MOEN®

Illustrated Parts

■ **Order by Part Number**

HALLE™
4" Lavatory Faucet

MODEL	HANDLE	FINISH
84971SRN	Lever	Spot Resist Brushed Nickel
84971C	Lever	Chrome
84971BL	Lever	Matte Black

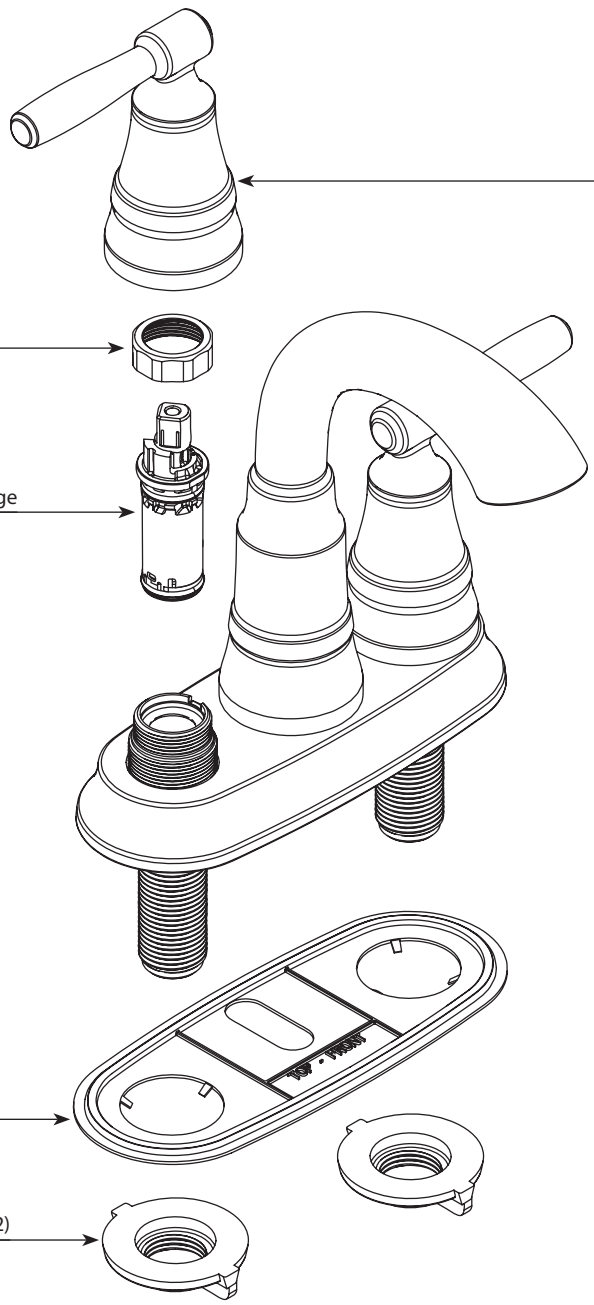

Handle Kit - Hot

195385SRN Spot Resist Brushed Nickel
195385 Chrome
195385BL Matte Black

Cartridge Nut (Qty 2)
97535

Handle Kit - Cold

195392SRN Spot Resist Brushed Nickel
195392 Chrome
195392BL Matte Black

Replacement Cartridge
1224

Aerator Kit (Includes tool)

180158 1.2gpm

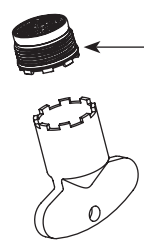

WASTE ASSEMBLIES

Top only:

186479CSL Classic Stainless (Use for Spot Resist Brushed Nickel)
186479CSL Chrome
186479CSL Matte Black

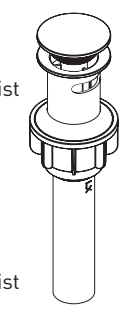

Full assembly:

186478CSL Classic Stainless (Use for Spot Resist Brushed Nickel)
186478CSL Chrome
186478CSL Matte Black

Deck Gasket
185795

Mounting Nuts (Qty 2)
145665

USE ON DECKS < 1/4" (6mm)	USE ON DECKS >1-3/16" (30mm)
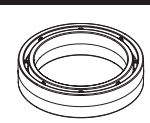 Thin Deck Spacer Kit (Qty 2) **146936**	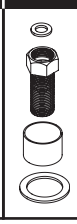 Thick Deck Extension Kit (Qty 2) **100818**

TO ORDER PARTS CALL: 1-800-BUY-MOEN
www.moen.com

04/14/2026 EXP.2192 5000007265 64
Released 00