MOEN®

ILLUSTRATED PARTS

Modern™
Single-Handle Lavatory Faucet
84771 Series

ORDER BY PART NUMBER

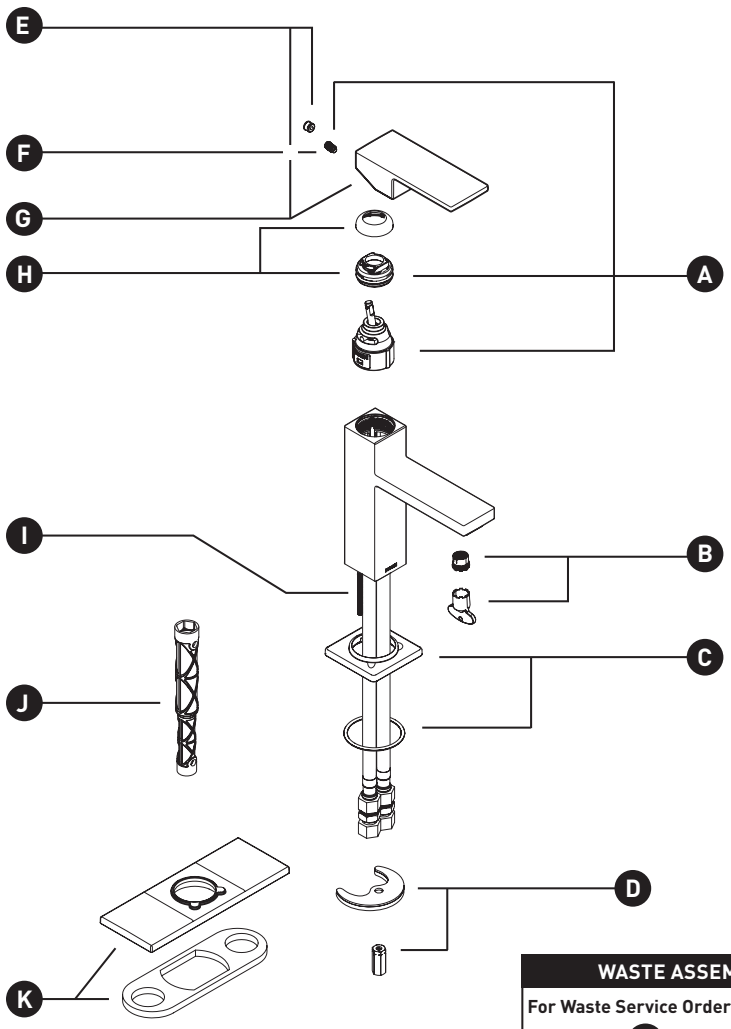

Mounting Nut
For models prior to 8/2018



WASTE ASSEMBLIES
For Waste Service Order Full Assembly

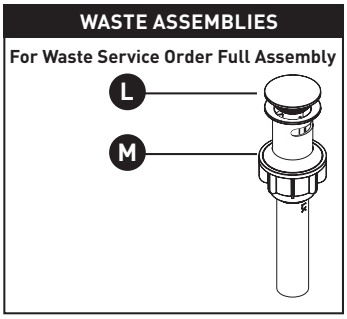

ID	Kit Number	Finish
A	160657	N/A
B	181085 (1.2gpm)	N/A
	184082 (1.0gpm)	N/A
*C	193147	See below
D	146190	N/A
*E	152859	See below
F	155023	N/A
*G	193172	See below
*H	160660	See below
I	143327	N/A
J	118305	N/A
*K	193148	See below
L	186479 (Top only)	Chrome
	186479BL (Top only)	Matte Black
	186479BZG (Top only)	Bronzed Gold
	186479CSL (Top only)	(Used for Spot Resist Brushed Nickel)
M	186478 (Full assembly)	Chrome
	186478BL (Full assembly)	Matte Black
	186478BZG (Full assembly)	Bronzed Gold
	186478CSL (Full assembly)	(Used for Spot Resist Brushed Nickel)

***Finish Determined by Suffix**

Finish	Description
No Suffix	Chrome
BL	Matte Black
BZG	Bronzed Gold
SRN	Spot Resist Brushed Nickel

TO ORDER PARTS CALL: 1-800-BUY-MOEN
www.moen.com