MOEN®

Illustrated Parts

HABER®
Two Handle Centerset Lavatory Faucet

MODEL	FINISH	NOTES
84768SRN	Spot Resist Brushed Nickel	Non-Metallic Waste

■ **Order by Part Number**

Handle Kit - Hot
188083SRN Spot Resist Brushed Nickel

Handle Kit - Cold
188084SRN Spot Resist Brushed Nickel

Set Screw *(Requires 3/32" hex key)*
159198

Cartridge Nut (Qty 2)
97535

Lift Rod Kit
12694SRN Spot Resist Brushed Nickel

Replacement Cartridge
1224

Aerator Kit - Includes Tool
181035 1.2gpm

Escutcheon Nut (Qty 2)
130560

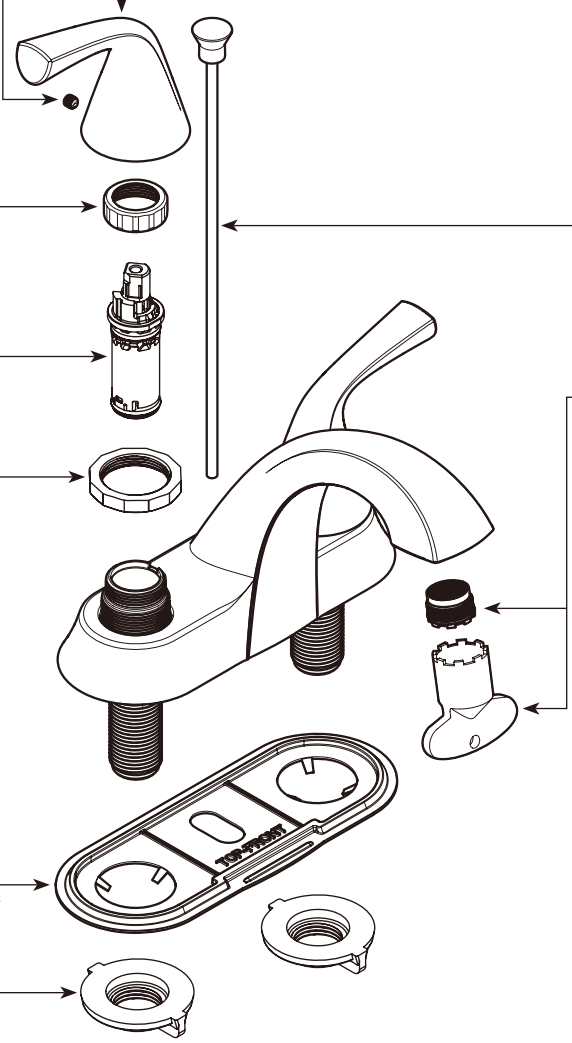

Deck Gasket
188085 *Use for Chrome & Spot Resist Brushed Nickel*

Mounting Nuts (Qty 2)
145665

WASTE ASSEMBLIES

For Waste Service Order Full Assembly

Non-Metallic Waste Assembly
151018CSL Classic Stainless *(Use for Spot Resist Brushed Nickel)*

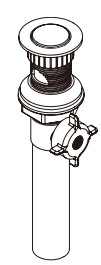

USE ON DECKS < 1/4" (6mm)	USE ON DECKS >1-3/16" (30mm)
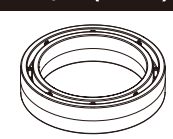 Thin Deck Spacer Kit (Qty 2) **146936**	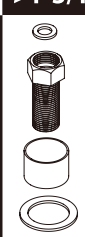 Thick Deck Extension Kit (Qty 2) **100818**

TO ORDER PARTS CALL: 1-800-BUY-MOEN
www.moen.com

04/10/2026 EXP:2147 5000046798
Released 01