Brand	hansgrohe
Art. Name	**Metropol** Widespread Faucet 110 with Lever Handles and Pop-Up Drain, 1.2 GPM
Art. Nr.	32516821
Surface	Brushed Nickel
Pos.	1

Product Picture

Drawing

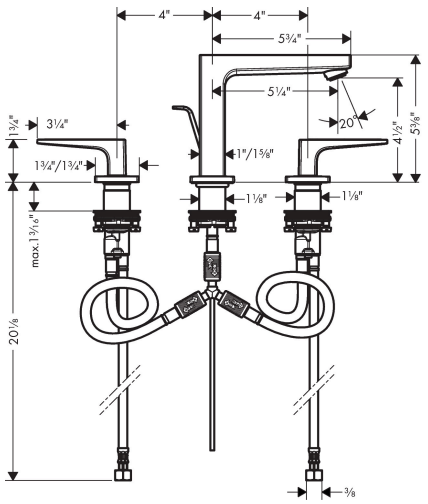

Features

- Consists of: Widespread faucet
- Handle design: lever handle
- Spray pattern: aerated spray
- Maximum flow rate (at 3 bar): 4.5 l/min
- Ceramic valves hot/cold 90°
- Pop-up drain G 1

Technology

Comfort Zone

Quick Clean

EcoRight