Brand	hansgrohe
Art. Name	**Metris C** Widespread Faucet 100 with Pop-Up Drain, 1.2 GPM
Art. Nr.	31073921
Surface	Rubbed Bronze
Pos.	1

Product Picture

Features

- Handle design: lever handle
- Spray pattern: aerated spray
- Maximum flow rate (at 3 bar): 4.5 l/min
- Ceramic valves hot/cold 90°
- Pop-up drain G 1

Drawing

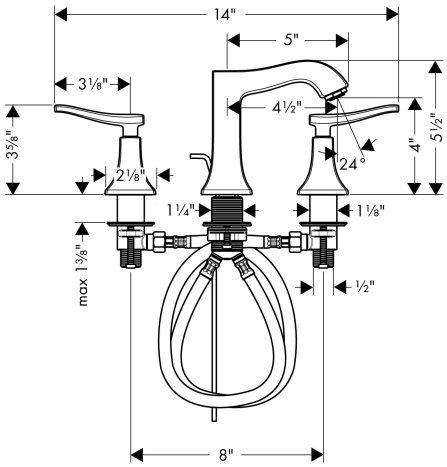

Technology