RIB® Building Automation

Functional Devices, Inc.
101 Commerce Drive
Sharpsville, IN 46068

Confidence & Peace of Mind in Every Box™
www.functionaldevices.com
sales@functionaldevices.com

Office: (765) 883-5538
Fax: (765) 883-7505
Toll Free: (800) 883-5538

10 AMP PILOT CONTROL RELAY

RIBTH1S

Pilot Relay, 10 Amp SPST + Override, 10-30 Vac/dc/208-277 Vac Coil, Hi/Lo Voltage Separation, NEMA 1 Housing

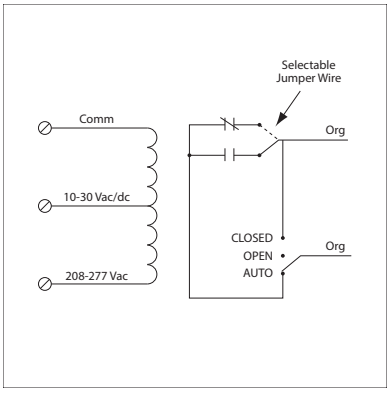

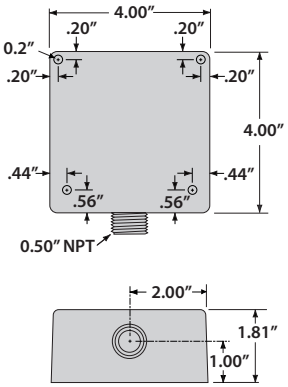

SPECIFICATIONS

 # Relays & Contact Type: One (1) SPST Continuous Duty Coil
Expected Relay Life: 10 million cycles minimum mechanical
Operating Temperature: -30 to 140° F
Humidity Range: 5 to 95% (noncondensing)
Operate Time: 20ms
Relay Status: LED On = Activated
Dimensions: 4.00"H x 4.00"W x 1.81"D with 0.50" NPT hub
Origin: Made of US and non-US parts
Wires: 16˝, 600V Rated
Approvals: UL Listed, UL916, C-UL, CE, RoHS
Housing Rating: UL Accepted for Use in Plenum, NEMA 1
Gold Flash: Yes
Override Switch: Yes

Contact Ratings:
10 Amp Resistive @ 277 Vac
480 VA Pilot Duty @ 277 Vac
480 VA Ballast @ 277 Vac
Not rated for Electronic Ballast
600 Watt Tungsten @ 120 Vac (N/O)
240 Watt Tungsten @ 120 Vac (N/C)
1/3 HP @ 120-240 Vac (N/O)
1/6 HP @ 120-240 Vac (N/C)
1/4 HP @ 277 Vac (N/O)
1/8 HP @ 277 Vac (N/C)

Coil Voltage Input:
10-30 Vac/dc ; 208-277 Vac ; 50-60 Hz
Drop Out = 2.1 Vac / 2.8 Vdc
Pull In = 9 Vac / 10 Vdc

Coil Current:
33 mA @ 10 Vac
35 mA @ 12 Vac
46 mA @ 24 Vac
55 mA @ 30 Vac
39 mA @ 208-277 Vac
13 mA @ 10 Vdc
15 mA @ 12 Vdc
18 mA @ 24 Vdc
20 mA @ 30 Vdc

Note:
Normally Open or Normally Closed selected by yellow jumper wire