FRIEDRICH

Ductless Split Systems
Concealed Duct, Multizone Heat Pump

PURCHASER	P.O. #	DATE
PROJECT	LOCATION	
ENGINEER	ARCHITECT	
SUBMITTED BY	FOR APPROVAL	FOR REFERENCE

ITEM	PLAN DESIGNATION	QUANTITY	COOLING BTU/H	VOLTAGE	FRIEDRICH MODEL

FEATURES

- Inverter technology (variable speed compressor)
- Internal condensate pump with 23" lift* included
- Cooling/Heating/Fan Mode
- Dry Mode
- 3 Fan speeds
- 24-hour on/off timer
- Auto restart
- Sleep mode
- Control lock function
- External Static Pressure Range (ESP)
  - 9,000 (0.0 - 0.20) WC
  - 12,000 (0.0 - 0.20) WC
  - 18,000 (0.0 - 0.20) WC
- BLDC Motors

* Lift from drain pan to the highest point. Use external drain pump for installations requiring condensate lift exceeding 23"

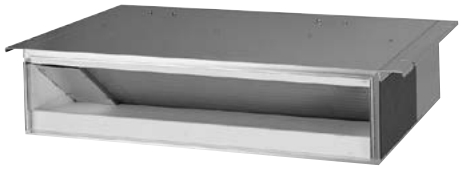

MD09Y3JM, MD12Y3JM, MD18Y3JM



WIRED WALL CONTROLLER

PRECISION INVERTER™

5 YR. PARTS WARRANTY | 7 YR. COMPRESSOR WARRANTY



MR24DY3JMA



MR36TQY3JMA



MR48DEY3JM

SPECIFICATIONS

PERFORMANCE RATINGS		Multizone - The Insider™ Concealed Ducted Heat Pumps		
INDOOR MODEL		MD09Y3JM	MD12Y3JM	MD18Y3JM
SPECIFICATIONS				
CAPACITY COOLING (RATED)	Btu	9,000	12,000	18,000
CAPACITY HEATING (RATED)	Btu	10,400	13,800	19,000
MOISTURE REMOVAL	Pts/h	2.5	2.5	4.2
AIRFLOW (LOW, MED, HIGH)	CFM	194 / 247 / 318	265 / 300 / 335	406 / 477 / 530
SOUND RATING - INDOOR	dB-A	30 / 26 / 23	26/31/33	29/31/34
ELECTRICAL DATA				
POWER SOURCE		208/230, 1, 60	208/230, 1, 60	208/230, 1, 60
POWER AND COMMUNICATION CABLE	No. x AWG	4C x 14	4C x 14	4C x 14
REFRIGERATION SYSTEM				
CONNECTIONS		Flare	Flare	Flare
LIQUID LINE O.D.	in	1/4	1/4	1/4
SUCTION LINE O.D.	in	3/8	3/8	1/2
DIMENSIONS & WEIGHT				
W X H X D	in	27-9/16 x 7-15/32 x 27-9/16	32-9/32 x 7-15/32 x 22-5/8	43-5/16 x 7-15/32 x 22-5/8
NET WEIGHT	lbs	39	45	58
SHIPPING WEIGHT	lbs	45	51	65

PERFORMANCE RATINGS		Multi Outdoor		
		24k	36k	48k
OUTDOOR MODEL		MR24DY3JMA	MR36TQY3JMA	MR48DEY3JM
SPECIFICATIONS				
POWER SOURCE		208/230/60/1	208/230/60/1	208/230/60/1
EST. YEARLY OPERATING COST	$	122-125	170-245	346-400
RUNNING CURRENT COOLING MIN.~RATED~MAX.	A	1.7~6.4~9.0	2.9~10.7~15.7	4.6~16.7~24.8
RUNNING CURRENT HEATING MIN.~RATED~MAX.	A	1.8~7.8~11.2	3.3~11.9~18.3	6.2~18.8~26.2
POWER INPUT COOLING MIN.~RATED~MAX.	W	390~1480~2070	670~2460~3610	970~3840~5710
POWER INPUT HEATING MIN.~RATED~MAX.	W	420~1800~2580	760~2740~4210	1420~4320~6020
POWER AND COMMUNICATION CABLE	No. x AWG	4 X 14	4 X 14	4 X 14
DIMENSIONS W X H X D	inch	34-1/4 x 25-3/4 x12-5/8	37-3/8 x 32-7/8 x 13	37-3/8 x 54-5/16 x 13
NET WEIGHT	lbs	99	137	214
SHIPPING WEIGHT	lbs	139	148	236
REFRIGERATION SYSTEM				
REFRIGERANT		R410A	R410A	R410A
FACTORY PRECHARGE	ft	63	98	155
REFRIGERANT CHARGE	oz	74	99	Main= 16, Branch= 131
LIQUID LINE O.D.	in	1/4	1/4	3/8
SUCTION LINE O.D.	in	3/8	3/8	3/4
MIN./MAX. LINE LENGTH (EACH)	ft	10~82	10~82	10~49*
MIN./MAX. LINE LENGTH (TOTAL)	ft	75~246	75~246	30~475*
MAX. HEIGHT DIFFERENCE	ft	49	49	98*
SOUND PRESSURE LEVEL COOLING	A	51	52	54
SOUND PRESSURE LEVEL HEATING	A	51	55	56
OPERATING RANGE COOLING (WIND BAFFLE)	°F DB	14 (-4) ~ 118	14 (-4) ~ 118	14 (-4) -118
OPERATING RANGE HEATING	°F WB	5 ~ 64	-4 ~ 64	-4 ~ 64
MINIMUM AMPACITY	A	15	17	27.3
MAX. TD FUSE/BREAKER	A	25	25	40

Your operating costs will depend on your utility rates and use. The estimated operating cost is based on a electricity cost of $ .115 per kWh. For more information, visit www.ftc.gov/energy. Due to continuing research in new energy-saving technology, specifications are subject to change without notice.

ACCESSORIES

REFRIGERATION LINE SETS* (Required accessory)

Kit#	Length Ft.	Liquid	Suction
T32150	15’	1/4”	3/8”
T32350	35’	1/4”	3/8”
T42150	15’	1/4”	1/2”
T42350	35’	1/4”	1/2”
T53150	15’	3/8”	5/8”
T53350	35’	3/8”	5/8”

*Insulated line sets are available for all Friedrich split systems in 15 ft. and 35 ft. lengths. Each line set is equipped with flare nuts on both ends. Both liquid and suction lines are insulated. Line sets can be joined together with field supplied double male connectors.
Each system requires one line set for each indoor unit installed.

THERMOSTAT

WIRED CONTROLLER
DWC2


Optional wired wall-mounted controller

Adapter for 5/16" service valves

- Adapter is available through Friedrich parts distributors.
- All R410A models have 1/2”-20 UNF (5/16” SAE) X 1/4” SAE thread per inch charging and vacuuming ports.
- An adapter must be used for ¼” gauges.

DIMENSIONAL DRAWINGS

INDOOR UNITS / MD09Y3JM

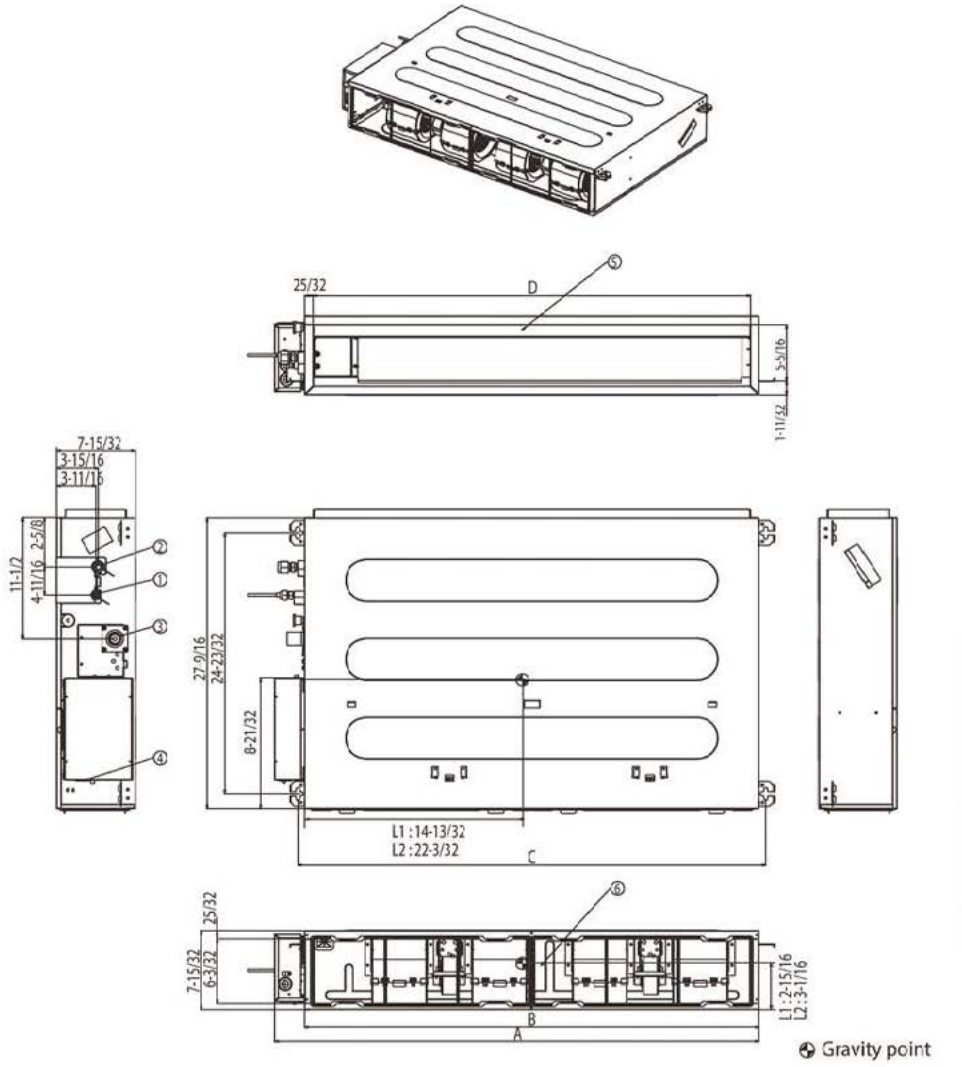

Item No.	Part Name	Description
1	Liquid Pipe Connection	
2	Gas Pipe Connection	
3	Drain Pipe Connection	
4	Power Supply Connection	
5	Air Discharge	
6	Air Suction	

Symbols

View Direction

Datum line

Refrigerant/Drain Piping Direction

Note

1. Unit should be installed in compliance with the installation manual in the product box.
2. Unit should be grounded in accordance with the local regulations or applicable national codes.
3. All electrical components and materials to be supplied from the site must comply with the local regulations or international codes.
4. Electric characteristics chapter should be considered for electrical work and design. Especially, the power cable and circuit breaker should be selected in accordance with that.

DIMENSIONAL DRAWINGS

INDOOR UNITS / MD12Y3JM

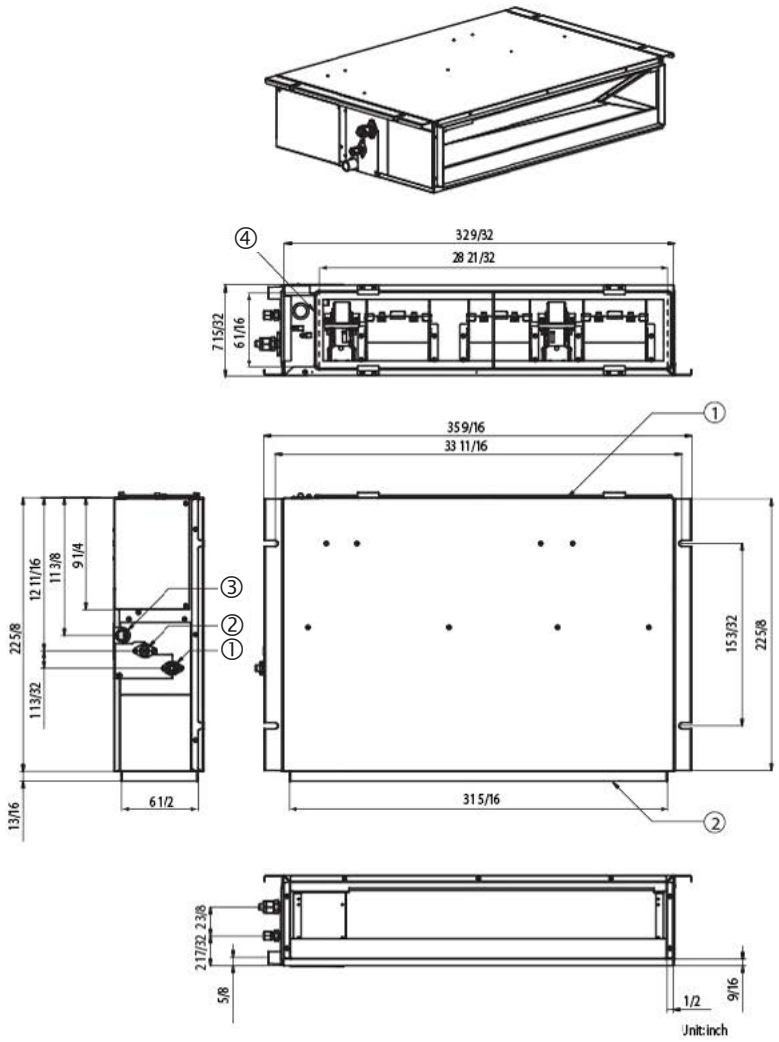

No.	Part Name	Remarks
1	Air suction flange	
2	Air discharge flange	
3	Gas pipe connection	
4	Liquid pipe connection	
5	Drain pipe connection	
6	Power supply connection	

Item No.	Part Name	Description
1	Gas Pipe Connection	-
2	Liquid Pipe Connection	-
3	Drain Pipe Connection	-
4	Power and Communication cable routing hole	-
5	Wired remote controller wire routing hole	-
6	Air Intake	-
7	Air Outlet	-
8	Air Filter	Supplied with product
9	Control Cover	-
10	Panel for suction from bottom side	Detachable type

Symbols

View Direction

Datum line

Refrigerant/Drain Piping Direction

Note

1. Unit should be installed in compliance with the installation manual in the product box.
2. Unit should be grounded in accordance with the local regulations or applicable national codes.
3. All electrical components and materials to be supplied from the site must comply with the local regulations or international codes.
4. Electric characteristics chapter should be considered for electrical work and design. Especially, the power cable and circuit breaker should be selected in accordance with that.

DIMENSIONAL DRAWINGS

INDOOR UNITS / MD18Y3JM

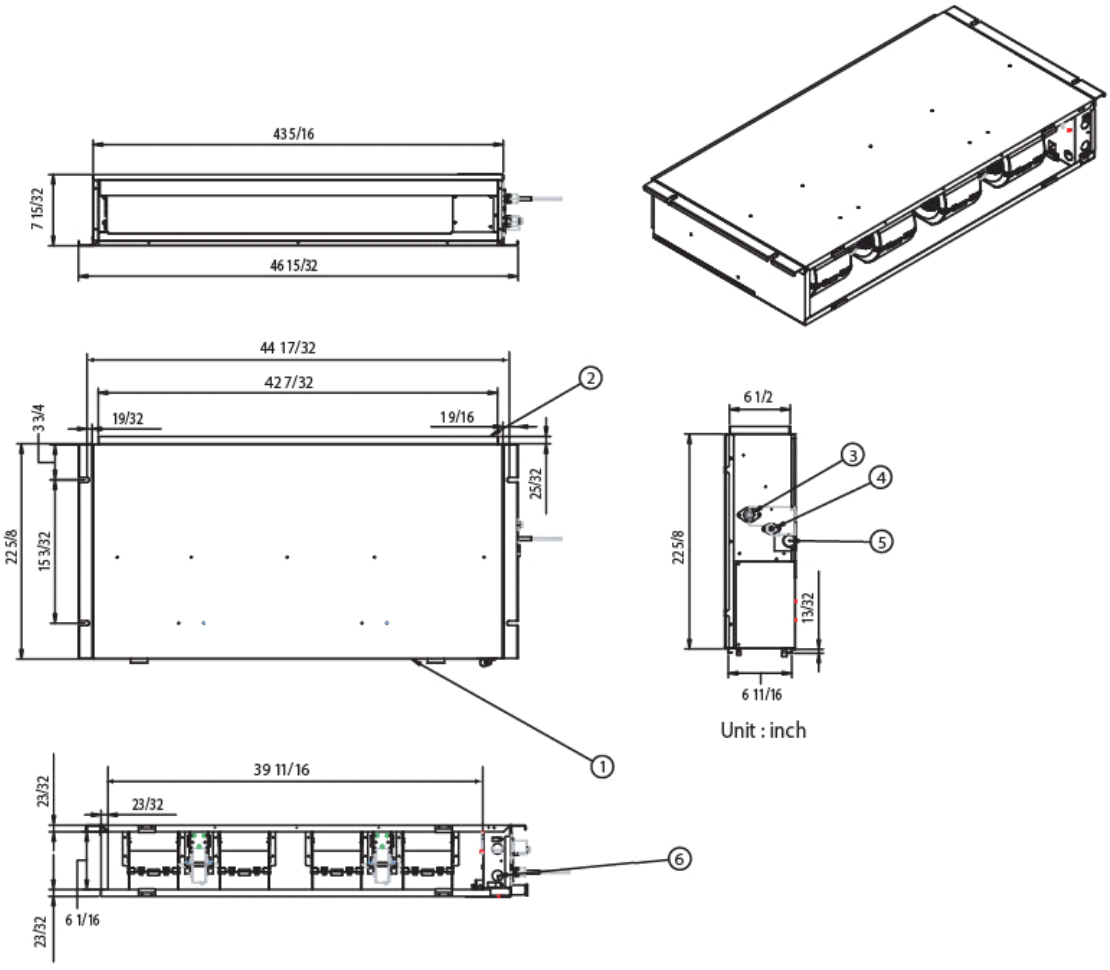

Item No.	Part Name	Description
1	Gas Pipe Connection	-
2	Liquid Pipe Connection	-
3	Drain Pipe Connection	-
4	Power and Communication cable routing hole	-
5	Wired remote controller wire routing hole	-
6	Air Intake	-
7	Air Outlet	-
8	Air Filter	Supplied with product
9	Control Cover	-
10	Panel for suction from bottom side	Detachable type

Symbols

View Direction

Datum line

Refrigerant/Drain Piping Direction

Note

1. Unit should be installed in compliance with the installation manual in the product box.
2. Unit should be grounded in accordance with the local regulations or applicable national codes.
3. All electrical components and materials to be supplied from the site must comply with the local regulations or international codes.
4. Electric characteristics chapter should be considered for electrical work and design. Especially, the power cable and circuit breaker should be selected in accordance with that.

DIMENSIONAL DRAWINGS

OUTDOOR UNITS / MR24DY3JMA

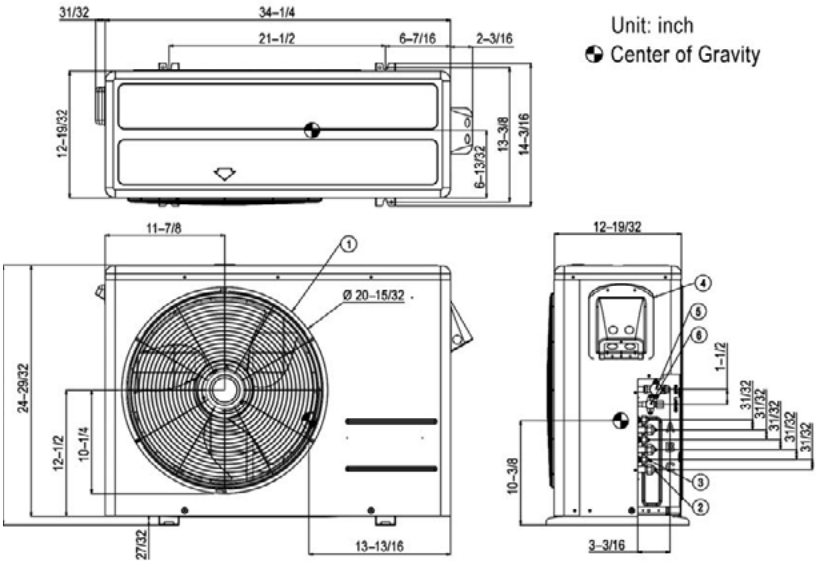

Item No.	Part Name
1	Air Discharge Grille
2	Gas Pipe Connection
3	Liquid Pipe Connection
4	Power and Transmission Connection
5	Main Service Valve (Gas)
6	Main Service Valve (Liquid)

Note

1. Unit should be installed in compliance with the installation manual in the product box.
2. Unit should be grounded in accordance with the local regulations or applicable national codes.
3. All electrical components and materials to be supplied from the site must comply with the local regulations or international codes.
4. Electric characteristics chapter should be considered for electrical work and design. Especially, the power cable and circuit breaker should be selected in accordance with that.

OUTDOOR UNITS / MR36TQY3JMA

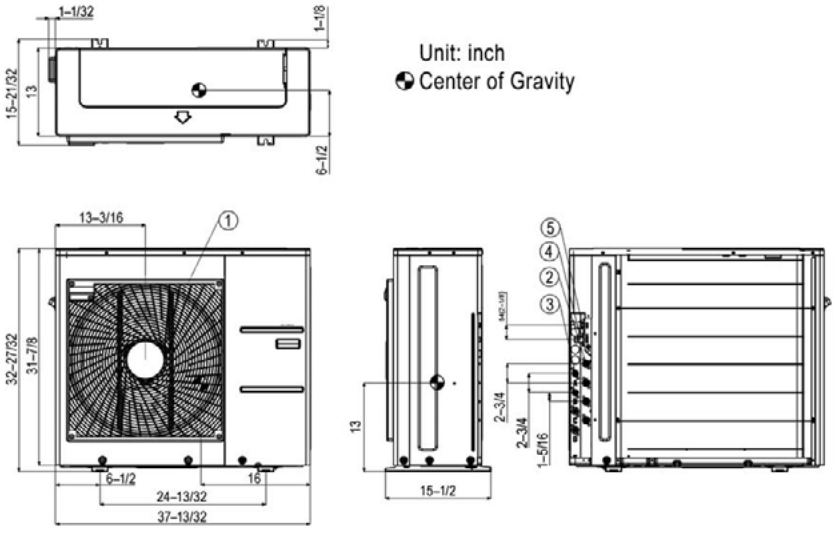

Item No.	Part Name
1	Air discharge grille
2	Gas pipe connection
3	Liquid pipe connection
4	Main Service Valve (Liquid)
5	Main Service Valve (Gas)

Note

1. Unit should be installed in compliance with the installation manual in the product box.
2. Unit should be grounded in accordance with the local regulations or applicable national codes.
3. All electrical components and materials to be supplied on the site must comply with the local regulations or international codes
4. Electrical characteristics chapter should be considered for electrical work and design. Especially the capacity of power cable and circuit breaker for outdoor unit should be more than that of electrical characteristics chapter.

DIMENSIONAL DRAWINGS

OUTDOOR UNITS / MR48DEY3JM

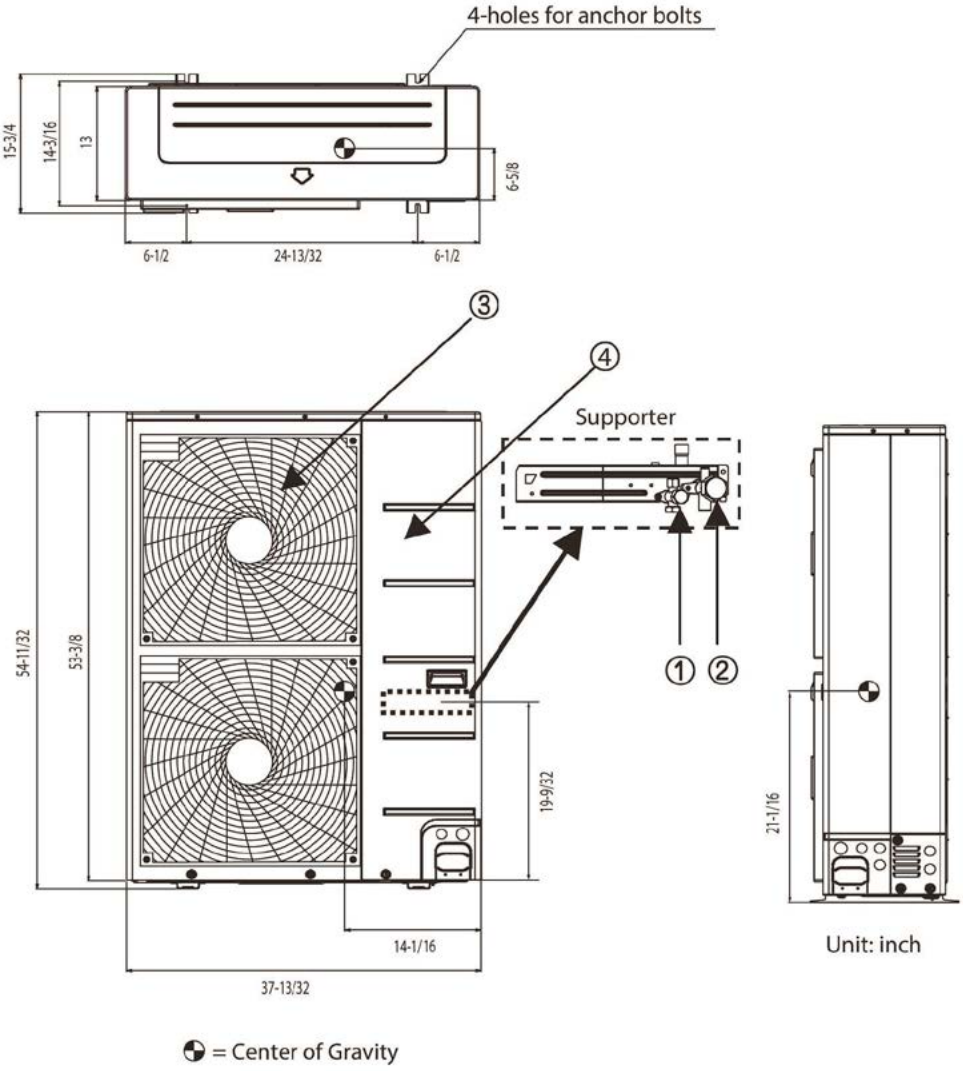

Item No.	Part Name	Description
1	Liquid pipe connection	
2	Gas pipe connection	
3	Air discharge grille	
4	Power & transmission connection	

REFRIGERATION LINE SETS MINIMUM/MAXIMUM LENGTHS
MULTIZONE | 48,000 BTU

Multizone 48,000 BTU/h Eight Zone				
System Pipe Lengths	Total piping length (Outdoor to Indoor) (Tp)		(ft.)	≤476
	Outdoor to Branch box (A, B)	Min.	(ft.)	10
		Max.	(ft.)	≤180
	Total branch piping length (Branch Box to indoor units) (A1-A3, B1-B4)		(ft.)	≤295
	Branch box to Indoor units	Min.	(ft.)	10
		Max.	(ft.)	≤49
Elevations	If outdoor unit is above or below indoor unit (E1)		(ft.)	≤98
	Between the farthest two indoor units (E3)		(ft.)	≤43
	Between branch distribution unit and farthest connected indoor unit(s) (E2)		(ft.)	≤33
	Between branch boxes (E4)		(ft.)	≤43

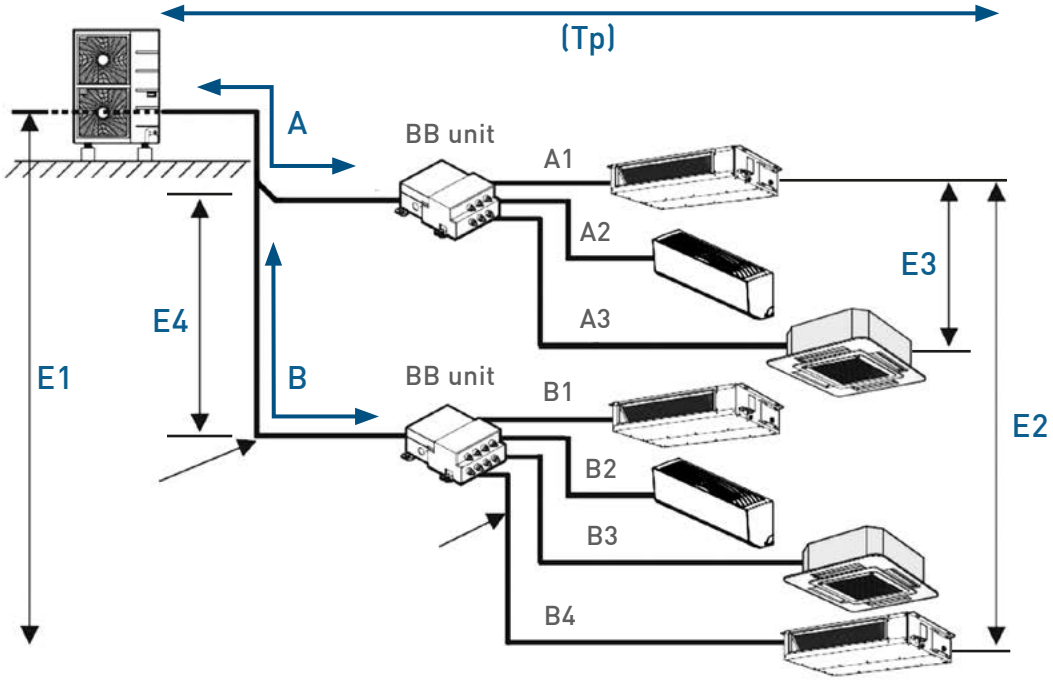

SINGLE AND DUAL BB CONFIGURATIONS

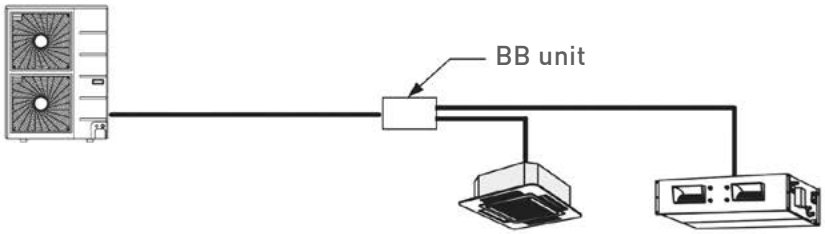



Branch Box D4PBB

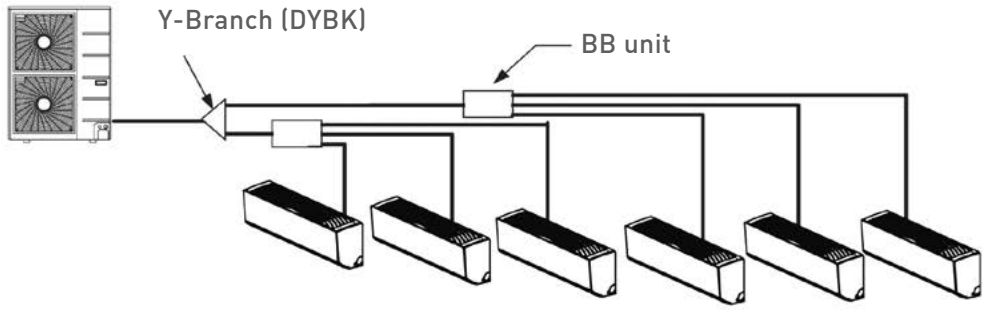



Y - Branch DYBK