Typical Installations

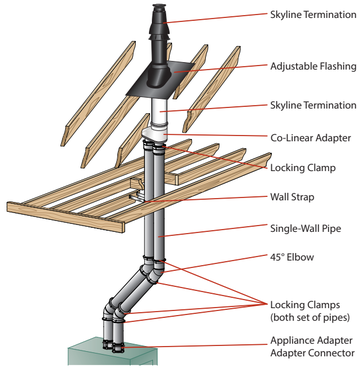

Twin Pipe with Concentric Termination

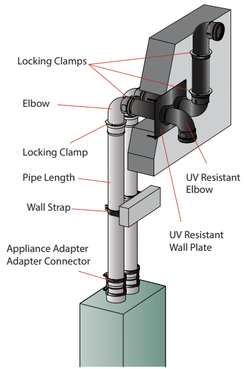

Horizontal Twin Pipe Elbow Termination

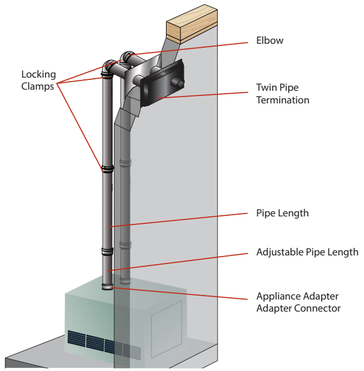

Horizontal Below Grade

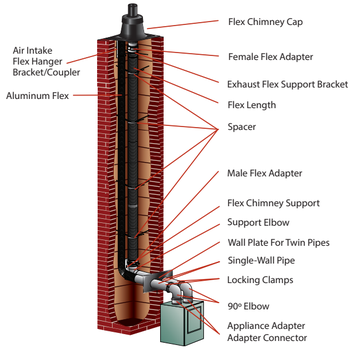

Flex Through Chimney w/ Air Intake

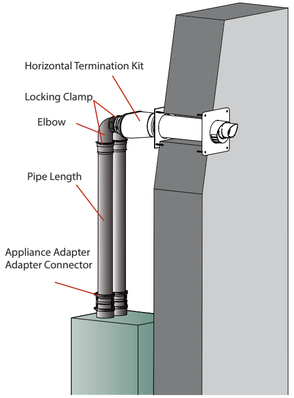

Horizontal Twin Pipe Concentric

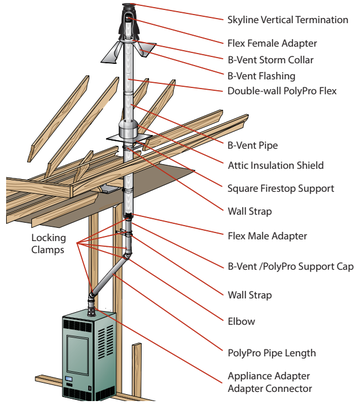

Flex Through B Vent as a Chase

PolyPro

DuraVent is dedicated to the design and manufacturing of venting products. As experts in this industry, our team is passionate about creating innovative, quality products. We invest in equipment with the latest technology to develop and test venting products that are engineered to one standard: excellence.

All measuring equipment is calibrated to the same levels as used by testing agencies and are compliant with ISO 1702: the test-laboratory standard.

Wind Tunnel Laboratory

The wind tunnel lab allows us to gather precise data with 270° of measurement on terminations. All data is analyzed for product performance under rigorous conditions before going to market.

Rain Testing

DuraVent labs test the vapor/moisture barrier of products by subjecting them to extreme rain and wind conditions. These tests are compliant with both the US and Canadian requirements, as well as the stringent European standards.

Climate Testing

DuraVent labs have developed a patented ice testing system in the climate room. Tests run to -4°F (-20°C). PolyPro vertical terminations are engineered to remain icicle free.

Commercial and OEM Product Development

DuraVent engineers are expertly skilled to develop venting components to OEM specs. To satisfy specific venting requirements, DuraVent has the experience to provide custom design, prototyping and testing of vent systems and components engineered to the demands of specific appliances.

Contact

Professional Technical Help

DuraVent prides itself on providing the best customer service and technical support in the industry.

Our Customer Support Team is available to answer technical questions.

Monday – Friday
5:30am – 4pm Pacific | 8:30am – 7pm Eastern

Tel: 800-835-4429
Fax: 707-446-4740
customerservice@duravent.com

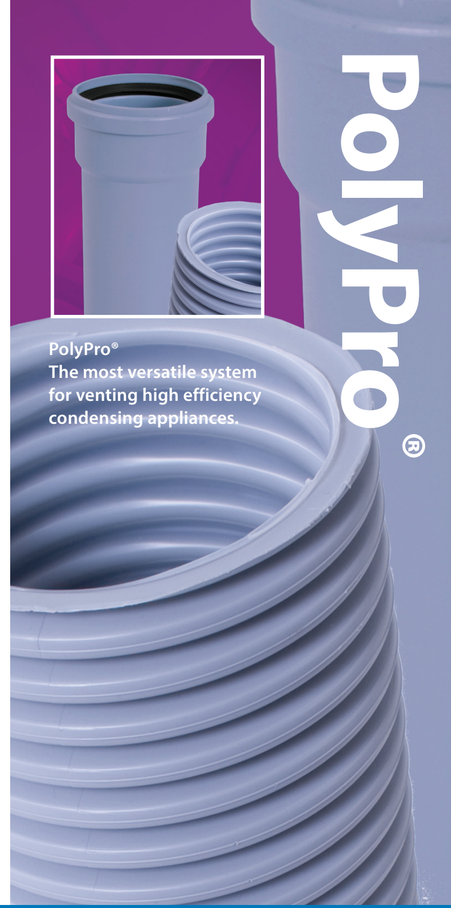

DuraVent®

PolyPro®

Applications
PolyPro is a polypropylene vent pipe for use with ANSI Category II and IV gas-burning appliances, including high-efficiency water heaters, condensing boilers and warm air furnaces. PolyPro is listed by Intertek to the ULC S636 standard in Canada as a Class IIA, IIB and IIC vent system suitable for exhaust temperatures up to 230°F / 110°C, and a maximum positive pressure of 15 in-w.c.

Materials and Construction
Rigid pipe constructed of 2.2mm (minimum) thick polypropylene.
EPDM or optional Viton Gaskets

Clearances
0" clearance to combustibles for exhaust temperatures up to 194°F / 90°C, and 0" clearance for vertical installations up to exhaust temperatures of 230°F / 110°C and ¼" / 6mm clearance to combustibles for horizontal installations at exhaust temperatures up to 230°F / 110°C.

Diameters
2" (60mm), 3" (80mm), 4" (100mm)
5" (130mm), 6" (150mm), and 8" (200mm).
2" x 4" (60mmx100mm)
3" x 5" (80mmx130mm)
4" x 6" (100mmx150mm)

Listings
Listed with the appliance in the USA and Canada, check with appliance manufacturer. Intertek / ETL listed to ULC S636 Listed as a Class IIA, IIB, and IIC vent system.

PolyPro is approved by the Massachusetts Plumbers Board. Approval code G1-0811-42.

Intertek

Product List

PolyPro
PolyPro and PVC/CPVC: PVC pipes are commonly used for venting water heaters, condensing boilers and warm air furnaces, yet PVC was never designed for such use. PolyPro is an engineered alternative for condensing gas appliances. Engineered for venting, it is easier and faster to install than PVC, saving the contractor time and money. Polypropylene has a higher operating temperature limit of 230°F/110°C (PVC is 149°F/65°C max and CPVC is 194°F/90°C). PolyPro is engineered with a condensation management system.

Terminations
DuraVent's concentric PolyPro vertical terminations are lab tested to handle harsh weather and remain icicle free in freezing temperatures. Air circulation and weather conditions like rain, wind and ice have the potential to reduce the efficiency of a unit's performance and the operation of its venting system.

	Single-Wall Pipe Use to vent condensing appliances. Includes 1 Locking Clamp.
	Black UV Resistant Single-Wall Pipe Use to vent condensing appliances. Includes 1 Locking Clamp.
	Adjustable Pipe Use to add length to straight length of PolyPro pipe. Includes 1 Locking clamp.
	Test Port Use to test for proper appliance operation without penetrating or disconnecting the vent wall. Install immediately above the appliance. Includes 1 Locking Clamp.
	45°/90° Elbows Use for supporting vent pipe between offsets. Come with 1 Locking Clamp.
	Black UV Resistant Extended 90° Elbow Made of UV resistant polypropylene. May be used for terminations, order Bird Guard Screen to protect opening. Includes 1 Locking Clamp.
	Condensate Drain Use to properly manage corrosive condensates common with high efficiency gas appliances. Includes 1 Locking Clamp.
	Tee Cap Use cap on Tees, Condensate Drain or on other components where a cap is needed.
	Tee with Cap Use for a 90° offset or to combine connections. Includes 2 Locking Clamps.
	Black UV Resistant Tee Use as a termination. Order Bird Guard Screen to protect opening.
	Black Termination Tee Use as a termination. Manufactured with two female ends to accept Bird Screen on both ends.
	Black UV Resistant Termination Tee Use as a termination. Manufactured with two female ends to accept Bird Screen on both ends.
	Black Wall Plate Use to trim wall penetration.

	Tee with Drain Cap Use to manage condensates at the bottom of a vertical run. Includes 2 Locking Clamps.
	Reducer Use to transition the vent system to a smaller diameter. Includes 1 Adapter Connector clamp.
	Increaser Use to transition the vent system to a larger diameter. Install in vertical orientation. Includes 1 Adapter Connector clamp.
	Appliance Adapter for PVC Pipe Use to connect PolyPro vent system to an appliance outlet. Has a double female adapter.
	Appliance Adapter for PVC Coupler Use to adapt rigid PolyPro pipe length to PVC/CPVC coupler or other plastic appliance outlet. Includes 1 Adapter Connector clamp.
	Female Appliance Adapter Use to connect PolyPro to a nominal sized pipe with a smooth male end outlet.
	Male PVC Appliance Adapter Use to connect PolyPro vent system to a standard stainless steel appliance outlet equipped with an integrated hose clamp and gasket.
	Female PVC Appliance Adapter Use to directly connect PolyPro to a male PVC Pipe appliance outlet. Seals on the outer diameter of the PVC pipe and has a clamp.
	FasNSeal Adapter Use to transition from FasNSeal vent system to PolyPro vent system.
	PolyPro to FasNSeal Adapter Use to transition from PolyPro vent system to FasNSeal vent system or to connect a metric appliance to FasNSeal. Can be used as an appliance adapter or inline.
	Adapter Connector Use to secure PolyPro pipe to PVC/CPVC coupler or appliance outlet.
	Wall Strap Use to support offsets and pipe used in vertical rise or horizontal runs as per installation instructions.

	Locking Clamp Use to secure two sections of pipe together.
	Firestop Spacer Use when penetrating floor levels.
	Flat Roof Flashing Use to weather-proof the penetration of vent pipe through the roof.
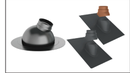	**Adjustable Roof Flashing** Use to weather-proof penetration of vent through the roof. For concentric pipe.
	Twin Pipe Termination Use to terminate horizontally with two single-wall PolyPro pipes for intake and exhaust.
	Single Horizontal Termination Use to terminate horizontally with one single-wall PolyPro pipe.
	Lochinvar Horizontal Termination Kit Use to adapt PolyPro to the Iplex 636 low profile termination.
	Vertical Termination Cap Kit - Concentric Use for concentric vertical terminations. Includes 2 Locking Clamps and 2 Adapter Connector clamps.
	Horizontal Termination Kit - Concentric Use for concentric horizontal terminations. Includes two Locking Clamps and 2 Adapter Connector clamps.
	Bird Guard Screen Use to protect venting system from birds and rodents.
	EPDM Replacement Gasket Use as a replacement gasket for rigid PolyPro products.
	Viton Replacement Gasket Use as a gasket for oil fuel appliances.

What Makes Us Different From The Rest?

- Lightweight and designed for quick and easy assembly.
- PolyPro provides safe installation.
- There are no corrosion of metals or chlorides.
- PolyPro is corrosive condensate resistant and 100% recyclable.

Need An Air Intake Solution? Create Your Own Kit

Order DuraFlex AL length, Hanger Bracket, Coupler and Wall Plate for Twin Pipe.
(2" Air intake will require a 2"-3" Increaser: 2PPS-X3)

- (1) DuraFlex AL Length: DFA-25, DFA-35, or DFA-50
- (1) Hanger Bracket: DFA-FCB
- (1) Coupler: DFA-FCP
- (1) Wall Plate for Twin Pipe: PPS-WPT

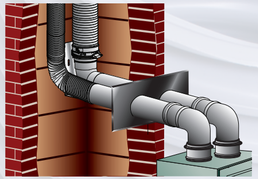

DuraVent®