Installation Instructions

PolyPro Single-Wall and
Concentric Gas Vent System for
Category II & IV
Gas-Burning Appliances

POLYPRO®

DuraVent®

A MAJOR CAUSE OF VENT RELATED FIRES IS FAILURE TO MAINTAIN REQUIRED CLEARANCES (AIR SPACES) TO COMBUSTIBLE MATERIALS. IT IS OF THE UTMOST IMPORTANCE THAT POLYPRO® BE INSTALLED ONLY IN ACCORDANCE WITH THESE INSTRUCTIONS.

WARNING

CARBON MONOXIDE POISONING HAZARD. Failure to follow the steps outlined below for each appliance connected to the venting system being placed into operation could result in carbon monoxide poisoning or death.

- Examine all components for possible shipping damage prior to installation.
- Read all instructions before beginning the installation and follow these instructions exactly as written.
- Proper joint assembly is essential for a safe installation. Check the integrity of ALL joints upon completion of assembly.
- This venting system must be free to expand and contract under normal operation.
- Ensure unrestricted vent movement where required through walls, ceilings and roof penetrations.
- This venting system must be supported in accordance with these instructions.
- Do not mix pipe, fittings, or joining methods from different vent system manufacturers. Do not use adhesives of any kind with this venting system.
- Acceptance of the installed system is dependent on full compliance with these installation instructions.

WARNING

Risk of carbon monoxide poisoning or fire due to joint separation or pipe breakage.

Keep these instructions for future reference.

Dear Customer, Installer, or End User:
We welcome any comments regarding matters pertaining to our DuraVent products. We welcome any ideas, input or complaints to help improve our product offering.

If you are searching for tech support or product information, please call us at:
800-835-4429
or email us at:
techsupport@duravent.com

PolyPro® is one of DuraVent's line of products.

Intertek

PolyPro Single-Wall and Concentric Gas Vent System

For the most up-to-date installation instructions, see www.duravent.com

POLYPRO®

CONTENTS

LISTING 4

APPLICATION 4

PERMITS 4

GENERAL INSTALLATION NOTES 4

CLEARANCES (TABLE 1) 4

CONDENSATE DRAIN 5

EQUIVALENT LENGTH CHART (TABLE 2) 5

ENCLOSURE REQUIREMENTS 6

FIRESTOPS 6

WALL AND CEILING PENETRATION (TABLE 3) 6

POLYPRO SINGLE-WALL 7

- **JOINT CONNECTIONS** 7
- **APPLIANCE CONNECTION** 8
- **INSTALLATION** 8
- **HORIZONTAL TERMINATIONS** 9
- **VERTICAL TERMINATIONS** 11
- **MULTIPLE VENT RUNS** 11

POLYPRO CONCENTRIC 13

- **JOINT CONNECTIONS** 13
- **APPLIANCE CONNECTION** 13
- **INSTALLATION** 14
- **HORIZONTAL TERMINATIONS** 15
- **VERTICAL TERMINATIONS** 16

MAINTENANCE 17

WARRANTY 20

DuraVent®

LISTING

Listed to ULC S636
Rated Class IIA, IIB, and IIC vent system
maximum temperature 230°F (110 °C)
maximum positive pressure 15 in-w.c.
Massachusetts Plumbers Board,
G1-0811-42

APPLICATION

ANSI Category II and IV gas-burning appliances with a maximum positive pressure of 15in w.c. and maximum flue gas temperature of 230°F (110°C, ULC-S636-Class IIC).
Appliances specifically tested and listed to use DuraVent PolyPro Venting.

PERMITS

Check with your local Building Official, Fire Official, or other authority having jurisdiction (AHJ) regarding permits, restrictions, and installation inspections in your area.

GENERAL INSTALLATION NOTES

Read these instructions before beginning.
You must use only authorized DuraVent PolyPro vent parts, or other parts specifically authorized in these instructions and/or listed by the appliance manufacturer in order to maintain a safe, approved system.

- Do not mix parts or try to match with other products or use improvised solutions.
- Do not install damaged or modified parts.

Table 1

Clearance to Combustibles

	VENT PIPE ORIENTATION	
Single Wall	**Vertical**	**Horizontal**
Up to 190°F	0"	0"
Up to 230°F	0"	¼" (6mm) all around
Concentric		
Up to 230°F	0"	0"

- Use soapy water to lubricate gaskets.
- Never use petroleum base lubricants.

If these directions and those of the appliance manufacturer differ, follow the more conservative requirements. If you have any questions, contact either your dealer or DuraVent directly. A venting system must not be routed into, through, or within any other vent, such as an existing masonry or factory-built chimney flue, unless that vent or chimney is not being used to vent another appliance and is only used as a conduit for the gas-vent system. Plastic venting systems shall not pass through fire rated separations without approved firestopping.

PolyPro Single-Wall attains Flame Spread / Smoke Developed ratings of <25 / <50 (per UL-723, ASTM E-84 and ULC-S102) when used in conjunction with the below noted materials:

- 3M Fire Barrier Plenum Wrap 5A+
- Unifrax FyreWrap 0.5 Plenum Insulation
- Knauf Insulation- Atmosphere Duct Wrap with ECOSE
- Alternate equivalent listed product

Always follow the particular installation instructions from the insulation wrap manufacturer, in addition to those for the PolyPro vent system. The venting system shall be securely supported using suitable hangers installed after the pipe has been properly wrapped. Hardware must not deform or damage the vent or wrap.

IMPORTANT

The vent system must be compliant in accordance with local code requirements and appropriate National Codes: In the US: NFPA 54 / ANSI Z223.1 National Fuel Gas Code or the International Fuel Gas Code. In Canada: CAN/CGA-B149.1 Natural Gas Installation Code or CAN/CGA-149.2 Propane Installation Code.

IMPORTANT

To prevent possible recirculation of flue gases, the installer must consider the effects of prevailing wind conditions, eddy zones, nearby buildings, obstructions, or other obstacles such as shrubs when planning exhaust and air intake locations. DuraVent can not be held responsible for poor appliance performance or damage to buildings due to an incorrect installation. The minimum clearances detailed within our instructions may not be adequate in some circumstances depending on the specifics of the installation. For this reason we always recommend vertical venting.

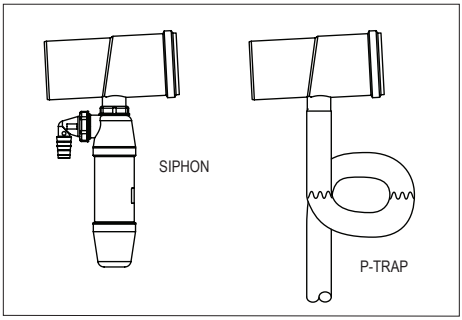

Figure 1

WARNING

CARBON MONOXIDE POISONING HAZARD
Failure to follow these installation instructions could result in personal injury or death.

Refer to the appliance manufacturer's instructions for maximum and minimum vent lengths permitted with your specific appliance model. This information should include guidance on the maximum number of elbows and related pressure-drops. The total vent length from the appliance to the termination shall not be greater than specified by the appliance manufacturer. If specific guidance is not offered by the appliance manufacturer as to Equivalent Vent Lengths (EVL) for vent components, the general guidelines in **Table 2** can be used.

CONDENSATE DRAIN *(Fig.1)*

Refer to the appliance manufacturer's installation instructions for requirements of condensate drainage. Ensure proper system slope for drainage. ***(Fig.7 and 20)***

When using a P-Trap style drain, connect 1-1/4in (32mm) tubing and secure into a loop. Fill the loop partially with water to prevent exhaust leakage. Route the free end of the loop to an appropriate disposal.

Table 2 - Equivalent Length Chart

	2" Equivalent Length	3" Equivalent Length	4" Equivalent Length	5" Equivalent Length	6" Equivalent Length	8" Equivalent Length
1-ft Vent Pipe	1-ft	1-ft	1-ft	1-ft	1-ft	1-ft
1-ft Flex Pipe (same diameter as rigid)	2-ft	2-ft	2-ft	2-ft	N/A	N/A
1-ft Flex Pipe (up-sized one diameter)	0.4-ft	0.6-ft	0.6-ft	N/A	N/A	N/A
45 Elbow	3-ft	3-ft	5-ft	6-ft	6-ft	13-ft
90 Elbow	5-ft	7-ft	12-ft	14-ft	14-ft	19-ft
Tee	9-ft	12-ft	19-ft	21-ft	22-ft	29-ft

ENCLOSURE REQUIREMENTS

Through Rooms: Interior vents shall be enclosed where they extend through closets, storage areas, occupied spaces, or any place where the surface of the vent could be contacted by persons or combustible materials except when installed in the room with the appliance.

Multi-Story: Consult local building or other applicable codes for requirements in your area. In the U.S., NFPA 211 10.6.3 (2013) states: "Vents that pass through the floors of buildings requiring the protection of vertical openings shall be enclosed within an approved enclosure. The enclosure walls shall have a fire resistance rating of not less than 1 hour where a vent is located in a building less than four stories in height. The enclosure walls shall have a fire resistance rating of not less than 2 hours where a vent is located in a building four or more stories in height."

FIRESTOPS

1. Firestops are required at each ceiling/ floor penetration including an attic. Firestops are not required at the roof deck penetration.
2. Cut and/or frame hole. ***(Table 3)***
3. Slide the two halves together and attach to the ceiling using either 8 penny nails or #8 1-1/2in wood screws at each of the four corners and at the two overlapping sides (***Fig.2)***

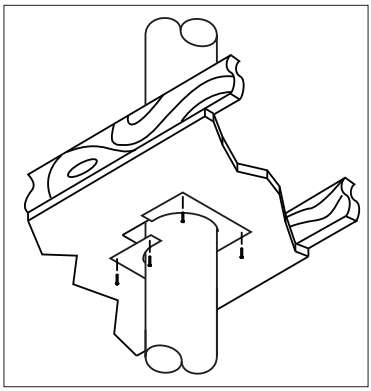

Figure 2

Table 3 - Wall & Ceiling Penetration Sizing Table

	VENT DIAMETER					
Termination	**2"**	**3"**	**4"**	**5"**	**6"**	**8"**
CONCENTRIC VERTICAL OR HORIZONTAL	4 1/8" 105mm	5 1/8" 130mm	6 1/8" 155mm	N/A	N/A	N/A
TWIN PIPE HORIZONTAL CLASS IIB	7 3/8" x 2 5/8" 187mm x 65mm	8 3/8" x 3 7/8" 212 x 85mm	9" x 4 3/8" 228 x 100mm	N/A	N/A	N/A
TWIN PIPE HORIZONTAL CLASS IIC **(Framing Dimensions)**	8" x 3" 200 x 77mm	8 7/8" x 3 7/8" 225 x 98mm	9 3/8" x 4 3/8" 238 x 112mm	N/A	N/A	N/A
SINGLE HORIZONTAL CLASS IIB	2 5/8" 65mm /	3 3/8" " 85mm	4" " 100mm	N/A	N/A	N/A
SINGLE HORIZONTAL CLASS IIC **(Framing Dimensions)**	3" 77mm	3 7/8 98mm	4 3/8 112mm	N/A	N/A	N/A
SINGLE WALL W/ LOCKING BAND VERTICAL	3 1/2"	4 1/4"	5 1/8"	6 1/2"	7 1/4"	9 1/4"
SINGLE PIPE NO LOCKING BANDS VERTICAL	3"	3 3/4"	4 1/2"	5 3/4"	6 3/4"	8 3/4"

POLYPRO SINGLE-WALL

JOINT CONNECTIONS

Locking Band (Old Design): Verify the gasket is seated evenly inside the groove in the female end of the pipe. For PP / Metal pipe with a locking tab, slide the Locking Band on to the male pipe section ***Fig.3a***. Insert locking tab into locking band recess, rotate button away from locking band clasp, insert pipe sections, push lock band clasp downward over the socket, disengage tab 1/4"-5/8" from socket.

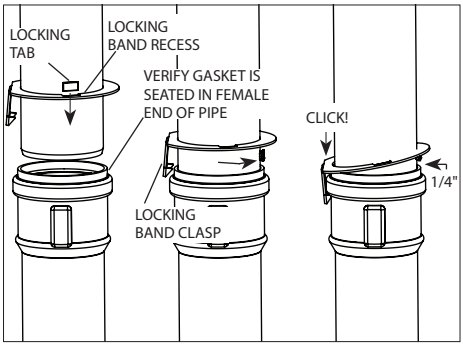

Figure 3a

Locking Clamp (New Design): Verify the gasket is seated evenly inside the groove in the female end. Assemble the joint by passing the male end of the Polypro Pipe through the Locking Clamp on the hose clamp side and into the female end of the PolyPro pipe, (***Fig.3b).*** Hook the Locking Clamp onto the gasket extrusion on the female end and tighten down on the hose clamp.

The new Locking Clamp design is backwards compatible with pipe sections designed for use with the Locking Band. Use pliers to break off the Locking Tab with a twisting motion. Once removed, install the pipe section following the Locking Clamp instructions. Locking Clamps can be purchased separately in packs of 12.

Fig.3a and b. **Screws are not allowed for joint connection. Never penetrate the wall of PolyPro Single-Wall vent pipe. (Exception: a stainless steel screw may be used outside the building on exterior termination fittings to orient an elbow, etc).**

- **IMPORTANT: Locking Bands or Locking Clamps are mandatory on all exhaust vent joints**

POLYPRO TO DURAVENT / SECURITY CHIMNEY METAL VENT CONNECTION

To transition from PolyPro to Duravent / Security metal vents that are UL 1738 or ULC 636 listed, an approved adapter must be used. Installation of PolyPro (female) to metal vent adapter (male) is the same process as illustrated in ***Fig.3a and b***.

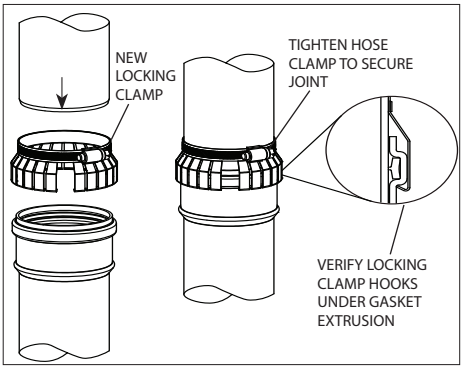

Figure 3b

APPLIANCE CONNECTION: 2" - 4"

1. If the appliance has a PVC/CPVC female outlet, use the Appliance Adapter/ PVC Adapter and Clamp. ***(Fig.4)***
2. If the appliance has a PVC/CPVC Male outlet use a matching PVC/CPVC coupling to convert to a female outlet.
3. If the appliance outlet has a rubber boot or Fernco-style appliance adapter, then the PolyPro vent pipe may attach directly to the appliance (***Fig.5***).
4. If the appliance has a FasNSeal outlet use the FasNSeal to PolyPro adapter.

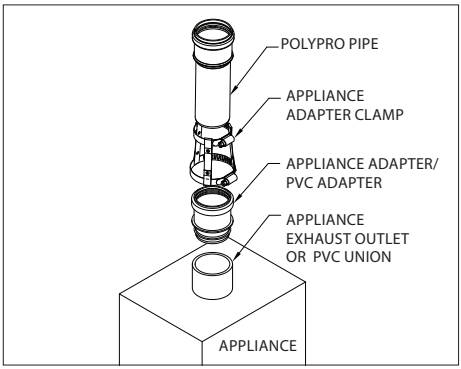

Figure 4

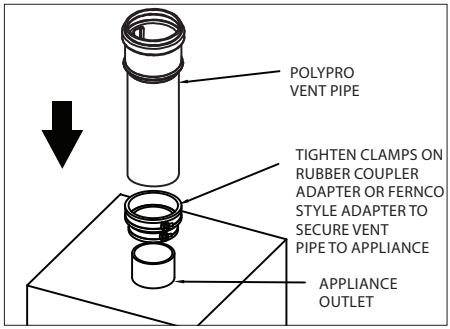

Figure 5

INSTALLATION

1. Pipe lengths may be cut to length ***(Fig.6). If the Locking Tab is removed use the new Locking Clamp (Fig.3b PPS-LC) or alternative clamp (Fig.4 PPS-PAC / PPS-LBC) for the connection.***
   - Cut square (not at an angle) to the end of the pipe.
   - Remove burrs before assembly.

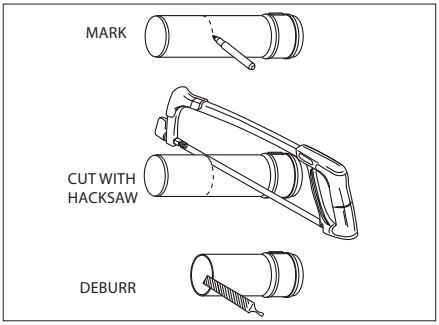

Figure 6

2. Check with appliance manufacturer for any restrictions or limits on vent length, number of elbows, etc.
3. **The slope of the vent pipe must be at least 1.8° (3/8" rise per ft run, 31mm per meter) back to the appliance.** Ensure there are no dips in the system where condensate can collect. ***(Fig.7)***

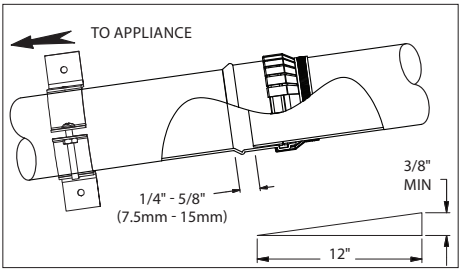

Figure 7

IMPORTANT

PP Pipe sections must be disengaged 1/4"-5/8" per joint (to allow for expansion) and sloped 1.8°(3/8"per ft) back to the appliance per *Fig.7* for proper condensate flow.

4. Every horizontal vent run must be supported. ***(Fig.8)***
5. The venting system shall be securely supported using suitable hangers. Supports made by DuraVent are recommended; field supplied supports, such as all-thread or plumbers tape, that are approved by the AHJ is acceptable. All supports must not deform or damage the vent. Ensure the load of the vent system is not supported by the appliance.
   - Duravent Wallstraps are designed for use with 3/8"-16 all-thread rod to extend from a wall, ceiling, or anchoring point.
6. Vertical pipe lengths must be supported every 10 feet (3 meters) or less. Horizontal pipe lengths must be supported every 5 feet (1.5 meters) or less. ***(Fig.8)***
7. Elbows and Tees are sufficiently supported by attaching a wall support within 1" to 12" of the pipe joint holding the Elbow or Tee. (***Fig.8)***
8. Vertical components can be insulated in unconditioned space or when run outside. Use mineral wool or housing insulation.
9. Use black UV protected components on venting installed on the outside.

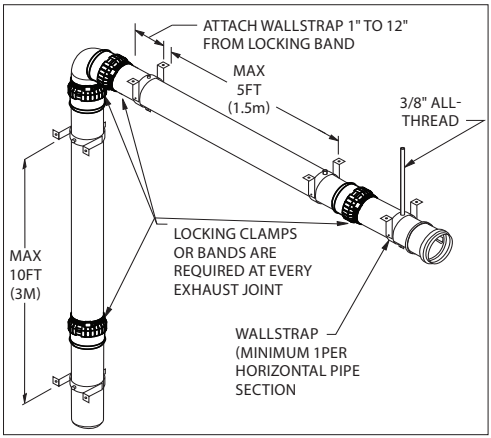

Figure 8

TERMINATIONS

Horizontal Single-Wall Pipe (Fig.9)

1. Locate penetration in wall.
2. Cut and frame hole. ***(Table 3)***
3. Attach Interior Wall Plate to interior wall.
4. Attach and seal Exterior Wall Plate to exterior wall.
5. Line up keyway, slide black pipe **(UV Protected)** or termination through plates.
6. If termination is used, attach with screws. Align tabs with pipe mounts.
7. Add additional components to raise vent level if desired (vent must be 12" above grade or average snow level).

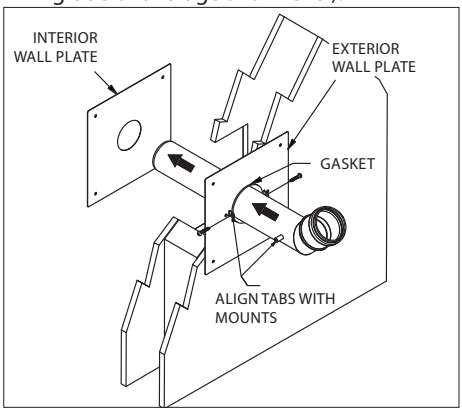

Figure 9

8. Remove gasket and install Bird Guard into end of pipe. ***(Fig.10)***
9. Install Poly Pro venting system from appliance to termination.

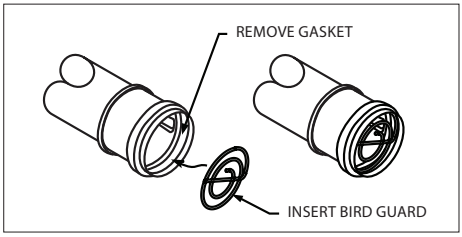

Figure 10

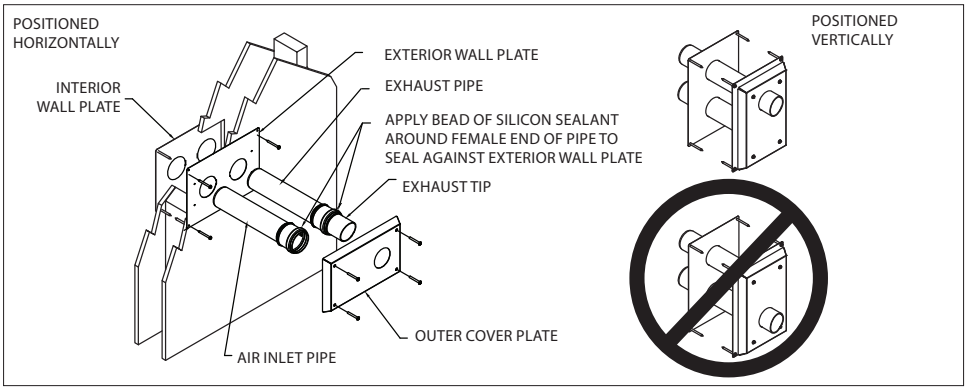

Figure 11

Horizontal Twin Pipe (Fig.11)

1. Locate penetration.
2. Cut and frame hole. ***(Table 3)***
3. Attach Interior Wall Plate to interior wall.
4. Attach and seal Exterior Wall Plate to exterior wall.
5. Slide pipes through outer plate.
6. Rotate pipes to slide pipe past keyway.
7. Slide Exhaust Tip into exhaust pipe.
8. Mount Outer Cover Plate to exterior wall plate.
9. Install Poly Pro venting system from appliance to termination.

Lochinvar / IPEX twin plate termination connector- 2" installation (Fig.12)

1. Slide PolyPro pipe w/ PVC adapter into oblong hole and down. Brackets will point away from the wall on the exterior of the house and rest between the two outward beads.
2. Install the termination assembly in accordance with appliance manufacturer's instructions.
3. Verify exhaust pipe cannot be removed from termination cap.

Lochinvar / IPEX twin plate termination connector- 3" & 4" installation (Fig.13)

1. Slide PolyPro Pipe w/ PVC adapter into small hole of retaining plate until it stops on the adapter collar.

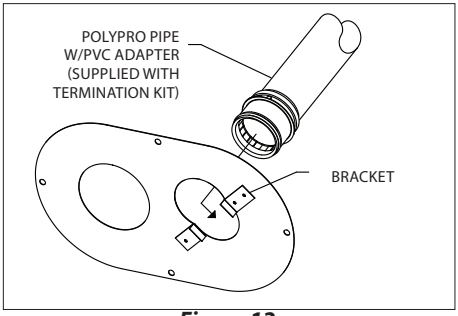

Figure 12

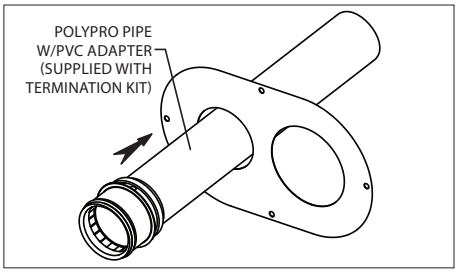

Figure 13

2. Finish installing the termination assembly in accordance with appliance manufacturer's instructions. PolyPro pipe is to be installed on the exhaust outlet.
3. Once securely installed to exterior, verify exhaust pipe cannot be removed from termination cap.

Stainless Horizontal (Fig.14)

1. Cut opening in the wall.
2. Add Trim Plates and Locking Clamp/ Band (if applicable) to final pipe length before installing. Make sure flanges are facing towards the wall. Use non-hardening sealant where necessary.
3. After Exterior Trim Plate is mounted to wall, measure 3" from Exterior Plate and cut off female pipe end and deburr. Seal pipe to Exterior Plate. Slide Bird screen over cut pipe end and tighten clamp.

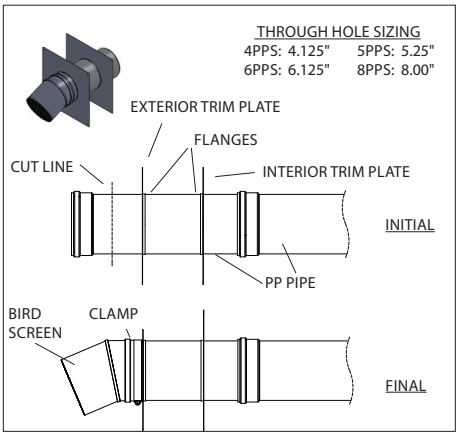

Figure 14

Vertical single pipe (Fig.15)

1. Follow instructions for Vertical Concentric Termination on page 16.
2. Attach Flashing to roof. ***(Fig.15)***
   - Use a rubber boot flashing or similar, ensure an effective, leak-proof seal is maintained.
   - Use **BLACK** UV protected pipe.
3. Maintain 12 in. (305mm) min. clearance above highest anticipated snow level, max 24 in. (610mm) above roof.

MULTIPLE VENTS IN ONE CONDUIT (Fig.16)

Multiple PolyPro vent systems may be installed within one conduit, including but not limited to masonry or factory-built chimneys. Listed 2"-4" components must be used, the conduit cannot be in use for another appliance, and the conduit (if pre-existing) must be inspected and deemed sound.

Upper supports may be field supplied and listed. The listing requires: Min thickness of 24 ga (0.020") SS, no larger than 18" Dia or 18" max length rectangle, 4 vent runs max per support. The listing requires clearance holes no larger than 5 1/8" Dia, with spacing 1 3/4" apart.

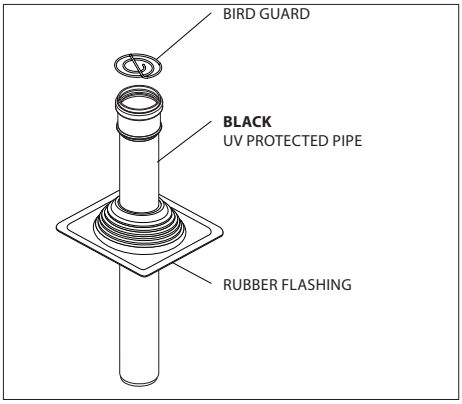

Figure 15- Vertical Pipe Termination

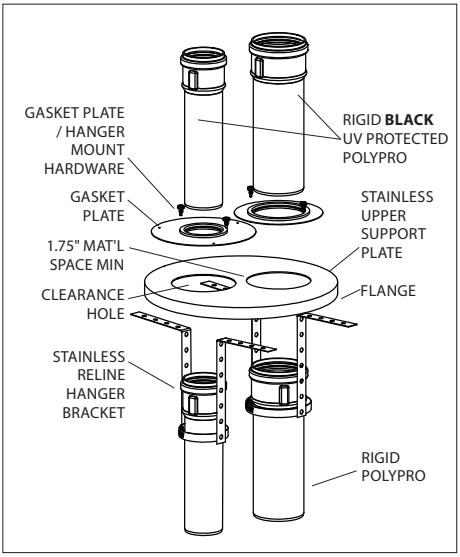

Figure 16

The Upper Support Plate (with a flange for BVent and factory built chimney, ***Fig.17***) must be affixed to the top of the conduit via screws. Anchor bolts must be used when attaching a flat support plate to the top of masonry or other chase (not shown). Support plate must be weather tight. The SS hanger bracket is installed under the gasket plate and affixed to the top of the support plate with screws (***Fig.17)***. Use non-hardening sealant as required.

The lower portion of the vent system must be supported and firestopped per applicable DuraVent instruction.
If there are multiple offsets in the conduit or a rigid Polypro install proves to be too challenging, PolyPro Flex is an acceptable replacement in the US. Refer to PolyPro Flex installation instructions for details on how to install.

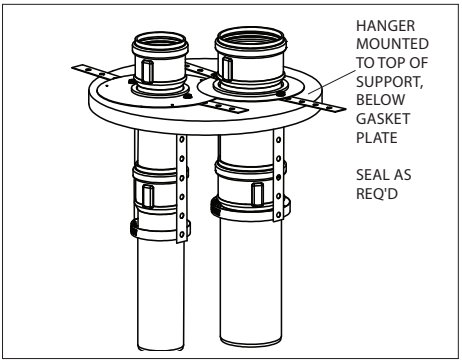

Figure 17

POLYPRO CONCENTRIC

JOINT CONNECTIONS

Install all sections of Concentric PolyPro venting with the female gasketed ends pointing away from the appliance and towards the termination. Secure the joints by:

1. Verify the gasket is seated evenly inside the groove.
2. Insert the male end of the pipe into the female end. Ensure you have a minimum of 1.2in (30.5mm) of vent overlap.
3. Use the two provided self-tapping screws to secure the outer vent sleeves at the joint, 3/4in from the edge and on opposite sides of the pipe. (***Fig.18***)

APPLIANCE CONNECTION

Begin assembling your vent install at the appliance flue outlet. If necessary, use an approved appliance adapter to transition from the appliance outlet to DuraVent Concentric PolyPro venting. ***(Fig.19)***

Warning

Use only the provided DuraVent self tapping screws, these screws have the correct length. Using screws with a longer length will damage the PolyPro vent.

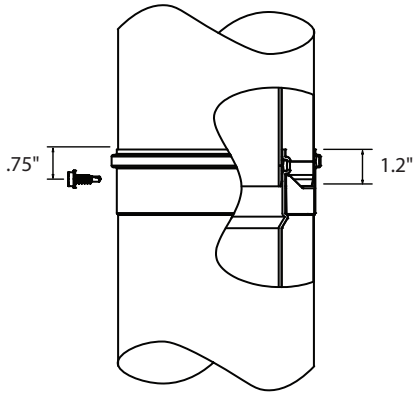

Figure 18

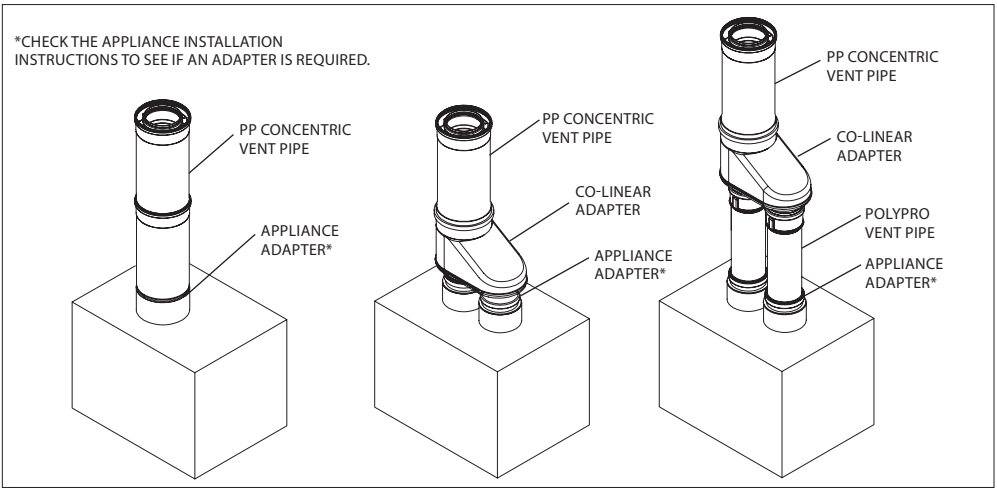

Figure 19

INSTALLATION

1. Certain Concentric PolyPro vent pipe may be cut to length. On the vent sections where this is allowed, a label specifying "Can be cut. This end only" will be placed on the male end. **If the vent section does not have this label then DO NOT cut the pipe.**
   Follow these steps to cut:
   - Mark where along the outer sleeve where you intend to cut. Make sure the mark is square (not at an angle) to the end of the pipe.
   - Use a hack saw with a metal cutting blade and cut along the mark through only the outer sleeve.
   - Mark the inner sleeve so it is 1/4in (7mm) to 1/2in (14mm) longer than the outer. Cut along the mark.
   - Remove burrs on the inner and outer sleeves before assembly.
2. Check with appliance manufacturer for any restrictions or limits on vent length, number of elbows, etc.
3. All vent pipes must have a minimum slope of at least 1.8° (3/8in rise per ft run, 31mm rise per meter run) back to the appliance**.** Ensure there are no dips in the system where condensate can collect. ***(Fig.20)***
4. The venting system shall be securely supported using suitable hangers. DuraVent hardware is recommended however field supplied support hardware, such as all-thread or plumbers tape, approved by the AHJ is acceptable. Hardware must be fixed to a rigid surface such as a wall, stud, or framing, and must not deform or damage the vent **(*Fig. 20 and 21*).** Make sure the load of the vent system is not supported by the appliance.
   - Vertical vent sections must be supported with Wallstraps every 6.5ft (2m) or less. ***(Fig.21)***

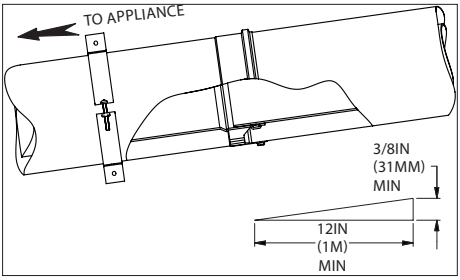

Figure 20

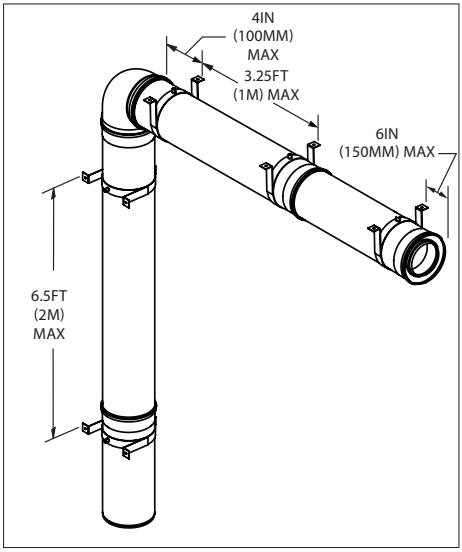

Figure 21

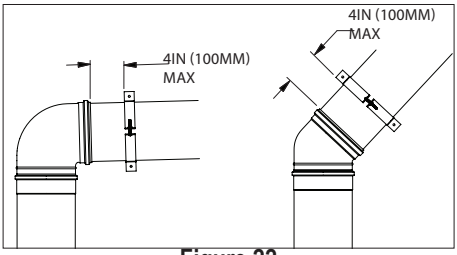

Figure 22

- All other vent orientations (horizontal, 45°, ect) must be supported with a Wallstrap at every joint within 6in (150mm) of the female end. Maximum space between Wallstraps is 3.25ft (1m).
- Elbows and Tees must be supported by a Wallstrap within 4in (100mm) after the Elbow or Tee section. ***(Fig.22)***
- 3/8"-16 or greater all-thread rod may be used as an extension with DuraVent Wallstraps.

5. Concentric Polypro adjustable vent pipe must be secured with the provided sheet metal screws at the sliding joint as well as at the male and female ends of the vent pipe. Adjustable sections can extend from a minimum of 11in (280mm) length to a maximum of 15.5in (393mm) length.
6. Polypro Concentric can be insulated in unconditioned space or when run outside. Use mineral wool or housing insulation.

TERMINATIONS

Horizontal Concentric Pipe (Fig.23)

1. Locate the penetration in the wall. Measure the intended path of the installation and make sure you have all the necessary vent lengths and components to complete the install.
2. Cut and frame the penetration following the dimensions in **Table 3**.
3. Center the Interior Wall Thimble Plate to the wall penetration and secure with the four provided screws. ***(Fig.23)***
4. Attach the Exterior Wall Thimble Plate to the Horizontal Vent Termination. Insert the assembly through the Interior Wall Plate from the exterior of the building. If necessary, cut the male end of the termination to the length needed for the install.
5. Center the Exterior Wall Plate to the wall penetration, use water resistant sealant or caulking on the exterior plate to prevent rain intrusion. Secure the Exterior Wall Plate in place using the provided screws. ***(Fig.23)***

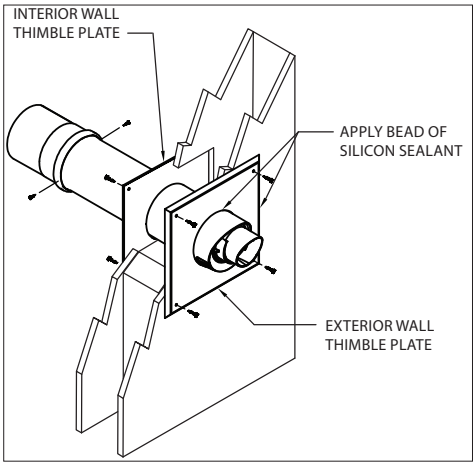

Figure 23

6. Vent termination should be installed flush against the Exterior Wall Plate. Orient the termination so the air intake slots face downward to prevent rain intrusion. Secure the termination orientation using screws at the joint connection.
7. Seal the gap between the termination and wall thimble, exposed screw heads, and the edges of the exterior wall thimble plate with water resistant sealant or caulking.
8. Assemble any remaining sections between the termination and the appliance.
   - If using a PolyPro Single-Wall to PolyPro Concentric adapter, install gaskets as shown in ***Fig.24*** before connecting to the vent pipe.
   - Assemble the PolyPro Single-Wall venting according to the DuraVent PolyPro Single-Wall instructions beginning on page 7.

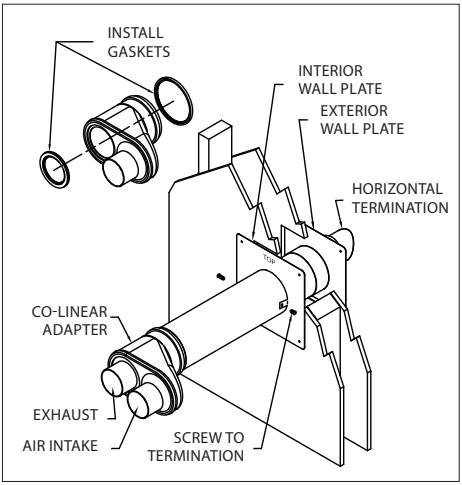

Figure 24

Vertical Concentric (Fig.27)

1. Locate the penetration in the roof (***Fig.25)***. Measure the intended path of the installation and make sure you have all the necessary components to complete the install.
2. Cut and frame the roof penetration following the dimensions in **Table 3**. Make sure no debris falls into the appliance intake or outlet.
3. Use the appropriate roof flashing for the roof type. On a pitched roof, use the Adjustable Flashing for 0/12 to 5/12 pitch and the Steep Roof Flashing for 5/12 to 12/12 pitched roofs. On a flat roof, use the aluminum Flat Roof Flashing.

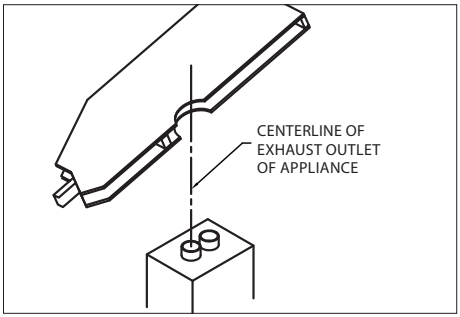

Figure 25

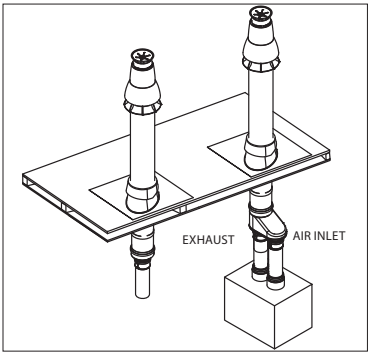

Figure 26

- On a pitched roof, install the Flashing with the upper edge under the existing roofing material. Center the Flashing over the roof framing. Then seal and nail the Flashing into place along the upper edge and down each side with 1" roofing nails. Do not nail the lower edge of the Flashing. Seal the top and upper sides of the Flashing, and all exposed nail heads with roofing compound or sealant.
- On a flat roof, nail and seal the Flashing on all sides with roofing compound. Do not put screws through the Flashing into the vent pipe. Follow all local building practices as needed.

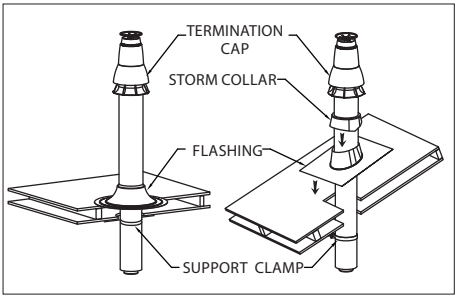

Figure 27

4. Insert the Vertical Termination or next section of vent through the Flashing and attach to the already installed venting.
   - If using a PolyPro Single-Wall to PolyPro Concentric adapter, install gaskets as shown in ***Fig.24*** before connecting to the vent pipe.
   - Assemble the PolyPro Single-Wall venting according to the DuraVent PolyPro Single-Wall instructions beginning on page 7. (***Fig.26)***
5. Attach the supplied support clamp around the termination and ensure the Vertical Termination is plumb using a level before tightening and securing the clamp to a rigid surface.
6. Apply a continuous ring of non-hardening sealant around the vent at the point where the Storm Collar will meet the chimney just above the flashing. Slide the Storm Collar down over the chimney to the top of the flashing. Seal the Storm Collar to the vent pipe with sealant.

MAINTENANCE

Have your venting system checked annually. This can be done easily by the same technician who inspects & services the appliance. Recommended areas to inspect are as follows:

- Check areas of the venting system which are exposed to the elements for wear or damage. If damage is found, the components should be replaced immediately.
- Where possible, look into the Termination Cap to verify no foreign material is there to block the vent. Remove any foreign material found.
- Check for soot deposits within the venting system and remove any accumulation with a soft brush. Ensure the appliance is running properly to prevent further soot buildup.
- Where practical, inspect joints to verify that no pipe sections or fittings have been disturbed, and consequently loosened. Also check mechanical supports such as wallstraps, support plates, etc for rigidity.

THIS PAGE IS INTENTIONALLY LEFT BLANK

THIS PAGE IS INTENTIONALLY LEFT BLANK

POLYPRO WARRANTY

DuraVent, Inc. ("DuraVent") provides this warranty for PolyPro® for ten years. Subject to the limitations set forth below, DuraVent warrants that its products will be free from defects in material or manufacturing, if properly installed, maintained and used. DuraVent products are fully warranted if installed only by a professional installer. This Warranty is transferable from the original homeowner to the buyer of the home within the warranted ten years. This warranty does not cover normal wear and tear, smoke damage or damage caused by chimney fires, acts of God, or any product that was: (1) purchased other than from an authorized DuraVent dealer, retailer or distributor; (2) modified or altered; (3) improperly serviced, inspected or cleaned; or (4) subject to negligence or any use not in accordance with the installation instructions included with the product as determined by DuraVent.

Installation instructions are available online at www.duravent.com under Support/Literature and through our Customer Service Department 800-835-4429 or customerservice@duravent.com.

DuraVent provides the following warranties for PolyPro: One Hundred Percent (100%) MSRP 10 years from the date of purchase.

All warranty obligations of DuraVent shall be limited to repair or replacement of the defective product pursuant to the terms and conditions applicable to each product line. These remedies shall constitute DuraVent's sole obligation and sole remedy under this warranty. This warranty provides no cash surrender value. The terms and conditions of this warranty may not be modified, altered or waived by any action, inaction or representation, whether oral or in writing, except upon the express, written authority of an executive officer of DuraVent.

This product is intended for venting only category II & IV appliances burning Natural Gas, Propane and Oil. All other fuels are not covered under this warranty.

LIMITATIONS ON POLYPRO INTERNET SALES: Notwithstanding any other terms or conditions of this PolyPro Warranty, DuraVent provides no warranty for PolyPro® if it is not installed by a qualified professional installer.

DuraVent must be notified and given the opportunity to inspect defective product prior to replacement under the terms of this limited lifetime warranty. All warranty claims must be submitted with proof of purchase. Labor and installation costs are not covered under this warranty. To obtain warranty service contact: DuraVent Warranty Service, 877 Cotting Ct., Vacaville CA 95688, or call 800-835-4429.

WHERE LAWFUL, DURAVENT DISCLAIMS ALL OTHER WARRANTIES, INCLUDING BUT NOT LIMITED TO IMPLIED WARRANTIES OF MERCHANTABILITY AND FITNESS FOR A PARTICULAR PURPOSE. IN NO EVENT WILL DURAVENT BE LIABLE FOR INCIDENTAL, CONSEQUENTIAL, PUNITIVE OR SPECIAL DAMAGES OR DIRECT OR INDIRECT LOSS OF ANY KIND, INCLUDING BUT NOT LIMITED TO PROPERTY DAMAGE AND PERSONAL INJURY. DURAVENT'S ENTIRE LIABILITY IS LIMITED TO THE PURCHASE PRICE OF THIS PRODUCT. SOME STATES DO NOT ALLOW LIMITATIONS ON IMPLIED WARRANTIES, OR THE EXCLUSION OR LIMITATION OF INCIDENTAL OR CONSEQUENTIAL DAMAGES, SO THE ABOVE LIMITATIONS AND EXCLUSIONS MAY NOT APPLY TO YOU. THIS LIMITED WARRANTY GIVES YOU SPECIFIC LEGAL RIGHTS, AND YOU MAY ALSO HAVE OTHER RIGHTS THAT VARY FROM STATE TO STATE.

For the most up-to-date installation instructions, see www.duravent.com

DuraVent®

Customer Service Support: 800-835-4429 • 707-446-4740 FAX www.duravent.com

PolyPro® is a registered trademark of DuraVent, Inc.
All rights reserved, ©2019

L273_820016825_Install Instructions_PolyPro_07-11-19_V1