REVISIONS				
REV.	DESCRIPTION	DRAWN BY	APPR BY	APPR DATE

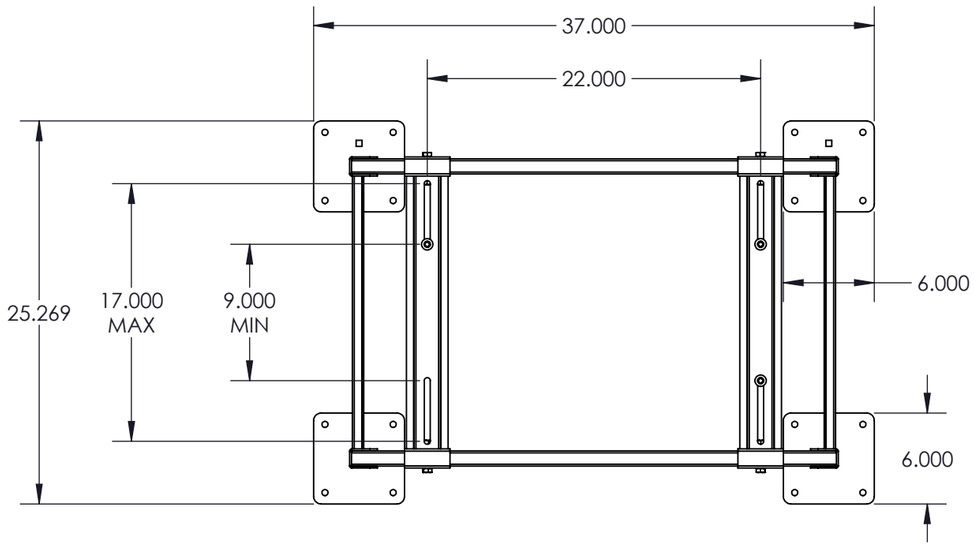

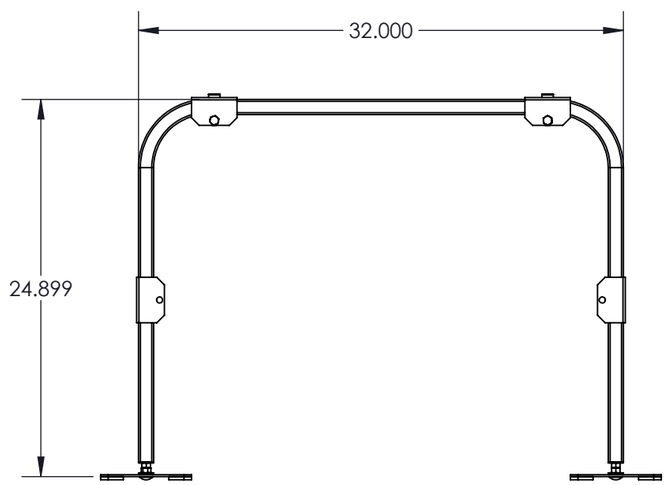

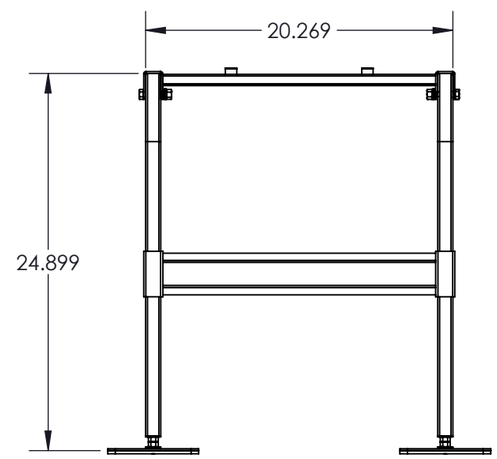

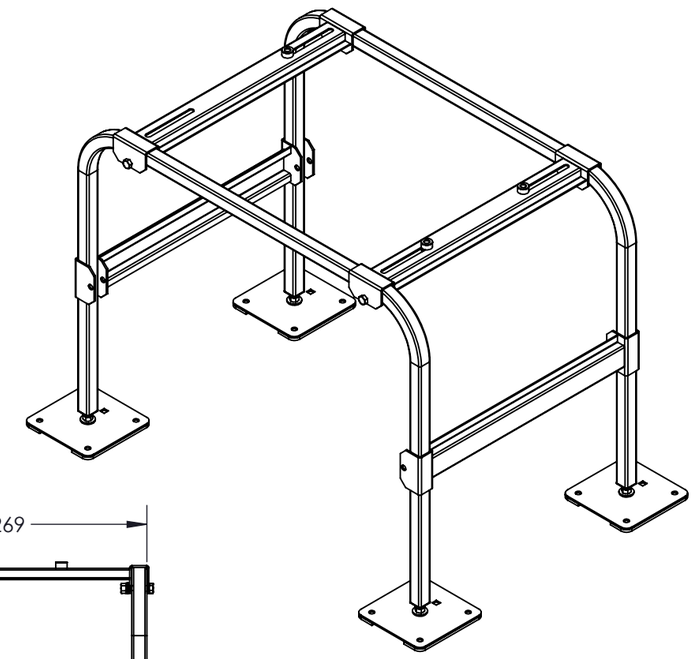

ALL DRAWINGS AND WRITTEN MATERIAL CONTAINED HEREIN ARE THE PROPERTY OF DIVERSITECH CORP AND MAY NOT BE DUPLICATED OR DISCLOSED AT ANY TIME UNLESS APPROVED IN WRITING BY DIVERSITECH CORP

INTERPRET THIS DRAWING IN ACCORDANCE WITH ASME Y14.5-2009 DIMENSIONING AND TOLERANCING STANDARDS

UNLESS OTHERWISE SPECIFIED DIMENSIONS & TOLERANCES ARE IN **INCHES**

DIM RANGE	TOLERANCE
0.02 - 0.12	±0.008
0.12 - 0.24	±0.012
0.24 - 1.18	±0.020
1.18 - 4.72	±0.031
4.72 - 15.75	±0.047
15.75 - 39.4	±0.079
39.4 +	±0.118

DEBURR ALL SHARP EDGES

DO NOT SCALE

THIRD ANGLE PROJECTION

DIVERSITECH

	NAME	DATE
DRAWN BY	apadilla	04 Mar 24
CAD APPR.		
DWG APPR.		

TITLE	SIZE
	B
DRAWING NUMBER	REVISION
QSMS2400-PAL	
SCALE: 1:1	SHEET 1 OF 5

QS-B-080321-0