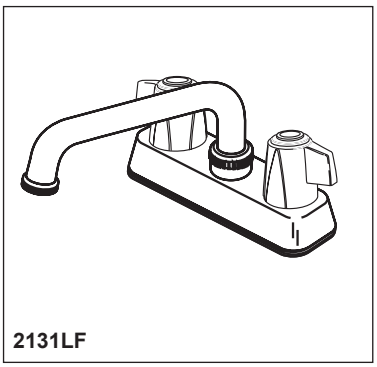

2131LF

see what Delta can do℠

SPECIALTY FAUCETS

■ Two Handle Laundry Faucet

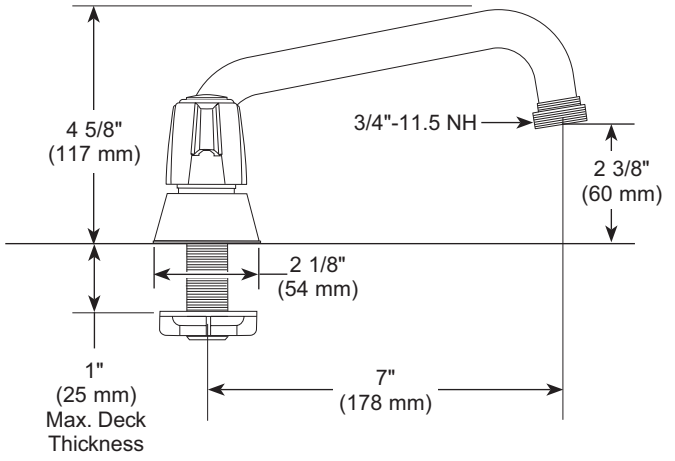

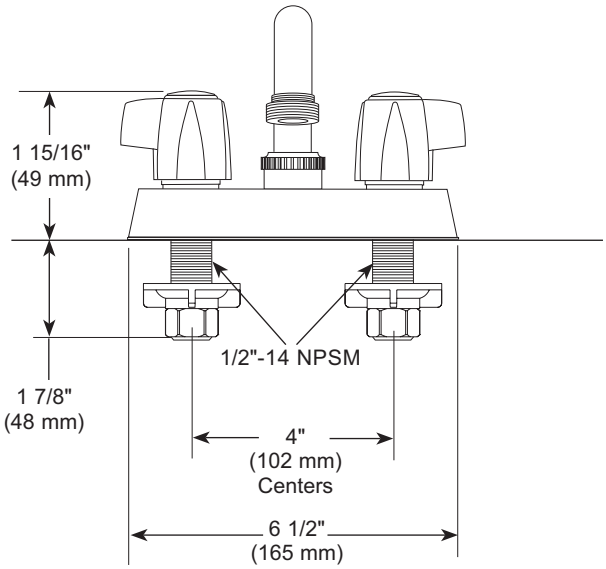

STANDARD SPECIFICATIONS:

- Two handle deck faucet for exposed mounting on 2 or 3 hole sinks
- Solid brass cast body
- Spout swivels 360˚
- Hot and cold stems are interchangeable
- Control mechanism shall be of the rotating cylinder type with stainless steel plate and 90˚ rotation, with replaceable non-metallic seats.
- 1/2"-14 NPSM threaded male shanks
- Spout has hose thread

WARRANTY

- Parts and Finish – Lifetime limited warranty; or for commercial purchasers, 10 years for multi-family residential (apartments and condominiums) and 5 years for all other commercial uses, in each case from the date the product is received by the original purchaser or their authorized representative (installation contractor, etc.).
- Please go to www.deltafaucet.com for the complete details of our limited warranty.

COMPLIES WITH:

- NSF/ANSI/CAN 61 & 372
- ASME A112.18.1/ CSA B125.1
- ICC/ANSI A117.1

Delta Faucet Company reserves the right (1) to make changes in specifications and materials, and (2) to change or discontinue models, both without notice or obligation. Dimensions are for reference only. See current full-line price book or www.deltafaucet.com for finish options and product availability.

Delta Faucet Company
55 E. 111th Street, Carmel, IN 46280
350 South Edgeware Road, St. Thomas, ON N5P 4L1
© 2025 Delta Faucet Company