CHA16-261/651 SERIES-BLOWER PARTS
FEBRUARY 23, 1990

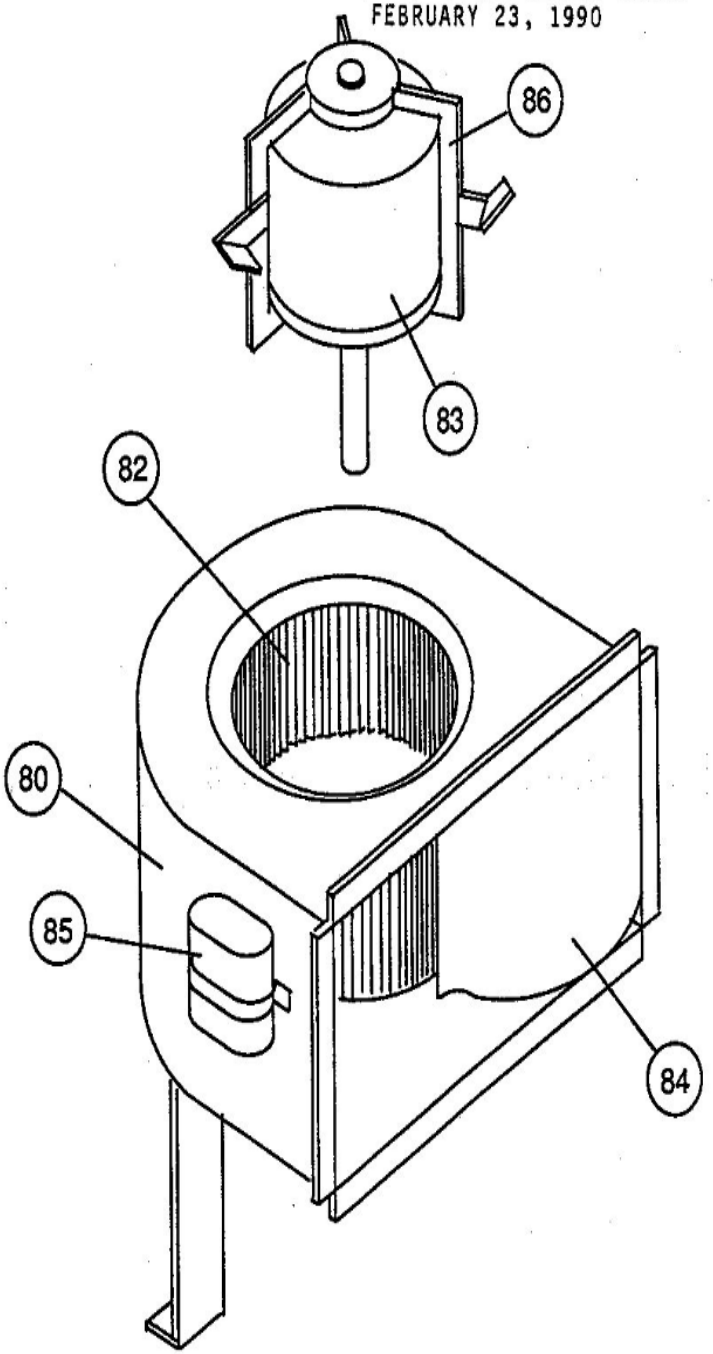

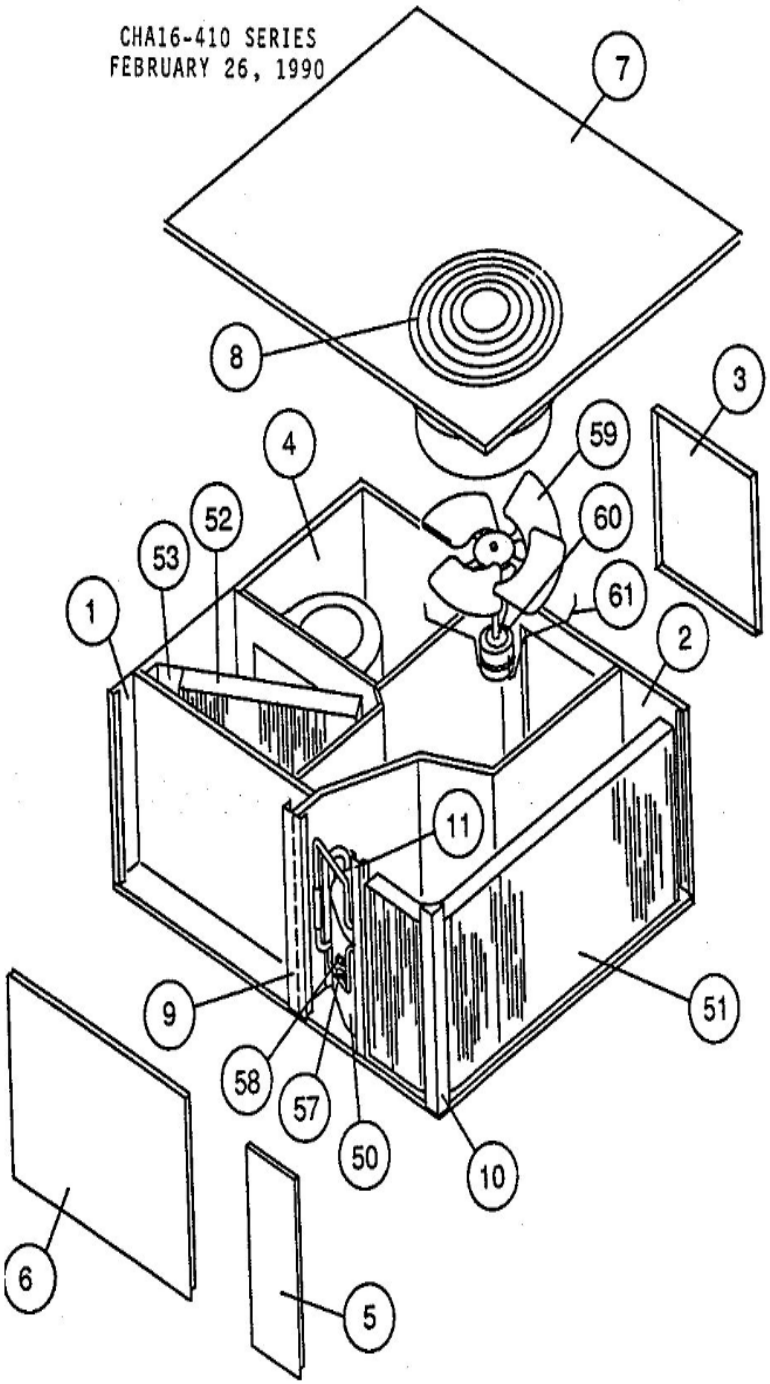
CHA16-410 SERIES
FEBRUARY 26, 1990
7
8
3
4
59
52
60
53
61
1
2
11
9
51
58
57
50
10
6
5

CHA16-411/413 Series Control Panel
January 20, 1993

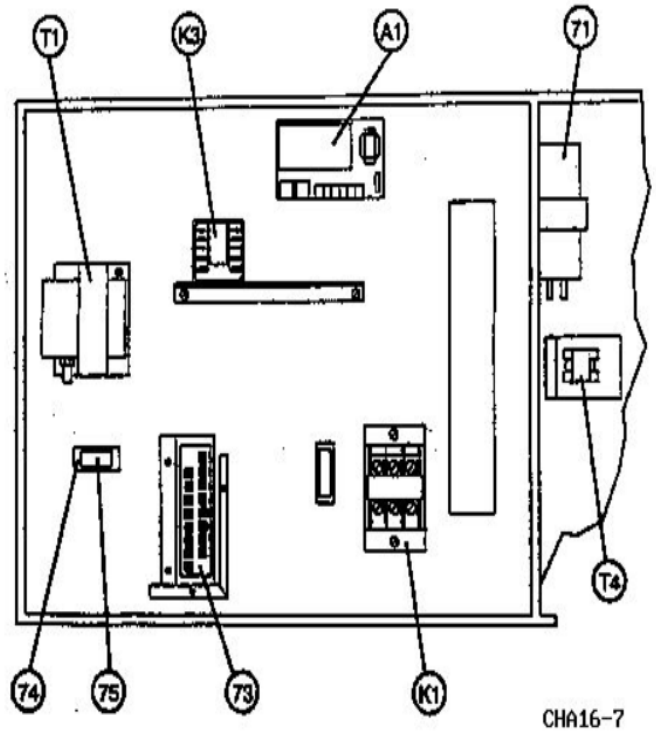

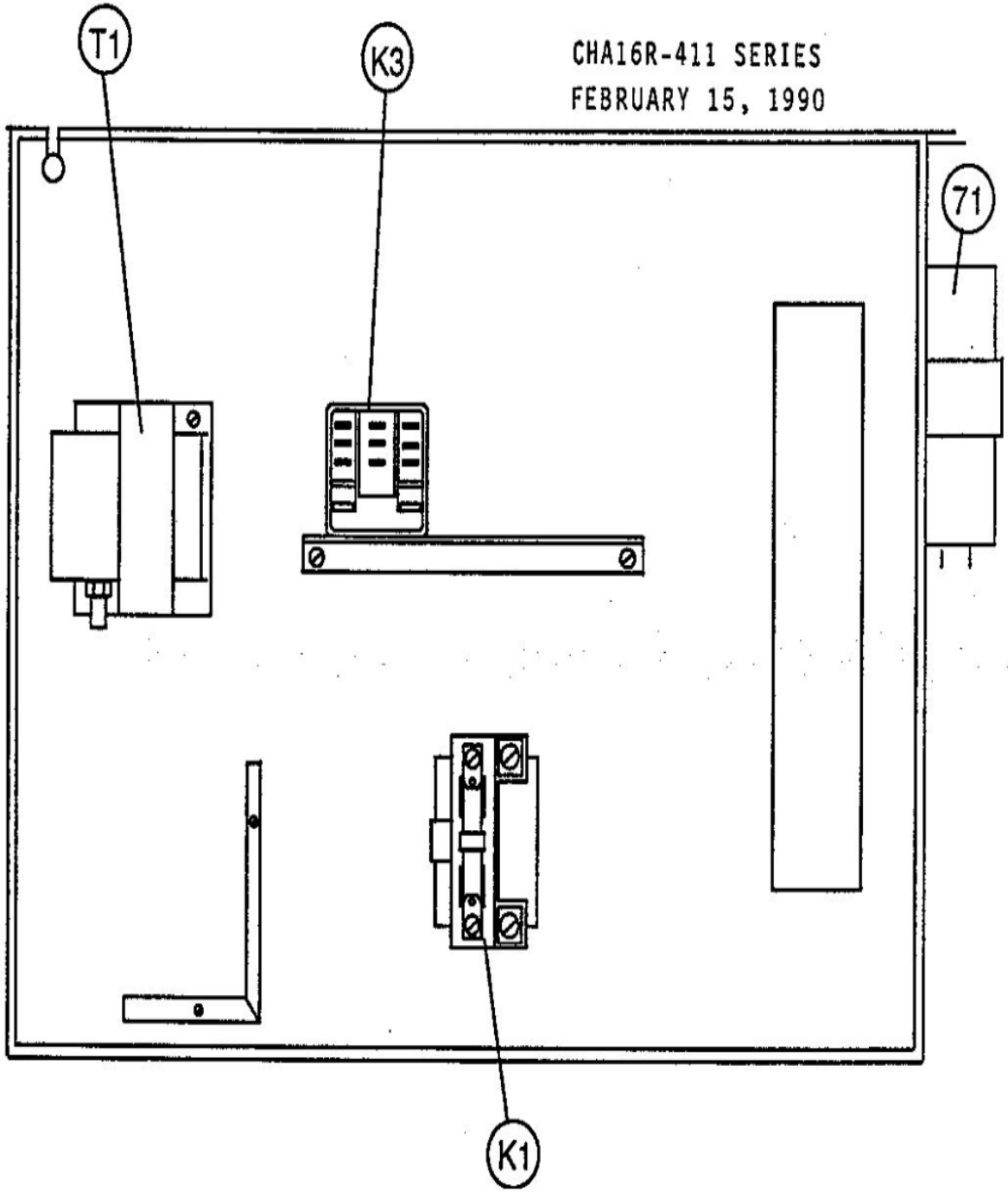
T1
K3
CHA16R-411 SERIES
FEBRUARY 15, 1990
71
K1

Model CHA16R-411

Revision Number - 3

*OPTIONAL PARTS-FIELD INSTALLED

Callout	Name	Quantity	Description
	SWITCH Cat #: 27H67 Model/Part #: 27H670 1	1	AIR FLOW
	SWITCH Cat #: 51H31 Model/Part #: 51H310 1	1	DIRTY FILTER
	THERMOSTAT Cat #: 97H52 Model/Part #: 97H520 1	1	ELEC-MODULE
	SENSOR Cat #: 97H54 Model/Part #: 97H540 1	1	DISCHARGE
	PLATE Cat #: LB-63405DB Model/Part #: LB-63405DB	1	REMOTE SENSOR
	HARNESS-WIRING Cat #: 76H93 Model/Part #: LB-63547CA	1	WIRE HARNESS, P39, J39 SA
	PLUG Cat #: 57A25 Model/Part #: P-8-10686	1	PLUG-3 CIRCUIT
*****	SENSOR Cat #: 97H53 Model/Part #: 97H530 1	1	(USED WITH NOVAR-ROOM AIR
*****	RETURN AIR KIT Cat #: 10J37 Model/Part #: LB-63352DB	1	INC NEXT 3 PARTS
*****	NOVAR CONTROL KIT Cat #: 91H21 Model/Part #: LB-63353CB	1	INC NEXT 5 PARTS

BLOWER PARTS

Callout	Name	Quantity	Description
	BAND-MOTOR Cat #: 62A57 Model/Part #: 62A570 1	1	(INTL ONLY-NO PAINT)
80	HOUSING-BLOWER Cat #: 40H52 Model/Part #: LB-78349CE	1	BLOWER HOUSING S.A.
80	HOUSING-BLOWER Cat #: 40H53 Model/Part #: LB-78349CF	1	(INTL ONLY)

Callout	Name	Quantity	Description
82	WHEEL-BLOWER Cat #: 21709 Model/Part #: LB-29333BH	1	"1/2""BORE,10-5/8"" X 8"""
83	MOTOR-BLOWER Cat #: 15B45 Model/Part #: 15B4501	1	"1/2HP,1350RPM,220-240/50/1 (INTL ONLY)"
83	MOTOR-BLOWER Cat #: 18H61 Model/Part #: 18H6101	1	"1/3HP,1075RPM,208-230/60/1 W/MOUNTS"
83	MOTOR-BLOWER Cat #: 28G16 Model/Part #: 28G1601	1	"1/2HP,1075RPM,460-575/60/1 W/ MOUNTS"
84	PLATE-CUTOFF Cat #: 46H31 Model/Part #: LB-82078D	1	CUTOFF PLATE 10X7
85	CAPACITOR-FAN MTR Cat #: 53H02 Model/Part #: 81A3801	1	"5MFD,370VAC(208-230V)"
85	CAPACITOR Cat #: 81A39 Model/Part #: 81A3901	1	"7MFD,370VAC(INTL)"
85	CAPACITOR Cat #: 81A40 Model/Part #: 81A4001	1	"10MFD,370VA(460 & 575V)"
86	ARM-MOTOR MTG Cat #: 98G22 Model/Part #: 98G2201	3	(INTL ONLY-NO PAINT)
86	MOUNT-MTR Cat #: 68H05 Model/Part #: LB-63637A	3	(INTL ONLY-PAINTED)

CABINET PARTS

Callout	Name	Quantity	Description
	NUT Cat #: 66A03 Model/Part #: 66A0301	4	GRILLE
	SUPPORT-FILTER Cat #: 77H99 Model/Part #: LB-62277CA	1	LEFT
	SUPPORT-FILTER Cat #: 77H98 Model/Part #: LB-62280CA	1	RIGHT
	FILTER	1	"16"" X 25"" X 1"""

Callout	Name	Quantity	Description
	Cat #: 30335 Model/Part #: P-8-7822		
1	PANEL Cat #: 46H22 Model/Part #: LB-81971DA	1	REAR
2	PANEL Cat #: 34H98 Model/Part #: LB-61518CA	1	SUPPLY & RETURN
3	COVER Cat #: 46H28 Model/Part #: LB-61561DA	2	SUPPLY & RETURN
4	PANEL Cat #: 41H08 Model/Part #: LB-61560DA	1	BLOWER ACCESS
5	PANEL Cat #: 46H25 Model/Part #: LB-82201D	1	COMP ACCESS
6	PANEL Cat #: 46H23 Model/Part #: LB-81978DA	1	FRONT ACCESS
7	PANEL-TOP Cat #: 46H27 Model/Part #: LB-61517CB	1	PANEL-TOP SA
8	GRILLE-DISCHARGE Cat #: 63K59 Model/Part #: 63K5901	1	GRILLE-DISCHARGE
9	MULLION Cat #: 79H05 Model/Part #: LB-82615DA	1	CENTER FRONT
10	POST-CORNER Cat #: 38H22 Model/Part #: LB-61497D	1	POST CORNER (5 pcs blk)
11	MULLION Cat #: 46H26 Model/Part #: LB-82202D	1	COIL

CONTROL PANEL PARTS

Callout	Name	Quantity	Description
	FUSE Cat #: 71G35 Model/Part #: 71G3501	1	"N3 TYPE,3.5AMP,125V (FOOTNOTE 1)"
71	CAPACITOR-FAN&RUN Cat #: 46F45 Model/Part #: 46F4501	1	"40+5MFD,370VAC(208/230V,1PH)"

Callout	Name	Quantity	Description
71	CAPACITOR-FAN MTR Cat #: 53H02 Model/Part #: 81A3801	1	"5MFD,370VAC(208-230V)"
71	CAPACITOR Cat #: 81A39 Model/Part #: 81A3901	1	"7MFD,370VAC(INTL)"
73	STRIP-TERMINAL Cat #: 78H58 Model/Part #: 78H5801	1	TERMINAL BOARD
74	HOLDER-FUSE Cat #: 99C32 Model/Part #: 99C3201	1	(INTL ONLY)
75	FUSE Cat #: 99C09 Model/Part #: 99C0901	1	"SP TYPE,3AMP,250V"
K1	CONTACTOR Cat #: 65C69 Model/Part #: 65C6901	1	"SPST,24V(1PH)"
K1	CONTACTOR Cat #: 38393 Model/Part #: P-8-7736	1	"3PDT,24V(3PH)"
K3	RELAY Cat #: 43H88 Model/Part #: 43H8801	1	"BLR RELAY,3PDT,24V(460V)"
K3	RELAY Cat #: 43H89 Model/Part #: 43H8901	1	"BLR RELAY,DPDT,24V"
T1	TRANSFORMER Cat #: 13H28 Model/Part #: 13H2801	1	"208/240V PRI,24V SEC,70VA, L/FUSE"
T1	TRANSFORMER Cat #: 51H79 Model/Part #: 51H7901	1	"480V PRI,24V SEC,70VA,L/FUSE"
T1	TRANSFORMER Cat #: 99C10 Model/Part #: 99C1001	1	"240V PRI,24V SEC,60VA,L/FUSE (INTL ONLY

CONTROL PARTS (ANDOVER CONTROLS)

Callout	Name	Quantity	Description
	SWITCH Cat #: 27H67 Model/Part #: 27H6701	1	AIR FLOW
	SWITCH Cat #: 51H31 Model/Part #: 51H3101	1	DIRTY FILTER
	SENSOR Cat #: 78H43 Model/Part #: 78H4301	1	DUCT
	HARNESS-WIRING Cat #: 24J33 Model/Part #: LB-64914B	1	HARNESS S.A. J39/P39
76	CONTROL Cat #: 24J35 Model/Part #: LB-83721CC	1	MODULE-W/THERM

COOLING PARTS

Callout	Name	Quantity	Description
	RELAY-OVERLOADCOMP-INTERNAL Cat #: Model/Part #:	1	
	THERMOSTAT Cat #: 38F91 Model/Part #: 38F9101	1	THERMOSTAT
	MOUNT PKG-COMP Cat #: 49A67 Model/Part #: 49A7001PR	1	49A7001PR COMP MT PK
	DRIER Cat #: 58A63 Model/Part #: 58A6301	1	SUCTION LINE
	VALVE-EXPANSION Cat #: 65G84 Model/Part #: 65G8401	1	VALVE, EXPANSION
	DRIER Cat #: 69H06 Model/Part #: 69H0601	1	LIQUID LINE
	FITTING PRESS TAP Cat #: 86G64 Model/Part #: 86G6401	2	FITTING, PRESSURE TAP
	STRAINER Cat #: 93G1601 Model/Part #: 93G1601	1	STRAINER-3/4 O.D.X .035
	WELL-THERMOMETER	1	THERMO-WELL ASSEMBLY

Callout	Name	Quantity	Description
	Cat #: 25G48 Model/Part #: LB-54392CB		
	SEAL Cat #: 46H30 Model/Part #: LB-81985C	1	DRAIN PAN
	STRAINER ASSY Cat #: 41H88 Model/Part #: LB-82514DC	1	W/TUBES
	VALVE CORE Cat #: 66820 Model/Part #: P-8-1897	1	VALVE, CORE 8075910047
	CAP-SEAL Cat #: 58114 Model/Part #: P-8-3187	1	CAP, BRASS
	SHIELD-RAIN Cat #: 32621 Model/Part #: P-8-6142	1	SHIELD, MOTOR
50	COMPRESSOR Cat #: 29C90 Model/Part #: 29C9001	1	"3TON,200-230/60/3,COPE"
50	COMPRESSOR Cat #: 39H10 Model/Part #: 39H1001	1	"3TON,575/60/3,COPE"
50	COMPRESSOR Cat #: 68J59 Model/Part #: 50F5801	1	"3TON,460/60/3,COPE"
50	COMPRESSOR Cat #: 99C64 Model/Part #: 99C6401	1	"3TON,208-230/60/1,COPE"
51	COIL-OUTDOOR Cat #: 41H29 Model/Part #: LB-62560CB	1	W/MANIFOLD
52	COIL-INDOOR Cat #: 41H35 Model/Part #: LB-82503CB	1	W/MANIFOLD
53	PAN-DRAIN Cat #: 46H29 Model/Part #: LB-61400CC	1	DRAIN PAN S.A.
58	SWITCH-LO PRESS Cat #: 85C23 Model/Part #: 85C2301	1	"IN 55PSIG,OUT 25PSIG"
59	FAN Cat #: 99C63 Model/Part #: 99C6301	1	"1/2""BORE,20""DIA,4 BLADE"
60	MOTOR-FAN	1	"1/6HP,1075RPM,208-

Callout	Name	Quantity	Description
	Cat #: 27H45 Model/Part #: 27H4501		230/60/1"
60	MOTOR-FAN Cat #: 50F11 Model/Part #: 50F1101	1	"1/5HP,900RPM,220-240/50/1"
60	MOTOR-FAN Cat #: 87268 Model/Part #: P-8-11026	1	"1/4HP,1075RPM,460/60/1"
61	BRACKET-MTR MTG Cat #: 63K66 Model/Part #: 63K6601	1	MOUNT-MOTOR BRKT ASSY
S4	SWITCH-HI PRESS Cat #: 86H31 Model/Part #: 86H3101	1	OUT 410PSIG

Note:

Note1: EARLIER PRODUCTION UNITS HAD FUSED TRANSFORMERS WHICH USED THIS FUSE WHICH CAN BE ORDERED FOR REPLACEMENT.