1-1/2" White PVC P-Trap w/ Threaded Weld PVC Adapter

(3 Nuts)

FEATURES
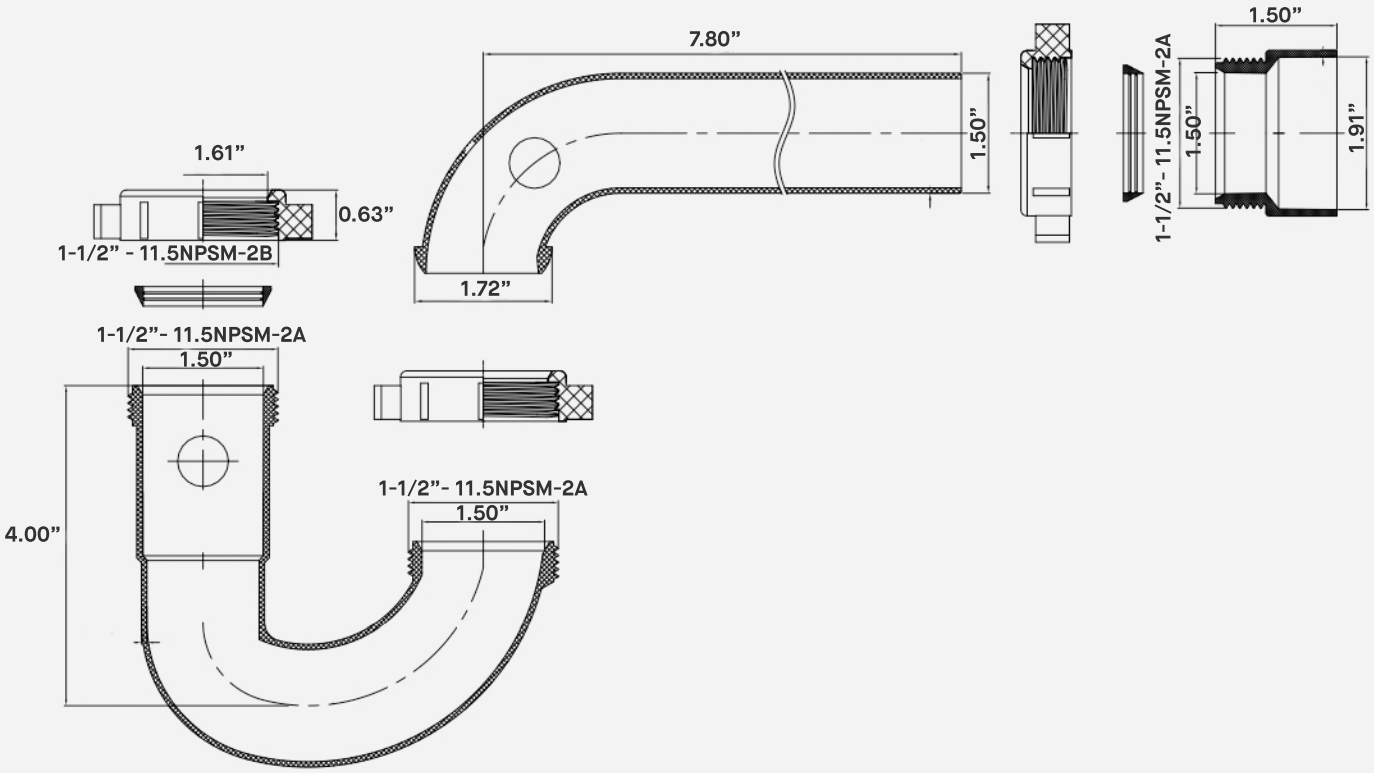
- **PVC Construction** – for excellent resistance to weathering and strong, long-lasting performance.