DRAWING NO. SD079848

REV	DATE	DESCRIPTION	ECO	BY	C'H'K.
C	05/19/2014 00:00:00 AM	NOTE ADDED AS PER ECO MARKUP	36169	AD	BSB

CATALOG NUMBER (10)	STRANDED COPPER CONDUCTOR ACCOMMODATED			BOLT SIZE	METRIC BOLT SIZE	DIMENSIONS							
	CODE (AWG)	NAVY	METRIC SIZE (CLASS 2)			B	C	K DIA	L	N	O.D.	T REF.	Z MIN.
YA39L	750 Kcmil	-----	375mm² STR	5/8	M16	1.42 [36]	1.91 [49]	.69 [18]	3.57 [93]	.66 [17]	1.30 [33]	.27 [7]	.67 [17]
YA39L2				7/8	----			.94 [24]	4.10 [104]	.88 [22]			.89 [23]
YA39L9				1-1/4	----			1.31 [33]	4.85 [123]	1.25 [32]			1.27 [32]
YA39L6				1/2	M12	1.42 [36]	1.91 [49]	.53 [13]	3.41 [87]	.53 [13]	1.30 [33]	.27 [7]	.55 [14]
YA40L	800 Kcmil		400mm² STR [26.1]	5/8	M16	1.42 [36]	1.98 [50]	.69 [18]	3.81 [97]	.66 [17]	1.35 [34]	.30 [8]	.67 [17]
YA41L	850 Kcmil	-----	-----	5/8	M16	1.88 [48]	2.01 [51]	.69 [18]	4.15 [105]	.66 [17]	1.38 [8]	.31 [8]	.67 [17]

CONNECTOR SIZE	TOLERANCES					
	B	C	K DIA.	L	N	O.D.
-8C THRU -25	±.06	±.04	±.02	±.09	±.03	±.01
-26 THRU -34	±.08	±.04	±.02	±.12	±.03	±.01
-35 AND UP	±.09	±.06	±.02	±.15	±.06	±.01

TOLERANCE BLOCK

INSTALLATION TOOLING (# CRIMPS)

CATALOG NO.	COLOR CODE	DIE INFORMATION		MECHANICAL RATCHET				HYDRAULIC							DIELESS (# CRIMPS)	WIRE STRIP LENGTH
		DIE INDEX	TYPE	YIMRTC (5)	OUR840	MD6 MD7	MD6--R2 MD7-34R	Y500CT PATMD6 PAT600	Y34A Y34B Y34BH (7)	Y35, Y39 Y750, BAT35 PAT750	Y46 PAT46 (4)	Y45 (3)	Y48B	Y60BHU		
YA39L YA39L2 YA39L9 YA39L6	BLACK	24	BLACK DIE SET	----	----	----	----	----	----	U39RT(2)	U39RT(2) P39RT(2)	U39RT(2) S39RT(2)	C39R(1) C36AR(1)	L39RT(1) L36ART(1)	HYDRAULIC: Y644 (1) Y81KFT (3) Y4PC834 (3)	1-15/16"
			NEST	----	----	-----	-----	-----	----	----	P39D(1)	----	C39D(1)	----		
			INDENTOR								P44PR		Y48PR			
YA40L	ORANGE	25	ORANGE DIE SET	----	----	----	----	----	----	----	P40RT(3)	S40RT(3)	C40R(1)	L40RT(1)		1-15/16"
			NEST	----	----	----	----	----	----	----	P40D(1)	----	C40D(1)	----		
			INDENTOR								P44PR		Y48PR			
YA41L	GOLD	26	GOLD DIE SET	----	----	----	----	----	----	----	----	----	----	----		1-15/16"
			NEST	----	----	----	----	----	----	----	P41D(1)	----	C41D(1)	----		
			INDENTOR								P44PR		Y48PR			

NOTES:

1. MATERIAL: COPPER TUBING.
2. FINISH: TIN PLATED.
   "FOR ALTERNATIVE FINISH ADD ONE OF THE FOLLOWING SUFFIXES:
   NICKEL = NK, LEAD = LD, BARE = BR"
3. CATALOG # PT6515 ADAPTOR IS REQUIRED TO USE "U" DIES IN Y45 SERIES TOOLS.
4. CATALOG # PUADP-1 ADAPTOR IS REQUIRED TO USE "U" DIES IN Y46 SERIES TOOLS.
5. PERMANENT DIE IN TOOLING.
6. DIMENSIONS IN BRACKETS [ ] ARE IN MILLIMETERS ROUNDED OFF TO THE NEAREST MILLIMETER, UNLESS OTHERWISE NOTED, AND ARE FOR REFERENCE ONLY.
7. FOR USE BY CUSTOMERS THAT HAVE THIS HYPRESS™. NO NEW Y34A HYPRESS™ TOOLS ARE BEING PROCESSED. Y34A USES A--D NEST DIES ONLY.
8. CONNECTORS ARE UL LISTED; UNDRILLED VERSIONS ARE NOT UL LISTED.
9. CONNECTORS ARE CSA CERTIFIED. UNDRILLED VERSIONS ARE NOT CSA CERTIFIED.
10. FOR UNDRILLED VERSIONS ADD SUFFIX "-U" TO END OF CATALOG NUMBER. FOR UNDRILLED VERSIONS, USE D MIN. = N MAX. + Z MIN.
11. "X", "W-RT", "W-VT", "U" & "L" DIE SETS ARE COLOR CODED. "A", "B" AND "C" DIES ARE NOT COLOR CODED. NESTS AND INDENTOR TYPE ARE NOT COLOR CODED.

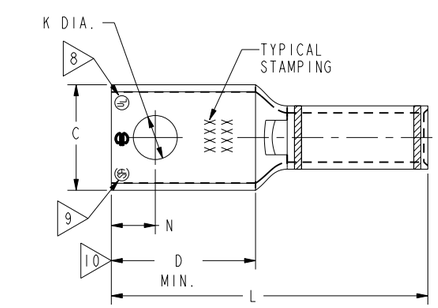

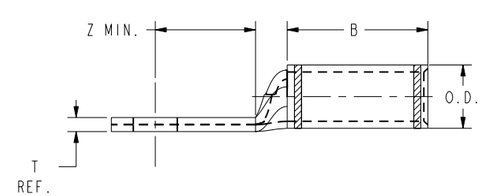

REFERENCE: SE209240

TO ORDER BURNDY® PRODUCTS CALL

UNITED STATES
1-800-346-4175 (LONDONDERRY, NH)

CANADA:
1-800-361-6975 (QUEBEC)
1-800-387-6487 (ALL OTHER PROVINCES)

FOR PRODUCT INFO: http://www.burndy.com

COPPER HYLUG™

ITEM NO: N/A			
CAT. NO: YA-L, YA-L-TC-, YAV-TC-			
DRAWN BY: J MICHAUD	8/17/94		
CHECKER: D FILLION	10/3/94		
DSN APPVL: C PALAGI	8/19/94		
MFG APPVL: N/A	N/A		
QA APPVL: C.ACKERMAN	9/30/94		
MKT APPVL: T.NELSON	9/7/94	SCALE: 1:1	
PROD FAM: CM&R COMPRESSION		DRAWING NO	REV
PROJECT #: --	SIZE	SD079848	C
DOCUMENT TYPE: Sales	D		
REL LEVEL: Released		SHEET 15 OF 17	

BURNDY

REV: PE0200