DRAWING NO. SD035209

REV	DATE	DESCRIPTION	ECO	BY	CHK.
C	3/20/2009 12:00:00 AM	REDRAWN INTO PRO-E	17207	DG	MA

CATALOG NUMBER (10)	STRANDED COPPER CONDUCTOR ACCOMMODATED: CODE (AWG)	NAVY	METRIC SIZE (CLASS 2)	BOLT SIZE	METRIC BOLT SIZE	DIMENSIONS: B	C	E	K DIA.	L	N	O.D.	T REF.	Z MIN.
YA352L	550 kcmil	-----	-----	3/8	-----	1.69 [43]	1.65 [42]	1.13 [29]	.44 [11]	4.64 [118]	.50 [13]	1.13 [29]	.25 [6]	.52 [13]
YA352LN				1/2	M12	1.69 [43]	1.65 [42]	1.75 [44]	.56 [14]	5.51 [140]	.63 [16]	1.13 [29]	.25 [6]	.64 [16]
YA362L	600 kcmil	-----	300mm² STR [23.1]	3/8	-----	1.38 [35]	1.74 [44]	1.13 [29]	.44 [11]	4.36 [111]	.50 [13]	1.19 [30]	.27 [7]	.52 [13]
YA36L2TC38				3/8	-----	1.38 [35]	1.74 [44]	1.00 [25]	.40 [10]	4.23 [107]	.50 [13]	1.19 [30]		.52 [13]
YA362LN				1/2	M12	1.38 [35]	1.74 [44]	1.75 [44]	.56 [14]	5.23 [133]	.63 [16]	1.19 [30]		.64 [16]
YA372L	650 kcmil	-----	-----	3/8	-----	1.39 [35]	1.80 [46]	1.13 [29]	.44 [11]	4.40 [112]	.50 [13]	1.23 [31]	.27 [7]	.52 [13]
YA372LN				1/2	M12	1.39 [35]	1.80 [46]	1.75 [44]	.56 [14]	5.27 [134]	.63 [16]	1.23 [31]		.64 [16]

CONNECTOR SIZE	TOLERANCES: B	C	E	K DIA.	L	N	O.D.
-8C THRU -25	±.06	+.04 -.02	±.02	±.02	±.09	±.03	±.01
-26 THRU -34	±.08	+.04 -.02	±.02	±.02	±.12	±.03	±.01
-35 AND UP	±.09	±.06	±.02	±.02	±.15	±.06	±.01

TOLERANCE BLOCK

INSTALLATION TOOLING (# CRIMPS)

CATALOG NO.	COLOR CODE	DIE INFORMATION: DIE INDEX	TYPE	MECHANICAL RATCHET: Y2MR (5)	OUR840	MD6 MD7	MD6--2 BAT500	MD7-34R	HYDRAULIC: Y34A (7) Y34B Y34BH	Y35,Y39 Y750,BAT35 BAT750	Y46 (4)	Y45 (3)	Y48B	Y60BHU	DIELESS (# CRIMPS)	WIRE STRIP LENGTH
YA352L YA352LN	YELLOW	21	YELLOW DIE SET	-----	-----	-----	-----	-----	-----	U35RT(2)	U35RT(2)	U35RT(2)	-----	L35RT(1)	HYDRAULIC: Y644M(1) BAT644M(1)	1-3/4"
			NEST	-----	-----	-----	-----	-----	-----	-----	P35D(1)	-----	C35D(1)	-----		
			INDENTOR								P44PR		Y48PR			
YA362L YA36L2TC38 YA362LN	GREEN	22 472	GREEN DIE SET	-----	-----	-----	-----	-----	-----	U36RT(2) U32ART(2)	U36RT(2) U32ART(2)	U36RT(2) U32ART(2)	C36R(1) C32AR(1)	L36RT(1) L32ART(1)		1-3/4"
			NEST	-----	-----	-----	-----	-----	-----	-----	P36D(1)	-----	C36D(1)	-----		
			INDENTOR								P44PR		Y48PR			
YA372L YA372LN	ORANGE	23	ORANGE DIE SET	-----	-----	-----	-----	-----	-----	U37RT(2)	U37RT(2)	U37RT(2)	C37R(1)	L37RT(1)		1-15/16"
			NEST	-----	-----	-----	-----	-----	-----	-----	P37D(1)	-----	C37D(1)	-----		
			INDENTOR								P44PR		Y48PR			

NOTES:

1. MATERIAL: COPPER TUBING.
2. FINISH: TIN PLATED.
3. (3) CATALOG # PT6515 ADAPTOR IS REQUIRED TO USE "U" DIES IN Y45 SERIES TOOLS.
4. (4) CATALOG # PUADP-1 ADAPTOR IS REQUIRED TO USE "U" DIES IN Y46 SERIES TOOLS.
5. (5) PERMANENT DIE IN TOOING.
6. DIMENSIONS IN BRACKETS [ ] ARE IN MILLIMETERS ROUNDED OFF TO THE NEAREST MILLIMETER,UNLESS OTHERWISE NOTED, AND ARE FOR REFERENCE ONLY.
7. (7) FOR USE BY CUSTOMERS THAT HAVE THIS HYPRESS™ NO NEW Y34A HYPRESS™ TOOLS ARE BEING PROCESSED. Y34A USES A--D TYPE NEST DIES.
8. (8) CONNECTORS ARE UL LISTED; UNDRILLED VERSIONS ARE NOT UL LISTED.
9. (9) CONNECTORS ARE CSA CERTIFIED; UNDRILLED VERSIONS ARE NOT CSA CERTIFIED.
10. (10) FOR UNDRILLED VERSIONS ADD SUFFIX "-U" TO END OF CATALOG NUMBER. FOR UNDRILLED VERSIONS, USE D MIN. = N MAX. + E MIN. + Z MIN.
11. "X", "W-RT", "W-VT", "U", & "L" DIE SETS ARE COLOR CODED. "A", "B", AND "C" DIES ARE NOT COLOR CODED. NESTS AND INDENTOR TYPE ARE NOT COLOR CODED.

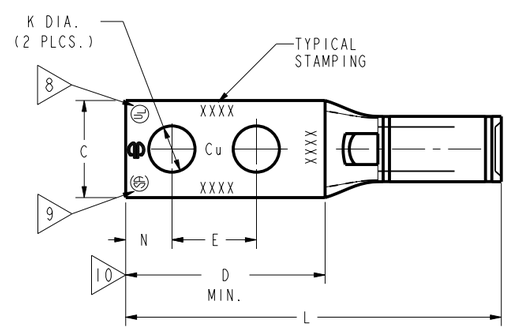

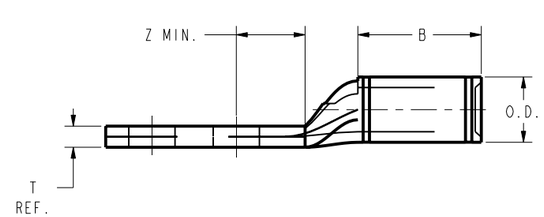

REFERENCE :SE209512
SUPERSEDES:SC91923

TO ORDER BURNDY® PRODUCTS CALL

UNITED STATES
1-800-346-4175 (LONDONDERRY, NH)

CANADA:
1-800-361-6975 (QUEBEC)
1-800-387-6487 (ALL OTHER PROVINCES)

FOR PRODUCT INFO: http://www.burndy.com

COPPER HYLUG™

ITEM NO:	N/A
CAT. NO:	YA-2L, YA-L-2TC, YA--2NT, YA-4L (TABLE)
DRAWN BY:	J.MICHAUD 11/18/94
CHECKER:	D.FILLION 11/18/94
DSN APPVL:	C.PALAGI 10/24/94
MFG APPVL:	-- --
QA APPVL:	C.ACKERMAN 11/17/94
MKT APPVL:	T.NELSON 11/10/94
PROD FAM:	--
PROJECT #:	--
DOCUMENT TYPE:	Sales
REL LEVEL:	Released
SIZE	D
DRAWING NO	SD035209
REV	C
SCALE:	NTS
SHEET 12 OF 18	

BURNDY

REV: PE0200