DRAWING NO.
SD035209

REV	DATE	DESCRIPTION	ECO	BY	C'H'K.
E	06/18/2011 00:00:00 AM	TOOL UPDATED AS PER MARKUP CHANGE # OF CRIMPS FROM 2 TO 1 ON U31ART TOOL	24861	AD	MA

CATALOG NUMBER 11	STRANDED COPPER CONDUCTOR ACCOMMODATED			BOLT SIZE	METRIC BOLT SIZE	DIMENSIONS								
	CODE (AWG)	NAVY	METRIC SIZE (CLASS 2)			B	C	E	K DIA.	L	N	O.D.	T REF.	Z MIN.
YA332L	450 kcmil	-----	-----	3/8	-----	1.50 [38]	1.48 [38]	1.06 [27]	.40 [10]	4.14 [105]	.41 [10]	1.01 [26]	.21 [5]	.42 [11]
YA332LN				1/2	M12	1.50 [38]	1.48 [38]	1.75 [44]	.56 [14]	5.23 [133]	.63 [16]	1.01 [26]	.21 [5]	.64 [16]
YA34L2TC14E2	500 kcmil	-----	240mm² STR [23.1]	1/4	M6	1.27 [32]	1.55 [39]	.75 [19]	.27 [7]	3.44 [87]	.31 [8]	1.06 [27]	.23 [6]	.33 [8]
YA342L				3/8	-----			1.06 [27]	.40 [10]	3.94 [100]	.41 [10]			.42 [11]
YA34L2TC38				3/8	M10			1.00 [25]	.41 [10]	3.88 [99]	.41 [10]			.42 [11]
YA34L2NTC38				3/8	M10			1.75 [44]	.41 [10]	4.63 [118]	.41 [10]			.42 [11]
YA34L2TC12				1/2	M12			1.25 [32]	.52 [13]	4.38 [111]	.53 [13]			.55 [14]
YA342LN				1/2	M12	1.27 [32]	1.55 [39]	1.75 [44]	.56 [14]	5.06 [129]	.63 [16]	1.06 [27]	.23 [6]	.64 [16]

CONNECTOR SIZE	TOLERANCES						
	B	C	E	K DIA.	L	N	O.D.
-8C THRU -25	±.06	±.04	±.02	±.02	±.09	±.03	±.01
-26 THRU -34	±.08	±.04	±.02	±.02	±.12	±.03	±.01
-35 AND UP	±.09	±.06	±.02	±.02	±.15	±.06	±.01

TOLERANCE BLOCK

INSTALLATION TOOLING (# CRIMPS)

CATALOG NO.	COLOR CODE	DIE INFORMATION		MECHANICAL				HYDRAULIC						DIELESS (# CRIMPS)	WIRE STRIP LENGTH
		DIE INDEX	TYPE	YIMRTC 6	OUR840	MD6 MD7	MD6--R2 MD7-34R	Y34A 8 Y34B Y34BH	Y35,Y39 Y750, PAT750 5	Y46 4 5 PAT46	Y45 3 5	Y48B	Y60BHU		
YA332L YA332LN	GRAY	326	GRAY DIE SET	-----	-----	-----	W33RT (2) W33VT (2)	-----	U33RT(2)	U33RT(2)	U33RT(2)	-----	L33RT (1)	HYDRAULIC: Y81KFT(2) Y4PC834(2) Y644(1)	1-9/16"
		538	NEST	-----	-----	-----	-----	B33D (1) A33D (1)	U33D-1 (1)	U33D-1 (1)	U33D-1 (1)	C33D (1)	-----		
			INDENTOR					Y34PR	Y34PR	Y34PR	Y34PR	Y48PR			
YA34L2TC14E2 YA342L YA34L2TC38 YA34L2NTC38 YA34L2TC12 YA342LN	BROWN	20	BROWN DIE SET	-----	-----	-----	W34RT (2) W34VT (2)	-----	U34RT (2) U31ART(1)	U34RT (2) P34RT (2) U31ART(1)	U34RT (2) U31ART (1)	C34R (1) C31AR(1)	L34RT (1)		1-7/16"
		299	NEST	-----	-----	-----	-----	B34D (1) A34D (1)	U34D-1(1)	U34D-1(1)	U34D-1 (1)	C34D (1)	-----		
			INDENTOR					Y34PR	Y34PR	Y34PR	Y34PR	Y48PR			

NOTES:

1. MATERIAL: COPPER TUBING.
2. FINISH: TIN PLATED.
3. CATALOG # PT6515 ADAPTOR IS REQUIRED TO USE "U" DIES IN Y45 SERIES TOOLS.
4. CATALOG # PUADP-1 ADAPTOR IS REQUIRED TO USE "U" DIES IN Y46 SERIES TOOLS.
5. Y35P3 INDENTOR ADAPTOR REQUIRED FOR Y34PR INDENTOR.
6. PERMANENT DIE IN TOOING.
7. DIMENSIONS IN BRACKETS [ ] ARE IN MILLIMETERS ROUNDED OFF TO THE NEAREST MILLIMETER, UNLESS OTHERWISE NOTED, AND ARE FOR REFERENCE ONLY.
8. FOR USE BY CUSTOMERS THAT HAVE THIS HYPRESS.™ NO NEW Y34A HYPRESS™ TOOLS ARE BEING PROCESSED. Y34A USES A--D TYPE NEST DIES.
9. CONNECTORS ARE UL LISTED; UNDRILLED VERSIONS ARE NOT UL LISTED.
10. CONNECTORS ARE CSA CERTIFIED; UNDRILLED VERSIONS ARE NOT CSA CERTIFIED.
11. FOR UNDRILLED VERSIONS ADD SUFFIX "-U" TO END OF CATALOG NUMBER. FOR UNDRILLED VERSIONS, USE D MIN. = N MAX. + E MIN. + Z MIN.
12. "X", "W-RT", "W-VT", "U", & "L" DIE SETS ARE COLOR CODED. "A", "B", AND "C" DIES ARE NOT COLOR CODED. NESTS AND INDENTOR TYPE ARE NOT COLOR CODED.

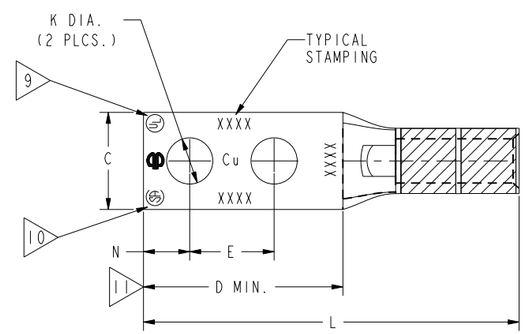

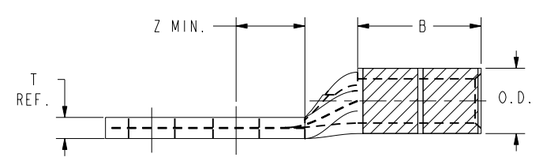

REFERENCE :SE209512
SUPERSEDES:SC91923

TO ORDER BURNDY® PRODUCTS CALL

UNITED STATES
1-800-346-4175 (LONDONDERRY, NH)

CANADA:
1-800-361-6975 (QUEBEC)
1-800-387-6487 (ALL OTHER PROVINCES)

FOR PRODUCT INFO: http://www.burndy.com

HYLUG,™ COPPER

ITEM NO: N/A		
CAT. NO: YA--2L-, YA--2TC- (TABLE)		
DRAWN BY: J.MICHAUD	11/18/94	BURNDY
CHECKER: D.FILLION	11/18/94	
DSN APPVL: C.PALAGI	10/24/94	
MFG APPVL: --	--	
QA APPVL: C.ACKERMAN	11/17/94	
MKT APPVL: T.NELSON	11/10/94	SCALE: NTS
PROD FAM: CM&R COMPRESSION		DRAWING NO / REV
PROJECT #: --	SIZE	SD035209 / E
DOCUMENT TYPE: Sales	D	
REL LEVEL: Released		SHEET 11 OF 18

REV: PE0200