DRAWING NO. SD079848

REV	DATE	DESCRIPTION	ECO	BY	C'H'K.
D	05/19/2014 00:00:00 AM	NOTE ADDED AS PER ECO WARREP	36169	AD	BSB

CATALOG NUMBER <11>	STRANDED COPPER CONDUCTOR ACCOMMODATED			BOLT SIZE	METRIC BOLT SIZE	DIMENSIONS							
	CODE (AWG)	NAVY	METRIC SIZE (CLASS 2)			B	C	K DIA.	L	N	O.D.	T REF.	Z MIN.
YA31L11	350 kcmil	350	----	3/8	----	1.06 [27]	1.29 [33]	.40 [10]	2.50 [64]	.41 [10]	.88 [22]	.18 [5]	.42 [11]
YA31L				1/2	M12			.53 [13]	2.75 [70]	.53 [13]			.55 [14]
YA31L7				5/8	M16			.69 [18]	3.00 [76]	.66 [17]			.67 [17]
YA31L36				7/8	----	1.06 [27]	1.29 [33]	.94 [24]	4.02 [102]	1.19 [30]	.88 [22]	.18 [5]	1.16 [29]
YA32L14	400 kcmil	400	----	3/8	----	1.19 [30]	1.40 [36]	.40 [10]	2.68 [68]	.41 [10]	.95 [24]	.19 [5]	.42 [11]
YA32L1				1/2	M12			.53 [13]	2.93 [74]	.53 [13]			.55 [14]
YA32L				5/8	M16			.69 [18]	3.18 [81]	.67 [17]			.67 [17]
YA32LTC78				7/8	----	1.19 [30]	1.40 [36]	.94 [24]	3.62 [92]	.88 [22]	.95 [24]	.19 [5]	.89 [23]
YA33L	450 kcmil	----	----	5/8	M16	1.50 [38]	1.48 [38]	.69 [18]	3.57 [91]	.66 [17]	1.01 [26]	.21 [5]	.67 [17]

CONNECTOR SIZE	TOLERANCES					
	B	C	K DIA.	L	N	O.D.
-8C THRU -25	±.06	±.04	±.02	±.09	±.03	±.01
-26 THRU -34	±.08	±.04	±.02	±.12	±.03	±.01
-35 AND UP	±.09	±.06	±.02	±.15	±.06	±.01

TOLERANCE BLOCK

INSTALLATION TOOLING (# CRIMPS)

CATALOG NO.	COLOR CODE	DIE INFORMATION		MECHANICAL RATCHET				HYDRAULIC							DIELESS (# CRIMPS)	WIRE STRIP LENGTH
		DIE INDEX	TYPE	YIMRTC <6>	OUR840	MD6 MD7	MD6--R2 MD7-34R	Y500CT PATMD6 PAT600	Y34A <8> Y34B Y34BH	Y35, Y39 Y750, BAT35 PAT750 <5>	Y46 <4><5> PAT46	Y45 <3><5>	Y48B	Y60BHU		
YA31L11 YA31L YA31L7 YA31L36	RED	18 324	RED DIE SET	----	----	W31VT(2)	W31RT(2) W31VT(2)	W31VT(2) W31RT(2)	----	U31RT(2) U29ART(2)	U31RT(2) U29ART(2)	U31RT(2) U29ART(2)	C31R(2) C29AR(2)	L31RT(1) L29ART(1)	HYDRAULIC: Y644 (1) Y81KFT (2) Y4PC834 (2)	1-1/8"
			NEST	----	----	-----	-----	-----	A31D(1) B31D(1)	U31D-1(1)	U31D-1(1)	U31D-1(1)	C31D(1)	----		
			INDENTOR						Y34PR	Y34PR	Y34PR	Y34PR	Y48PR			
YA32L14 YA32L1 YA32L YA32LTC78	BLUE	19 470	BLUE DIE SET	----	----	W32VT(2)	W32RT(2) W32VT(2)	W32VT(2) W32RT(2)	----	U32RT(2) U30ART(2)	U32RT(2) U30ART(2)	U32RT(2) U30ART(2)	C32R(2) C30AR(2)	L32RT(1) L30ART(1)		1-1/4"
			NEST	----	----	----	----	----	A32D(1) B32D(1)	U32D-1(1)	U32D-1(1)	U32D-1(1)	C32D(1)	----		
			INDENTOR						Y34PR	Y34PR	Y34PR	Y34PR	Y48PR			
YA33L	GRAY	326 538	GRAY DIE SET	----	----	W33VT(2)	W33RT(2) W33VT(2)	W33VT(2) W33RT(2)	----	U33RT(2)	U33RT(2)	U33RT(2)	----	L33RT(1)		1-9/16"
			NEST	----	----	----	----	----	A33D(1) B33D(1)	U33D-1(1)	U33D-1(1)	U33D-1(1)	C33D(1)	----		
			INDENTOR						Y34PR	Y34PR	Y34PR	Y34PR	Y48PR			

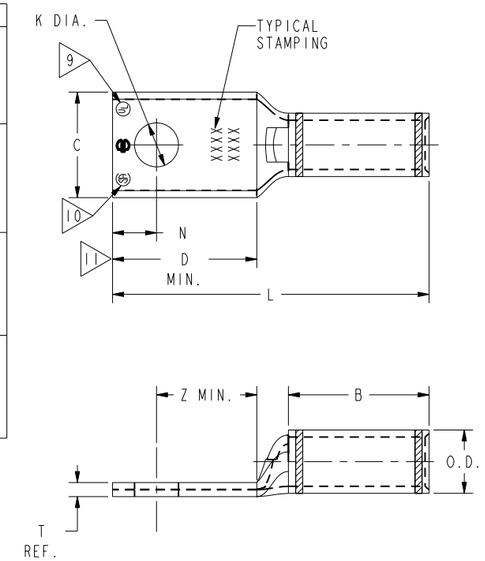

NOTES:

1. MATERIAL: COPPER TUBING.
2. FINISH: TIN PLATED.
   "FOR ALTERNATIVE FINISH ADD ONE OF THE FOLLOWING SUFFIXES:
   NICKEL = NK, LEAD = LD, BARE = BR"

<3> CATALOG # PT65I5 ADAPTOR IS REQUIRED TO USE "U" DIES IN Y45 SERIES TOOLS.

<4> CATALOG # PUADP-1 ADAPTOR IS REQUIRED TO USE "U" DIES IN Y46 SERIES TOOLS.

<5> Y35P3 INDENTOR ADAPTOR REQUIRED FOR Y34PR INDENTOR.

<6> PERMANENT DIE IN TOOLING.

7. DIMENSIONS IN BRACKETS [ ] ARE IN MILLIMETERS ROUNDED OFF TO THE NEAREST MILLIMETER, UNLESS OTHERWISE NOTED, AND ARE FOR REFERENCE ONLY.

<8> FOR USE BY CUSTOMERS THAT HAVE THIS HYPRESS™. NO NEW Y34A HYPRESS™ TOOLS ARE BEING PROCESSED. Y34A USES A--D NEST DIES ONLY.

<9> CONNECTORS ARE UL LISTED; UNDRILLED VERSIONS ARE NOT UL LISTED.

<10> CONNECTORS ARE CSA CERTIFIED. UNDRILLED VERSIONS ARE NOT CSA CERTIFIED.

<11> FOR UNDRILLED VERSIONS ADD SUFFIX "-U" TO END OF CATALOG NUMBER.
FOR UNDRILLED VERSIONS, USE D MIN. = N MAX. + Z MIN.

12. "X", "W-RT", "W-VT", "U" & "L" DIE SETS ARE COLOR CODED. "A", "B" AND "C" DIES ARE NOT COLOR CODED. NESTS AND INDENTOR TYPE ARE NOT COLOR CODED.

REFERENCE: SE209240

REV: PE0200

TO ORDER BURNDY® PRODUCTS CALL

UNITED STATES
1-800-346-4175 (LONDONDERRY, NH)

CANADA:
1-800-361-6975 (QUEBEC)
1-800-387-6487 (ALL OTHER PROVINCES)

FOR PRODUCT INFO: http://www.burndy.com

COPPER HYLUG™

ITEM NO: N/A		
CAT. NO: YA-L, YA-L-TC-, YAV-TC-		
DRAWN BY: J MICHAUD 8/9/94		BURNDY
CHECKER: D FILLION 10/9/94		
DSN APPVL: C PALAGI 8/19/94		
MFG APPVL: N/A N/A		
QA APPVL: C.ACKERMAN 9/30/94		
MKT APPVL: T.NELSON 9/7/94		SCALE: 1:1
PROD FAM: CM&R COMPRESSION	DRAWING NO	REV
PROJECT #: -- SIZE	SD079848	D
DOCUMENT TYPE: Sales D		
REL LEVEL: Released	SHEET 12 OF 17	