DRAWING NO.
SD035209

REV	DATE	DESCRIPTION	ECO	BY	C'H'K.
C	06/18/2011 00:00:00 AM	TOOL UPDATED AS PER WARRUP	24861	AD	MA

CATALOG NUMBER 11	STRANDED COPPER CONDUCTOR ACCOMMODATED			BOLT SIZE	METRIC BOLT SIZE	DIMENSIONS								
	CODE (AWG)	NAVY	METRIC SIZE (CLASS 2)			B	C	E	K DIA.	L	N	O.D.	T MIN.	Z MIN.
YA30L2TC14E1	250 kcmil	250	120mm² STR [14.5]	1/4	M6	1.06 [27]	1.20 [30]	1.00 [25]	.27 [7]	3.26 [83]	.31 [8]	.81 [19]	.16 [4]	.33 [8]
YA292L				3/8	M10		1.10 [28]	1.06 [27]	.41 [10]	3.50 [89]	.41 [10]	.75 [19]		.42 [11]
YA29L2TC38				3/8	M10		1.10 [28]	1.00 [25]	.41 [10]	3.43 [87]	.41 [10]	.75 [19]		.42 [11]
YA29L2TC38E10				3/8	M10		1.10 [28]	1.25 [32]	.41 [10]	3.68 [93]	.41 [10]	.75 [19]		.42 [11]
YA292LN				1/2	M12	1.06 [27]	1.10 [28]	1.75 [44]	.56 [14]	4.62 [117]	.63 [16]	.75 [19]		.64 [16]
YA29L2TC14E1	300 kcmil	300	150mm² STR [16.2]	1/4	M6	1.03 [26]	1.10 [28]	1.00 [25]	.27 [7]	3.25 [83]	.31 [8]	.75 [19]		.33 [8]
YA302L				3/8	M21		1.20 [30]	1.06 [27]	.41 [10]	3.51 [89]	.41 [10]	.81 [21]		.42 [11]
YA30L2TC38				3/8	M12		1.20 [30]	1.00 [25]	.41 [10]	3.45 [87]	.41 [10]	.81 [21]		.42 [11]
YA302LN				1/2	M12	1.03 [26]	1.20 [30]	1.75 [44]	.56 [14]	4.63 [118]	.63 [16]	.81 [21]	.16 [4]	.64 [16]

CONNECTOR SIZE	TOLERANCES						
	B	C	E	K DIA.	L	N	O.D.
-8C THRU -25	±.06	±.04	±.02	±.02	±.09	±.03	±.01
-26 THRU -34	±.08	±.04	±.02	±.02	±.12	±.03	±.01
-35 AND UP	±.09	±.06	±.02	±.02	±.15	±.06	±.01

TOLERANCE BLOCK

INSTALLATION TOOLING (# CRIMPS)

CATALOG NO.	COLOR CODE	DIE INFORMATION		MECHANICAL				HYDRAULIC						DIELESS (# CRIMPS)	WIRE STRIP LENGTH
		DIE INDEX	TYPE	YIMRTC 6	OUR840	MD6 MD7	MD6--R2 MD7-34R	Y34A 8 Y34B Y34BH	Y35,Y39 Y750, PAT750 5	Y46 4 5 PAT46	Y45 3 5	Y48B	Y60BHU		
YA29- SERIES	YELLOW	16	YELLOW DIE SET	-----	X29RT(4)	W29VT(2)	W29RT(2) W29VT(2)	A29R(1)	U29RT(1)	U29RT(1)	U29RT(1)	C29R(1)	L29RT(1)	MECHANICAL: MY29-3(1) MY29-11(1) HYDRAULIC: Y81KFT(2) Y4PC834(2) Y644(1)	1-1/8"
			NEST	-----	-----	-----	-----	B29D(1) A29D(1)	U29D-1(1)	U29D-1(1)	U29D-1(1)	C29D(1)	-----		
			INDENTOR					Y34PR	Y34PR	Y34PR	Y34PR	Y48PR			
YA30- SERIES	WHITE	17 298	WHITE DIE SET	-----	-----	-----	W30RT(2)	A28AR(1)	U30RT(2) U28ART(2)	U30RT(2) U28ART(2)	U30RT(2) U28ART(2)	C30R(2) C28AR(2)	L30RT(1)	HYDRAULIC: Y81KFT(2) Y4PC834(2) Y644(1)	1"
			NEST	-----	-----	-----	-----	B30D(1) A30D(1)	U30D-1(1)	U30D-1(1)	U30D-1(1)	C30D(1)	-----		
			INDENTOR					Y34PR	Y34PR	Y34PR	Y34PR	Y48PR			

NOTES:

1. MATERIAL: COPPER TUBING.
2. FINISH: TIN PLATED.
3. CATALOG # PT6515 ADAPTOR IS REQUIRED TO USE "U" DIES IN Y45 SERIES TOOLS.
4. CATALOG # PUADP-1 ADAPTOR IS REQUIRED TO USE "U" DIES IN Y46 SERIES TOOLS.
5. Y35P3 INDENTOR ADAPTOR REQUIRED FOR Y34PR INDENTOR.
6. PERMANENT DIE IN TOOING.
7. DIMENSIONS IN BRACKETS [ ] ARE IN MILLIMETERS ROUNDED OFF TO THE NEAREST MILLIMETER, UNLESS OTHERWISE NOTED, AND ARE FOR REFERENCE ONLY.

   FOR USE BY CUSTOMERS THAT HAVE THIS HYPRESS™. NO NEW Y34A HYPRESS™ TOOLS ARE BEING PROCESSED. Y34A USES A--D TYPE NEST DIES.
8.
9. CONNECTORS ARE UL LISTED; UNDRILLED VERSIONS ARE NOT UL LISTED.
10. CONNECTORS ARE CSA CERTIFIED; UNDRILLED VERSIONS ARE NOT CSA CERTIFIED.
11. FOR UNDRILLED VERSIONS ADD SUFFIX "-U" TO END OF CATALOG NUMBER. FOR UNDRILLED VERSIONS, USE D MIN. = N MAX. + E MIN. + Z MIN.
12. "X", "W-RT", "W-VT", "U", & "L" DIE SETS ARE COLOR CODED. "A", "B", AND "C" DIES ARE NOT COLOR CODED. NESTS AND INDENTOR TYPE ARE NOT COLOR CODED.

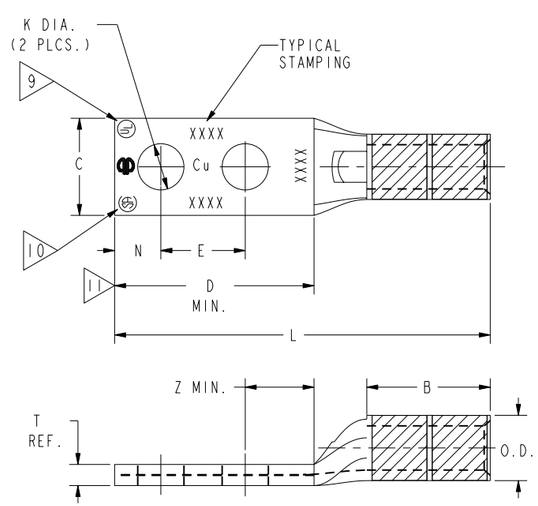

REFERENCE: SE209512
SUPERSEDES:SC91923

TO ORDER BURNDY® PRODUCTS CALL

UNITED STATES
1-800-346-4175 (LONDONDERRY, NH)

CANADA:
1-800-361-6975 (QUEBEC)
1-800-387-6487 (ALL OTHER PROVINCES)

FOR PRODUCT INFO: http://www.burndy.com

HYLUG™(COPPER)

ITEM NO:	N/A	
CAT. NO:	YA--2L-, YA--2TC- (TABLE)	
DRAWN BY:	J.MICHAUD	11/18/94
CHECKER:	D.FILLION	11/18/94
DSN APPVL:	C.PALAGI	10/24/94
MFG APPVL:	--	--
QA APPVL:	C.ACKERMAN	11/17/94
MKT APPVL:	T.NELSON	11/10/94
PROD FAM:	CM&R COMPRESSION	
PROJECT #:	--	
DOCUMENT TYPE:	Sales	
REL LEVEL:	Released	
SIZE	D	
DRAWING NO	SD035209	
REV	C	
SHEET 9 OF 18		
SCALE: NTS		

BURNDY

REV: PE0200