14ACX W/LOUVERED PANELS

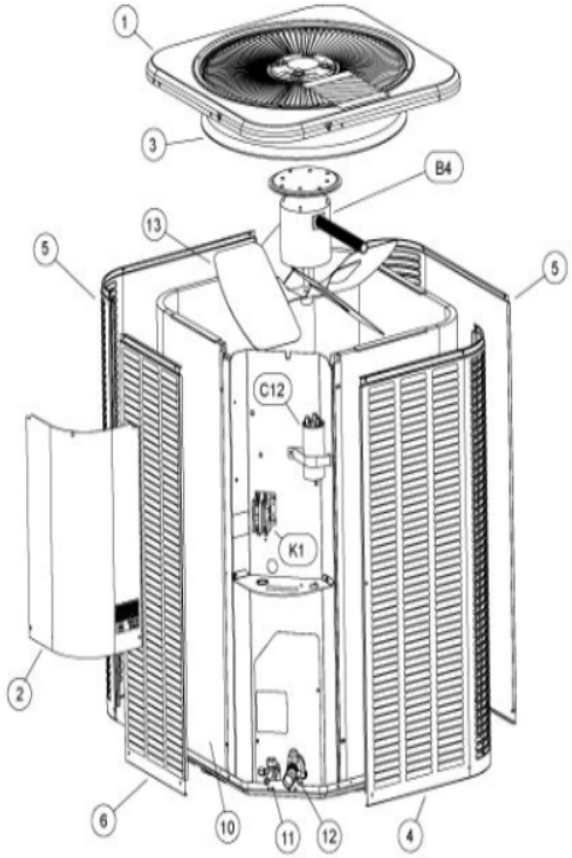

14ACX SERIES

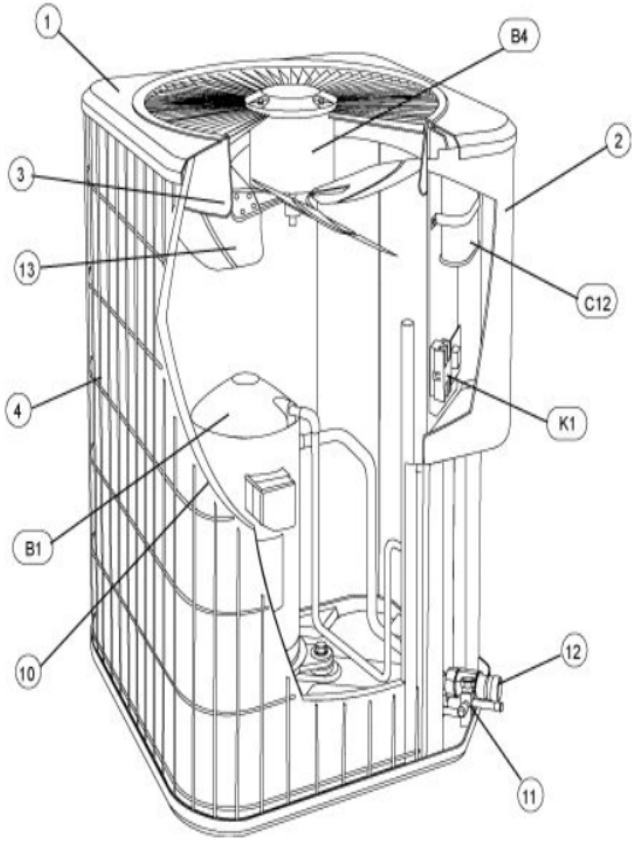

Model 14ACX-030-230

Revision Number - 10

*OPTIONAL PARTS-FIELD INSTALLED

Callout	Name	Quantity	Description
	SWITCH-PRESS Cat #: 84M96 Model/Part #: 100216-01	1	"IN 55+5PSIG,OUT 25+5PSIG"
	SEAL CAP Cat #: 95M45 Model/Part #: 100275-01	1	1/4 INCH FLARE SEAL CAP
	CAPACITOR-START Cat #: 63A06 Model/Part #: 63A0601	1	"176-216 MFD, 320 VAC"
	TEE Cat #: 87071 Model/Part #: P-8-10569	1	VALVE DEPRESSOR TEE
	RELAY-POTENTIAL Cat #: 58327 Model/Part #: P-8-3577	1	SPNC
LC KIT	LOSS OF CHARGE KIT Cat #: 84M23 Model/Part #: LB-110135A	1	INC NEXT 3 PARTS
ST KIT	START KIT Cat #: 88M91 Model/Part #: LB-31200BAR	1	INC NEXT 2 PARTS

CABINET PARTS

Callout	Name	Quantity	Description
	NUT-CAP Cat #: 85M56 Model/Part #: 100094-01	4	TOP PANEL
	PUSH PIN-MESHING Cat #: 42W17 Model/Part #: 100230-05	6	PIN: PUSH
	MESHING-COIL Cat #: 26W30 Model/Part #: 100231-09	1	"36"" X 90"" (CUT OT FIT)"
	COVER Cat #: 49W81 Model/Part #: 102098-01	1	PATCH PLATE
	COVER Cat #: 69J03 Model/Part #: 69J0301	1	SOUND-COMPRESSOR (OPTIONAL)
	LEG	1	BASE(SET OF 4)

Callout	Name	Quantity	Description
	Cat #: 94J45 Model/Part #: LB-87156A		
1	PANEL-TOP Cat #: 49W78 Model/Part #: 102075-01	1	TOP - PANEL 28 X 28
2	COVER-CONTROL BOX Cat #: 49W75 Model/Part #: 102072-01	1	COVER - CONTROL PANEL
3	ORIFICE Cat #: 98M16 Model/Part #: 100001-01	1	"22"""
4	GUARD Cat #: 88M52 Model/Part #: 100315-06	1	OUTDOOR COIL

CONTROL PANEL PARTS

Callout	Name	Quantity	Description
C12	CAPACITOR-FAN MTR Cat #: 89M77 Model/Part #: 100335-09	1	"40+5MFD,440VAC"
K1	CONTACTOR Cat #: 95M55 Model/Part #: 100438-01	1	"SPST,24V"

COOLING PARTS

Callout	Name	Quantity	Description
	RELAY-OVERLOADCOMP-INTERNAL Cat #: Model/Part #:	1	
	CORE-VALVE Cat #: 95M48 Model/Part #: 100210-01	1	CORE - VALVE
	DRIER Cat #: 95M52 Model/Part #: 100214-03	1	"LIQUID LINE (FOOTNOTE 1)"
	FITTING-PRESS TAP Cat #: 95M47 Model/Part #: 100520-01	1	PRESSURE TAP
	100484-15 Kit-RFC (.065) Cat #: 10W99 Model/Part #: 10W99	1	100484-15 Kit-RFC (.065)
	MOUNT PKG-COMP Cat #: 54M63 Model/Part #: 15J1301PR	1	MOUNT PKG-COMP

Callout	Name	Quantity	Description
	HARNESS-COMPRESSOR Cat #: 15M35 Model/Part #: 15M3501	1	MOLDED PLUG
	DRIER Cat #: 88K44 Model/Part #: 88K4401	1	SUCTION LINE (OPTIONAL)
10	COIL-OUTDOOR Cat #: 36W54 Model/Part #: LB-87170DP	1	W/MANIFOLD
11	VALVE-SERVICE Cat #: 10W32 Model/Part #: 100432-01	1	"LIQUID-LINE,3/8"""
12	VALVE-SERVICE Cat #: 10W33 Model/Part #: 100432-02	1	"SUCTION LINE,3/4"""
13	FAN Cat #: 43W37 Model/Part #: 100060-23	1	"1/2""BORE,22""DIA,3 BLADE"
B1	COMPRESSOR ZP24K5E-PFV Cat #: 27W16 Model/Part #: 100040-03	1	"2 TON,208-230/60/1,COPE
B4	MOTOR-FAN Cat #: 98M36 Model/Part #: 100483-11	1	"1/6HP,825RPM,208-230/60/1"
HR1	HEATER-CRANKCASE Cat #: 93M04 Model/Part #: 100499-01	1	"40 WATT, 240 VOLT (OPTIONAL)"
S4	SWITCH-HI PRESS-MANUAL Cat #: 42W41 Model/Part #: 100103-03	1	CUTOUT 590 PSIG

INTERLINK ALTERNATE FOR COPELAND COMP.

Callout	Name	Quantity	Description
	COMPRESSOR APA024KAA Cat #: 92W82 Model/Part #: 101995-11	1	COMPRESSOR APA024KAA
	HARNESS-COMP (REPAIR) Cat #: 44W62 Model/Part #: 102111-01	1	HARNESS -COMP (REPAIR)
	COVER Cat #: 75W44 Model/Part #: 103048-02	1	COVER THERMAL SWITCH (REPAIR)
S173	SWITCH-THERMAL Cat #: 75W43 Model/Part #: 103048-01	1	SWITCH THERMAL (REPAIR)

Note:

There are no technical notes for this product.