CGs - Gold Series Gas Boiler
Weil-McLain

Water,
Sealed Combustion
NAT'L or LP
MBH: 67-167
Efficiency Range 83%-85%

CGs
GOLD SERIES-GAS BOILER

- HIGH EFFICIENCY
- EASY TO INSTALL AND SERVICE
- MADE WITH WEIL-McLAIN QUALITY

APPLICATIONS INCLUDE:
Residential
Light Commercial
Multiple Boilers
Indirect-fired Water Heating
Radiant Heating
... And Much More

ENERGY STAR

WEIL-McLAIN
www.weil-mclain.com

LIMITED WARRANTY to CONSUMERS · GOOD HOUSEKEEPING · Since 1909 · REPLACEMENT or REFUND if DEFECTIVE

Ratings

Model (1)	Input MBH (2)	DOE Heating Capacity MBH (2)	Net I=B=R Water Ratings MBH (3)	DOE Seasonal Efficiency Percent (AFUE)	Approx. Shipping Weight (Lbs)	Minimum Vent Connector Diameter (4)
CGs-3 (*)	67	57	50	85.3	200	3
CGs-4E (5)(*)	90	77	67	85.0	240	3
CGs-4	100	85	74	84.6	240	3
CGs-5	133	112	97	84.0	280	3
CGs-6	167	140	122	83.4	325	3

Notes:
(1) Add "PIN" for natural gas, "PIL" for propane.
(2) Based on standard test procedures prescribed by the United States Department of Energy.
(3) Net I=B=R ratings are based on net installed radiation of sufficient quantity for the requirements of the building and nothing needs to be added for normal piping and pick-up. Ratings are based on a piping and pick-up allowance of 1.15. An additional allowance should be made for unusual piping and pick-up loads.
(4) CGs boilers must be vented directly to the outside.
(5) CGs-4E is for a direct vent application only. CGs-4E cannot use indoor air for combustion.
* As an Energy Star Partner, Weil-McLain has determined that the CGs-3 and CGs-4E meet the Energy Star guidelines for energy efficiency.
CGs boilers are C.S.A. design certified for installation on combustible flooring. Tested for 50 psi working pressure.

Dimensions

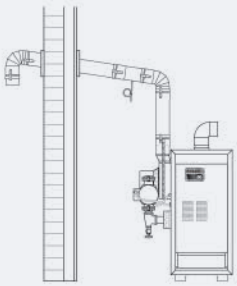

Direct Exhaust Venting

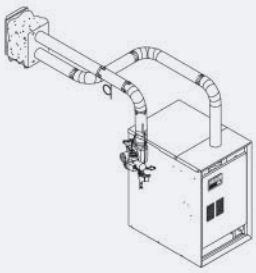

Direct Venting

Model	Dimensions Inches A	Dimensions Inches W	Supply Piping In. (1)	Return Piping In. (1)	Nat or LP Gas Connection Size Inches	Crate Dimensions (Outside Measurements - In.) Length	Width	Height
CGs-3	6-1/2	13	1	1	1/2	30	27-1/2	31-1/2
CGs-4	8	16	1	1	1/2	30	27-1/2	31-1/2
CGs-4E(**)	8	16	1	1	1/2	30	27-1/2	31-1/2
CGs-5	9-1/2	19	1	1	1/2	33	27-1/2	31-1/2
CGs-6	11	22	1-1/4	1-1/4	1/2	36	27-1/2	31-1/2

Notes: (1) Circulator flange supplied with boiler is same size as recommended pipe size. For supply and return boiler tapping size, see installation manual.
(**) CGs-4E is for direct vent applications only, it cannot be used for direct exhaust vent applications.

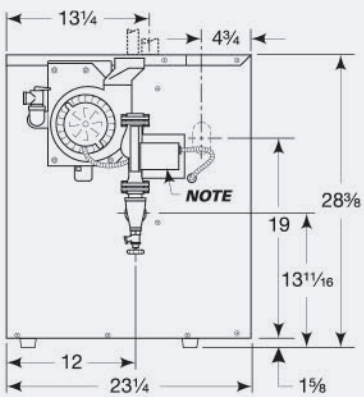

LEFT SIDE

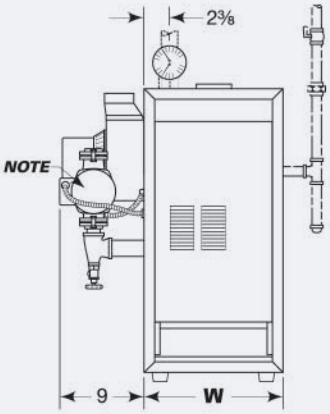

FRONT

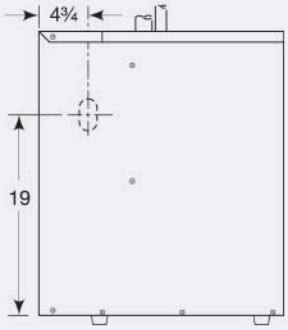

RIGHT SIDE

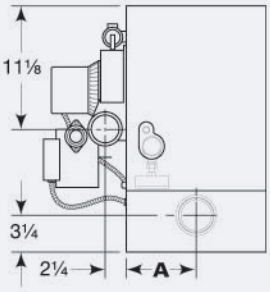

TOP VIEW

Note: Boiler circulator is shipped loose. Circulator may be mounted on either boiler supply or return piping. See dimension chart for pipe size of circulator flange provided.

Standard and Additional Equipment

Standard Equipment:
Factory Tested
Two-Piece Top Jacket Panel
Insulated Extended Steel Jacket
Cast Iron Sections with Built-in Air Separator
Radiation Plates
Steel Base
Integrated Boiler Control Module with Intermittent Electronic Ignition System & Indicator/Diagnostic Lights
Inducer Assembly
Flue Gas Collector/Transition Assembly
Combination Gas Valve for 24 Volt
Wiring Harness
Air Pressure Switch
Non-Linting Pilot Burner
High-Grade Stainless Steel Burners
Sidewall Vent Termination Kit (includes inside and outside plates, vent cap and hardware)
40VA Transformer
Electrical Junction Box
Rollout Thermal Fuse Element
High-Limit Temperature Control
Circulator (when ordered)
30 PSI ASME Relief Valve (boiler sections tested for 50 PSI working pressure)
Combination Pressure-Temperature Gauge
Drain Valve

Additional Equipment:
CGs AL29-4C® Starter (same as CGi Starter)
Taco 007 Circulator
Expansion Tank Package (expansion tank, fill & check valve, auto air vent and fittings): #109-sizes 3 thru 5; #110-size 6. Shipped in separate carton.
Through-the-Roof Termination Kit - includes 5"x5"x3" tee, 5" cap, flue support, spacer clamps, debris screen and hardware. 5" Type B vent pipe and fittings must be furnished by installer.
High Altitude Kits
W-M 5 & 10 Year Homeowner Protection Plan
W-M Indirect-fired Water Heaters
W-M Maxiflo® Pool Heaters
W-M Baseboard Units

WEIL-McLAIN

In the interest of continual improvements in product and performance, Weil-McLain reserves the right to change specifications without notice.
C-842 R5 (1108)