Von Duprin 2016 Hollow Metal Templates Master Index

22 Series Exit Device

22 Series Exit Device

-

22 Rim

APPLICATION	PREPARATION
SURFACE APPLICATION OR 990 TRIM APPLICATION	#10-24 TAP 4 PLACES
210 TRIM APPLICATION OR SEXBOLT APPLICATION	1/4" DIA THIS SIDE-13/32" DIA OPPOSITE SIDE 4 PLACES

NOTE: FOR STOCK HOLLOW METAL DOORS SEE TEMPLATE NO. 10038 FOR TYPE "161" CUTOUTS.

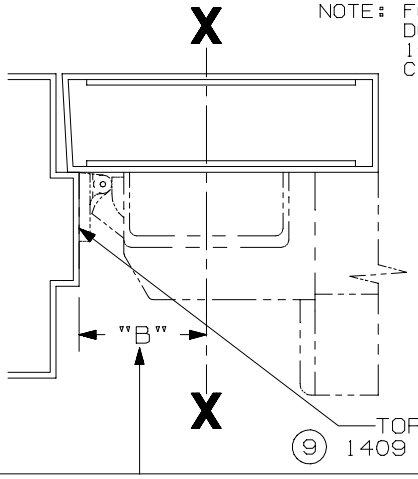

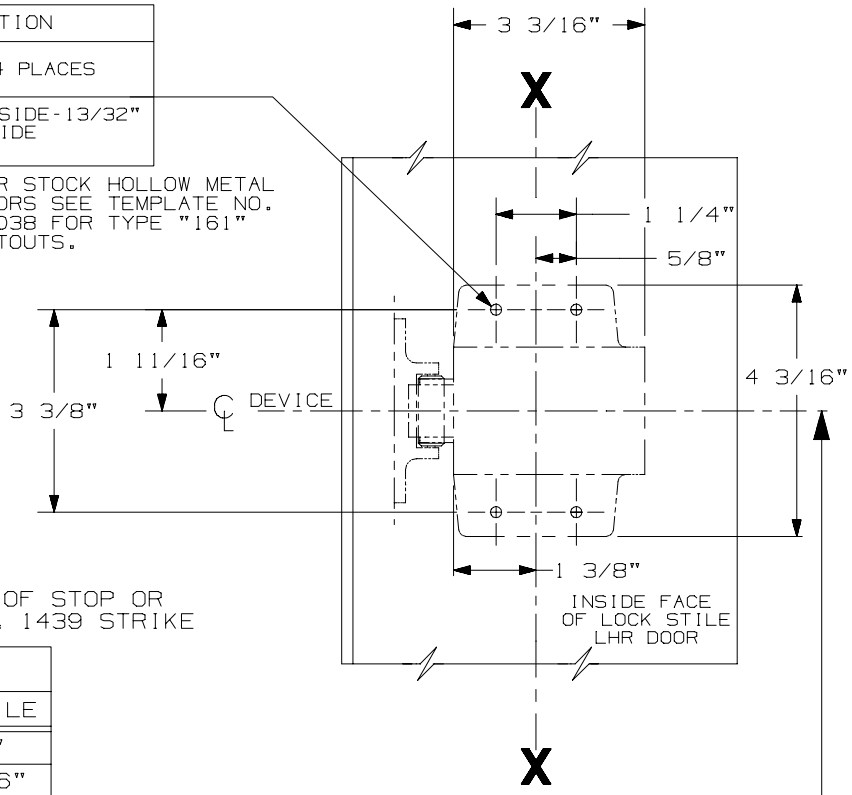

SINGLE DOOR INSTALLATION		
STRIKE	DIM "B"	MIN. STILE
299 & 299F	2 3/8"	4 3/8"
⑨ 1409 & 1439	1 9/16"	3 13/16"
1606	1 15/16"	3 15/16"

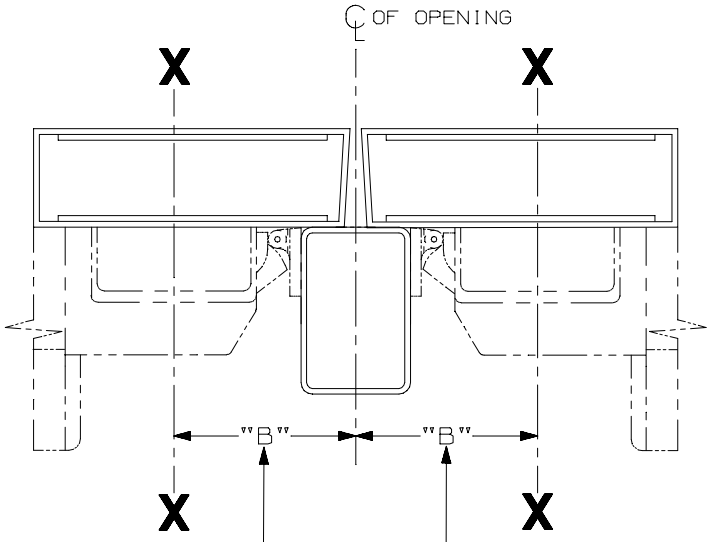

REMOVE GLASS STOP HEAD OR BEAD IN AREA OF DEVICE IF REQUIRED.

LHR SHOWN
RHR OPPOSITE

SINGLE DOOR OPENING
39 13/16" TO FINISHED FLOOR

DOUBLE DOOR OPENING
WITH VON DUPRIN MULLION
39 11/16"

DOUBLE DOOR INSTALLATION WITH VON DUPRIN MULLIONS			
MULLION	STRIKE	DIM. "B"	MIN. STILE
4954	299	3 3/8"	4 3/4"
9954	499-F	3 1/2"	4 7/8"
5654	299	2 15/16"	4 1/4"
5754	1408	2 1/8"	3 13/16"
1654	1606	2 15/16"	4 1/4"

FOR OUTSIDE TRIM PREPARATION, WHEN REQUIRED, SEE ADDITIONAL TRIM TEMPLATE.

22 EO, DT, & EO-F Series Rim Devices

VON DUPRIN®

NOTES: SEE MASTER SHEET #10001 FOR SUGGESTED REINFORCING

TEMPLATE NUMBER: 10011_a

DATE: 05-15-13

RIM APPLICATION

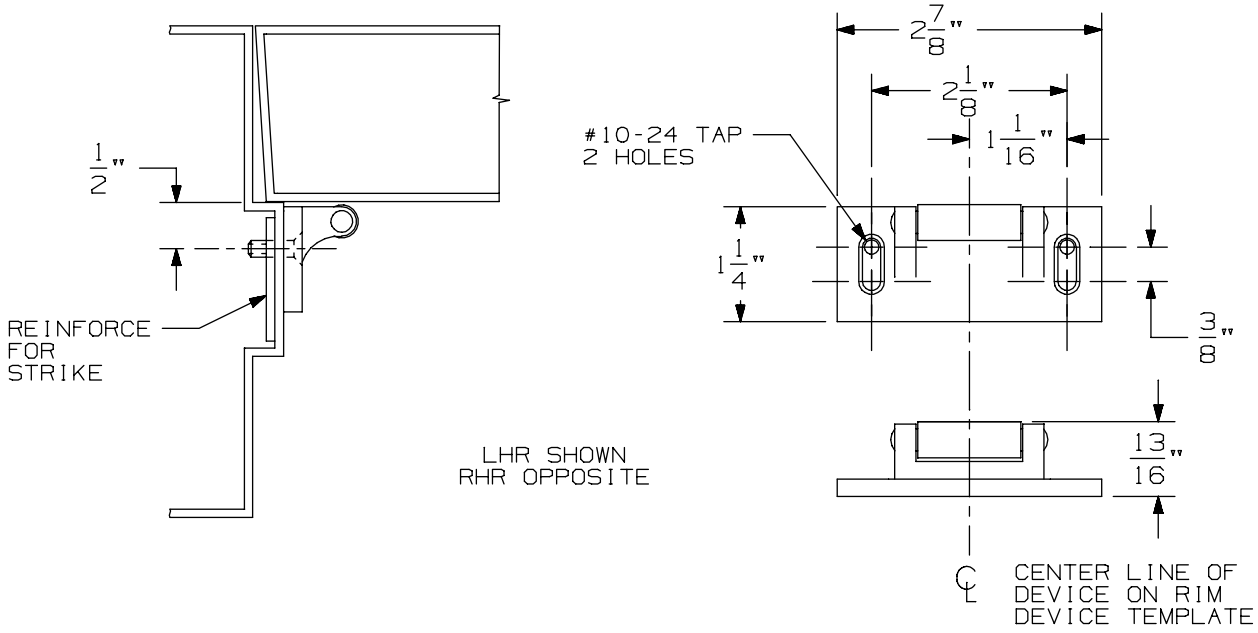

VERTICAL APPLICATION

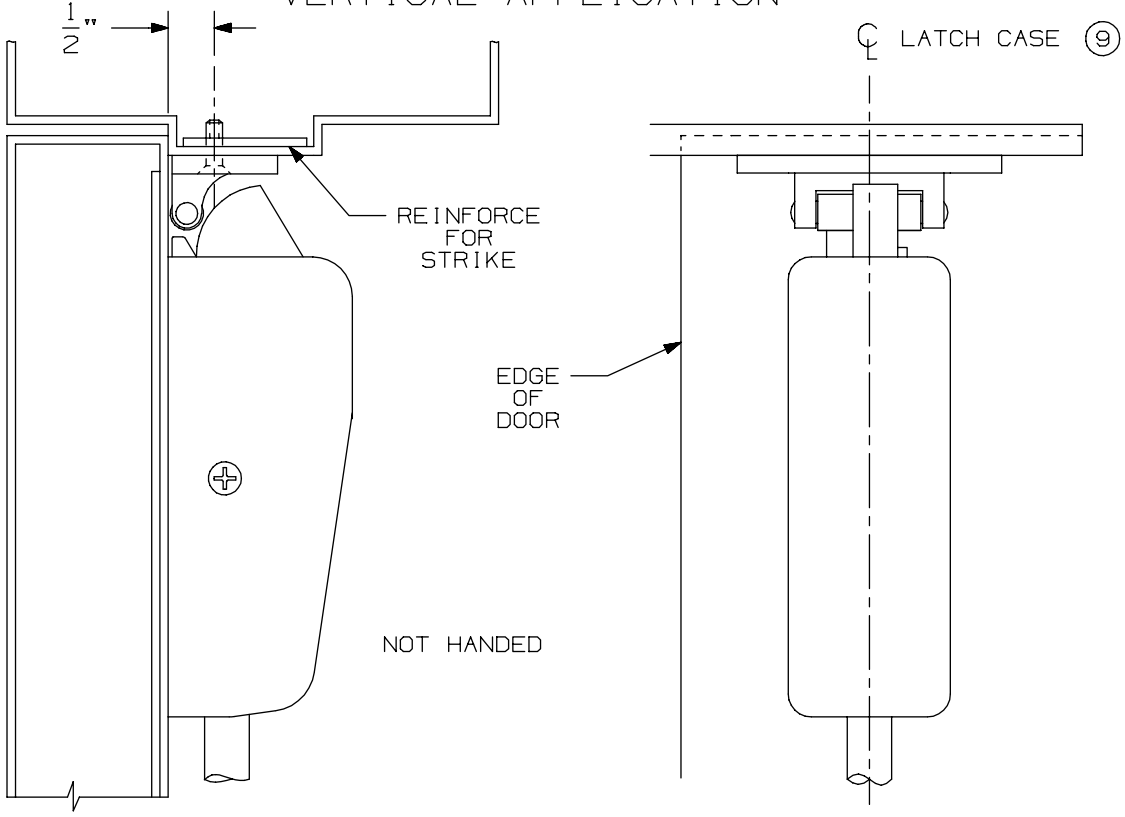

NOTE: LATCH CASE MOUNTING HOLES TO BE PREPARED AT INSTALLATION ON DOOR.

299 & 299F Strike

VON DUPRIN®

NOTES: SEE MASTER SHEET #10001 FOR SUGGESTED REINFORCING

TEMPLATE NUMBER: 30039_a

DATE: 05-23-13

APPLICATION	PREPARATION
SURFACE APPLICATION OR 990 TRIM APPLICATION	#10-24 TAP 4 PLACES
210 TRIM APPLICATION OR SEXBOLT APPLICATION	1/4" DIA THIS SIDE-13/32" DIA OPPOSITE SIDE 4 PLACES

NOTE: FOR STOCK HOLLOW METAL DOORS SEE TEMPLATE NO. 10038 FOR TYPE "161" CUTOUTS.

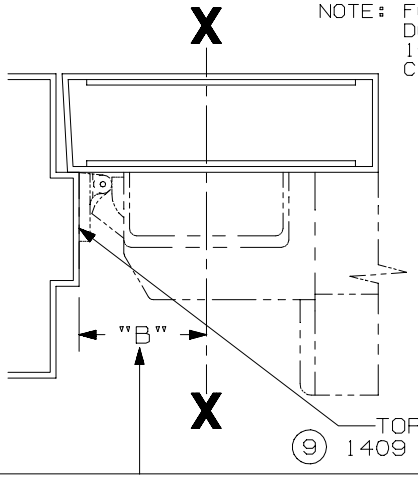

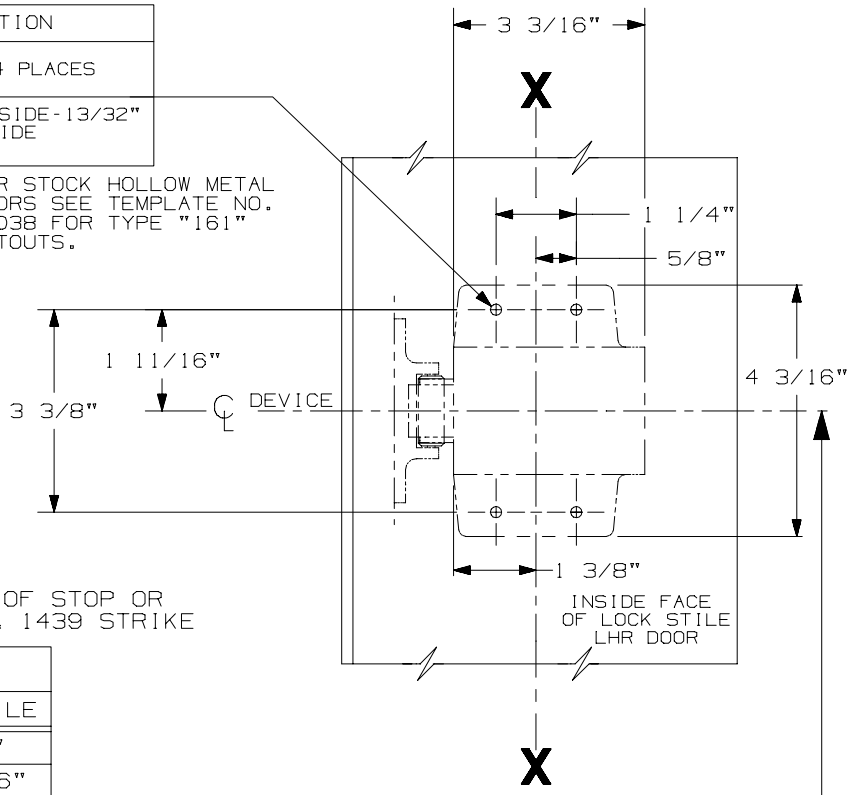

SINGLE DOOR INSTALLATION		
STRIKE	DIM "B"	MIN. STILE
299 & 299F	2 3/8"	4 3/8"
⑨ 1409 & 1439	1 9/16"	3 13/16"
1606	1 15/16"	3 15/16"

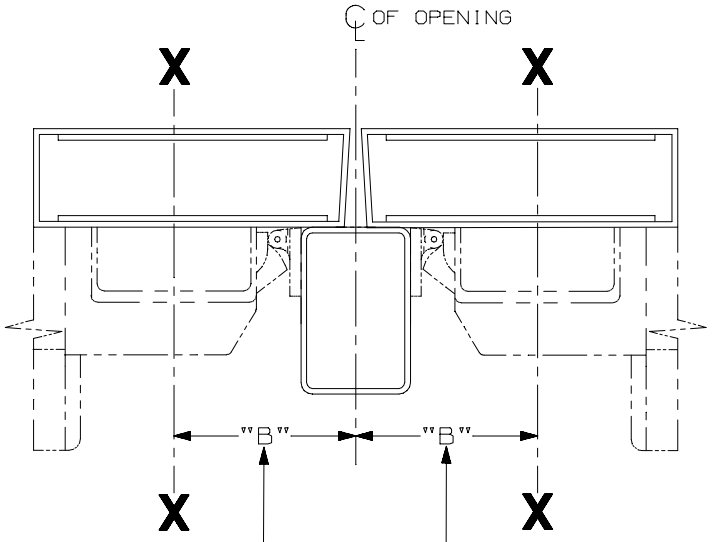

REMOVE GLASS STOP HEAD OR BEAD IN AREA OF DEVICE IF REQUIRED.

LHR SHOWN
RHR OPPOSITE

SINGLE DOOR OPENING
39 13/16" TO FINISHED FLOOR

DOUBLE DOOR OPENING
WITH VON DUPRIN MULLION
39 11/16"

DOUBLE DOOR INSTALLATION WITH VON DUPRIN MULLIONS			
MULLION	STRIKE	DIM. "B"	MIN. STILE
4954	299	3 3/8"	4 3/4"
9954	499-F	3 1/2"	4 7/8"
5654	299	2 15/16"	4 1/4"
5754	1408	2 1/8"	3 13/16"
1654	1606	2 15/16"	4 1/4"

FOR OUTSIDE TRIM PREPARATION, WHEN REQUIRED, SEE ADDITIONAL TRIM TEMPLATE.

22 EO, DT, & EO-F Series Rim Devices

VON DUPRIN®

NOTES: SEE MASTER SHEET #10001 FOR SUGGESTED REINFORCING

TEMPLATE NUMBER: 10011_a

DATE: 05-15-13

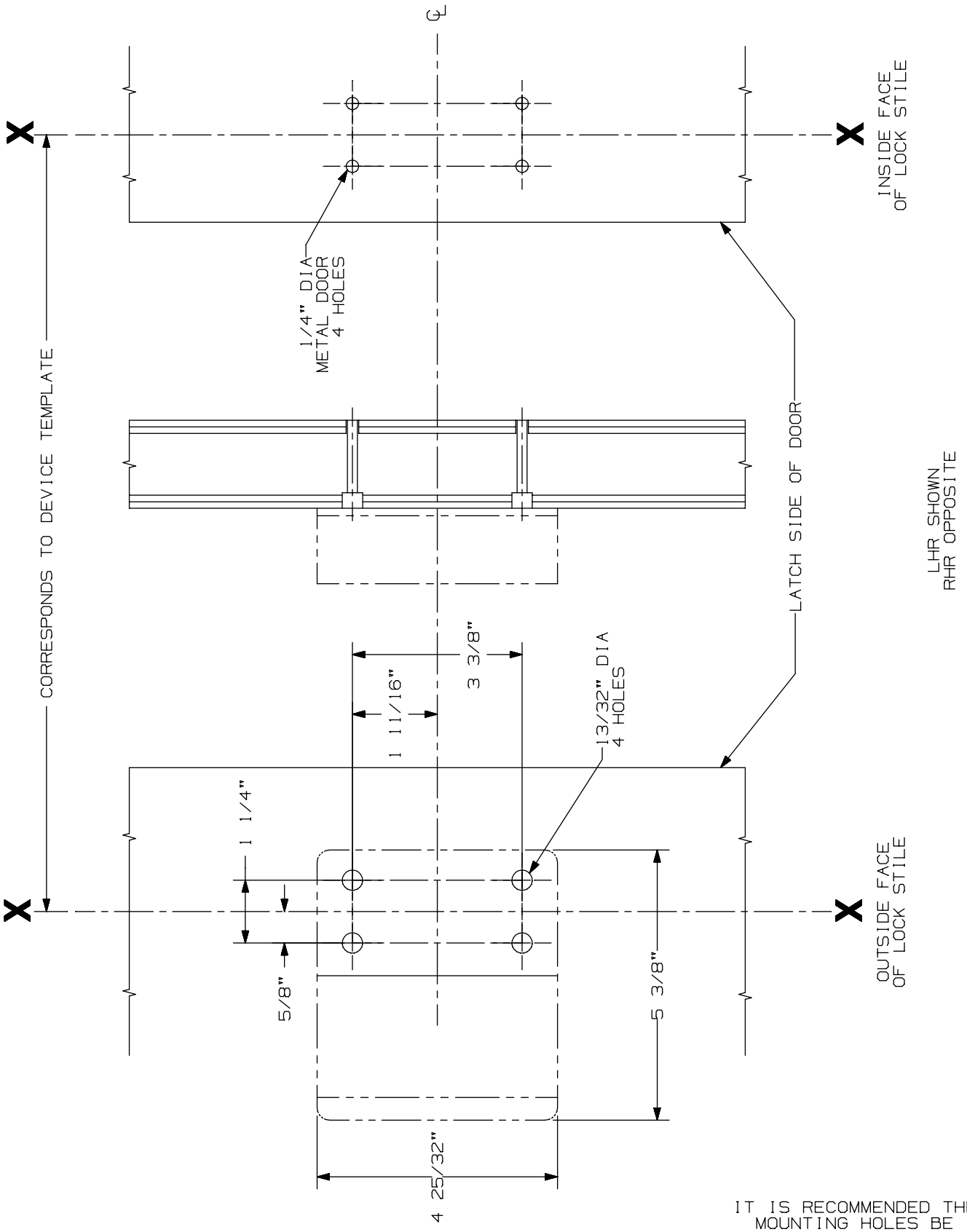

IT IS RECOMMENDED THE MOUNTING HOLES BE PREPARED IN THE FIELD

210 DT Trim

VON DUPRIN®

NOTES: See Master Sheet #10001 For Suggested Reinforcing

TEMPLATE NUMBER: 20015_a

DATE: 05-22-13

RIM APPLICATION

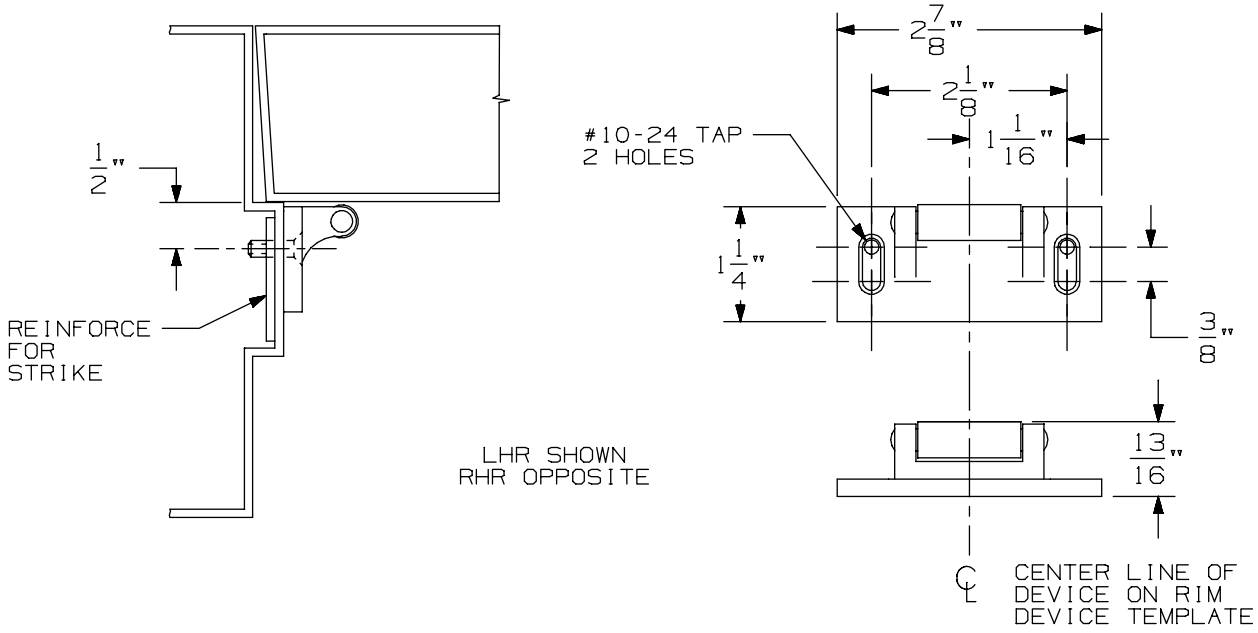

VERTICAL APPLICATION

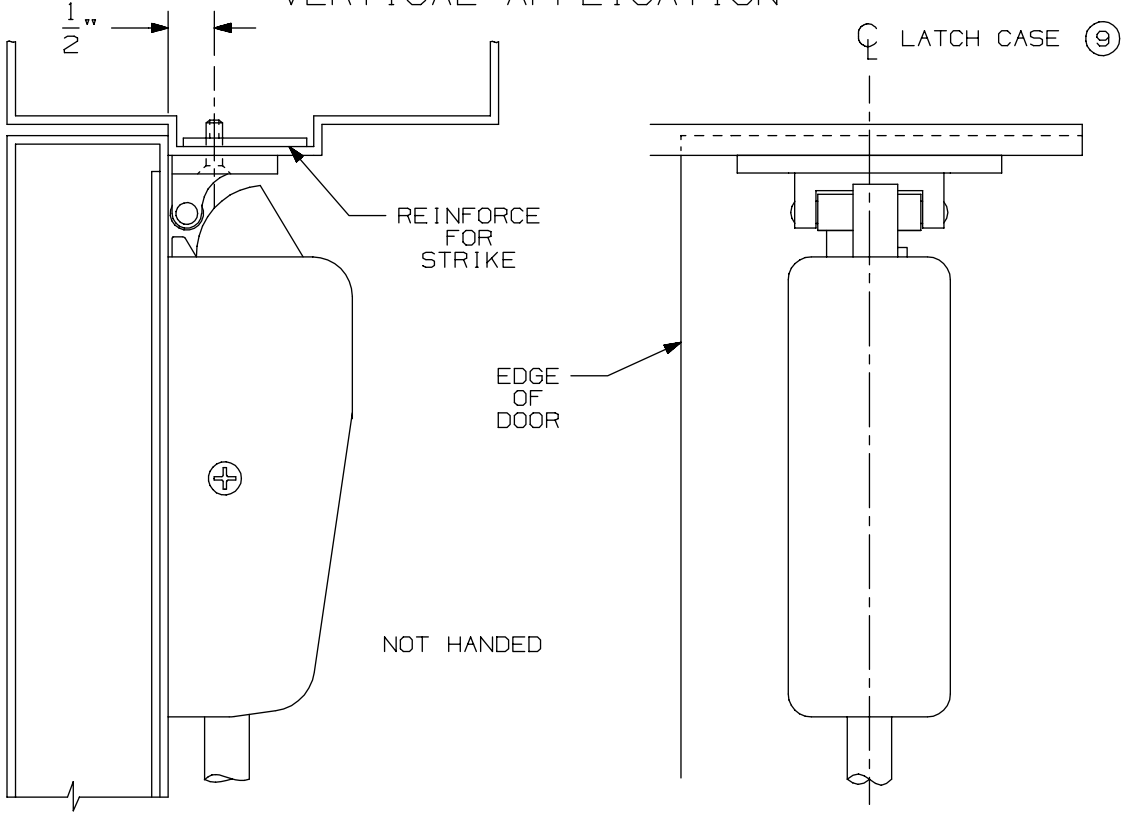

NOTE: LATCH CASE MOUNTING HOLES TO BE PREPARED AT INSTALLATION ON DOOR.

299 & 299F Strike

VON DUPRIN®

NOTES: SEE MASTER SHEET #10001 FOR SUGGESTED REINFORCING

TEMPLATE NUMBER: 30039_a

DATE: 05-23-13

APPLICATION	PREPARATION
SURFACE APPLICATION OR 990 TRIM APPLICATION	#10-24 TAP 4 PLACES
210 TRIM APPLICATION OR SEXBOLT APPLICATION	1/4" DIA THIS SIDE-13/32" DIA OPPOSITE SIDE 4 PLACES

NOTE: FOR STOCK HOLLOW METAL DOORS SEE TEMPLATE NO. 10038 FOR TYPE "161" CUTOUTS.

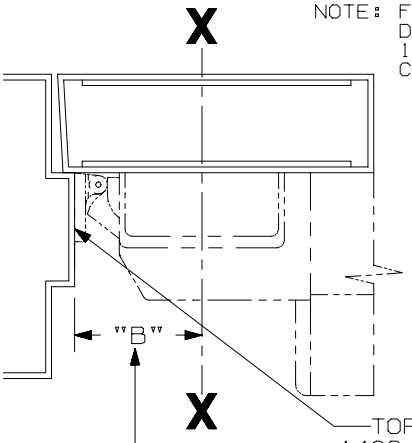

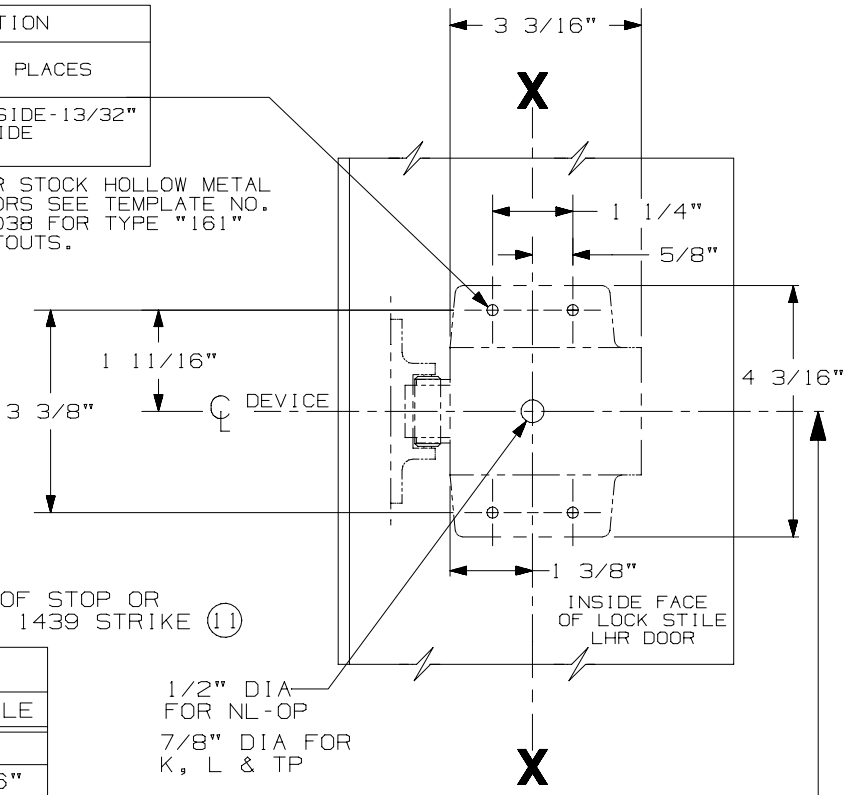

SINGLE DOOR INSTALLATION		
STRIKE	DIM "B"	MIN. STILE
299 & 299F	2 3/8"	4 3/8"
(11) 1409 & 1439	1 9/16"	3 13/16"
1606	1 15/16"	3 15/16"

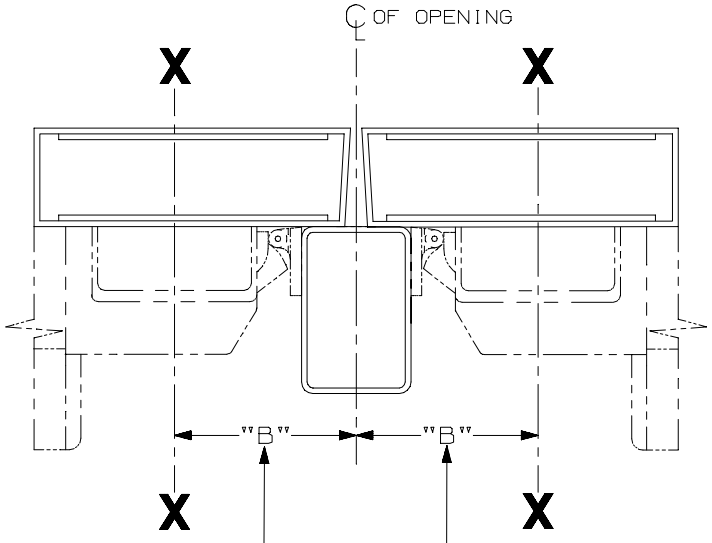

REMOVE GLASS STOP HEAD OR BEAD IN AREA OF DEVICE IF REQUIRED.

LHR SHOWN
RHR OPPOSITE

SINGLE DOOR OPENING
39 13/16" TO FINISHED FLOOR

DOUBLE DOOR OPENING
WITH VON DUPRIN MULLION
39 11/16"

DOUBLE DOOR INSTALLATION WITH VON DUPRIN MULLIONS			
MULLION	STRIKE	DIM. "B"	MIN. STILE
4954	299	3 3/8"	4 3/4"
9954	499-F	3 1/2"	4 7/8"
5654	299	2 15/16"	4 1/4"
5754	1408	2 1/8"	3 13/16"
1654	1606	2 15/16"	4 1/4"

IT IS RECOMMENDED THE MOUNTING HOLES BE PREPARED IN THE FIELD

FOR OUTSIDE TRIM PREPARATION, WHEN REQUIRED, SEE ADDITIONAL TRIM TEMPLATE.

22 NL, K, L, TP, NL-F, K-F, L-F, & TP-F Series Rim Devices

VON DUPRIN®

NOTES: SEE MASTER SHEET #10001 FOR SUGGESTED REINFORCING

TEMPLATE NUMBER: 10012_a

DATE: 05-15-13

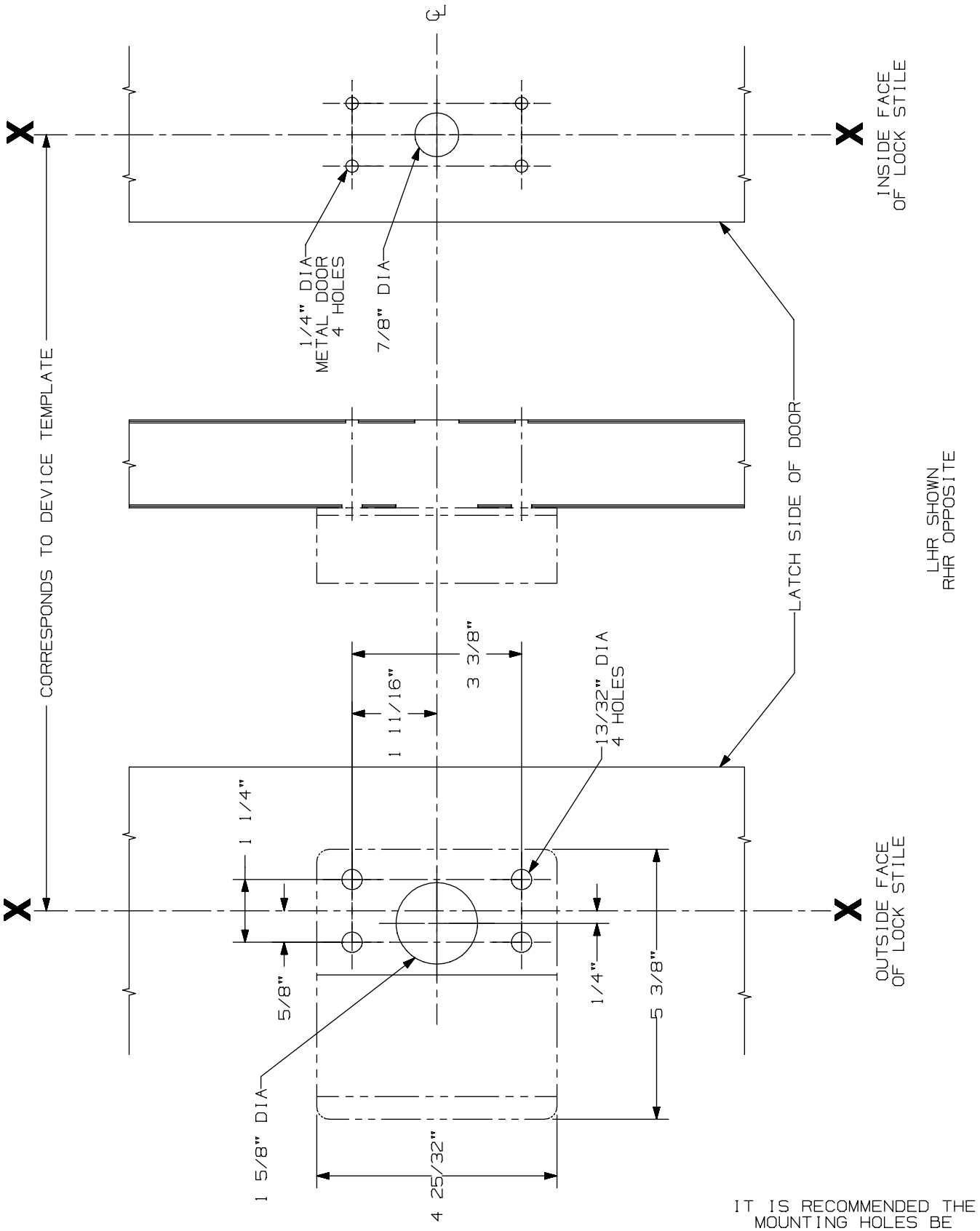

IT IS RECOMMENDED THE MOUNTING HOLES BE PREPARED IN THE FIELD

210 NL Trim

VON DUPRIN®

NOTES: See Master Sheet #10001 For Suggested Reinforcing

TEMPLATE NUMBER: 20016_a

DATE: 05-22-13

RIM APPLICATION

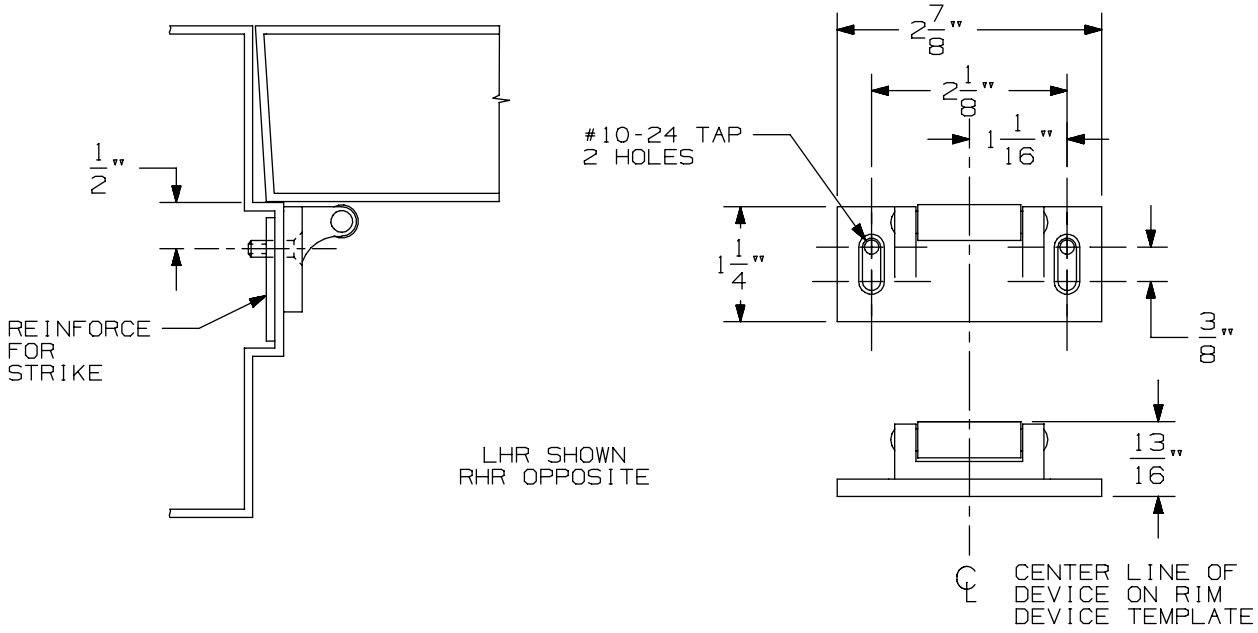

VERTICAL APPLICATION

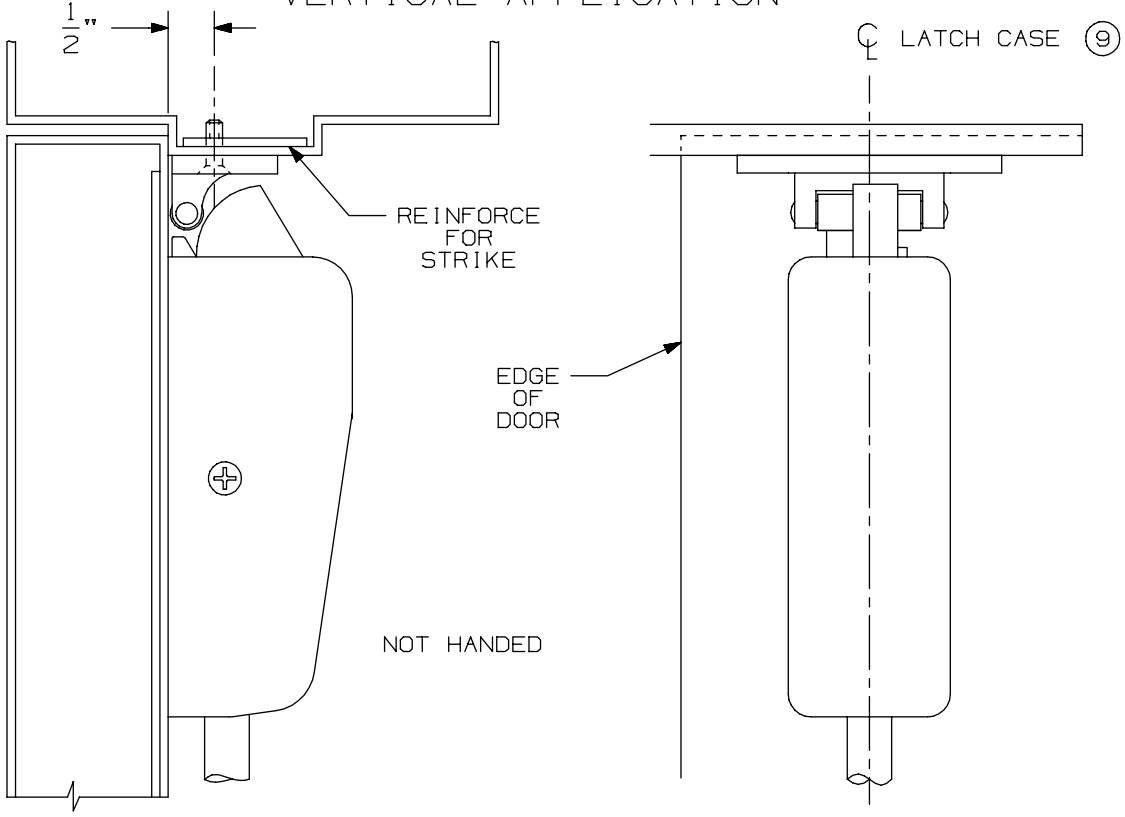

NOTE: LATCH CASE MOUNTING HOLES TO BE PREPARED AT INSTALLATION ON DOOR.

299 & 299F Strike

VON DUPRIN®

NOTES: SEE MASTER SHEET #10001 FOR SUGGESTED REINFORCING

TEMPLATE NUMBER: 30039_a

DATE: 05-23-13

APPLICATION	PREPARATION
SURFACE APPLICATION OR 990 TRIM APPLICATION	#10-24 TAP 4 PLACES
210 TRIM APPLICATION OR SEXBOLT APPLICATION	1/4" DIA THIS SIDE-13/32" DIA OPPOSITE SIDE 4 PLACES

NOTE: FOR STOCK HOLLOW METAL DOORS SEE TEMPLATE NO. 10038 FOR TYPE "161" CUTOUTS.

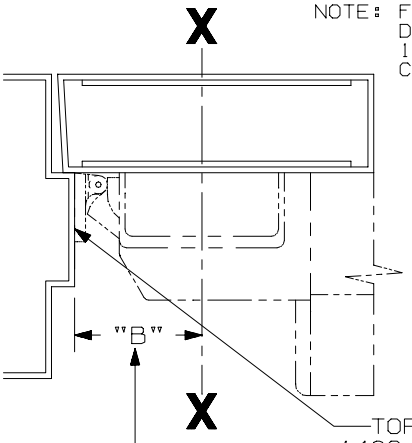

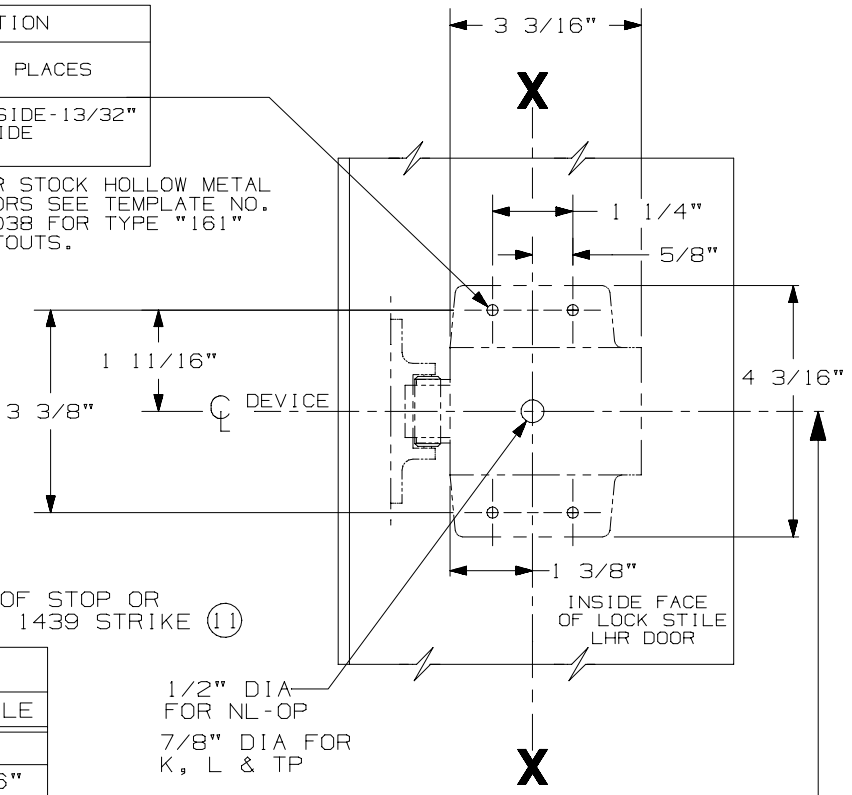

SINGLE DOOR INSTALLATION		
STRIKE	DIM "B"	MIN. STILE
299 & 299F	2 3/8"	4 3/8"
(11) 1409 & 1439	1 9/16"	3 13/16"
1606	1 15/16"	3 15/16"

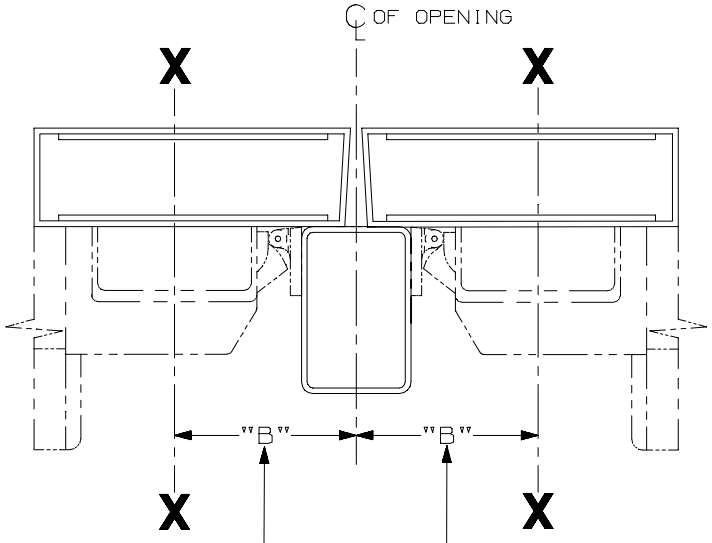

REMOVE GLASS STOP HEAD OR BEAD IN AREA OF DEVICE IF REQUIRED.

LHR SHOWN
RHR OPPOSITE

SINGLE DOOR OPENING
39 13/16" TO FINISHED FLOOR

DOUBLE DOOR OPENING
WITH VON DUPRIN MULLION
39 11/16"

DOUBLE DOOR INSTALLATION WITH VON DUPRIN MULLIONS			
MULLION	STRIKE	DIM. "B"	MIN. STILE
4954	299	3 3/8"	4 3/4"
9954	499-F	3 1/2"	4 7/8"
5654	299	2 15/16"	4 1/4"
5754	1408	2 1/8"	3 13/16"
1654	1606	2 15/16"	4 1/4"

IT IS RECOMMENDED THE MOUNTING HOLES BE PREPARED IN THE FIELD

FOR OUTSIDE TRIM PREPARATION, WHEN REQUIRED, SEE ADDITIONAL TRIM TEMPLATE.

22 NL, K, L, TP, NL-F, K-F, L-F, & TP-F Series Rim Devices

VON DUPRIN®

NOTES: SEE MASTER SHEET #10001 FOR SUGGESTED REINFORCING

TEMPLATE NUMBER: 10012_a

DATE: 05-15-13

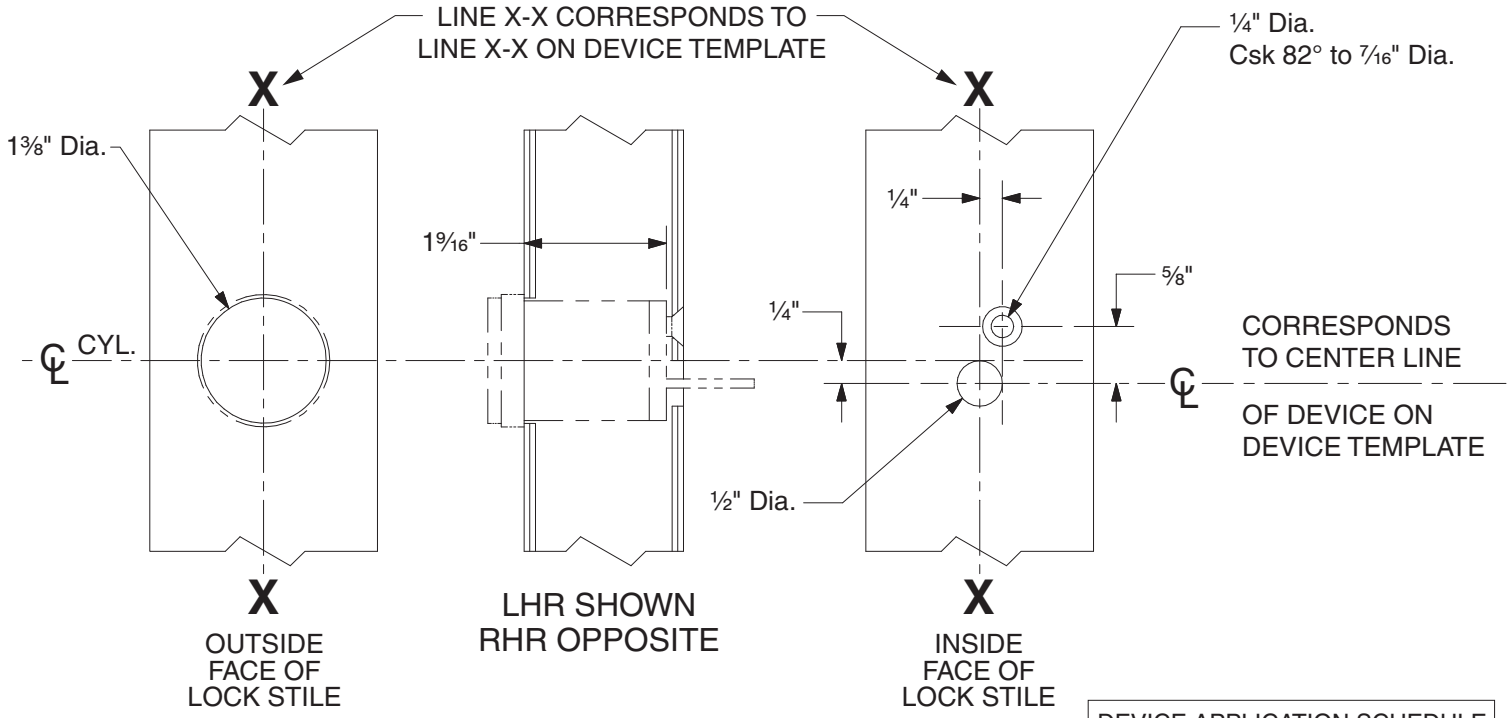

DEVICE APPLICATION SCHEDULE	
98 RIM SERIES	99 RIM SERIES
9827 SERIES	9927 SERIES
9847 SERIES	9947 SERIES
22 RIM SERIES	2227 SERIES

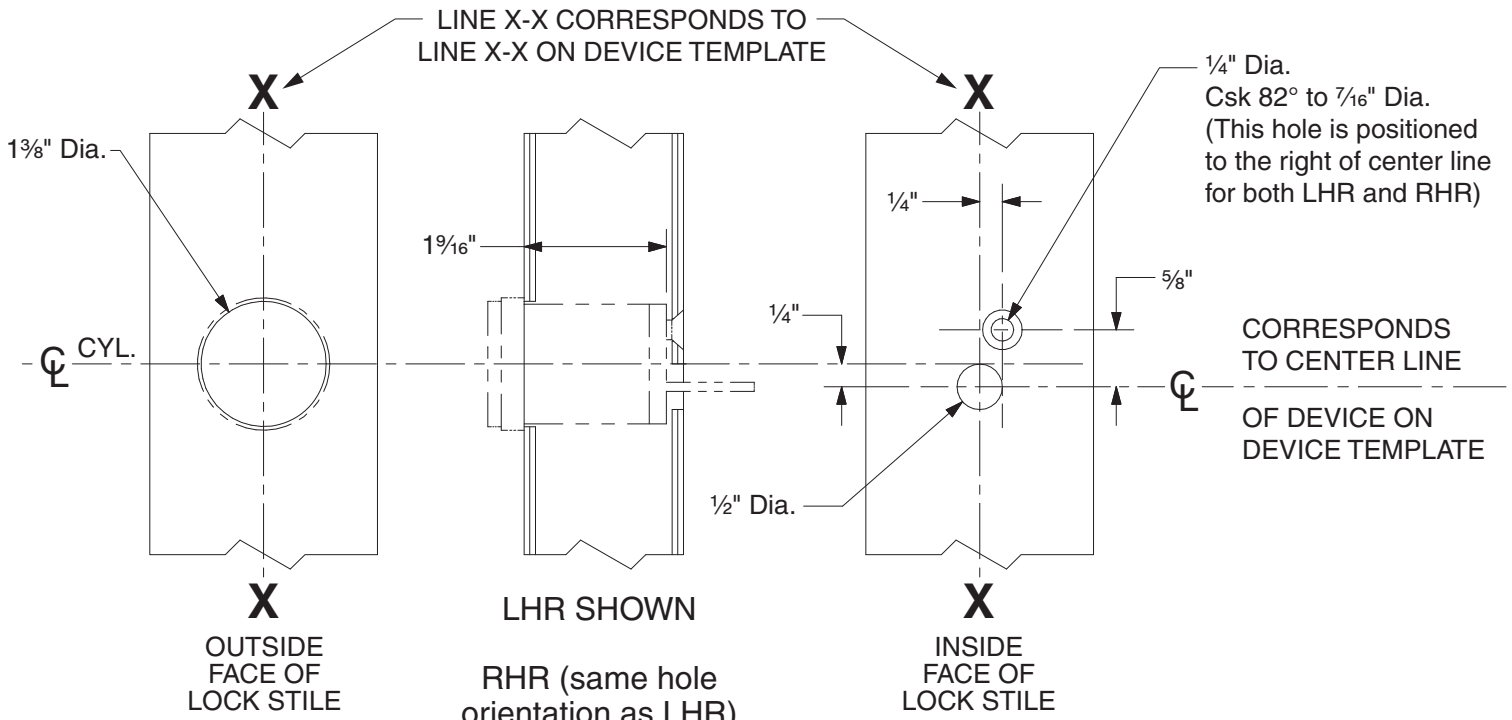

DEVICE APPLICATION SCHEDULE	
9849 SERIES	9949 SERIES

110NL Cylinder Preparation

VON DUPRIN®

NOTES: SEE MASTER SHEET #10001 FOR SUGGESTED REINFORCING

TEMPLATE NUMBER: 40022_c

DATE: 05-28-13

RIM APPLICATION

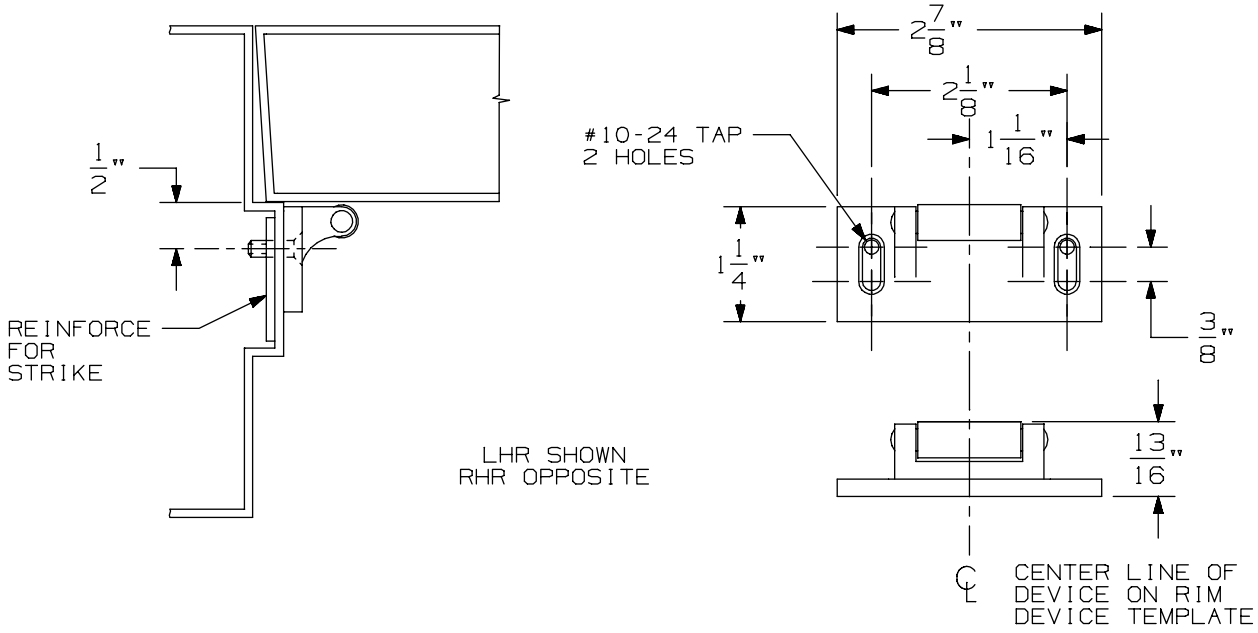

VERTICAL APPLICATION

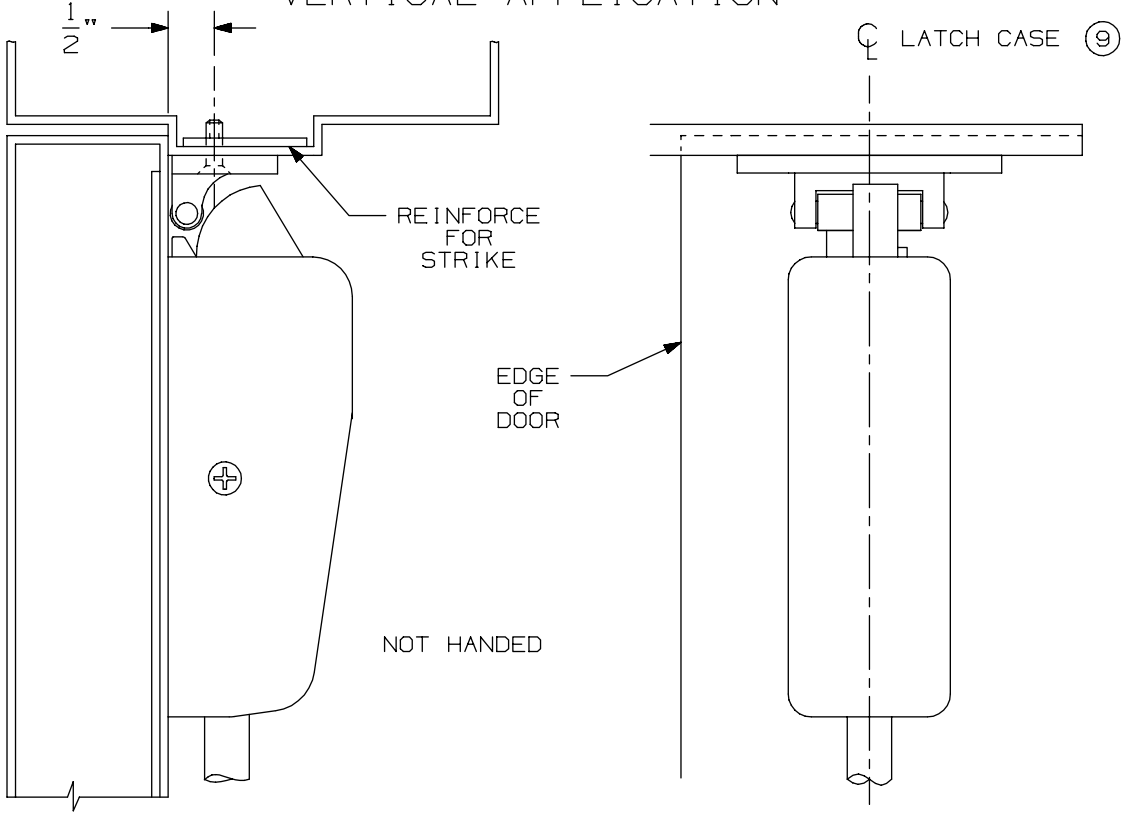

NOTE: LATCH CASE MOUNTING HOLES TO BE PREPARED AT INSTALLATION ON DOOR.

299 & 299F Strike

VON DUPRIN®

NOTES: SEE MASTER SHEET #10001 FOR SUGGESTED REINFORCING

TEMPLATE NUMBER: 30039_a

DATE: 05-23-13

APPLICATION	PREPARATION
SURFACE APPLICATION OR 990 TRIM APPLICATION	#10-24 TAP 4 PLACES
210 TRIM APPLICATION OR SEXBOLT APPLICATION	1/4" DIA THIS SIDE-13/32" DIA OPPOSITE SIDE 4 PLACES

NOTE: FOR STOCK HOLLOW METAL DOORS SEE TEMPLATE NO. 10038 FOR TYPE "161" CUTOUTS.

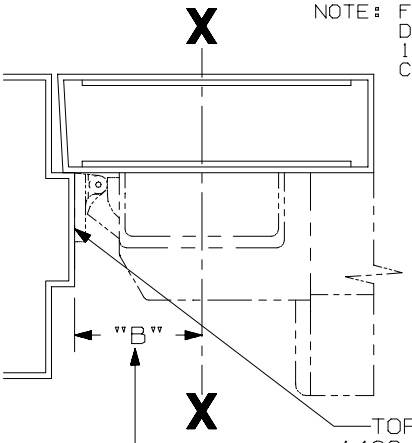

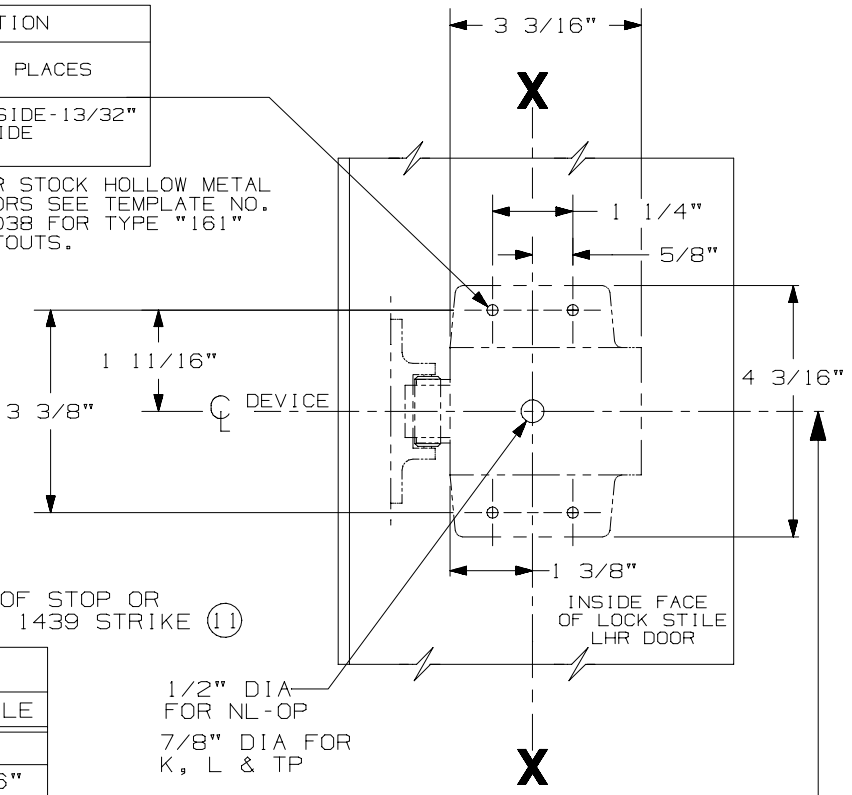

SINGLE DOOR INSTALLATION		
STRIKE	DIM "B"	MIN. STILE
299 & 299F	2 3/8"	4 3/8"
(11) 1409 & 1439	1 9/16"	3 13/16"
1606	1 15/16"	3 15/16"

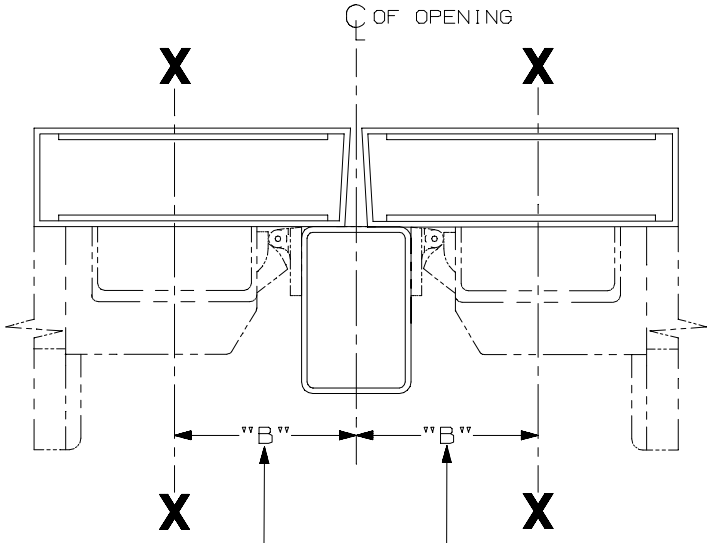

REMOVE GLASS STOP HEAD OR BEAD IN AREA OF DEVICE IF REQUIRED.

LHR SHOWN
RHR OPPOSITE

SINGLE DOOR OPENING
39 13/16" TO FINISHED FLOOR

DOUBLE DOOR OPENING
WITH VON DUPRIN MULLION
39 11/16"

DOUBLE DOOR INSTALLATION WITH VON DUPRIN MULLIONS			
MULLION	STRIKE	DIM. "B"	MIN. STILE
4954	299	3 3/8"	4 3/4"
9954	499-F	3 1/2"	4 7/8"
5654	299	2 15/16"	4 1/4"
5754	1408	2 1/8"	3 13/16"
1654	1606	2 15/16"	4 1/4"

IT IS RECOMMENDED THE MOUNTING HOLES BE PREPARED IN THE FIELD

FOR OUTSIDE TRIM PREPARATION, WHEN REQUIRED, SEE ADDITIONAL TRIM TEMPLATE.

22 NL, K, L, TP, NL-F, K-F, L-F, & TP-F Series Rim Devices

VON DUPRIN®

NOTES: SEE MASTER SHEET #10001 FOR SUGGESTED REINFORCING

TEMPLATE NUMBER: 10012_a

DATE: 05-15-13

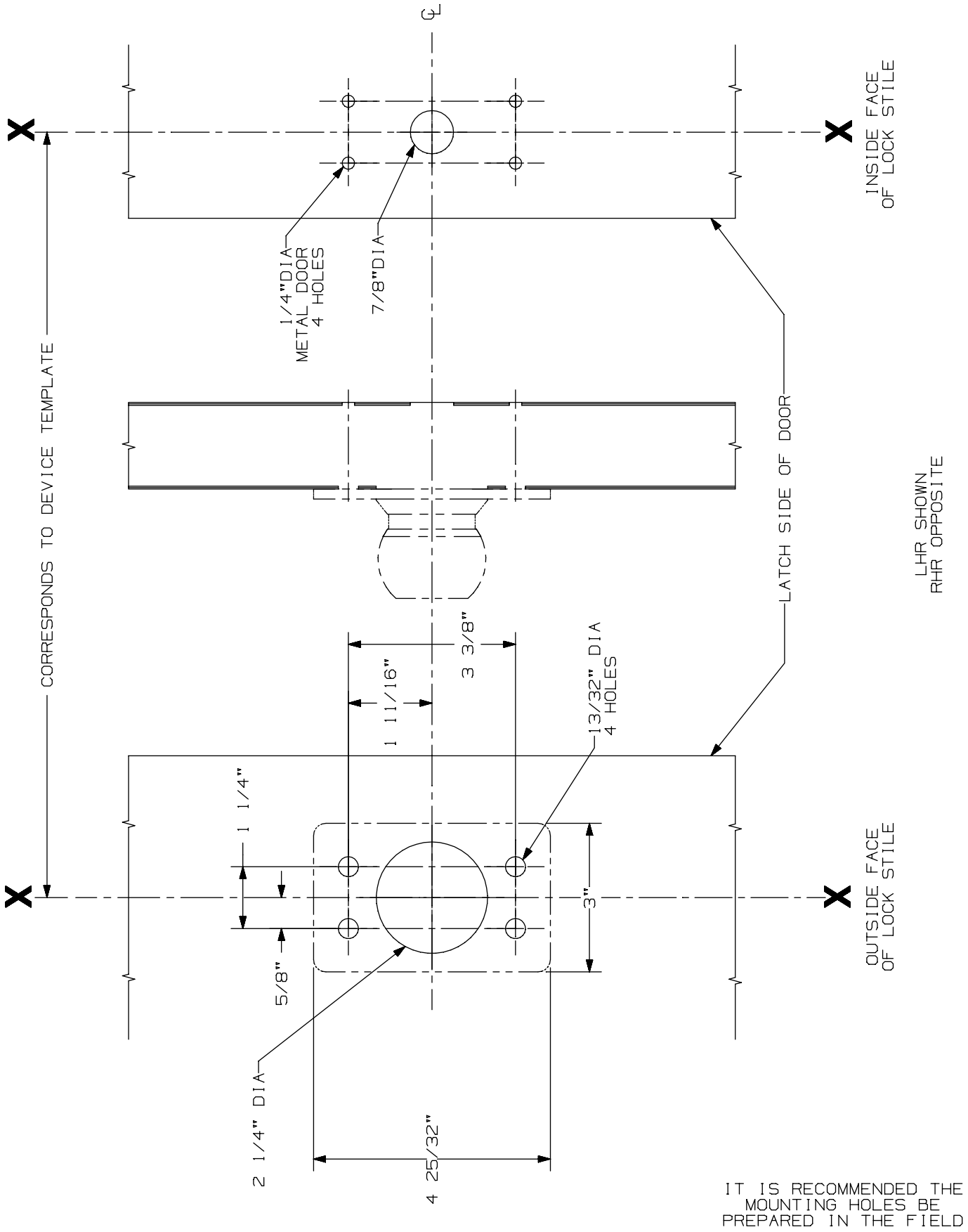

IT IS RECOMMENDED THE MOUNTING HOLES BE PREPARED IN THE FIELD

210 K Series Trim

VON DUPRIN®

NOTES: See Master Sheet #10001 For Suggested Reinforcing

TEMPLATE NUMBER: 20018_a

DATE: 05-22-13

RIM APPLICATION

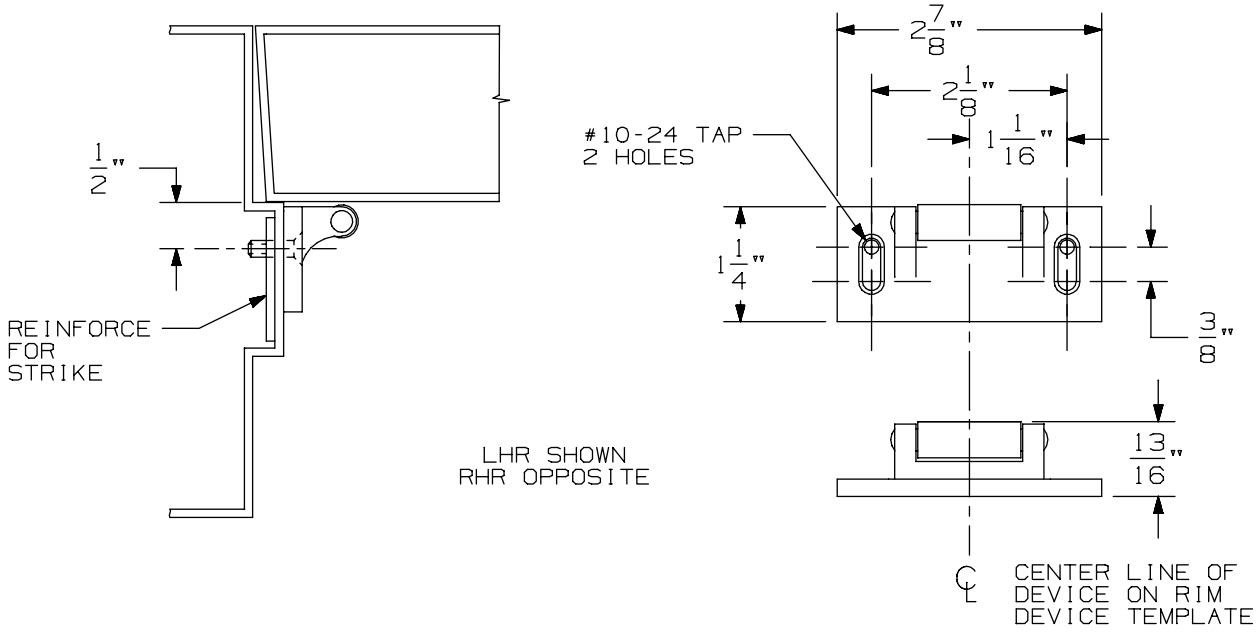

VERTICAL APPLICATION

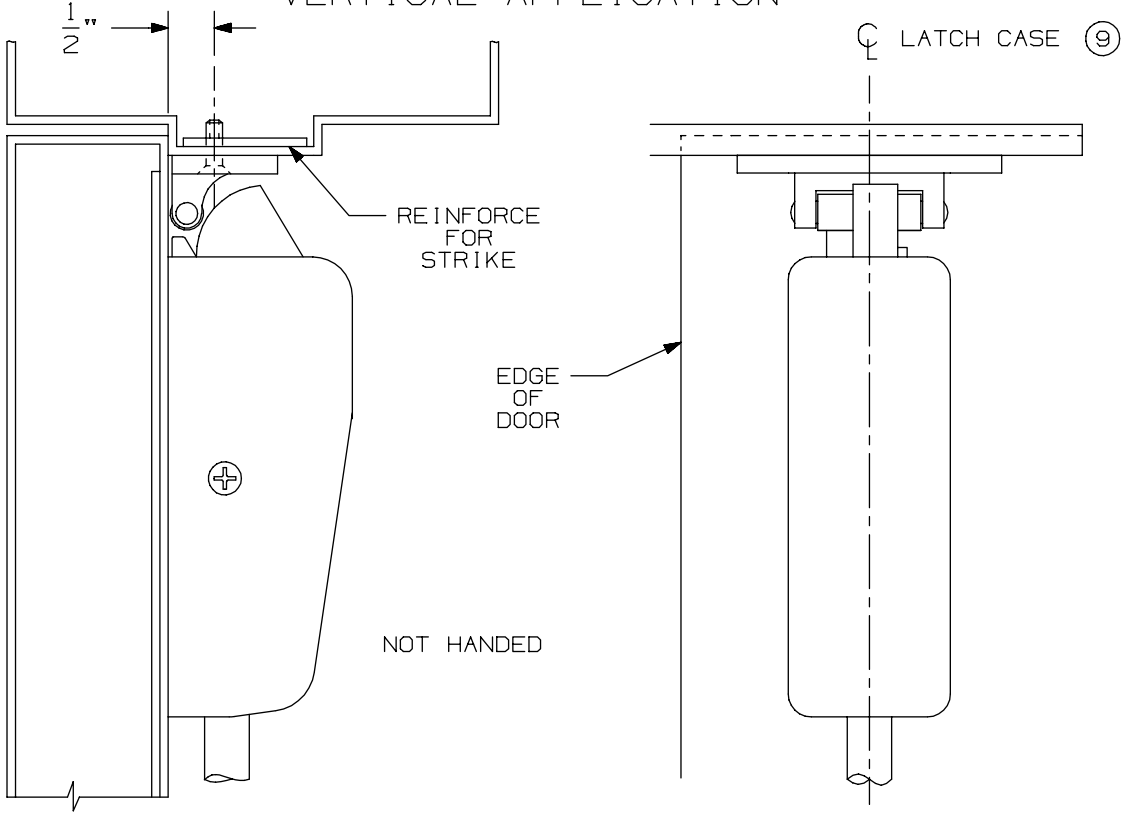

NOTE: LATCH CASE MOUNTING HOLES TO BE PREPARED AT INSTALLATION ON DOOR.

299 & 299F Strike

VON DUPRIN®

NOTES: SEE MASTER SHEET #10001 FOR SUGGESTED REINFORCING

TEMPLATE NUMBER: 30039_a

DATE: 05-23-13

APPLICATION	PREPARATION
SURFACE APPLICATION OR 990 TRIM APPLICATION	#10-24 TAP 4 PLACES
210 TRIM APPLICATION OR SEXBOLT APPLICATION	1/4" DIA THIS SIDE-13/32" DIA OPPOSITE SIDE 4 PLACES

NOTE: FOR STOCK HOLLOW METAL DOORS SEE TEMPLATE NO. 10038 FOR TYPE "161" CUTOUTS.

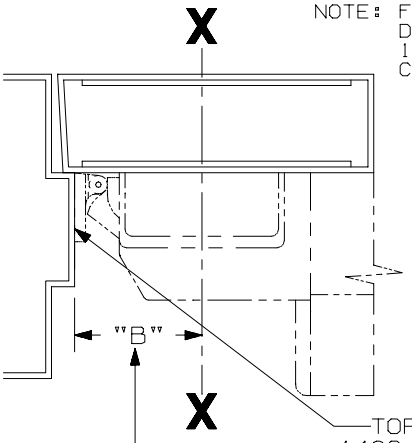

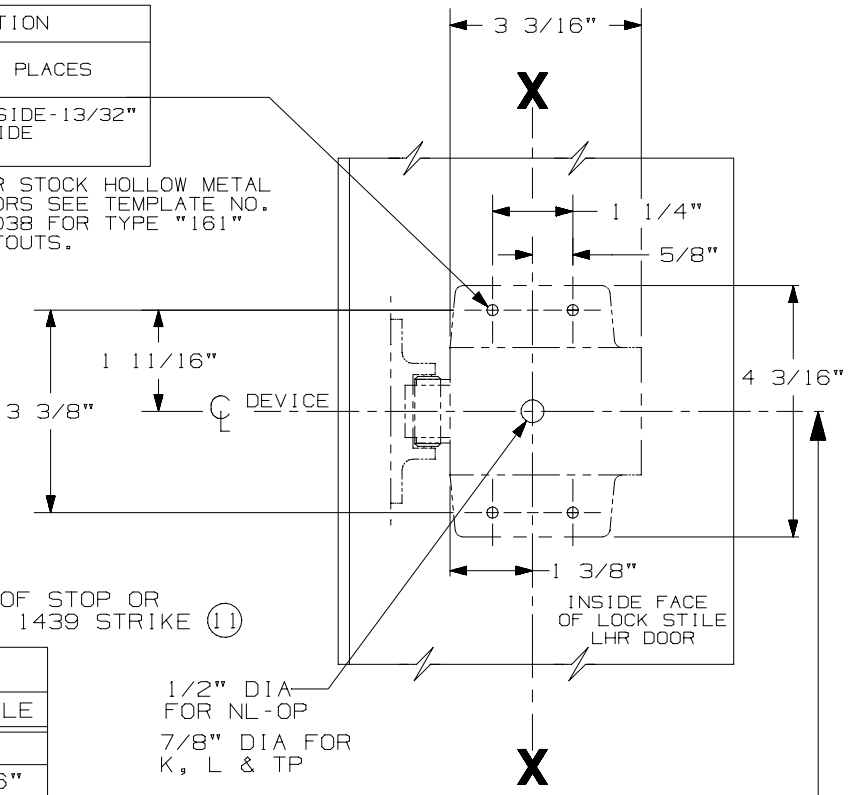

SINGLE DOOR INSTALLATION		
STRIKE	DIM "B"	MIN. STILE
299 & 299F	2 3/8"	4 3/8"
(11) 1409 & 1439	1 9/16"	3 13/16"
1606	1 15/16"	3 15/16"

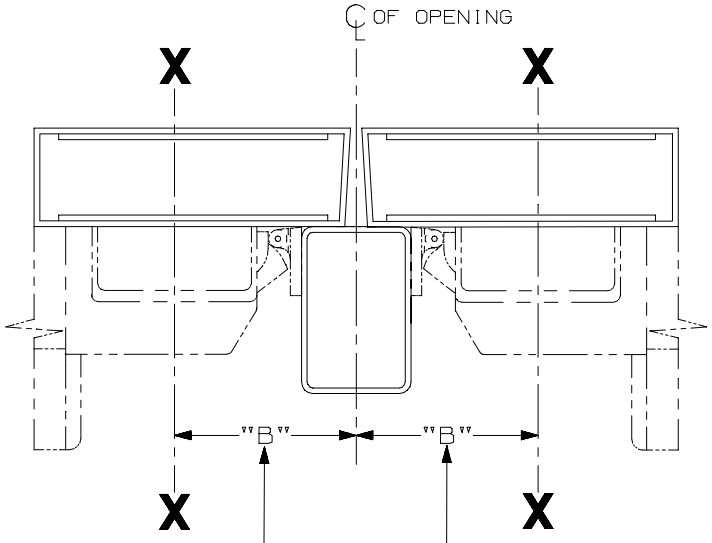

REMOVE GLASS STOP HEAD OR BEAD IN AREA OF DEVICE IF REQUIRED.

LHR SHOWN
RHR OPPOSITE

SINGLE DOOR OPENING
39 13/16" TO FINISHED FLOOR

DOUBLE DOOR OPENING
WITH VON DUPRIN MULLION
39 11/16"

DOUBLE DOOR INSTALLATION WITH VON DUPRIN MULLIONS			
MULLION	STRIKE	DIM. "B"	MIN. STILE
4954	299	3 3/8"	4 3/4"
9954	499-F	3 1/2"	4 7/8"
5654	299	2 15/16"	4 1/4"
5754	1408	2 1/8"	3 13/16"
1654	1606	2 15/16"	4 1/4"

IT IS RECOMMENDED THE MOUNTING HOLES BE PREPARED IN THE FIELD

FOR OUTSIDE TRIM PREPARATION, WHEN REQUIRED, SEE ADDITIONAL TRIM TEMPLATE.

22 NL, K, L, TP, NL-F, K-F, L-F, & TP-F Series Rim Devices

VON DUPRIN®

NOTES: SEE MASTER SHEET #10001 FOR SUGGESTED REINFORCING

TEMPLATE NUMBER: 10012_a

DATE: 05-15-13

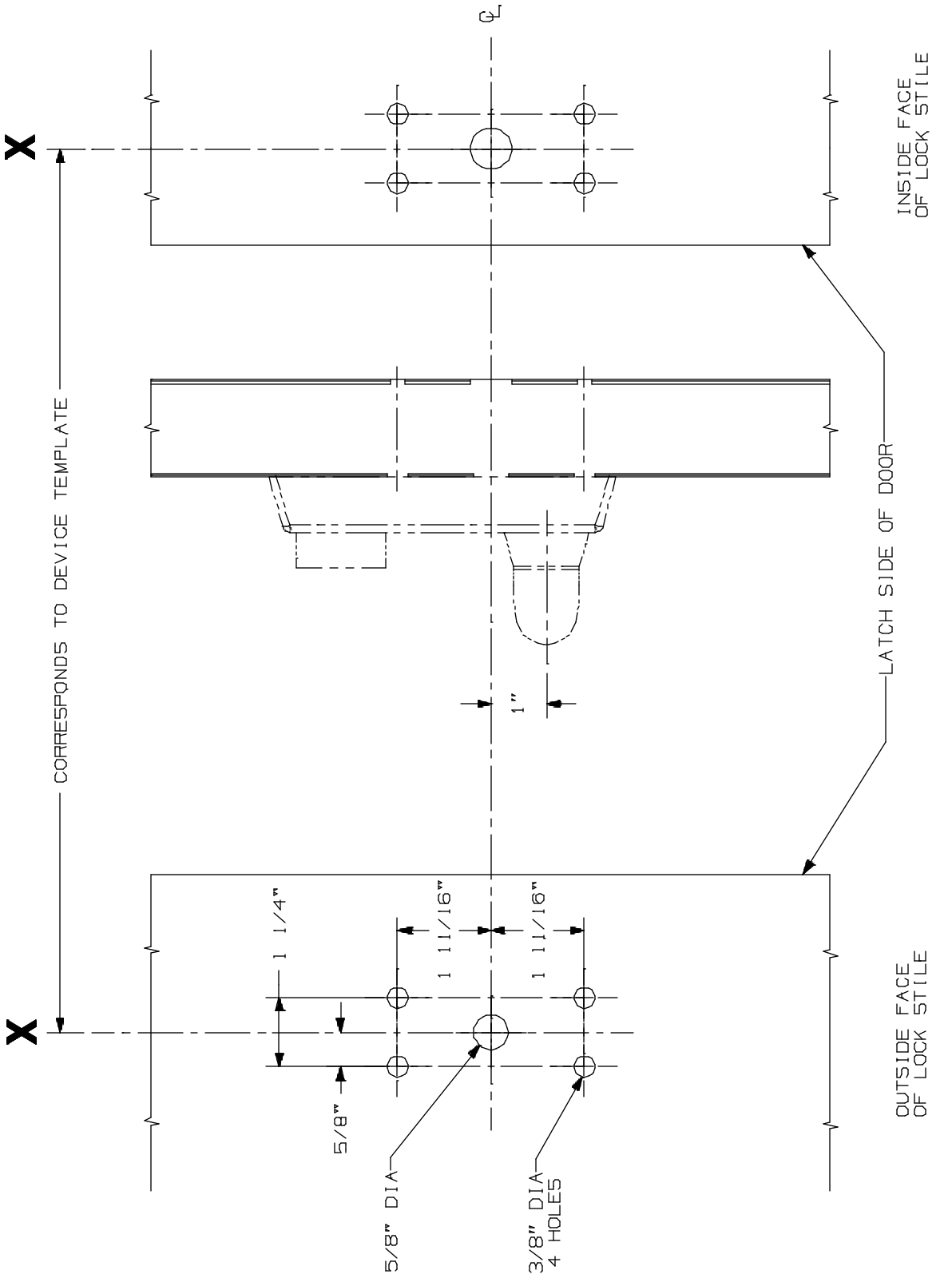

APPLICATIONS
ZZ RIM SERIES
2227 SERIES

230L & 230L-BE Lever Control
Metal Door Application

VON DUPRIN®

NOTES: See Master Sheet #10001 For Suggested Reinforcing

TEMPLATE NUMBER: 20007_a

DATE: 05-22-13

RIM APPLICATION

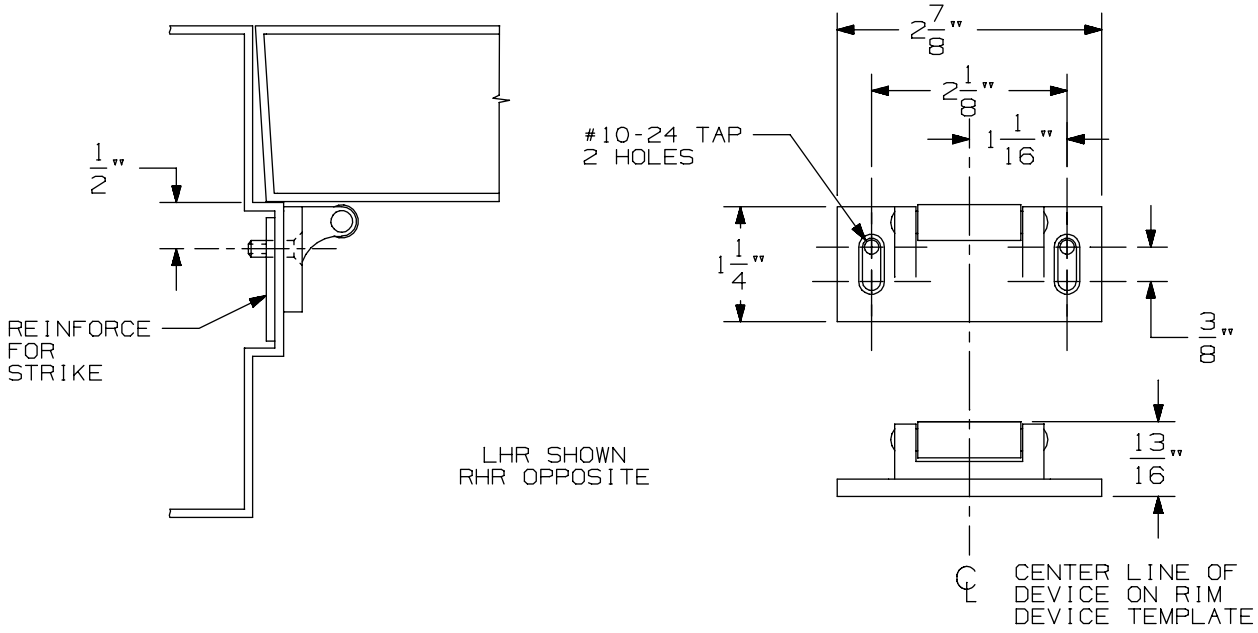

VERTICAL APPLICATION

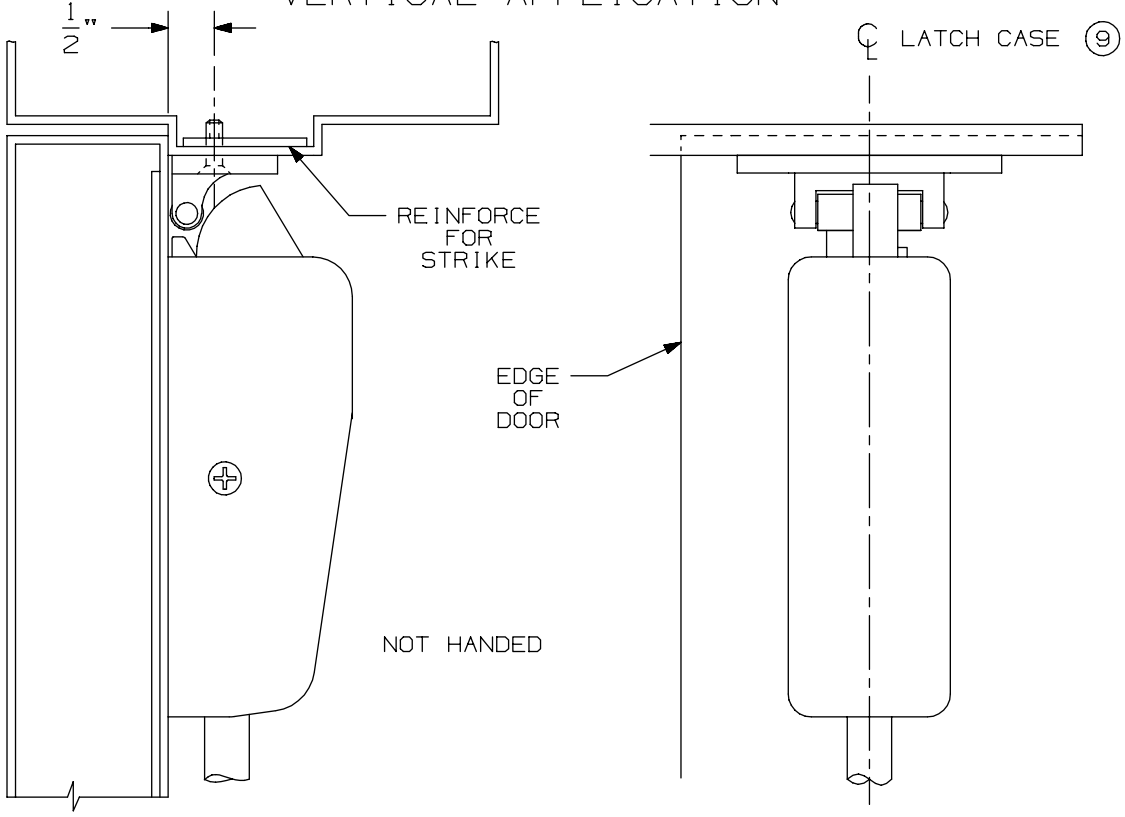

NOTE: LATCH CASE MOUNTING HOLES TO BE PREPARED AT INSTALLATION ON DOOR.

299 & 299F Strike

VON DUPRIN®

NOTES: SEE MASTER SHEET #10001 FOR SUGGESTED REINFORCING

TEMPLATE NUMBER: 30039_a

DATE: 05-23-13

APPLICATION	PREPARATION
SURFACE APPLICATION OR 990 TRIM APPLICATION	#10-24 TAP 4 PLACES
210 TRIM APPLICATION OR SEXBOLT APPLICATION	1/4" DIA THIS SIDE-13/32" DIA OPPOSITE SIDE 4 PLACES

NOTE: FOR STOCK HOLLOW METAL DOORS SEE TEMPLATE NO. 10038 FOR TYPE "161" CUTOUTS.

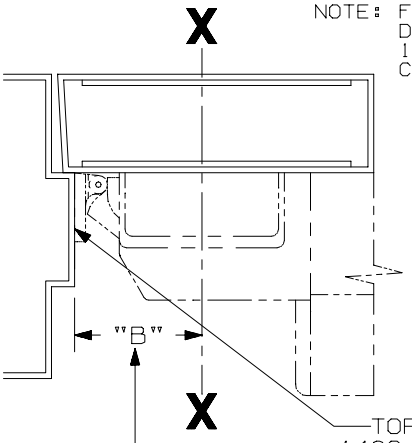

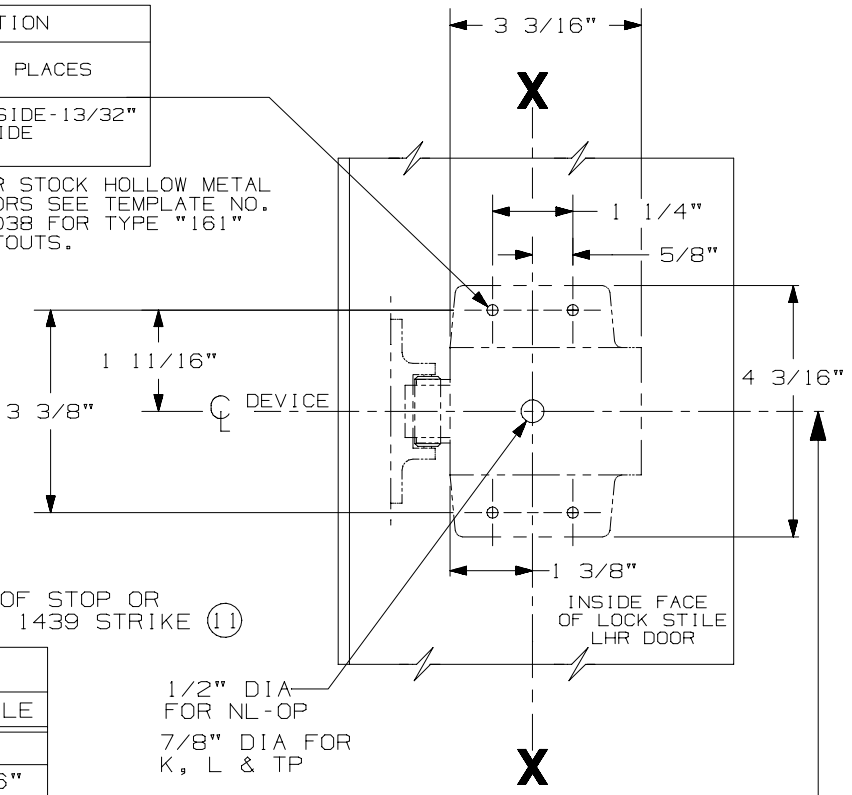

SINGLE DOOR INSTALLATION		
STRIKE	DIM "B"	MIN. STILE
299 & 299F	2 3/8"	4 3/8"
(11) 1409 & 1439	1 9/16"	3 13/16"
1606	1 15/16"	3 15/16"

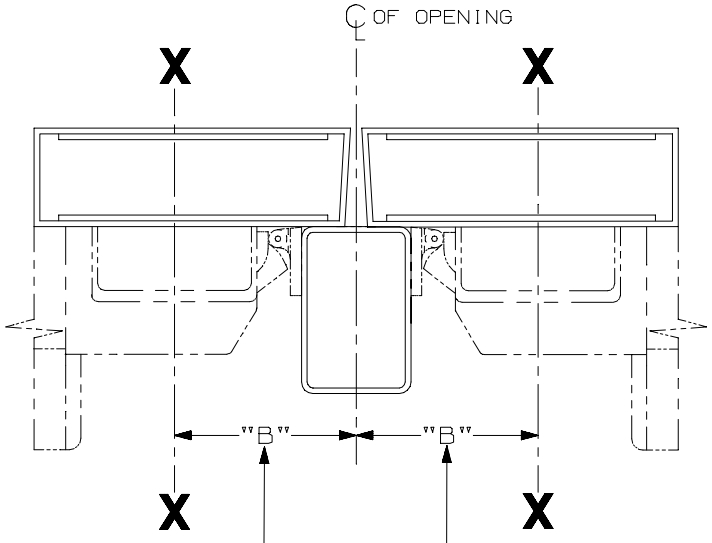

REMOVE GLASS STOP HEAD OR BEAD IN AREA OF DEVICE IF REQUIRED.

LHR SHOWN
RHR OPPOSITE

SINGLE DOOR OPENING
39 13/16" TO FINISHED FLOOR

DOUBLE DOOR OPENING
WITH VON DUPRIN MULLION
39 11/16"

DOUBLE DOOR INSTALLATION WITH VON DUPRIN MULLIONS			
MULLION	STRIKE	DIM. "B"	MIN. STILE
4954	299	3 3/8"	4 3/4"
9954	499-F	3 1/2"	4 7/8"
5654	299	2 15/16"	4 1/4"
5754	1408	2 1/8"	3 13/16"
1654	1606	2 15/16"	4 1/4"

IT IS RECOMMENDED THE MOUNTING HOLES BE PREPARED IN THE FIELD

FOR OUTSIDE TRIM PREPARATION, WHEN REQUIRED, SEE ADDITIONAL TRIM TEMPLATE.

22 NL, K, L, TP, NL-F, K-F, L-F, & TP-F Series Rim Devices

VON DUPRIN®

NOTES: SEE MASTER SHEET #10001 FOR SUGGESTED REINFORCING

TEMPLATE NUMBER: 10012_a

DATE: 05-15-13

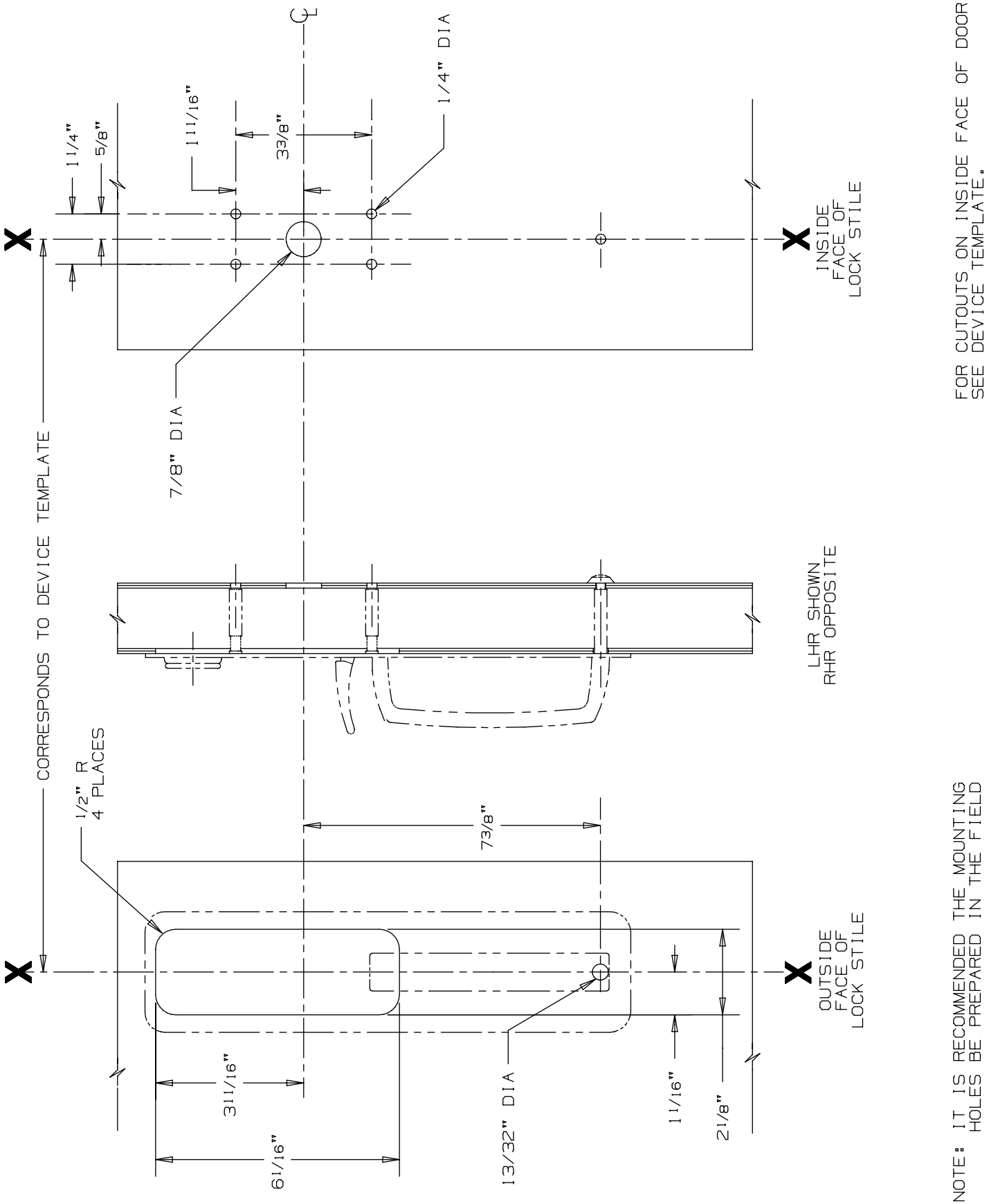

230TP & 230TP-BE Trim

VON DUPRIN®

NOTES: SEE MASTER SHEET #10001 FOR SUGGESTED REINFORCING

TEMPLATE NUMBER: 20038_b

DATE: 07-14-14

RIM APPLICATION

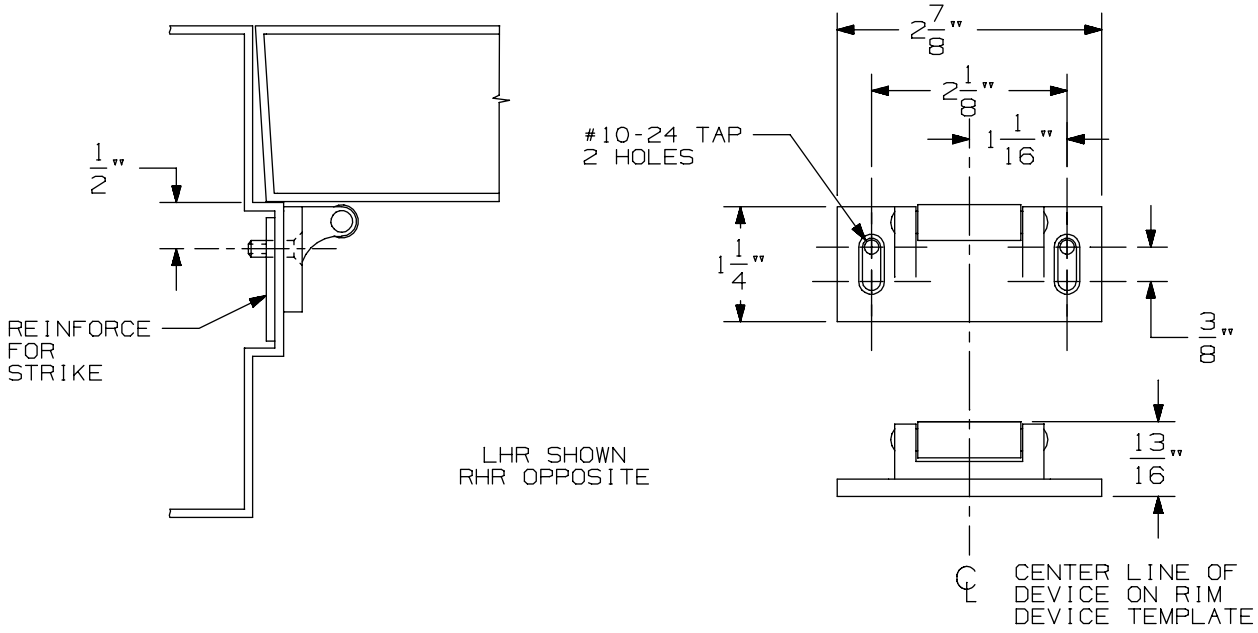

VERTICAL APPLICATION

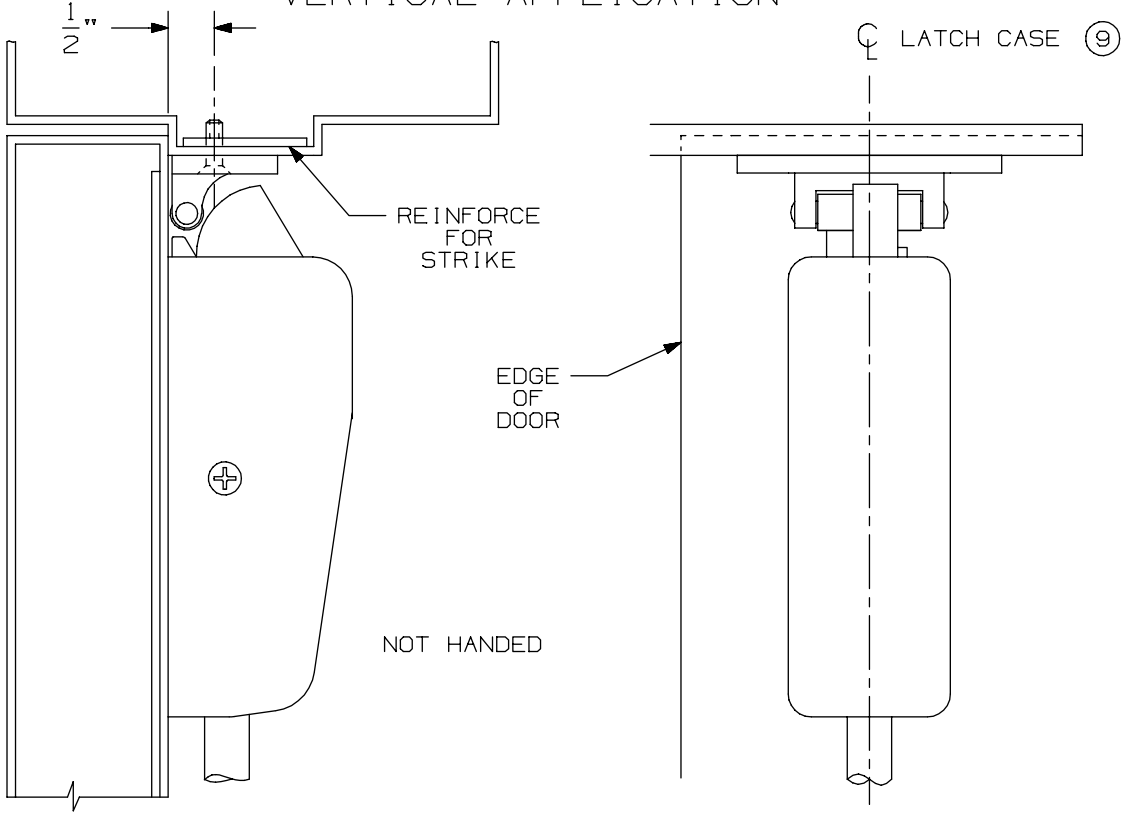

NOTE: LATCH CASE MOUNTING HOLES TO BE PREPARED AT INSTALLATION ON DOOR.

299 & 299F Strike

VON DUPRIN®

NOTES: SEE MASTER SHEET #10001 FOR SUGGESTED REINFORCING

TEMPLATE NUMBER: 30039_a

DATE: 05-23-13

22 Series Exit Device

-

22-F Rim Fire

APPLICATION	PREPARATION
SURFACE APPLICATION OR 990 TRIM APPLICATION	#10-24 TAP 4 PLACES
210 TRIM APPLICATION OR SEXBOLT APPLICATION	1/4" DIA THIS SIDE-13/32" DIA OPPOSITE SIDE 4 PLACES

NOTE: FOR STOCK HOLLOW METAL DOORS SEE TEMPLATE NO. 10038 FOR TYPE "161" CUTOUTS.

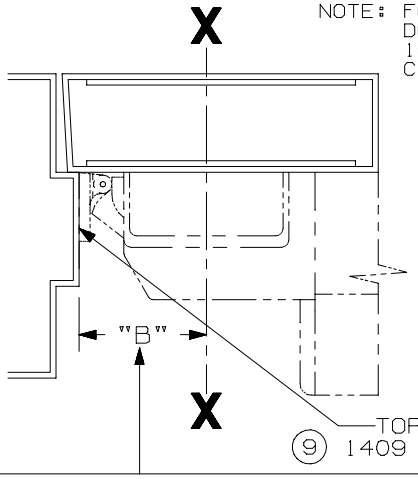

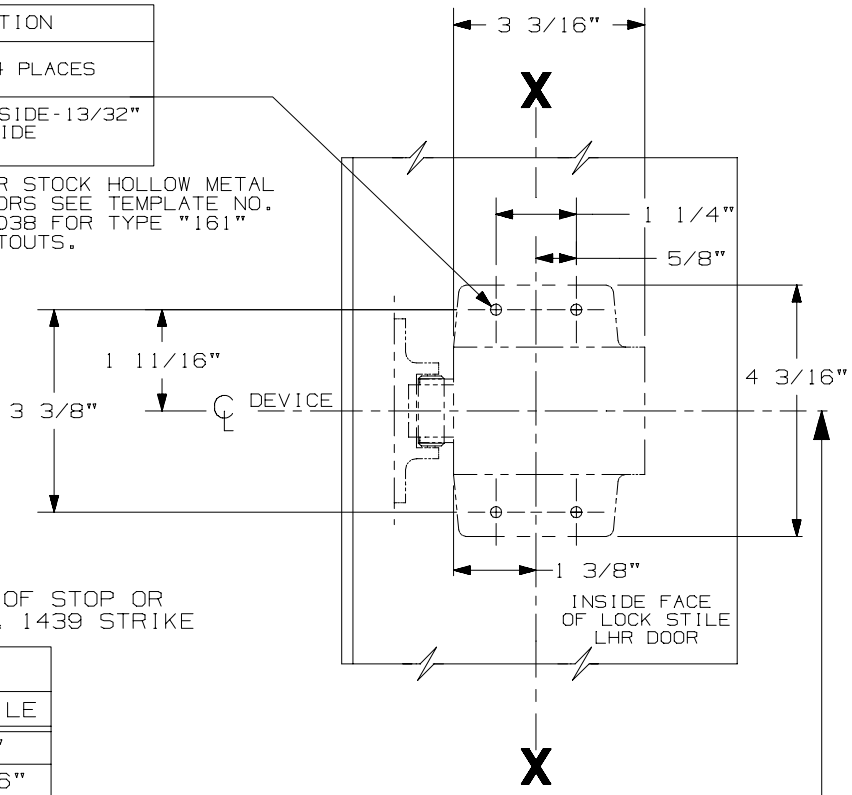

SINGLE DOOR INSTALLATION		
STRIKE	DIM "B"	MIN. STILE
299 & 299F	2 3/8"	4 3/8"
⑨ 1409 & 1439	1 9/16"	3 13/16"
1606	1 15/16"	3 15/16"

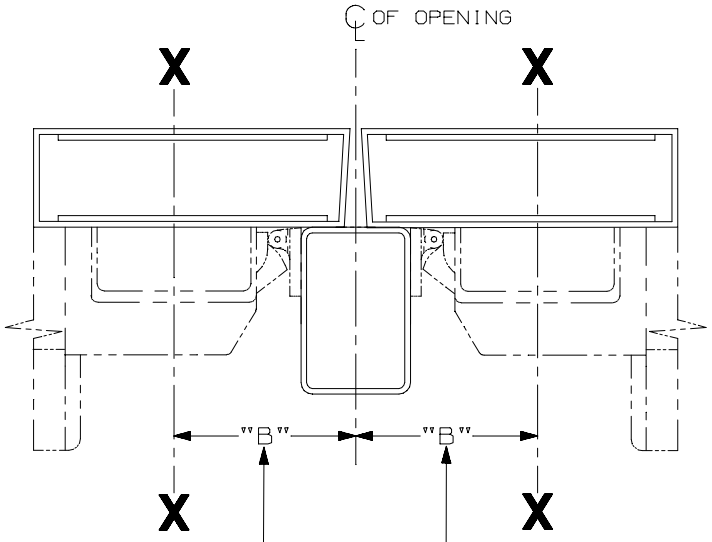

REMOVE GLASS STOP HEAD OR BEAD IN AREA OF DEVICE IF REQUIRED.

LHR SHOWN
RHR OPPOSITE

SINGLE DOOR OPENING
39 13/16" TO FINISHED FLOOR

DOUBLE DOOR OPENING
WITH VON DUPRIN MULLION
39 11/16"

DOUBLE DOOR INSTALLATION WITH VON DUPRIN MULLIONS			
MULLION	STRIKE	DIM. "B"	MIN. STILE
4954	299	3 3/8"	4 3/4"
9954	499-F	3 1/2"	4 7/8"
5654	299	2 15/16"	4 1/4"
5754	1408	2 1/8"	3 13/16"
1654	1606	2 15/16"	4 1/4"

FOR OUTSIDE TRIM PREPARATION, WHEN REQUIRED, SEE ADDITIONAL TRIM TEMPLATE.

22 EO, DT, & EO-F Series Rim Devices

VON DUPRIN®

NOTES: SEE MASTER SHEET #10001 FOR SUGGESTED REINFORCING

TEMPLATE NUMBER: 10011_a

DATE: 05-15-13

RIM APPLICATION

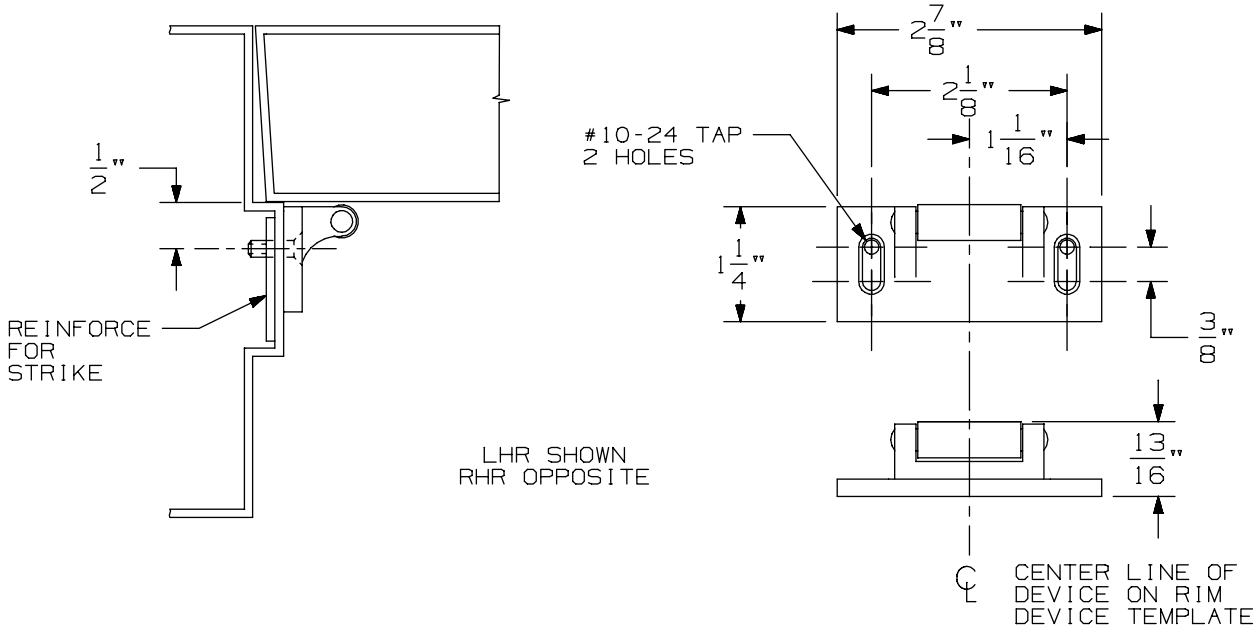

VERTICAL APPLICATION

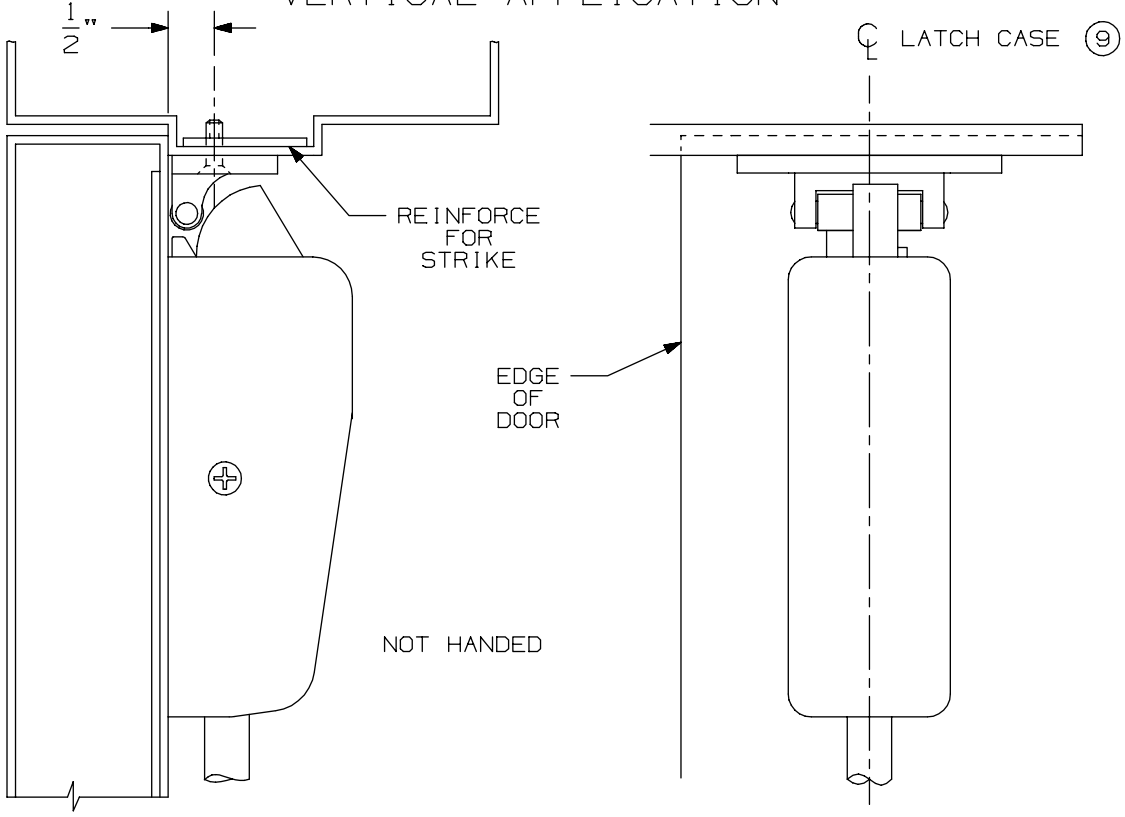

NOTE: LATCH CASE MOUNTING HOLES TO BE PREPARED AT INSTALLATION ON DOOR.

299 & 299F Strike

VON DUPRIN®

NOTES: SEE MASTER SHEET #10001 FOR SUGGESTED REINFORCING

TEMPLATE NUMBER: 30039_a

DATE: 05-23-13

APPLICATION	PREPARATION
SURFACE APPLICATION OR 990 TRIM APPLICATION	#10-24 TAP 4 PLACES
210 TRIM APPLICATION OR SEXBOLT APPLICATION	1/4" DIA THIS SIDE-13/32" DIA OPPOSITE SIDE 4 PLACES

NOTE: FOR STOCK HOLLOW METAL DOORS SEE TEMPLATE NO. 10038 FOR TYPE "161" CUTOUTS.

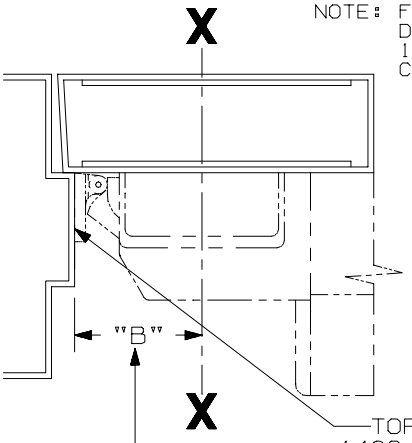

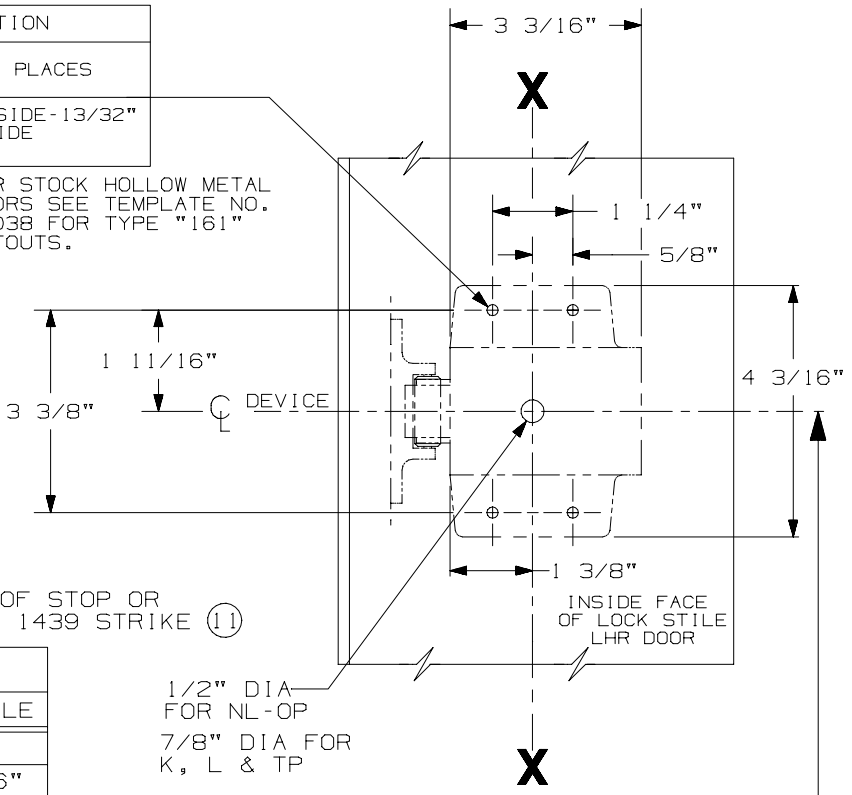

SINGLE DOOR INSTALLATION		
STRIKE	DIM "B"	MIN. STILE
299 & 299F	2 3/8"	4 3/8"
(11) 1409 & 1439	1 9/16"	3 13/16"
1606	1 15/16"	3 15/16"

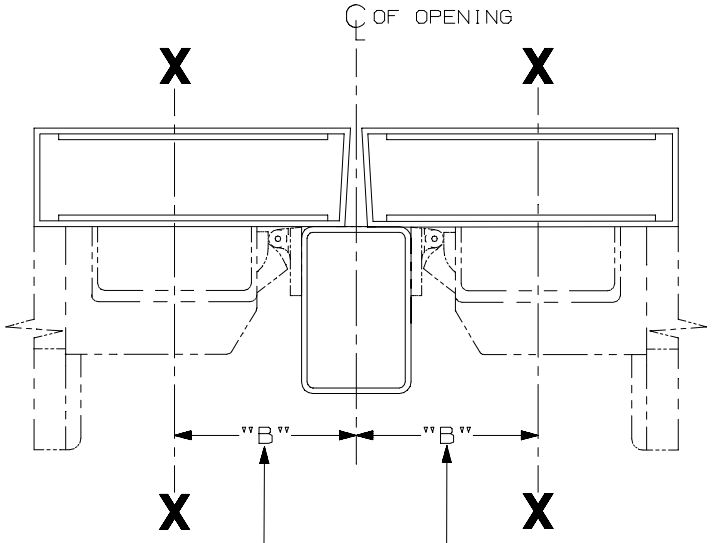

REMOVE GLASS STOP HEAD OR BEAD IN AREA OF DEVICE IF REQUIRED.

LHR SHOWN
RHR OPPOSITE

SINGLE DOOR OPENING
39 13/16" TO FINISHED FLOOR

DOUBLE DOOR OPENING
WITH VON DUPRIN MULLION
39 11/16"

DOUBLE DOOR INSTALLATION WITH VON DUPRIN MULLIONS			
MULLION	STRIKE	DIM. "B"	MIN. STILE
4954	299	3 3/8"	4 3/4"
9954	499-F	3 1/2"	4 7/8"
5654	299	2 15/16"	4 1/4"
5754	1408	2 1/8"	3 13/16"
1654	1606	2 15/16"	4 1/4"

IT IS RECOMMENDED THE MOUNTING HOLES BE PREPARED IN THE FIELD

FOR OUTSIDE TRIM PREPARATION, WHEN REQUIRED, SEE ADDITIONAL TRIM TEMPLATE.

22 NL, K, L, TP, NL-F, K-F, L-F, & TP-F Series Rim Devices

VON DUPRIN®

NOTES: SEE MASTER SHEET #10001 FOR SUGGESTED REINFORCING

TEMPLATE NUMBER: 10012_a

DATE: 05-15-13

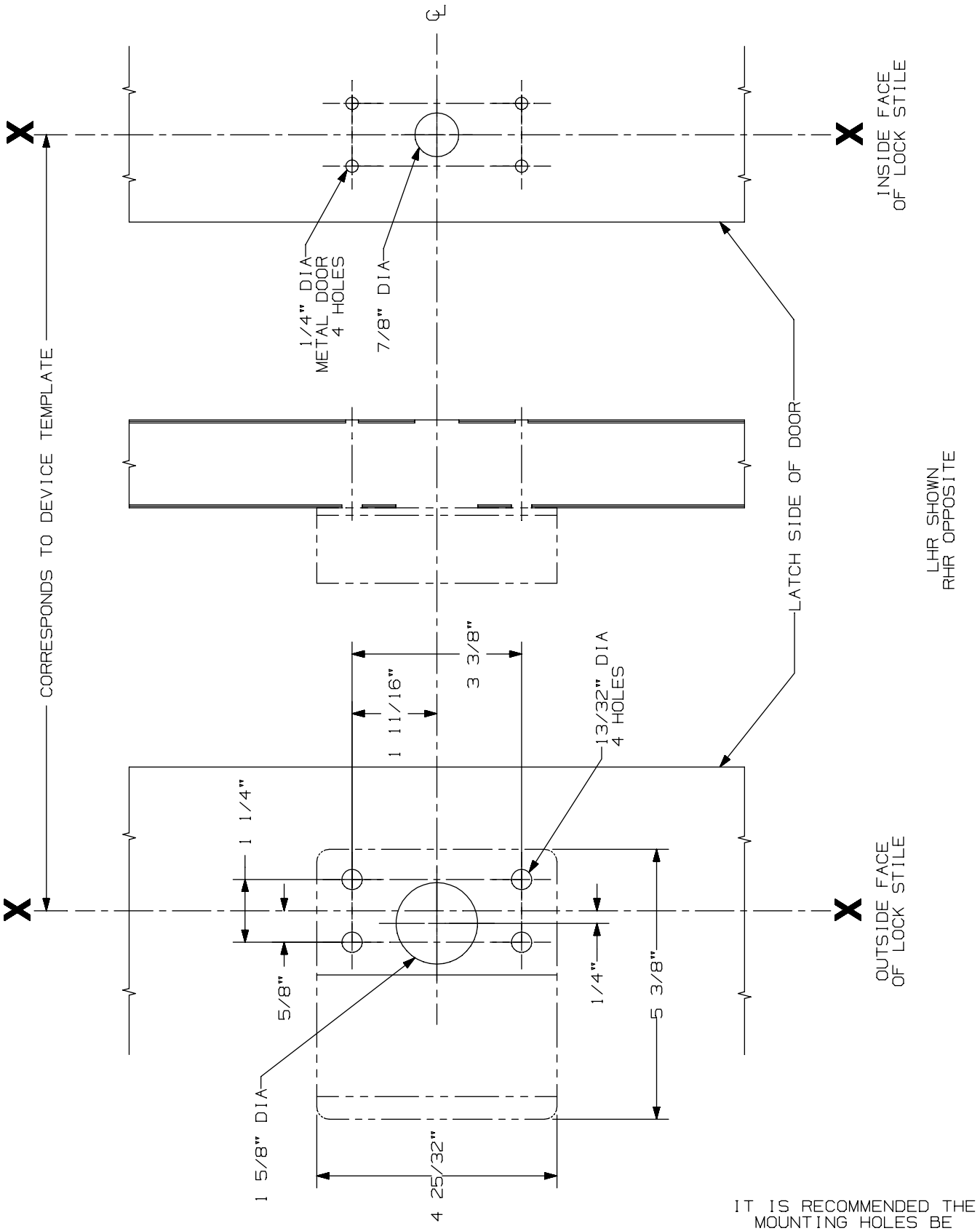

IT IS RECOMMENDED THE MOUNTING HOLES BE PREPARED IN THE FIELD

210 NL Trim

VON DUPRIN®

NOTES: See Master Sheet #10001 For Suggested Reinforcing

TEMPLATE NUMBER: 20016_a

DATE: 05-22-13

RIM APPLICATION

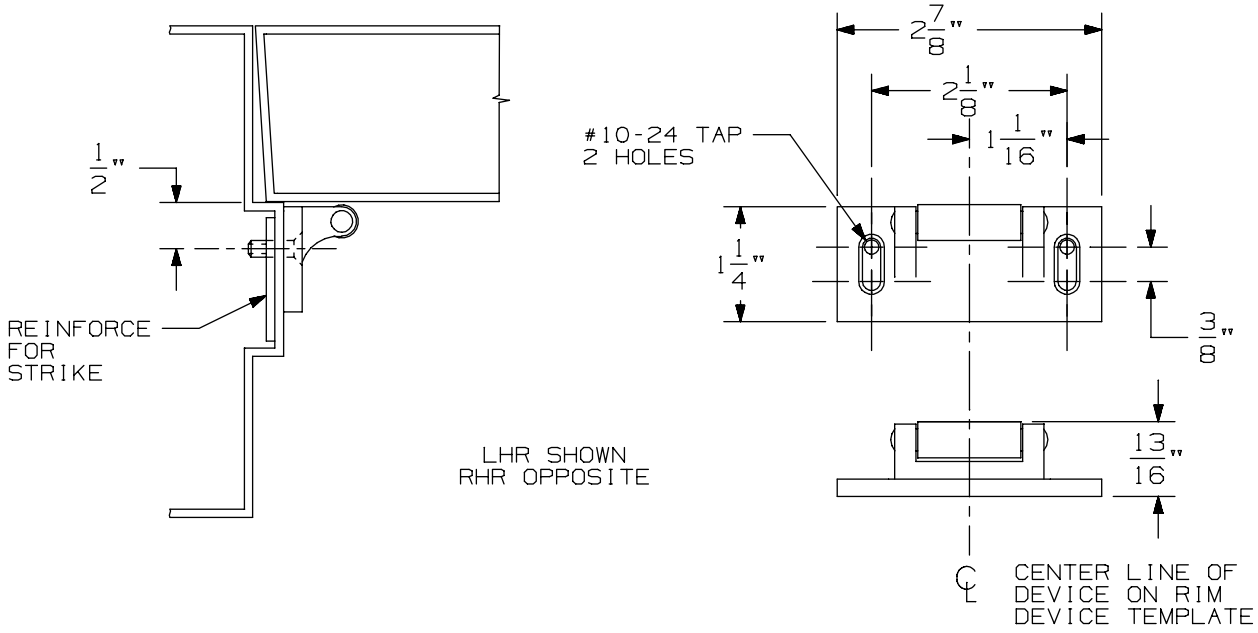

VERTICAL APPLICATION

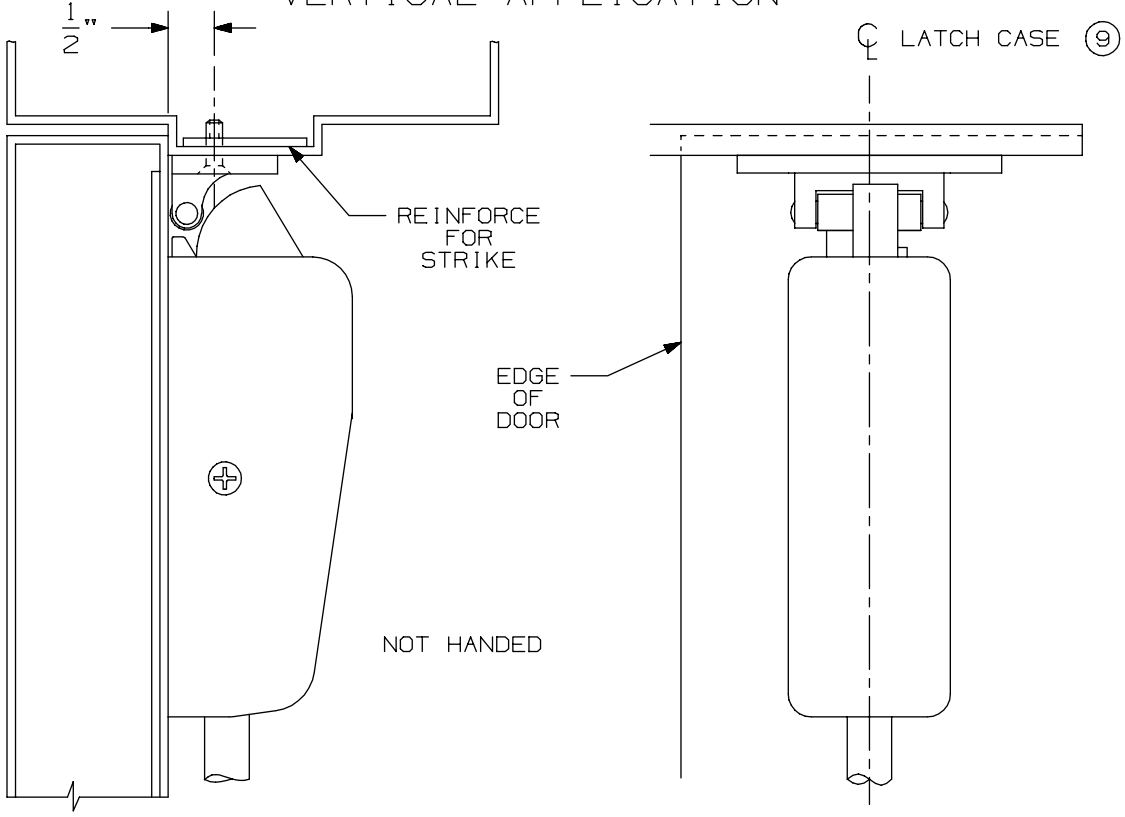

NOTE: LATCH CASE MOUNTING HOLES TO BE PREPARED AT INSTALLATION ON DOOR.

299 & 299F Strike

VON DUPRIN®

NOTES: SEE MASTER SHEET #10001 FOR SUGGESTED REINFORCING

TEMPLATE NUMBER: 30039_a

DATE: 05-23-13

APPLICATION	PREPARATION
SURFACE APPLICATION OR 990 TRIM APPLICATION	#10-24 TAP 4 PLACES
210 TRIM APPLICATION OR SEXBOLT APPLICATION	1/4" DIA THIS SIDE-13/32" DIA OPPOSITE SIDE 4 PLACES

NOTE: FOR STOCK HOLLOW METAL DOORS SEE TEMPLATE NO. 10038 FOR TYPE "161" CUTOUTS.

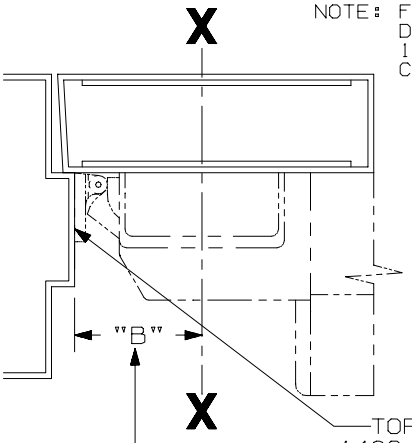

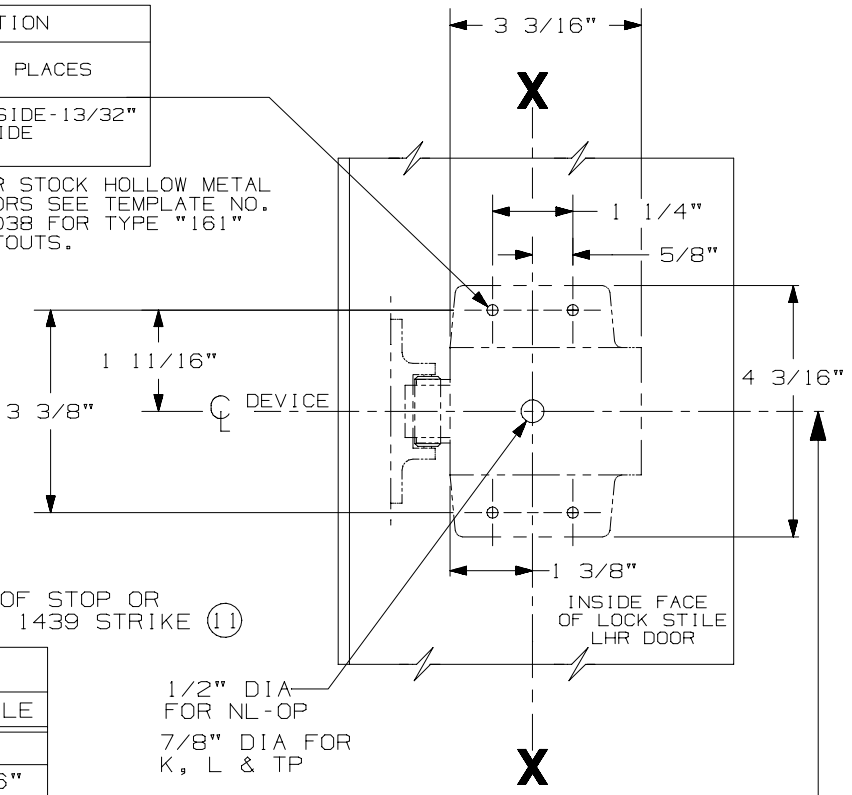

SINGLE DOOR INSTALLATION		
STRIKE	DIM "B"	MIN. STILE
299 & 299F	2 3/8"	4 3/8"
(11) 1409 & 1439	1 9/16"	3 13/16"
1606	1 15/16"	3 15/16"

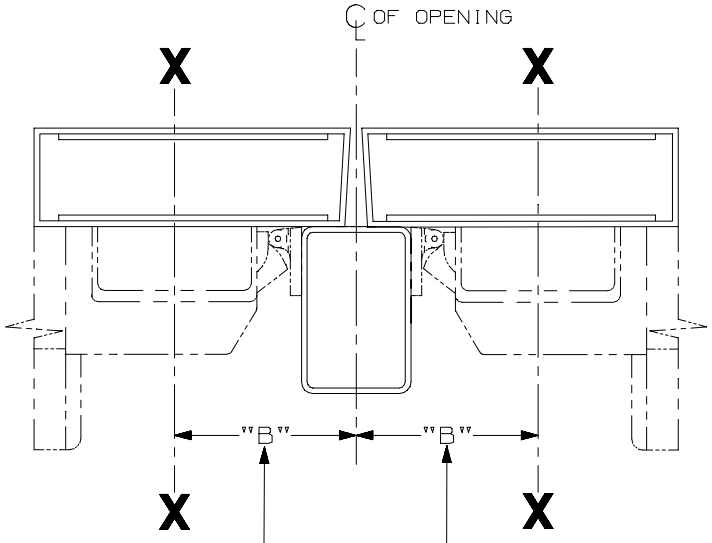

REMOVE GLASS STOP HEAD OR BEAD IN AREA OF DEVICE IF REQUIRED.

LHR SHOWN
RHR OPPOSITE

SINGLE DOOR OPENING
39 13/16" TO FINISHED FLOOR

DOUBLE DOOR OPENING
WITH VON DUPRIN MULLION
39 11/16"

DOUBLE DOOR INSTALLATION WITH VON DUPRIN MULLIONS			
MULLION	STRIKE	DIM. "B"	MIN. STILE
4954	299	3 3/8"	4 3/4"
9954	499-F	3 1/2"	4 7/8"
5654	299	2 15/16"	4 1/4"
5754	1408	2 1/8"	3 13/16"
1654	1606	2 15/16"	4 1/4"

IT IS RECOMMENDED THE MOUNTING HOLES BE PREPARED IN THE FIELD

FOR OUTSIDE TRIM PREPARATION, WHEN REQUIRED, SEE ADDITIONAL TRIM TEMPLATE.

22 NL, K, L, TP, NL-F, K-F, L-F, & TP-F Series Rim Devices

VON DUPRIN®

NOTES: SEE MASTER SHEET #10001 FOR SUGGESTED REINFORCING

TEMPLATE NUMBER: 10012_a

DATE: 05-15-13

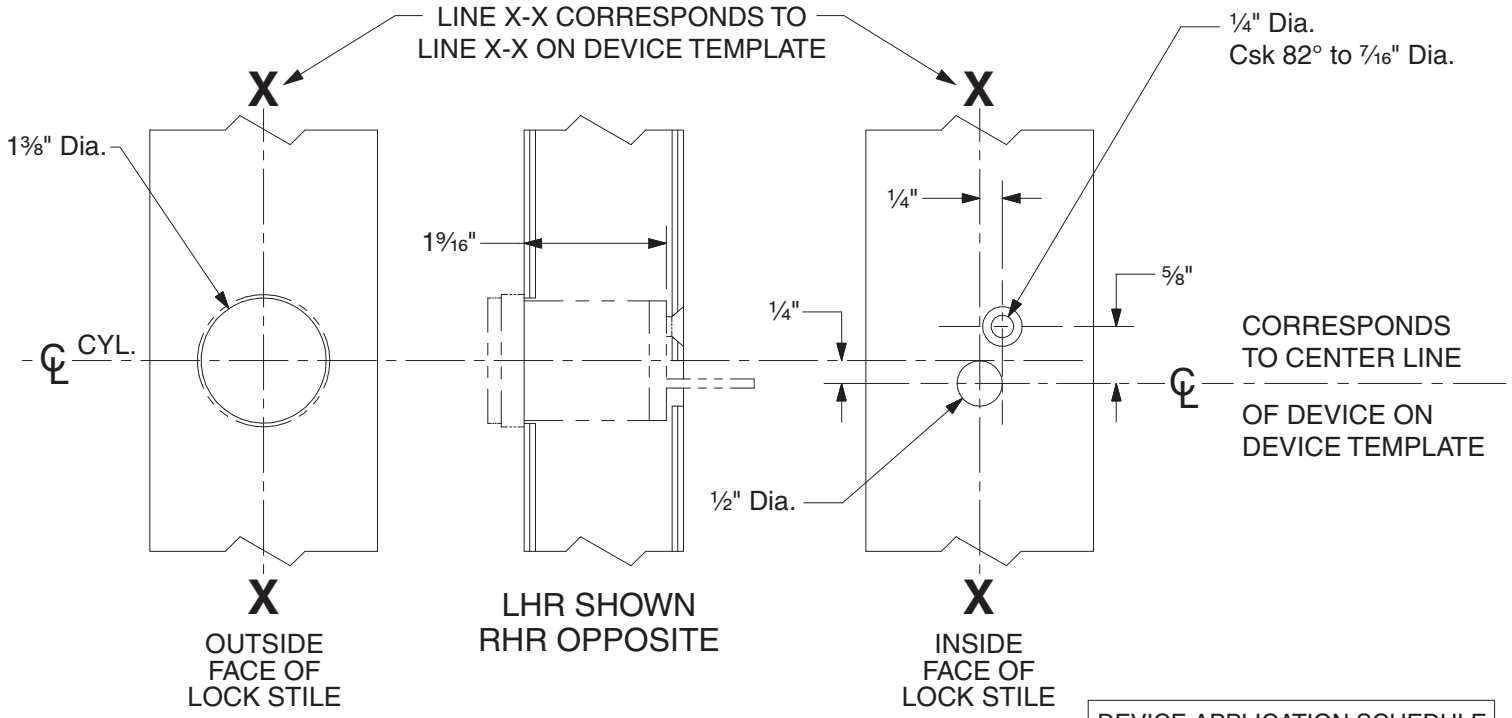

DEVICE APPLICATION SCHEDULE	
98 RIM SERIES	99 RIM SERIES
9827 SERIES	9927 SERIES
9847 SERIES	9947 SERIES
22 RIM SERIES	2227 SERIES

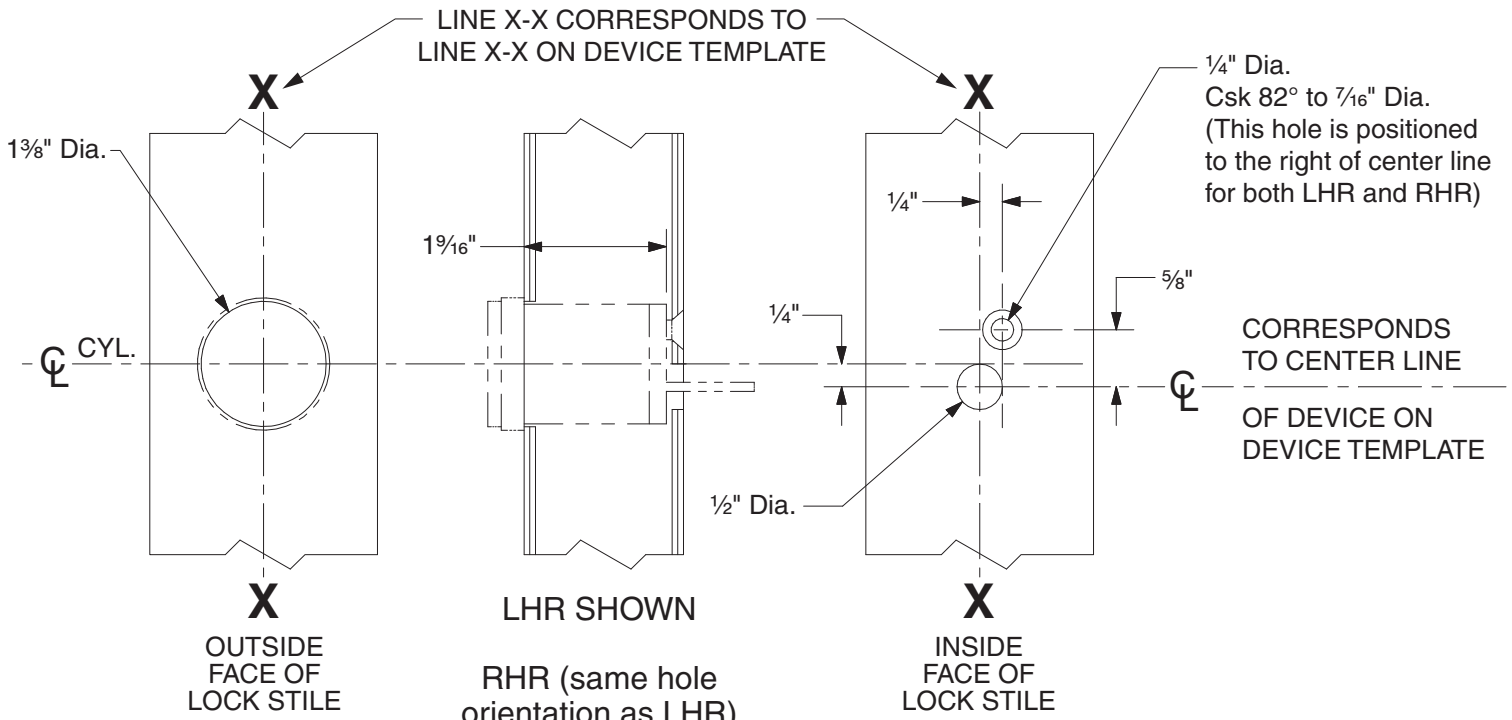

DEVICE APPLICATION SCHEDULE	
9849 SERIES	9949 SERIES

110NL Cylinder Preparation

VON DUPRIN®

NOTES: SEE MASTER SHEET #10001 FOR SUGGESTED REINFORCING

TEMPLATE NUMBER: 40022_c

DATE: 05-28-13

RIM APPLICATION

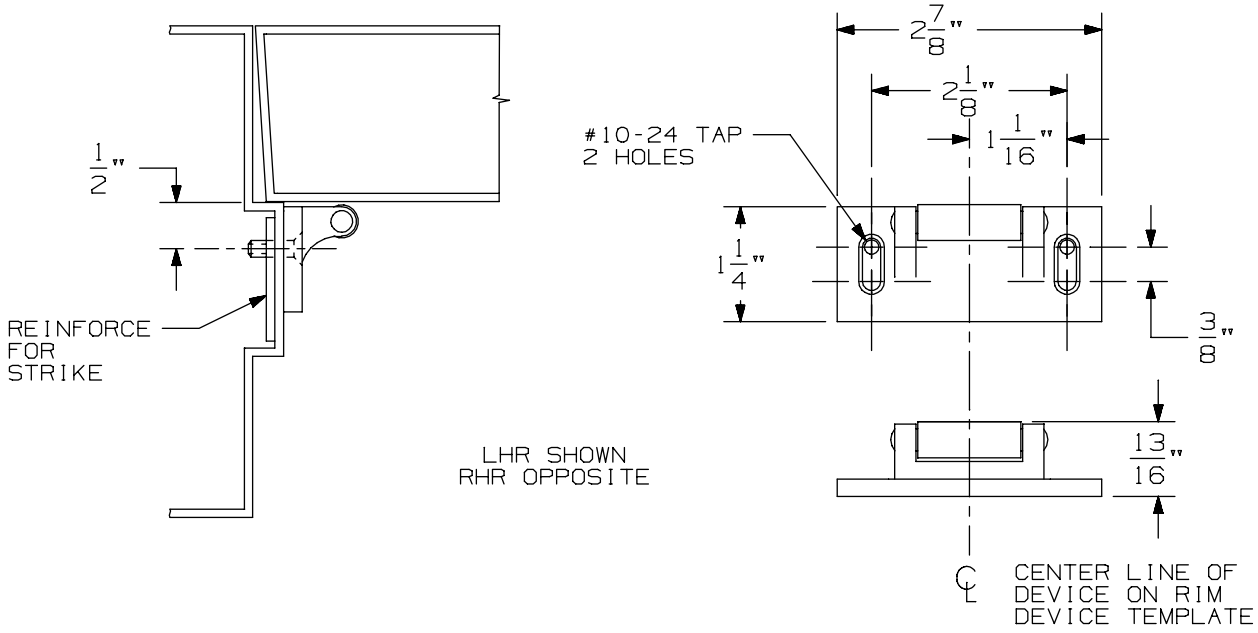

VERTICAL APPLICATION

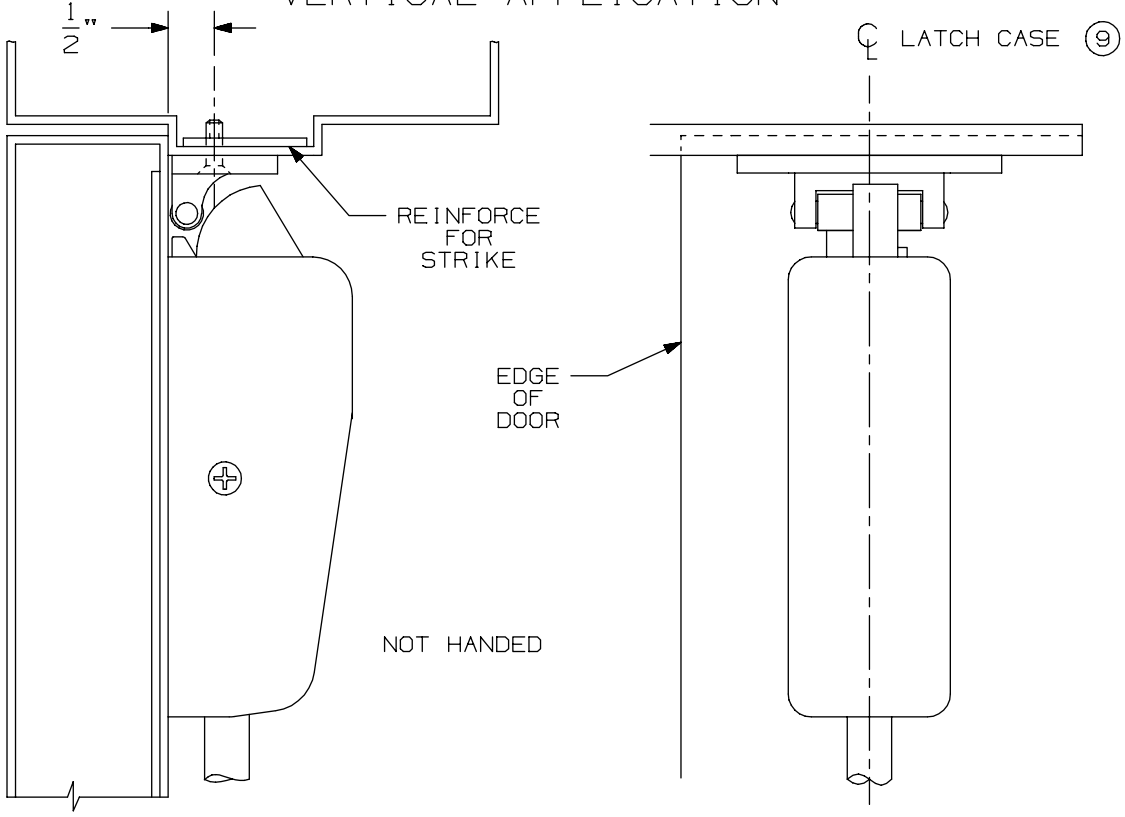

NOTE: LATCH CASE MOUNTING HOLES TO BE PREPARED AT INSTALLATION ON DOOR.

299 & 299F Strike

VON DUPRIN®

NOTES: SEE MASTER SHEET #10001 FOR SUGGESTED REINFORCING

TEMPLATE NUMBER: 30039_a

DATE: 05-23-13

APPLICATION	PREPARATION
SURFACE APPLICATION OR 990 TRIM APPLICATION	#10-24 TAP 4 PLACES
210 TRIM APPLICATION OR SEXBOLT APPLICATION	1/4" DIA THIS SIDE-13/32" DIA OPPOSITE SIDE 4 PLACES

NOTE: FOR STOCK HOLLOW METAL DOORS SEE TEMPLATE NO. 10038 FOR TYPE "161" CUTOUTS.

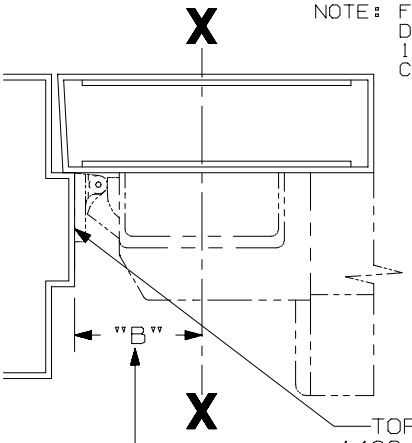

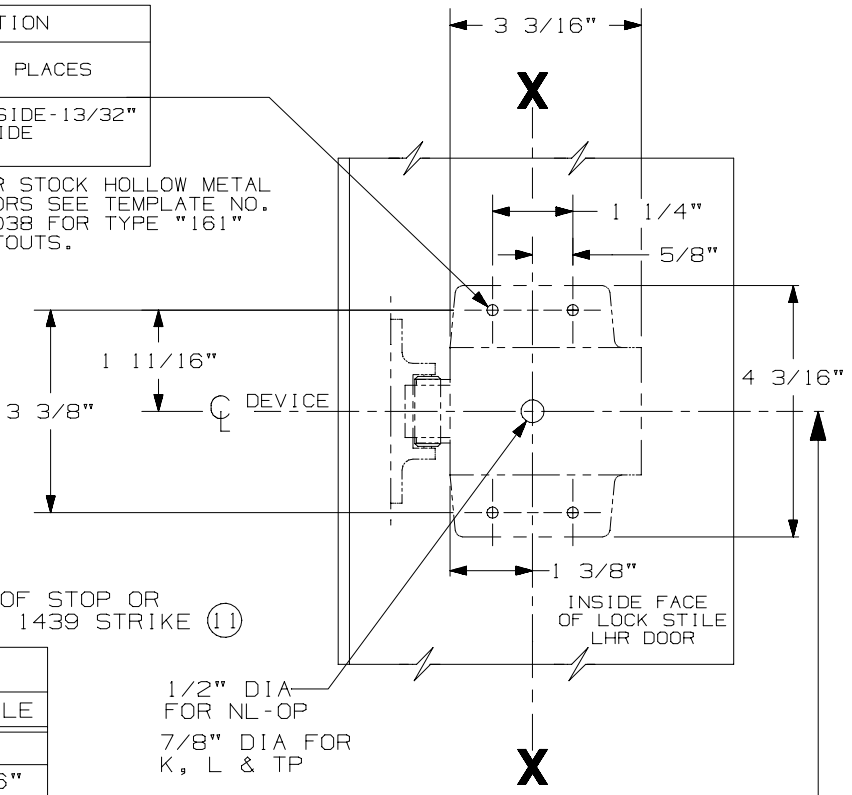

SINGLE DOOR INSTALLATION		
STRIKE	DIM "B"	MIN. STILE
299 & 299F	2 3/8"	4 3/8"
(11) 1409 & 1439	1 9/16"	3 13/16"
1606	1 15/16"	3 15/16"

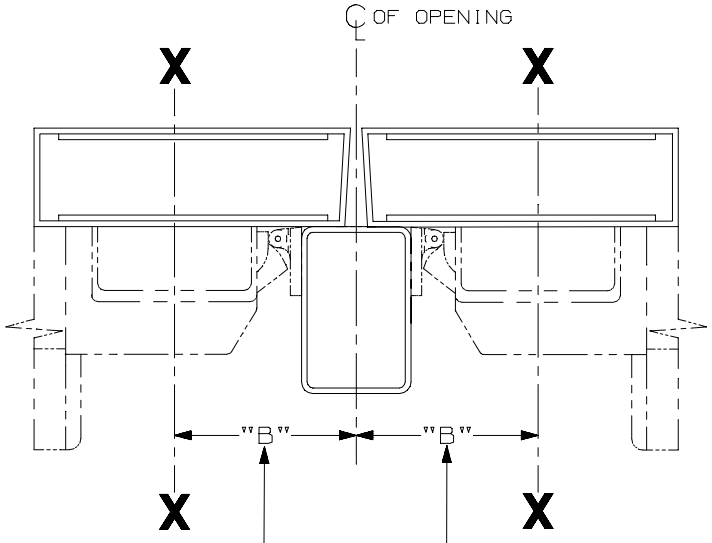

REMOVE GLASS STOP HEAD OR BEAD IN AREA OF DEVICE IF REQUIRED.

LHR SHOWN
RHR OPPOSITE

SINGLE DOOR OPENING
39 13/16" TO FINISHED FLOOR

DOUBLE DOOR OPENING
WITH VON DUPRIN MULLION
39 11/16"

DOUBLE DOOR INSTALLATION WITH VON DUPRIN MULLIONS			
MULLION	STRIKE	DIM. "B"	MIN. STILE
4954	299	3 3/8"	4 3/4"
9954	499-F	3 1/2"	4 7/8"
5654	299	2 15/16"	4 1/4"
5754	1408	2 1/8"	3 13/16"
1654	1606	2 15/16"	4 1/4"

IT IS RECOMMENDED THE MOUNTING HOLES BE PREPARED IN THE FIELD

FOR OUTSIDE TRIM PREPARATION, WHEN REQUIRED, SEE ADDITIONAL TRIM TEMPLATE.

22 NL, K, L, TP, NL-F, K-F, L-F, & TP-F Series Rim Devices

VON DUPRIN®

NOTES: SEE MASTER SHEET #10001 FOR SUGGESTED REINFORCING

TEMPLATE NUMBER: 10012_a

DATE: 05-15-13

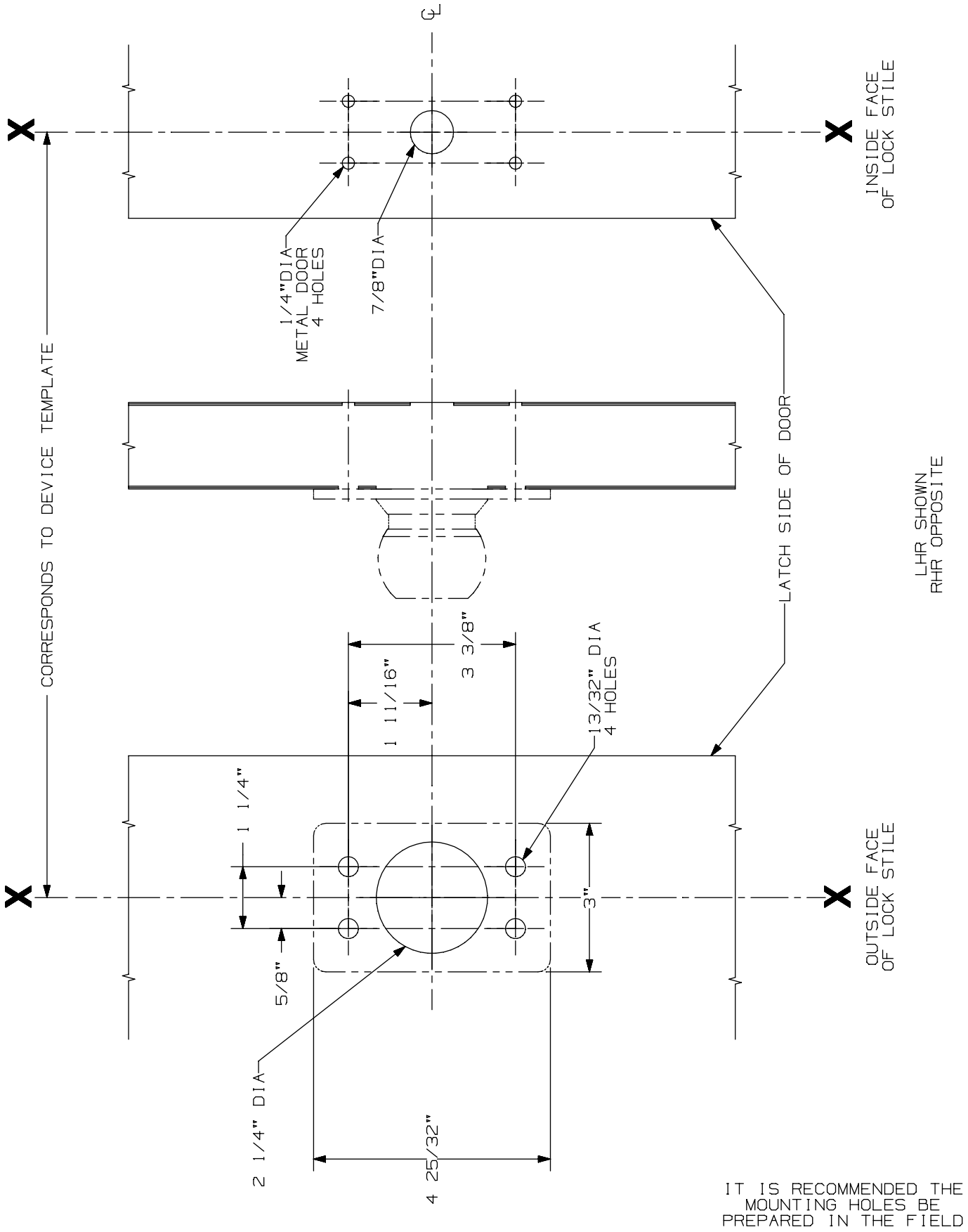

IT IS RECOMMENDED THE MOUNTING HOLES BE PREPARED IN THE FIELD

210 K Series Trim

VON DUPRIN®

NOTES: See Master Sheet #10001 For Suggested Reinforcing

TEMPLATE NUMBER: 20018_a

DATE: 05-22-13

RIM APPLICATION

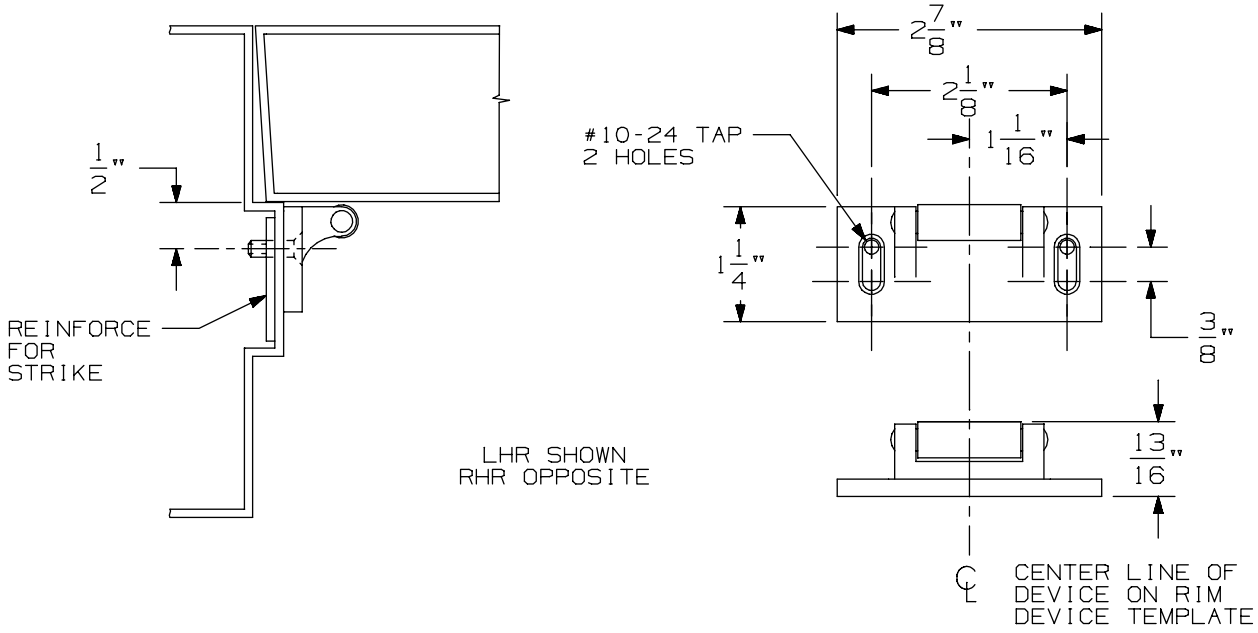

VERTICAL APPLICATION

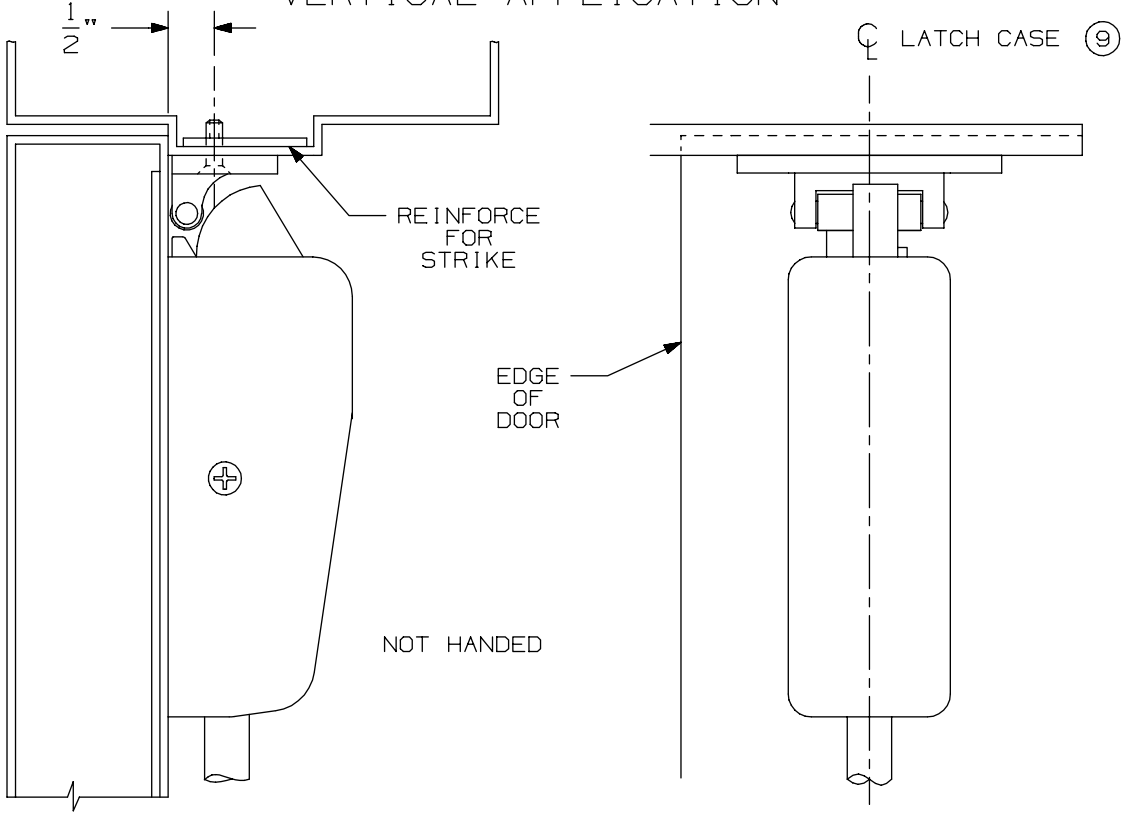

NOTE: LATCH CASE MOUNTING HOLES TO BE PREPARED AT INSTALLATION ON DOOR.

299 & 299F Strike

VON DUPRIN®

NOTES: SEE MASTER SHEET #10001 FOR SUGGESTED REINFORCING

TEMPLATE NUMBER: 30039_a

DATE: 05-23-13

APPLICATION	PREPARATION
SURFACE APPLICATION OR 990 TRIM APPLICATION	#10-24 TAP 4 PLACES
210 TRIM APPLICATION OR SEXBOLT APPLICATION	1/4" DIA THIS SIDE-13/32" DIA OPPOSITE SIDE 4 PLACES

NOTE: FOR STOCK HOLLOW METAL DOORS SEE TEMPLATE NO. 10038 FOR TYPE "161" CUTOUTS.

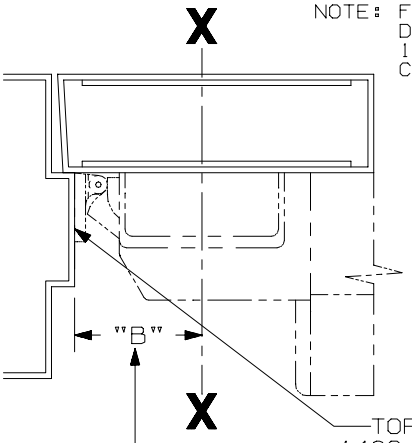

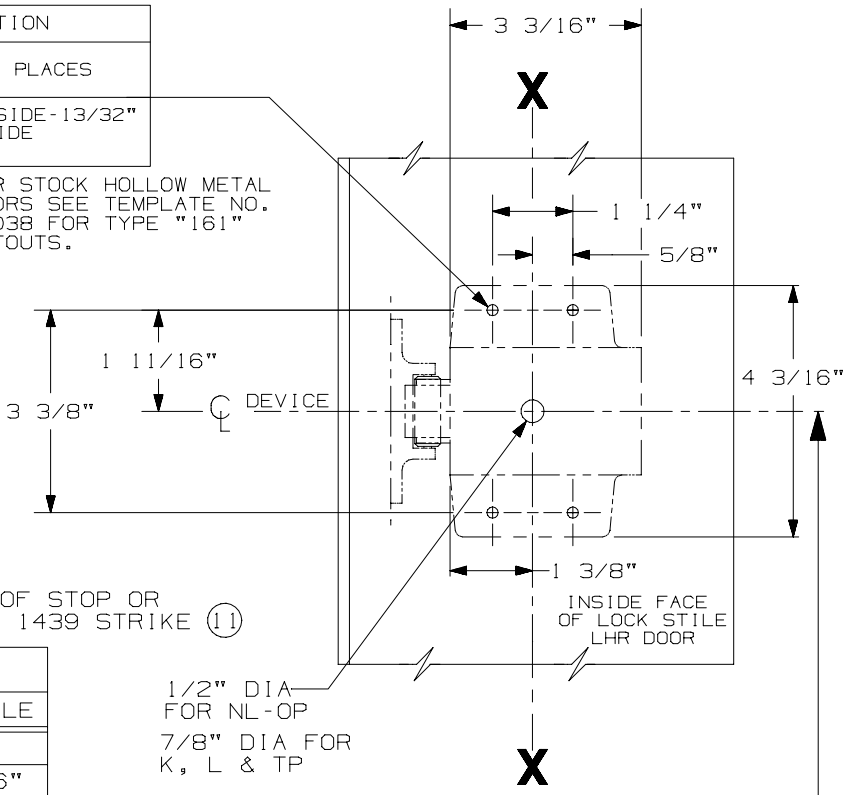

SINGLE DOOR INSTALLATION		
STRIKE	DIM "B"	MIN. STILE
299 & 299F	2 3/8"	4 3/8"
(11) 1409 & 1439	1 9/16"	3 13/16"
1606	1 15/16"	3 15/16"

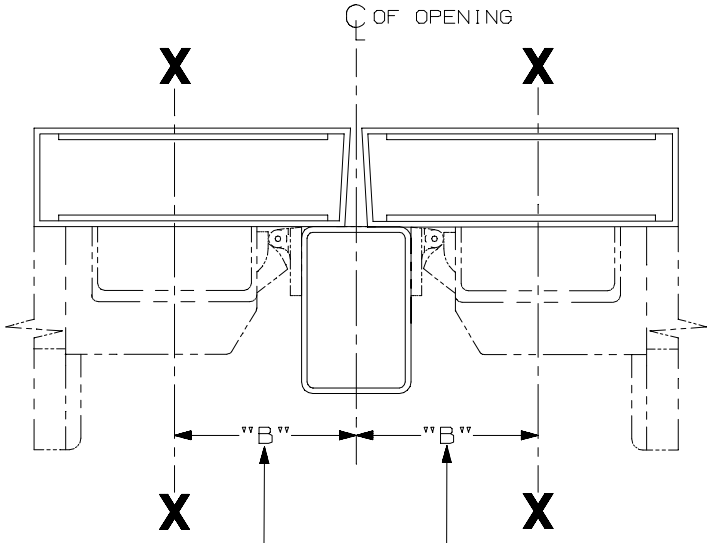

REMOVE GLASS STOP HEAD OR BEAD IN AREA OF DEVICE IF REQUIRED.

LHR SHOWN
RHR OPPOSITE

SINGLE DOOR OPENING
39 13/16" TO FINISHED FLOOR

DOUBLE DOOR OPENING
WITH VON DUPRIN MULLION
39 11/16"

DOUBLE DOOR INSTALLATION WITH VON DUPRIN MULLIONS			
MULLION	STRIKE	DIM. "B"	MIN. STILE
4954	299	3 3/8"	4 3/4"
9954	499-F	3 1/2"	4 7/8"
5654	299	2 15/16"	4 1/4"
5754	1408	2 1/8"	3 13/16"
1654	1606	2 15/16"	4 1/4"

IT IS RECOMMENDED THE MOUNTING HOLES BE PREPARED IN THE FIELD

FOR OUTSIDE TRIM PREPARATION, WHEN REQUIRED, SEE ADDITIONAL TRIM TEMPLATE.

22 NL, K, L, TP, NL-F, K-F, L-F, & TP-F Series Rim Devices

VON DUPRIN®

NOTES: SEE MASTER SHEET #10001 FOR SUGGESTED REINFORCING

TEMPLATE NUMBER: 10012_a

DATE: 05-15-13

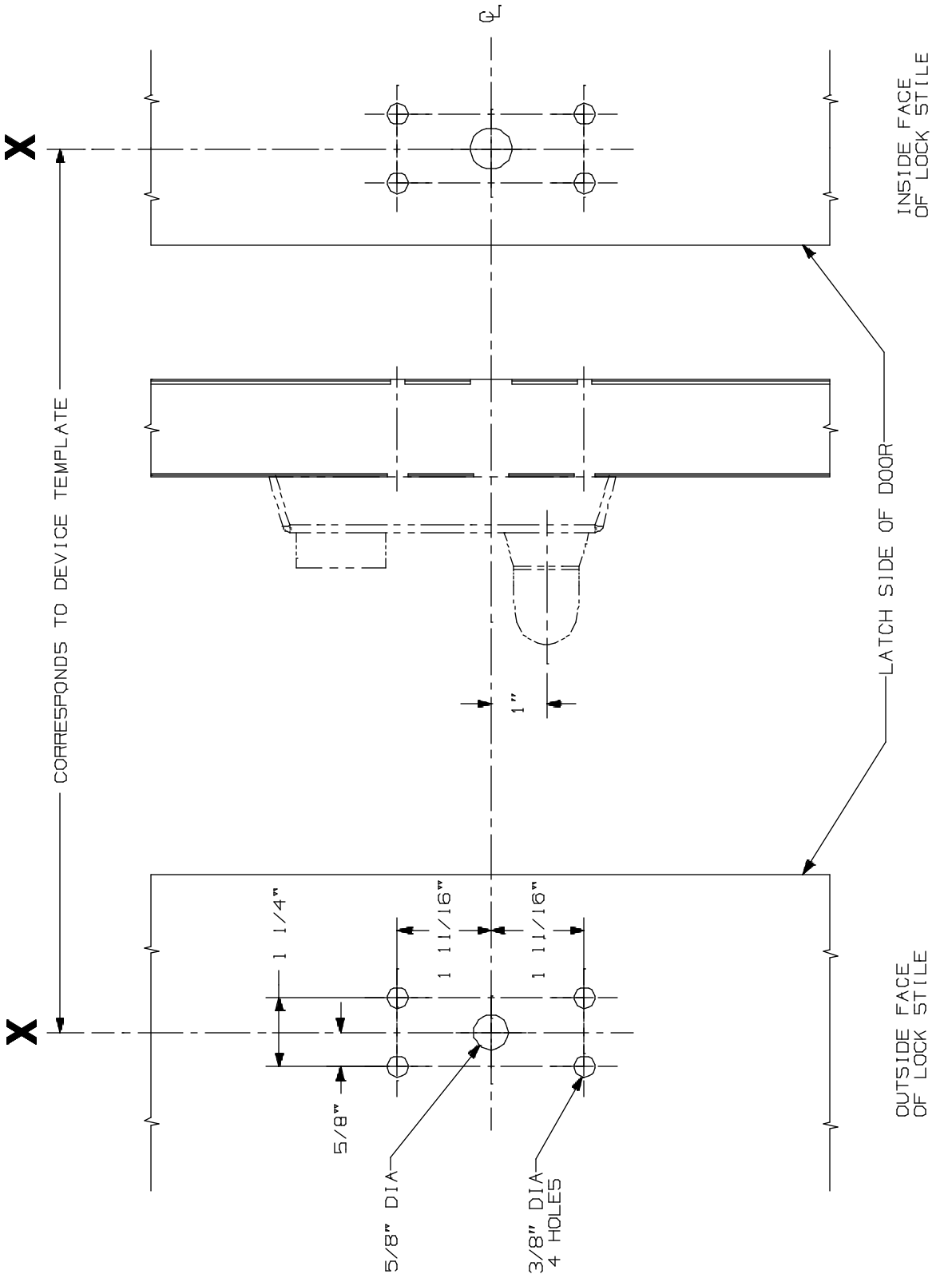

APPLICATIONS
ZZ RIM SERIES
2227 SERIES

230L & 230L-BE Lever Control
Metal Door Application

VON DUPRIN®

NOTES: See Master Sheet #10001 For Suggested Reinforcing

TEMPLATE NUMBER: 20007_a

DATE: 05-22-13

RIM APPLICATION

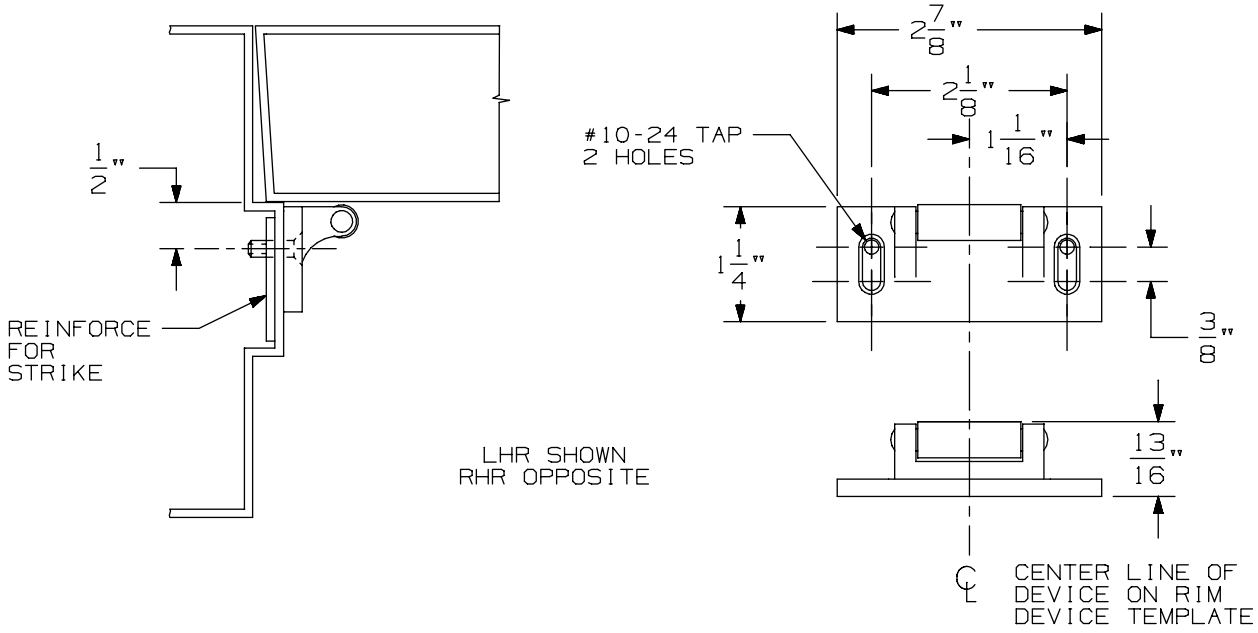

VERTICAL APPLICATION

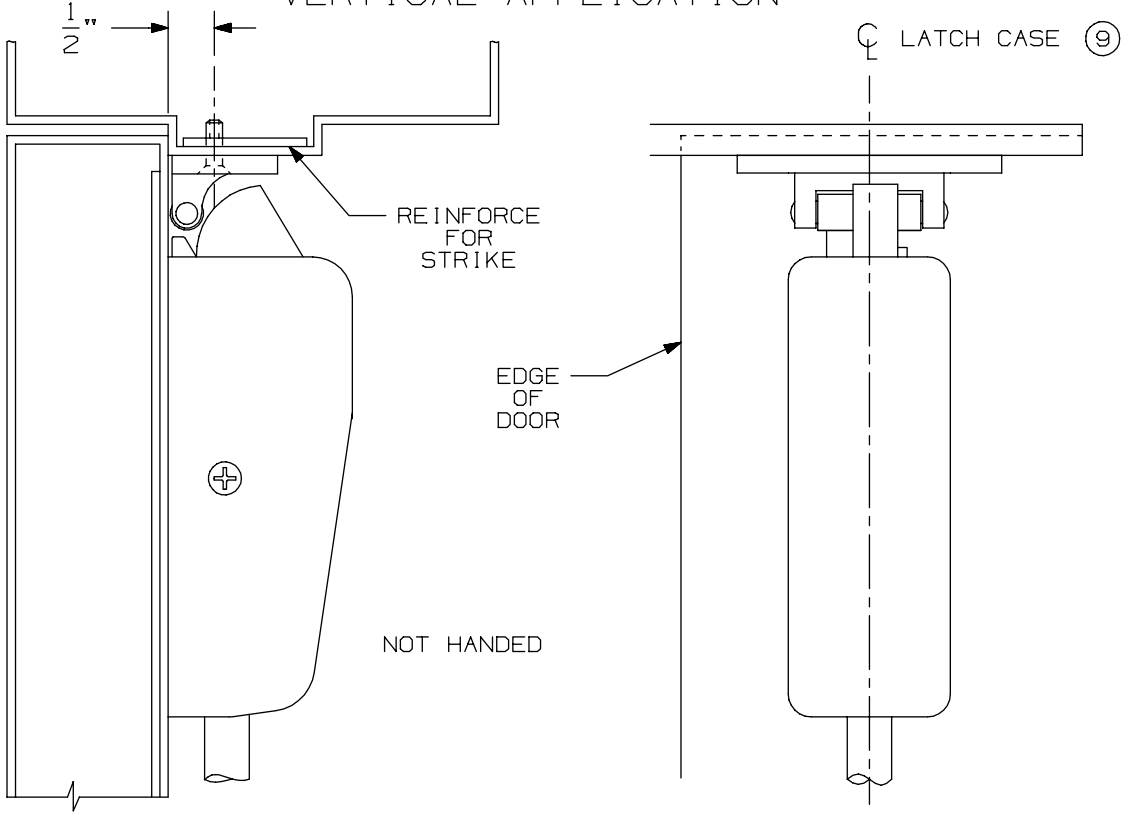

NOTE: LATCH CASE MOUNTING HOLES TO BE PREPARED AT INSTALLATION ON DOOR.

299 & 299F Strike

VON DUPRIN®

NOTES: SEE MASTER SHEET #10001 FOR SUGGESTED REINFORCING

TEMPLATE NUMBER: 30039_a

DATE: 05-23-13

APPLICATION	PREPARATION
SURFACE APPLICATION OR 990 TRIM APPLICATION	#10-24 TAP 4 PLACES
210 TRIM APPLICATION OR SEXBOLT APPLICATION	1/4" DIA THIS SIDE-13/32" DIA OPPOSITE SIDE 4 PLACES

NOTE: FOR STOCK HOLLOW METAL DOORS SEE TEMPLATE NO. 10038 FOR TYPE "161" CUTOUTS.

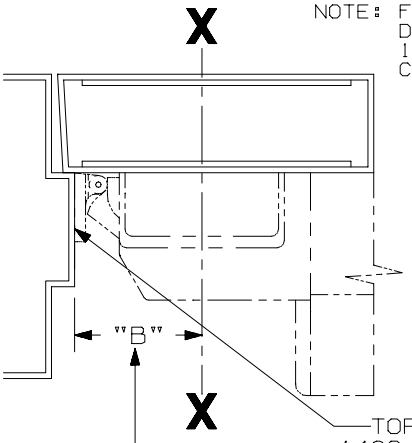

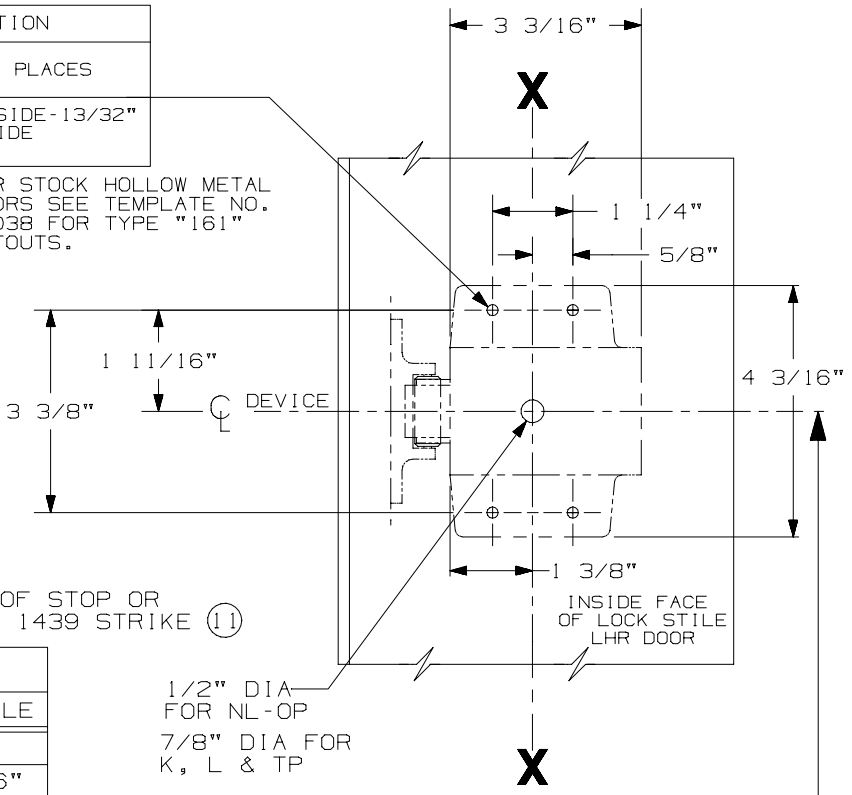

SINGLE DOOR INSTALLATION		
STRIKE	DIM "B"	MIN. STILE
299 & 299F	2 3/8"	4 3/8"
(11) 1409 & 1439	1 9/16"	3 13/16"
1606	1 15/16"	3 15/16"

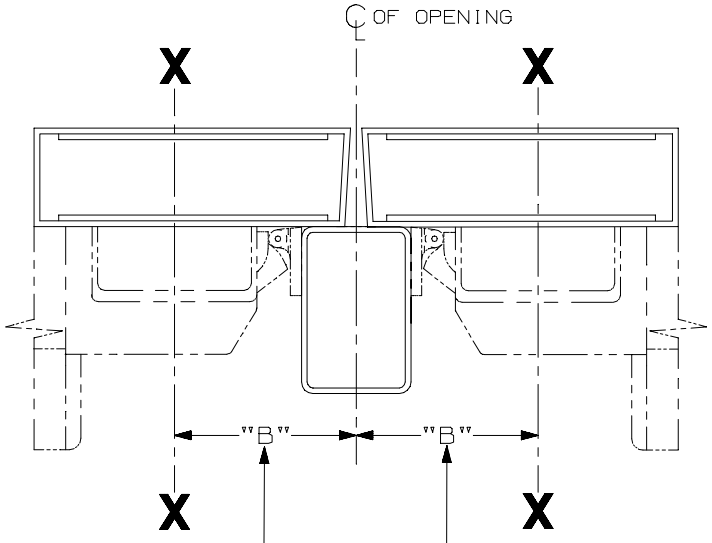

REMOVE GLASS STOP HEAD OR BEAD IN AREA OF DEVICE IF REQUIRED.

LHR SHOWN
RHR OPPOSITE

SINGLE DOOR OPENING
39 13/16" TO FINISHED FLOOR

DOUBLE DOOR OPENING
WITH VON DUPRIN MULLION
39 11/16"

DOUBLE DOOR INSTALLATION WITH VON DUPRIN MULLIONS			
MULLION	STRIKE	DIM. "B"	MIN. STILE
4954	299	3 3/8"	4 3/4"
9954	499-F	3 1/2"	4 7/8"
5654	299	2 15/16"	4 1/4"
5754	1408	2 1/8"	3 13/16"
1654	1606	2 15/16"	4 1/4"

IT IS RECOMMENDED THE MOUNTING HOLES BE PREPARED IN THE FIELD

FOR OUTSIDE TRIM PREPARATION, WHEN REQUIRED, SEE ADDITIONAL TRIM TEMPLATE.

22 NL, K, L, TP, NL-F, K-F, L-F, & TP-F Series Rim Devices

VON DUPRIN®

NOTES: SEE MASTER SHEET #10001 FOR SUGGESTED REINFORCING

TEMPLATE NUMBER: 10012_a

DATE: 05-15-13

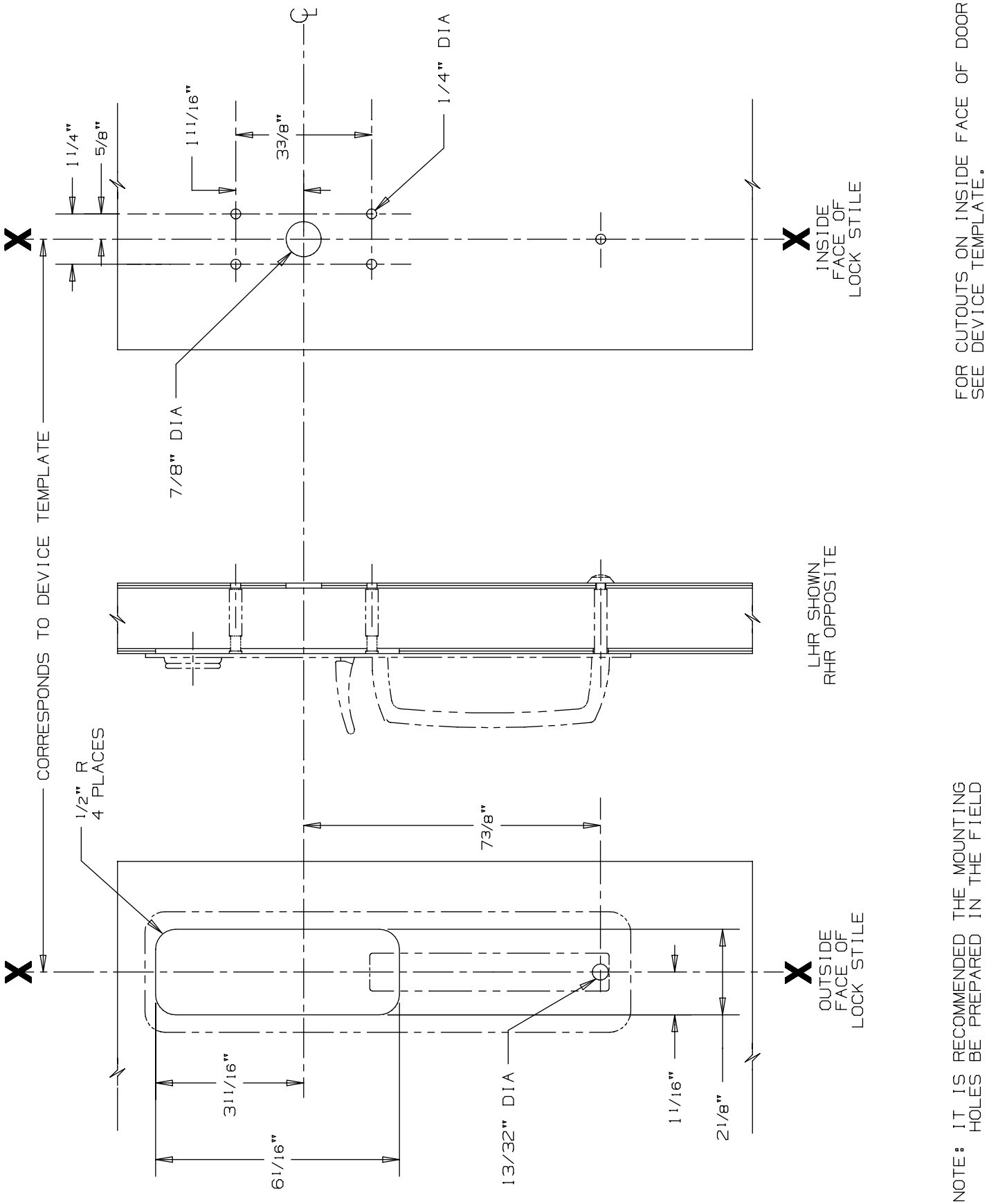

230TP & 230TP-BE Trim

VON DUPRIN®

NOTES: SEE MASTER SHEET #10001 FOR SUGGESTED REINFORCING

TEMPLATE NUMBER: 20038_b

DATE: 07-14-14

RIM APPLICATION

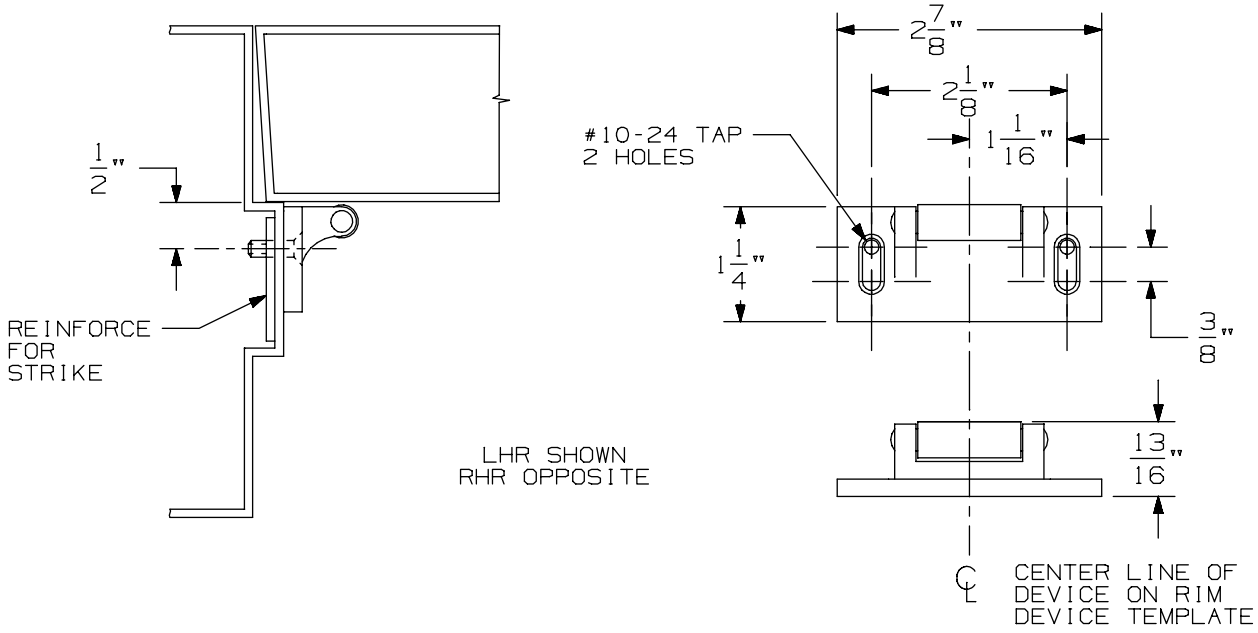

VERTICAL APPLICATION

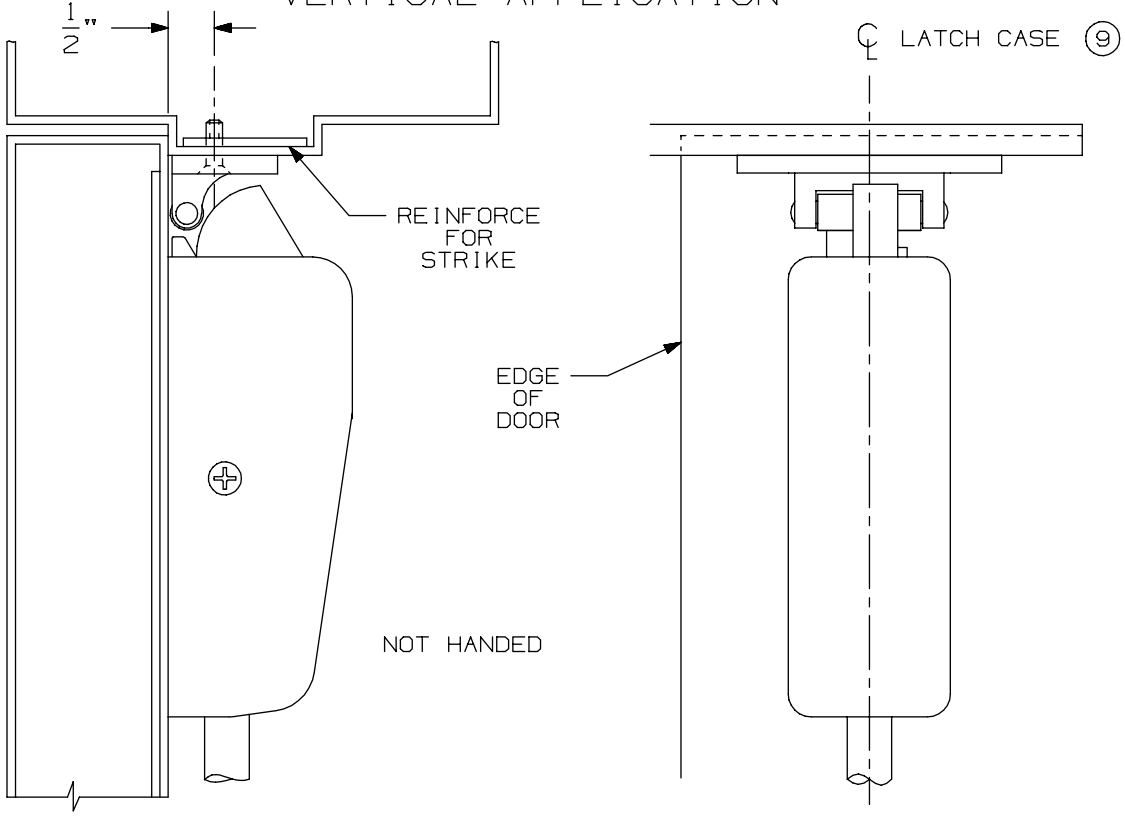

NOTE: LATCH CASE MOUNTING HOLES TO BE PREPARED AT INSTALLATION ON DOOR.

299 & 299F Strike

VON DUPRIN®

NOTES: SEE MASTER SHEET #10001 FOR SUGGESTED REINFORCING

TEMPLATE NUMBER: 30039_a

DATE: 05-23-13

22 Series Exit Device

-

2227 Surface Vertical Rod

DEVICE APPLICATION SCHEDULE		
INSTALLATION	MIN. STILE	BACKSET
TWO VERT. ROD DEVICES	3 5/8"	2 3/16"
SINGLE DOOR	3 5/8"	2 3/16"

NOTE: BACKSET MAY VARY WHEN USED WITH COORDINATOR DEPENDING ON TYPE USED.

APPLICATION	PREPARATION
SURFACE APPLICATION OR 990 TRIM APPLICATION	#10-24 TAP-4 PLACES
210 TRIM APPLICATION 290 TRIM APPLICATION SEX BOLT APPLICATION	1/4" DIA. THIS SIDE 13/32" DIA. OPPOSITE SIDE - 4 PLACES

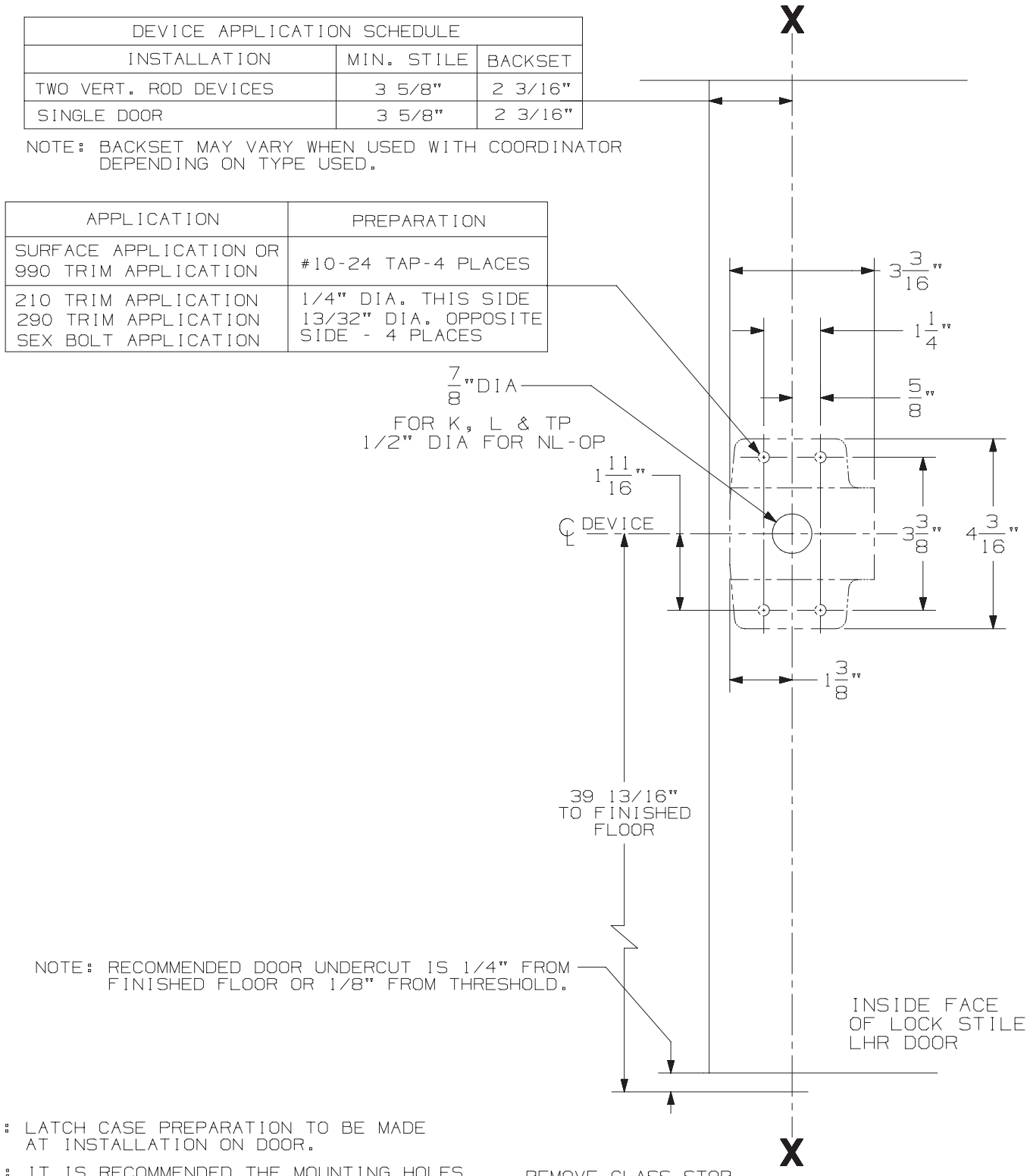

NOTE: LATCH CASE PREPARATION TO BE MADE AT INSTALLATION ON DOOR.

NOTE: IT IS RECOMMENDED THE MOUNTING HOLES BE PREPARED IN THE FIELD.

FOR OUTSIDE TRIM PREPARATION, WHEN REQUIRED, SEE ADDITIONAL TRIM TEMPLATE.

2227 & 2227-F EO, DT, K, L, & TP Series Vertical Rod Device

VON DUPRIN®

NOTES: SEE MASTER SHEET #10001 FOR SUGGESTED REINFORCING

TEMPLATE NUMBER: 10013_a

DATE: 05-15-13

RIM APPLICATION

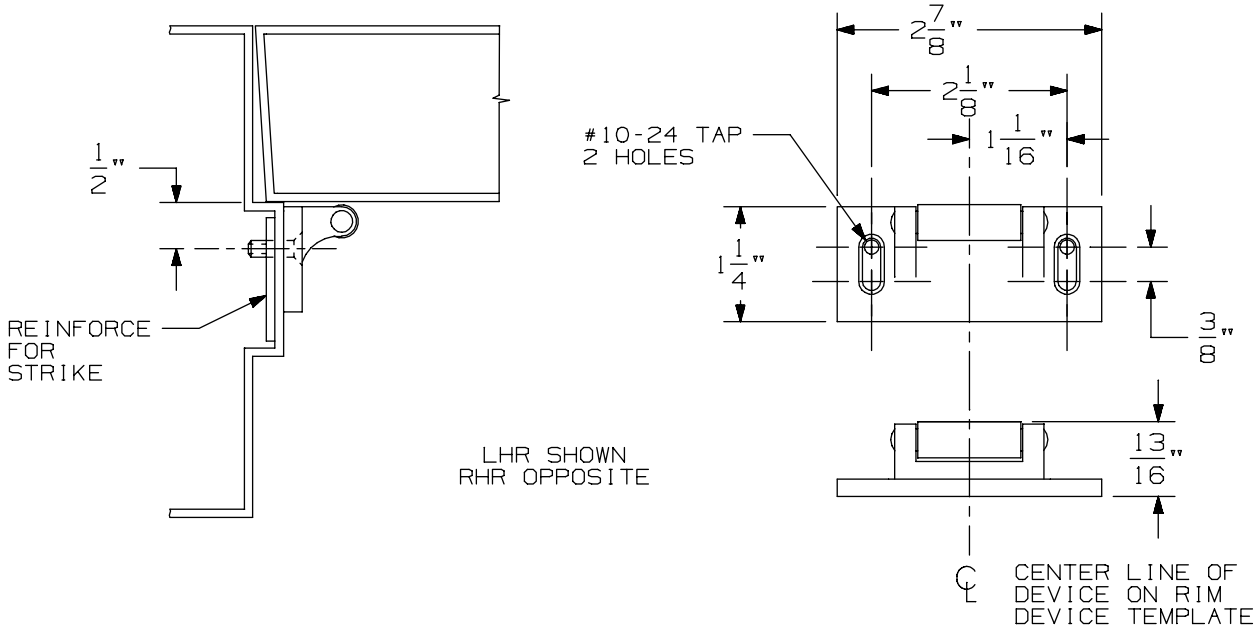

VERTICAL APPLICATION

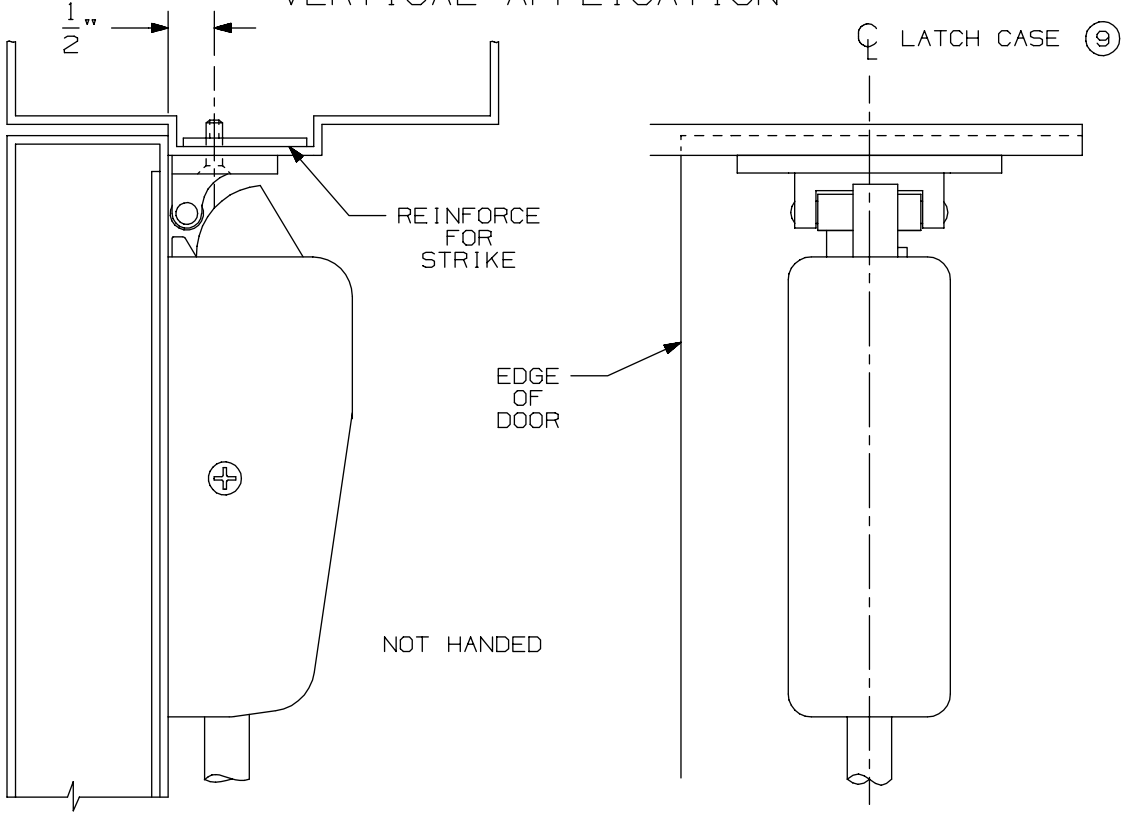

NOTE: LATCH CASE MOUNTING HOLES TO BE PREPARED AT INSTALLATION ON DOOR.

299 & 299F Strike

VON DUPRIN®

NOTES: SEE MASTER SHEET #10001 FOR SUGGESTED REINFORCING

TEMPLATE NUMBER: 30039_a

DATE: 05-23-13

DEVICE APPLICATION SCHEDULE		
INSTALLATION	MIN. STILE	BACKSET
TWO VERT. ROD DEVICES	3 5/8"	2 3/16"
SINGLE DOOR	3 5/8"	2 3/16"

NOTE: BACKSET MAY VARY WHEN USED WITH COORDINATOR DEPENDING ON TYPE USED.

APPLICATION	PREPARATION
SURFACE APPLICATION OR 990 TRIM APPLICATION	#10-24 TAP-4 PLACES
210 TRIM APPLICATION 290 TRIM APPLICATION SEX BOLT APPLICATION	1/4" DIA. THIS SIDE 13/32" DIA. OPPOSITE SIDE - 4 PLACES

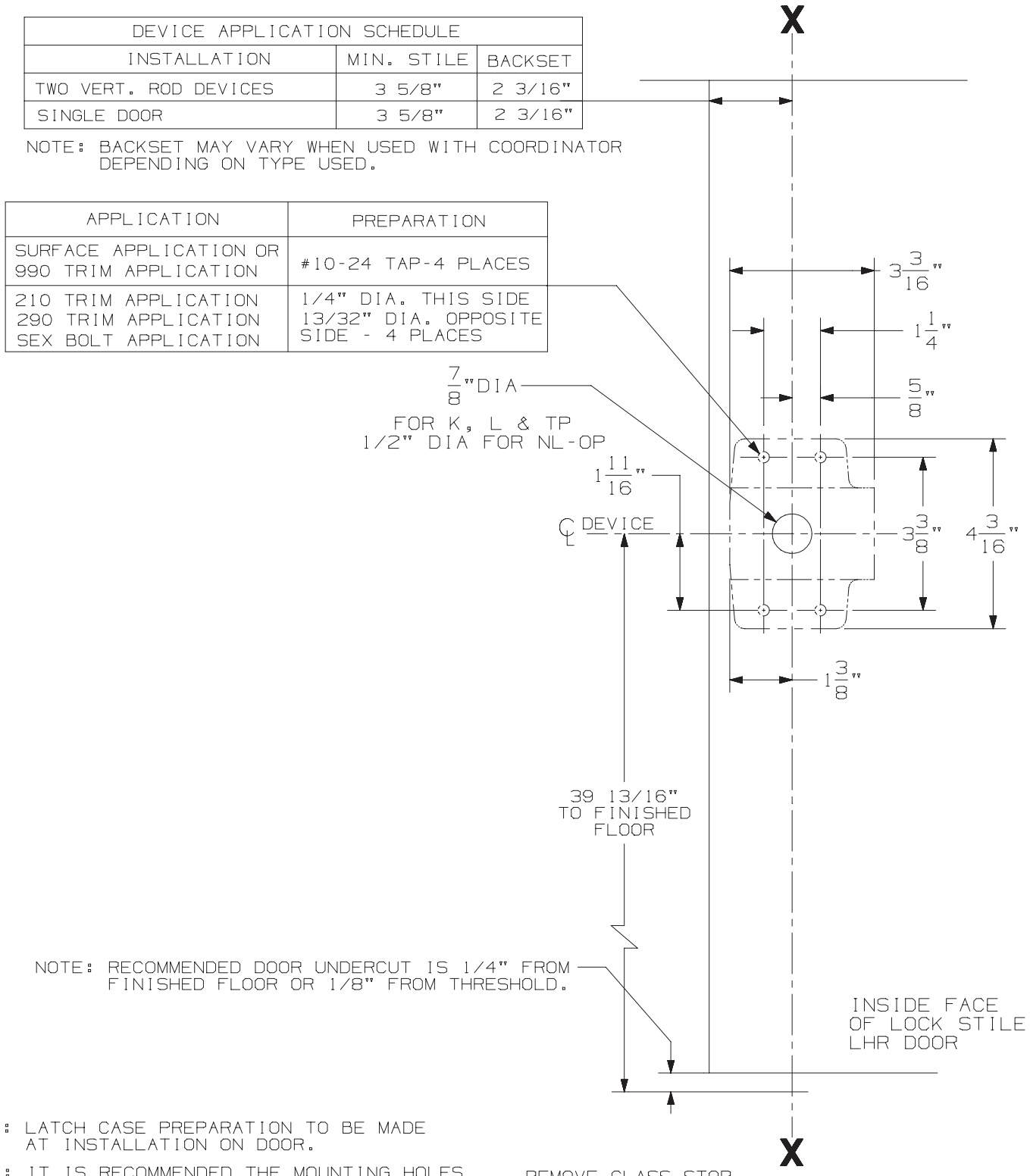

NOTE: LATCH CASE PREPARATION TO BE MADE AT INSTALLATION ON DOOR.

NOTE: IT IS RECOMMENDED THE MOUNTING HOLES BE PREPARED IN THE FIELD.

FOR OUTSIDE TRIM PREPARATION, WHEN REQUIRED, SEE ADDITIONAL TRIM TEMPLATE.

2227 & 2227-F EO, DT, K, L, & TP Series Vertical Rod Device

VON DUPRIN®

NOTES: SEE MASTER SHEET #10001 FOR SUGGESTED REINFORCING

TEMPLATE NUMBER: 10013_a

DATE: 05-15-13

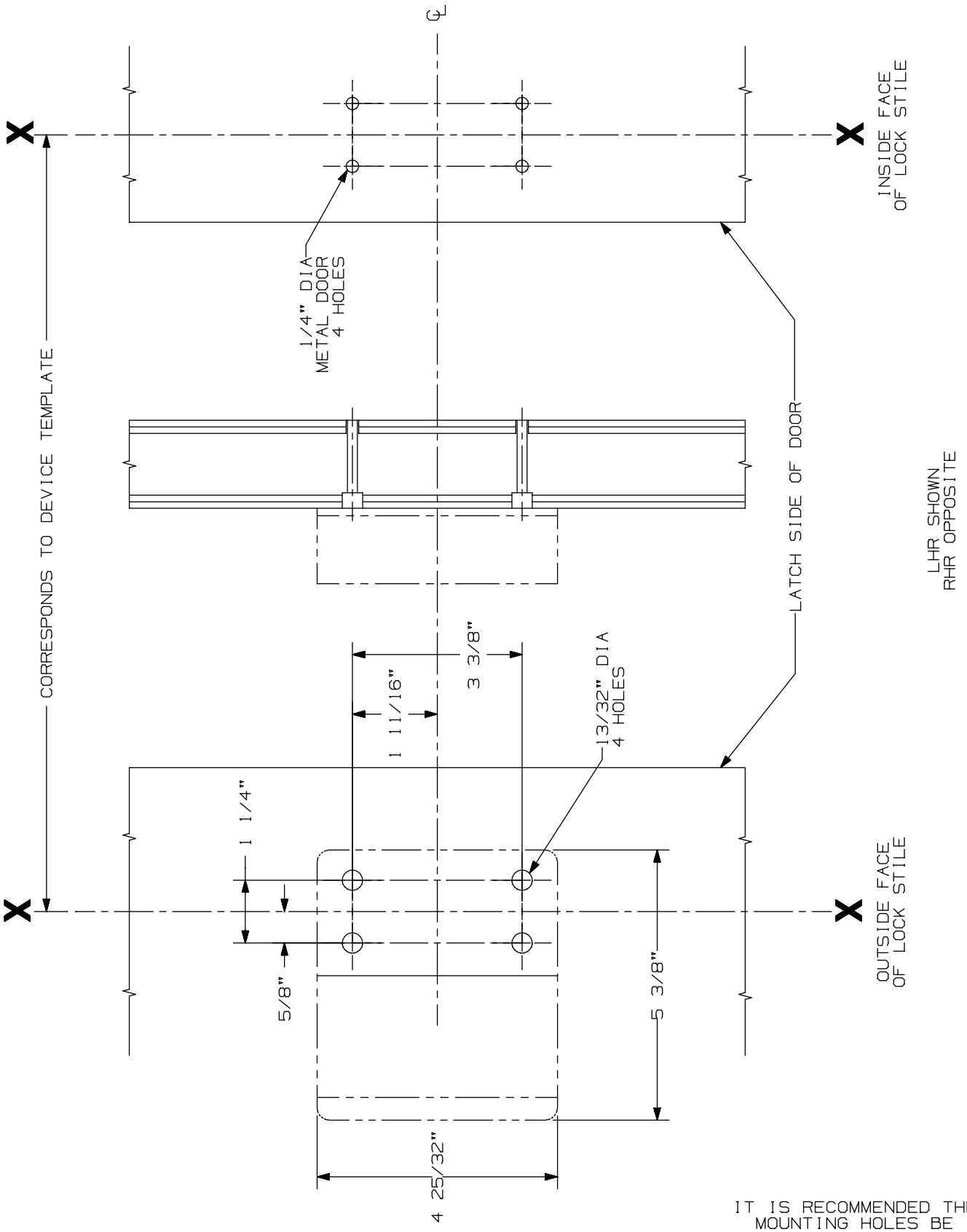

IT IS RECOMMENDED THE MOUNTING HOLES BE PREPARED IN THE FIELD

210 DT Trim

VON DUPRIN®

NOTES: See Master Sheet #10001 For Suggested Reinforcing

TEMPLATE NUMBER: 20015_a

DATE: 05-22-13

RIM APPLICATION

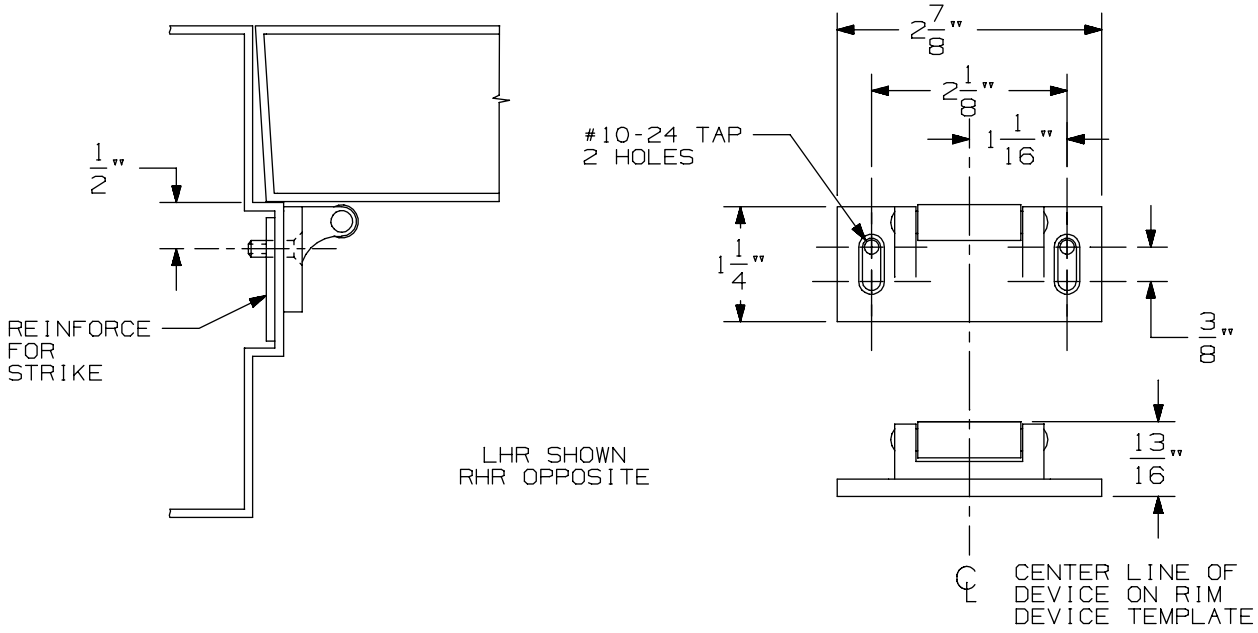

VERTICAL APPLICATION

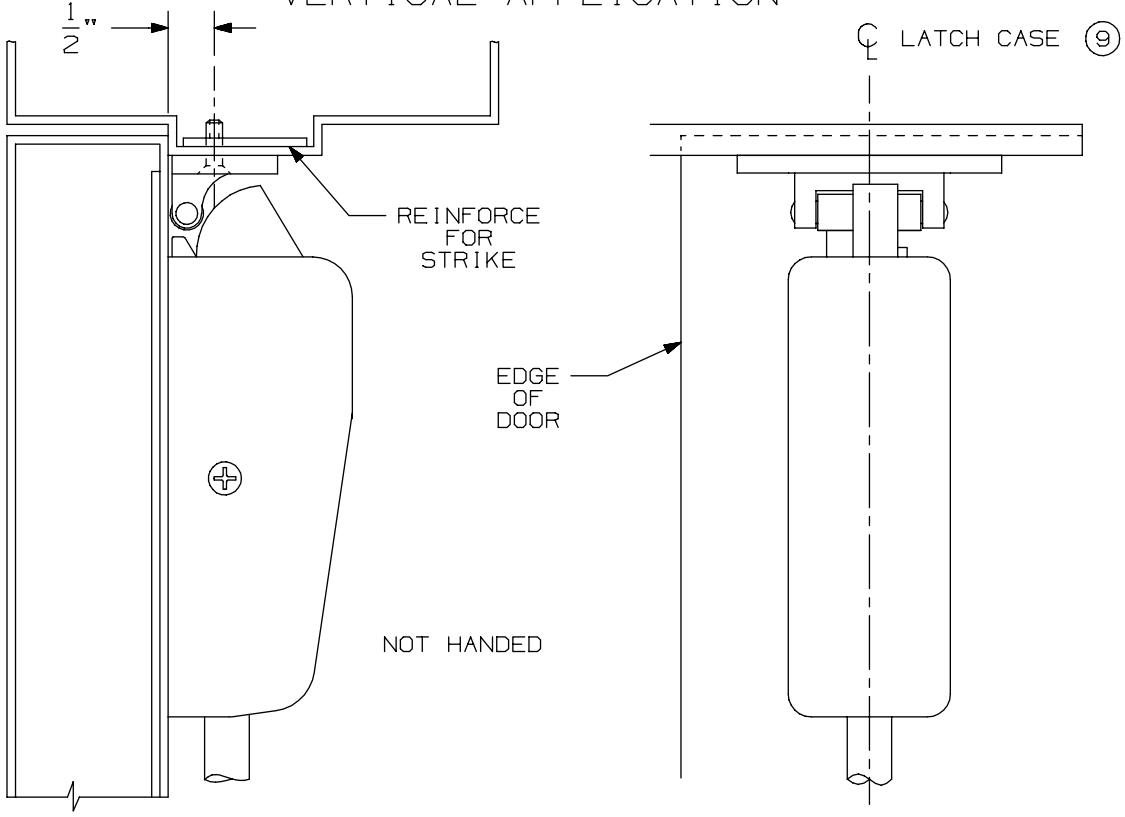

NOTE: LATCH CASE MOUNTING HOLES TO BE PREPARED AT INSTALLATION ON DOOR.

299 & 299F Strike

VON DUPRIN®

NOTES: SEE MASTER SHEET #10001 FOR SUGGESTED REINFORCING

TEMPLATE NUMBER: 30039_a

DATE: 05-23-13

DEVICE APPLICATION SCHEDULE		
INSTALLATION	MIN. STILE	BACKSET
TWO VERT. ROD DEVICES	3 5/8"	2 3/16"
SINGLE DOOR	3 5/8"	2 3/16"

NOTE: BACKSET MAY VARY WHEN USED WITH COORDINATOR DEPENDING ON TYPE USED.

APPLICATION	PREPARATION
SURFACE APPLICATION OR 990 TRIM APPLICATION	#10-24 TAP-4 PLACES
210 TRIM APPLICATION 290 TRIM APPLICATION SEX BOLT APPLICATION	1/4" DIA. THIS SIDE 13/32" DIA. OPPOSITE SIDE - 4 PLACES

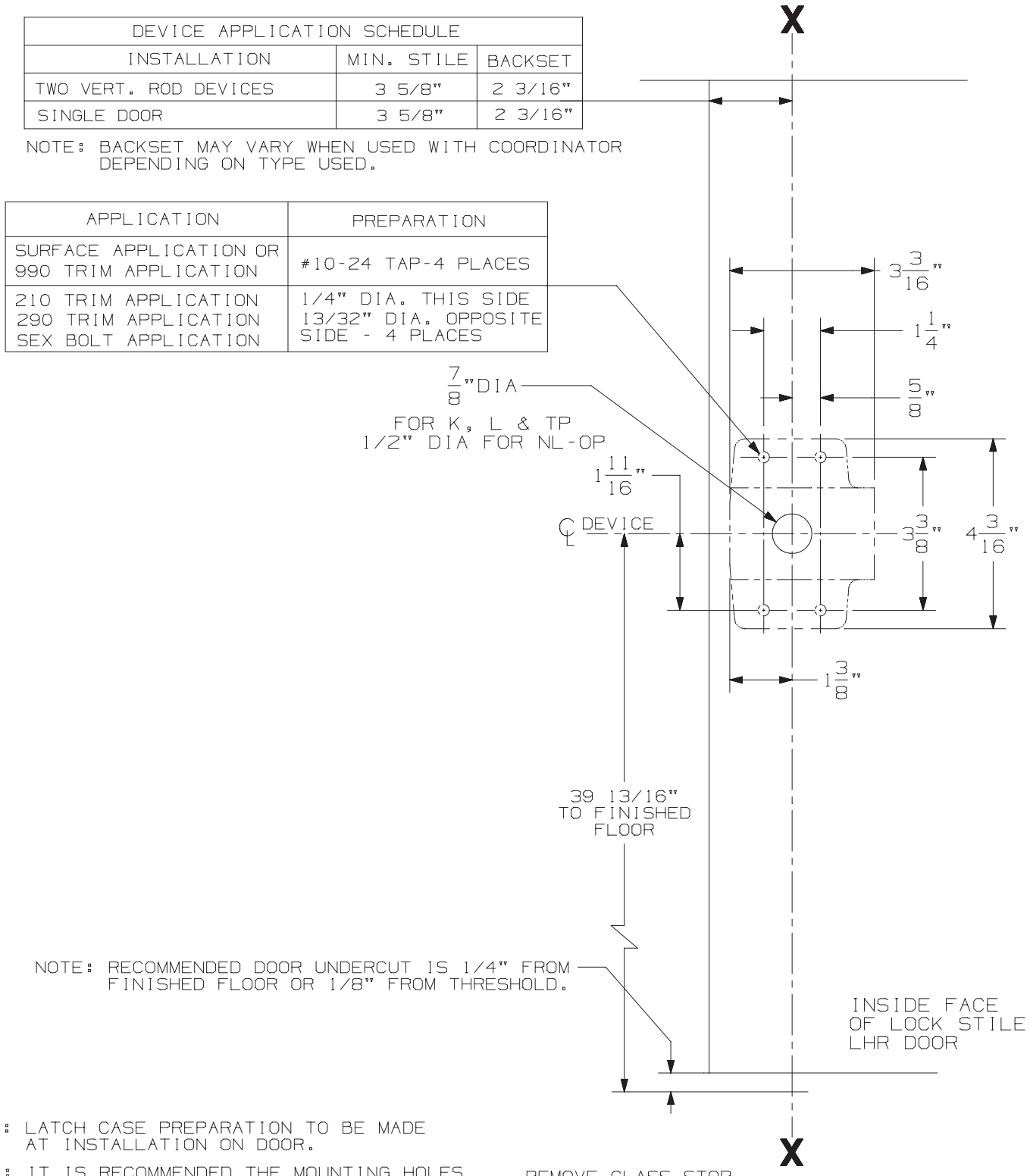

NOTE: LATCH CASE PREPARATION TO BE MADE AT INSTALLATION ON DOOR.

NOTE: IT IS RECOMMENDED THE MOUNTING HOLES BE PREPARED IN THE FIELD.

FOR OUTSIDE TRIM PREPARATION, WHEN REQUIRED, SEE ADDITIONAL TRIM TEMPLATE.

2227 & 2227-F EO, DT, K, L, & TP Series Vertical Rod Device

VON DUPRIN®

NOTES: SEE MASTER SHEET #10001 FOR SUGGESTED REINFORCING

TEMPLATE NUMBER: 10013_a

DATE: 05-15-13

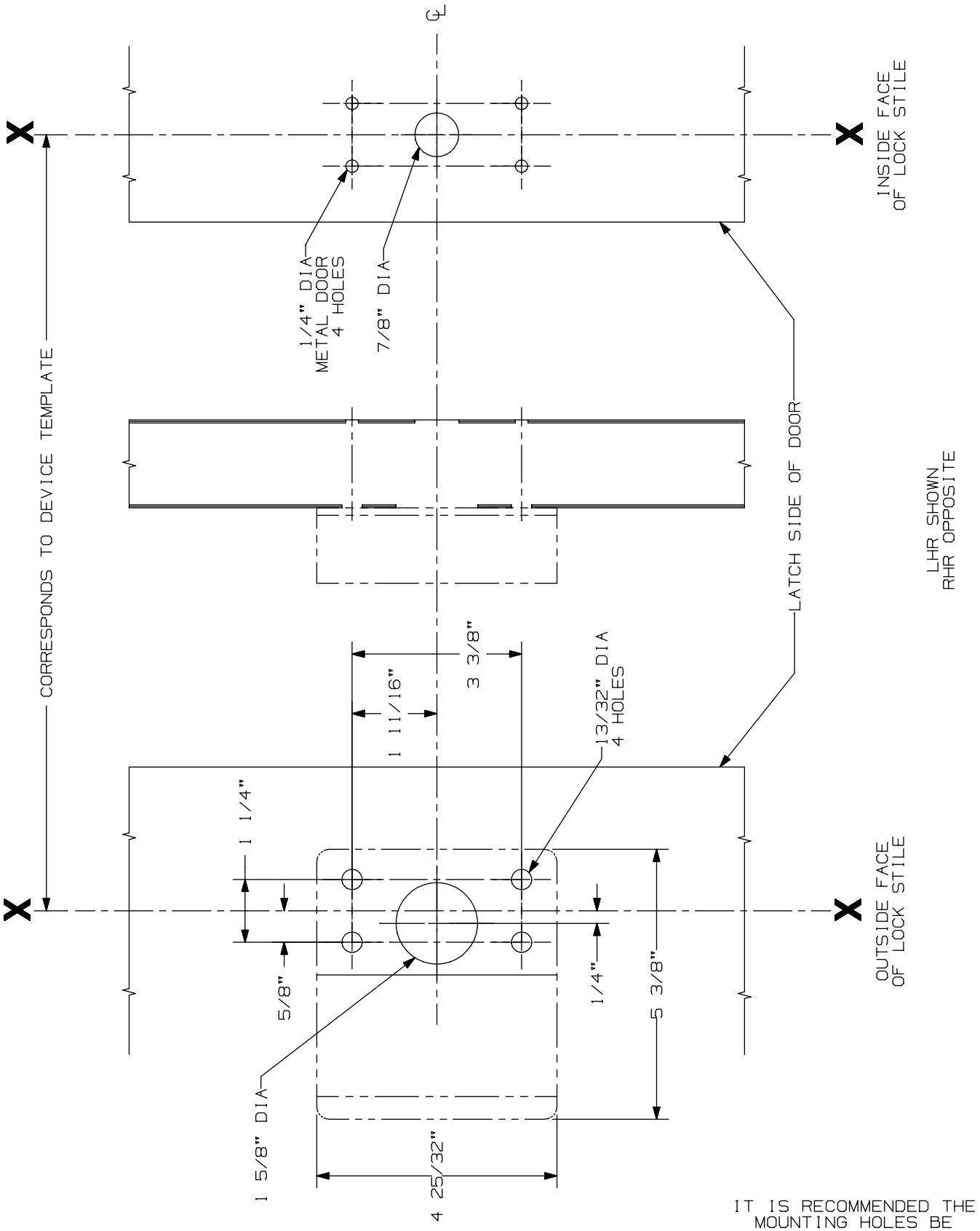

IT IS RECOMMENDED THE MOUNTING HOLES BE PREPARED IN THE FIELD

210 NL Trim

VON DUPRIN®

NOTES: See Master Sheet #10001 For Suggested Reinforcing

TEMPLATE NUMBER: 20016_a

DATE: 05-22-13

RIM APPLICATION

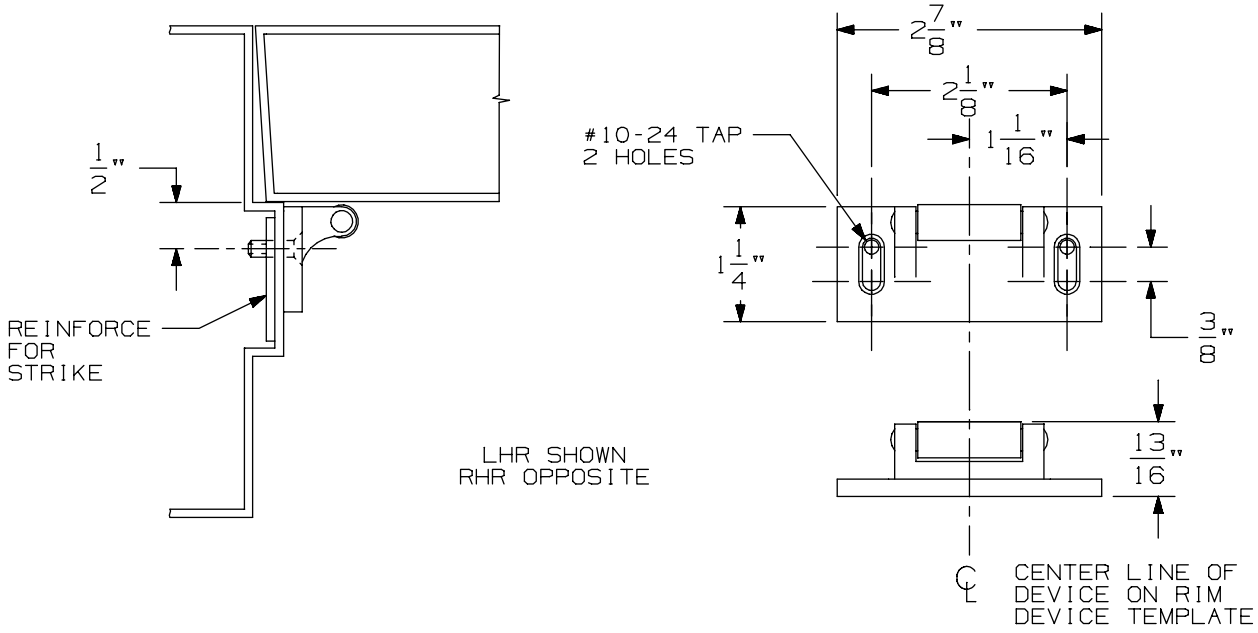

VERTICAL APPLICATION

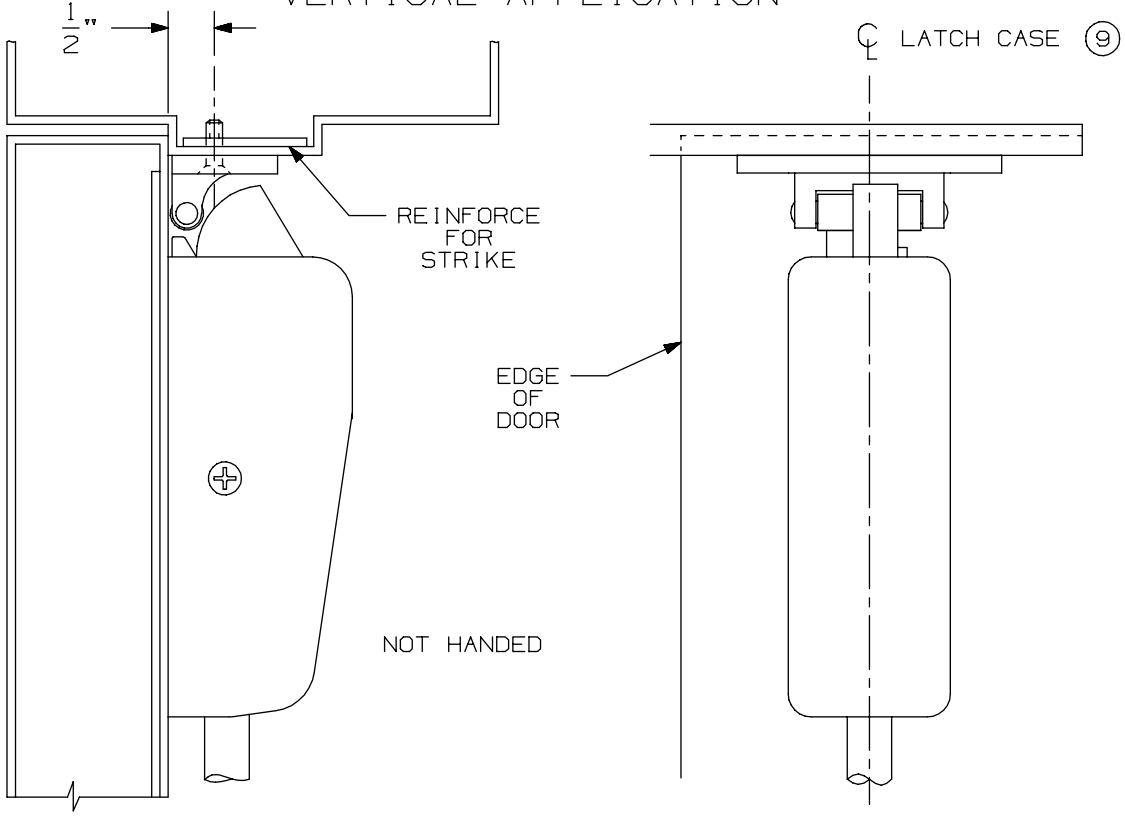

NOTE: LATCH CASE MOUNTING HOLES TO BE PREPARED AT INSTALLATION ON DOOR.

299 & 299F Strike

VON DUPRIN®

NOTES: SEE MASTER SHEET #10001 FOR SUGGESTED REINFORCING

TEMPLATE NUMBER: 30039_a

DATE: 05-23-13

DEVICE APPLICATION SCHEDULE		
INSTALLATION	MIN. STILE	BACKSET
TWO VERT. ROD DEVICES	3 5/8"	2 3/16"
SINGLE DOOR	3 5/8"	2 3/16"

NOTE: BACKSET MAY VARY WHEN USED WITH COORDINATOR DEPENDING ON TYPE USED.

APPLICATION	PREPARATION
SURFACE APPLICATION OR 990 TRIM APPLICATION	#10-24 TAP-4 PLACES
210 TRIM APPLICATION 290 TRIM APPLICATION SEX BOLT APPLICATION	1/4" DIA. THIS SIDE 13/32" DIA. OPPOSITE SIDE - 4 PLACES

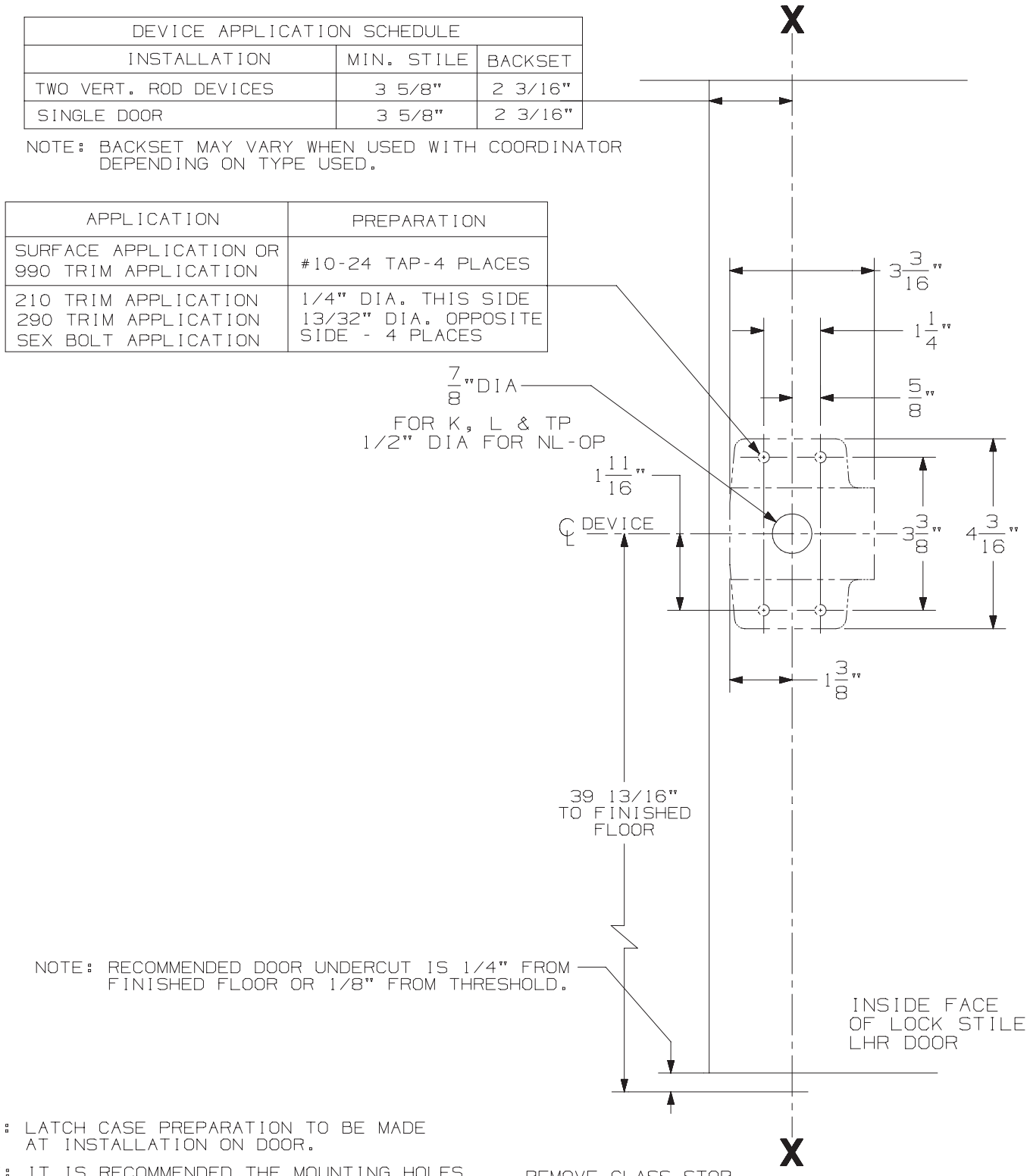

NOTE: LATCH CASE PREPARATION TO BE MADE AT INSTALLATION ON DOOR.

NOTE: IT IS RECOMMENDED THE MOUNTING HOLES BE PREPARED IN THE FIELD.

FOR OUTSIDE TRIM PREPARATION, WHEN REQUIRED, SEE ADDITIONAL TRIM TEMPLATE.

2227 & 2227-F EO, DT, K, L, & TP Series Vertical Rod Device

VON DUPRIN®

NOTES: SEE MASTER SHEET #10001 FOR SUGGESTED REINFORCING

TEMPLATE NUMBER: 10013_a

DATE: 05-15-13

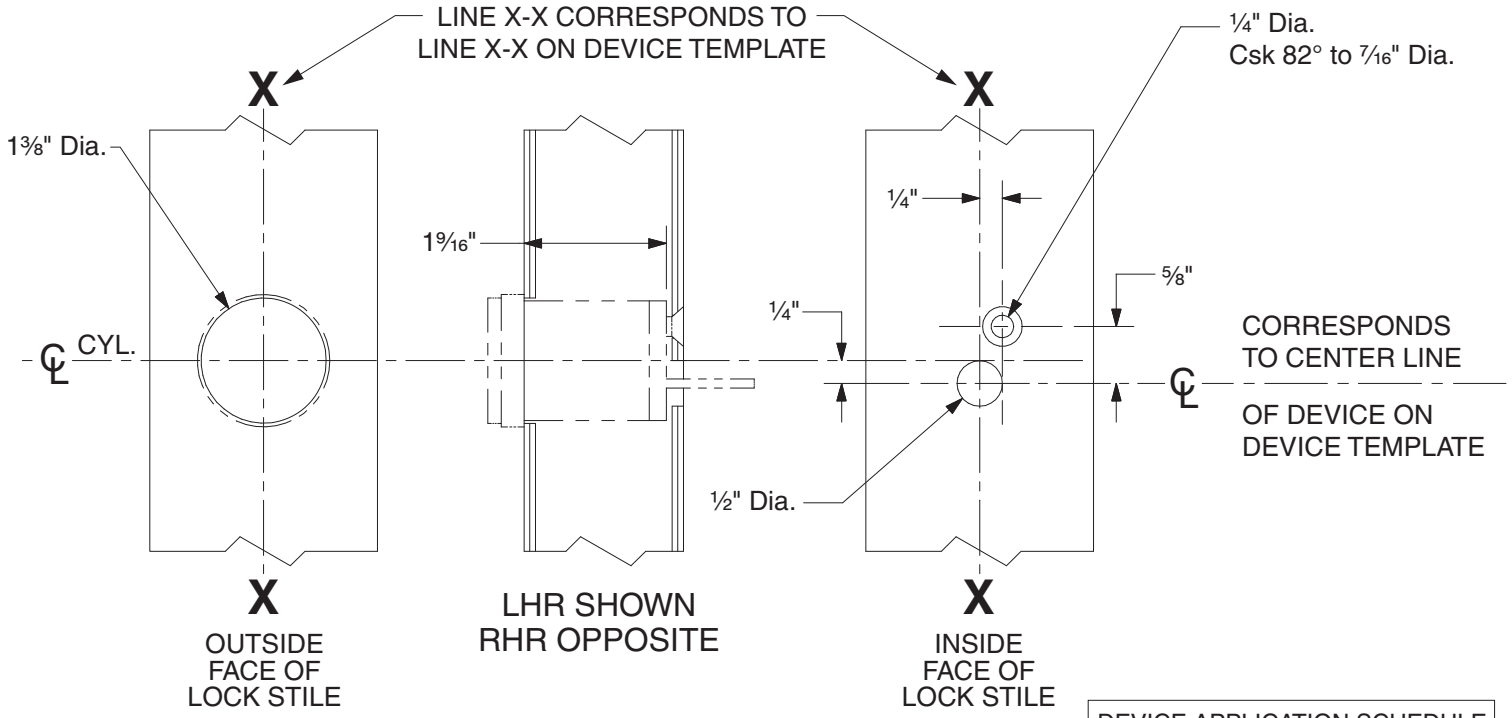

DEVICE APPLICATION SCHEDULE	
98 RIM SERIES	99 RIM SERIES
9827 SERIES	9927 SERIES
9847 SERIES	9947 SERIES
22 RIM SERIES	2227 SERIES

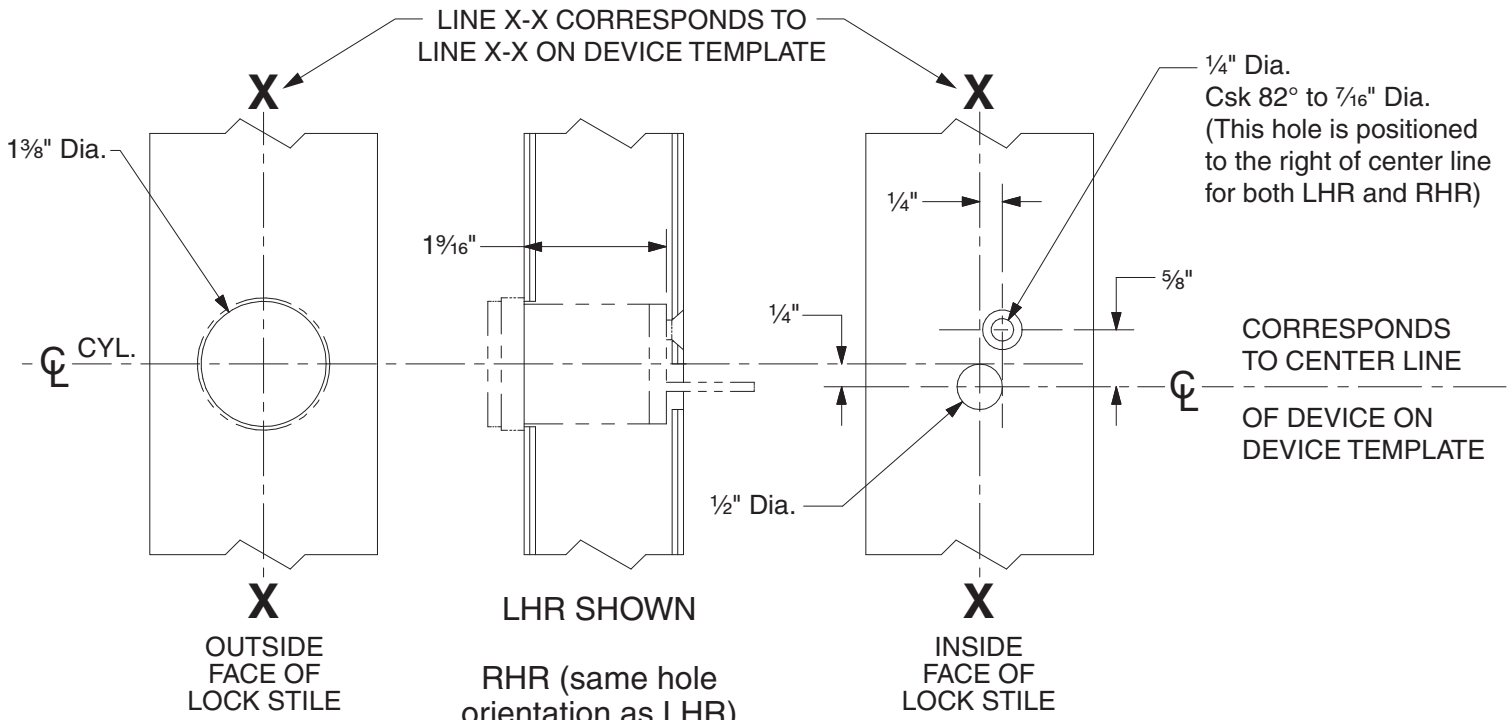

DEVICE APPLICATION SCHEDULE	
9849 SERIES	9949 SERIES

110NL Cylinder Preparation

VON DUPRIN®

NOTES: SEE MASTER SHEET #10001 FOR SUGGESTED REINFORCING

TEMPLATE NUMBER: 40022_c

DATE: 05-28-13

RIM APPLICATION

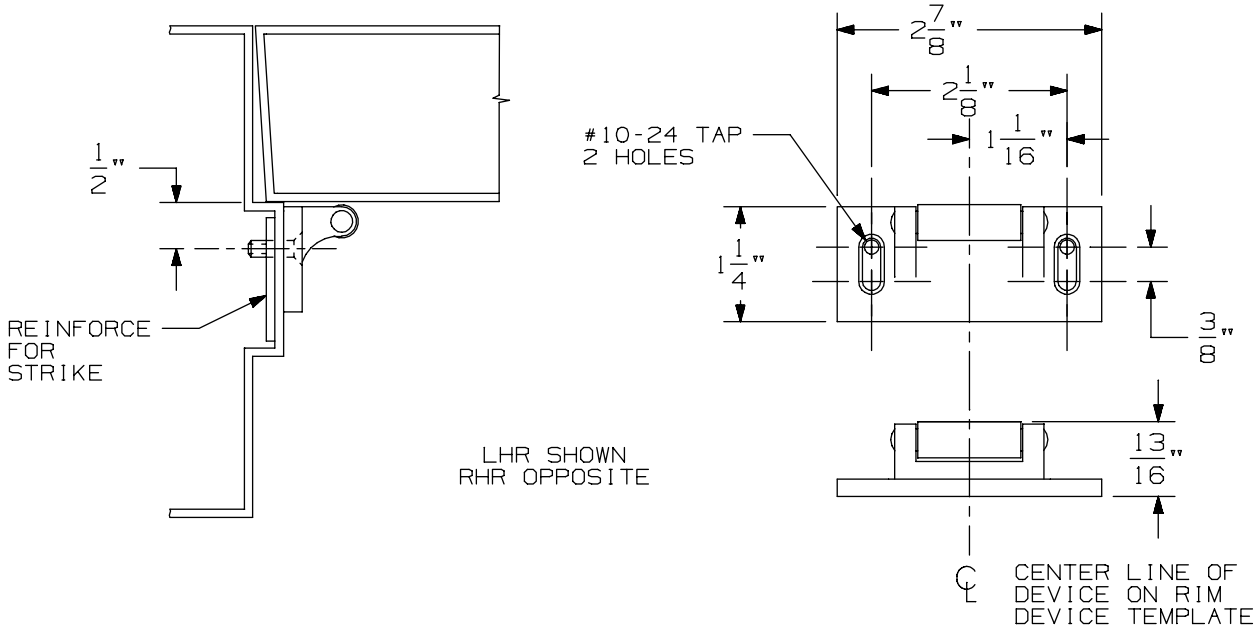

VERTICAL APPLICATION

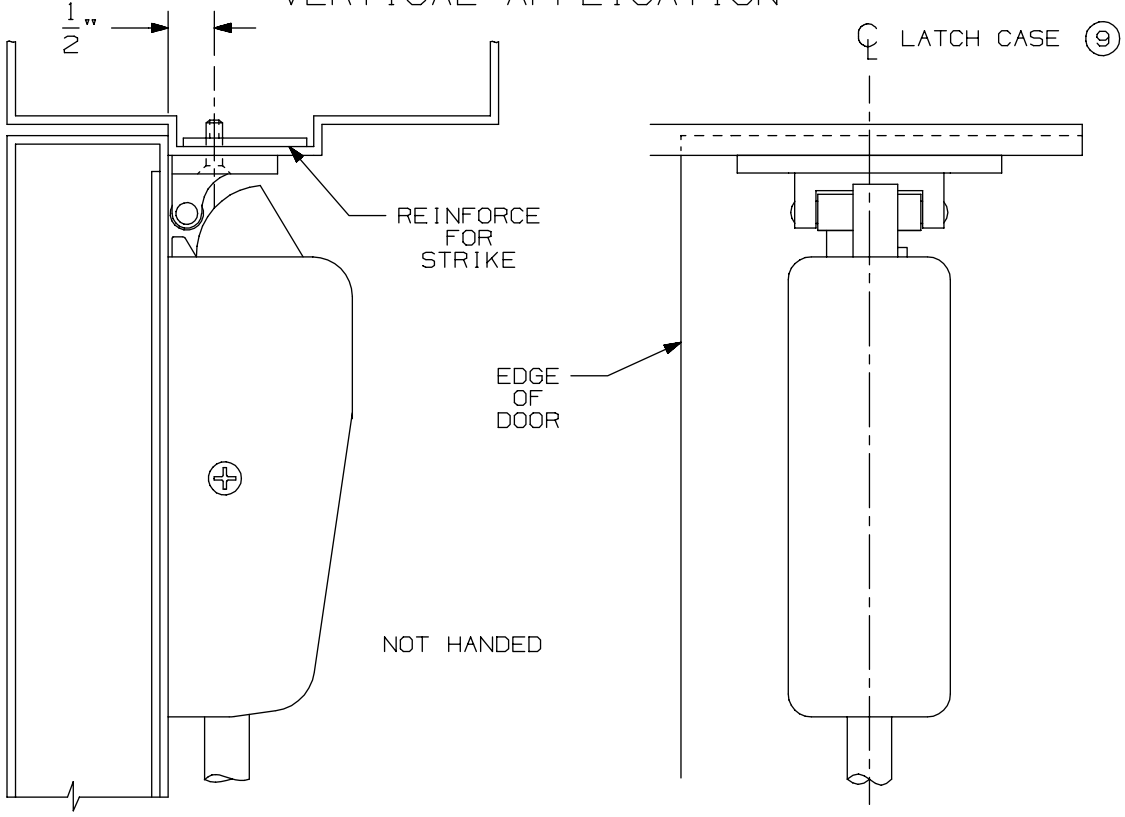

NOTE: LATCH CASE MOUNTING HOLES TO BE PREPARED AT INSTALLATION ON DOOR.

299 & 299F Strike

VON DUPRIN®

NOTES: SEE MASTER SHEET #10001 FOR SUGGESTED REINFORCING

TEMPLATE NUMBER: 30039_a

DATE: 05-23-13

DEVICE APPLICATION SCHEDULE		
INSTALLATION	MIN. STILE	BACKSET
TWO VERT. ROD DEVICES	3 5/8"	2 3/16"
SINGLE DOOR	3 5/8"	2 3/16"

NOTE: BACKSET MAY VARY WHEN USED WITH COORDINATOR DEPENDING ON TYPE USED.

APPLICATION	PREPARATION
SURFACE APPLICATION OR 990 TRIM APPLICATION	#10-24 TAP-4 PLACES
210 TRIM APPLICATION 290 TRIM APPLICATION SEX BOLT APPLICATION	1/4" DIA. THIS SIDE 13/32" DIA. OPPOSITE SIDE - 4 PLACES

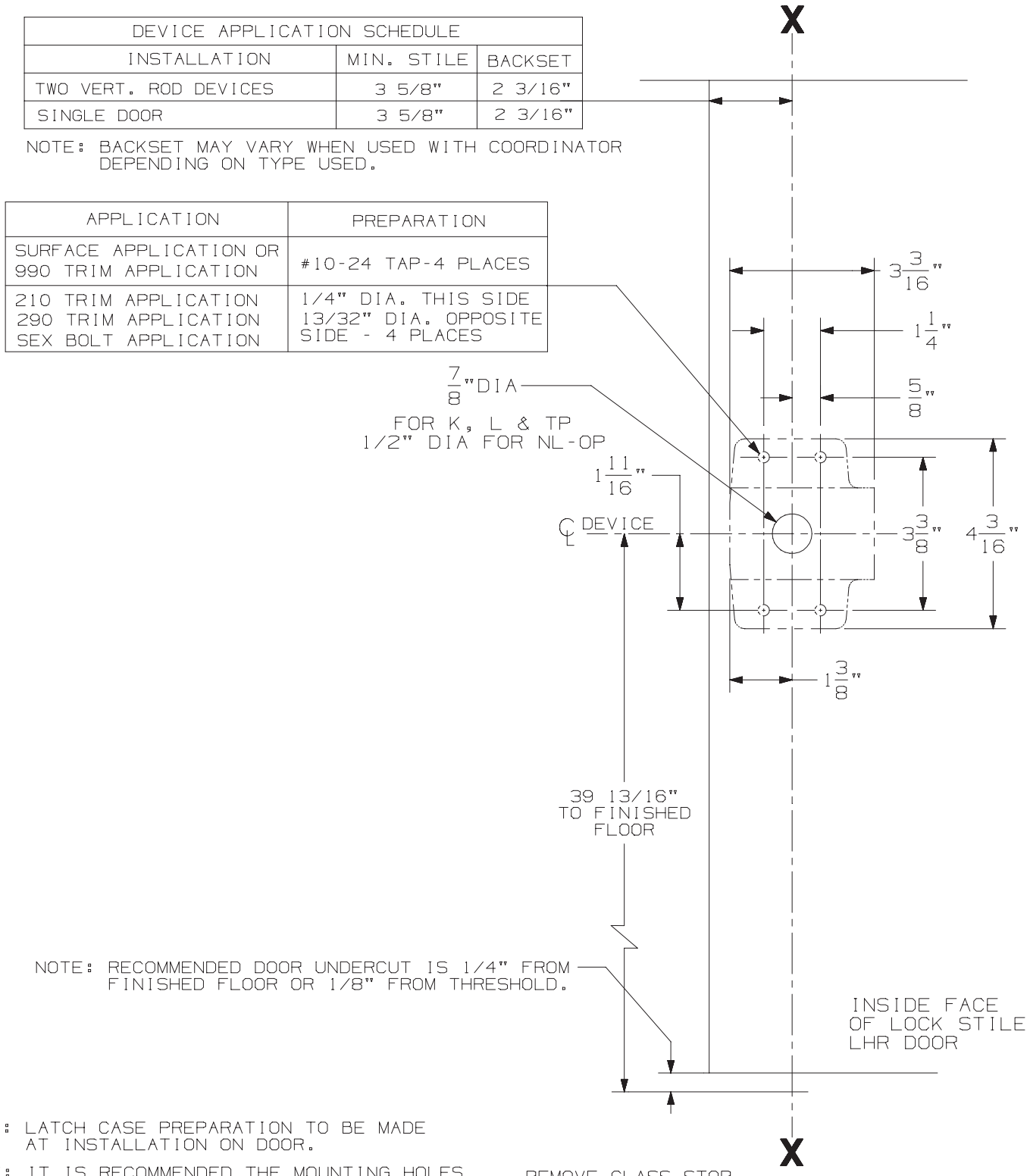

NOTE: LATCH CASE PREPARATION TO BE MADE AT INSTALLATION ON DOOR.

NOTE: IT IS RECOMMENDED THE MOUNTING HOLES BE PREPARED IN THE FIELD.

FOR OUTSIDE TRIM PREPARATION, WHEN REQUIRED, SEE ADDITIONAL TRIM TEMPLATE.

2227 & 2227-F EO, DT, K, L, & TP Series Vertical Rod Device

VON DUPRIN®

NOTES: SEE MASTER SHEET #10001 FOR SUGGESTED REINFORCING

TEMPLATE NUMBER: 10013_a

DATE: 05-15-13

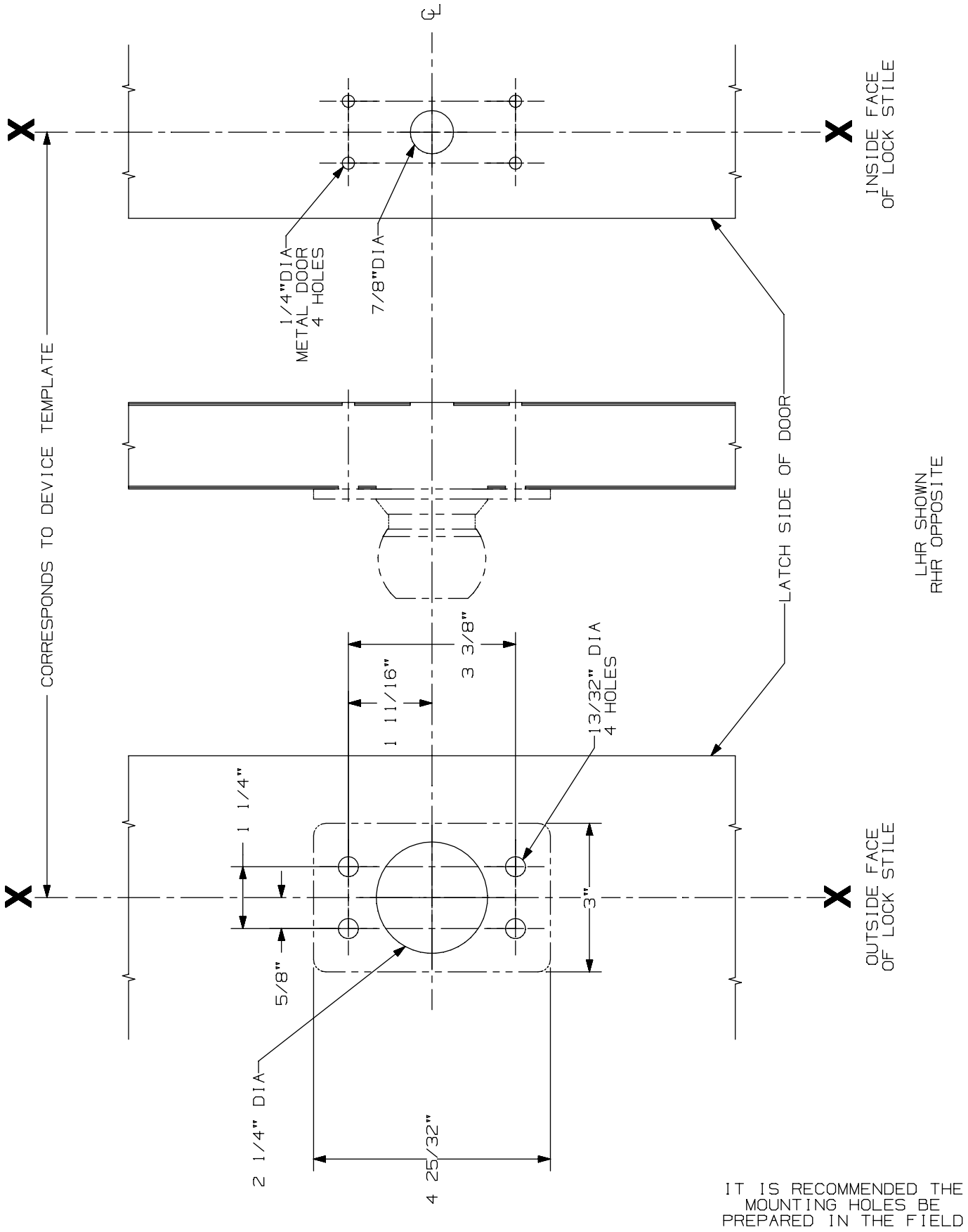

IT IS RECOMMENDED THE MOUNTING HOLES BE PREPARED IN THE FIELD

210 K Series Trim

VON DUPRIN®

NOTES: See Master Sheet #10001 For Suggested Reinforcing

TEMPLATE NUMBER: 20018_a

DATE: 05-22-13

RIM APPLICATION

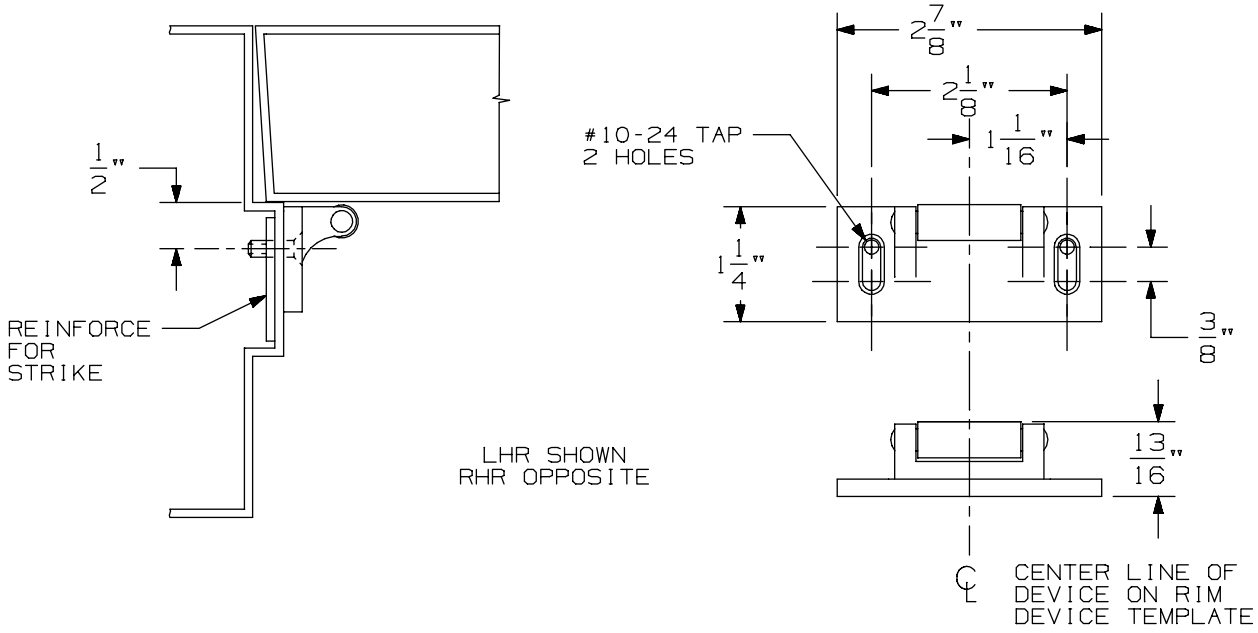

VERTICAL APPLICATION

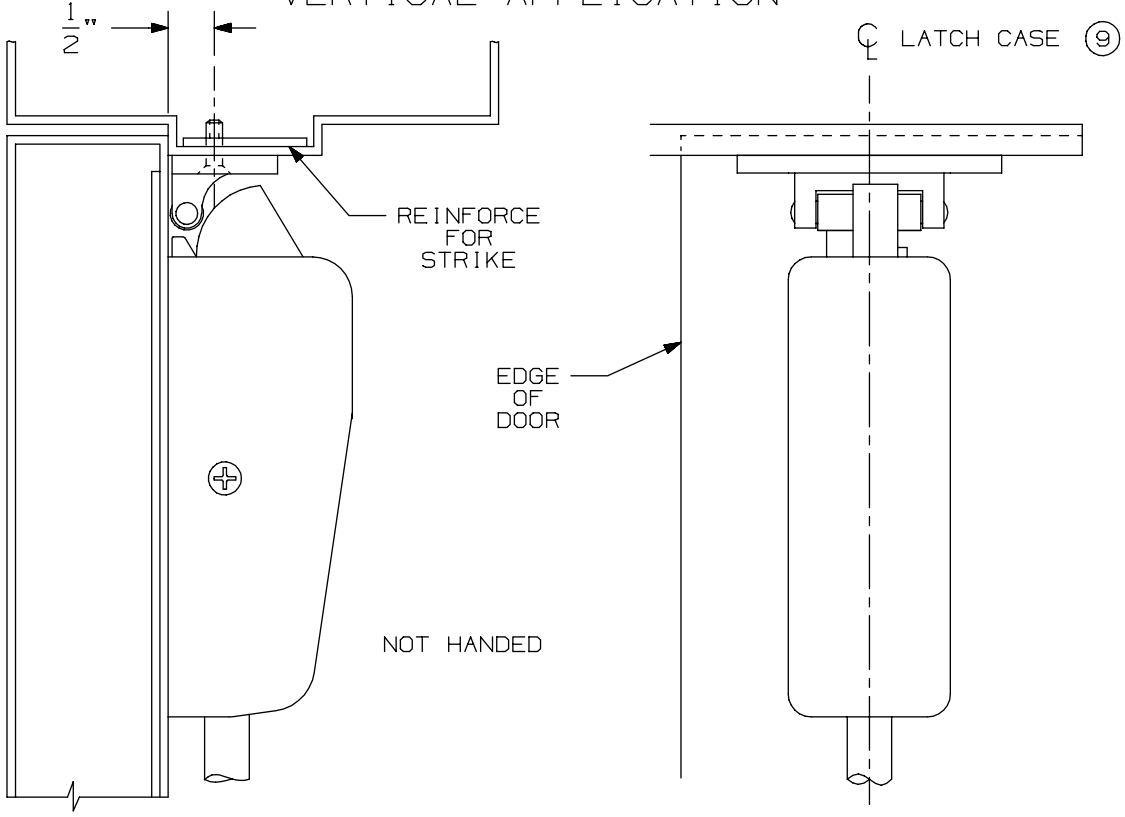

NOTE: LATCH CASE MOUNTING HOLES TO BE PREPARED AT INSTALLATION ON DOOR.

299 & 299F Strike

VON DUPRIN®

NOTES: SEE MASTER SHEET #10001 FOR SUGGESTED REINFORCING

TEMPLATE NUMBER: 30039_a

DATE: 05-23-13

DEVICE APPLICATION SCHEDULE		
INSTALLATION	MIN. STILE	BACKSET
TWO VERT. ROD DEVICES	3 5/8"	2 3/16"
SINGLE DOOR	3 5/8"	2 3/16"

NOTE: BACKSET MAY VARY WHEN USED WITH COORDINATOR DEPENDING ON TYPE USED.

APPLICATION	PREPARATION
SURFACE APPLICATION OR 990 TRIM APPLICATION	#10-24 TAP-4 PLACES
210 TRIM APPLICATION 290 TRIM APPLICATION SEX BOLT APPLICATION	1/4" DIA. THIS SIDE 13/32" DIA. OPPOSITE SIDE - 4 PLACES

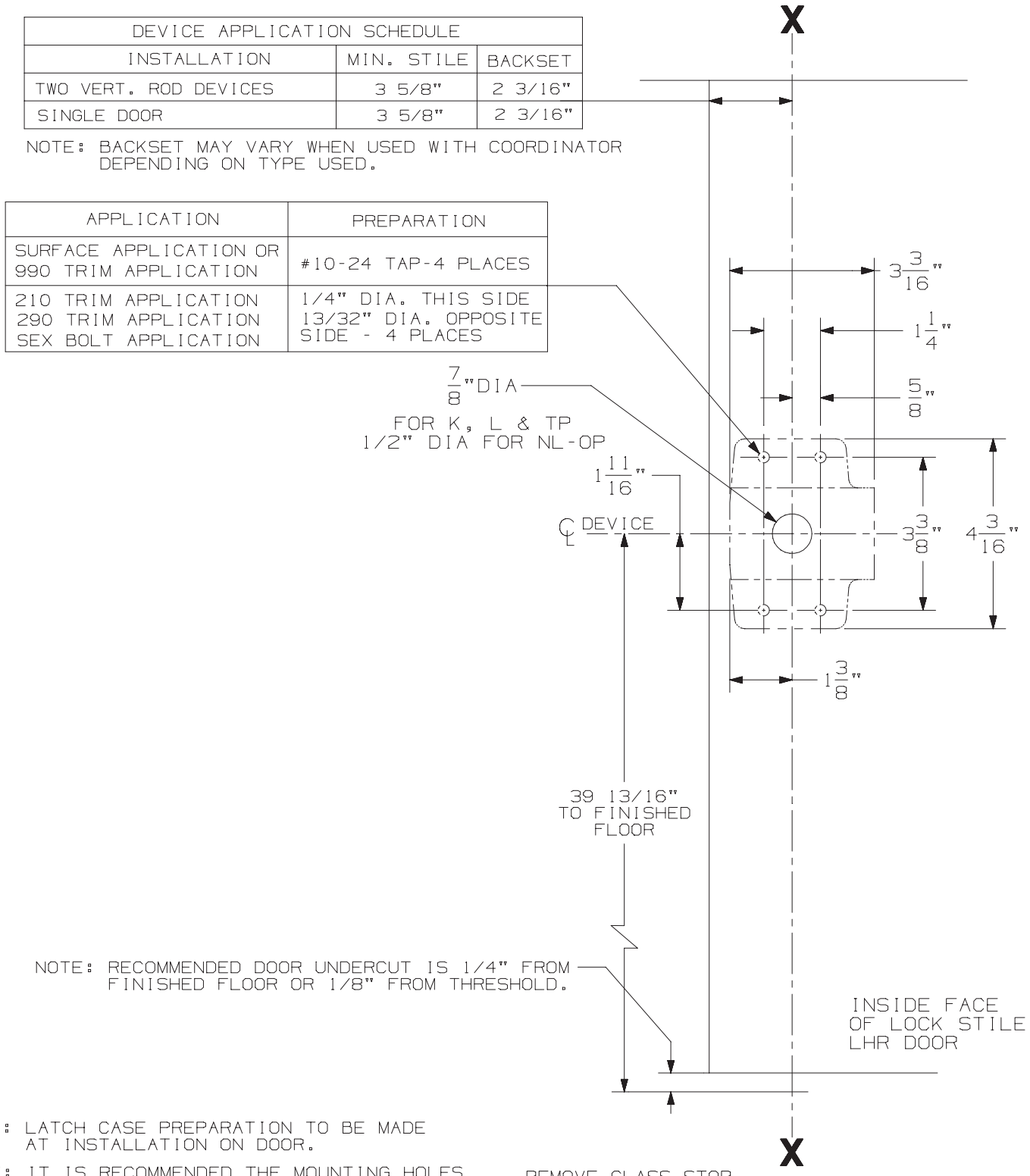

NOTE: LATCH CASE PREPARATION TO BE MADE AT INSTALLATION ON DOOR.

NOTE: IT IS RECOMMENDED THE MOUNTING HOLES BE PREPARED IN THE FIELD.

FOR OUTSIDE TRIM PREPARATION, WHEN REQUIRED, SEE ADDITIONAL TRIM TEMPLATE.

2227 & 2227-F EO, DT, K, L, & TP Series Vertical Rod Device

VON DUPRIN®

NOTES: SEE MASTER SHEET #10001 FOR SUGGESTED REINFORCING

TEMPLATE NUMBER: 10013_a

DATE: 05-15-13

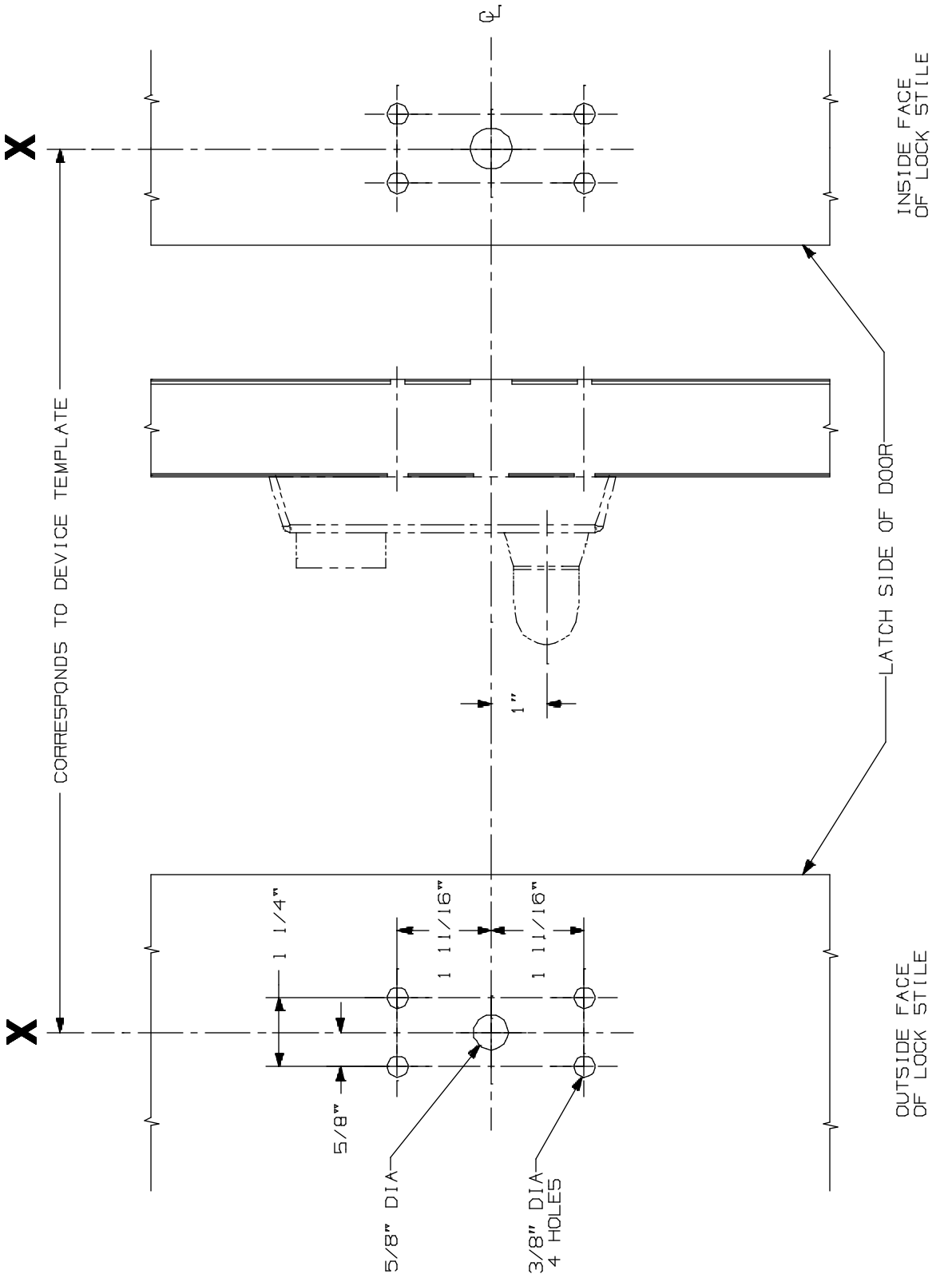

APPLICATIONS
ZZ RIM SERIES
2227 SERIES

230L & 230L-BE Lever Control
Metal Door Application

VON DUPRIN®

NOTES: See Master Sheet #10001 For Suggested Reinforcing

TEMPLATE NUMBER: 20007_a

DATE: 05-22-13

RIM APPLICATION

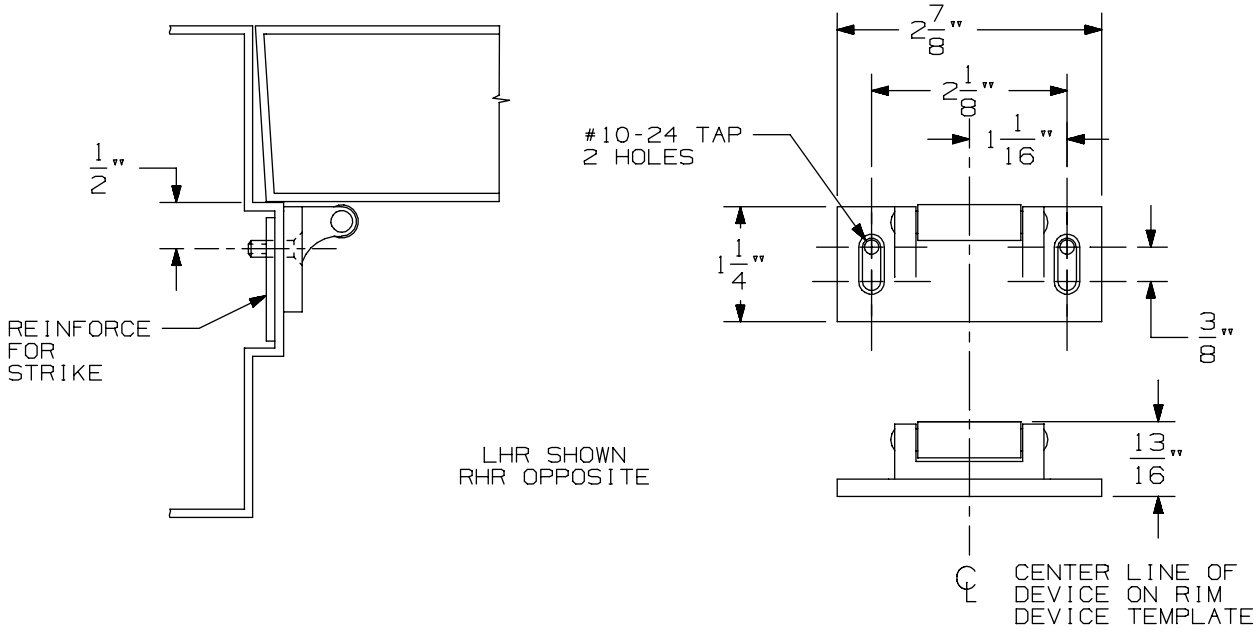

VERTICAL APPLICATION

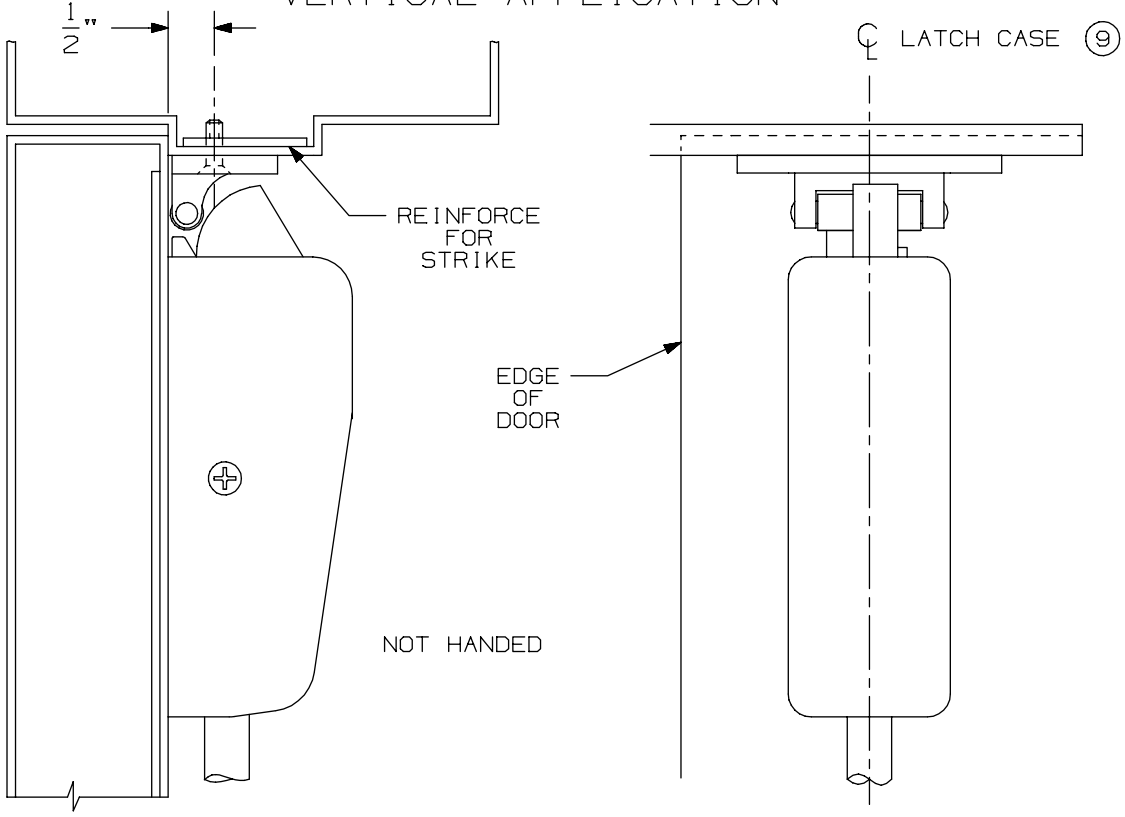

NOTE: LATCH CASE MOUNTING HOLES TO BE PREPARED AT INSTALLATION ON DOOR.

299 & 299F Strike

VON DUPRIN®

NOTES: SEE MASTER SHEET #10001 FOR SUGGESTED REINFORCING

TEMPLATE NUMBER: 30039_a

DATE: 05-23-13

DEVICE APPLICATION SCHEDULE		
INSTALLATION	MIN. STILE	BACKSET
TWO VERT. ROD DEVICES	3 5/8"	2 3/16"
SINGLE DOOR	3 5/8"	2 3/16"

NOTE: BACKSET MAY VARY WHEN USED WITH COORDINATOR DEPENDING ON TYPE USED.

APPLICATION	PREPARATION
SURFACE APPLICATION OR 990 TRIM APPLICATION	#10-24 TAP-4 PLACES
210 TRIM APPLICATION 290 TRIM APPLICATION SEX BOLT APPLICATION	1/4" DIA. THIS SIDE 13/32" DIA. OPPOSITE SIDE - 4 PLACES

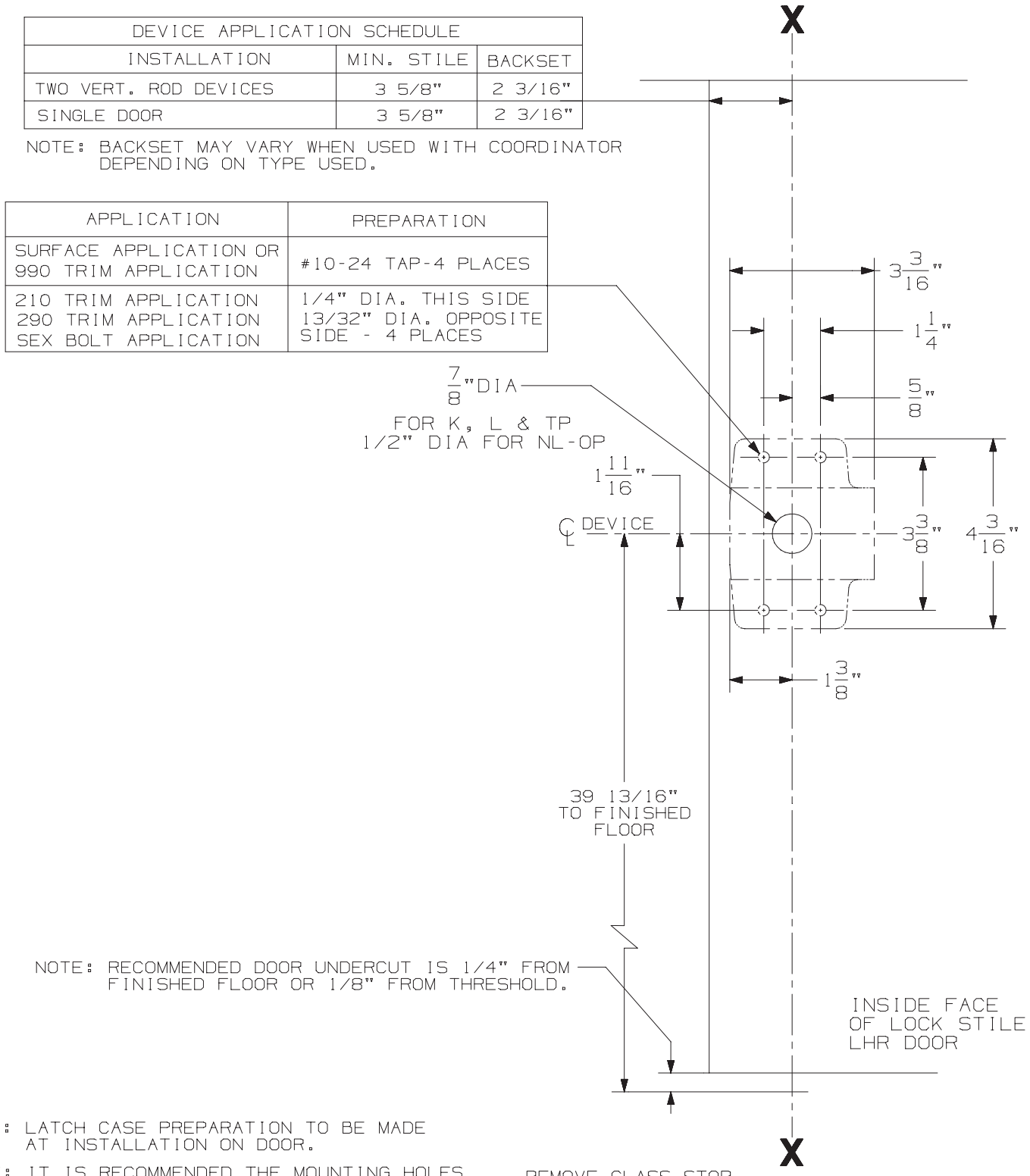

NOTE: LATCH CASE PREPARATION TO BE MADE AT INSTALLATION ON DOOR.

NOTE: IT IS RECOMMENDED THE MOUNTING HOLES BE PREPARED IN THE FIELD.

FOR OUTSIDE TRIM PREPARATION, WHEN REQUIRED, SEE ADDITIONAL TRIM TEMPLATE.

2227 & 2227-F EO, DT, K, L, & TP Series Vertical Rod Device

VON DUPRIN®

NOTES: SEE MASTER SHEET #10001 FOR SUGGESTED REINFORCING

TEMPLATE NUMBER: 10013_a

DATE: 05-15-13

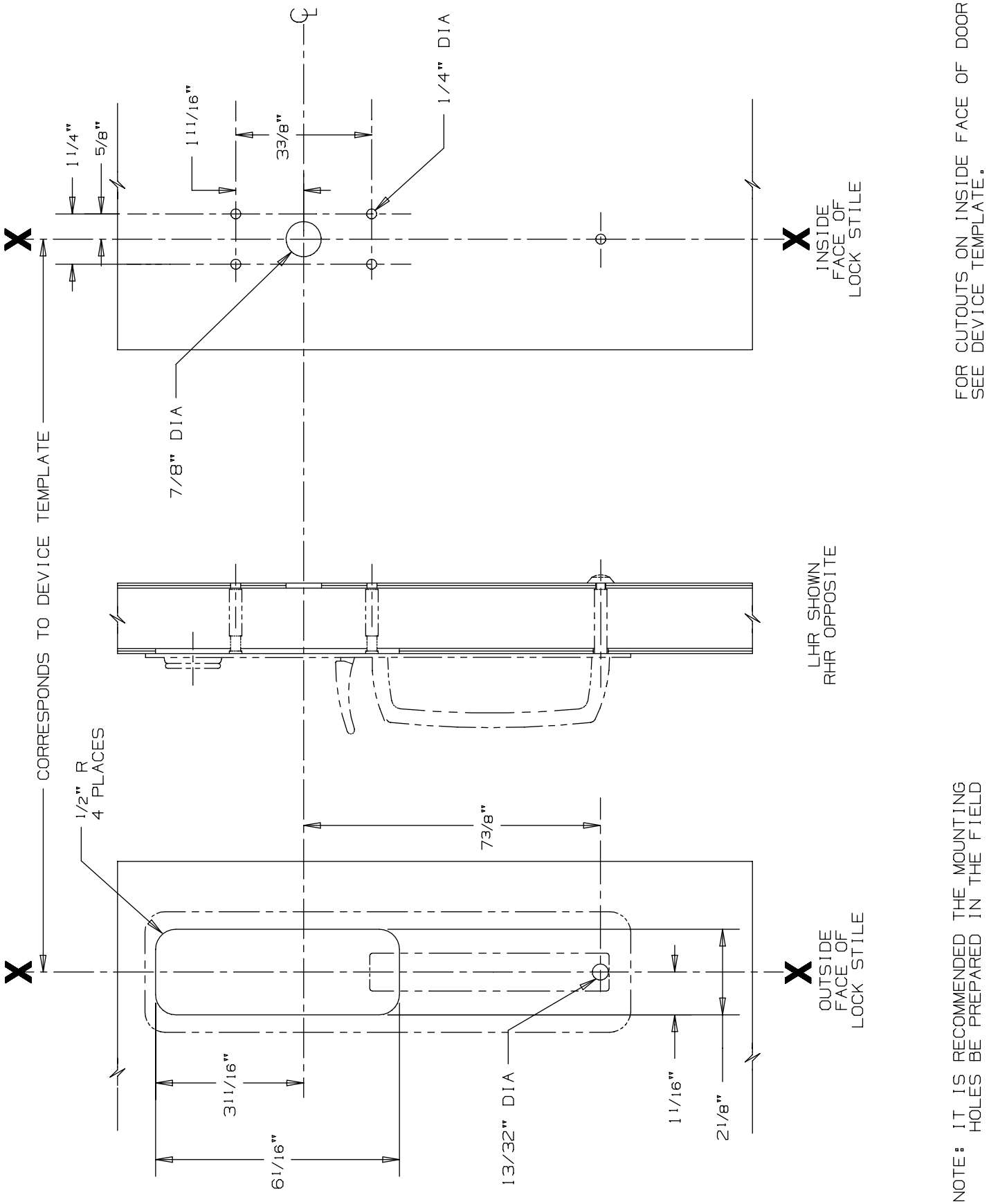

230TP & 230TP-BE Trim

VON DUPRIN®

NOTES: SEE MASTER SHEET #10001 FOR SUGGESTED REINFORCING

TEMPLATE NUMBER: 20038_b

DATE: 07-14-14

RIM APPLICATION

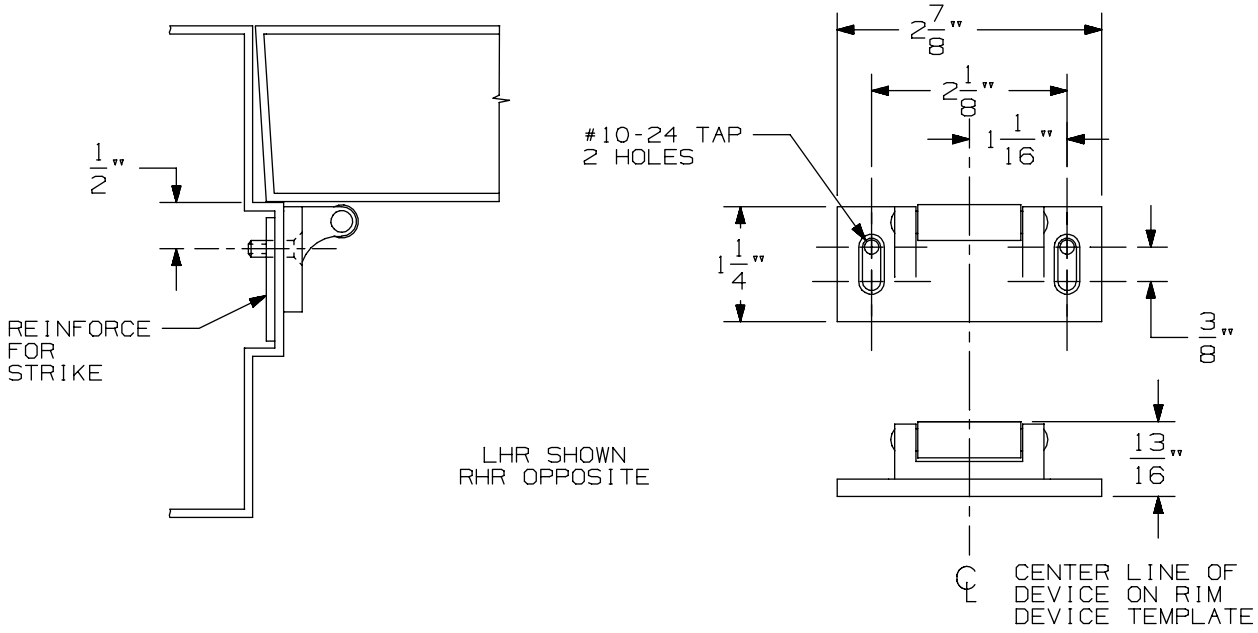

VERTICAL APPLICATION

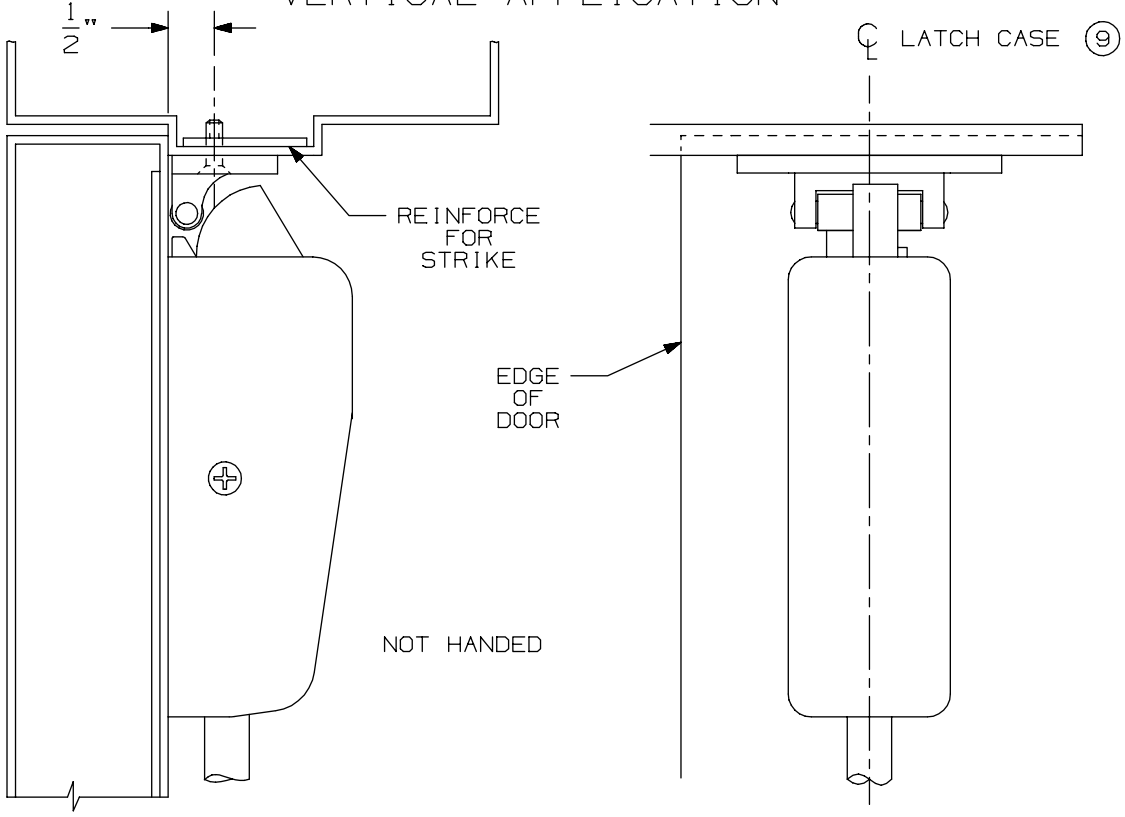

NOTE: LATCH CASE MOUNTING HOLES TO BE PREPARED AT INSTALLATION ON DOOR.

299 & 299F Strike

VON DUPRIN®

NOTES: SEE MASTER SHEET #10001 FOR SUGGESTED REINFORCING

TEMPLATE NUMBER: 30039_a

DATE: 05-23-13

22 Series Exit Device

-

2227-F Surface VertiDevicecal Rod

DEVICE APPLICATION SCHEDULE		
INSTALLATION	MIN. STILE	BACKSET
TWO VERT. ROD DEVICES	3 5/8"	2 3/16"
SINGLE DOOR	3 5/8"	2 3/16"

NOTE: BACKSET MAY VARY WHEN USED WITH COORDINATOR DEPENDING ON TYPE USED.

APPLICATION	PREPARATION
SURFACE APPLICATION OR 990 TRIM APPLICATION	#10-24 TAP-4 PLACES
210 TRIM APPLICATION 290 TRIM APPLICATION SEX BOLT APPLICATION	1/4" DIA. THIS SIDE 13/32" DIA. OPPOSITE SIDE - 4 PLACES

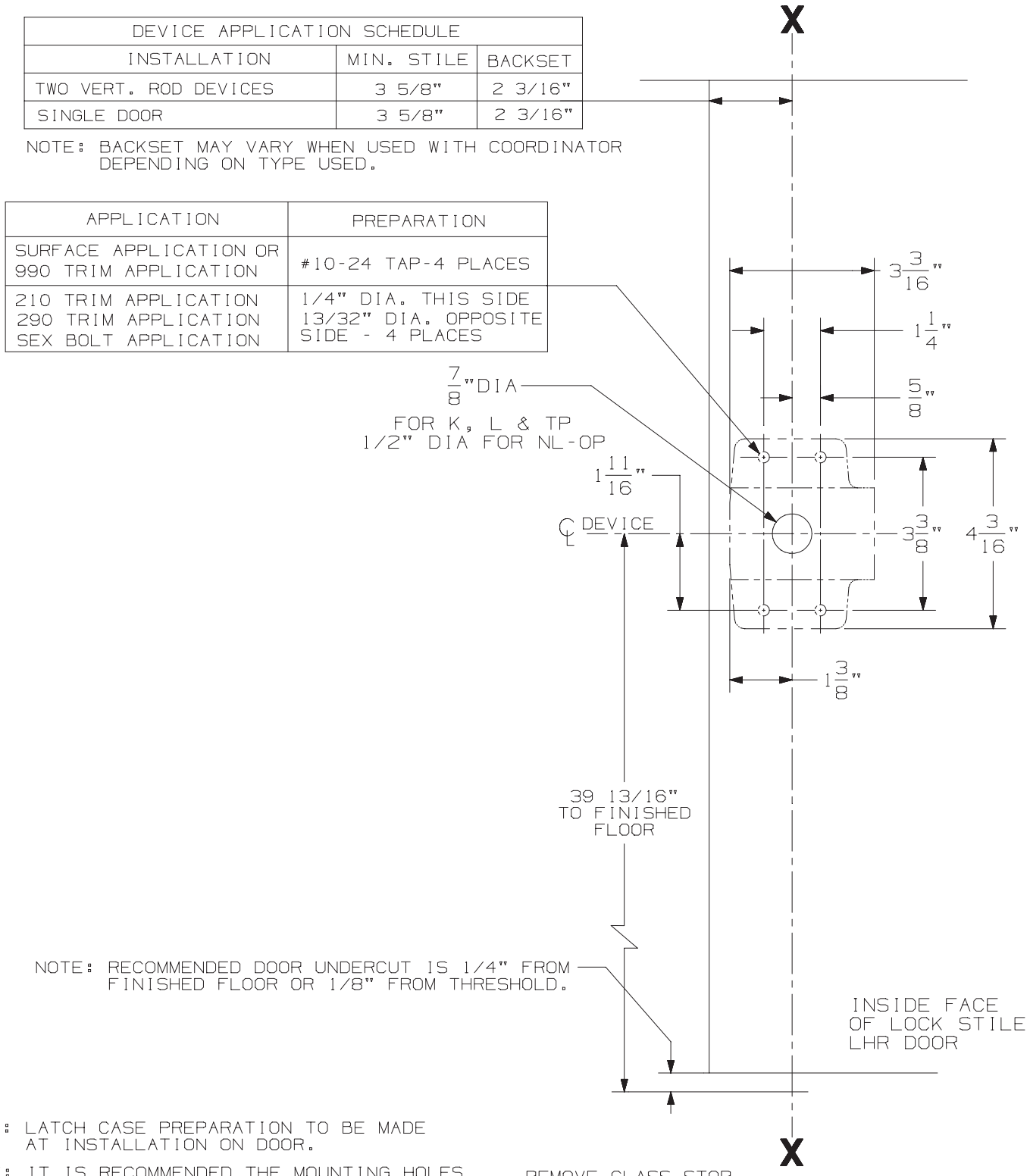

NOTE: LATCH CASE PREPARATION TO BE MADE AT INSTALLATION ON DOOR.

NOTE: IT IS RECOMMENDED THE MOUNTING HOLES BE PREPARED IN THE FIELD.

FOR OUTSIDE TRIM PREPARATION, WHEN REQUIRED, SEE ADDITIONAL TRIM TEMPLATE.

2227 & 2227-F EO, DT, K, L, & TP Series Vertical Rod Device

VON DUPRIN®

NOTES: SEE MASTER SHEET #10001 FOR SUGGESTED REINFORCING

TEMPLATE NUMBER: 10013_a

DATE: 05-15-13

RIM APPLICATION

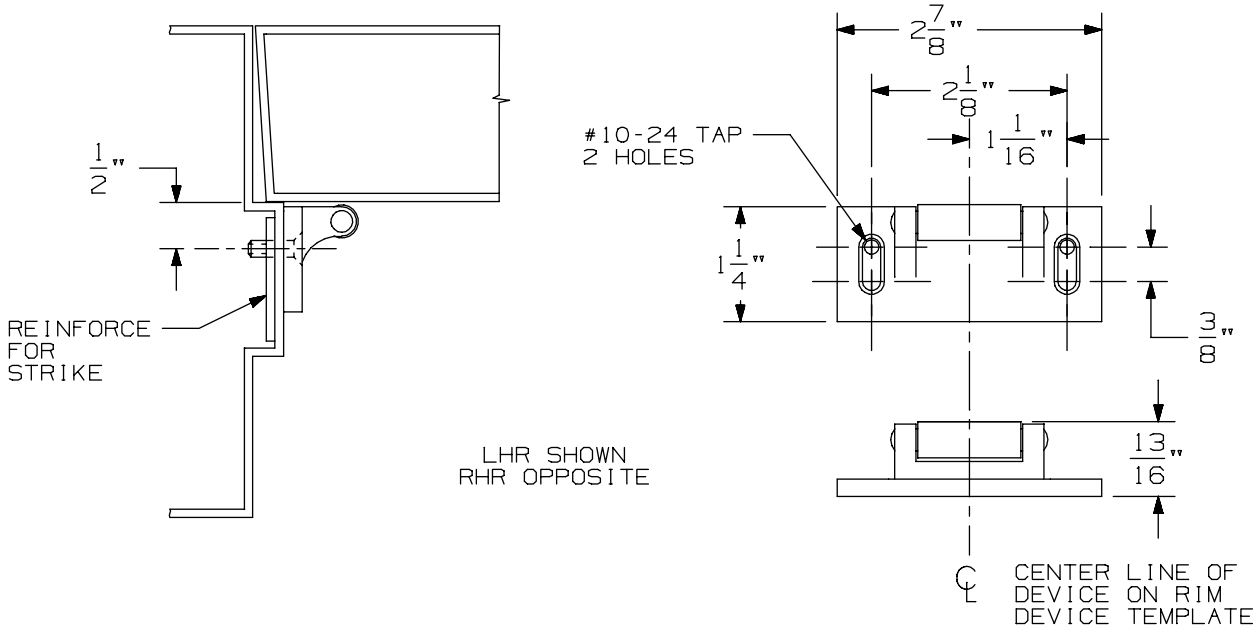

VERTICAL APPLICATION

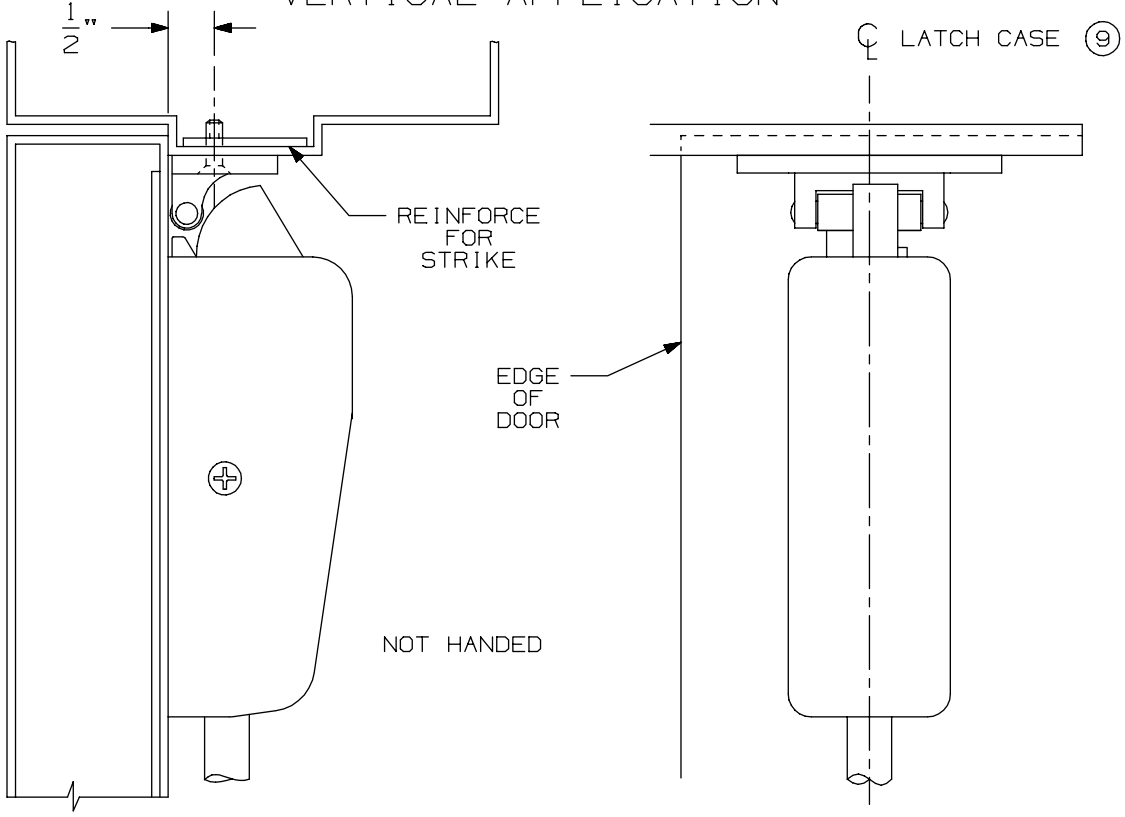

NOTE: LATCH CASE MOUNTING HOLES TO BE PREPARED AT INSTALLATION ON DOOR.

299 & 299F Strike

VON DUPRIN®

NOTES: SEE MASTER SHEET #10001 FOR SUGGESTED REINFORCING

TEMPLATE NUMBER: 30039_a

DATE: 05-23-13

DEVICE APPLICATION SCHEDULE		
INSTALLATION	MIN. STILE	BACKSET
TWO VERT. ROD DEVICES	3 5/8"	2 3/16"
SINGLE DOOR	3 5/8"	2 3/16"

NOTE: BACKSET MAY VARY WHEN USED WITH COORDINATOR DEPENDING ON TYPE USED.

APPLICATION	PREPARATION
SURFACE APPLICATION OR 990 TRIM APPLICATION	#10-24 TAP-4 PLACES
210 TRIM APPLICATION 290 TRIM APPLICATION SEX BOLT APPLICATION	1/4" DIA. THIS SIDE 13/32" DIA. OPPOSITE SIDE - 4 PLACES

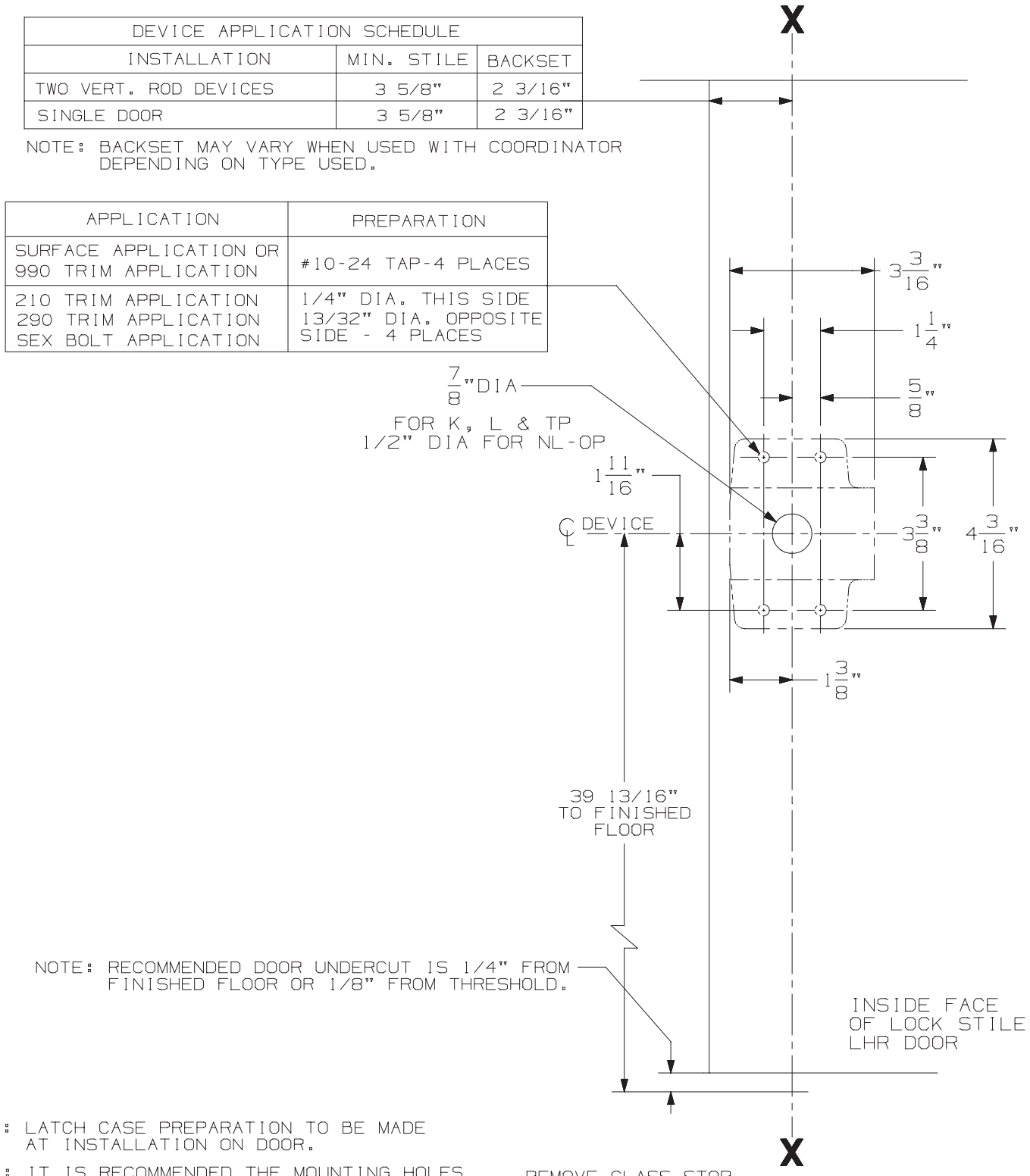

NOTE: LATCH CASE PREPARATION TO BE MADE AT INSTALLATION ON DOOR.

NOTE: IT IS RECOMMENDED THE MOUNTING HOLES BE PREPARED IN THE FIELD.

FOR OUTSIDE TRIM PREPARATION, WHEN REQUIRED, SEE ADDITIONAL TRIM TEMPLATE.

2227 & 2227-F EO, DT, K, L, & TP Series Vertical Rod Device

VON DUPRIN®

NOTES: SEE MASTER SHEET #10001 FOR SUGGESTED REINFORCING

TEMPLATE NUMBER: 10013_a

DATE: 05-15-13

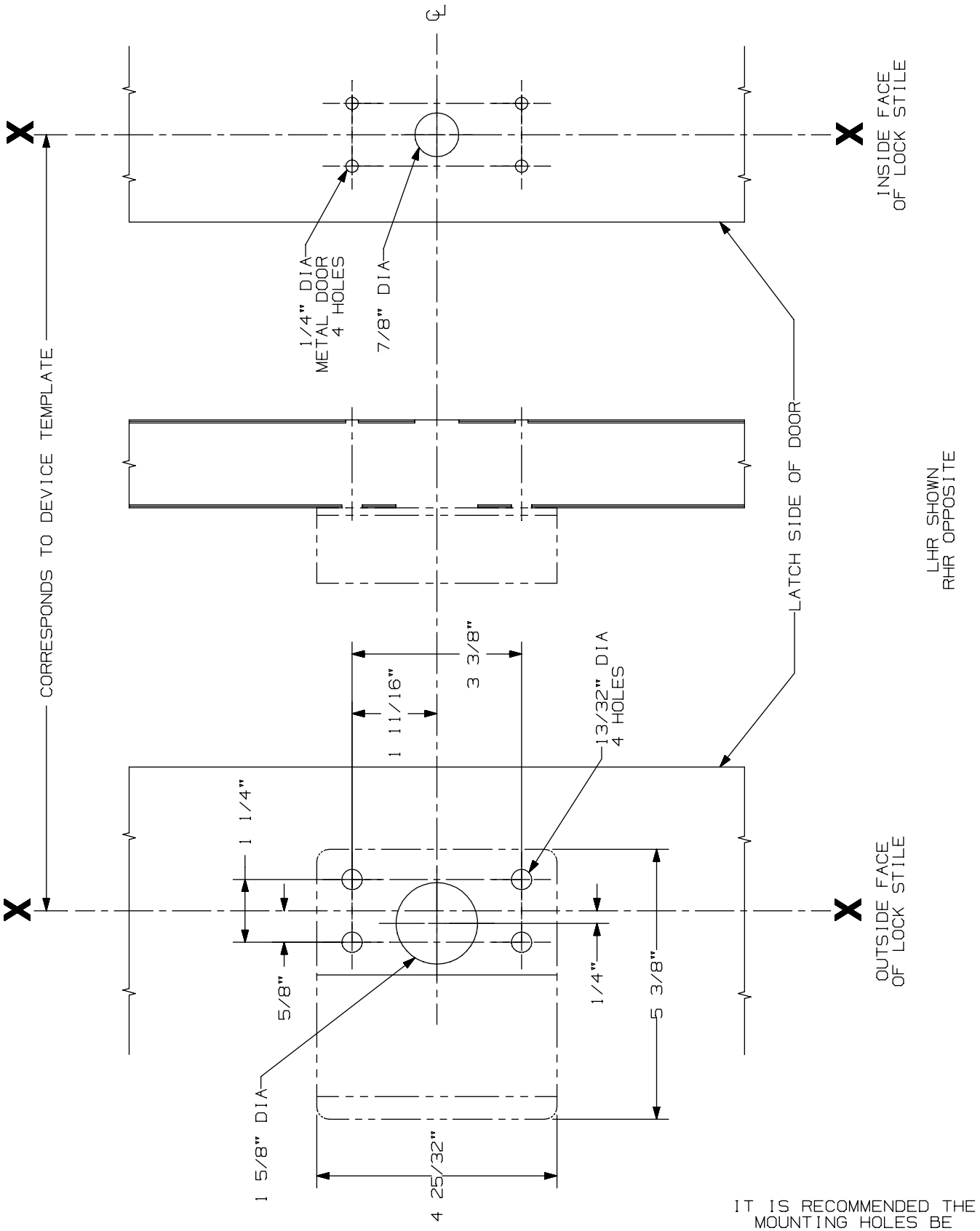

IT IS RECOMMENDED THE MOUNTING HOLES BE PREPARED IN THE FIELD

210 NL Trim

VON DUPRIN®

NOTES: See Master Sheet #10001 For Suggested Reinforcing

TEMPLATE NUMBER: 20016_a

DATE: 05-22-13

RIM APPLICATION

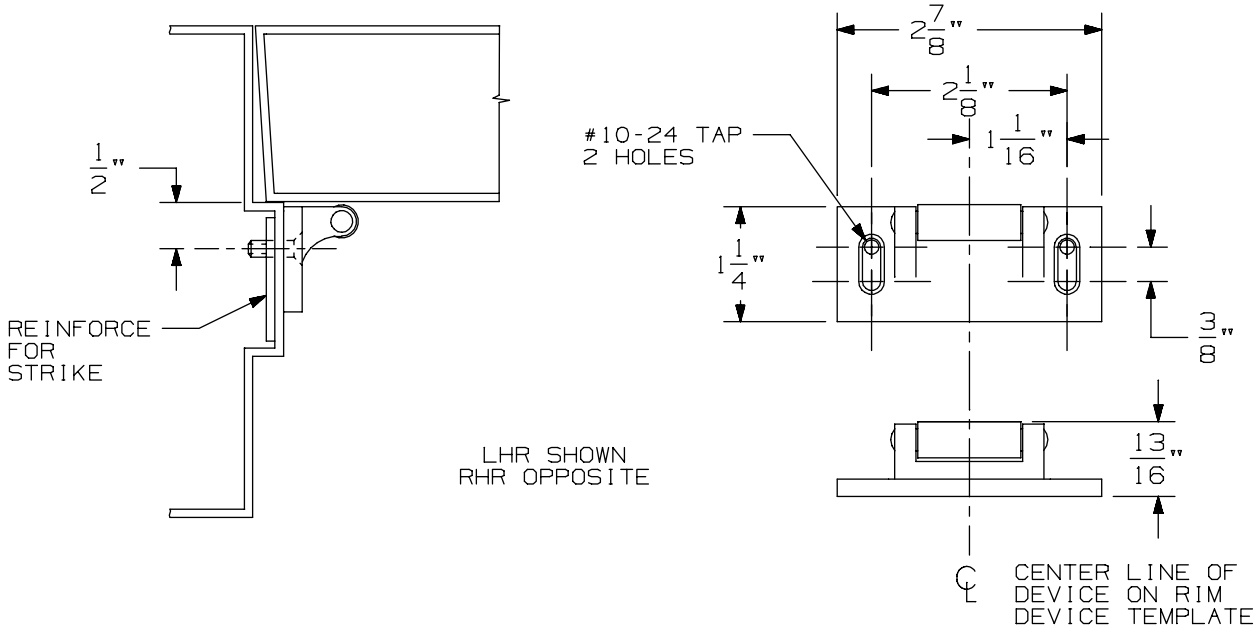

VERTICAL APPLICATION

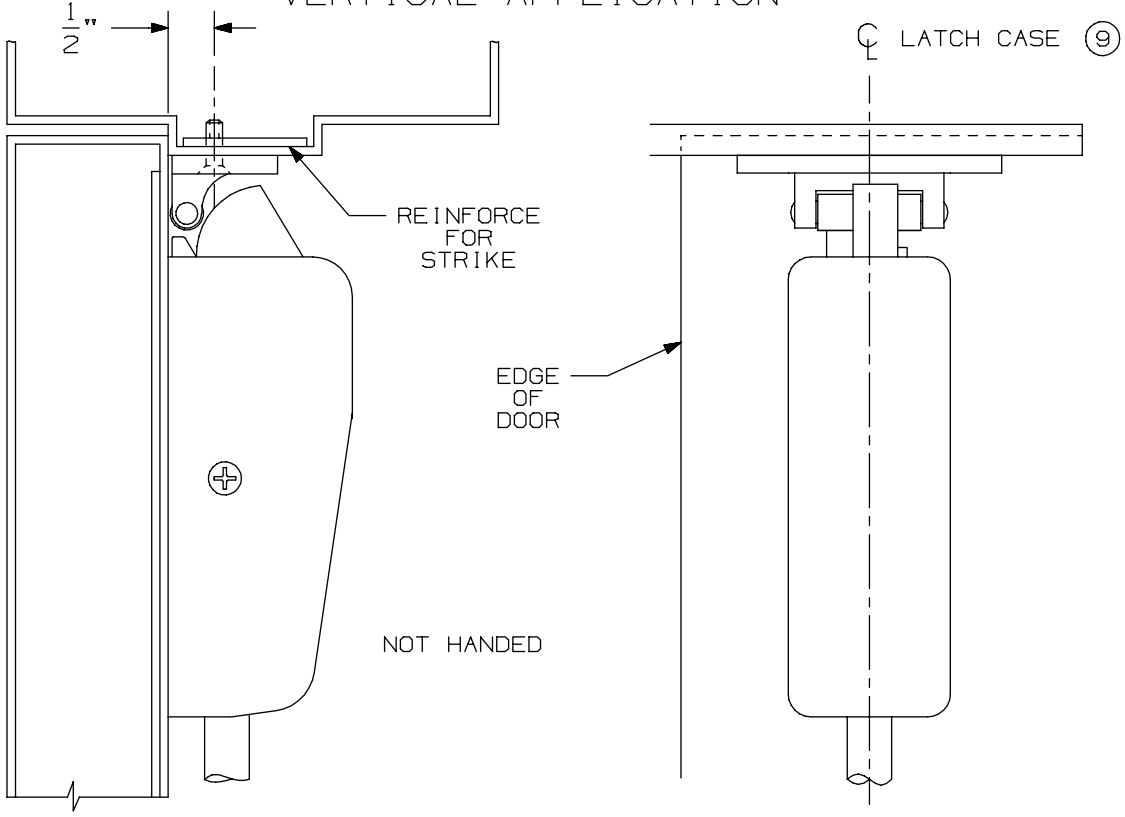

NOTE: LATCH CASE MOUNTING HOLES TO BE PREPARED AT INSTALLATION ON DOOR.

299 & 299F Strike

VON DUPRIN®

NOTES: SEE MASTER SHEET #10001 FOR SUGGESTED REINFORCING

TEMPLATE NUMBER: 30039_a

DATE: 05-23-13

DEVICE APPLICATION SCHEDULE		
INSTALLATION	MIN. STILE	BACKSET
TWO VERT. ROD DEVICES	3 5/8"	2 3/16"
SINGLE DOOR	3 5/8"	2 3/16"

NOTE: BACKSET MAY VARY WHEN USED WITH COORDINATOR DEPENDING ON TYPE USED.

APPLICATION	PREPARATION
SURFACE APPLICATION OR 990 TRIM APPLICATION	#10-24 TAP-4 PLACES
210 TRIM APPLICATION 290 TRIM APPLICATION SEX BOLT APPLICATION	1/4" DIA. THIS SIDE 13/32" DIA. OPPOSITE SIDE - 4 PLACES

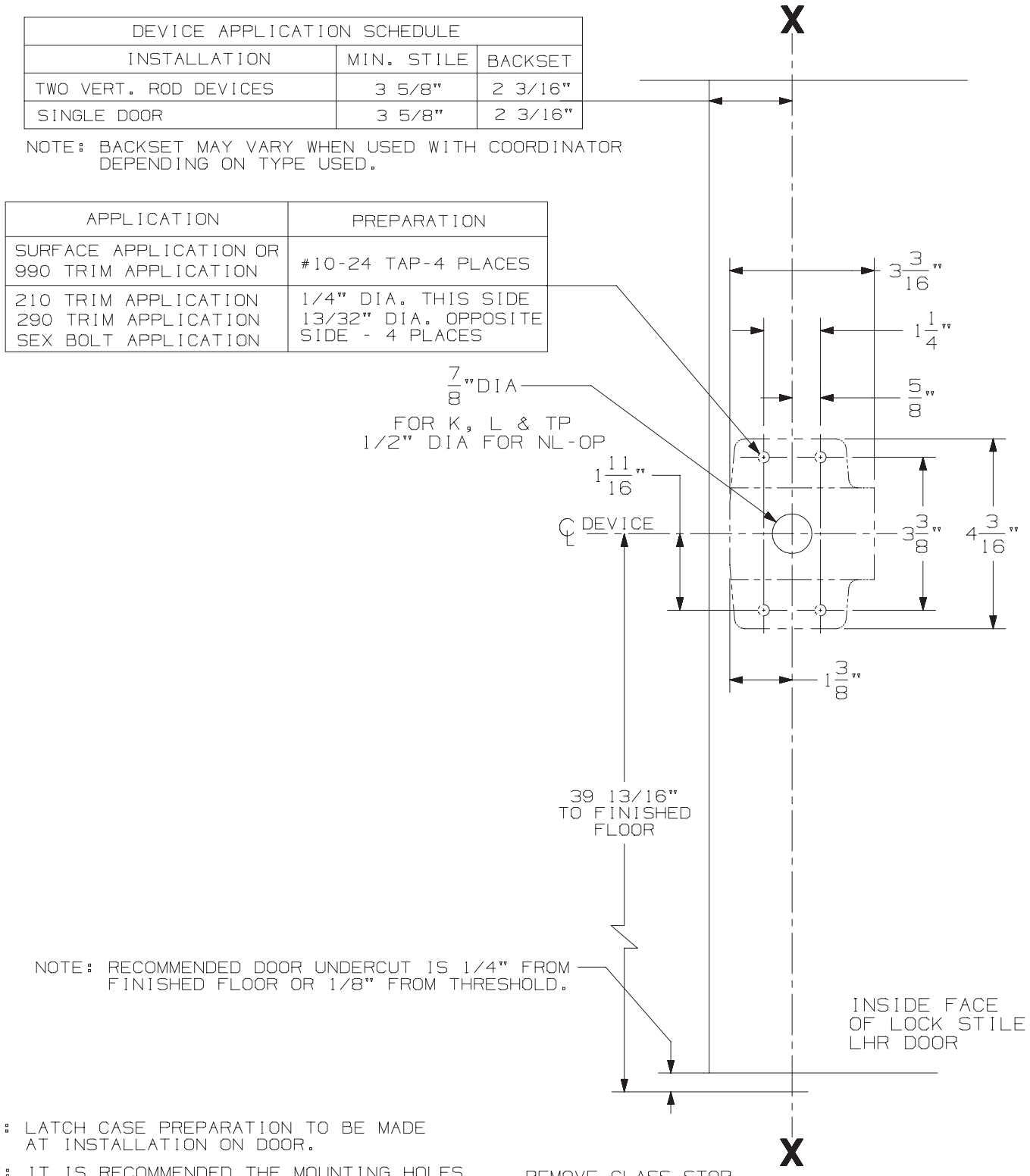

NOTE: LATCH CASE PREPARATION TO BE MADE AT INSTALLATION ON DOOR.

NOTE: IT IS RECOMMENDED THE MOUNTING HOLES BE PREPARED IN THE FIELD.

FOR OUTSIDE TRIM PREPARATION, WHEN REQUIRED, SEE ADDITIONAL TRIM TEMPLATE.

2227 & 2227-F EO, DT, K, L, & TP Series Vertical Rod Device

VON DUPRIN®

NOTES: SEE MASTER SHEET #10001 FOR SUGGESTED REINFORCING

TEMPLATE NUMBER: 10013_a

DATE: 05-15-13

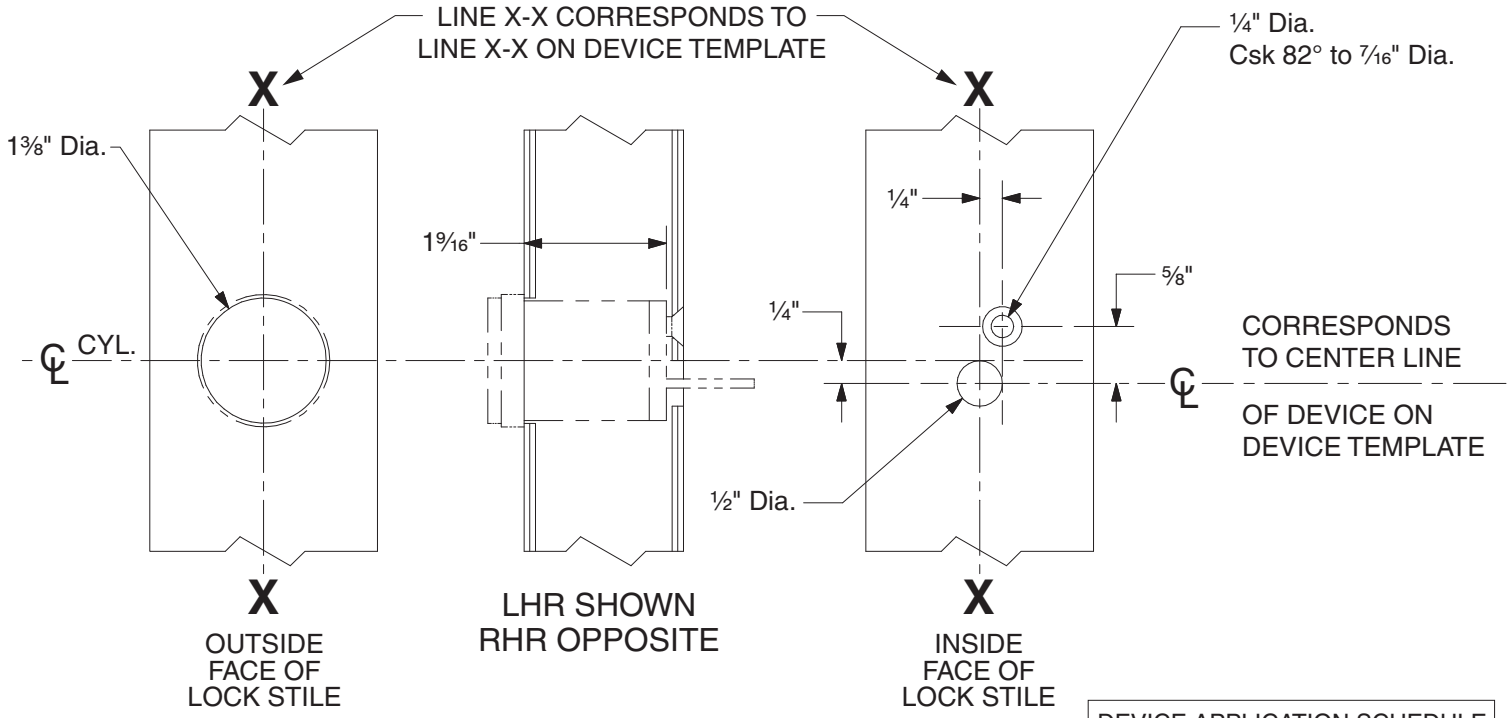

DEVICE APPLICATION SCHEDULE	
98 RIM SERIES	99 RIM SERIES
9827 SERIES	9927 SERIES
9847 SERIES	9947 SERIES
22 RIM SERIES	2227 SERIES

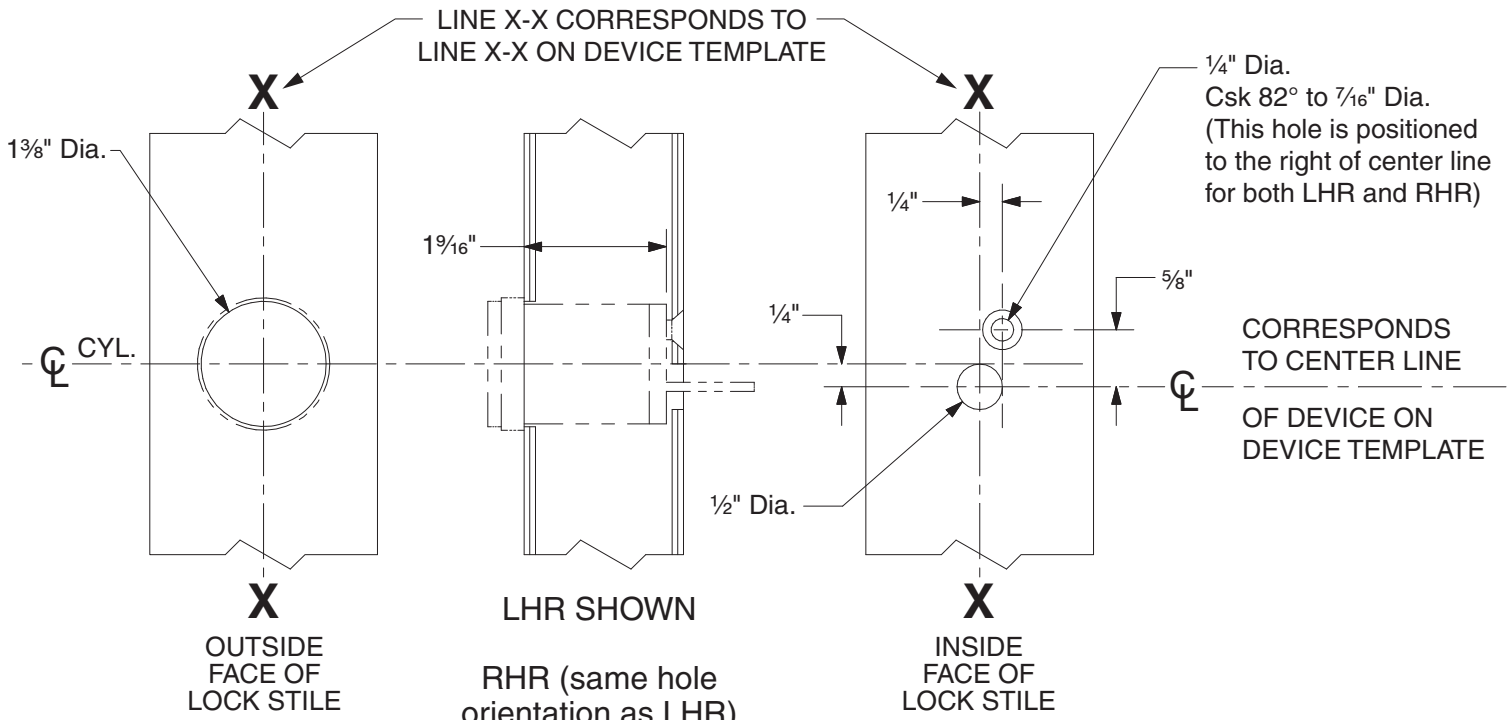

DEVICE APPLICATION SCHEDULE	
9849 SERIES	9949 SERIES

110NL Cylinder Preparation

VON DUPRIN®

NOTES: SEE MASTER SHEET #10001 FOR SUGGESTED REINFORCING

TEMPLATE NUMBER: 40022_c

DATE: 05-28-13

RIM APPLICATION

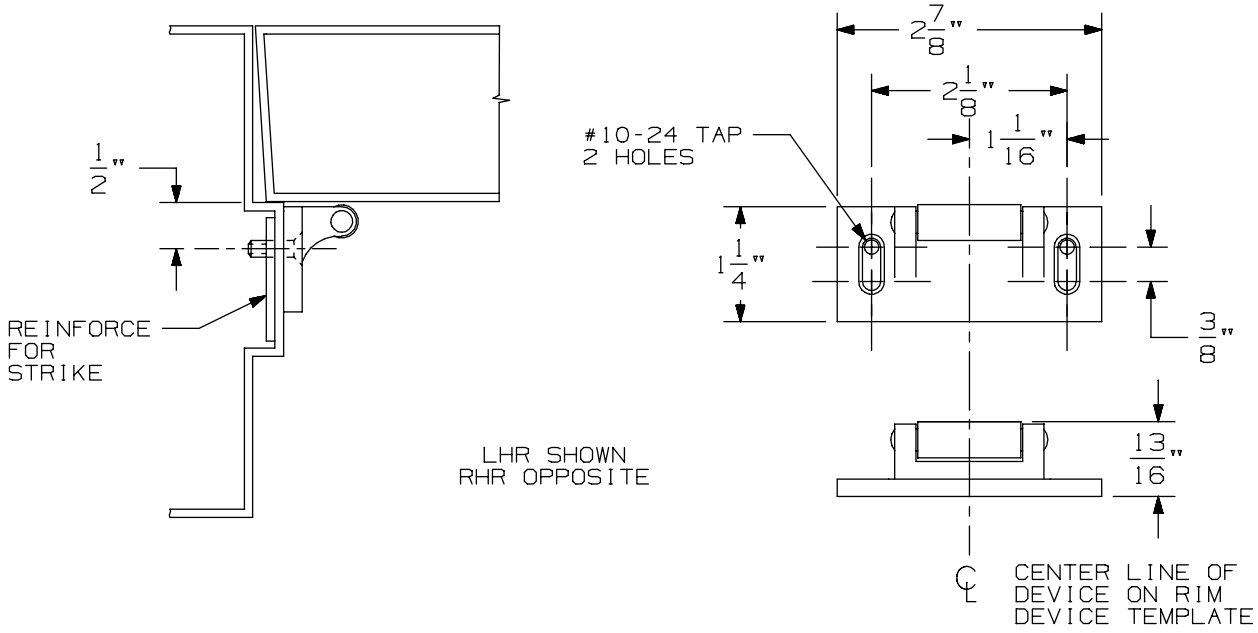

VERTICAL APPLICATION

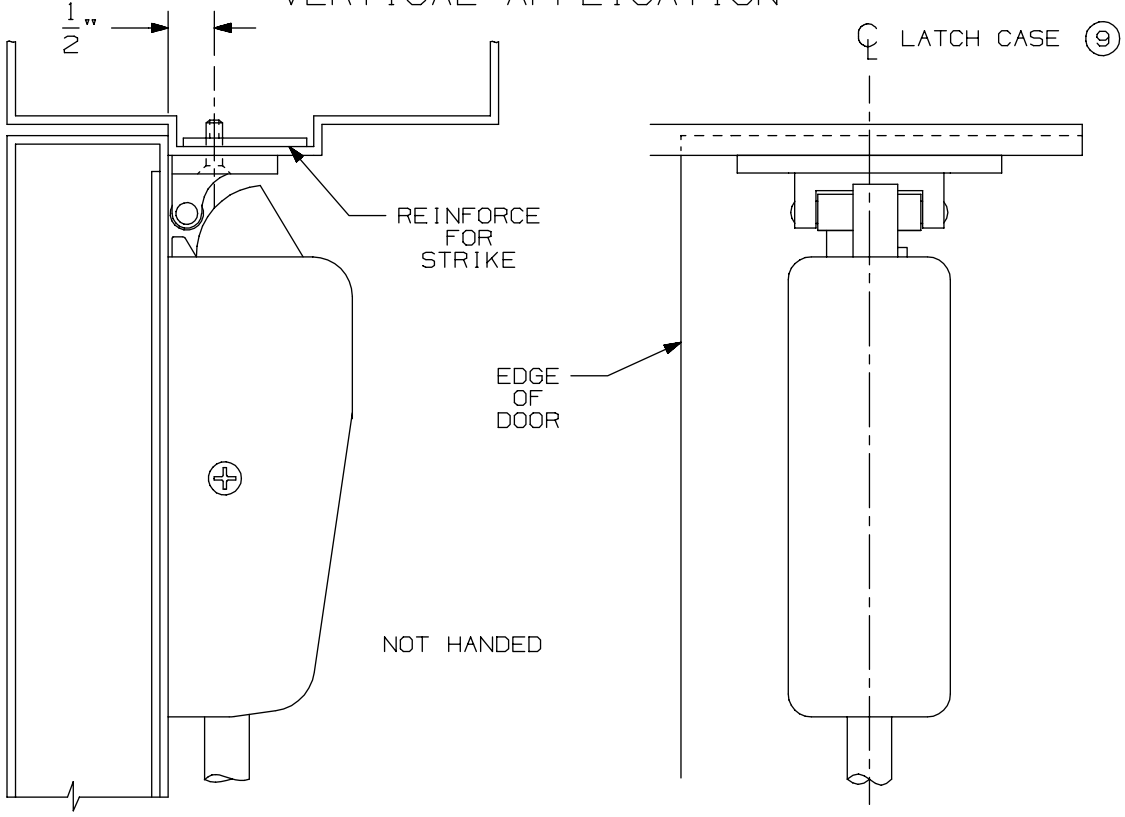

NOTE: LATCH CASE MOUNTING HOLES TO BE PREPARED AT INSTALLATION ON DOOR.

299 & 299F Strike

VON DUPRIN®

NOTES: SEE MASTER SHEET #10001 FOR SUGGESTED REINFORCING

TEMPLATE NUMBER: 30039_a

DATE: 05-23-13

DEVICE APPLICATION SCHEDULE		
INSTALLATION	MIN. STILE	BACKSET
TWO VERT. ROD DEVICES	3 5/8"	2 3/16"
SINGLE DOOR	3 5/8"	2 3/16"

NOTE: BACKSET MAY VARY WHEN USED WITH COORDINATOR DEPENDING ON TYPE USED.

APPLICATION	PREPARATION
SURFACE APPLICATION OR 990 TRIM APPLICATION	#10-24 TAP-4 PLACES
210 TRIM APPLICATION 290 TRIM APPLICATION SEX BOLT APPLICATION	1/4" DIA. THIS SIDE 13/32" DIA. OPPOSITE SIDE - 4 PLACES

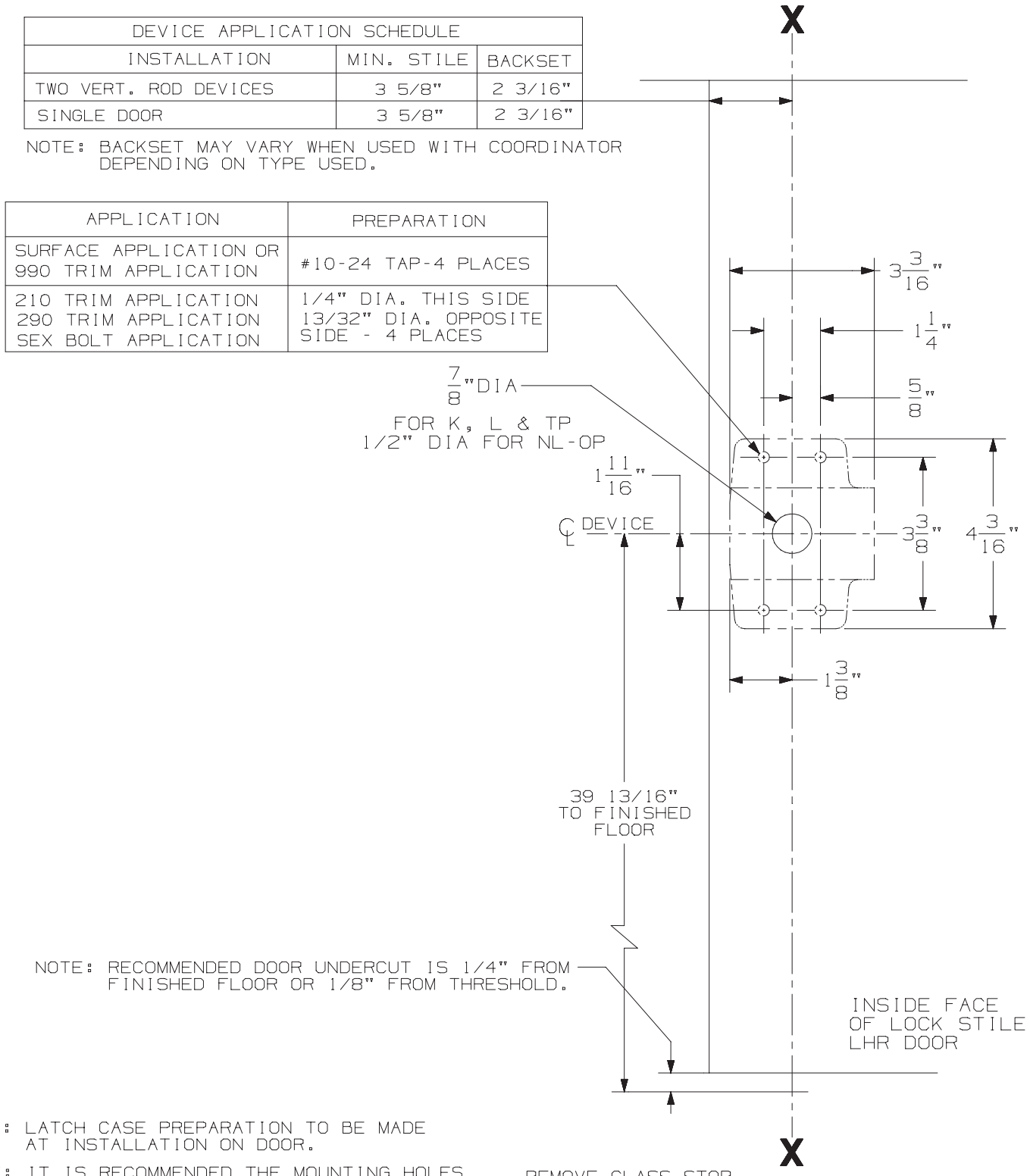

NOTE: LATCH CASE PREPARATION TO BE MADE AT INSTALLATION ON DOOR.

NOTE: IT IS RECOMMENDED THE MOUNTING HOLES BE PREPARED IN THE FIELD.

FOR OUTSIDE TRIM PREPARATION, WHEN REQUIRED, SEE ADDITIONAL TRIM TEMPLATE.

2227 & 2227-F EO, DT, K, L, & TP Series Vertical Rod Device

VON DUPRIN®

NOTES: SEE MASTER SHEET #10001 FOR SUGGESTED REINFORCING

TEMPLATE NUMBER: 10013_a

DATE: 05-15-13

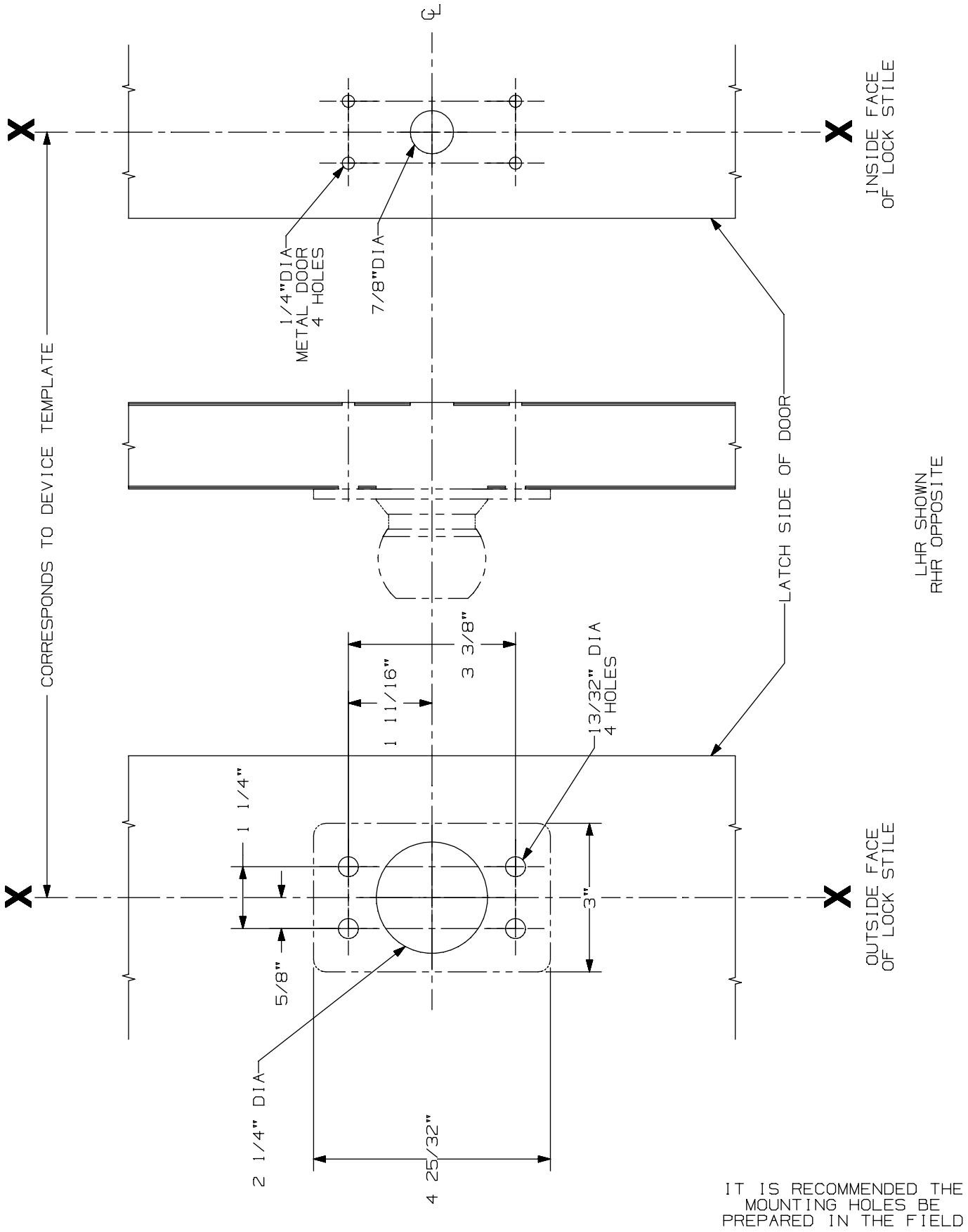

IT IS RECOMMENDED THE MOUNTING HOLES BE PREPARED IN THE FIELD

210 K Series Trim

VON DUPRIN®

NOTES: See Master Sheet #10001 For Suggested Reinforcing

TEMPLATE NUMBER: 20018_a

DATE: 05-22-13

RIM APPLICATION

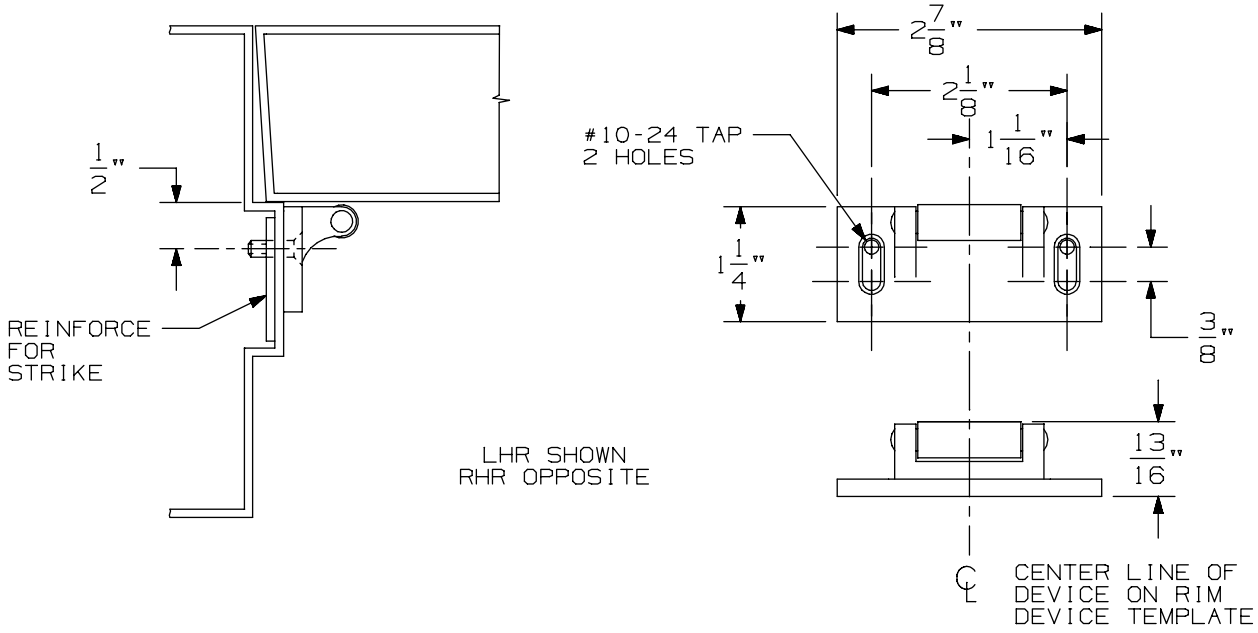

VERTICAL APPLICATION

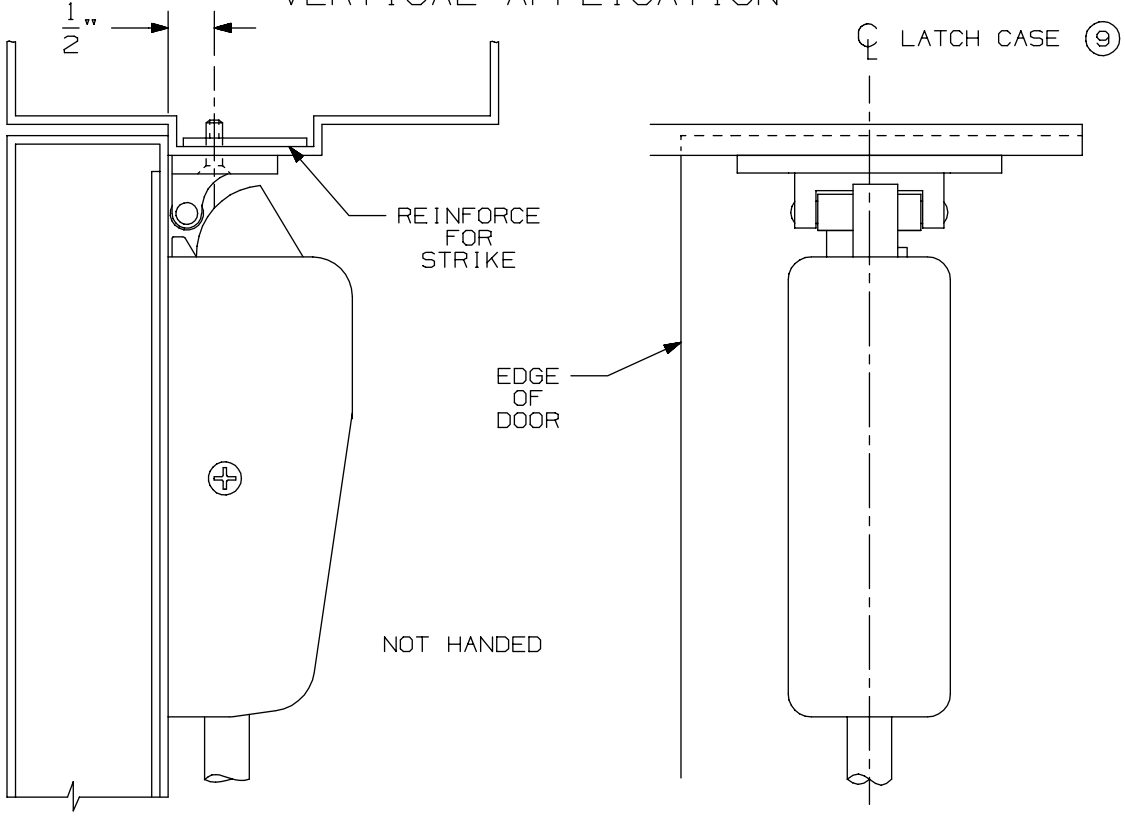

NOTE: LATCH CASE MOUNTING HOLES TO BE PREPARED AT INSTALLATION ON DOOR.

299 & 299F Strike

VON DUPRIN®

NOTES: SEE MASTER SHEET #10001 FOR SUGGESTED REINFORCING

TEMPLATE NUMBER: 30039_a

DATE: 05-23-13

DEVICE APPLICATION SCHEDULE		
INSTALLATION	MIN. STILE	BACKSET
TWO VERT. ROD DEVICES	3 5/8"	2 3/16"
SINGLE DOOR	3 5/8"	2 3/16"

NOTE: BACKSET MAY VARY WHEN USED WITH COORDINATOR DEPENDING ON TYPE USED.

APPLICATION	PREPARATION
SURFACE APPLICATION OR 990 TRIM APPLICATION	#10-24 TAP-4 PLACES
210 TRIM APPLICATION 290 TRIM APPLICATION SEX BOLT APPLICATION	1/4" DIA. THIS SIDE 13/32" DIA. OPPOSITE SIDE - 4 PLACES

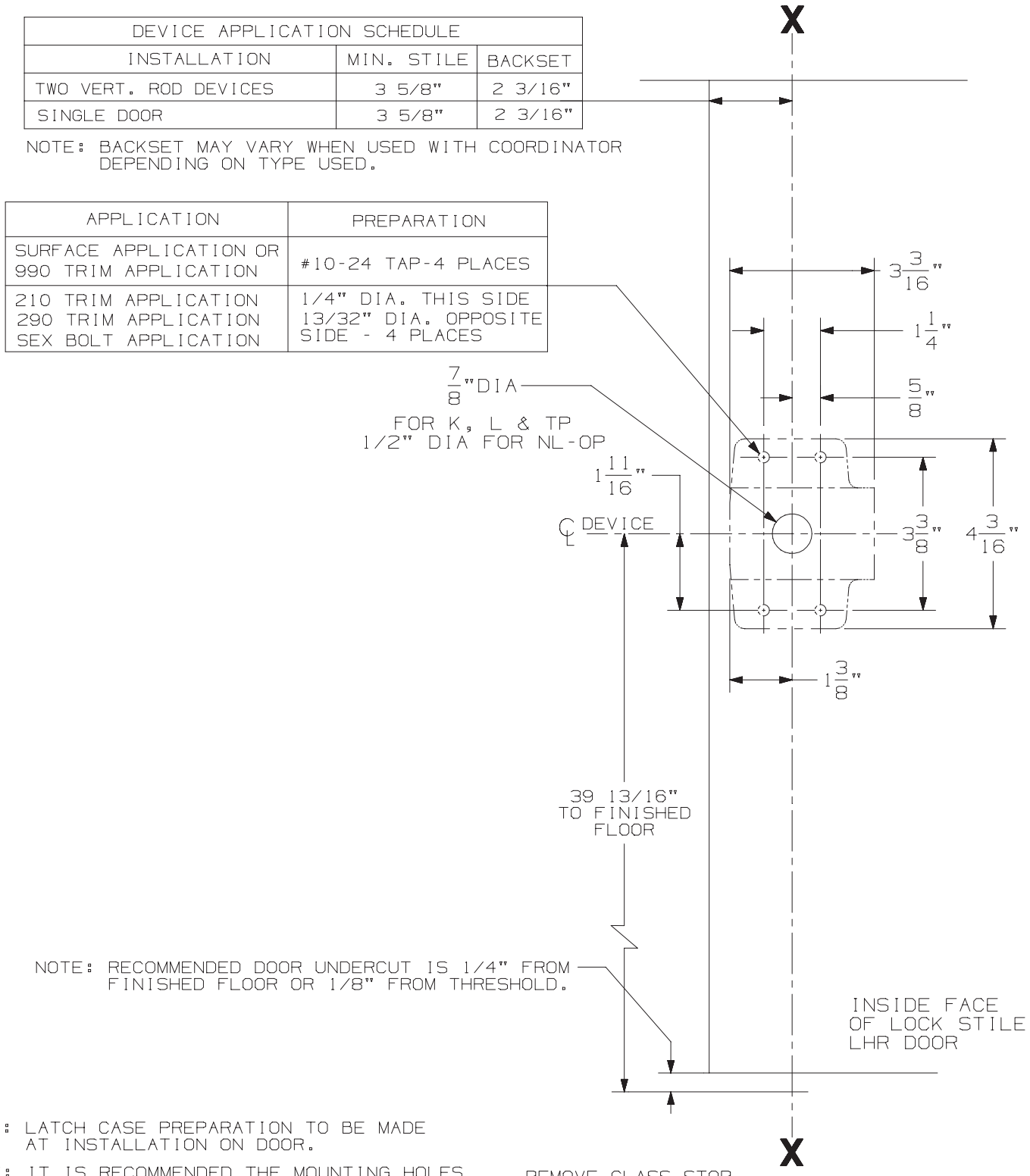

NOTE: LATCH CASE PREPARATION TO BE MADE AT INSTALLATION ON DOOR.

NOTE: IT IS RECOMMENDED THE MOUNTING HOLES BE PREPARED IN THE FIELD.

FOR OUTSIDE TRIM PREPARATION, WHEN REQUIRED, SEE ADDITIONAL TRIM TEMPLATE.

2227 & 2227-F EO, DT, K, L, & TP Series Vertical Rod Device

VON DUPRIN®

NOTES: SEE MASTER SHEET #10001 FOR SUGGESTED REINFORCING

TEMPLATE NUMBER: 10013_a

DATE: 05-15-13

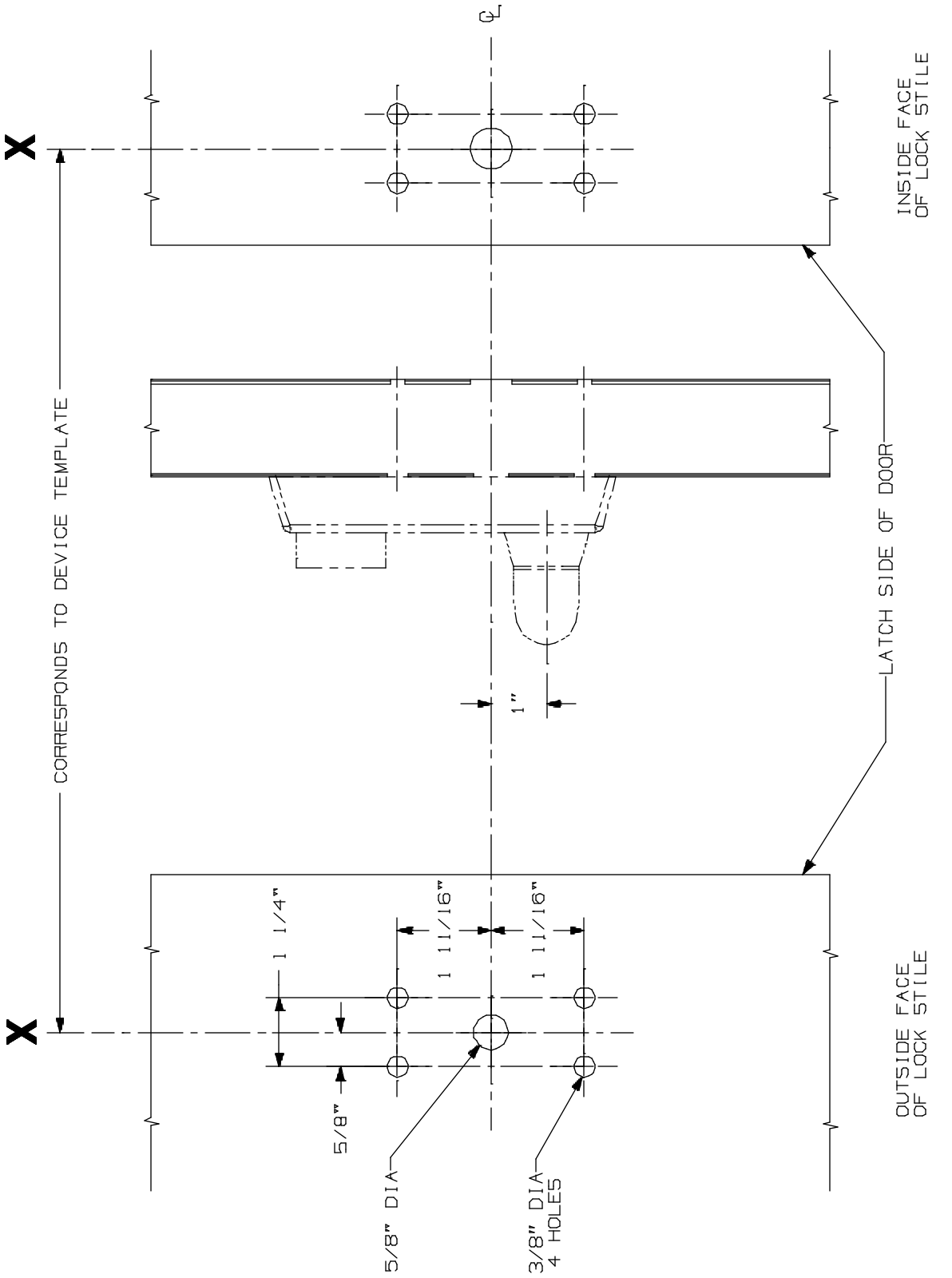

APPLICATIONS
ZZ RIM SERIES
2227 SERIES

230L & 230L-BE Lever Control
Metal Door Application

VON DUPRIN®

NOTES: See Master Sheet #10001 For Suggested Reinforcing

TEMPLATE NUMBER: 20007_a

DATE: 05-22-13

RIM APPLICATION

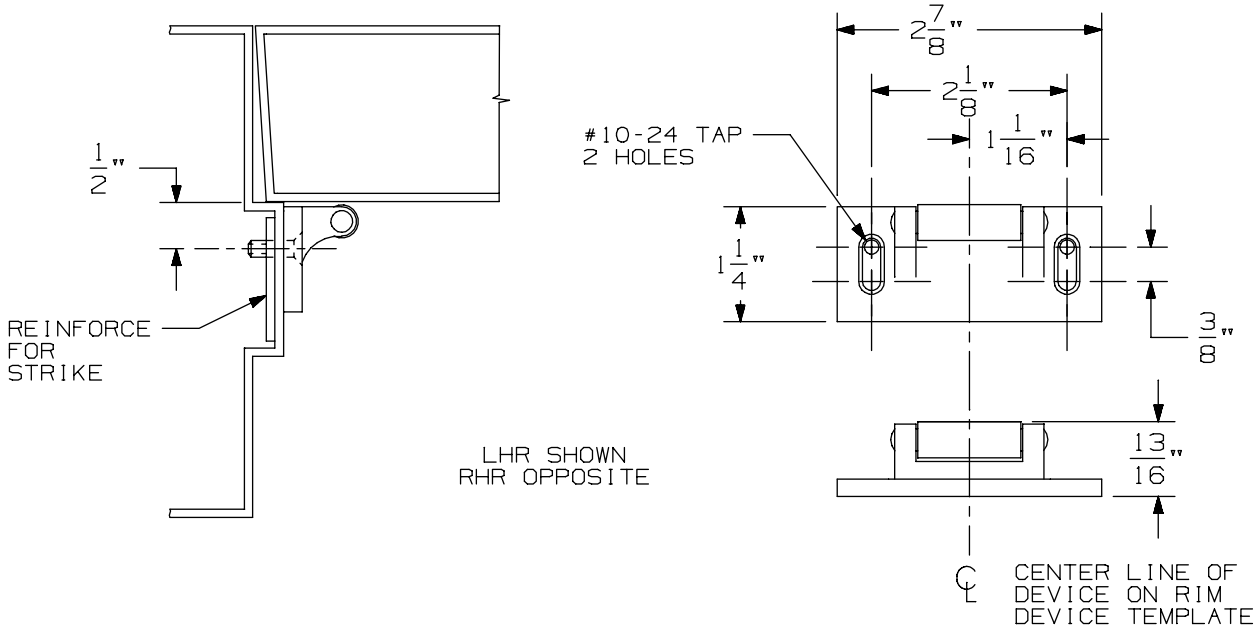

VERTICAL APPLICATION

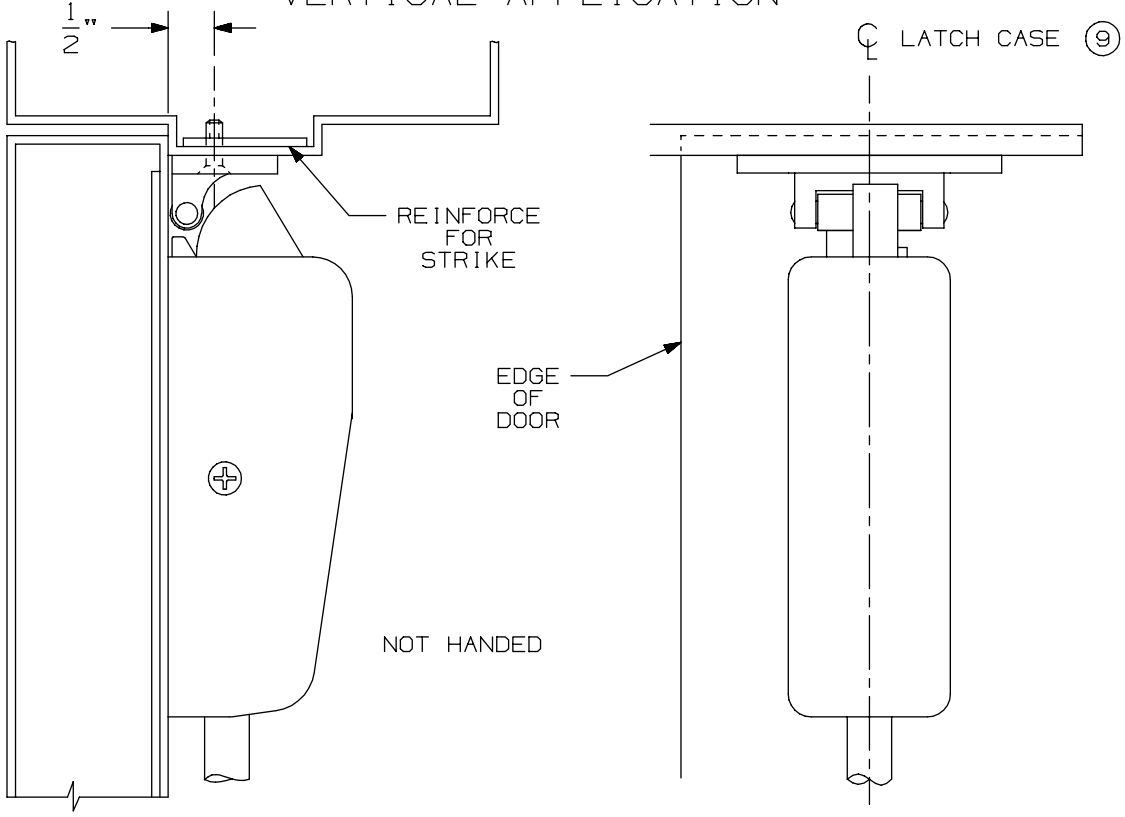

NOTE: LATCH CASE MOUNTING HOLES TO BE PREPARED AT INSTALLATION ON DOOR.

299 & 299F Strike

VON DUPRIN®

NOTES: SEE MASTER SHEET #10001 FOR SUGGESTED REINFORCING

TEMPLATE NUMBER: 30039_a

DATE: 05-23-13

DEVICE APPLICATION SCHEDULE		
INSTALLATION	MIN. STILE	BACKSET
TWO VERT. ROD DEVICES	3 5/8"	2 3/16"
SINGLE DOOR	3 5/8"	2 3/16"

NOTE: BACKSET MAY VARY WHEN USED WITH COORDINATOR DEPENDING ON TYPE USED.

APPLICATION	PREPARATION
SURFACE APPLICATION OR 990 TRIM APPLICATION	#10-24 TAP-4 PLACES
210 TRIM APPLICATION 290 TRIM APPLICATION SEX BOLT APPLICATION	1/4" DIA. THIS SIDE 13/32" DIA. OPPOSITE SIDE - 4 PLACES

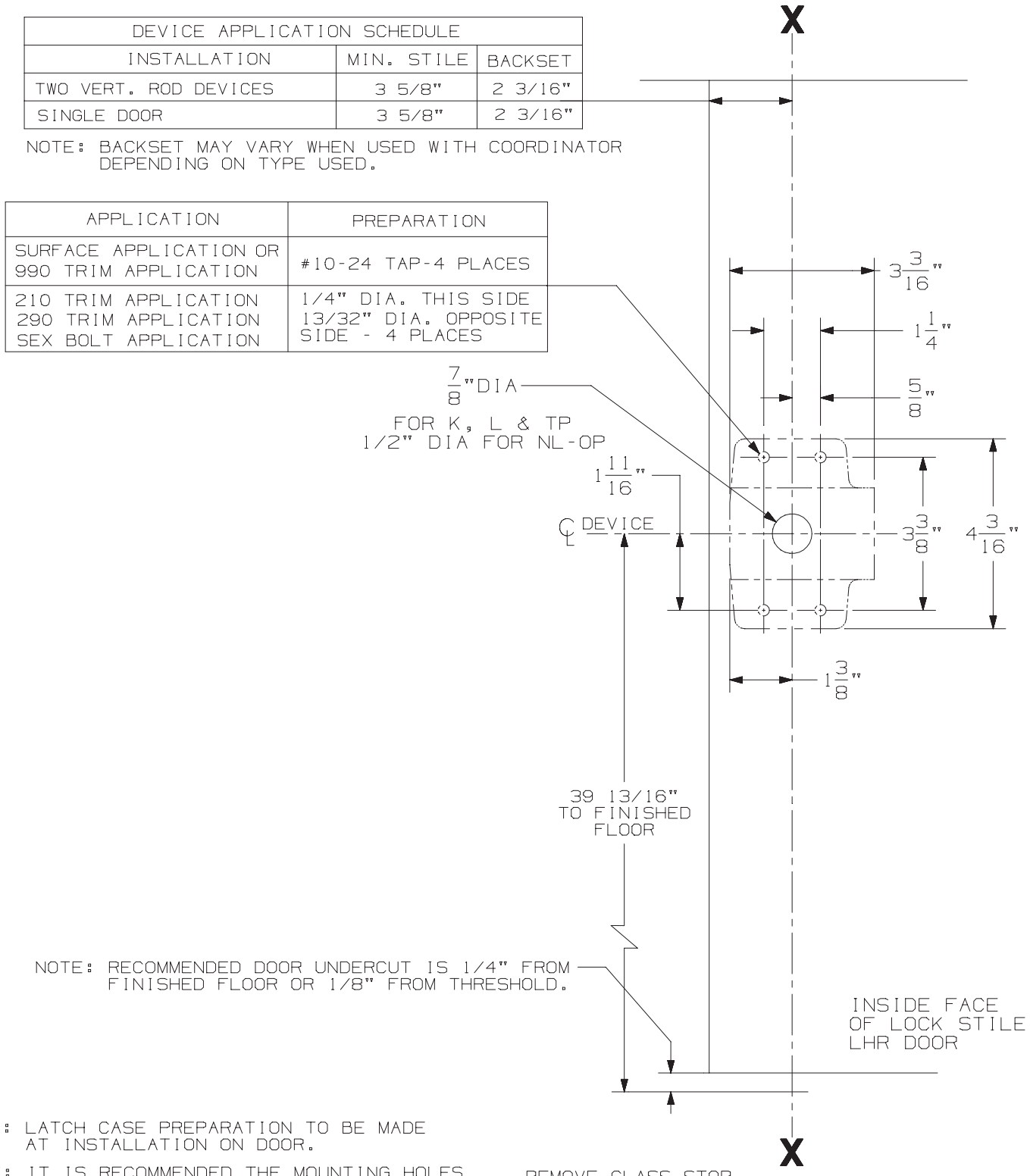

NOTE: LATCH CASE PREPARATION TO BE MADE AT INSTALLATION ON DOOR.

NOTE: IT IS RECOMMENDED THE MOUNTING HOLES BE PREPARED IN THE FIELD.

FOR OUTSIDE TRIM PREPARATION, WHEN REQUIRED, SEE ADDITIONAL TRIM TEMPLATE.

2227 & 2227-F EO, DT, K, L, & TP Series Vertical Rod Device

VON DUPRIN®

NOTES: SEE MASTER SHEET #10001 FOR SUGGESTED REINFORCING

TEMPLATE NUMBER: 10013_a

DATE: 05-15-13

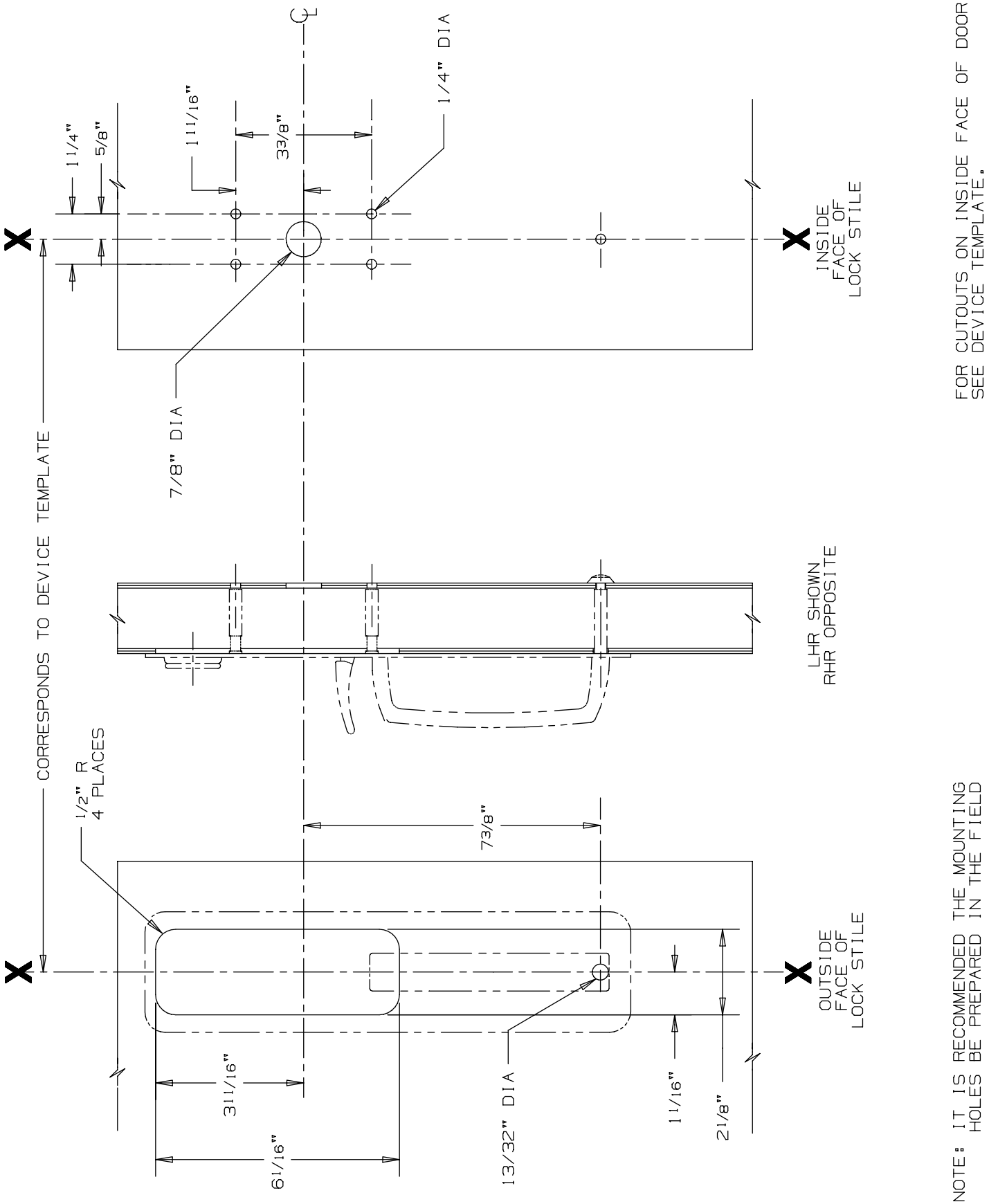

230TP & 230TP-BE Trim

VON DUPRIN®

NOTES: SEE MASTER SHEET #10001 FOR SUGGESTED REINFORCING

TEMPLATE NUMBER: 20038_b

DATE: 07-14-14

RIM APPLICATION

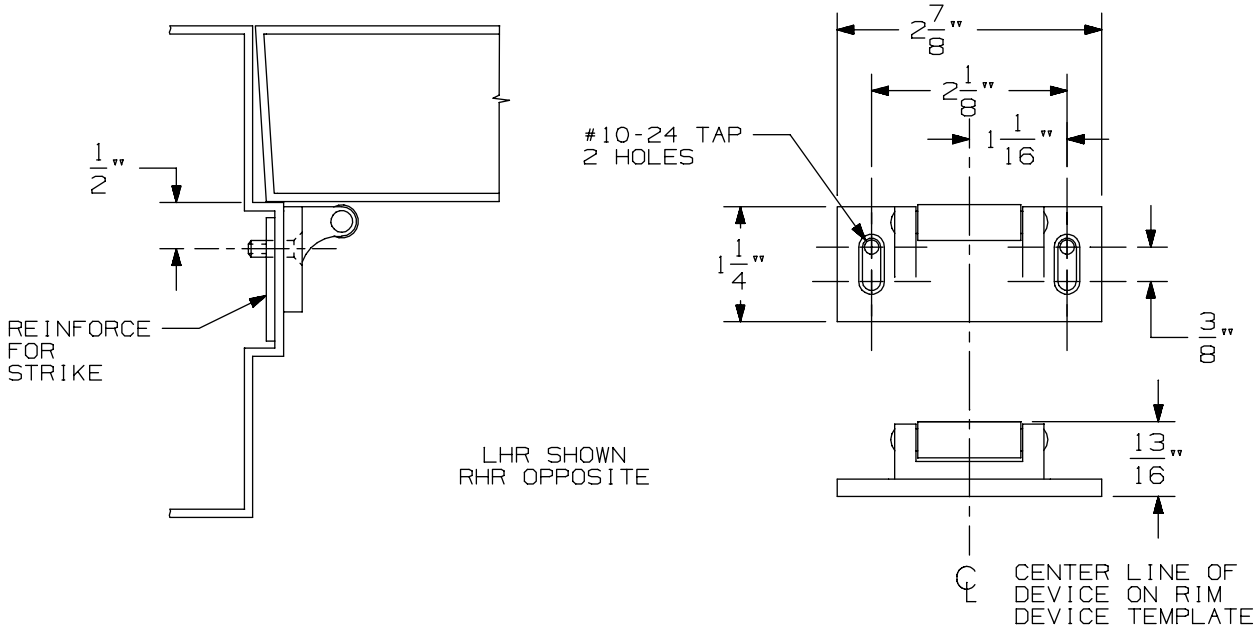

VERTICAL APPLICATION

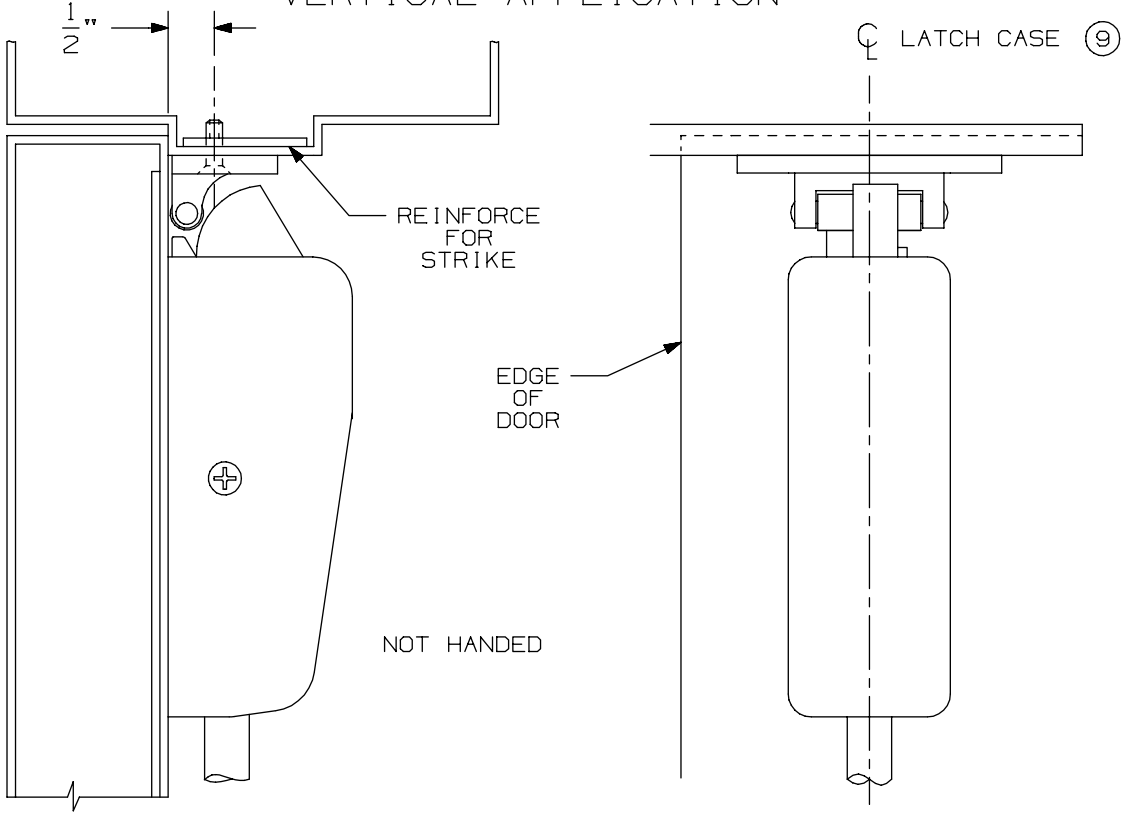

NOTE: LATCH CASE MOUNTING HOLES TO BE PREPARED AT INSTALLATION ON DOOR.

299 & 299F Strike

VON DUPRIN®

NOTES: SEE MASTER SHEET #10001 FOR SUGGESTED REINFORCING

TEMPLATE NUMBER: 30039_a

DATE: 05-23-13

22 Series Trim & Strikes

22 Series Trim & Strikes

-

22 Series Trims

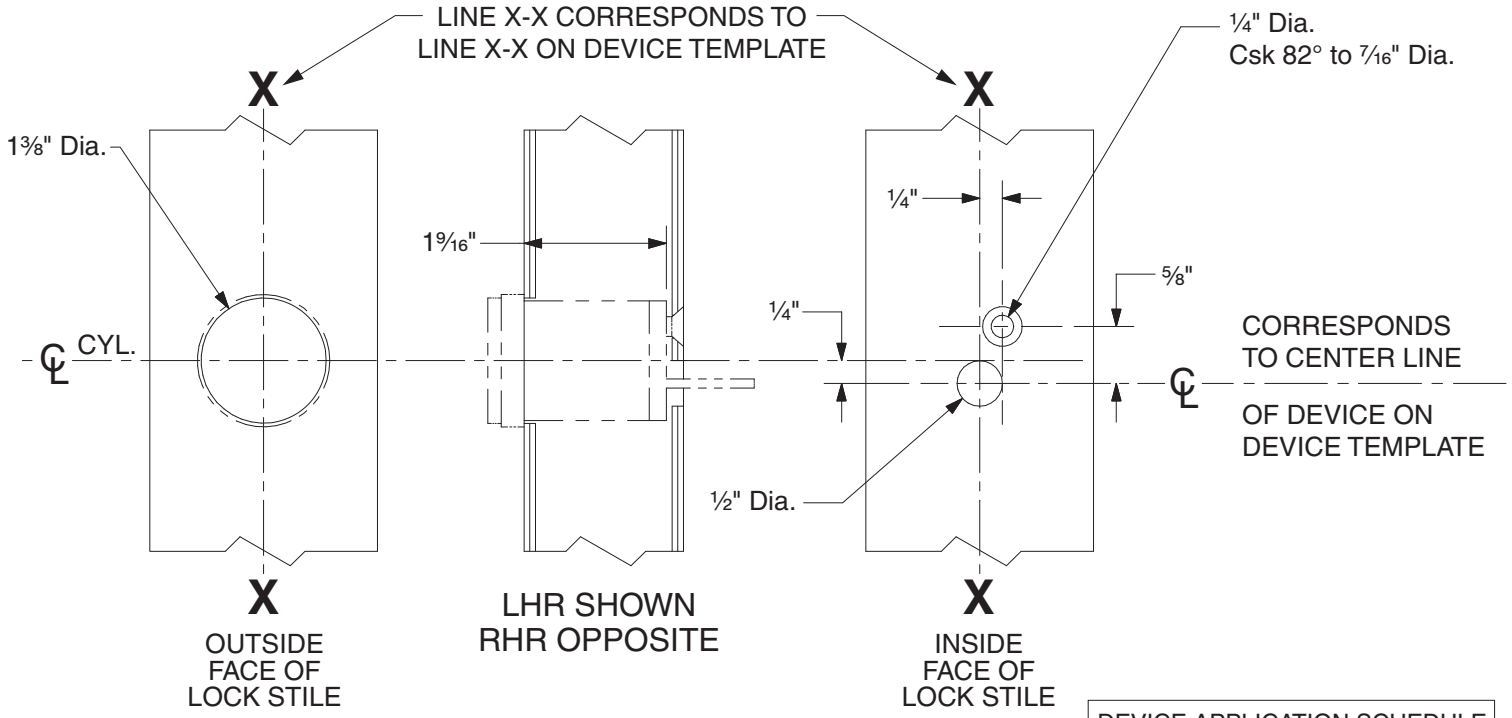

DEVICE APPLICATION SCHEDULE	
98 RIM SERIES	99 RIM SERIES
9827 SERIES	9927 SERIES
9847 SERIES	9947 SERIES
22 RIM SERIES	2227 SERIES

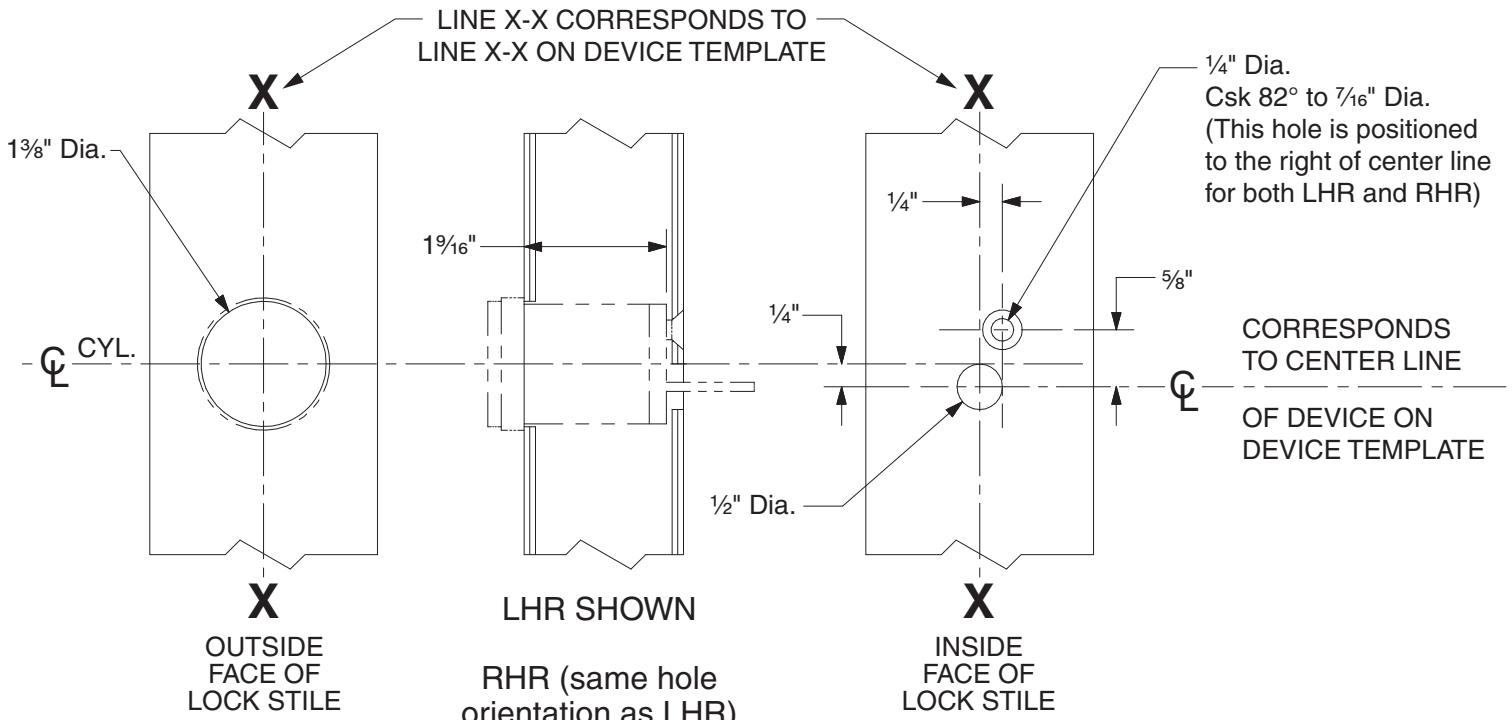

DEVICE APPLICATION SCHEDULE	
9849 SERIES	9949 SERIES

110NL Cylinder Preparation

VON DUPRIN®

NOTES: SEE MASTER SHEET #10001 FOR SUGGESTED REINFORCING

TEMPLATE NUMBER: 40022_c

DATE: 05-28-13

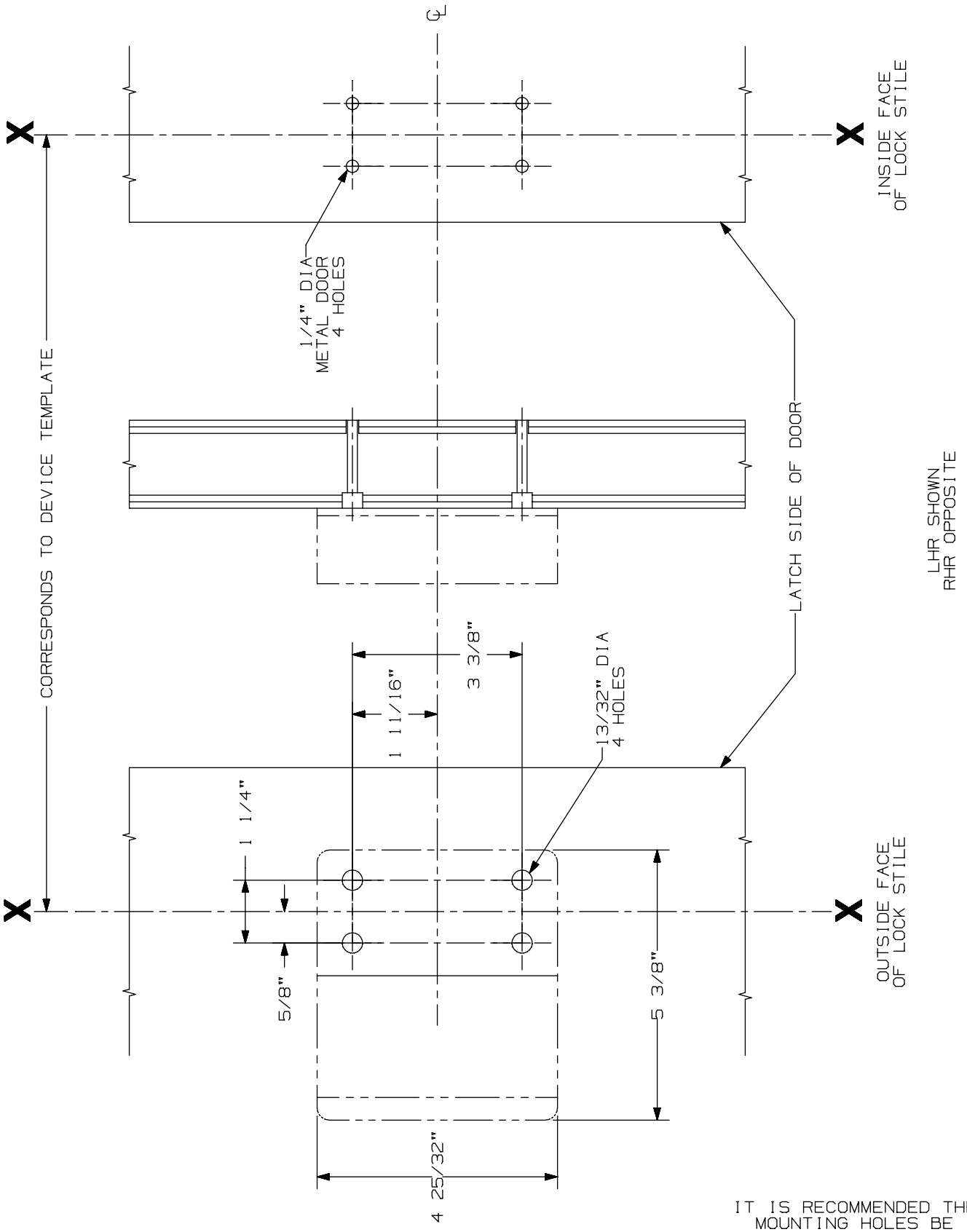

IT IS RECOMMENDED THE MOUNTING HOLES BE PREPARED IN THE FIELD

210 DT Trim

VON DUPRIN®

NOTES: See Master Sheet #10001 For Suggested Reinforcing

TEMPLATE NUMBER: 20015_a

DATE: 05-22-13

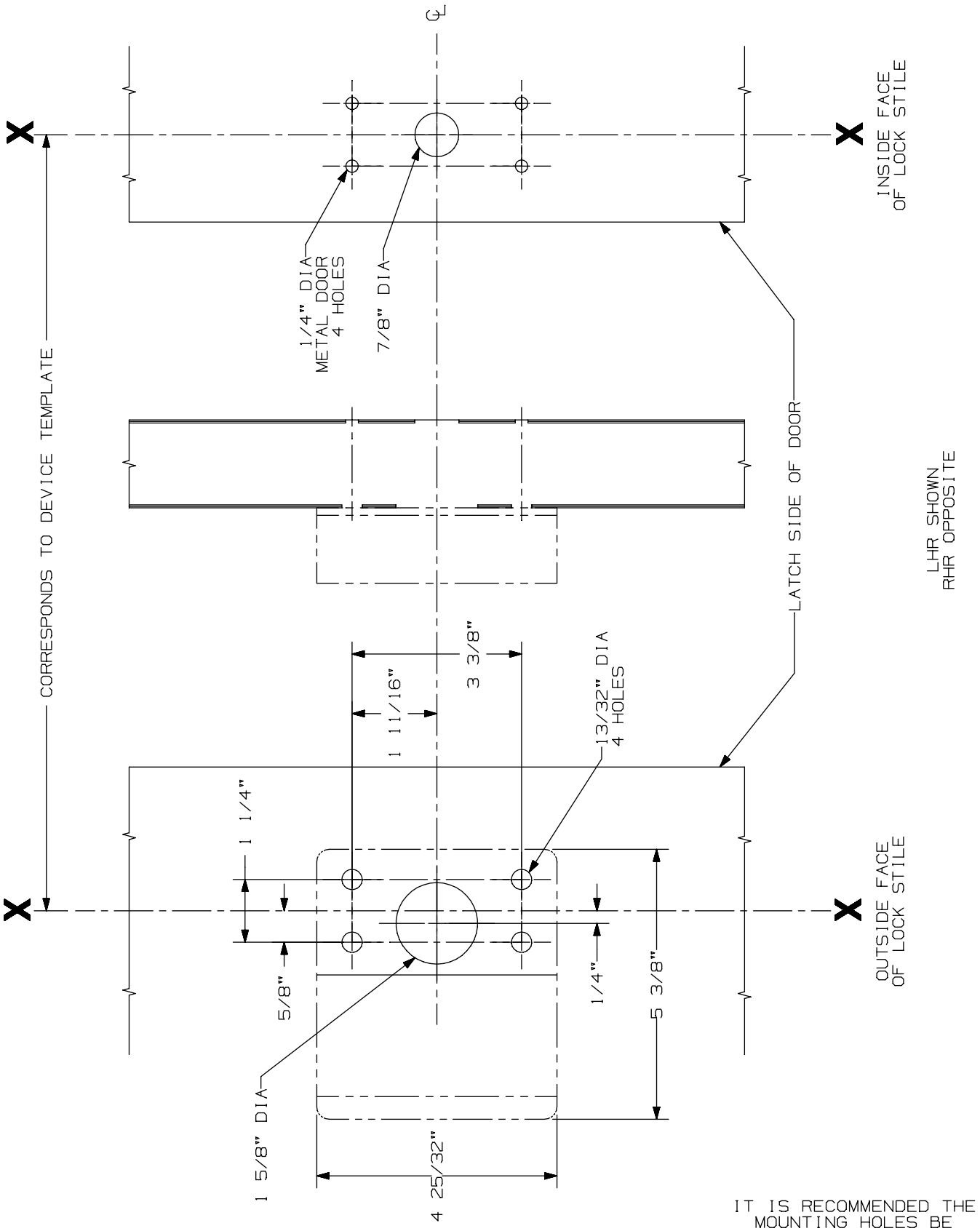

IT IS RECOMMENDED THE MOUNTING HOLES BE PREPARED IN THE FIELD

210 NL Trim

VON DUPRIN®

NOTES: See Master Sheet #10001 For Suggested Reinforcing

TEMPLATE NUMBER: 20016_a

DATE: 05-22-13

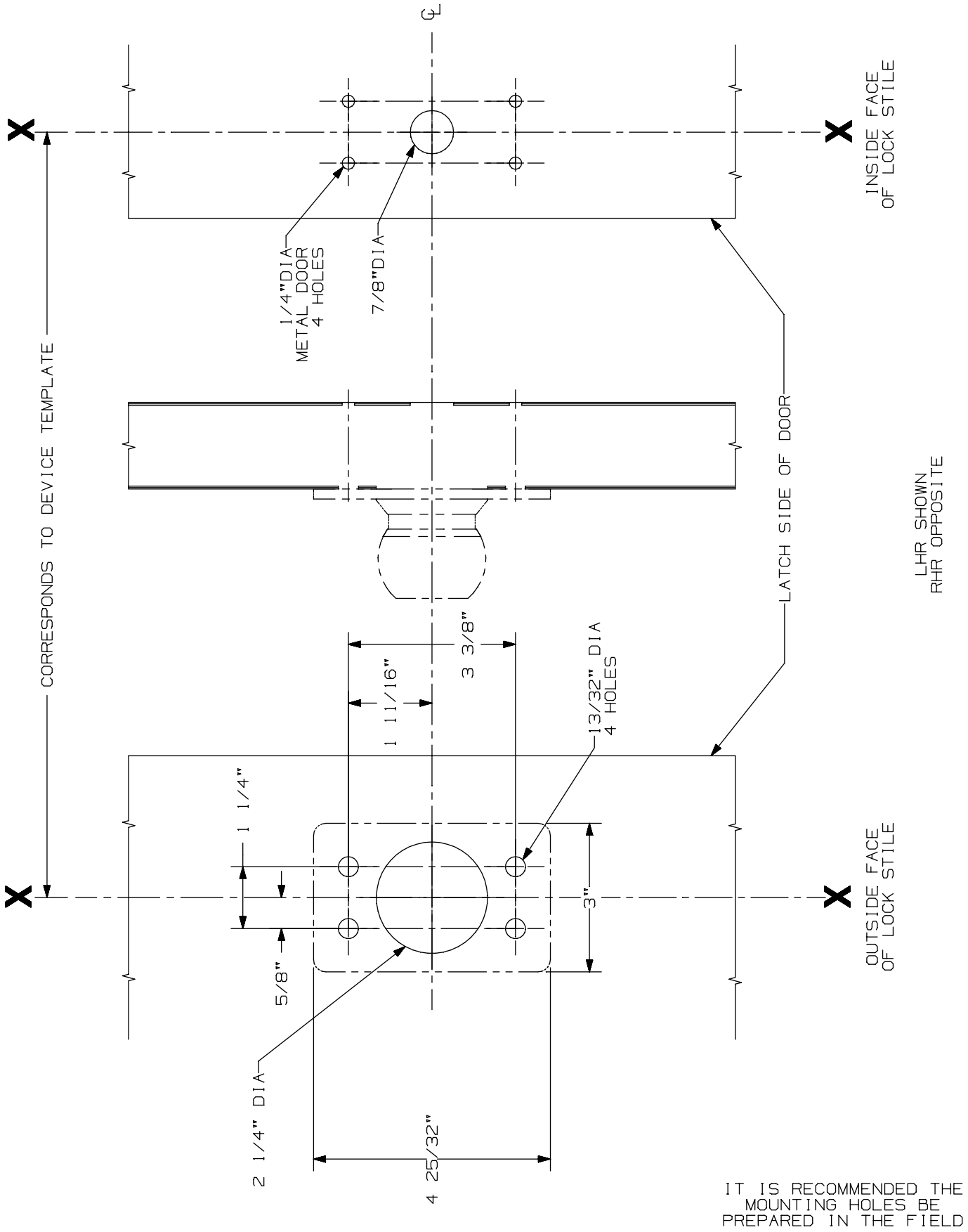

IT IS RECOMMENDED THE MOUNTING HOLES BE PREPARED IN THE FIELD

210 K Series Trim

VON DUPRIN®

NOTES: See Master Sheet #10001 For Suggested Reinforcing

TEMPLATE NUMBER: 20018_a

DATE: 05-22-13

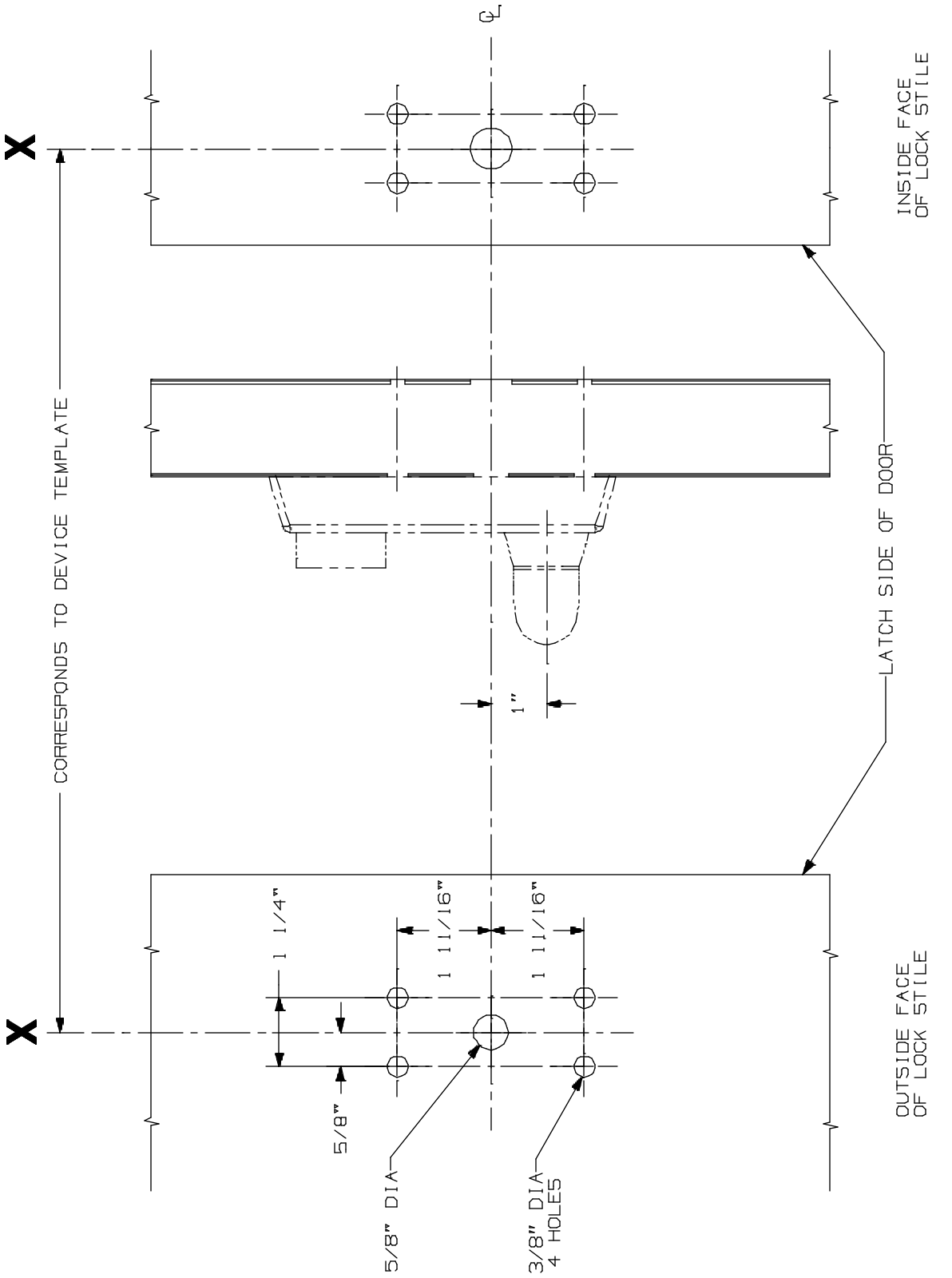

APPLICATIONS
ZZ RIM SERIES
2227 SERIES

230L & 230L-BE Lever Control
Metal Door Application

VON DUPRIN®

NOTES: See Master Sheet #10001 For Suggested Reinforcing

TEMPLATE NUMBER: 20007_a

DATE: 05-22-13

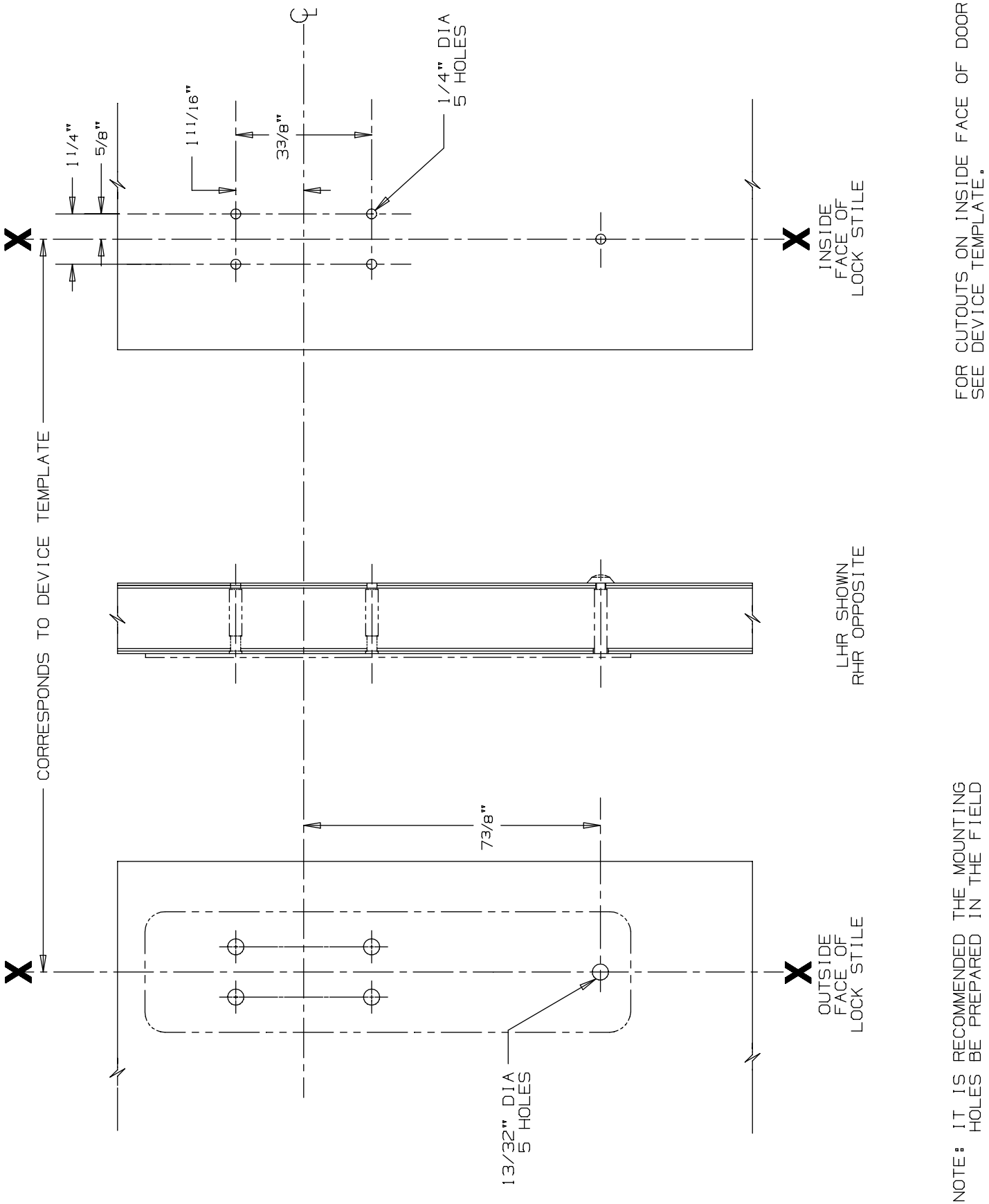

230 EO Trim

VON DUPRIN®

NOTES: SEE MASTER SHEET #10001 FOR SUGGESTED REINFORCING

TEMPLATE NUMBER: 20035_a

DATE: 05-23-13

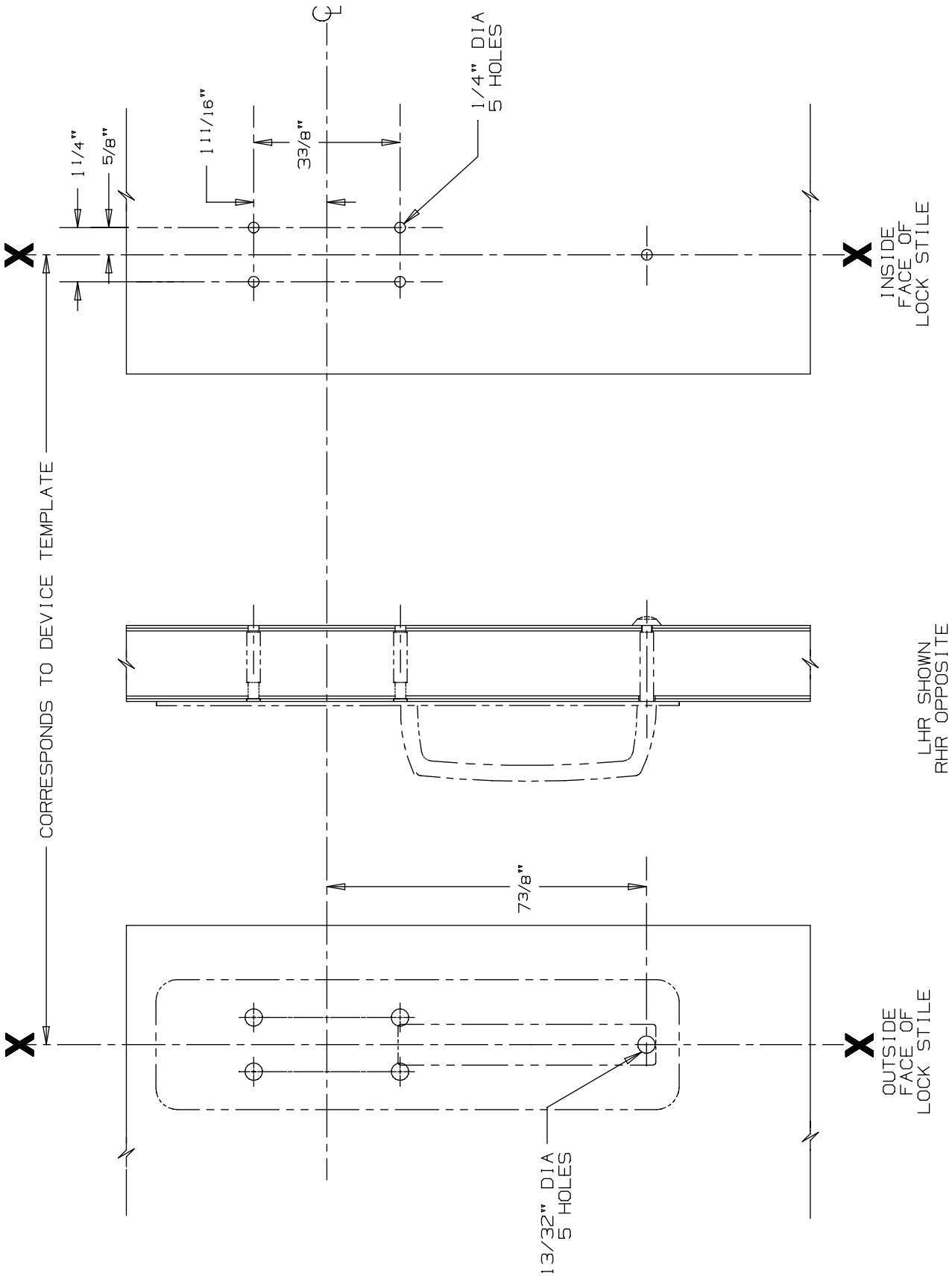

230 DT Trim

VON DUPRIN®

NOTES: SEE MASTER SHEET #10001 FOR SUGGESTED REINFORCING

TEMPLATE NUMBER: 20036_a

DATE: 05-23-13

NOTES: SEE MASTER SHEET #10001 FOR SUGGESTED REINFORCING

230 NL Trim

TEMPLATE NUMBER: 20037_a

DATE: 05-23-13

VON DUPRIN®

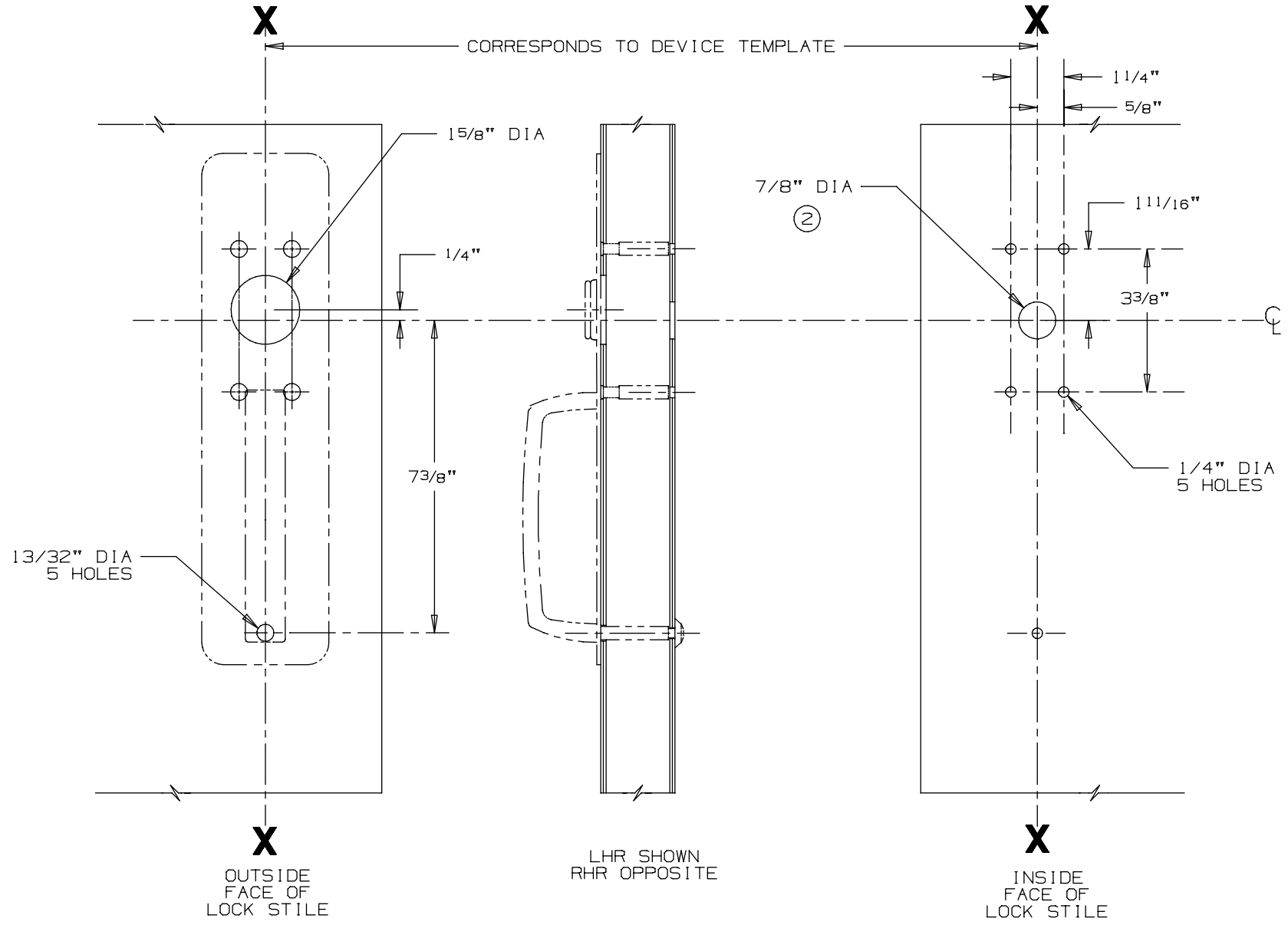

NOTE: IT IS RECOMMENDED THE MOUNTING HOLES BE PREPARED IN THE FIELD

FOR CUTOUTS ON INSIDE FACE OF DOOR SEE DEVICE TEMPLATE.

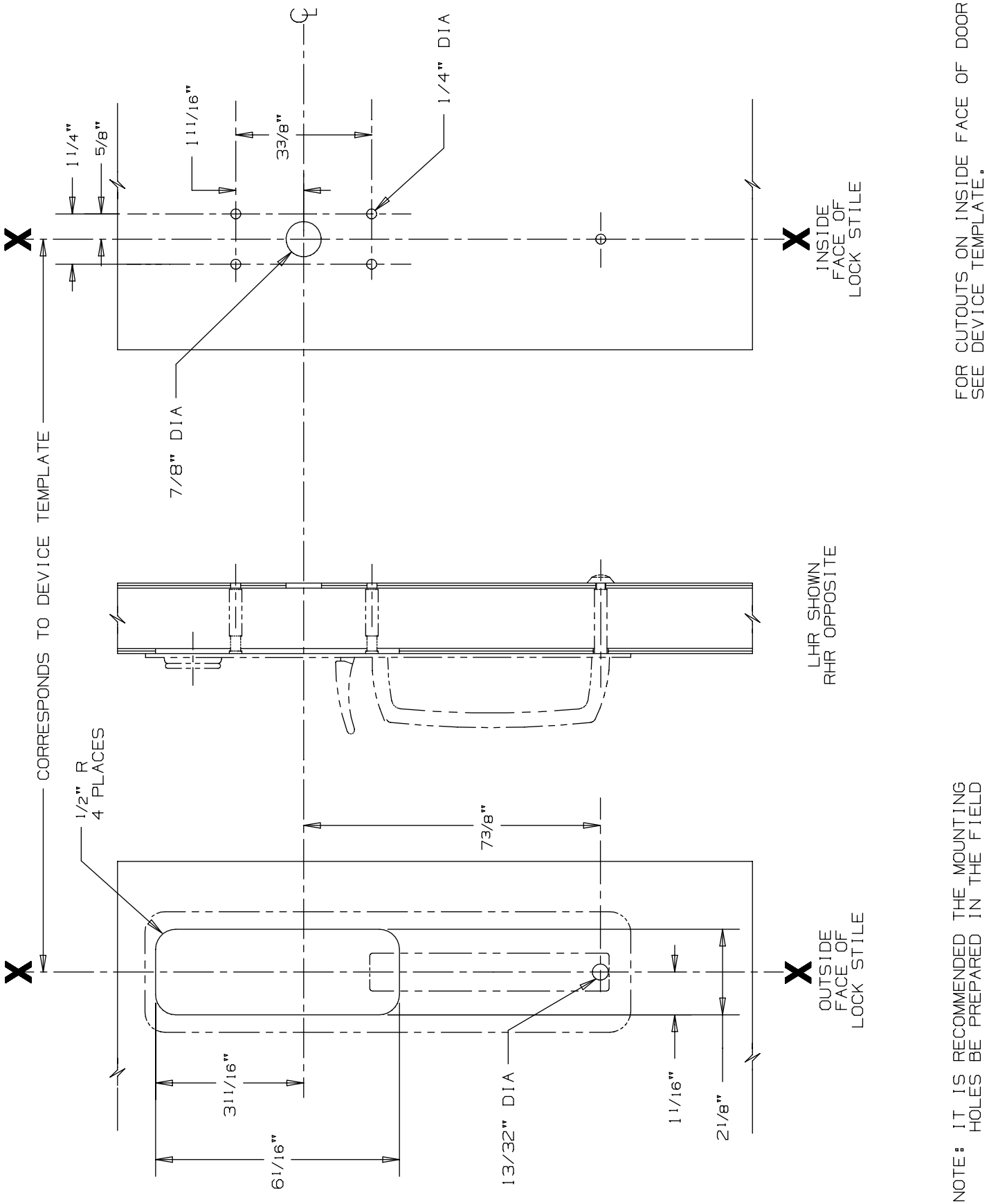

230TP & 230TP-BE Trim

VON DUPRIN®

NOTES: SEE MASTER SHEET #10001 FOR SUGGESTED REINFORCING

TEMPLATE NUMBER: 20038_b

DATE: 07-14-14

22 Series Trim & Strikes

-

22 Series Strikes

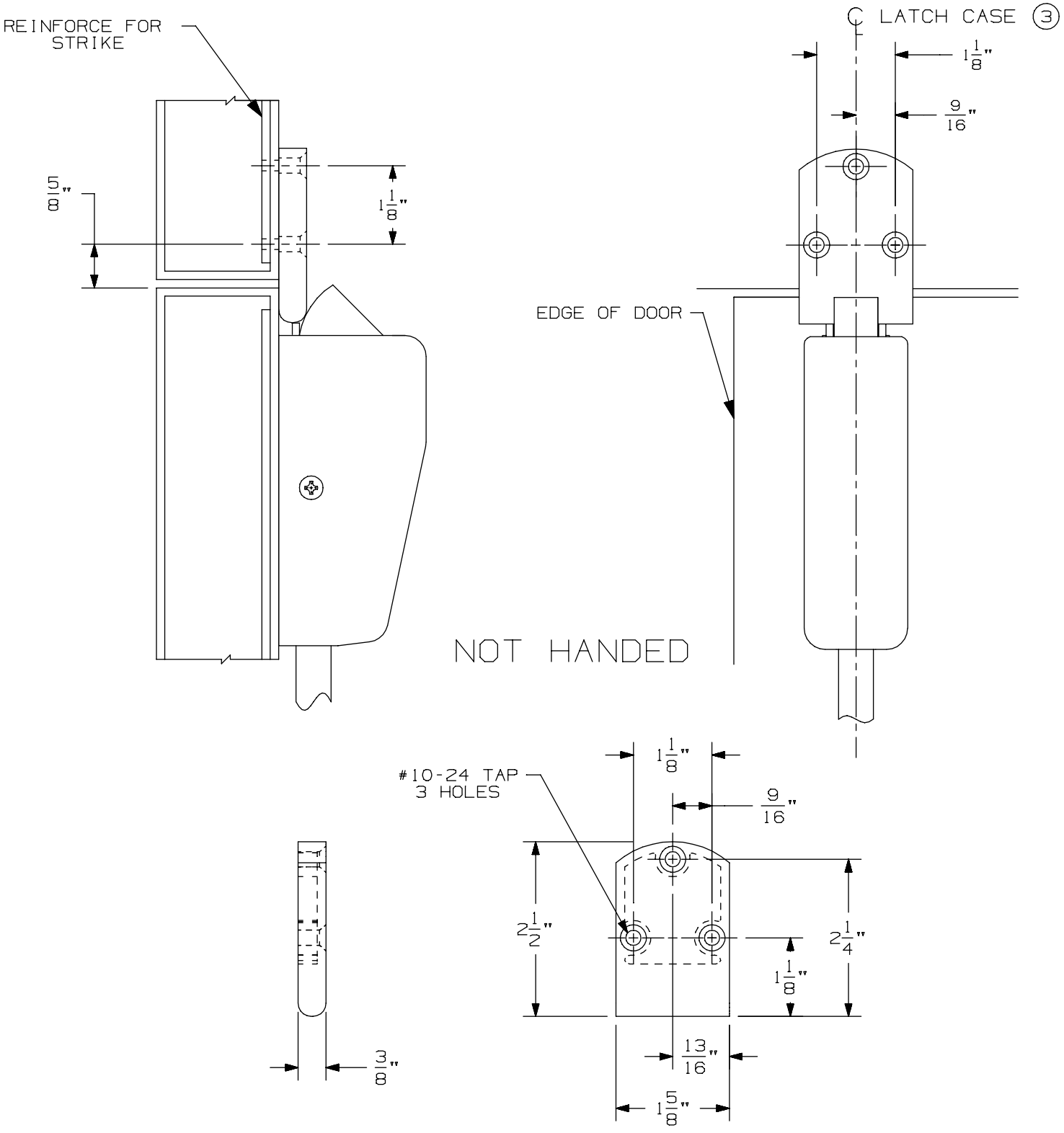

260U Vertical Strike

VON DUPRIN®

NOTES: Latch case mounting holes to be prepared at installation on door

TEMPLATE NUMBER: 30007_a

DATE: 05-23-13

RIM APPLICATION

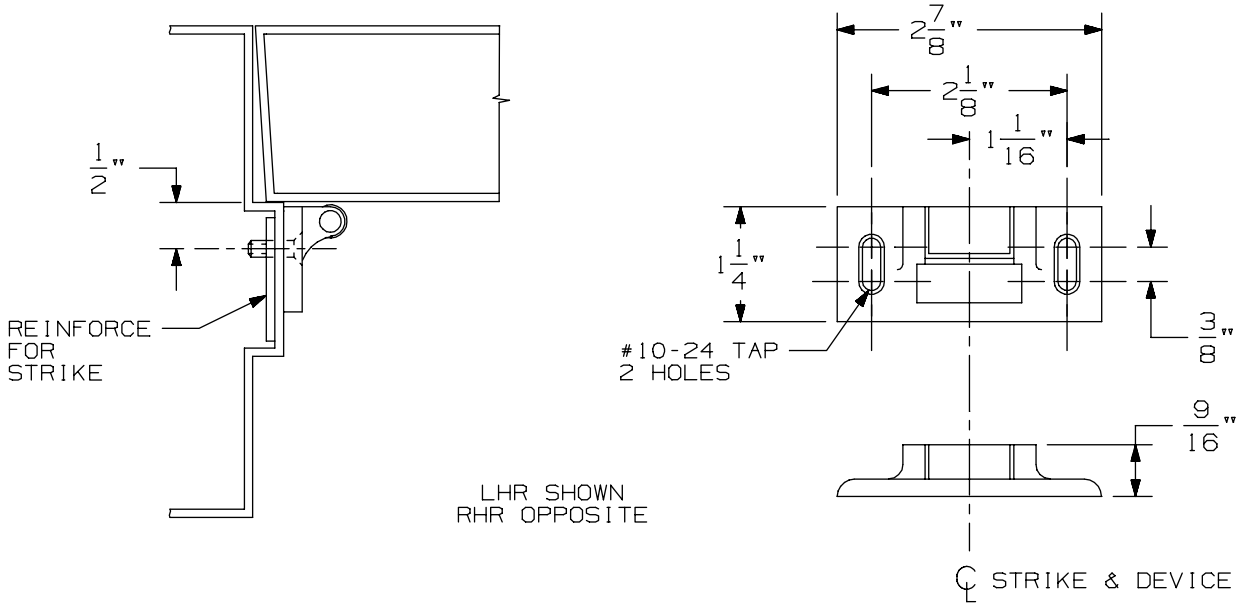

VERTICAL APPLICATION

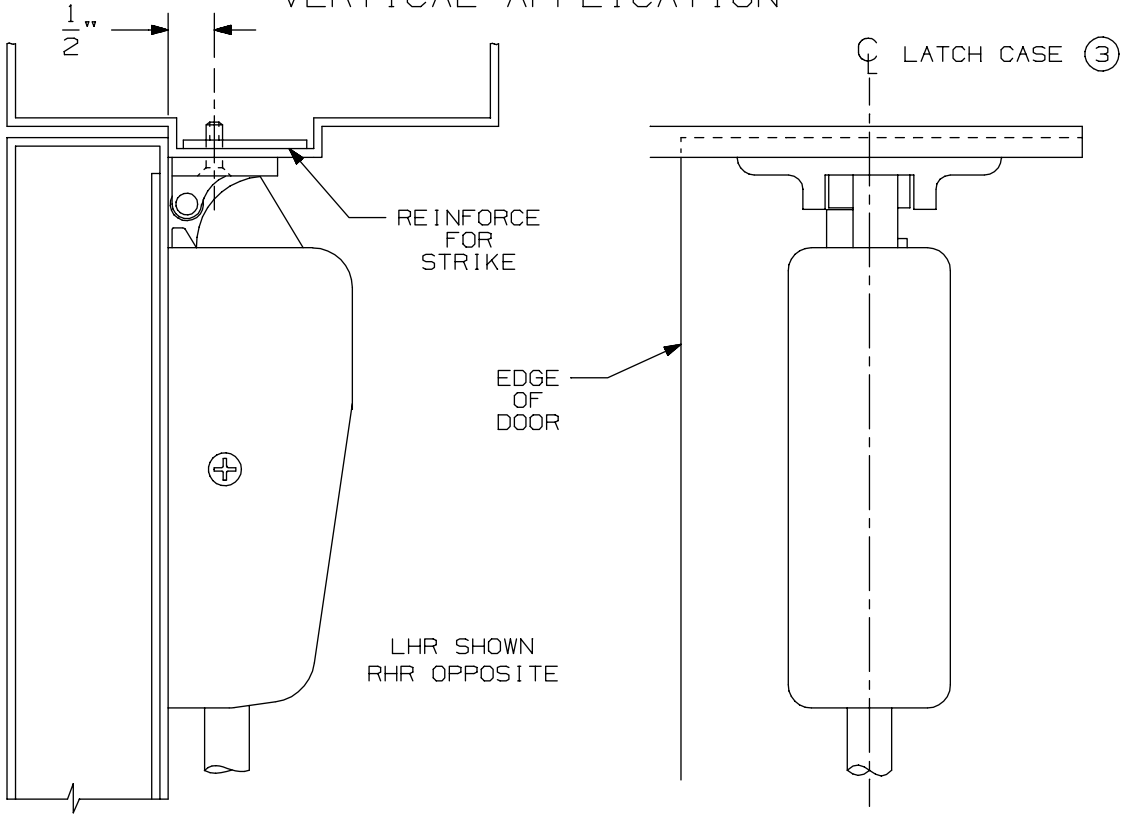

NOTE: LATCH CASE MOUNTING HOLES TO BE PREPARED AT INSTALLATION ON DOOR.

264 Strike

VON DUPRIN®

NOTES: SEE MASTER SHEET #10001 FOR SUGGESTED REINFORCING

TEMPLATE NUMBER: 30009_a

DATE: 05-23-13

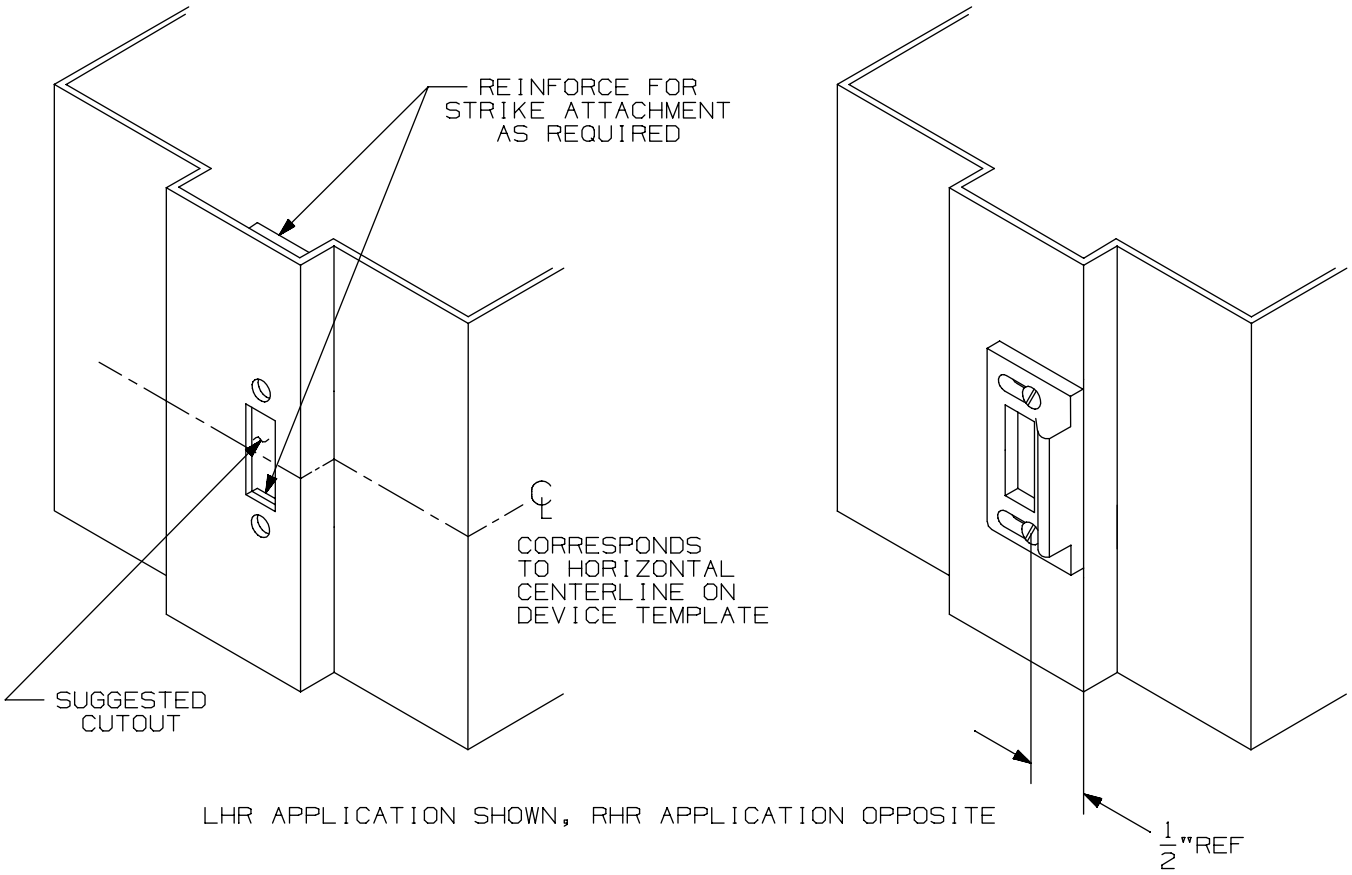

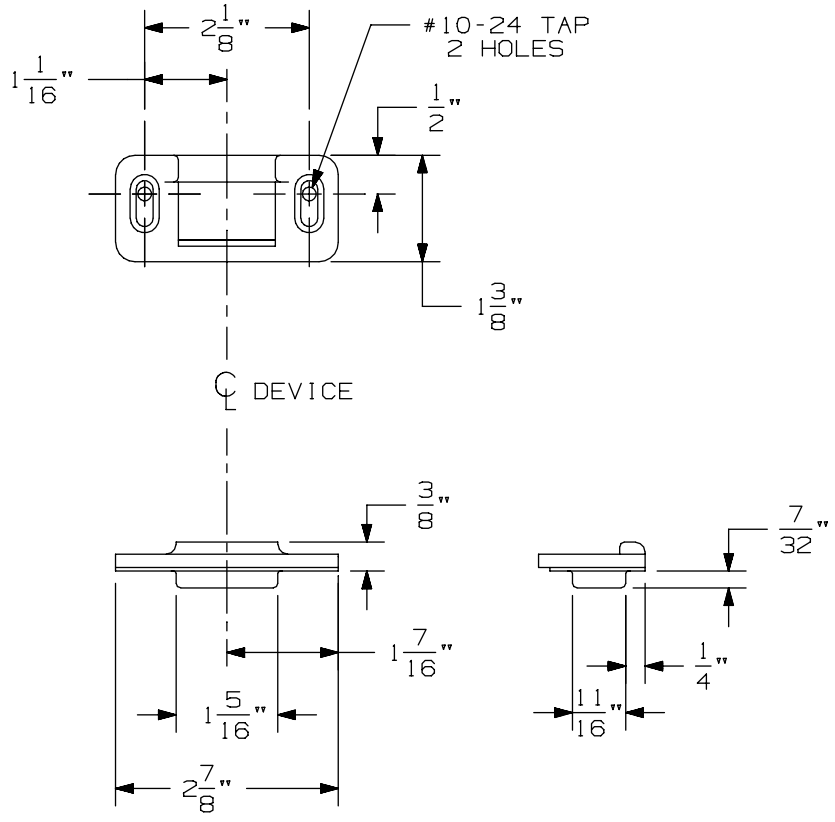

1606 Half Mortise Strike

VON DUPRIN®

NOTES: SEE MASTER SHEET #10001 FOR SUGGESTED REINFORCING

TEMPLATE NUMBER: 30024_a

DATE: 05-23-13

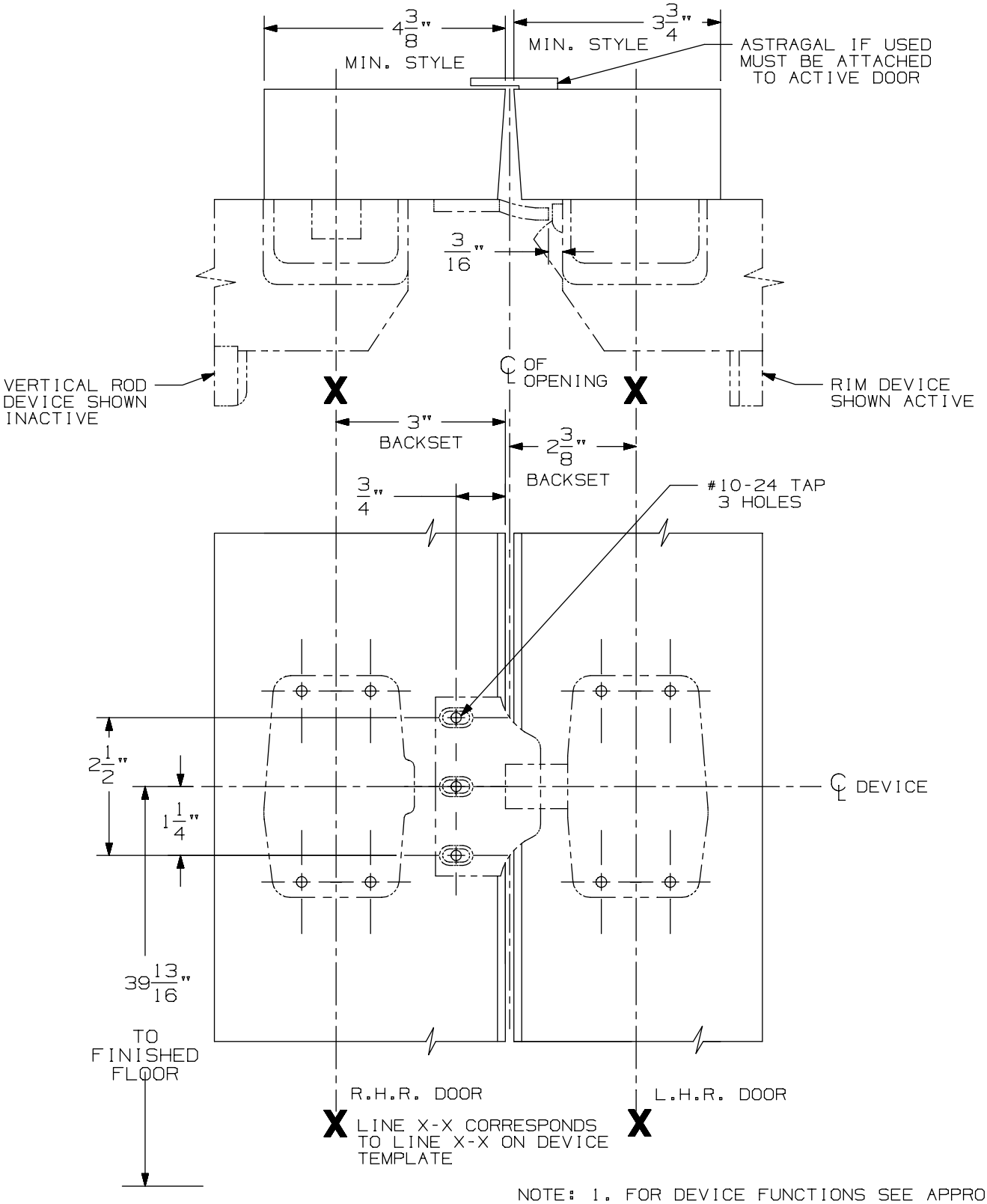

NOTE: 1. FOR DEVICE FUNCTIONS SEE APPROPRIATE DEVICE TEMPLATES.

2. SEE DEVICE TEMPLATE FOR MOUNTING HOLE LOCATIONS.

3. A COORDINATOR MUST BE USED ON THE INACTIVE DOOR.

1609 Strike Application for 2227 Vertical Rod & 22 Rim Devices (Panic Device Only)

VON DUPRIN®

NOTES: SEE MASTER SHEET #10001 FOR SUGGESTED REINFORCING

TEMPLATE NUMBER: 30244_a

DATE: 05-28-13

RIM APPLICATION

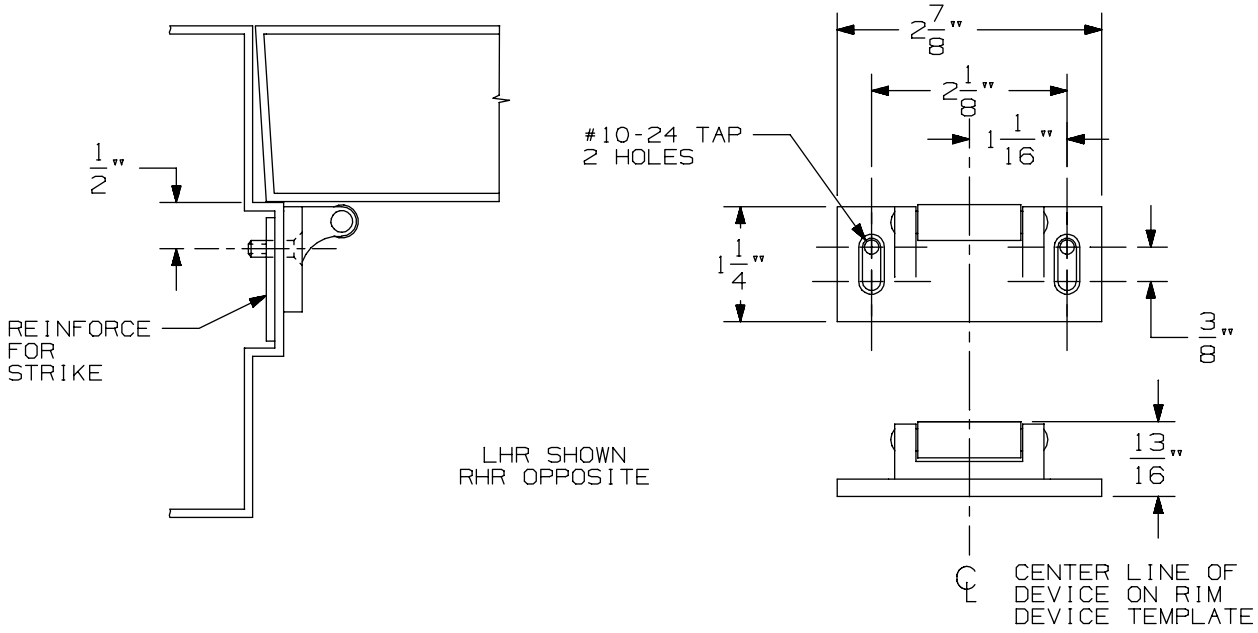

VERTICAL APPLICATION

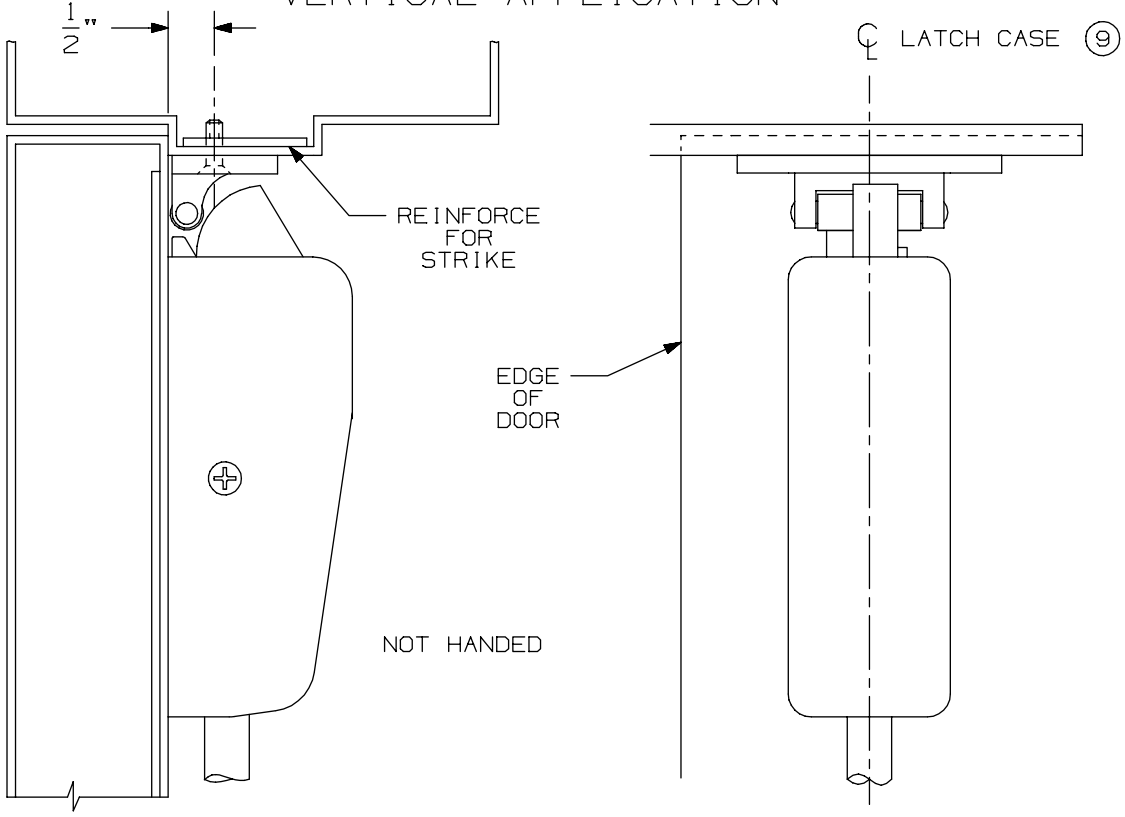

NOTE: LATCH CASE MOUNTING HOLES TO BE PREPARED AT INSTALLATION ON DOOR.

299 & 299F Strike

VON DUPRIN®

NOTES: SEE MASTER SHEET #10001 FOR SUGGESTED REINFORCING

TEMPLATE NUMBER: 30039_a

DATE: 05-23-13

RIM APPLICATION

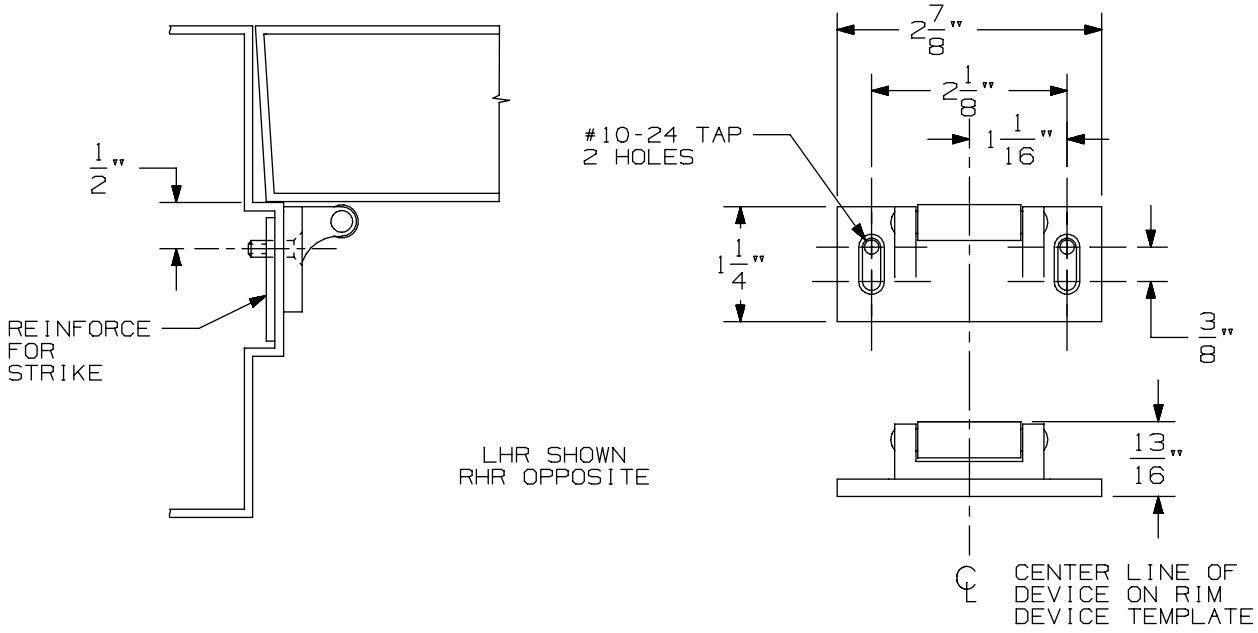

VERTICAL APPLICATION

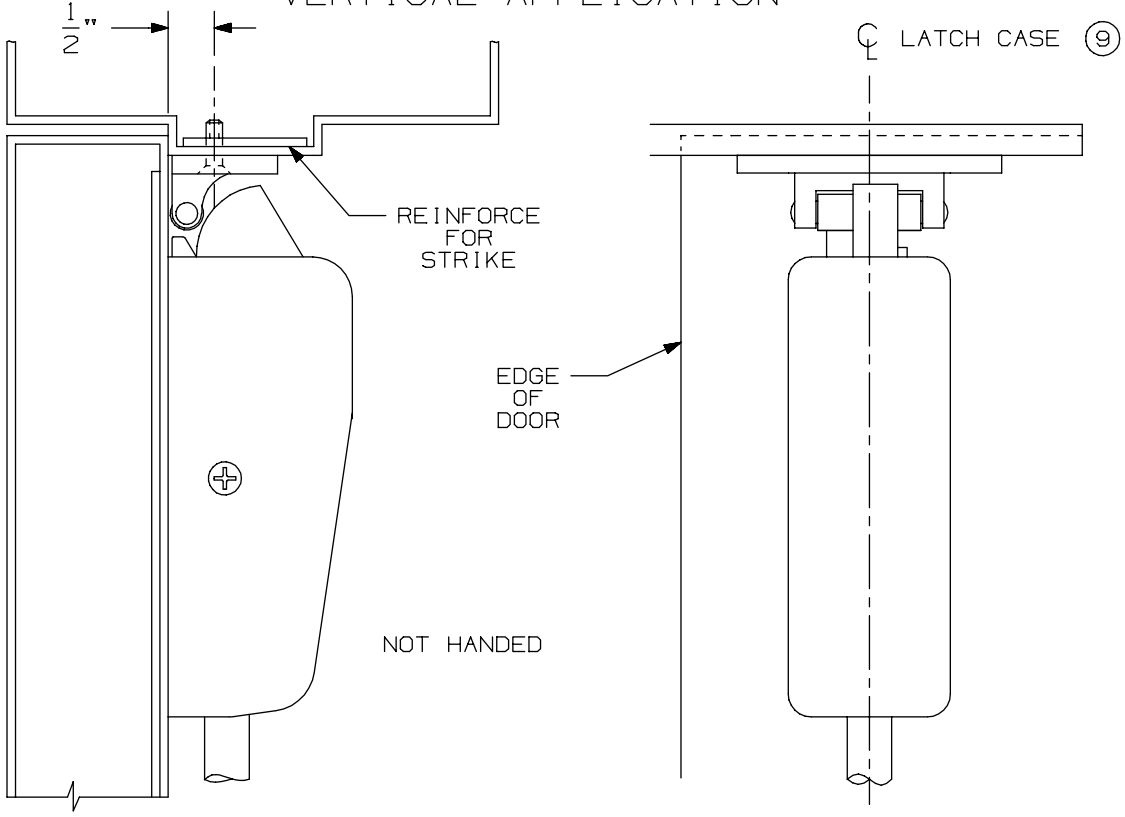

NOTE: LATCH CASE MOUNTING HOLES TO BE PREPARED AT INSTALLATION ON DOOR.

299 & 299F Strike

VON DUPRIN®

NOTES: SEE MASTER SHEET #10001 FOR SUGGESTED REINFORCING

TEMPLATE NUMBER: 30039_a

DATE: 05-23-13

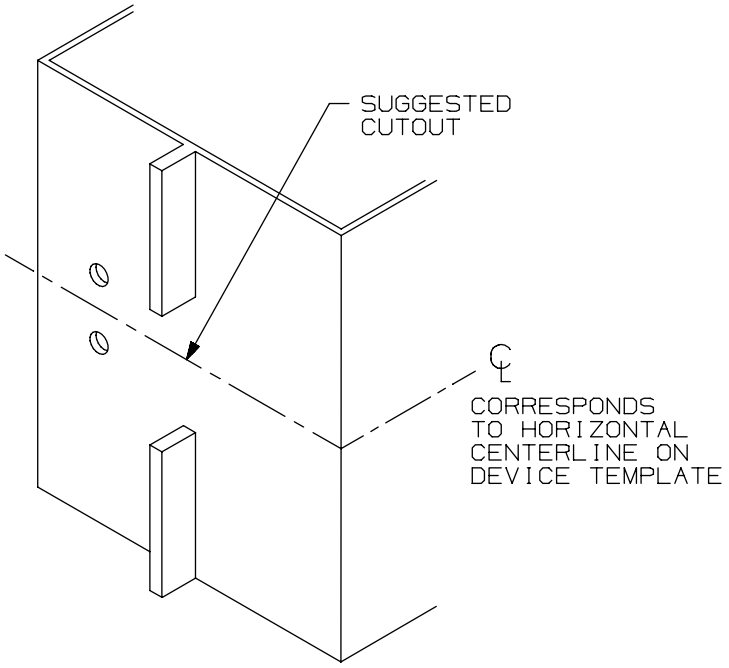

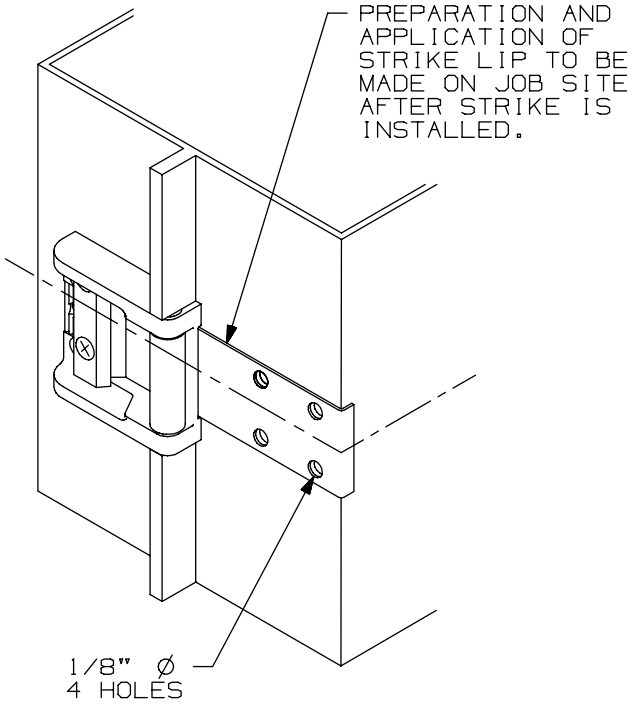

SINGLE DOOR INSTALLATION			
DEVICE	DIM "B"	DIM "C"	RECOMMENDED MIN STILE* (1)
33A/35A RIM	19/32"	1 9/16"	2"
44 RIM EO,DT,NL,TP	1 11/16"	1 9/16"	3 3/8"
44 RIM K	1 9/16"	1 9/16"	3 3/8"
55 RIM	17/32"	1 9/16"	1 3/4"
22 RIM	1 9/16"	1 9/16"	3 13/16"
88 RIM EO,DT,NL,TP	1 11/16"	1 9/16"	3 3/8"
44 RIM K,L	1 9/16"	1 9/16"	3 3/8"
98/99 RIM	1 9/16"	1 9/16"	3 13/16"

* CONSULT FACTORY FOR STILE WIDTHS LESS THAN
(1) MIN. RECOMMENDED TO ENSURE PROPER APPLICATION

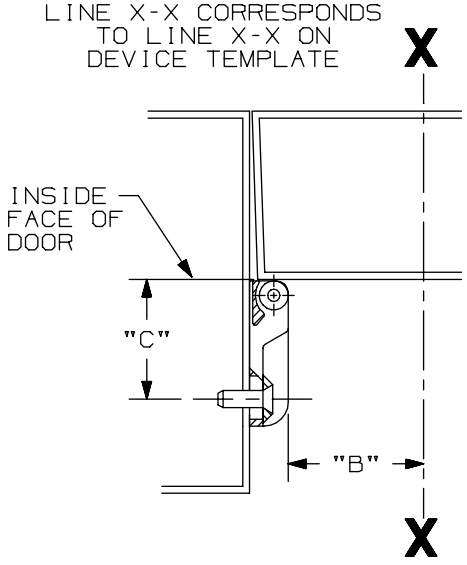

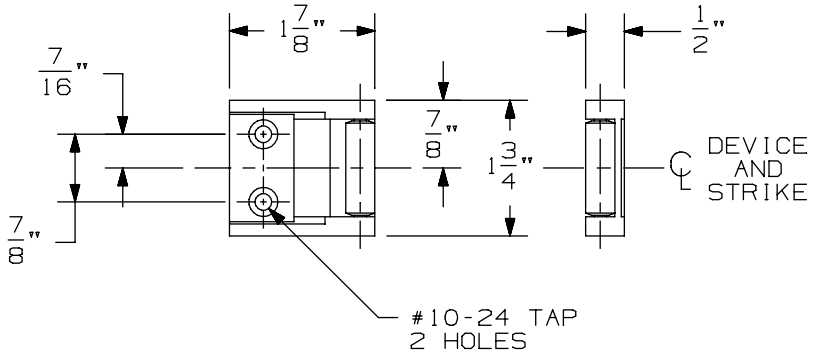

LHR APPLICATION SHOWN, RHR APPLICATION OPPOSITE

1439 Roller Strike

VON DUPRIN®

NOTES: SEE MASTER SHEET #10001 FOR SUGGESTED REINFORCING

TEMPLATE NUMBER: 30029_a

DATE: 05-23-13

22 Series for 161 Stock Hollow Metal Doors

22 Series for 161 Stock Hollow Metal Doors

-

22 Rim

TYPE 161 STOCK HOLLOW METAL DOOR

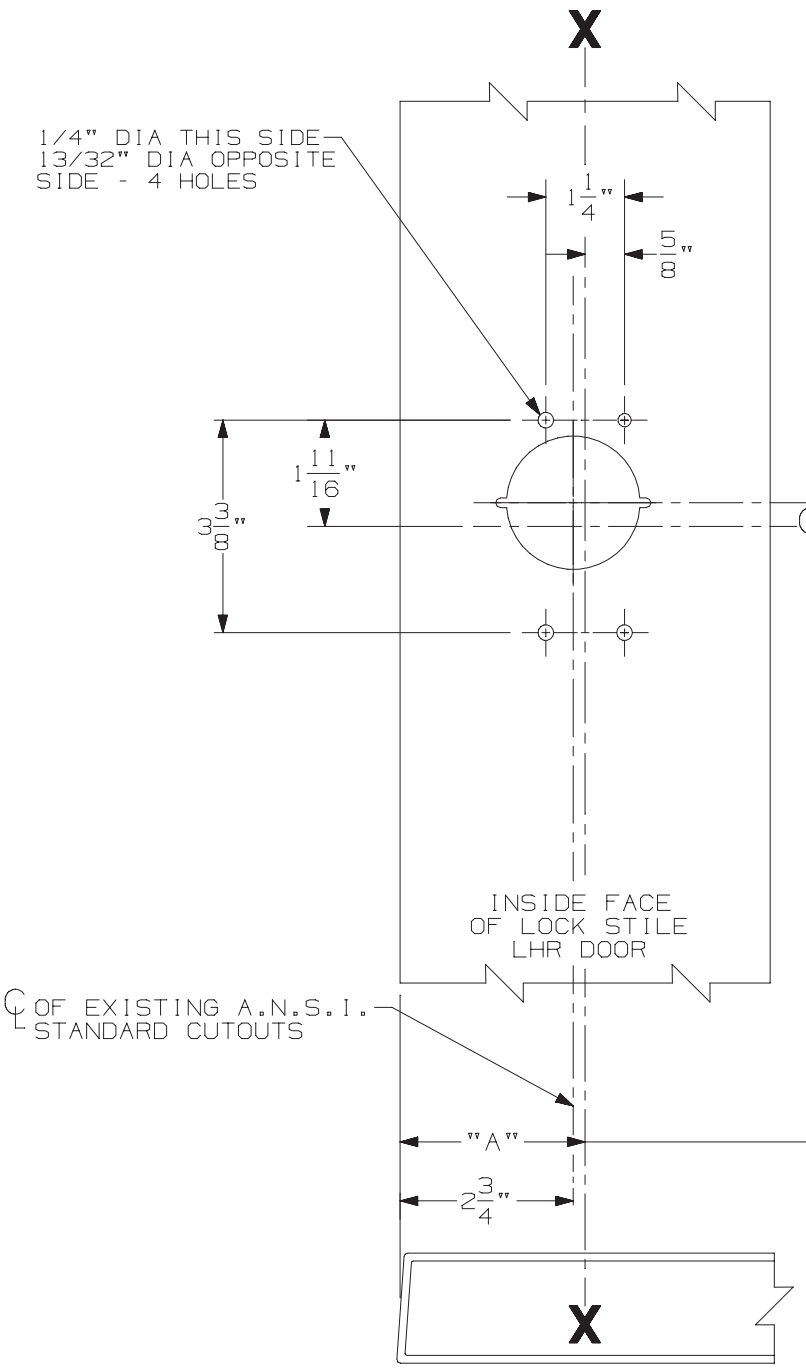

A.N.S.I. CUTOUTS ARE SHOWN FOR REFERENCE ONLY. SEE A.N.S.I. SPECIFICATION NO. A115 FOR THE SIZE AND LOCATION OF THESE CUTOUTS.

LHR APPLICATION SHOWN
RHR APPLICATION OPPOSITE

SINGLE DOOR OPENING
39 13/16" TO FINISHED FLOOR

DOUBLE DOOR OPENING
WITH VON DUPRIN MULLION
39 11/16" (2)

SINGLE DOOR APPLICATION		
STRIKE	STOP SIZE	DIM. "A"
299	5/8"	2 7/8"
299	1/2"	2 3/4"

DOUBLE DOOR APPLICATION WITH VON DUPRIN MULLIONS		
MULLION	STRIKE	DIM. "A"
5654	299	2 13/16"
1654	1606	2 13/16"

FOR ADDITIONAL INFORMATION
SEE TEMPLATE NO. 10011 AND 10012

FOR OUTSIDE TRIM PREPARATION, WHEN REQUIRED,
SEE ADDITIONAL TRIM TEMPLATE.

22EO, DT, & NL Rim Devices w/ 220 Trim for Type "161" Stock Hollow Metal Applications

VON DUPRIN®

NOTES: SEE MASTER SHEET #10001 FOR SUGGESTED REINFORCING

TEMPLATE NUMBER: 10038_a

DATE: 05-15-13

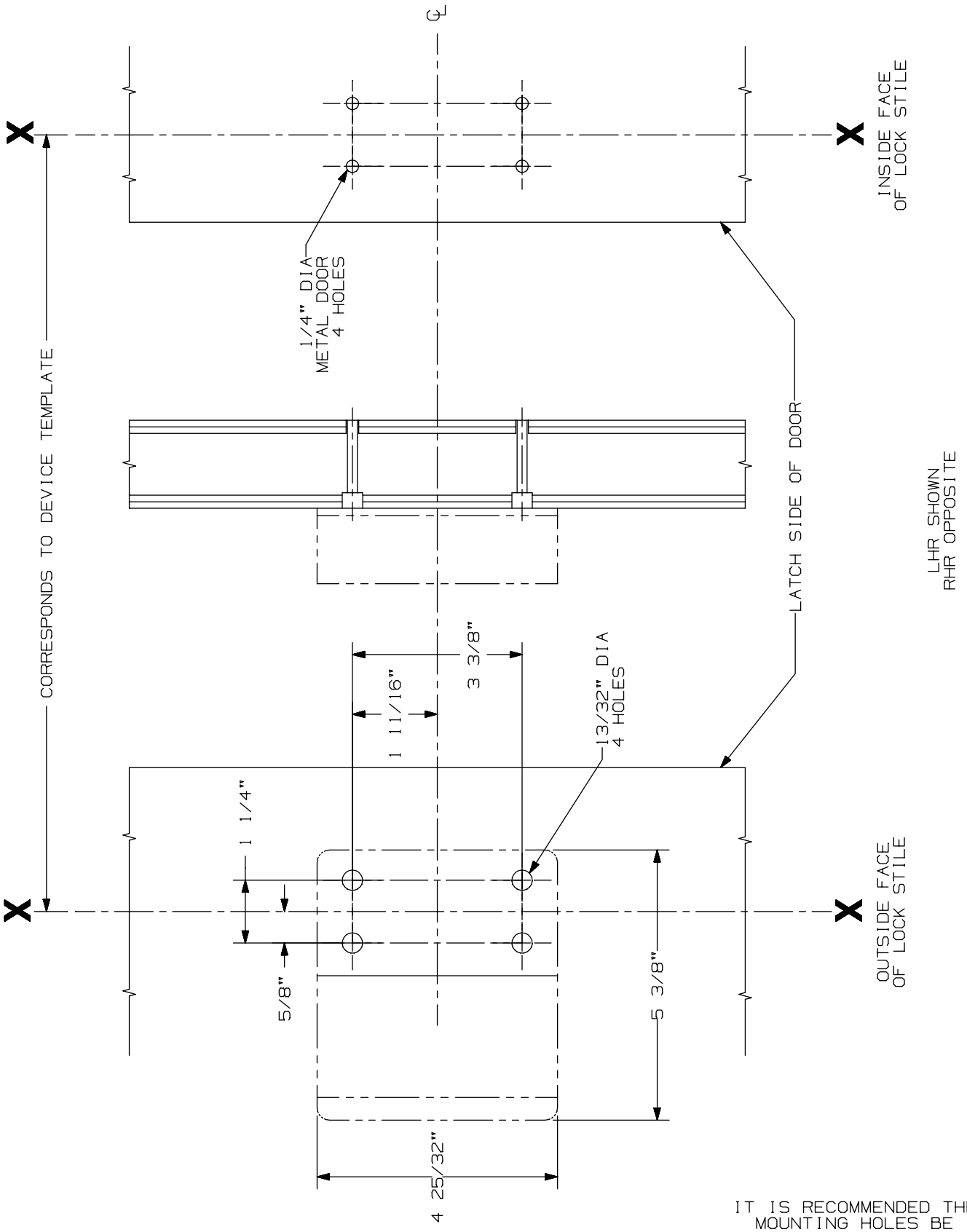

IT IS RECOMMENDED THE MOUNTING HOLES BE PREPARED IN THE FIELD

210 DT Trim

VON DUPRIN®

NOTES: See Master Sheet #10001 For Suggested Reinforcing

TEMPLATE NUMBER: 20015_a

DATE: 05-22-13

RIM APPLICATION

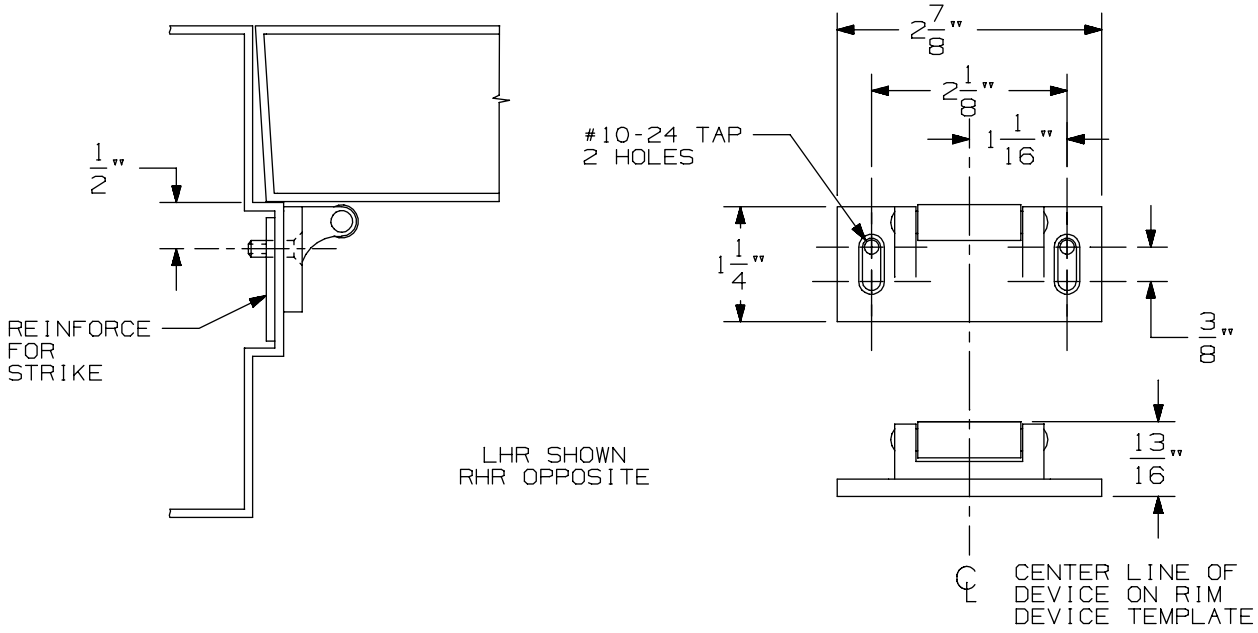

VERTICAL APPLICATION

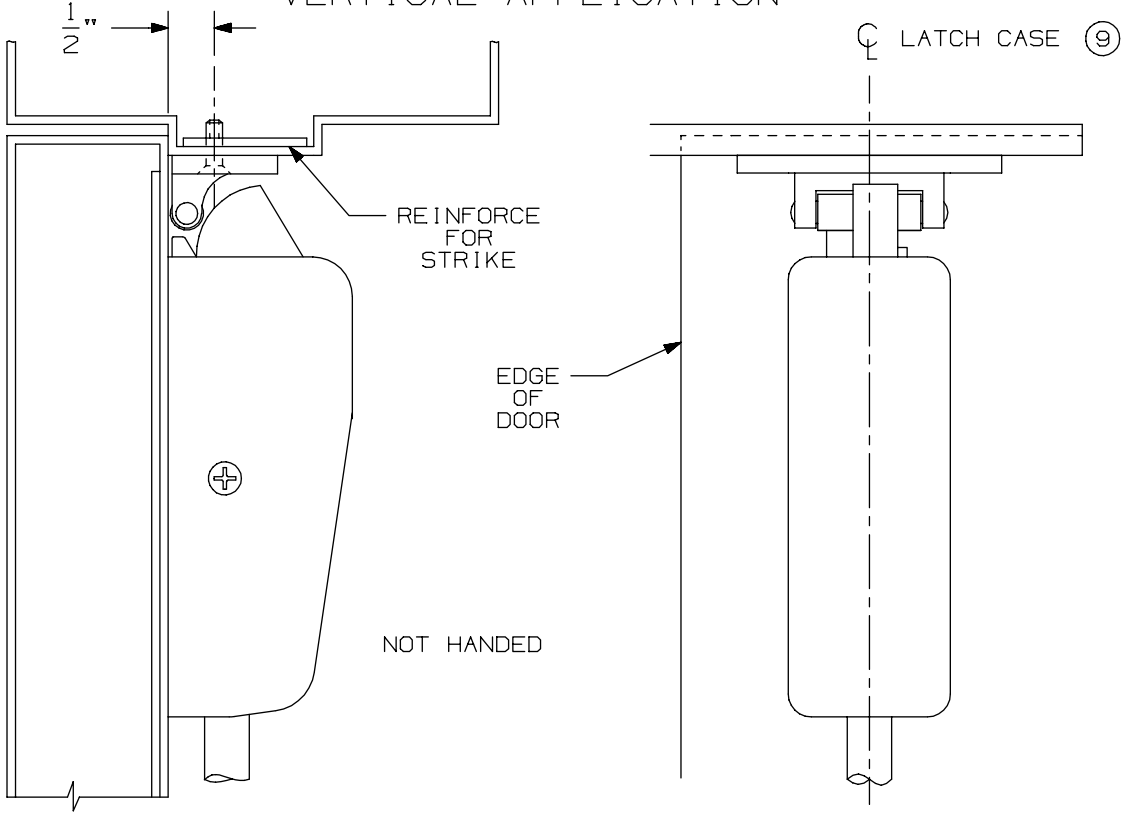

NOTE: LATCH CASE MOUNTING HOLES TO BE PREPARED AT INSTALLATION ON DOOR.

299 & 299F Strike

VON DUPRIN®

NOTES: SEE MASTER SHEET #10001 FOR SUGGESTED REINFORCING

TEMPLATE NUMBER: 30039_a

DATE: 05-23-13

TYPE 161 STOCK HOLLOW METAL DOOR

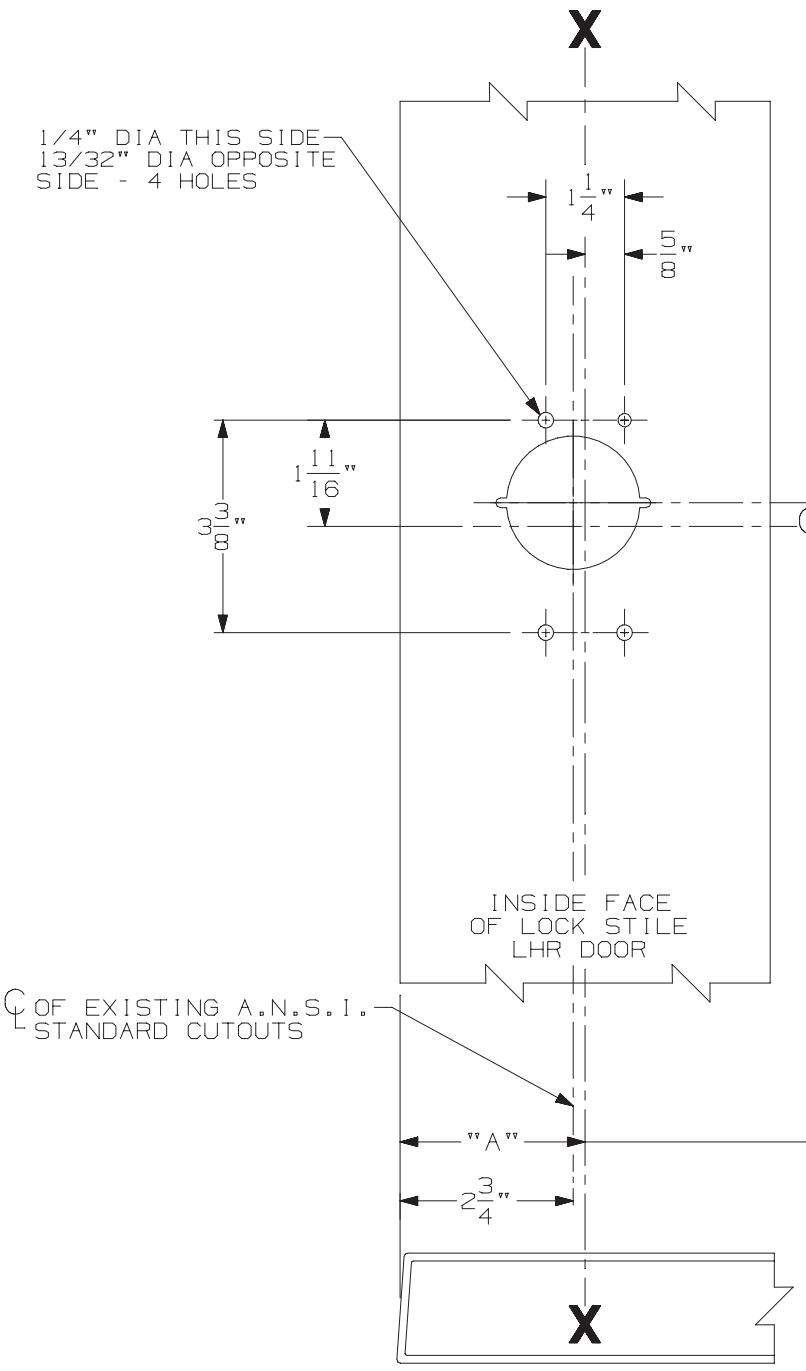

A.N.S.I. CUTOUTS ARE SHOWN FOR REFERENCE ONLY. SEE A.N.S.I. SPECIFICATION NO. A115 FOR THE SIZE AND LOCATION OF THESE CUTOUTS.

LHR APPLICATION SHOWN
RHR APPLICATION OPPOSITE

SINGLE DOOR OPENING
39 13/16" TO FINISHED FLOOR

DOUBLE DOOR OPENING
WITH VON DUPRIN MULLION
39 11/16" (2)

SINGLE DOOR APPLICATION		
STRIKE	STOP SIZE	DIM. "A"
299	5/8"	2 7/8"
299	1/2"	2 3/4"

DOUBLE DOOR APPLICATION WITH VON DUPRIN MULLIONS		
MULLION	STRIKE	DIM. "A"
5654	299	2 13/16"
1654	1606	2 13/16"

FOR ADDITIONAL INFORMATION
SEE TEMPLATE NO. 10011 AND 10012

FOR OUTSIDE TRIM PREPARATION, WHEN REQUIRED,
SEE ADDITIONAL TRIM TEMPLATE.

22EO, DT, & NL Rim Devices w/ 220 Trim for Type "161" Stock Hollow Metal Applications

VON DUPRIN®

NOTES: SEE MASTER SHEET #10001 FOR SUGGESTED REINFORCING

TEMPLATE NUMBER: 10038_a

DATE: 05-15-13

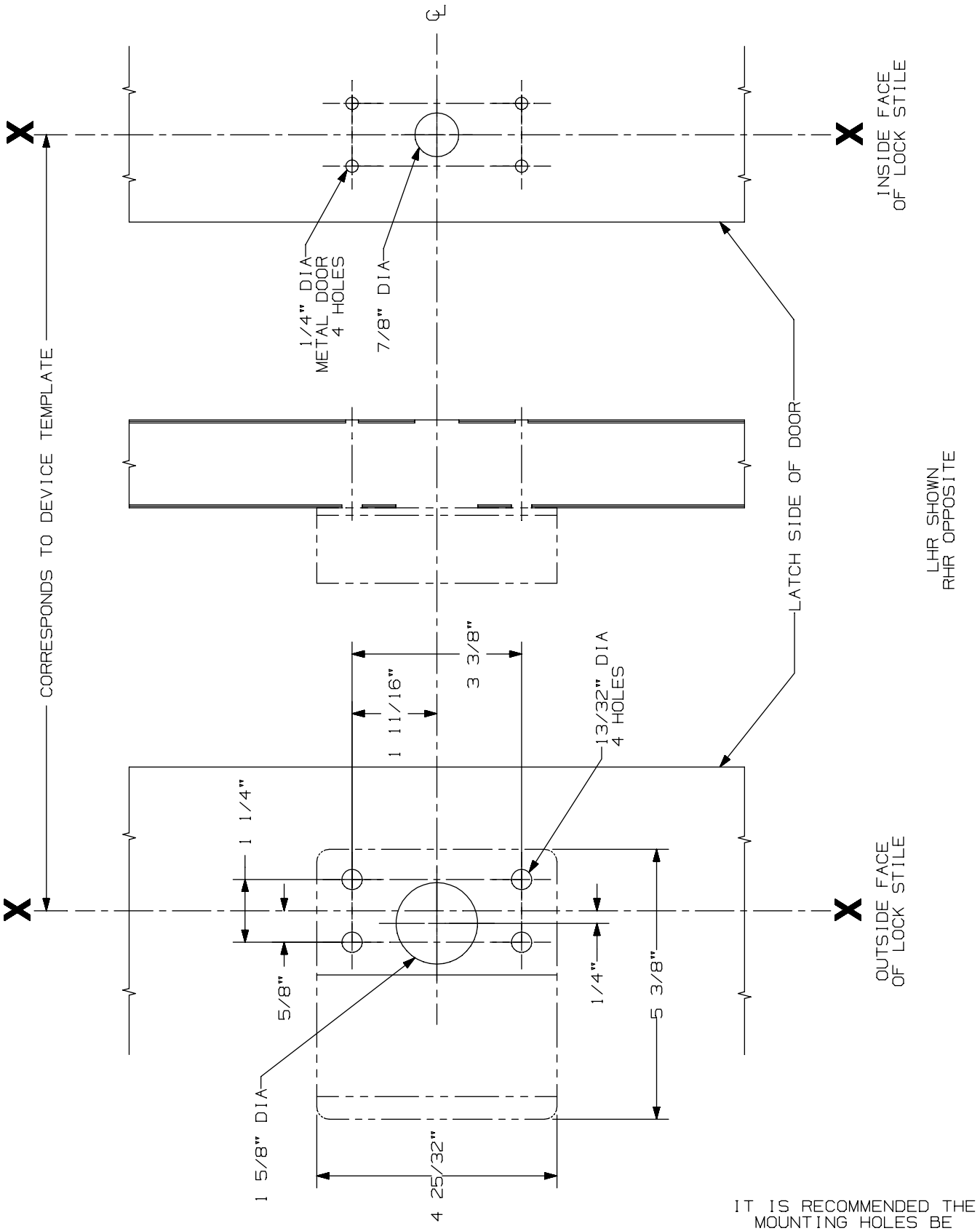

IT IS RECOMMENDED THE MOUNTING HOLES BE PREPARED IN THE FIELD

210 NL Trim

VON DUPRIN®

NOTES: See Master Sheet #10001 For Suggested Reinforcing

TEMPLATE NUMBER: 20016_a

DATE: 05-22-13

RIM APPLICATION

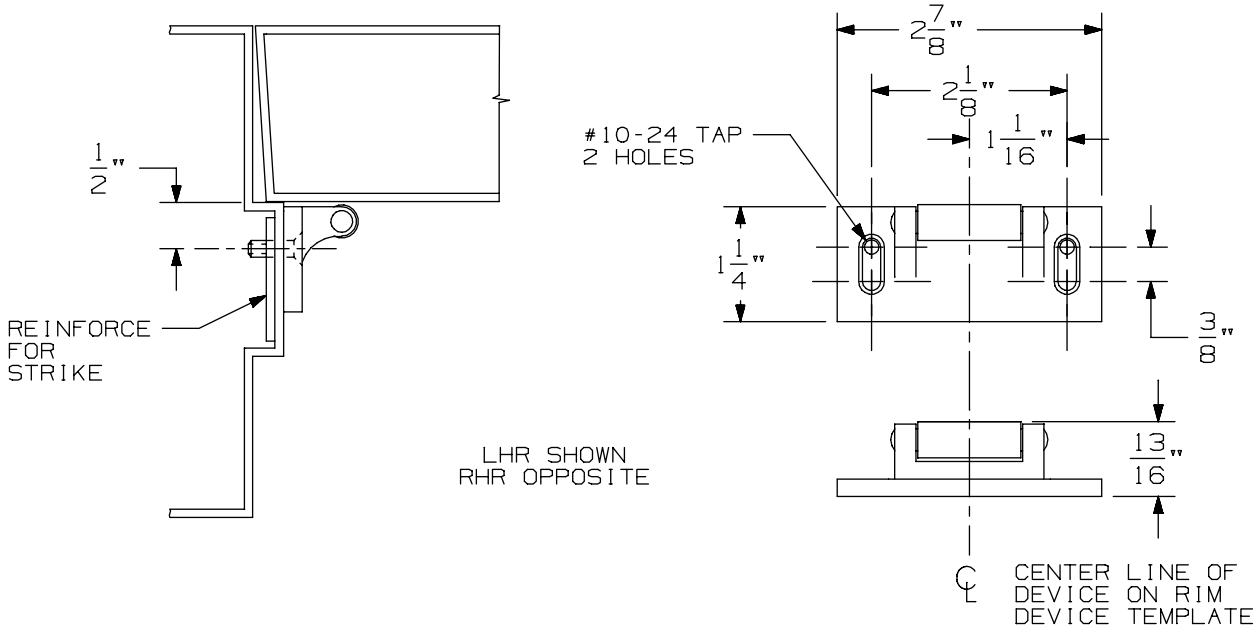

VERTICAL APPLICATION

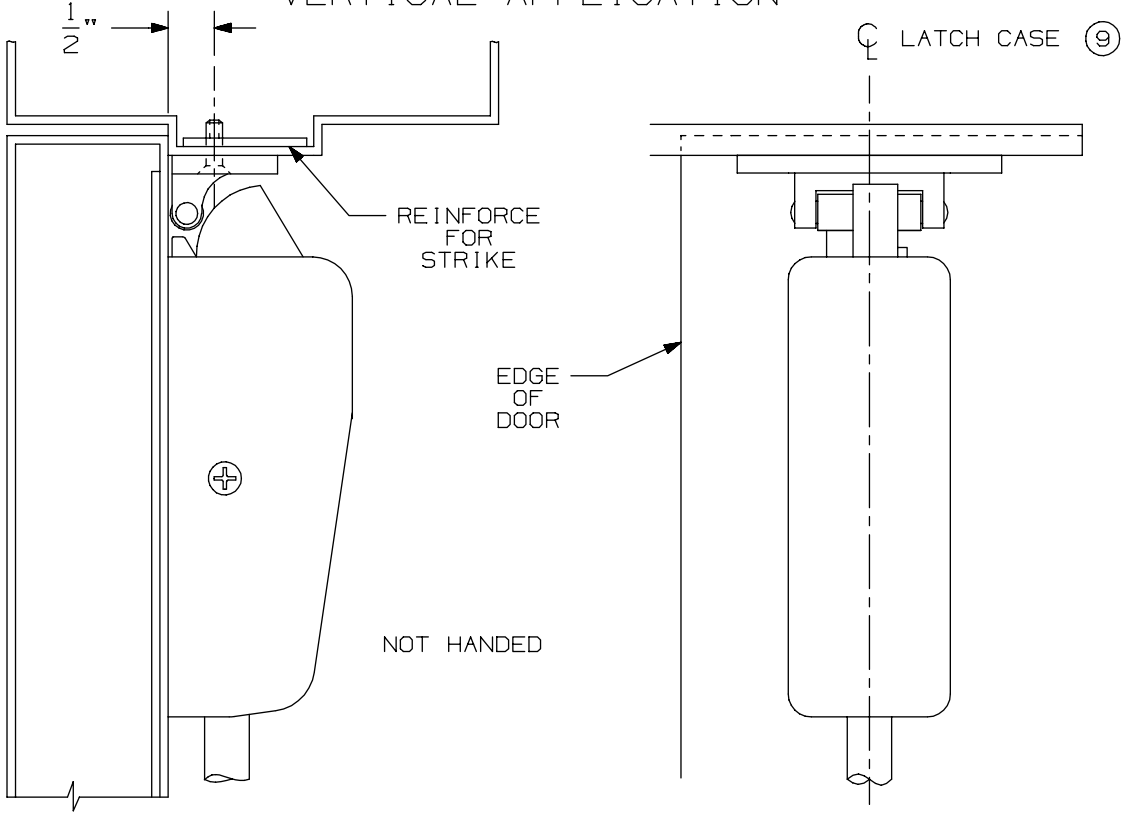

NOTE: LATCH CASE MOUNTING HOLES TO BE PREPARED AT INSTALLATION ON DOOR.

299 & 299F Strike

VON DUPRIN®

NOTES: SEE MASTER SHEET #10001 FOR SUGGESTED REINFORCING

TEMPLATE NUMBER: 30039_a

DATE: 05-23-13

TYPE 161 STOCK HOLLOW METAL DOOR

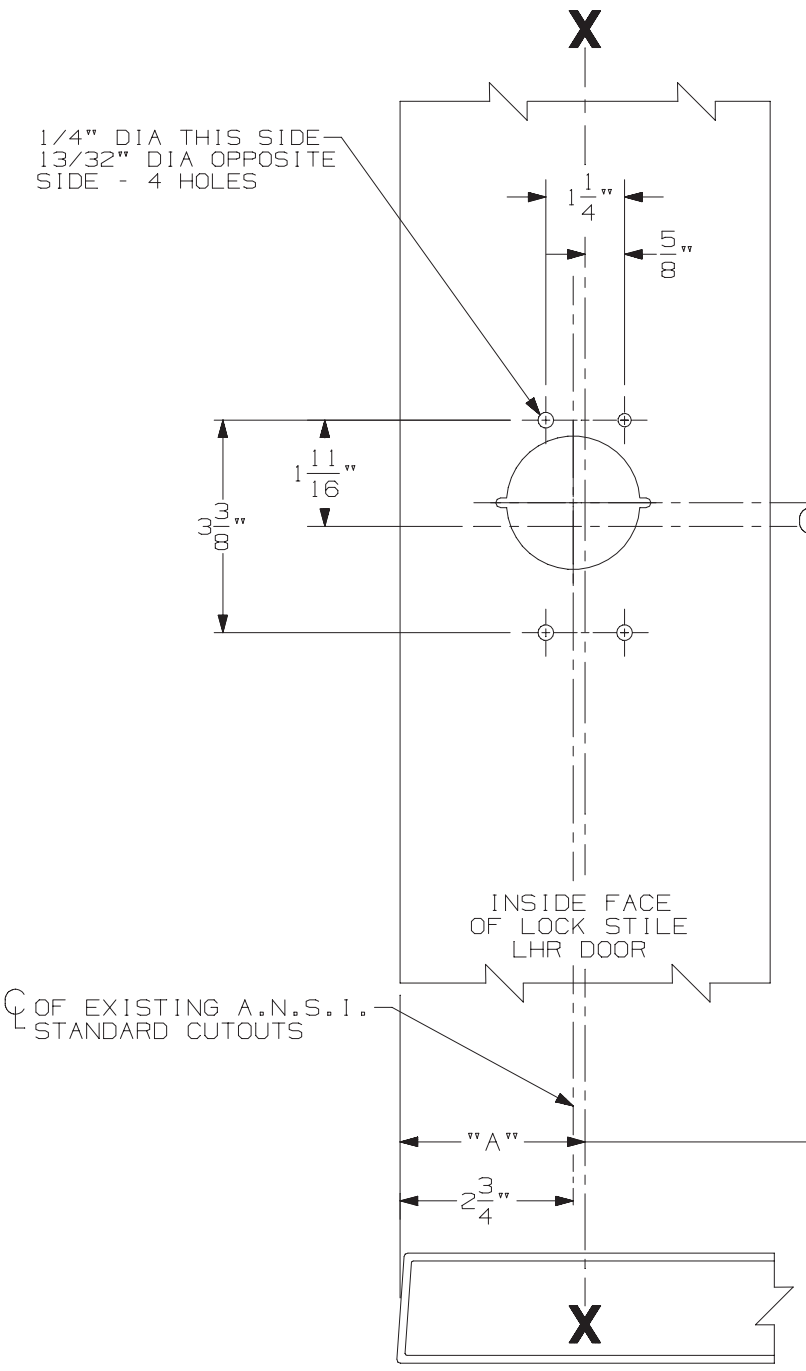

A.N.S.I. CUTOUTS ARE SHOWN FOR REFERENCE ONLY. SEE A.N.S.I. SPECIFICATION NO. A115 FOR THE SIZE AND LOCATION OF THESE CUTOUTS.

LHR APPLICATION SHOWN
RHR APPLICATION OPPOSITE

SINGLE DOOR OPENING
39 13/16" TO FINISHED FLOOR

DOUBLE DOOR OPENING
WITH VON DUPRIN MULLION
39 11/16" (2)

SINGLE DOOR APPLICATION		
STRIKE	STOP SIZE	DIM. "A"
299	5/8"	2 7/8"
299	1/2"	2 3/4"

DOUBLE DOOR APPLICATION WITH VON DUPRIN MULLIONS		
MULLION	STRIKE	DIM. "A"
5654	299	2 13/16"
1654	1606	2 13/16"

FOR ADDITIONAL INFORMATION
SEE TEMPLATE NO. 10011 AND 10012

FOR OUTSIDE TRIM PREPARATION, WHEN REQUIRED,
SEE ADDITIONAL TRIM TEMPLATE.

22EO, DT, & NL Rim Devices w/ 220 Trim for Type "161" Stock Hollow Metal Applications

VON DUPRIN®

NOTES: SEE MASTER SHEET #10001 FOR SUGGESTED REINFORCING

TEMPLATE NUMBER: 10038_a

DATE: 05-15-13

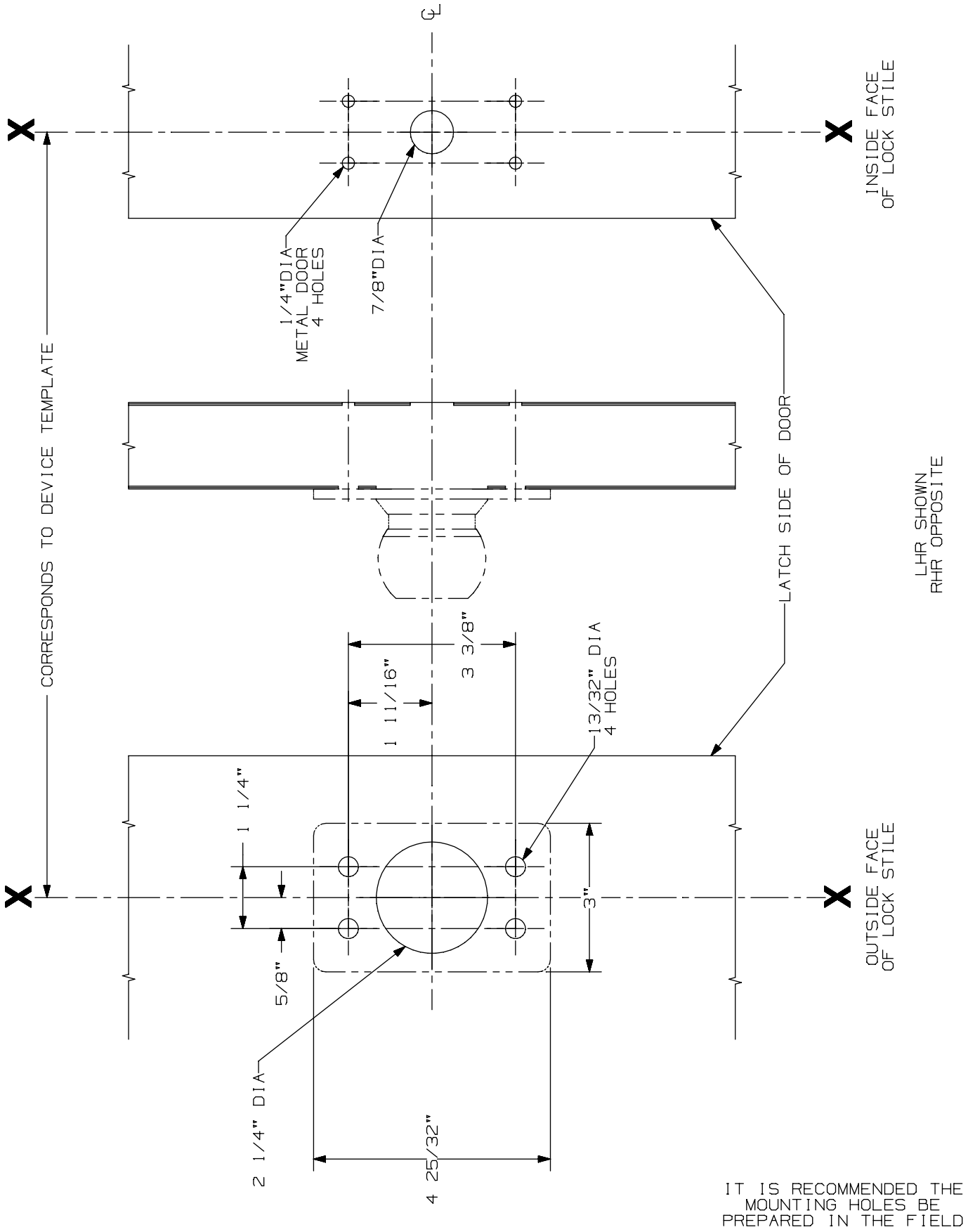

IT IS RECOMMENDED THE MOUNTING HOLES BE PREPARED IN THE FIELD

210 K Series Trim

VON DUPRIN®

NOTES: See Master Sheet #10001 For Suggested Reinforcing

TEMPLATE NUMBER: 20018_a

DATE: 05-22-13

RIM APPLICATION

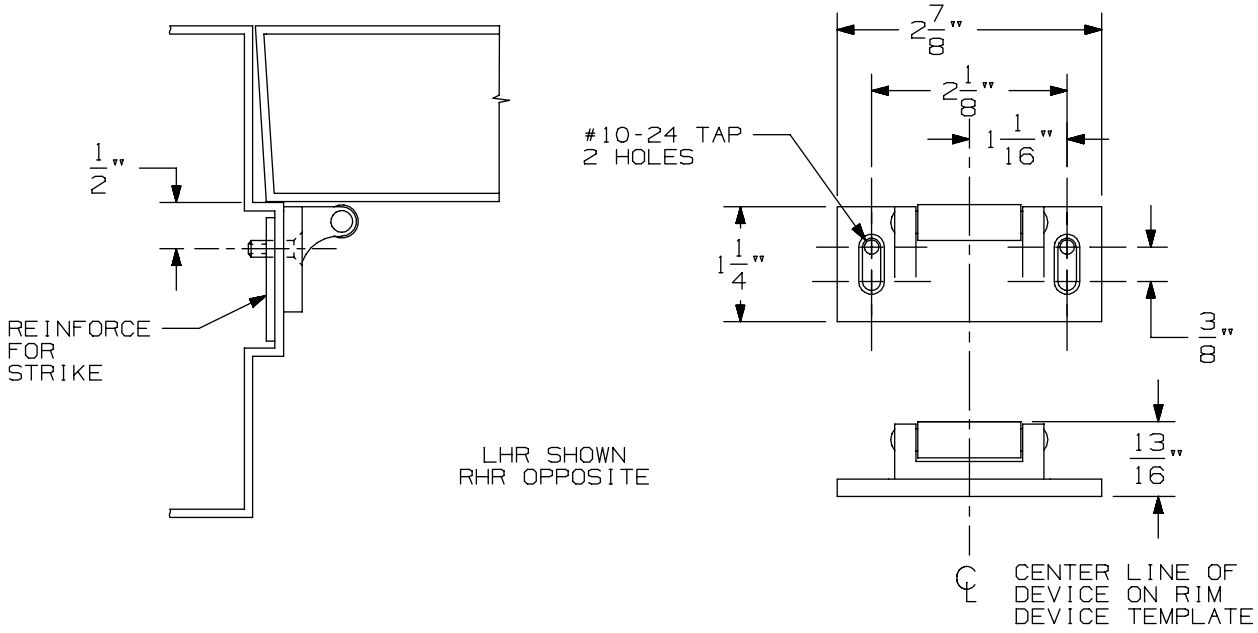

VERTICAL APPLICATION

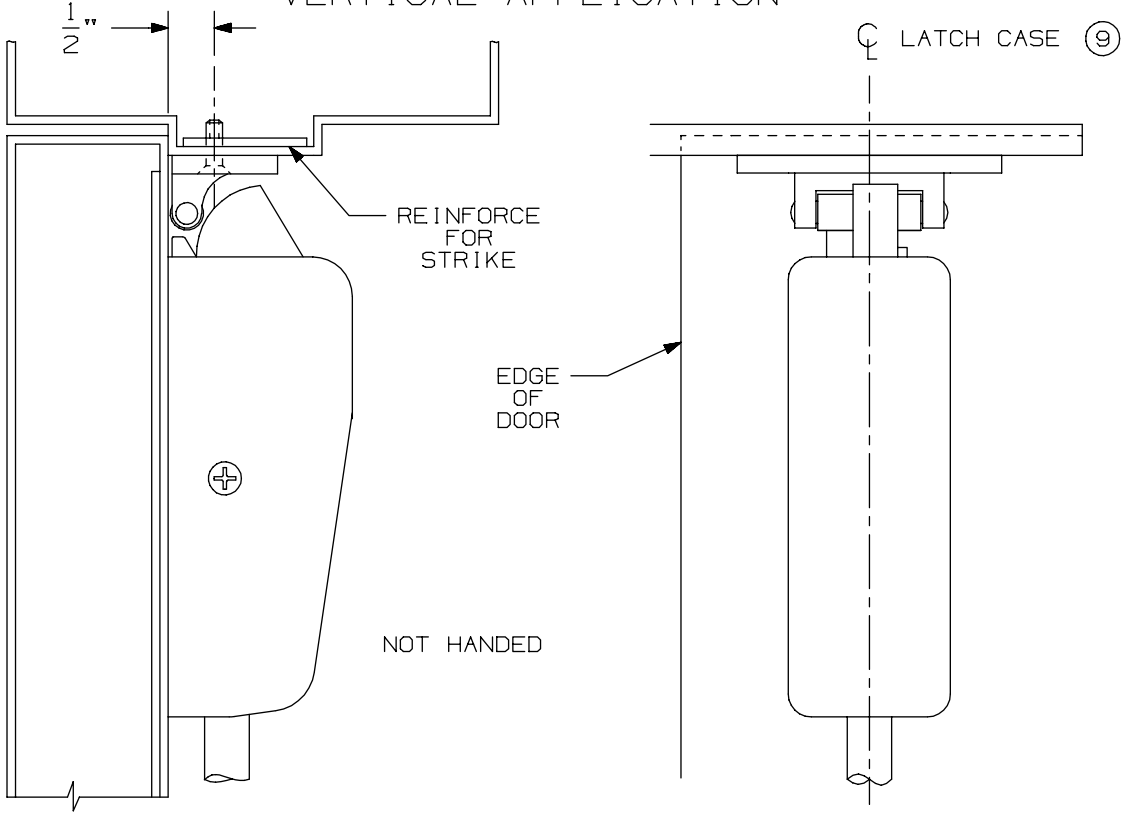

NOTE: LATCH CASE MOUNTING HOLES TO BE PREPARED AT INSTALLATION ON DOOR.

299 & 299F Strike

VON DUPRIN®

NOTES: SEE MASTER SHEET #10001 FOR SUGGESTED REINFORCING

TEMPLATE NUMBER: 30039_a

DATE: 05-23-13

TYPE 161 STOCK HOLLOW METAL DOOR

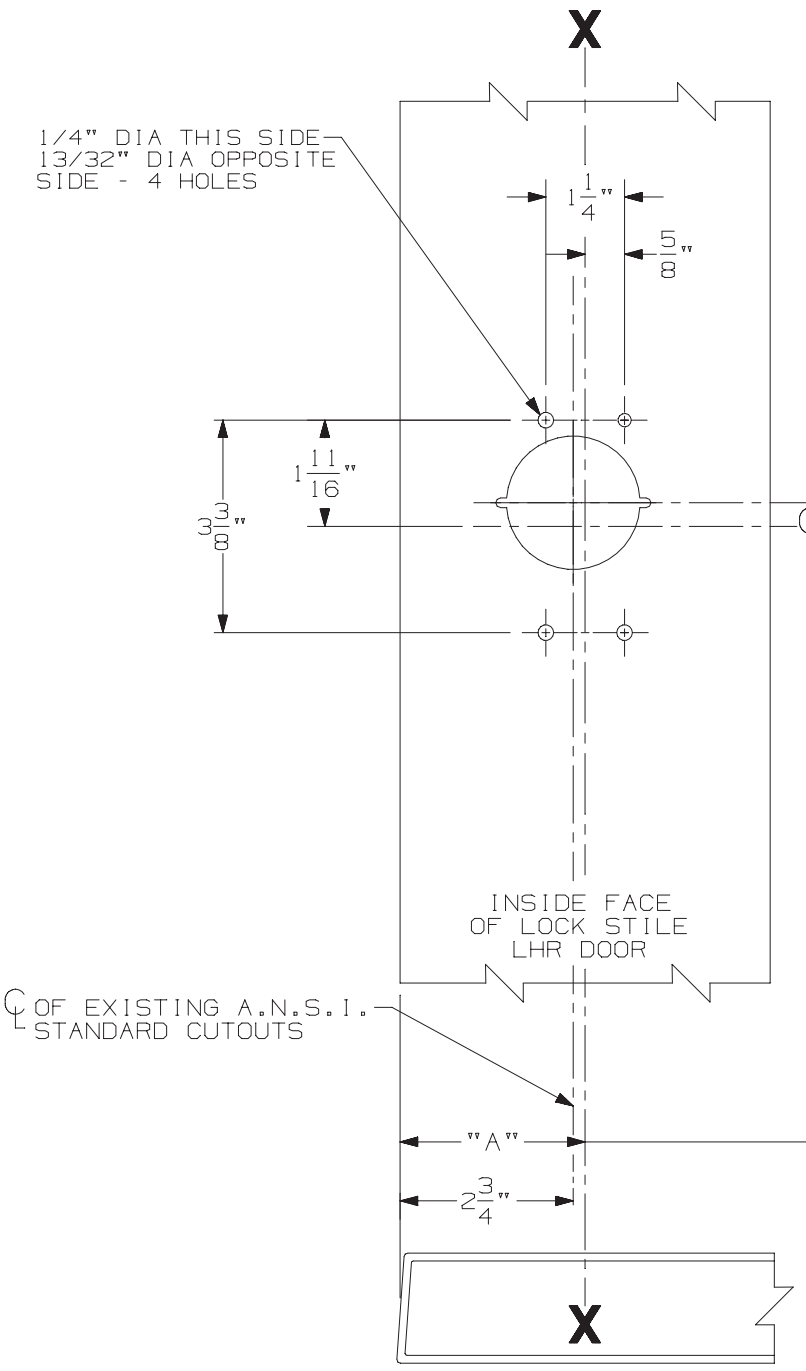

A.N.S.I. CUTOUTS ARE SHOWN FOR REFERENCE ONLY. SEE A.N.S.I. SPECIFICATION NO. A115 FOR THE SIZE AND LOCATION OF THESE CUTOUTS.

LHR APPLICATION SHOWN
RHR APPLICATION OPPOSITE

SINGLE DOOR OPENING
39 13/16" TO FINISHED FLOOR

DOUBLE DOOR OPENING
WITH VON DUPRIN MULLION
39 11/16" (2)

SINGLE DOOR APPLICATION		
STRIKE	STOP SIZE	DIM. "A"
299	5/8"	2 7/8"
299	1/2"	2 3/4"

DOUBLE DOOR APPLICATION WITH VON DUPRIN MULLIONS		
MULLION	STRIKE	DIM. "A"
5654	299	2 13/16"
1654	1606	2 13/16"

FOR ADDITIONAL INFORMATION
SEE TEMPLATE NO. 10011 AND 10012

FOR OUTSIDE TRIM PREPARATION, WHEN REQUIRED,
SEE ADDITIONAL TRIM TEMPLATE.

22EO, DT, & NL Rim Devices w/ 220 Trim for Type "161" Stock Hollow Metal Applications

VON DUPRIN®

NOTES: SEE MASTER SHEET #10001 FOR SUGGESTED REINFORCING

TEMPLATE NUMBER: 10038_a

DATE: 05-15-13

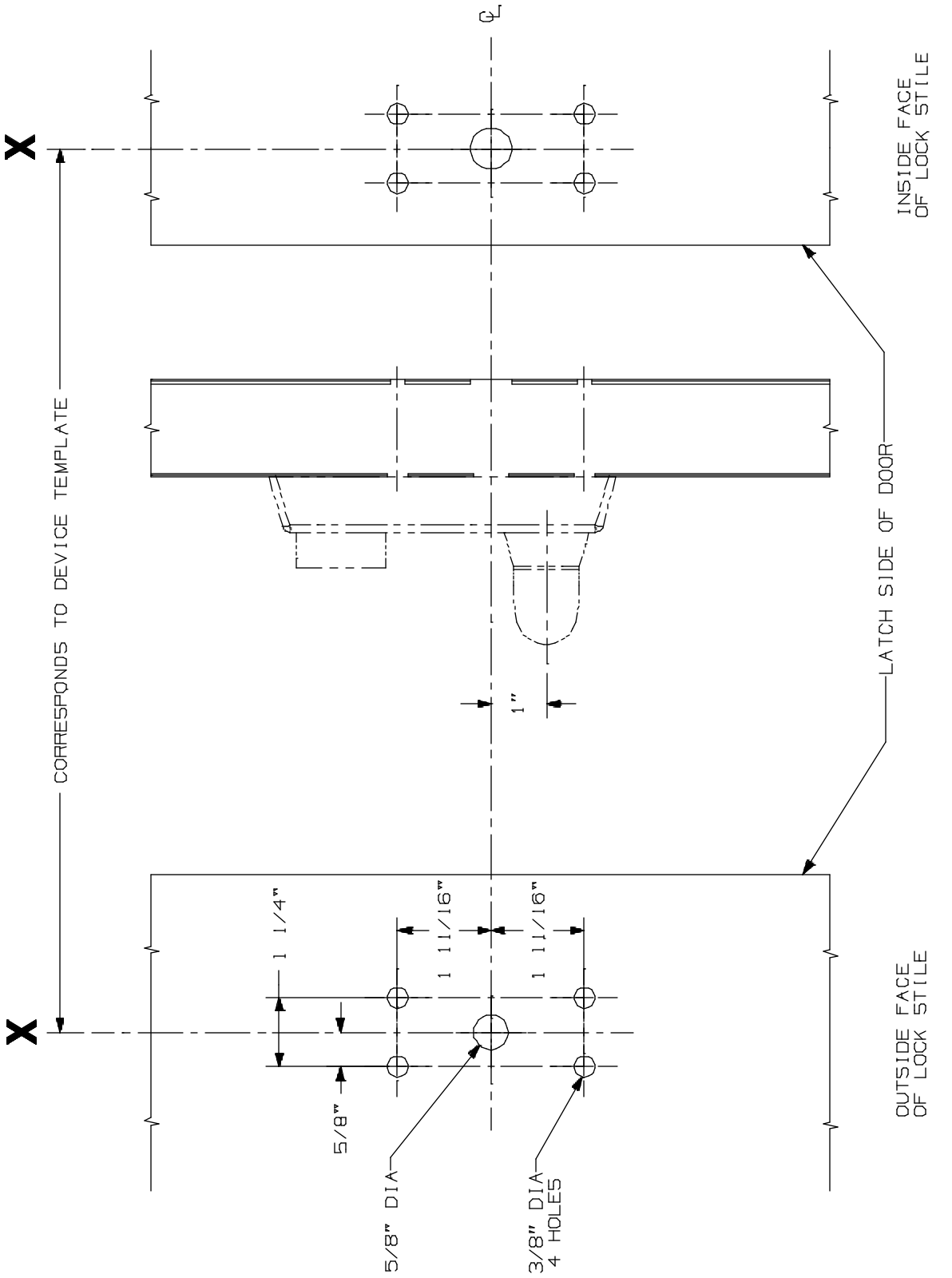

APPLICATIONS
ZZ RIM SERIES
2227 SERIES

230L & 230L-BE Lever Control
Metal Door Application

VON DUPRIN®

NOTES: See Master Sheet #10001 For Suggested Reinforcing

TEMPLATE NUMBER: 20007_a

DATE: 05-22-13

RIM APPLICATION

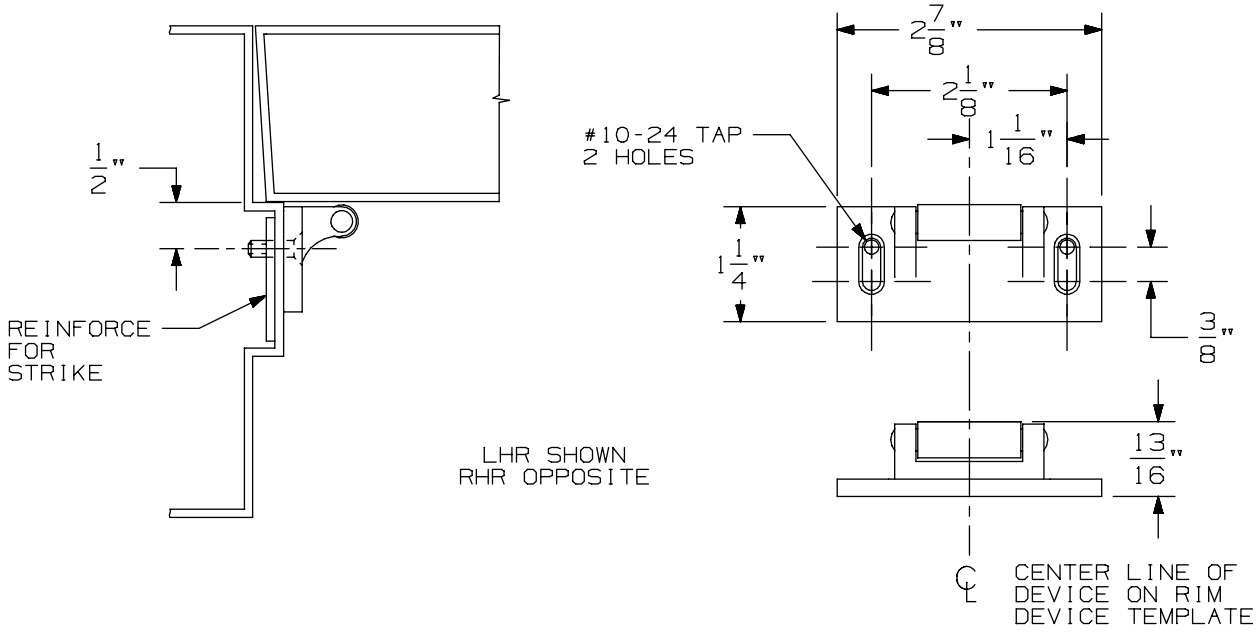

VERTICAL APPLICATION

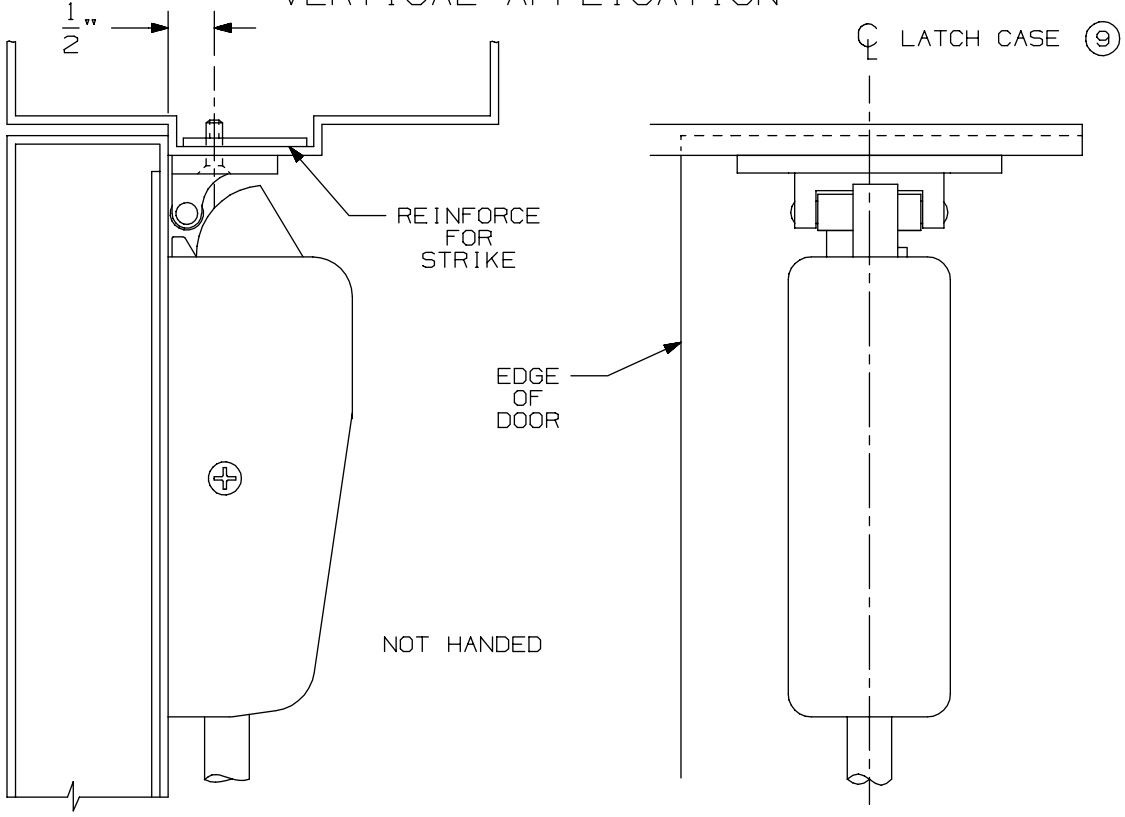

NOTE: LATCH CASE MOUNTING HOLES TO BE PREPARED AT INSTALLATION ON DOOR.

299 & 299F Strike

VON DUPRIN®

NOTES: SEE MASTER SHEET #10001 FOR SUGGESTED REINFORCING

TEMPLATE NUMBER: 30039_a

DATE: 05-23-13

TYPE 161 STOCK HOLLOW METAL DOOR

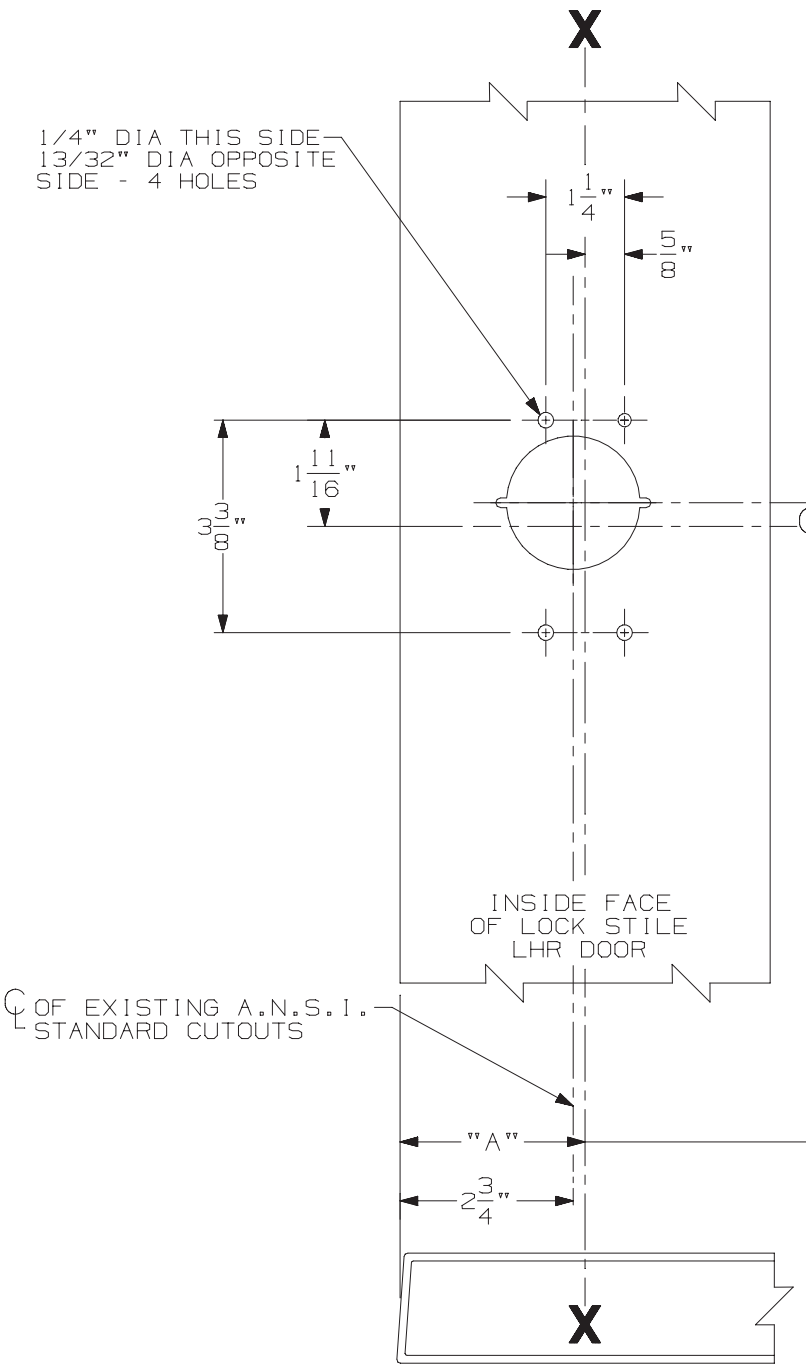

A.N.S.I. CUTOUTS ARE SHOWN FOR REFERENCE ONLY. SEE A.N.S.I. SPECIFICATION NO. A115 FOR THE SIZE AND LOCATION OF THESE CUTOUTS.

LHR APPLICATION SHOWN
RHR APPLICATION OPPOSITE

SINGLE DOOR OPENING
39 13/16" TO FINISHED FLOOR

DOUBLE DOOR OPENING
WITH VON DUPRIN MULLION
39 11/16" (2)

SINGLE DOOR APPLICATION		
STRIKE	STOP SIZE	DIM. "A"
299	5/8"	2 7/8"
299	1/2"	2 3/4"

DOUBLE DOOR APPLICATION WITH VON DUPRIN MULLIONS		
MULLION	STRIKE	DIM. "A"
5654	299	2 13/16"
1654	1606	2 13/16"

FOR ADDITIONAL INFORMATION
SEE TEMPLATE NO. 10011 AND 10012

FOR OUTSIDE TRIM PREPARATION, WHEN REQUIRED,
SEE ADDITIONAL TRIM TEMPLATE.

22EO, DT, & NL Rim Devices w/ 220 Trim for Type "161" Stock Hollow Metal Applications

VON DUPRIN®

NOTES: SEE MASTER SHEET #10001 FOR SUGGESTED REINFORCING

TEMPLATE NUMBER: 10038_a

DATE: 05-15-13

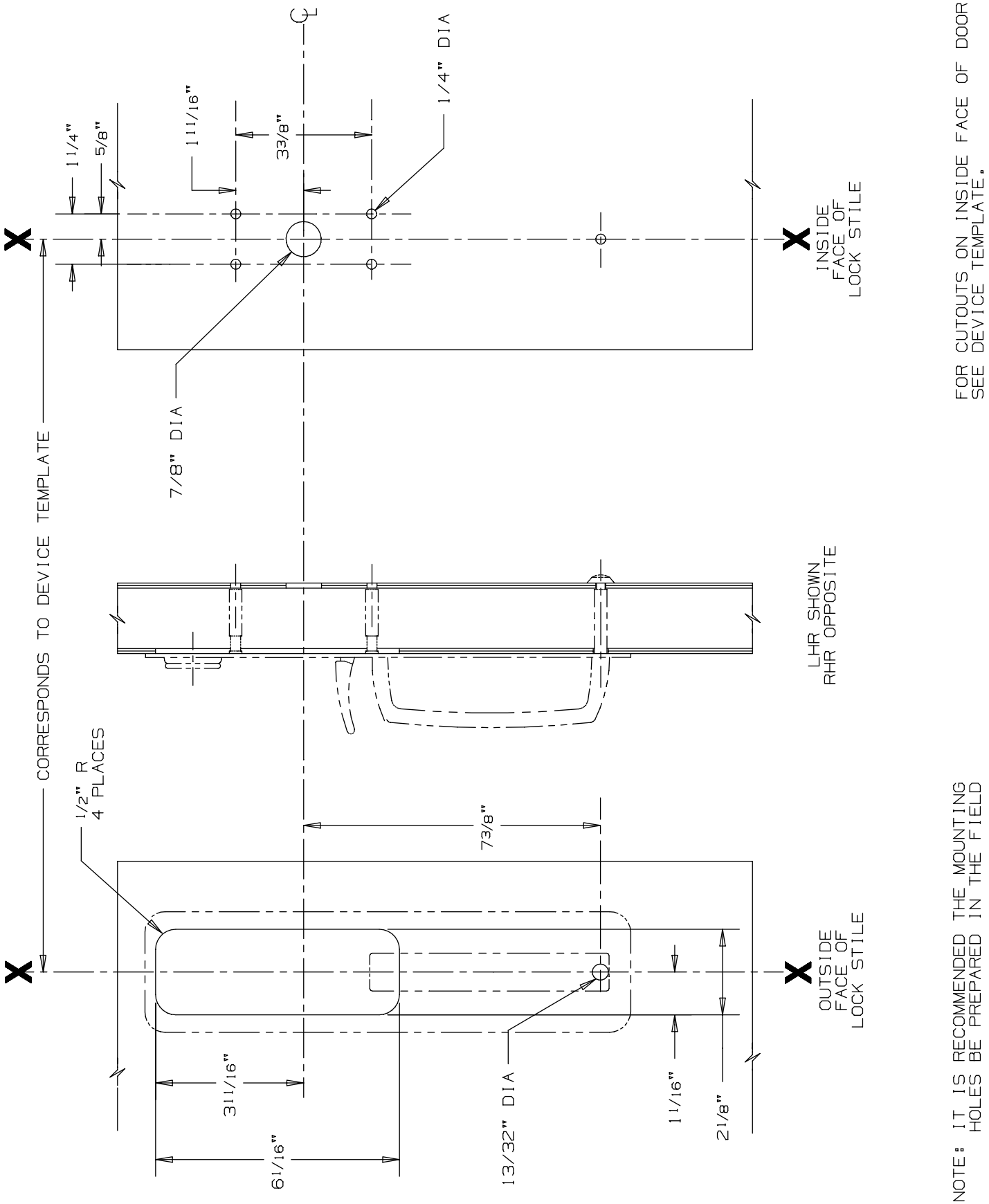

230TP & 230TP-BE Trim

VON DUPRIN®

NOTES: SEE MASTER SHEET #10001 FOR SUGGESTED REINFORCING

TEMPLATE NUMBER: 20038_b

DATE: 07-14-14

RIM APPLICATION

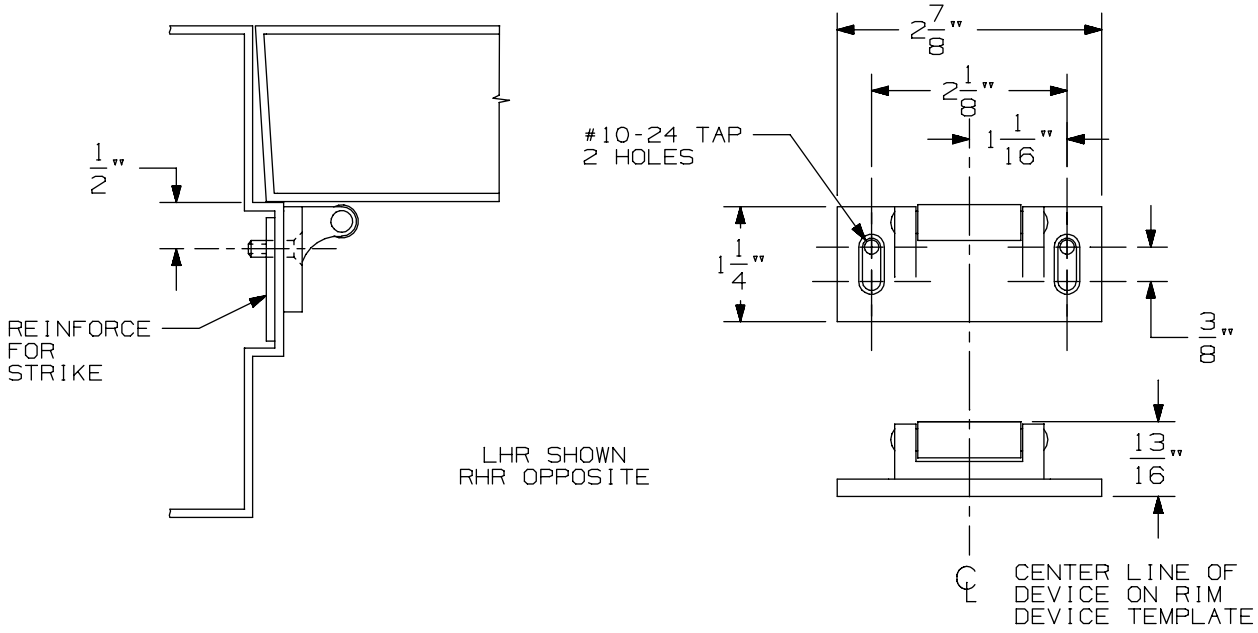

VERTICAL APPLICATION

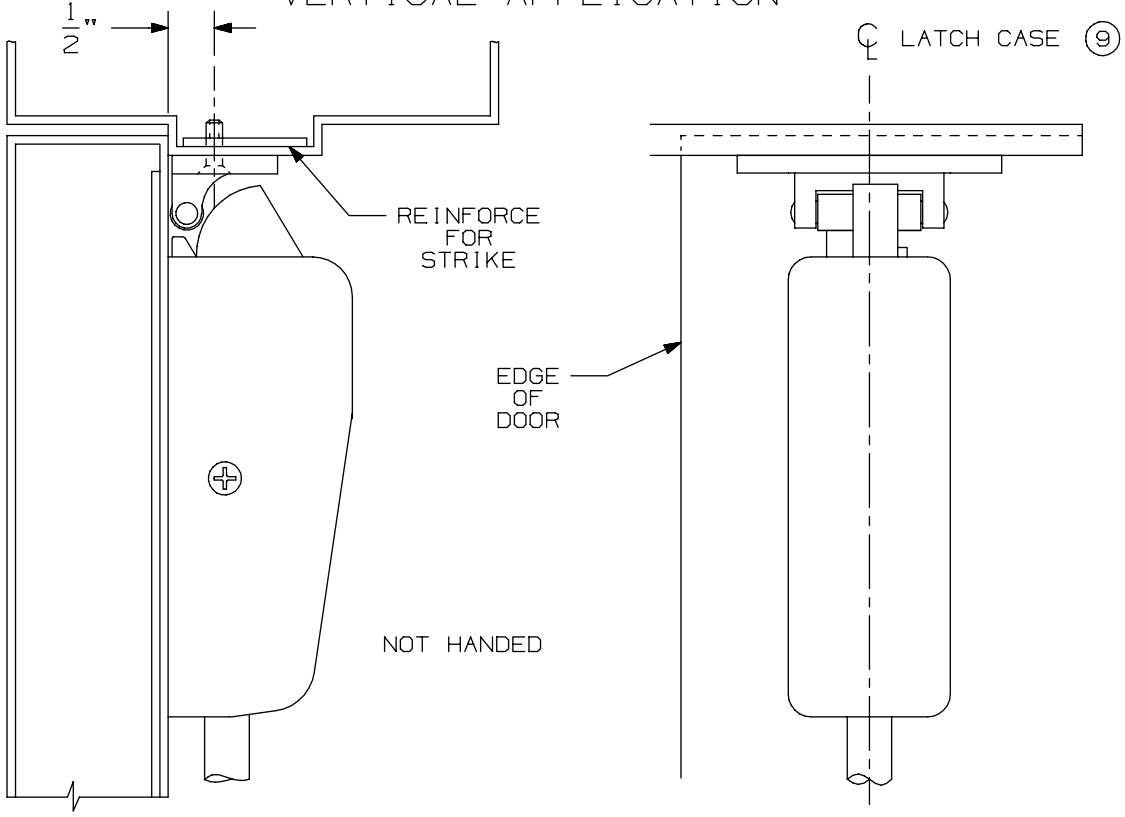

NOTE: LATCH CASE MOUNTING HOLES TO BE PREPARED AT INSTALLATION ON DOOR.

299 & 299F Strike

VON DUPRIN®

NOTES: SEE MASTER SHEET #10001 FOR SUGGESTED REINFORCING

TEMPLATE NUMBER: 30039_a

DATE: 05-23-13

22 Series for 161 Stock Hollow Metal Doors

-

22 Series Trims

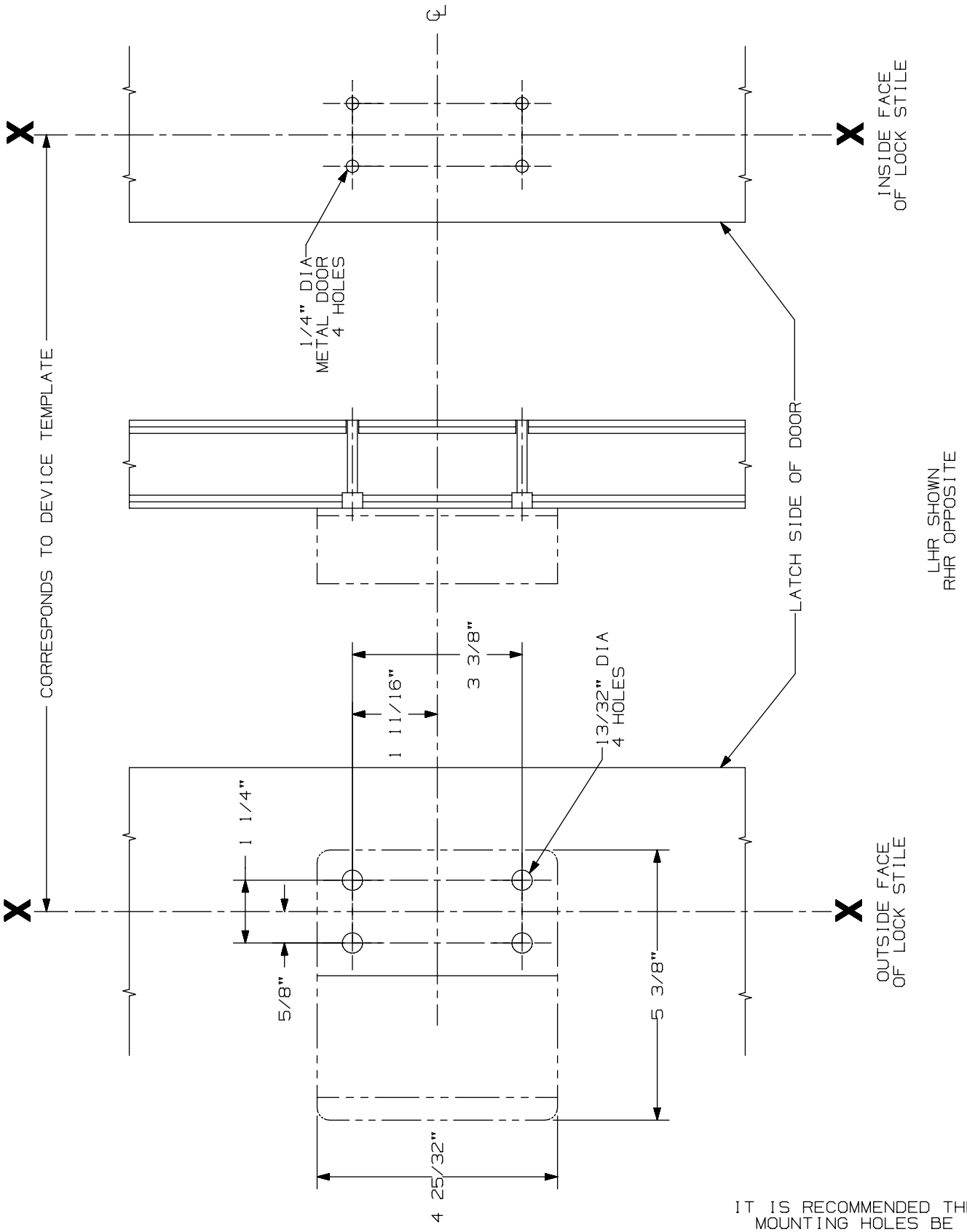

IT IS RECOMMENDED THE MOUNTING HOLES BE PREPARED IN THE FIELD

210 DT Trim

VON DUPRIN®

NOTES: See Master Sheet #10001 For Suggested Reinforcing

TEMPLATE NUMBER: 20015_a

DATE: 05-22-13

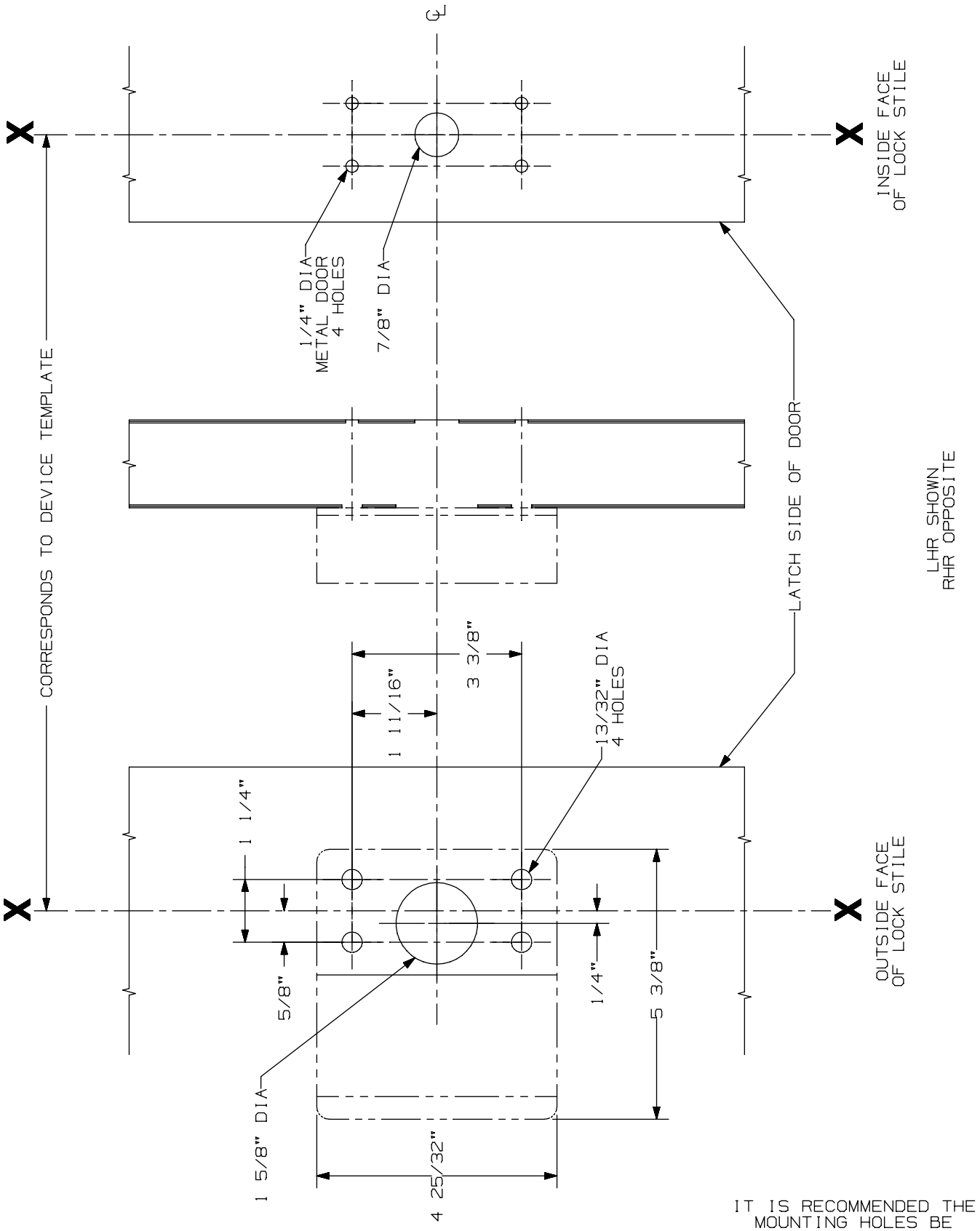

IT IS RECOMMENDED THE MOUNTING HOLES BE PREPARED IN THE FIELD

210 NL Trim

VON DUPRIN®

NOTES: See Master Sheet #10001 For Suggested Reinforcing

TEMPLATE NUMBER: 20016_a

DATE: 05-22-13

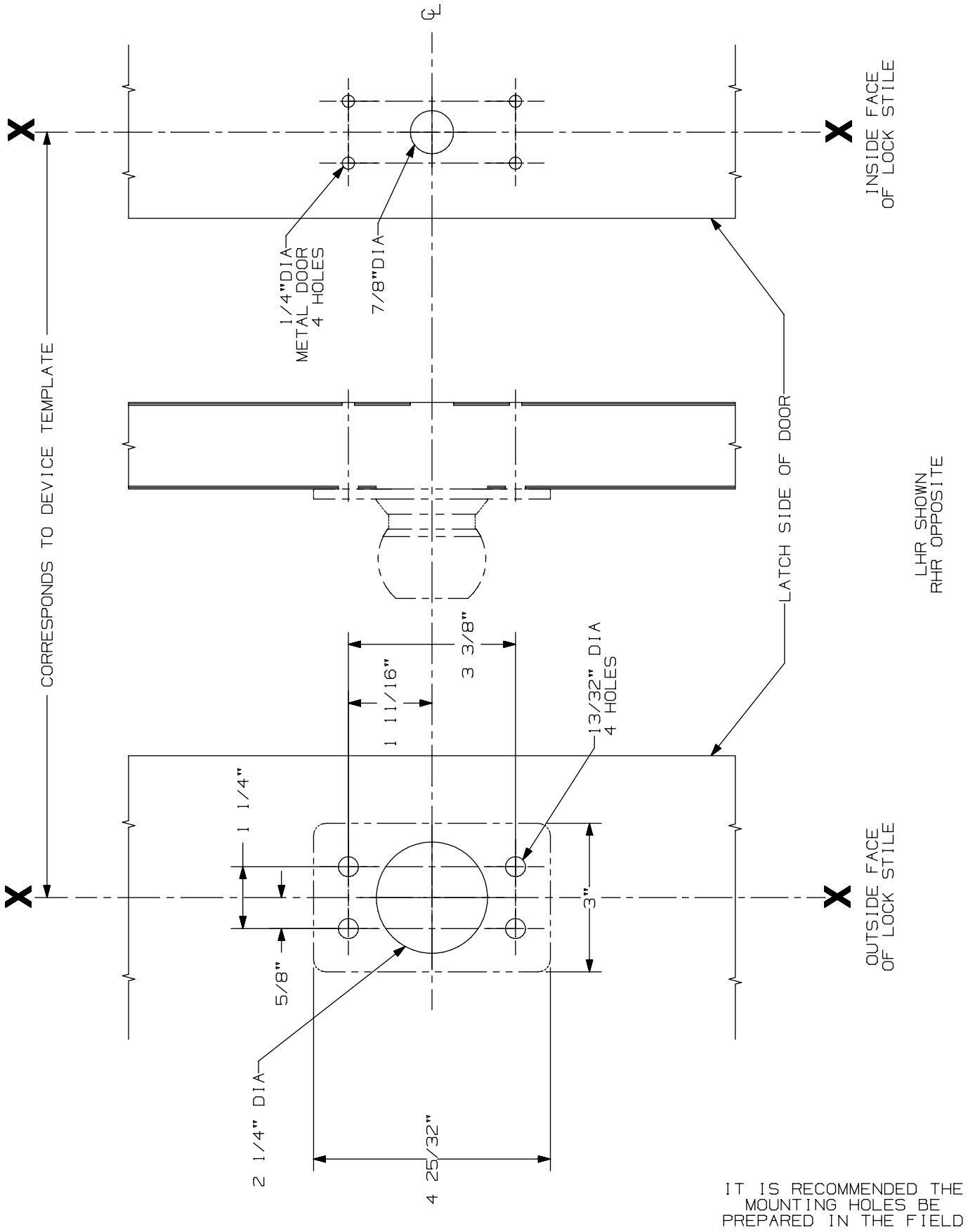

IT IS RECOMMENDED THE MOUNTING HOLES BE PREPARED IN THE FIELD

210 K Series Trim

VON DUPRIN®

NOTES: See Master Sheet #10001 For Suggested Reinforcing

TEMPLATE NUMBER: 20018_a

DATE: 05-22-13

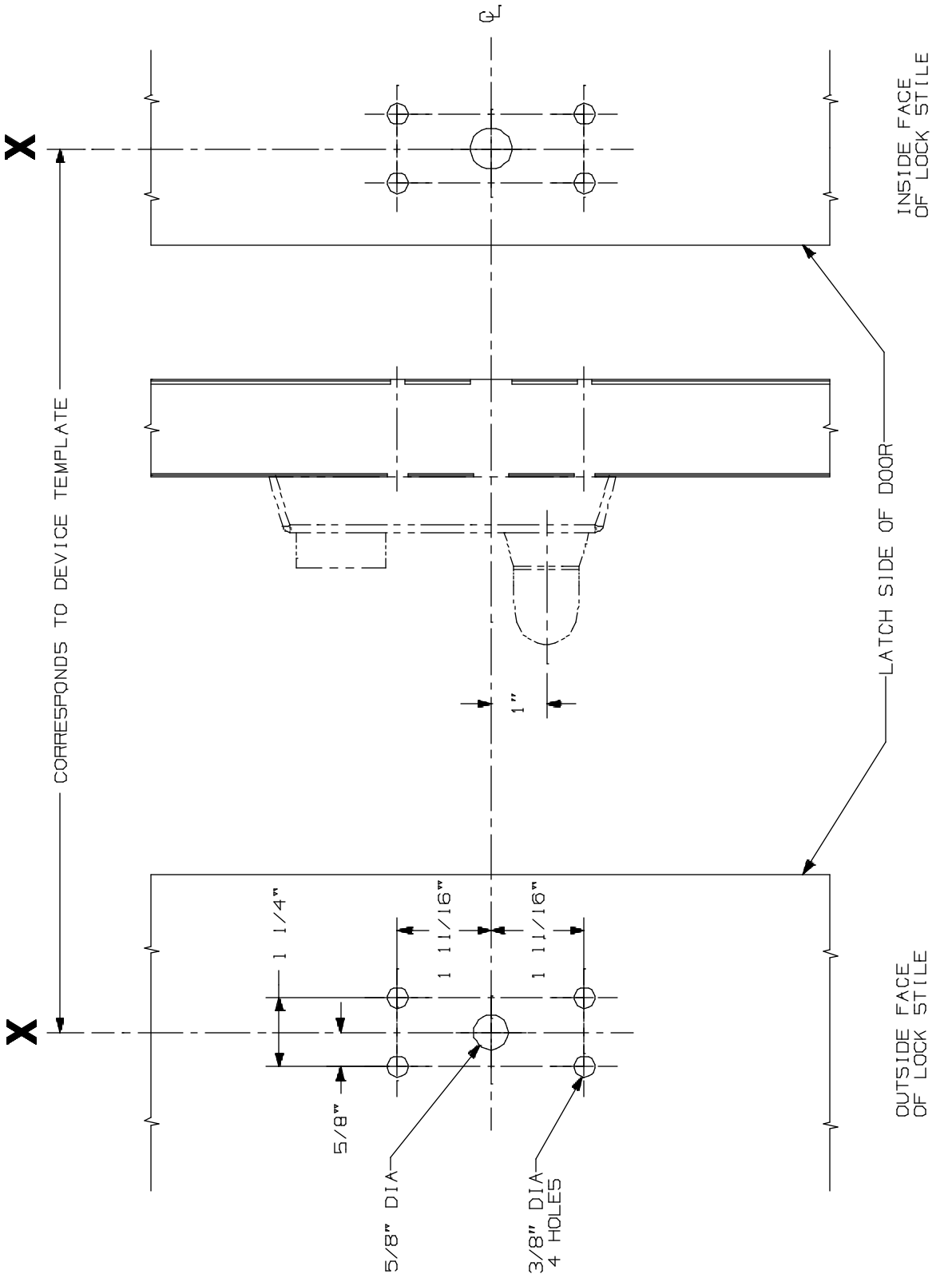

APPLICATIONS
ZZ RIM SERIES
2227 SERIES

230L & 230L-BE Lever Control
Metal Door Application

VON DUPRIN®

NOTES: See Master Sheet #10001 For Suggested Reinforcing

TEMPLATE NUMBER: 20007_a

DATE: 05-22-13

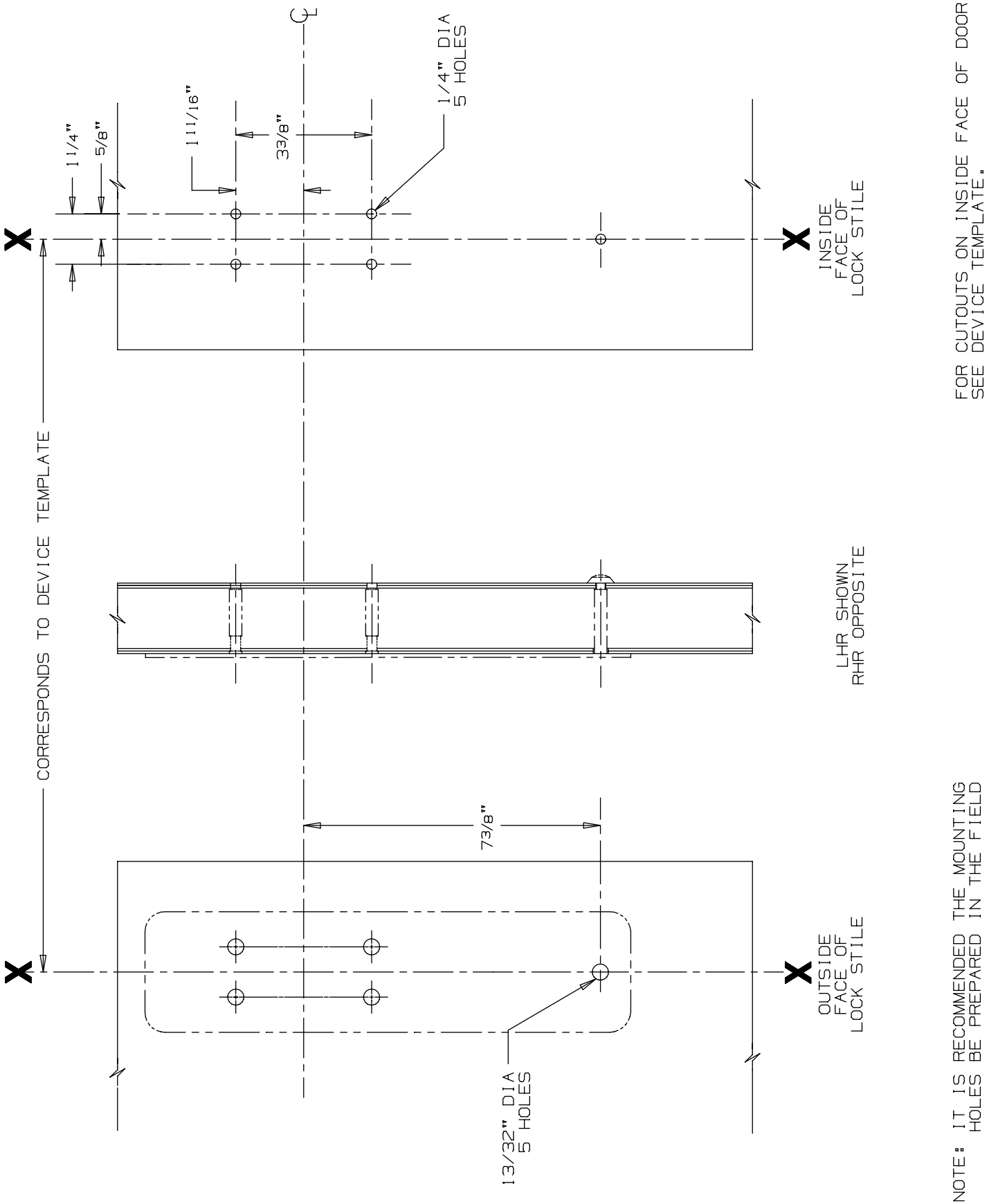

230 EO Trim

VON DUPRIN®

NOTES: SEE MASTER SHEET #10001 FOR SUGGESTED REINFORCING

TEMPLATE NUMBER: 20035_a

DATE: 05-23-13

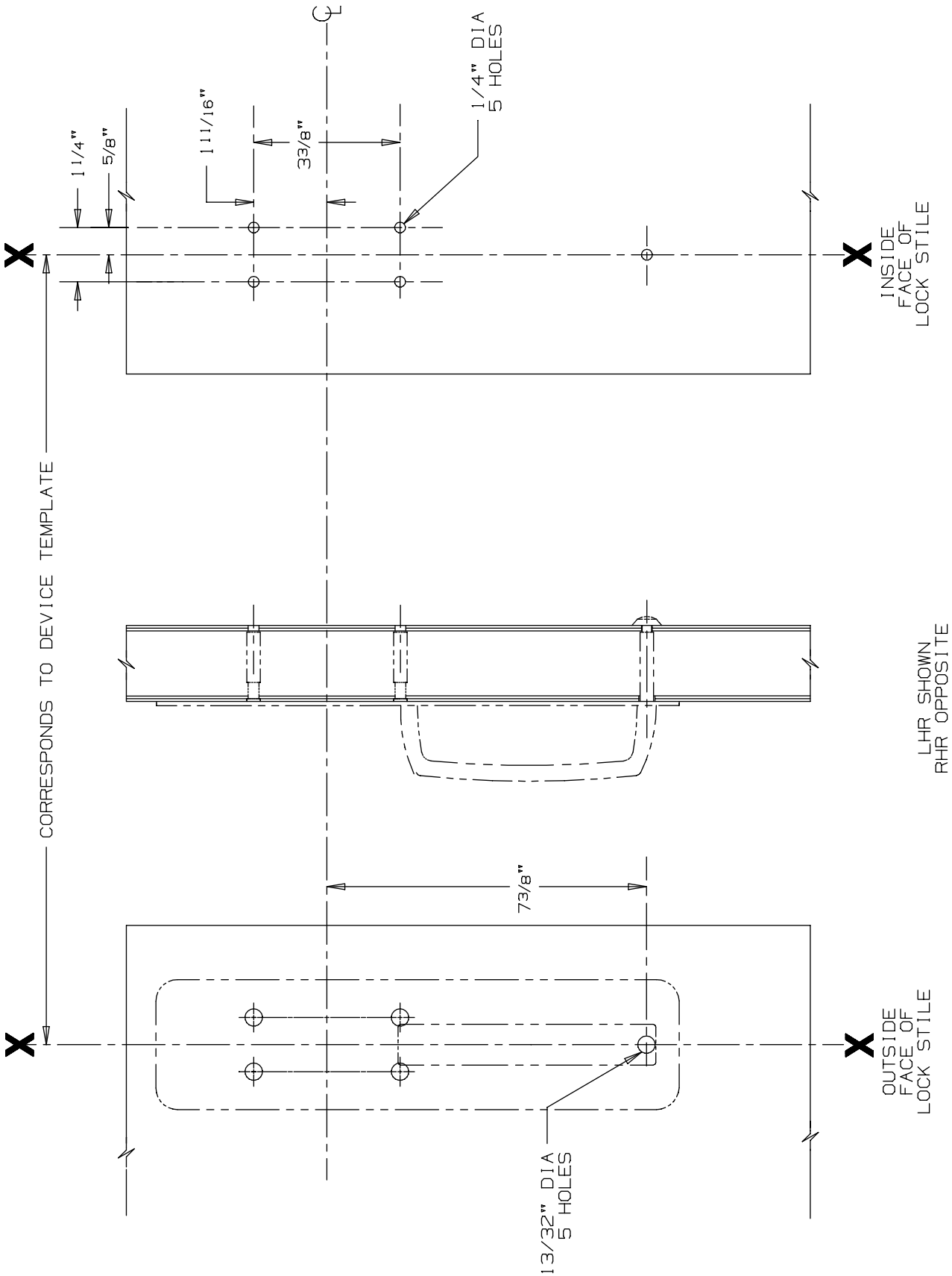

230 DT Trim

VON DUPRIN®

NOTES: SEE MASTER SHEET #10001 FOR SUGGESTED REINFORCING

TEMPLATE NUMBER: 20036_a

DATE: 05-23-13

NOTES: SEE MASTER SHEET #10001 FOR SUGGESTED REINFORCING

230 NL Trim

TEMPLATE NUMBER: 20037_a

DATE: 05-23-13

VON DUPRIN®

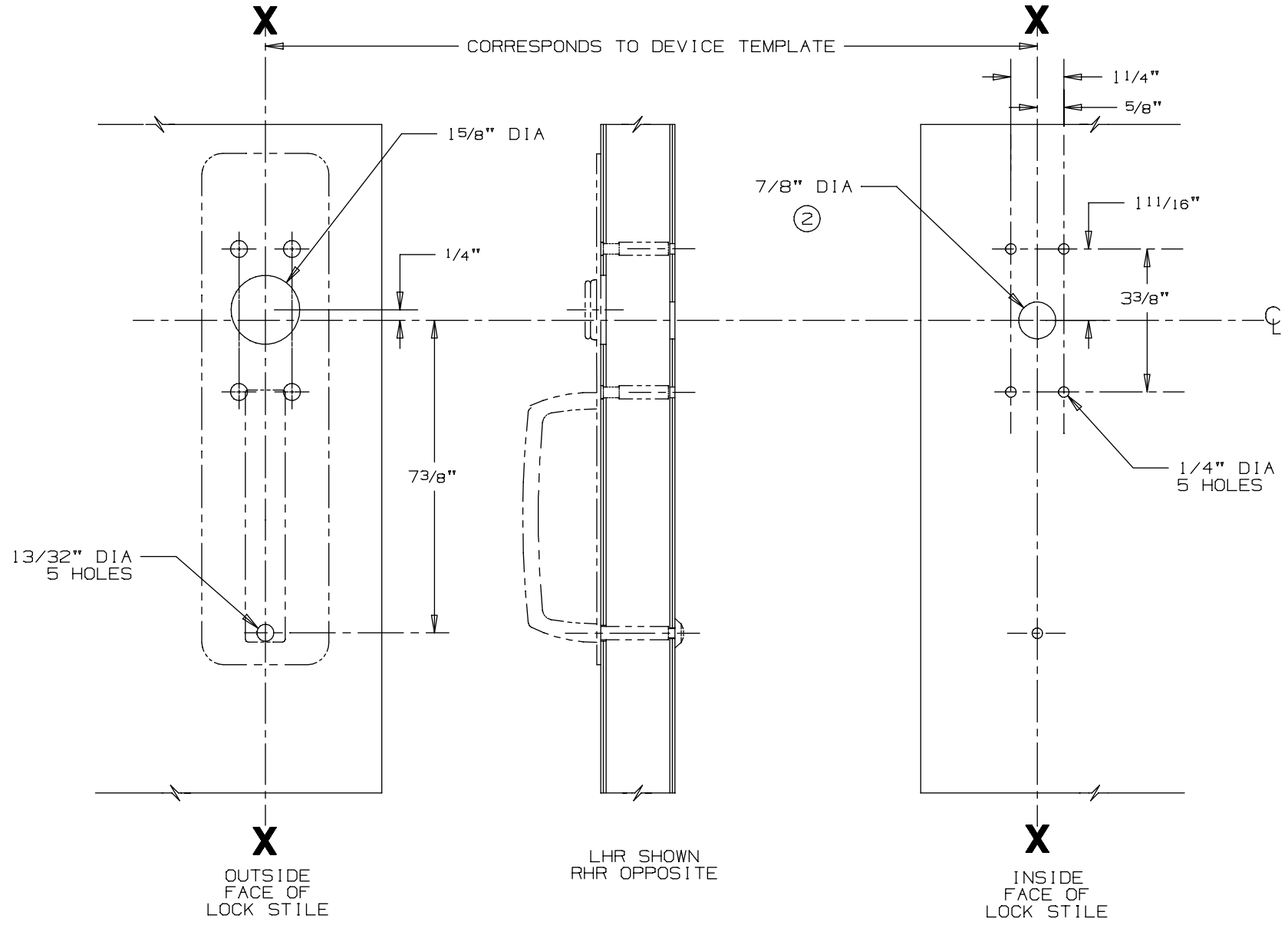

NOTE: IT IS RECOMMENDED THE MOUNTING HOLES BE PREPARED IN THE FIELD

FOR CUTOUTS ON INSIDE FACE OF DOOR SEE DEVICE TEMPLATE.

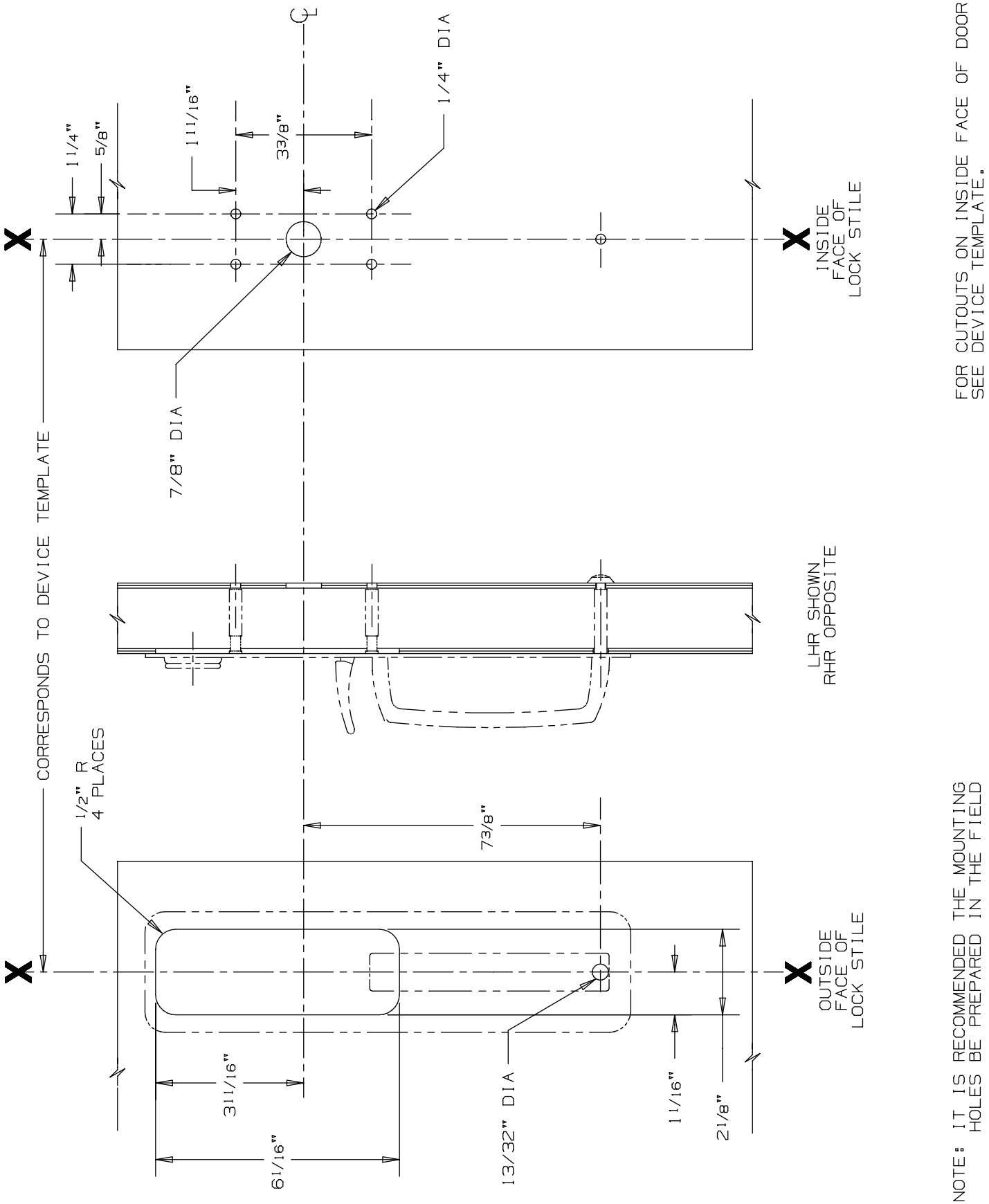

230TP & 230TP-BE Trim

VON DUPRIN®

NOTES: SEE MASTER SHEET #10001 FOR SUGGESTED REINFORCING

TEMPLATE NUMBER: 20038_b

DATE: 07-14-14

33A/35A Series Exit Devices

33A/35A Series Exit Devices

-

33A/35A Rim (Standard, EL, LX, RX and SS)

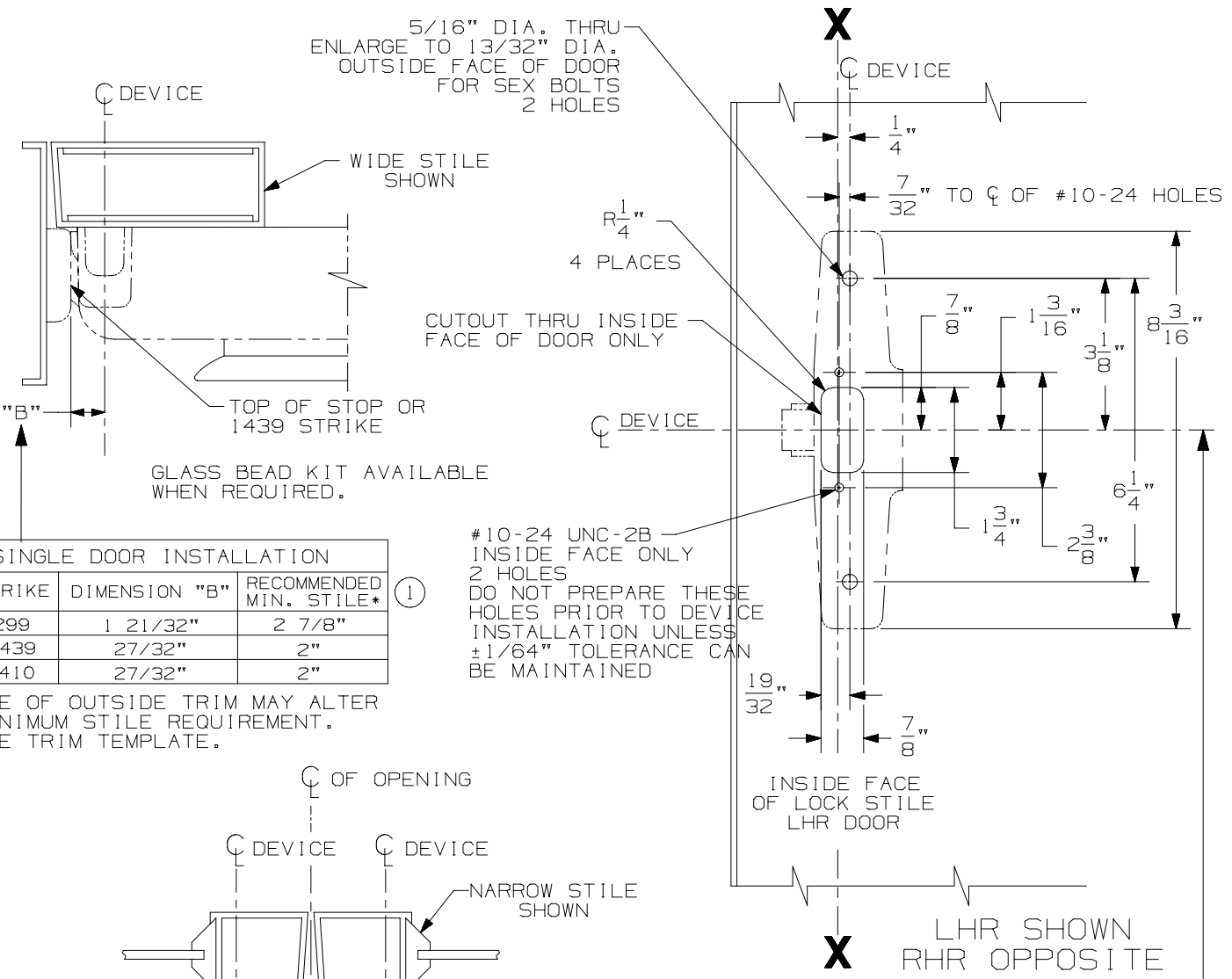

SINGLE DOOR INSTALLATION		
STRIKE	DIMENSION "B"	RECOMMENDED MIN. STILE* (1)
299	1 21/32"	2 7/8"
1439	27/32"	2"
1410	27/32"	2"

USE OF OUTSIDE TRIM MAY ALTER
MINIMUM STILE REQUIREMENT.
SEE TRIM TEMPLATE.

SINGLE DOOR OPENING
39 13/16" TO FINISHED FLOOR.

DOUBLE DOOR OPENING
WITH VON DUPRIN MULLION
39 11/16"

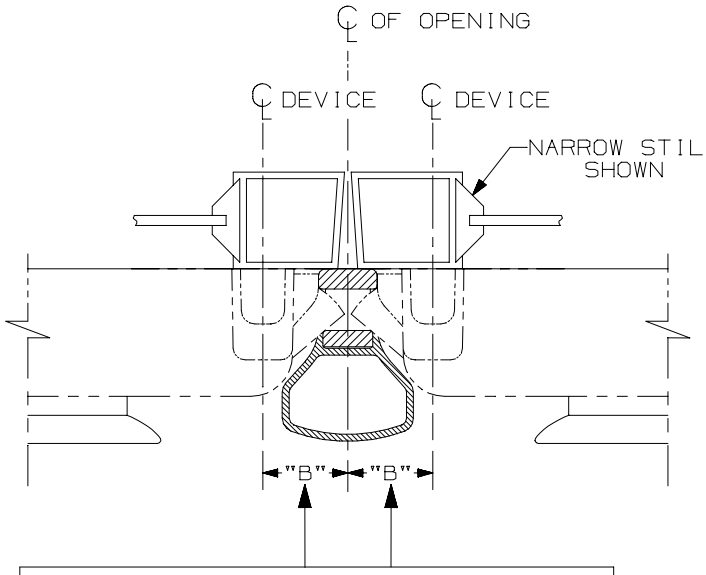

DOUBLE DOOR INSTALLATION WITH VON DUPRIN MULLIONS			
MULLION	STRIKE	DIMENSION "B"	RECOMMENDED MIN. STILE* (1)
4954	299	2 21/32"	3 3/8"
1654	1606	2 7/32"	2 15/16"
5654	299	2 3/16"	2 15/16"
5754	1408	1 3/8"	2"

USE OF OUTSIDE TRIM MAY ALTER
MINIMUM STILE REQUIREMENT.
SEE TRIM TEMPLATE.

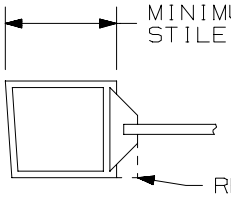

(1) * CONSULT FACTORY FOR STILE WIDTHS LESS THAN MIN. RECOMMENDED TO ENSURE PROPER APPLICATION

FOR OUTSIDE TRIM PREPARATION, WHEN REQUIRED, SEE TRIM TEMPLATE.

33/35A Series Rim Devices

VON DUPRIN®

NOTES: SEE MASTER SHEET #10001 FOR SUGGESTED REINFORCING

TEMPLATE NUMBER: 10048_a

DATE: 05-15-13

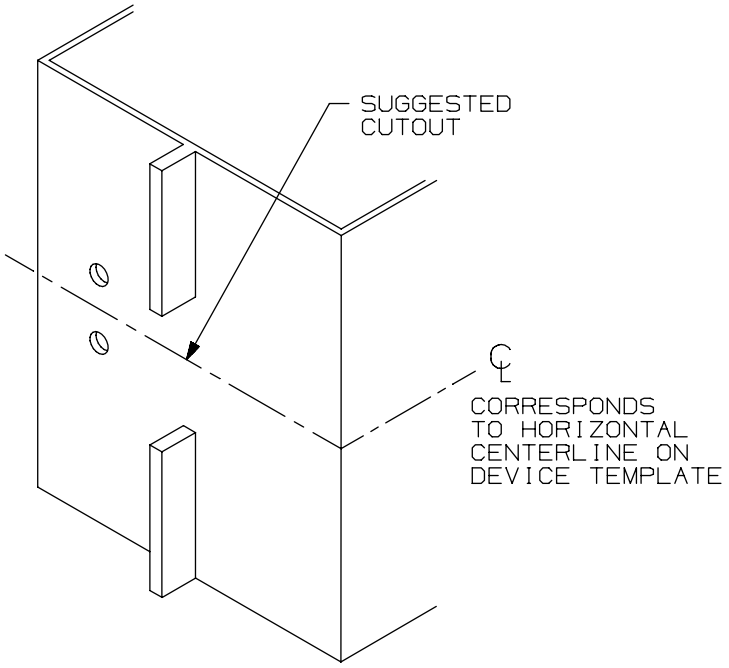

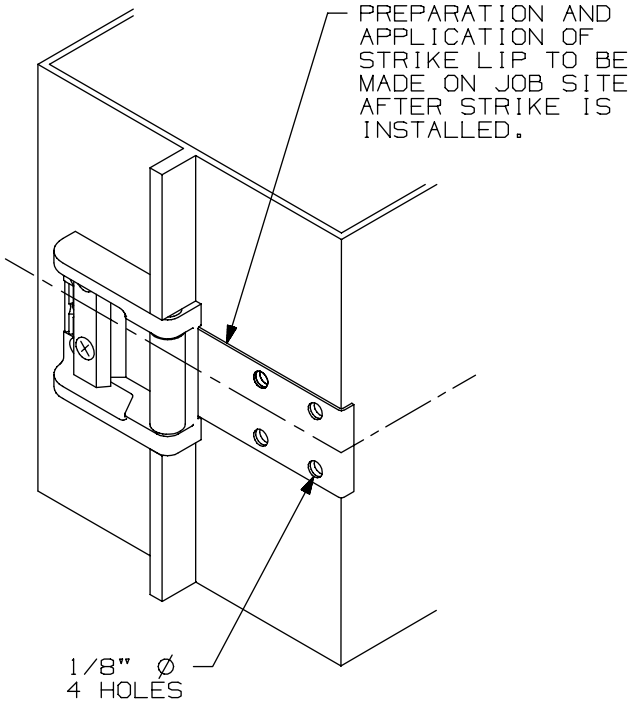

SINGLE DOOR INSTALLATION			
DEVICE	DIM "B"	DIM "C"	RECOMMENDED MIN STILE* (1)
33A/35A RIM	19/32"	1 9/16"	2"
44 RIM EO,DT,NL,TP	1 11/16"	1 9/16"	3 3/8"
44 RIM K	1 9/16"	1 9/16"	3 3/8"
55 RIM	17/32"	1 9/16"	1 3/4"
22 RIM	1 9/16"	1 9/16"	3 13/16"
88 RIM EO,DT,NL,TP	1 11/16"	1 9/16"	3 3/8"
44 RIM K,L	1 9/16"	1 9/16"	3 3/8"
98/99 RIM	1 9/16"	1 9/16"	3 13/16"

* CONSULT FACTORY FOR STILE WIDTHS LESS THAN
(1) MIN. RECOMMENDED TO ENSURE PROPER APPLICATION

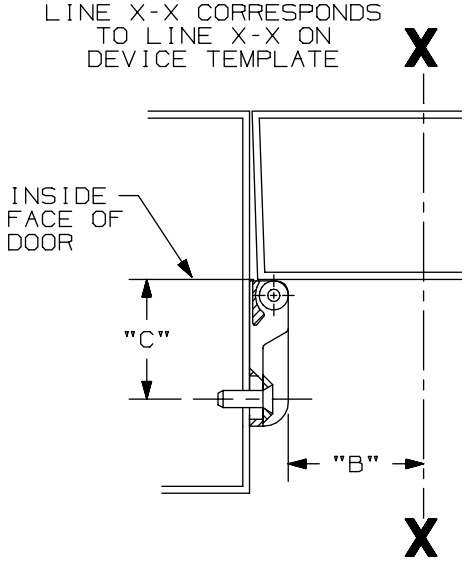

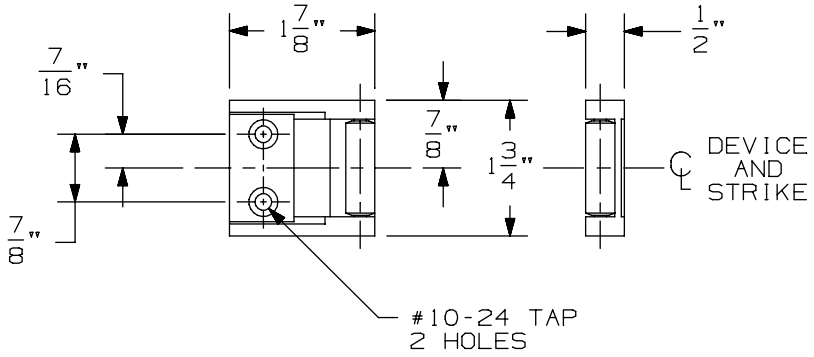

LHR APPLICATION SHOWN, RHR APPLICATION OPPOSITE

1439 Roller Strike

VON DUPRIN®

NOTES: SEE MASTER SHEET #10001 FOR SUGGESTED REINFORCING

TEMPLATE NUMBER: 30029_a

DATE: 05-23-13

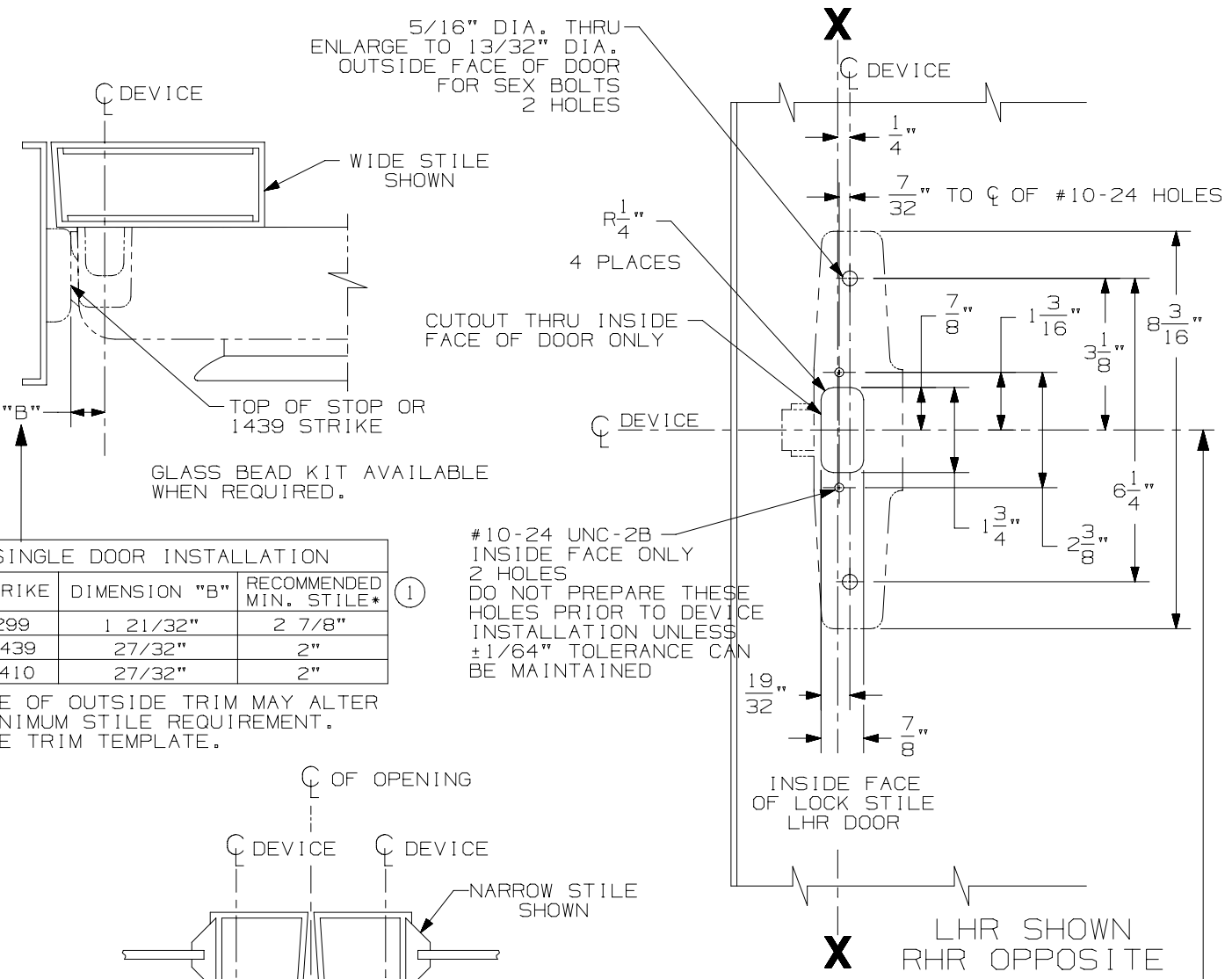

SINGLE DOOR INSTALLATION		
STRIKE	DIMENSION "B"	RECOMMENDED MIN. STILE* (1)
299	1 21/32"	2 7/8"
1439	27/32"	2"
1410	27/32"	2"

USE OF OUTSIDE TRIM MAY ALTER
MINIMUM STILE REQUIREMENT.
SEE TRIM TEMPLATE.

SINGLE DOOR OPENING
39 13/16" TO FINISHED FLOOR.

DOUBLE DOOR OPENING
WITH VON DUPRIN MULLION
39 11/16"

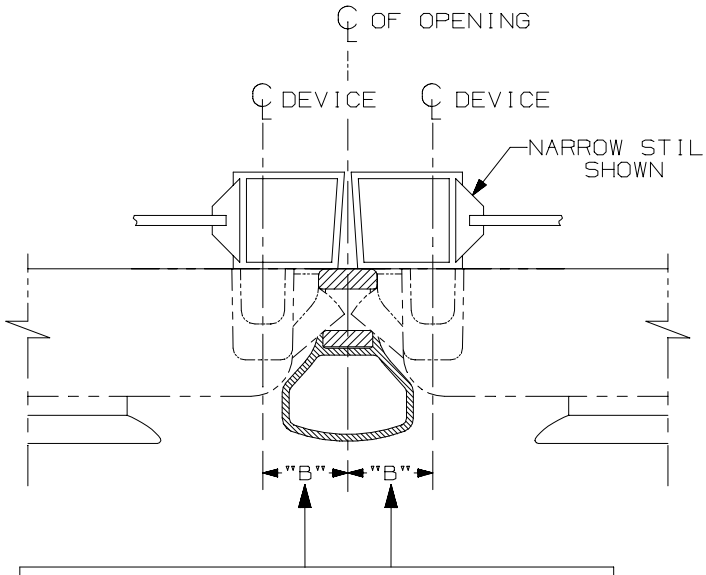

DOUBLE DOOR INSTALLATION WITH VON DUPRIN MULLIONS			
MULLION	STRIKE	DIMENSION "B"	RECOMMENDED MIN. STILE* (1)
4954	299	2 21/32"	3 3/8"
1654	1606	2 7/32"	2 15/16"
5654	299	2 3/16"	2 15/16"
5754	1408	1 3/8"	2"

USE OF OUTSIDE TRIM MAY ALTER
MINIMUM STILE REQUIREMENT.
SEE TRIM TEMPLATE.

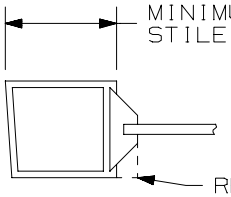

(1) * CONSULT FACTORY FOR STILE WIDTHS LESS THAN MIN. RECOMMENDED TO ENSURE PROPER APPLICATION

FOR OUTSIDE TRIM PREPARATION, WHEN REQUIRED, SEE TRIM TEMPLATE.

33/35A Series Rim Devices

VON DUPRIN®

NOTES: SEE MASTER SHEET #10001 FOR SUGGESTED REINFORCING

TEMPLATE NUMBER: 10048_a

DATE: 05-15-13

386NL & DT TRIM

NOTES: SEE MASTER SHEET #10001 FOR SUGGESTED REINFORCING

TEMPLATE NUMBER: 20008_C

DATE: 5-25-16

VON DUPRIN®

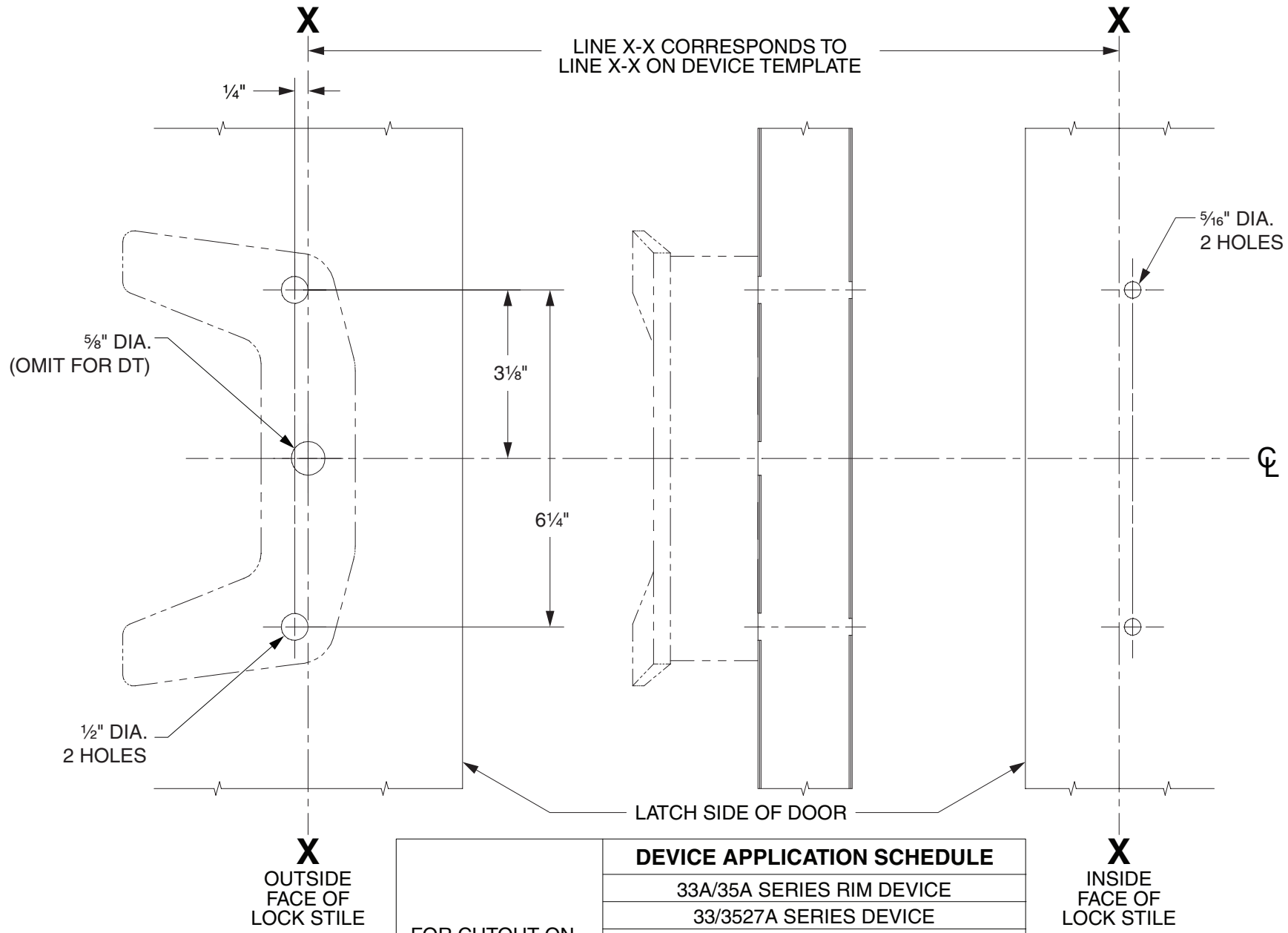

LHR SHOWN
RHR OPPOSITE

FOR CUTOUT ON INSIDE FACE OF DOOR, SEE DEVICE TEMPLATE	**DEVICE APPLICATION SCHEDULE**
	33A/35A SERIES RIM DEVICE
	33/3527A SERIES DEVICE
	33/3527A-F SERIES DEVICE
	33/3547A SERIES DEVICE
	33/3547A-F SERIES DEVICE
	33/3548A SERIES DEVICE
	33/3548A-F SERIES DEVICE
	33/3549A SERIES DEVICE
	33/3549A-F SERIES DEVICE

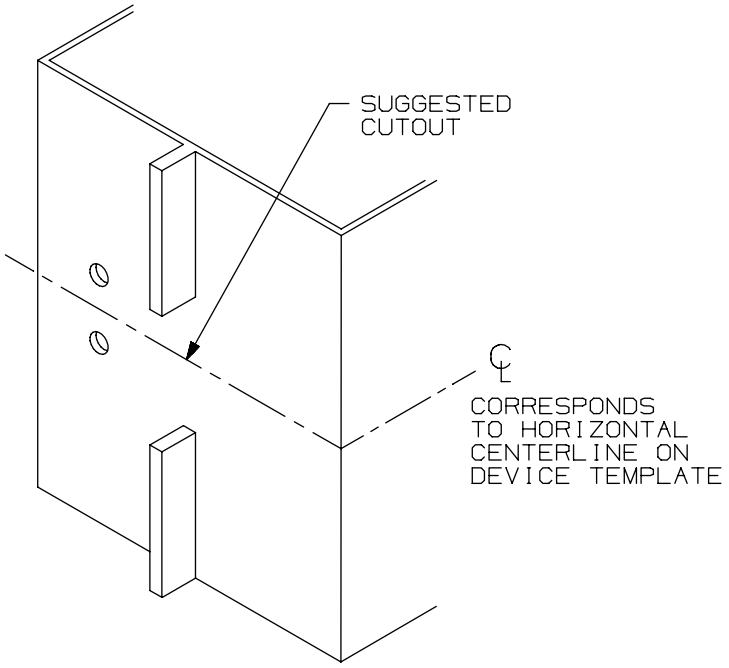

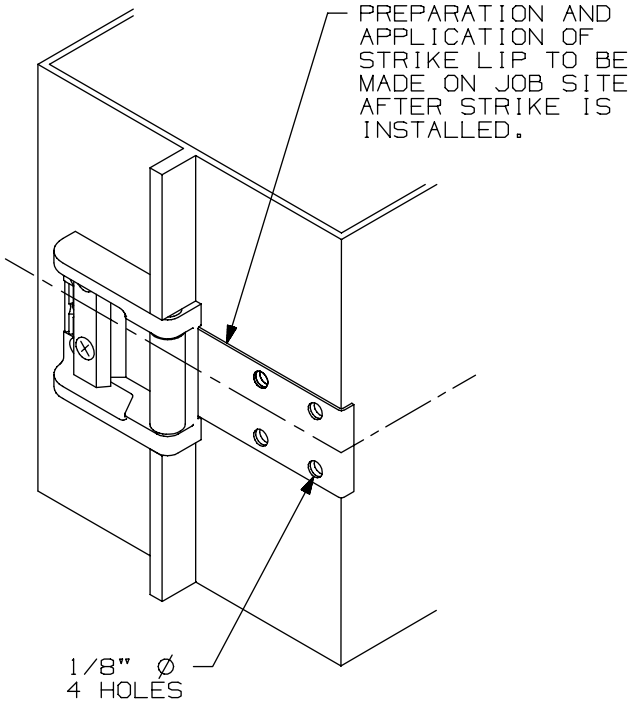

SINGLE DOOR INSTALLATION			
DEVICE	DIM "B"	DIM "C"	RECOMMENDED MIN STILE* (1)
33A/35A RIM	19/32"	1 9/16"	2"
44 RIM EO,DT,NL,TP	1 11/16"	1 9/16"	3 3/8"
44 RIM K	1 9/16"	1 9/16"	3 3/8"
55 RIM	17/32"	1 9/16"	1 3/4"
22 RIM	1 9/16"	1 9/16"	3 13/16"
88 RIM EO,DT,NL,TP	1 11/16"	1 9/16"	3 3/8"
44 RIM K,L	1 9/16"	1 9/16"	3 3/8"
98/99 RIM	1 9/16"	1 9/16"	3 13/16"

* CONSULT FACTORY FOR STILE WIDTHS LESS THAN
(1) MIN. RECOMMENDED TO ENSURE PROPER APPLICATION

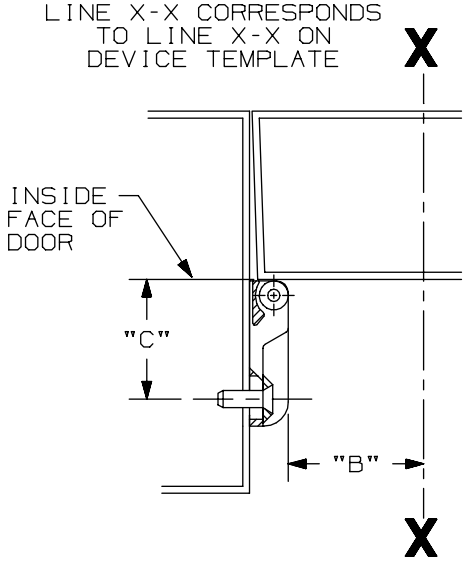

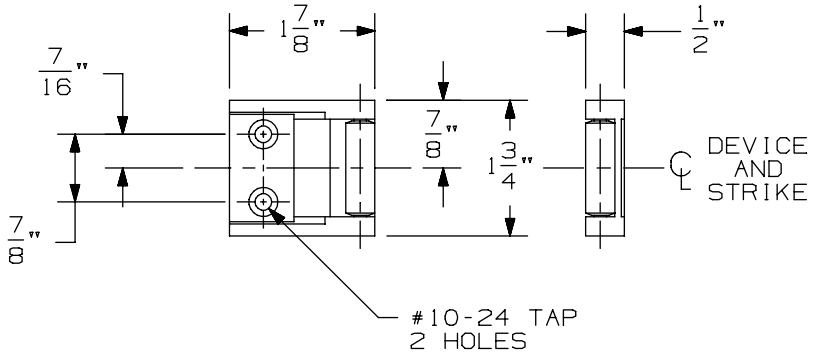

LHR APPLICATION SHOWN, RHR APPLICATION OPPOSITE

1439 Roller Strike

VON DUPRIN®

NOTES: SEE MASTER SHEET #10001 FOR SUGGESTED REINFORCING

TEMPLATE NUMBER: 30029_a

DATE: 05-23-13

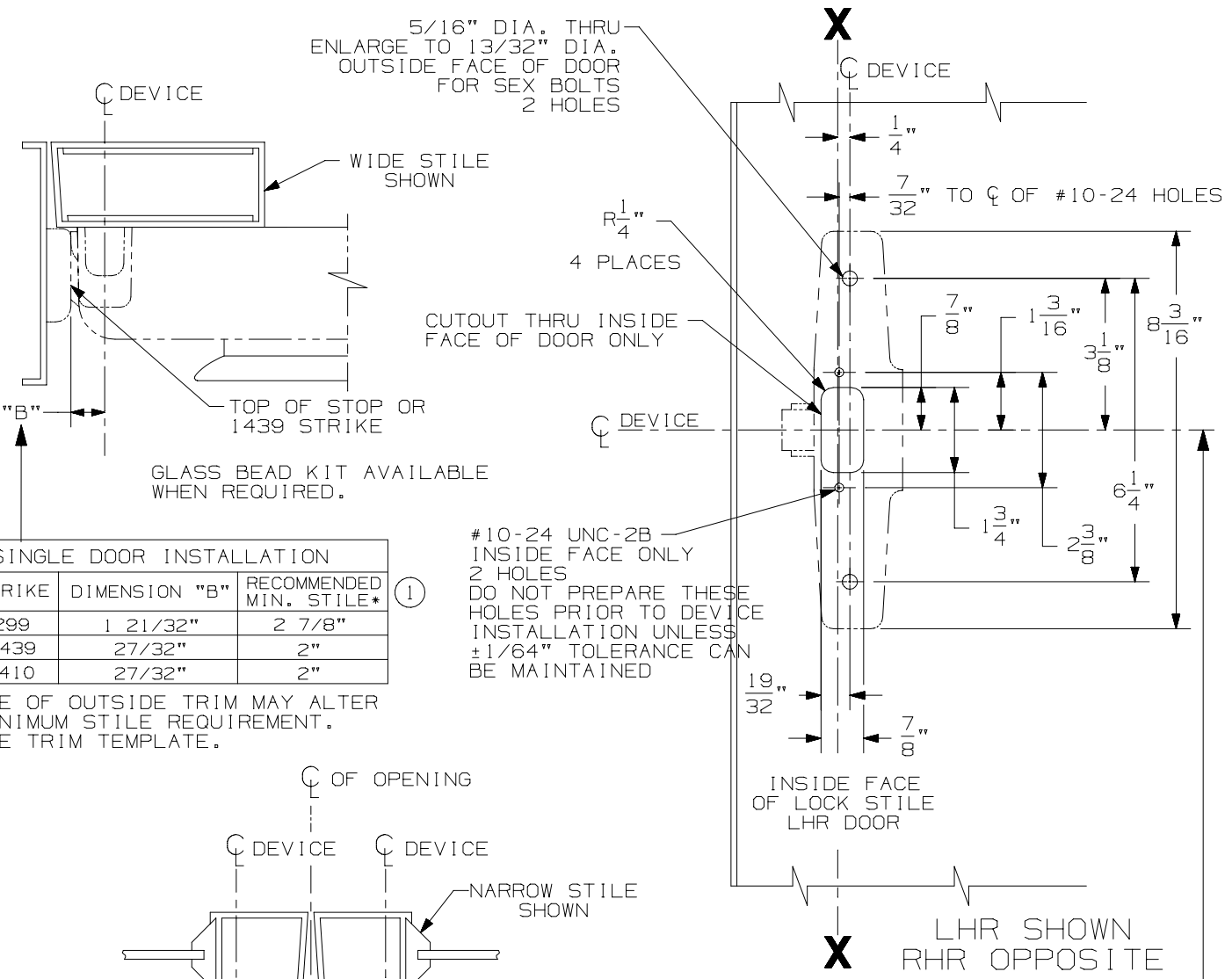

SINGLE DOOR INSTALLATION		
STRIKE	DIMENSION "B"	RECOMMENDED MIN. STILE* (1)
299	1 21/32"	2 7/8"
1439	27/32"	2"
1410	27/32"	2"

USE OF OUTSIDE TRIM MAY ALTER
MINIMUM STILE REQUIREMENT.
SEE TRIM TEMPLATE.

SINGLE DOOR OPENING
39 13/16" TO FINISHED FLOOR.

DOUBLE DOOR OPENING
WITH VON DUPRIN MULLION
39 11/16"

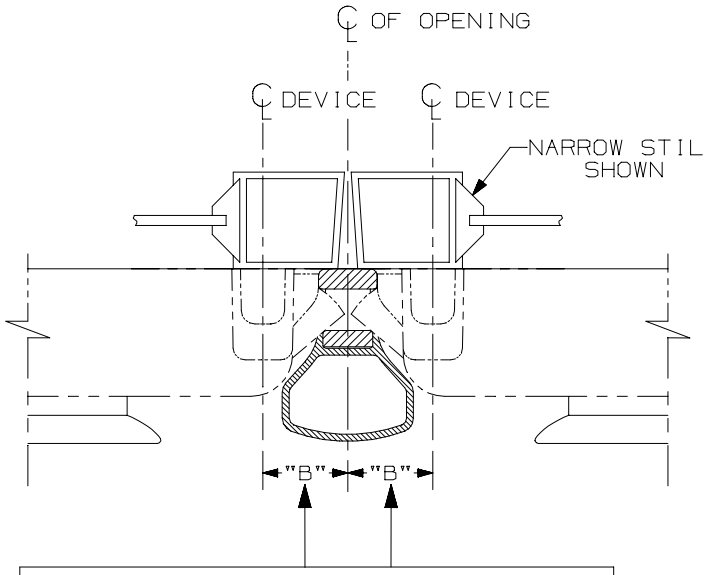

DOUBLE DOOR INSTALLATION WITH VON DUPRIN MULLIONS			
MULLION	STRIKE	DIMENSION "B"	RECOMMENDED MIN. STILE* (1)
4954	299	2 21/32"	3 3/8"
1654	1606	2 7/32"	2 15/16"
5654	299	2 3/16"	2 15/16"
5754	1408	1 3/8"	2"

USE OF OUTSIDE TRIM MAY ALTER
MINIMUM STILE REQUIREMENT.
SEE TRIM TEMPLATE.

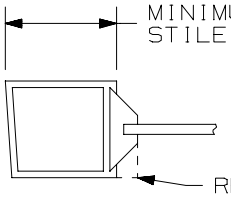

(1) * CONSULT FACTORY FOR STILE WIDTHS LESS THAN MIN. RECOMMENDED TO ENSURE PROPER APPLICATION

FOR OUTSIDE TRIM PREPARATION, WHEN REQUIRED, SEE TRIM TEMPLATE.

33/35A Series Rim Devices

VON DUPRIN®

NOTES: SEE MASTER SHEET #10001 FOR SUGGESTED REINFORCING

TEMPLATE NUMBER: 10048_a

DATE: 05-15-13

386NL & DT TRIM

NOTES: SEE MASTER SHEET #10001 FOR SUGGESTED REINFORCING

TEMPLATE NUMBER: 20008_C

DATE: 5-25-16

VON DUPRIN®

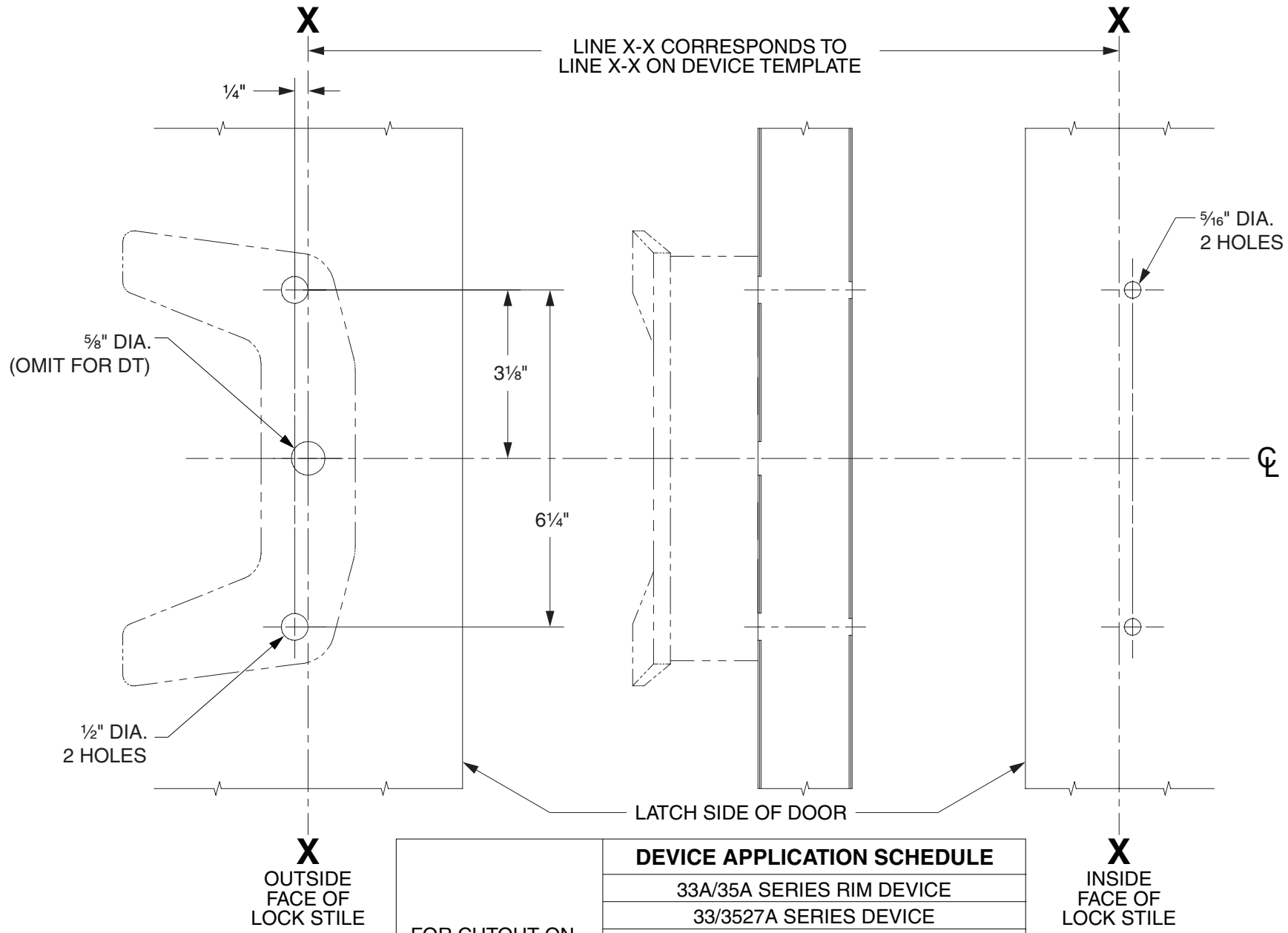

LHR SHOWN
RHR OPPOSITE

FOR CUTOUT ON INSIDE FACE OF DOOR, SEE DEVICE TEMPLATE	**DEVICE APPLICATION SCHEDULE**
	33A/35A SERIES RIM DEVICE
	33/3527A SERIES DEVICE
	33/3527A-F SERIES DEVICE
	33/3547A SERIES DEVICE
	33/3547A-F SERIES DEVICE
	33/3548A SERIES DEVICE
	33/3548A-F SERIES DEVICE
	33/3549A SERIES DEVICE
	33/3549A-F SERIES DEVICE

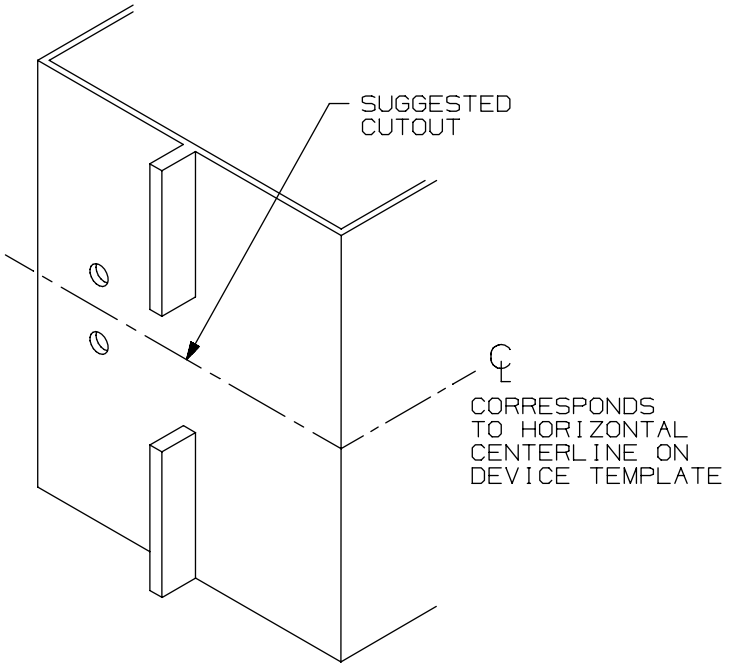

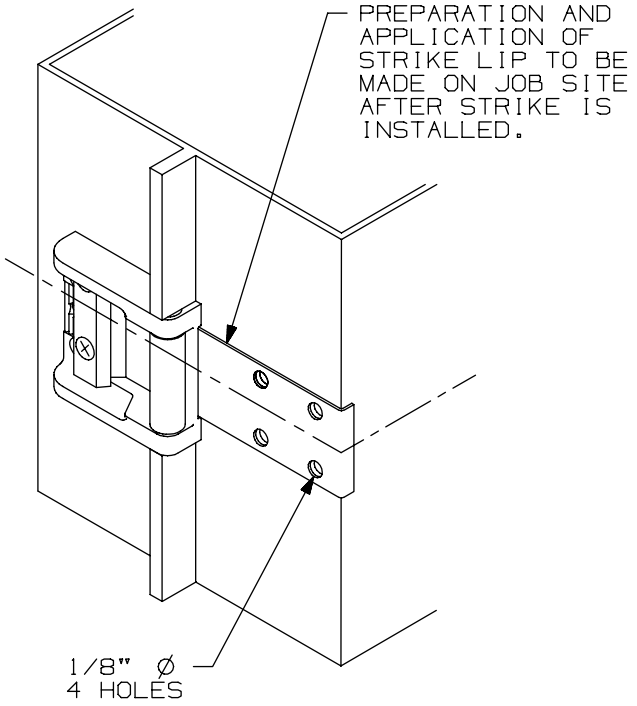

SINGLE DOOR INSTALLATION			
DEVICE	DIM "B"	DIM "C"	RECOMMENDED MIN STILE* (1)
33A/35A RIM	19/32"	1 9/16"	2"
44 RIM EO,DT,NL,TP	1 11/16"	1 9/16"	3 3/8"
44 RIM K	1 9/16"	1 9/16"	3 3/8"
55 RIM	17/32"	1 9/16"	1 3/4"
22 RIM	1 9/16"	1 9/16"	3 13/16"
88 RIM EO,DT,NL,TP	1 11/16"	1 9/16"	3 3/8"
44 RIM K,L	1 9/16"	1 9/16"	3 3/8"
98/99 RIM	1 9/16"	1 9/16"	3 13/16"

* CONSULT FACTORY FOR STILE WIDTHS LESS THAN
(1) MIN. RECOMMENDED TO ENSURE PROPER APPLICATION

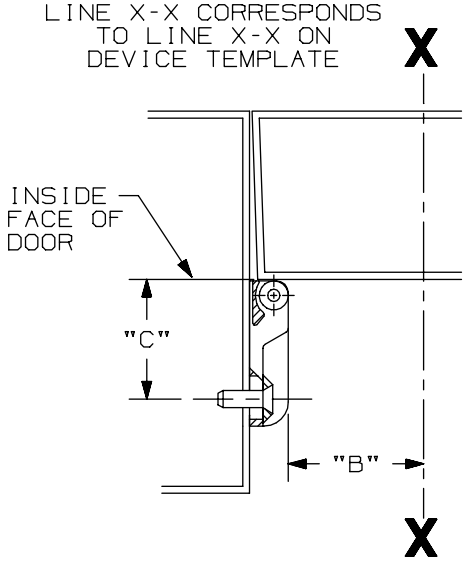

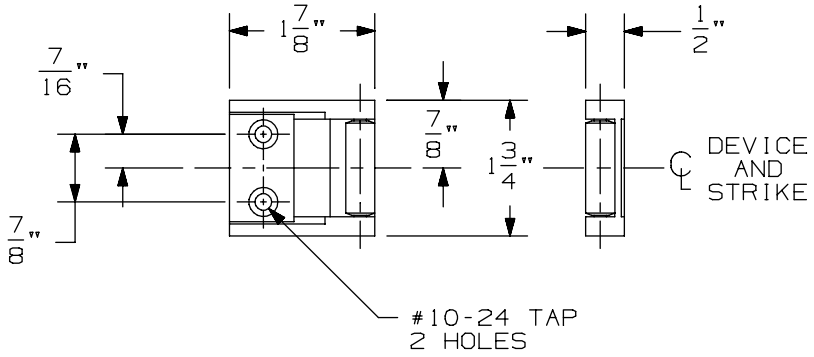

LHR APPLICATION SHOWN, RHR APPLICATION OPPOSITE

1439 Roller Strike

VON DUPRIN®

NOTES: SEE MASTER SHEET #10001 FOR SUGGESTED REINFORCING

TEMPLATE NUMBER: 30029_a

DATE: 05-23-13

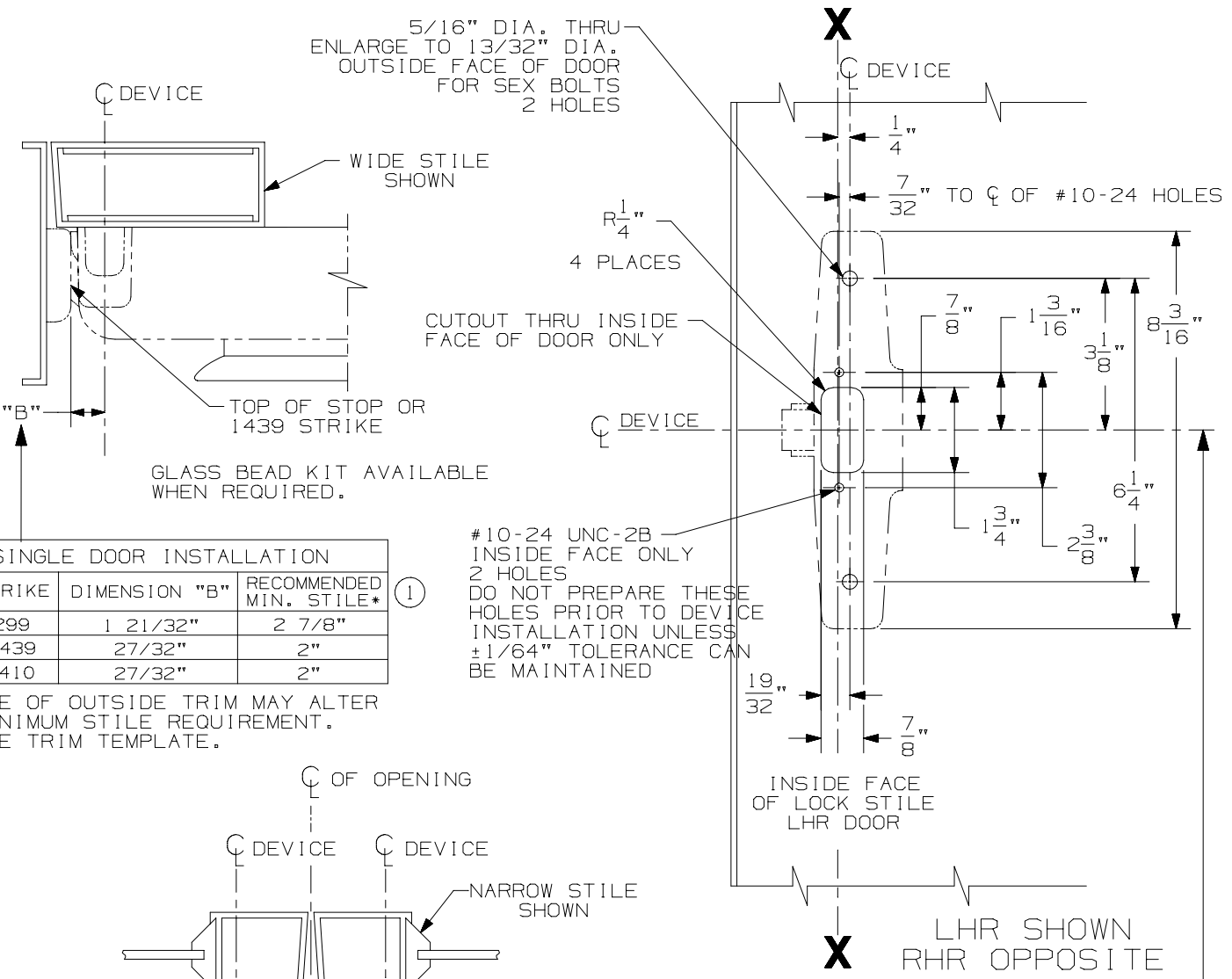

SINGLE DOOR INSTALLATION		
STRIKE	DIMENSION "B"	RECOMMENDED MIN. STILE* (1)
299	1 21/32"	2 7/8"
1439	27/32"	2"
1410	27/32"	2"

USE OF OUTSIDE TRIM MAY ALTER
MINIMUM STILE REQUIREMENT.
SEE TRIM TEMPLATE.

SINGLE DOOR OPENING
39 13/16" TO FINISHED FLOOR.

DOUBLE DOOR OPENING
WITH VON DUPRIN MULLION
39 11/16"

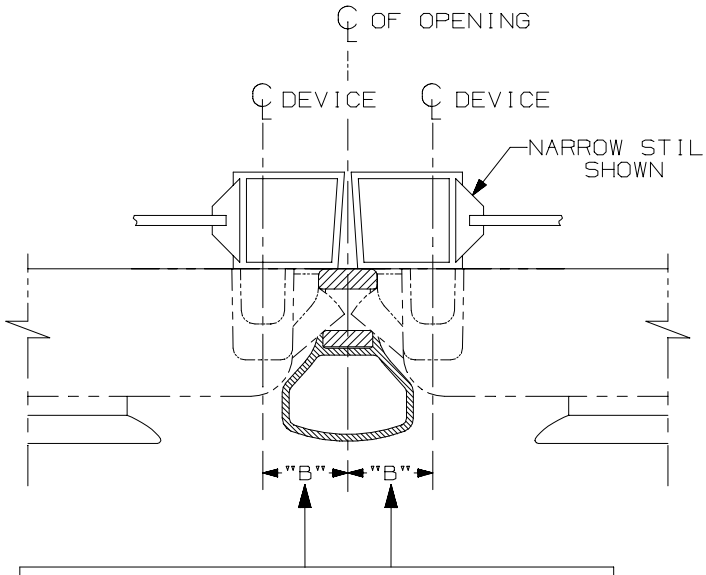

DOUBLE DOOR INSTALLATION WITH VON DUPRIN MULLIONS			
MULLION	STRIKE	DIMENSION "B"	RECOMMENDED MIN. STILE* (1)
4954	299	2 21/32"	3 3/8"
1654	1606	2 7/32"	2 15/16"
5654	299	2 3/16"	2 15/16"
5754	1408	1 3/8"	2"

USE OF OUTSIDE TRIM MAY ALTER
MINIMUM STILE REQUIREMENT.
SEE TRIM TEMPLATE.

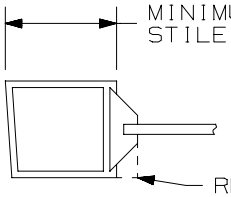

(1) * CONSULT FACTORY FOR STILE WIDTHS LESS THAN MIN. RECOMMENDED TO ENSURE PROPER APPLICATION

FOR OUTSIDE TRIM PREPARATION, WHEN REQUIRED, SEE TRIM TEMPLATE.

33/35A Series Rim Devices

VON DUPRIN®

NOTES: SEE MASTER SHEET #10001 FOR SUGGESTED REINFORCING

TEMPLATE NUMBER: 10048_a

DATE: 05-15-13

388NL CYLINDER CONTROL

NOTES: SEE MASTER SHEET #10001 FOR SUGGESTED REINFORCING

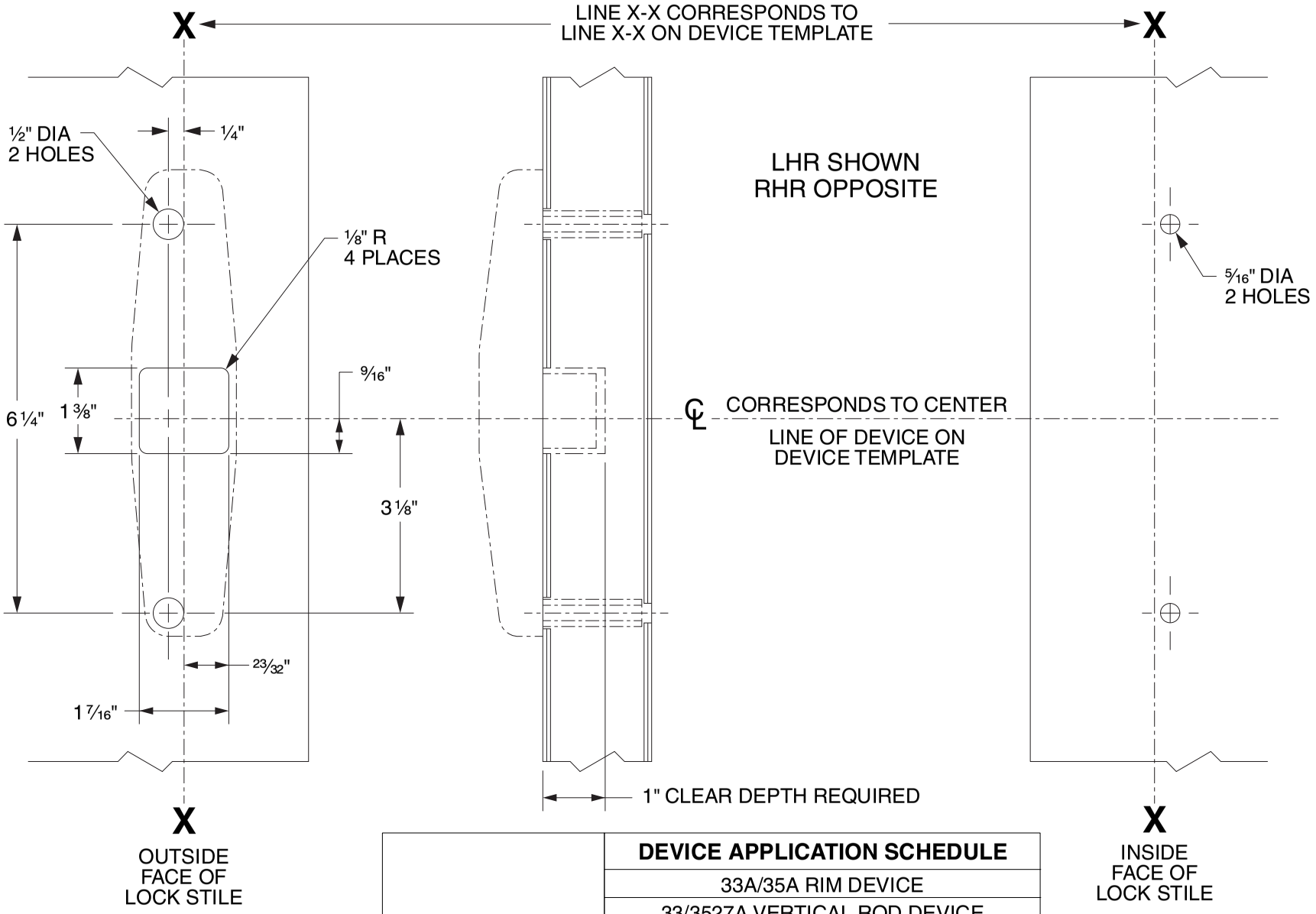

	DEVICE APPLICATION SCHEDULE
FOR CUTOUT ON INSIDE FACE OF DOOR SEE DEVICE TEMPLATE	33A/35A RIM DEVICE
	33/3527A VERTICAL ROD DEVICE
	33/3527A-F VERTICAL ROD DEVICE
	33/3547A VERTICAL ROD DEVICE
	33/3547A-F VERTICAL ROD DEVICE
	33/3548A VERTICAL ROD DEVICE
	33/3548A-F VERTICAL ROD DEVICE
	33/3549A VERTICAL ROD DEVICE
	33/3549A-F VERTICAL ROD DEVICE

VON DUPRIN®

TEMPLATE NUMBER: 40079_d

DATE: 05-31-13

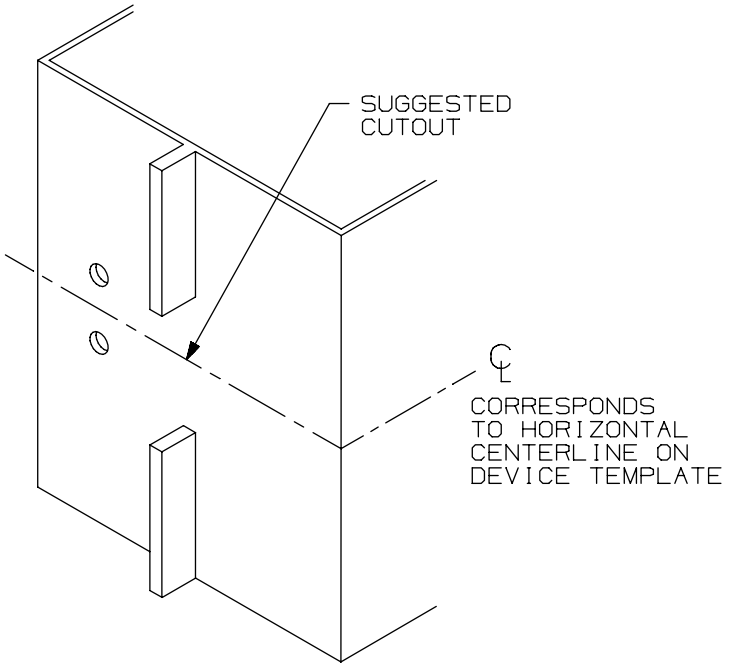

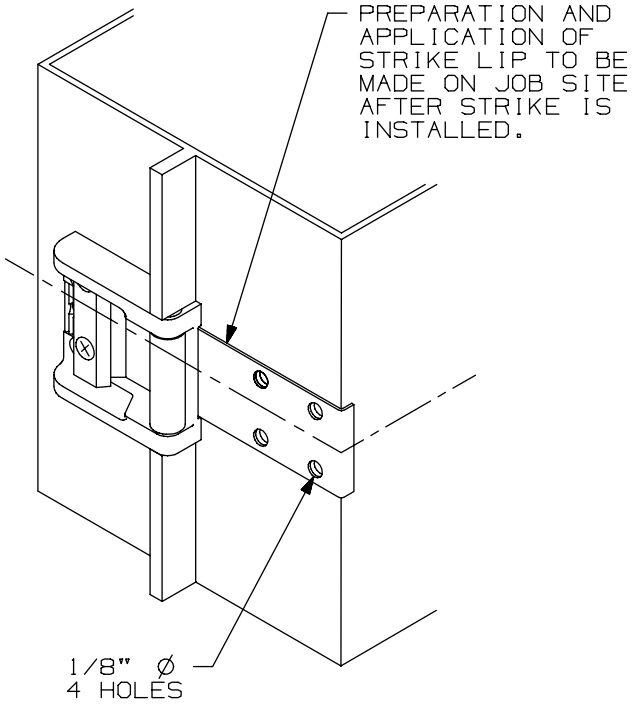

SINGLE DOOR INSTALLATION			
DEVICE	DIM "B"	DIM "C"	RECOMMENDED MIN STILE* (1)
33A/35A RIM	19/32"	1 9/16"	2"
44 RIM EO,DT,NL,TP	1 11/16"	1 9/16"	3 3/8"
44 RIM K	1 9/16"	1 9/16"	3 3/8"
55 RIM	17/32"	1 9/16"	1 3/4"
22 RIM	1 9/16"	1 9/16"	3 13/16"
88 RIM EO,DT,NL,TP	1 11/16"	1 9/16"	3 3/8"
44 RIM K,L	1 9/16"	1 9/16"	3 3/8"
98/99 RIM	1 9/16"	1 9/16"	3 13/16"

* CONSULT FACTORY FOR STILE WIDTHS LESS THAN
(1) MIN. RECOMMENDED TO ENSURE PROPER APPLICATION

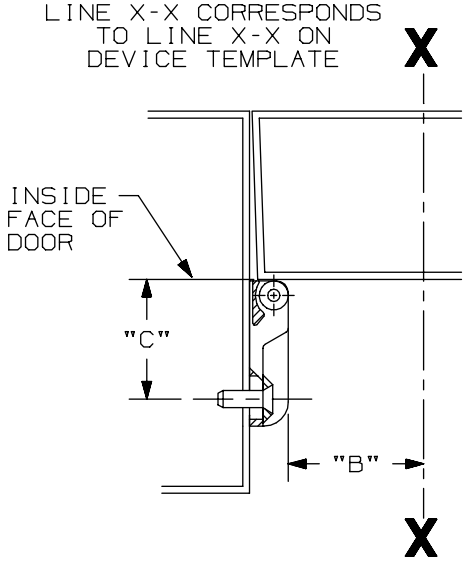

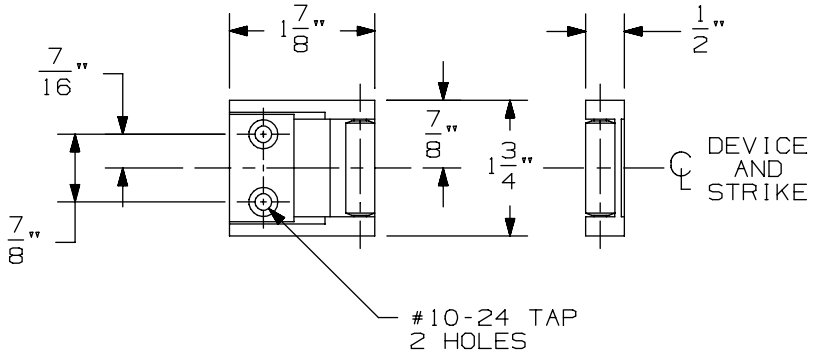

LHR APPLICATION SHOWN, RHR APPLICATION OPPOSITE

1439 Roller Strike

VON DUPRIN®

NOTES: SEE MASTER SHEET #10001 FOR SUGGESTED REINFORCING

TEMPLATE NUMBER: 30029_a

DATE: 05-23-13

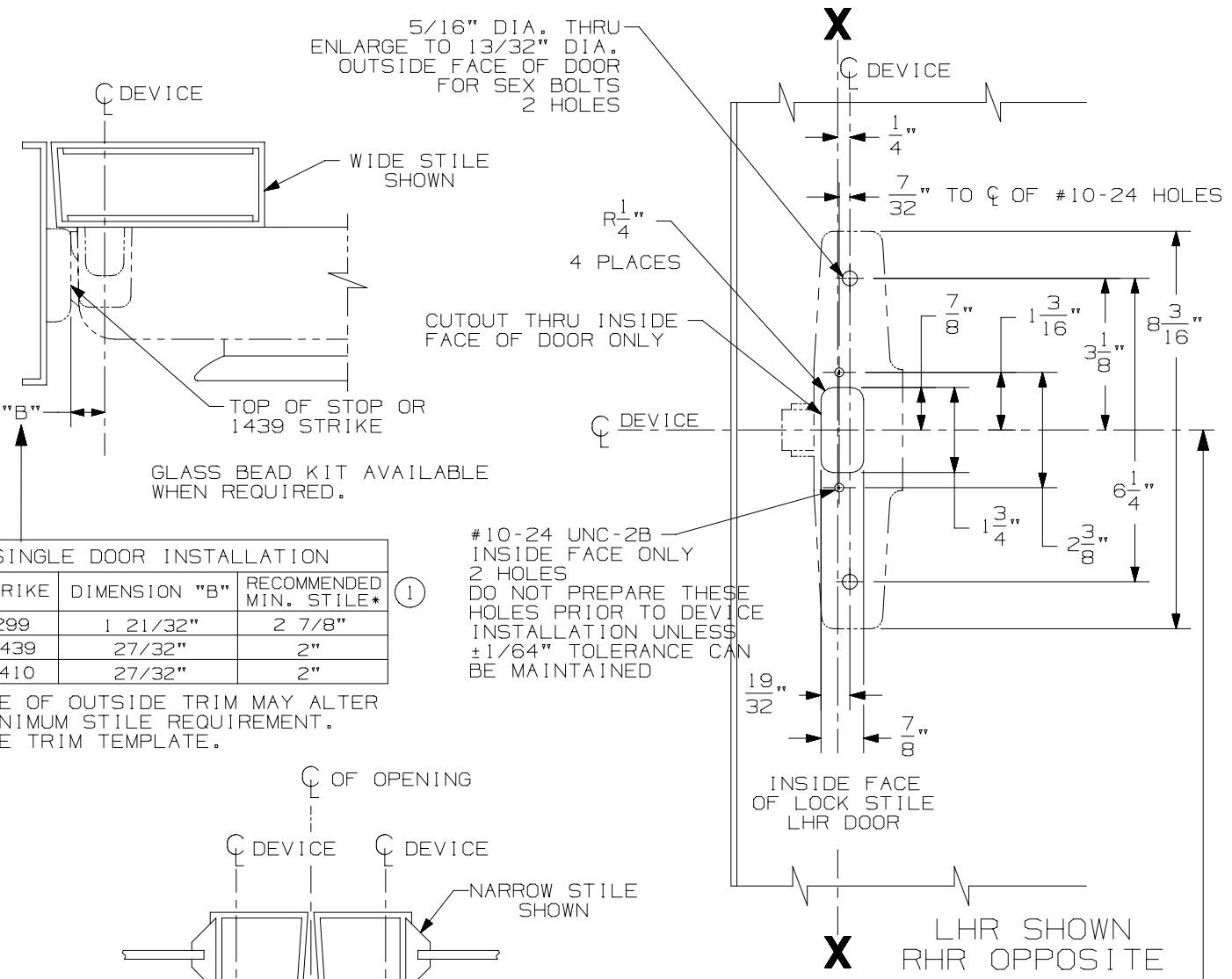

SINGLE DOOR INSTALLATION		
STRIKE	DIMENSION "B"	RECOMMENDED MIN. STILE* (1)
299	1 21/32"	2 7/8"
1439	27/32"	2"
1410	27/32"	2"

USE OF OUTSIDE TRIM MAY ALTER
MINIMUM STILE REQUIREMENT.
SEE TRIM TEMPLATE.

SINGLE DOOR OPENING
39 13/16" TO FINISHED FLOOR.

DOUBLE DOOR OPENING
WITH VON DUPRIN MULLION
39 11/16"

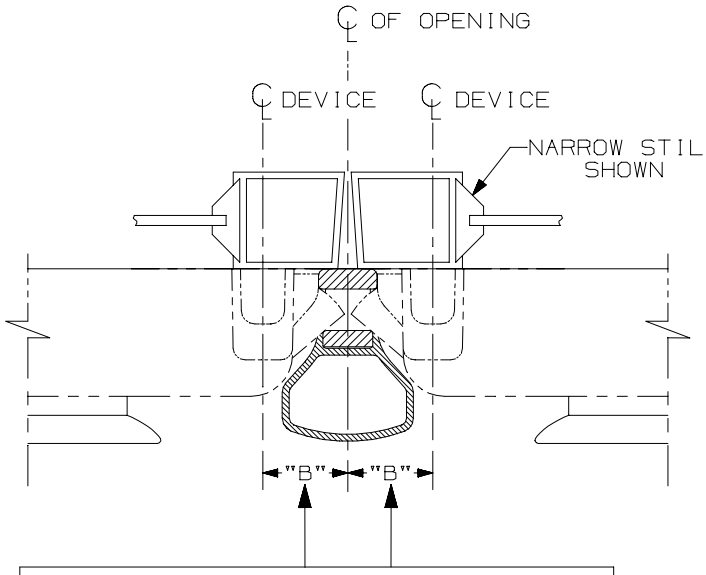

DOUBLE DOOR INSTALLATION WITH VON DUPRIN MULLIONS			
MULLION	STRIKE	DIMENSION "B"	RECOMMENDED MIN. STILE* (1)
4954	299	2 21/32"	3 3/8"
1654	1606	2 7/32"	2 15/16"
5654	299	2 3/16"	2 15/16"
5754	1408	1 3/8"	2"

USE OF OUTSIDE TRIM MAY ALTER
MINIMUM STILE REQUIREMENT.
SEE TRIM TEMPLATE.

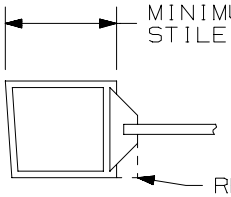

(1) * CONSULT FACTORY FOR STILE WIDTHS LESS THAN MIN. RECOMMENDED TO ENSURE PROPER APPLICATION

FOR OUTSIDE TRIM PREPARATION, WHEN REQUIRED, SEE TRIM TEMPLATE.

33/35A Series Rim Devices

VON DUPRIN®

NOTES: SEE MASTER SHEET #10001 FOR SUGGESTED REINFORCING

TEMPLATE NUMBER: 10048_a

DATE: 05-15-13

360T, 360L, 360T-BE, 360L-BE CONTROL

NOTES: SEE MASTER SHEET #10001 FOR SUGGESTED REINFORCING

TEMPLATE NUMBER: 40080_e

DATE: 04-06-15

VON DUPRIN®

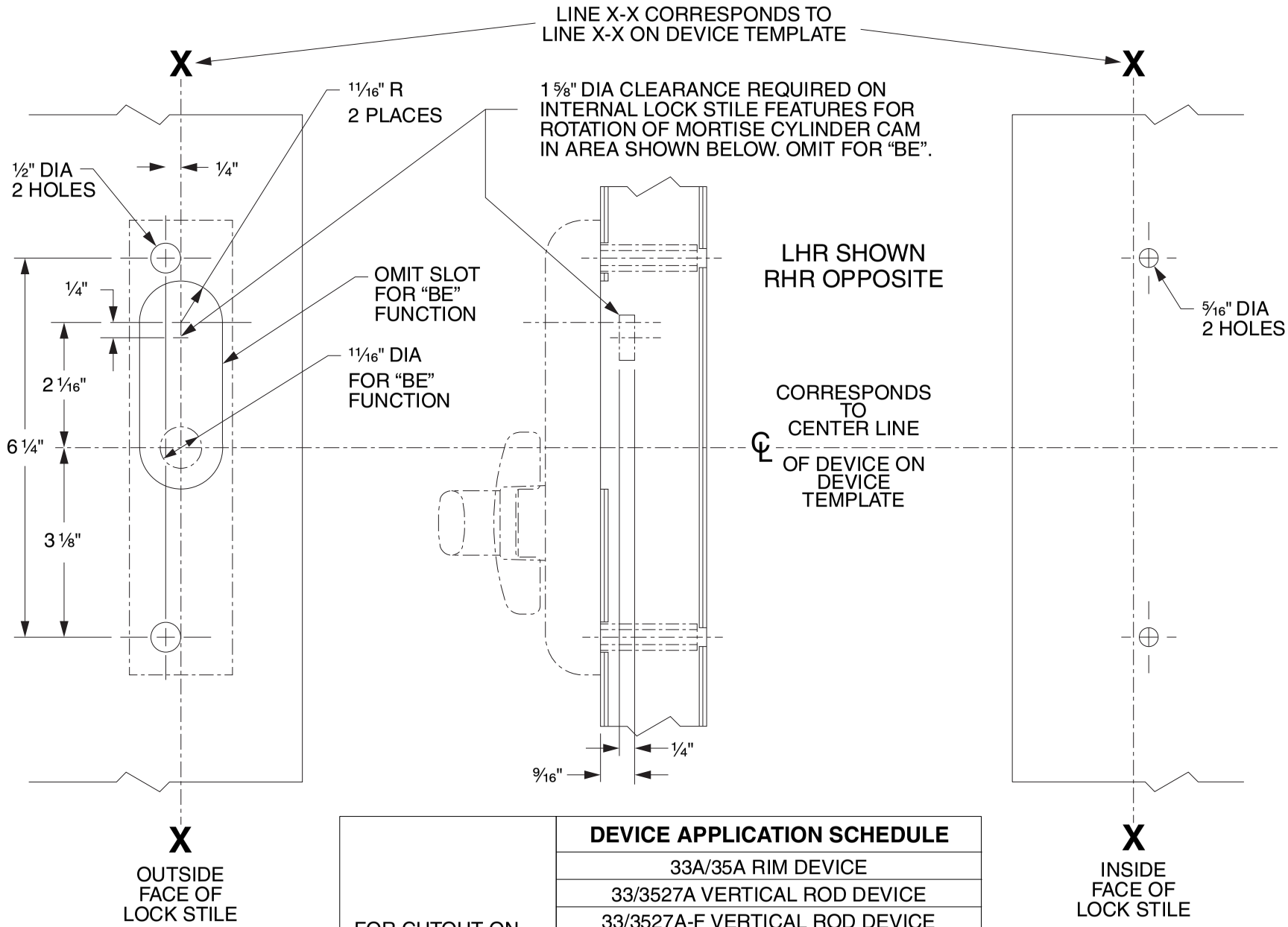

	DEVICE APPLICATION SCHEDULE
FOR CUTOUT ON INSIDE FACE OF DOOR SEE DEVICE TEMPLATE	33A/35A RIM DEVICE
	33/3527A VERTICAL ROD DEVICE
	33/3527A-F VERTICAL ROD DEVICE
	33/3547A VERTICAL ROD DEVICE
	33/3547A-F VERTICAL ROD DEVICE
	33/3548A VERTICAL ROD DEVICE
	33/3548A-F VERTICAL ROD DEVICE
	33/3549A VERTICAL CABLE DEVICE
	33/3549A-F VERTICAL CABLE DEVICE

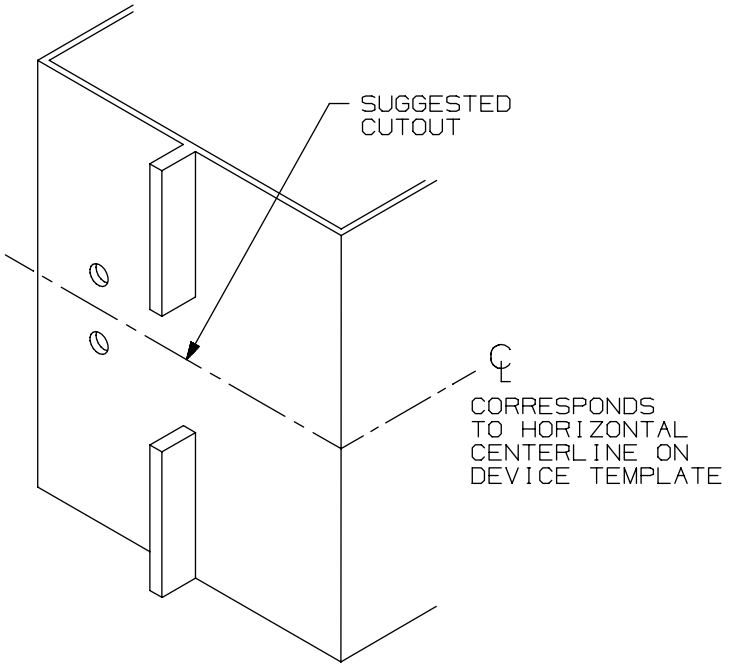

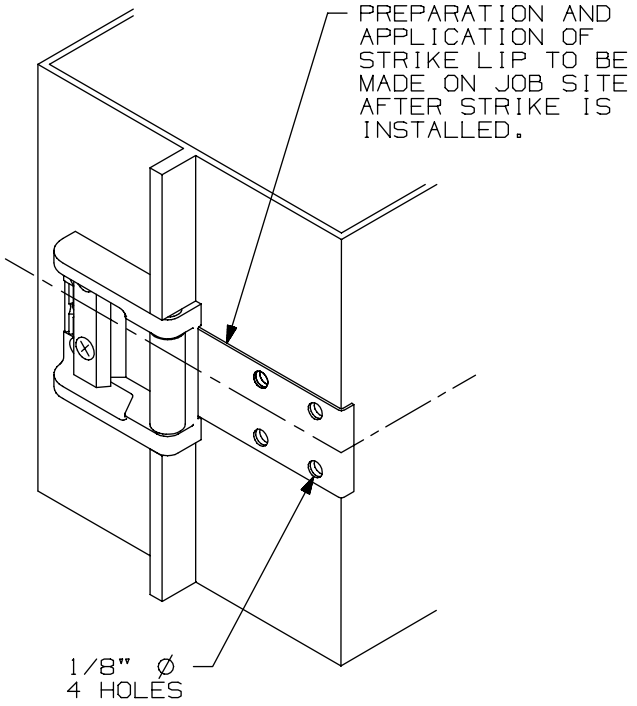

SINGLE DOOR INSTALLATION			
DEVICE	DIM "B"	DIM "C"	RECOMMENDED MIN STILE* (1)
33A/35A RIM	19/32"	1 9/16"	2"
44 RIM EO,DT,NL,TP	1 11/16"	1 9/16"	3 3/8"
44 RIM K	1 9/16"	1 9/16"	3 3/8"
55 RIM	17/32"	1 9/16"	1 3/4"
22 RIM	1 9/16"	1 9/16"	3 13/16"
88 RIM EO,DT,NL,TP	1 11/16"	1 9/16"	3 3/8"
44 RIM K,L	1 9/16"	1 9/16"	3 3/8"
98/99 RIM	1 9/16"	1 9/16"	3 13/16"

* CONSULT FACTORY FOR STILE WIDTHS LESS THAN
(1) MIN. RECOMMENDED TO ENSURE PROPER APPLICATION

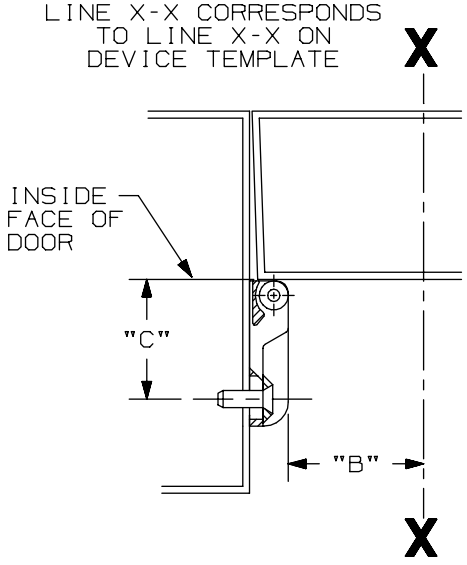

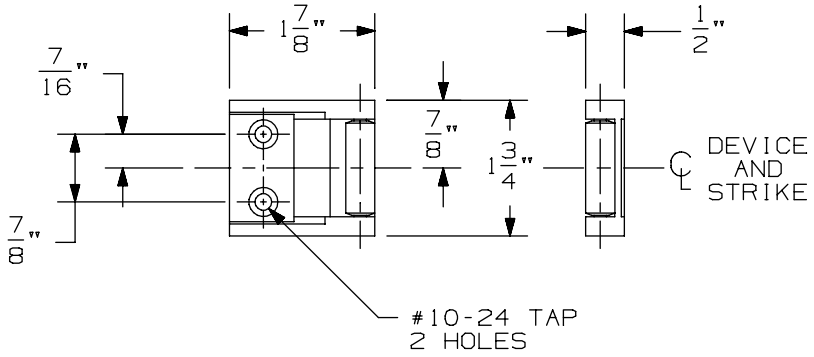

LHR APPLICATION SHOWN, RHR APPLICATION OPPOSITE

1439 Roller Strike

VON DUPRIN®

NOTES: SEE MASTER SHEET #10001 FOR SUGGESTED REINFORCING

TEMPLATE NUMBER: 30029_a

DATE: 05-23-13

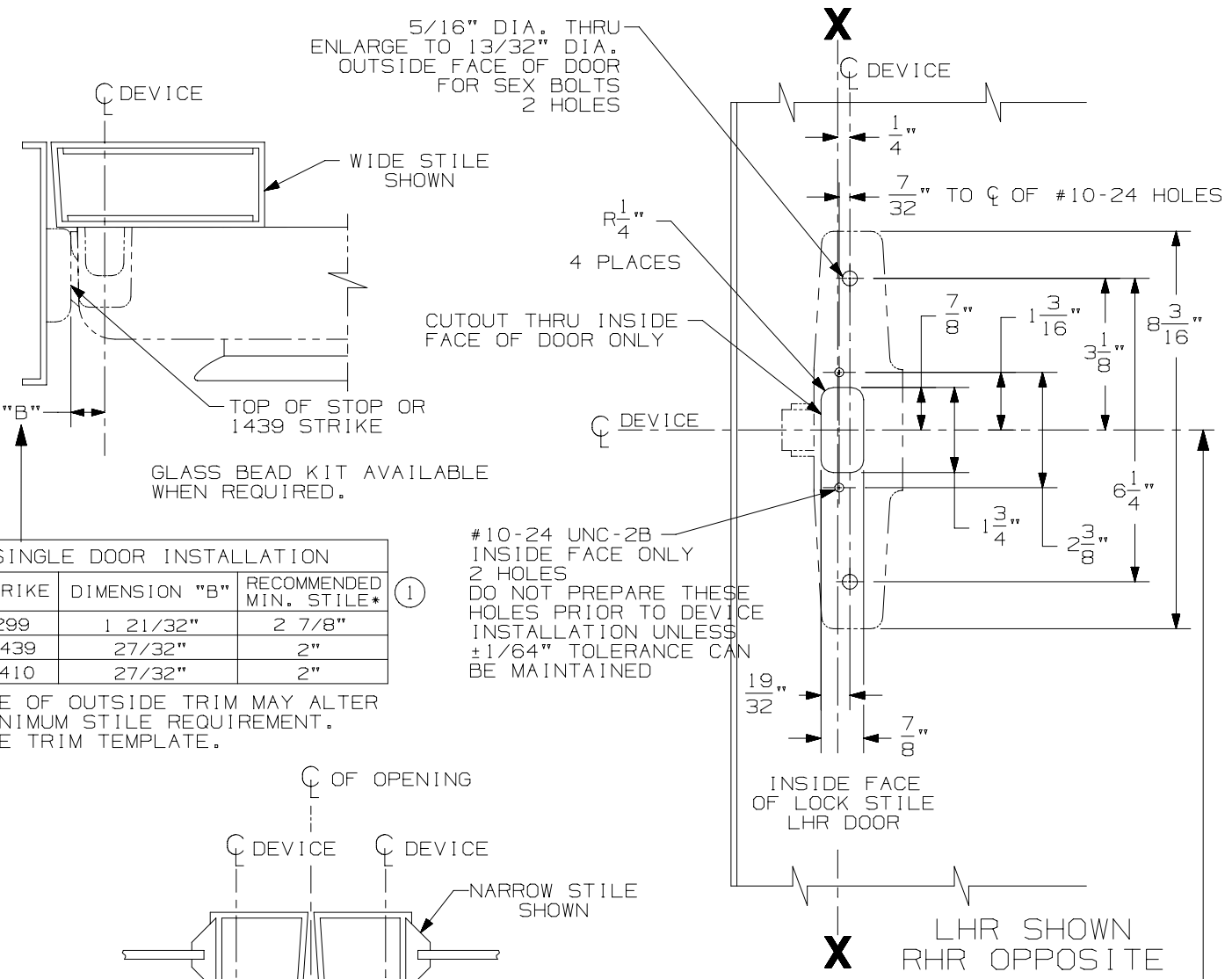

SINGLE DOOR INSTALLATION		
STRIKE	DIMENSION "B"	RECOMMENDED MIN. STILE* (1)
299	1 21/32"	2 7/8"
1439	27/32"	2"
1410	27/32"	2"

USE OF OUTSIDE TRIM MAY ALTER
MINIMUM STILE REQUIREMENT.
SEE TRIM TEMPLATE.

SINGLE DOOR OPENING
39 13/16" TO FINISHED FLOOR.

DOUBLE DOOR OPENING
WITH VON DUPRIN MULLION
39 11/16"

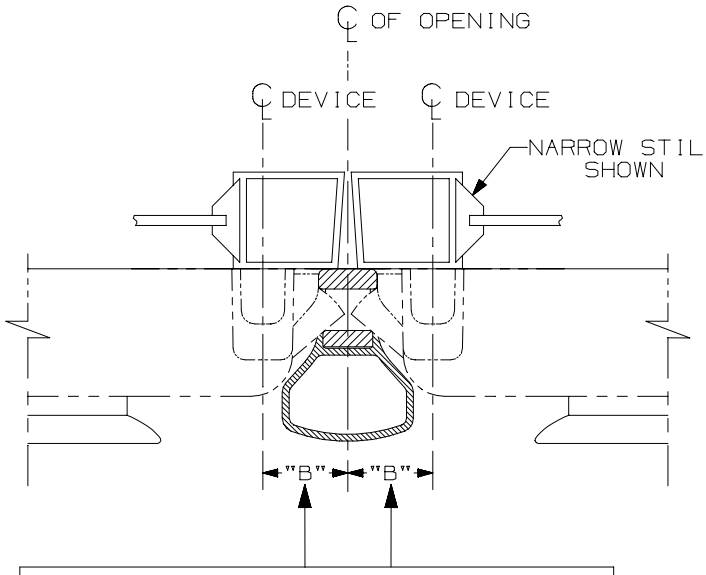

DOUBLE DOOR INSTALLATION WITH VON DUPRIN MULLIONS			
MULLION	STRIKE	DIMENSION "B"	RECOMMENDED MIN. STILE* (1)
4954	299	2 21/32"	3 3/8"
1654	1606	2 7/32"	2 15/16"
5654	299	2 3/16"	2 15/16"
5754	1408	1 3/8"	2"

USE OF OUTSIDE TRIM MAY ALTER
MINIMUM STILE REQUIREMENT.
SEE TRIM TEMPLATE.

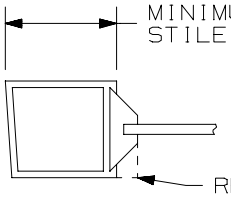

(1) * CONSULT FACTORY FOR STILE WIDTHS LESS THAN MIN. RECOMMENDED TO ENSURE PROPER APPLICATION

FOR OUTSIDE TRIM PREPARATION, WHEN REQUIRED, SEE TRIM TEMPLATE.

33/35A Series Rim Devices

VON DUPRIN®

NOTES: SEE MASTER SHEET #10001 FOR SUGGESTED REINFORCING

TEMPLATE NUMBER: 10048_a

DATE: 05-15-13

360T, 360L, 360T-BE, 360L-BE CONTROL

NOTES: SEE MASTER SHEET #10001 FOR SUGGESTED REINFORCING

TEMPLATE NUMBER: 40080_e

DATE: 04-06-15

VON DUPRIN®

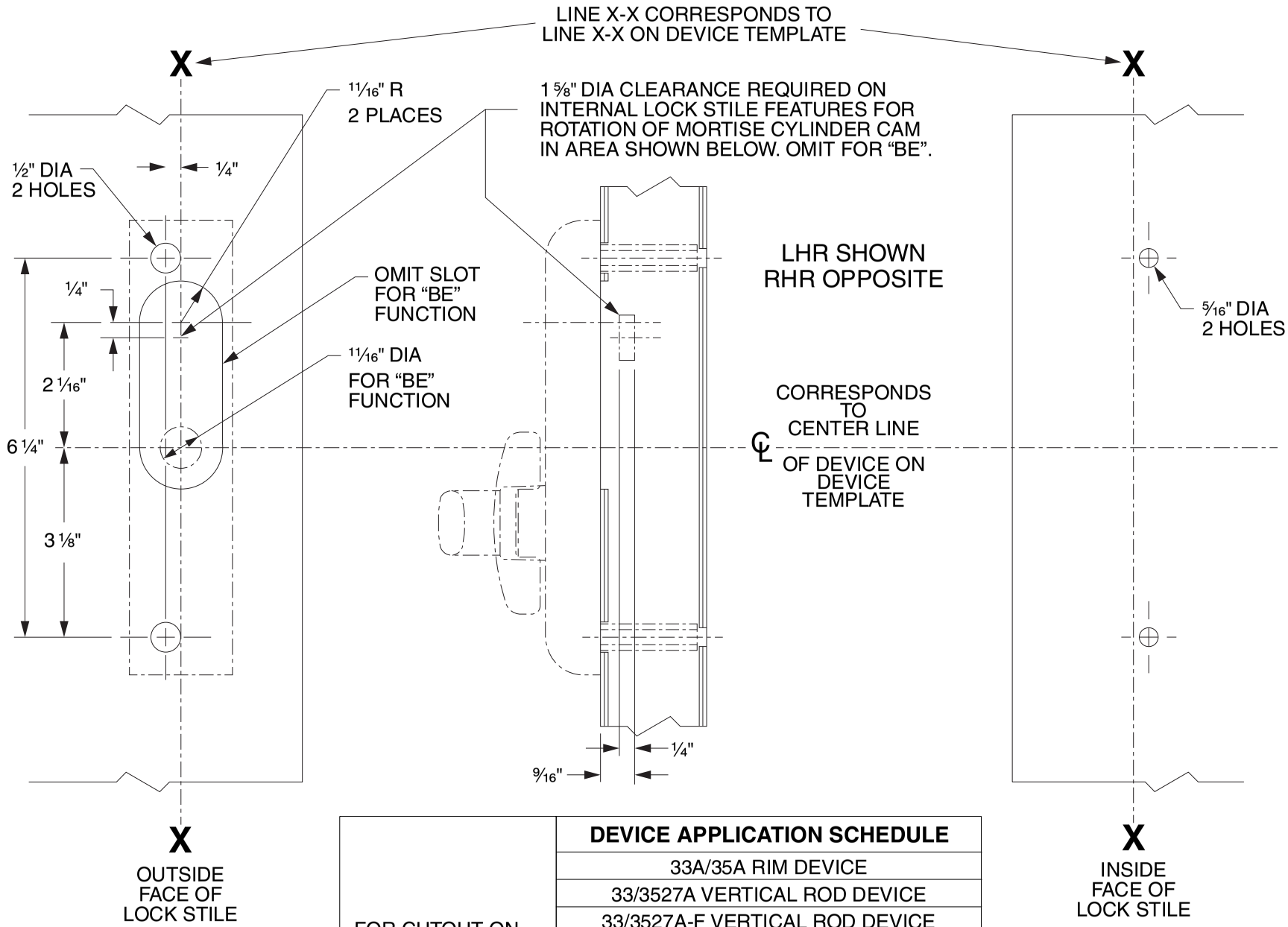

	DEVICE APPLICATION SCHEDULE
FOR CUTOUT ON INSIDE FACE OF DOOR SEE DEVICE TEMPLATE	33A/35A RIM DEVICE
	33/3527A VERTICAL ROD DEVICE
	33/3527A-F VERTICAL ROD DEVICE
	33/3547A VERTICAL ROD DEVICE
	33/3547A-F VERTICAL ROD DEVICE
	33/3548A VERTICAL ROD DEVICE
	33/3548A-F VERTICAL ROD DEVICE
	33/3549A VERTICAL CABLE DEVICE
	33/3549A-F VERTICAL CABLE DEVICE

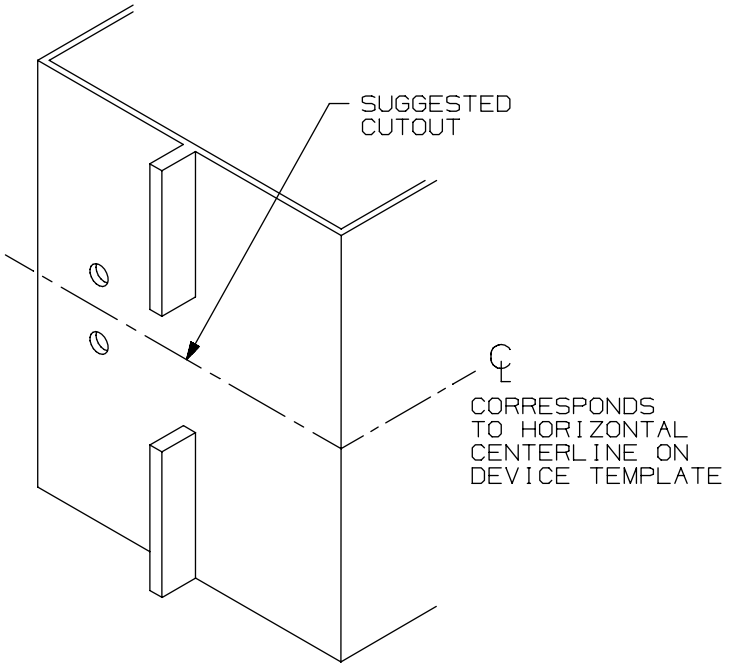

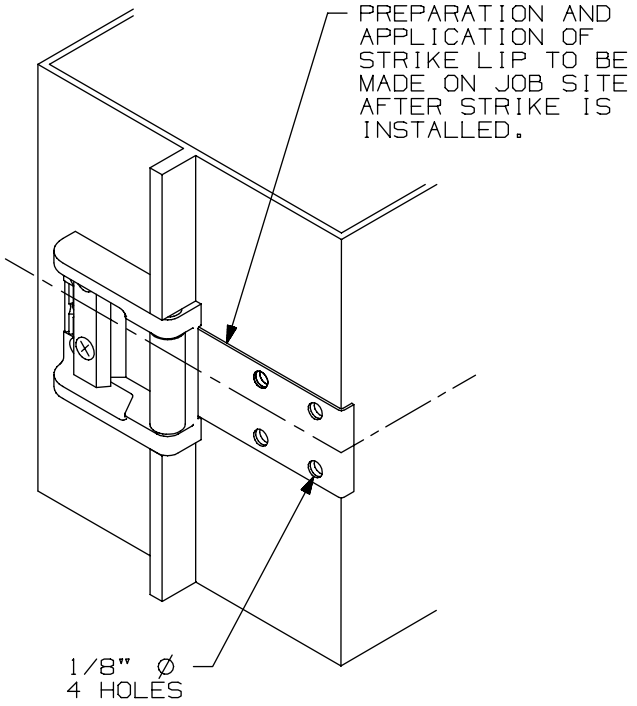

SINGLE DOOR INSTALLATION			
DEVICE	DIM "B"	DIM "C"	RECOMMENDED MIN STILE* (1)
33A/35A RIM	19/32"	1 9/16"	2"
44 RIM EO,DT,NL,TP	1 11/16"	1 9/16"	3 3/8"
44 RIM K	1 9/16"	1 9/16"	3 3/8"
55 RIM	17/32"	1 9/16"	1 3/4"
22 RIM	1 9/16"	1 9/16"	3 13/16"
88 RIM EO,DT,NL,TP	1 11/16"	1 9/16"	3 3/8"
44 RIM K,L	1 9/16"	1 9/16"	3 3/8"
98/99 RIM	1 9/16"	1 9/16"	3 13/16"

* CONSULT FACTORY FOR STILE WIDTHS LESS THAN
(1) MIN. RECOMMENDED TO ENSURE PROPER APPLICATION

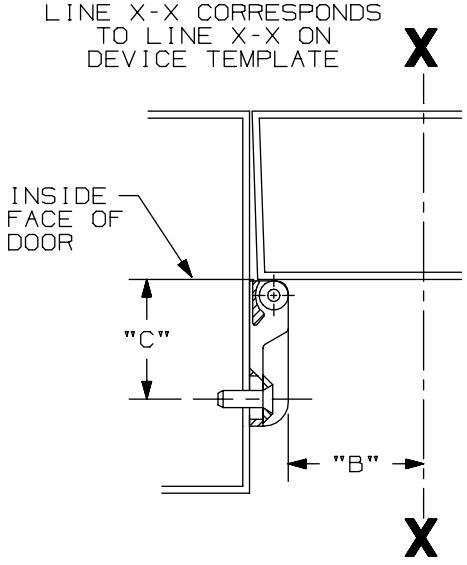

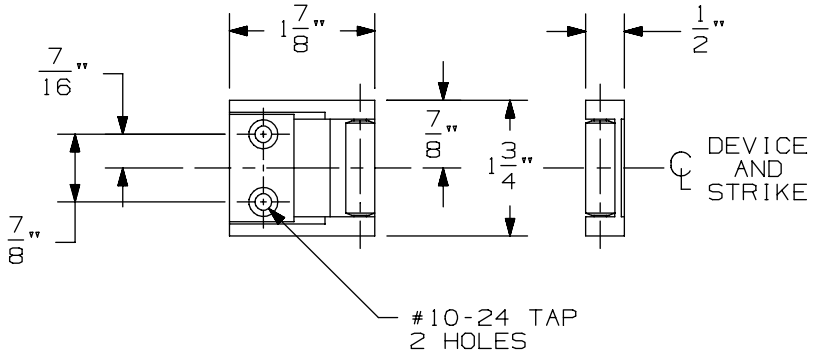

LHR APPLICATION SHOWN, RHR APPLICATION OPPOSITE

1439 Roller Strike

VON DUPRIN®

NOTES: SEE MASTER SHEET #10001 FOR SUGGESTED REINFORCING

TEMPLATE NUMBER: 30029_a

DATE: 05-23-13

33A/35A Series Exit Devices

-

3327A/3527A Surface Vertical Rod (Standard, CD, EL, LX, RX and SS)

DEVICE INSTALLATION SCHEDULE		
INSTALLATION	BACKSET	STILE WIDTH
TWO VERTICAL ROD DEVICES (PANIC & FIRE)	1 3/16"	2" TO 2 3/4"**
	1 1/2"	2 3/4" TO 3 3/4"
	1 7/8"	3 3/4" TO 5"
	2 1/2"	5" TO FLUSH
SINGLE DOOR (PANIC ONLY)	1 11/32"*	2" TO 2 3/4" *,**
	1 1/2"	2 3/4" TO 3 3/4"
	1 7/8"	3 3/4" TO 5"
	2 1/2"	5" TO FLUSH
VERTICAL ROD & RIM DEVICE REQUIRES 1609J STRIKE	2 7/32"	3" MIN.
* 1/2" MAXIMUM STOP HEIGHT		

NOTE: BACKSET MAY VARY WHEN USED WITH COORDINATOR DEPENDING ON TYPE USED.

USE OF OUTSIDE TRIM MAY ALTER MINIMUM STILE REQUIREMENT. SEE TRIM TEMPLATE.

**CONSULT FACTORY FOR STILE WIDTHS LESS THAN 2" TO ENSURE PROPER APPLICATION (1)

(1)

(1)

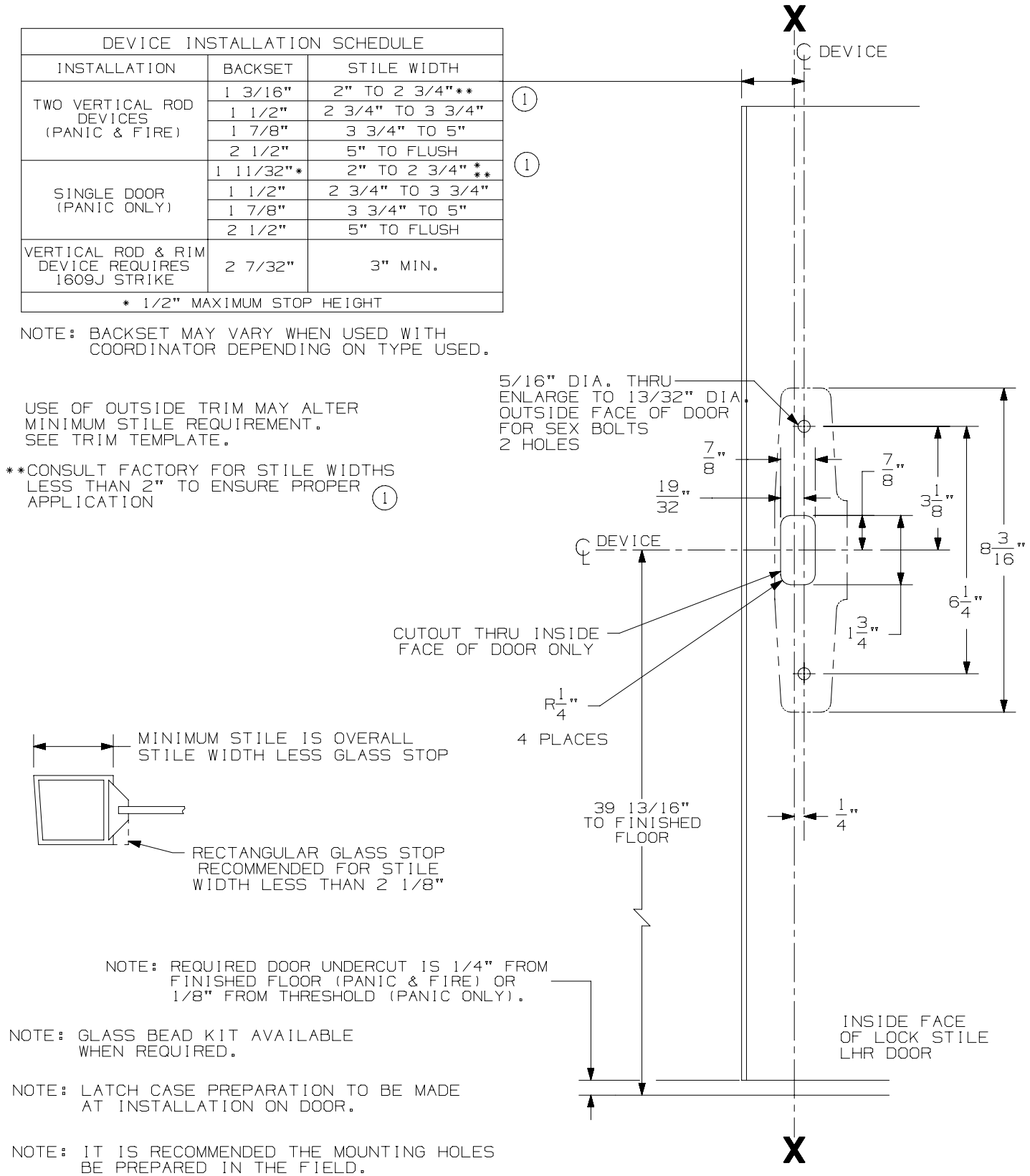

NOTE: REQUIRED DOOR UNDERCUT IS 1/4" FROM FINISHED FLOOR (PANIC & FIRE) OR 1/8" FROM THRESHOLD (PANIC ONLY).

NOTE: GLASS BEAD KIT AVAILABLE WHEN REQUIRED.

NOTE: LATCH CASE PREPARATION TO BE MADE AT INSTALLATION ON DOOR.

NOTE: IT IS RECOMMENDED THE MOUNTING HOLES BE PREPARED IN THE FIELD.

FOR OUTSIDE TRIM PREPARATION, WHEN REQUIRED, SEE TRIM TEMPLATE.

LHR SHOWN
RHR OPPOSITE

33/3527A & 33/3527A-F Series Vertical Rod Device

VON DUPRIN®

NOTES: SEE MASTER SHEET #10001 FOR SUGGESTED REINFORCING

TEMPLATE NUMBER: 10049_a

DATE: 05-15-13

BLADE STOP APPLICATION | 266 STRIKE ④

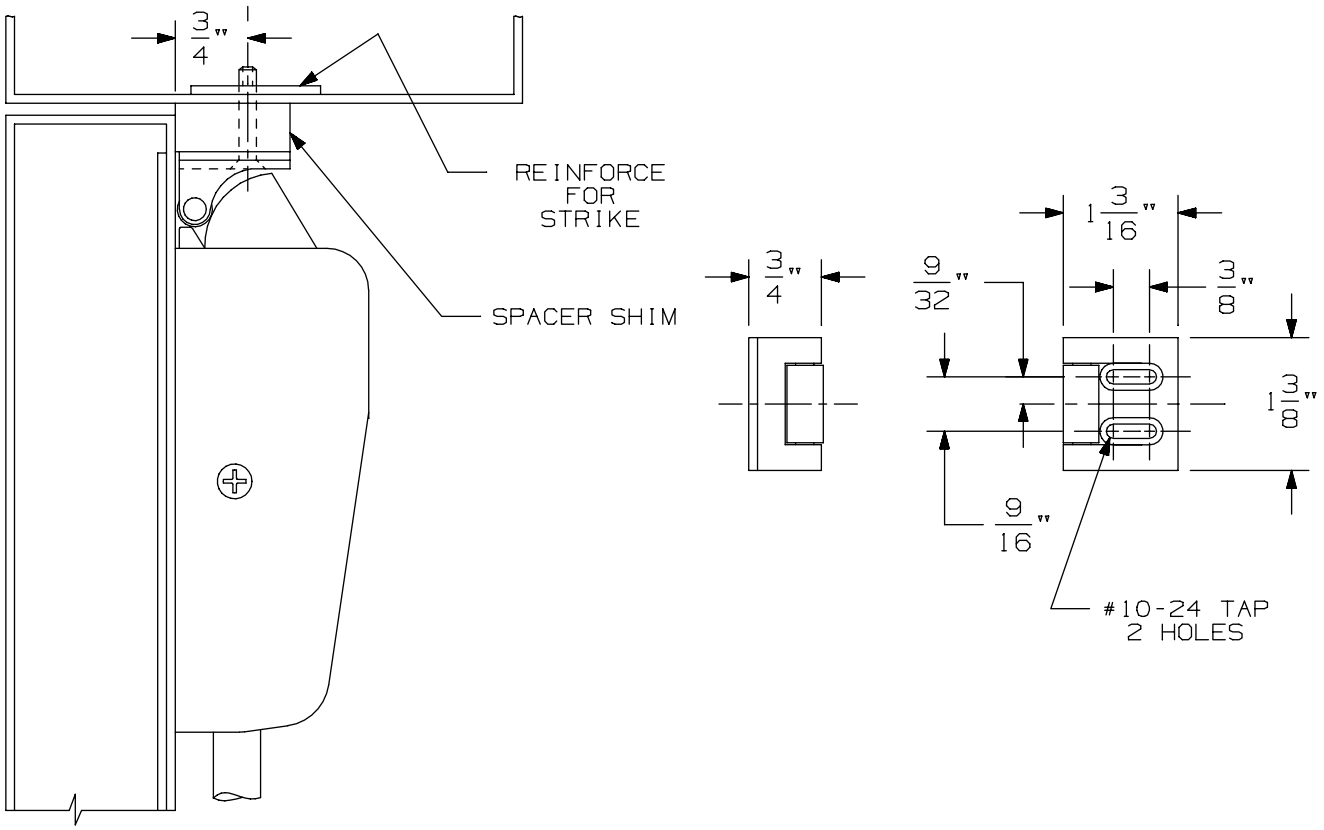

NOT HANDED

NOTE: LATCH CASE MOUNTING HOLES TO BE PREPARED AT INSTALLATION ON DOOR.

266 Strike	VON DUPRIN®	
NOTES: SEE MASTER SHEET #10001 FOR SUGGESTED REINFORCING	TEMPLATE NUMBER: 30010_a	DATE: 05-23-13

DEVICE INSTALLATION SCHEDULE		
INSTALLATION	BACKSET	STILE WIDTH
TWO VERTICAL ROD DEVICES (PANIC & FIRE)	1 3/16"	2" TO 2 3/4"**
	1 1/2"	2 3/4" TO 3 3/4"
	1 7/8"	3 3/4" TO 5"
	2 1/2"	5" TO FLUSH
SINGLE DOOR (PANIC ONLY)	1 11/32"*	2" TO 2 3/4" *,**
	1 1/2"	2 3/4" TO 3 3/4"
	1 7/8"	3 3/4" TO 5"
	2 1/2"	5" TO FLUSH
VERTICAL ROD & RIM DEVICE REQUIRES 1609J STRIKE	2 7/32"	3" MIN.
* 1/2" MAXIMUM STOP HEIGHT		

NOTE: BACKSET MAY VARY WHEN USED WITH COORDINATOR DEPENDING ON TYPE USED.

USE OF OUTSIDE TRIM MAY ALTER MINIMUM STILE REQUIREMENT. SEE TRIM TEMPLATE.

**CONSULT FACTORY FOR STILE WIDTHS LESS THAN 2" TO ENSURE PROPER APPLICATION (1)

(1)

(1)

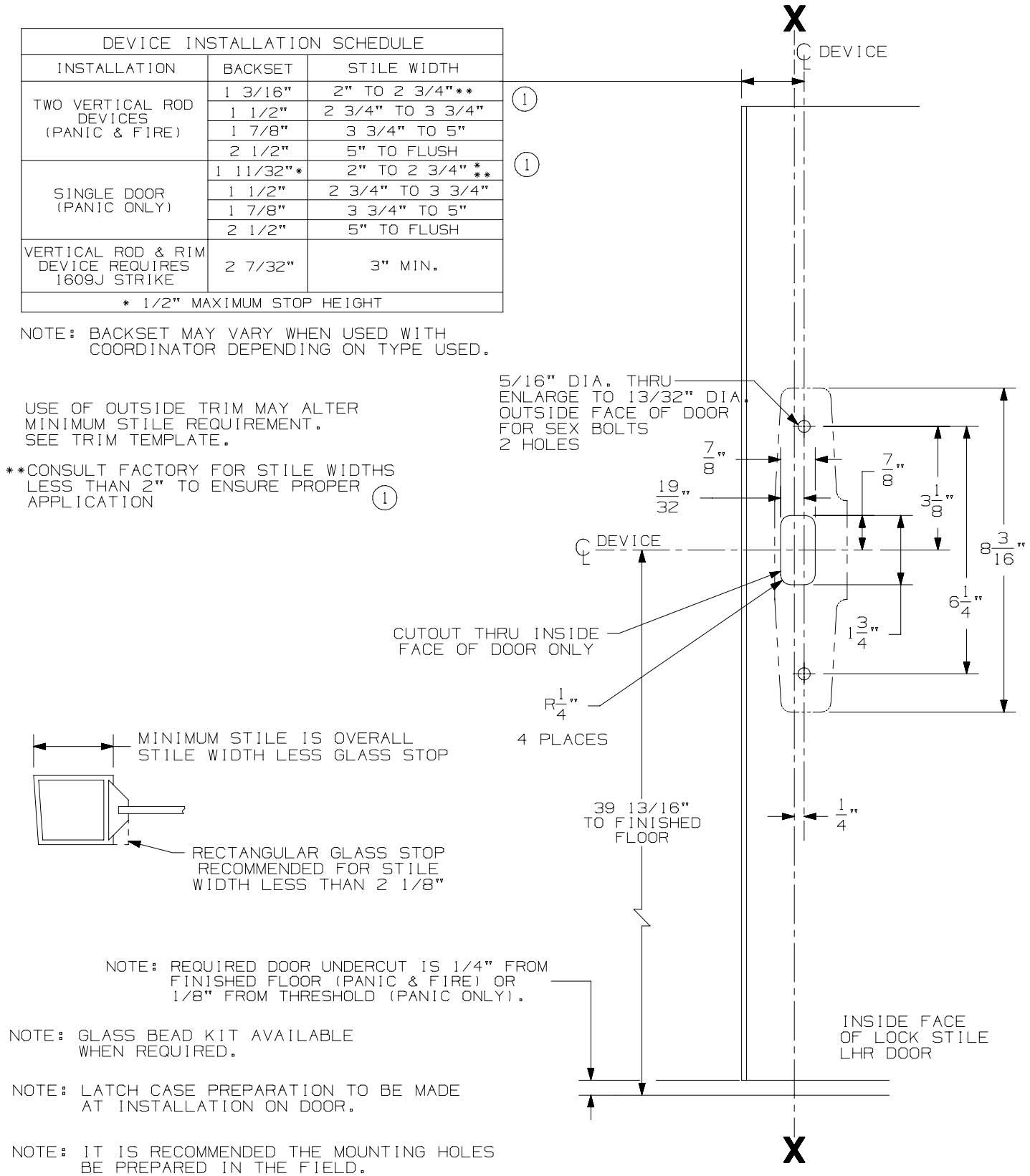

NOTE: REQUIRED DOOR UNDERCUT IS 1/4" FROM FINISHED FLOOR (PANIC & FIRE) OR 1/8" FROM THRESHOLD (PANIC ONLY).

NOTE: GLASS BEAD KIT AVAILABLE WHEN REQUIRED.

NOTE: LATCH CASE PREPARATION TO BE MADE AT INSTALLATION ON DOOR.

NOTE: IT IS RECOMMENDED THE MOUNTING HOLES BE PREPARED IN THE FIELD.

FOR OUTSIDE TRIM PREPARATION, WHEN REQUIRED, SEE TRIM TEMPLATE.

LHR SHOWN
RHR OPPOSITE

33/3527A & 33/3527A-F Series Vertical Rod Device

VON DUPRIN®

NOTES: SEE MASTER SHEET #10001 FOR SUGGESTED REINFORCING

TEMPLATE NUMBER: 10049_a

DATE: 05-15-13

386NL & DT TRIM

NOTES: SEE MASTER SHEET #10001 FOR SUGGESTED REINFORCING

TEMPLATE NUMBER: 20008_C

DATE: 5-25-16

VON DUPRIN®

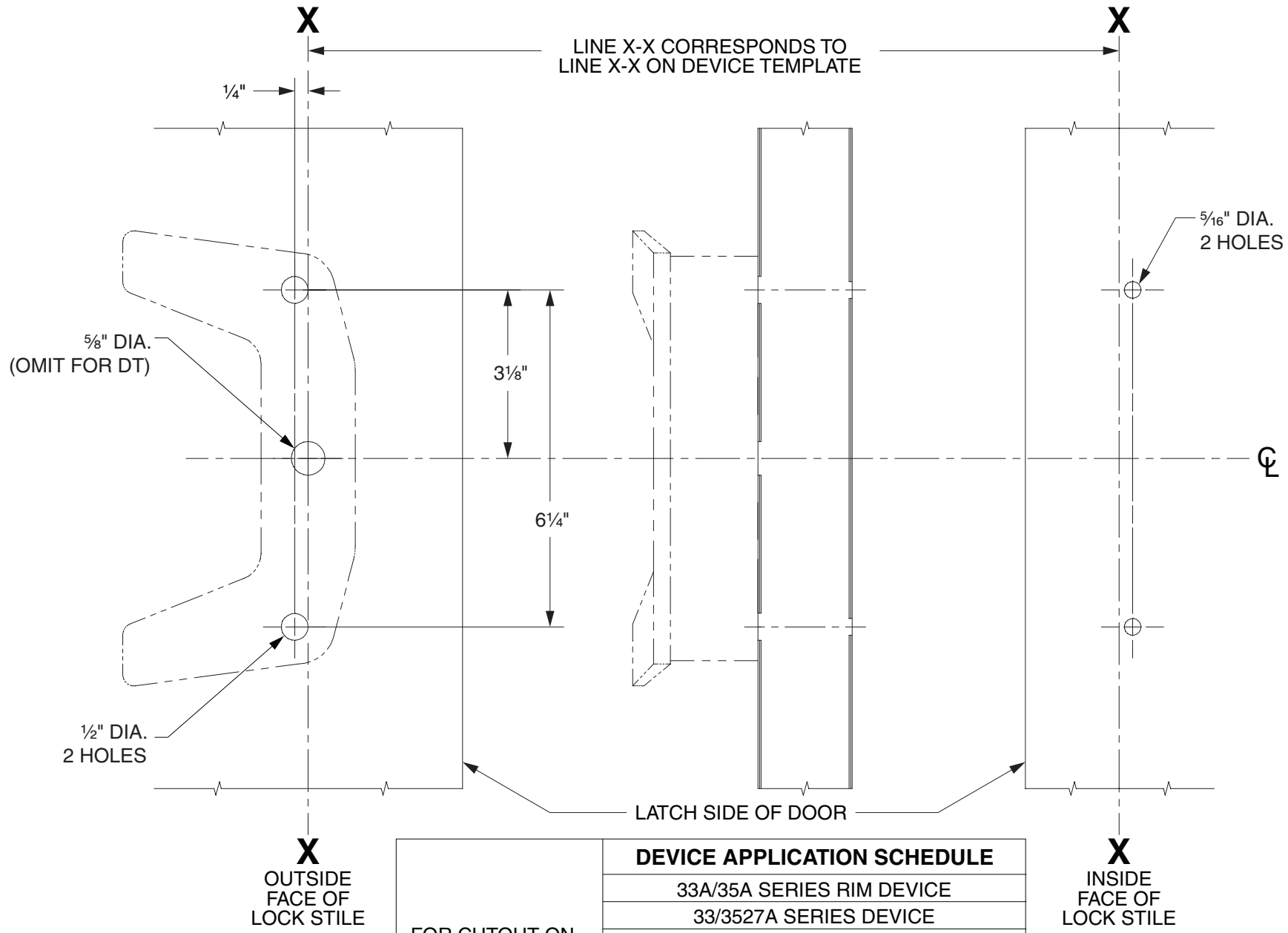

LHR SHOWN
RHR OPPOSITE

FOR CUTOUT ON INSIDE FACE OF DOOR, SEE DEVICE TEMPLATE	**DEVICE APPLICATION SCHEDULE**
	33A/35A SERIES RIM DEVICE
	33/3527A SERIES DEVICE
	33/3527A-F SERIES DEVICE
	33/3547A SERIES DEVICE
	33/3547A-F SERIES DEVICE
	33/3548A SERIES DEVICE
	33/3548A-F SERIES DEVICE
	33/3549A SERIES DEVICE
	33/3549A-F SERIES DEVICE

BLADE STOP APPLICATION | 266 STRIKE ④

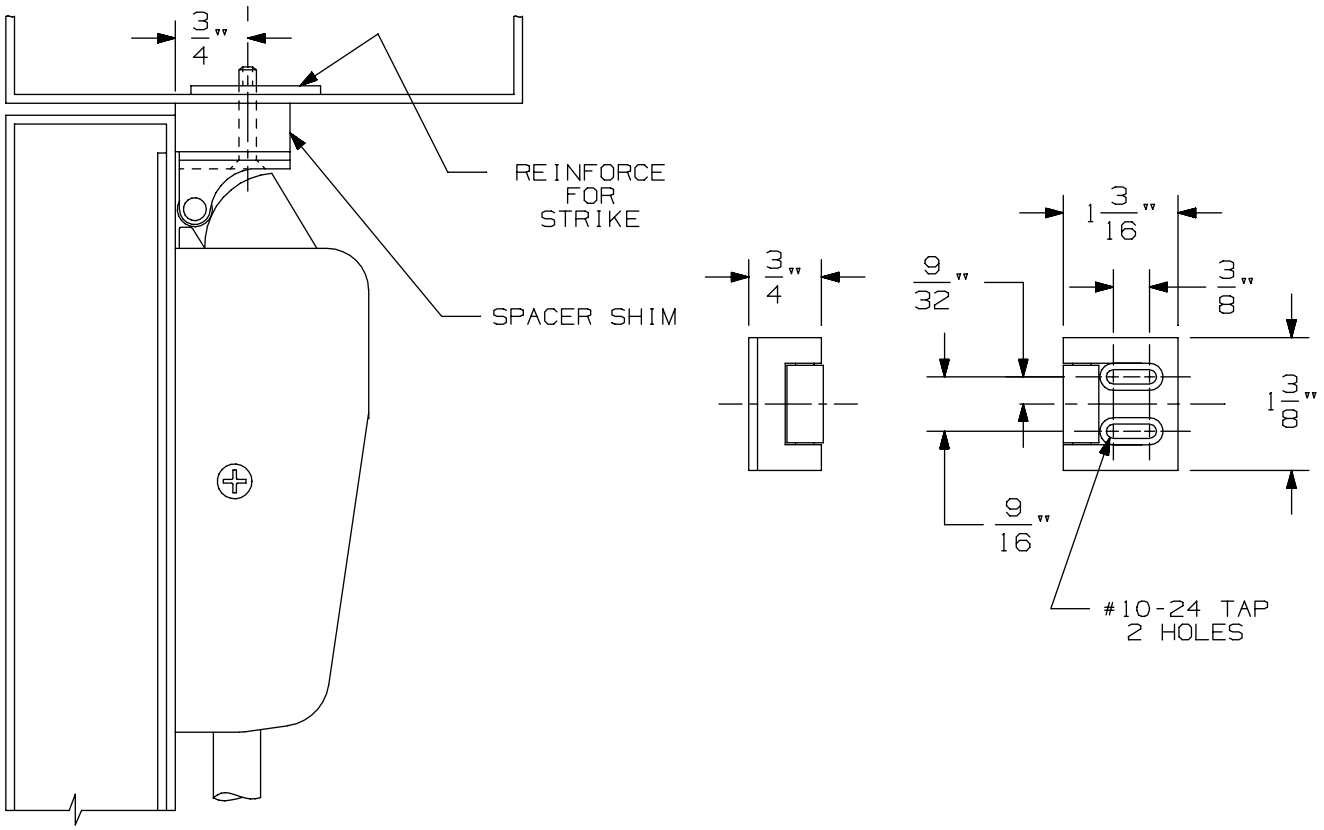

NOT HANDED

NOTE: LATCH CASE MOUNTING HOLES TO BE PREPARED AT INSTALLATION ON DOOR.

266 Strike	VON DUPRIN®	
NOTES: SEE MASTER SHEET #10001 FOR SUGGESTED REINFORCING	TEMPLATE NUMBER: 30010_a	DATE: 05-23-13

DEVICE INSTALLATION SCHEDULE		
INSTALLATION	BACKSET	STILE WIDTH
TWO VERTICAL ROD DEVICES (PANIC & FIRE)	1 3/16"	2" TO 2 3/4"**
	1 1/2"	2 3/4" TO 3 3/4"
	1 7/8"	3 3/4" TO 5"
	2 1/2"	5" TO FLUSH
SINGLE DOOR (PANIC ONLY)	1 11/32"*	2" TO 2 3/4" *,**
	1 1/2"	2 3/4" TO 3 3/4"
	1 7/8"	3 3/4" TO 5"
	2 1/2"	5" TO FLUSH
VERTICAL ROD & RIM DEVICE REQUIRES 1609J STRIKE	2 7/32"	3" MIN.
* 1/2" MAXIMUM STOP HEIGHT		

NOTE: BACKSET MAY VARY WHEN USED WITH COORDINATOR DEPENDING ON TYPE USED.

USE OF OUTSIDE TRIM MAY ALTER MINIMUM STILE REQUIREMENT. SEE TRIM TEMPLATE.

**CONSULT FACTORY FOR STILE WIDTHS LESS THAN 2" TO ENSURE PROPER APPLICATION (1)

(1)

(1)

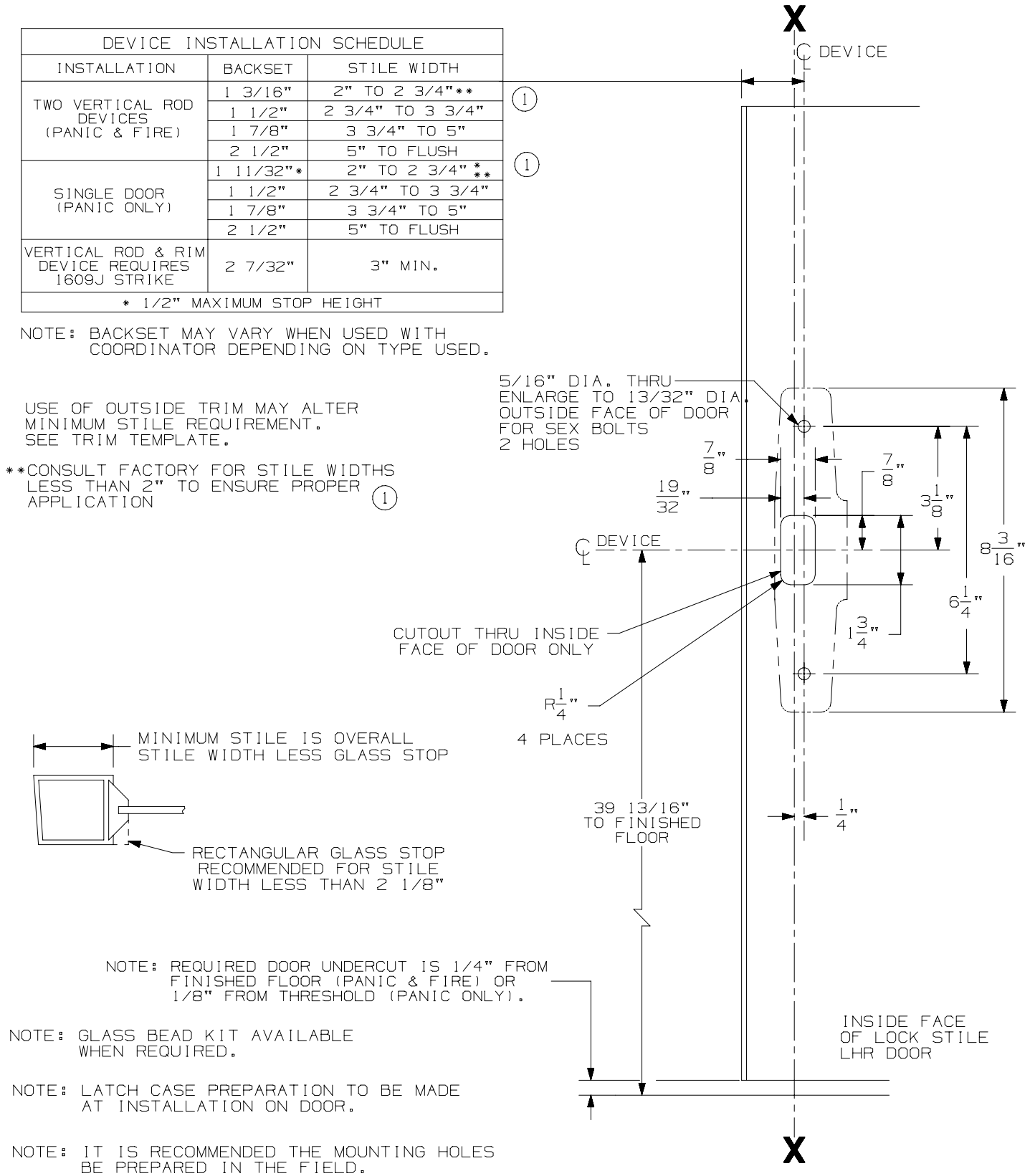

NOTE: REQUIRED DOOR UNDERCUT IS 1/4" FROM FINISHED FLOOR (PANIC & FIRE) OR 1/8" FROM THRESHOLD (PANIC ONLY).

NOTE: GLASS BEAD KIT AVAILABLE WHEN REQUIRED.

NOTE: LATCH CASE PREPARATION TO BE MADE AT INSTALLATION ON DOOR.

NOTE: IT IS RECOMMENDED THE MOUNTING HOLES BE PREPARED IN THE FIELD.

FOR OUTSIDE TRIM PREPARATION, WHEN REQUIRED, SEE TRIM TEMPLATE.

LHR SHOWN
RHR OPPOSITE

33/3527A & 33/3527A-F Series Vertical Rod Device

VON DUPRIN®

NOTES: SEE MASTER SHEET #10001 FOR SUGGESTED REINFORCING

TEMPLATE NUMBER: 10049_a

DATE: 05-15-13

386NL & DT TRIM

NOTES: SEE MASTER SHEET #10001 FOR SUGGESTED REINFORCING

TEMPLATE NUMBER: 20008_C

DATE: 5-25-16

VON DUPRIN®

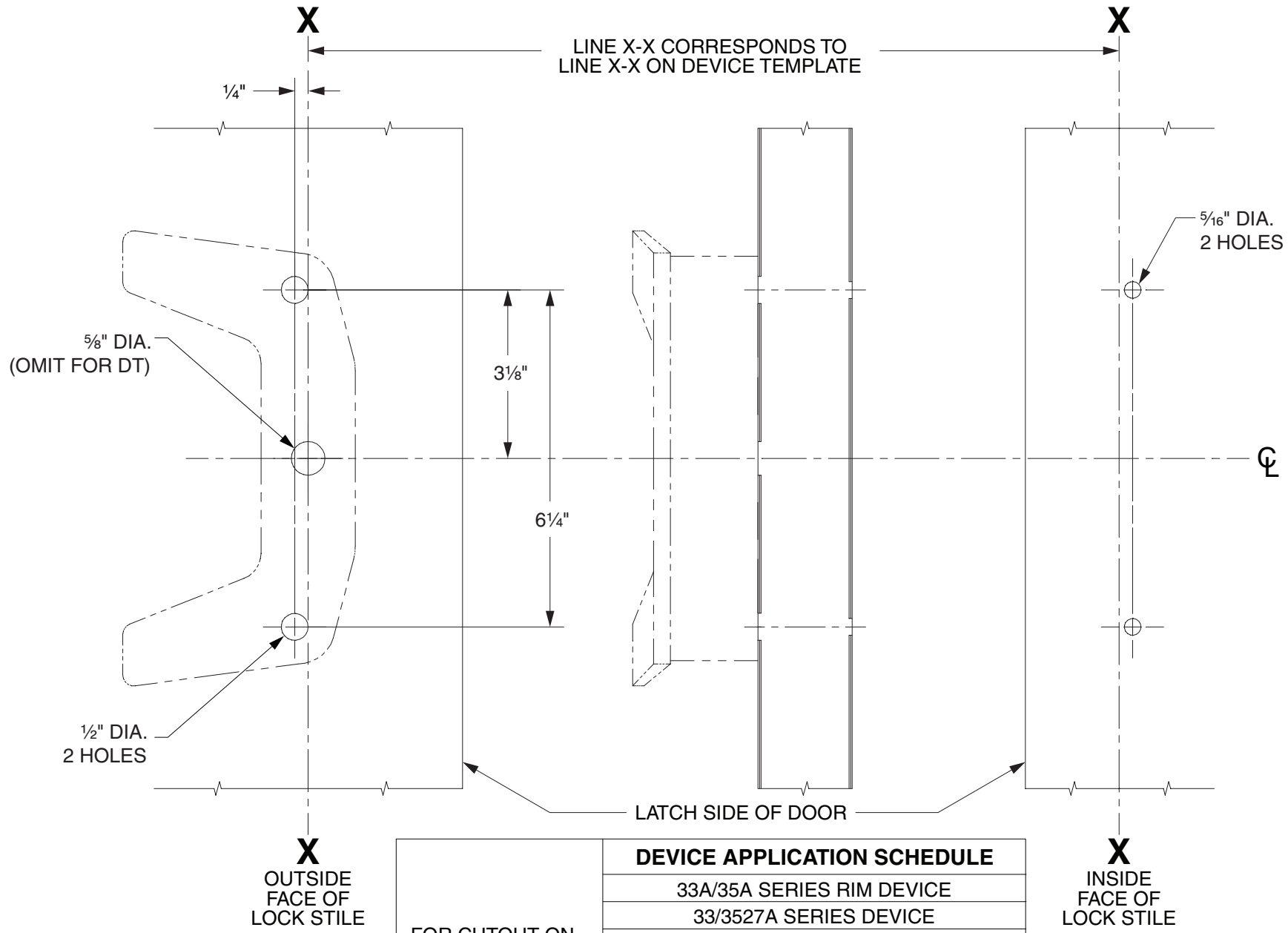

LHR SHOWN
RHR OPPOSITE

FOR CUTOUT ON INSIDE FACE OF DOOR, SEE DEVICE TEMPLATE	**DEVICE APPLICATION SCHEDULE**
	33A/35A SERIES RIM DEVICE
	33/3527A SERIES DEVICE
	33/3527A-F SERIES DEVICE
	33/3547A SERIES DEVICE
	33/3547A-F SERIES DEVICE
	33/3548A SERIES DEVICE
	33/3548A-F SERIES DEVICE
	33/3549A SERIES DEVICE
	33/3549A-F SERIES DEVICE

BLADE STOP APPLICATION | 266 STRIKE ④

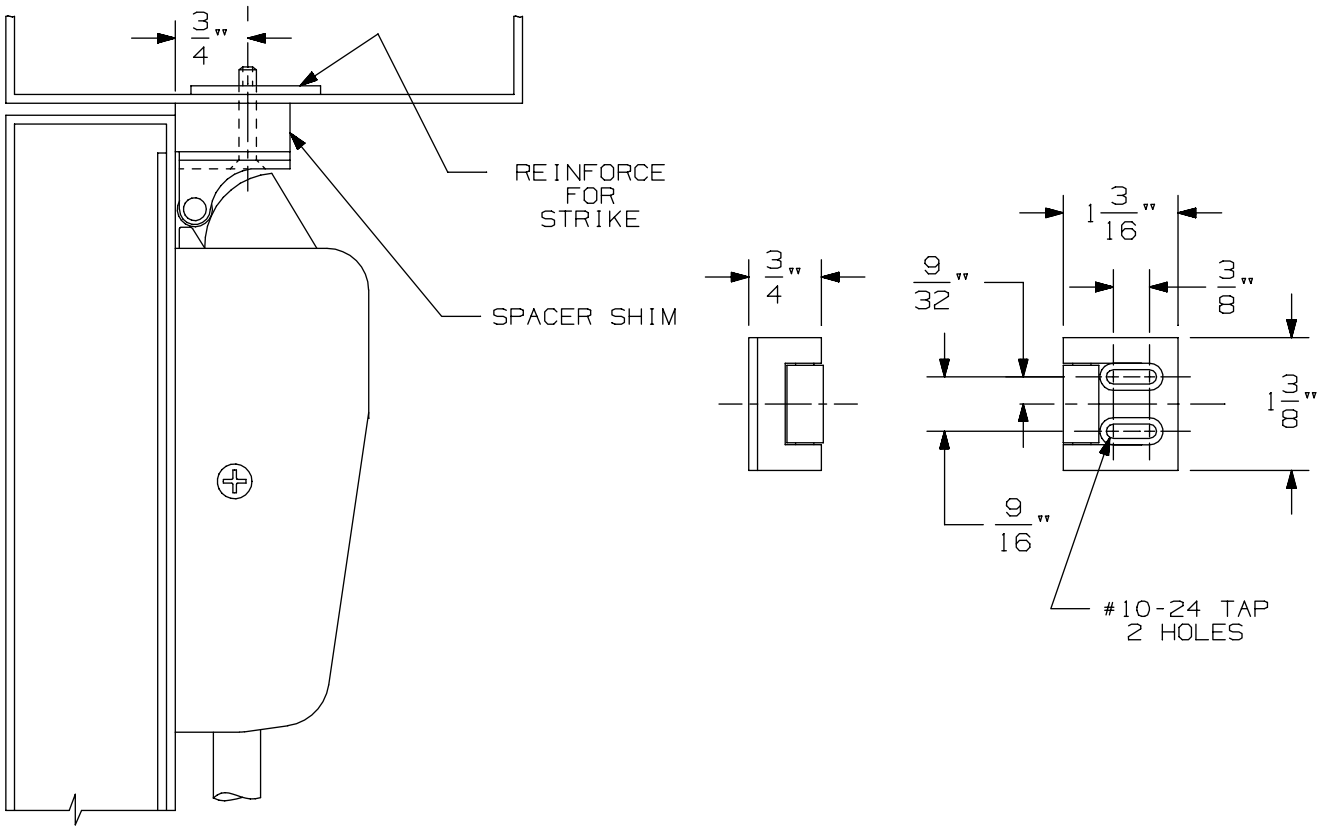

NOT HANDED

NOTE: LATCH CASE MOUNTING HOLES TO BE PREPARED AT INSTALLATION ON DOOR.

266 Strike	VON DUPRIN®	
NOTES: SEE MASTER SHEET #10001 FOR SUGGESTED REINFORCING	TEMPLATE NUMBER: 30010_a	DATE: 05-23-13

DEVICE INSTALLATION SCHEDULE		
INSTALLATION	BACKSET	STILE WIDTH
TWO VERTICAL ROD DEVICES (PANIC & FIRE)	1 3/16"	2" TO 2 3/4"**
	1 1/2"	2 3/4" TO 3 3/4"
	1 7/8"	3 3/4" TO 5"
	2 1/2"	5" TO FLUSH
SINGLE DOOR (PANIC ONLY)	1 11/32"*	2" TO 2 3/4" *,**
	1 1/2"	2 3/4" TO 3 3/4"
	1 7/8"	3 3/4" TO 5"
	2 1/2"	5" TO FLUSH
VERTICAL ROD & RIM DEVICE REQUIRES 1609J STRIKE	2 7/32"	3" MIN.
* 1/2" MAXIMUM STOP HEIGHT		

NOTE: BACKSET MAY VARY WHEN USED WITH COORDINATOR DEPENDING ON TYPE USED.

USE OF OUTSIDE TRIM MAY ALTER MINIMUM STILE REQUIREMENT. SEE TRIM TEMPLATE.

**CONSULT FACTORY FOR STILE WIDTHS LESS THAN 2" TO ENSURE PROPER APPLICATION (1)

(1)

(1)

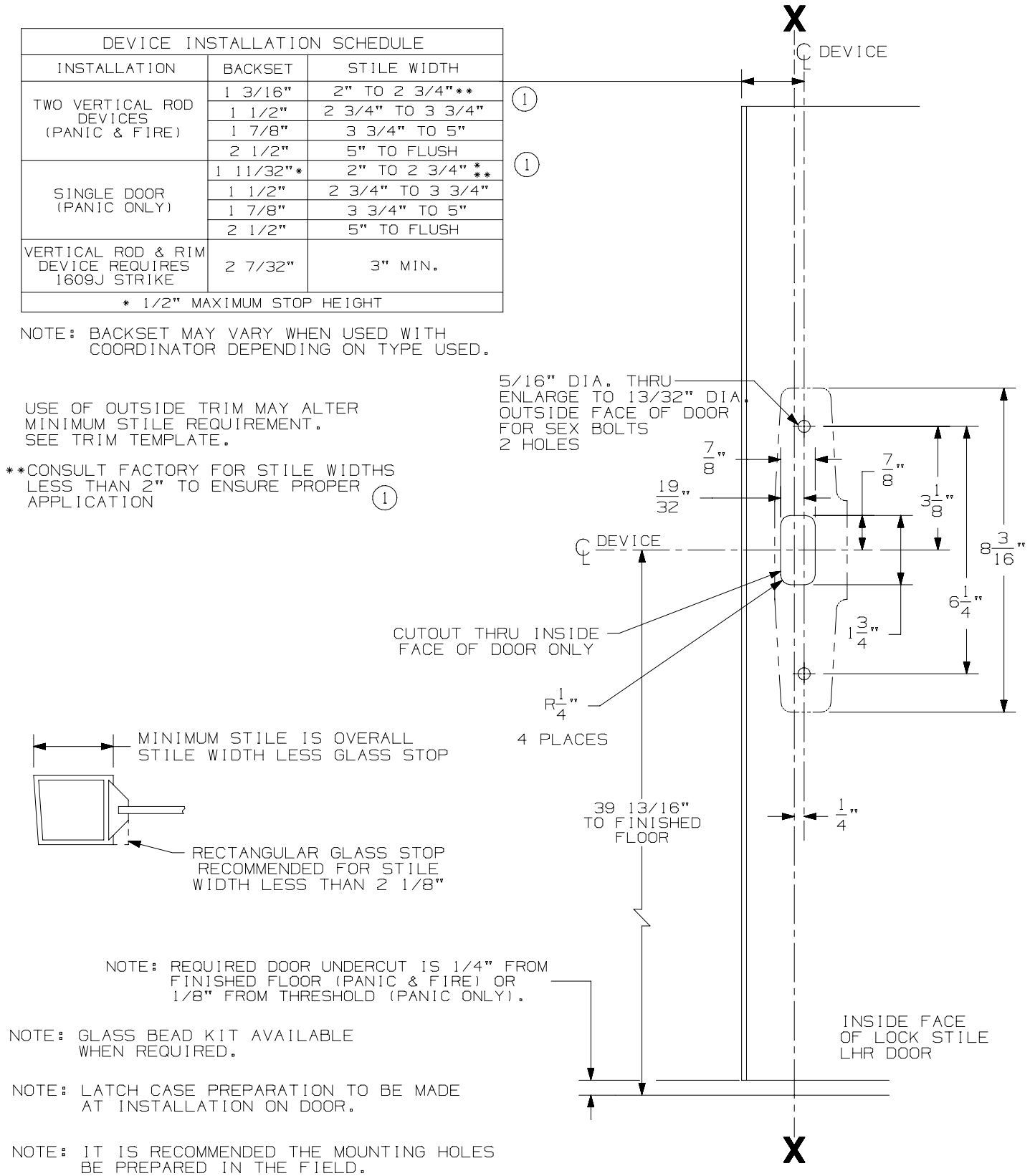

NOTE: REQUIRED DOOR UNDERCUT IS 1/4" FROM FINISHED FLOOR (PANIC & FIRE) OR 1/8" FROM THRESHOLD (PANIC ONLY).

NOTE: GLASS BEAD KIT AVAILABLE WHEN REQUIRED.

NOTE: LATCH CASE PREPARATION TO BE MADE AT INSTALLATION ON DOOR.

NOTE: IT IS RECOMMENDED THE MOUNTING HOLES BE PREPARED IN THE FIELD.

FOR OUTSIDE TRIM PREPARATION, WHEN REQUIRED, SEE TRIM TEMPLATE.

LHR SHOWN
RHR OPPOSITE

33/3527A & 33/3527A-F Series Vertical Rod Device

VON DUPRIN®

NOTES: SEE MASTER SHEET #10001 FOR SUGGESTED REINFORCING

TEMPLATE NUMBER: 10049_a

DATE: 05-15-13

388NL CYLINDER CONTROL

NOTES: SEE MASTER SHEET #10001 FOR SUGGESTED REINFORCING

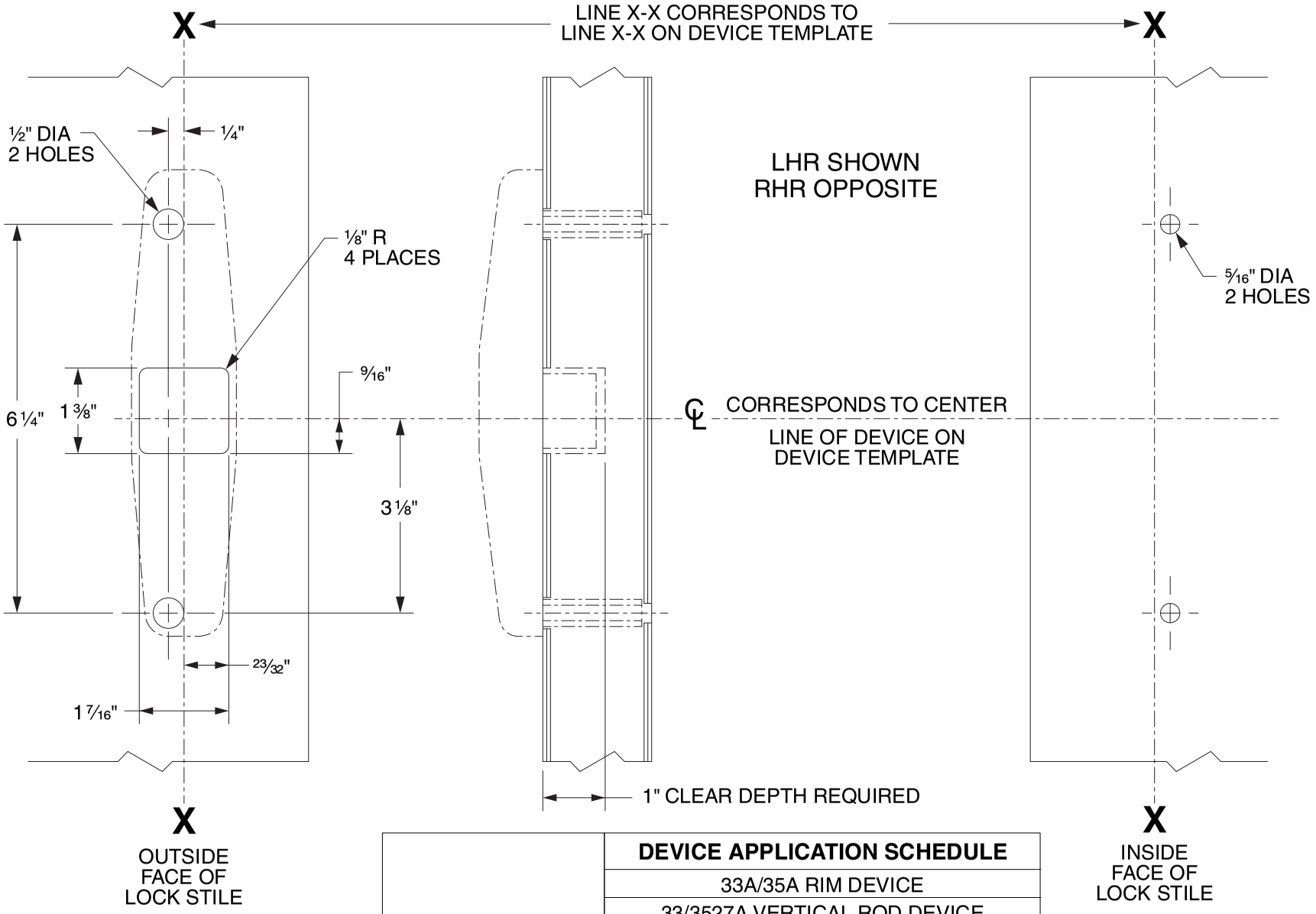

	DEVICE APPLICATION SCHEDULE
FOR CUTOUT ON INSIDE FACE OF DOOR SEE DEVICE TEMPLATE	33A/35A RIM DEVICE
	33/3527A VERTICAL ROD DEVICE
	33/3527A-F VERTICAL ROD DEVICE
	33/3547A VERTICAL ROD DEVICE
	33/3547A-F VERTICAL ROD DEVICE
	33/3548A VERTICAL ROD DEVICE
	33/3548A-F VERTICAL ROD DEVICE
	33/3549A VERTICAL ROD DEVICE
	33/3549A-F VERTICAL ROD DEVICE

VON DUPRIN®

TEMPLATE NUMBER: 40079_d

DATE: 05-31-13

BLADE STOP APPLICATION | 266 STRIKE ④

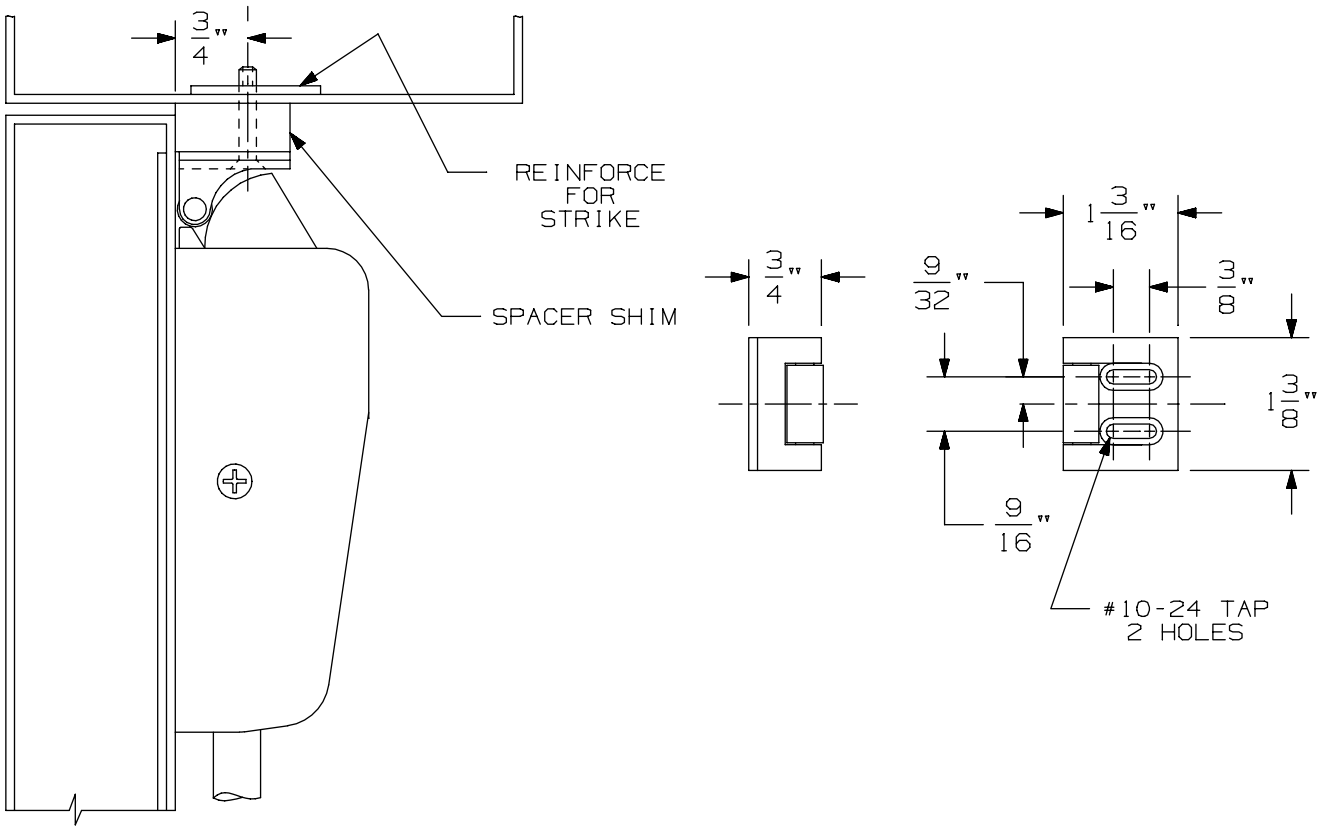

NOT HANDED

NOTE: LATCH CASE MOUNTING HOLES TO BE PREPARED AT INSTALLATION ON DOOR.

266 Strike	VON DUPRIN®	
NOTES: SEE MASTER SHEET #10001 FOR SUGGESTED REINFORCING	TEMPLATE NUMBER: 30010_a	DATE: 05-23-13

DEVICE INSTALLATION SCHEDULE		
INSTALLATION	BACKSET	STILE WIDTH
TWO VERTICAL ROD DEVICES (PANIC & FIRE)	1 3/16"	2" TO 2 3/4"**
	1 1/2"	2 3/4" TO 3 3/4"
	1 7/8"	3 3/4" TO 5"
	2 1/2"	5" TO FLUSH
SINGLE DOOR (PANIC ONLY)	1 11/32"*	2" TO 2 3/4" *,**
	1 1/2"	2 3/4" TO 3 3/4"
	1 7/8"	3 3/4" TO 5"
	2 1/2"	5" TO FLUSH
VERTICAL ROD & RIM DEVICE REQUIRES 1609J STRIKE	2 7/32"	3" MIN.
* 1/2" MAXIMUM STOP HEIGHT		

NOTE: BACKSET MAY VARY WHEN USED WITH COORDINATOR DEPENDING ON TYPE USED.

USE OF OUTSIDE TRIM MAY ALTER MINIMUM STILE REQUIREMENT. SEE TRIM TEMPLATE.

**CONSULT FACTORY FOR STILE WIDTHS LESS THAN 2" TO ENSURE PROPER APPLICATION (1)

(1)

(1)

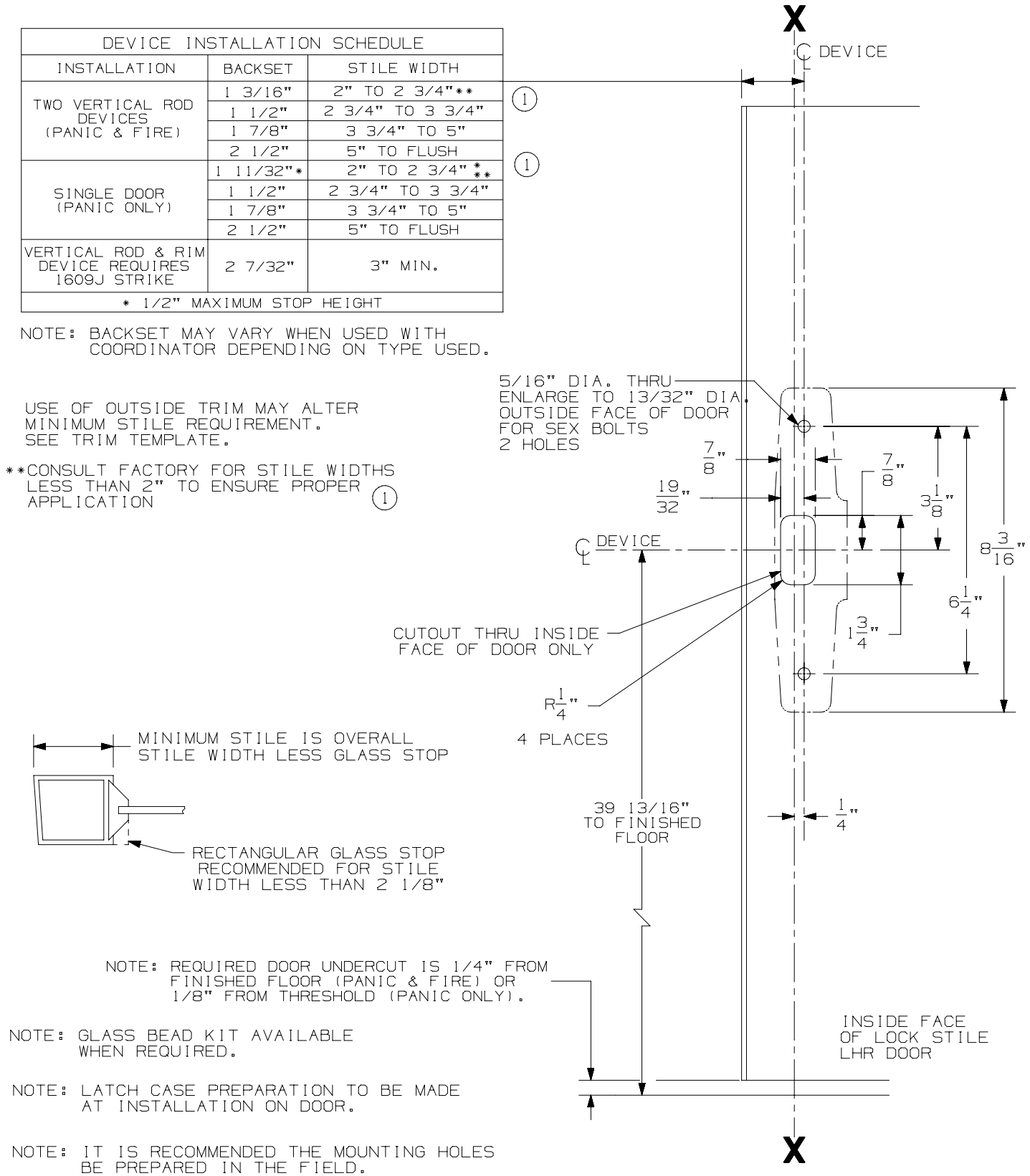

NOTE: REQUIRED DOOR UNDERCUT IS 1/4" FROM FINISHED FLOOR (PANIC & FIRE) OR 1/8" FROM THRESHOLD (PANIC ONLY).

NOTE: GLASS BEAD KIT AVAILABLE WHEN REQUIRED.

NOTE: LATCH CASE PREPARATION TO BE MADE AT INSTALLATION ON DOOR.

NOTE: IT IS RECOMMENDED THE MOUNTING HOLES BE PREPARED IN THE FIELD.

FOR OUTSIDE TRIM PREPARATION, WHEN REQUIRED, SEE TRIM TEMPLATE.

LHR SHOWN
RHR OPPOSITE

33/3527A & 33/3527A-F Series Vertical Rod Device

VON DUPRIN®

NOTES: SEE MASTER SHEET #10001 FOR SUGGESTED REINFORCING

TEMPLATE NUMBER: 10049_a

DATE: 05-15-13

360T, 360L, 360T-BE, 360L-BE CONTROL

NOTES: SEE MASTER SHEET #10001 FOR SUGGESTED REINFORCING

TEMPLATE NUMBER: 40080_e

DATE: 04-06-15

VON DUPRIN®

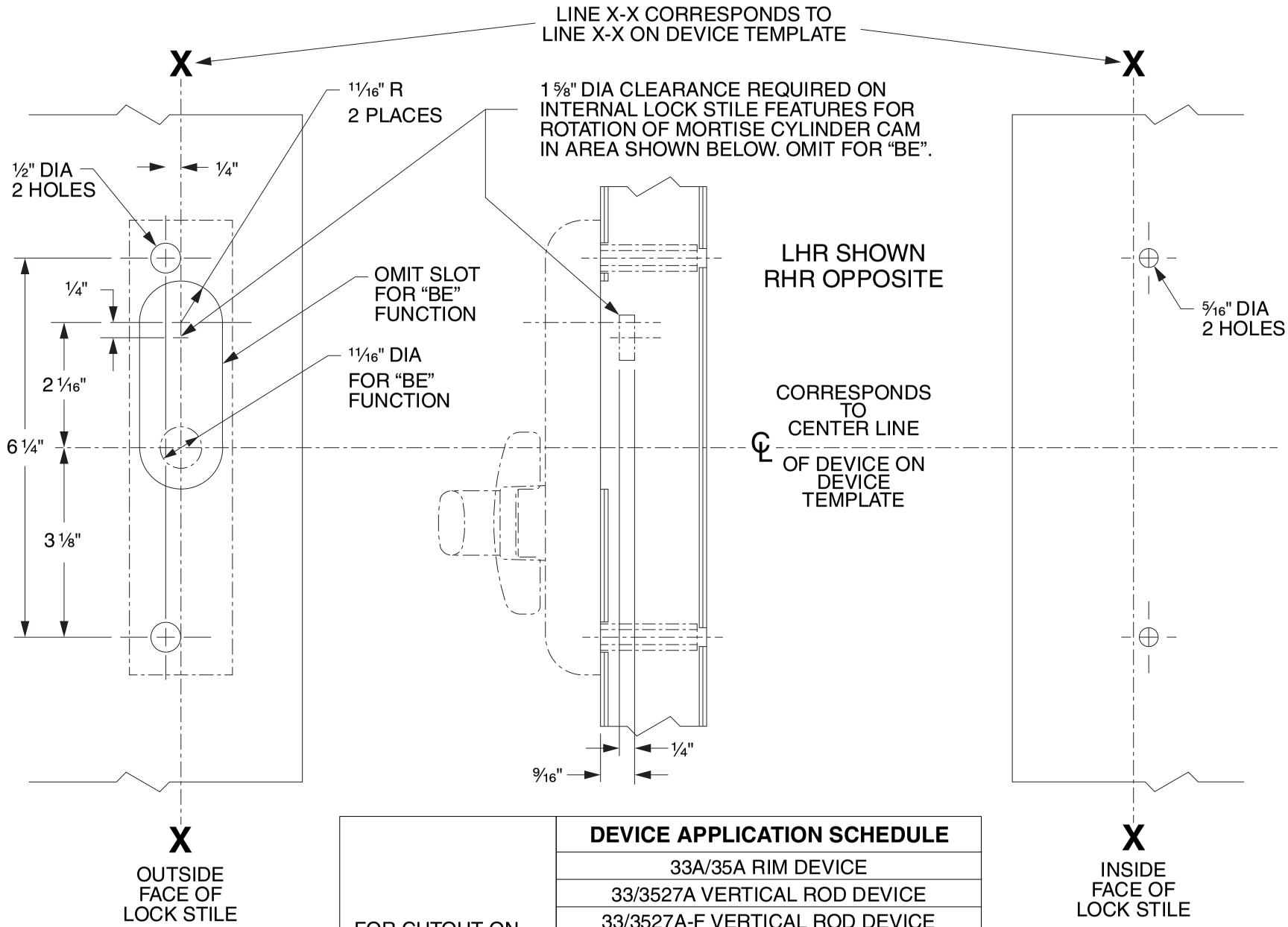

	DEVICE APPLICATION SCHEDULE
FOR CUTOUT ON INSIDE FACE OF DOOR SEE DEVICE TEMPLATE	33A/35A RIM DEVICE
	33/3527A VERTICAL ROD DEVICE
	33/3527A-F VERTICAL ROD DEVICE
	33/3547A VERTICAL ROD DEVICE
	33/3547A-F VERTICAL ROD DEVICE
	33/3548A VERTICAL ROD DEVICE
	33/3548A-F VERTICAL ROD DEVICE
	33/3549A VERTICAL CABLE DEVICE
	33/3549A-F VERTICAL CABLE DEVICE

BLADE STOP APPLICATION | 266 STRIKE ④

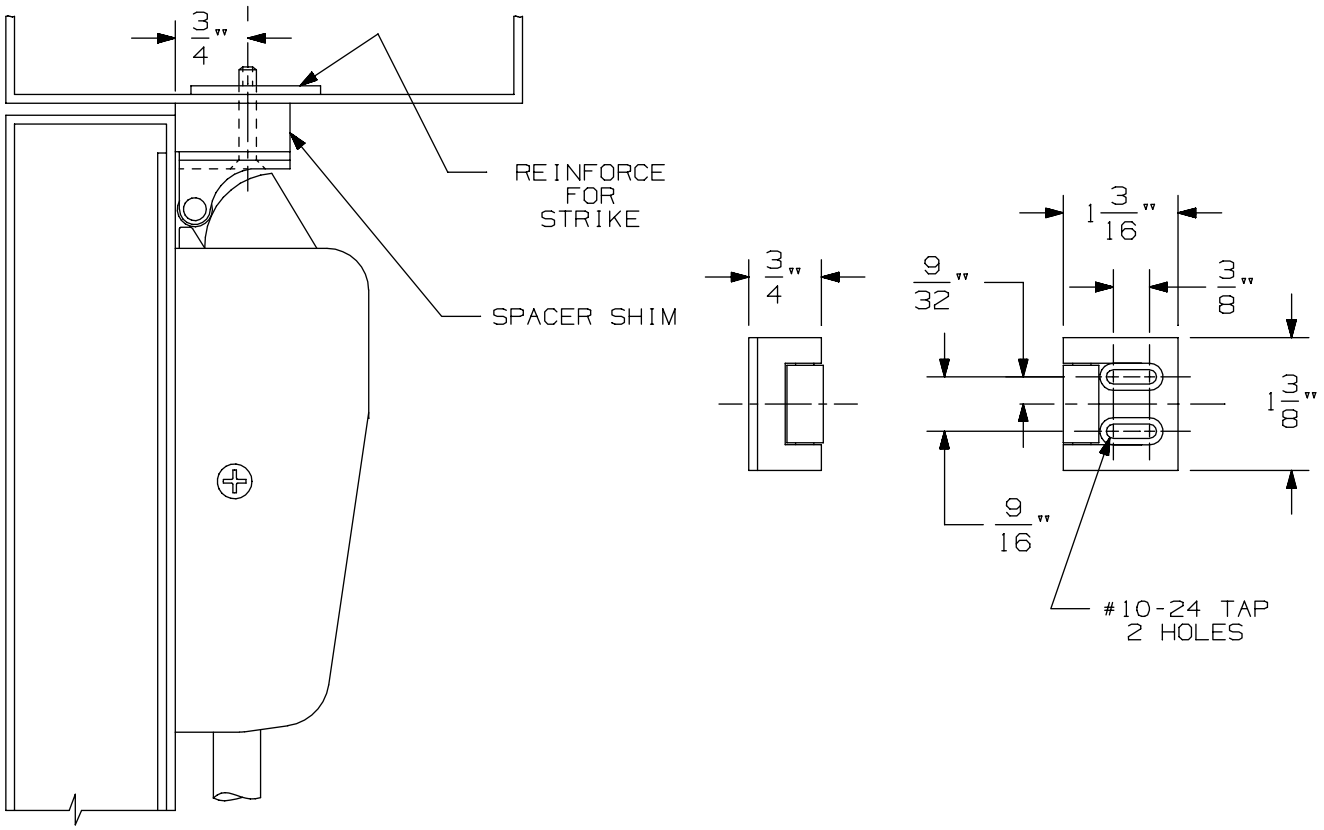

NOT HANDED

NOTE: LATCH CASE MOUNTING HOLES TO BE PREPARED AT INSTALLATION ON DOOR.

266 Strike	VON DUPRIN®	
NOTES: SEE MASTER SHEET #10001 FOR SUGGESTED REINFORCING	TEMPLATE NUMBER: 30010_a	DATE: 05-23-13

DEVICE INSTALLATION SCHEDULE		
INSTALLATION	BACKSET	STILE WIDTH
TWO VERTICAL ROD DEVICES (PANIC & FIRE)	1 3/16"	2" TO 2 3/4"**
	1 1/2"	2 3/4" TO 3 3/4"
	1 7/8"	3 3/4" TO 5"
	2 1/2"	5" TO FLUSH
SINGLE DOOR (PANIC ONLY)	1 11/32"*	2" TO 2 3/4" *,**
	1 1/2"	2 3/4" TO 3 3/4"
	1 7/8"	3 3/4" TO 5"
	2 1/2"	5" TO FLUSH
VERTICAL ROD & RIM DEVICE REQUIRES 1609J STRIKE	2 7/32"	3" MIN.
* 1/2" MAXIMUM STOP HEIGHT		

NOTE: BACKSET MAY VARY WHEN USED WITH COORDINATOR DEPENDING ON TYPE USED.

USE OF OUTSIDE TRIM MAY ALTER MINIMUM STILE REQUIREMENT. SEE TRIM TEMPLATE.

**CONSULT FACTORY FOR STILE WIDTHS LESS THAN 2" TO ENSURE PROPER APPLICATION (1)

(1)

(1)

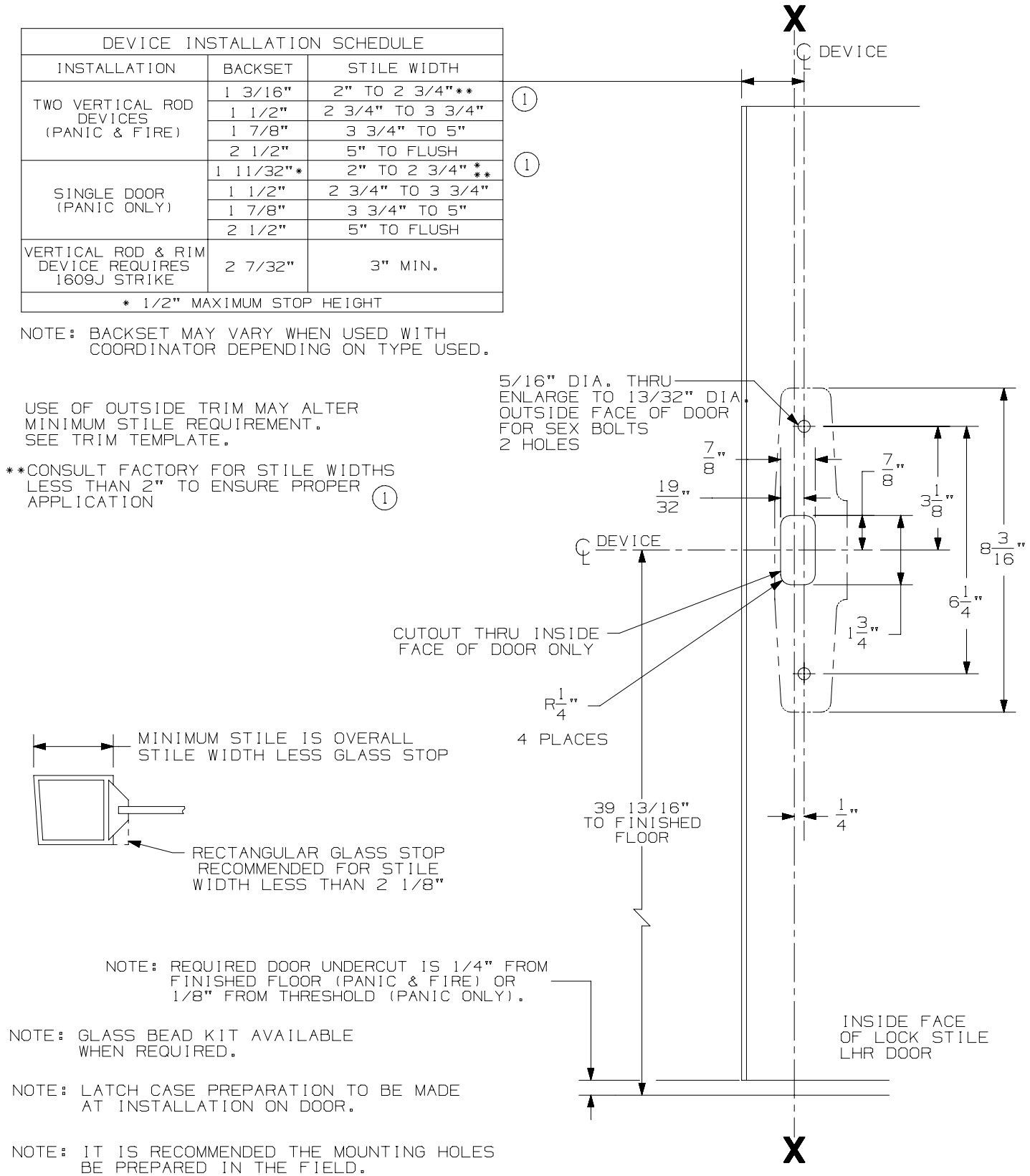

NOTE: REQUIRED DOOR UNDERCUT IS 1/4" FROM FINISHED FLOOR (PANIC & FIRE) OR 1/8" FROM THRESHOLD (PANIC ONLY).

NOTE: GLASS BEAD KIT AVAILABLE WHEN REQUIRED.

NOTE: LATCH CASE PREPARATION TO BE MADE AT INSTALLATION ON DOOR.

NOTE: IT IS RECOMMENDED THE MOUNTING HOLES BE PREPARED IN THE FIELD.

FOR OUTSIDE TRIM PREPARATION, WHEN REQUIRED, SEE TRIM TEMPLATE.

LHR SHOWN
RHR OPPOSITE

33/3527A & 33/3527A-F Series Vertical Rod Device

VON DUPRIN®

NOTES: SEE MASTER SHEET #10001 FOR SUGGESTED REINFORCING

TEMPLATE NUMBER: 10049_a

DATE: 05-15-13

386NL & DT TRIM

NOTES: SEE MASTER SHEET #10001 FOR SUGGESTED REINFORCING

TEMPLATE NUMBER: 20008_C

DATE: 5-25-16

VON DUPRIN®

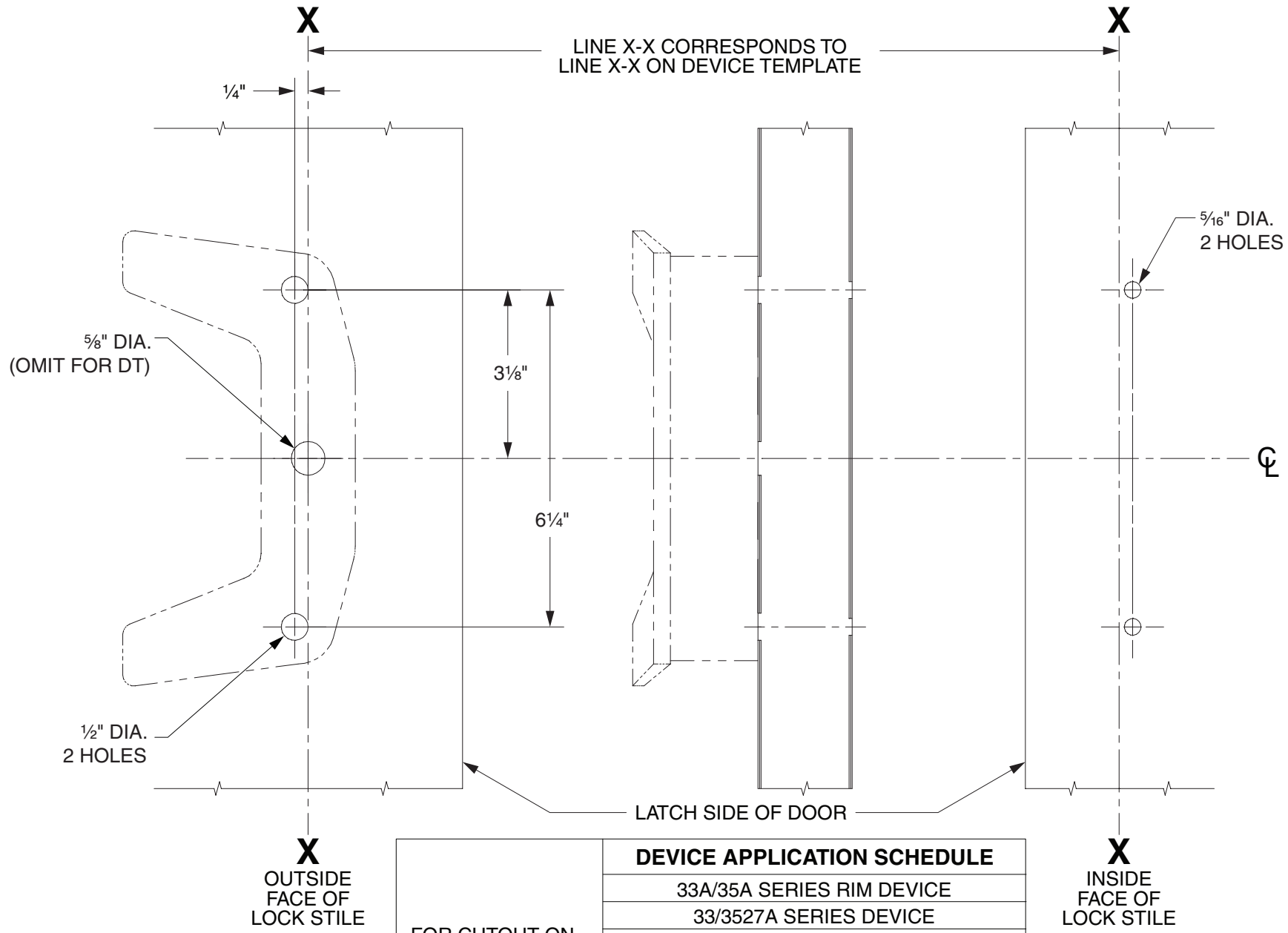

LHR SHOWN
RHR OPPOSITE

FOR CUTOUT ON INSIDE FACE OF DOOR, SEE DEVICE TEMPLATE	**DEVICE APPLICATION SCHEDULE**
	33A/35A SERIES RIM DEVICE
	33/3527A SERIES DEVICE
	33/3527A-F SERIES DEVICE
	33/3547A SERIES DEVICE
	33/3547A-F SERIES DEVICE
	33/3548A SERIES DEVICE
	33/3548A-F SERIES DEVICE
	33/3549A SERIES DEVICE
	33/3549A-F SERIES DEVICE

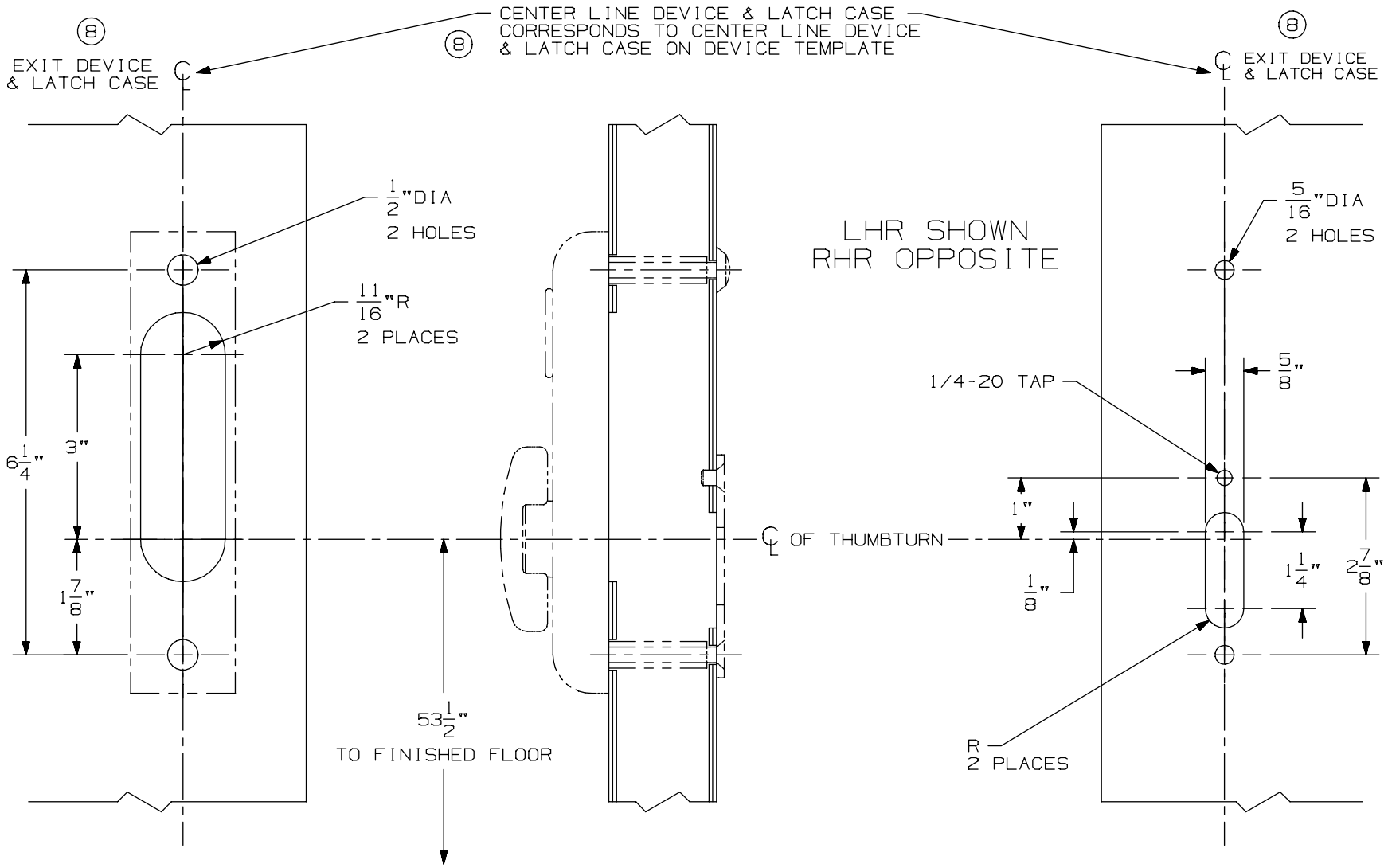

OUTSIDE
FACE OF
LOCK STILE

INSIDE
FACE OF
LOCK STILE

DEVICE APPLICATION SCHEDULE
2227 VERT. ROD DEVICE
2227-F VERT. ROD DEVICE
3327/3527 VERT. ROD DEVICE
8 3327A/3527A VERT. ROD DEVICE
8 3327A-F/3527A-F VERT. ROD DEVICE
9827/9927 VERT. ROD DEVICE
9827-F/9927-F VERT. ROD DEVICE

NOTES: SEE MASTER SHEET #10001 FOR SUGGESTED REINFORCING

374-T Control

VON DUPRIN®

TEMPLATE NUMBER: 40118_a

DATE: 05-28-13

BLADE STOP APPLICATION | 266 STRIKE ④

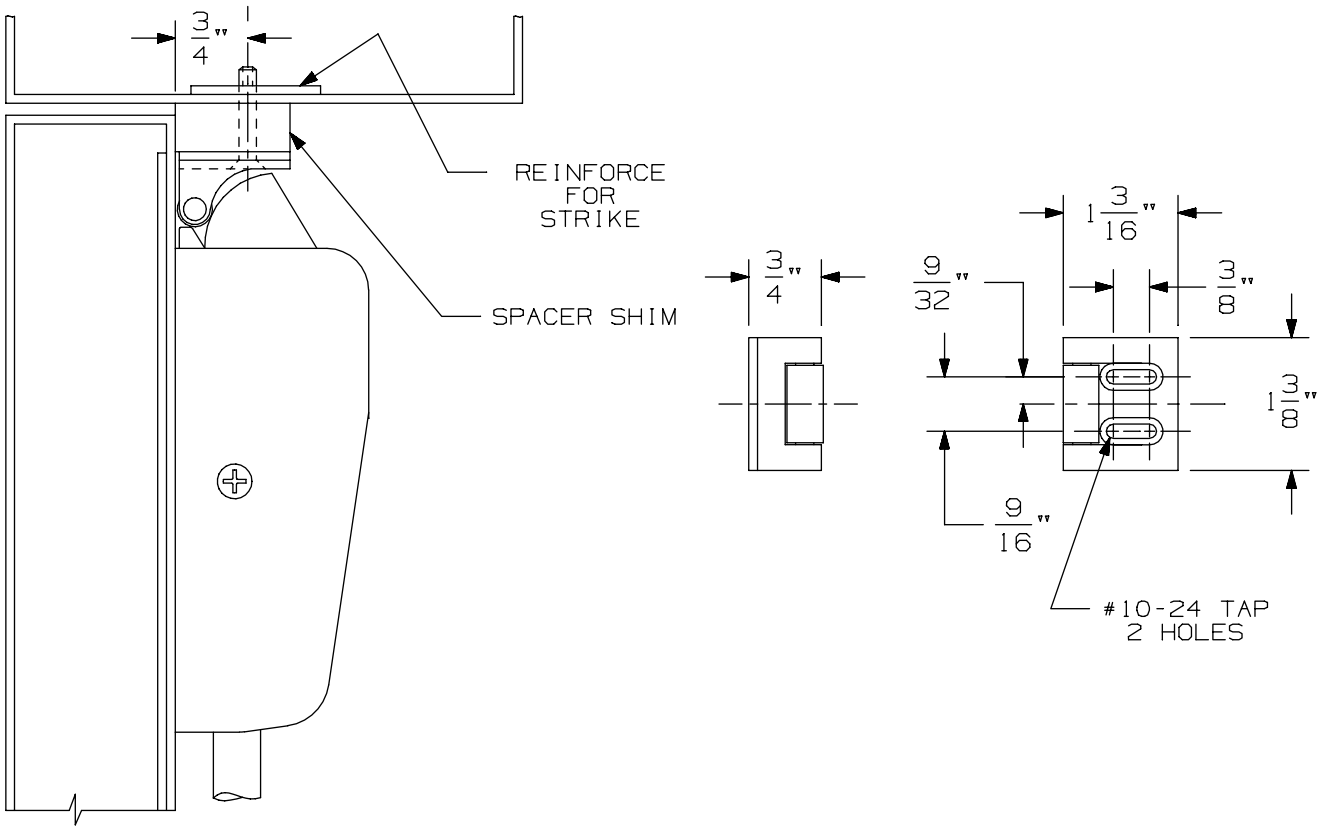

NOT HANDED

NOTE: LATCH CASE MOUNTING HOLES TO BE PREPARED AT INSTALLATION ON DOOR.

266 Strike	VON DUPRIN®	
NOTES: SEE MASTER SHEET #10001 FOR SUGGESTED REINFORCING	TEMPLATE NUMBER: 30010_a	DATE: 05-23-13

360T, 360L, 360T-BE, 360L-BE CONTROL

NOTES: SEE MASTER SHEET #10001 FOR SUGGESTED REINFORCING

TEMPLATE NUMBER: 40080_e

DATE: 04-06-15

VON DUPRIN®

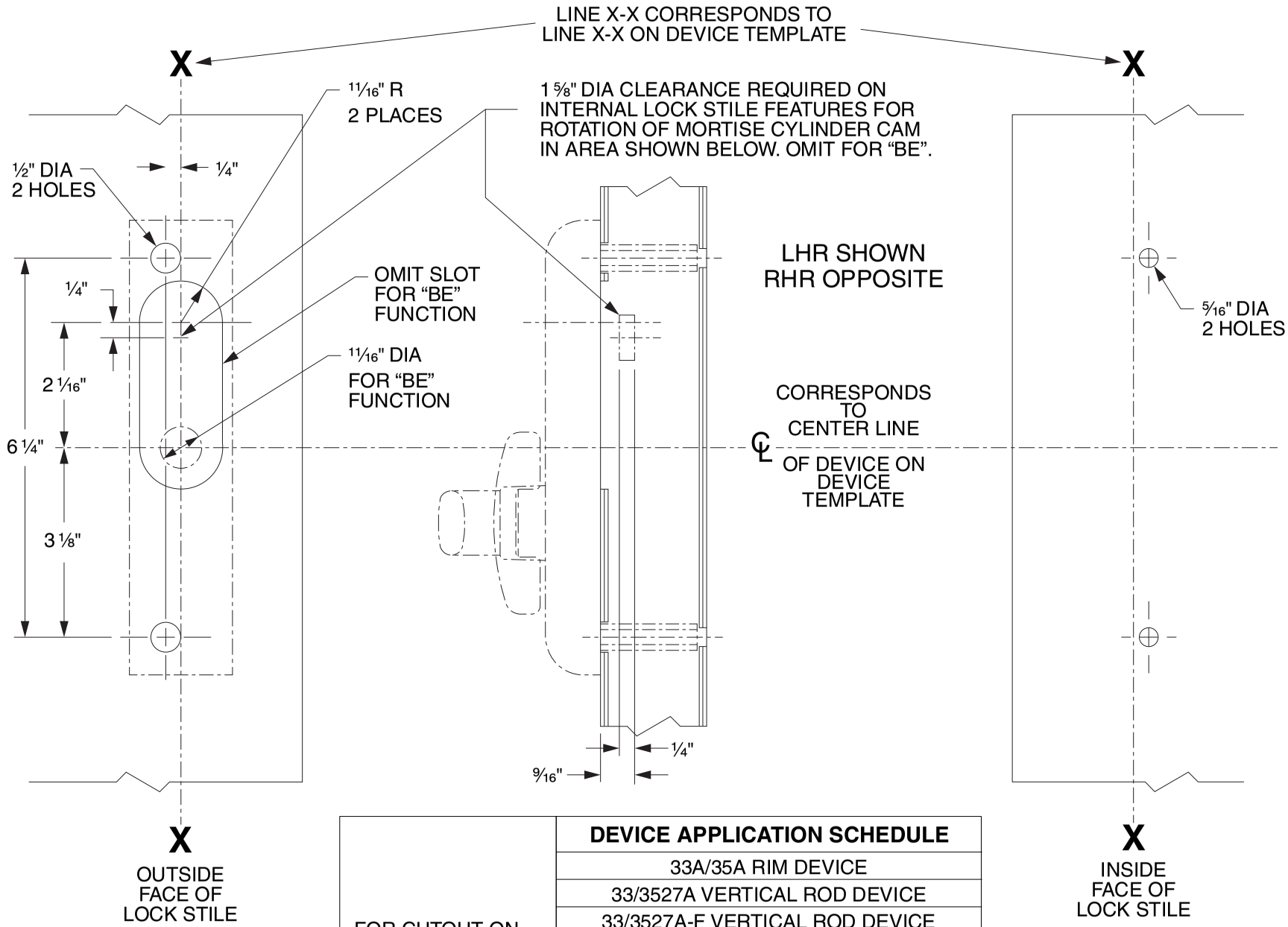

	DEVICE APPLICATION SCHEDULE
FOR CUTOUT ON INSIDE FACE OF DOOR SEE DEVICE TEMPLATE	33A/35A RIM DEVICE
	33/3527A VERTICAL ROD DEVICE
	33/3527A-F VERTICAL ROD DEVICE
	33/3547A VERTICAL ROD DEVICE
	33/3547A-F VERTICAL ROD DEVICE
	33/3548A VERTICAL ROD DEVICE
	33/3548A-F VERTICAL ROD DEVICE
	33/3549A VERTICAL CABLE DEVICE
	33/3549A-F VERTICAL CABLE DEVICE

33A/35A Series Exit Devices

-

3327A/3527A-F Surface Vertical Rod Fire (Standard, CD, EL, LX, RX and SS)

DEVICE INSTALLATION SCHEDULE		
INSTALLATION	BACKSET	STILE WIDTH
TWO VERTICAL ROD DEVICES (PANIC & FIRE)	1 3/16"	2" TO 2 3/4"**
	1 1/2"	2 3/4" TO 3 3/4"
	1 7/8"	3 3/4" TO 5"
	2 1/2"	5" TO FLUSH
SINGLE DOOR (PANIC ONLY)	1 11/32"*	2" TO 2 3/4" *,**
	1 1/2"	2 3/4" TO 3 3/4"
	1 7/8"	3 3/4" TO 5"
	2 1/2"	5" TO FLUSH
VERTICAL ROD & RIM DEVICE REQUIRES 1609J STRIKE	2 7/32"	3" MIN.
* 1/2" MAXIMUM STOP HEIGHT		

NOTE: BACKSET MAY VARY WHEN USED WITH COORDINATOR DEPENDING ON TYPE USED.

USE OF OUTSIDE TRIM MAY ALTER MINIMUM STILE REQUIREMENT. SEE TRIM TEMPLATE.

**CONSULT FACTORY FOR STILE WIDTHS LESS THAN 2" TO ENSURE PROPER APPLICATION (1)

(1)

(1)

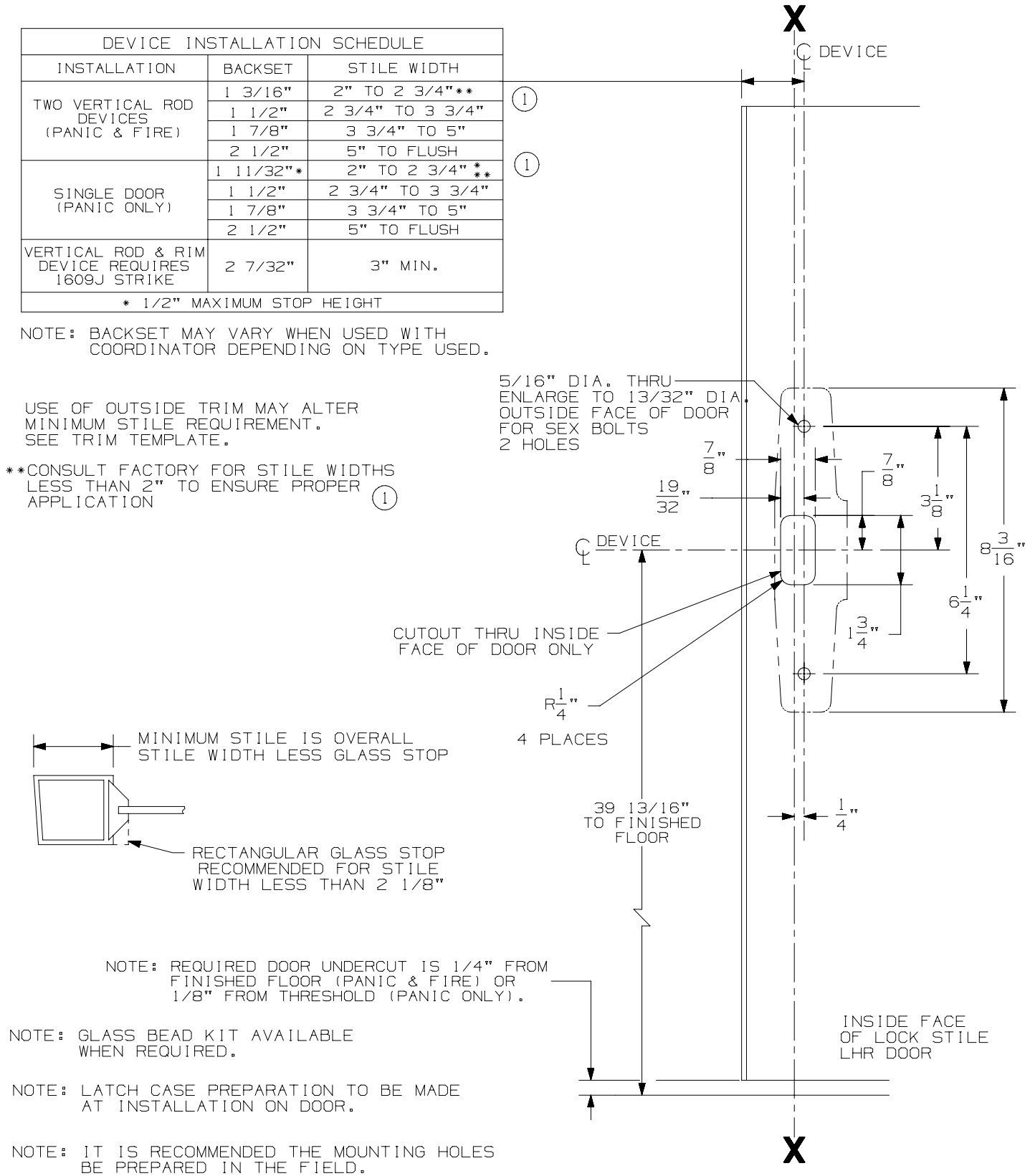

NOTE: REQUIRED DOOR UNDERCUT IS 1/4" FROM FINISHED FLOOR (PANIC & FIRE) OR 1/8" FROM THRESHOLD (PANIC ONLY).

NOTE: GLASS BEAD KIT AVAILABLE WHEN REQUIRED.

NOTE: LATCH CASE PREPARATION TO BE MADE AT INSTALLATION ON DOOR.

NOTE: IT IS RECOMMENDED THE MOUNTING HOLES BE PREPARED IN THE FIELD.

FOR OUTSIDE TRIM PREPARATION, WHEN REQUIRED, SEE TRIM TEMPLATE.

LHR SHOWN
RHR OPPOSITE

33/3527A & 33/3527A-F Series Vertical Rod Device

VON DUPRIN®

NOTES: SEE MASTER SHEET #10001 FOR SUGGESTED REINFORCING

TEMPLATE NUMBER: 10049_a

DATE: 05-15-13

RIM APPLICATION

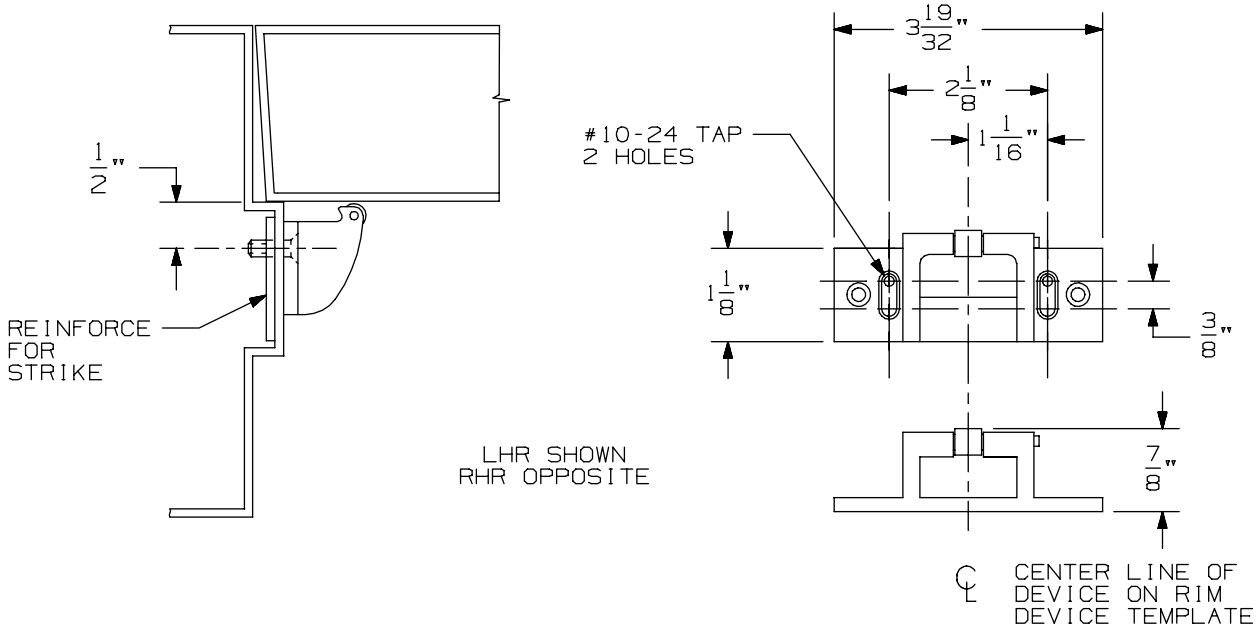

VERTICAL APPLICATION

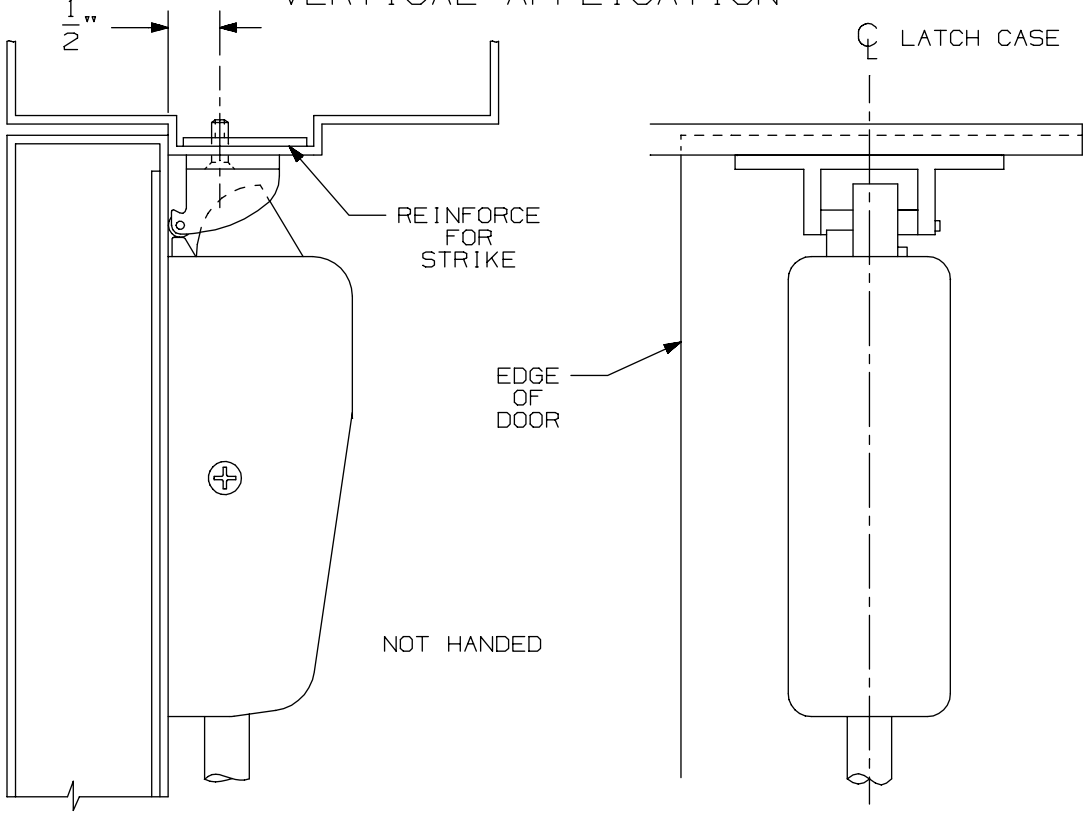

NOTE: LATCH CASE MOUNTING HOLES TO BE PREPARED AT INSTALLATION ON DOOR.

499-F Strike	VON DUPRIN®	
NOTES: SEE MASTER SHEET #10001 FOR SUGGESTED REINFORCING	TEMPLATE NUMBER: 30040_a	DATE: 05-23-13

DEVICE INSTALLATION SCHEDULE		
INSTALLATION	BACKSET	STILE WIDTH
TWO VERTICAL ROD DEVICES (PANIC & FIRE)	1 3/16"	2" TO 2 3/4"**
	1 1/2"	2 3/4" TO 3 3/4"
	1 7/8"	3 3/4" TO 5"
	2 1/2"	5" TO FLUSH
SINGLE DOOR (PANIC ONLY)	1 11/32"*	2" TO 2 3/4" *,**
	1 1/2"	2 3/4" TO 3 3/4"
	1 7/8"	3 3/4" TO 5"
	2 1/2"	5" TO FLUSH
VERTICAL ROD & RIM DEVICE REQUIRES 1609J STRIKE	2 7/32"	3" MIN.
* 1/2" MAXIMUM STOP HEIGHT		

NOTE: BACKSET MAY VARY WHEN USED WITH COORDINATOR DEPENDING ON TYPE USED.

USE OF OUTSIDE TRIM MAY ALTER MINIMUM STILE REQUIREMENT. SEE TRIM TEMPLATE.

**CONSULT FACTORY FOR STILE WIDTHS LESS THAN 2" TO ENSURE PROPER APPLICATION (1)

(1)

(1)

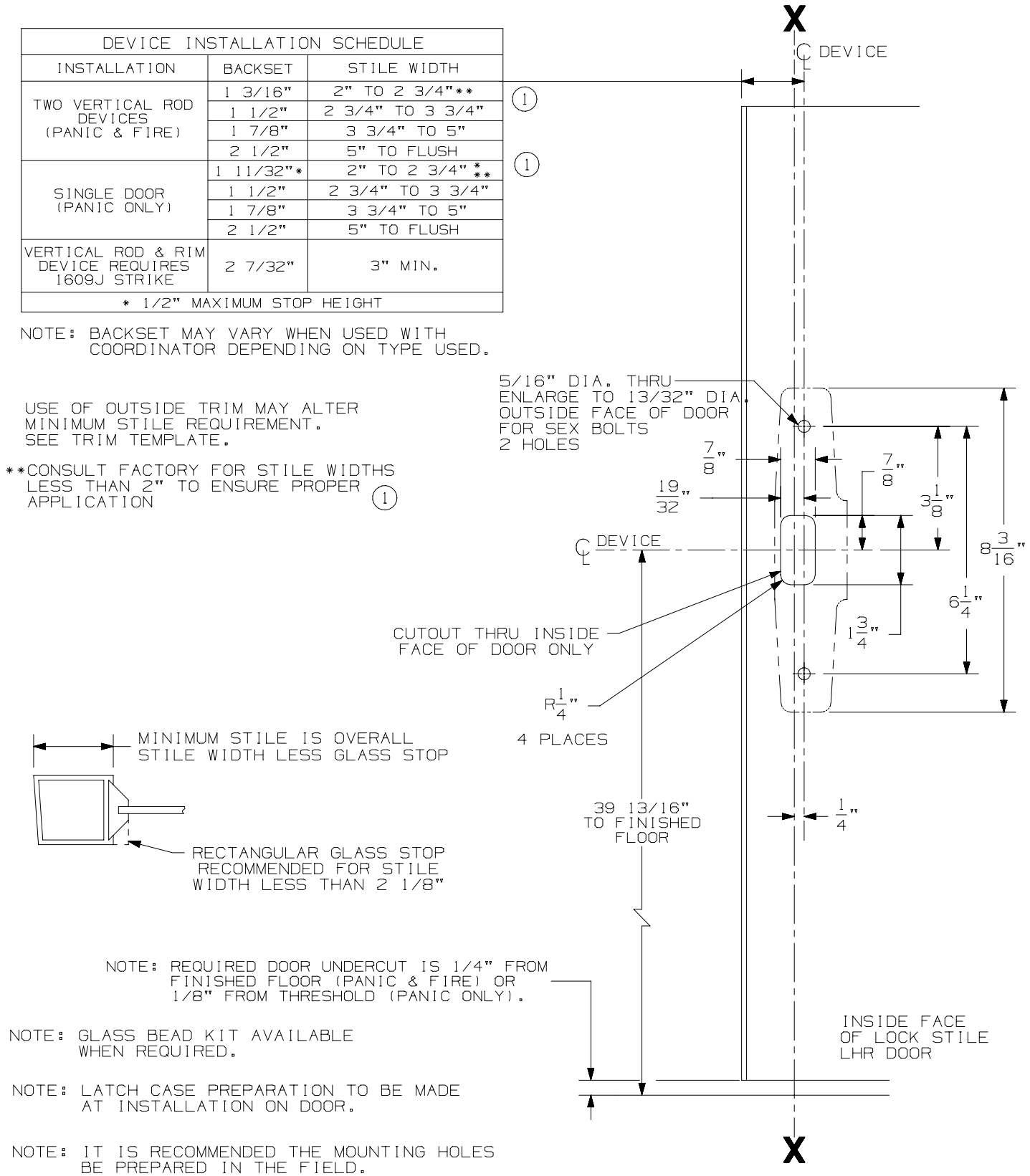

NOTE: REQUIRED DOOR UNDERCUT IS 1/4" FROM FINISHED FLOOR (PANIC & FIRE) OR 1/8" FROM THRESHOLD (PANIC ONLY).

NOTE: GLASS BEAD KIT AVAILABLE WHEN REQUIRED.

NOTE: LATCH CASE PREPARATION TO BE MADE AT INSTALLATION ON DOOR.

NOTE: IT IS RECOMMENDED THE MOUNTING HOLES BE PREPARED IN THE FIELD.

FOR OUTSIDE TRIM PREPARATION, WHEN REQUIRED, SEE TRIM TEMPLATE.

LHR SHOWN
RHR OPPOSITE

33/3527A & 33/3527A-F Series Vertical Rod Device

VON DUPRIN®

NOTES: SEE MASTER SHEET #10001 FOR SUGGESTED REINFORCING

TEMPLATE NUMBER: 10049_a

DATE: 05-15-13

386NL & DT TRIM

NOTES: SEE MASTER SHEET #10001 FOR SUGGESTED REINFORCING

TEMPLATE NUMBER: 20008_C

DATE: 5-25-16

VON DUPRIN®

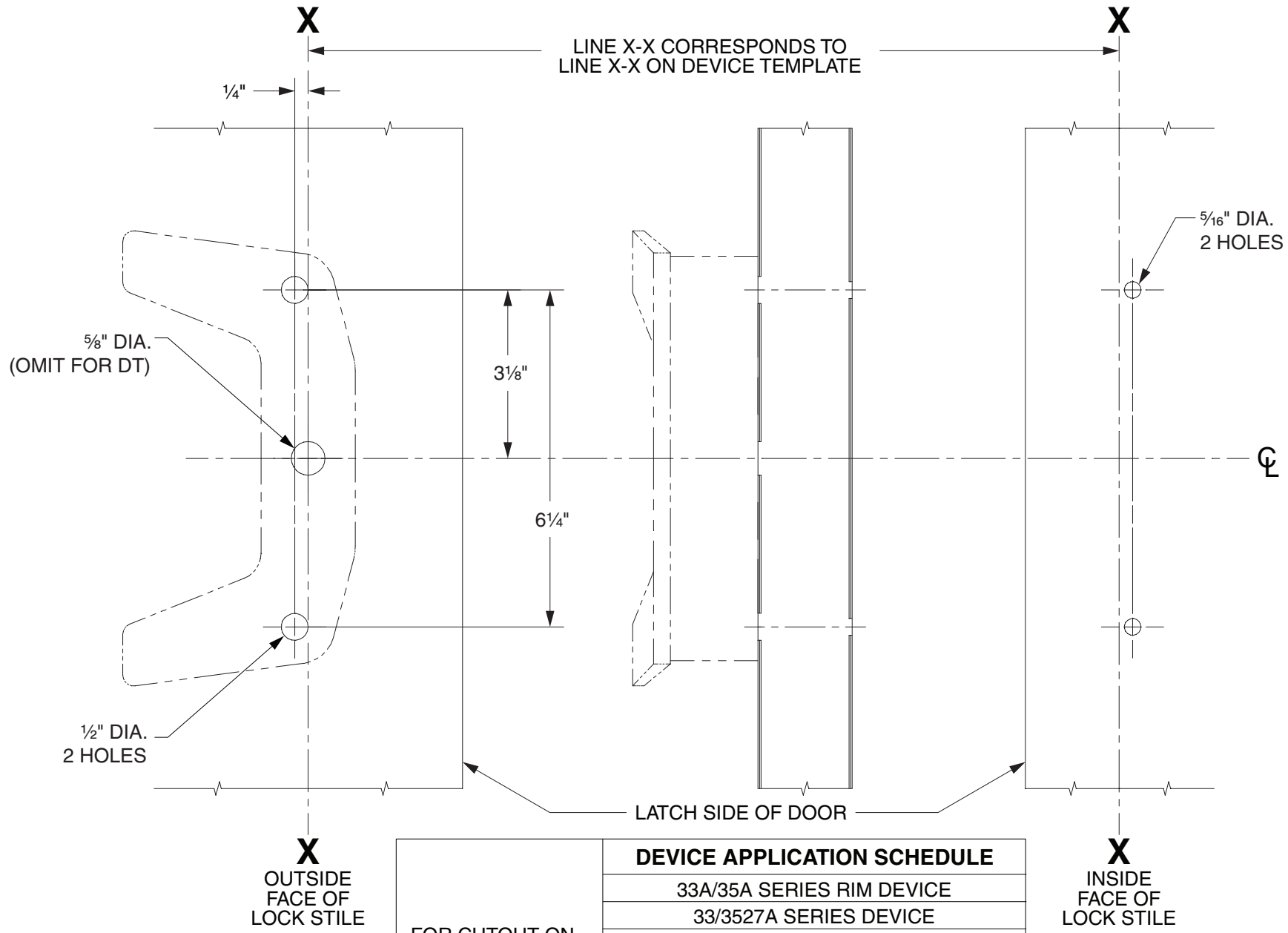

LHR SHOWN
RHR OPPOSITE

FOR CUTOUT ON INSIDE FACE OF DOOR, SEE DEVICE TEMPLATE	**DEVICE APPLICATION SCHEDULE**
	33A/35A SERIES RIM DEVICE
	33/3527A SERIES DEVICE
	33/3527A-F SERIES DEVICE
	33/3547A SERIES DEVICE
	33/3547A-F SERIES DEVICE
	33/3548A SERIES DEVICE
	33/3548A-F SERIES DEVICE
	33/3549A SERIES DEVICE
	33/3549A-F SERIES DEVICE

RIM APPLICATION

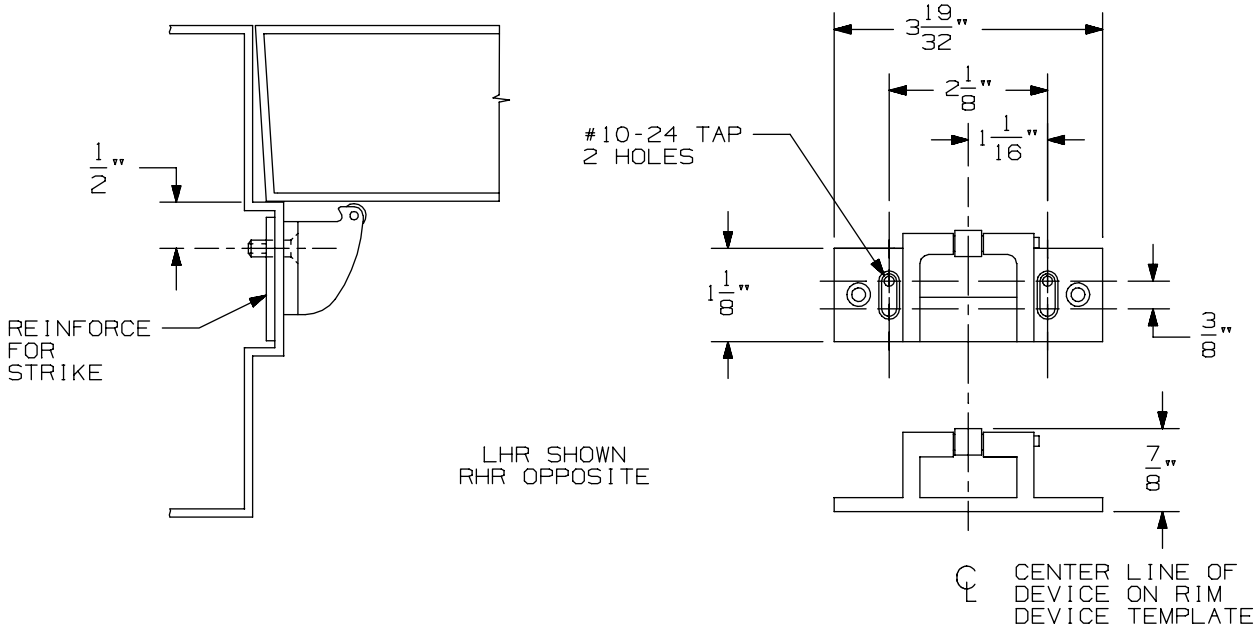

VERTICAL APPLICATION

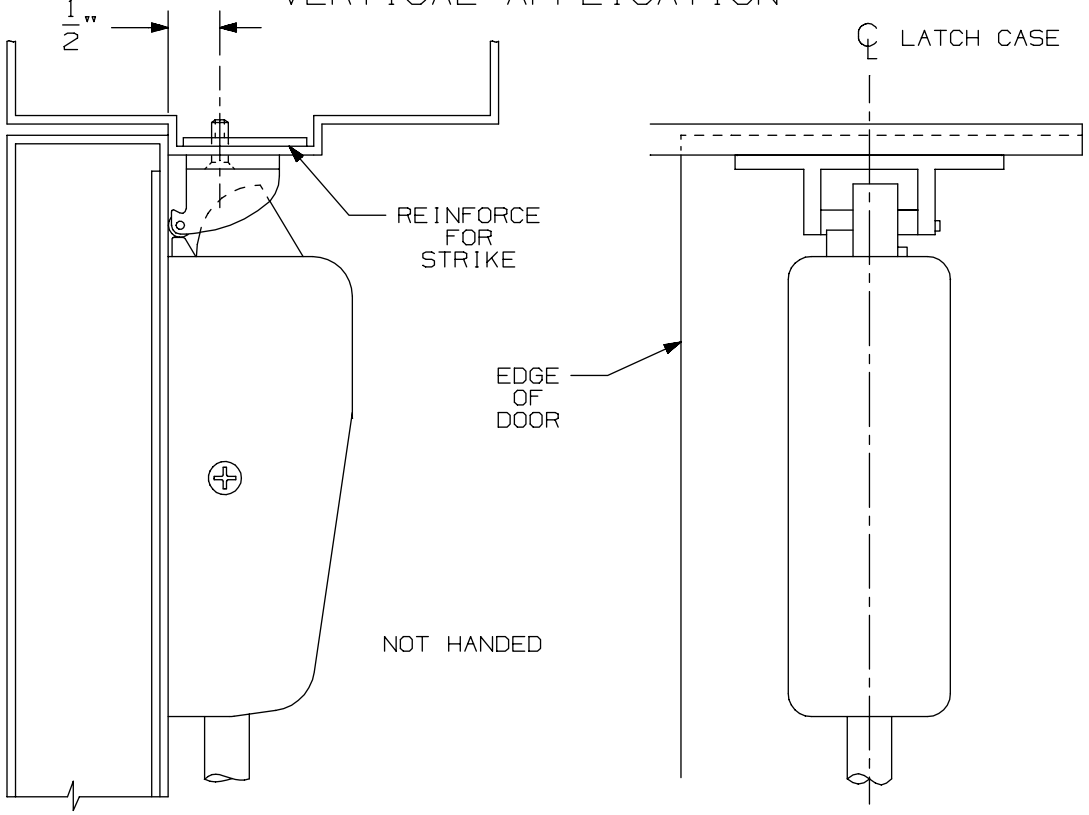

NOTE: LATCH CASE MOUNTING HOLES TO BE PREPARED AT INSTALLATION ON DOOR.

499-F Strike	VON DUPRIN®	
NOTES: SEE MASTER SHEET #10001 FOR SUGGESTED REINFORCING	TEMPLATE NUMBER: 30040_a	DATE: 05-23-13

DEVICE INSTALLATION SCHEDULE		
INSTALLATION	BACKSET	STILE WIDTH
TWO VERTICAL ROD DEVICES (PANIC & FIRE)	1 3/16"	2" TO 2 3/4"**
	1 1/2"	2 3/4" TO 3 3/4"
	1 7/8"	3 3/4" TO 5"
	2 1/2"	5" TO FLUSH
SINGLE DOOR (PANIC ONLY)	1 11/32"*	2" TO 2 3/4" *,**
	1 1/2"	2 3/4" TO 3 3/4"
	1 7/8"	3 3/4" TO 5"
	2 1/2"	5" TO FLUSH
VERTICAL ROD & RIM DEVICE REQUIRES 1609J STRIKE	2 7/32"	3" MIN.
* 1/2" MAXIMUM STOP HEIGHT		

NOTE: BACKSET MAY VARY WHEN USED WITH COORDINATOR DEPENDING ON TYPE USED.

USE OF OUTSIDE TRIM MAY ALTER MINIMUM STILE REQUIREMENT. SEE TRIM TEMPLATE.

**CONSULT FACTORY FOR STILE WIDTHS LESS THAN 2" TO ENSURE PROPER APPLICATION (1)

(1)

(1)

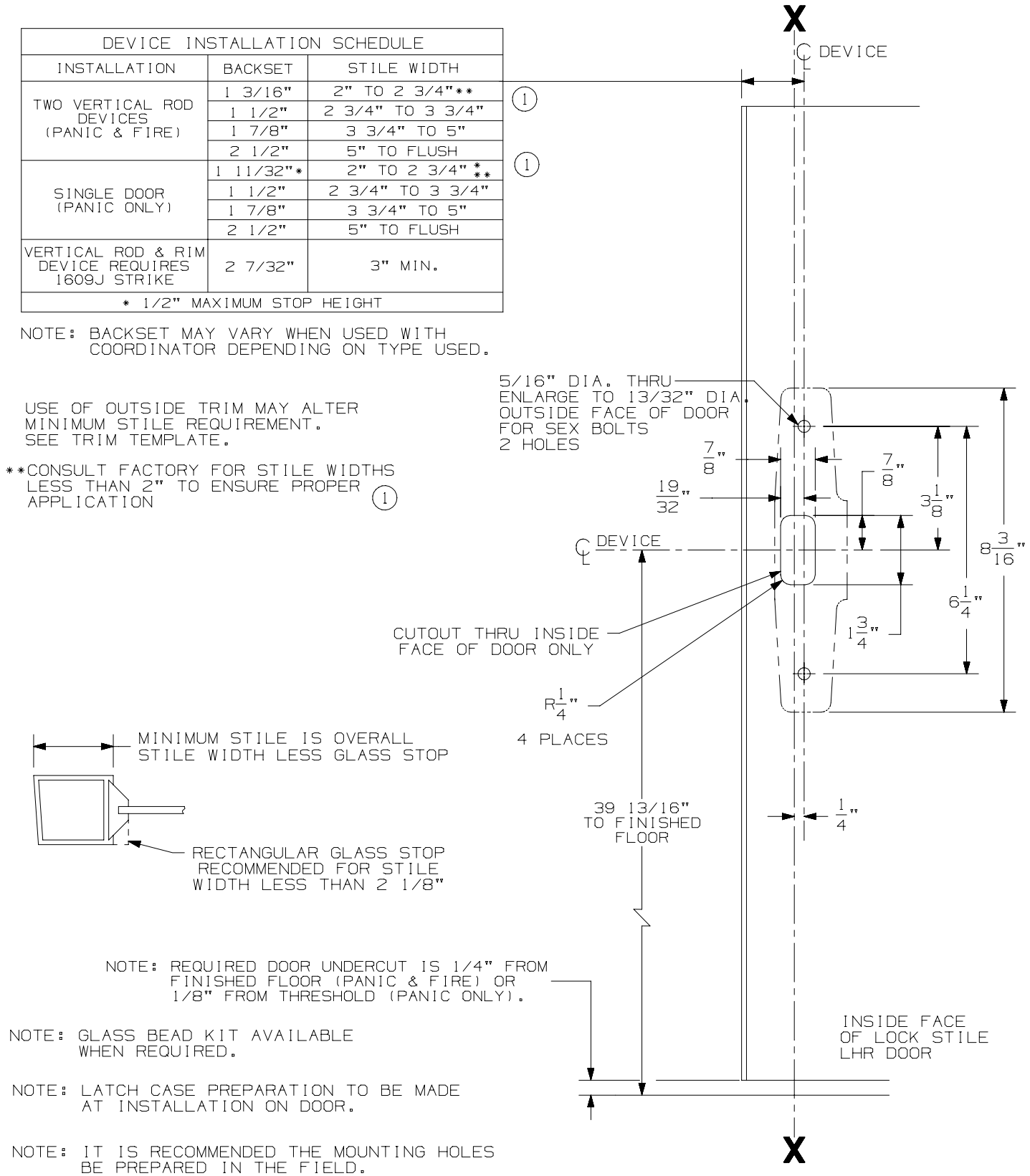

NOTE: REQUIRED DOOR UNDERCUT IS 1/4" FROM FINISHED FLOOR (PANIC & FIRE) OR 1/8" FROM THRESHOLD (PANIC ONLY).

NOTE: GLASS BEAD KIT AVAILABLE WHEN REQUIRED.

NOTE: LATCH CASE PREPARATION TO BE MADE AT INSTALLATION ON DOOR.

NOTE: IT IS RECOMMENDED THE MOUNTING HOLES BE PREPARED IN THE FIELD.

FOR OUTSIDE TRIM PREPARATION, WHEN REQUIRED, SEE TRIM TEMPLATE.

LHR SHOWN
RHR OPPOSITE

33/3527A & 33/3527A-F Series Vertical Rod Device

VON DUPRIN®

NOTES: SEE MASTER SHEET #10001 FOR SUGGESTED REINFORCING

TEMPLATE NUMBER: 10049_a

DATE: 05-15-13

388NL CYLINDER CONTROL

NOTES: SEE MASTER SHEET #10001 FOR SUGGESTED REINFORCING

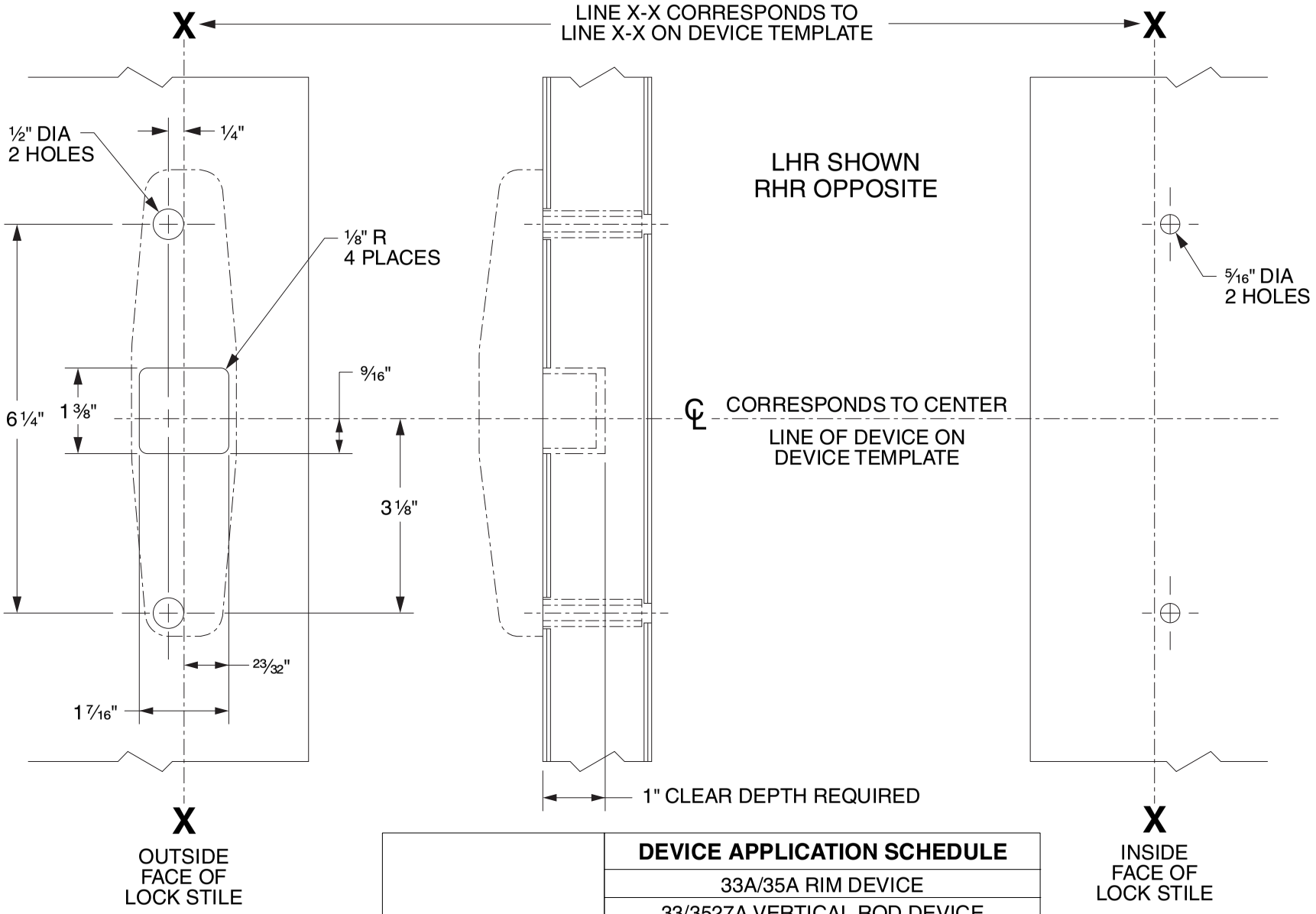

	DEVICE APPLICATION SCHEDULE
FOR CUTOUT ON INSIDE FACE OF DOOR SEE DEVICE TEMPLATE	33A/35A RIM DEVICE
	33/3527A VERTICAL ROD DEVICE
	33/3527A-F VERTICAL ROD DEVICE
	33/3547A VERTICAL ROD DEVICE
	33/3547A-F VERTICAL ROD DEVICE
	33/3548A VERTICAL ROD DEVICE
	33/3548A-F VERTICAL ROD DEVICE
	33/3549A VERTICAL ROD DEVICE
	33/3549A-F VERTICAL ROD DEVICE

VON DUPRIN®

TEMPLATE NUMBER: 40079_d

DATE: 05-31-13

RIM APPLICATION

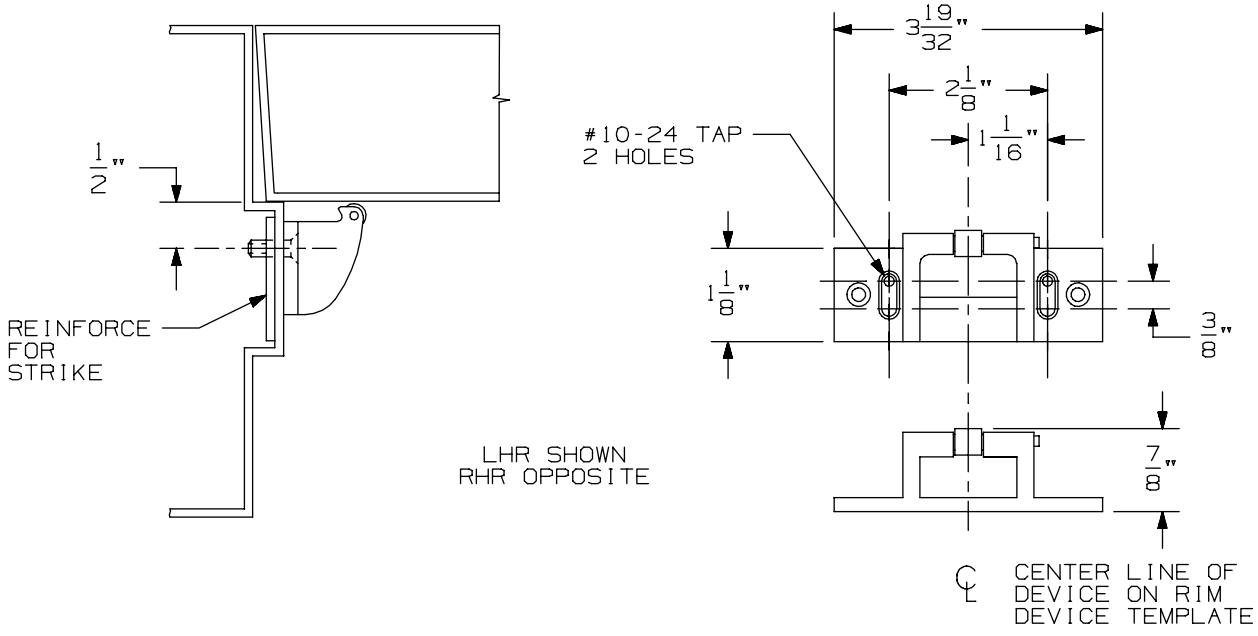

VERTICAL APPLICATION

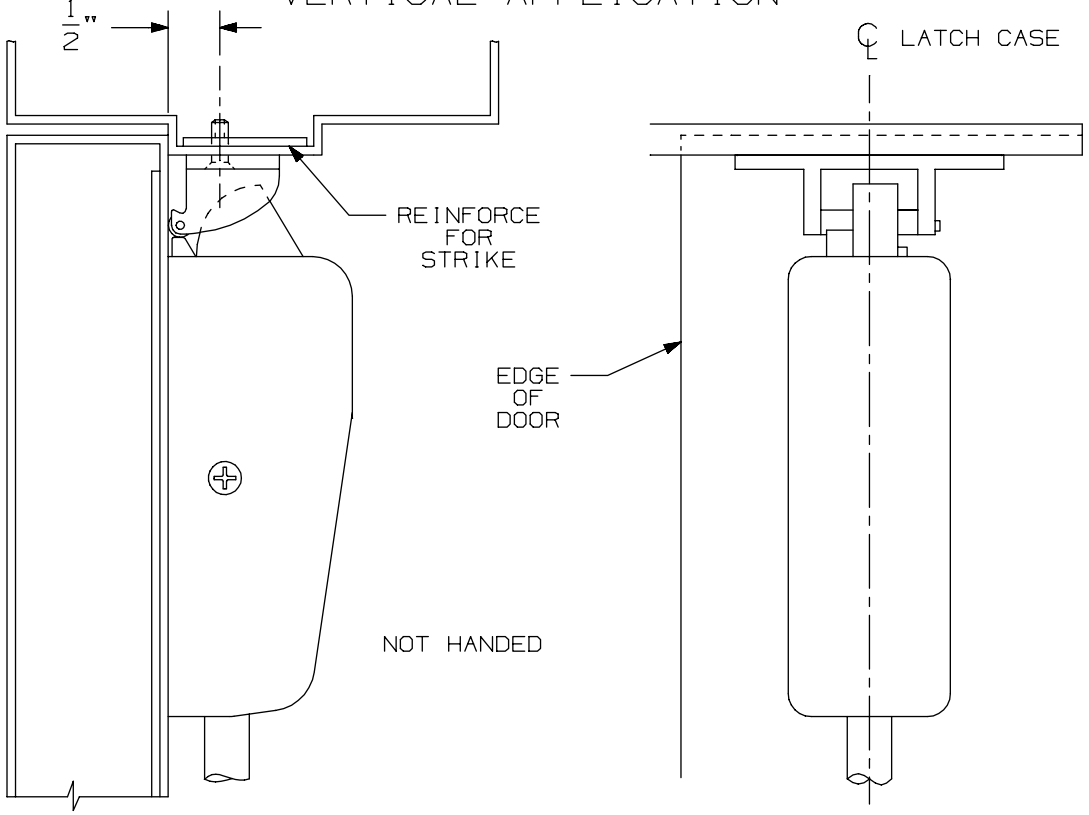

NOTE: LATCH CASE MOUNTING HOLES TO BE PREPARED AT INSTALLATION ON DOOR.

499-F Strike	VON DUPRIN®	
NOTES: SEE MASTER SHEET #10001 FOR SUGGESTED REINFORCING	TEMPLATE NUMBER: 30040_a	DATE: 05-23-13

DEVICE INSTALLATION SCHEDULE		
INSTALLATION	BACKSET	STILE WIDTH
TWO VERTICAL ROD DEVICES (PANIC & FIRE)	1 3/16"	2" TO 2 3/4"**
	1 1/2"	2 3/4" TO 3 3/4"
	1 7/8"	3 3/4" TO 5"
	2 1/2"	5" TO FLUSH
SINGLE DOOR (PANIC ONLY)	1 11/32"*	2" TO 2 3/4" *,**
	1 1/2"	2 3/4" TO 3 3/4"
	1 7/8"	3 3/4" TO 5"
	2 1/2"	5" TO FLUSH
VERTICAL ROD & RIM DEVICE REQUIRES 1609J STRIKE	2 7/32"	3" MIN.
* 1/2" MAXIMUM STOP HEIGHT		

NOTE: BACKSET MAY VARY WHEN USED WITH COORDINATOR DEPENDING ON TYPE USED.

USE OF OUTSIDE TRIM MAY ALTER MINIMUM STILE REQUIREMENT. SEE TRIM TEMPLATE.

**CONSULT FACTORY FOR STILE WIDTHS LESS THAN 2" TO ENSURE PROPER APPLICATION (1)

(1)

(1)

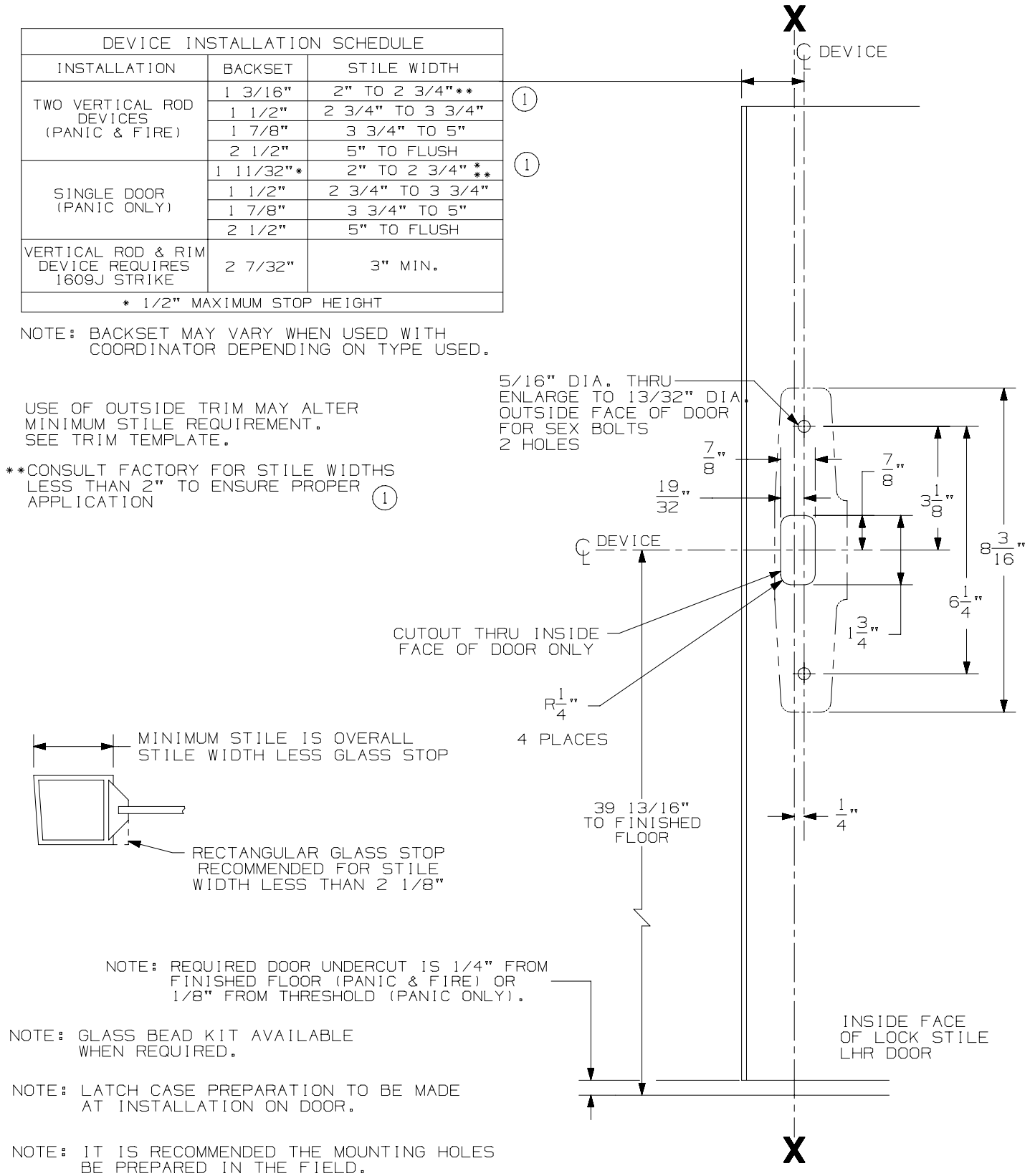

NOTE: REQUIRED DOOR UNDERCUT IS 1/4" FROM FINISHED FLOOR (PANIC & FIRE) OR 1/8" FROM THRESHOLD (PANIC ONLY).

NOTE: GLASS BEAD KIT AVAILABLE WHEN REQUIRED.

NOTE: LATCH CASE PREPARATION TO BE MADE AT INSTALLATION ON DOOR.

NOTE: IT IS RECOMMENDED THE MOUNTING HOLES BE PREPARED IN THE FIELD.

FOR OUTSIDE TRIM PREPARATION, WHEN REQUIRED, SEE TRIM TEMPLATE.

LHR SHOWN
RHR OPPOSITE

33/3527A & 33/3527A-F Series Vertical Rod Device

VON DUPRIN®

NOTES: SEE MASTER SHEET #10001 FOR SUGGESTED REINFORCING

TEMPLATE NUMBER: 10049_a

DATE: 05-15-13

360T, 360L, 360T-BE, 360L-BE CONTROL

NOTES: SEE MASTER SHEET #10001 FOR SUGGESTED REINFORCING

TEMPLATE NUMBER: 40080_e

DATE: 04-06-15

VON DUPRIN®

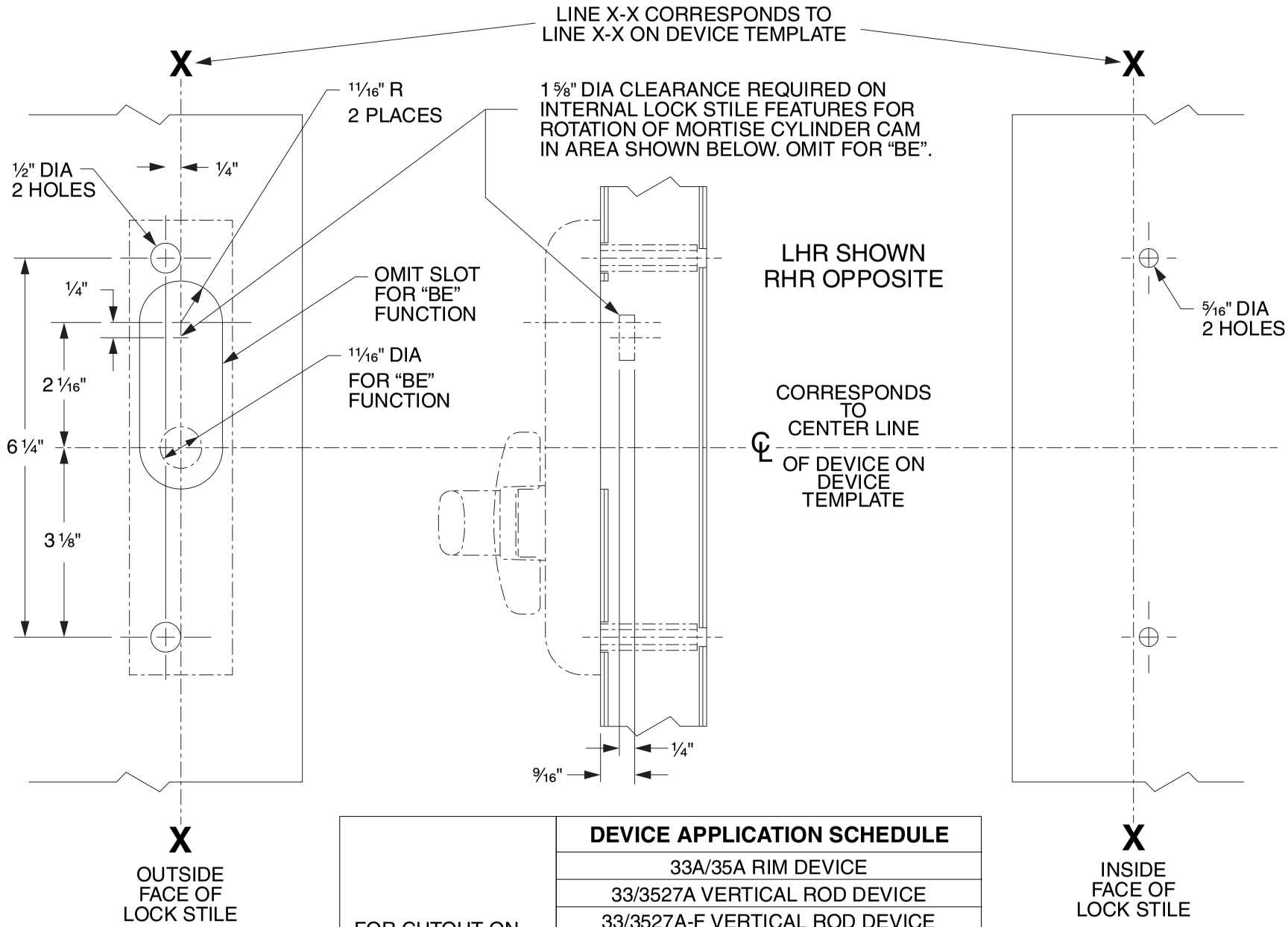

	DEVICE APPLICATION SCHEDULE
FOR CUTOUT ON INSIDE FACE OF DOOR SEE DEVICE TEMPLATE	33A/35A RIM DEVICE
	33/3527A VERTICAL ROD DEVICE
	33/3527A-F VERTICAL ROD DEVICE
	33/3547A VERTICAL ROD DEVICE
	33/3547A-F VERTICAL ROD DEVICE
	33/3548A VERTICAL ROD DEVICE
	33/3548A-F VERTICAL ROD DEVICE
	33/3549A VERTICAL CABLE DEVICE
	33/3549A-F VERTICAL CABLE DEVICE

RIM APPLICATION

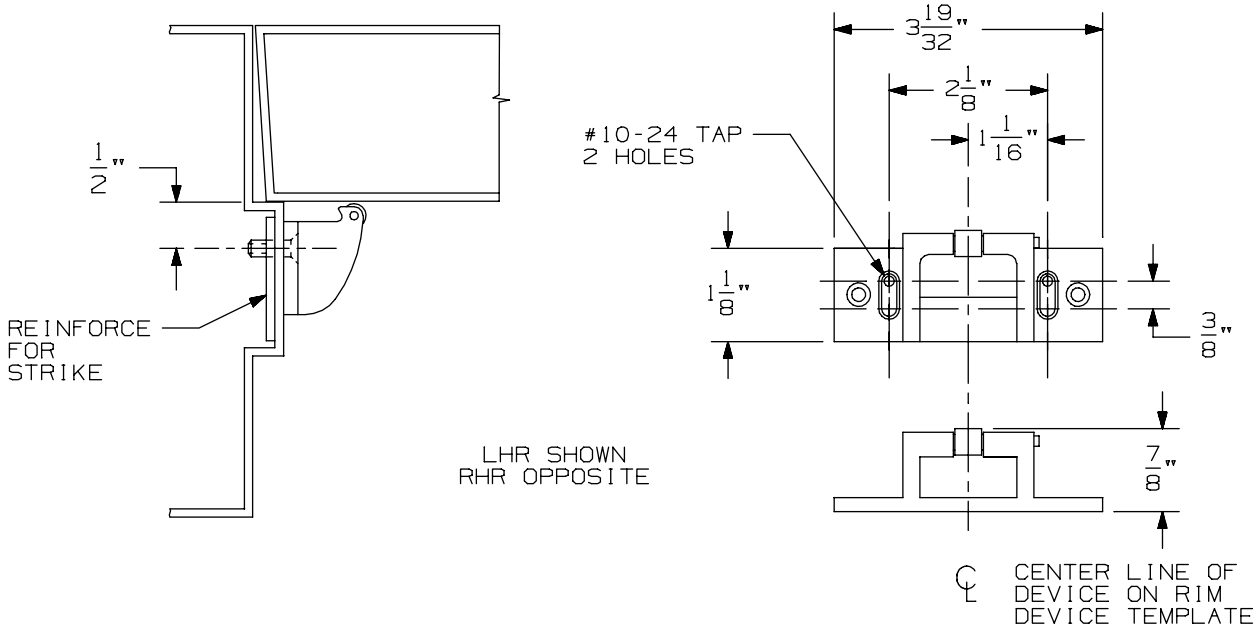

VERTICAL APPLICATION

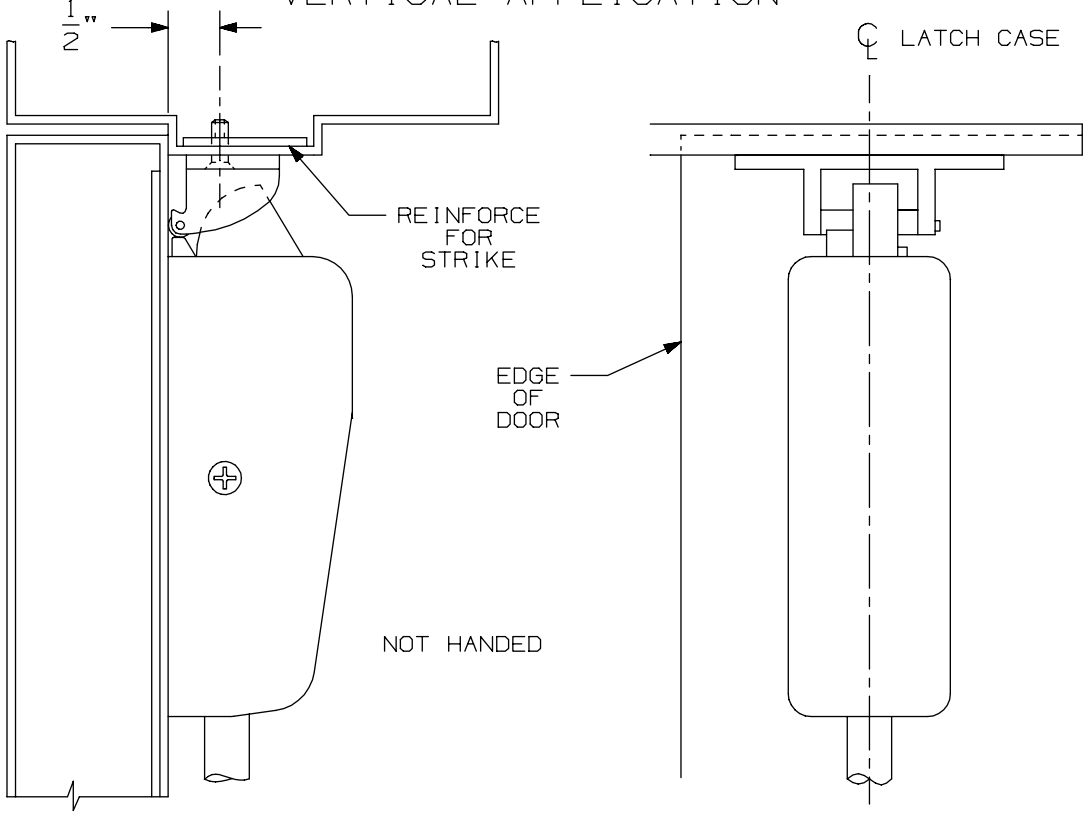

NOTE: LATCH CASE MOUNTING HOLES TO BE PREPARED AT INSTALLATION ON DOOR.

499-F Strike	VON DUPRIN®	
NOTES: SEE MASTER SHEET #10001 FOR SUGGESTED REINFORCING	TEMPLATE NUMBER: 30040_a	DATE: 05-23-13

DEVICE INSTALLATION SCHEDULE		
INSTALLATION	BACKSET	STILE WIDTH
TWO VERTICAL ROD DEVICES (PANIC & FIRE)	1 3/16"	2" TO 2 3/4"**
	1 1/2"	2 3/4" TO 3 3/4"
	1 7/8"	3 3/4" TO 5"
	2 1/2"	5" TO FLUSH
SINGLE DOOR (PANIC ONLY)	1 11/32"*	2" TO 2 3/4" *,**
	1 1/2"	2 3/4" TO 3 3/4"
	1 7/8"	3 3/4" TO 5"
	2 1/2"	5" TO FLUSH
VERTICAL ROD & RIM DEVICE REQUIRES 1609J STRIKE	2 7/32"	3" MIN.
* 1/2" MAXIMUM STOP HEIGHT		

NOTE: BACKSET MAY VARY WHEN USED WITH COORDINATOR DEPENDING ON TYPE USED.

USE OF OUTSIDE TRIM MAY ALTER MINIMUM STILE REQUIREMENT. SEE TRIM TEMPLATE.

**CONSULT FACTORY FOR STILE WIDTHS LESS THAN 2" TO ENSURE PROPER APPLICATION (1)

(1)

(1)

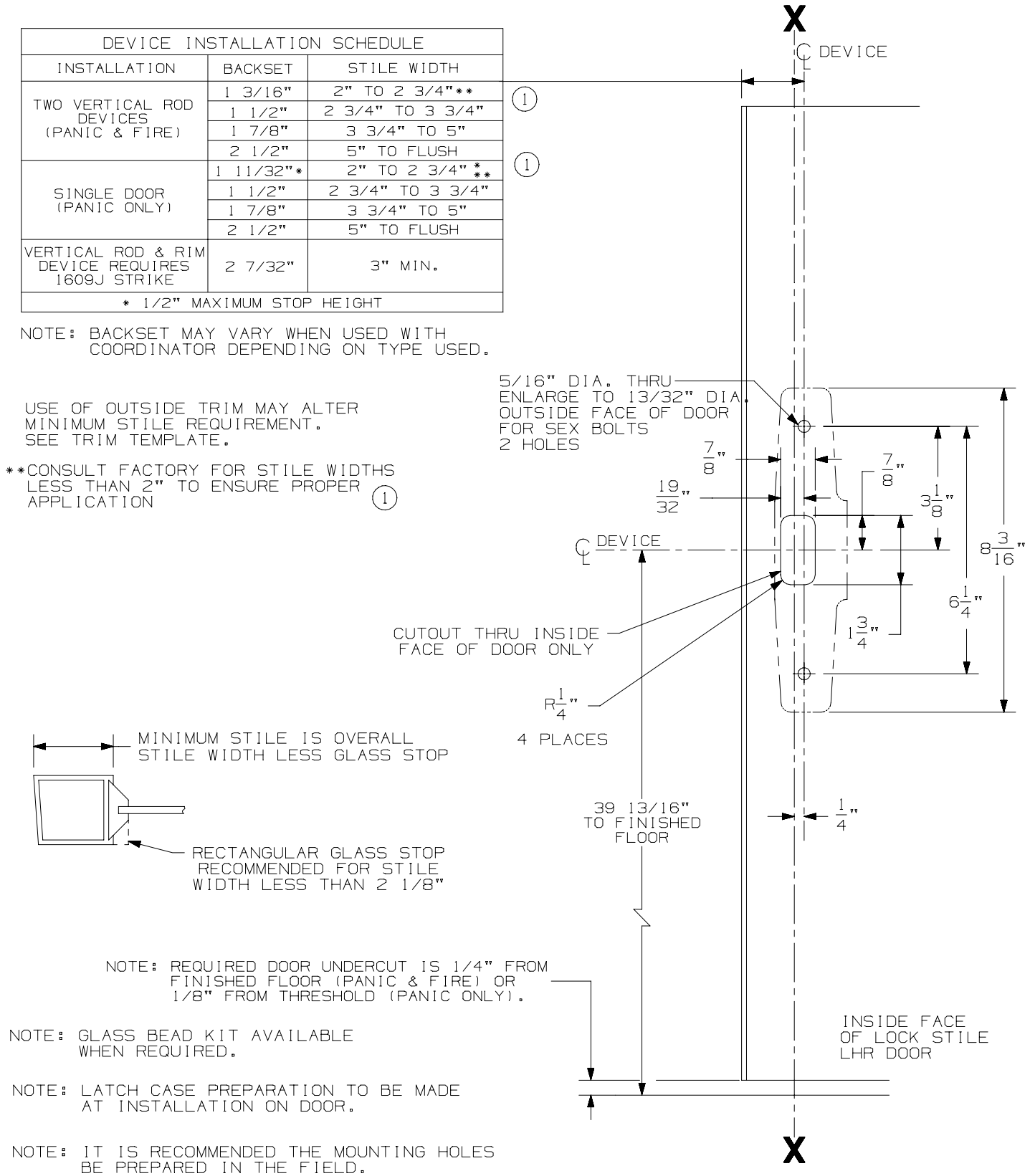

NOTE: REQUIRED DOOR UNDERCUT IS 1/4" FROM FINISHED FLOOR (PANIC & FIRE) OR 1/8" FROM THRESHOLD (PANIC ONLY).

NOTE: GLASS BEAD KIT AVAILABLE WHEN REQUIRED.

NOTE: LATCH CASE PREPARATION TO BE MADE AT INSTALLATION ON DOOR.

NOTE: IT IS RECOMMENDED THE MOUNTING HOLES BE PREPARED IN THE FIELD.

FOR OUTSIDE TRIM PREPARATION, WHEN REQUIRED, SEE TRIM TEMPLATE.

LHR SHOWN
RHR OPPOSITE

33/3527A & 33/3527A-F Series Vertical Rod Device

VON DUPRIN®

NOTES: SEE MASTER SHEET #10001 FOR SUGGESTED REINFORCING

TEMPLATE NUMBER: 10049_a

DATE: 05-15-13

386NL & DT TRIM

NOTES: SEE MASTER SHEET #10001 FOR SUGGESTED REINFORCING

TEMPLATE NUMBER: 20008_C

DATE: 5-25-16

VON DUPRIN®

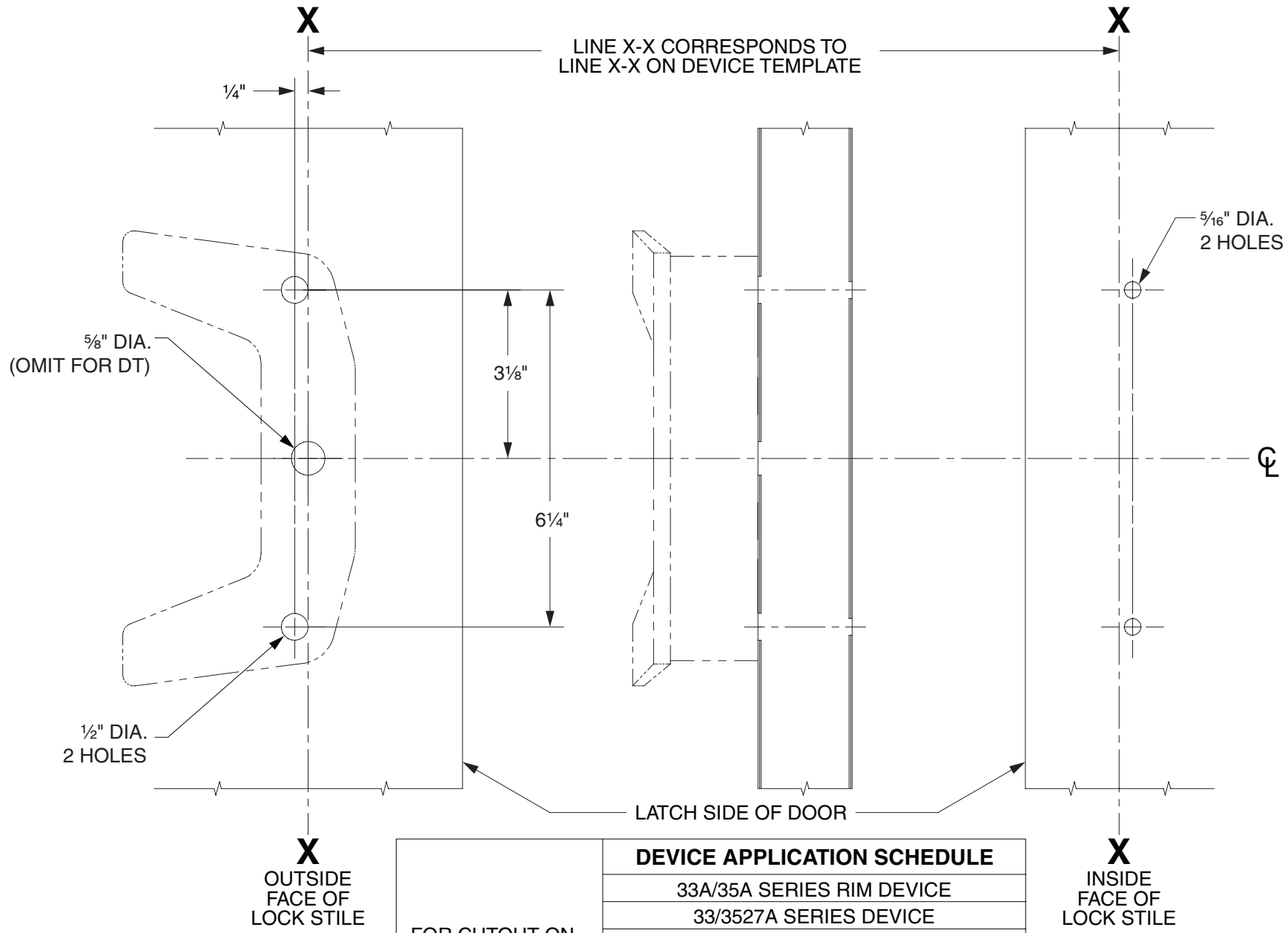

LHR SHOWN
RHR OPPOSITE

FOR CUTOUT ON INSIDE FACE OF DOOR, SEE DEVICE TEMPLATE	**DEVICE APPLICATION SCHEDULE**
	33A/35A SERIES RIM DEVICE
	33/3527A SERIES DEVICE
	33/3527A-F SERIES DEVICE
	33/3547A SERIES DEVICE
	33/3547A-F SERIES DEVICE
	33/3548A SERIES DEVICE
	33/3548A-F SERIES DEVICE
	33/3549A SERIES DEVICE
	33/3549A-F SERIES DEVICE

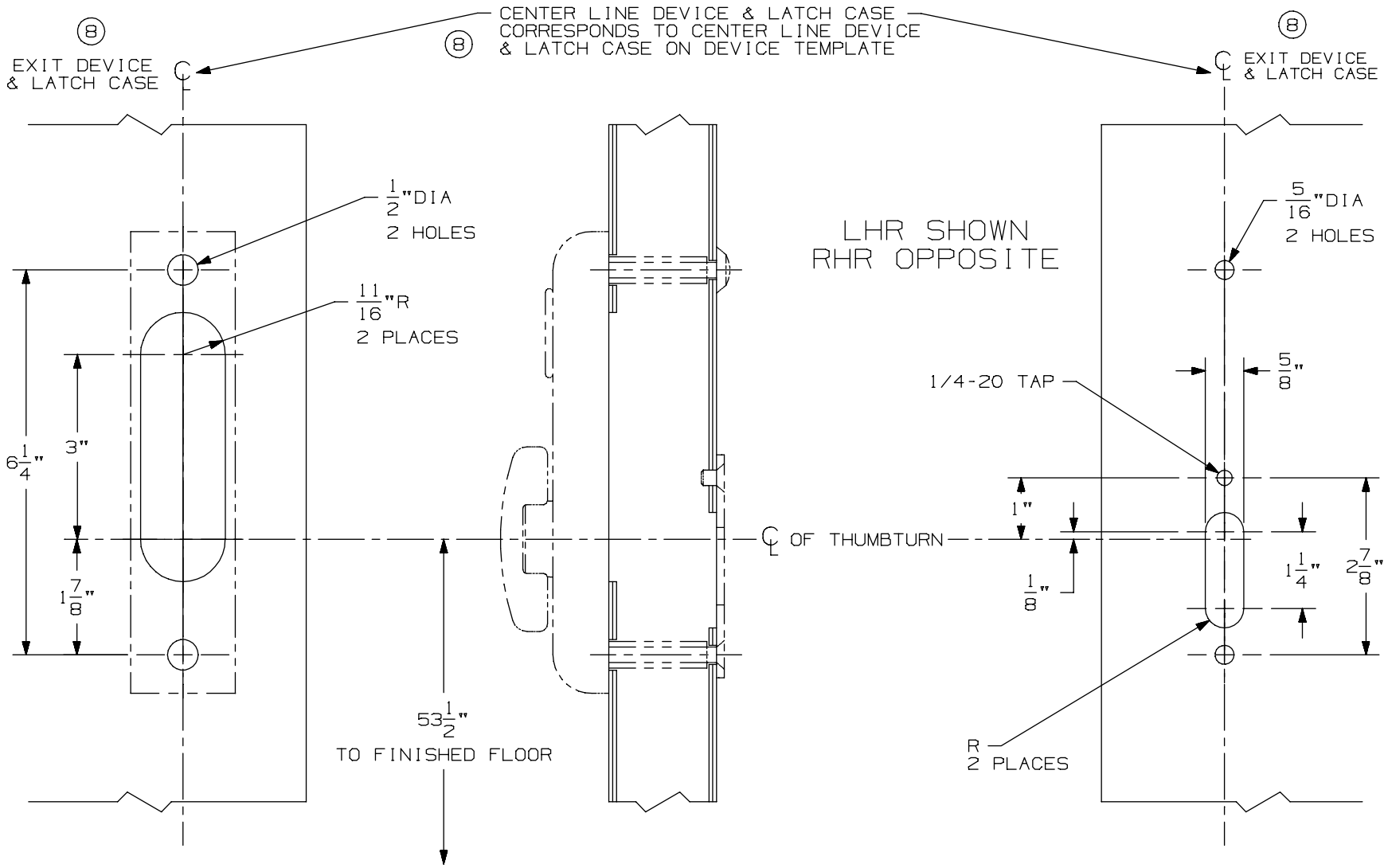

OUTSIDE
FACE OF
LOCK STILE

INSIDE
FACE OF
LOCK STILE

DEVICE APPLICATION SCHEDULE
2227 VERT. ROD DEVICE
2227-F VERT. ROD DEVICE
3327/3527 VERT. ROD DEVICE
8 3327A/3527A VERT. ROD DEVICE
8 3327A-F/3527A-F VERT. ROD DEVICE
9827/9927 VERT. ROD DEVICE
9827-F/9927-F VERT. ROD DEVICE

NOTES: SEE MASTER SHEET #10001 FOR SUGGESTED REINFORCING

374-T Control

VON DUPRIN®

TEMPLATE NUMBER: 40118_a

DATE: 05-28-13

RIM APPLICATION

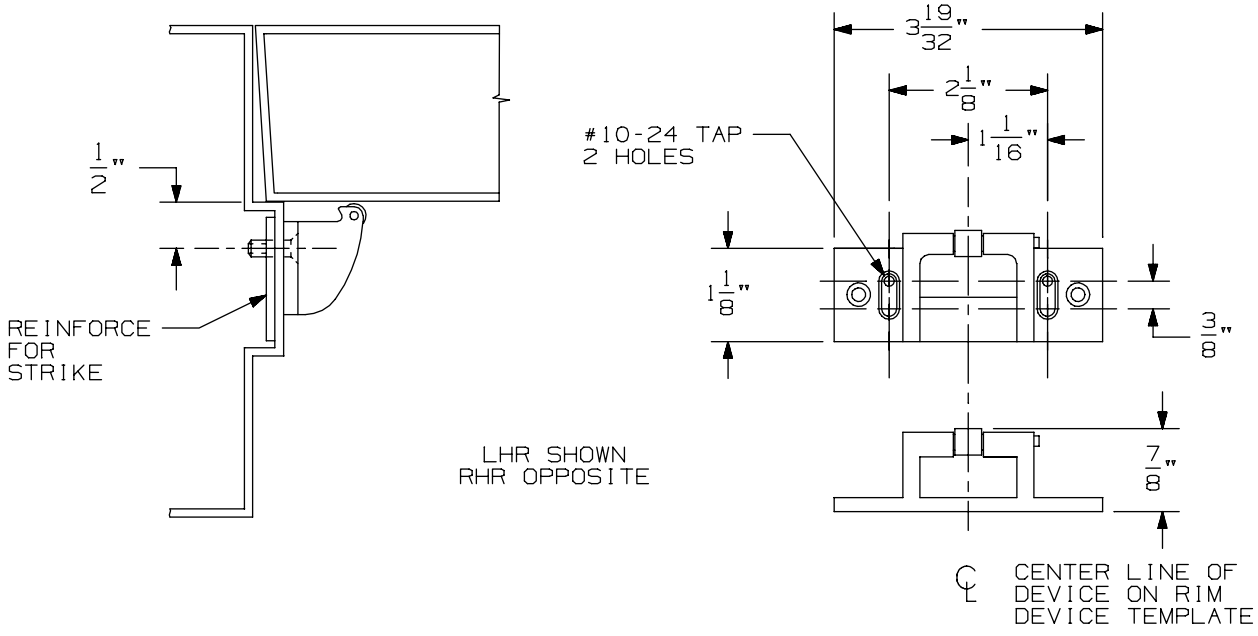

VERTICAL APPLICATION

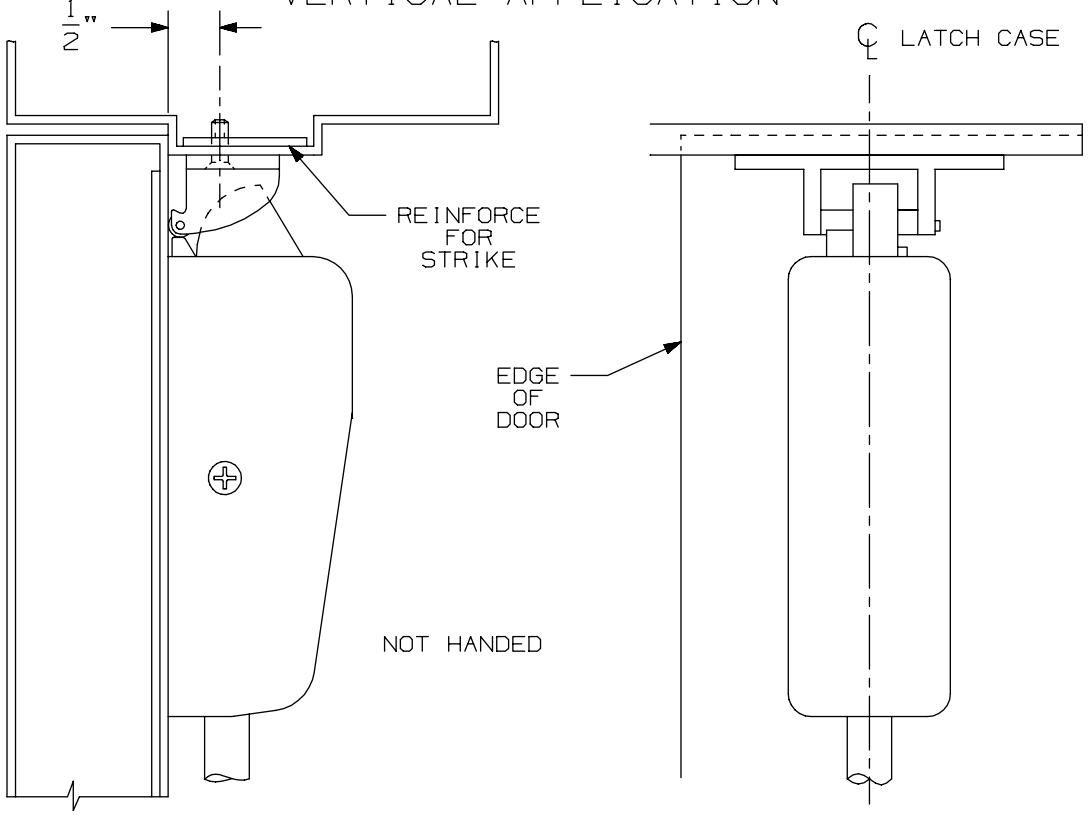

NOTE: LATCH CASE MOUNTING HOLES TO BE PREPARED AT INSTALLATION ON DOOR.

499-F Strike	VON DUPRIN®	
NOTES: SEE MASTER SHEET #10001 FOR SUGGESTED REINFORCING	TEMPLATE NUMBER: 30040_a	DATE: 05-23-13

360T, 360L, 360T-BE, 360L-BE CONTROL

NOTES: SEE MASTER SHEET #10001 FOR SUGGESTED REINFORCING

TEMPLATE NUMBER: 40080_e

DATE: 04-06-15

VON DUPRIN®

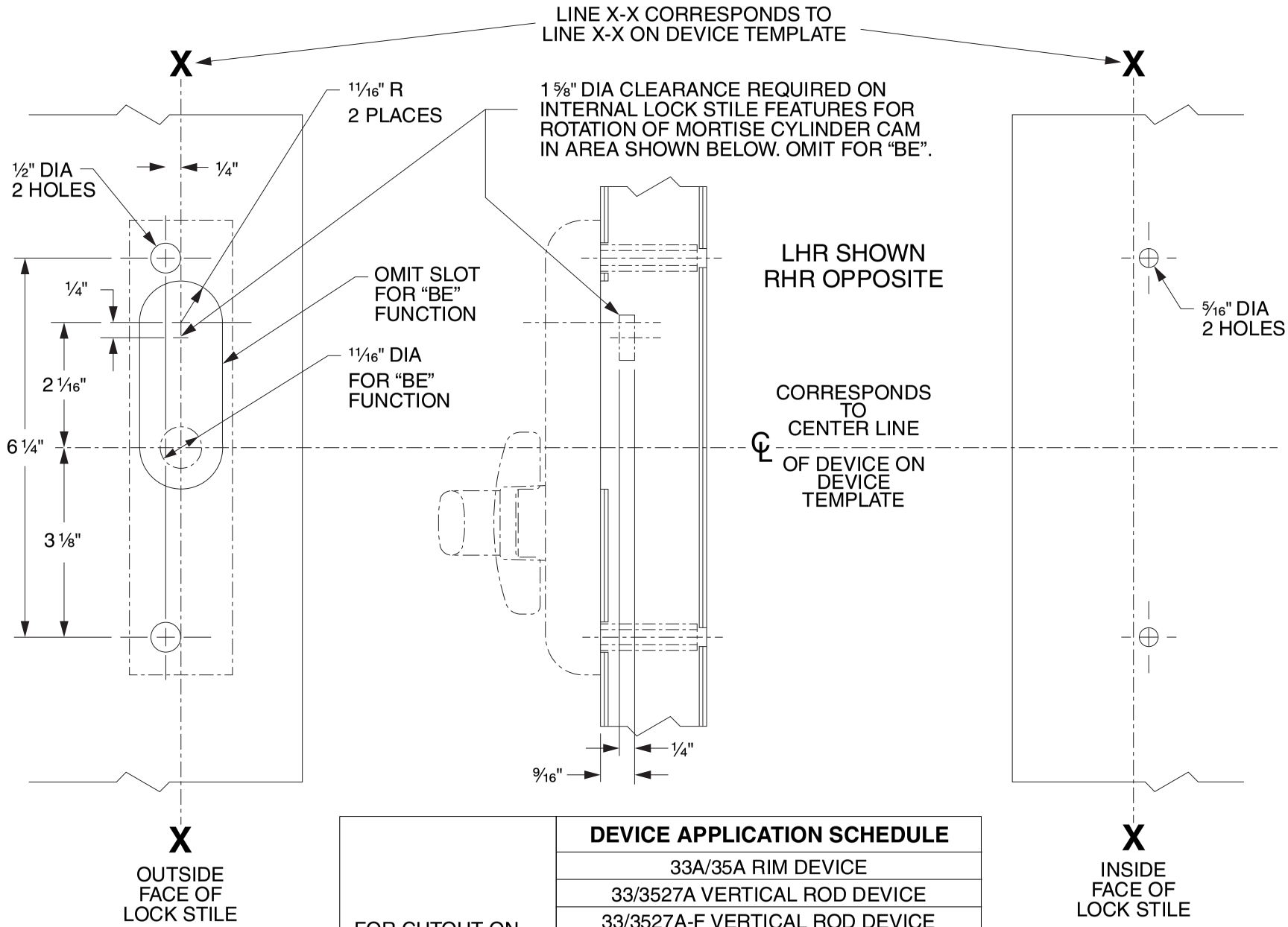

	DEVICE APPLICATION SCHEDULE
FOR CUTOUT ON INSIDE FACE OF DOOR SEE DEVICE TEMPLATE	33A/35A RIM DEVICE
	33/3527A VERTICAL ROD DEVICE
	33/3527A-F VERTICAL ROD DEVICE
	33/3547A VERTICAL ROD DEVICE
	33/3547A-F VERTICAL ROD DEVICE
	33/3548A VERTICAL ROD DEVICE
	33/3548A-F VERTICAL ROD DEVICE
	33/3549A VERTICAL CABLE DEVICE
	33/3549A-F VERTICAL CABLE DEVICE

33A/35A Series Exit Devices

-

3327A/3527A-F-LBR Surface Vertical Rod Fire (Standard, CD, EL, LX, RX and SS)

DEVICE INSTALLATION SCHEDULE		
INSTALLATION	BACKSET	MIN.STILE
TWO VERTICAL ROD DEVICES	2 1/2"	3 5/8"

NOTES:

1. LATCH CASE PREPARATION TO BE MADE AT INSTALLATION ON DOOR.
2. IT IS RECOMMENDED THE MOUNTING HOLES BE PREPARED IN THE FIELD.
3. FOR OUTSIDE TRIM PREPARATION, WHEN REQUIRED, SEE TRIM TEMPLATE.
4. GLASS BEAD KIT AVAILABLE WHEN REQUIRED.
5. THE FIRE LATCH PREP IS FOR FIRE DOORS ONLY.

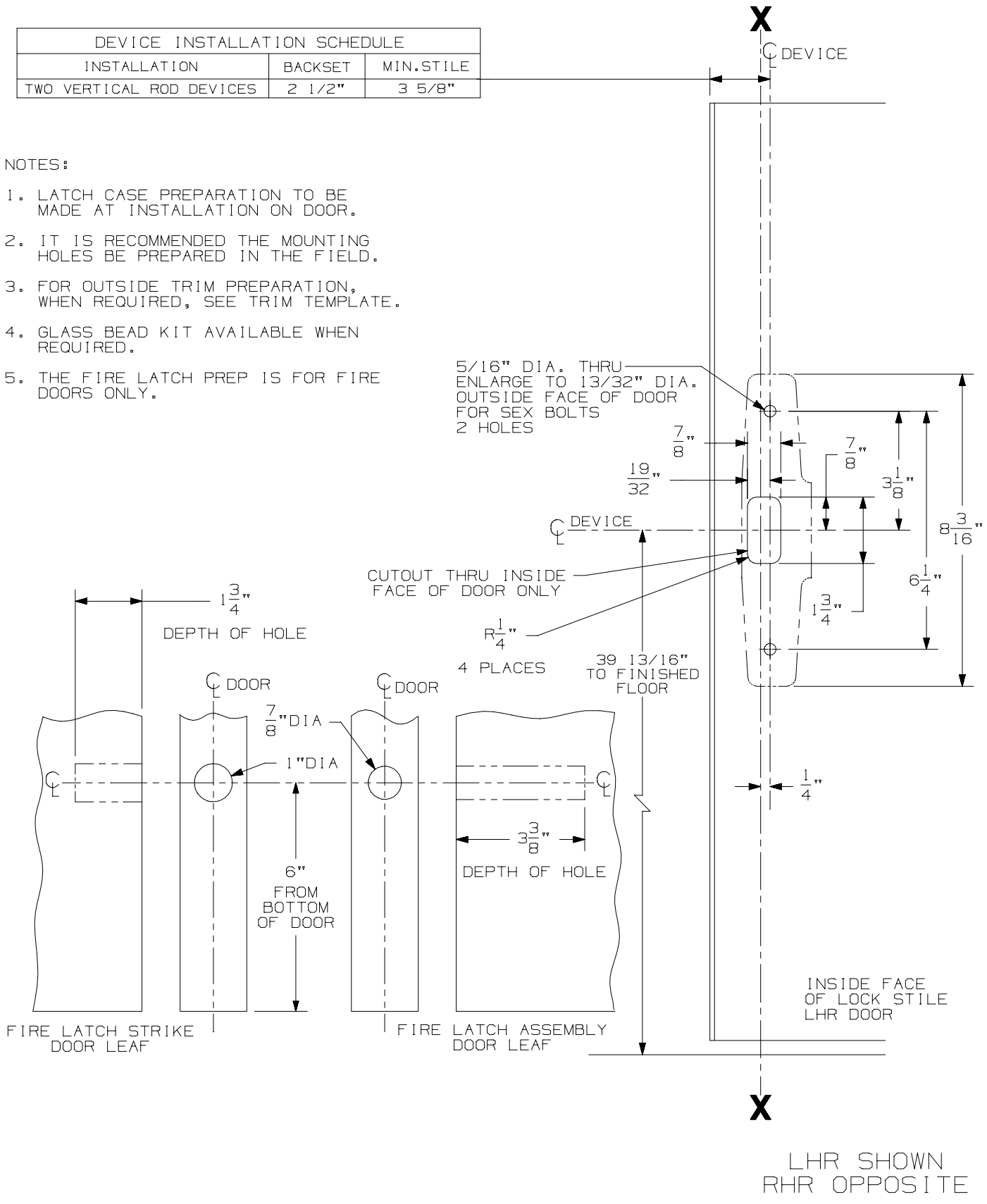

LHR SHOWN
RHR OPPOSITE

33/3527A-F-LBR Series
Surface Vertical Rod Device

VON DUPRIN®

NOTES: SEE MASTER SHEET #10001 FOR SUGGESTED REINFORCING

TEMPLATE NUMBER: 10050_c

DATE: 12-13-16

BLADE STOP APPLICATION | 266 STRIKE ④

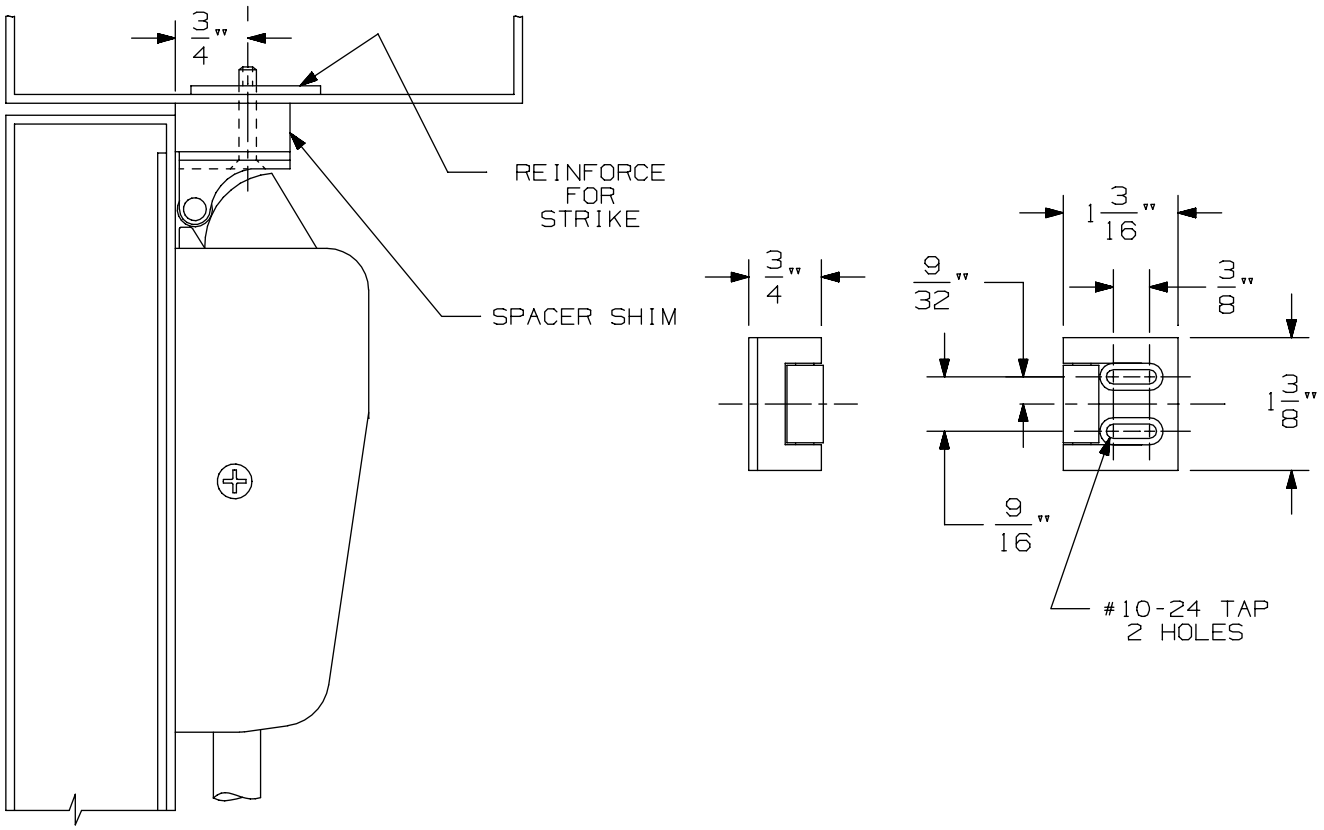

NOT HANDED

NOTE: LATCH CASE MOUNTING HOLES TO BE PREPARED AT INSTALLATION ON DOOR.

266 Strike	VON DUPRIN®	
NOTES: SEE MASTER SHEET #10001 FOR SUGGESTED REINFORCING	TEMPLATE NUMBER: 30010_a	DATE: 05-23-13

DEVICE INSTALLATION SCHEDULE		
INSTALLATION	BACKSET	MIN.STILE
TWO VERTICAL ROD DEVICES	2 1/2"	3 5/8"

NOTES:

1. LATCH CASE PREPARATION TO BE MADE AT INSTALLATION ON DOOR.
2. IT IS RECOMMENDED THE MOUNTING HOLES BE PREPARED IN THE FIELD.
3. FOR OUTSIDE TRIM PREPARATION, WHEN REQUIRED, SEE TRIM TEMPLATE.
4. GLASS BEAD KIT AVAILABLE WHEN REQUIRED.
5. THE FIRE LATCH PREP IS FOR FIRE DOORS ONLY.

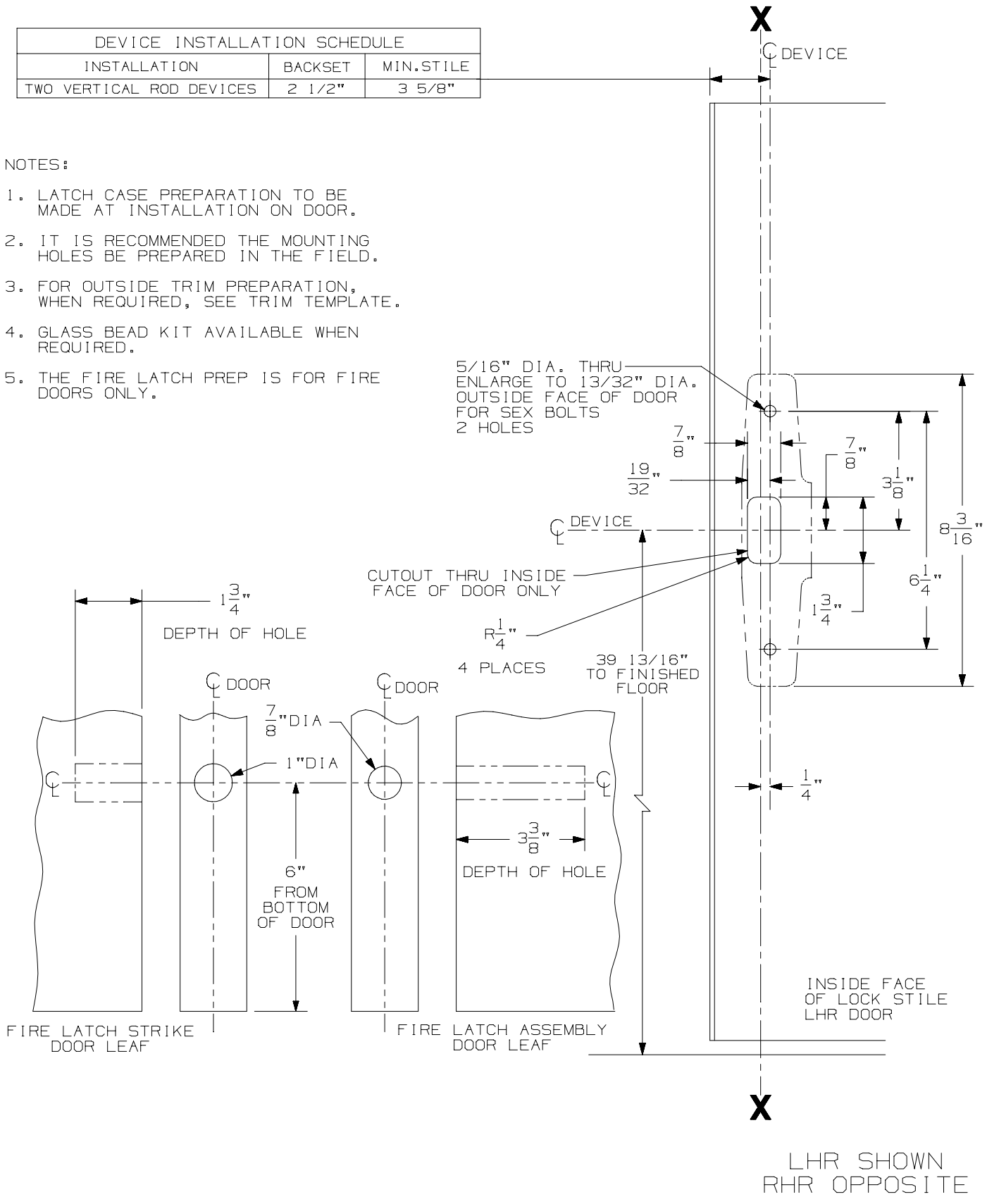

LHR SHOWN
RHR OPPOSITE

33/3527A-F-LBR Series
Surface Vertical Rod Device

VON DUPRIN®

NOTES: SEE MASTER SHEET #10001 FOR SUGGESTED REINFORCING

TEMPLATE NUMBER: 10050_c

DATE: 12-13-16

386NL & DT TRIM

NOTES: SEE MASTER SHEET #10001 FOR SUGGESTED REINFORCING

TEMPLATE NUMBER: 20008_C

DATE: 5-25-16

VON DUPRIN®

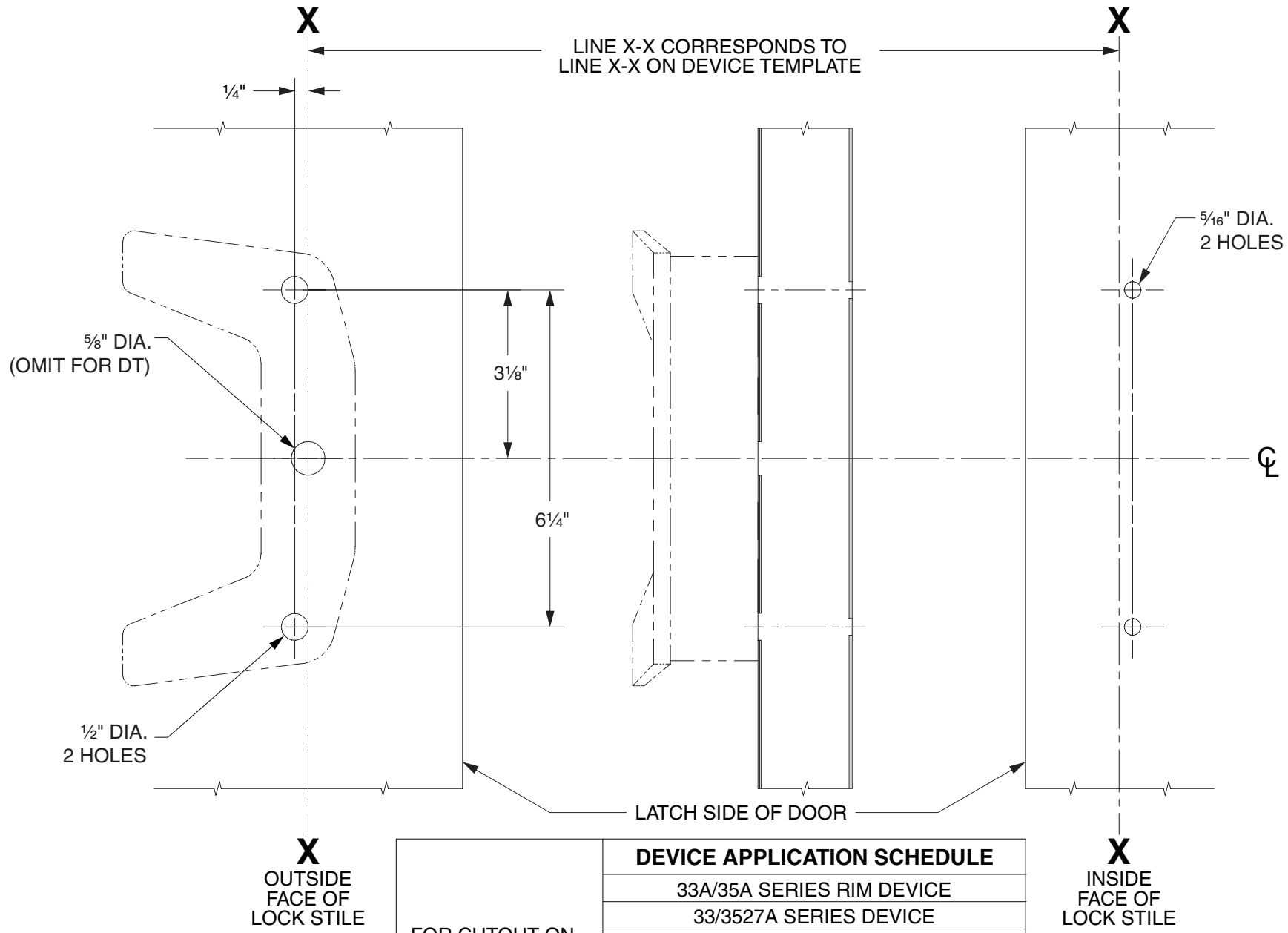

LHR SHOWN
RHR OPPOSITE

FOR CUTOUT ON INSIDE FACE OF DOOR, SEE DEVICE TEMPLATE	**DEVICE APPLICATION SCHEDULE**
	33A/35A SERIES RIM DEVICE
	33/3527A SERIES DEVICE
	33/3527A-F SERIES DEVICE
	33/3547A SERIES DEVICE
	33/3547A-F SERIES DEVICE
	33/3548A SERIES DEVICE
	33/3548A-F SERIES DEVICE
	33/3549A SERIES DEVICE
	33/3549A-F SERIES DEVICE

BLADE STOP APPLICATION | 266 STRIKE ④

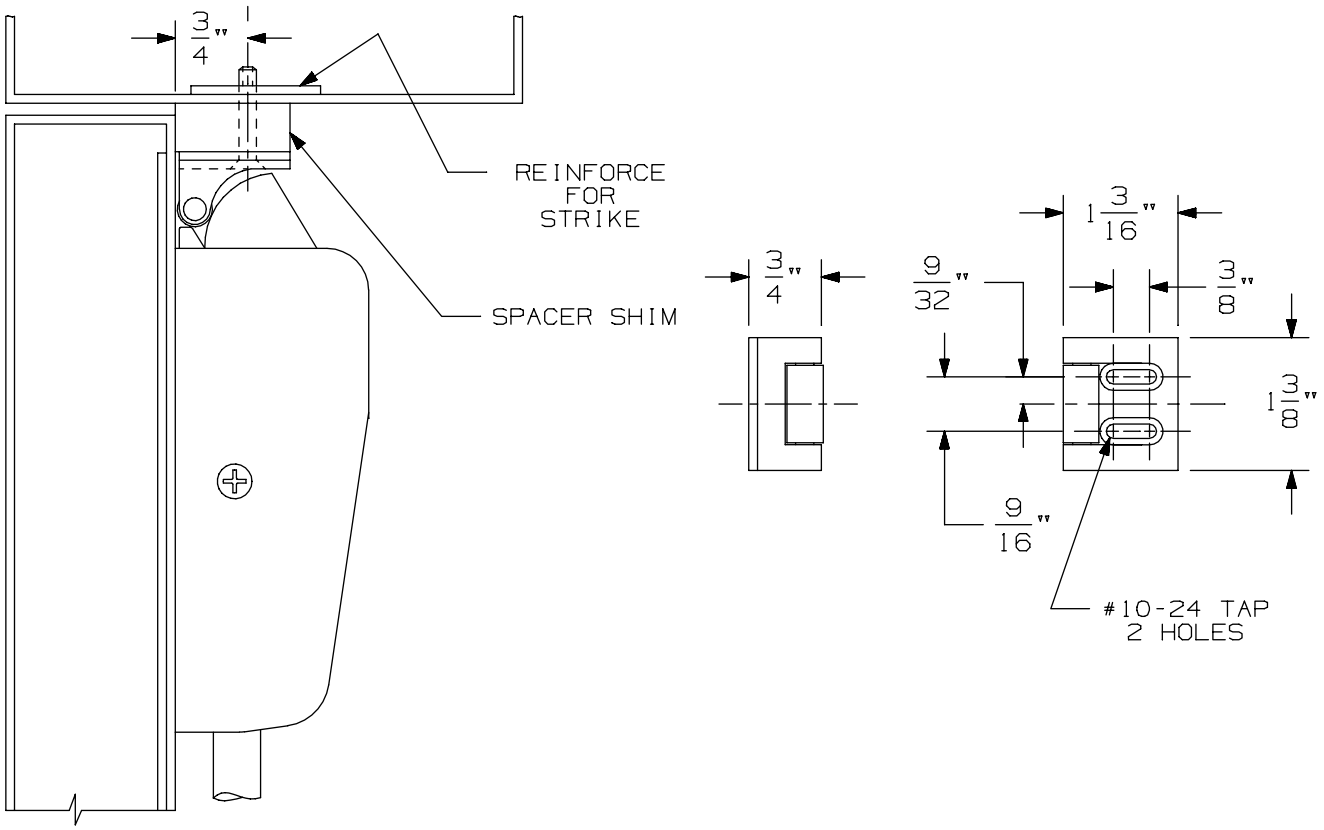

NOT HANDED

NOTE: LATCH CASE MOUNTING HOLES TO BE PREPARED AT INSTALLATION ON DOOR.

266 Strike	VON DUPRIN®	
NOTES: SEE MASTER SHEET #10001 FOR SUGGESTED REINFORCING	TEMPLATE NUMBER: 30010_a	DATE: 05-23-13

DEVICE INSTALLATION SCHEDULE		
INSTALLATION	BACKSET	MIN.STILE
TWO VERTICAL ROD DEVICES	2 1/2"	3 5/8"

NOTES:

1. LATCH CASE PREPARATION TO BE MADE AT INSTALLATION ON DOOR.
2. IT IS RECOMMENDED THE MOUNTING HOLES BE PREPARED IN THE FIELD.
3. FOR OUTSIDE TRIM PREPARATION, WHEN REQUIRED, SEE TRIM TEMPLATE.
4. GLASS BEAD KIT AVAILABLE WHEN REQUIRED.
5. THE FIRE LATCH PREP IS FOR FIRE DOORS ONLY.

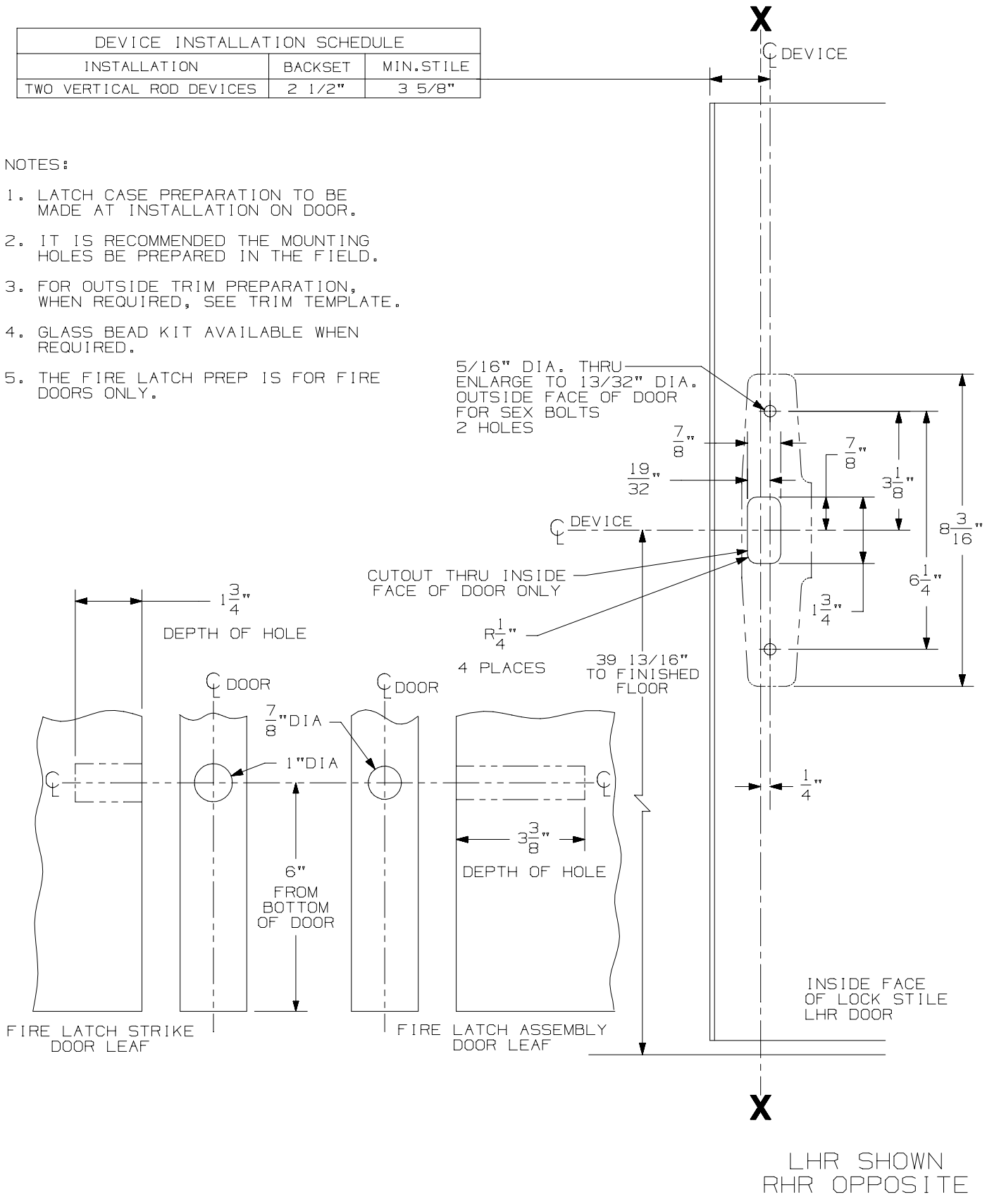

LHR SHOWN
RHR OPPOSITE

33/3527A-F-LBR Series
Surface Vertical Rod Device

VON DUPRIN®

NOTES: SEE MASTER SHEET #10001 FOR SUGGESTED REINFORCING

TEMPLATE NUMBER: 10050_c

DATE: 12-13-16

388NL CYLINDER CONTROL

NOTES: SEE MASTER SHEET #10001 FOR SUGGESTED REINFORCING

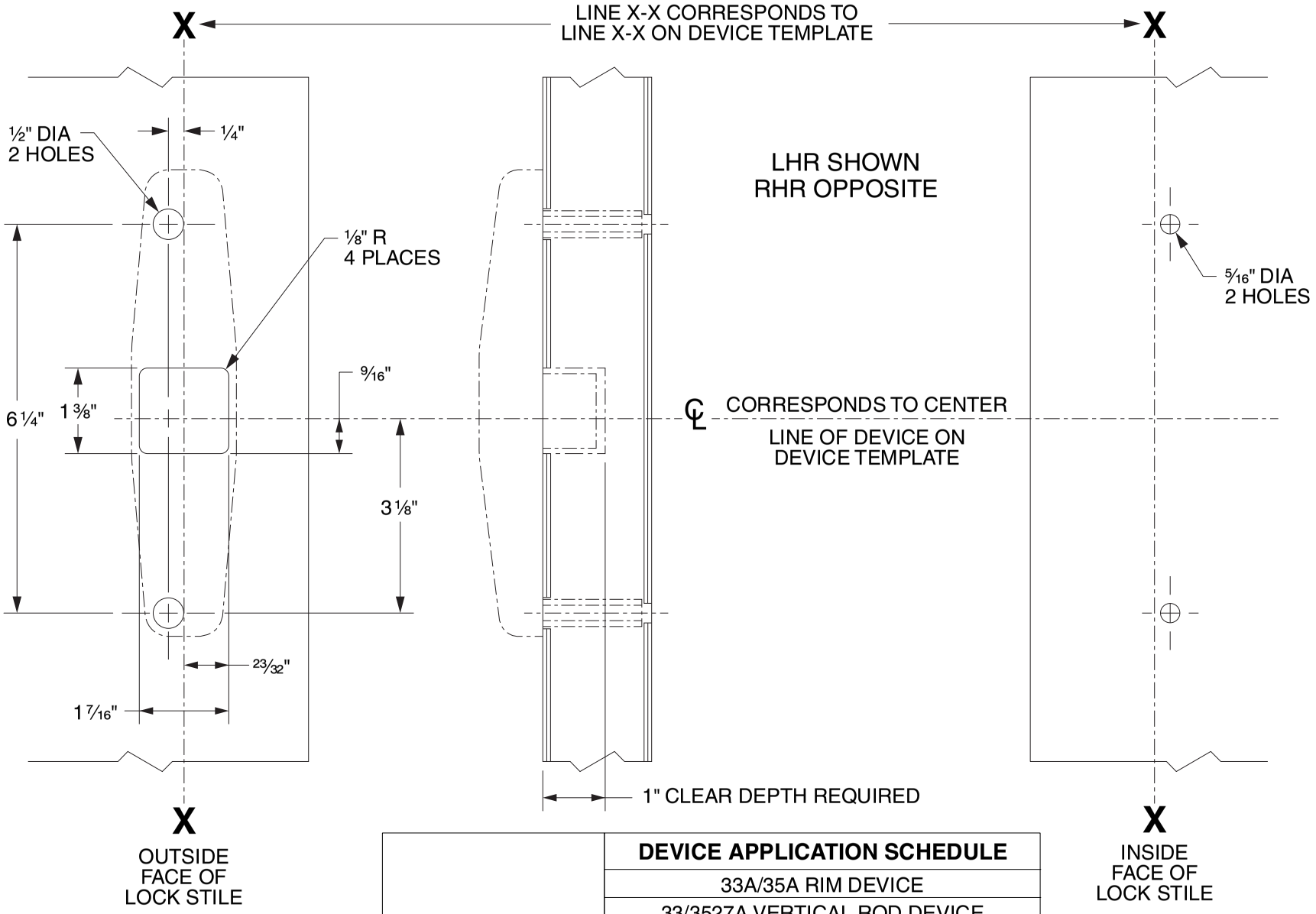

	DEVICE APPLICATION SCHEDULE
FOR CUTOUT ON INSIDE FACE OF DOOR SEE DEVICE TEMPLATE	33A/35A RIM DEVICE
	33/3527A VERTICAL ROD DEVICE
	33/3527A-F VERTICAL ROD DEVICE
	33/3547A VERTICAL ROD DEVICE
	33/3547A-F VERTICAL ROD DEVICE
	33/3548A VERTICAL ROD DEVICE
	33/3548A-F VERTICAL ROD DEVICE
	33/3549A VERTICAL ROD DEVICE
	33/3549A-F VERTICAL ROD DEVICE

VON DUPRIN®

TEMPLATE NUMBER: 40079_d

DATE: 05-31-13

BLADE STOP APPLICATION | 266 STRIKE ④

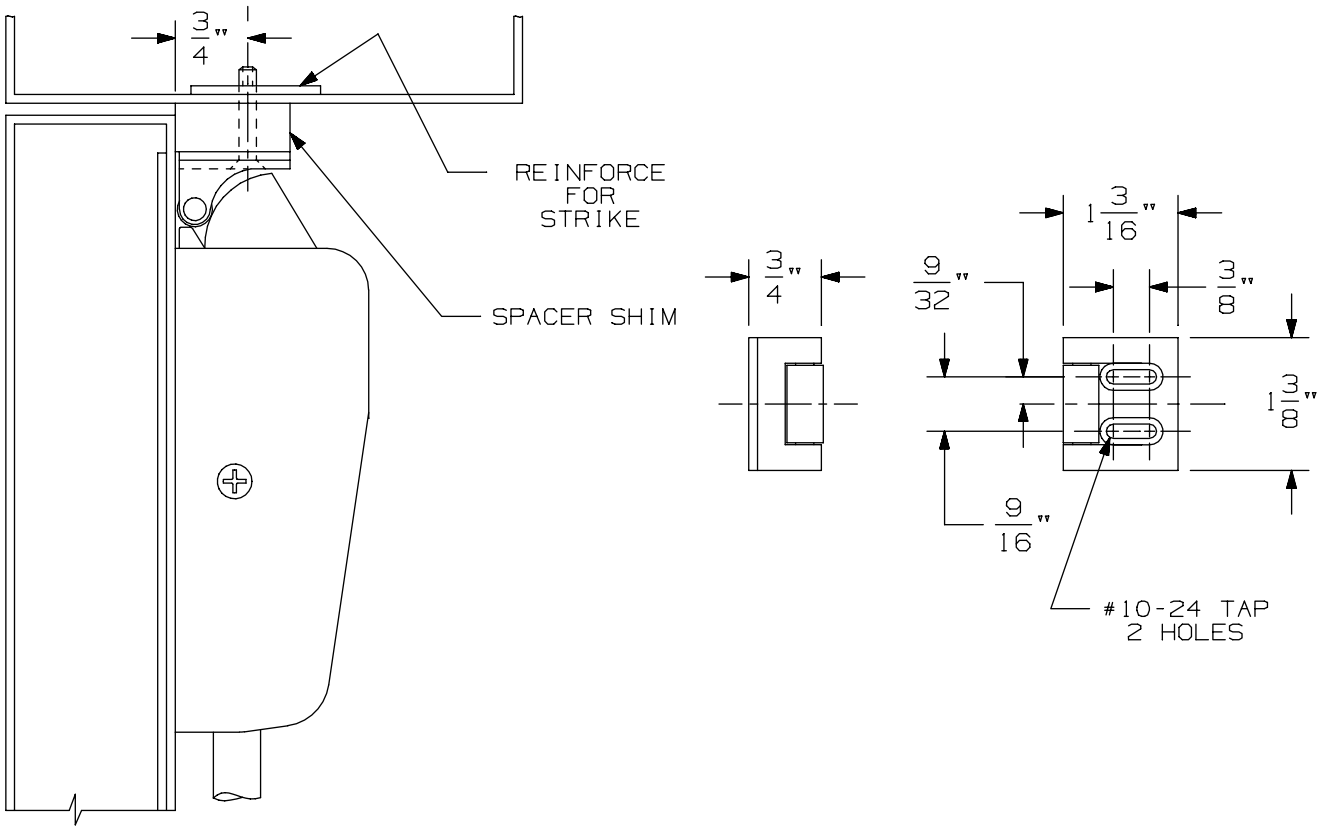

NOT HANDED

NOTE: LATCH CASE MOUNTING HOLES TO BE PREPARED AT INSTALLATION ON DOOR.

266 Strike	VON DUPRIN®	
NOTES: SEE MASTER SHEET #10001 FOR SUGGESTED REINFORCING	TEMPLATE NUMBER: 30010_a	DATE: 05-23-13

DEVICE INSTALLATION SCHEDULE		
INSTALLATION	BACKSET	MIN.STILE
TWO VERTICAL ROD DEVICES	2 1/2"	3 5/8"

NOTES:

1. LATCH CASE PREPARATION TO BE MADE AT INSTALLATION ON DOOR.
2. IT IS RECOMMENDED THE MOUNTING HOLES BE PREPARED IN THE FIELD.
3. FOR OUTSIDE TRIM PREPARATION, WHEN REQUIRED, SEE TRIM TEMPLATE.
4. GLASS BEAD KIT AVAILABLE WHEN REQUIRED.
5. THE FIRE LATCH PREP IS FOR FIRE DOORS ONLY.

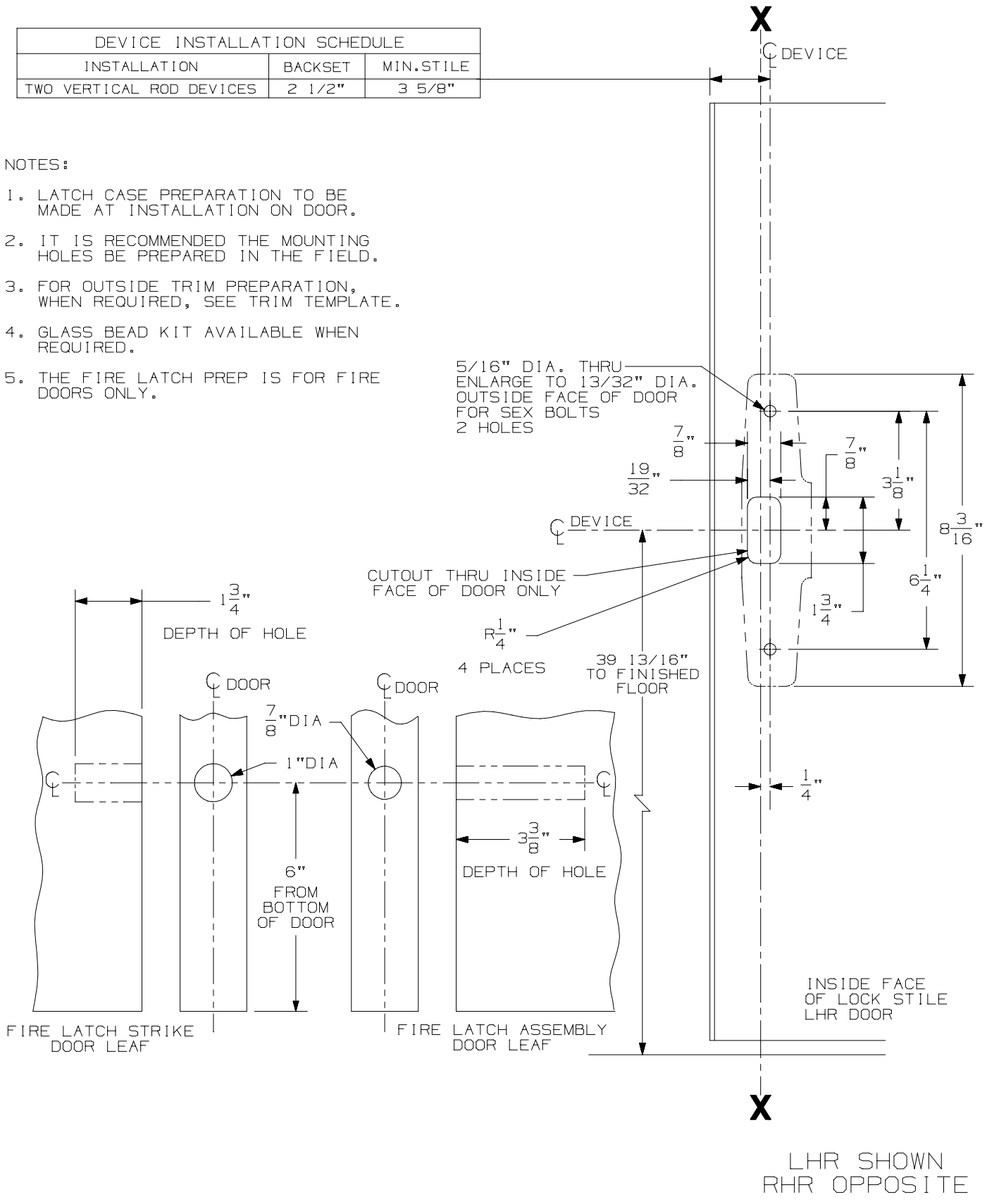

LHR SHOWN
RHR OPPOSITE

33/3527A-F-LBR Series
Surface Vertical Rod Device

VON DUPRIN®

NOTES: SEE MASTER SHEET #10001 FOR SUGGESTED REINFORCING

TEMPLATE NUMBER: 10050_c

DATE: 12-13-16

360T, 360L, 360T-BE, 360L-BE CONTROL

NOTES: SEE MASTER SHEET #10001 FOR SUGGESTED REINFORCING

TEMPLATE NUMBER: 40080_e

DATE: 04-06-15

VON DUPRIN®

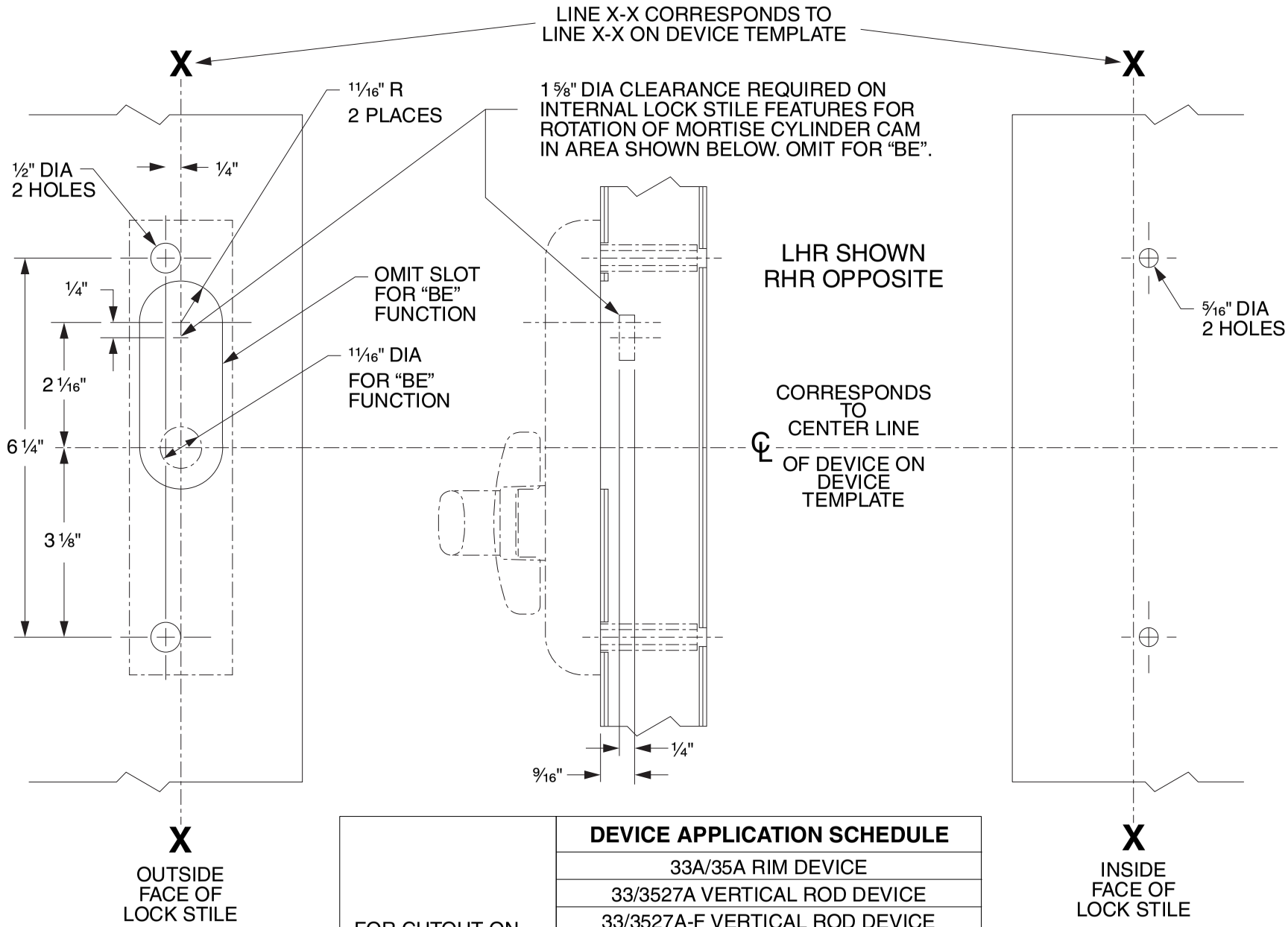

	DEVICE APPLICATION SCHEDULE
FOR CUTOUT ON INSIDE FACE OF DOOR SEE DEVICE TEMPLATE	33A/35A RIM DEVICE
	33/3527A VERTICAL ROD DEVICE
	33/3527A-F VERTICAL ROD DEVICE
	33/3547A VERTICAL ROD DEVICE
	33/3547A-F VERTICAL ROD DEVICE
	33/3548A VERTICAL ROD DEVICE
	33/3548A-F VERTICAL ROD DEVICE
	33/3549A VERTICAL CABLE DEVICE
	33/3549A-F VERTICAL CABLE DEVICE

BLADE STOP APPLICATION | 266 STRIKE ④

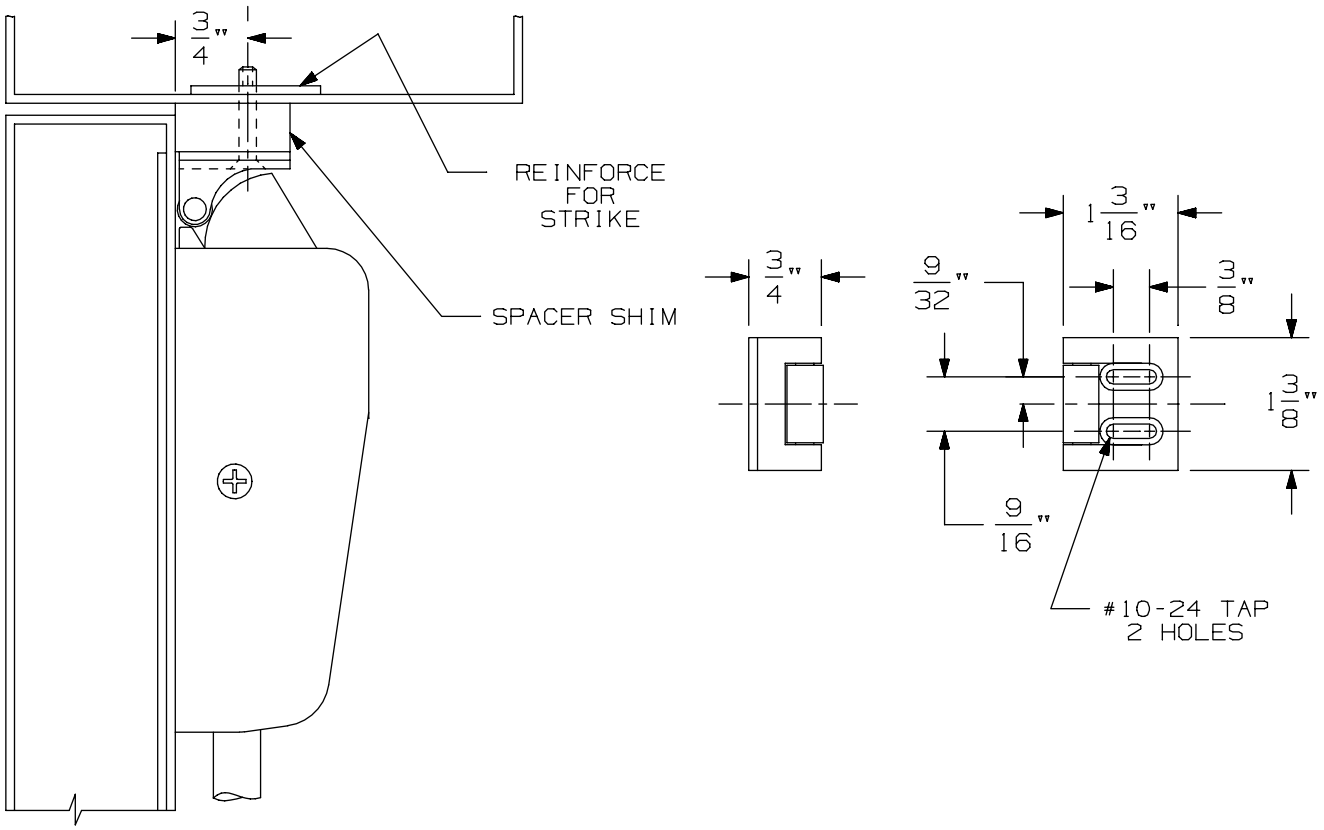

NOT HANDED

NOTE: LATCH CASE MOUNTING HOLES TO BE PREPARED AT INSTALLATION ON DOOR.

266 Strike	VON DUPRIN®	
NOTES: SEE MASTER SHEET #10001 FOR SUGGESTED REINFORCING	TEMPLATE NUMBER: 30010_a	DATE: 05-23-13

DEVICE INSTALLATION SCHEDULE		
INSTALLATION	BACKSET	MIN.STILE
TWO VERTICAL ROD DEVICES	2 1/2"	3 5/8"

NOTES:

1. LATCH CASE PREPARATION TO BE MADE AT INSTALLATION ON DOOR.
2. IT IS RECOMMENDED THE MOUNTING HOLES BE PREPARED IN THE FIELD.
3. FOR OUTSIDE TRIM PREPARATION, WHEN REQUIRED, SEE TRIM TEMPLATE.
4. GLASS BEAD KIT AVAILABLE WHEN REQUIRED.
5. THE FIRE LATCH PREP IS FOR FIRE DOORS ONLY.

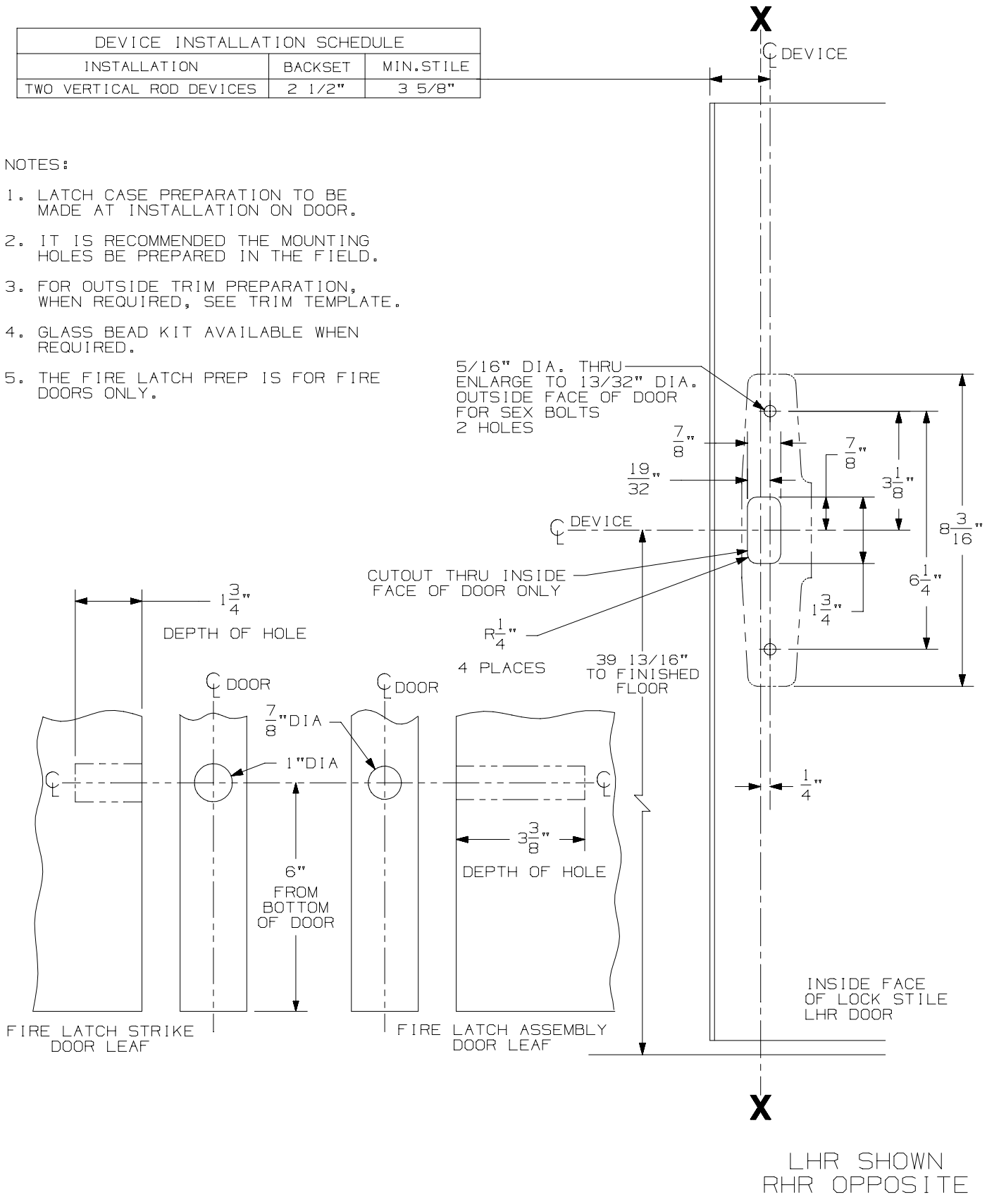

LHR SHOWN
RHR OPPOSITE

33/3527A-F-LBR Series
Surface Vertical Rod Device

VON DUPRIN®

NOTES: SEE MASTER SHEET #10001 FOR SUGGESTED REINFORCING

TEMPLATE NUMBER: 10050_c

DATE: 12-13-16

360T, 360L, 360T-BE, 360L-BE CONTROL

NOTES: SEE MASTER SHEET #10001 FOR SUGGESTED REINFORCING

TEMPLATE NUMBER: 40080_e

DATE: 04-06-15

VON DUPRIN®

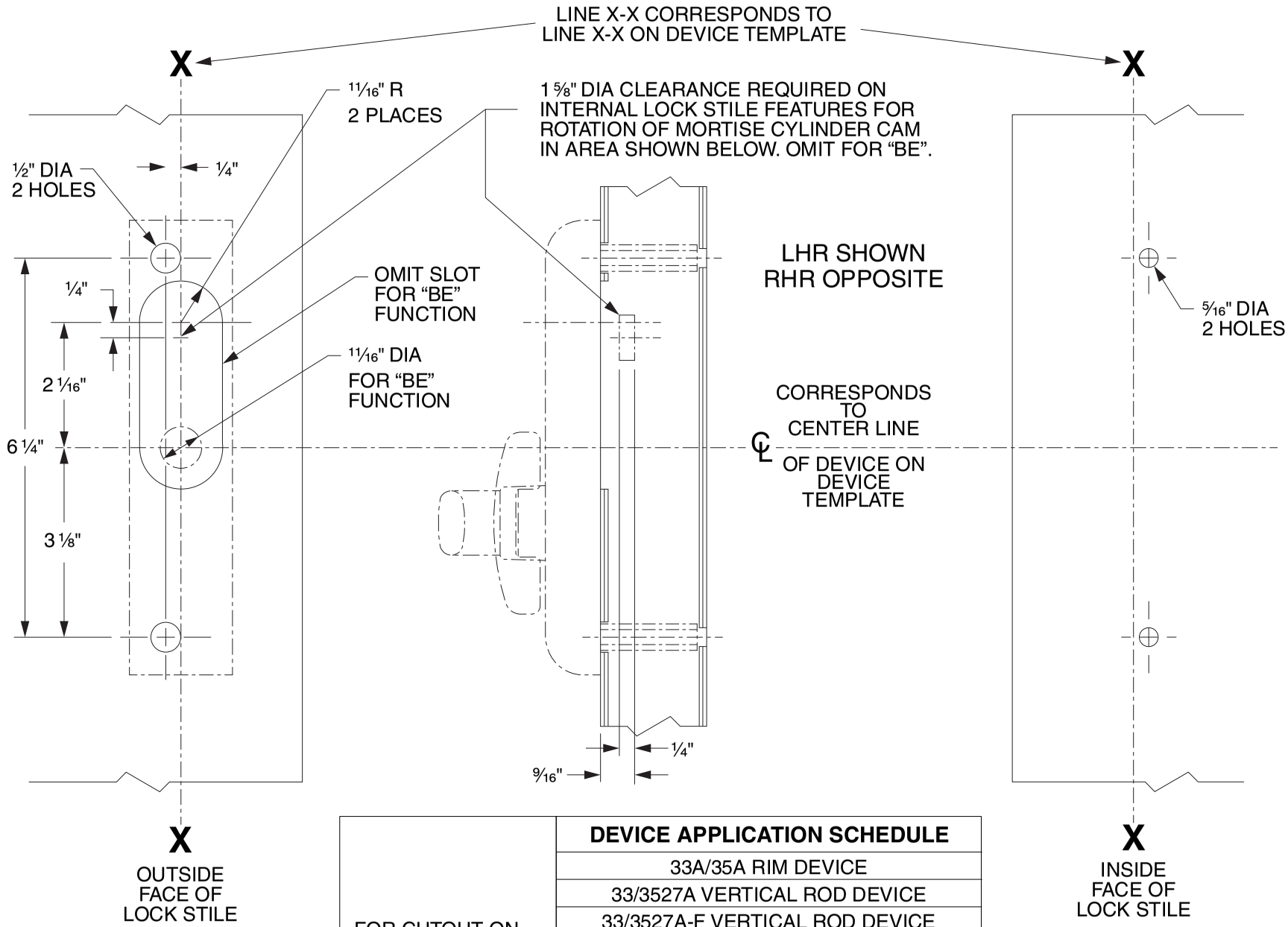

	DEVICE APPLICATION SCHEDULE
FOR CUTOUT ON INSIDE FACE OF DOOR SEE DEVICE TEMPLATE	33A/35A RIM DEVICE
	33/3527A VERTICAL ROD DEVICE
	33/3527A-F VERTICAL ROD DEVICE
	33/3547A VERTICAL ROD DEVICE
	33/3547A-F VERTICAL ROD DEVICE
	33/3548A VERTICAL ROD DEVICE
	33/3548A-F VERTICAL ROD DEVICE
	33/3549A VERTICAL CABLE DEVICE
	33/3549A-F VERTICAL CABLE DEVICE

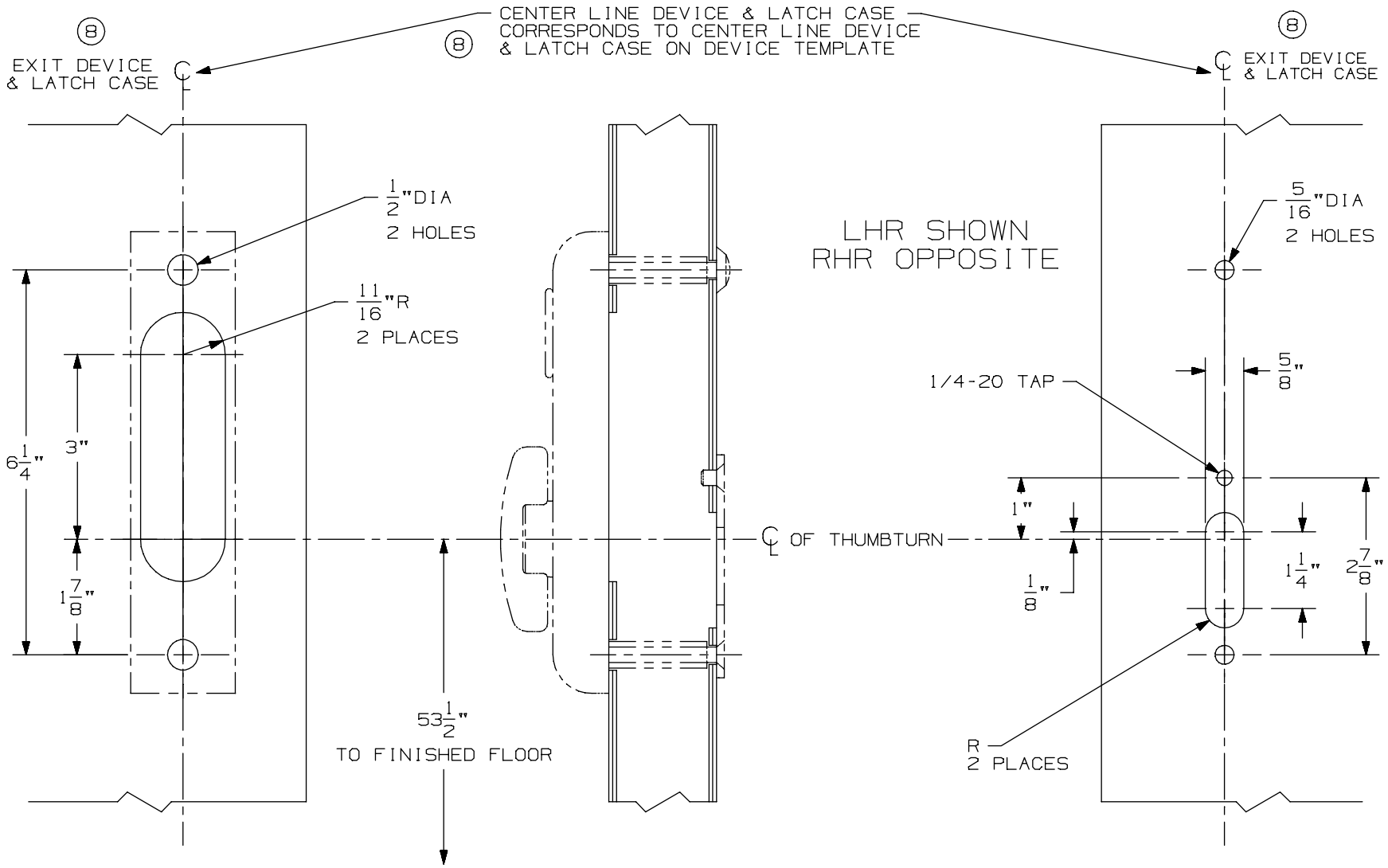

OUTSIDE
FACE OF
LOCK STILE

INSIDE
FACE OF
LOCK STILE

DEVICE APPLICATION SCHEDULE
2227 VERT. ROD DEVICE
2227-F VERT. ROD DEVICE
3327/3527 VERT. ROD DEVICE
8 3327A/3527A VERT. ROD DEVICE
8 3327A-F/3527A-F VERT. ROD DEVICE
9827/9927 VERT. ROD DEVICE
9827-F/9927-F VERT. ROD DEVICE

NOTES: SEE MASTER SHEET #10001 FOR SUGGESTED REINFORCING

374-T Control

VON DUPRIN®

TEMPLATE NUMBER: 40118_a

DATE: 05-28-13

BLADE STOP APPLICATION | 266 STRIKE ④

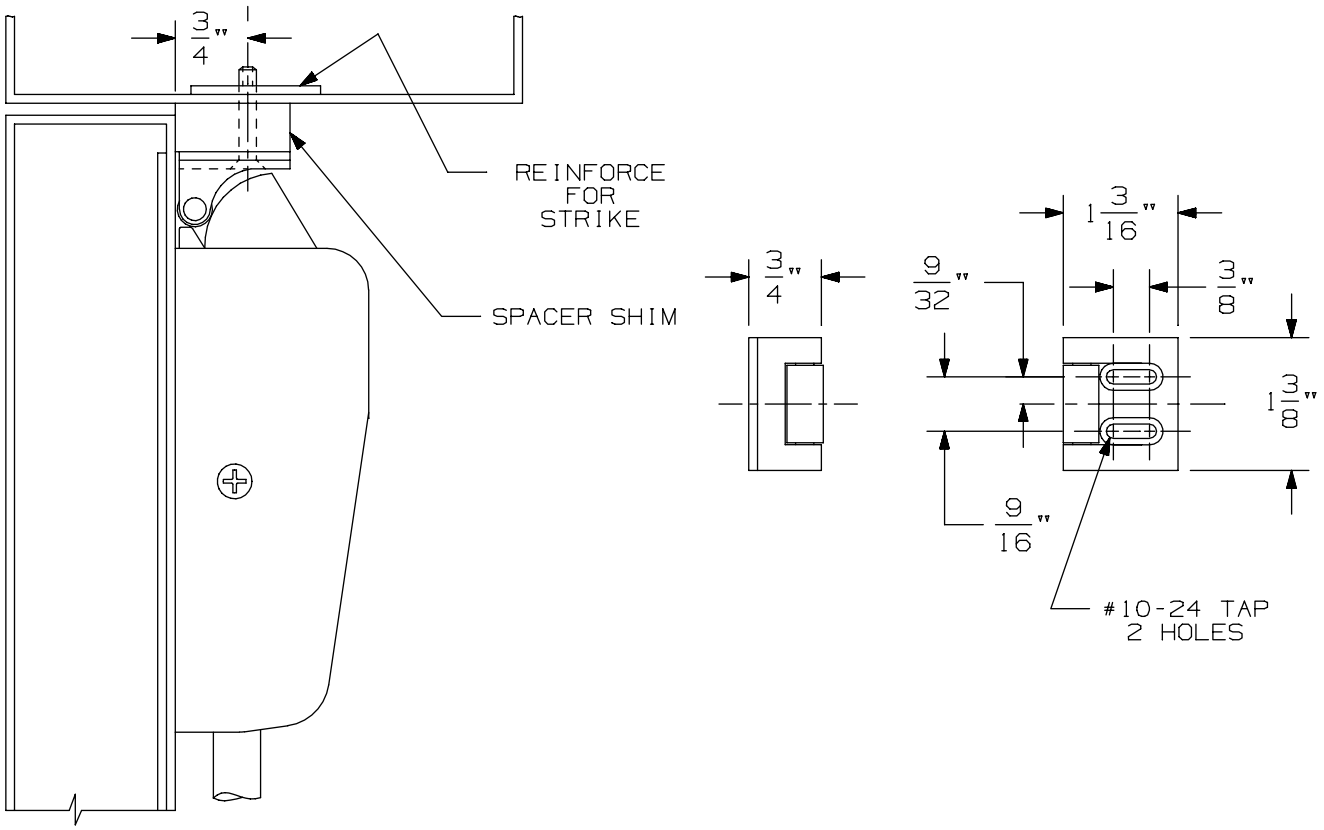

NOT HANDED

NOTE: LATCH CASE MOUNTING HOLES TO BE PREPARED AT INSTALLATION ON DOOR.

266 Strike	VON DUPRIN®	
NOTES: SEE MASTER SHEET #10001 FOR SUGGESTED REINFORCING	TEMPLATE NUMBER: 30010_a	DATE: 05-23-13

360T, 360L, 360T-BE, 360L-BE CONTROL

NOTES: SEE MASTER SHEET #10001 FOR SUGGESTED REINFORCING

TEMPLATE NUMBER: 40080_e

DATE: 04-06-15

VON DUPRIN®

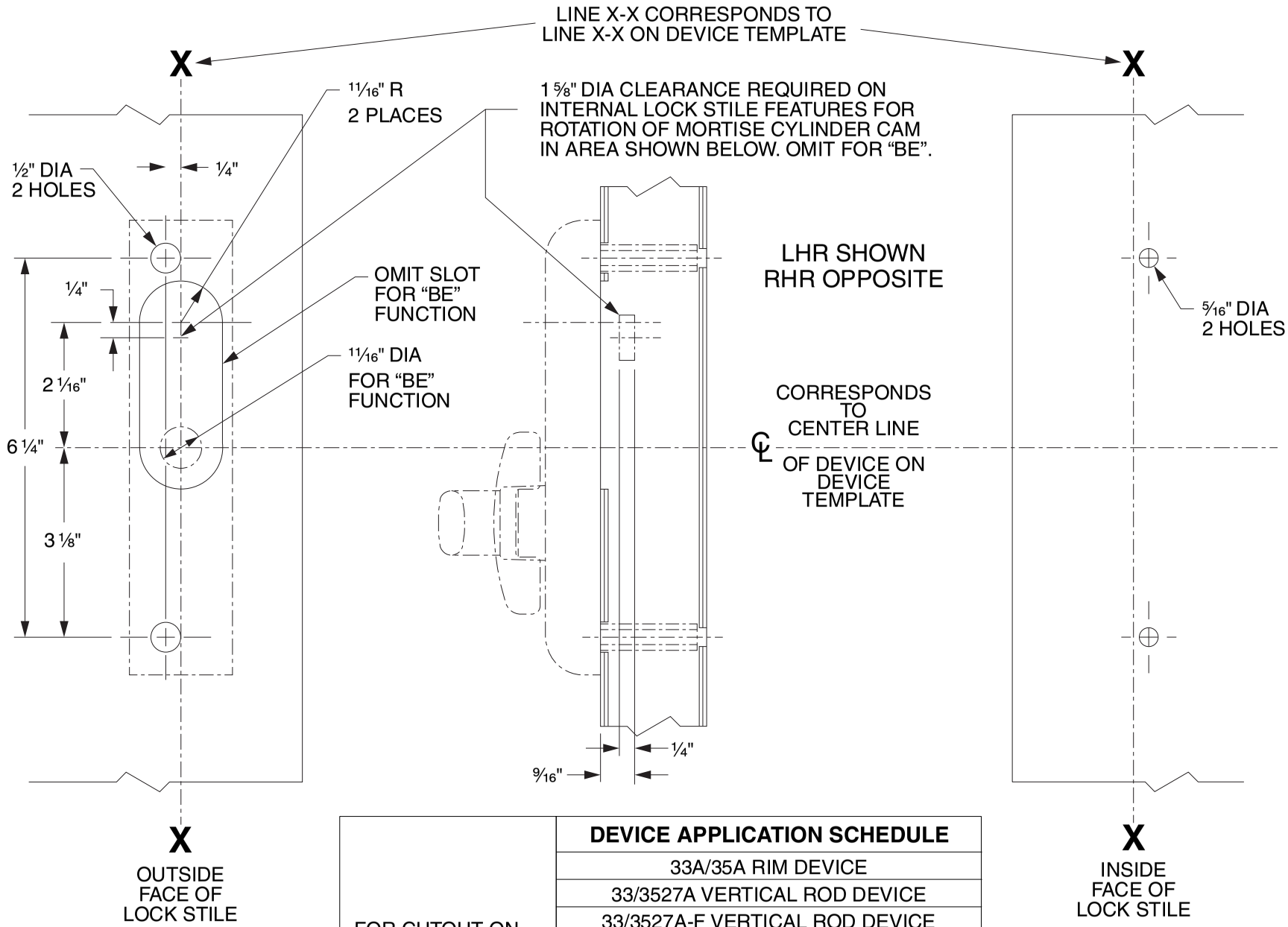

	DEVICE APPLICATION SCHEDULE
FOR CUTOUT ON INSIDE FACE OF DOOR SEE DEVICE TEMPLATE	33A/35A RIM DEVICE
	33/3527A VERTICAL ROD DEVICE
	33/3527A-F VERTICAL ROD DEVICE
	33/3547A VERTICAL ROD DEVICE
	33/3547A-F VERTICAL ROD DEVICE
	33/3548A VERTICAL ROD DEVICE
	33/3548A-F VERTICAL ROD DEVICE
	33/3549A VERTICAL CABLE DEVICE
	33/3549A-F VERTICAL CABLE DEVICE

33A/35A Series Exit Devices

-

3347A /3547A/ 3348A /3548A Concealed Verti-cal Rod (Standard, CD, EL, LX, RX and SS)

NOTE: BACKSET MAY VARY WHEN USED WITH COORDINATOR DEPENDING ON TYPE USED.

DEVICE INSTALLATION SCHEDULE		
INSTALLATION	BACKSET	STILE WIDTH
TWO VERTICAL ROD DEVICES	1 3/16"	2 1/8" TO 2 3/4"
	1 1/2"	2 3/4" TO 3 3/4"
	1 7/8"	3 3/4" TO 5"
	2 1/2"	5" TO FLUSH
SINGLE DOOR	1 1/2"	2 1/2" TO 3 3/4"
	1 7/8"	3 3/4" TO 5"
	2 1/2"	5" TO FLUSH

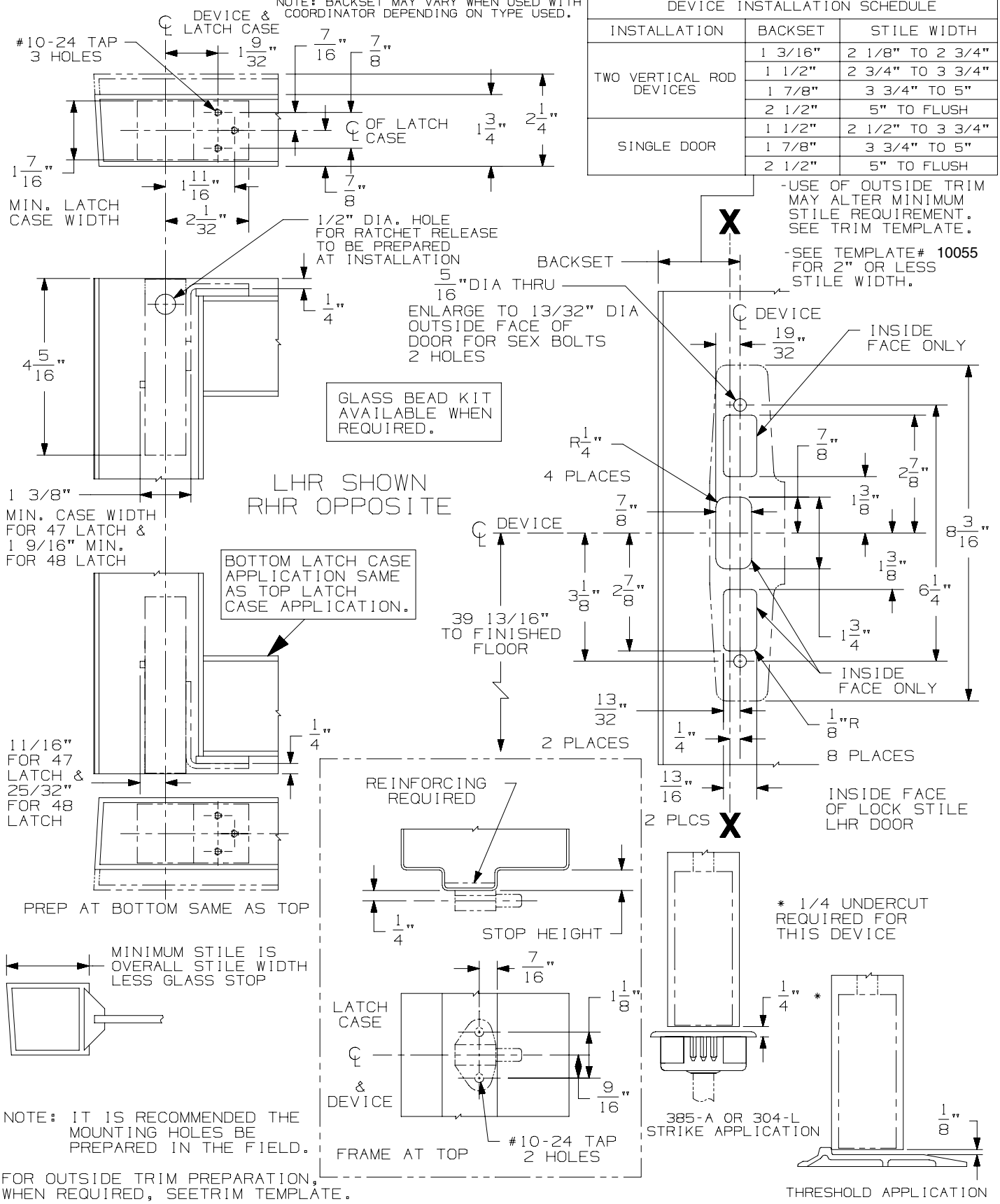

33/3547A & 33/3548A Series Concealed Vertical Rod Device

VON DUPRIN®

NOTES: SEE MASTER SHEET #10001 FOR SUGGESTED REINFORCING

TEMPLATE NUMBER: 10051_b

DATE: 06-07-13

NOTES:

1. 376-T SERIES CONTROL WILL NOT FIT ON THIS INSTALLATION.
2. KAWNEER 190 DOORS FOR THIS APPLICATION MUST BE ORDERED SPECIAL FROM KAWNEER.
3. 48 SERIES DEVICE LATCHES WILL NOT FIT IN 2" STILE DOORS (2-1/8" MINIMUM).

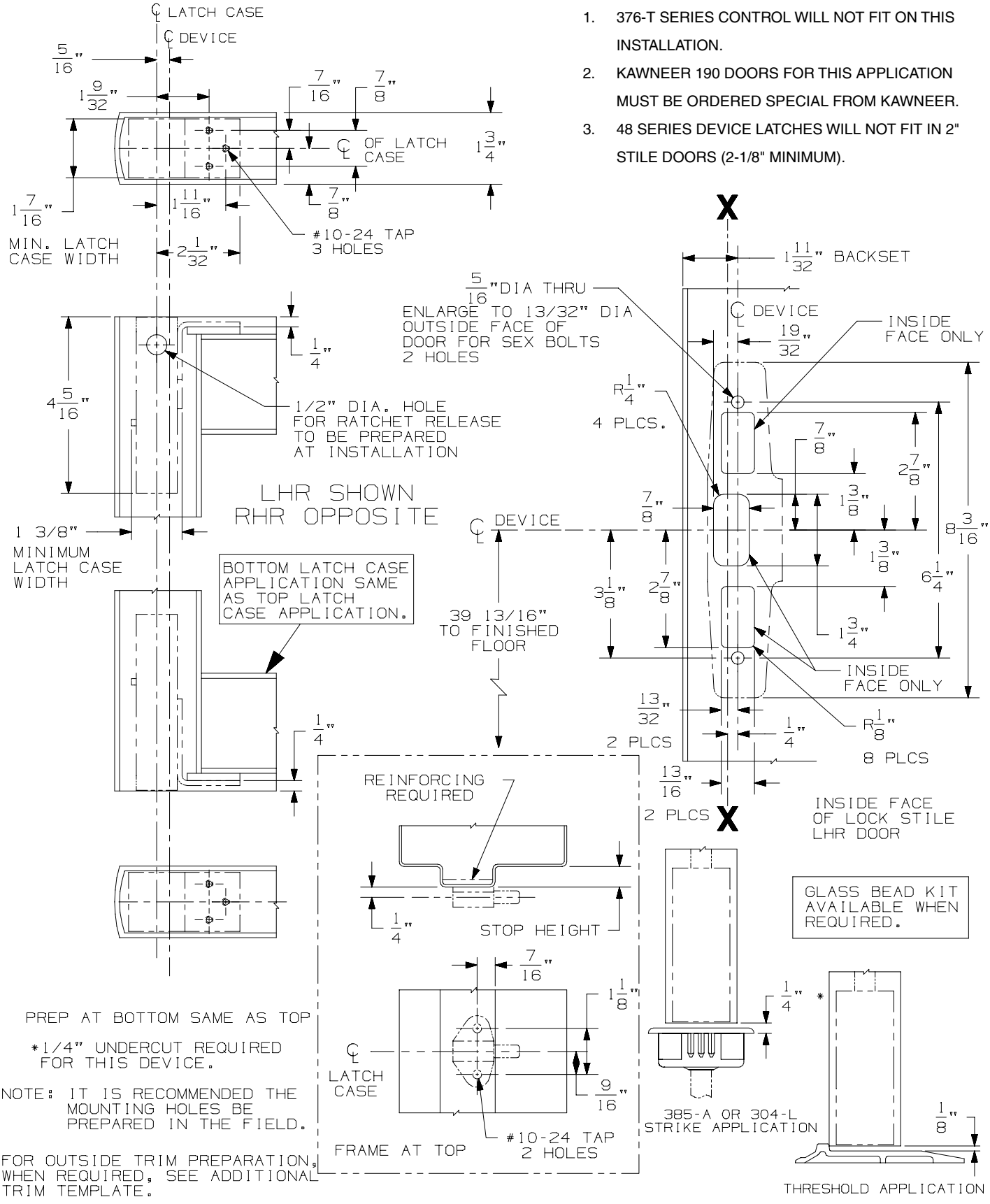

33/3547A Series Concealed Vertical Rod Device for 2" or Less Stile Width

VON DUPRIN®

NOTES: SEE MASTER SHEET #10001 FOR SUGGESTED REINFORCING

TEMPLATE NUMBER: 10055_c

DATE: 07-18-16

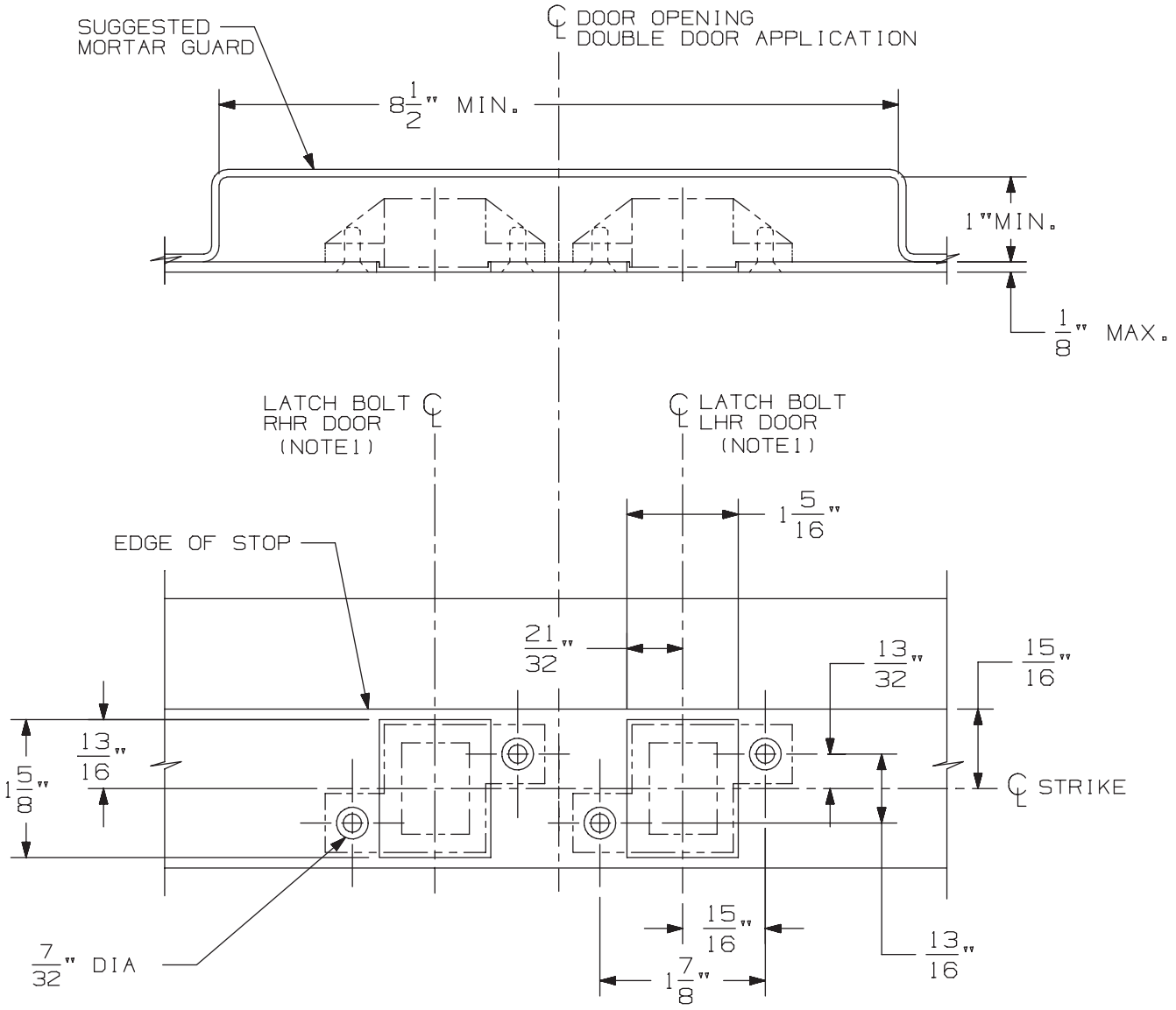

3/8" DIA X 82° C'SINK

IN FRAME
2 HOLES
EACH STRIKE

DOUBLE DOOR APPLICATION SHOWN.
FOR SINGLE DOOR APPLICATION USE
APPROPRIATE HANDING AS SHOWN.

DEVICE APPLICATION SCHEDULE
33/3547 & 33/3547-F SERIES DEVICE
98/99/47 & 98/99/47-F SERIES DEVICE
5547/5547 WDC SERIES
33/3547A & 33/3547A-F SERIES DEVICE
(9) 94/9547 SERIES DEVICE

NOTES: 1. SEE DEVICE TEMPLATE FOR LOCATION OF LATCH BOLT.

2. IF DEVICE IS TO BE MOUNTED ON WOOD DOORS, SEE WOOD DOOR TEMPLATE FOR LATCH BOLT LOCATION.

338 Strike for Hollow Metal Frame Preparation

VON DUPRIN®

NOTES: SEE MASTER SHEET #10001 FOR SUGGESTED REINFORCING

TEMPLATE NUMBER: 30038_a

DATE: 05-23-13

NOTE: BACKSET MAY VARY WHEN USED WITH COORDINATOR DEPENDING ON TYPE USED.

DEVICE INSTALLATION SCHEDULE		
INSTALLATION	BACKSET	STILE WIDTH
TWO VERTICAL ROD DEVICES	1 3/16"	2 1/8" TO 2 3/4"
	1 1/2"	2 3/4" TO 3 3/4"
	1 7/8"	3 3/4" TO 5"
	2 1/2"	5" TO FLUSH
SINGLE DOOR	1 1/2"	2 1/2" TO 3 3/4"
	1 7/8"	3 3/4" TO 5"
	2 1/2"	5" TO FLUSH

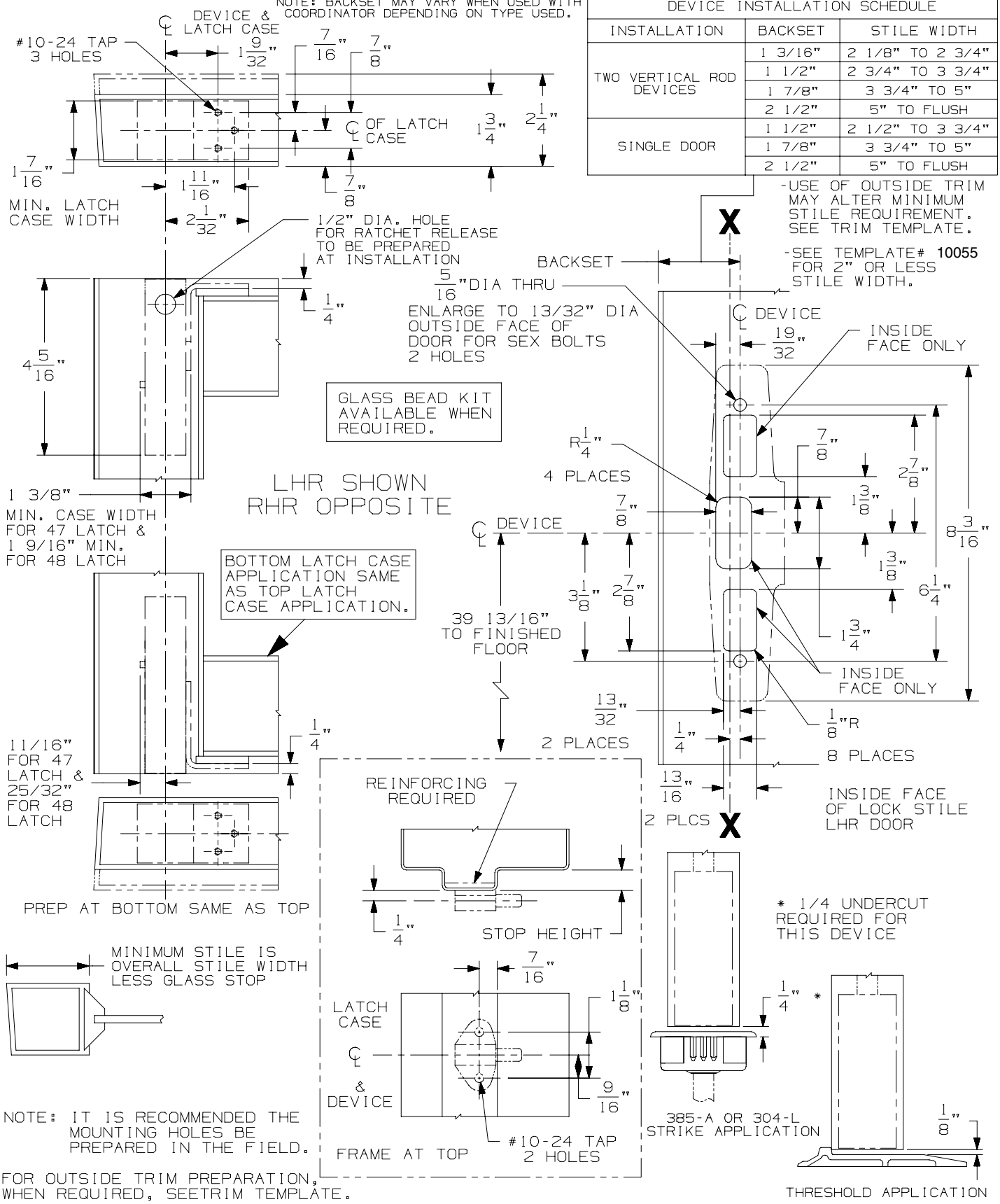

33/3547A & 33/3548A Series Concealed Vertical Rod Device

VON DUPRIN®

NOTES: SEE MASTER SHEET #10001 FOR SUGGESTED REINFORCING

TEMPLATE NUMBER: 10051_b

DATE: 06-07-13

NOTES:

1. 376-T SERIES CONTROL WILL NOT FIT ON THIS INSTALLATION.
2. KAWNEER 190 DOORS FOR THIS APPLICATION MUST BE ORDERED SPECIAL FROM KAWNEER.
3. 48 SERIES DEVICE LATCHES WILL NOT FIT IN 2" STILE DOORS (2-1/8" MINIMUM).

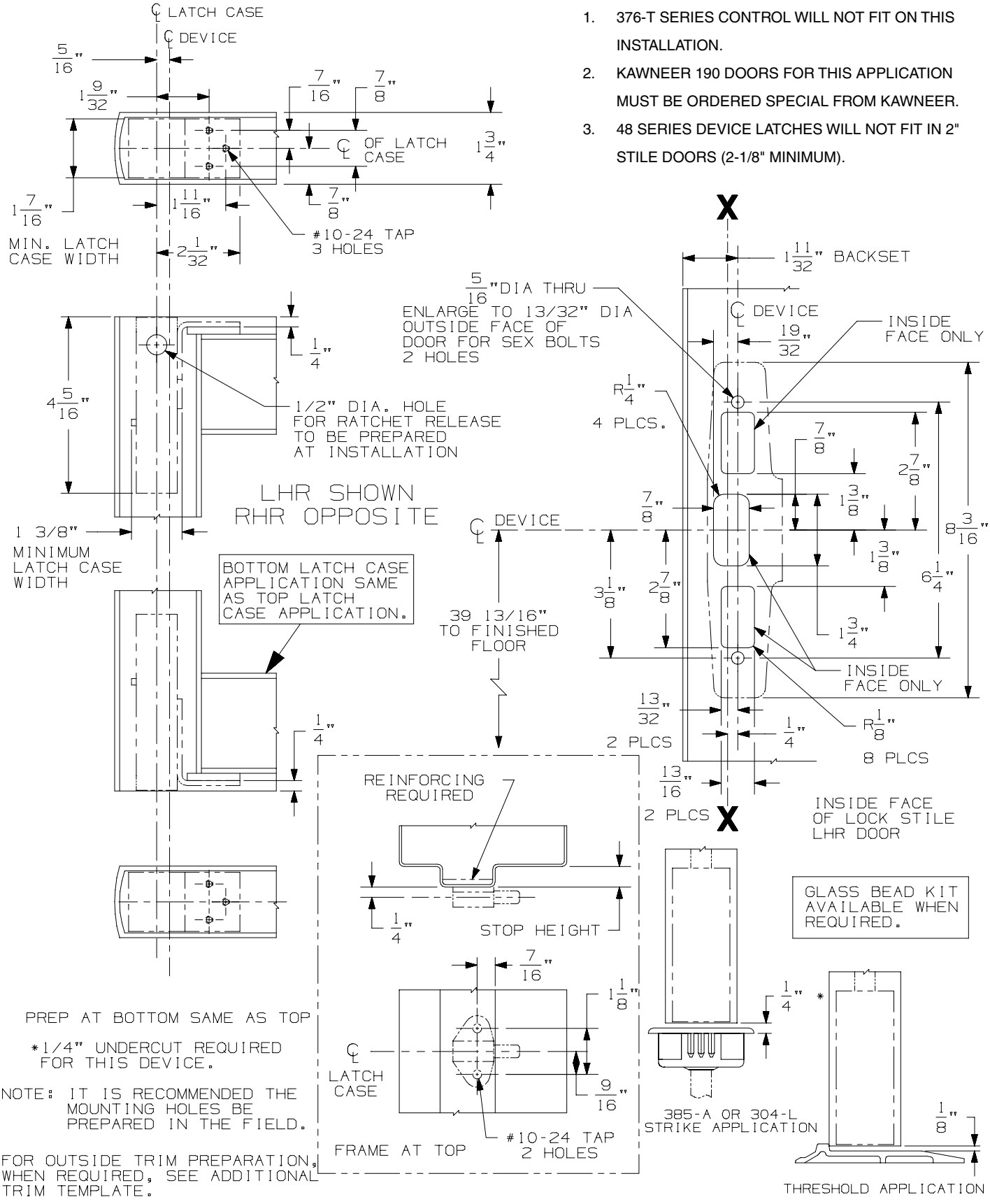

33/3547A Series Concealed Vertical Rod Device for 2" or Less Stile Width

VON DUPRIN®

NOTES: SEE MASTER SHEET #10001 FOR SUGGESTED REINFORCING

TEMPLATE NUMBER: 10055_c

DATE: 07-18-16

386NL & DT TRIM

NOTES: SEE MASTER SHEET #10001 FOR SUGGESTED REINFORCING

TEMPLATE NUMBER: 20008_C

DATE: 5-25-16

VON DUPRIN®

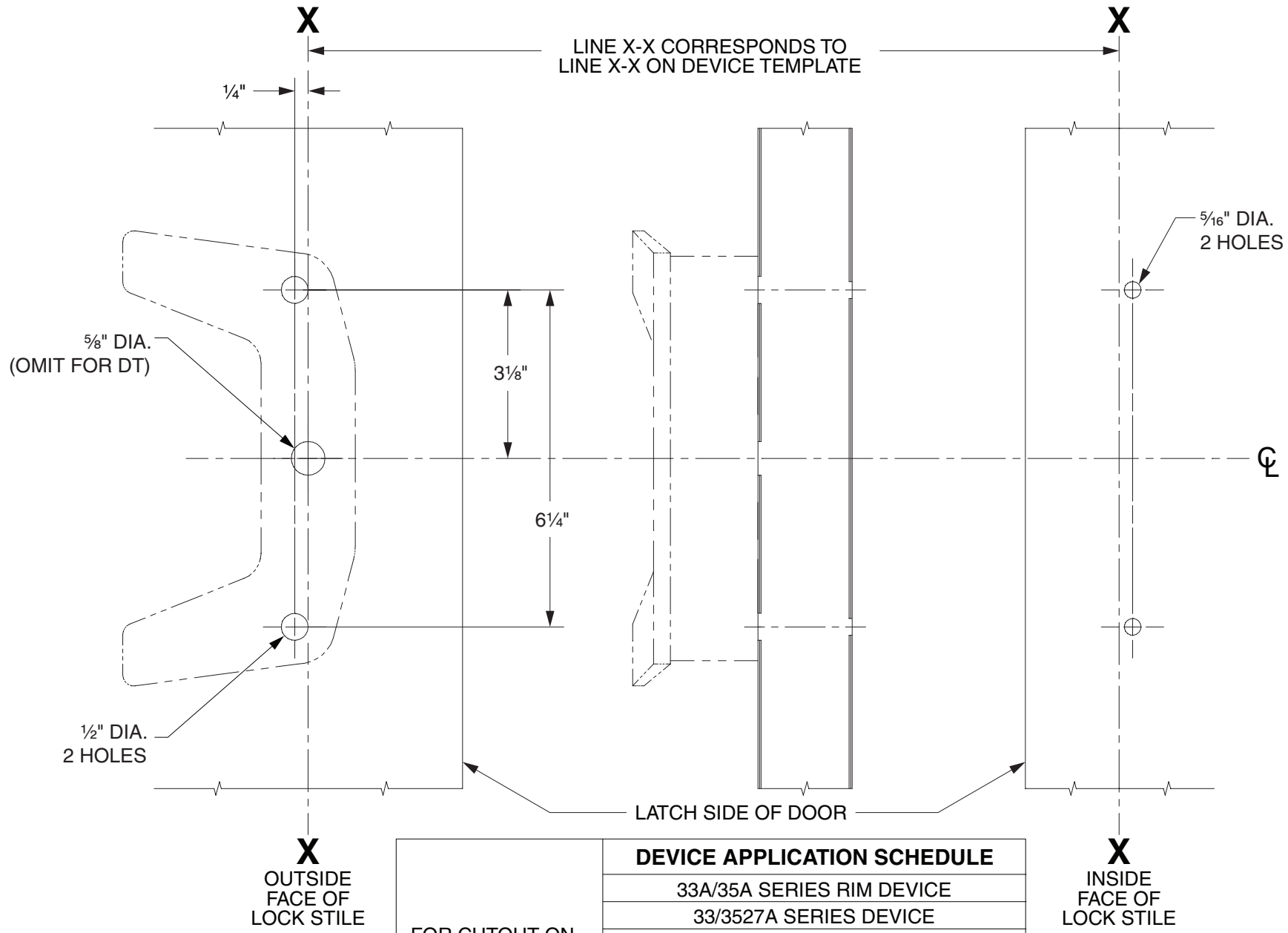

LHR SHOWN
RHR OPPOSITE

FOR CUTOUT ON INSIDE FACE OF DOOR, SEE DEVICE TEMPLATE	**DEVICE APPLICATION SCHEDULE**
	33A/35A SERIES RIM DEVICE
	33/3527A SERIES DEVICE
	33/3527A-F SERIES DEVICE
	33/3547A SERIES DEVICE
	33/3547A-F SERIES DEVICE
	33/3548A SERIES DEVICE
	33/3548A-F SERIES DEVICE
	33/3549A SERIES DEVICE
	33/3549A-F SERIES DEVICE

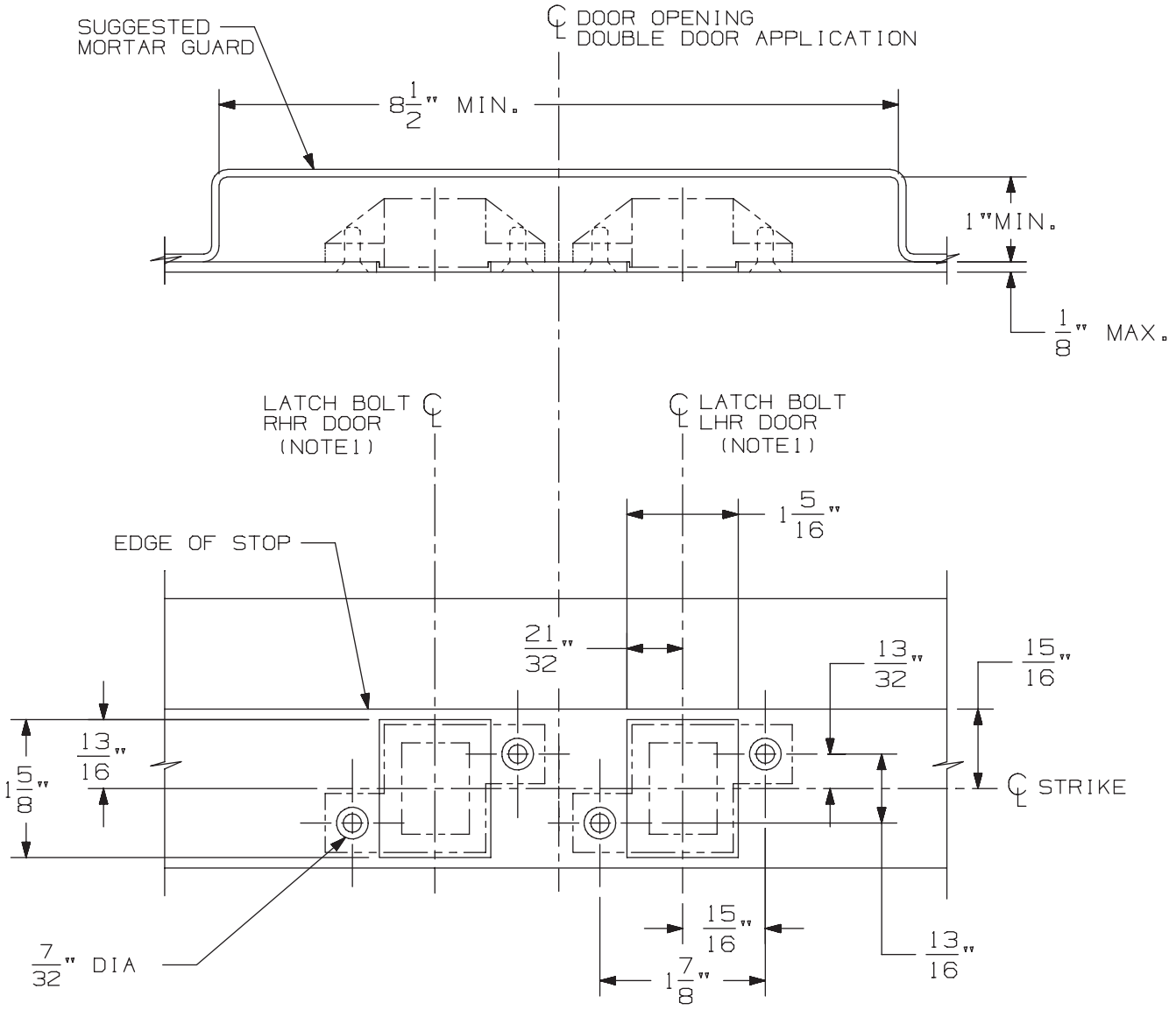

3/8" DIA X 82° C'SINK

IN FRAME
2 HOLES
EACH STRIKE

DOUBLE DOOR APPLICATION SHOWN.
FOR SINGLE DOOR APPLICATION USE
APPROPRIATE HANDING AS SHOWN.

DEVICE APPLICATION SCHEDULE
33/3547 & 33/3547-F SERIES DEVICE
98/99/47 & 98/99/47-F SERIES DEVICE
5547/5547 WDC SERIES
33/3547A & 33/3547A-F SERIES DEVICE
(9) 94/9547 SERIES DEVICE

NOTES: 1. SEE DEVICE TEMPLATE FOR LOCATION OF LATCH BOLT.

2. IF DEVICE IS TO BE MOUNTED ON WOOD DOORS, SEE WOOD DOOR TEMPLATE FOR LATCH BOLT LOCATION.

338 Strike for Hollow Metal Frame Preparation

VON DUPRIN®

NOTES: SEE MASTER SHEET #10001 FOR SUGGESTED REINFORCING

TEMPLATE NUMBER: 30038_a

DATE: 05-23-13

NOTE: BACKSET MAY VARY WHEN USED WITH COORDINATOR DEPENDING ON TYPE USED.

DEVICE INSTALLATION SCHEDULE		
INSTALLATION	BACKSET	STILE WIDTH
TWO VERTICAL ROD DEVICES	1 3/16"	2 1/8" TO 2 3/4"
	1 1/2"	2 3/4" TO 3 3/4"
	1 7/8"	3 3/4" TO 5"
	2 1/2"	5" TO FLUSH
SINGLE DOOR	1 1/2"	2 1/2" TO 3 3/4"
	1 7/8"	3 3/4" TO 5"
	2 1/2"	5" TO FLUSH

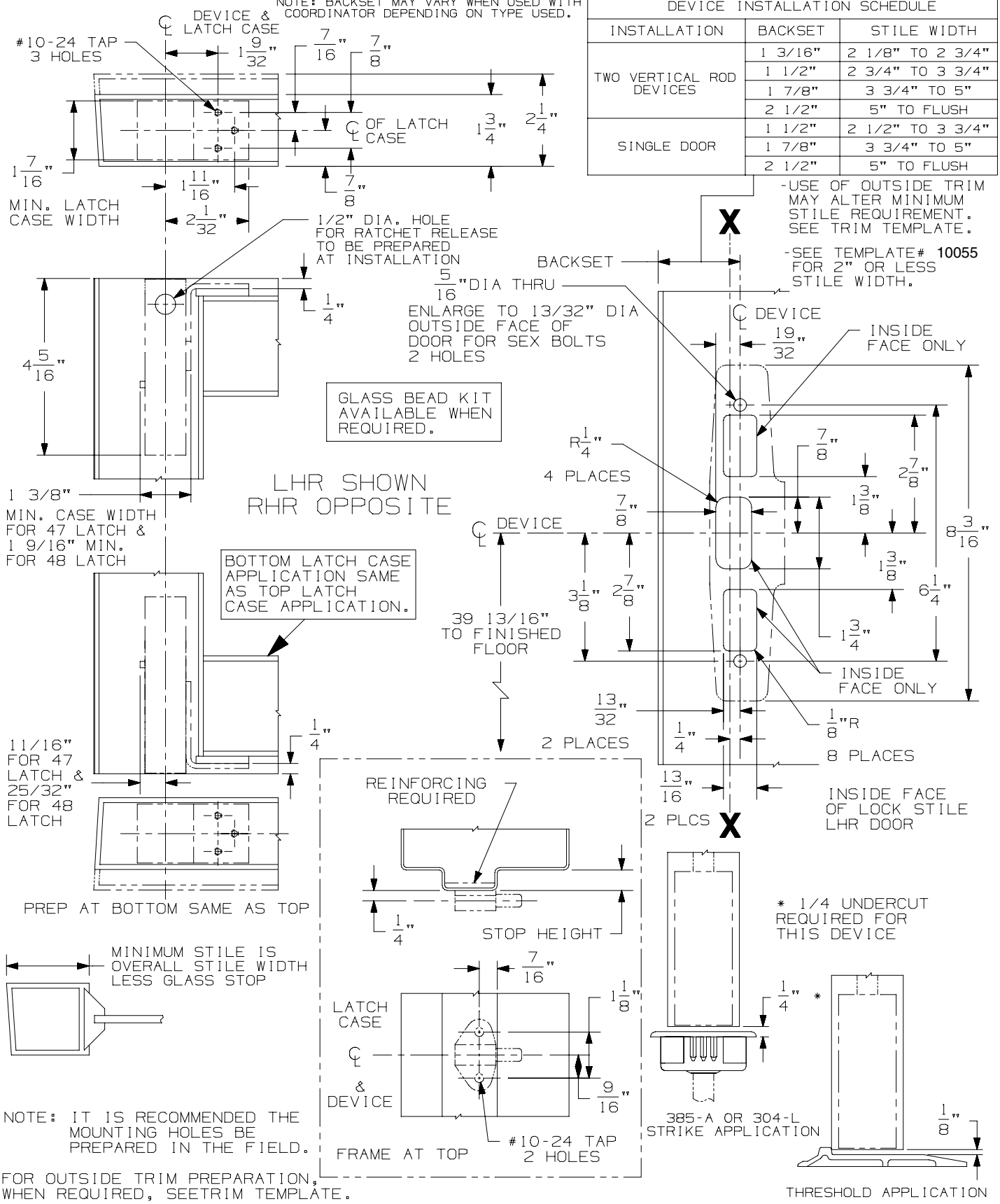

33/3547A & 33/3548A Series Concealed Vertical Rod Device

VON DUPRIN®

NOTES: SEE MASTER SHEET #10001 FOR SUGGESTED REINFORCING

TEMPLATE NUMBER: 10051_b

DATE: 06-07-13

NOTES:

1. 376-T SERIES CONTROL WILL NOT FIT ON THIS INSTALLATION.
2. KAWNEER 190 DOORS FOR THIS APPLICATION MUST BE ORDERED SPECIAL FROM KAWNEER.
3. 48 SERIES DEVICE LATCHES WILL NOT FIT IN 2" STILE DOORS (2-1/8" MINIMUM).

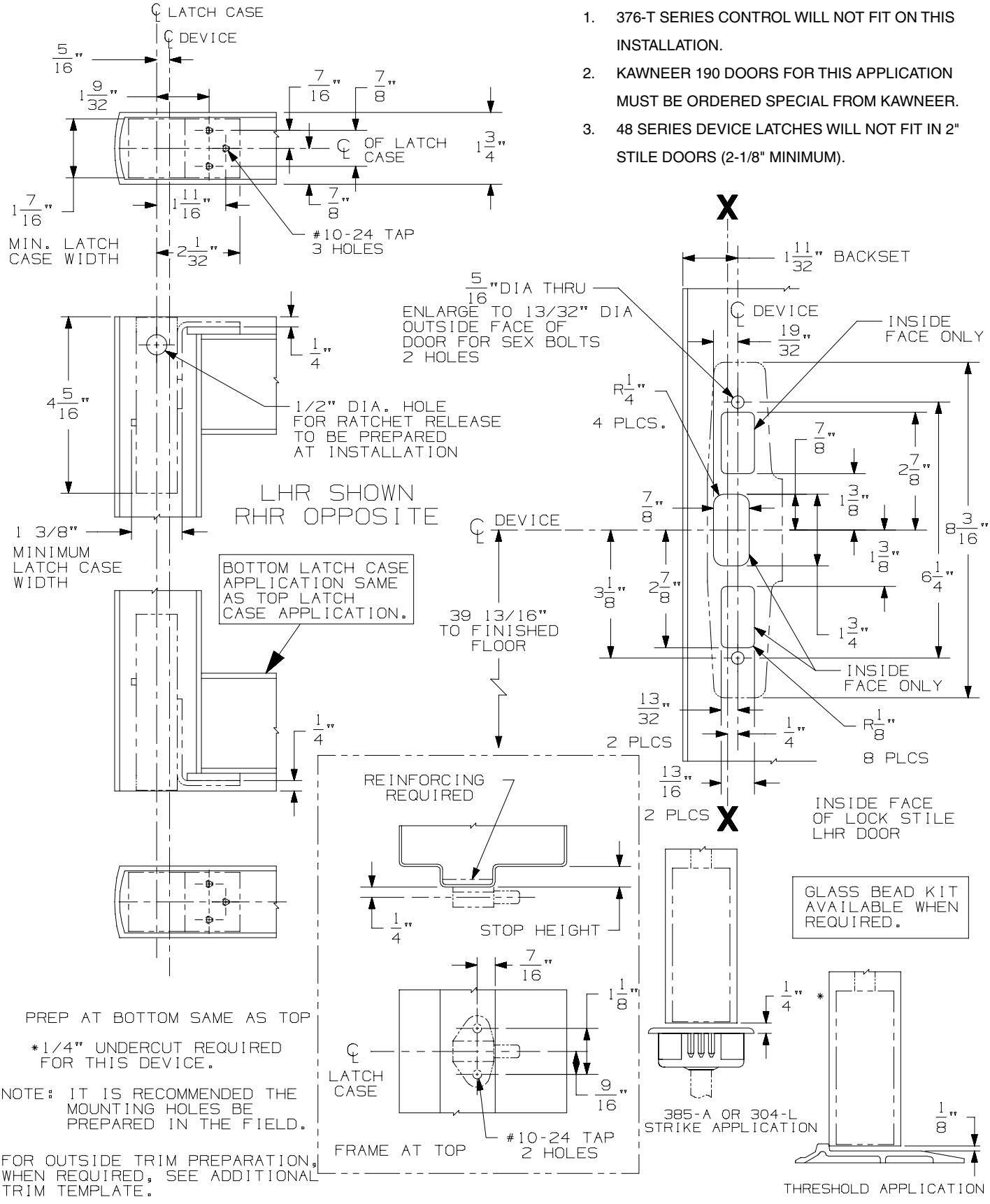

33/3547A Series Concealed Vertical Rod Device for 2" or Less Stile Width

VON DUPRIN®

NOTES: SEE MASTER SHEET #10001 FOR SUGGESTED REINFORCING

TEMPLATE NUMBER: 10055_c

DATE: 07-18-16

386NL & DT TRIM

NOTES: SEE MASTER SHEET #10001 FOR SUGGESTED REINFORCING

TEMPLATE NUMBER: 20008_C

DATE: 5-25-16

VON DUPRIN®

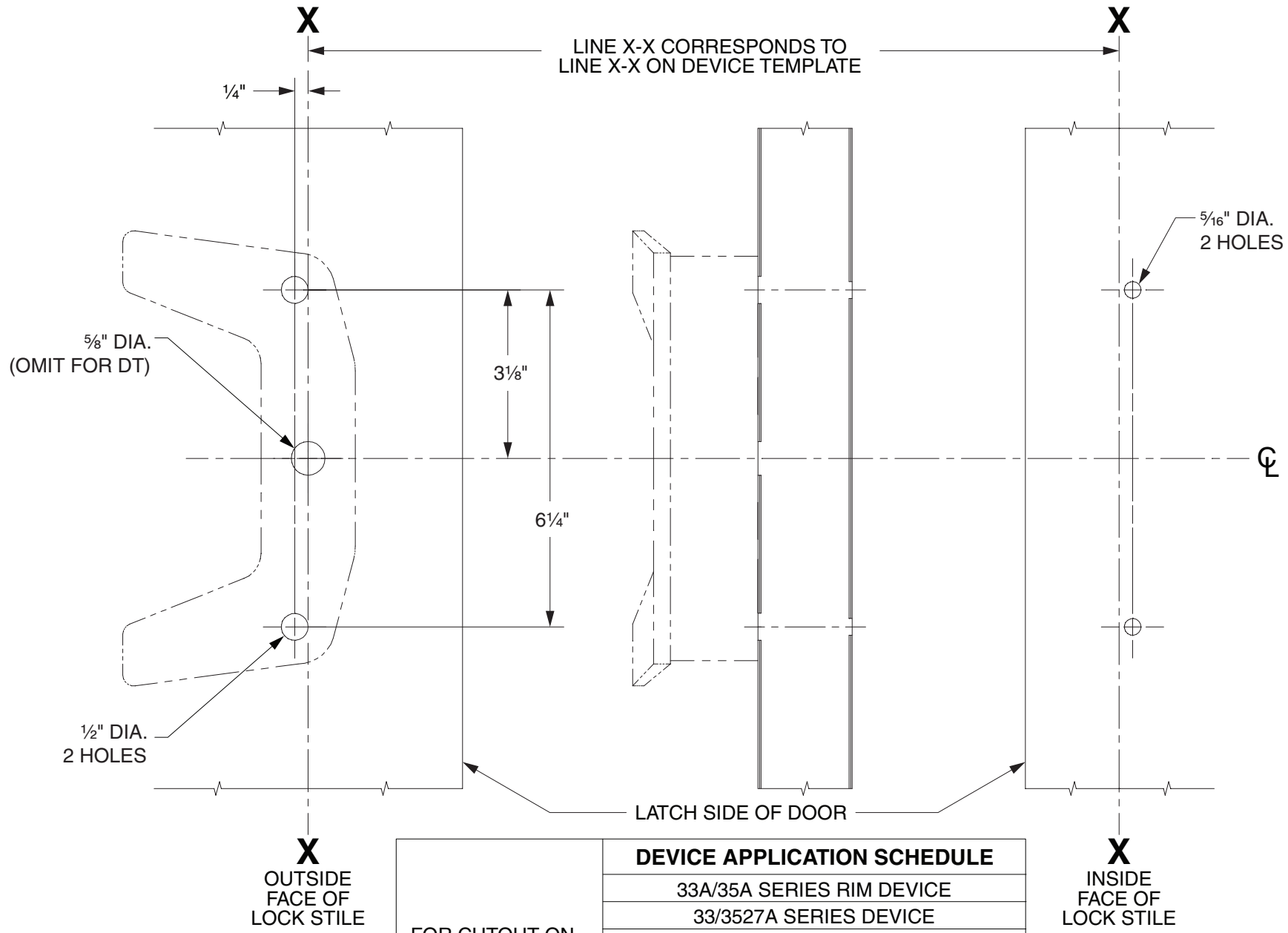

LHR SHOWN
RHR OPPOSITE

FOR CUTOUT ON INSIDE FACE OF DOOR, SEE DEVICE TEMPLATE	**DEVICE APPLICATION SCHEDULE**
	33A/35A SERIES RIM DEVICE
	33/3527A SERIES DEVICE
	33/3527A-F SERIES DEVICE
	33/3547A SERIES DEVICE
	33/3547A-F SERIES DEVICE
	33/3548A SERIES DEVICE
	33/3548A-F SERIES DEVICE
	33/3549A SERIES DEVICE
	33/3549A-F SERIES DEVICE

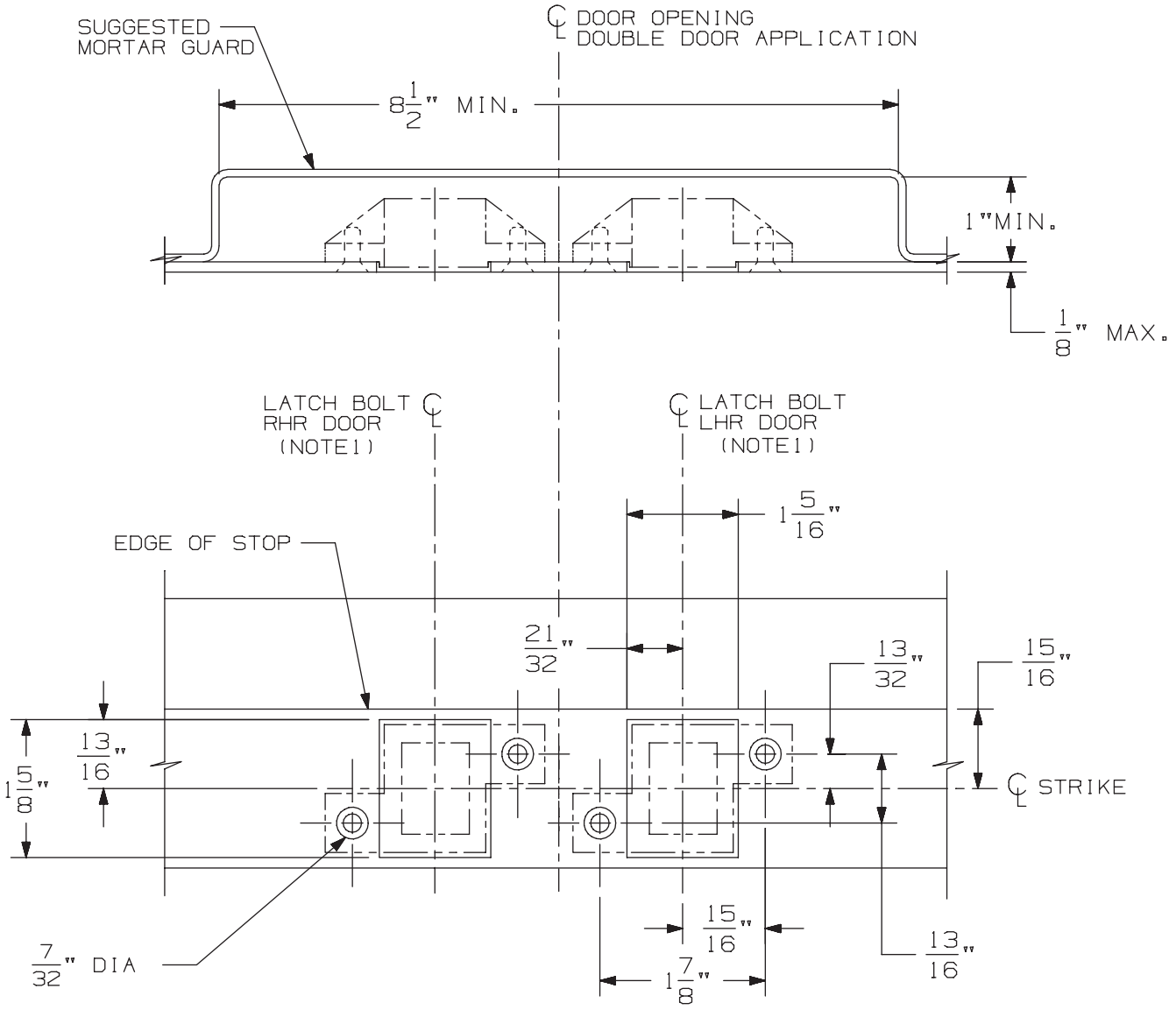

3/8" DIA X 82° C'SINK

IN FRAME
2 HOLES
EACH STRIKE

DOUBLE DOOR APPLICATION SHOWN.
FOR SINGLE DOOR APPLICATION USE
APPROPRIATE HANDING AS SHOWN.

DEVICE APPLICATION SCHEDULE
33/3547 & 33/3547-F SERIES DEVICE
98/99/47 & 98/99/47-F SERIES DEVICE
5547/5547 WDC SERIES
33/3547A & 33/3547A-F SERIES DEVICE
(9) 94/9547 SERIES DEVICE

NOTES: 1. SEE DEVICE TEMPLATE FOR LOCATION OF LATCH BOLT.

2. IF DEVICE IS TO BE MOUNTED ON WOOD DOORS, SEE WOOD DOOR TEMPLATE FOR LATCH BOLT LOCATION.

338 Strike for Hollow Metal Frame Preparation

VON DUPRIN®

NOTES: SEE MASTER SHEET #10001 FOR SUGGESTED REINFORCING

TEMPLATE NUMBER: 30038_a

DATE: 05-23-13

NOTE: BACKSET MAY VARY WHEN USED WITH COORDINATOR DEPENDING ON TYPE USED.

DEVICE INSTALLATION SCHEDULE		
INSTALLATION	BACKSET	STILE WIDTH
TWO VERTICAL ROD DEVICES	1 3/16"	2 1/8" TO 2 3/4"
	1 1/2"	2 3/4" TO 3 3/4"
	1 7/8"	3 3/4" TO 5"
	2 1/2"	5" TO FLUSH
SINGLE DOOR	1 1/2"	2 1/2" TO 3 3/4"
	1 7/8"	3 3/4" TO 5"
	2 1/2"	5" TO FLUSH

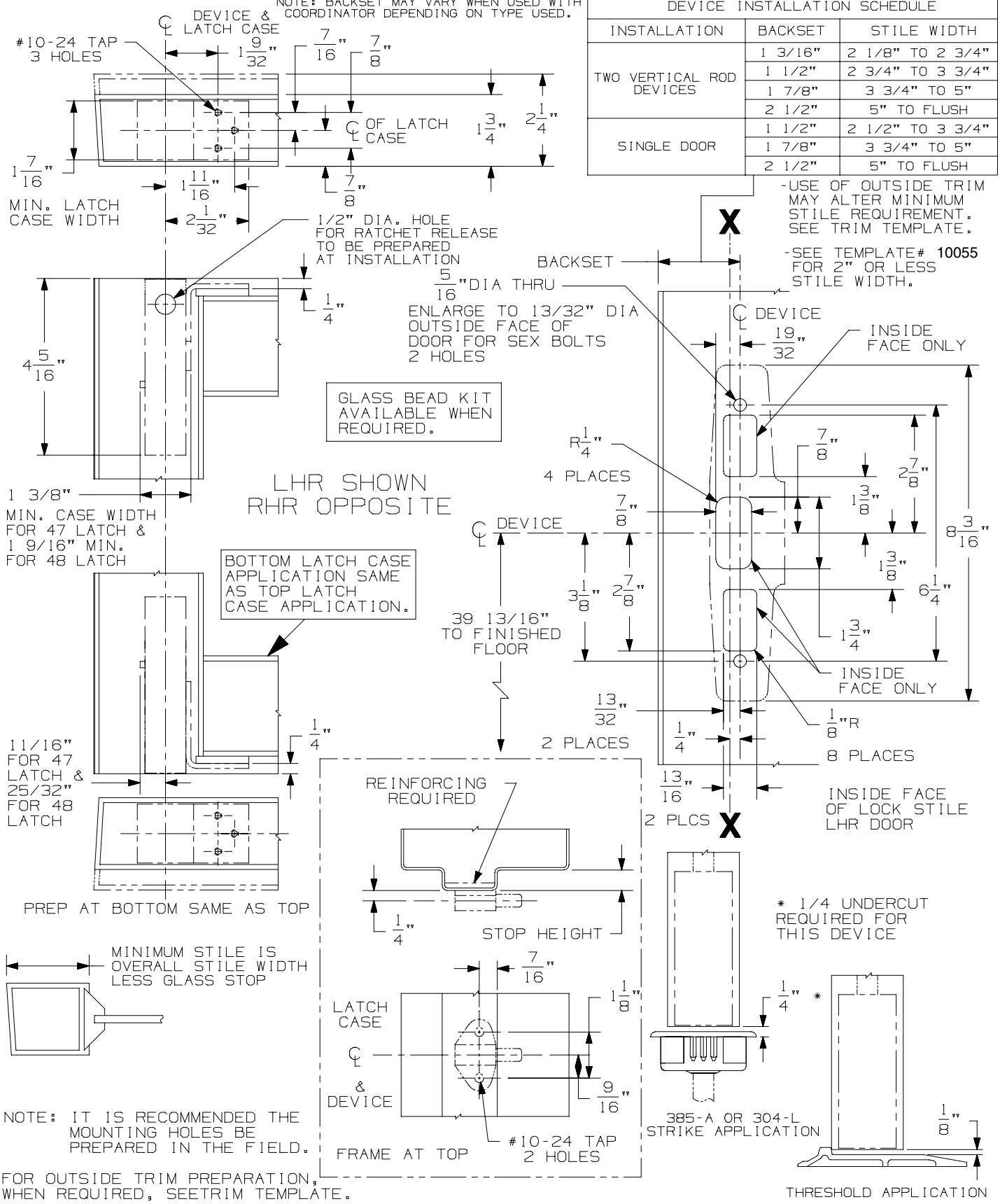

33/3547A & 33/3548A Series Concealed Vertical Rod Device

VON DUPRIN®

NOTES: SEE MASTER SHEET #10001 FOR SUGGESTED REINFORCING

TEMPLATE NUMBER: 10051_b

DATE: 06-07-13

NOTES:

1. 376-T SERIES CONTROL WILL NOT FIT ON THIS INSTALLATION.
2. KAWNEER 190 DOORS FOR THIS APPLICATION MUST BE ORDERED SPECIAL FROM KAWNEER.
3. 48 SERIES DEVICE LATCHES WILL NOT FIT IN 2" STILE DOORS (2-1/8" MINIMUM).

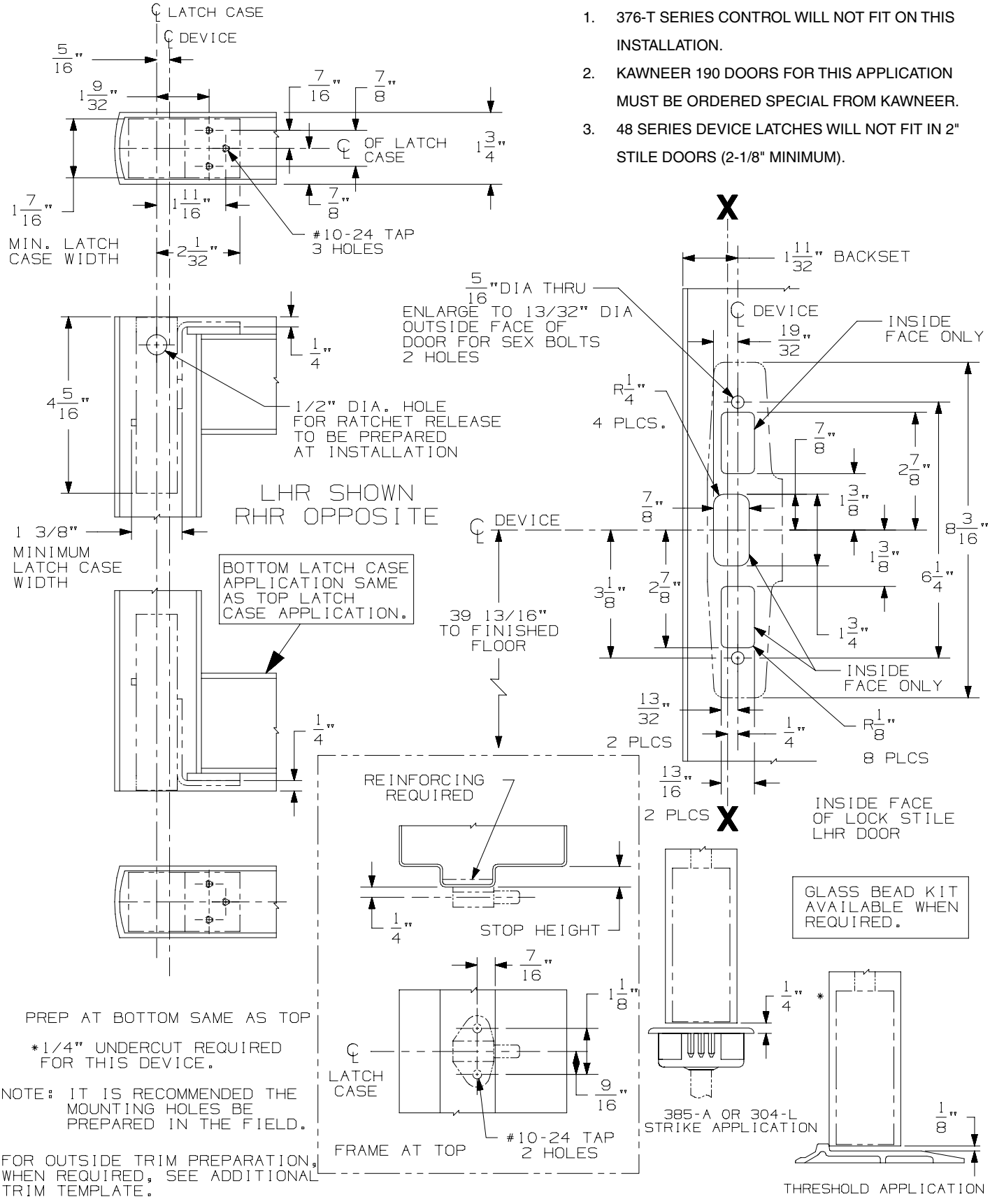

33/3547A Series Concealed Vertical Rod Device for 2" or Less Stile Width

VON DUPRIN®

NOTES: SEE MASTER SHEET #10001 FOR SUGGESTED REINFORCING

TEMPLATE NUMBER: 10055_c

DATE: 07-18-16

388NL CYLINDER CONTROL

NOTES: SEE MASTER SHEET #10001 FOR SUGGESTED REINFORCING

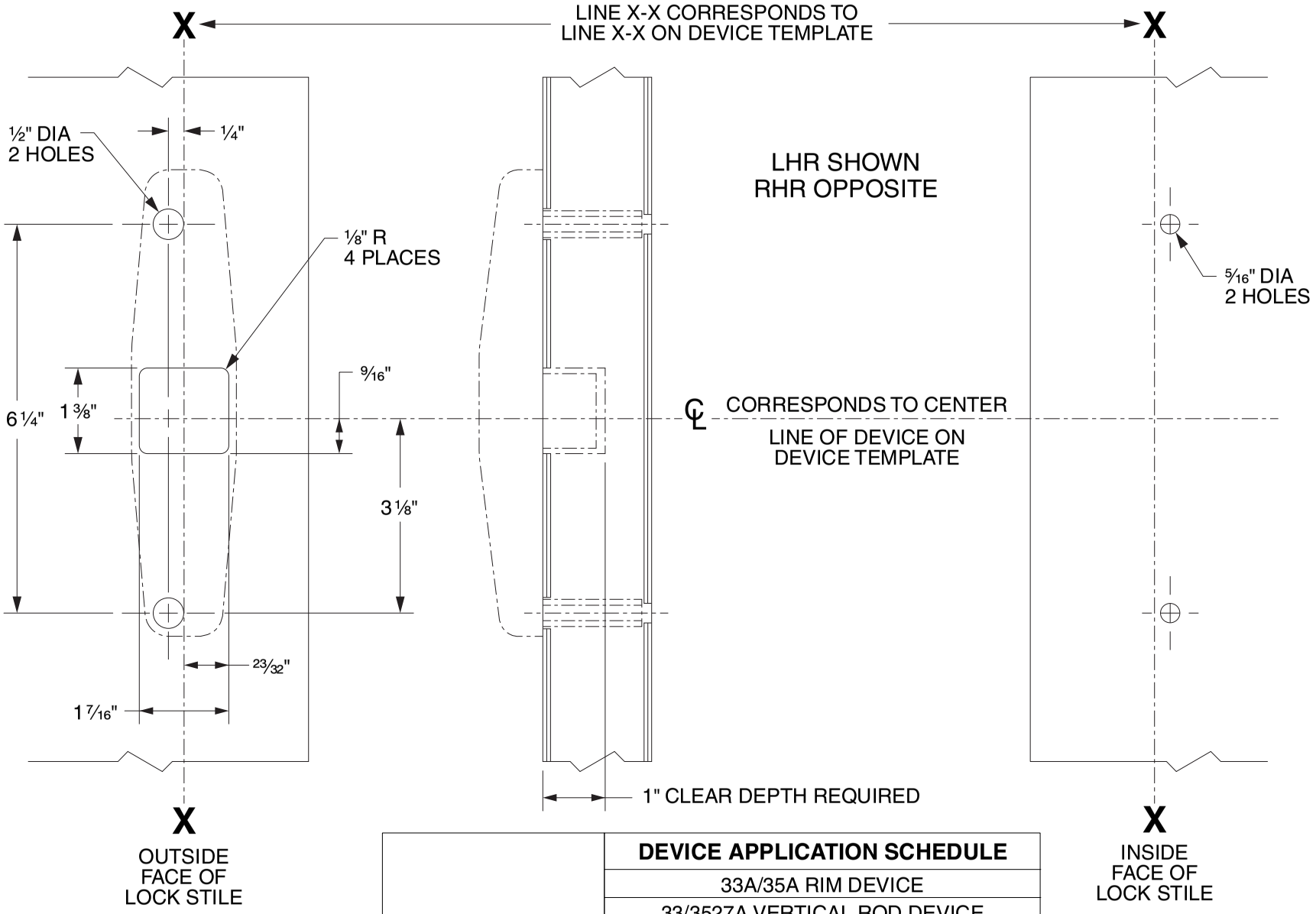

	DEVICE APPLICATION SCHEDULE
FOR CUTOUT ON INSIDE FACE OF DOOR SEE DEVICE TEMPLATE	33A/35A RIM DEVICE
	33/3527A VERTICAL ROD DEVICE
	33/3527A-F VERTICAL ROD DEVICE
	33/3547A VERTICAL ROD DEVICE
	33/3547A-F VERTICAL ROD DEVICE
	33/3548A VERTICAL ROD DEVICE
	33/3548A-F VERTICAL ROD DEVICE
	33/3549A VERTICAL ROD DEVICE
	33/3549A-F VERTICAL ROD DEVICE

VON DUPRIN®

TEMPLATE NUMBER: 40079_d

DATE: 05-31-13

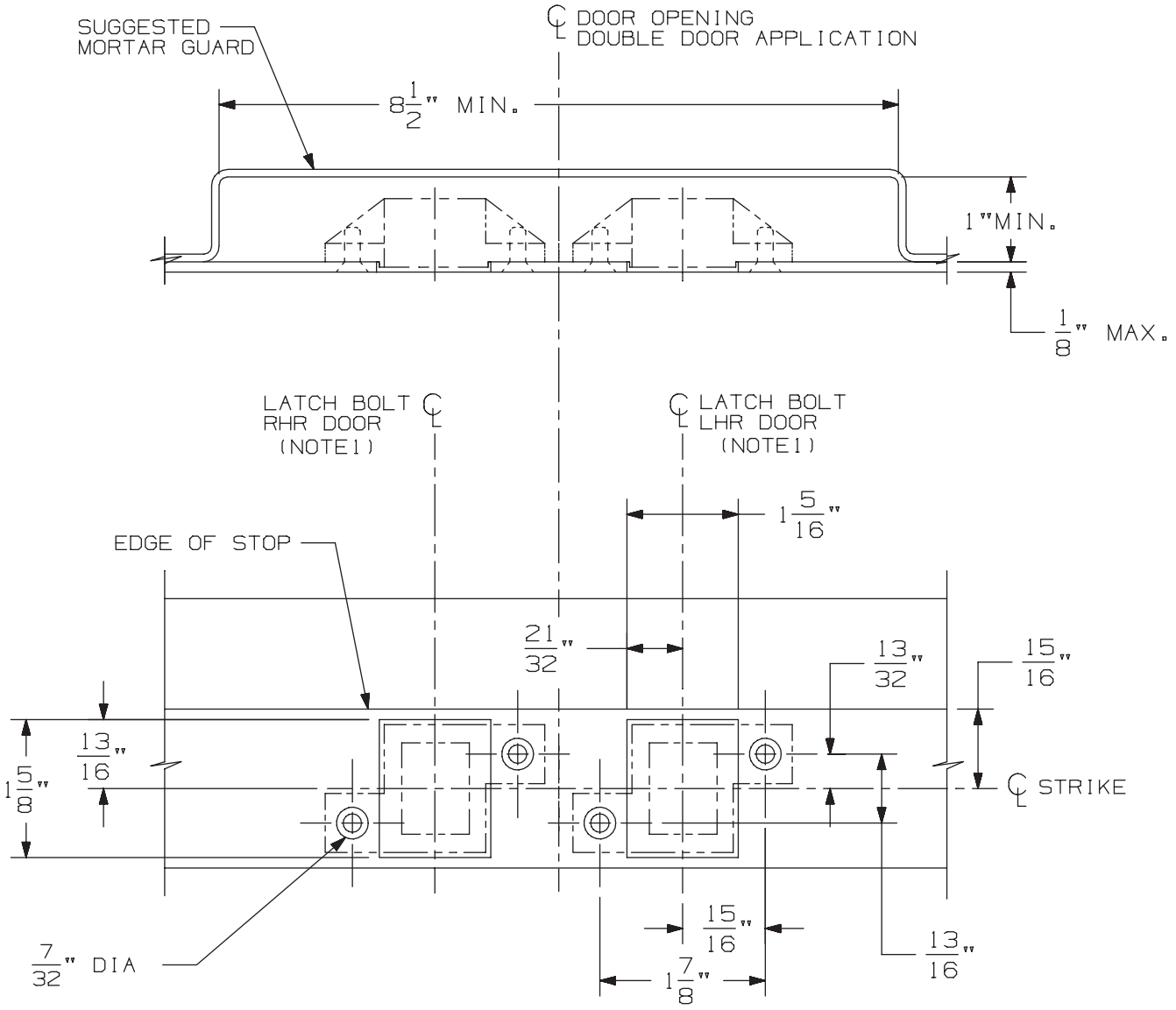

3/8" DIA X 82° C'SINK

IN FRAME
2 HOLES
EACH STRIKE

DOUBLE DOOR APPLICATION SHOWN.
FOR SINGLE DOOR APPLICATION USE
APPROPRIATE HANDING AS SHOWN.

DEVICE APPLICATION SCHEDULE
33/3547 & 33/3547-F SERIES DEVICE
98/99/47 & 98/99/47-F SERIES DEVICE
5547/5547 WDC SERIES
33/3547A & 33/3547A-F SERIES DEVICE
(9) 94/9547 SERIES DEVICE

NOTES: 1. SEE DEVICE TEMPLATE FOR LOCATION OF LATCH BOLT.

2. IF DEVICE IS TO BE MOUNTED ON WOOD DOORS, SEE WOOD DOOR TEMPLATE FOR LATCH BOLT LOCATION.

338 Strike for Hollow Metal Frame Preparation

VON DUPRIN®

NOTES: SEE MASTER SHEET #10001 FOR SUGGESTED REINFORCING

TEMPLATE NUMBER: 30038_a

DATE: 05-23-13

NOTE: BACKSET MAY VARY WHEN USED WITH COORDINATOR DEPENDING ON TYPE USED.

DEVICE INSTALLATION SCHEDULE		
INSTALLATION	BACKSET	STILE WIDTH
TWO VERTICAL ROD DEVICES	1 3/16"	2 1/8" TO 2 3/4"
	1 1/2"	2 3/4" TO 3 3/4"
	1 7/8"	3 3/4" TO 5"
	2 1/2"	5" TO FLUSH
SINGLE DOOR	1 1/2"	2 1/2" TO 3 3/4"
	1 7/8"	3 3/4" TO 5"
	2 1/2"	5" TO FLUSH

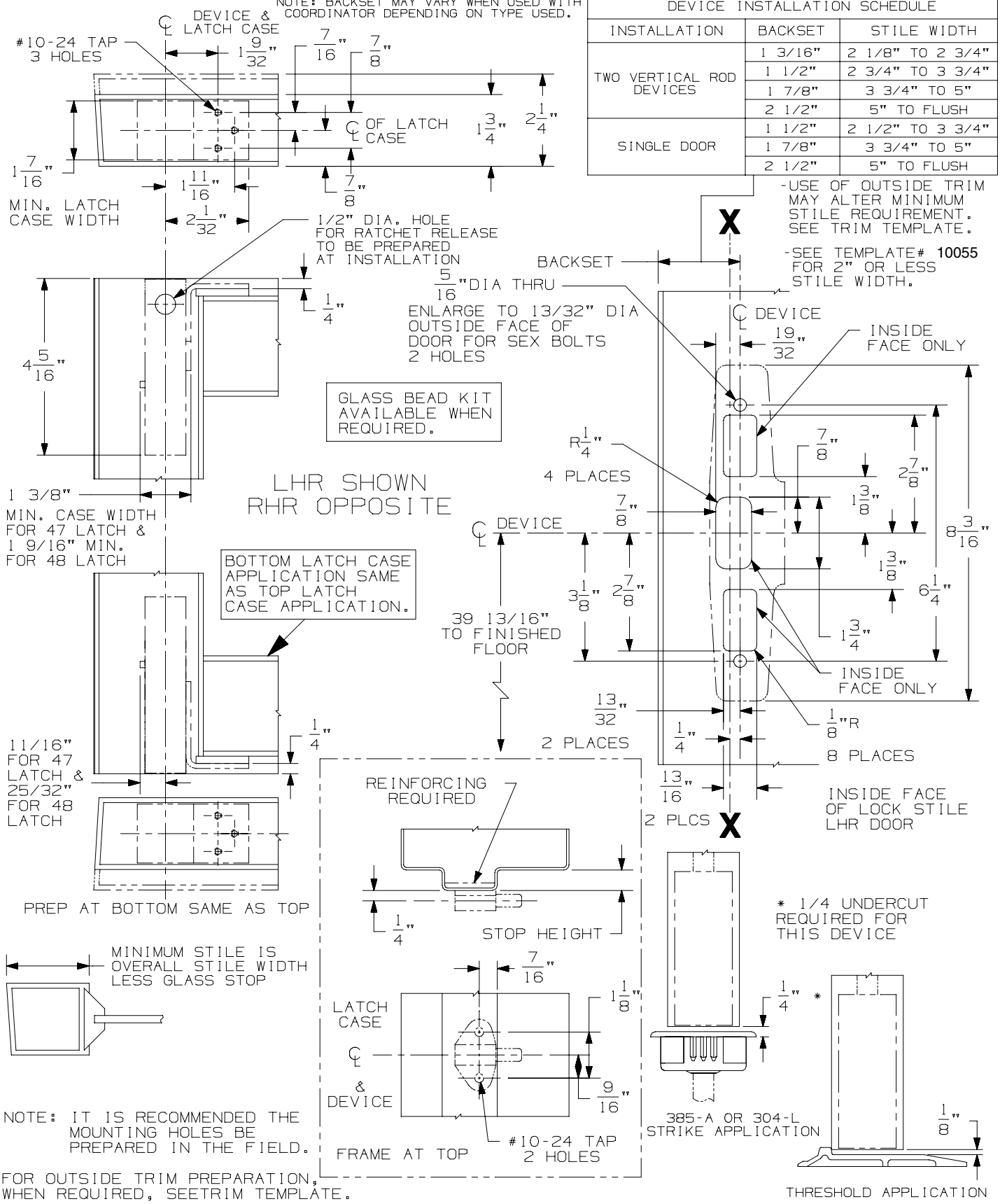

33/3547A & 33/3548A Series Concealed Vertical Rod Device

VON DUPRIN®

NOTES: SEE MASTER SHEET #10001 FOR SUGGESTED REINFORCING

TEMPLATE NUMBER: 10051_b

DATE: 06-07-13

360T, 360L, 360T-BE, 360L-BE CONTROL

NOTES: SEE MASTER SHEET #10001 FOR SUGGESTED REINFORCING

TEMPLATE NUMBER: 40080_e

DATE: 04-06-15

VON DUPRIN®

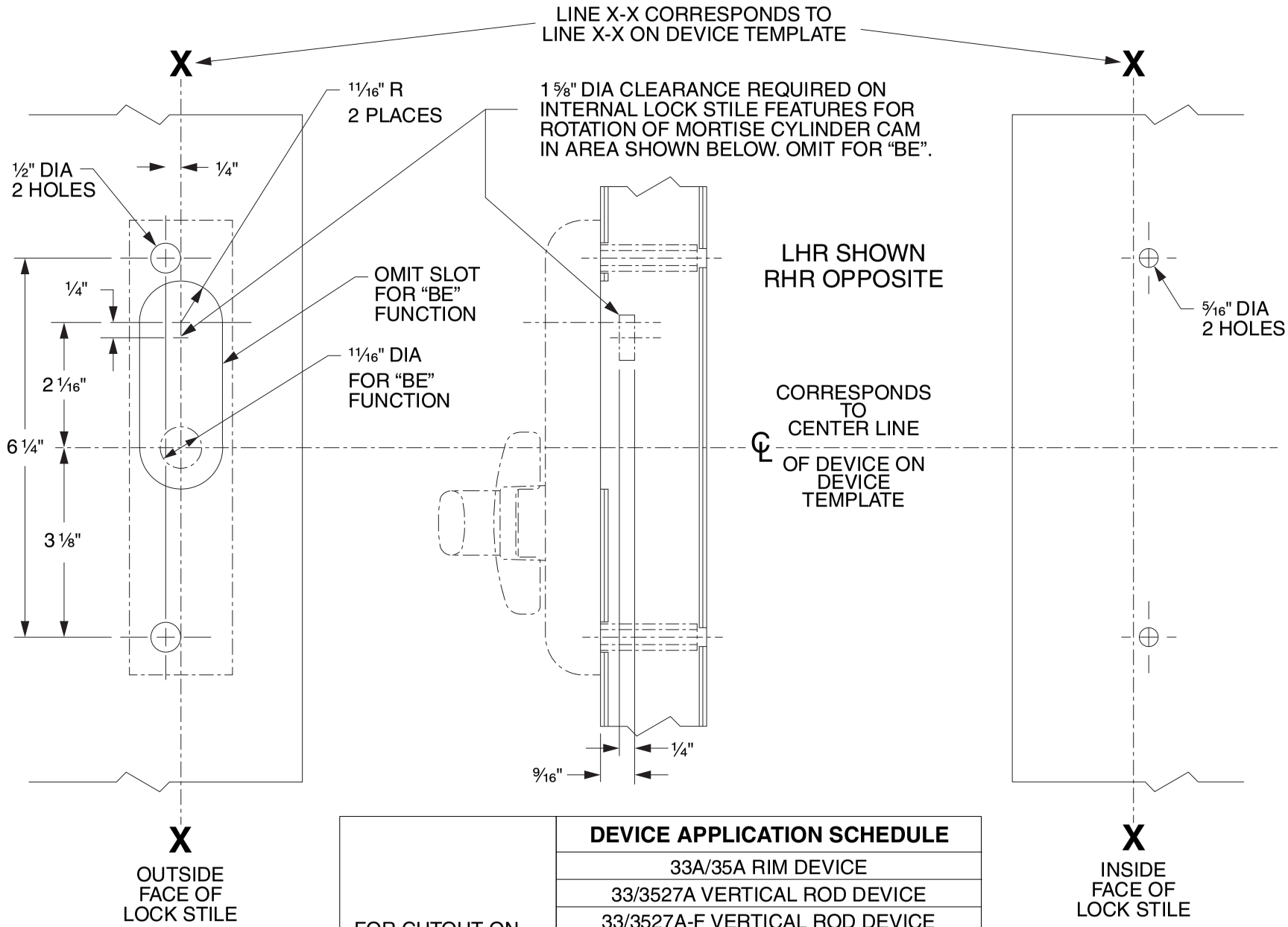

	DEVICE APPLICATION SCHEDULE
FOR CUTOUT ON INSIDE FACE OF DOOR SEE DEVICE TEMPLATE	33A/35A RIM DEVICE
	33/3527A VERTICAL ROD DEVICE
	33/3527A-F VERTICAL ROD DEVICE
	33/3547A VERTICAL ROD DEVICE
	33/3547A-F VERTICAL ROD DEVICE
	33/3548A VERTICAL ROD DEVICE
	33/3548A-F VERTICAL ROD DEVICE
	33/3549A VERTICAL CABLE DEVICE
	33/3549A-F VERTICAL CABLE DEVICE

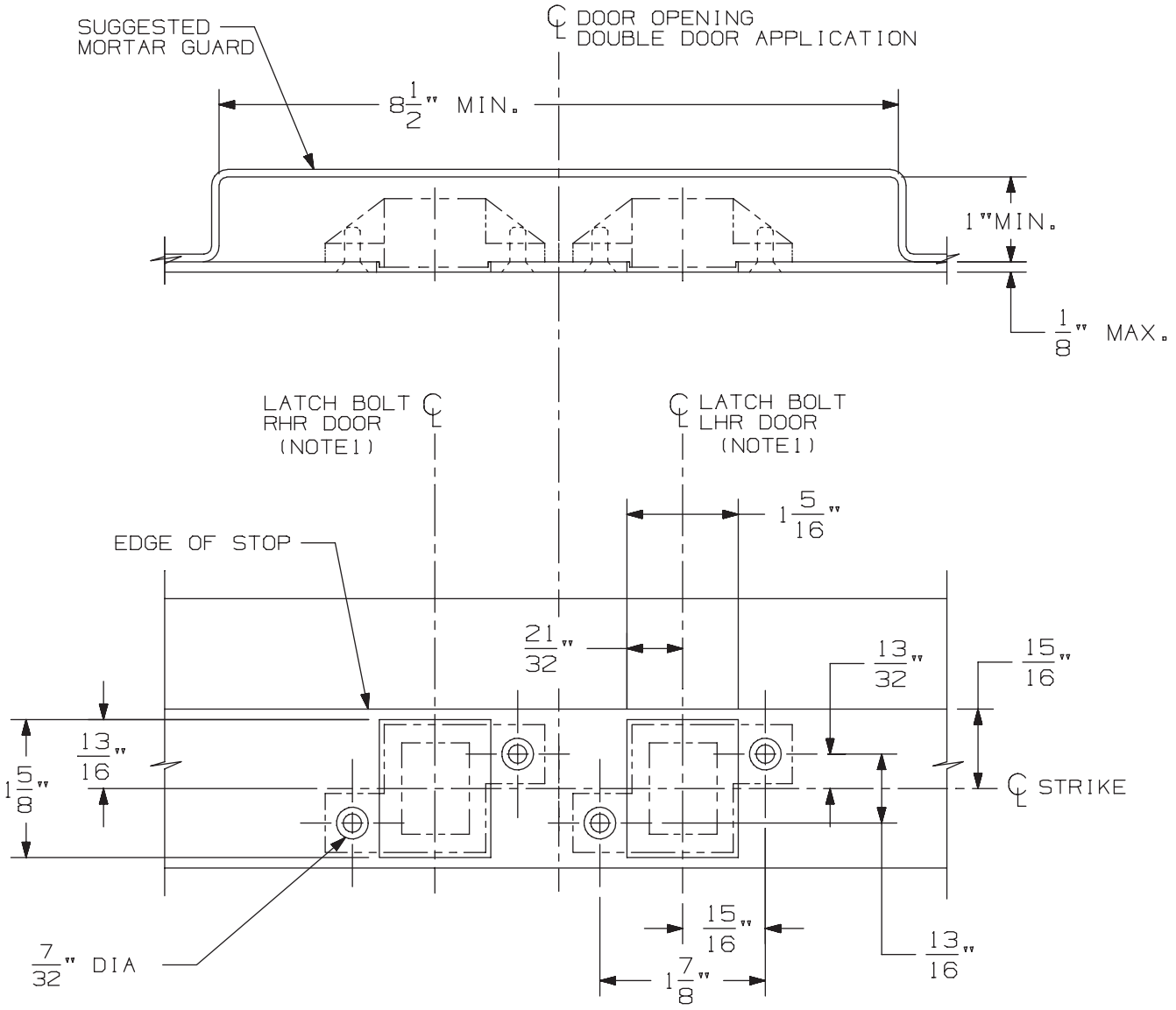

3/8" DIA X 82° C'SINK

IN FRAME
2 HOLES
EACH STRIKE

DOUBLE DOOR APPLICATION SHOWN.
FOR SINGLE DOOR APPLICATION USE
APPROPRIATE HANDING AS SHOWN.

DEVICE APPLICATION SCHEDULE
33/3547 & 33/3547-F SERIES DEVICE
98/99/47 & 98/99/47-F SERIES DEVICE
5547/5547 WDC SERIES
33/3547A & 33/3547A-F SERIES DEVICE
(9) 94/9547 SERIES DEVICE

NOTES: 1. SEE DEVICE TEMPLATE FOR LOCATION OF LATCH BOLT.

2. IF DEVICE IS TO BE MOUNTED ON WOOD DOORS, SEE WOOD DOOR TEMPLATE FOR LATCH BOLT LOCATION.

338 Strike for Hollow Metal Frame Preparation

VON DUPRIN®

NOTES: SEE MASTER SHEET #10001 FOR SUGGESTED REINFORCING

TEMPLATE NUMBER: 30038_a

DATE: 05-23-13

NOTE: BACKSET MAY VARY WHEN USED WITH COORDINATOR DEPENDING ON TYPE USED.

DEVICE INSTALLATION SCHEDULE		
INSTALLATION	BACKSET	STILE WIDTH
TWO VERTICAL ROD DEVICES	1 3/16"	2 1/8" TO 2 3/4"
	1 1/2"	2 3/4" TO 3 3/4"
	1 7/8"	3 3/4" TO 5"
	2 1/2"	5" TO FLUSH
SINGLE DOOR	1 1/2"	2 1/2" TO 3 3/4"
	1 7/8"	3 3/4" TO 5"
	2 1/2"	5" TO FLUSH

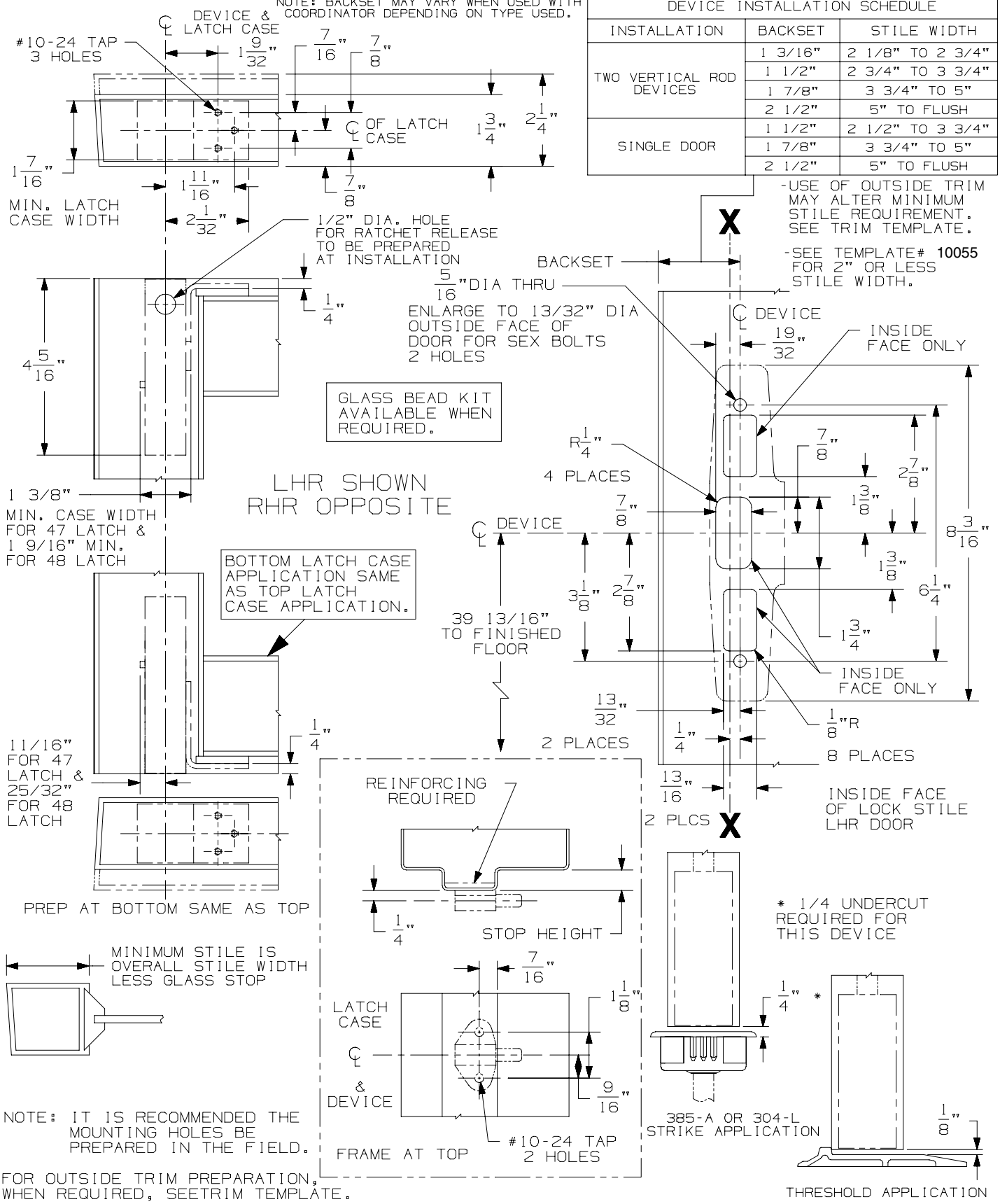

33/3547A & 33/3548A Series Concealed Vertical Rod Device

VON DUPRIN®

NOTES: SEE MASTER SHEET #10001 FOR SUGGESTED REINFORCING

TEMPLATE NUMBER: 10051_b

DATE: 06-07-13

376-T Control

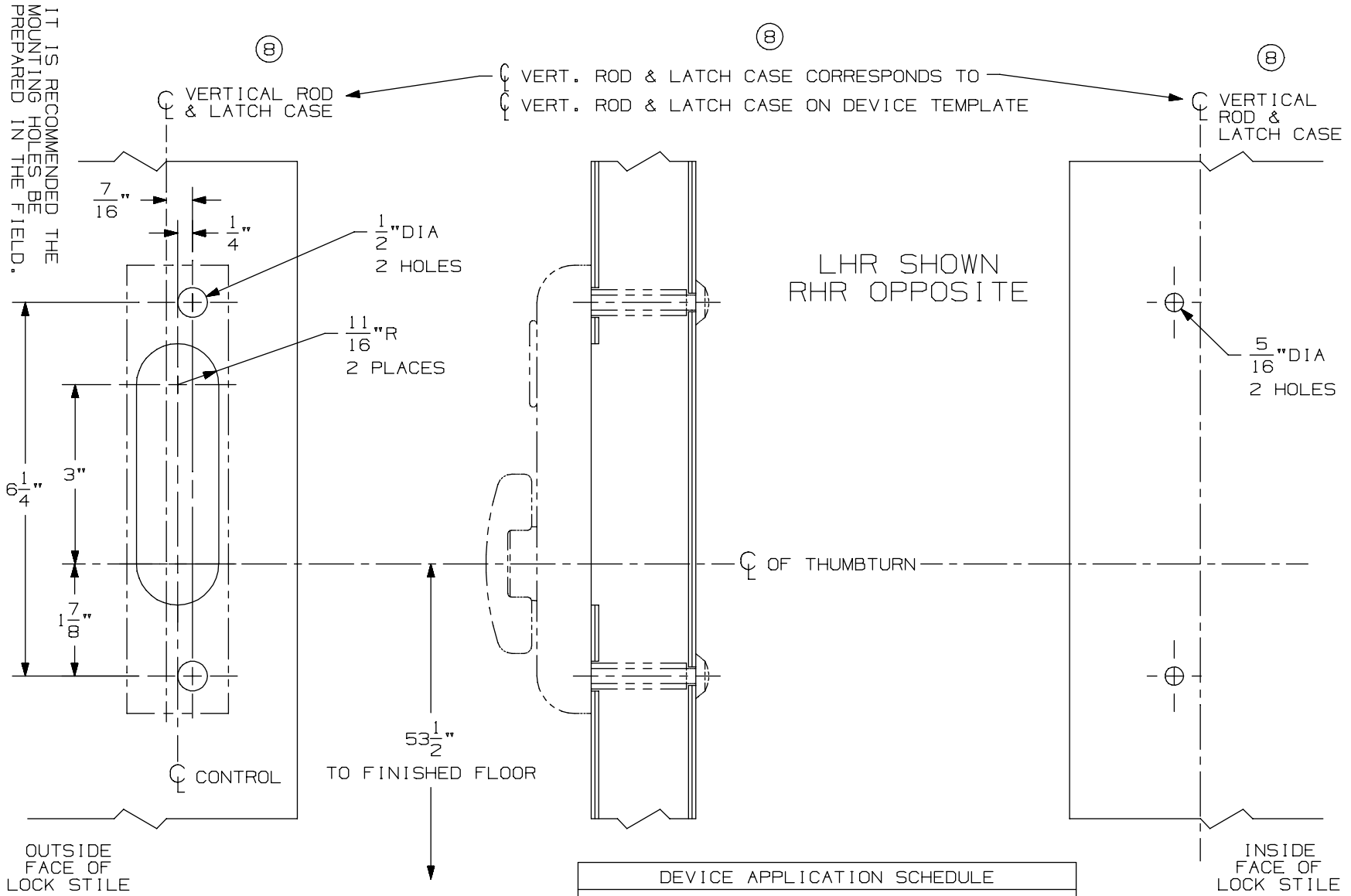

DEVICE APPLICATION SCHEDULE
5547/5547-F VERT. ROD DEVICE
8847-F VERT. ROD DEVICE
* 3347/3547 VERT. ROD DEVICE
3347-F/3547-F VERT. ROD DEVICE
⑧ * 3347A/3547A VERT. ROD DEVICE
⑧ 3347A-F/3547A-F VERT. ROD DEVICE
9847/9947 VERT. ROD DEVICE
9847-F/9947-F VERTICAL ROD DEVICE

⑧ * NOT TO BE USED WITH 1 1/16" LATCH CASE BACKSET ON BULLNOSE EDGE DOORS WITH WEATHERSTRIP CHANNEL.

NOTES: SEE MASTER SHEET #10001 FOR SUGGESTED REINFORCING

TEMPLATE NUMBER: 40114_a

DATE: 05-28-13

VON DUPRIN®

386NL & DT TRIM

NOTES: SEE MASTER SHEET #10001 FOR SUGGESTED REINFORCING

TEMPLATE NUMBER: 20008_C

DATE: 5-25-16

VON DUPRIN®

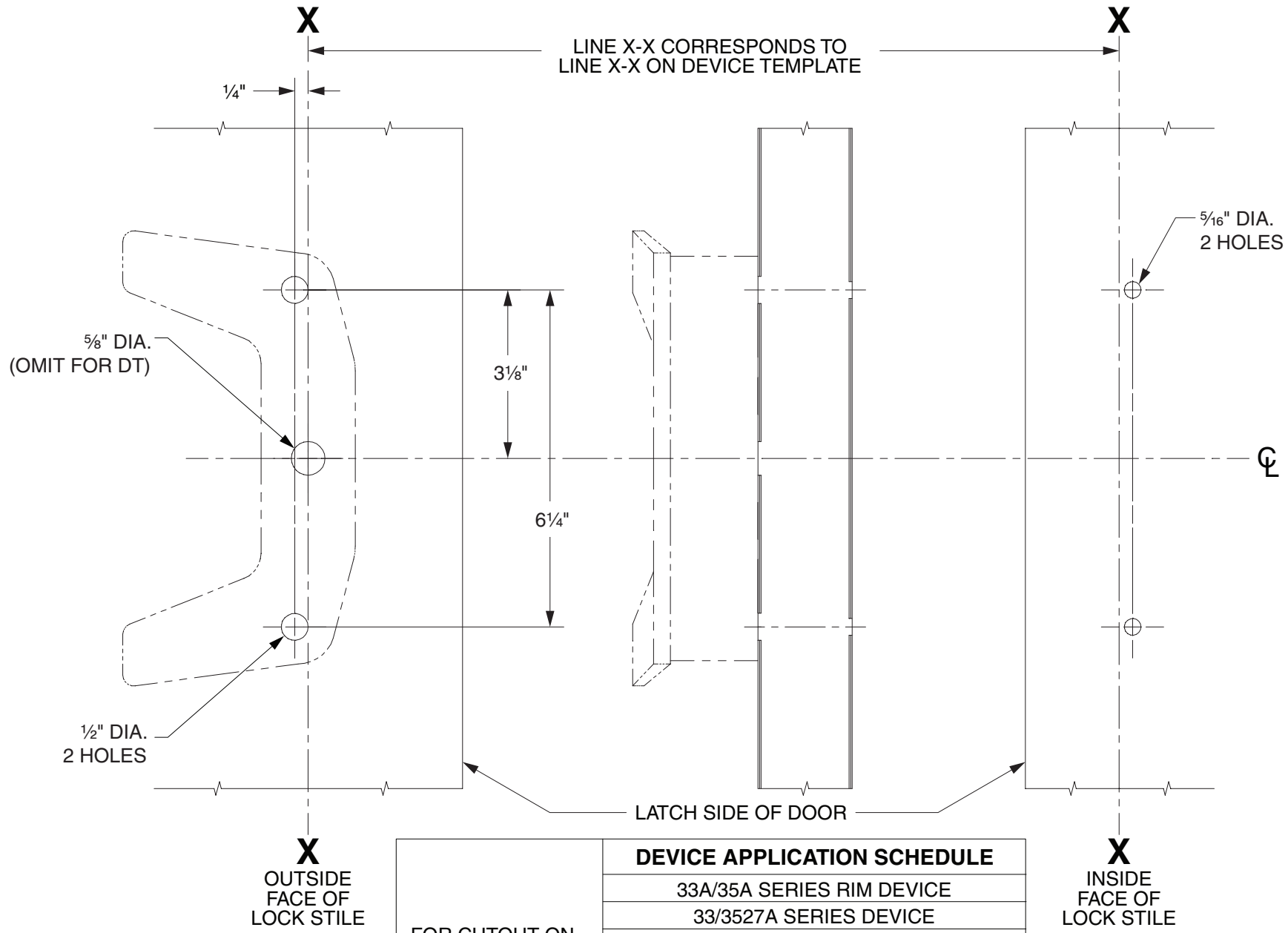

LHR SHOWN
RHR OPPOSITE

FOR CUTOUT ON INSIDE FACE OF DOOR, SEE DEVICE TEMPLATE	**DEVICE APPLICATION SCHEDULE**
	33A/35A SERIES RIM DEVICE
	33/3527A SERIES DEVICE
	33/3527A-F SERIES DEVICE
	33/3547A SERIES DEVICE
	33/3547A-F SERIES DEVICE
	33/3548A SERIES DEVICE
	33/3548A-F SERIES DEVICE
	33/3549A SERIES DEVICE
	33/3549A-F SERIES DEVICE

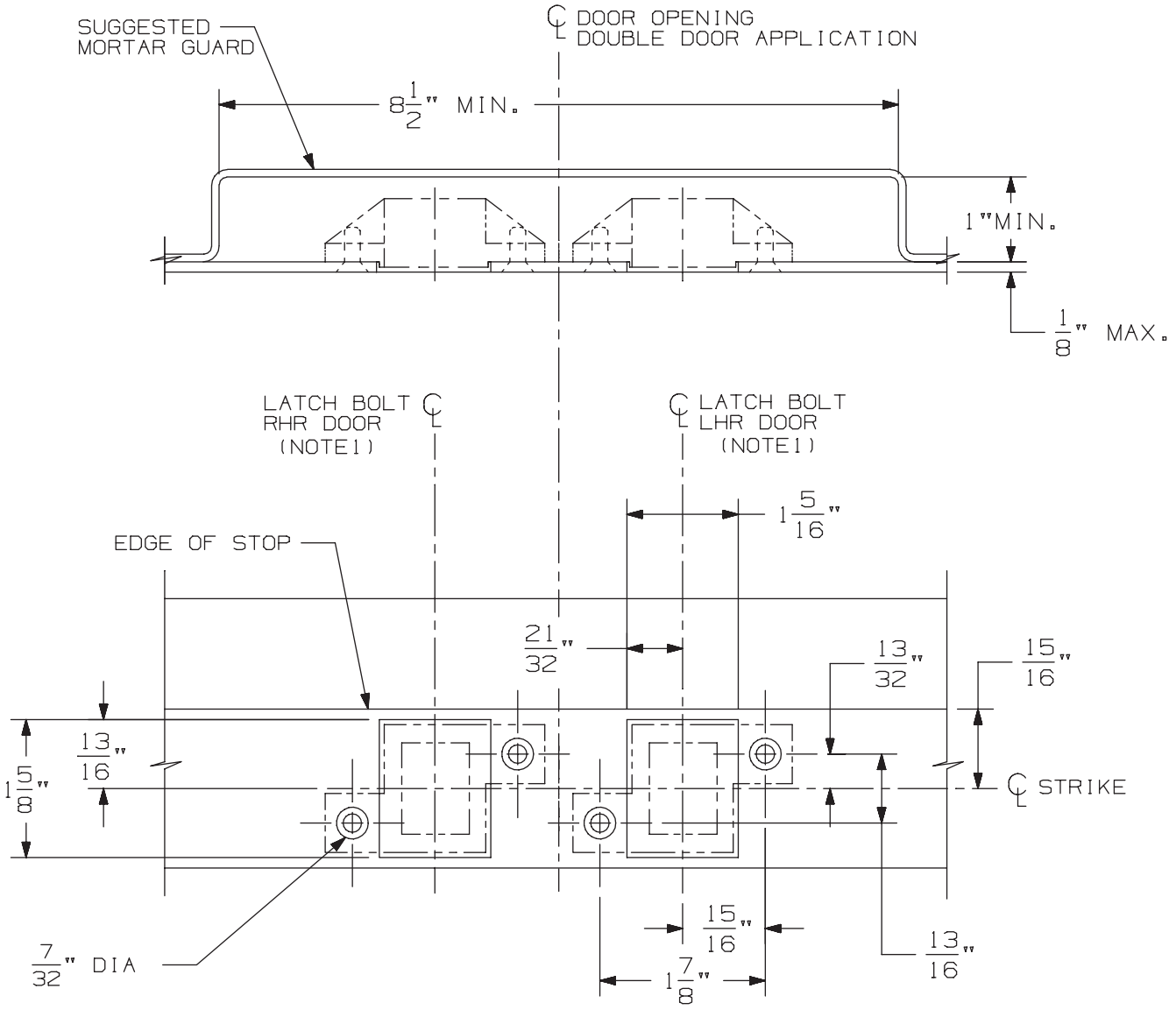

3/8" DIA X 82° C'SINK

IN FRAME
2 HOLES
EACH STRIKE

DOUBLE DOOR APPLICATION SHOWN.
FOR SINGLE DOOR APPLICATION USE
APPROPRIATE HANDING AS SHOWN.

DEVICE APPLICATION SCHEDULE
33/3547 & 33/3547-F SERIES DEVICE
98/99/47 & 98/99/47-F SERIES DEVICE
5547/5547 WDC SERIES
33/3547A & 33/3547A-F SERIES DEVICE
(9) 94/9547 SERIES DEVICE

NOTES: 1. SEE DEVICE TEMPLATE FOR LOCATION OF LATCH BOLT.

2. IF DEVICE IS TO BE MOUNTED ON WOOD DOORS, SEE WOOD DOOR TEMPLATE FOR LATCH BOLT LOCATION.

338 Strike for Hollow Metal Frame Preparation

VON DUPRIN®

NOTES: SEE MASTER SHEET #10001 FOR SUGGESTED REINFORCING

TEMPLATE NUMBER: 30038_a

DATE: 05-23-13

360T, 360L, 360T-BE, 360L-BE CONTROL

NOTES: SEE MASTER SHEET #10001 FOR SUGGESTED REINFORCING

TEMPLATE NUMBER: 40080_e

DATE: 04-06-15

VON DUPRIN®

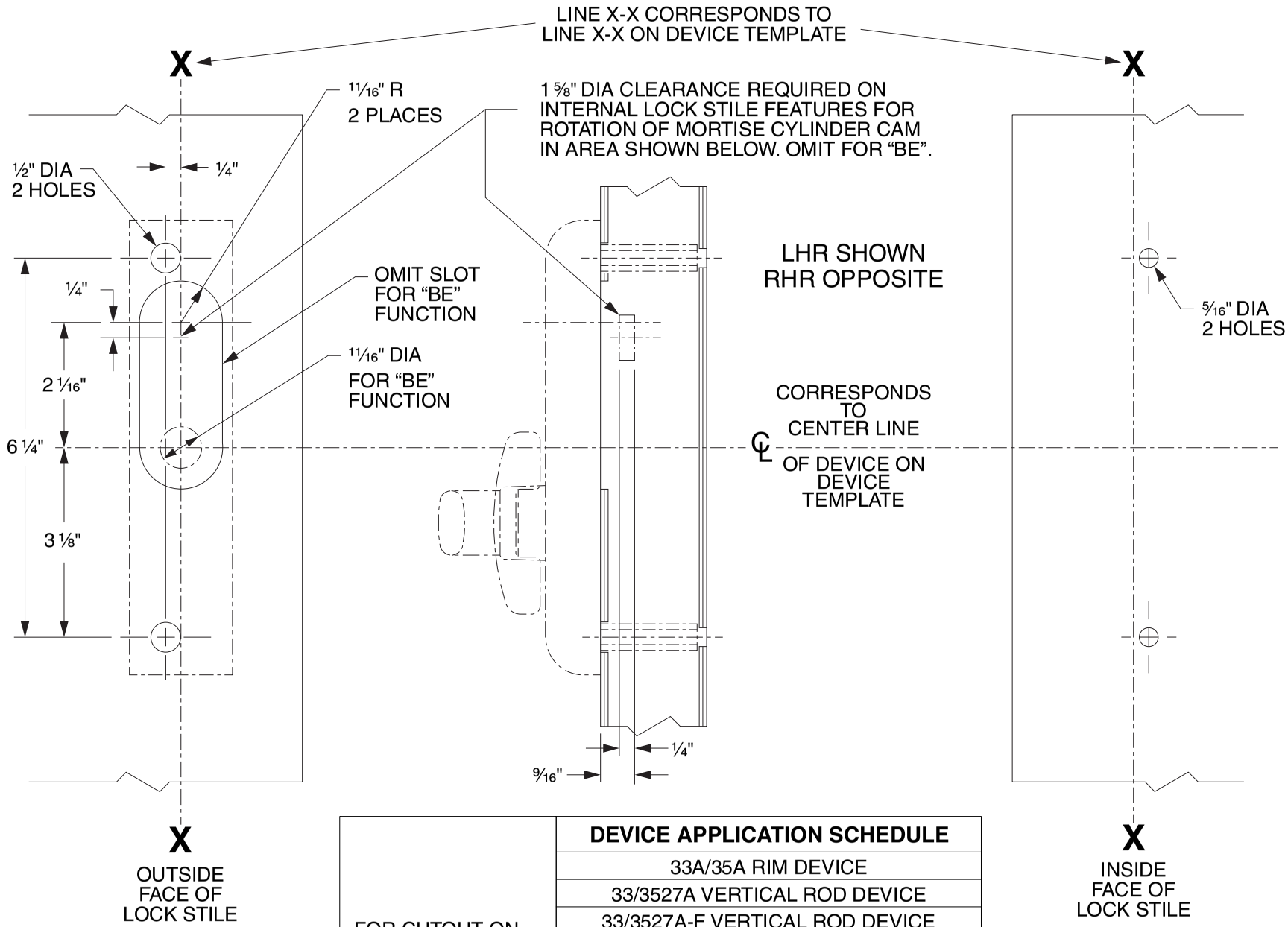

	DEVICE APPLICATION SCHEDULE
FOR CUTOUT ON INSIDE FACE OF DOOR SEE DEVICE TEMPLATE	33A/35A RIM DEVICE
	33/3527A VERTICAL ROD DEVICE
	33/3527A-F VERTICAL ROD DEVICE
	33/3547A VERTICAL ROD DEVICE
	33/3547A-F VERTICAL ROD DEVICE
	33/3548A VERTICAL ROD DEVICE
	33/3548A-F VERTICAL ROD DEVICE
	33/3549A VERTICAL CABLE DEVICE
	33/3549A-F VERTICAL CABLE DEVICE

33A/35A Series Exit Devices

-

3347A-F/3547A-F Concealed Vertical Rod Fire (Standard, CD, EL, LX, RX and SS)

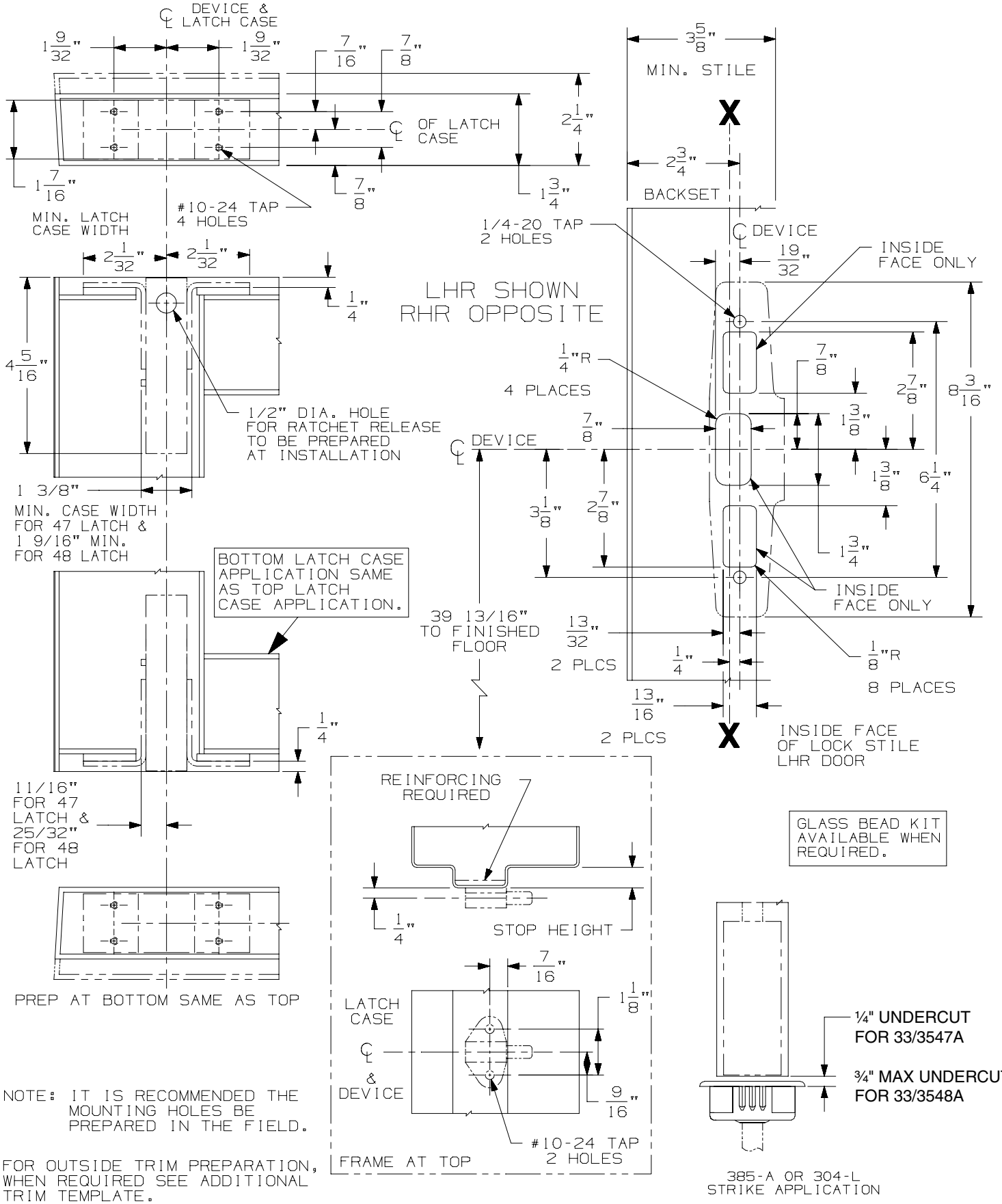

NOTE: IT IS RECOMMENDED THE MOUNTING HOLES BE PREPARED IN THE FIELD.

33/3547A-F & 33/3548A-F Series Concealed Vertical Rod Device

VON DUPRIN®

NOTES: SEE MASTER SHEET #10001 FOR SUGGESTED REINFORCING

TEMPLATE NUMBER: 10057_b

DATE: 09-22-14

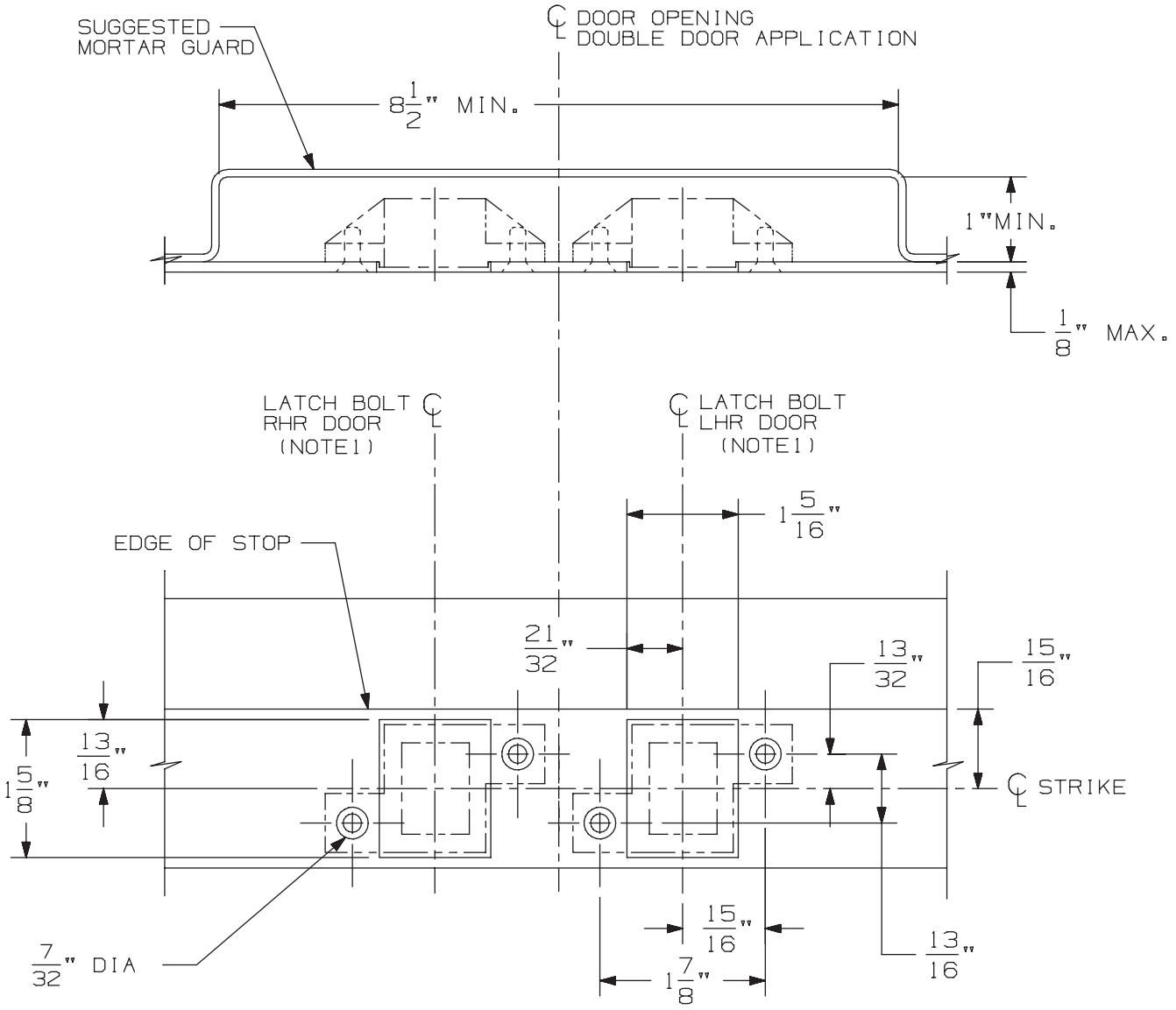

3/8" DIA X 82° C'SINK

IN FRAME
2 HOLES
EACH STRIKE

DOUBLE DOOR APPLICATION SHOWN.
FOR SINGLE DOOR APPLICATION USE
APPROPRIATE HANDING AS SHOWN.

DEVICE APPLICATION SCHEDULE
33/3547 & 33/3547-F SERIES DEVICE
98/99/47 & 98/99/47-F SERIES DEVICE
5547/5547 WDC SERIES
33/3547A & 33/3547A-F SERIES DEVICE
(9) 94/9547 SERIES DEVICE

NOTES: 1. SEE DEVICE TEMPLATE FOR LOCATION OF LATCH BOLT.

2. IF DEVICE IS TO BE MOUNTED ON WOOD DOORS, SEE WOOD DOOR TEMPLATE FOR LATCH BOLT LOCATION.

338 Strike for Hollow Metal Frame Preparation

VON DUPRIN®

NOTES: SEE MASTER SHEET #10001 FOR SUGGESTED REINFORCING

TEMPLATE NUMBER: 30038_a

DATE: 05-23-13

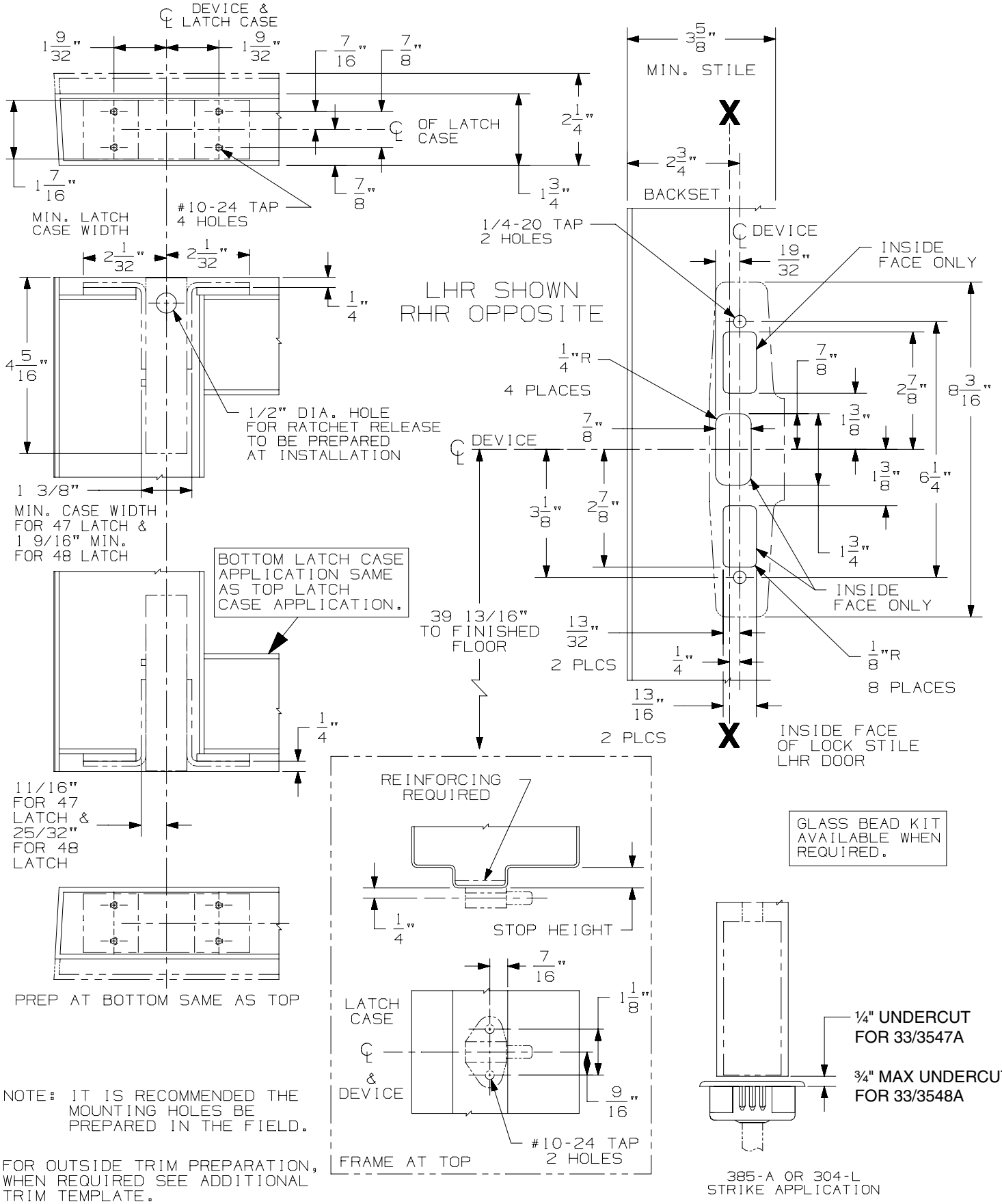

NOTE: IT IS RECOMMENDED THE MOUNTING HOLES BE PREPARED IN THE FIELD.

33/3547A-F & 33/3548A-F Series Concealed Vertical Rod Device

VON DUPRIN®

NOTES: SEE MASTER SHEET #10001 FOR SUGGESTED REINFORCING

TEMPLATE NUMBER: 10057_b

DATE: 09-22-14

386NL & DT TRIM

NOTES: SEE MASTER SHEET #10001 FOR SUGGESTED REINFORCING

TEMPLATE NUMBER: 20008_C

DATE: 5-25-16

VON DUPRIN®

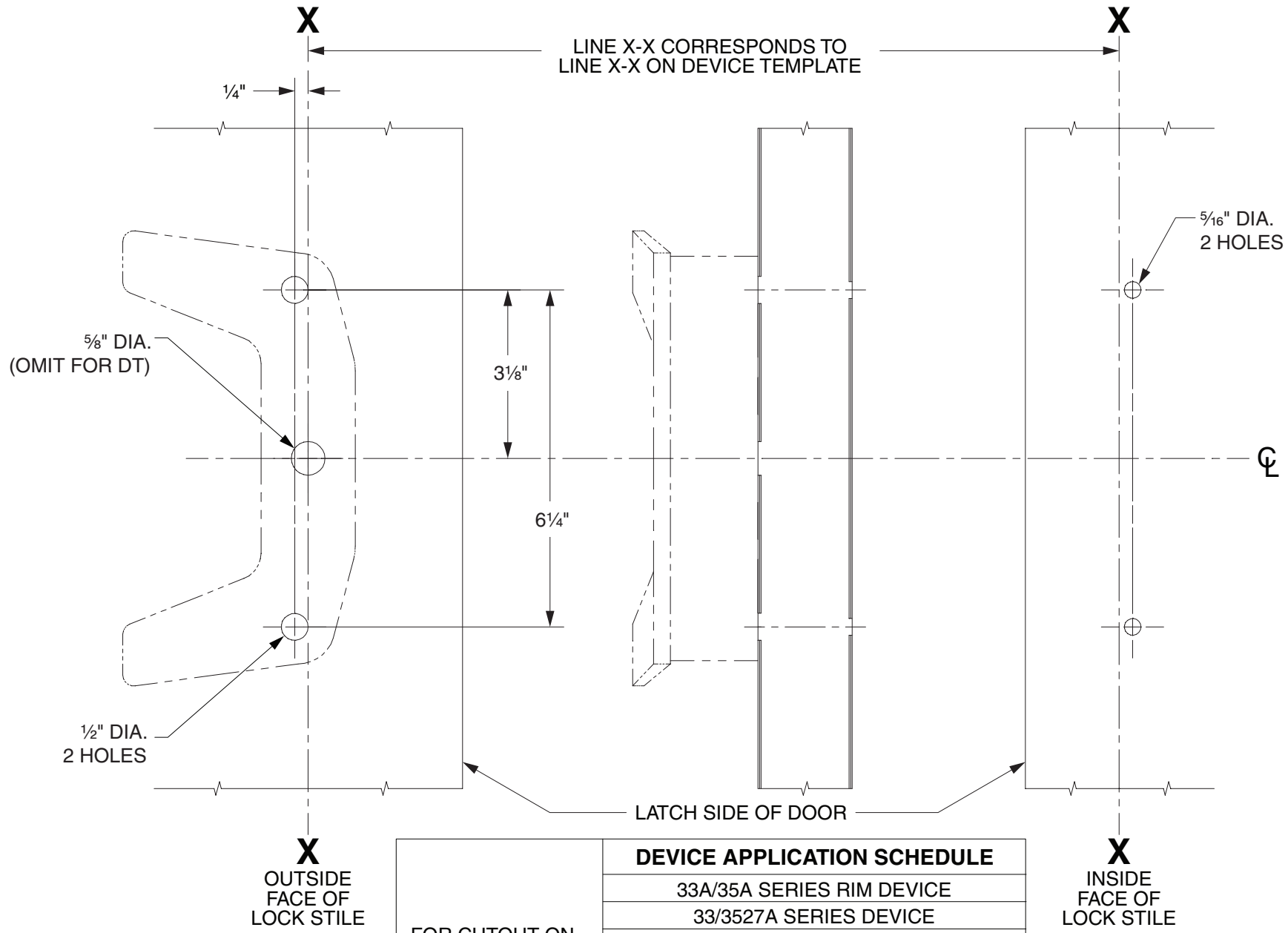

LHR SHOWN
RHR OPPOSITE

FOR CUTOUT ON INSIDE FACE OF DOOR, SEE DEVICE TEMPLATE	**DEVICE APPLICATION SCHEDULE**
	33A/35A SERIES RIM DEVICE
	33/3527A SERIES DEVICE
	33/3527A-F SERIES DEVICE
	33/3547A SERIES DEVICE
	33/3547A-F SERIES DEVICE
	33/3548A SERIES DEVICE
	33/3548A-F SERIES DEVICE
	33/3549A SERIES DEVICE
	33/3549A-F SERIES DEVICE

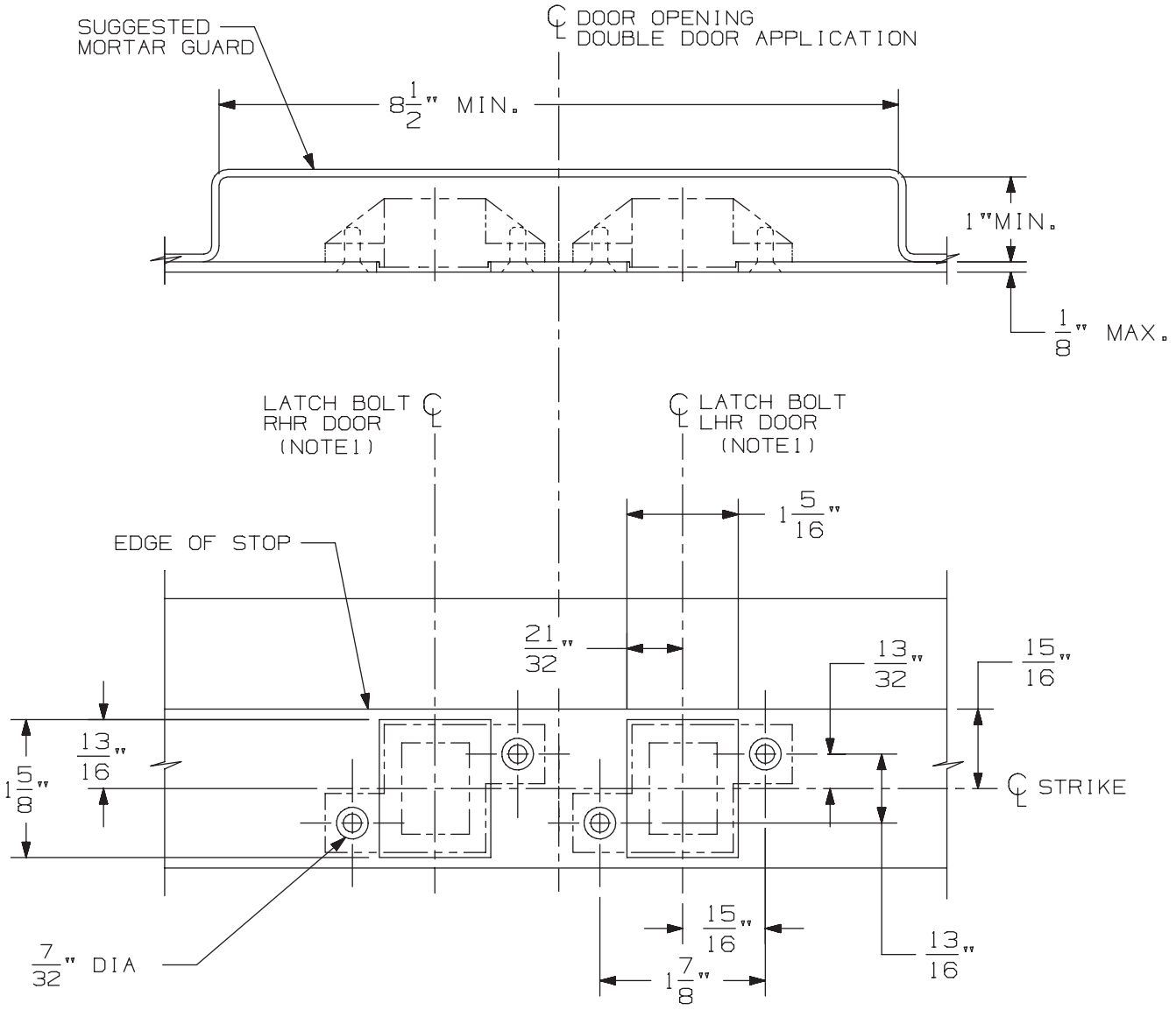

3/8" DIA X 82° C'SINK

IN FRAME
2 HOLES
EACH STRIKE

DOUBLE DOOR APPLICATION SHOWN.
FOR SINGLE DOOR APPLICATION USE
APPROPRIATE HANDING AS SHOWN.

DEVICE APPLICATION SCHEDULE
33/3547 & 33/3547-F SERIES DEVICE
98/99/47 & 98/99/47-F SERIES DEVICE
5547/5547 WDC SERIES
33/3547A & 33/3547A-F SERIES DEVICE
(9) 94/9547 SERIES DEVICE

NOTES: 1. SEE DEVICE TEMPLATE FOR LOCATION OF LATCH BOLT.

2. IF DEVICE IS TO BE MOUNTED ON WOOD DOORS, SEE WOOD DOOR TEMPLATE FOR LATCH BOLT LOCATION.

338 Strike for Hollow Metal Frame Preparation

VON DUPRIN®

NOTES: SEE MASTER SHEET #10001 FOR SUGGESTED REINFORCING

TEMPLATE NUMBER: 30038_a

DATE: 05-23-13

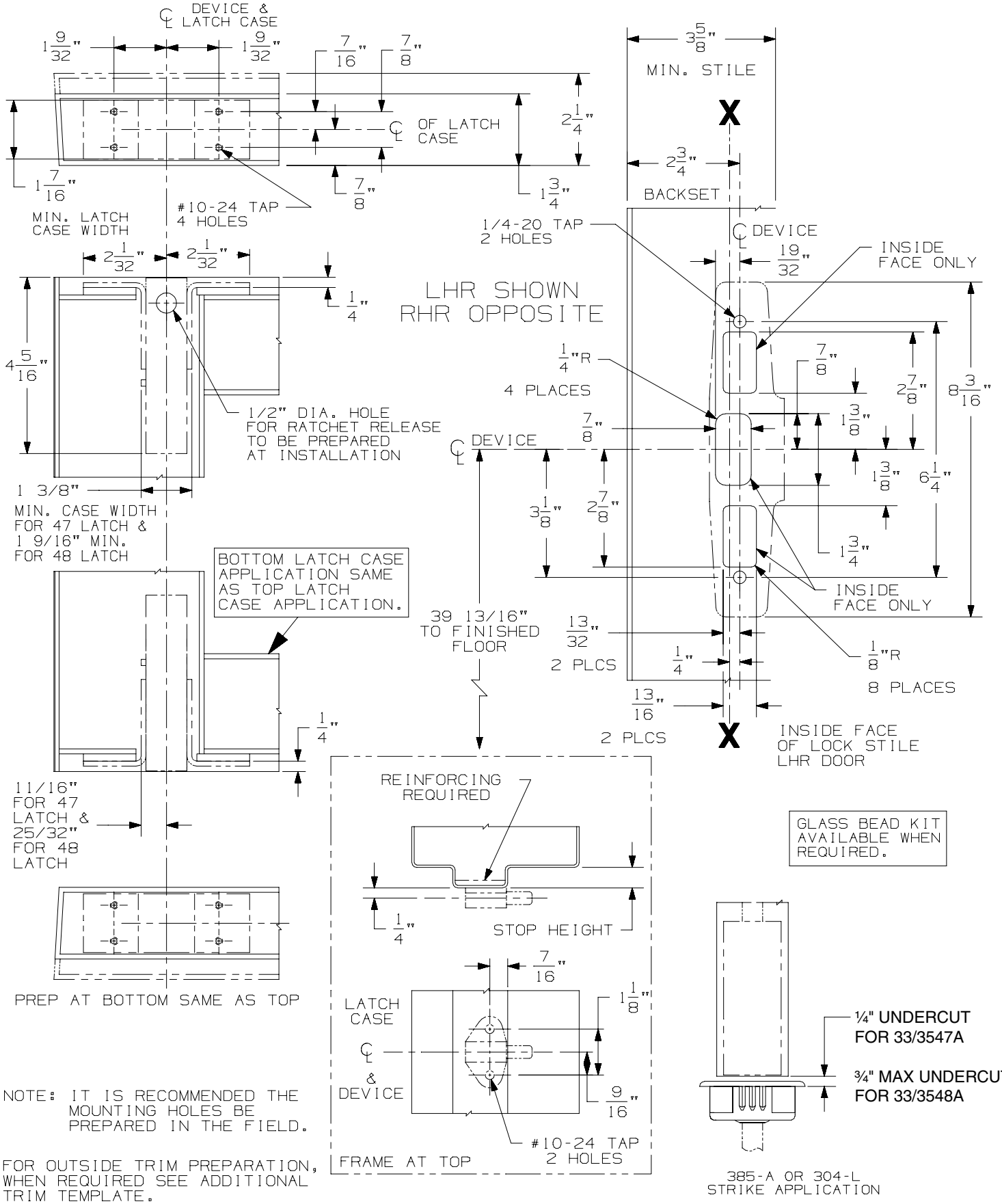

NOTE: IT IS RECOMMENDED THE MOUNTING HOLES BE PREPARED IN THE FIELD.

33/3547A-F & 33/3548A-F Series Concealed Vertical Rod Device

VON DUPRIN®

NOTES: SEE MASTER SHEET #10001 FOR SUGGESTED REINFORCING

TEMPLATE NUMBER: 10057_b

DATE: 09-22-14

388NL CYLINDER CONTROL

NOTES: SEE MASTER SHEET #10001 FOR SUGGESTED REINFORCING

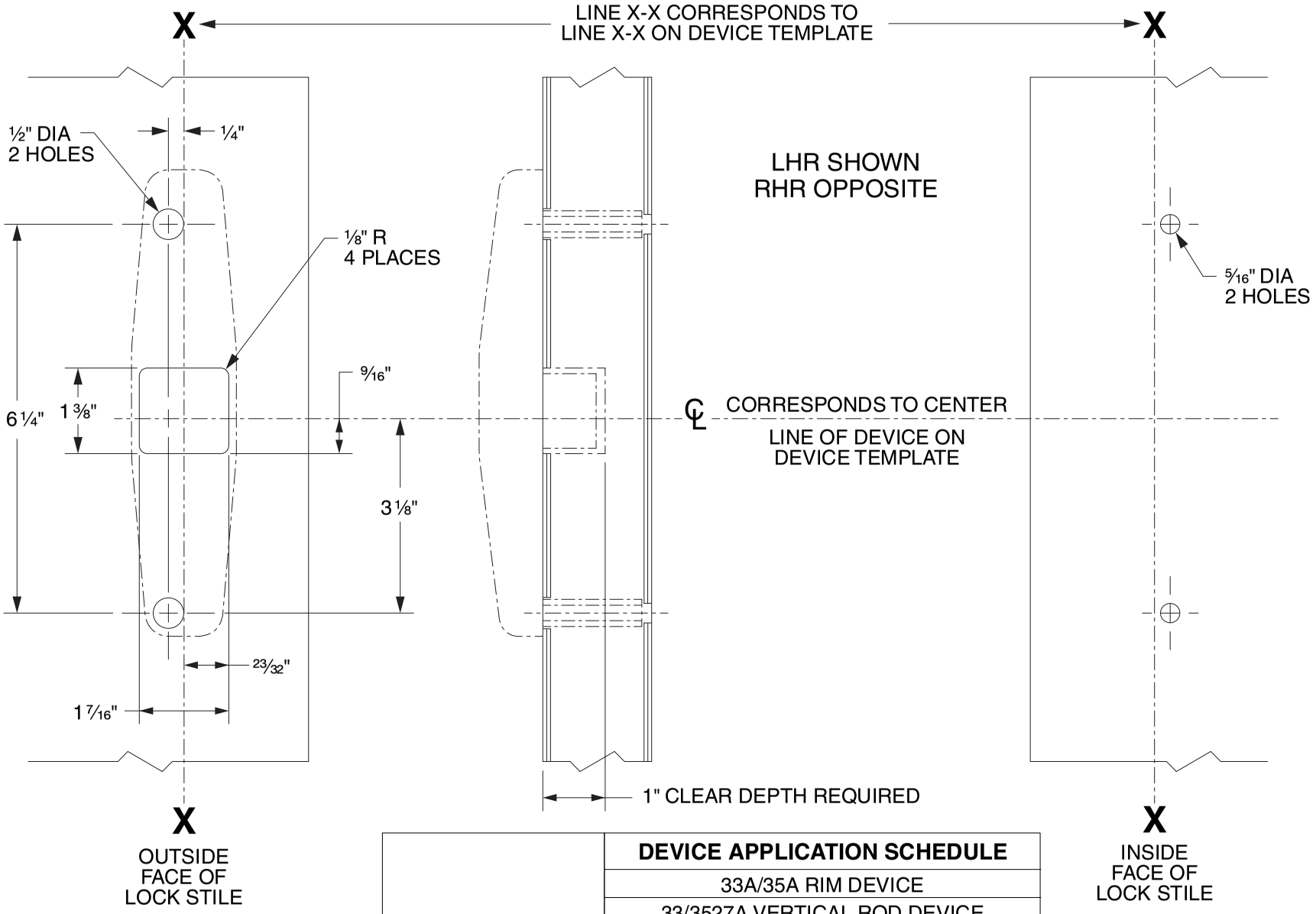

	DEVICE APPLICATION SCHEDULE
FOR CUTOUT ON INSIDE FACE OF DOOR SEE DEVICE TEMPLATE	33A/35A RIM DEVICE
	33/3527A VERTICAL ROD DEVICE
	33/3527A-F VERTICAL ROD DEVICE
	33/3547A VERTICAL ROD DEVICE
	33/3547A-F VERTICAL ROD DEVICE
	33/3548A VERTICAL ROD DEVICE
	33/3548A-F VERTICAL ROD DEVICE
	33/3549A VERTICAL ROD DEVICE
	33/3549A-F VERTICAL ROD DEVICE

VON DUPRIN®

TEMPLATE NUMBER: 40079_d

DATE: 05-31-13

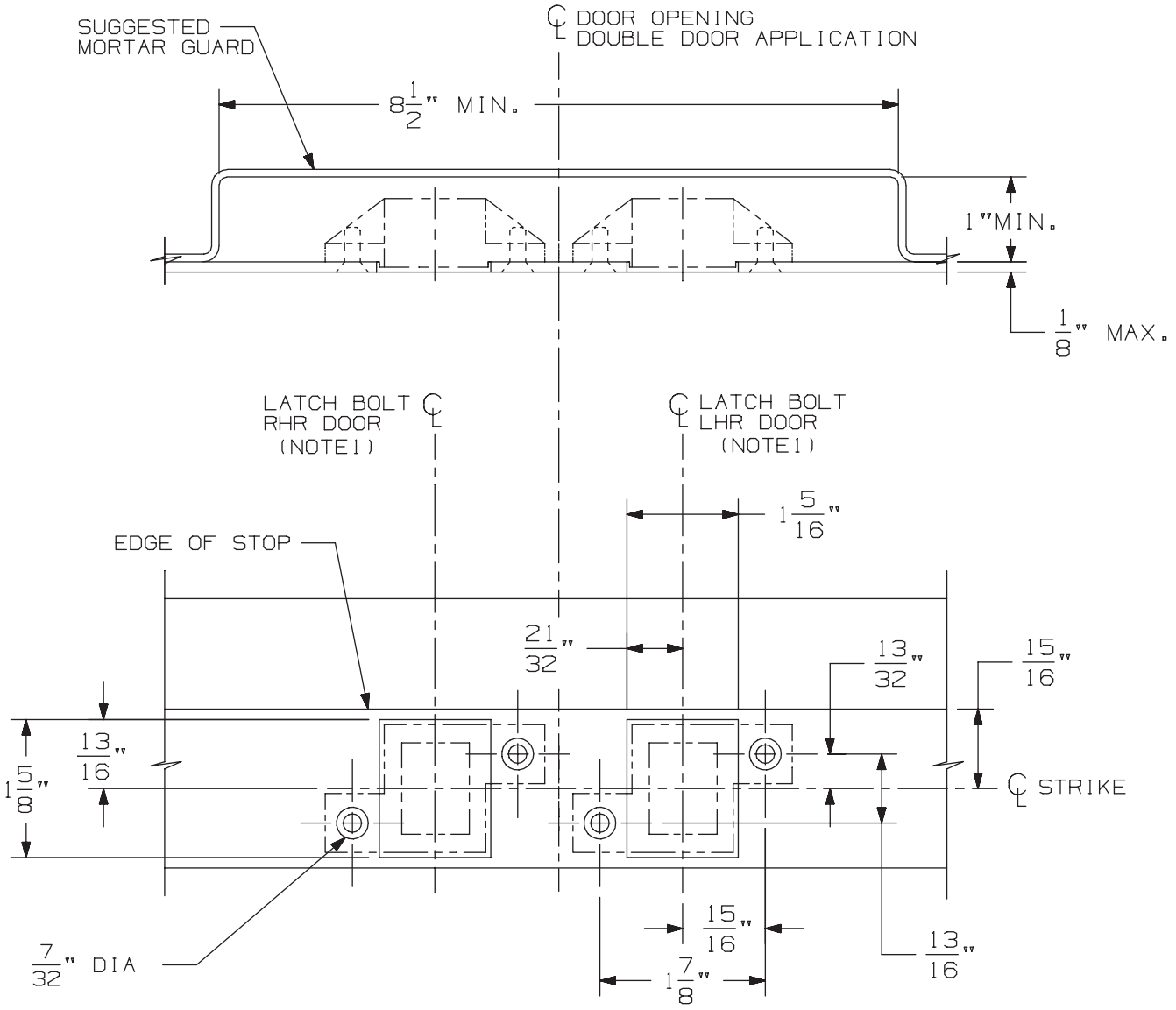

3/8" DIA X 82° C'SINK

IN FRAME
2 HOLES
EACH STRIKE

DOUBLE DOOR APPLICATION SHOWN.
FOR SINGLE DOOR APPLICATION USE
APPROPRIATE HANDING AS SHOWN.

DEVICE APPLICATION SCHEDULE
33/3547 & 33/3547-F SERIES DEVICE
98/99/47 & 98/99/47-F SERIES DEVICE
5547/5547 WDC SERIES
33/3547A & 33/3547A-F SERIES DEVICE
(9) 94/9547 SERIES DEVICE

NOTES: 1. SEE DEVICE TEMPLATE FOR LOCATION OF LATCH BOLT.

2. IF DEVICE IS TO BE MOUNTED ON WOOD DOORS, SEE WOOD DOOR TEMPLATE FOR LATCH BOLT LOCATION.

338 Strike for Hollow Metal Frame Preparation

VON DUPRIN®

NOTES: SEE MASTER SHEET #10001 FOR SUGGESTED REINFORCING

TEMPLATE NUMBER: 30038_a

DATE: 05-23-13

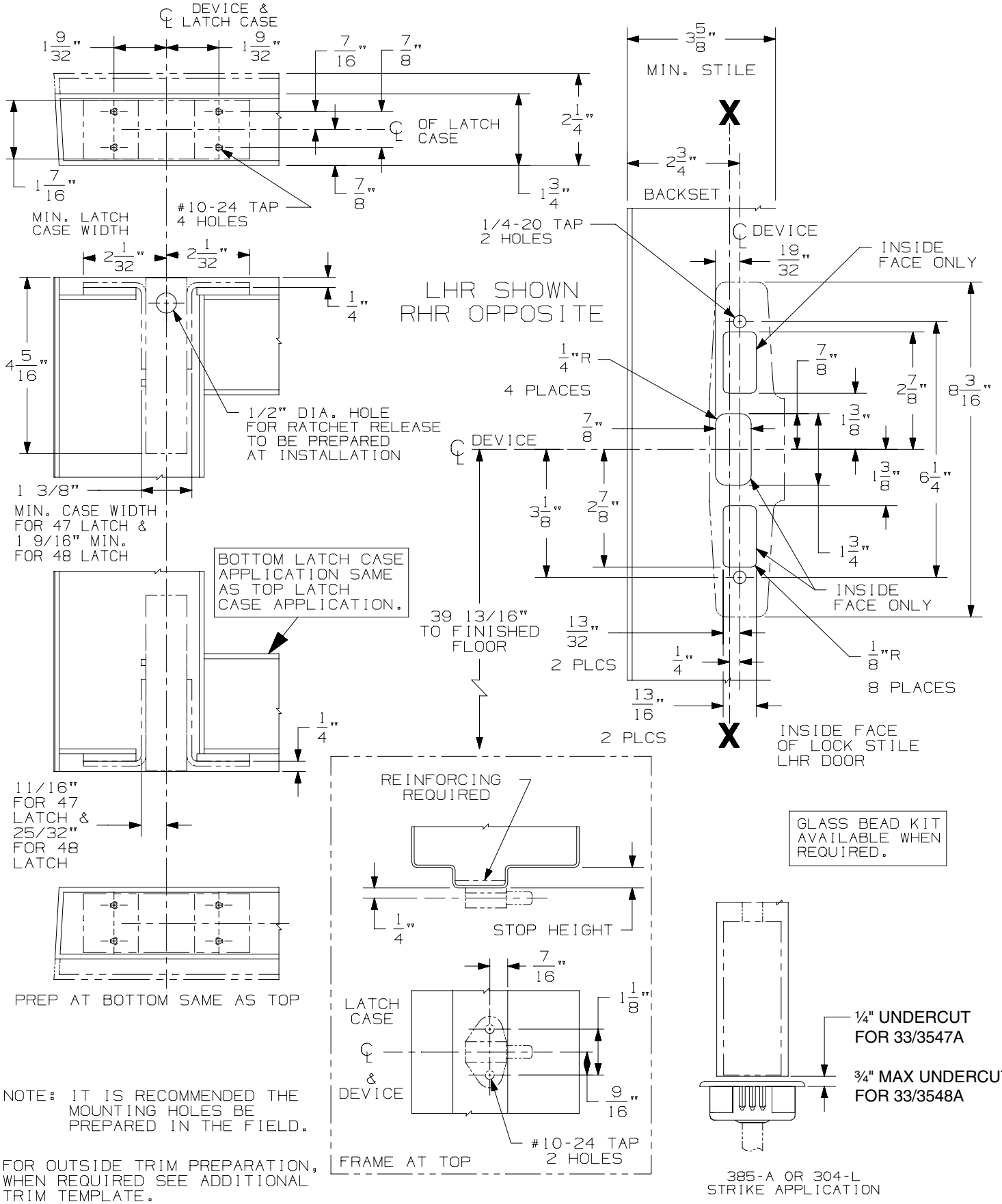

NOTE: IT IS RECOMMENDED THE MOUNTING HOLES BE PREPARED IN THE FIELD.

33/3547A-F & 33/3548A-F Series Concealed Vertical Rod Device

VON DUPRIN®

NOTES: SEE MASTER SHEET #10001 FOR SUGGESTED REINFORCING

TEMPLATE NUMBER: 10057_b

DATE: 09-22-14

360T, 360L, 360T-BE, 360L-BE CONTROL

NOTES: SEE MASTER SHEET #10001 FOR SUGGESTED REINFORCING

TEMPLATE NUMBER: 40080_e

DATE: 04-06-15

VON DUPRIN®

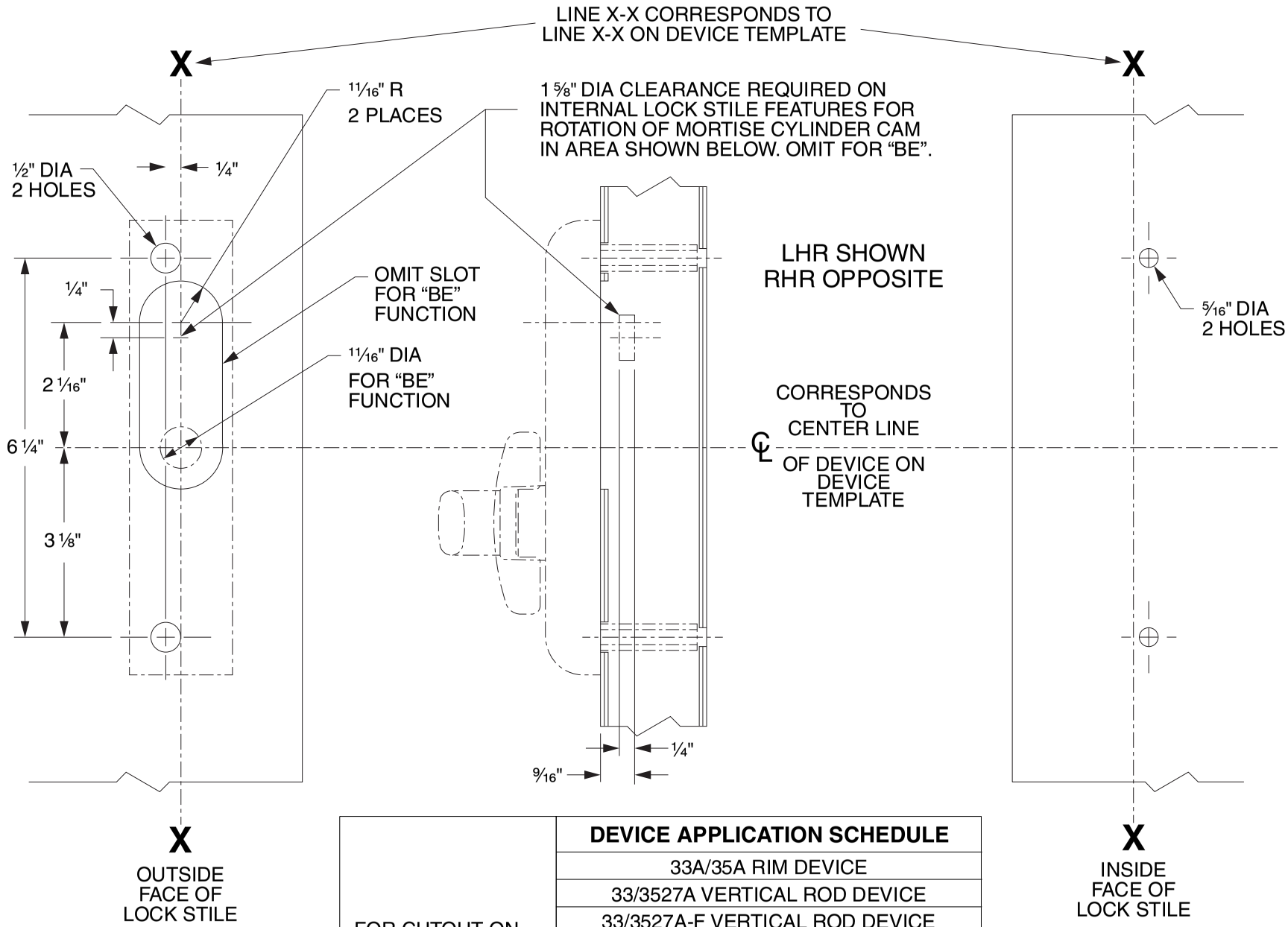

	DEVICE APPLICATION SCHEDULE
FOR CUTOUT ON INSIDE FACE OF DOOR SEE DEVICE TEMPLATE	33A/35A RIM DEVICE
	33/3527A VERTICAL ROD DEVICE
	33/3527A-F VERTICAL ROD DEVICE
	33/3547A VERTICAL ROD DEVICE
	33/3547A-F VERTICAL ROD DEVICE
	33/3548A VERTICAL ROD DEVICE
	33/3548A-F VERTICAL ROD DEVICE
	33/3549A VERTICAL CABLE DEVICE
	33/3549A-F VERTICAL CABLE DEVICE

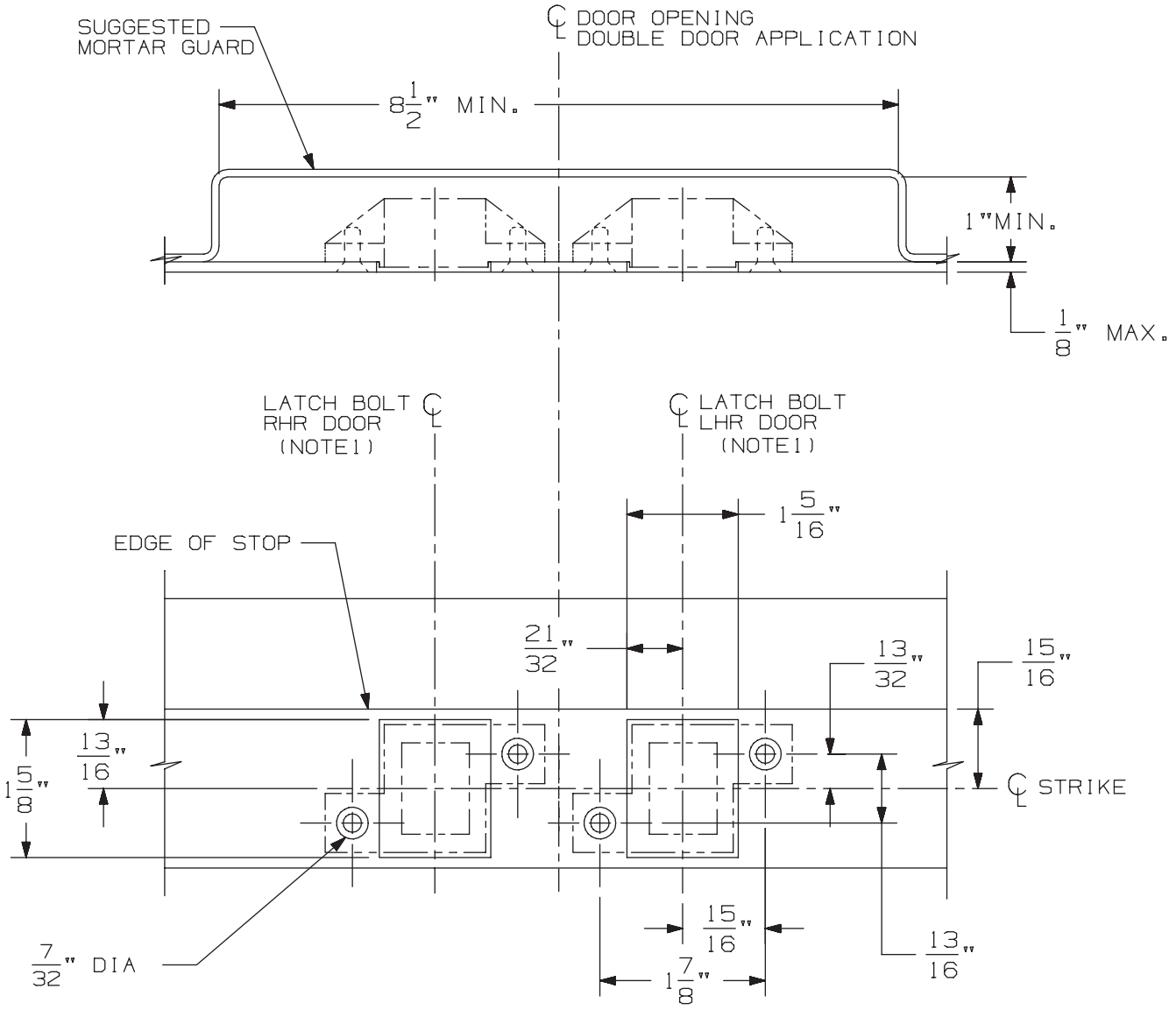

3/8" DIA X 82° C'SINK

IN FRAME
2 HOLES
EACH STRIKE

DOUBLE DOOR APPLICATION SHOWN.
FOR SINGLE DOOR APPLICATION USE
APPROPRIATE HANDING AS SHOWN.

DEVICE APPLICATION SCHEDULE
33/3547 & 33/3547-F SERIES DEVICE
98/99/47 & 98/99/47-F SERIES DEVICE
5547/5547 WDC SERIES
33/3547A & 33/3547A-F SERIES DEVICE
(9) 94/9547 SERIES DEVICE

NOTES: 1. SEE DEVICE TEMPLATE FOR LOCATION OF LATCH BOLT.

2. IF DEVICE IS TO BE MOUNTED ON WOOD DOORS, SEE WOOD DOOR TEMPLATE FOR LATCH BOLT LOCATION.

338 Strike for Hollow Metal Frame Preparation

VON DUPRIN®

NOTES: SEE MASTER SHEET #10001 FOR SUGGESTED REINFORCING

TEMPLATE NUMBER: 30038_a

DATE: 05-23-13

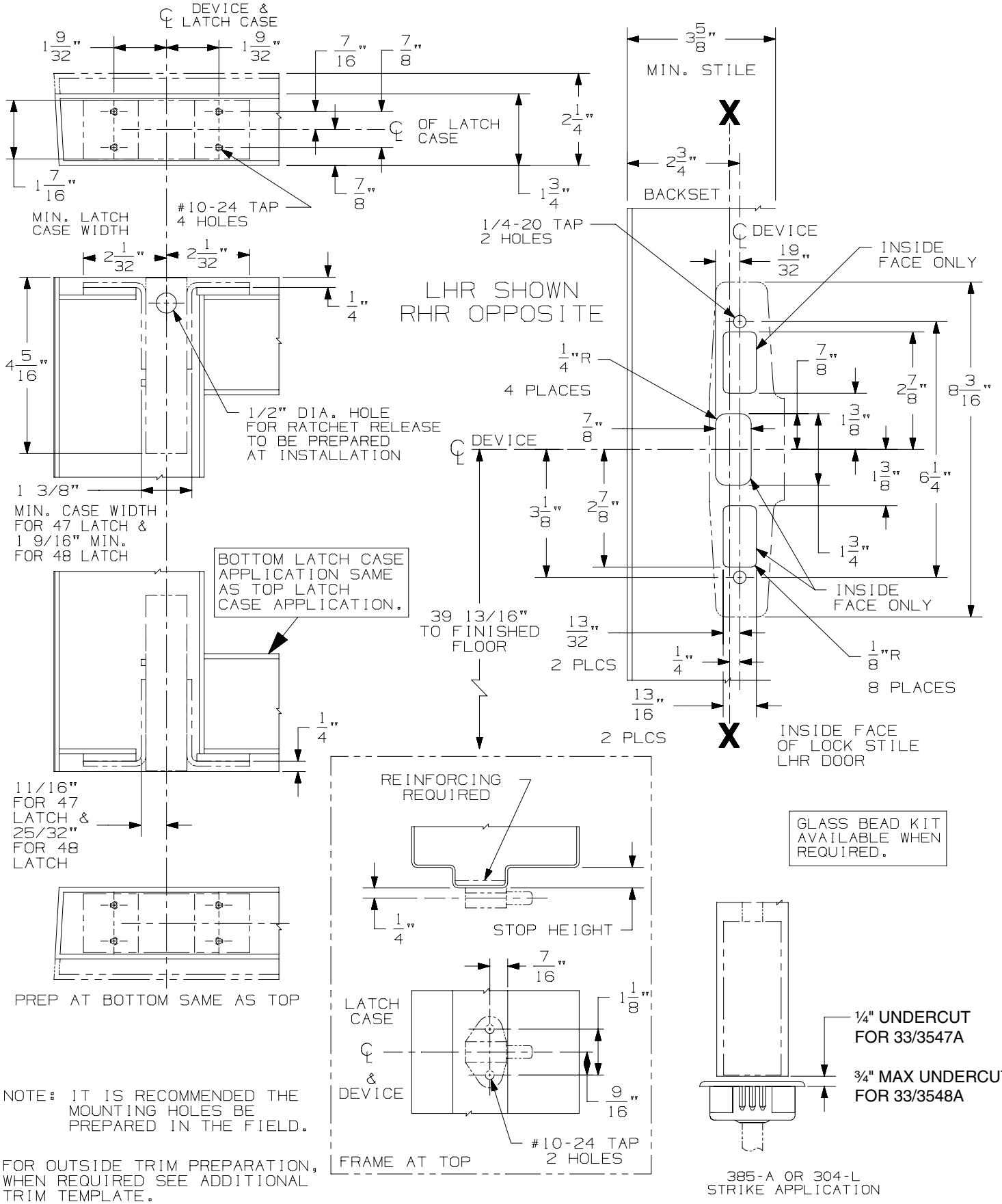

NOTE: IT IS RECOMMENDED THE MOUNTING HOLES BE PREPARED IN THE FIELD.

33/3547A-F & 33/3548A-F Series Concealed Vertical Rod Device

VON DUPRIN®

NOTES: SEE MASTER SHEET #10001 FOR SUGGESTED REINFORCING

TEMPLATE NUMBER: 10057_b

DATE: 09-22-14

376-T Control

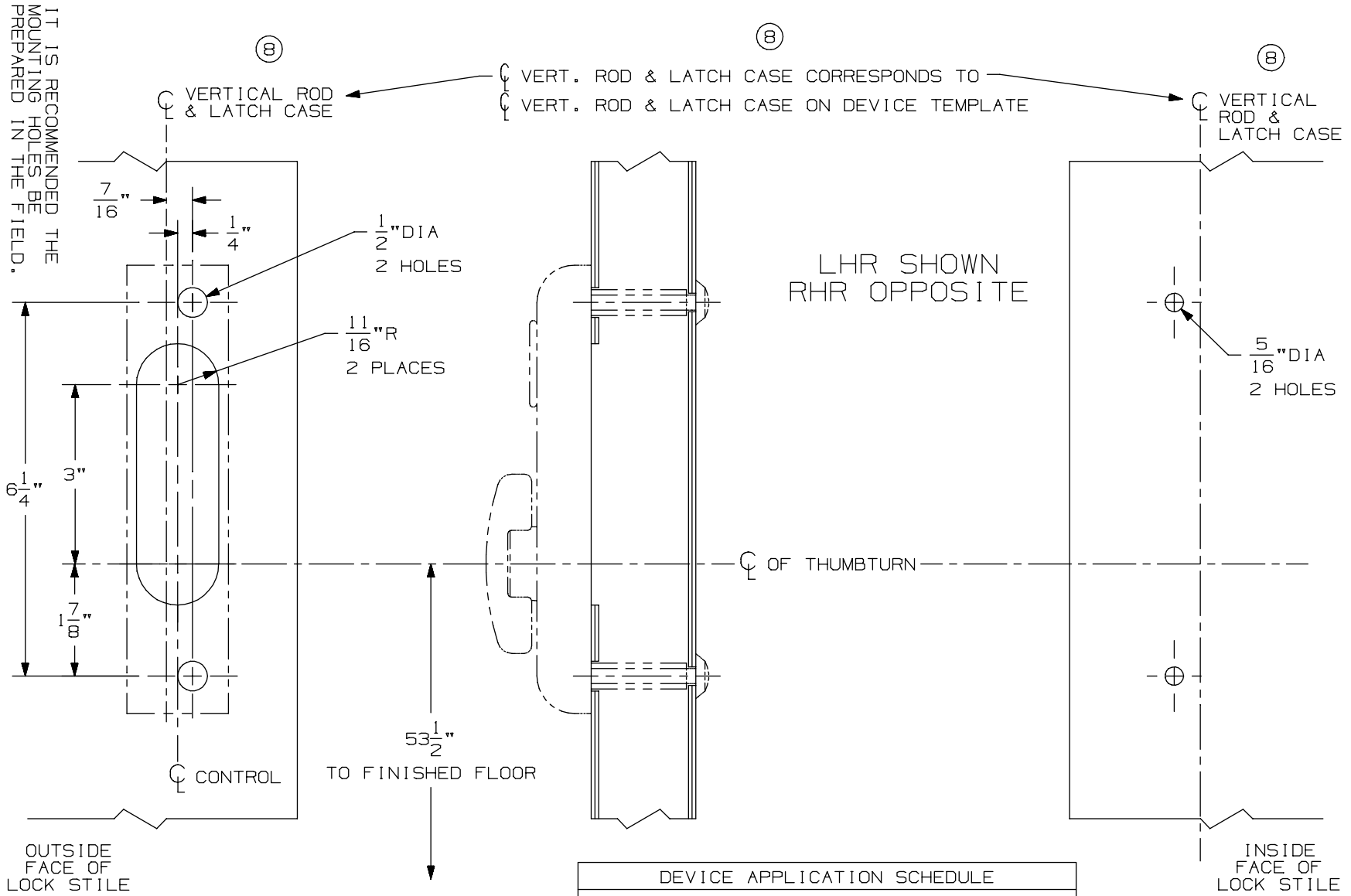

DEVICE APPLICATION SCHEDULE
5547/5547-F VERT. ROD DEVICE
8847-F VERT. ROD DEVICE
* 3347/3547 VERT. ROD DEVICE
3347-F/3547-F VERT. ROD DEVICE
⑧ * 3347A/3547A VERT. ROD DEVICE
⑧ 3347A-F/3547A-F VERT. ROD DEVICE
9847/9947 VERT. ROD DEVICE
9847-F/9947-F VERTICAL ROD DEVICE

⑧ * NOT TO BE USED WITH 1 1/16" LATCH CASE BACKSET ON BULLNOSE EDGE DOORS WITH WEATHERSTRIP CHANNEL.

NOTES: SEE MASTER SHEET #10001 FOR SUGGESTED REINFORCING

TEMPLATE NUMBER: 40114_a

DATE: 05-28-13

VON DUPRIN®

386NL & DT TRIM

NOTES: SEE MASTER SHEET #10001 FOR SUGGESTED REINFORCING

TEMPLATE NUMBER: 20008_C

DATE: 5-25-16

VON DUPRIN®

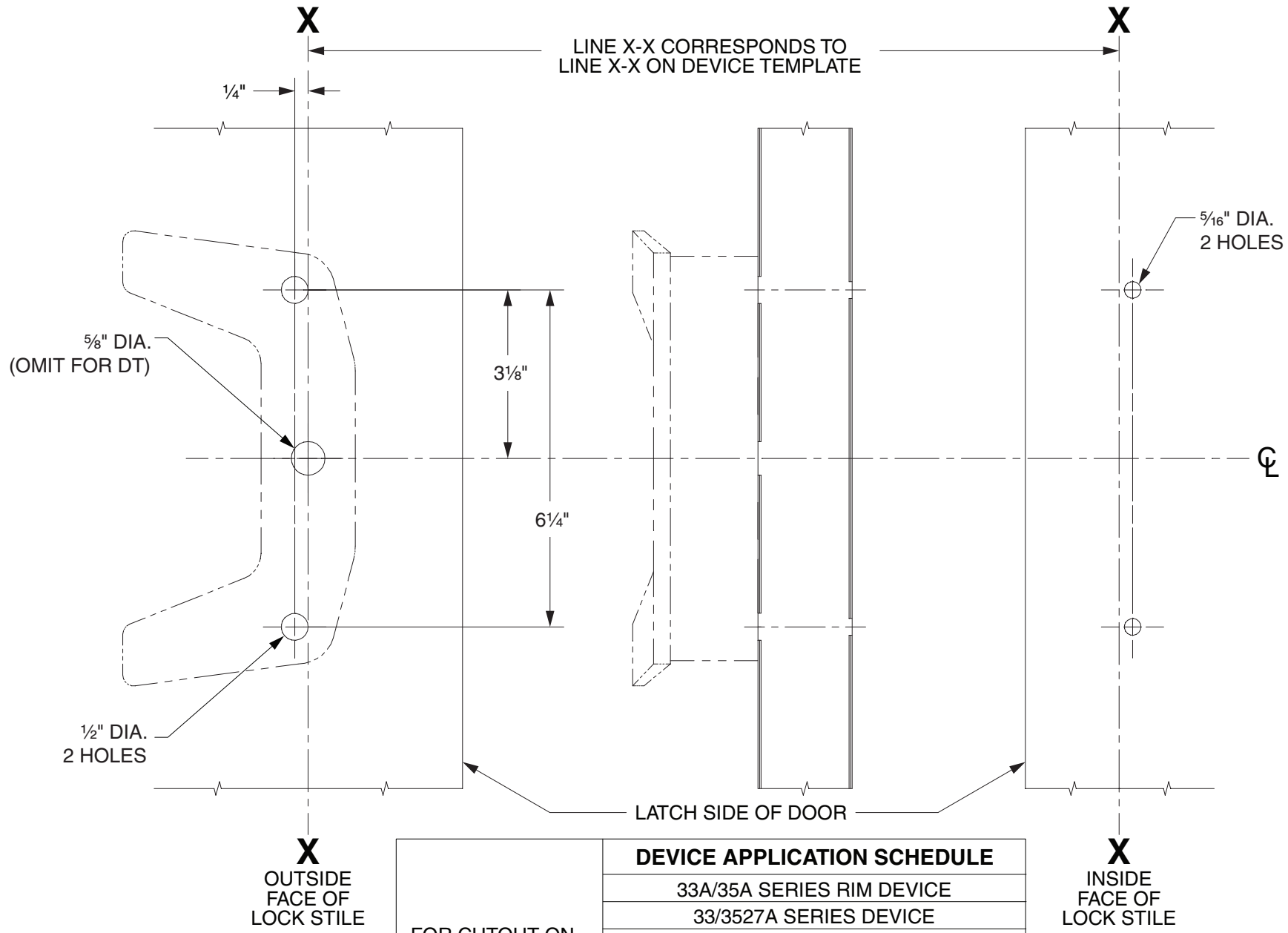

LHR SHOWN
RHR OPPOSITE

FOR CUTOUT ON INSIDE FACE OF DOOR, SEE DEVICE TEMPLATE	**DEVICE APPLICATION SCHEDULE**
	33A/35A SERIES RIM DEVICE
	33/3527A SERIES DEVICE
	33/3527A-F SERIES DEVICE
	33/3547A SERIES DEVICE
	33/3547A-F SERIES DEVICE
	33/3548A SERIES DEVICE
	33/3548A-F SERIES DEVICE
	33/3549A SERIES DEVICE
	33/3549A-F SERIES DEVICE

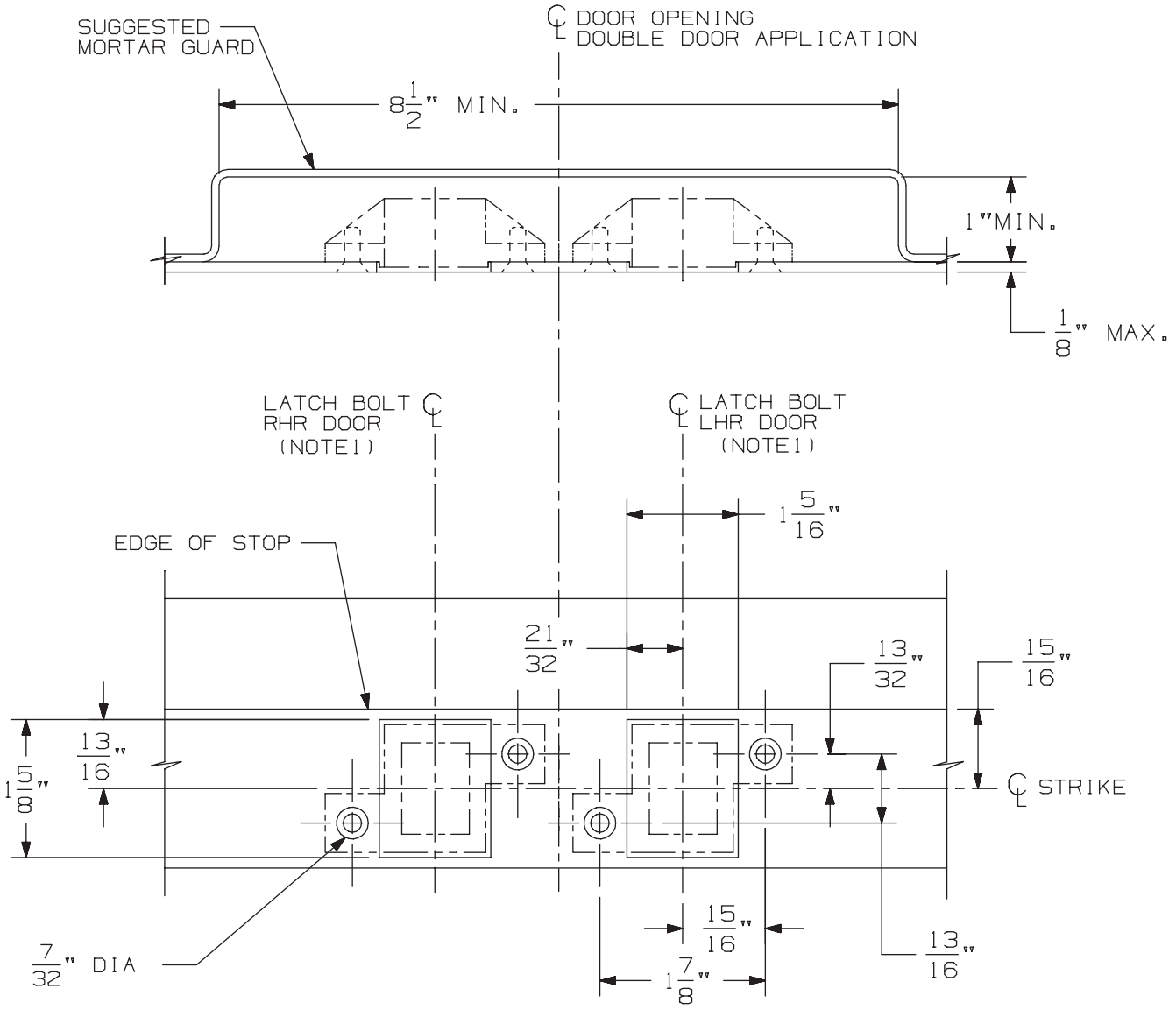

3/8" DIA X 82° C'SINK

IN FRAME
2 HOLES
EACH STRIKE

DOUBLE DOOR APPLICATION SHOWN.
FOR SINGLE DOOR APPLICATION USE
APPROPRIATE HANDING AS SHOWN.

DEVICE APPLICATION SCHEDULE
33/3547 & 33/3547-F SERIES DEVICE
98/99/47 & 98/99/47-F SERIES DEVICE
5547/5547 WDC SERIES
33/3547A & 33/3547A-F SERIES DEVICE
(9) 94/9547 SERIES DEVICE

NOTES: 1. SEE DEVICE TEMPLATE FOR LOCATION OF LATCH BOLT.

2. IF DEVICE IS TO BE MOUNTED ON WOOD DOORS, SEE WOOD DOOR TEMPLATE FOR LATCH BOLT LOCATION.

338 Strike for Hollow Metal Frame Preparation

VON DUPRIN®

NOTES: SEE MASTER SHEET #10001 FOR SUGGESTED REINFORCING

TEMPLATE NUMBER: 30038_a

DATE: 05-23-13

360T, 360L, 360T-BE, 360L-BE CONTROL

NOTES: SEE MASTER SHEET #10001 FOR SUGGESTED REINFORCING

TEMPLATE NUMBER: 40080_e

DATE: 04-06-15

VON DUPRIN®

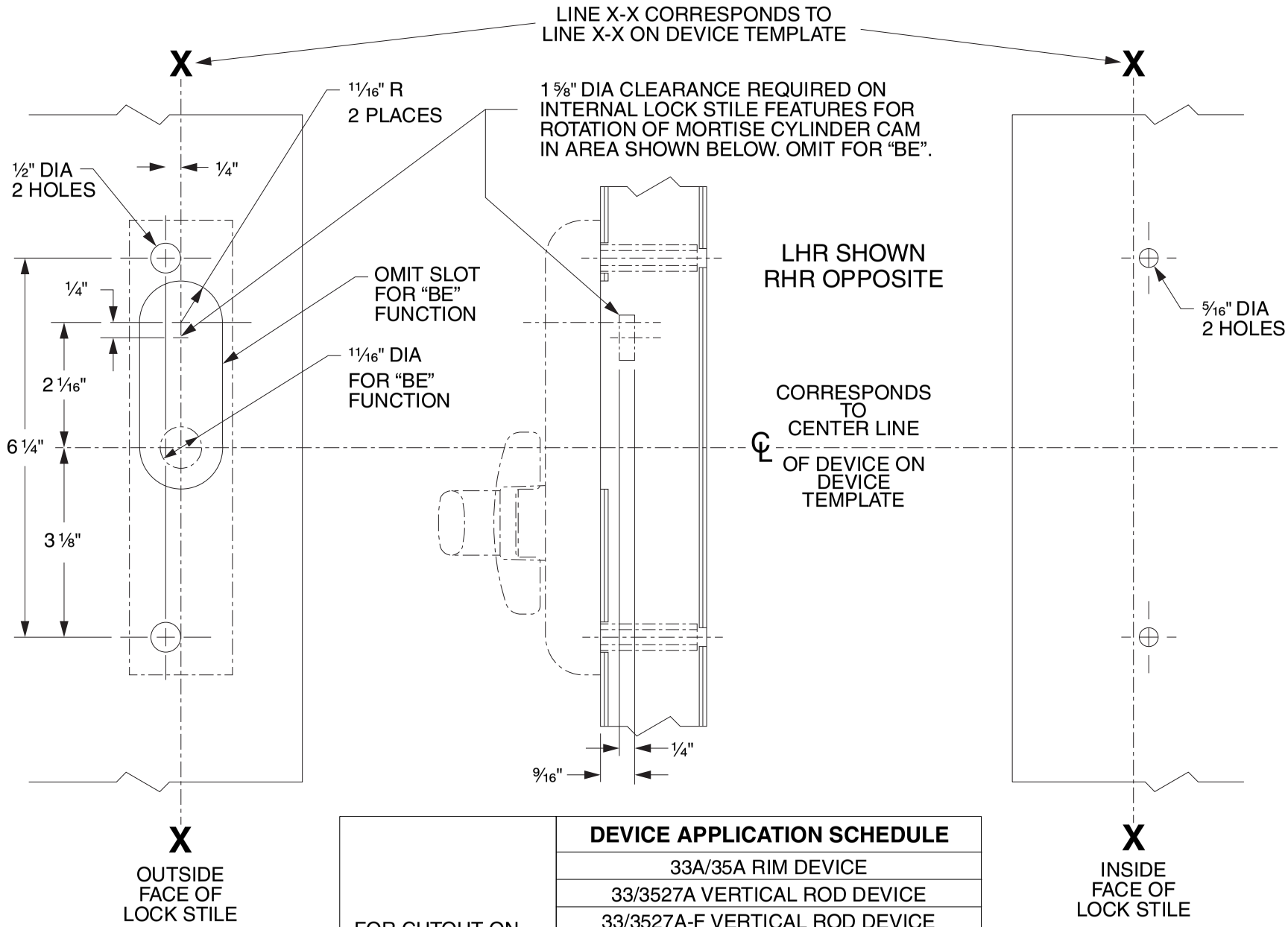

	DEVICE APPLICATION SCHEDULE
FOR CUTOUT ON INSIDE FACE OF DOOR SEE DEVICE TEMPLATE	33A/35A RIM DEVICE
	33/3527A VERTICAL ROD DEVICE
	33/3527A-F VERTICAL ROD DEVICE
	33/3547A VERTICAL ROD DEVICE
	33/3547A-F VERTICAL ROD DEVICE
	33/3548A VERTICAL ROD DEVICE
	33/3548A-F VERTICAL ROD DEVICE
	33/3549A VERTICAL CABLE DEVICE
	33/3549A-F VERTICAL CABLE DEVICE

33A/35A Series Exit Devices

-

3347A-F/3547A-F Concealed Vertical Rod BLUR Fire (Standard, CD, EL, LX, RX and SS)

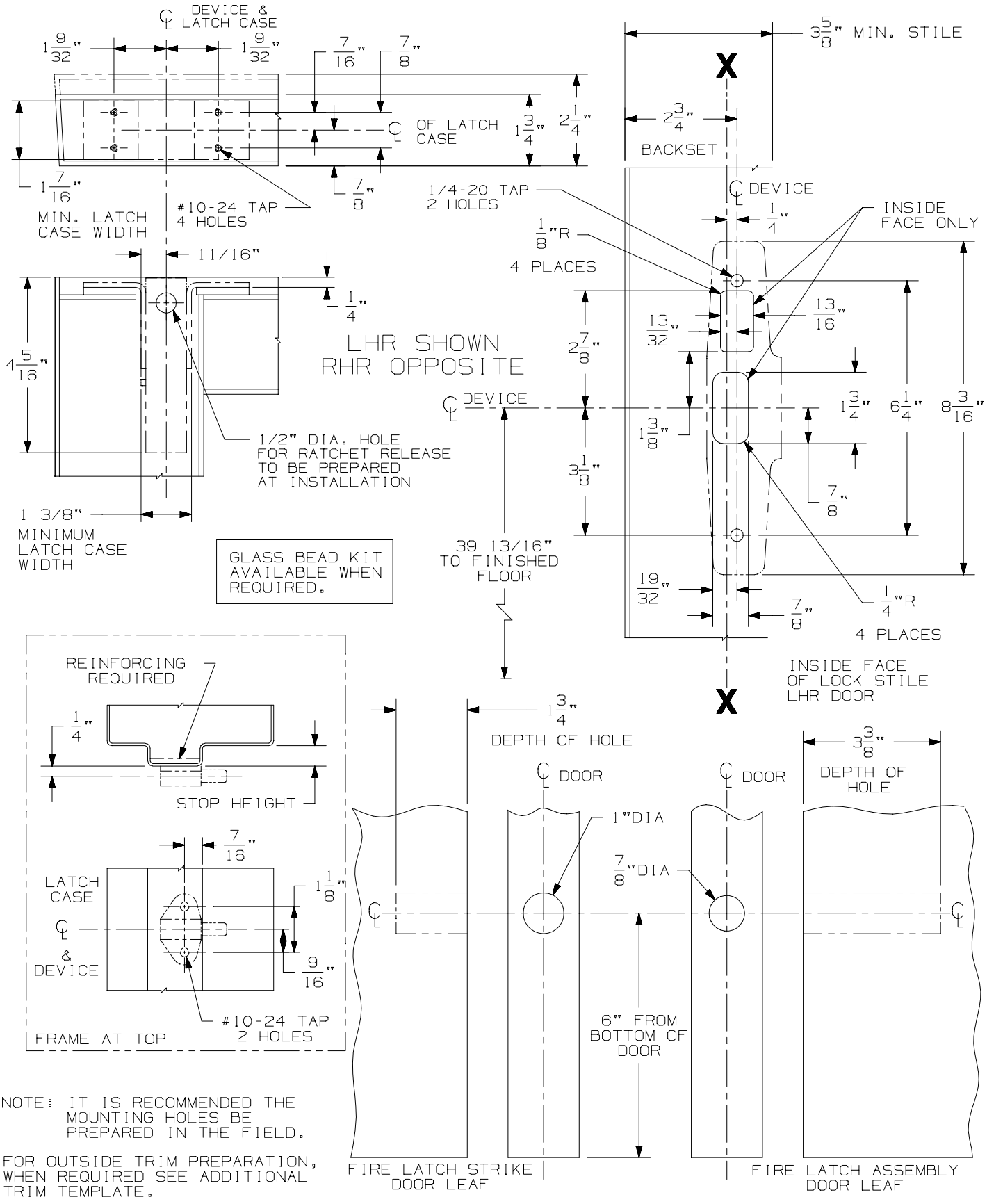

NOTE: IT IS RECOMMENDED THE MOUNTING HOLES BE PREPARED IN THE FIELD.

FOR OUTSIDE TRIM PREPARATION, WHEN REQUIRED SEE ADDITIONAL TRIM TEMPLATE.

33/3547A-F-LBR Series
Concealed Vertical Rod Device

VON DUPRIN®

NOTES: SEE MASTER SHEET #10001 FOR SUGGESTED REINFORCING

TEMPLATE NUMBER: 10058_a

DATE: 05-15-13

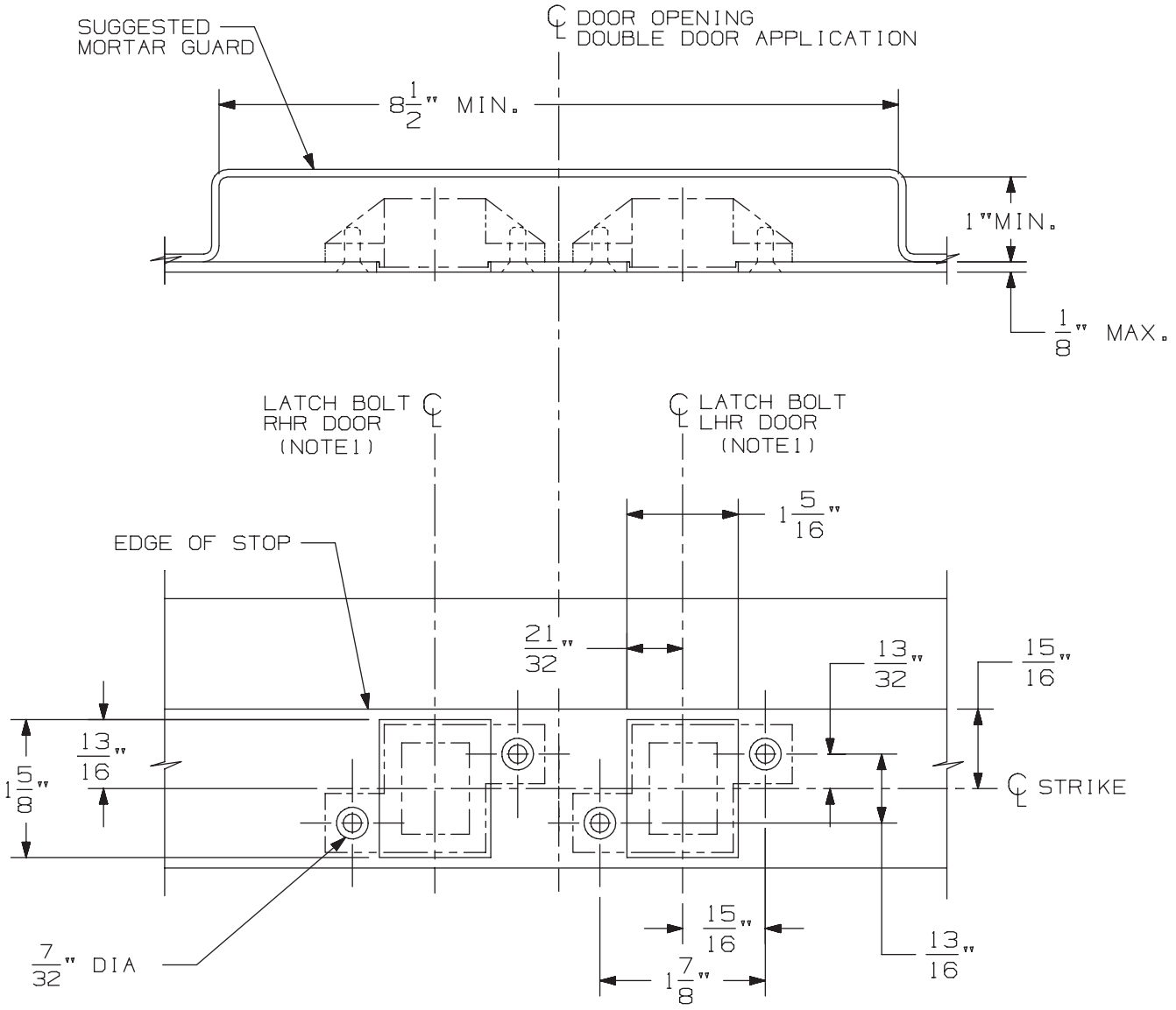

3/8" DIA X 82° C'SINK

IN FRAME
2 HOLES
EACH STRIKE

DOUBLE DOOR APPLICATION SHOWN.
FOR SINGLE DOOR APPLICATION USE
APPROPRIATE HANDING AS SHOWN.

DEVICE APPLICATION SCHEDULE
33/3547 & 33/3547-F SERIES DEVICE
98/99/47 & 98/99/47-F SERIES DEVICE
5547/5547 WDC SERIES
33/3547A & 33/3547A-F SERIES DEVICE
(9) 94/9547 SERIES DEVICE

NOTES: 1. SEE DEVICE TEMPLATE FOR LOCATION OF LATCH BOLT.

2. IF DEVICE IS TO BE MOUNTED ON WOOD DOORS, SEE WOOD DOOR TEMPLATE FOR LATCH BOLT LOCATION.

338 Strike for Hollow Metal Frame Preparation

VON DUPRIN®

NOTES: SEE MASTER SHEET #10001 FOR SUGGESTED REINFORCING

TEMPLATE NUMBER: 30038_a

DATE: 05-23-13

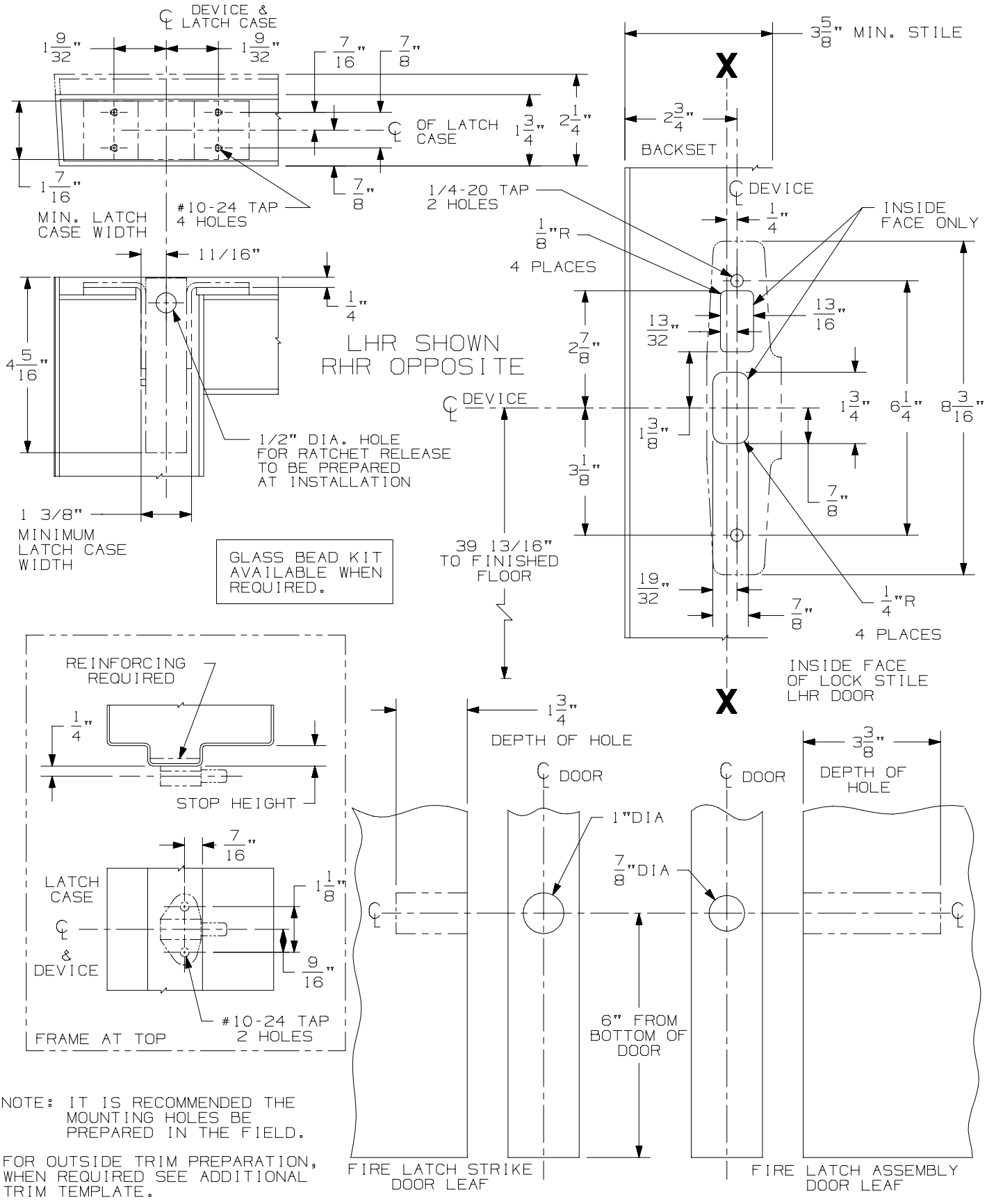

NOTE: IT IS RECOMMENDED THE MOUNTING HOLES BE PREPARED IN THE FIELD.

FOR OUTSIDE TRIM PREPARATION, WHEN REQUIRED SEE ADDITIONAL TRIM TEMPLATE.

33/3547A-F-LBR Series
Concealed Vertical Rod Device

VON DUPRIN®

NOTES: SEE MASTER SHEET #10001 FOR SUGGESTED REINFORCING

TEMPLATE NUMBER: 10058_a

DATE: 05-15-13

386NL & DT TRIM

NOTES: SEE MASTER SHEET #10001 FOR SUGGESTED REINFORCING

TEMPLATE NUMBER: 20008_C

DATE: 5-25-16

VON DUPRIN®

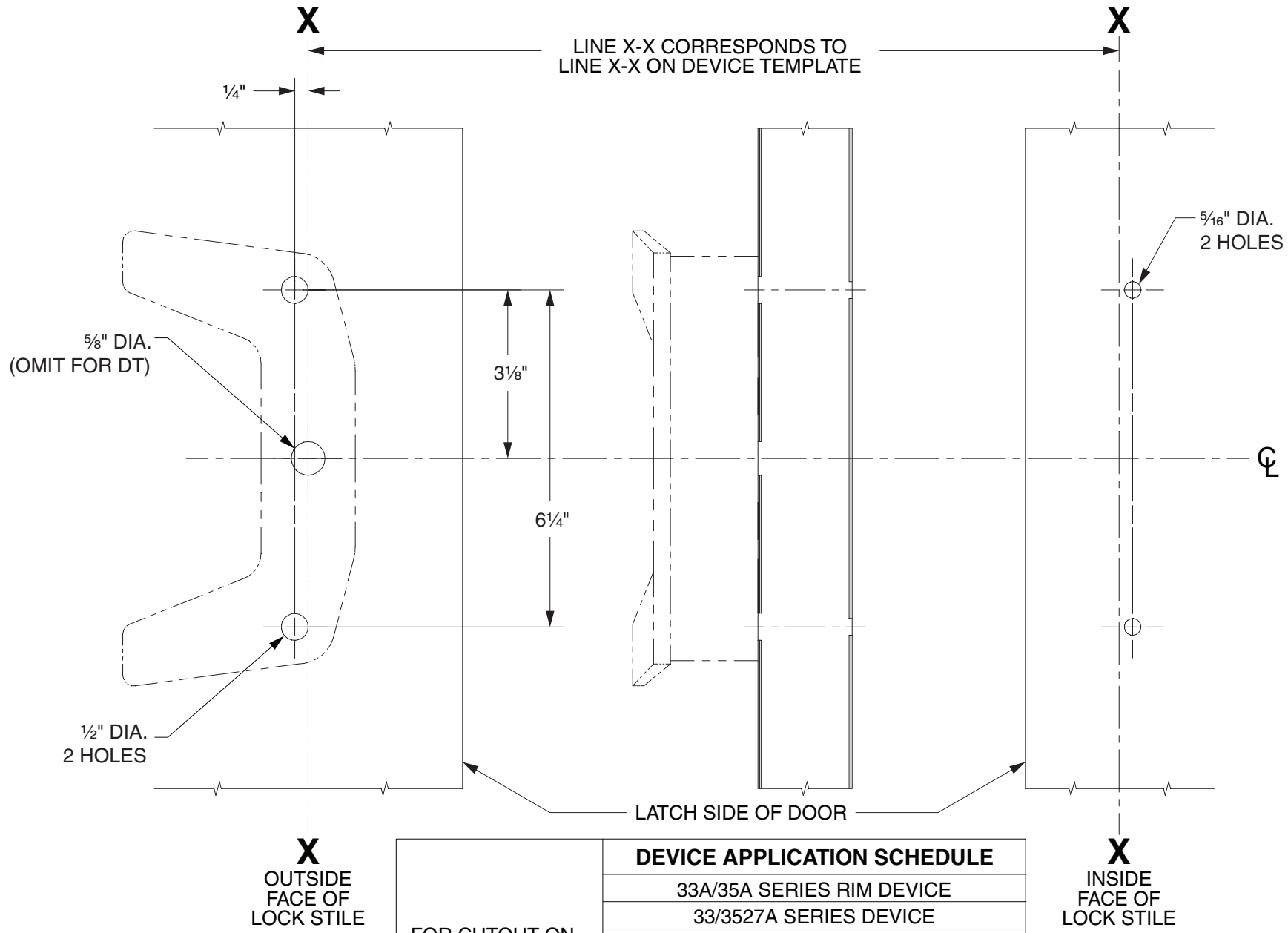

LHR SHOWN
RHR OPPOSITE

FOR CUTOUT ON INSIDE FACE OF DOOR, SEE DEVICE TEMPLATE	**DEVICE APPLICATION SCHEDULE**
	33A/35A SERIES RIM DEVICE
	33/3527A SERIES DEVICE
	33/3527A-F SERIES DEVICE
	33/3547A SERIES DEVICE
	33/3547A-F SERIES DEVICE
	33/3548A SERIES DEVICE
	33/3548A-F SERIES DEVICE
	33/3549A SERIES DEVICE
	33/3549A-F SERIES DEVICE

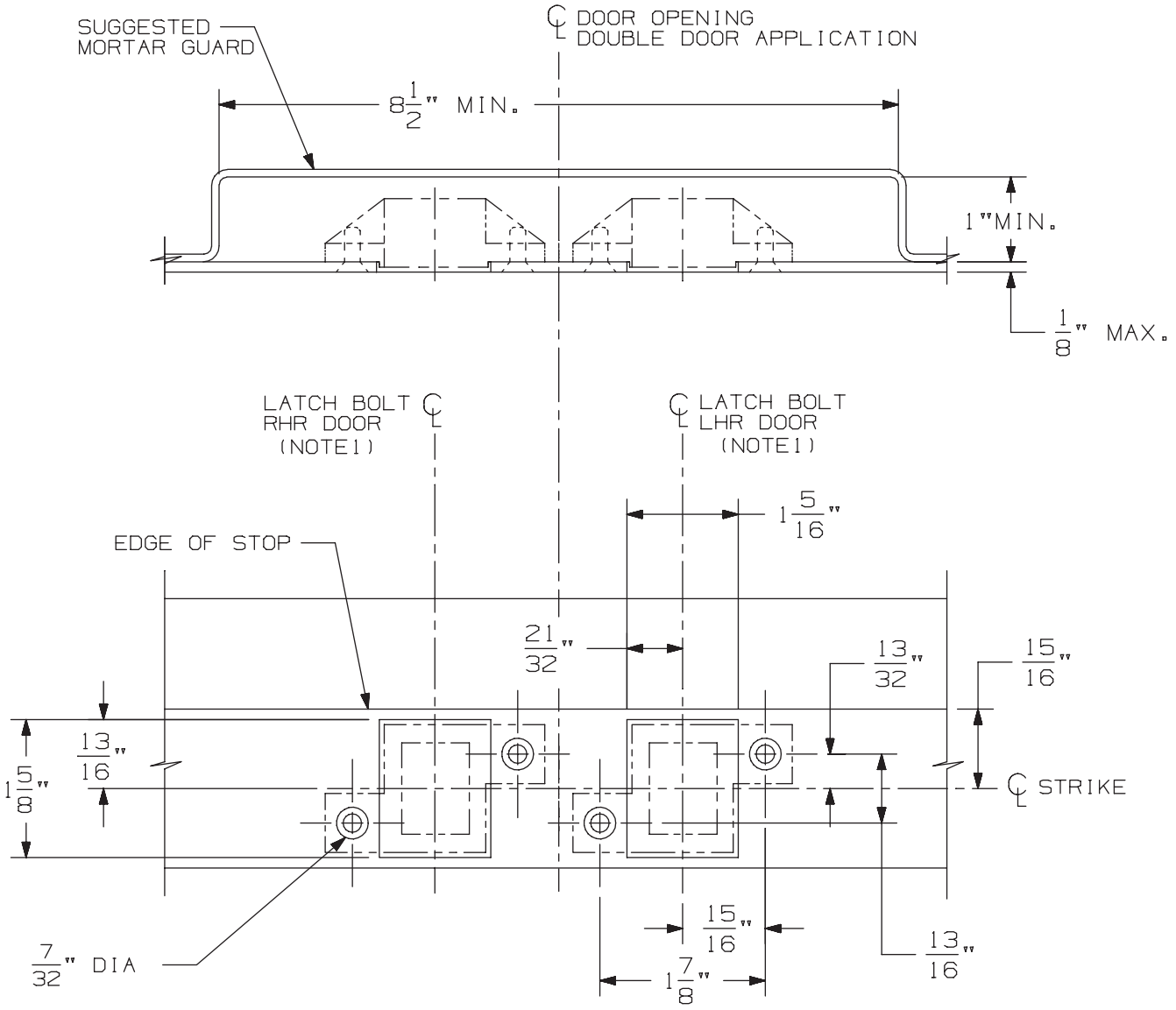

3/8" DIA X 82° C'SINK

IN FRAME
2 HOLES
EACH STRIKE

DOUBLE DOOR APPLICATION SHOWN.
FOR SINGLE DOOR APPLICATION USE
APPROPRIATE HANDING AS SHOWN.

DEVICE APPLICATION SCHEDULE
33/3547 & 33/3547-F SERIES DEVICE
98/99/47 & 98/99/47-F SERIES DEVICE
5547/5547 WDC SERIES
33/3547A & 33/3547A-F SERIES DEVICE
(9) 94/9547 SERIES DEVICE

NOTES: 1. SEE DEVICE TEMPLATE FOR LOCATION OF LATCH BOLT.

2. IF DEVICE IS TO BE MOUNTED ON WOOD DOORS, SEE WOOD DOOR TEMPLATE FOR LATCH BOLT LOCATION.

338 Strike for Hollow Metal Frame Preparation

VON DUPRIN®

NOTES: SEE MASTER SHEET #10001 FOR SUGGESTED REINFORCING

TEMPLATE NUMBER: 30038_a

DATE: 05-23-13

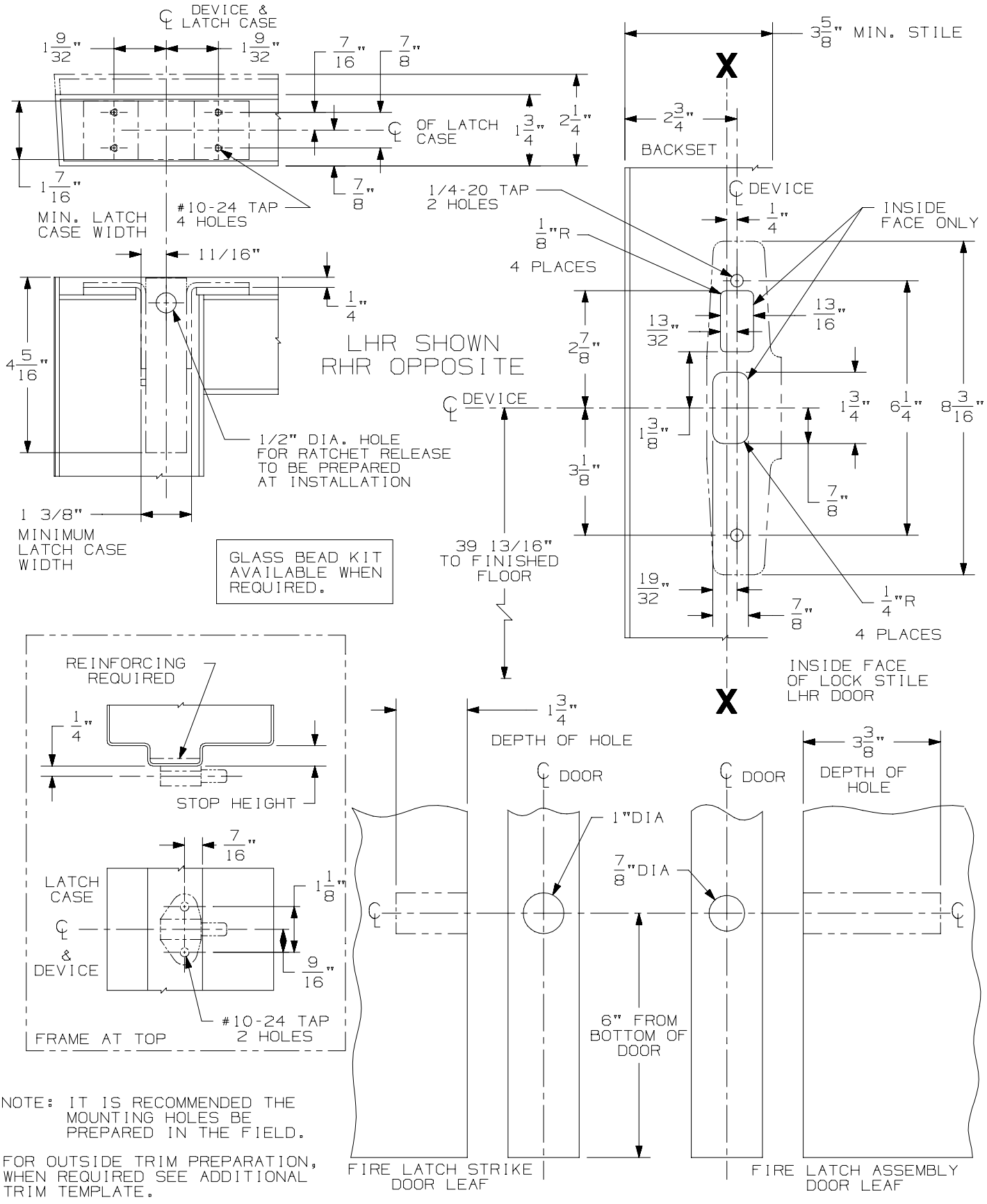

NOTE: IT IS RECOMMENDED THE MOUNTING HOLES BE PREPARED IN THE FIELD.

FOR OUTSIDE TRIM PREPARATION, WHEN REQUIRED SEE ADDITIONAL TRIM TEMPLATE.

33/3547A-F-LBR Series
Concealed Vertical Rod Device

VON DUPRIN®

NOTES: SEE MASTER SHEET #10001 FOR SUGGESTED REINFORCING

TEMPLATE NUMBER: 10058_a

DATE: 05-15-13

388NL CYLINDER CONTROL

NOTES: SEE MASTER SHEET #10001 FOR SUGGESTED REINFORCING

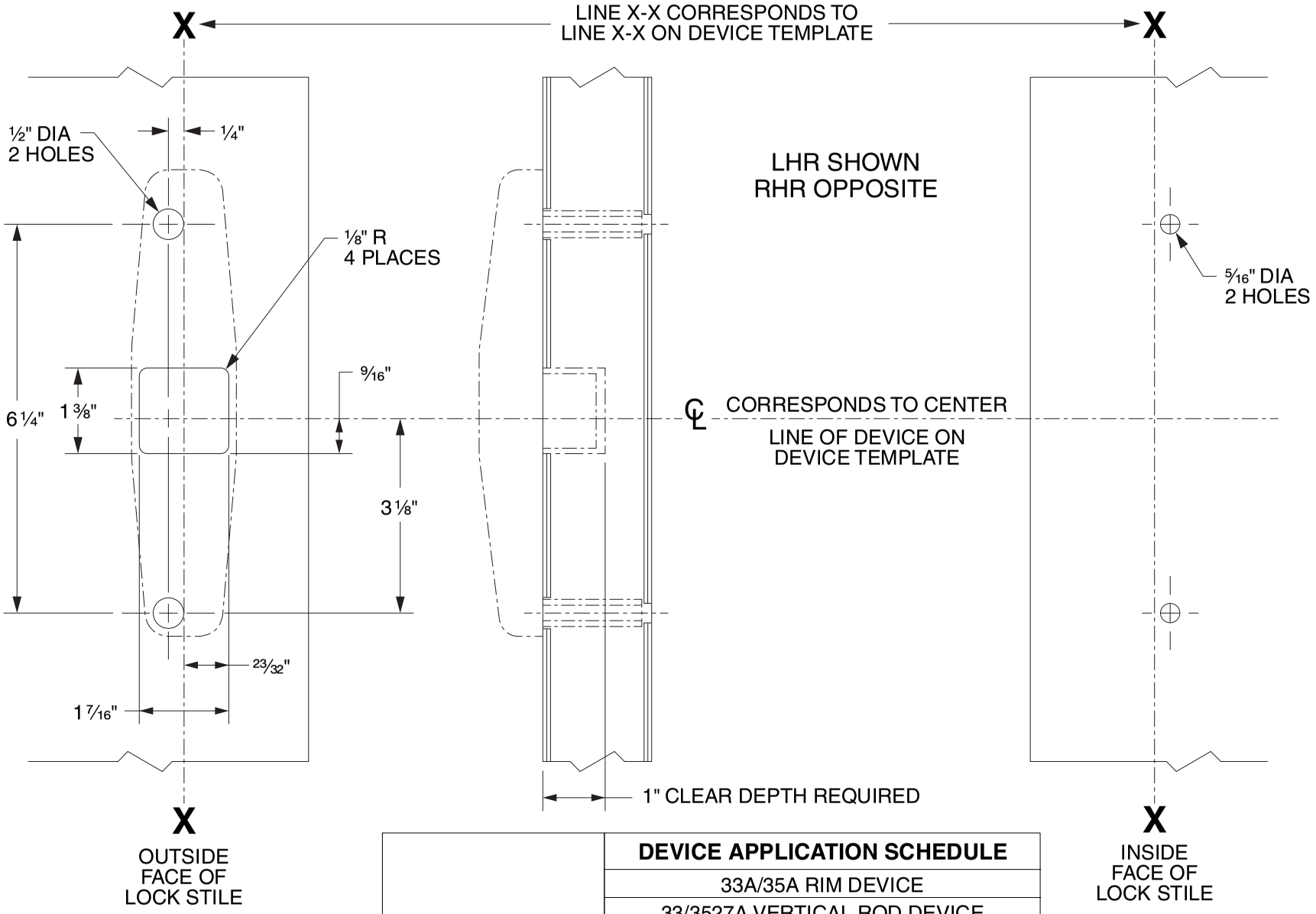

	DEVICE APPLICATION SCHEDULE
FOR CUTOUT ON INSIDE FACE OF DOOR SEE DEVICE TEMPLATE	33A/35A RIM DEVICE
	33/3527A VERTICAL ROD DEVICE
	33/3527A-F VERTICAL ROD DEVICE
	33/3547A VERTICAL ROD DEVICE
	33/3547A-F VERTICAL ROD DEVICE
	33/3548A VERTICAL ROD DEVICE
	33/3548A-F VERTICAL ROD DEVICE
	33/3549A VERTICAL ROD DEVICE
	33/3549A-F VERTICAL ROD DEVICE

VON DUPRIN®

TEMPLATE NUMBER: 40079_d

DATE: 05-31-13

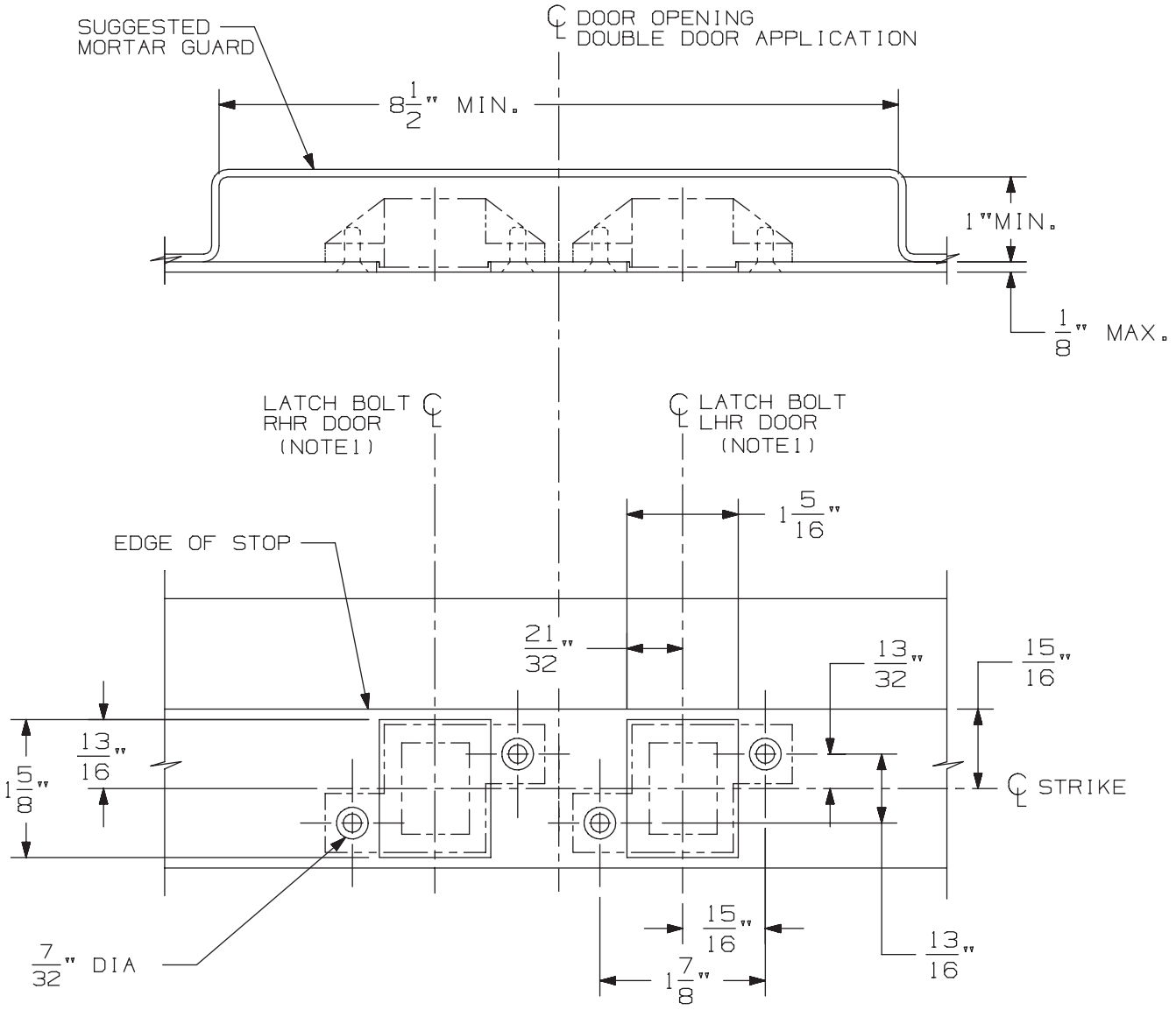

3/8" DIA X 82° C'SINK

IN FRAME
2 HOLES
EACH STRIKE

DOUBLE DOOR APPLICATION SHOWN.
FOR SINGLE DOOR APPLICATION USE
APPROPRIATE HANDING AS SHOWN.

DEVICE APPLICATION SCHEDULE
33/3547 & 33/3547-F SERIES DEVICE
98/99/47 & 98/99/47-F SERIES DEVICE
5547/5547 WDC SERIES
33/3547A & 33/3547A-F SERIES DEVICE
(9) 94/9547 SERIES DEVICE

NOTES: 1. SEE DEVICE TEMPLATE FOR LOCATION OF LATCH BOLT.

2. IF DEVICE IS TO BE MOUNTED ON WOOD DOORS, SEE WOOD DOOR TEMPLATE FOR LATCH BOLT LOCATION.

338 Strike for Hollow Metal Frame Preparation

VON DUPRIN®

NOTES: SEE MASTER SHEET #10001 FOR SUGGESTED REINFORCING

TEMPLATE NUMBER: 30038_a

DATE: 05-23-13

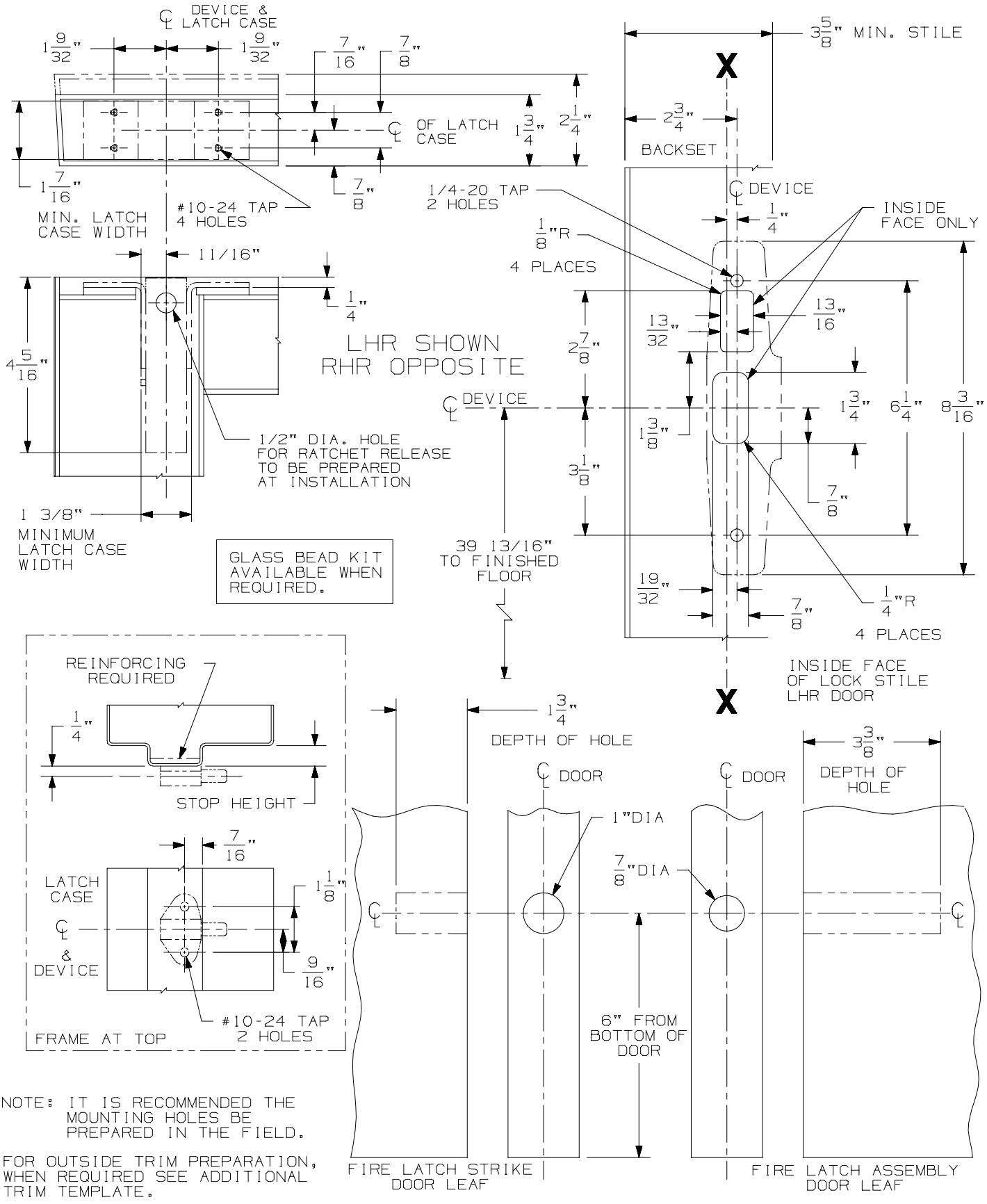

NOTE: IT IS RECOMMENDED THE MOUNTING HOLES BE PREPARED IN THE FIELD.

FOR OUTSIDE TRIM PREPARATION, WHEN REQUIRED SEE ADDITIONAL TRIM TEMPLATE.

33/3547A-F-LBR Series
Concealed Vertical Rod Device

VON DUPRIN®

NOTES: SEE MASTER SHEET #10001 FOR SUGGESTED REINFORCING

TEMPLATE NUMBER: 10058_a

DATE: 05-15-13

360T, 360L, 360T-BE, 360L-BE CONTROL

NOTES: SEE MASTER SHEET #10001 FOR SUGGESTED REINFORCING

TEMPLATE NUMBER: 40080_e

DATE: 04-06-15

VON DUPRIN®

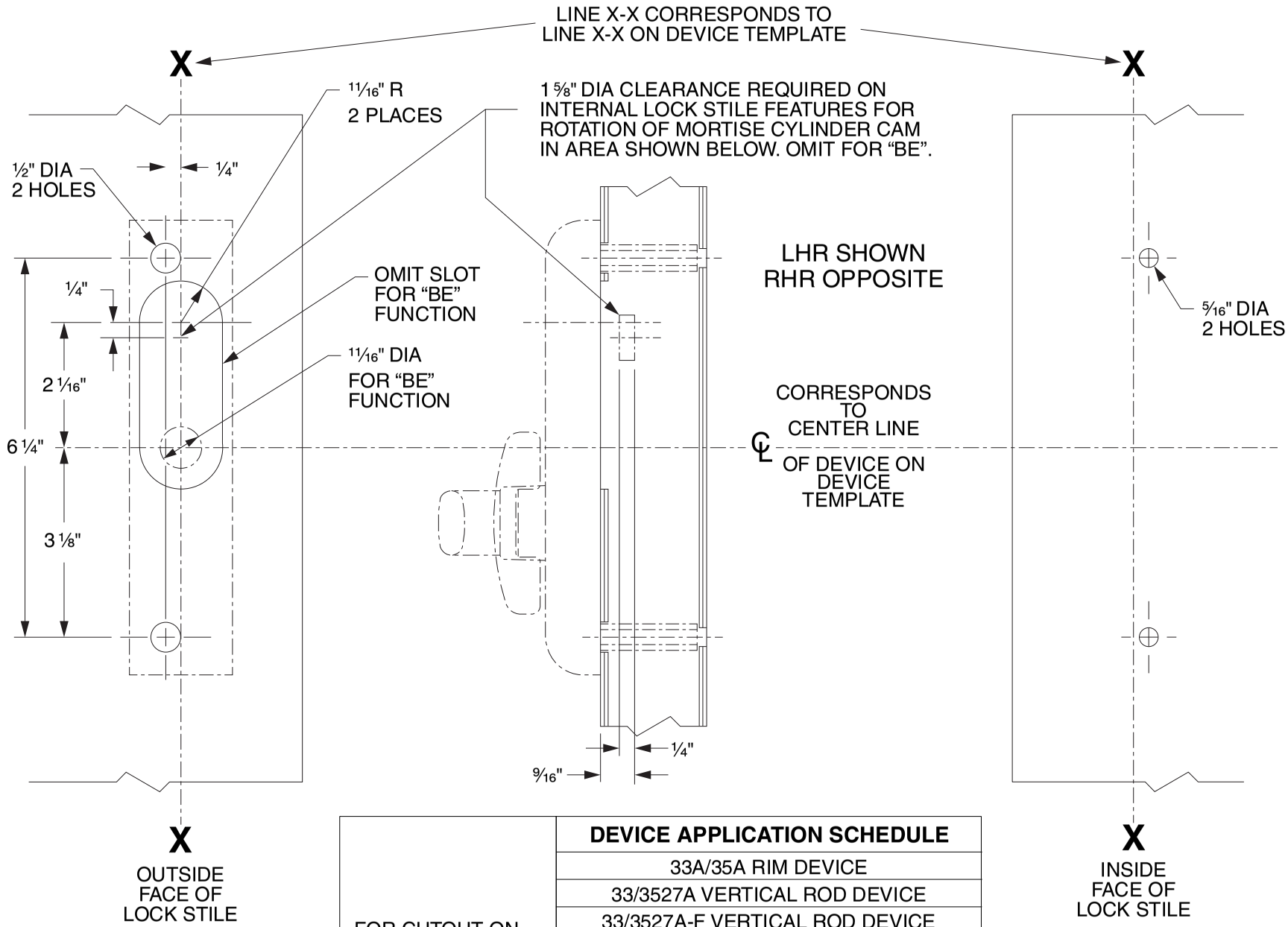

	DEVICE APPLICATION SCHEDULE
FOR CUTOUT ON INSIDE FACE OF DOOR SEE DEVICE TEMPLATE	33A/35A RIM DEVICE
	33/3527A VERTICAL ROD DEVICE
	33/3527A-F VERTICAL ROD DEVICE
	33/3547A VERTICAL ROD DEVICE
	33/3547A-F VERTICAL ROD DEVICE
	33/3548A VERTICAL ROD DEVICE
	33/3548A-F VERTICAL ROD DEVICE
	33/3549A VERTICAL CABLE DEVICE
	33/3549A-F VERTICAL CABLE DEVICE

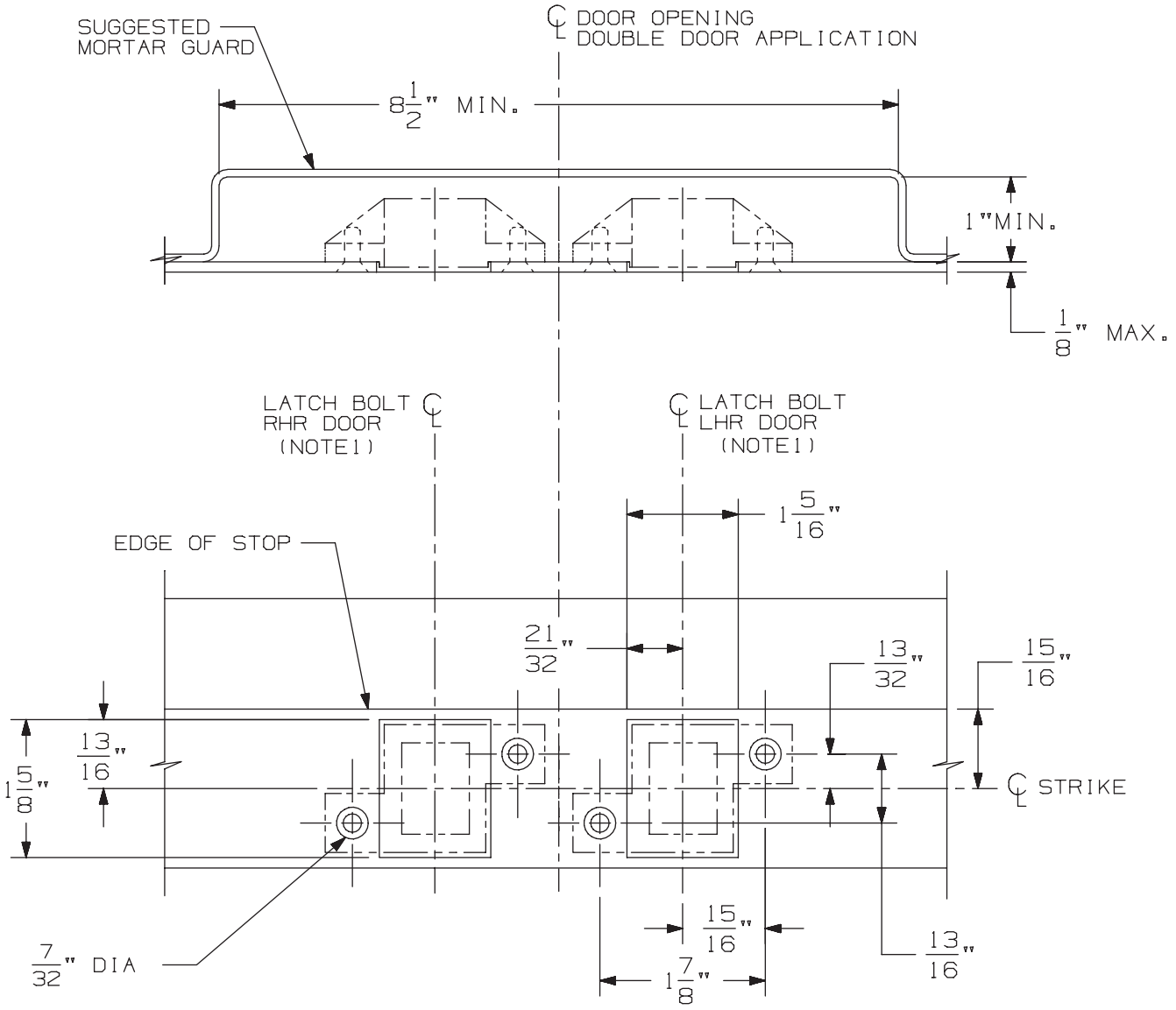

3/8" DIA X 82° C'SINK

IN FRAME
2 HOLES
EACH STRIKE

DOUBLE DOOR APPLICATION SHOWN.
FOR SINGLE DOOR APPLICATION USE
APPROPRIATE HANDING AS SHOWN.

DEVICE APPLICATION SCHEDULE
33/3547 & 33/3547-F SERIES DEVICE
98/99/47 & 98/99/47-F SERIES DEVICE
5547/5547 WDC SERIES
33/3547A & 33/3547A-F SERIES DEVICE
(9) 94/9547 SERIES DEVICE

NOTES: 1. SEE DEVICE TEMPLATE FOR LOCATION OF LATCH BOLT.

2. IF DEVICE IS TO BE MOUNTED ON WOOD DOORS, SEE WOOD DOOR TEMPLATE FOR LATCH BOLT LOCATION.

338 Strike for Hollow Metal Frame Preparation

VON DUPRIN®

NOTES: SEE MASTER SHEET #10001 FOR SUGGESTED REINFORCING

TEMPLATE NUMBER: 30038_a

DATE: 05-23-13

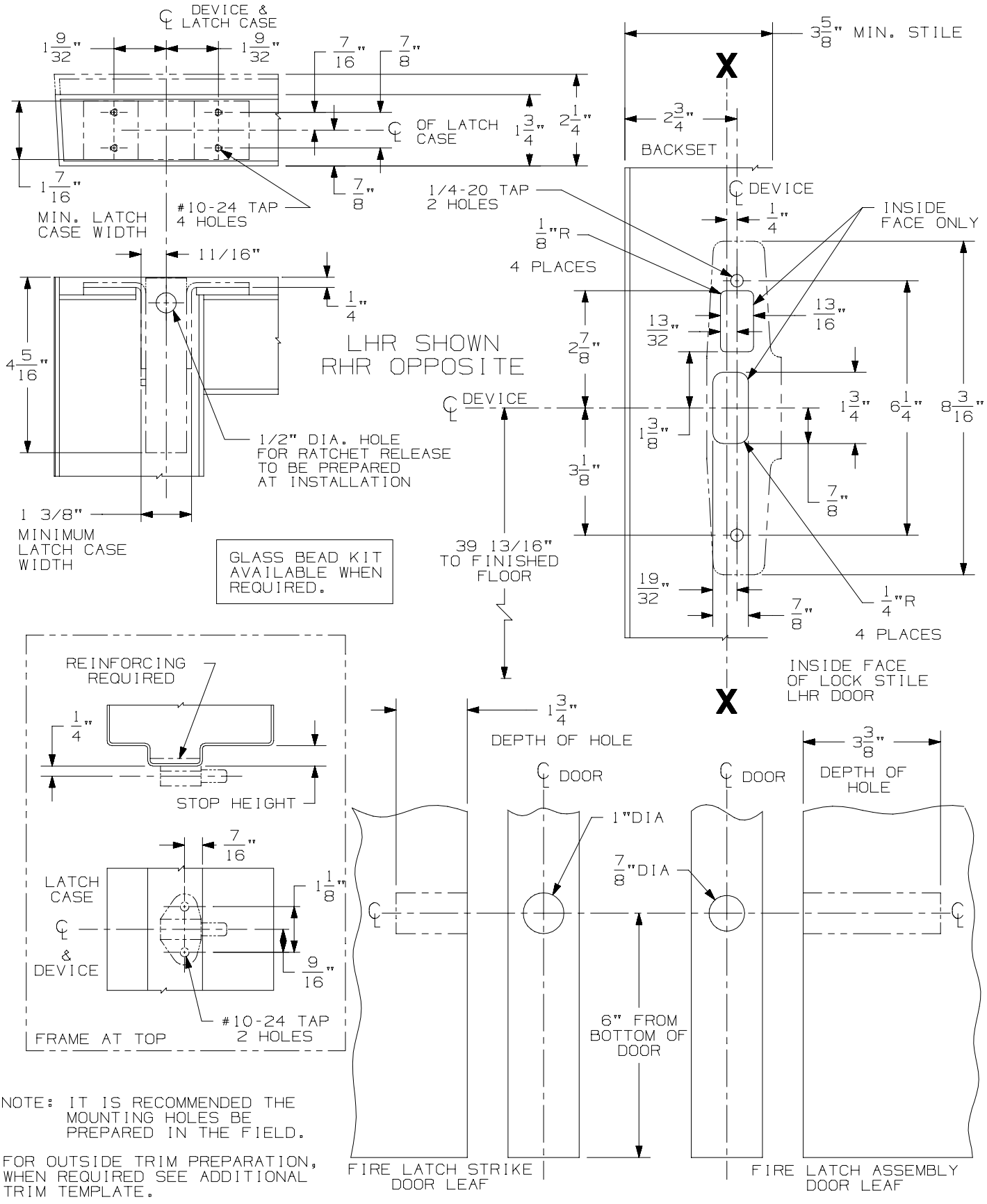

NOTE: IT IS RECOMMENDED THE MOUNTING HOLES BE PREPARED IN THE FIELD.

FOR OUTSIDE TRIM PREPARATION, WHEN REQUIRED SEE ADDITIONAL TRIM TEMPLATE.

33/3547A-F-LBR Series
Concealed Vertical Rod Device

VON DUPRIN®

NOTES: SEE MASTER SHEET #10001 FOR SUGGESTED REINFORCING

TEMPLATE NUMBER: 10058_a

DATE: 05-15-13

376-T Control

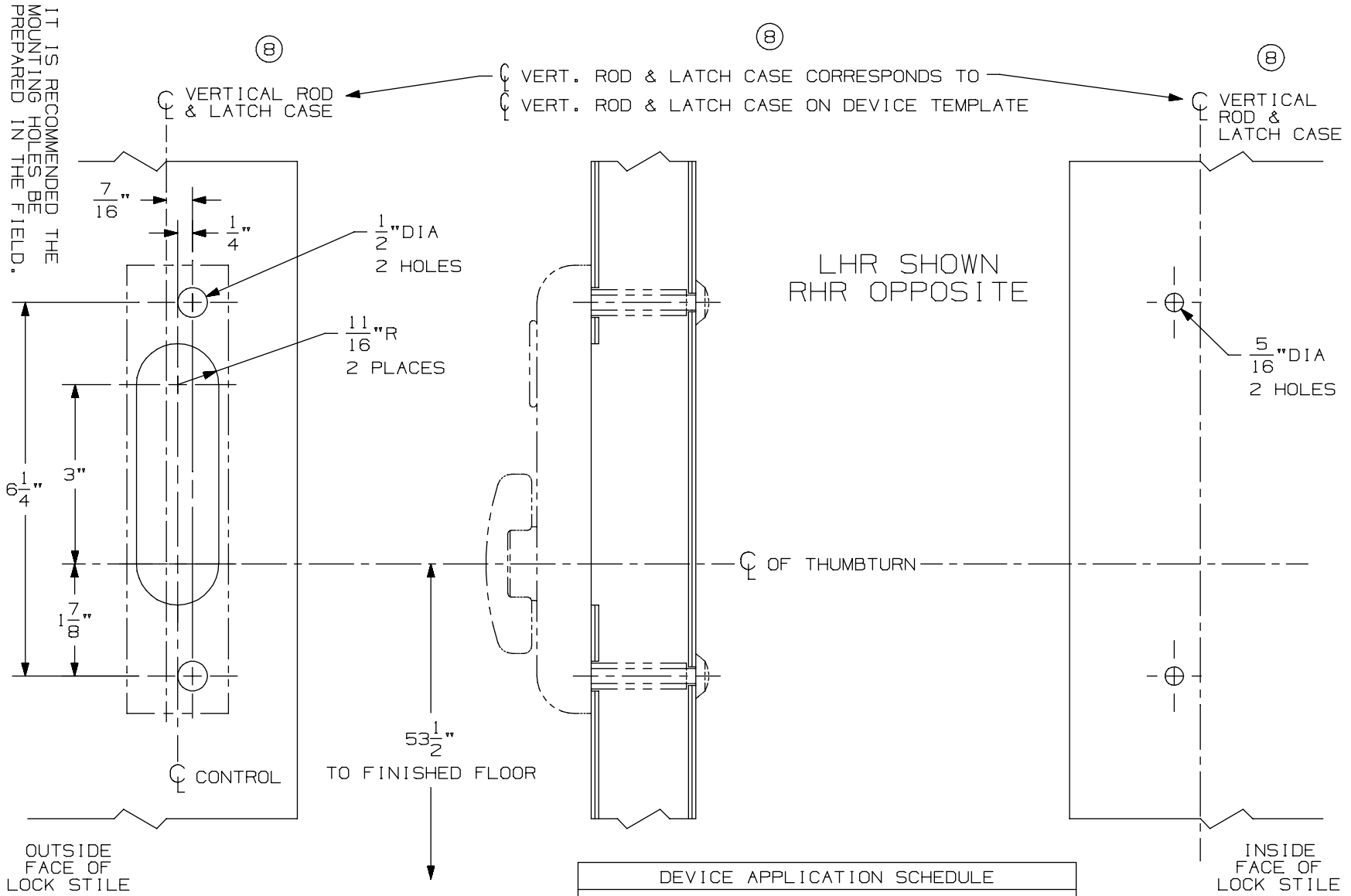

DEVICE APPLICATION SCHEDULE
5547/5547-F VERT. ROD DEVICE
8847-F VERT. ROD DEVICE
* 3347/3547 VERT. ROD DEVICE
3347-F/3547-F VERT. ROD DEVICE
⑧ * 3347A/3547A VERT. ROD DEVICE
⑧ 3347A-F/3547A-F VERT. ROD DEVICE
9847/9947 VERT. ROD DEVICE
9847-F/9947-F VERTICAL ROD DEVICE

⑧ * NOT TO BE USED WITH 1 1/16" LATCH CASE BACKSET ON BULLNOSE EDGE DOORS WITH WEATHERSTRIP CHANNEL.

NOTES: SEE MASTER SHEET #10001 FOR SUGGESTED REINFORCING

TEMPLATE NUMBER: 40114_a

DATE: 05-28-13

VON DUPRIN®

386NL & DT TRIM

NOTES: SEE MASTER SHEET #10001 FOR SUGGESTED REINFORCING

TEMPLATE NUMBER: 20008_C

DATE: 5-25-16

VON DUPRIN®

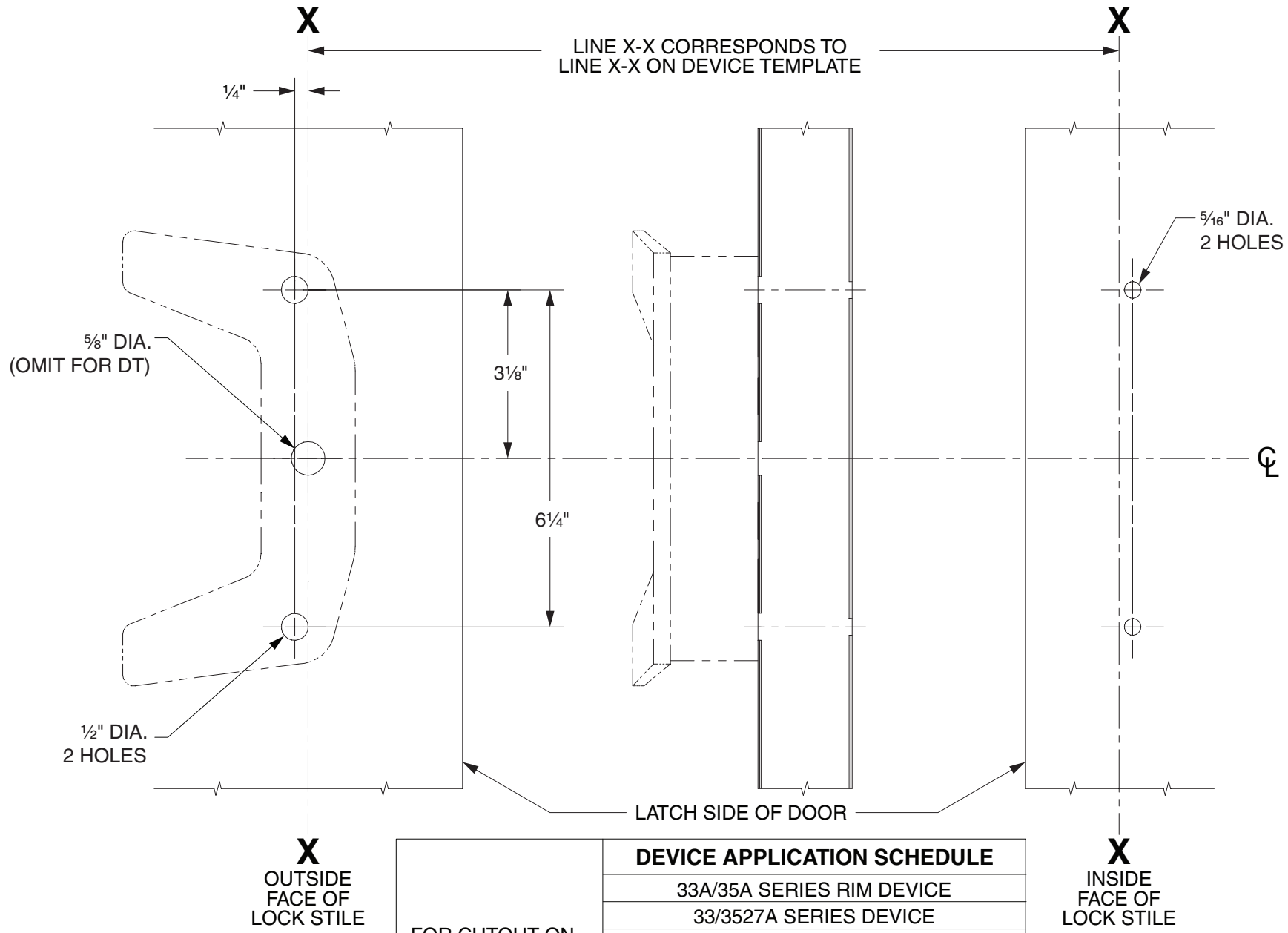

LHR SHOWN
RHR OPPOSITE

FOR CUTOUT ON INSIDE FACE OF DOOR, SEE DEVICE TEMPLATE	**DEVICE APPLICATION SCHEDULE**
	33A/35A SERIES RIM DEVICE
	33/3527A SERIES DEVICE
	33/3527A-F SERIES DEVICE
	33/3547A SERIES DEVICE
	33/3547A-F SERIES DEVICE
	33/3548A SERIES DEVICE
	33/3548A-F SERIES DEVICE
	33/3549A SERIES DEVICE
	33/3549A-F SERIES DEVICE

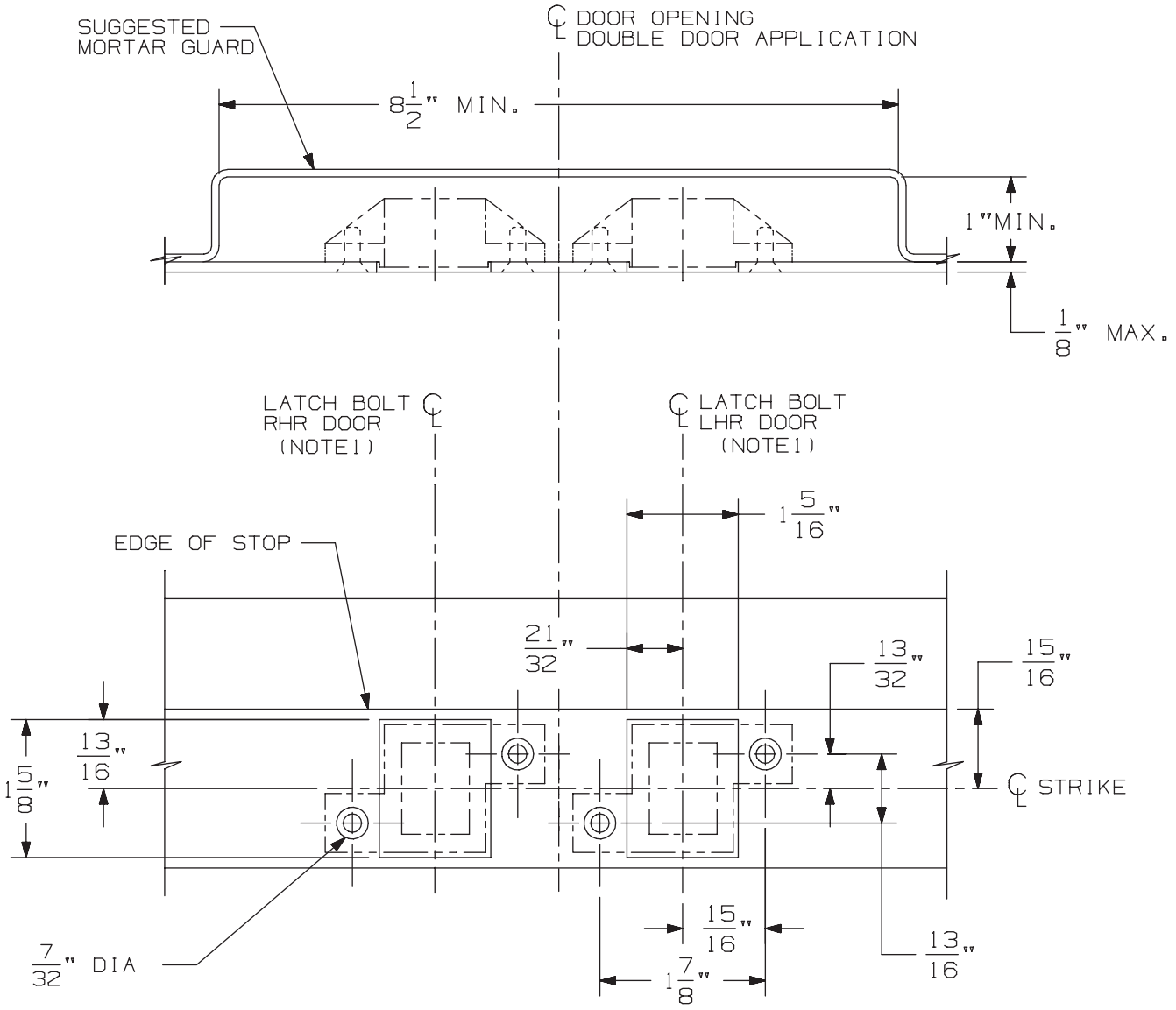

3/8" DIA X 82° C'SINK

IN FRAME
2 HOLES
EACH STRIKE

DOUBLE DOOR APPLICATION SHOWN.
FOR SINGLE DOOR APPLICATION USE
APPROPRIATE HANDING AS SHOWN.

DEVICE APPLICATION SCHEDULE
33/3547 & 33/3547-F SERIES DEVICE
98/99/47 & 98/99/47-F SERIES DEVICE
5547/5547 WDC SERIES
33/3547A & 33/3547A-F SERIES DEVICE
(9) 94/9547 SERIES DEVICE

NOTES: 1. SEE DEVICE TEMPLATE FOR LOCATION OF LATCH BOLT.

2. IF DEVICE IS TO BE MOUNTED ON WOOD DOORS, SEE WOOD DOOR TEMPLATE FOR LATCH BOLT LOCATION.

338 Strike for Hollow Metal Frame Preparation

VON DUPRIN®

NOTES: SEE MASTER SHEET #10001 FOR SUGGESTED REINFORCING

TEMPLATE NUMBER: 30038_a

DATE: 05-23-13

360T, 360L, 360T-BE, 360L-BE CONTROL

NOTES: SEE MASTER SHEET #10001 FOR SUGGESTED REINFORCING

TEMPLATE NUMBER: 40080_e

DATE: 04-06-15

VON DUPRIN®

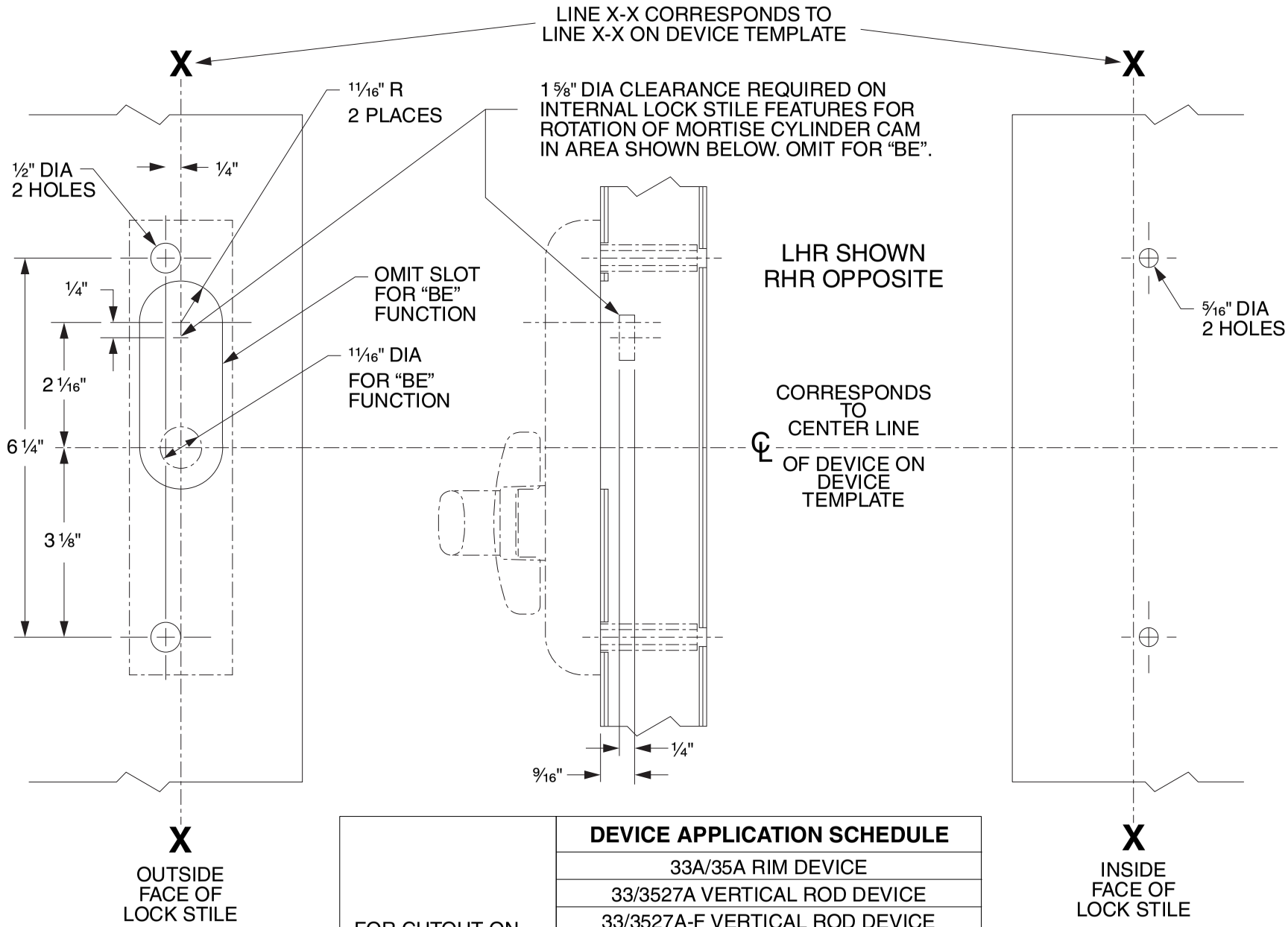

	DEVICE APPLICATION SCHEDULE
FOR CUTOUT ON INSIDE FACE OF DOOR SEE DEVICE TEMPLATE	33A/35A RIM DEVICE
	33/3527A VERTICAL ROD DEVICE
	33/3527A-F VERTICAL ROD DEVICE
	33/3547A VERTICAL ROD DEVICE
	33/3547A-F VERTICAL ROD DEVICE
	33/3548A VERTICAL ROD DEVICE
	33/3548A-F VERTICAL ROD DEVICE
	33/3549A VERTICAL CABLE DEVICE
	33/3549A-F VERTICAL CABLE DEVICE

33A/35A Series Exit Devices

-

3349A/3549A Concealed Vertical Cable (Standard, CD, EL, LX, RX and

Device Installation Schedule

Installation	Backset	Stile Width
pair of doors	1 3/16"	2 1/8" to 2 3/4"
	1 1/2"	2 3/4" to 3 3/4"
	1 7/8"	3 3/4" to 5"
	2 1/2"	5" to flush
single door	1 1/2"	2 1/2" to 3 3/4"
	1 7/8"	3 3/4" to 5"
	2 1/2"	5" to flush

- Use of outside trim may alter minimum stile requirement. See trim template.
- See template #10052 for 2" of less stile width.

Note: Backset may vary when used with coordinator depending on type used.

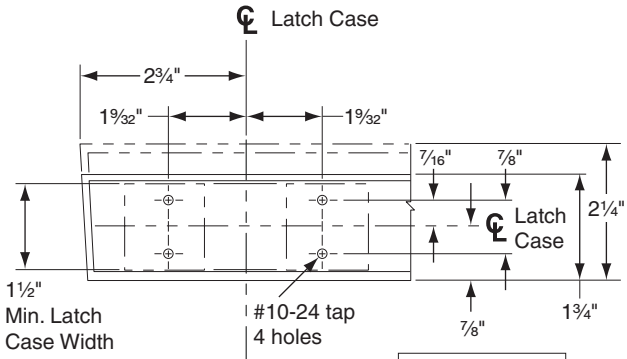

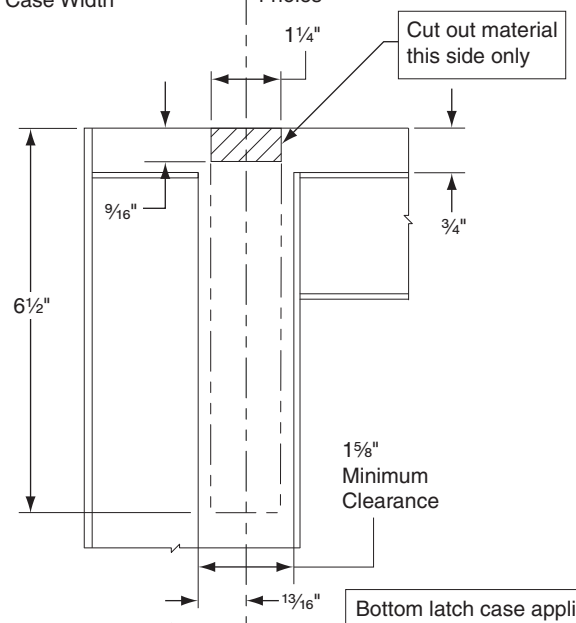

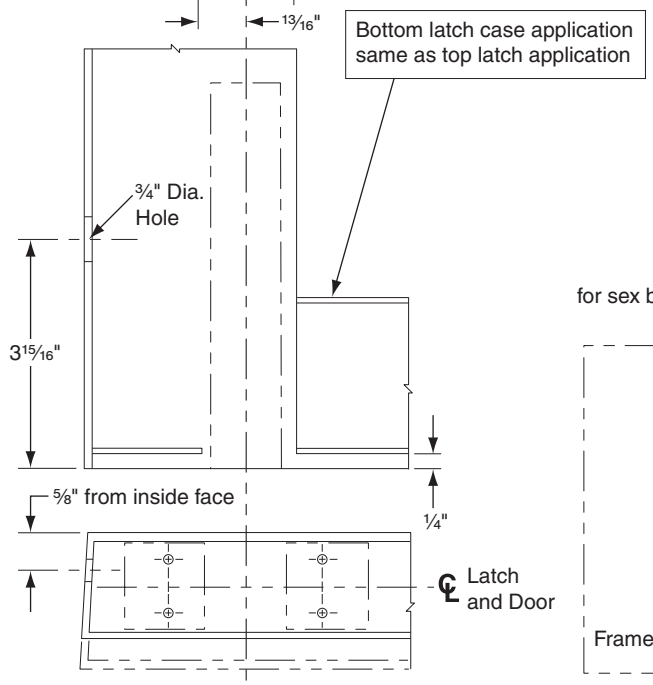

LHR SHOWN
RHR OPPOSITE

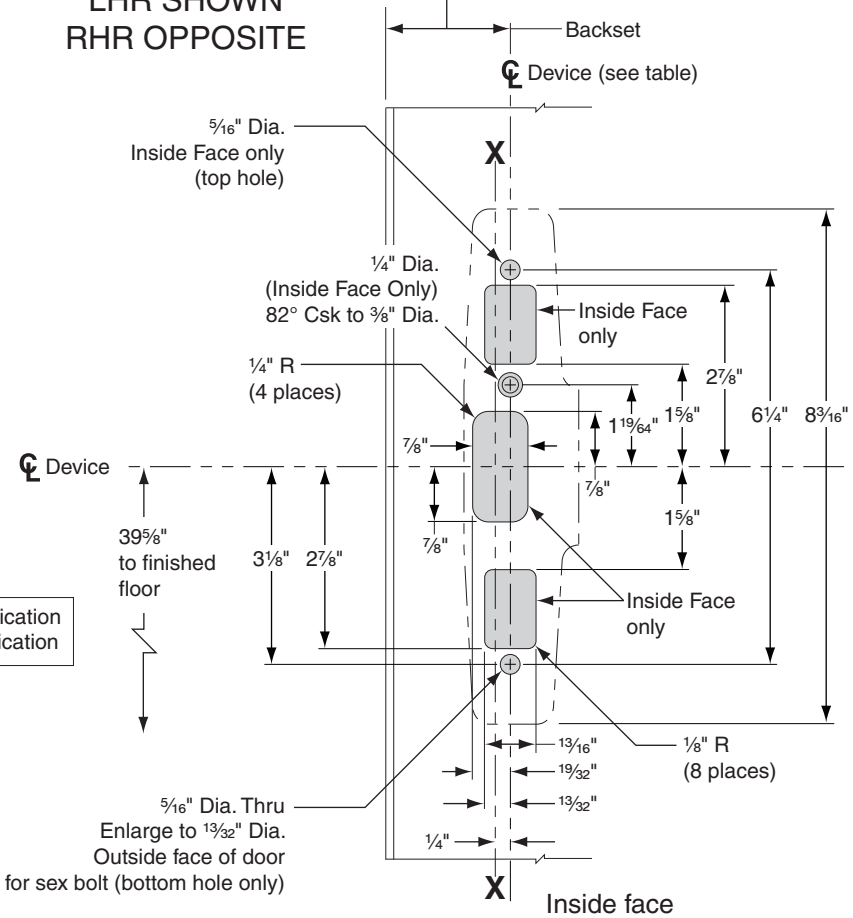

Inside face of lock stile LHR door

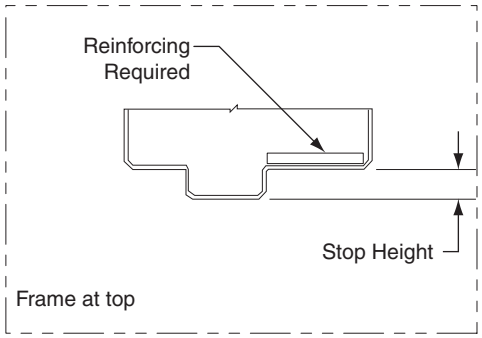

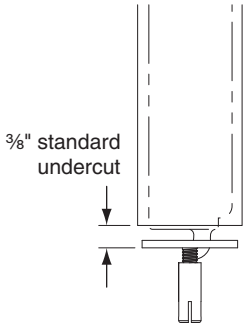

349 strike application

- Prep at bottom same as top
- Glass bead kit available when required
- It is recommended the mounting holes be prepared in the field
- For outside trim preparation, when required add additional trim template

33/3549A HOLLOW METAL DOOR PANIC APPLICATION CONCEALED VERTICAL DEVICE

VON DUPRIN®

NOTE: SEE MASTER SHEET NO. 10001 FOR SUGGESTED REINFORCING

TEMPLATE NUMBER: 23974744_d

DATE: 4-6-15

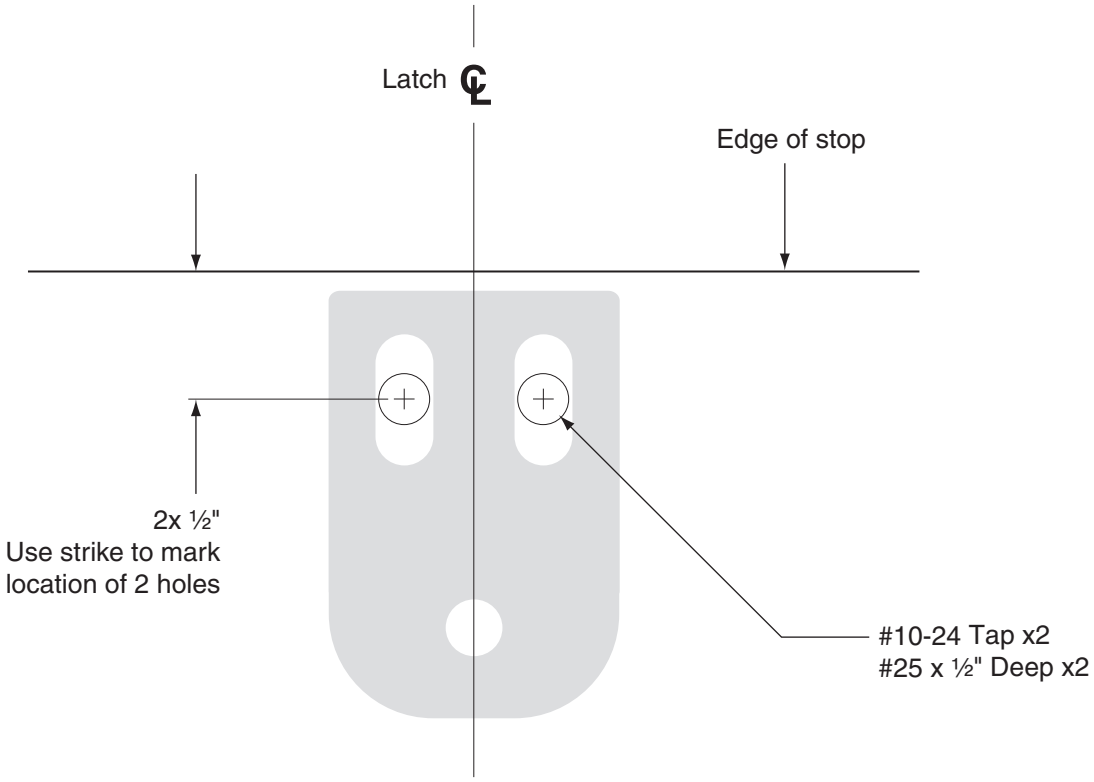

DEVICE APPLICATION SCHEDULE
33/3549A & 33/3549A-F SERIES DEVICE
98/9949 & 98/9949-F SERIES DEVICE
98/9949WDC & 98/9949WDC-F SERIES DEVICE

249 STRIKE
FOR HOLLOW METAL FRAME PREPARATION

VON DUPRIN®

NOTE: SEE MASTER SHEET NO. 10001 FOR SUGGESTED REINFORCING

TEMPLATE NUMBER: 24101511_b

DATE: 9-21-16

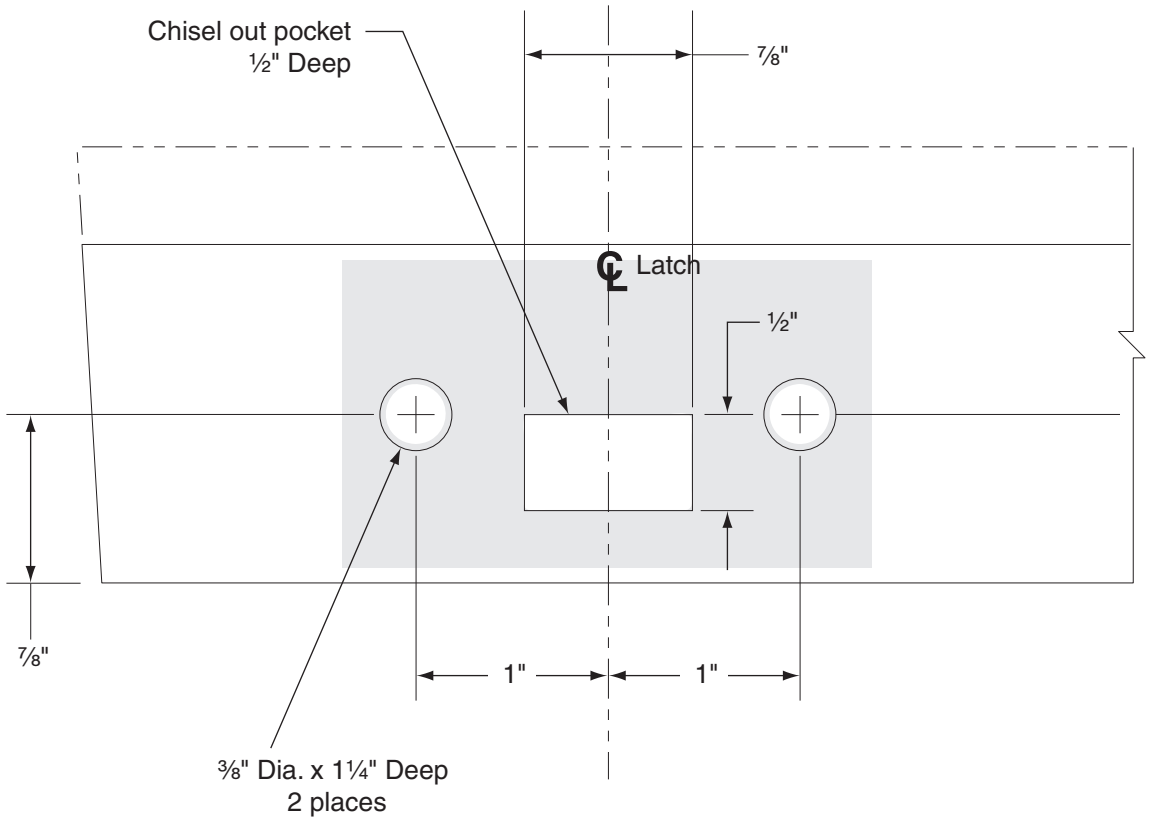

Clear holes of debris, then drop in anchors (slotted end first)

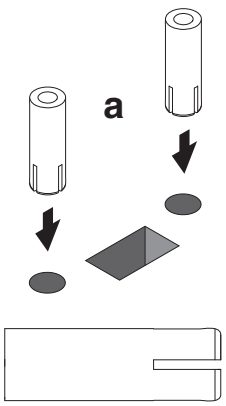

Secure the anchors using a hammer and punch

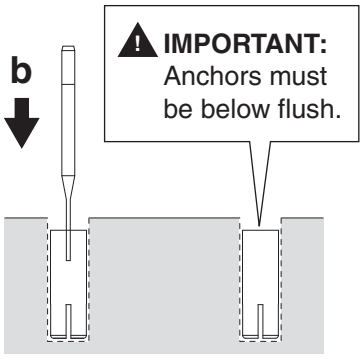

Install strike plate and secure with 2 screws

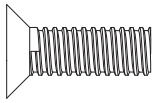

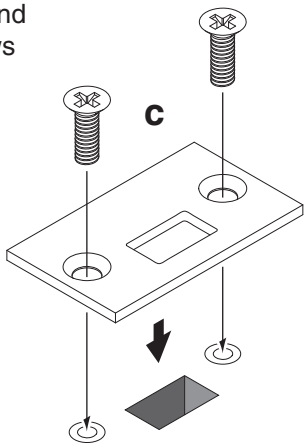

DEVICE APPLICATION SCHEDULE
33/3549A & 33/3549A-F SERIES DEVICE
98/9949 & 98/9949-F SERIES DEVICE
98/9949WDC & 98/9949WDC-F SERIES DEVICE

349 STRIKE

VON DUPRIN®

TEMPLATE NUMBER: 24101529_c

DATE: 9-21-16

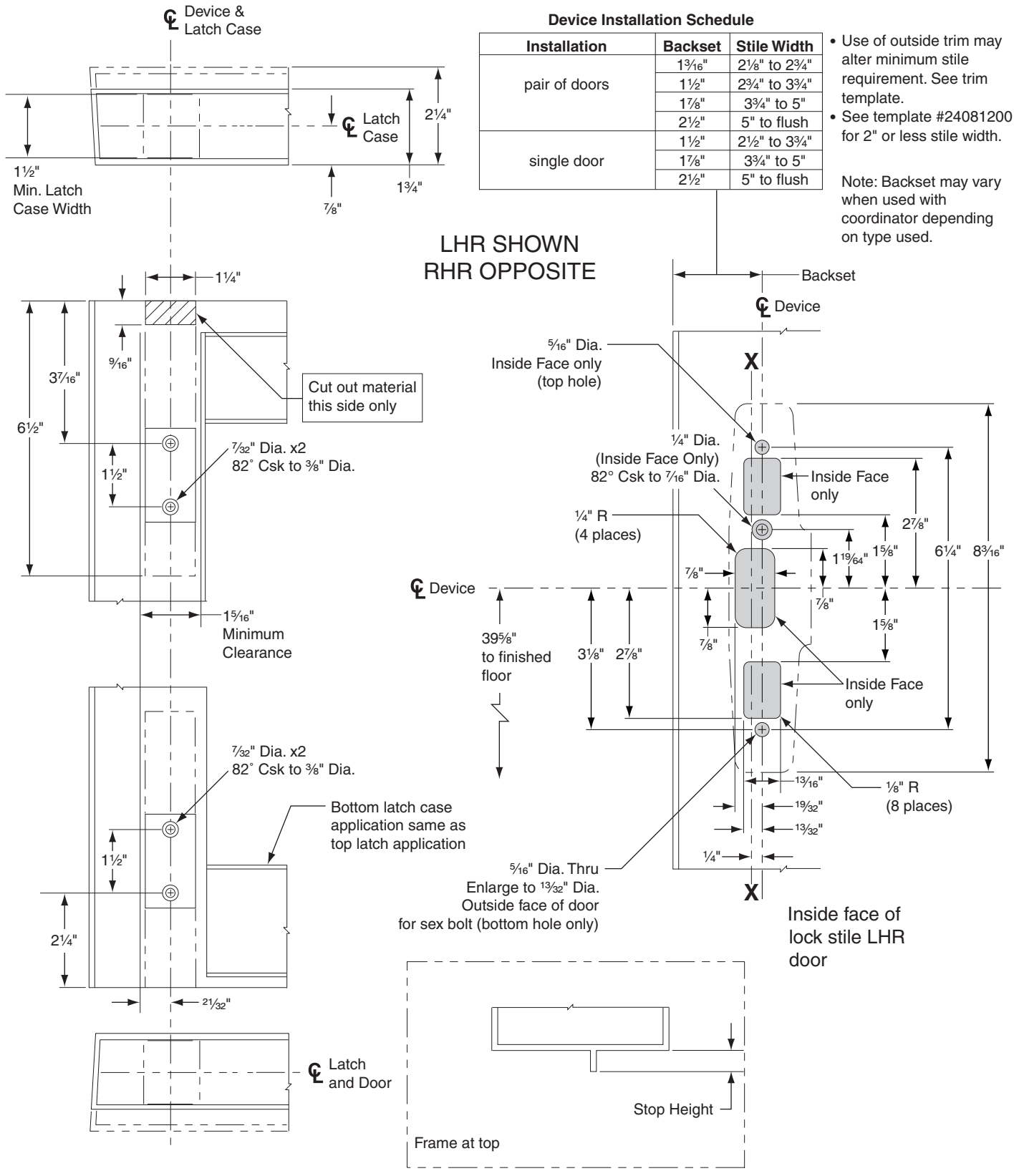

Device Installation Schedule

Installation	Backset	Stile Width
pair of doors	1³⁄₁₆"	2⅛" to 2¾"
	1½"	2¾" to 3¾"
	1⅞"	3¾" to 5"
	2½"	5" to flush
single door	1½"	2½" to 3¾"
	1⅞"	3¾" to 5"
	2½"	5" to flush

- Use of outside trim may alter minimum stile requirement. See trim template.
- See template #24081200 for 2" or less stile width.

Note: Backset may vary when used with coordinator depending on type used.

- Glass bead kit available when required
- It is recommended the mounting holes be prepared in the field
- For outside trim preparation, when required see additional trim template
- Device cannot be used on Kawneer 260 aluminum door

33/3549A ALUMINUM DOOR PANIC APPLICATION
CONCEALED VERTICAL DEVICE

VON DUPRIN®

TEMPLATE NUMBER: 23980113_e

DATE: 9-16-16

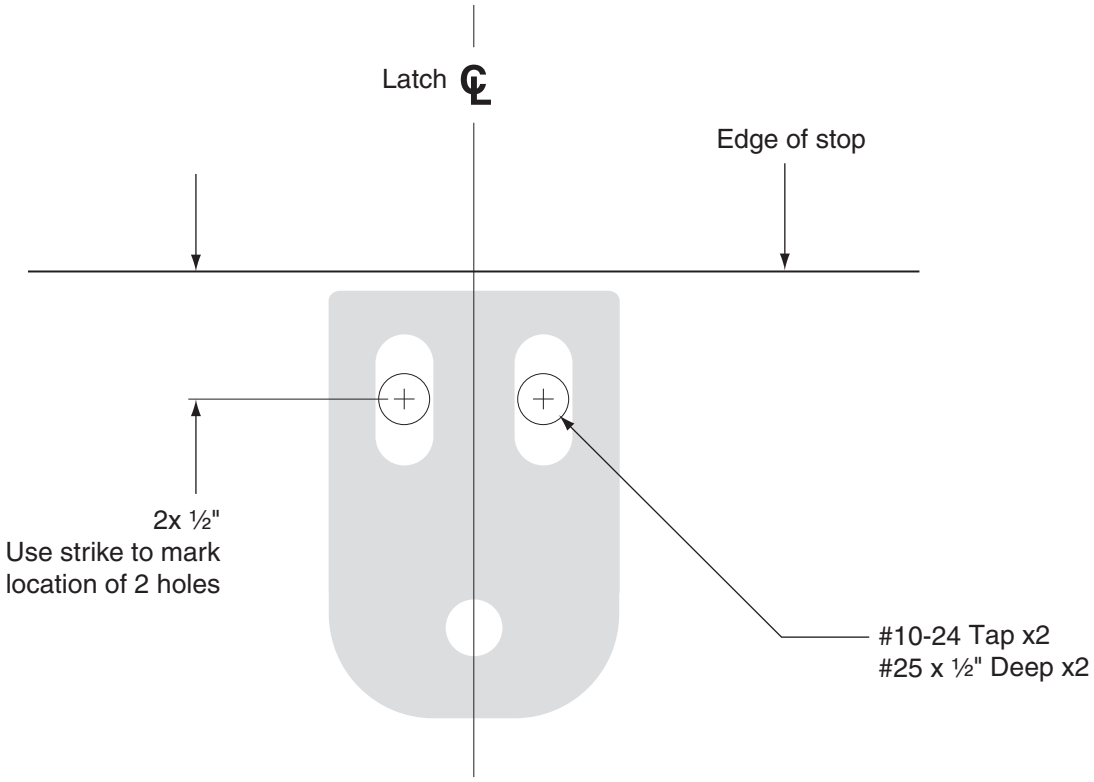

DEVICE APPLICATION SCHEDULE
33/3549A & 33/3549A-F SERIES DEVICE
98/9949 & 98/9949-F SERIES DEVICE
98/9949WDC & 98/9949WDC-F SERIES DEVICE

249 STRIKE
FOR HOLLOW METAL FRAME PREPARATION

VON DUPRIN®

NOTE: SEE MASTER SHEET NO. 10001 FOR SUGGESTED REINFORCING

TEMPLATE NUMBER: 24101511_b

DATE: 9-21-16

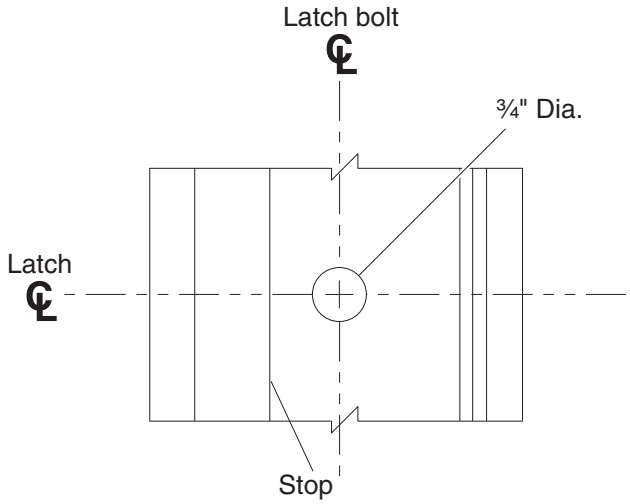

a. After closing door with bottom latch installed, mark the location the bottom latch bolt is contacting the threshold.

b. Drill a ¾" diameter hole in the threshold.

DEVICE APPLICATION SCHEDULE
33/3549A & 33/3549A-F SERIES DEVICE

THRESHOLD PREPARATION FOR ALUMINUM DOOR

VON DUPRIN®

TEMPLATE NUMBER: 24143075_b

DATE: 9-21-16

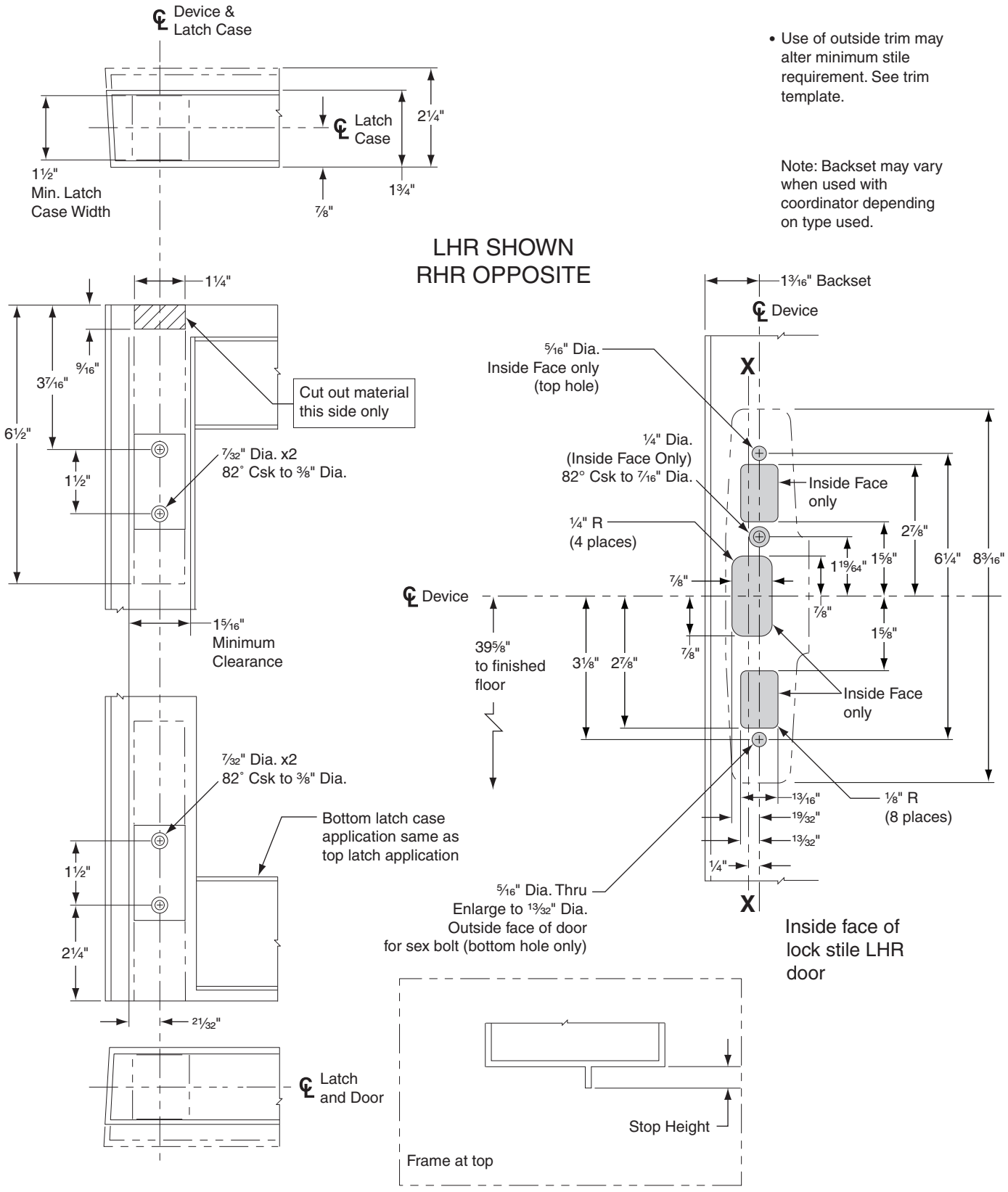

- Use of outside trim may alter minimum stile requirement. See trim template.

Note: Backset may vary when used with coordinator depending on type used.

- Glass bead kit available when required
- It is recommended the mounting holes be prepared in the field
- For outside trim preparation, when required see additional trim template
- Device cannot be used on Kawneer 260 aluminum door

33/3549A CONCEALED VERTICAL DEVICE
FOR 2" STILE ON PAIR OF ALUMINUM DOORS

VON DUPRIN®

TEMPLATE NUMBER: 24081200_e

DATE: 9-16-16

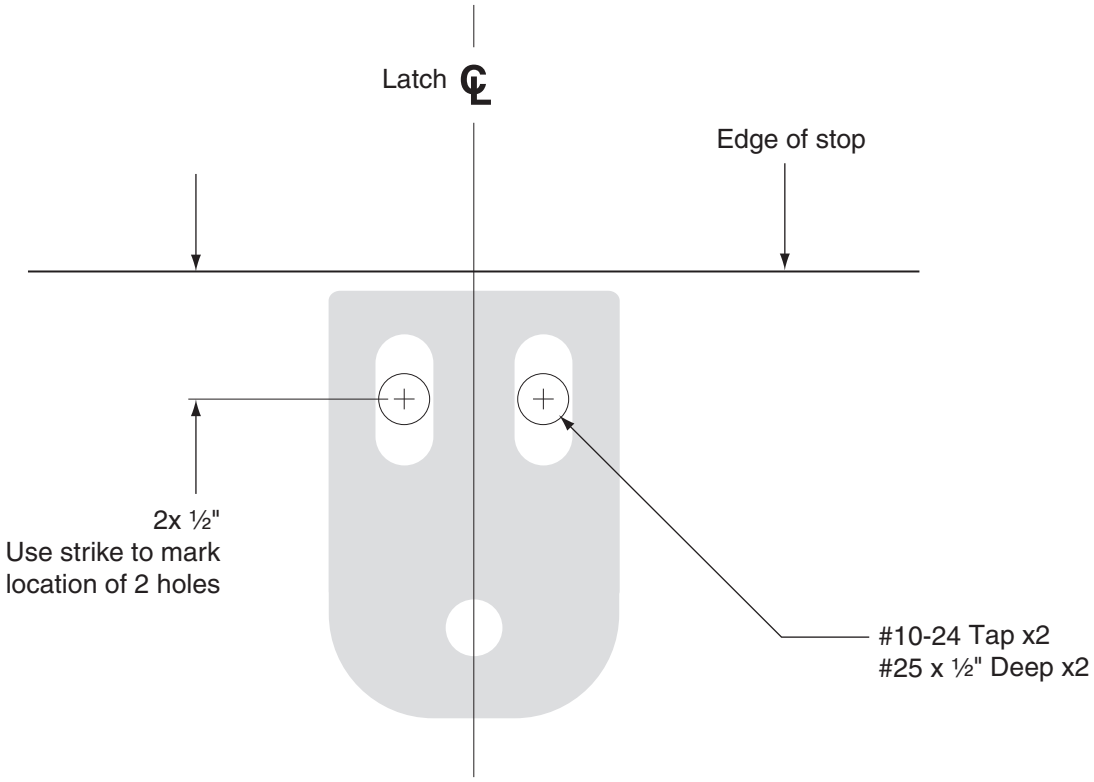

DEVICE APPLICATION SCHEDULE
33/3549A & 33/3549A-F SERIES DEVICE
98/9949 & 98/9949-F SERIES DEVICE
98/9949WDC & 98/9949WDC-F SERIES DEVICE

249 STRIKE
FOR HOLLOW METAL FRAME PREPARATION

VON DUPRIN®

NOTE: SEE MASTER SHEET NO. 10001 FOR SUGGESTED REINFORCING

TEMPLATE NUMBER: 24101511_b

DATE: 9-21-16

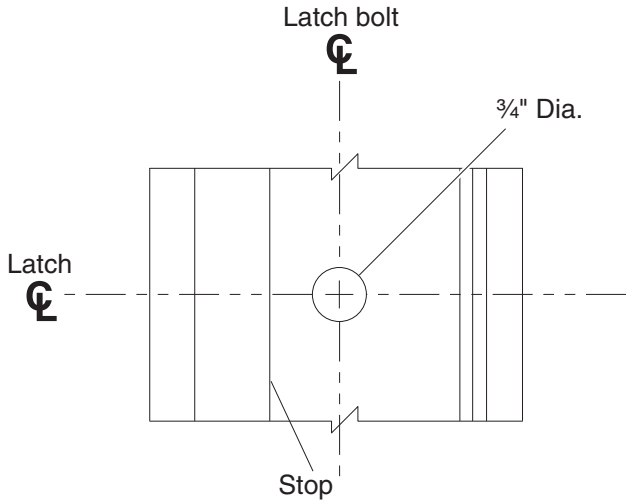

a. After closing door with bottom latch installed, mark the location the bottom latch bolt is contacting the threshold.

b. Drill a ¾" diameter hole in the threshold.

DEVICE APPLICATION SCHEDULE
33/3549A & 33/3549A-F SERIES DEVICE

THRESHOLD PREPARATION FOR ALUMINUM DOOR

VON DUPRIN®

TEMPLATE NUMBER: 24143075_b

DATE: 9-21-16

33A/35A Series Exit Devices -33/3549A-F-LBL Hollow Metal 3349A-F/3549A-F Concealed Vertical Cable Fire (Standard, EL, LX, RX and

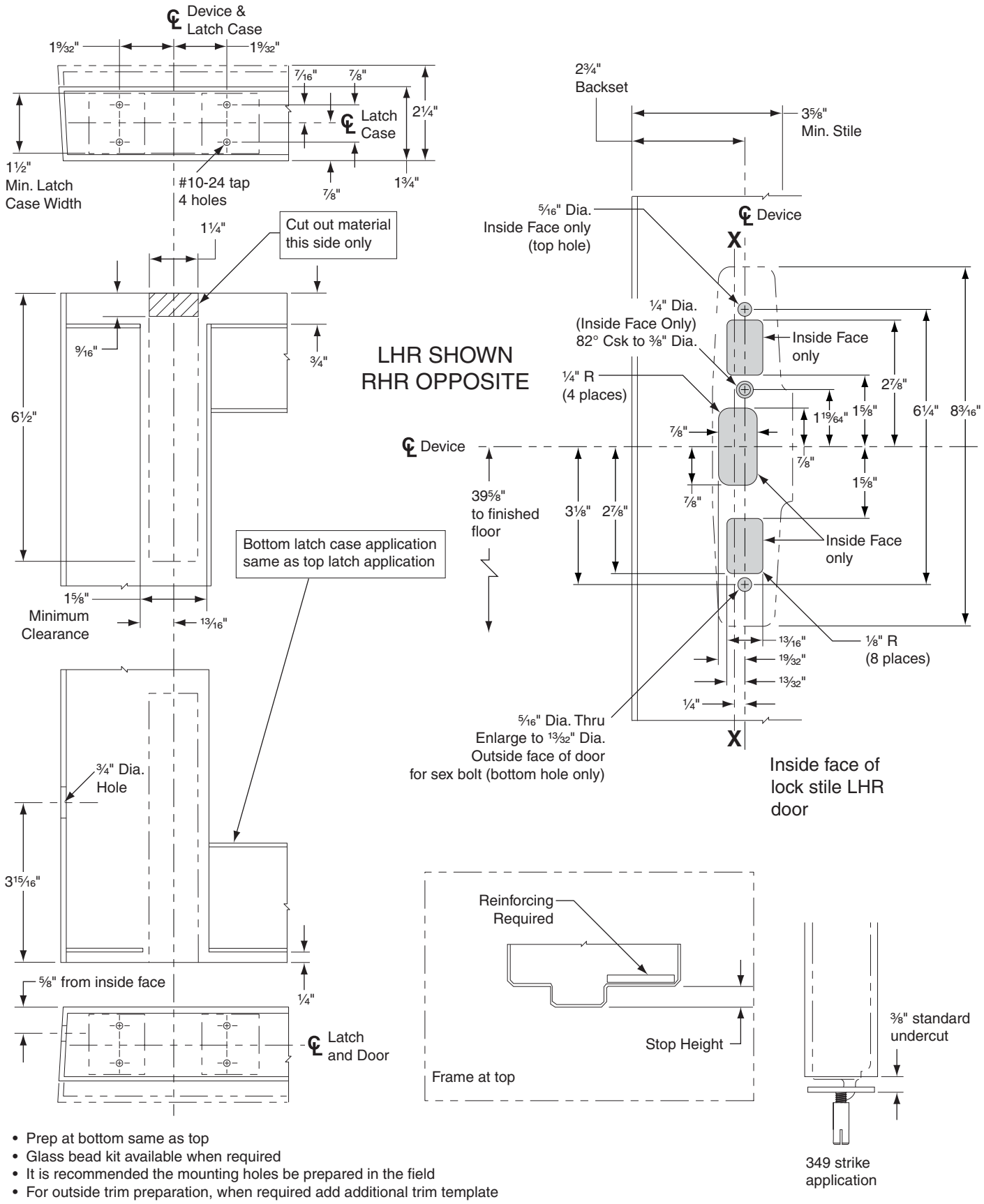

- Prep at bottom same as top
- Glass bead kit available when required
- It is recommended the mounting holes be prepared in the field
- For outside trim preparation, when required add additional trim template

33/3549A-F HOLLOW METAL DOOR FIRE APPLICATION CONCEALED VERTICAL DEVICE

VON DUPRIN®

NOTE: SEE MASTER SHEET NO. 10001 FOR SUGGESTED REINFORCING

TEMPLATE NUMBER: 23970684_e

DATE: 10-27-15

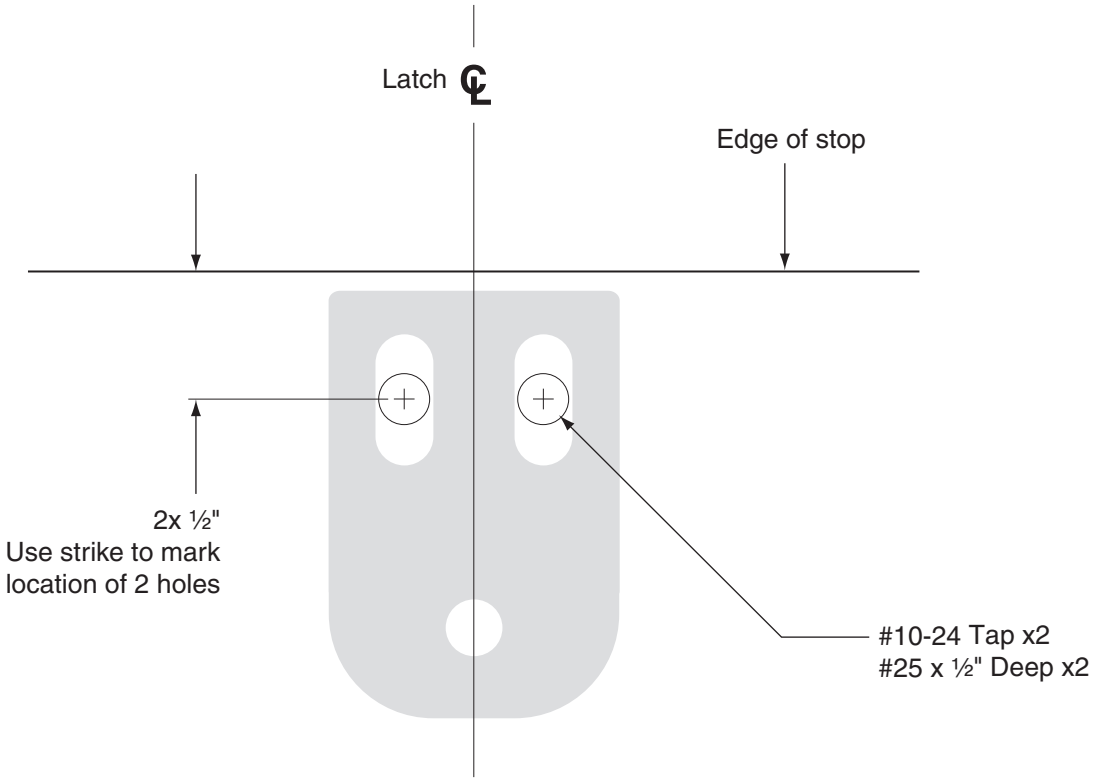

DEVICE APPLICATION SCHEDULE
33/3549A & 33/3549A-F SERIES DEVICE
98/9949 & 98/9949-F SERIES DEVICE
98/9949WDC & 98/9949WDC-F SERIES DEVICE

249 STRIKE
FOR HOLLOW METAL FRAME PREPARATION

VON DUPRIN®

NOTE: SEE MASTER SHEET NO. 10001 FOR SUGGESTED REINFORCING

TEMPLATE NUMBER: 24101511_b

DATE: 9-21-16

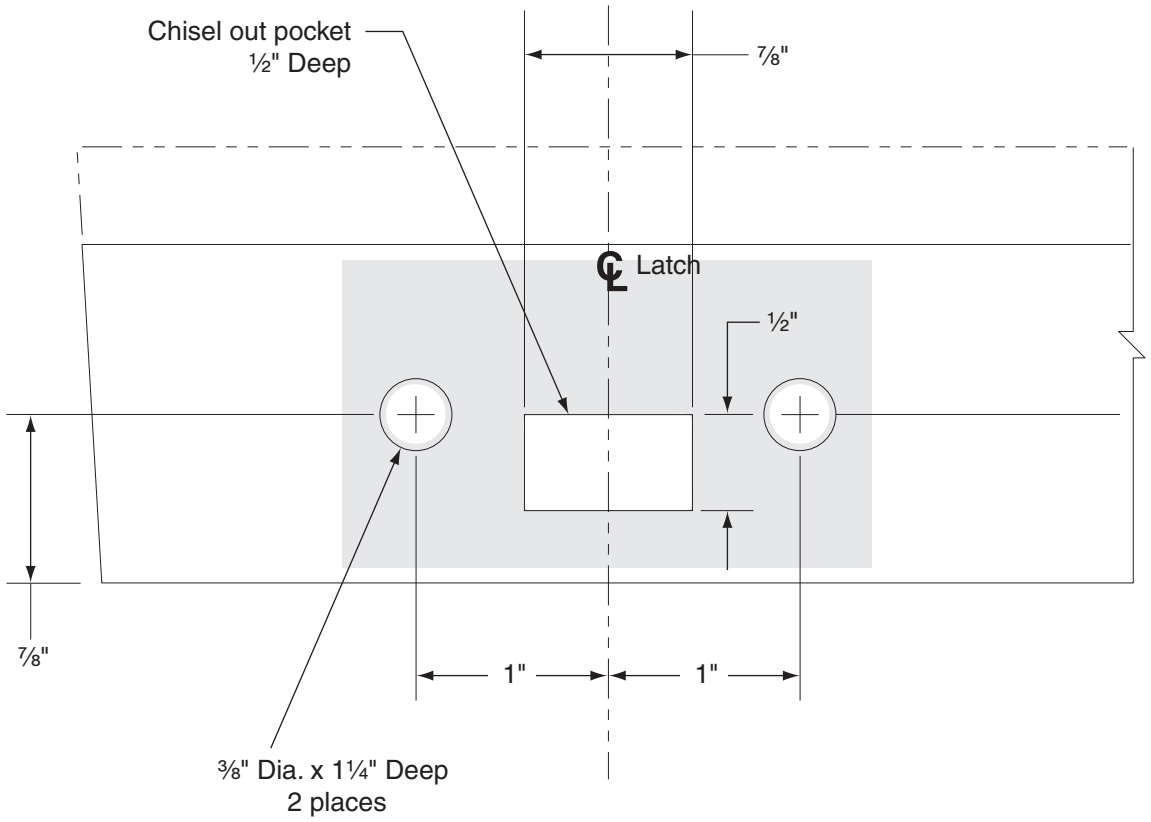

Clear holes of debris, then drop in anchors (slotted end first)

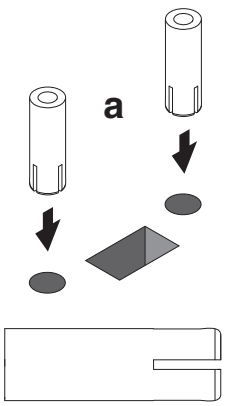

Secure the anchors using a hammer and punch

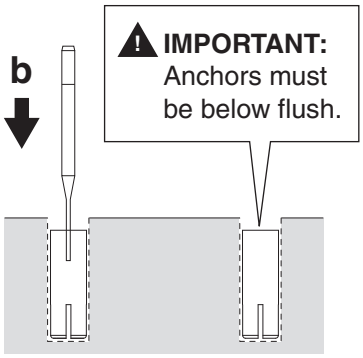

Install strike plate and secure with 2 screws

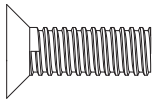

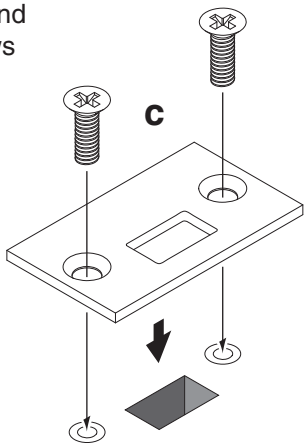

DEVICE APPLICATION SCHEDULE
33/3549A & 33/3549A-F SERIES DEVICE
98/9949 & 98/9949-F SERIES DEVICE
98/9949WDC & 98/9949WDC-F SERIES DEVICE

349 STRIKE

VON DUPRIN®

TEMPLATE NUMBER: 24101529_c

DATE: 9-21-16

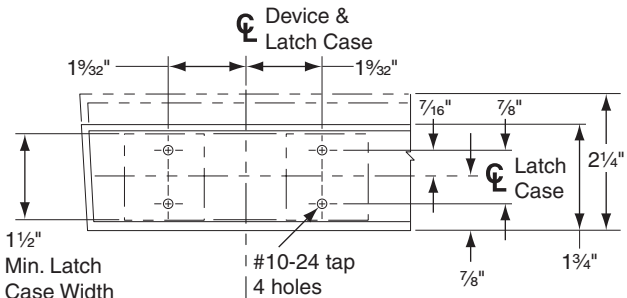

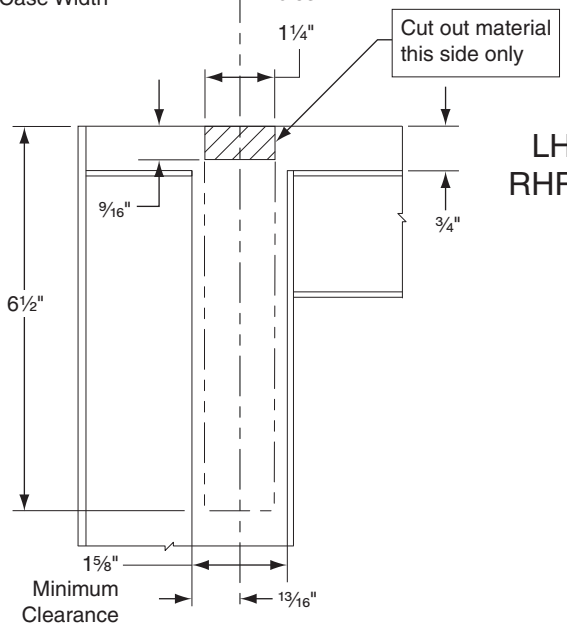

LHR SHOWN
RHR OPPOSITE

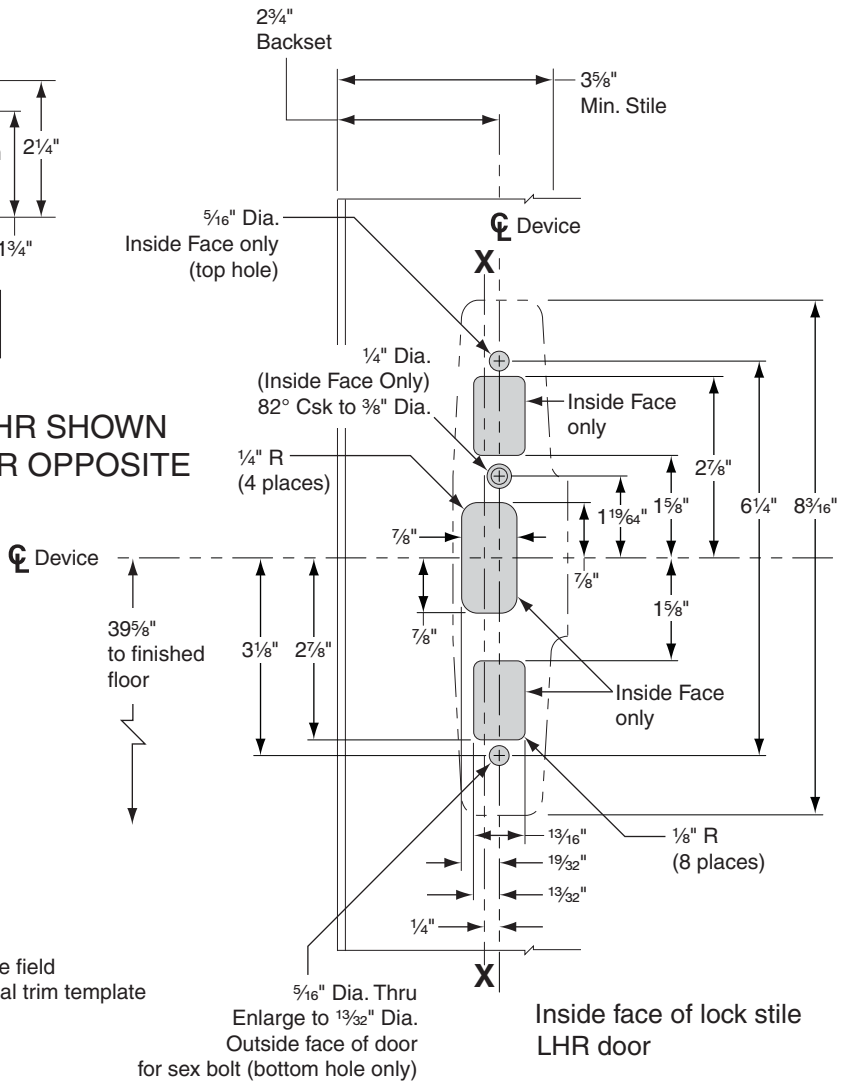

Inside face of lock stile
LHR door

- Glass bead kit available when required
- It is recommended the mounting holes be prepared in the field
- For outside trim preparation, when required add additional trim template

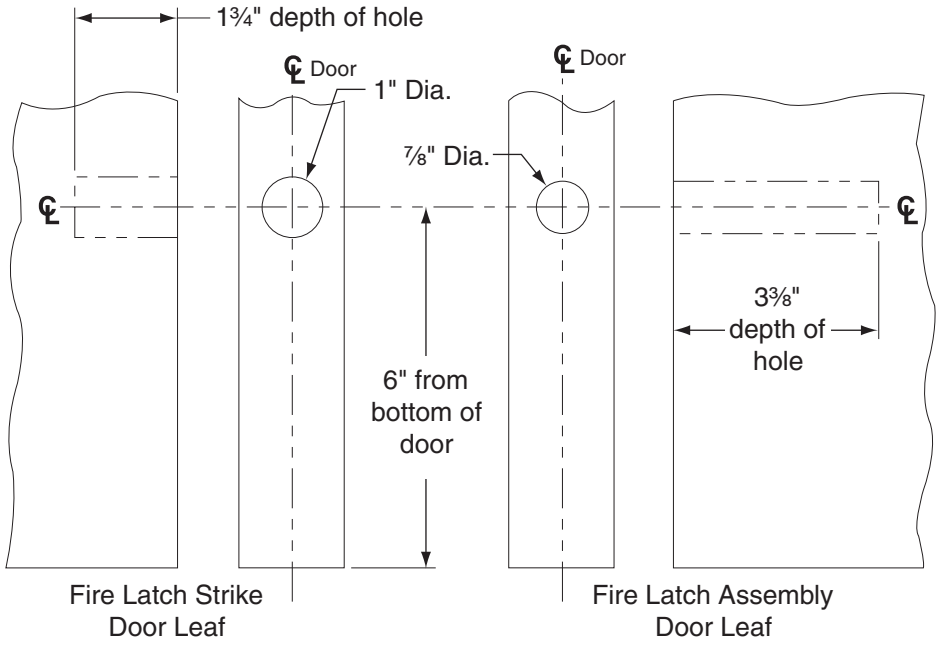

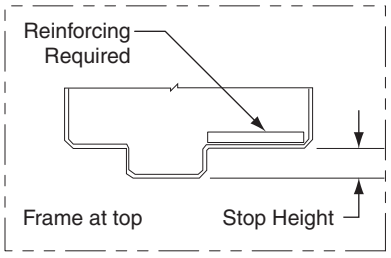

33/3549A-F-LBL
HOLLOW METAL DOOR FIRE APPLICATION
CONCEALED VERTICAL DEVICE

VON DUPRIN®

NOTE: SEE MASTER SHEET NO. 10001 FOR SUGGESTED REINFORCING

TEMPLATE NUMBER: 941358_b

DATE: 10-27-15

33A/35A Series Trims & Strikes

33A/35A Series Trims & Strikes

-

33A/35A Trims

386NL & DT TRIM

NOTES: SEE MASTER SHEET #10001 FOR SUGGESTED REINFORCING

TEMPLATE NUMBER: 20008_C

DATE: 5-25-16

VON DUPRIN®

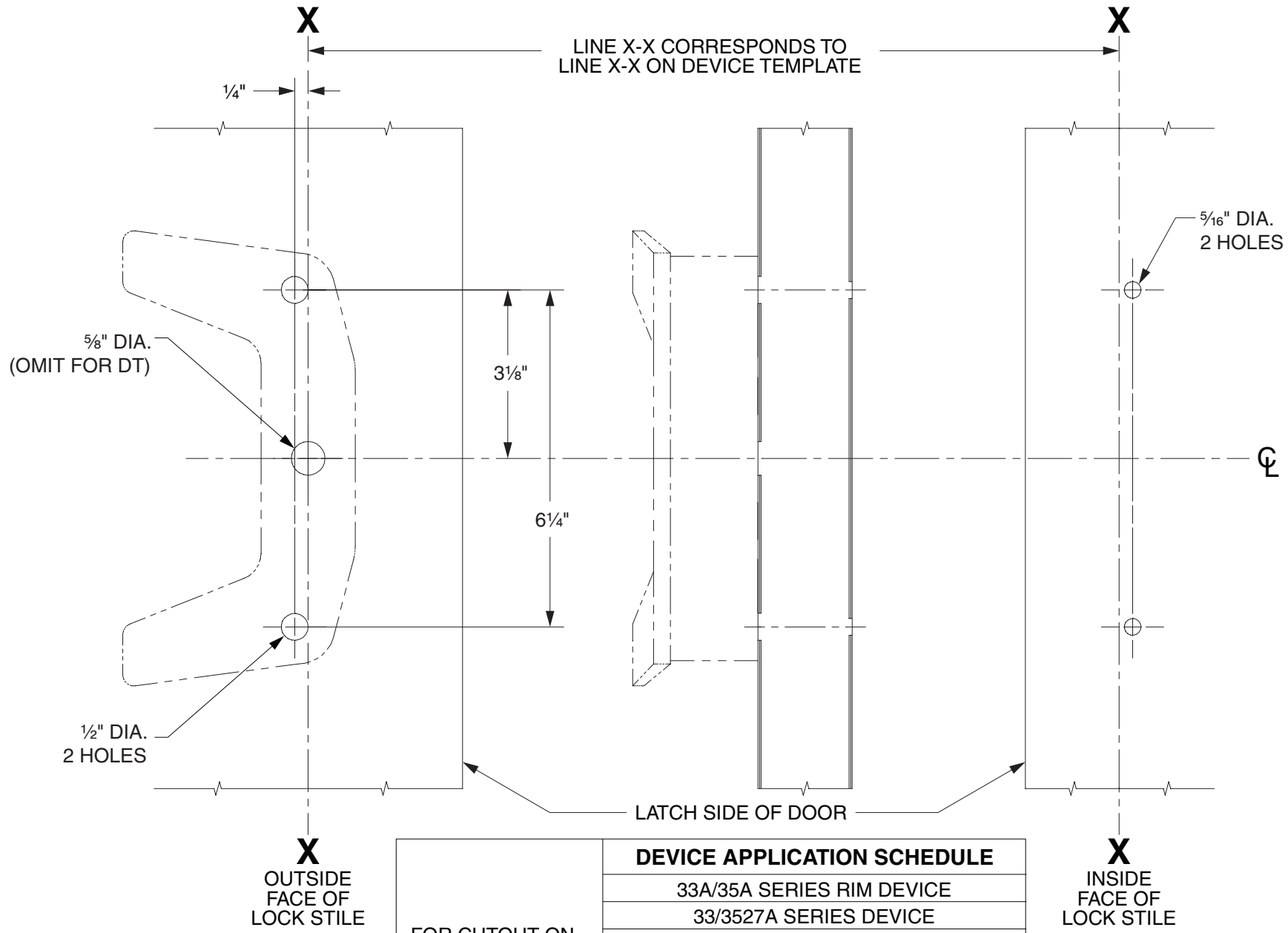

LHR SHOWN
RHR OPPOSITE

FOR CUTOUT ON INSIDE FACE OF DOOR, SEE DEVICE TEMPLATE	**DEVICE APPLICATION SCHEDULE**
	33A/35A SERIES RIM DEVICE
	33/3527A SERIES DEVICE
	33/3527A-F SERIES DEVICE
	33/3547A SERIES DEVICE
	33/3547A-F SERIES DEVICE
	33/3548A SERIES DEVICE
	33/3548A-F SERIES DEVICE
	33/3549A SERIES DEVICE
	33/3549A-F SERIES DEVICE

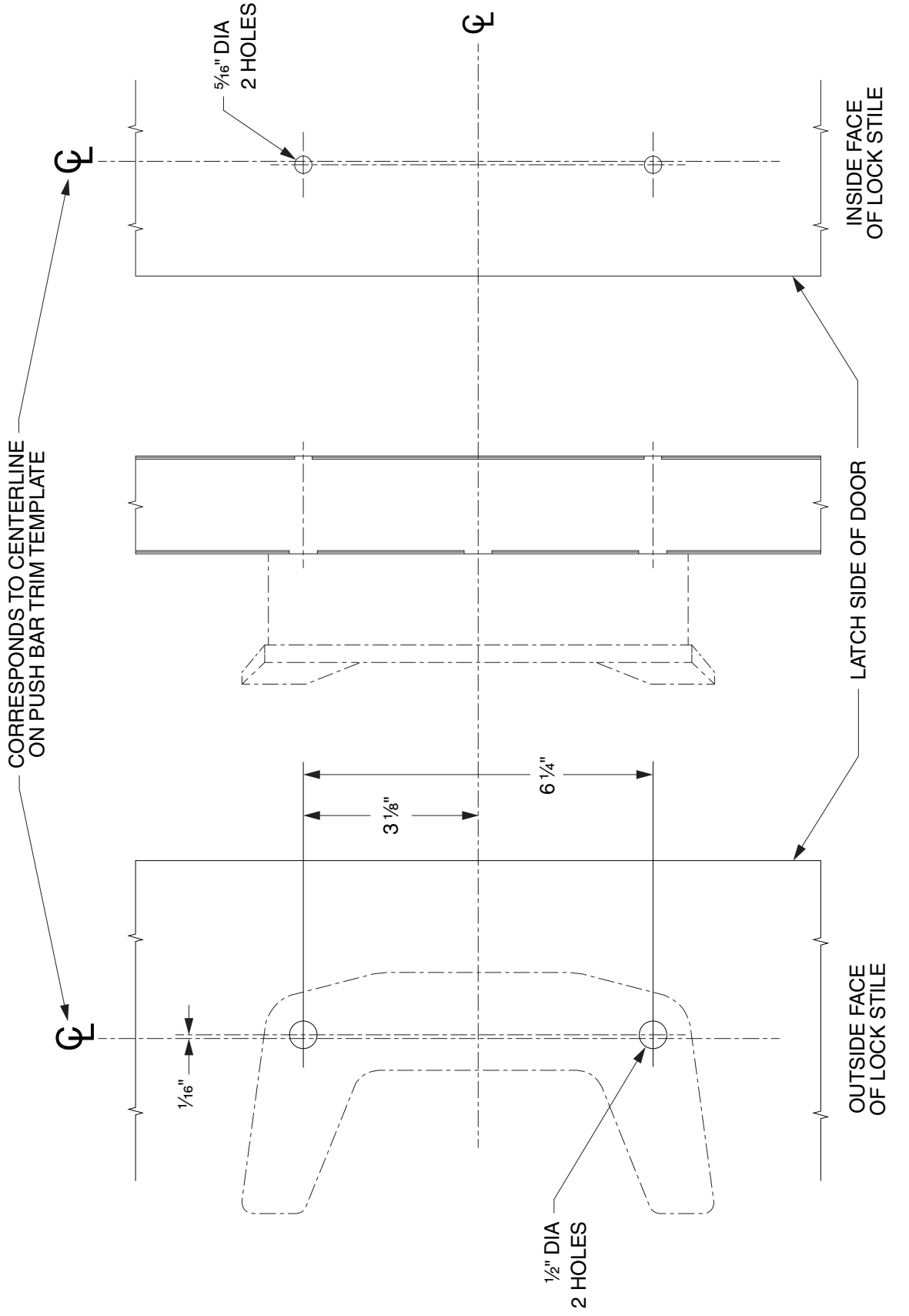

386DT TRIM FOR BACK TO BACK MOUNTING WITH 330/350 PUSHBAR

VON DUPRIN®

NOTES: SEE MASTER SHEET #10001 FOR SUGGESTED REINFORCING

TEMPLATE NUMBER: 20009_c

DATE: 05-31-13

NOTES: SEE MASTER SHEET #10001 FOR SUGGESTED REINFORCING

01 Mod Trim

TEMPLATE NUMBER: 20441_a

DATE: 05-23-13

VON DUPRIN®

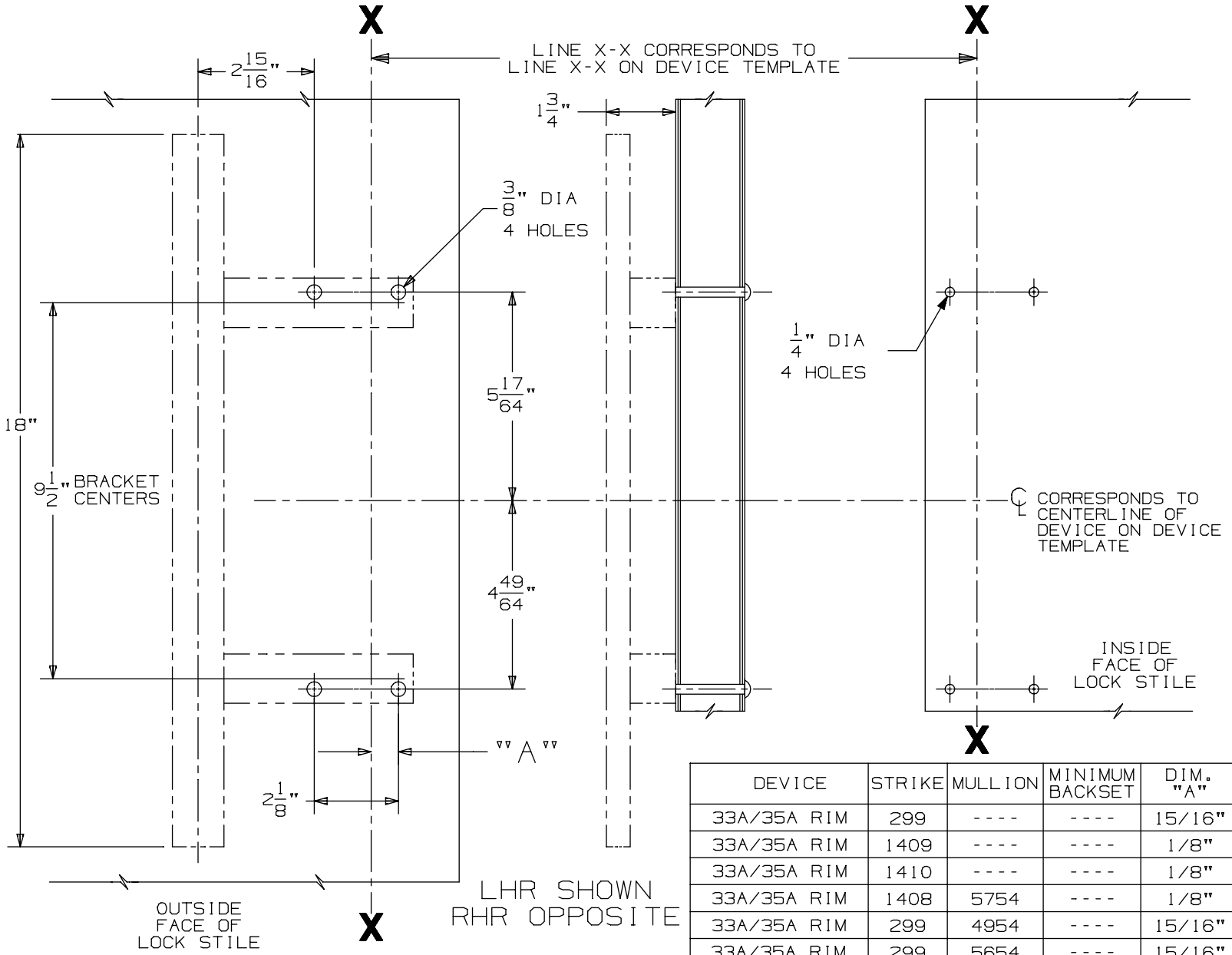

DEVICE	STRIKE	MULLION	MINIMUM BACKSET	DIM. "A"	MINIMUM STILE
33A/35A RIM	299	----	----	15/16"	3 1/2"
33A/35A RIM	1409	----	----	1/8"	3 1/2"
33A/35A RIM	1410	----	----	1/8"	3 1/2"
33A/35A RIM	1408	5754	----	1/8"	3 1/2"
33A/35A RIM	299	4954	----	15/16"	3 7/8"
33A/35A RIM	299	5654	----	15/16"	3 1/2"
33A/35A RIM	1606	1654	----	1/2"	3 7/8"
3327A/3527A	----	----	1 7/8"	11/16"	3 3/4"
33/3527A-F	----	----	1 7/8"	11/16"	3 3/4"
33/3547A/48A	----	----	1 7/8"	11/16"	3 3/4"
33/3547A/48A-F	----	----	2 3/4"	11/16"	4 3/8"

FOR CUTOUT ON INSIDE FACE OF DOOR SEE DEVICE TEMPLATE.

FOR STILES WIDER THAN MINIMUM LISTED, DIM. "A" MAY BE ADJUSTED ACORDINGLY IF DESIRED.
THRU BOLTS MUST NOT INTERFERE WITH CONCEALED VERTICAL RODS ON 33/3547A, 33/3548A, 33/3547A-F & 33/3548A-F DEVICES.

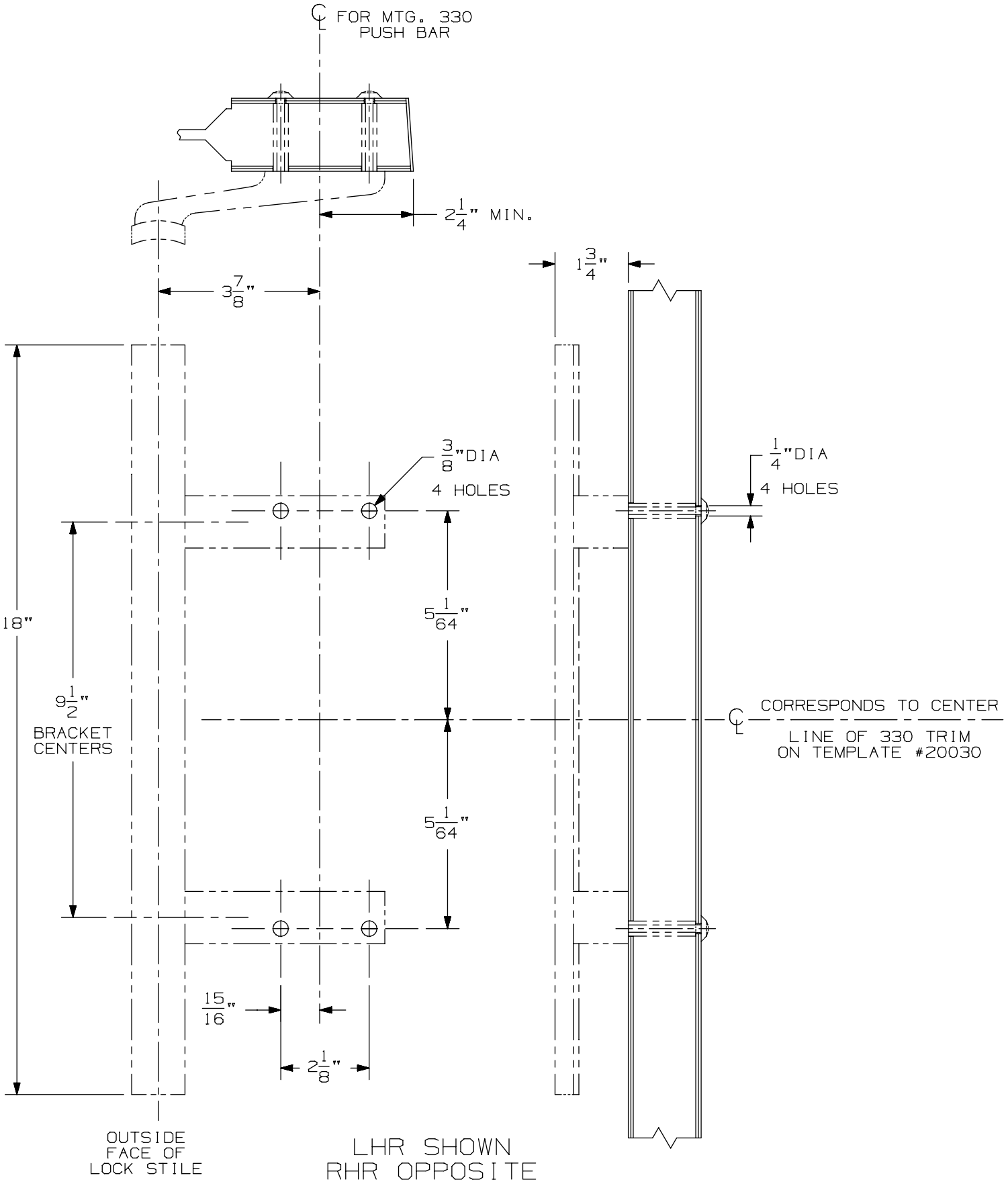

01 Mod Trim for 330 Push Bar

VON DUPRIN®

NOTES: SEE MASTER SHEET #10001 FOR SUGGESTED REINFORCING

TEMPLATE NUMBER: 20442_a

DATE: 05-23-13

392-6 (PULL BELOW CENTER)

FOR 388 CYLINDER ASSY, TL OR DT APPLICATIONS

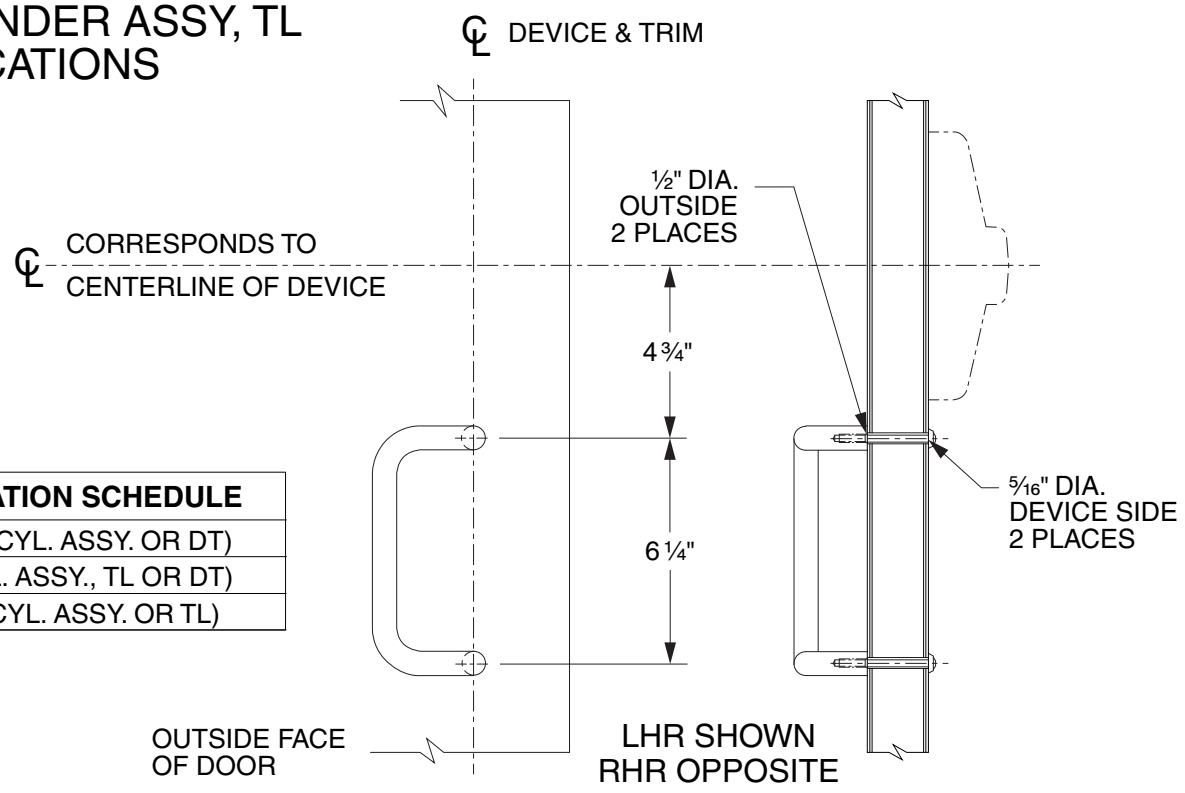

DEVICE APPLICATION SCHEDULE
33A/35A RIM (388 CYL. ASSY. OR DT)
33/3527A (388 CYL. ASSY., TL OR DT)
33/3527A-F (388 CYL. ASSY. OR TL)

392-6 (PULL ON CENTER)

FOR TL OR DT APPLICATIONS

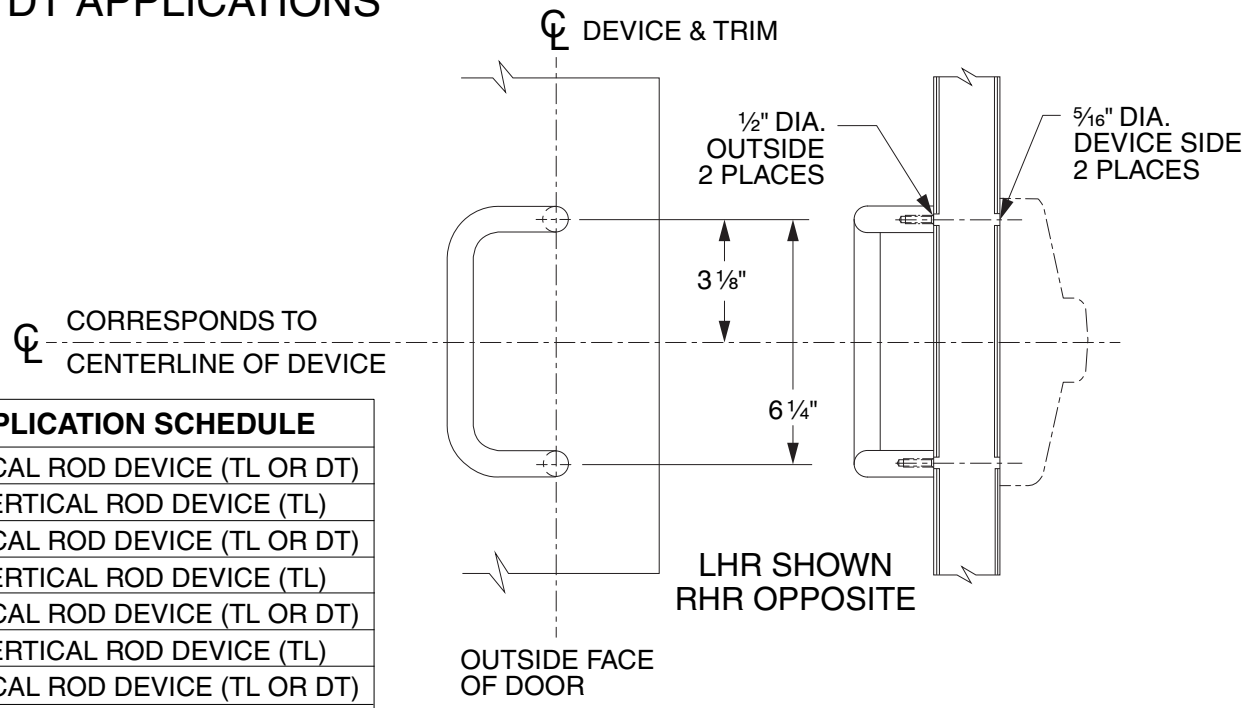

DEVICE APPLICATION SCHEDULE
33/3527A VERTICAL ROD DEVICE (TL OR DT)
33/3527A-F VERTICAL ROD DEVICE (TL)
33/3547A VERTICAL ROD DEVICE (TL OR DT)
33/3547A-F VERTICAL ROD DEVICE (TL)
33/3548A VERTICAL ROD DEVICE (TL OR DT)
33/3548A-F VERTICAL ROD DEVICE (TL)
33/3549A VERTICAL ROD DEVICE (TL OR DT)
33/3549A-F VERTICAL ROD DEVICE (TL)

392-6 PULL

VON DUPRIN®

NOTES: SEE MASTER SHEET #10001 FOR SUGGESTED REINFORCING

TEMPLATE NUMBER: 20454_c

DATE: 05-31-13

IVES 8190HD-0 PULL

FOR 388 CYLINDER ASSY,
TL OR DT APPLICATIONS

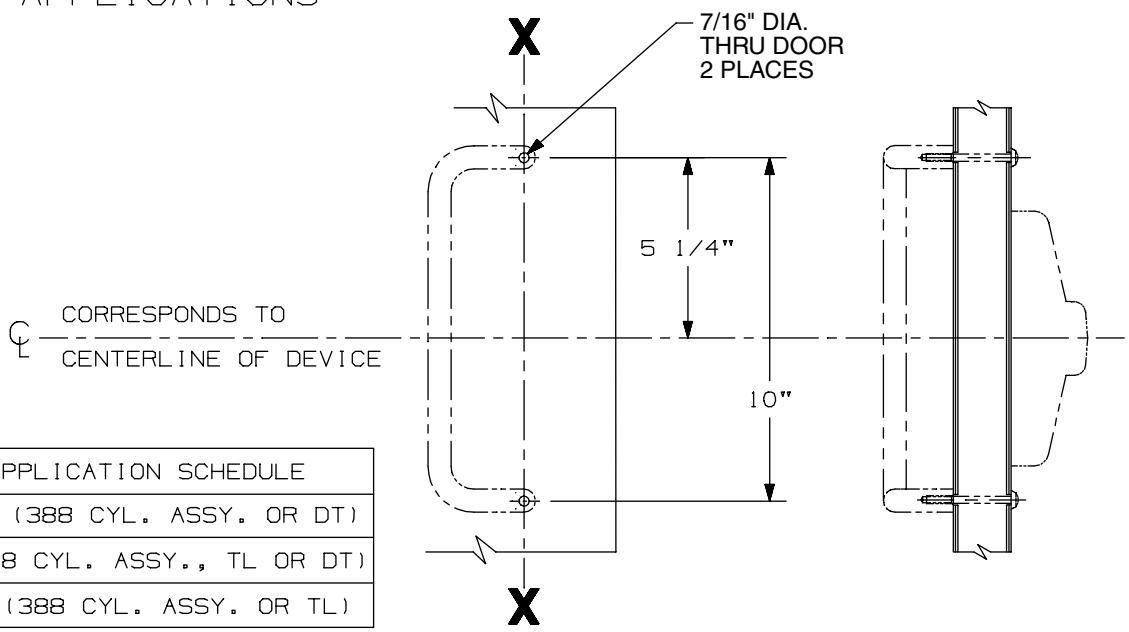

DEVICE APPLICATION SCHEDULE
33A/35A RIM (388 CYL. ASSY. OR DT)
33/3527A (388 CYL. ASSY., TL OR DT)
33/3527A-F (388 CYL. ASSY. OR TL)

IVES 8190HD-2 PULL

FOR 388 CYLINDER ASSY,
TL OR DT APPLICATIONS

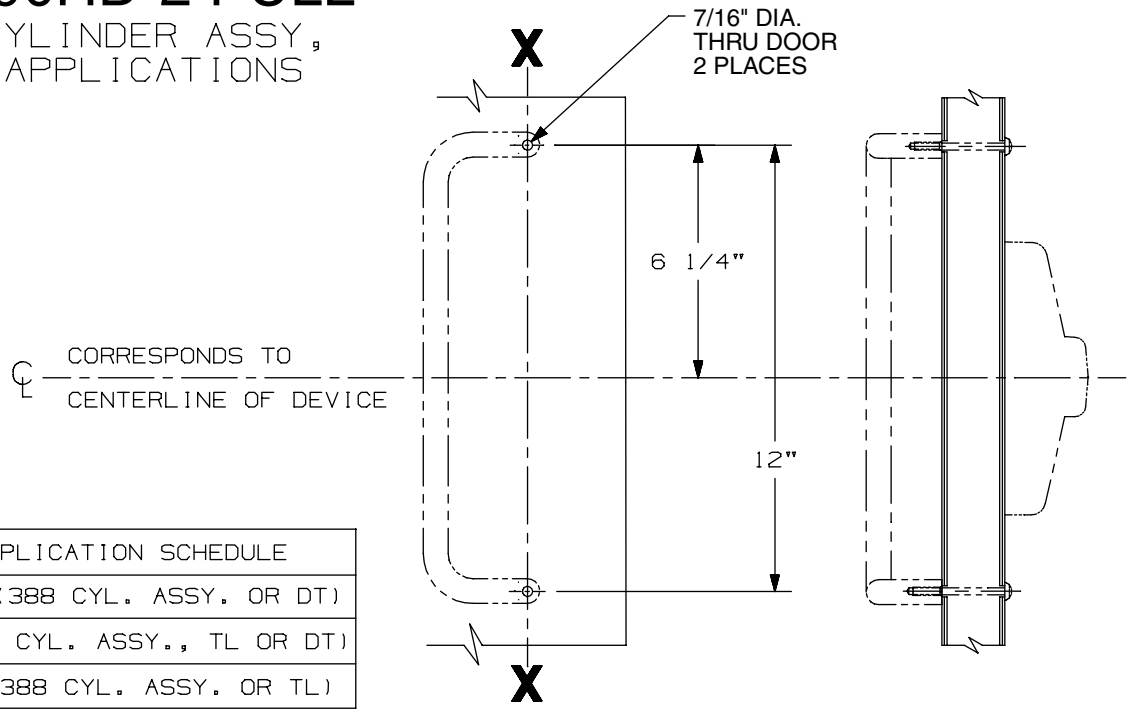

DEVICE APPLICATION SCHEDULE
33A/35A RIM (388 CYL. ASSY. OR DT)
33/3527A (388 CYL. ASSY., TL OR DT)
33/3527A-F (388 CYL. ASSY. OR TL)

Ives 8190HD-0 & 8190HD-2 Pull

VON DUPRIN®

NOTES: SEE MASTER SHEET #10001 FOR SUGGESTED REINFORCING

TEMPLATE NUMBER: 20455_b

DATE: 06-05-15

388NL CYLINDER CONTROL

NOTES: SEE MASTER SHEET #10001 FOR SUGGESTED REINFORCING

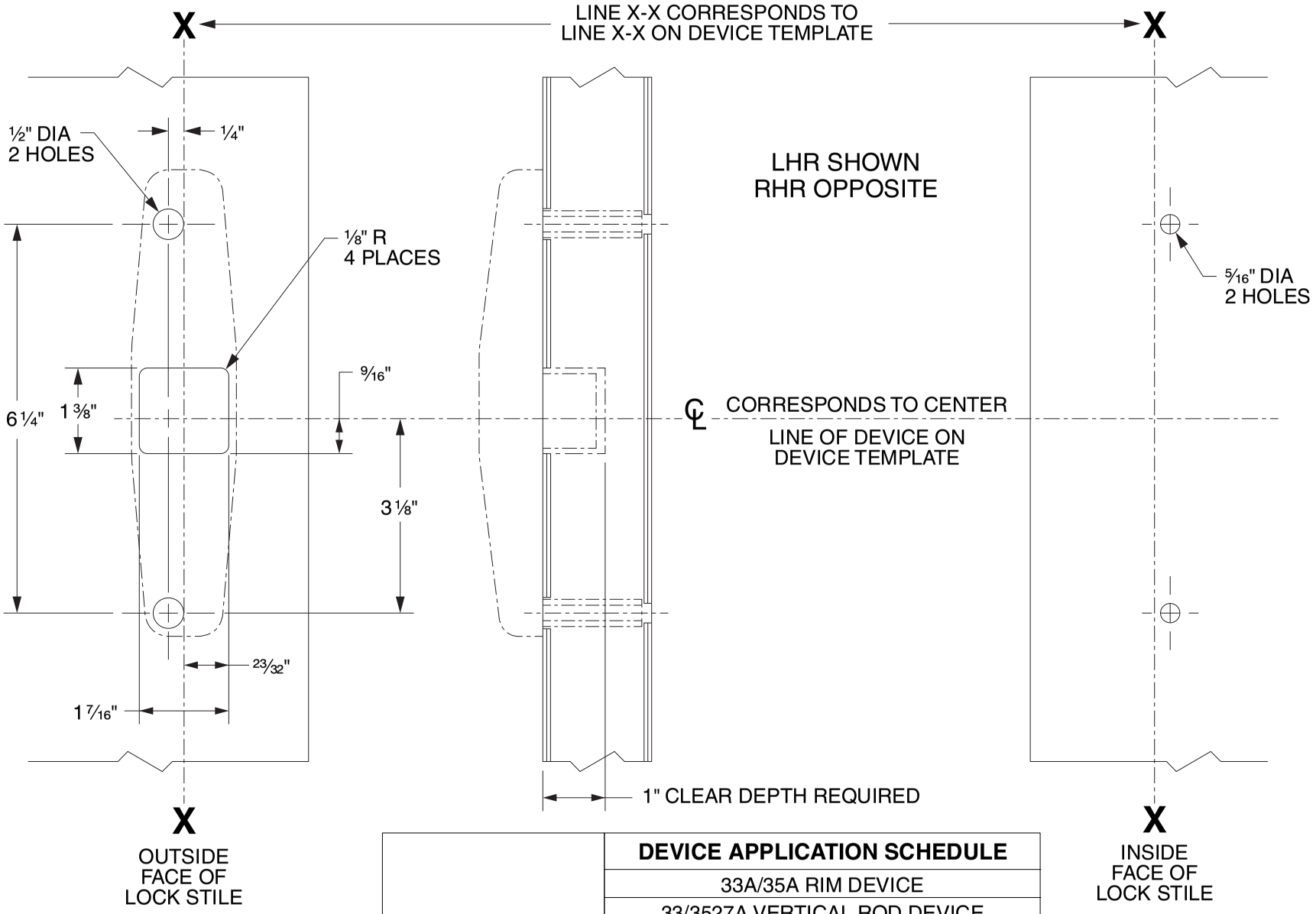

	DEVICE APPLICATION SCHEDULE
FOR CUTOUT ON INSIDE FACE OF DOOR SEE DEVICE TEMPLATE	33A/35A RIM DEVICE
	33/3527A VERTICAL ROD DEVICE
	33/3527A-F VERTICAL ROD DEVICE
	33/3547A VERTICAL ROD DEVICE
	33/3547A-F VERTICAL ROD DEVICE
	33/3548A VERTICAL ROD DEVICE
	33/3548A-F VERTICAL ROD DEVICE
	33/3549A VERTICAL ROD DEVICE
	33/3549A-F VERTICAL ROD DEVICE

VON DUPRIN®

TEMPLATE NUMBER: 40079_d

DATE: 05-31-13

360T, 360L, 360T-BE, 360L-BE CONTROL

NOTES: SEE MASTER SHEET #10001 FOR SUGGESTED REINFORCING

TEMPLATE NUMBER: 40080_e

DATE: 04-06-15

VON DUPRIN®

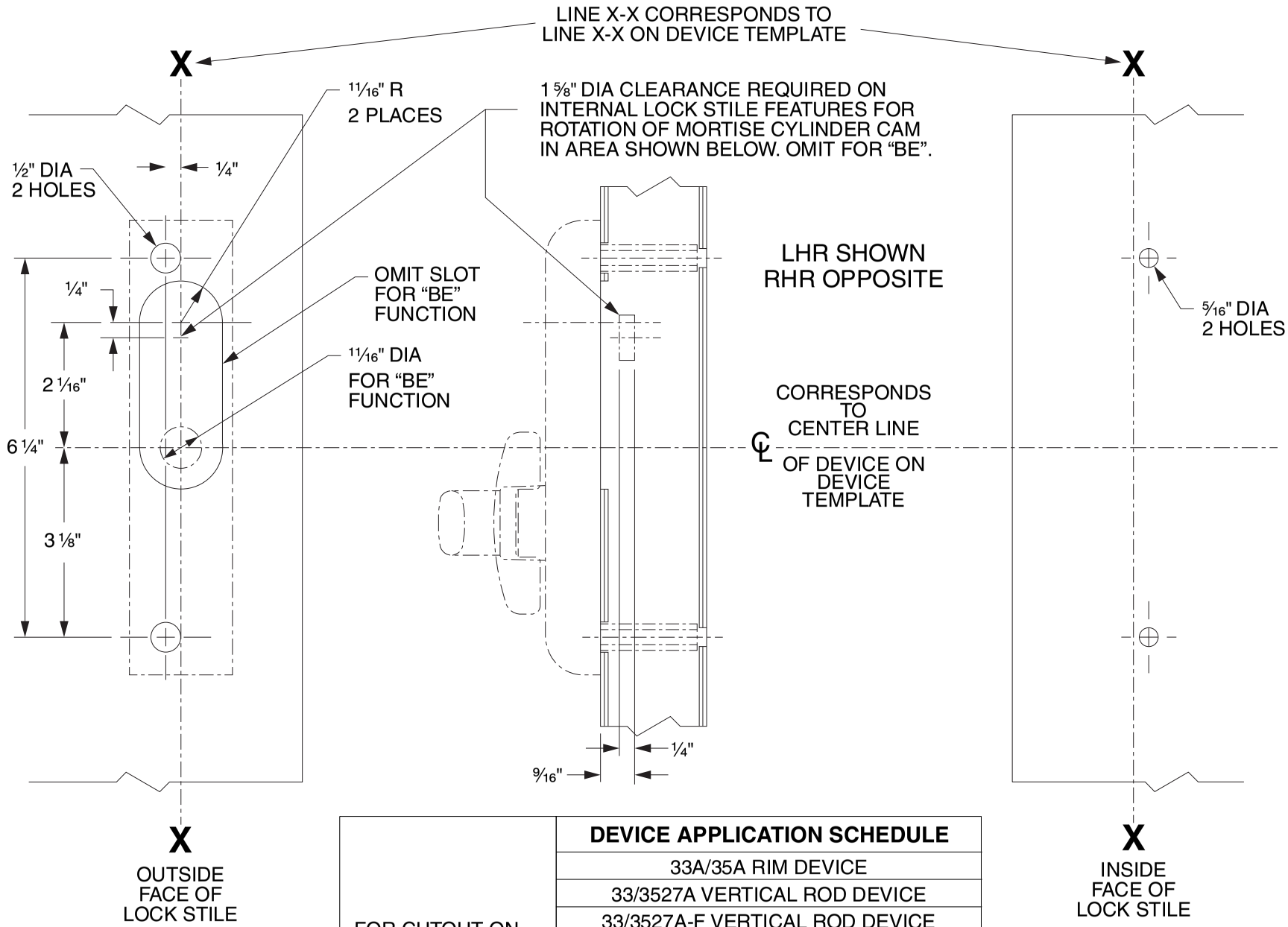

	DEVICE APPLICATION SCHEDULE
FOR CUTOUT ON INSIDE FACE OF DOOR SEE DEVICE TEMPLATE	33A/35A RIM DEVICE
	33/3527A VERTICAL ROD DEVICE
	33/3527A-F VERTICAL ROD DEVICE
	33/3547A VERTICAL ROD DEVICE
	33/3547A-F VERTICAL ROD DEVICE
	33/3548A VERTICAL ROD DEVICE
	33/3548A-F VERTICAL ROD DEVICE
	33/3549A VERTICAL CABLE DEVICE
	33/3549A-F VERTICAL CABLE DEVICE

360-L-DT Control

NOTES: SEE MASTER SHEET #10001 FOR SUGGESTED REINFORCING

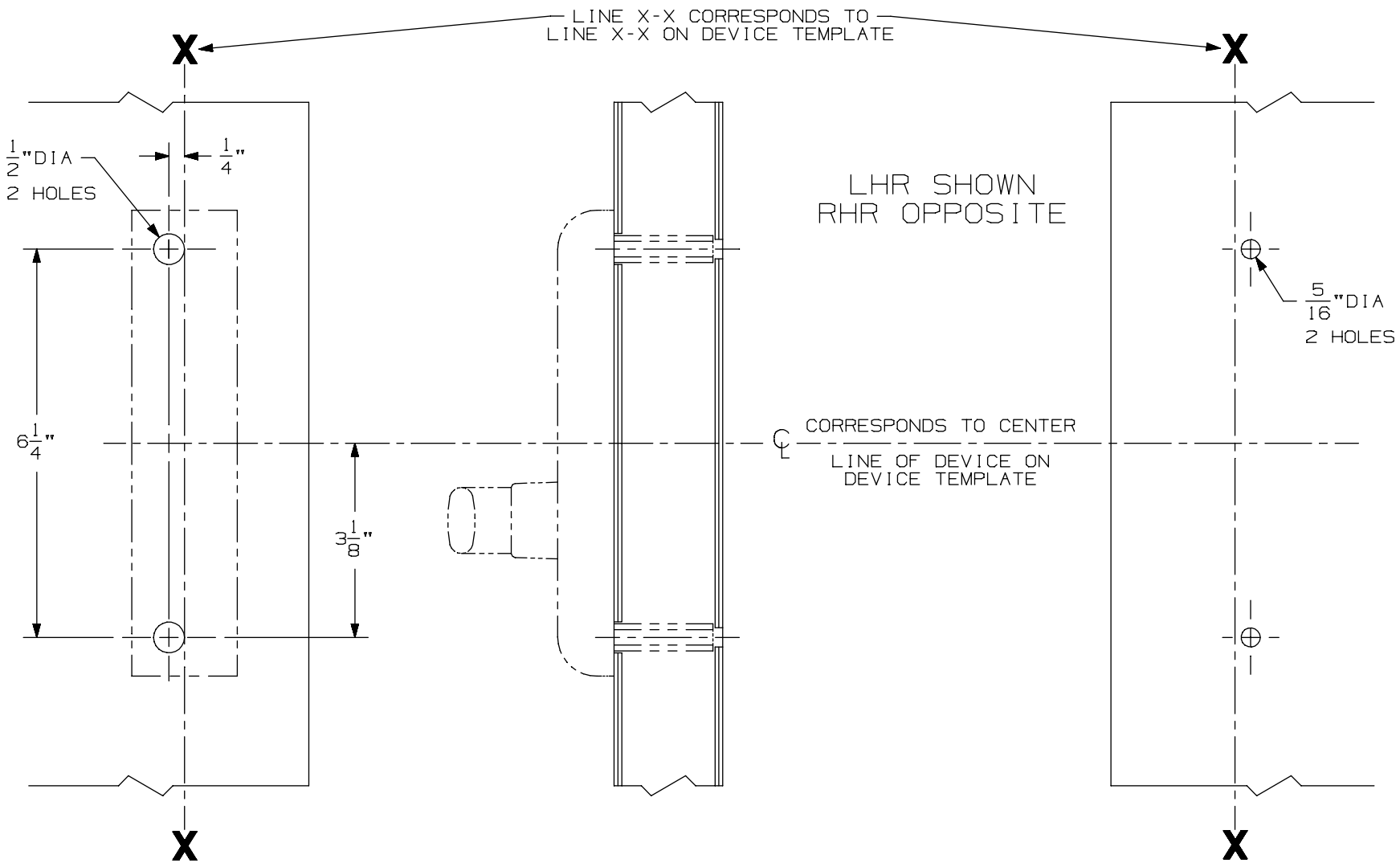

FOR CUTOUT ON INSIDE FACE OF DOOR SEE DEVICE TEMPLATE	DEVICE APPLICATION SCHEDULE
	33A/35A RIM DEVICE
	3327A/3527A VERTICAL ROD DEVICE
	3347A/3547A VERTICAL ROD DEVICE
	3348A/3548A VERTICAL ROD DEVICE

VON DUPRIN®

TEMPLATE NUMBER: 40081_a

DATE: 05-28-13

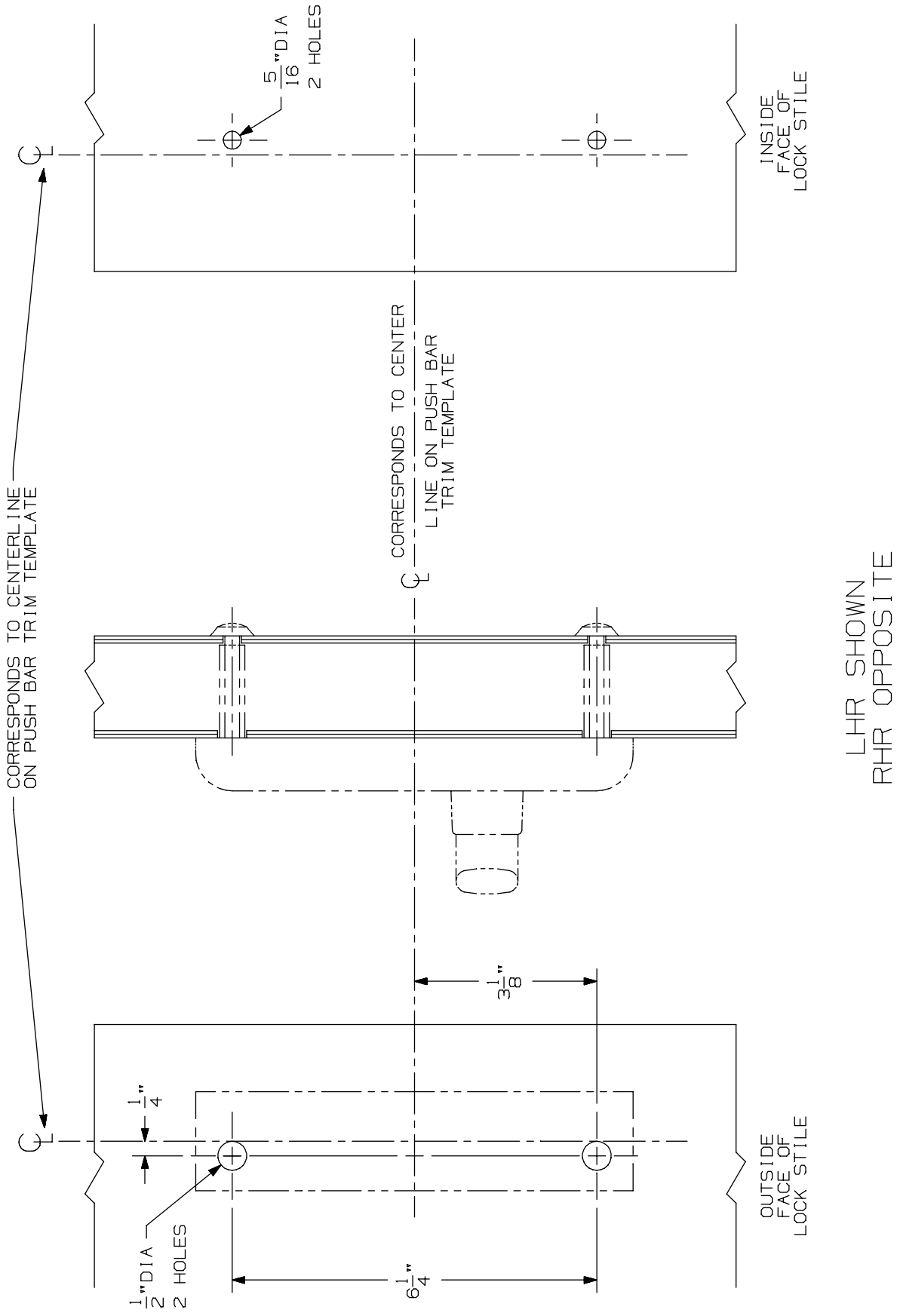

360-L-DT Control for Back to Back Mounting w/ 330/350 Push Bar Trim

VON DUPRIN®

NOTES: SEE MASTER SHEET #10001 FOR SUGGESTED REINFORCING

TEMPLATE NUMBER: 40082_a

DATE: 05-28-13

E360T & E360L CONTROL

NOTES: SEE MASTER SHEET #10001 FOR SUGGESTED REINFORCING

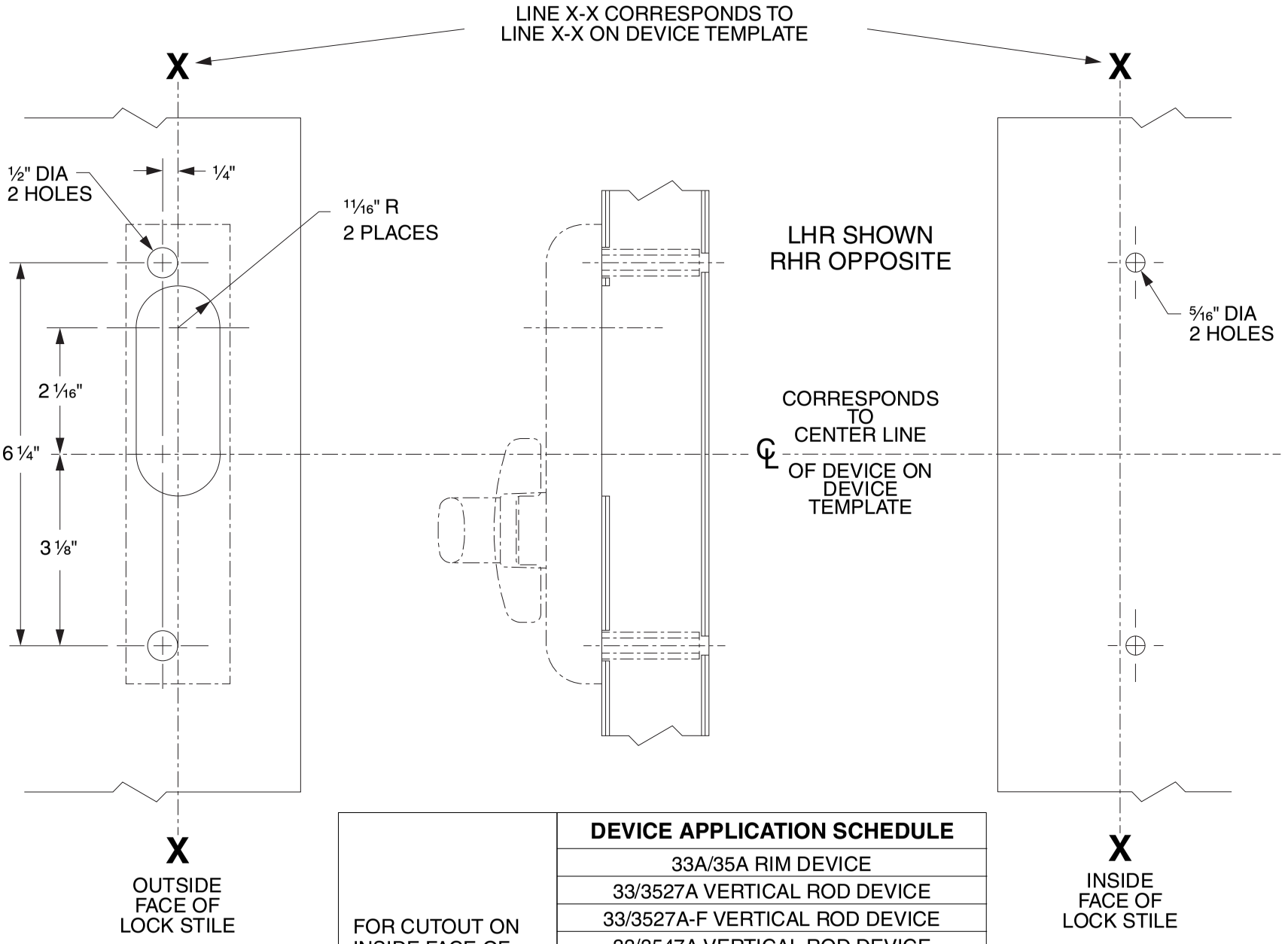

FOR CUTOUT ON INSIDE FACE OF DOOR SEE DEVICE TEMPLATE	DEVICE APPLICATION SCHEDULE
	33A/35A RIM DEVICE
	33/3527A VERTICAL ROD DEVICE
	33/3527A-F VERTICAL ROD DEVICE
	33/3547A VERTICAL ROD DEVICE
	33/3547A-F VERTICAL ROD DEVICE
	33/3548A VERTICAL ROD DEVICE
	33/3548A-F VERTICAL ROD DEVICE
	33/3549A VERTICAL ROD DEVICE
	33/3549A-F VERTICAL ROD DEVICE

VON DUPRIN®

TEMPLATE NUMBER: 40089_d

DATE: 05-31-13

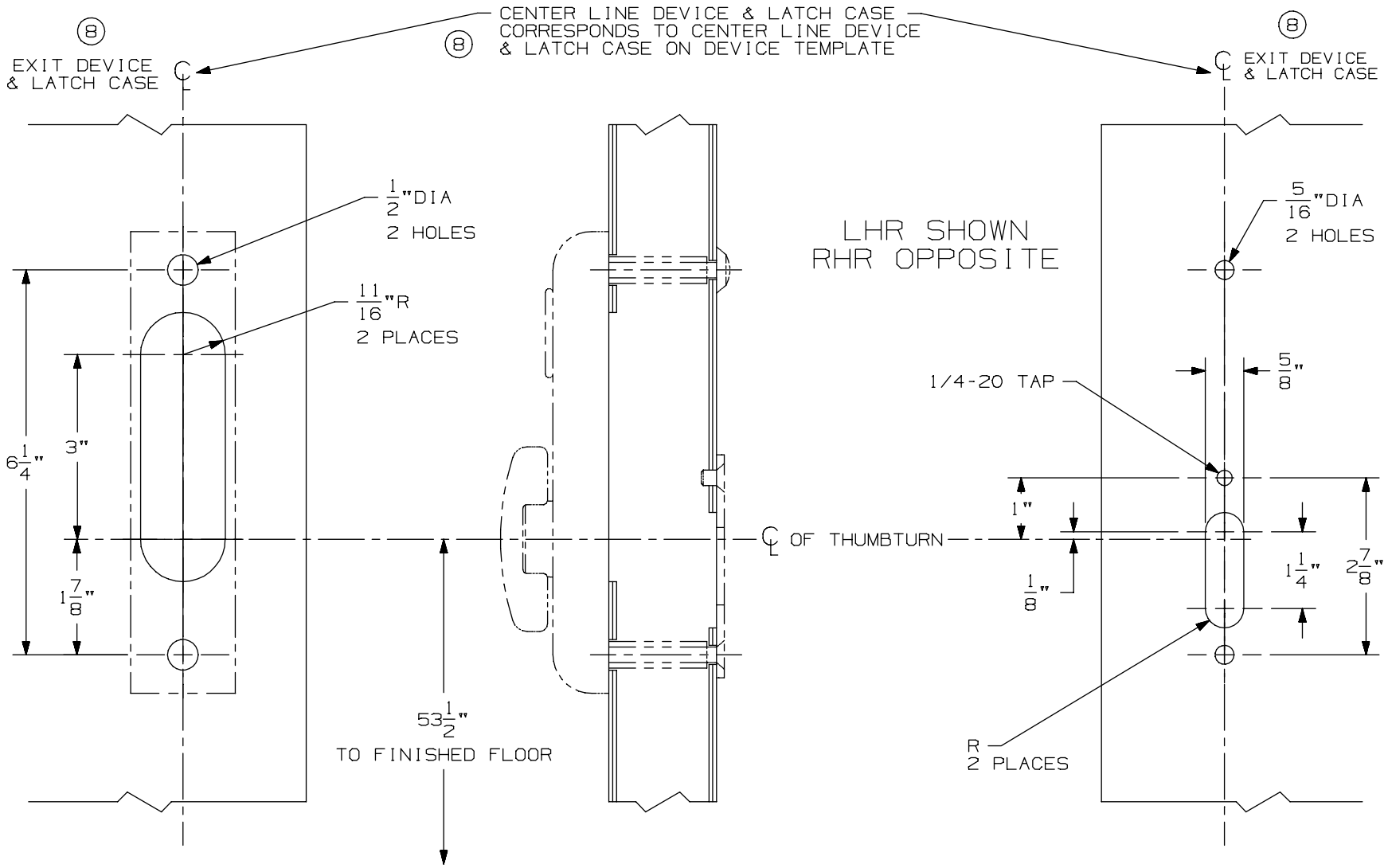

OUTSIDE
FACE OF
LOCK STILE

INSIDE
FACE OF
LOCK STILE

DEVICE APPLICATION SCHEDULE
2227 VERT. ROD DEVICE
2227-F VERT. ROD DEVICE
3327/3527 VERT. ROD DEVICE
8 3327A/3527A VERT. ROD DEVICE
8 3327A-F/3527A-F VERT. ROD DEVICE
9827/9927 VERT. ROD DEVICE
9827-F/9927-F VERT. ROD DEVICE

NOTES: SEE MASTER SHEET #10001 FOR SUGGESTED REINFORCING

374-T Control

VON DUPRIN®

TEMPLATE NUMBER: 40118_a

DATE: 05-28-13

374-T-BE Control

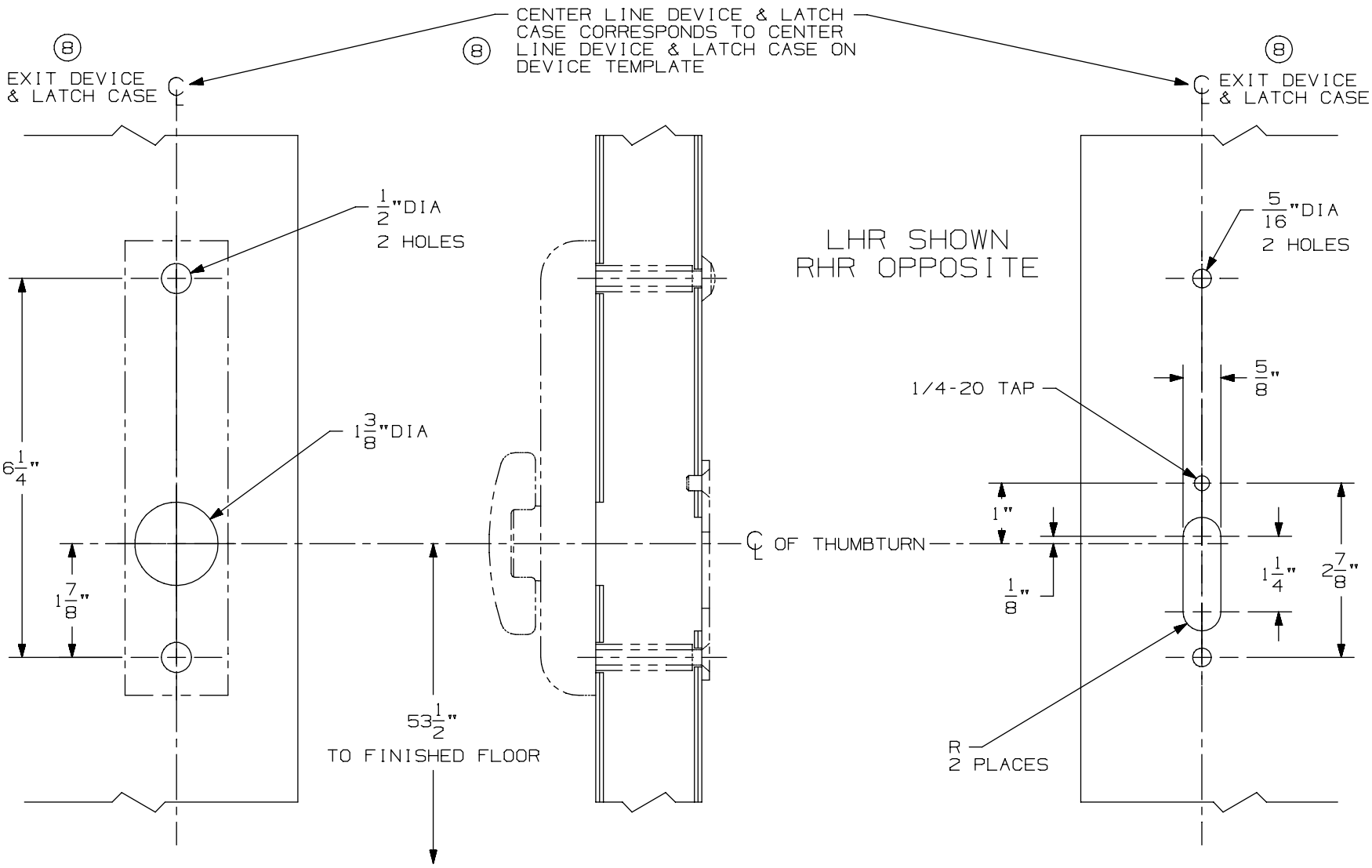

DEVICE APPLICATION SCHEDULE
2227 VERT. ROD DEVICE
2227-F VERT. ROD DEVICE
3327/3527 VERT. ROD DEVICE
(8) 3327A/3527A VERT. ROD DEVICE
(8) 3327A-F/3527A-F VERT. ROD DEVICE
9827/9927 VERT. ROD DEVICE
9827-F/9927-F VERT. ROD DEVICE

NOTES: SEE MASTER SHEET #10001 FOR SUGGESTED REINFORCING

TEMPLATE NUMBER: 40119_a

DATE: 05-28-13

VON DUPRIN®

376-T Control

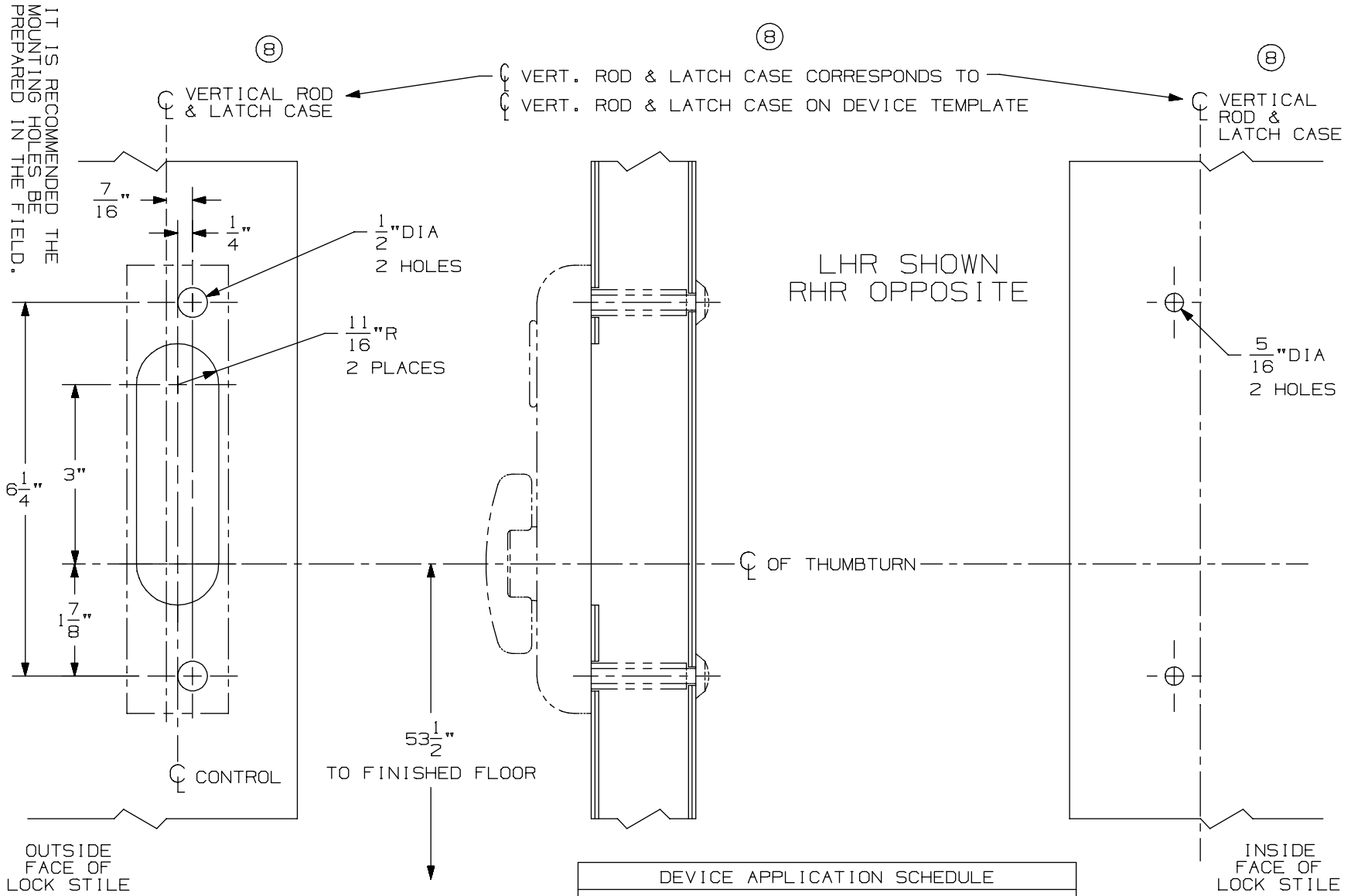

DEVICE APPLICATION SCHEDULE
5547/5547-F VERT. ROD DEVICE
8847-F VERT. ROD DEVICE
* 3347/3547 VERT. ROD DEVICE
3347-F/3547-F VERT. ROD DEVICE
⑧ * 3347A/3547A VERT. ROD DEVICE
⑧ 3347A-F/3547A-F VERT. ROD DEVICE
9847/9947 VERT. ROD DEVICE
9847-F/9947-F VERTICAL ROD DEVICE

⑧ * NOT TO BE USED WITH 1 1/16" LATCH CASE BACKSET ON BULLNOSE EDGE DOORS WITH WEATHERSTRIP CHANNEL.

NOTES: SEE MASTER SHEET #10001 FOR SUGGESTED REINFORCING

TEMPLATE NUMBER: 40114_a

DATE: 05-28-13

VON DUPRIN®

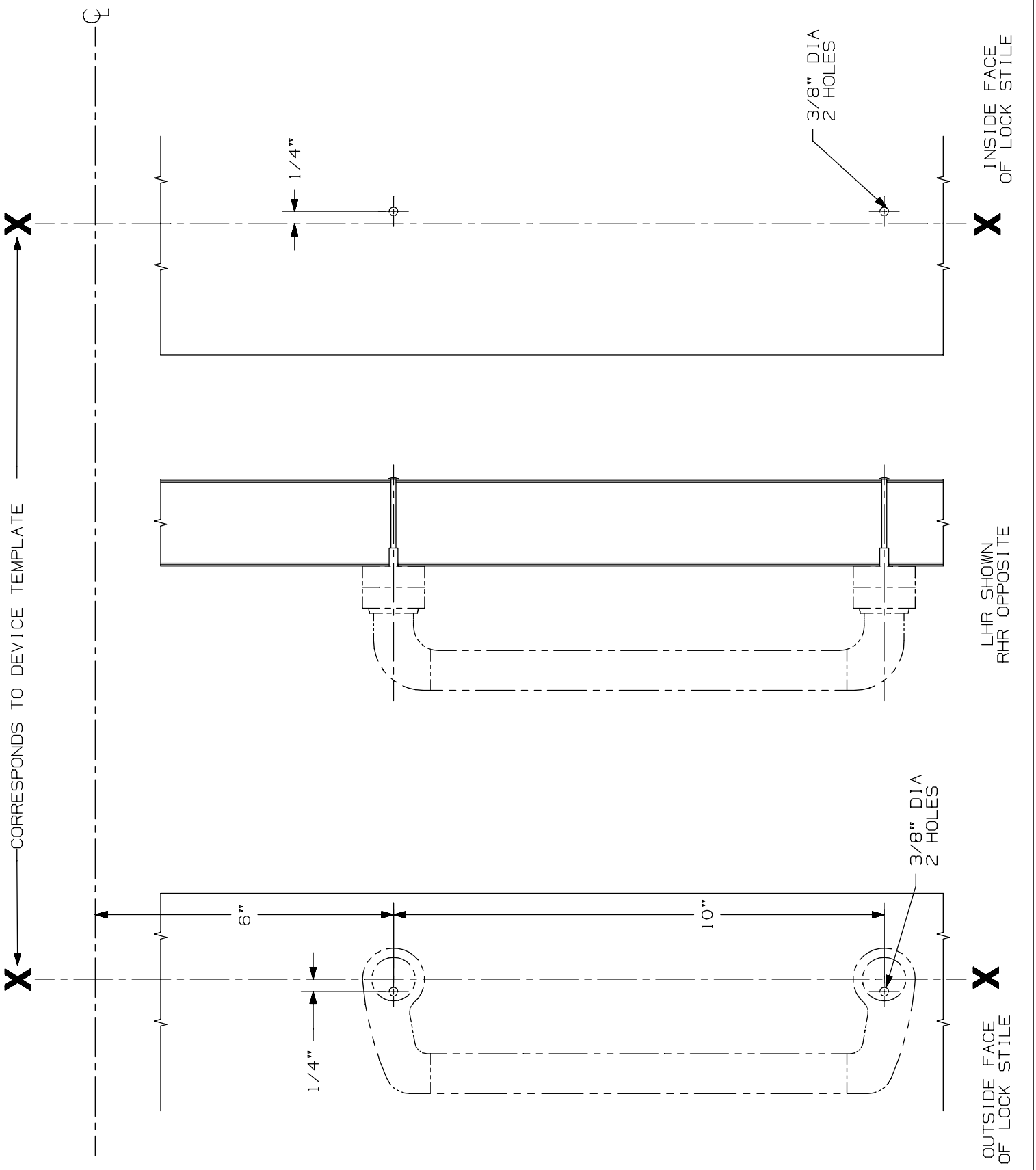

550 DT Trim w/ 33/35 Rim x 334 Control or 33A/35A Rim x 388 Control (Below Center App.)

VON DUPRIN®

NOTES: SEE MASTER SHEET #10001 FOR SUGGESTED REINFORCING

TEMPLATE NUMBER: 20049_a

DATE: 05-23-13

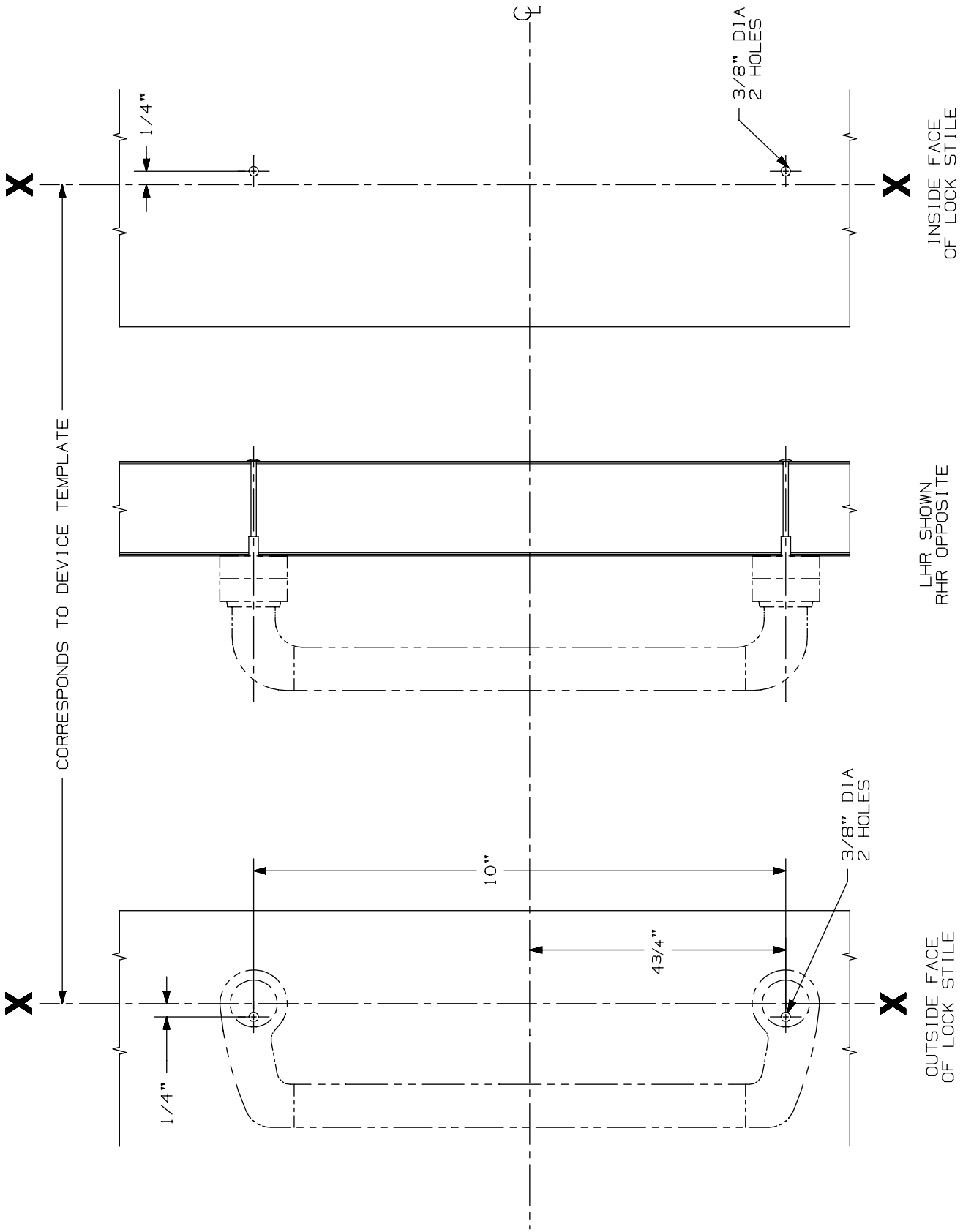

550 DT Trim for 33/35 & 33A/35A Rim Device
Rim Device (Straddle Application)

VON DUPRIN®

NOTES: SEE MASTER SHEET #10001 FOR SUGGESTED REINFORCING

TEMPLATE NUMBER: 20053_a

DATE: 05-23-13

33A/35A Series Trims & Strikes

-

33A/35A Strikes

BLADE STOP APPLICATION | 266 STRIKE ④

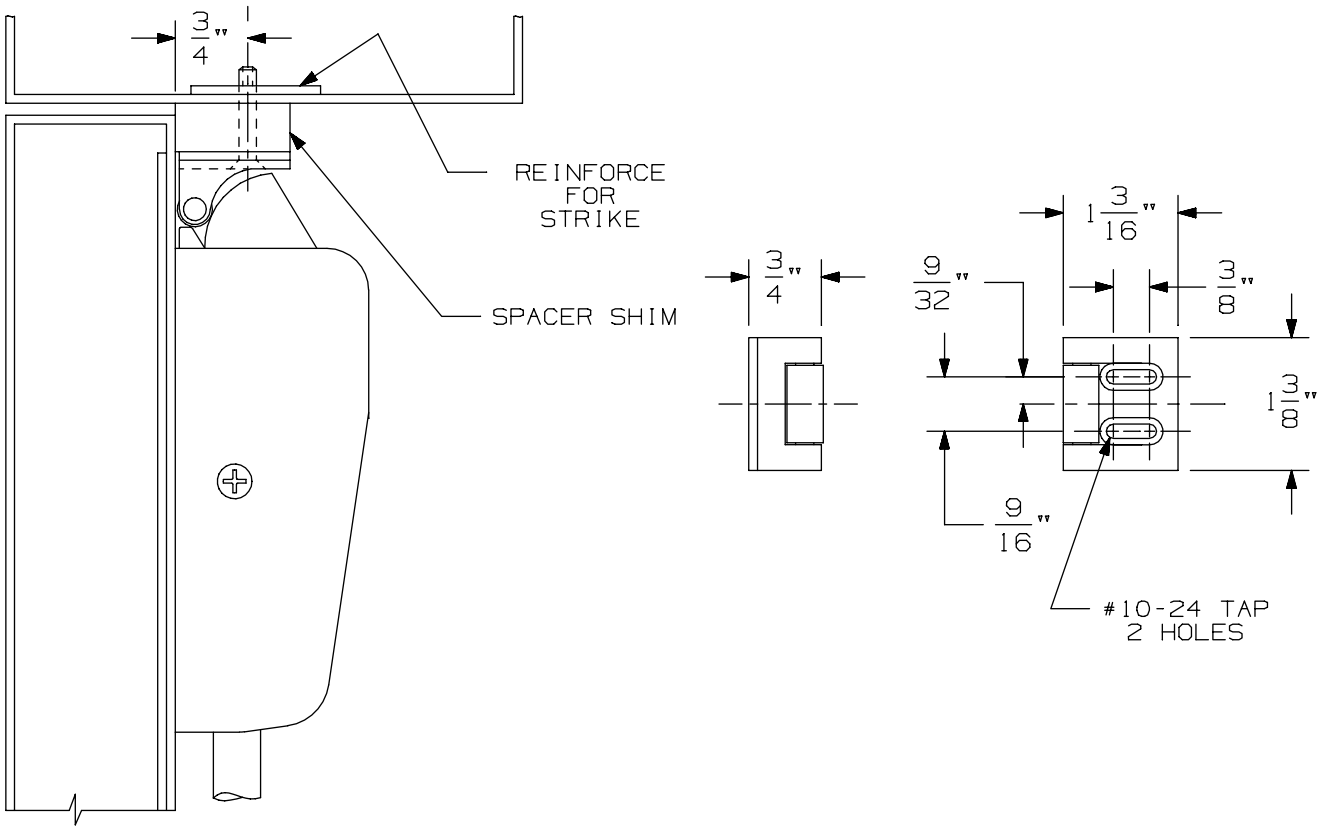

NOT HANDED

NOTE: LATCH CASE MOUNTING HOLES TO BE PREPARED AT INSTALLATION ON DOOR.

266 Strike	VON DUPRIN®	
NOTES: SEE MASTER SHEET #10001 FOR SUGGESTED REINFORCING	TEMPLATE NUMBER: 30010_a	DATE: 05-23-13

RIM APPLICATION

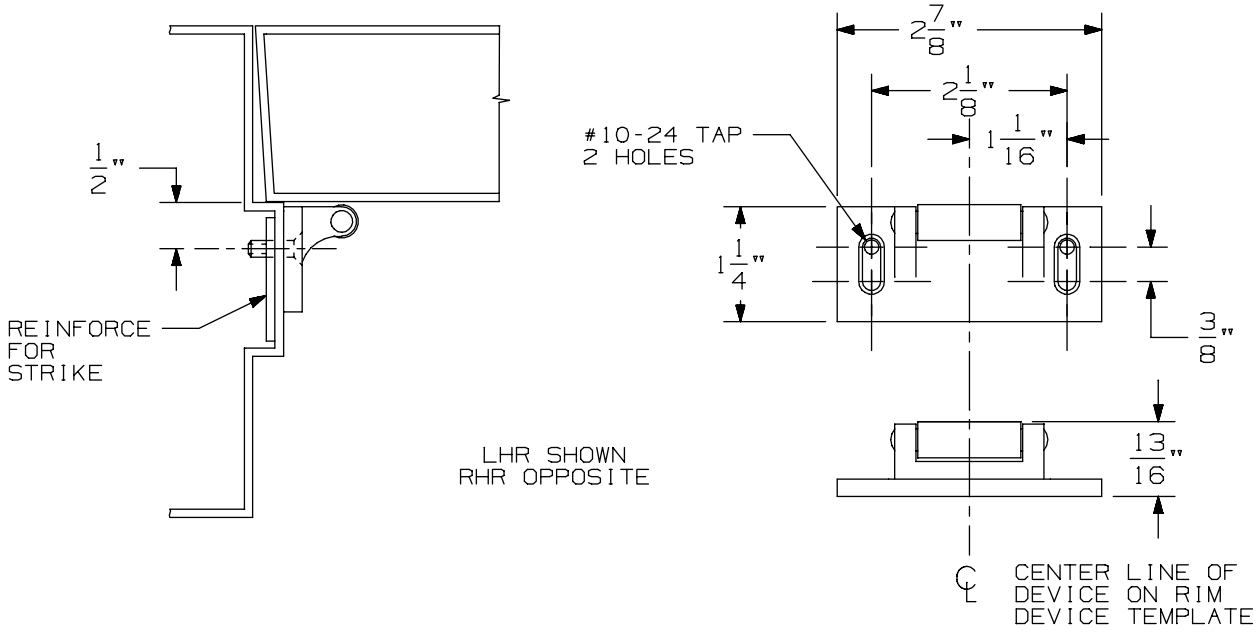

VERTICAL APPLICATION

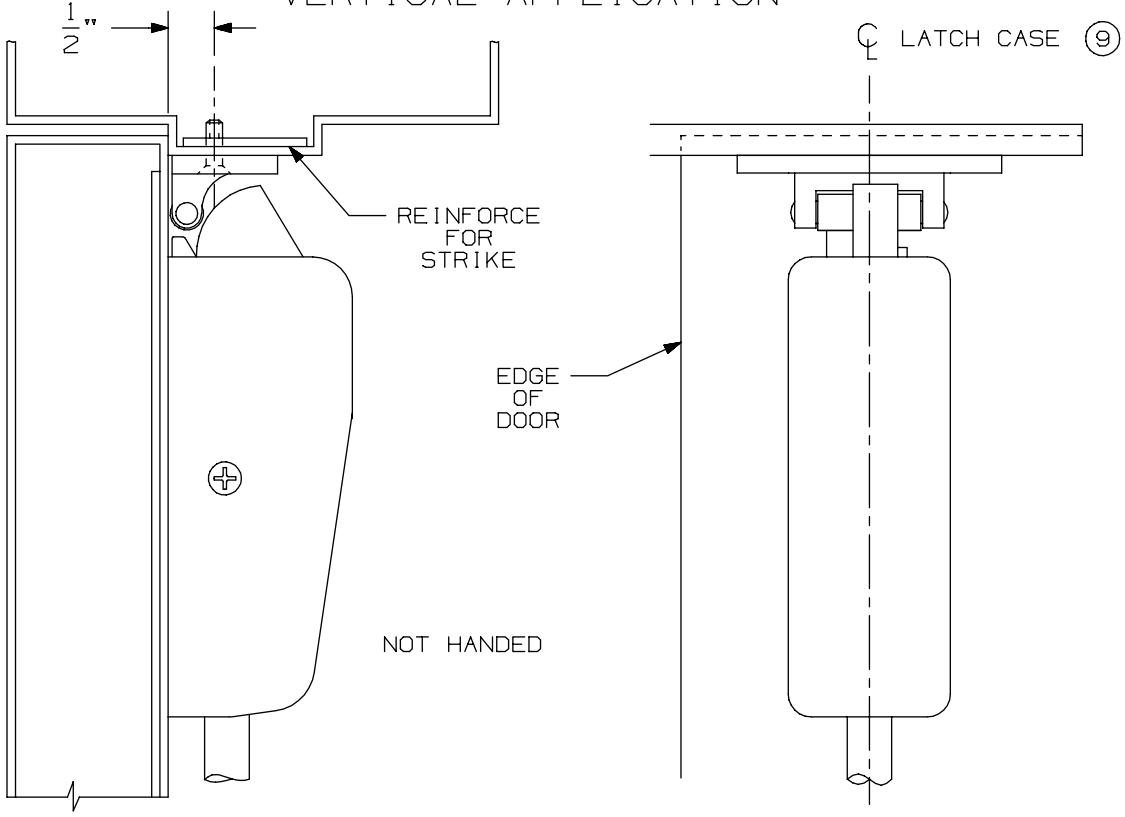

NOTE: LATCH CASE MOUNTING HOLES TO BE PREPARED AT INSTALLATION ON DOOR.

299 & 299F Strike

VON DUPRIN®

NOTES: SEE MASTER SHEET #10001 FOR SUGGESTED REINFORCING

TEMPLATE NUMBER: 30039_a

DATE: 05-23-13

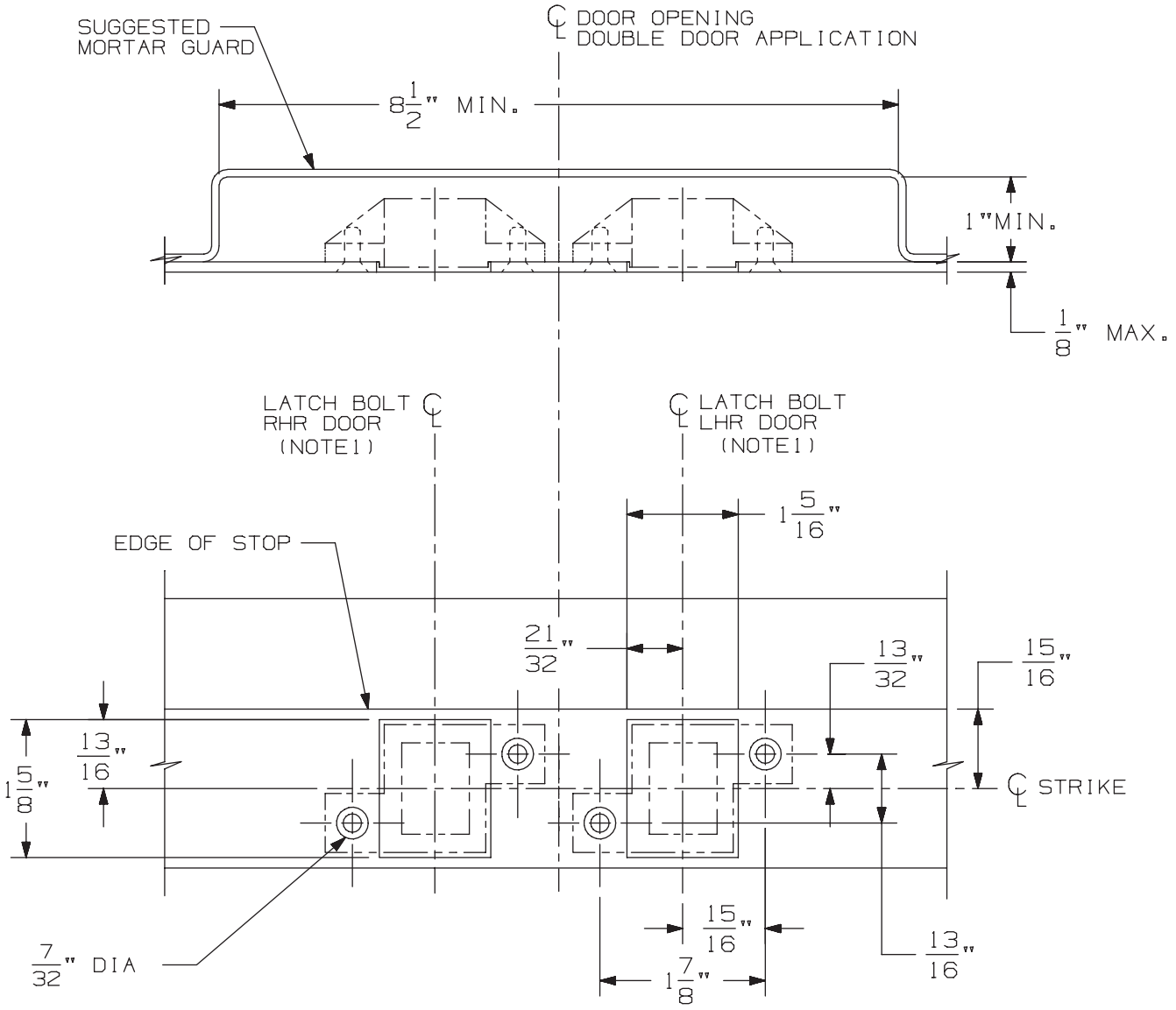

3/8" DIA X 82° C'SINK

IN FRAME
2 HOLES
EACH STRIKE

DOUBLE DOOR APPLICATION SHOWN.
FOR SINGLE DOOR APPLICATION USE
APPROPRIATE HANDING AS SHOWN.

DEVICE APPLICATION SCHEDULE
33/3547 & 33/3547-F SERIES DEVICE
98/99/47 & 98/99/47-F SERIES DEVICE
5547/5547 WDC SERIES
33/3547A & 33/3547A-F SERIES DEVICE
(9) 94/9547 SERIES DEVICE

NOTES: 1. SEE DEVICE TEMPLATE FOR LOCATION OF LATCH BOLT.

2. IF DEVICE IS TO BE MOUNTED ON WOOD DOORS, SEE WOOD DOOR TEMPLATE FOR LATCH BOLT LOCATION.

338 Strike for Hollow Metal Frame Preparation

VON DUPRIN®

NOTES: SEE MASTER SHEET #10001 FOR SUGGESTED REINFORCING

TEMPLATE NUMBER: 30038_a

DATE: 05-23-13

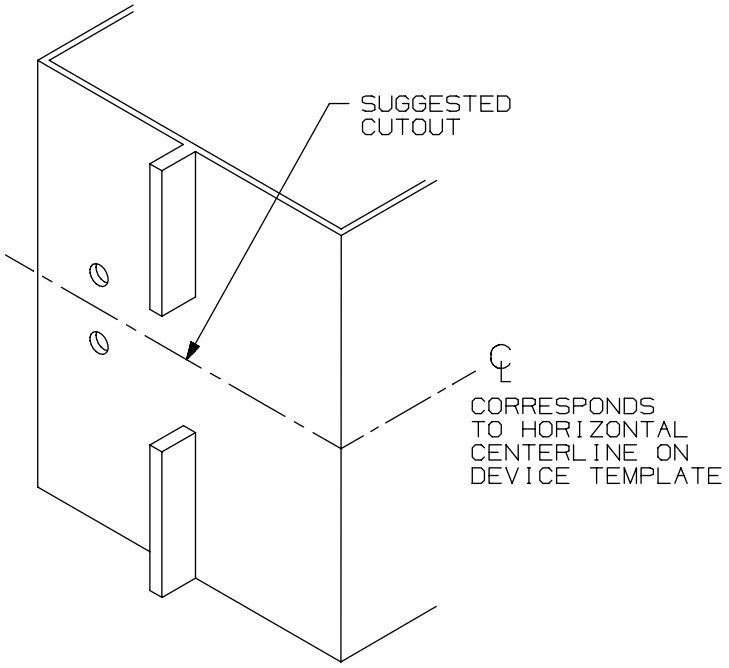

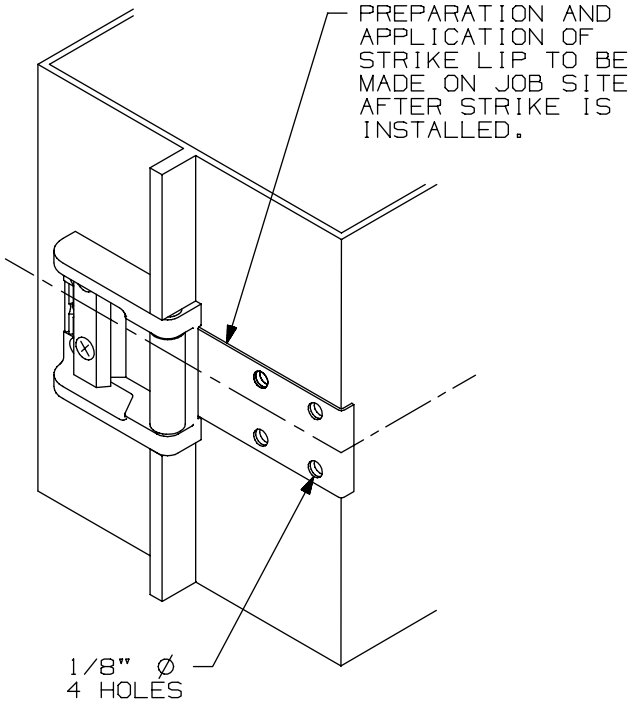

SINGLE DOOR INSTALLATION			
DEVICE	DIM "B"	DIM "C"	RECOMMENDED MIN STILE* (1)
33A/35A RIM	19/32"	1 9/16"	2"
44 RIM EO,DT,NL,TP	1 11/16"	1 9/16"	3 3/8"
44 RIM K	1 9/16"	1 9/16"	3 3/8"
55 RIM	17/32"	1 9/16"	1 3/4"
22 RIM	1 9/16"	1 9/16"	3 13/16"
88 RIM EO,DT,NL,TP	1 11/16"	1 9/16"	3 3/8"
44 RIM K,L	1 9/16"	1 9/16"	3 3/8"
98/99 RIM	1 9/16"	1 9/16"	3 13/16"

* CONSULT FACTORY FOR STILE WIDTHS LESS THAN
(1) MIN. RECOMMENDED TO ENSURE PROPER APPLICATION

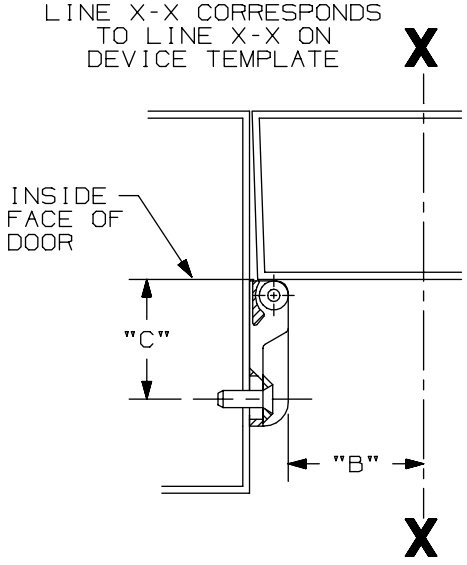

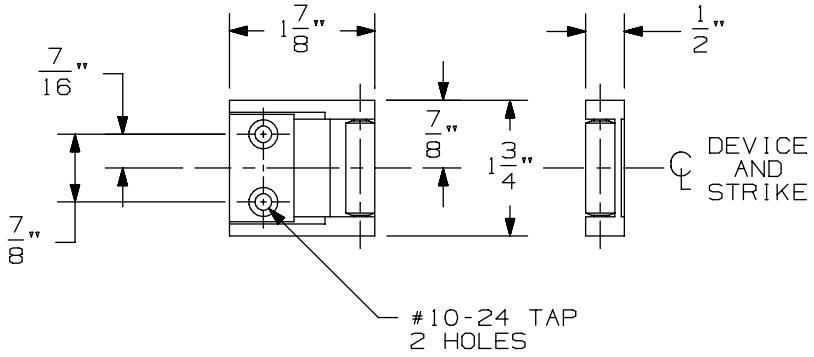

LHR APPLICATION SHOWN, RHR APPLICATION OPPOSITE

1439 Roller Strike

VON DUPRIN®

NOTES: SEE MASTER SHEET #10001 FOR SUGGESTED REINFORCING

TEMPLATE NUMBER: 30029_a

DATE: 05-23-13

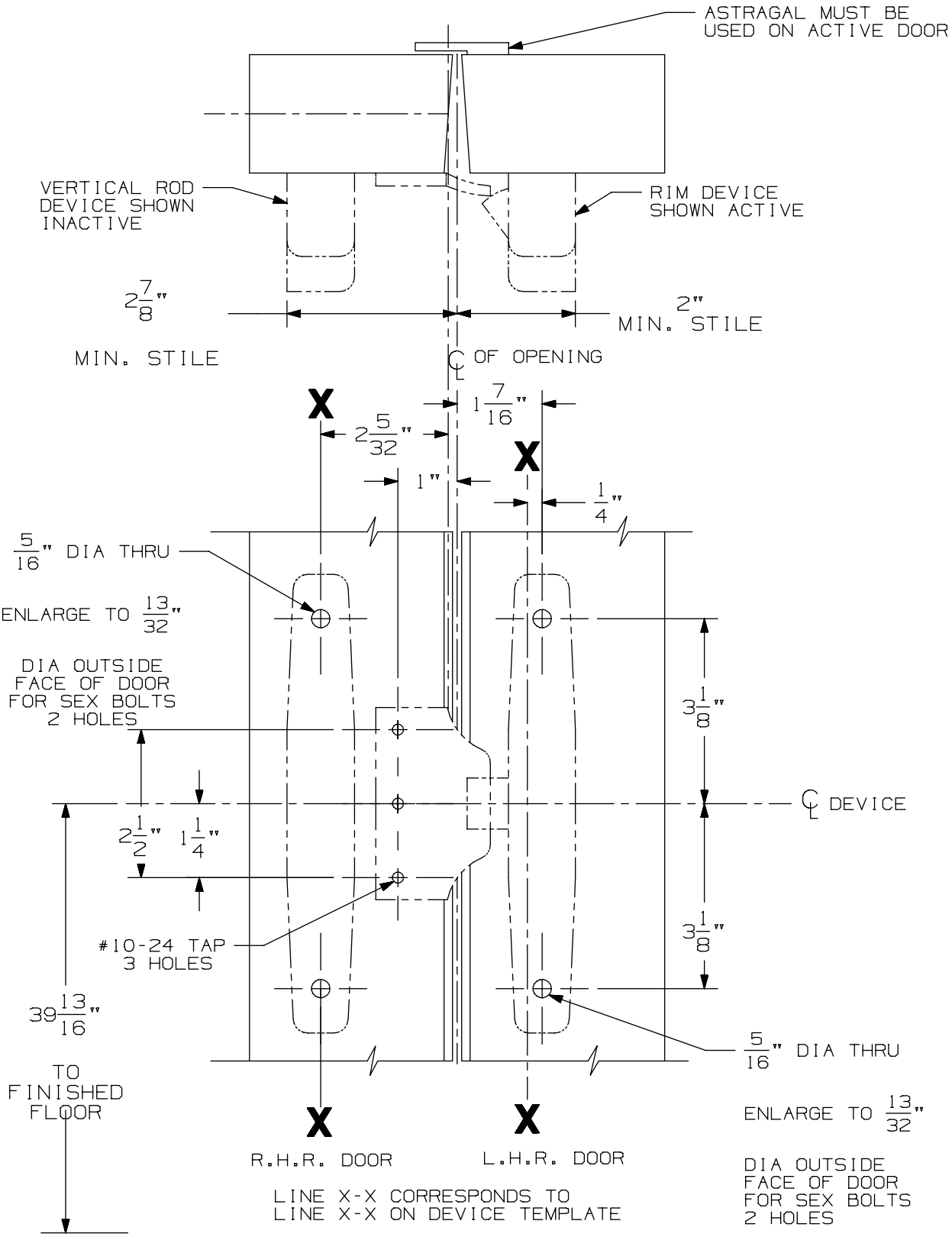

NOTE: 1. FOR DEVICE FUNCTIONS SEE APPROPRIATE DEVICE TEMPLATES.

2. A COORDINATOR MUST BE USED ON INACTIVE DOOR.

1609 J Strike for 3327/3527 Vertical Rod & 33/35 Rim Series Devices

VON DUPRIN®

NOTES: SEE MASTER SHEET #10001 FOR SUGGESTED REINFORCING

TEMPLATE NUMBER: 30037_a

DATE: 05-23-13

RIM APPLICATION

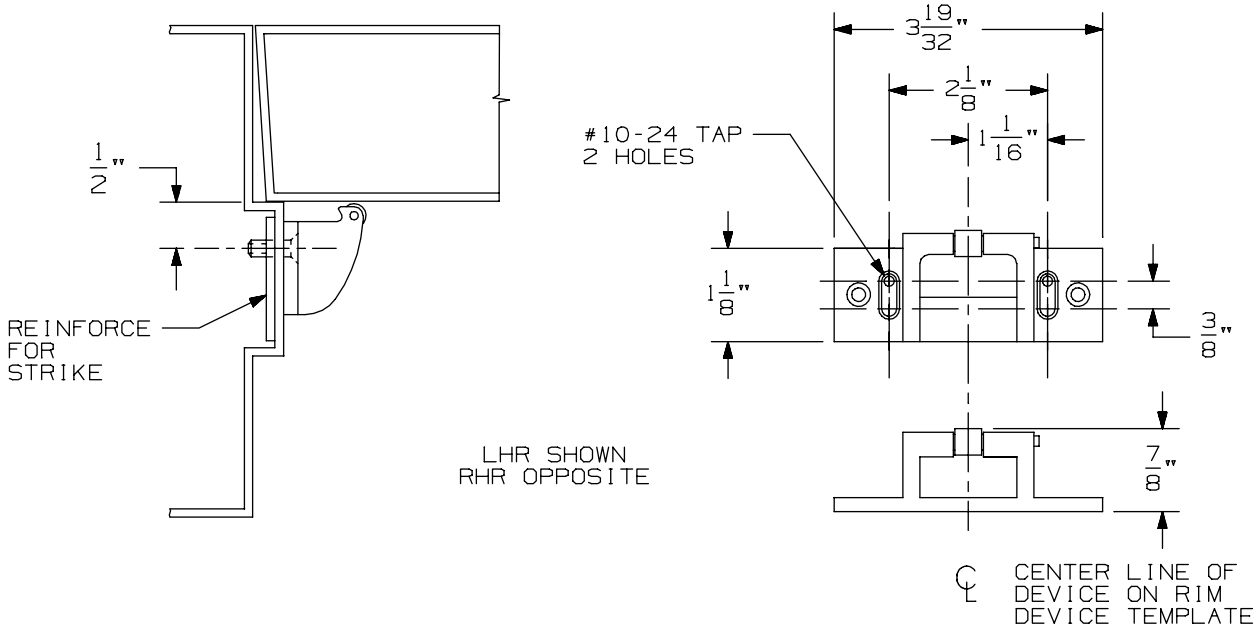

VERTICAL APPLICATION

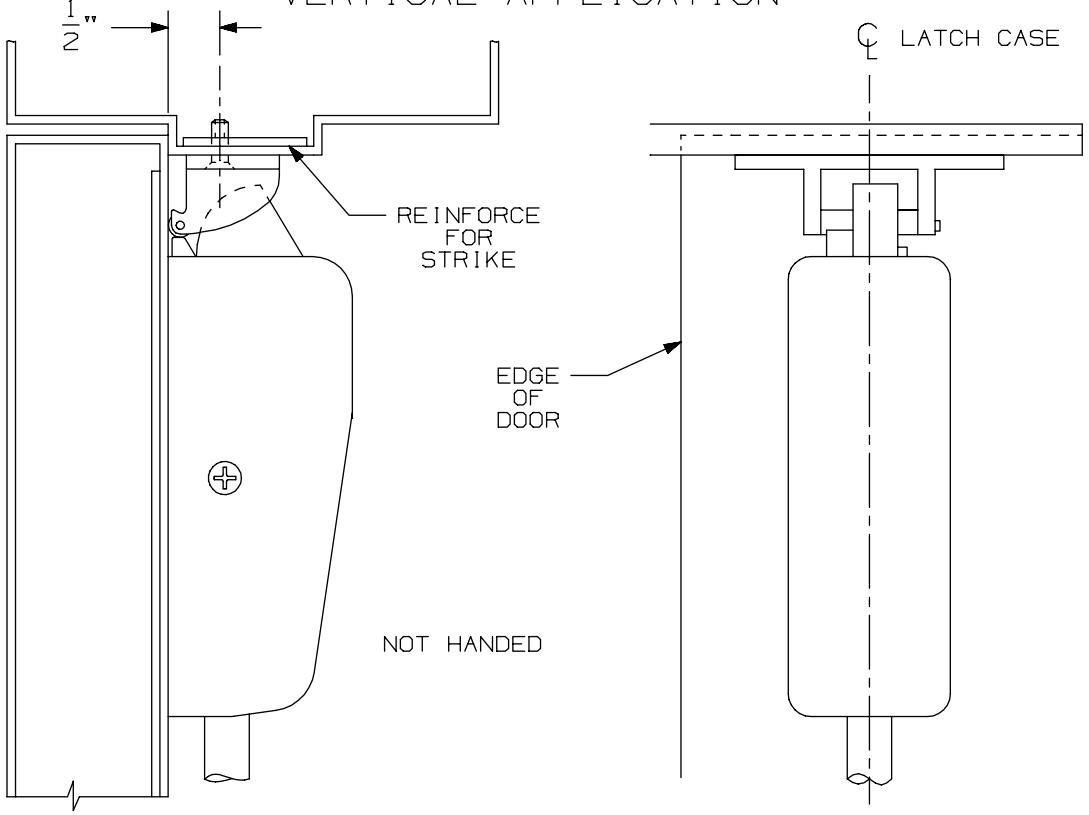

NOTE: LATCH CASE MOUNTING HOLES TO BE PREPARED AT INSTALLATION ON DOOR.

499-F Strike	VON DUPRIN®	
NOTES: SEE MASTER SHEET #10001 FOR SUGGESTED REINFORCING	TEMPLATE NUMBER: 30040_a	DATE: 05-23-13

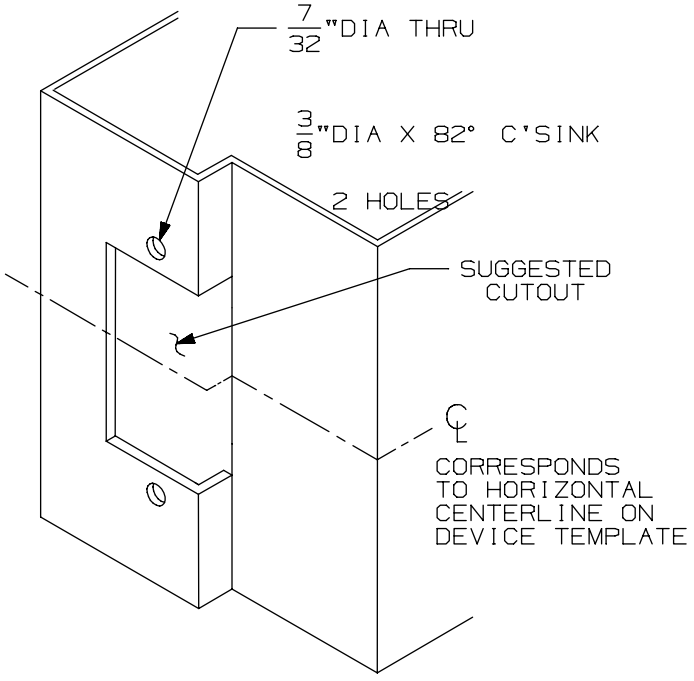

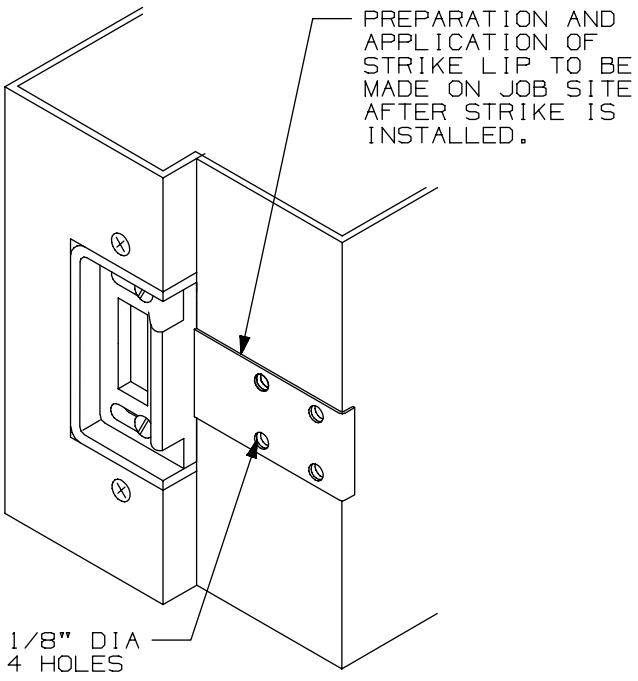

LHR APPLICATION SHOWN, RHR APPLICATION OPPOSITE.

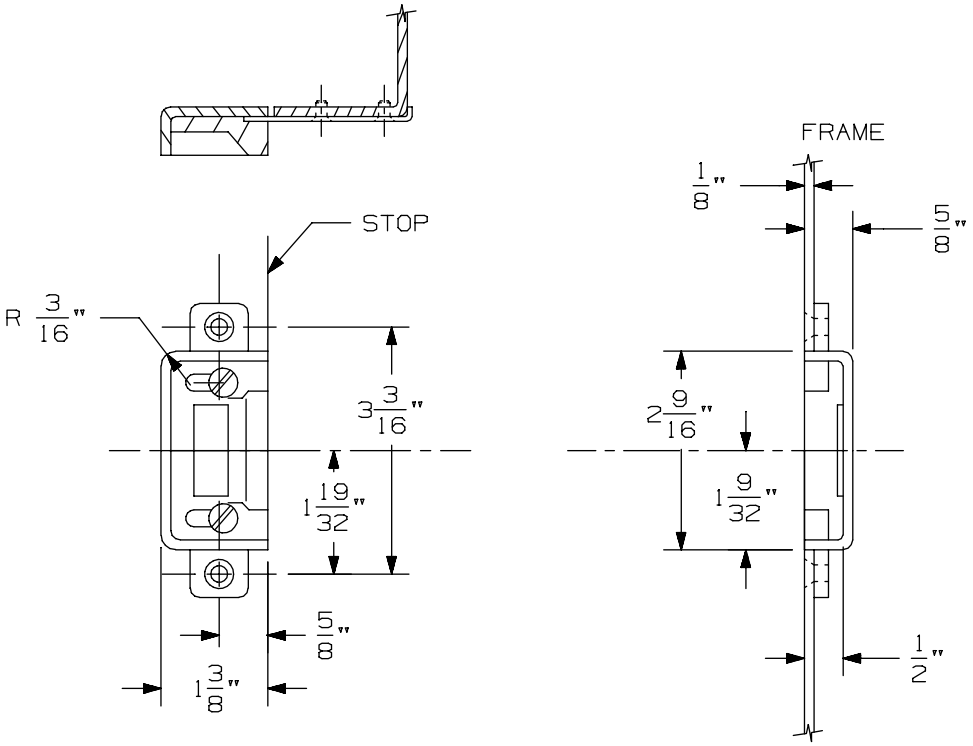

1410 Strike		VON DUPRIN®
NOTES: SEE MASTER SHEET #10001 FOR SUGGESTED REINFORCING	TEMPLATE NUMBER: 30023_a	DATE: 05-23-13

33A/35A Series Trims & Strikes

-

330/350 Push Bar

330, 350, TBSK330, & TBSK350
Push Bar Trim

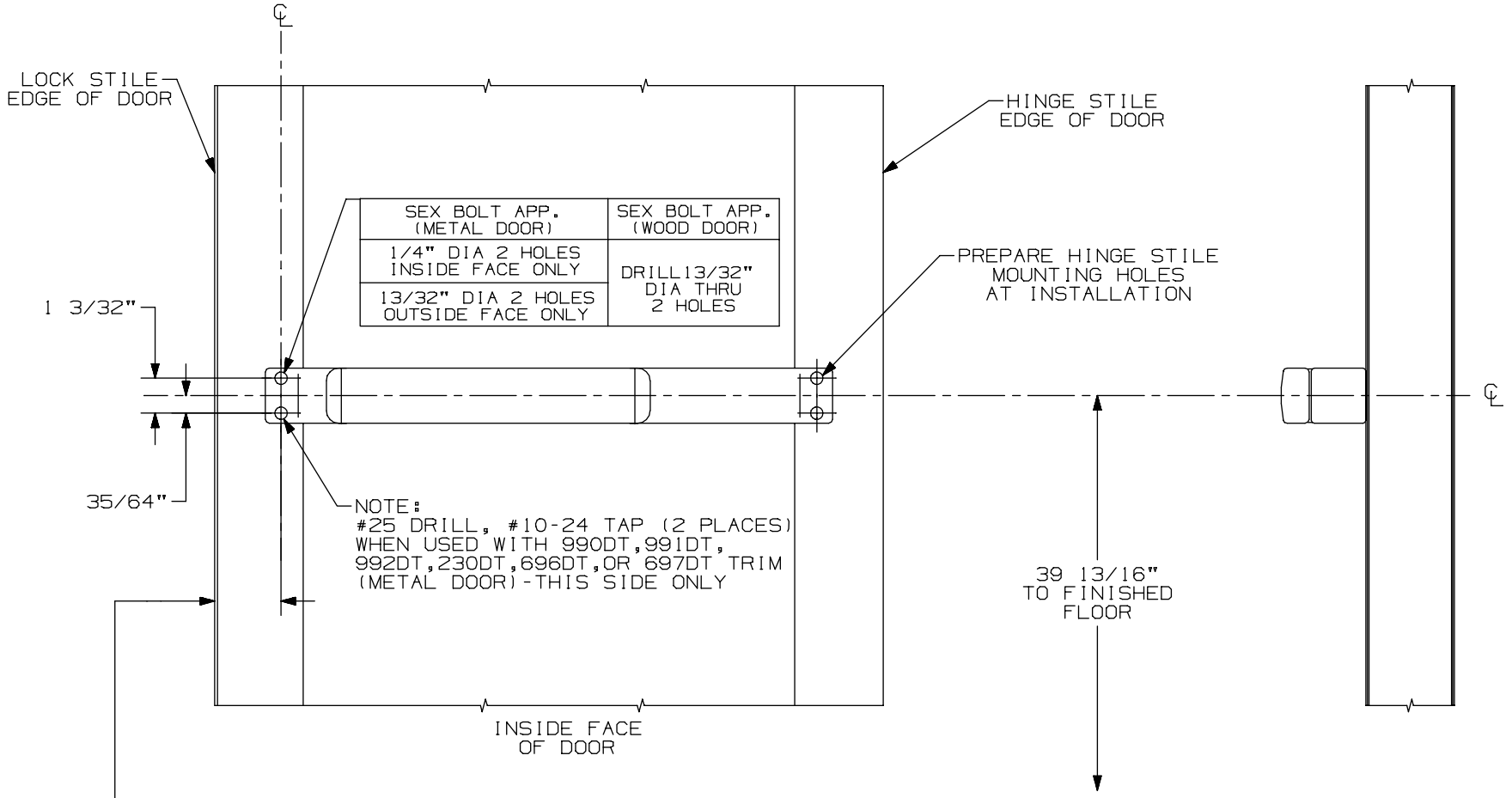

LHR SHOWN
RHR OPPOSITE

TRIM INSTALLATION SCHEDULE

	INSTALLATION	STILE SIZE	BACKSET
(4)	SINGLE DOOR 1/2" STOP & BACK TO BACK WITH 386DT, 337DT OR 696/697DT TRIM ON SINGLE DOOR 1/2" STOP	1 3/4"-3"	1 5/16"
(4)	SINGLE DOOR 5/8" STOP & BACK TO BACK WITH 386DT, 337DT OR 696/697DT TRIM ON SINGLE DOOR 5/8" STOP	1 7/8"-3"	1 7/16"
(4)	PAIR OF DOORS WITHOUT MULLION & BACK TO BACK WITH 386DT, 337DT OR 696/697DT TRIM ON PAIR OF DOORS WITHOUT MULLION	1 3/4"-3"	1 5/16"
	SINGLE DOOR PAIR OF DOORS WITHOUT MULLION BACK TO BACK WITH 990DT, 991DT, 992DT, OR 230DT	3"-FLUSH	1/2 OF STILE

NOTES: SEE MASTER SHEET #10001 FOR SUGGESTED REINFORCING

TEMPLATE NUMBER: 20030_a

DATE: 05-23-13

VON DUPRIN®

55 Series Exit Devices

55 Series Exit Devices

-

55 Rim

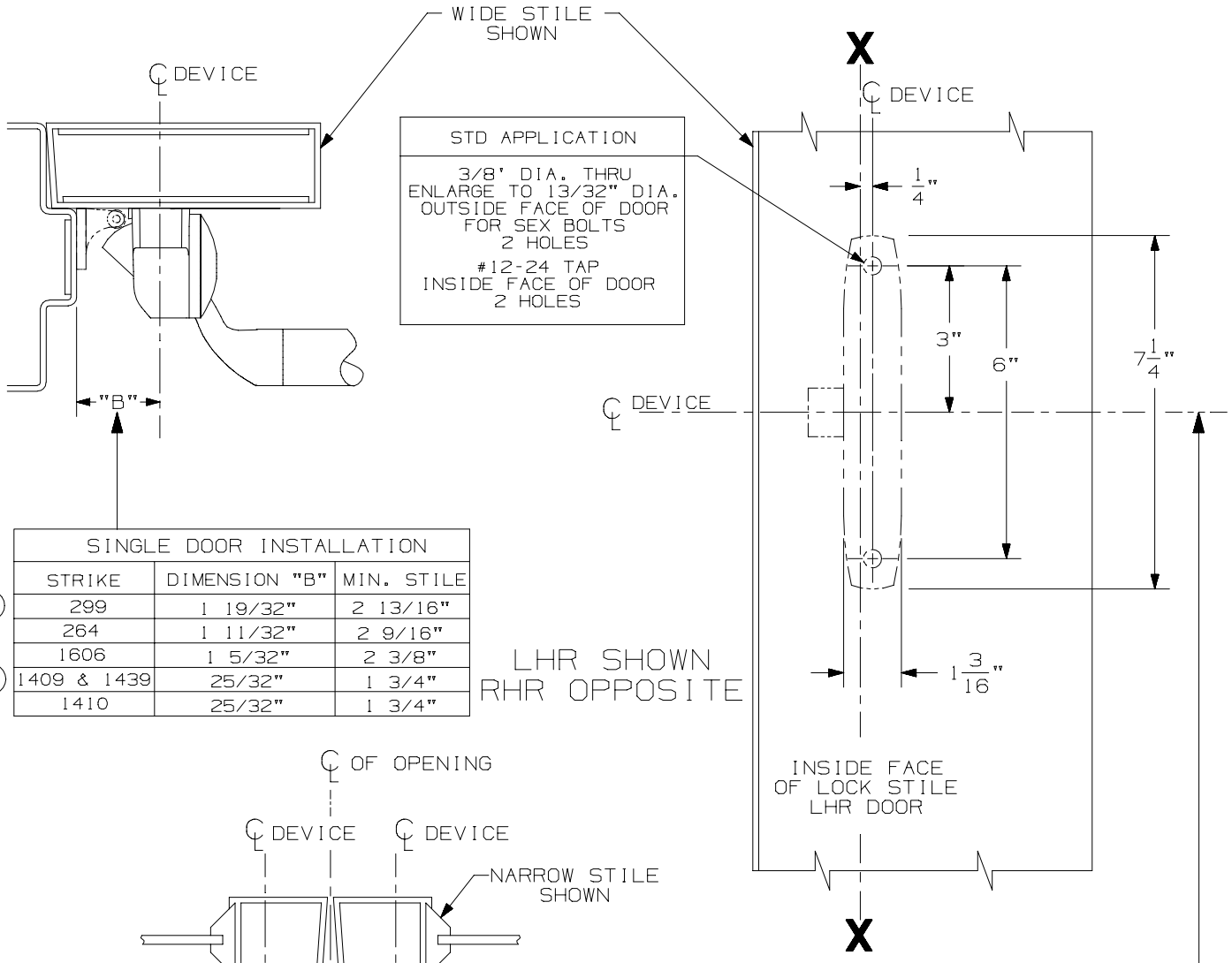

SINGLE DOOR INSTALLATION		
STRIKE	DIMENSION "B"	MIN. STILE
299	1 19/32"	2 13/16"
264	1 11/32"	2 9/16"
1606	1 5/32"	2 3/8"
1409 & 1439	25/32"	1 3/4"
1410	25/32"	1 3/4"

LHR SHOWN
RHR OPPOSITE

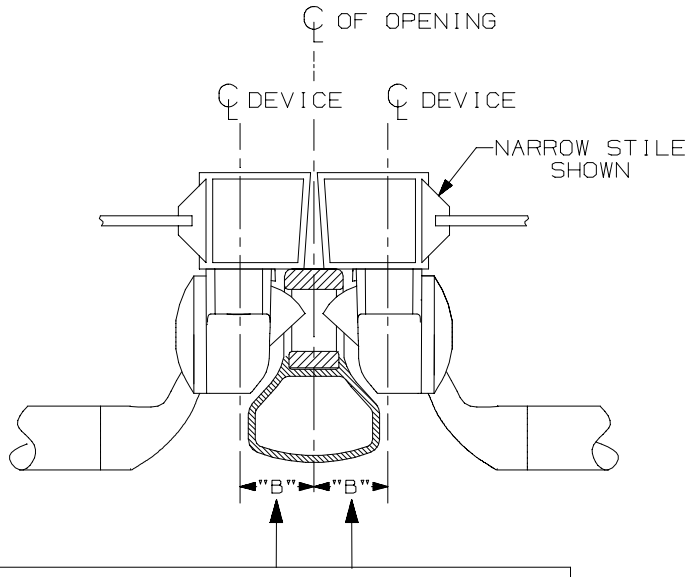

DOUBLE DOOR INSTALLATION WITH VON DUPRIN MULLIONS			
MULLION	STRIKE	DIMENSION "B"	MIN. STILE
5654	299	2 5/32"	2 3/4"
5654	264	1 29/32"	2 1/2"
4954	299	2 19/32"	3 3/16"
4954	264	2 11/32"	2 15/16"
1654	1606	2 5/32"	2 3/4"
5754	1408	1 9/32"	1 3/4"

SINGLE DOOR OPENING
39 13/16" TO FINISHED FLOOR.

DOUBLE DOOR OPENING
WITH VON DUPRIN MULLION
39 11/16"

CROSSBAR 36 13/16" FROM FINISHED FLOOR

FOR OUTSIDE TRIM PREPARATION, WHEN REQUIRED, SEE ADDITIONAL TRIM TEMPLATE.

55EO & 55DT Series Rim Devices

VON DUPRIN®

NOTES: SEE MASTER SHEET #10001 FOR SUGGESTED REINFORCING

TEMPLATE NUMBER: 10061_b

DATE: 06-5-15

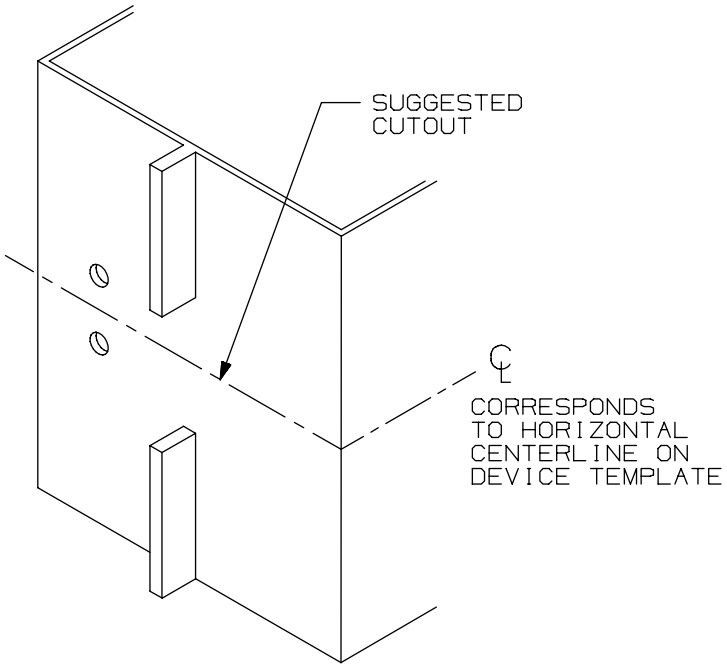

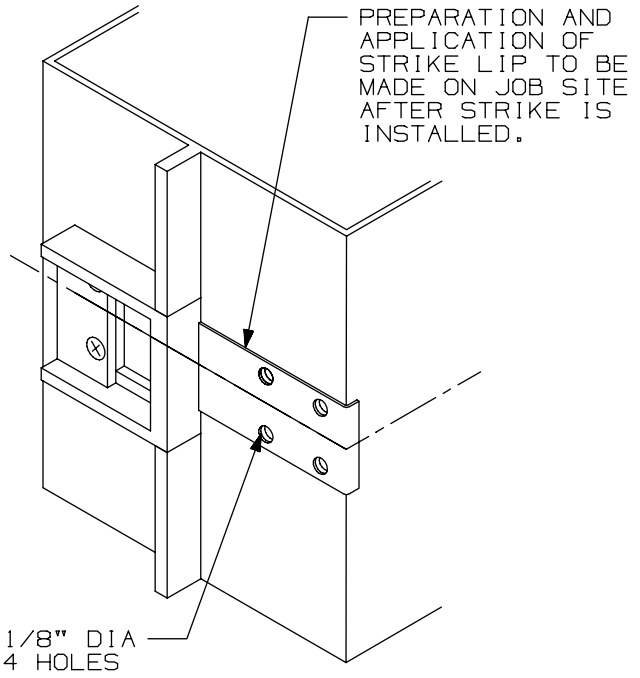

SINGLE DOOR INSTALLATION			
DEVICE	DIM "B"	DIM "C"	MIN STILE
33/35 RIM	19/32"	1 7/16"	1 3/4"
44 RIM EO,DT,NL,TP	1 11/16"	1 7/16"	3 3/8"
44 RIM K	1 9/16"	1 7/16"	3 3/8"
55 RIM	17/32"	1 7/16"	1 3/4"
22 RIM	1 9/16"	1 9/16"	3 13/16"
88 RIM EO,DT,NL,TP	1 11/16"	1 7/16"	3 3/8"
88 RIM K,L	1 9/16"	1 7/16"	3 3/8"
98/99 RIM	1 9/16"	1 9/16"	3 13/16"

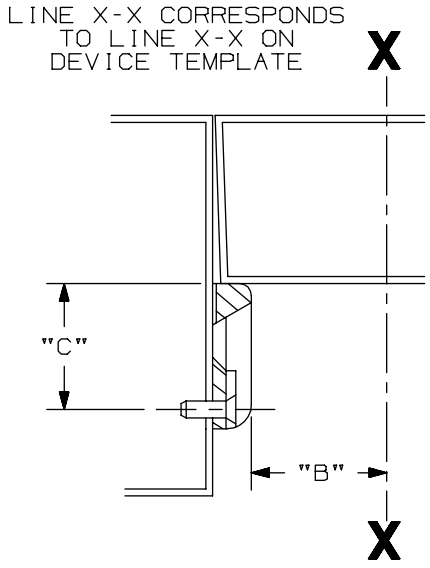

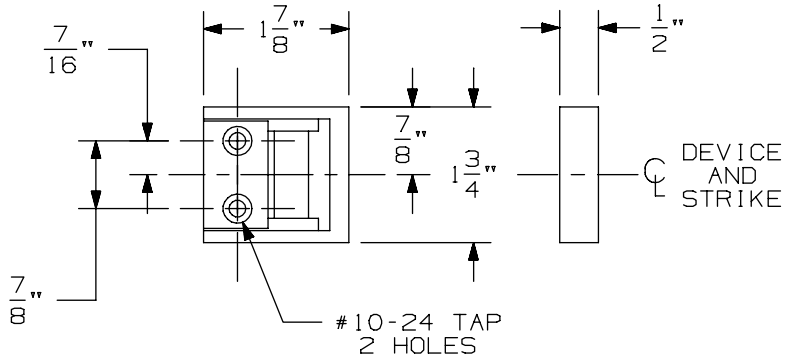

LHR APPLICATION SHOWN, RHR APPLICATION OPPOSITE

1409 Strike

VON DUPRIN®

NOTES: SEE MASTER SHEET #10001 FOR SUGGESTED REINFORCING

TEMPLATE NUMBER: 30022_a

DATE: 05-23-13

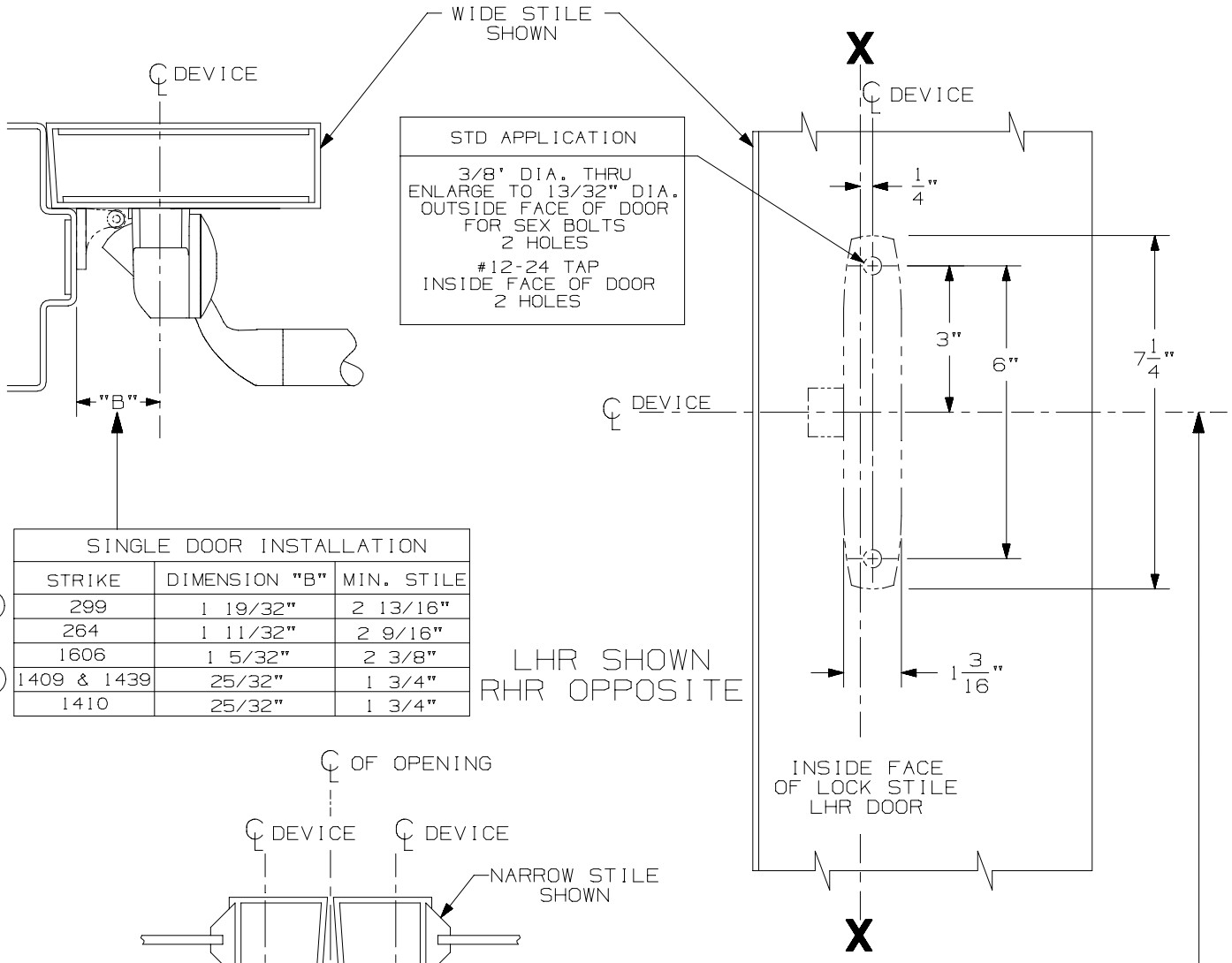

SINGLE DOOR INSTALLATION		
STRIKE	DIMENSION "B"	MIN. STILE
299	1 19/32"	2 13/16"
264	1 11/32"	2 9/16"
1606	1 5/32"	2 3/8"
1409 & 1439	25/32"	1 3/4"
1410	25/32"	1 3/4"

LHR SHOWN
RHR OPPOSITE

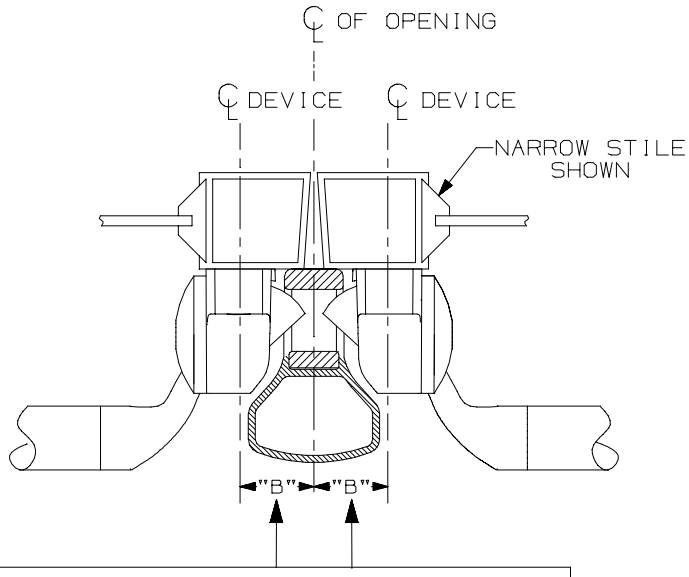

DOUBLE DOOR INSTALLATION WITH VON DUPRIN MULLIONS			
MULLION	STRIKE	DIMENSION "B"	MIN. STILE
5654	299	2 5/32"	2 3/4"
5654	264	1 29/32"	2 1/2"
4954	299	2 19/32"	3 3/16"
4954	264	2 11/32"	2 15/16"
1654	1606	2 5/32"	2 3/4"
5754	1408	1 9/32"	1 3/4"

SINGLE DOOR OPENING
39 13/16" TO FINISHED FLOOR.

DOUBLE DOOR OPENING
WITH VON DUPRIN MULLION
39 11/16"

CROSSBAR 36 13/16" FROM FINISHED FLOOR

FOR OUTSIDE TRIM PREPARATION, WHEN REQUIRED, SEE ADDITIONAL TRIM TEMPLATE.

55EO & 55DT Series Rim Devices

VON DUPRIN®

NOTES: SEE MASTER SHEET #10001 FOR SUGGESTED REINFORCING

TEMPLATE NUMBER: 10061_b

DATE: 06-5-15

NOTES: SEE MASTER SHEET #10001 FOR SUGGESTED REINFORCING

550 DT Trim

VON DUPRIN®

TEMPLATE NUMBER: 20026_a

DATE: 05-23-13

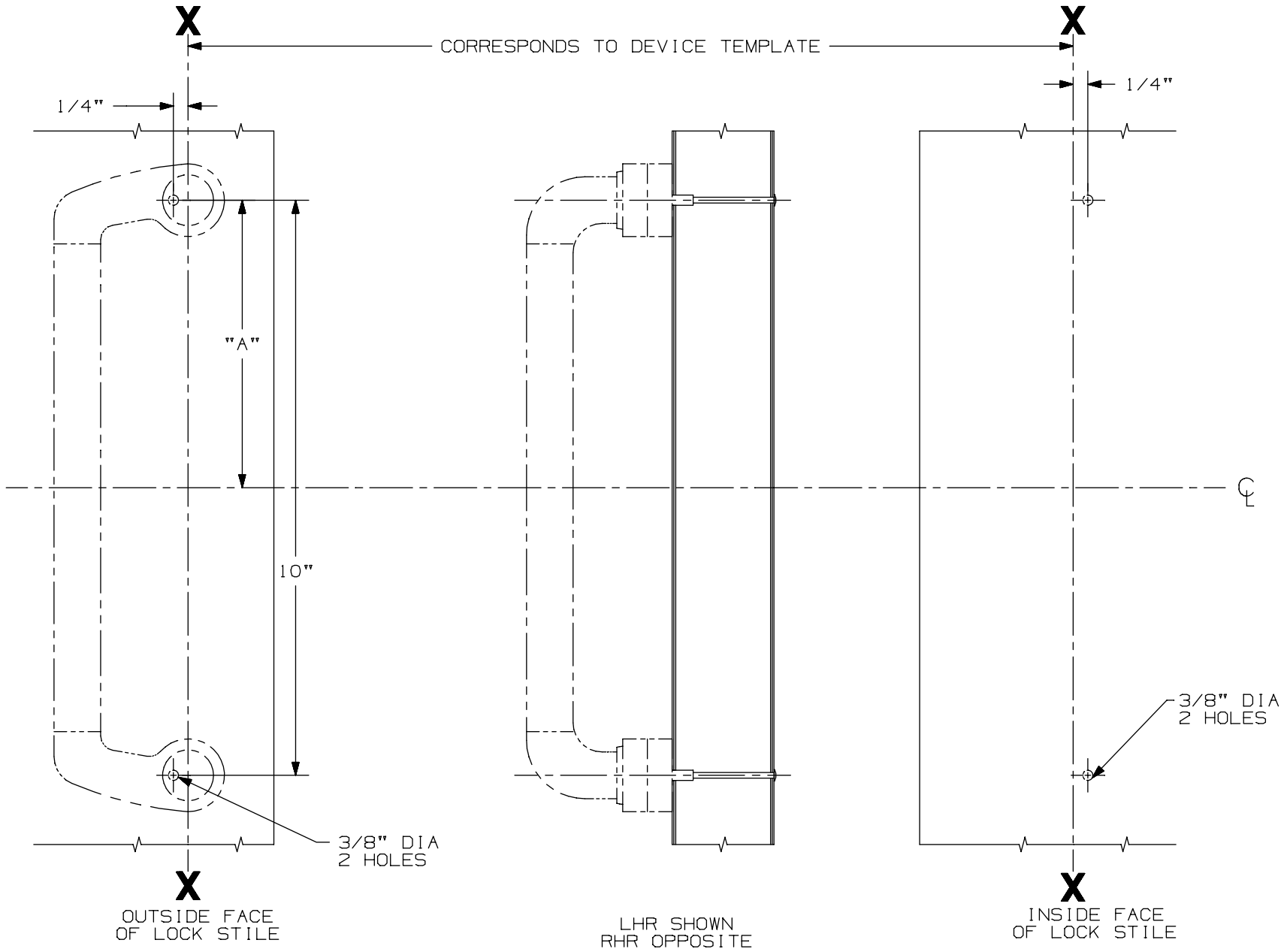

DEVICE APPLICATION SCHEDULE					
DEVICE	DIM. "A"	DEVICE	DIM. "A"	DEVICE	DIM. "A"
44 RIM	4 15/16"	44 MORT.	4 15/16"	44 VERT.	4 15/16"
55 RIM	4 15/16"	55 MORT.	4 15/16"	5547 VERT.	4 15/16"
88 RIM	4 15/16"	88 MORT.	4 15/16"	8827 VERT.	4 15/16"

FOR CUTOUTS ON INSIDE FACE OF DOOR: SEE DEVICE TEMPLATE

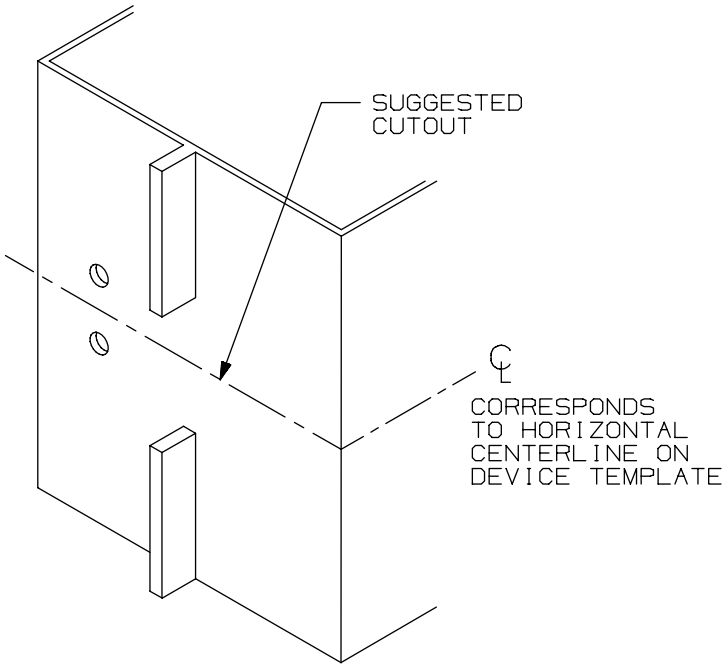

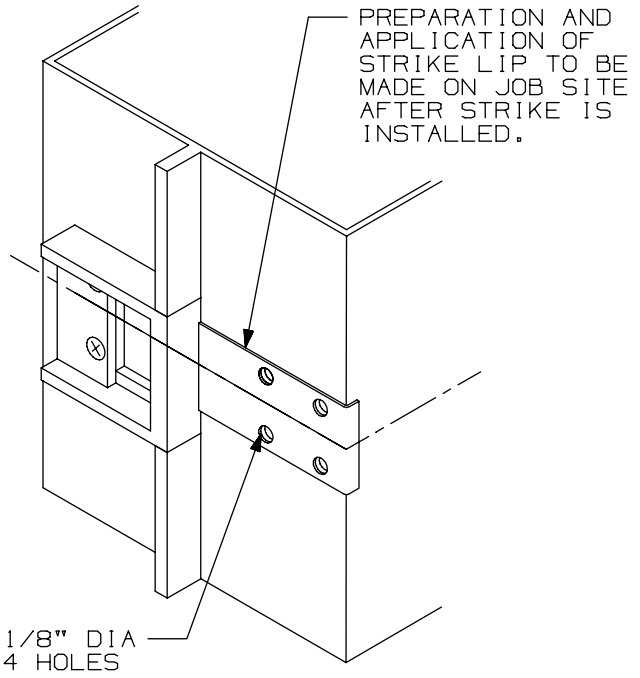

SINGLE DOOR INSTALLATION			
DEVICE	DIM "B"	DIM "C"	MIN STILE
33/35 RIM	19/32"	1 7/16"	1 3/4"
44 RIM EO,DT,NL,TP	1 11/16"	1 7/16"	3 3/8"
44 RIM K	1 9/16"	1 7/16"	3 3/8"
55 RIM	17/32"	1 7/16"	1 3/4"
22 RIM	1 9/16"	1 9/16"	3 13/16"
88 RIM EO,DT,NL,TP	1 11/16"	1 7/16"	3 3/8"
88 RIM K,L	1 9/16"	1 7/16"	3 3/8"
98/99 RIM	1 9/16"	1 9/16"	3 13/16"

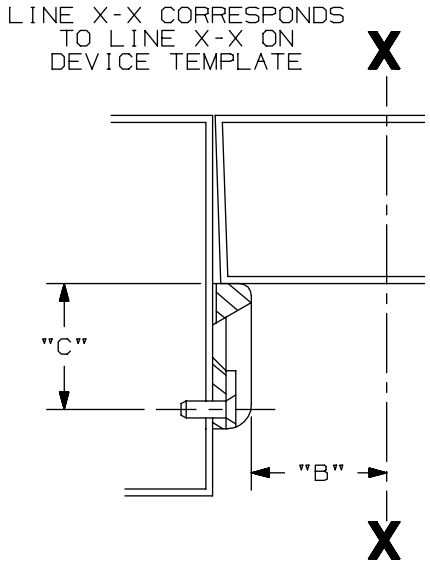

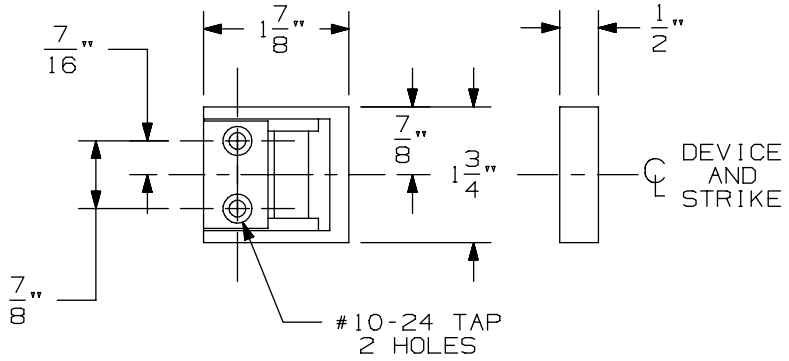

LHR APPLICATION SHOWN, RHR APPLICATION OPPOSITE

1409 Strike

VON DUPRIN®

NOTES: SEE MASTER SHEET #10001 FOR SUGGESTED REINFORCING

TEMPLATE NUMBER: 30022_a

DATE: 05-23-13

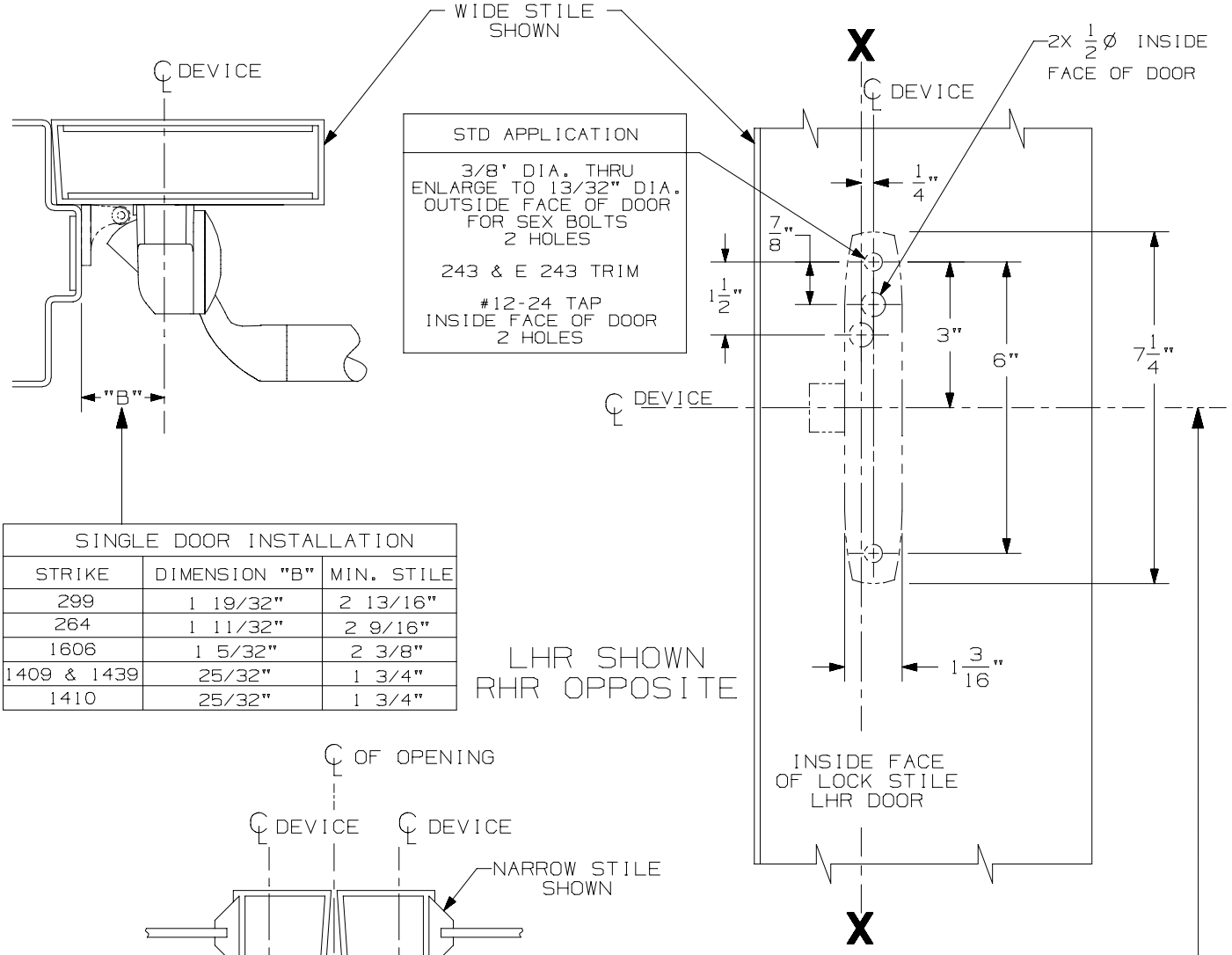

SINGLE DOOR INSTALLATION		
STRIKE	DIMENSION "B"	MIN. STILE
⑦ 299	1 19/32"	2 13/16"
264	1 11/32"	2 9/16"
1606	1 5/32"	2 3/8"
⑦ 1409 & 1439	25/32"	1 3/4"
1410	25/32"	1 3/4"

SINGLE DOOR OPENING
39 13/16" TO FINISHED FLOOR.

DOUBLE DOOR OPENING
WITH VON DUPRIN MULLION
39 11/16"

DOUBLE DOOR INSTALLATION WITH VON DUPRIN MULLIONS			
MULLION	STRIKE	DIMENSION "B"	MIN. STILE
⑦ 5654	299	2 5/32"	2 3/4"
⑦ 5654	264	1 29/32"	2 1/2"
⑦ 4954	299	2 19/32"	3 3/16"
4954	264	2 11/32"	2 15/16"
1654	1606	2 5/32"	2 3/4"
5554	1408	1 9/32"	1 3/4"

CROSSBAR 36 13/16" FROM FINISHED FLOOR

FOR OUTSIDE TRIM PREPARATION, WHEN REQUIRED, SEE ADDITIONAL TRIM TEMPLATE.

55NL Series Rim Devices

VON DUPRIN®

NOTES: SEE MASTER SHEET #10001 FOR SUGGESTED REINFORCING

TEMPLATE NUMBER: 10062_a

DATE: 05-15-13

NOTES: SEE MASTER SHEET #10001 FOR SUGGESTED REINFORCING

550 NL Trim

TEMPLATE NUMBER: 20027_a

DATE: 05-23-13

VON DUPRIN®

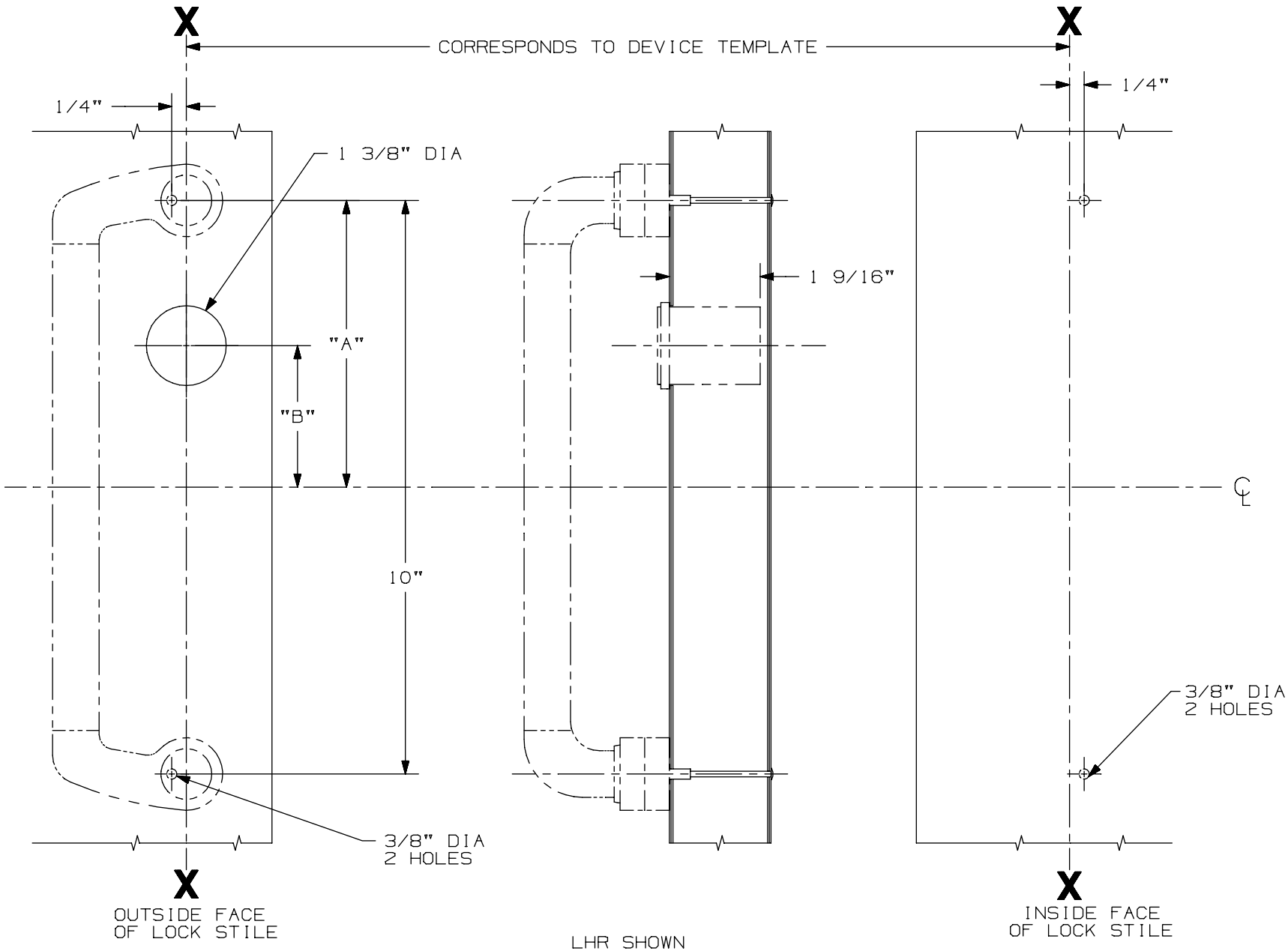

DEVICE APPLICATION SCHEDULE						FOR CUTOUTS ON INSIDE FACE OF DOOR: SEE DEVICE TEMPLATE
DEVICE	DIM. "A"	DIM. "B"	DEVICE	DIM. "A"	DIM. "B"	
44 RIM	4 15/16"	1/4"	44 MORT.	4 15/16"	2 1/16"	
55 RIM	4 15/16"	1 3/4"				
88 RIM	4 15/16"	1/4"	88 MORT.	4 15/16"	2"	

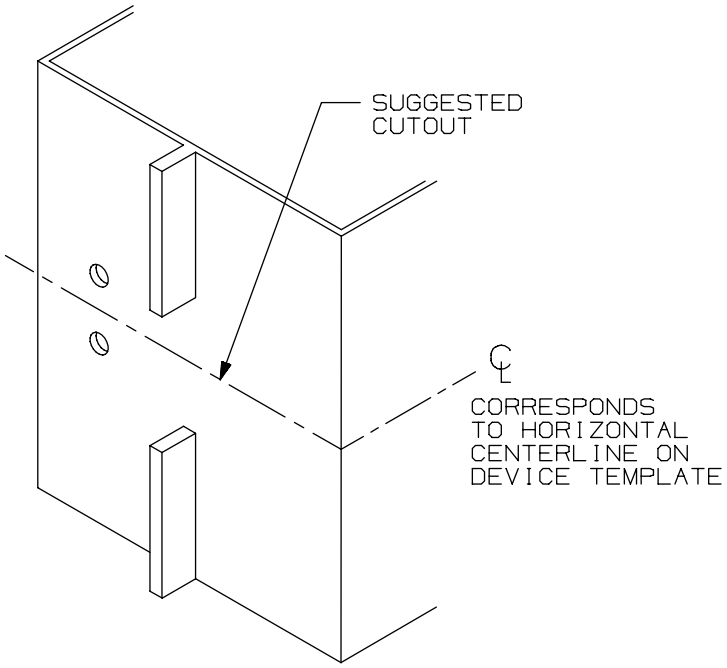

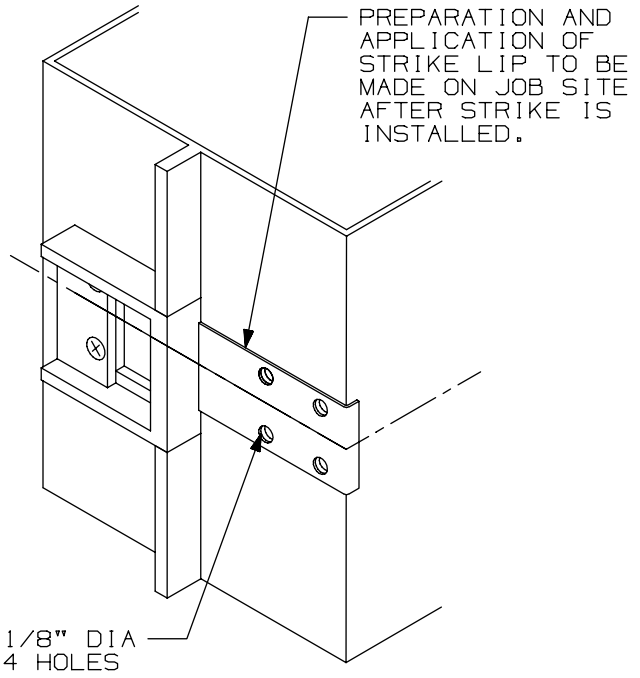

SINGLE DOOR INSTALLATION			
DEVICE	DIM "B"	DIM "C"	MIN STILE
33/35 RIM	19/32"	1 7/16"	1 3/4"
44 RIM EO,DT,NL,TP	1 11/16"	1 7/16"	3 3/8"
44 RIM K	1 9/16"	1 7/16"	3 3/8"
55 RIM	17/32"	1 7/16"	1 3/4"
22 RIM	1 9/16"	1 9/16"	3 13/16"
88 RIM EO,DT,NL,TP	1 11/16"	1 7/16"	3 3/8"
88 RIM K,L	1 9/16"	1 7/16"	3 3/8"
98/99 RIM	1 9/16"	1 9/16"	3 13/16"

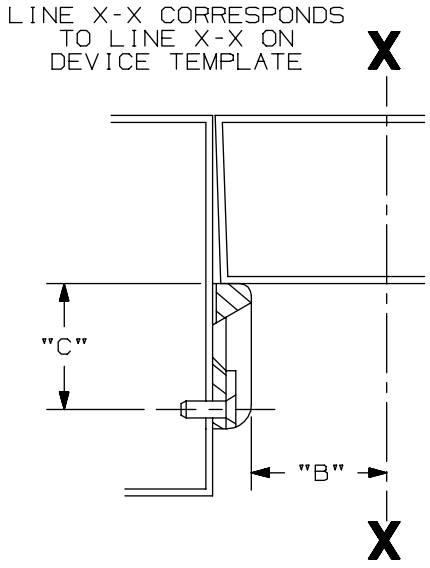

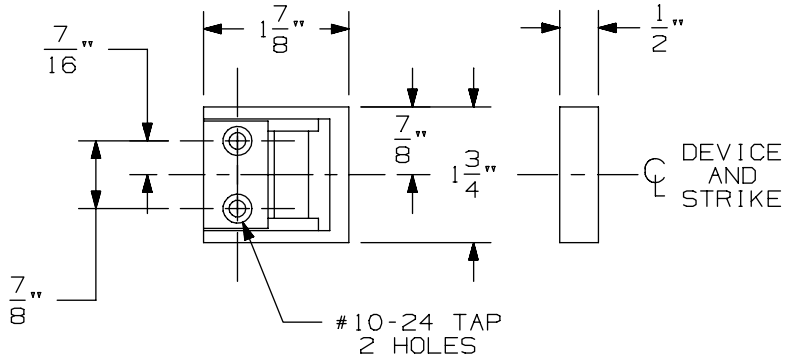

LHR APPLICATION SHOWN, RHR APPLICATION OPPOSITE

1409 Strike

VON DUPRIN®

NOTES: SEE MASTER SHEET #10001 FOR SUGGESTED REINFORCING

TEMPLATE NUMBER: 30022_a

DATE: 05-23-13

55 Series Exit Devices

-

5547 Concealed Vertical Rod

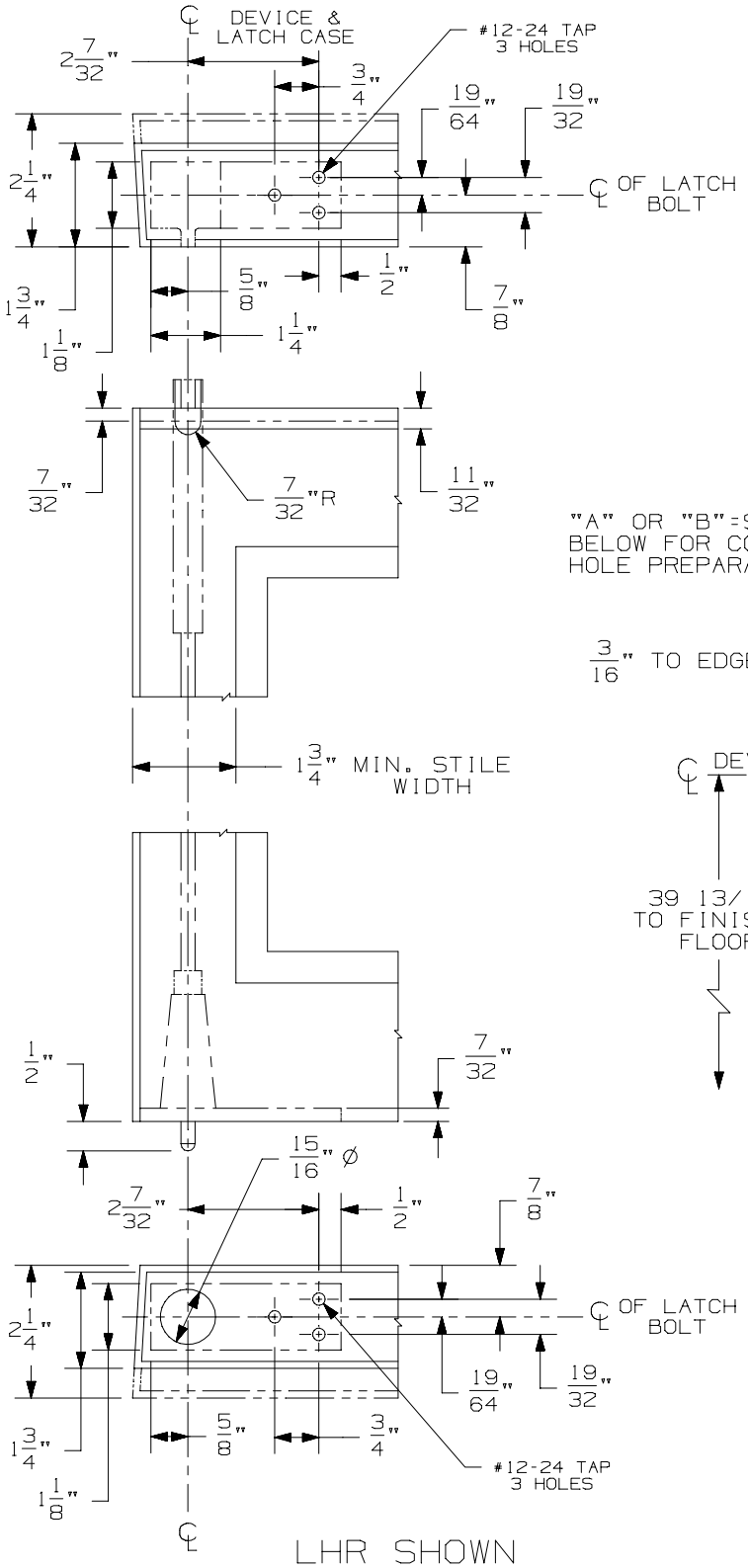

LHR SHOWN
RHR OPPOSITE

FOR OUTSIDE TRIM PREPARATION, WHEN REQUIRED, SEE ADDITIONAL TRIM TEMPLATE.

DEVICE INSTALLATION SCHEDULE	
INSTALLATION	BACKSET
MIN. 1 3/4" TO 2 1/2" DOOR STILE	SINGLE DOOR 1 9/32" DOUBLE DOOR 1 5/32"
FLUSH HOLLOW METAL DOOR	2 1/2"
STILES WIDER THAN 2 1/2"	1/2 OF STILE

NOTE: STOP THICKNESS OF 1/2 MAX. REQ'D

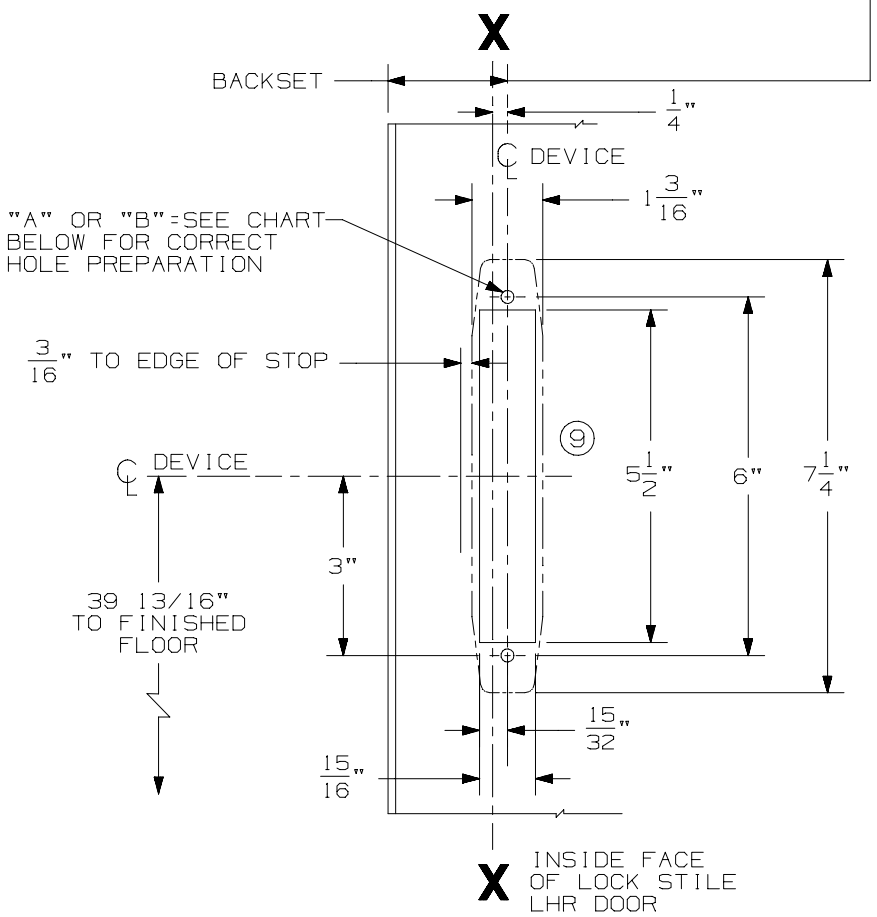

IMPORTANT

CHECK DOOR SECTION THICKNESS FOR CORRECT DEVICE MOUNTING APPLICATION	
"A" = 7/32 DIA FOR DOORS WITH 1/8 OR LESS WALL THICKNESS 2 HOLES	"B" = 1/4-28 TAP FOR DOORS WITH 5/32 TO 3/16 WALL THICKNESS 2 HOLES

NOTE: 471 STRIKE FOR METAL FRAME SEE TEMPLATE NO. 30013

472U AND 473U STRIKES FOR WOOD FRAMES

ALUMINUM FRAME PREPARATION SEE TEMPLATE NO. 30014

5547EO, 5547DT, 5547NL, & 5547TL Series Vertical Rod Devices

VON DUPRIN®

NOTES: SEE MASTER SHEET #10001 FOR SUGGESTED REINFORCING

TEMPLATE NUMBER: 10066_a

DATE: 05-15-13

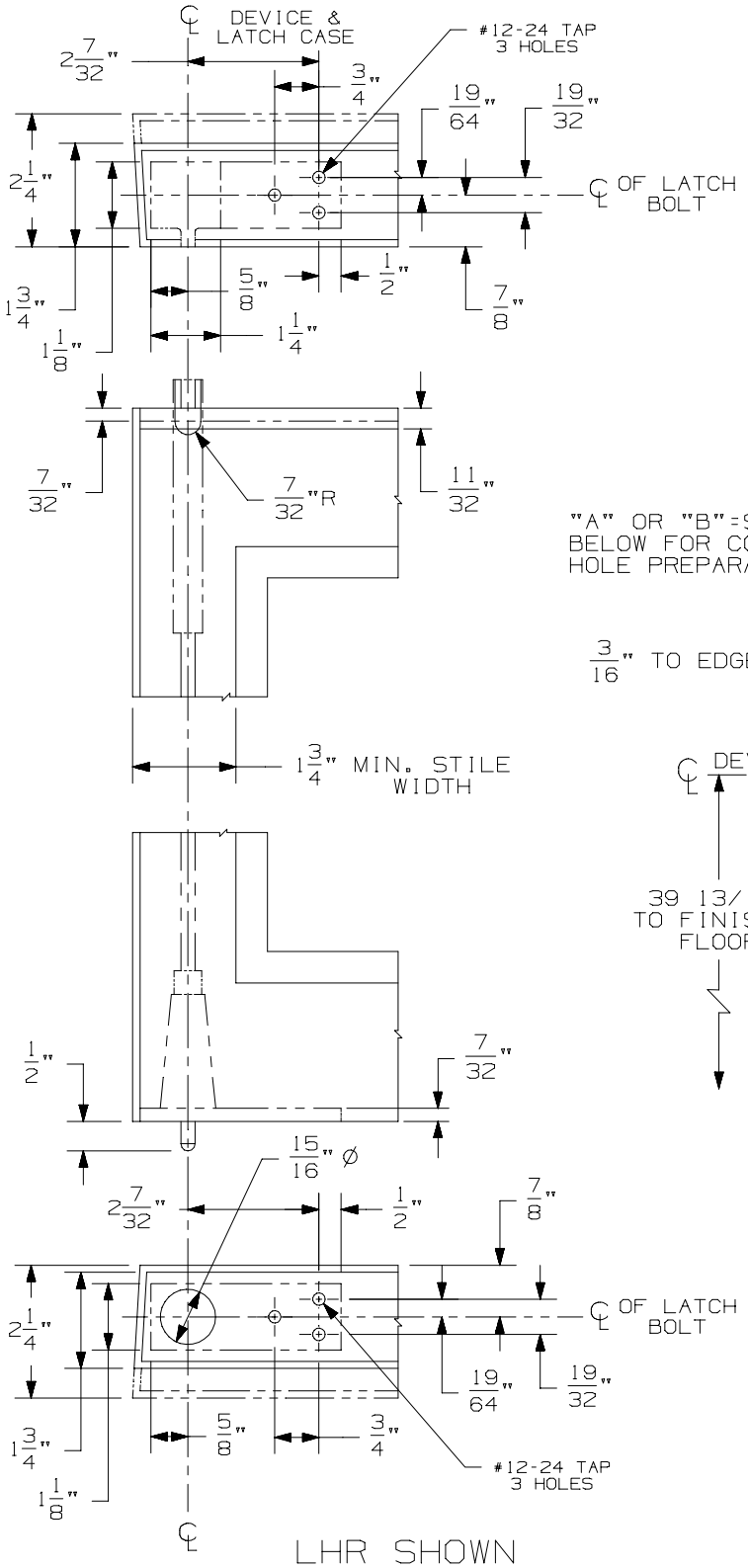

LHR SHOWN
RHR OPPOSITE

FOR OUTSIDE TRIM PREPARATION, WHEN REQUIRED, SEE ADDITIONAL TRIM TEMPLATE.

DEVICE INSTALLATION SCHEDULE	
INSTALLATION	BACKSET
MIN. 1 3/4" TO 2 1/2" DOOR STILE	SINGLE DOOR 1 9/32" DOUBLE DOOR 1 5/32"
FLUSH HOLLOW METAL DOOR	2 1/2"
STILES WIDER THAN 2 1/2"	1/2 OF STILE

NOTE: STOP THICKNESS OF 1/2 MAX. REQ'D

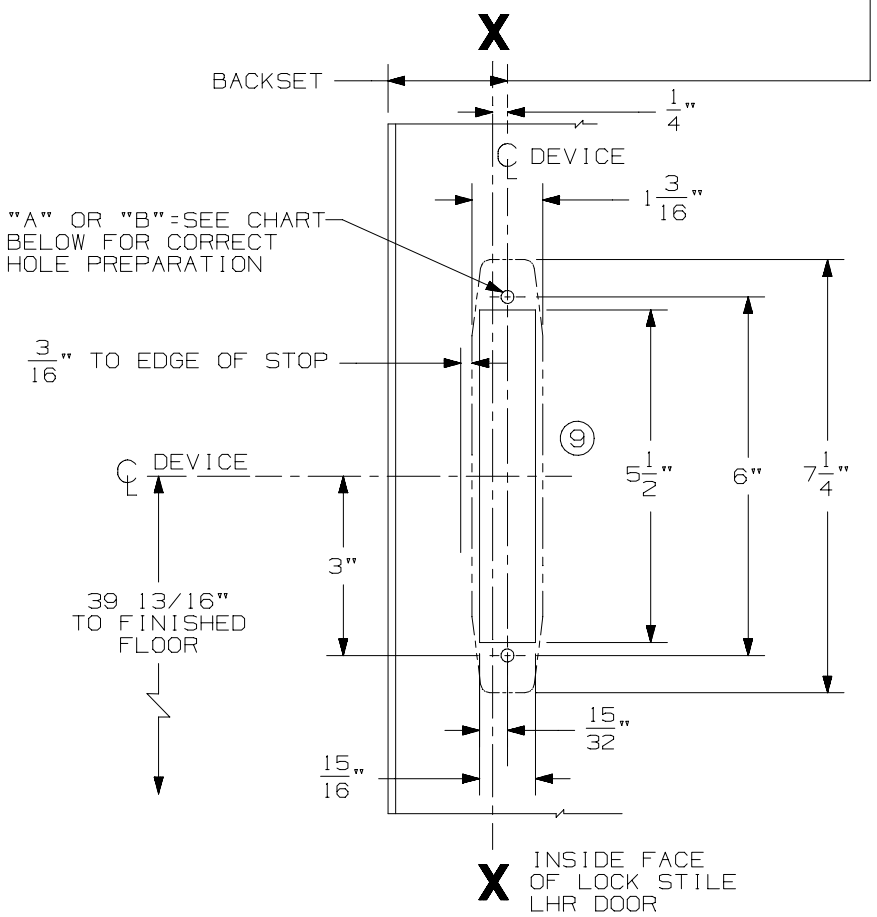

IMPORTANT

CHECK DOOR SECTION THICKNESS FOR CORRECT DEVICE MOUNTING APPLICATION	
"A" = 7/32 DIA FOR DOORS WITH 1/8 OR LESS WALL THICKNESS 2 HOLES	"B" = 1/4-28 TAP FOR DOORS WITH 5/32 TO 3/16 WALL THICKNESS 2 HOLES

NOTE: 471 STRIKE FOR METAL FRAME SEE TEMPLATE NO. 30013

472U AND 473U STRIKES FOR WOOD FRAMES

ALUMINUM FRAME PREPARATION SEE TEMPLATE NO. 30014

5547EO, 5547DT, 5547NL, & 5547TL Series Vertical Rod Devices

VON DUPRIN®

NOTES: SEE MASTER SHEET #10001 FOR SUGGESTED REINFORCING

TEMPLATE NUMBER: 10066_a

DATE: 05-15-13

NOTES: SEE MASTER SHEET #10001 FOR SUGGESTED REINFORCING

550 DT Trim

VON DUPRIN®

TEMPLATE NUMBER: 20026_a

DATE: 05-23-13

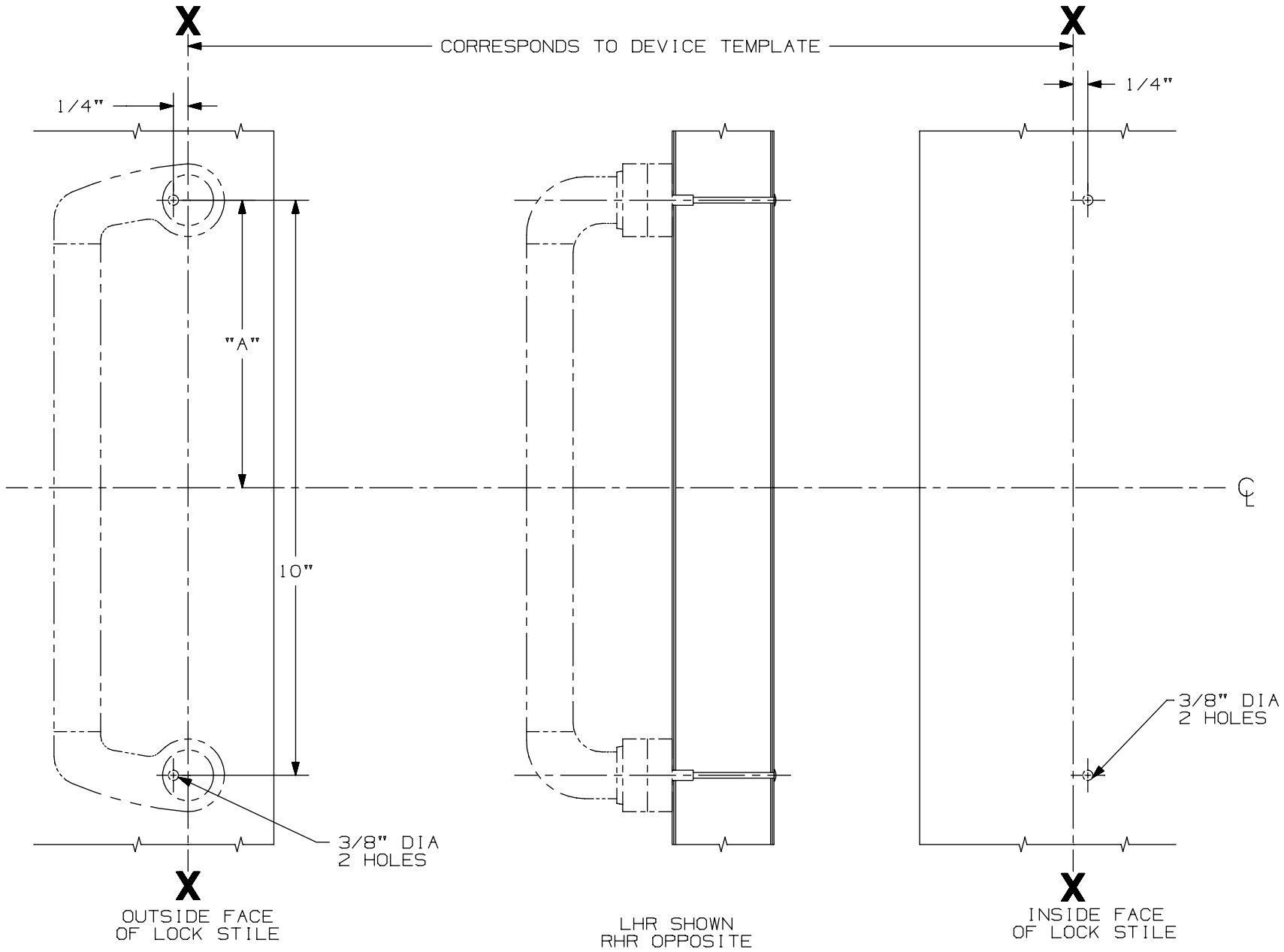

DEVICE APPLICATION SCHEDULE					
DEVICE	DIM. "A"	DEVICE	DIM. "A"	DEVICE	DIM. "A"
44 RIM	4 15/16"	44 MORT.	4 15/16"	44 VERT.	4 15/16"
55 RIM	4 15/16"	55 MORT.	4 15/16"	5547 VERT.	4 15/16"
88 RIM	4 15/16"	88 MORT.	4 15/16"	8827 VERT.	4 15/16"

FOR CUTOUTS ON INSIDE FACE OF DOOR: SEE DEVICE TEMPLATE

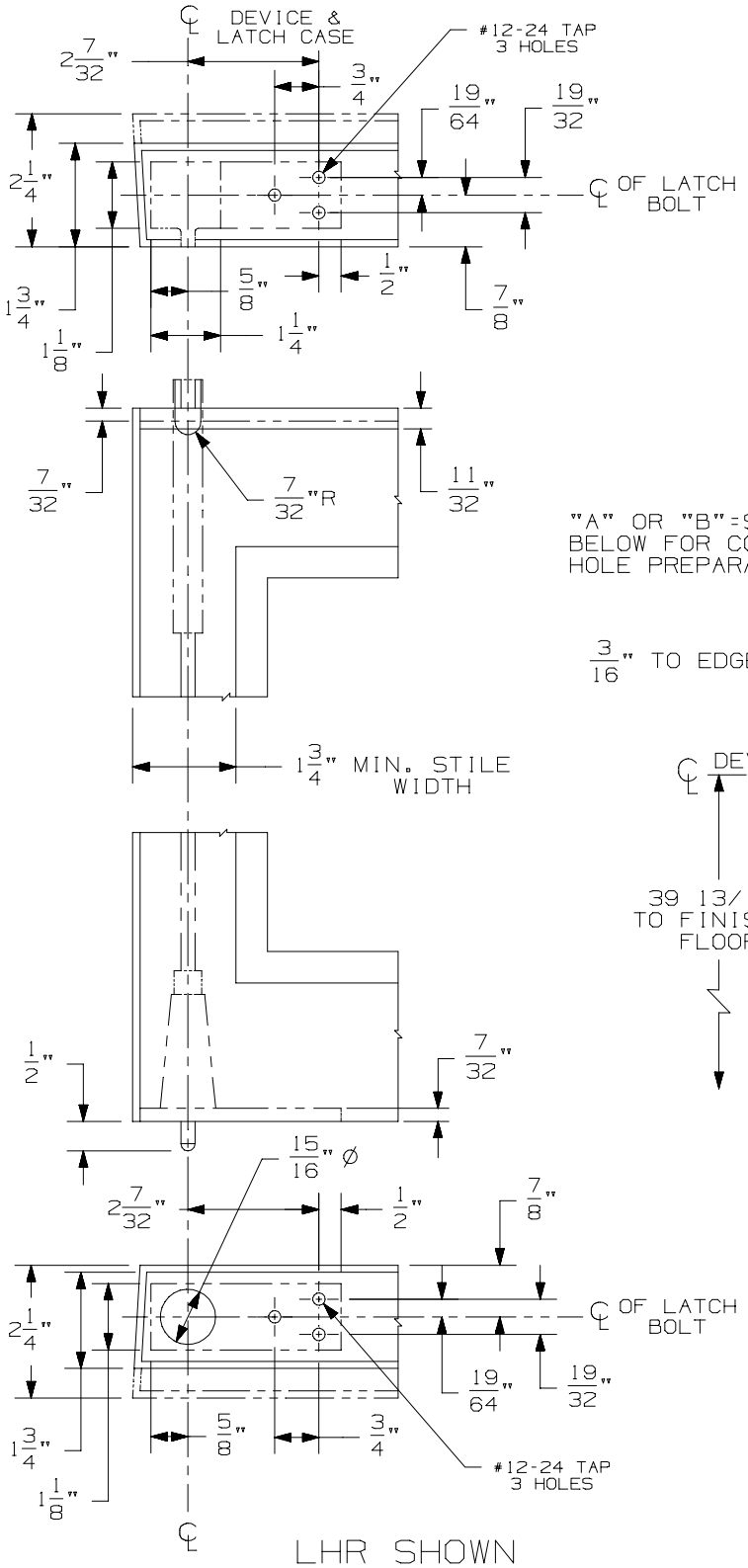

LHR SHOWN
RHR OPPOSITE

FOR OUTSIDE TRIM PREPARATION, WHEN REQUIRED, SEE ADDITIONAL TRIM TEMPLATE.

DEVICE INSTALLATION SCHEDULE	
INSTALLATION	BACKSET
MIN. 1 3/4" TO 2 1/2" DOOR STILE	SINGLE DOOR 1 9/32" DOUBLE DOOR 1 5/32"
FLUSH HOLLOW METAL DOOR	2 1/2"
STILES WIDER THAN 2 1/2"	1/2 OF STILE

NOTE: STOP THICKNESS OF 1/2 MAX. REQ'D

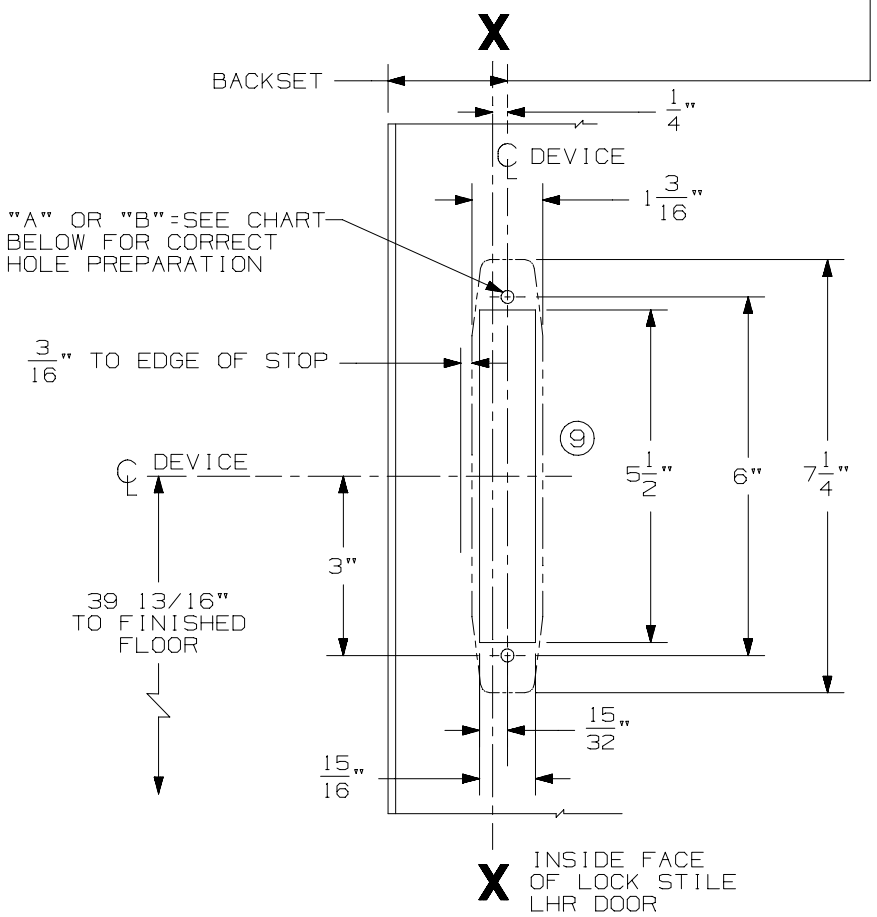

IMPORTANT

CHECK DOOR SECTION THICKNESS FOR CORRECT DEVICE MOUNTING APPLICATION	
"A" = 7/32 DIA FOR DOORS WITH 1/8 OR LESS WALL THICKNESS 2 HOLES	"B" = 1/4-28 TAP FOR DOORS WITH 5/32 TO 3/16 WALL THICKNESS 2 HOLES

NOTE: 471 STRIKE FOR METAL FRAME SEE TEMPLATE NO. 30013

472U AND 473U STRIKES FOR WOOD FRAMES

ALUMINUM FRAME PREPARATION SEE TEMPLATE NO. 30014

5547EO, 5547DT, 5547NL, & 5547TL Series Vertical Rod Devices

VON DUPRIN®

NOTES: SEE MASTER SHEET #10001 FOR SUGGESTED REINFORCING

TEMPLATE NUMBER: 10066_a

DATE: 05-15-13

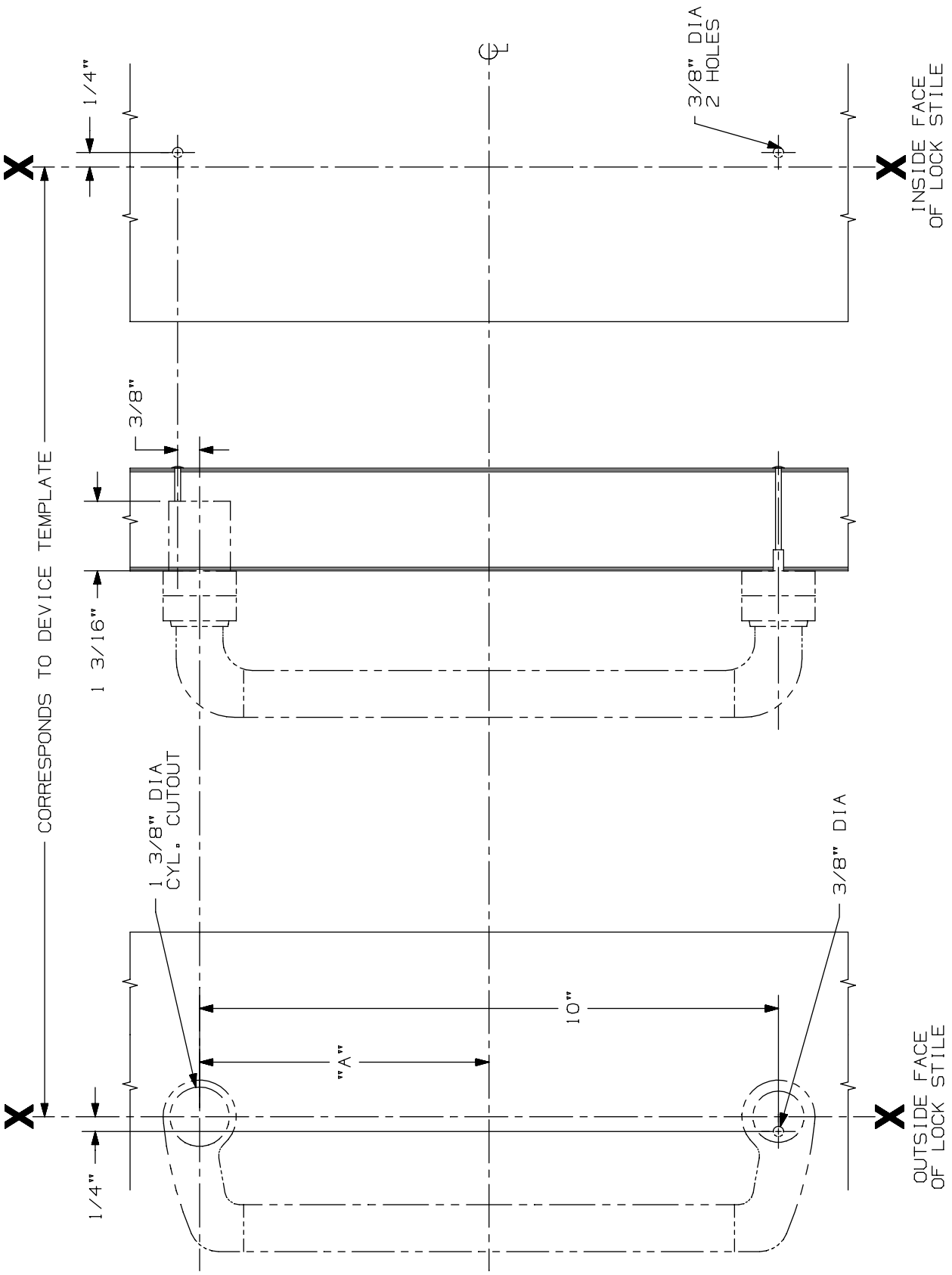

DEVICE APP. SCHEDULE	
DEVICE	DIM. "A"
5547 VERT.	4 15/16"

FOR CUTOUTS ON INSIDE FACE OF DOOR: SEE DEVICE TEMPLATE

555 NL Trim

VON DUPRIN®

NOTES: SEE MASTER SHEET #10001 FOR SUGGESTED REINFORCING

TEMPLATE NUMBER: 20028_a

DATE: 05-23-13

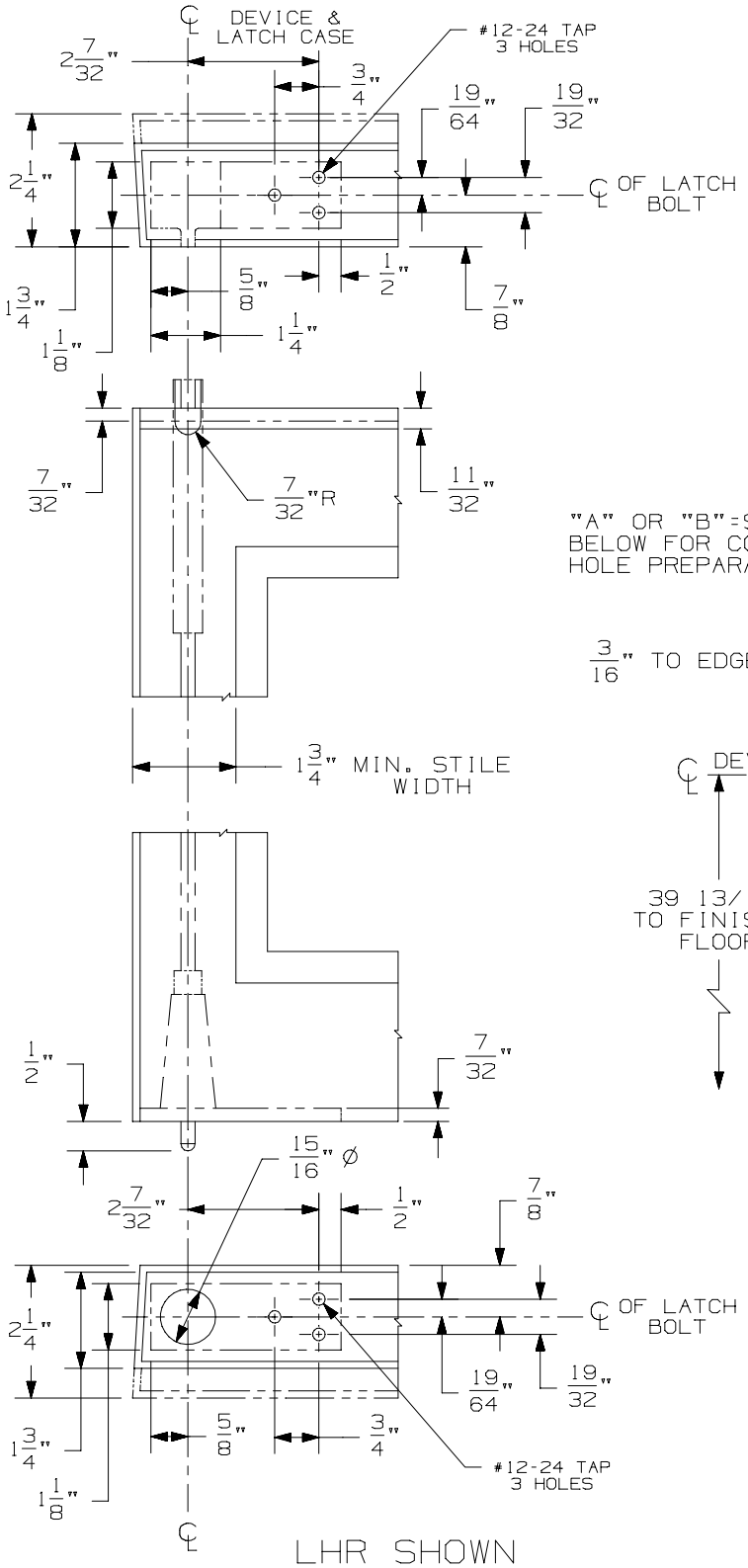

LHR SHOWN
RHR OPPOSITE

FOR OUTSIDE TRIM PREPARATION, WHEN REQUIRED, SEE ADDITIONAL TRIM TEMPLATE.

DEVICE INSTALLATION SCHEDULE	
INSTALLATION	BACKSET
MIN. 1 3/4" TO 2 1/2" DOOR STILE	SINGLE DOOR 1 9/32" DOUBLE DOOR 1 5/32"
FLUSH HOLLOW METAL DOOR	2 1/2"
STILES WIDER THAN 2 1/2"	1/2 OF STILE

NOTE: STOP THICKNESS OF 1/2 MAX. REQ'D

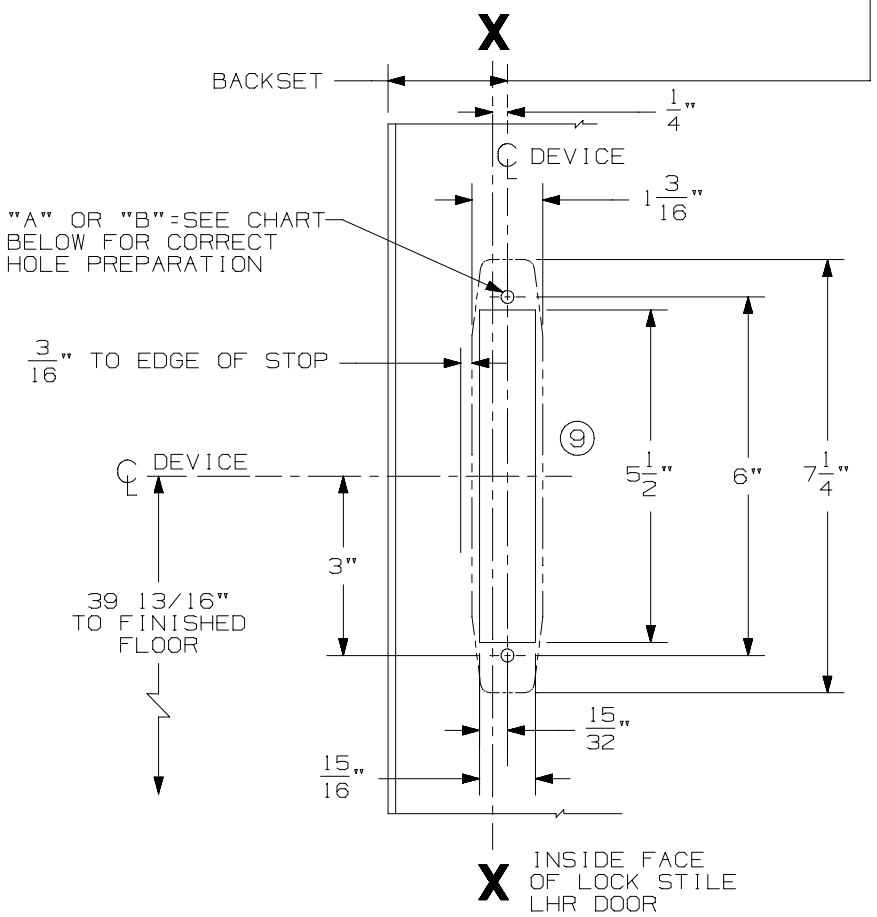

IMPORTANT

CHECK DOOR SECTION THICKNESS FOR CORRECT DEVICE MOUNTING APPLICATION	
"A" = 7/32 DIA FOR DOORS WITH 1/8 OR LESS WALL THICKNESS 2 HOLES	"B" = 1/4-28 TAP FOR DOORS WITH 5/32 TO 3/16 WALL THICKNESS 2 HOLES

NOTE: 471 STRIKE FOR METAL FRAME SEE TEMPLATE NO. 30013

472U AND 473U STRIKES FOR WOOD FRAMES

ALUMINUM FRAME PREPARATION SEE TEMPLATE NO. 30014

5547EO, 5547DT, 5547NL, & 5547TL Series Vertical Rod Devices

VON DUPRIN®

NOTES: SEE MASTER SHEET #10001 FOR SUGGESTED REINFORCING

TEMPLATE NUMBER: 10066_a

DATE: 05-15-13

NOTES: SEE MASTER SHEET #10001 FOR SUGGESTED REINFORCING

550 DT Trim

VON DUPRIN®

TEMPLATE NUMBER: 20026_a

DATE: 05-23-13

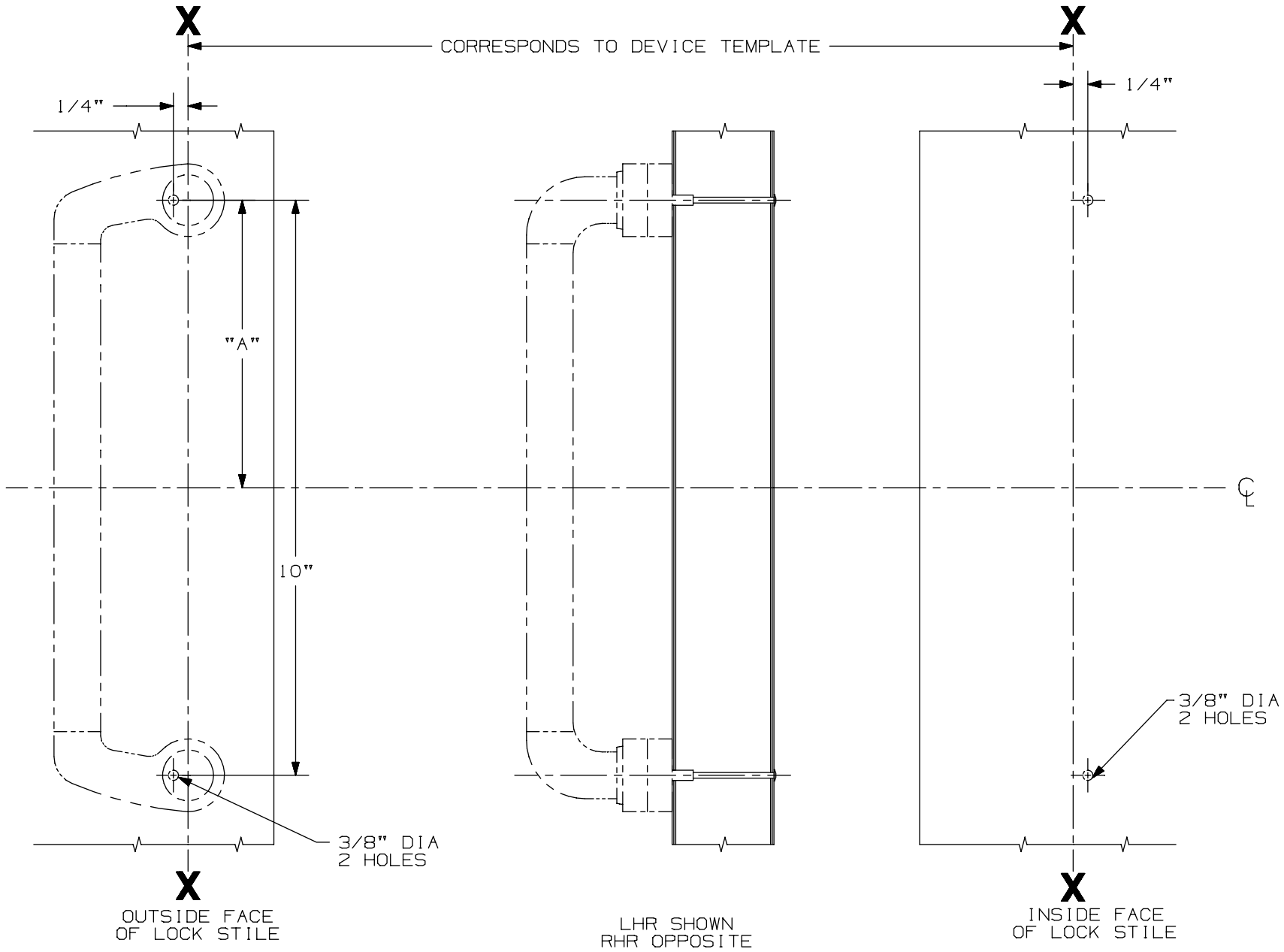

DEVICE APPLICATION SCHEDULE					
DEVICE	DIM. "A"	DEVICE	DIM. "A"	DEVICE	DIM. "A"
44 RIM	4 15/16"	44 MORT.	4 15/16"	44 VERT.	4 15/16"
55 RIM	4 15/16"	55 MORT.	4 15/16"	5547 VERT.	4 15/16"
88 RIM	4 15/16"	88 MORT.	4 15/16"	8827 VERT.	4 15/16"

FOR CUTOUTS ON INSIDE FACE OF DOOR: SEE DEVICE TEMPLATE

376-T Control

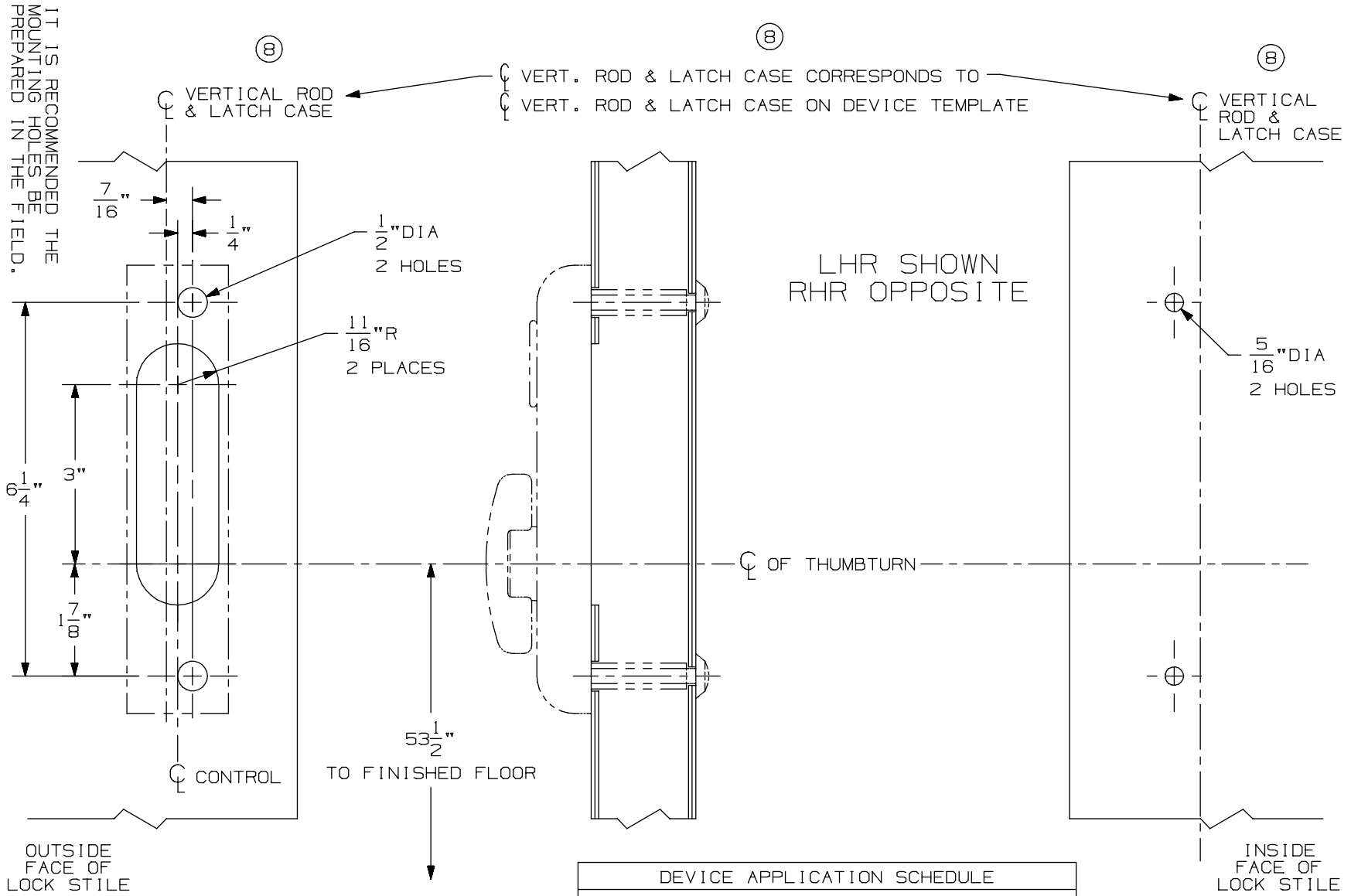

DEVICE APPLICATION SCHEDULE
5547/5547-F VERT. ROD DEVICE
8847-F VERT. ROD DEVICE
* 3347/3547 VERT. ROD DEVICE
3347-F/3547-F VERT. ROD DEVICE
⑧ * 3347A/3547A VERT. ROD DEVICE
⑧ 3347A-F/3547A-F VERT. ROD DEVICE
9847/9947 VERT. ROD DEVICE
9847-F/9947-F VERTICAL ROD DEVICE

⑧ * NOT TO BE USED WITH 1 1/16" LATCH CASE BACKSET ON BULLNOSE EDGE DOORS WITH WEATHERSTRIP CHANNEL.

NOTES: SEE MASTER SHEET #10001 FOR SUGGESTED REINFORCING

TEMPLATE NUMBER: 40114_a

DATE: 05-28-13

VON DUPRIN®

55 Series Exit Devices

-

5547-F Concealed Vertical Rod Fire

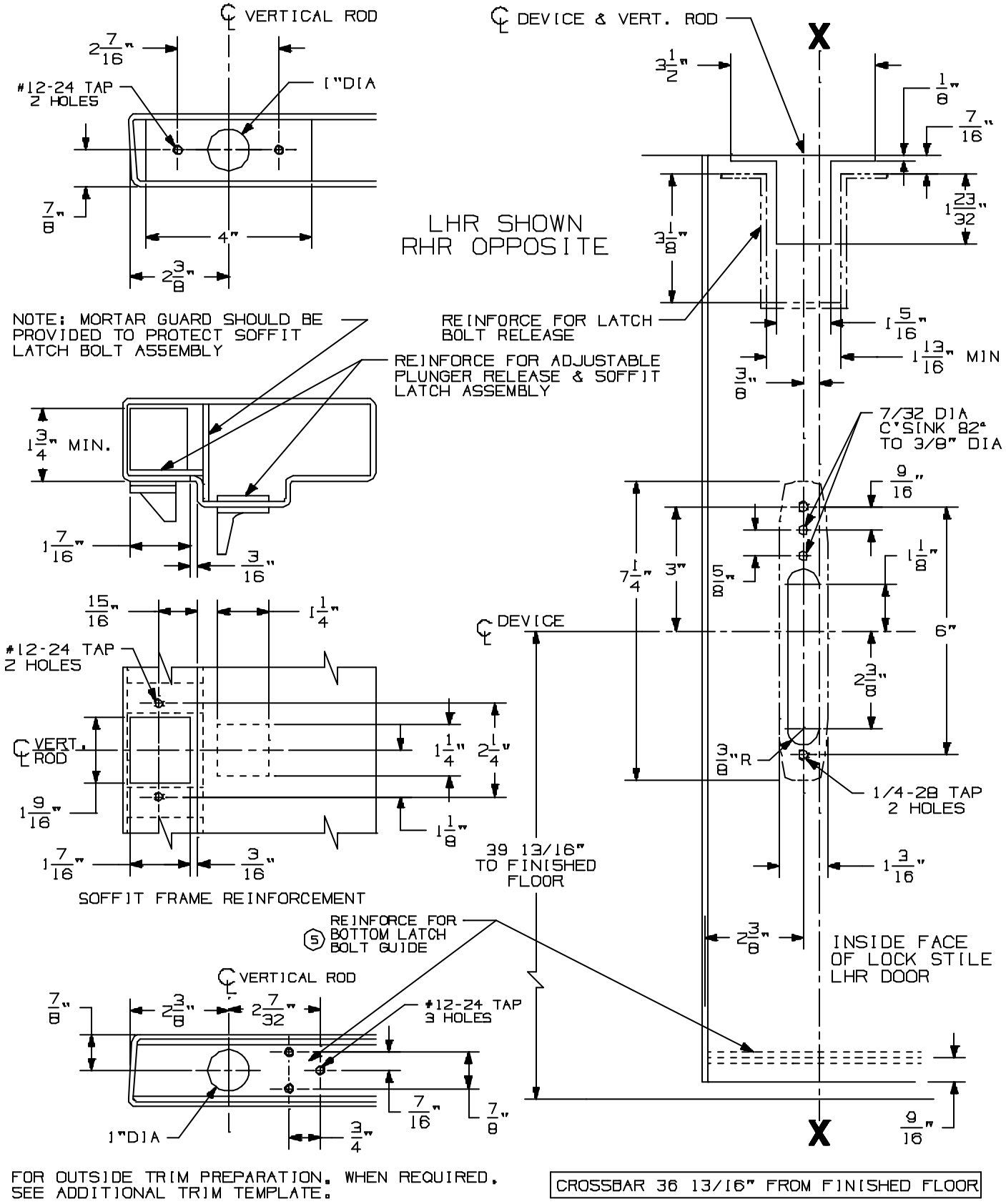

"UL" Listed Fire Exit Hardware
5547-F &5547-F TL Vertical Rod Devices

VON DUPRIN®

NOTES: SEE MASTER SHEET #10001 FOR SUGGESTED REINFORCING

TEMPLATE NUMBER: 10065_a

DATE: 05-15-13

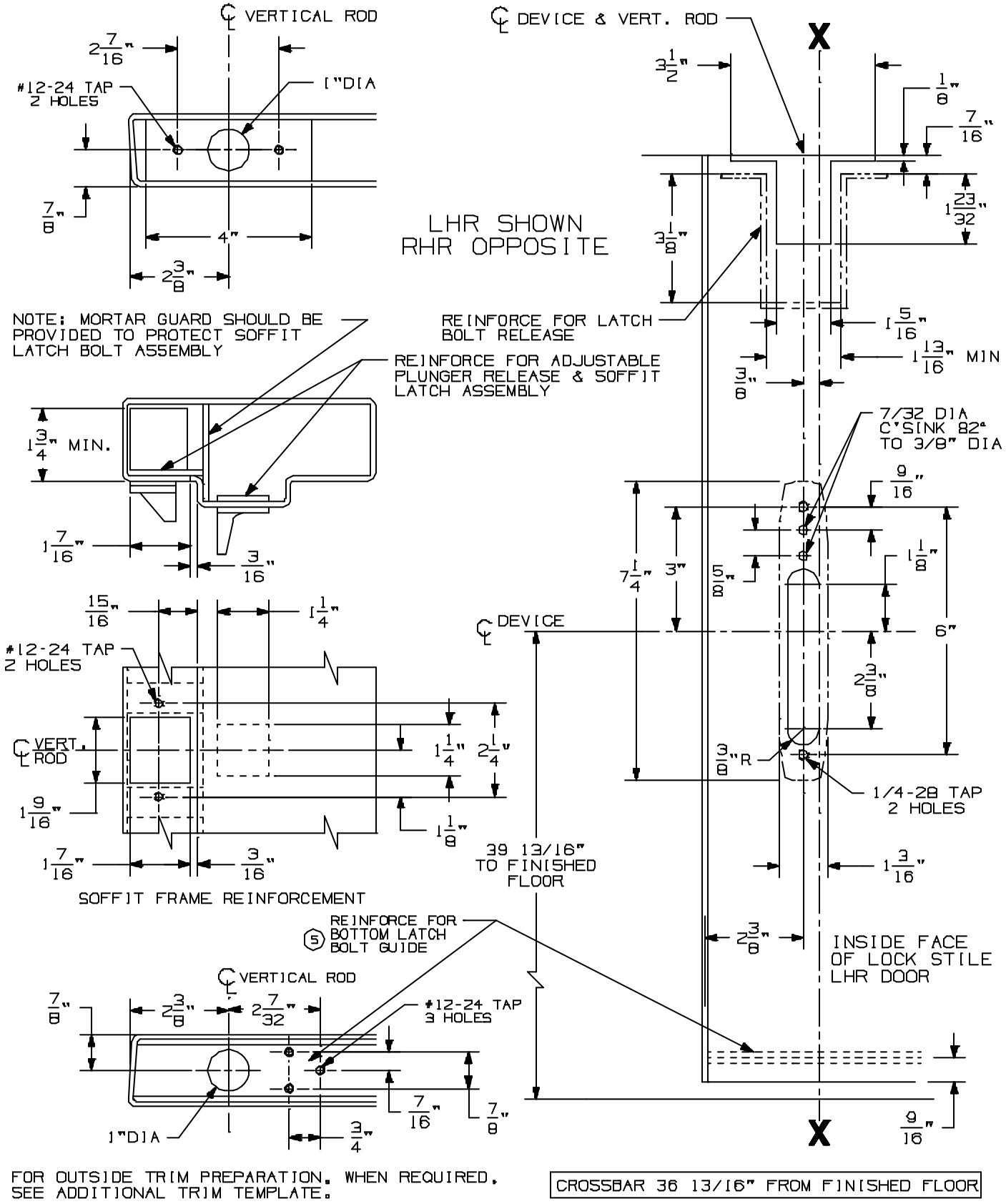

"UL" Listed Fire Exit Hardware
5547-F &5547-F TL Vertical Rod Devices

VON DUPRIN®

NOTES: SEE MASTER SHEET #10001 FOR SUGGESTED REINFORCING

TEMPLATE NUMBER: 10065_a

DATE: 05-15-13

NOTES: SEE MASTER SHEET #10001 FOR SUGGESTED REINFORCING

371-L Control

VON DUPRIN®

TEMPLATE NUMBER: 40100_a

DATE: 05-28-13

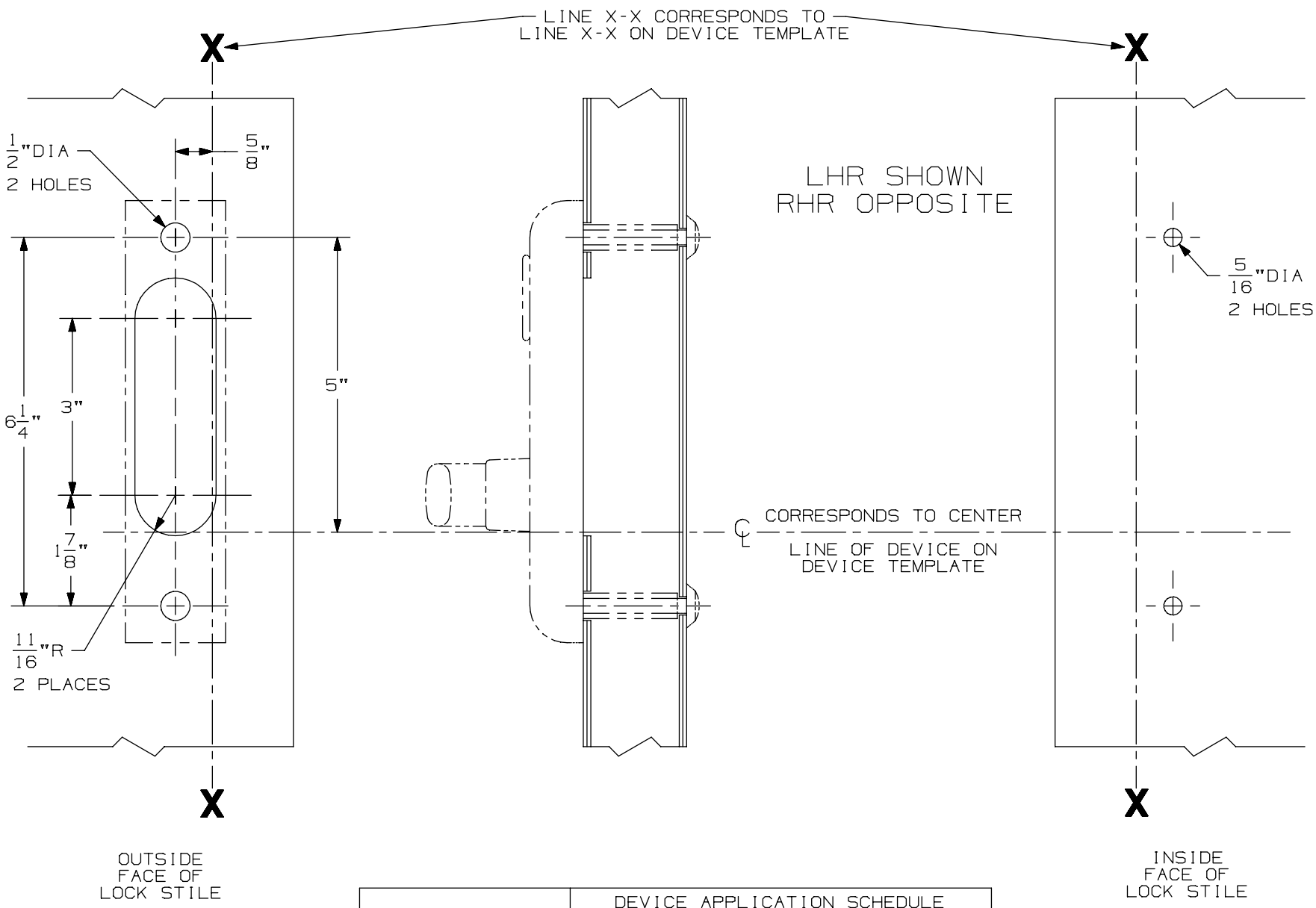

FOR CUTOUT ON INSIDE FACE OF DOOR SEE DEVICE TEMPLATE	DEVICE APPLICATION SCHEDULE
	5547-F VERTICAL ROD DEVICE

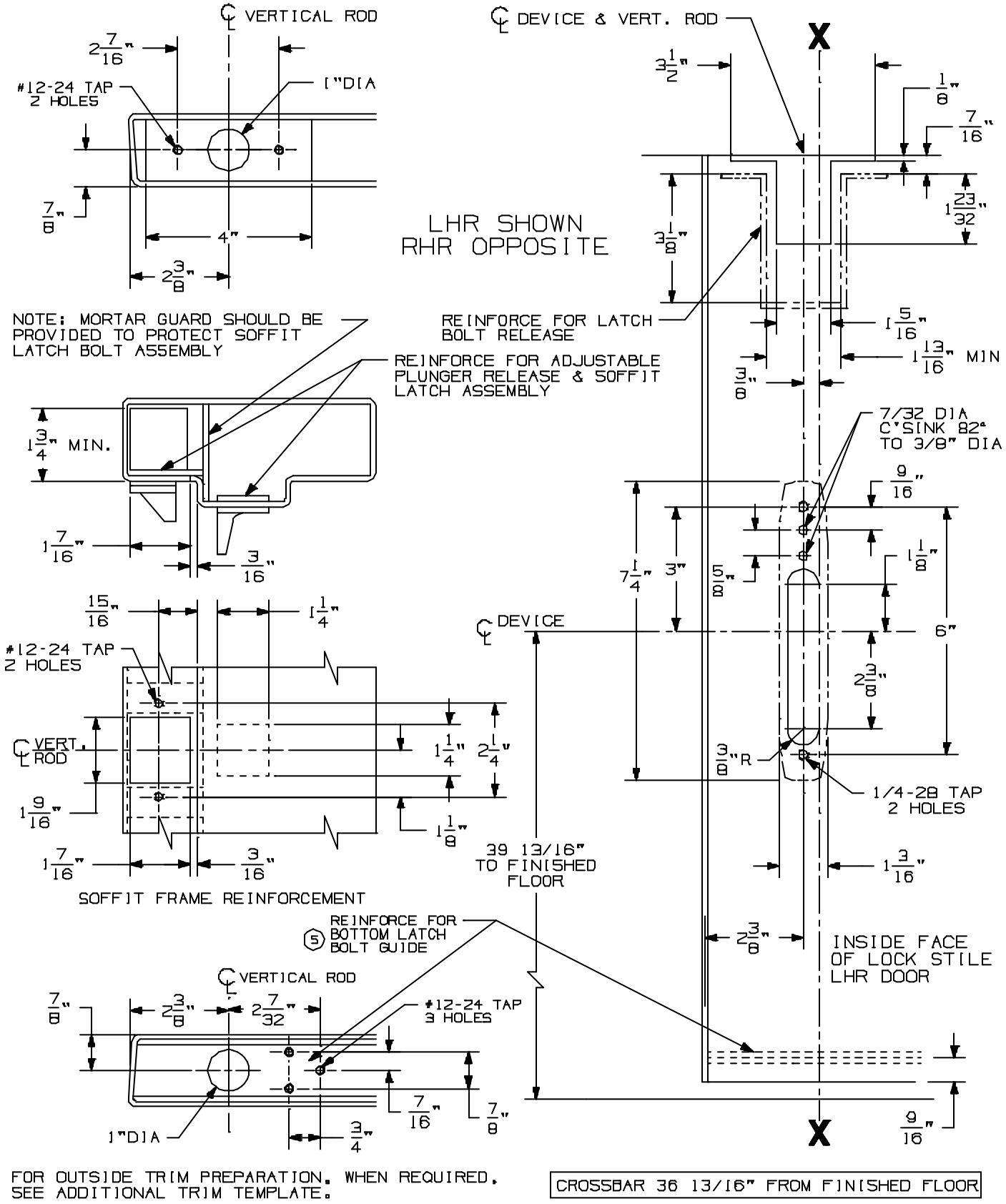

"UL" Listed Fire Exit Hardware
5547-F &5547-F TL Vertical Rod Devices

VON DUPRIN®

NOTES: SEE MASTER SHEET #10001 FOR SUGGESTED REINFORCING

TEMPLATE NUMBER: 10065_a

DATE: 05-15-13

DEVICE APPLICATION SCHEDULE	
DEVICE	DIM "A"
5547-F CONCEALED VERT.	3 3/16"
8847-F CONCEALED VERT.	3 3/16"

FOR CUTOUTS ON INSIDE FACE OF DOOR SEE DEVICE TEMPLATE

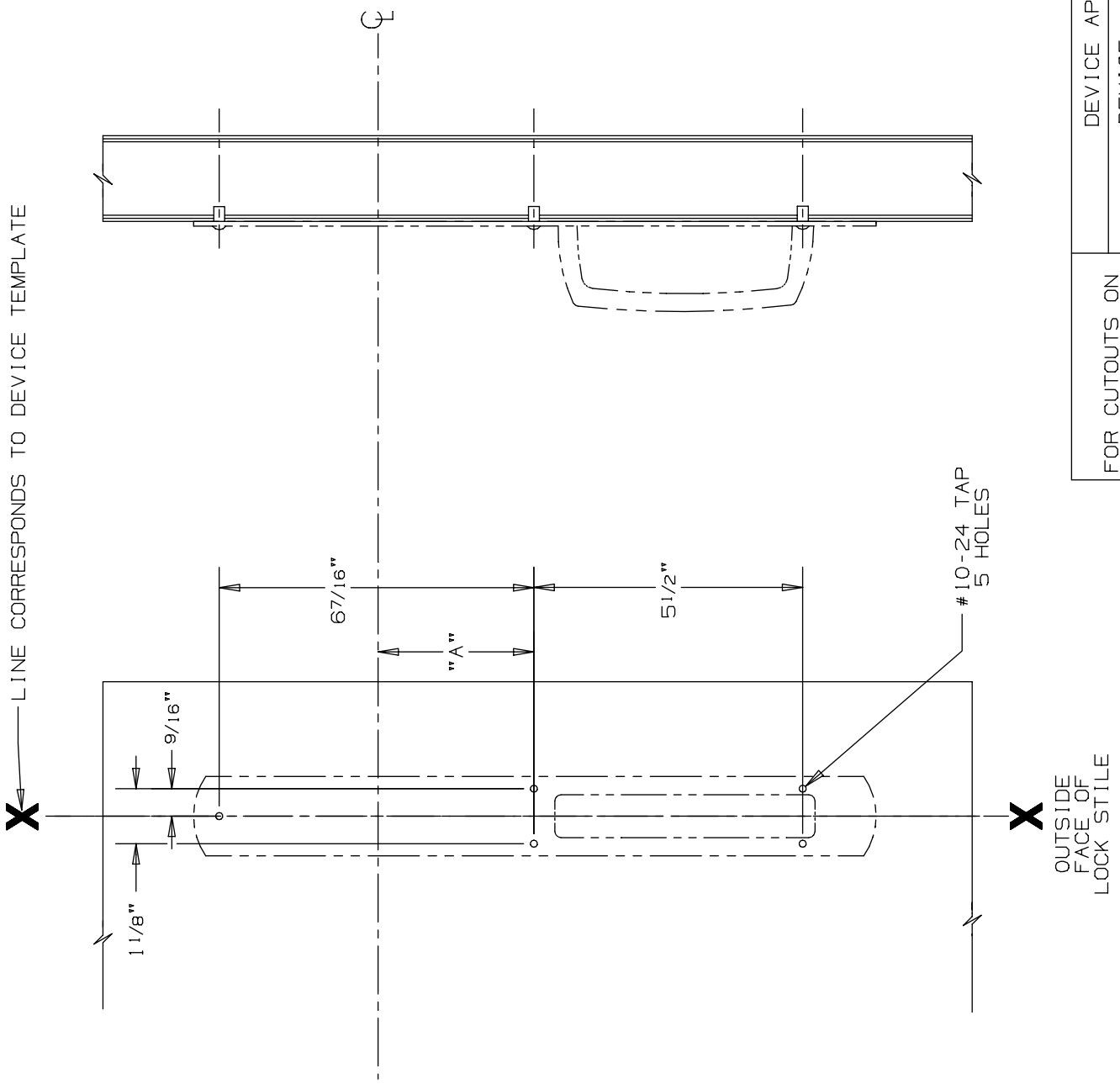

609DT Surface Applied Trim

VON DUPRIN®

NOTES: SEE MASTER SHEET #10001 FOR SUGGESTED REINFORCING

TEMPLATE NUMBER: 20070_a

DATE: 05-23-13

376-T Control

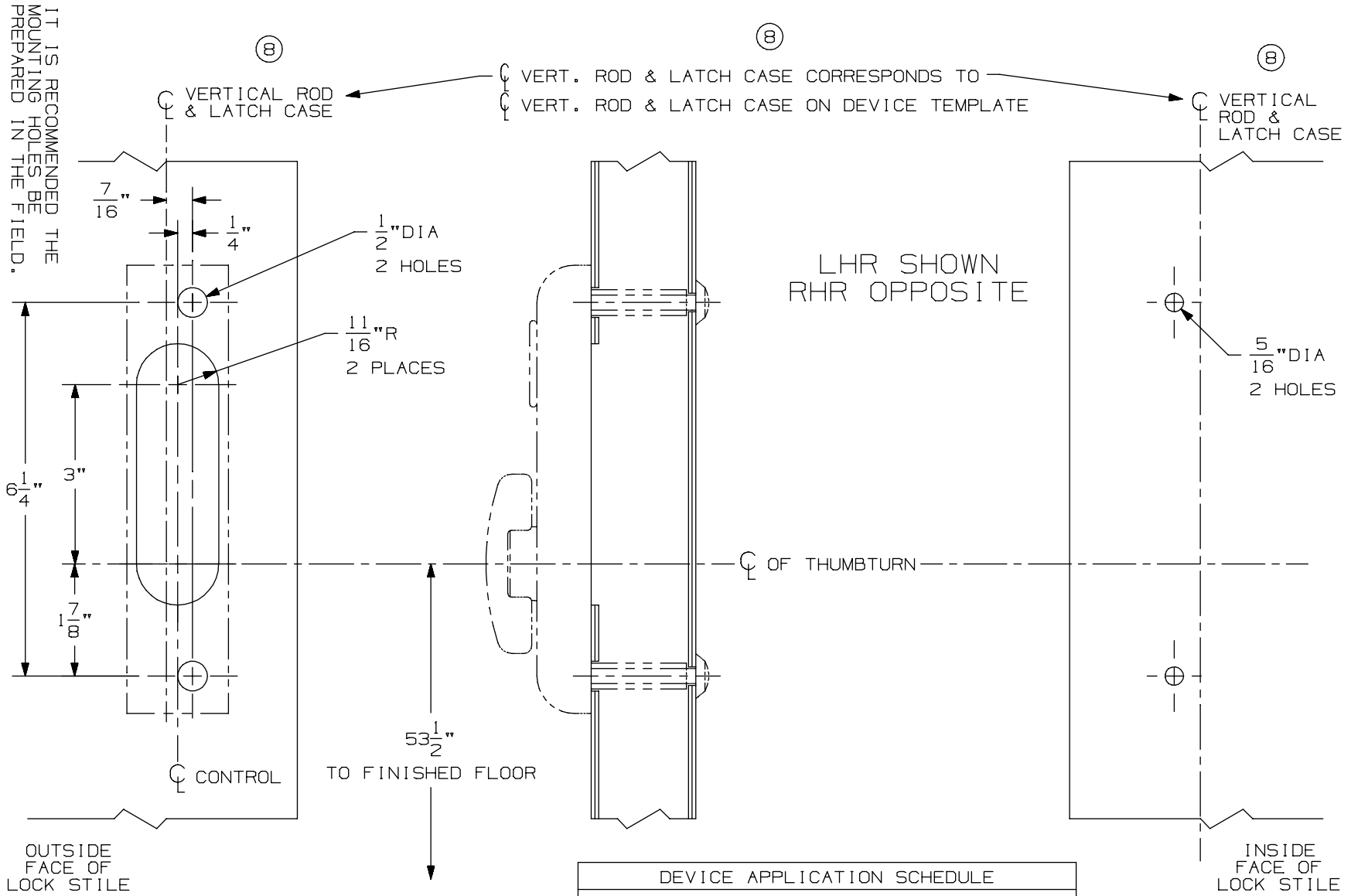

DEVICE APPLICATION SCHEDULE
5547/5547-F VERT. ROD DEVICE
8847-F VERT. ROD DEVICE
* 3347/3547 VERT. ROD DEVICE
3347-F/3547-F VERT. ROD DEVICE
⑧ * 3347A/3547A VERT. ROD DEVICE
⑧ 3347A-F/3547A-F VERT. ROD DEVICE
9847/9947 VERT. ROD DEVICE
9847-F/9947-F VERTICAL ROD DEVICE

⑧ * NOT TO BE USED WITH 1 1/16" LATCH CASE BACKSET ON BULLNOSE EDGE DOORS WITH WEATHERSTRIP CHANNEL.

NOTES: SEE MASTER SHEET #10001 FOR SUGGESTED REINFORCING

TEMPLATE NUMBER: 40114_a

DATE: 05-28-13

VON DUPRIN®

55 Series Exit Devices

-

5575 Mortise

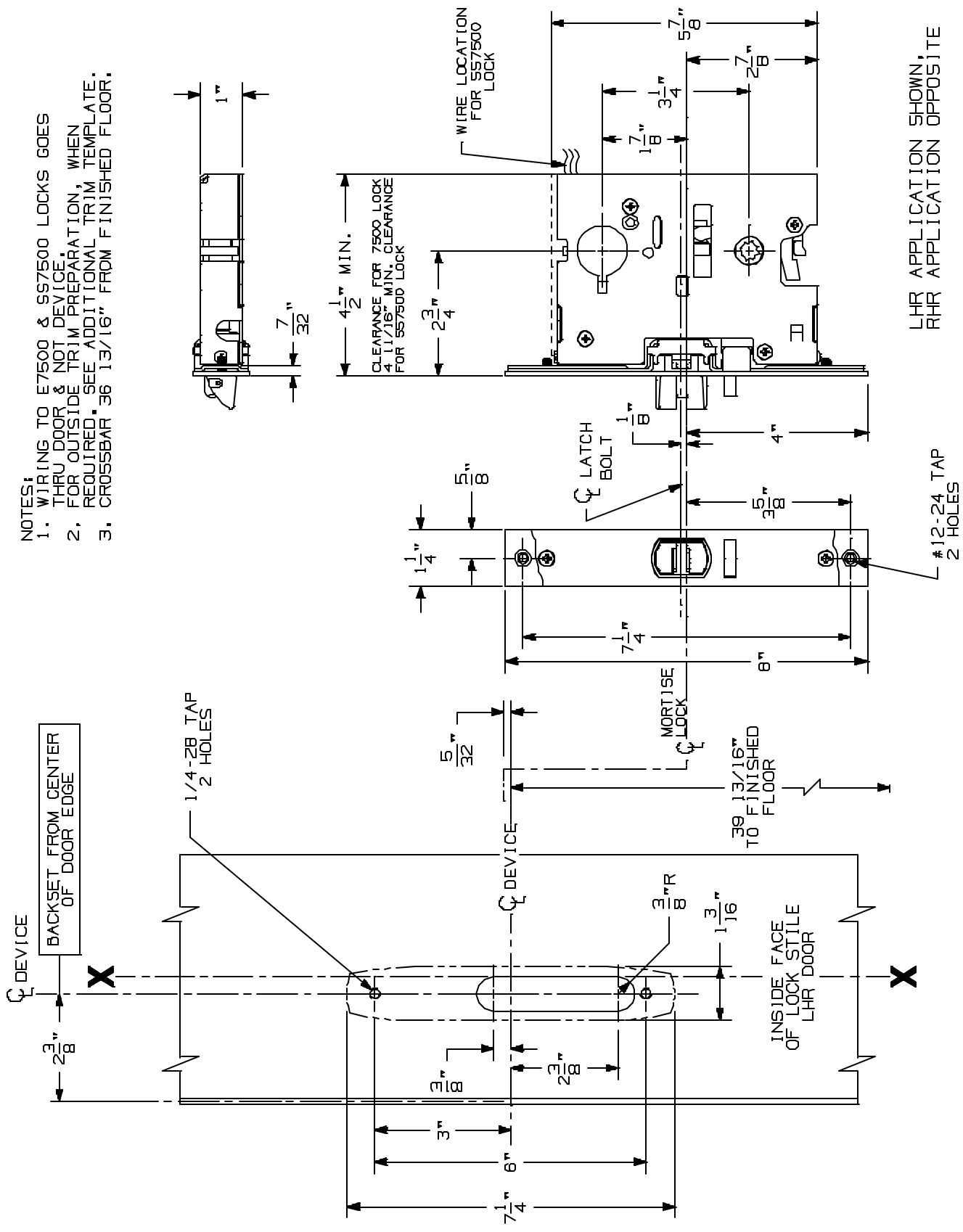

5575/5575-F Mortise Lock Devices

VON DUPRIN®

NOTES: SEE MASTER SHEET #10001 FOR SUGGESTED REINFORCING

TEMPLATE NUMBER: 10068_a

DATE: 05-15-13

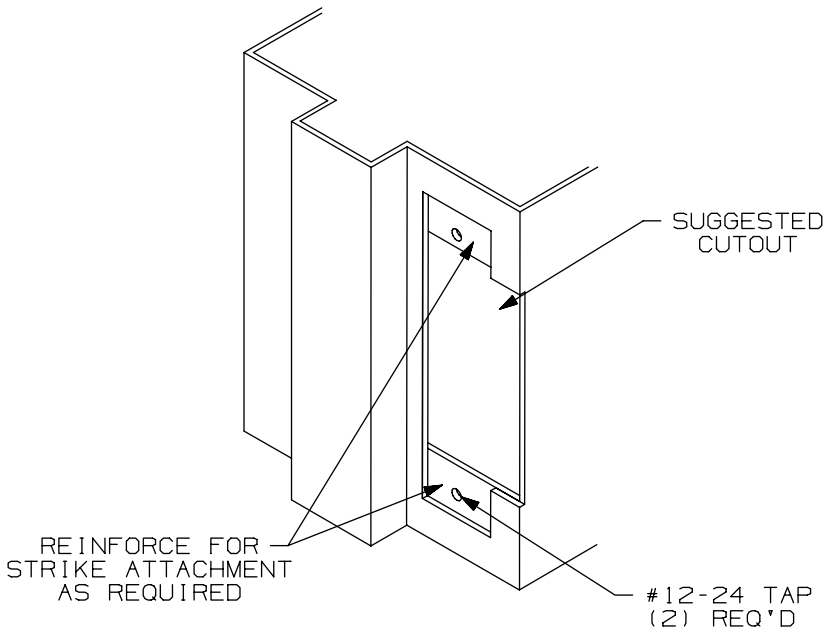

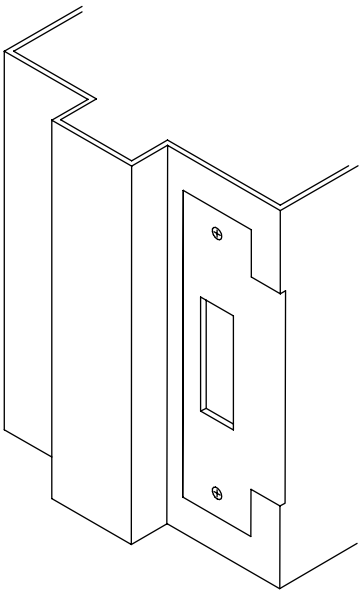

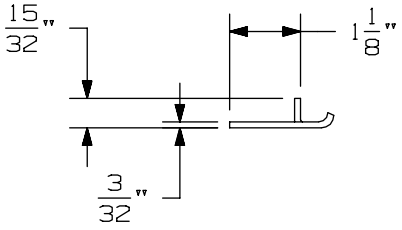

APPLICATION SCHEDULE	
DEVICE	DIM. "A"
9875 & 9875-F	11/16
9975 & 9975-F	11/16
8875 & 8875-F	1/2
5575 & 5575-F	1/2

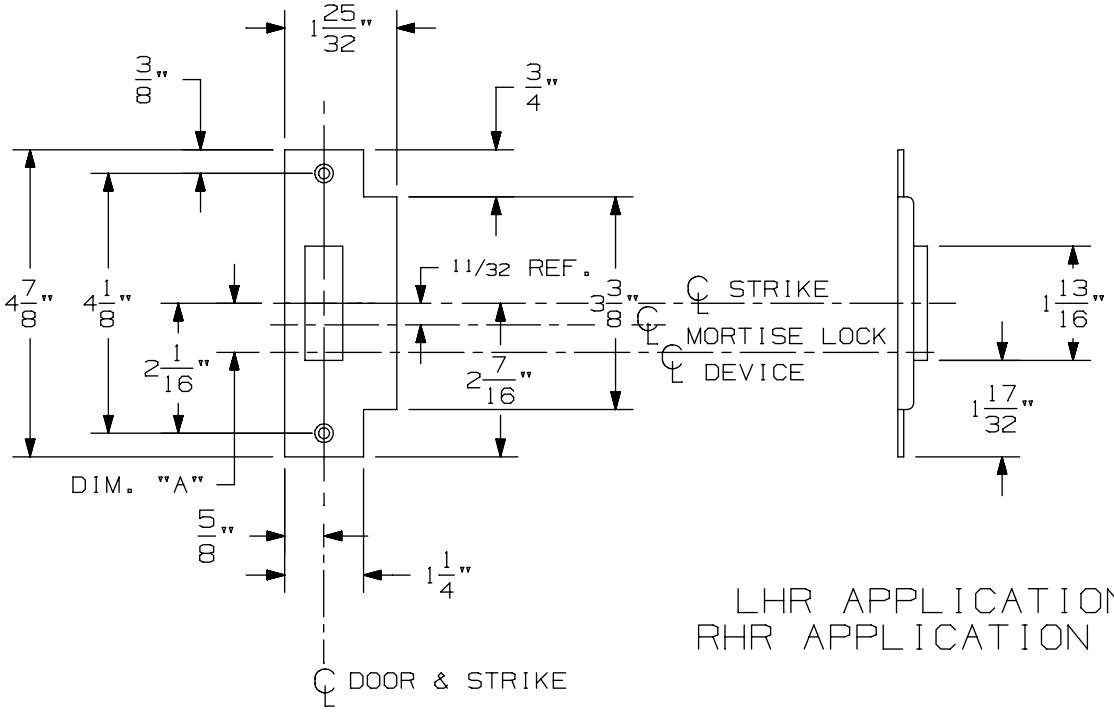

LHR APPLICATION SHOWN
RHR APPLICATION OPPOSITE

575 Mortise Strike (Single Door) for 7500 Mortise Lock

VON DUPRIN®

NOTES: SEE MASTER SHEET #10001 FOR SUGGESTED REINFORCING

TEMPLATE NUMBER: 30210_b

DATE: 07-22-13

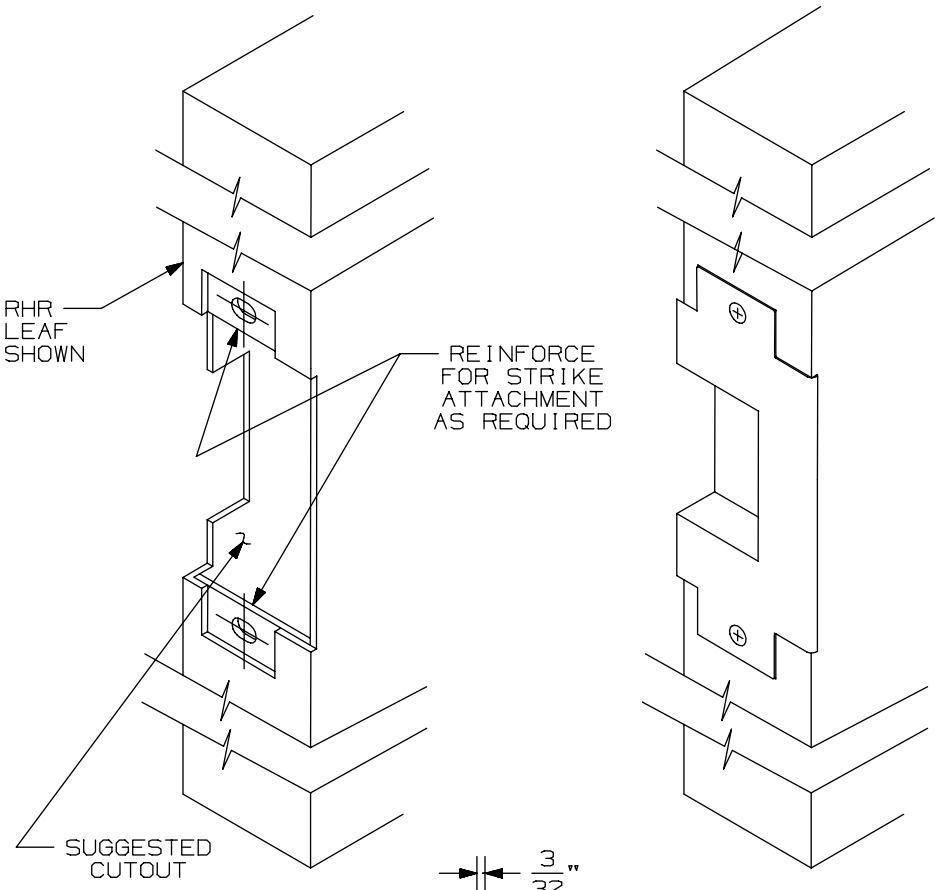

APPLICATION SCHEDULE	
DEVICE	DIM."A"
9875 & 9875-F	11/16
9975 & 9975-F	11/16
8875 & 8875-F	1/2
5575 & 5575-F	1/2

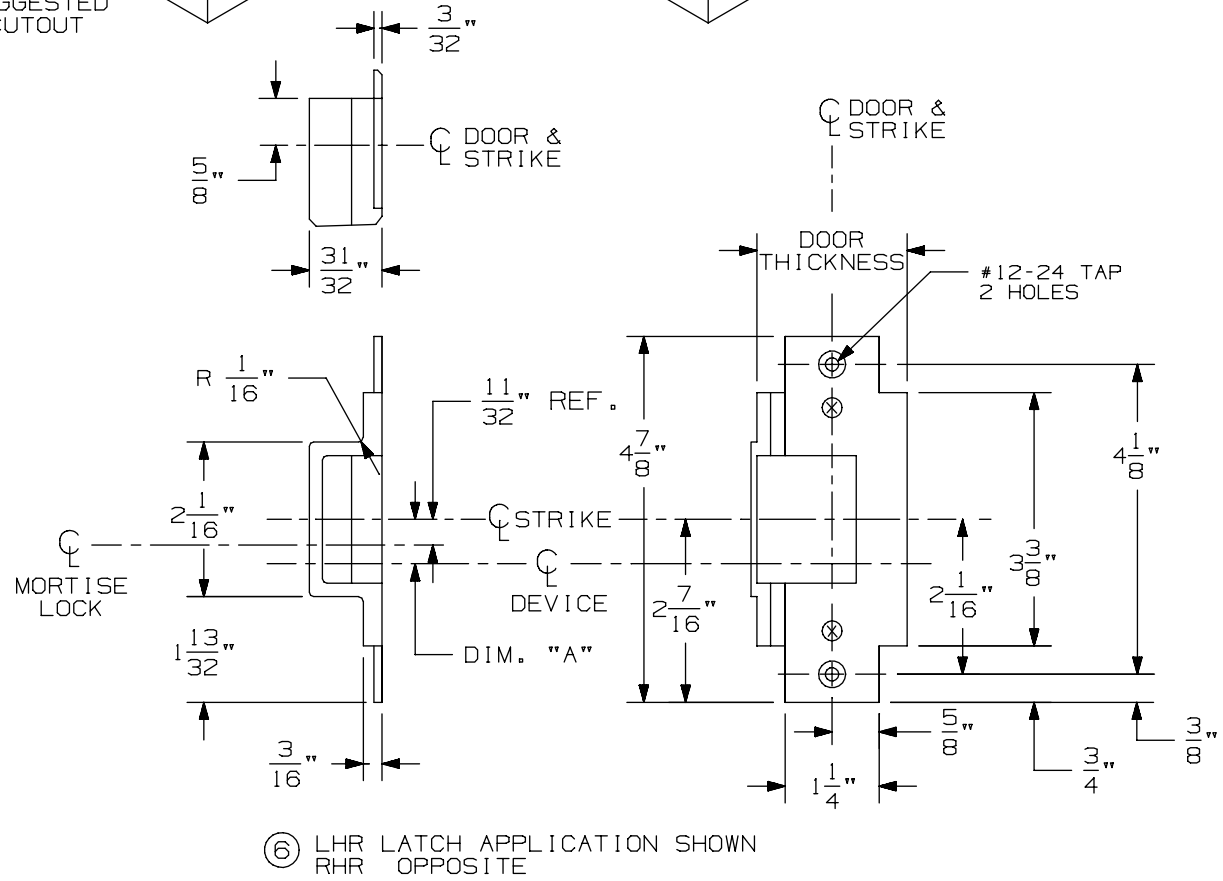

⑥ LHR LATCH APPLICATION SHOWN
RHR OPPOSITE

576A & 576B Mortise Strike for 7500 Mortise Lock

VON DUPRIN®

NOTES: SEE MASTER SHEET #10001 FOR SUGGESTED REINFORCING

TEMPLATE NUMBER: 30211_a

DATE: 05-28-13

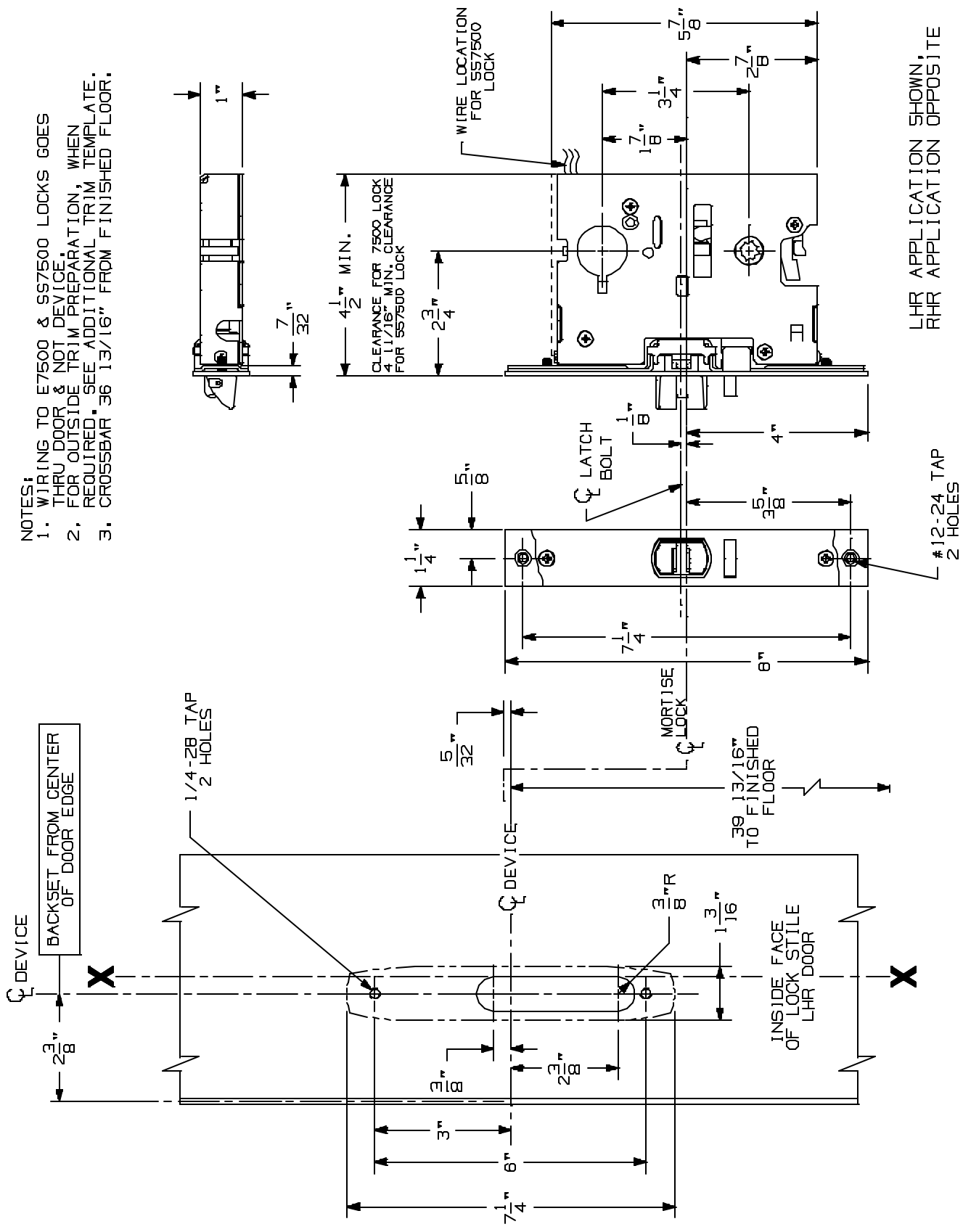

5575/5575-F Mortise Lock Devices

VON DUPRIN®

NOTES: SEE MASTER SHEET #10001 FOR SUGGESTED REINFORCING

TEMPLATE NUMBER: 10068_a

DATE: 05-15-13

NOTES: SEE MASTER SHEET #10001 FOR SUGGESTED REINFORCING

550 DT Trim

VON DUPRIN®

TEMPLATE NUMBER: 20026_a

DATE: 05-23-13

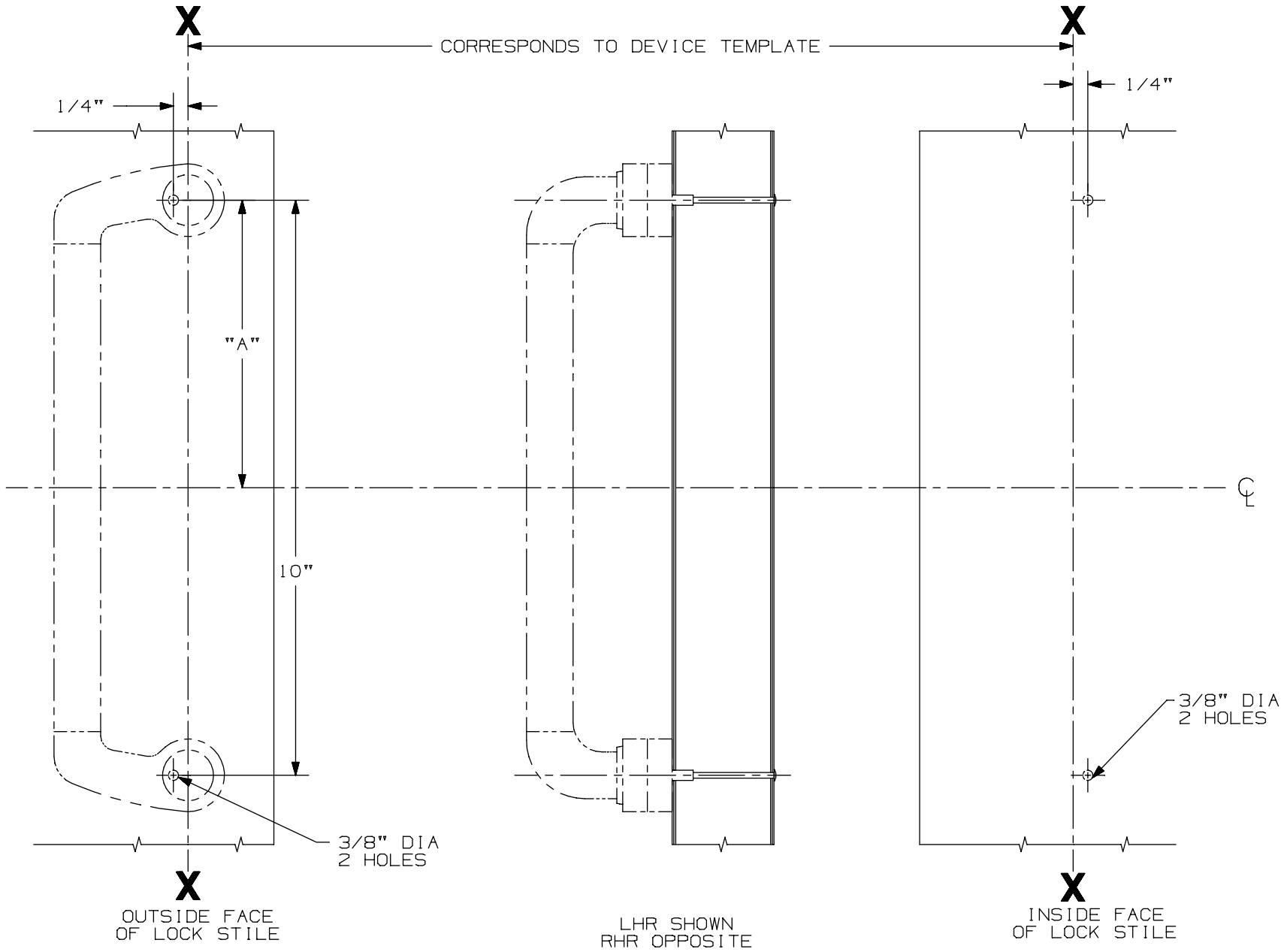

DEVICE APPLICATION SCHEDULE					
DEVICE	DIM. "A"	DEVICE	DIM. "A"	DEVICE	DIM. "A"
44 RIM	4 15/16"	44 MORT.	4 15/16"	44 VERT.	4 15/16"
55 RIM	4 15/16"	55 MORT.	4 15/16"	5547 VERT.	4 15/16"
88 RIM	4 15/16"	88 MORT.	4 15/16"	8827 VERT.	4 15/16"

FOR CUTOUTS ON INSIDE FACE OF DOOR: SEE DEVICE TEMPLATE

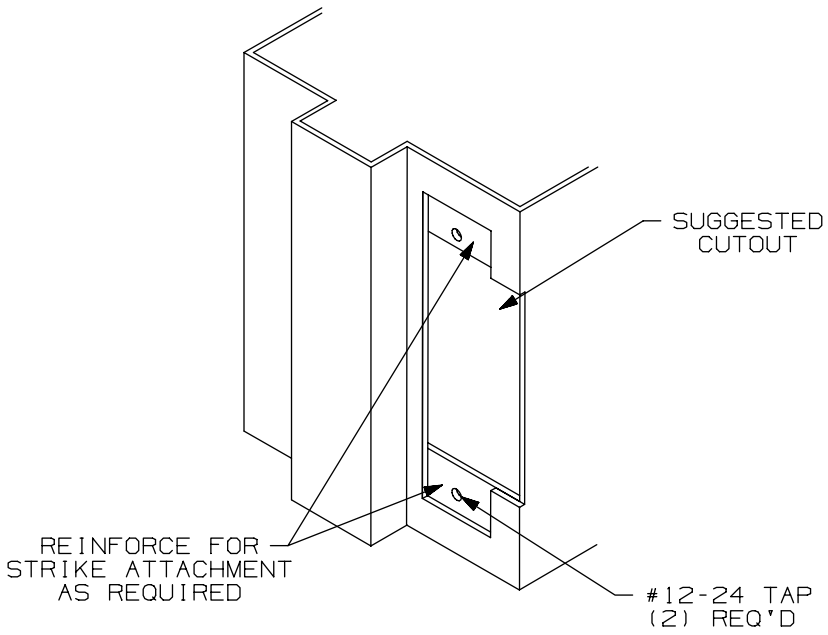

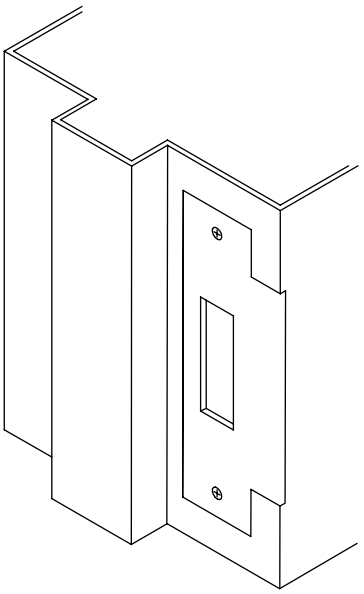

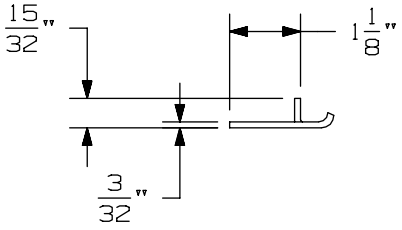

APPLICATION SCHEDULE	
DEVICE	DIM. "A"
9875 & 9875-F	11/16
9975 & 9975-F	11/16
8875 & 8875-F	1/2
5575 & 5575-F	1/2

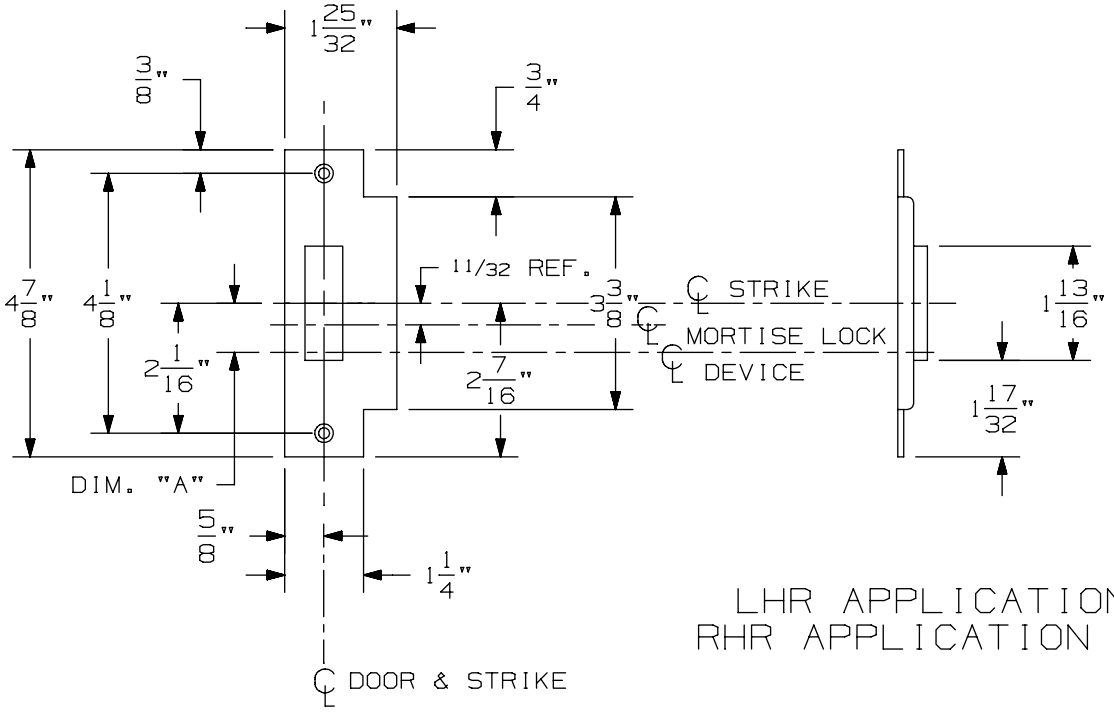

LHR APPLICATION SHOWN
RHR APPLICATION OPPOSITE

575 Mortise Strike (Single Door) for 7500 Mortise Lock

VON DUPRIN®

NOTES: SEE MASTER SHEET #10001 FOR SUGGESTED REINFORCING

TEMPLATE NUMBER: 30210_b

DATE: 07-22-13

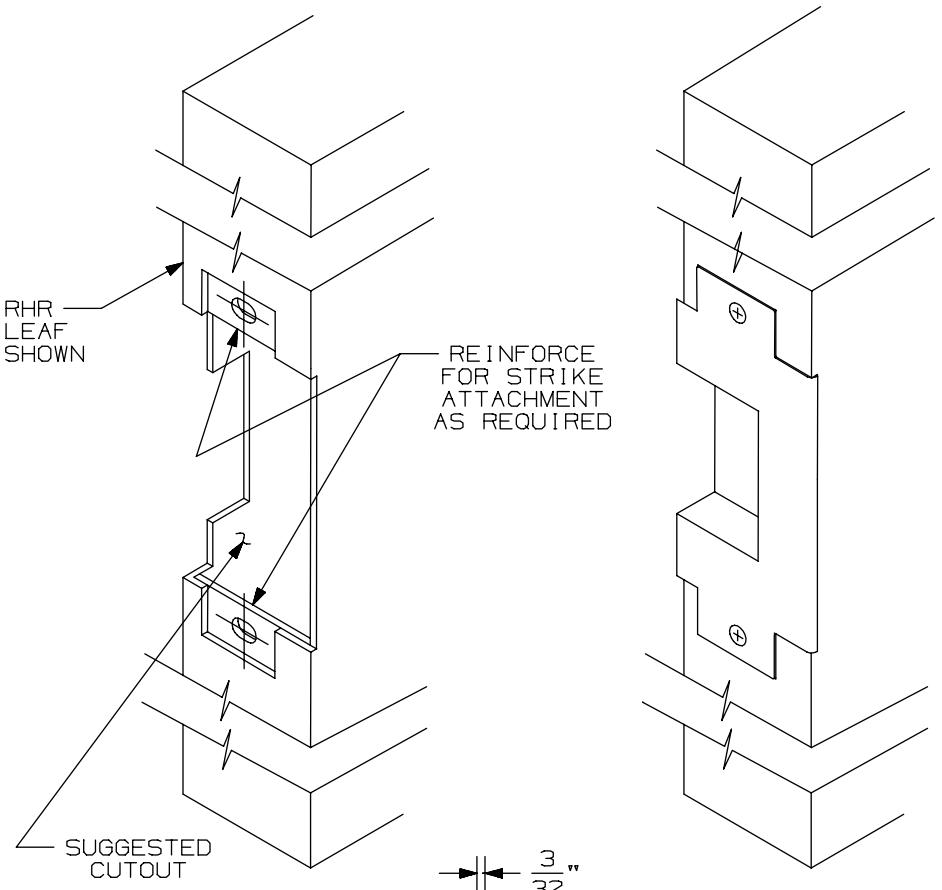

APPLICATION SCHEDULE	
DEVICE	DIM."A"
9875 & 9875-F	11/16
9975 & 9975-F	11/16
8875 & 8875-F	1/2
5575 & 5575-F	1/2

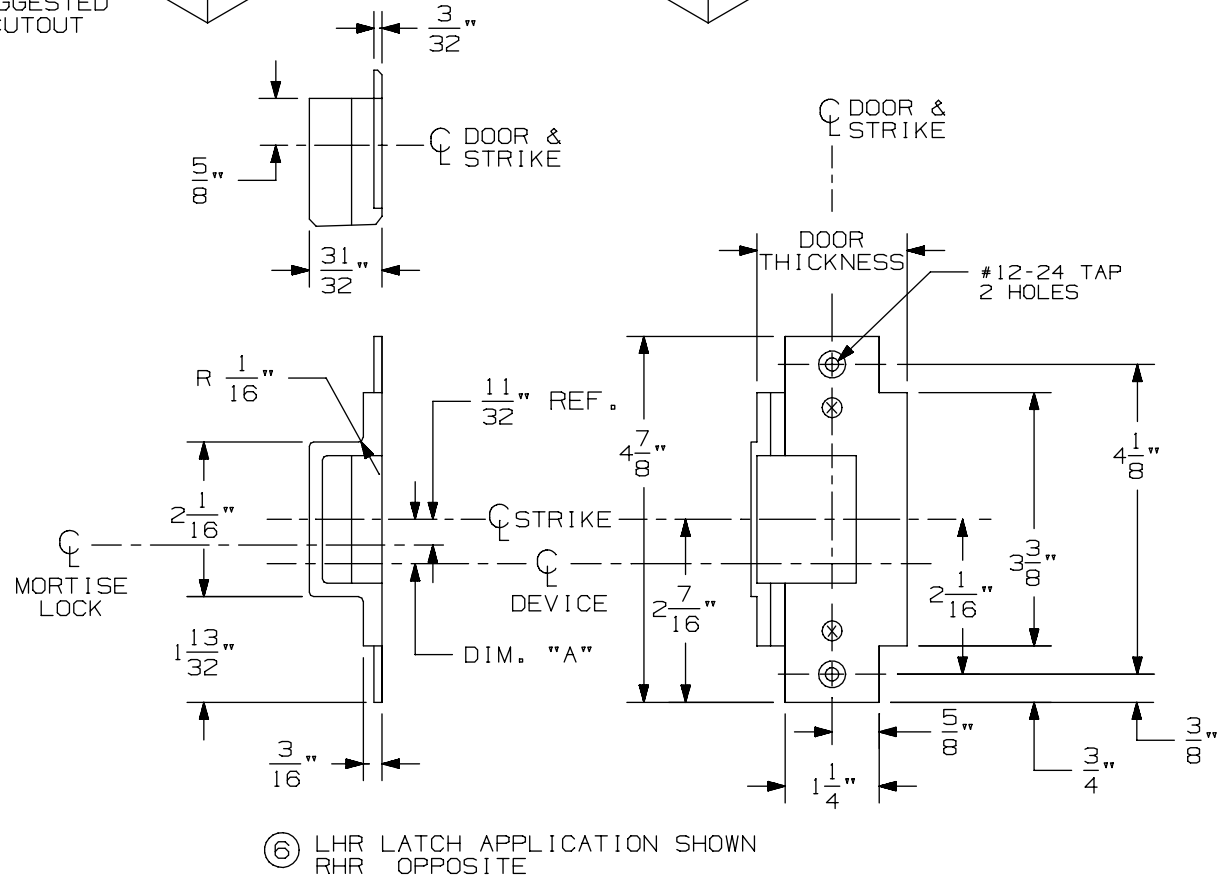

⑥ LHR LATCH APPLICATION SHOWN
RHR OPPOSITE

576A & 576B Mortise Strike for 7500 Mortise Lock

VON DUPRIN®

NOTES: SEE MASTER SHEET #10001 FOR SUGGESTED REINFORCING

TEMPLATE NUMBER: 30211_a

DATE: 05-28-13

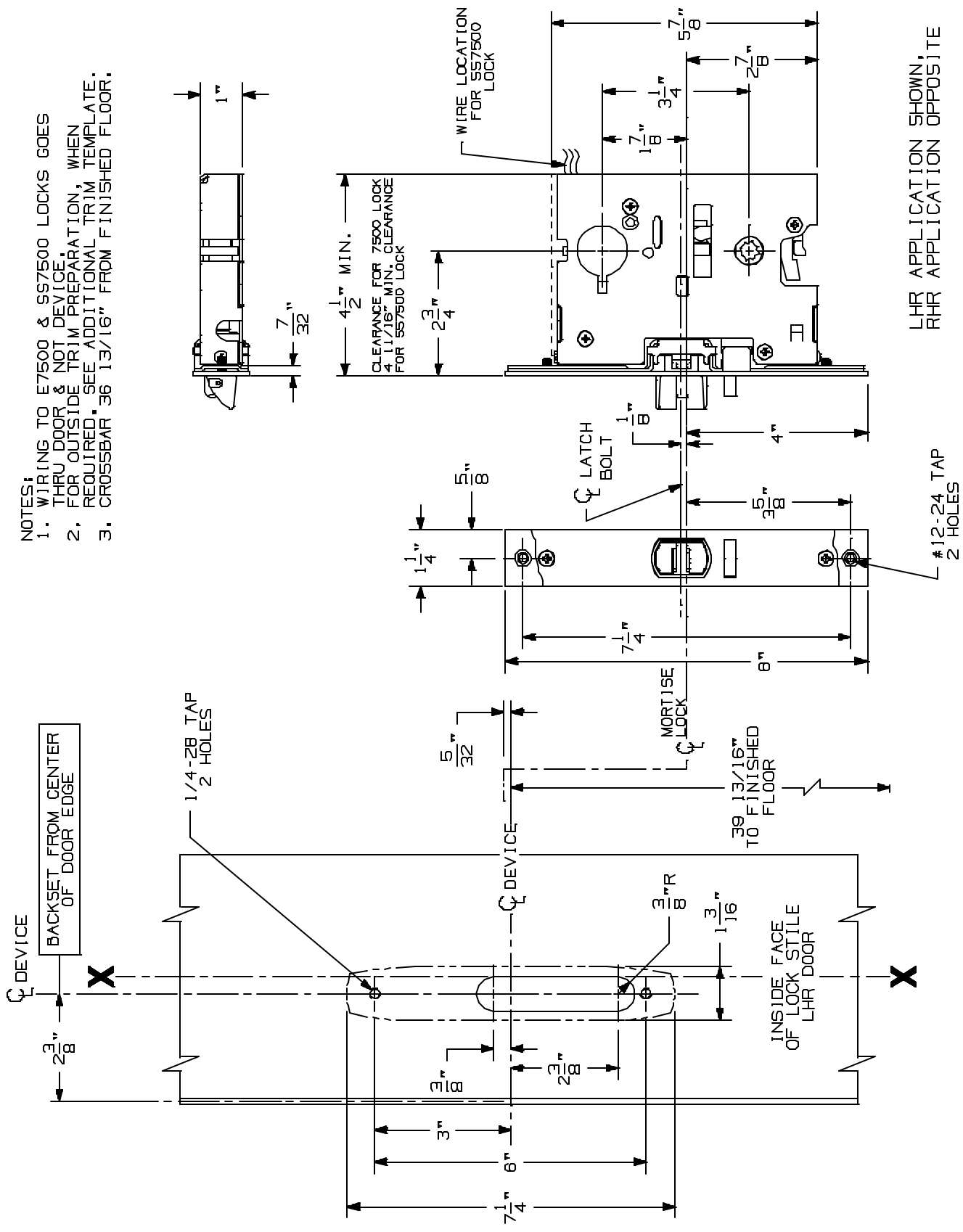

5575/5575-F Mortise Lock Devices

VON DUPRIN®

NOTES: SEE MASTER SHEET #10001 FOR SUGGESTED REINFORCING

TEMPLATE NUMBER: 10068_a

DATE: 05-15-13

NOTES: SEE MASTER SHEET #10001 FOR SUGGESTED REINFORCING

550 DT Trim

VON DUPRIN®

TEMPLATE NUMBER: 20026_a

DATE: 05-23-13

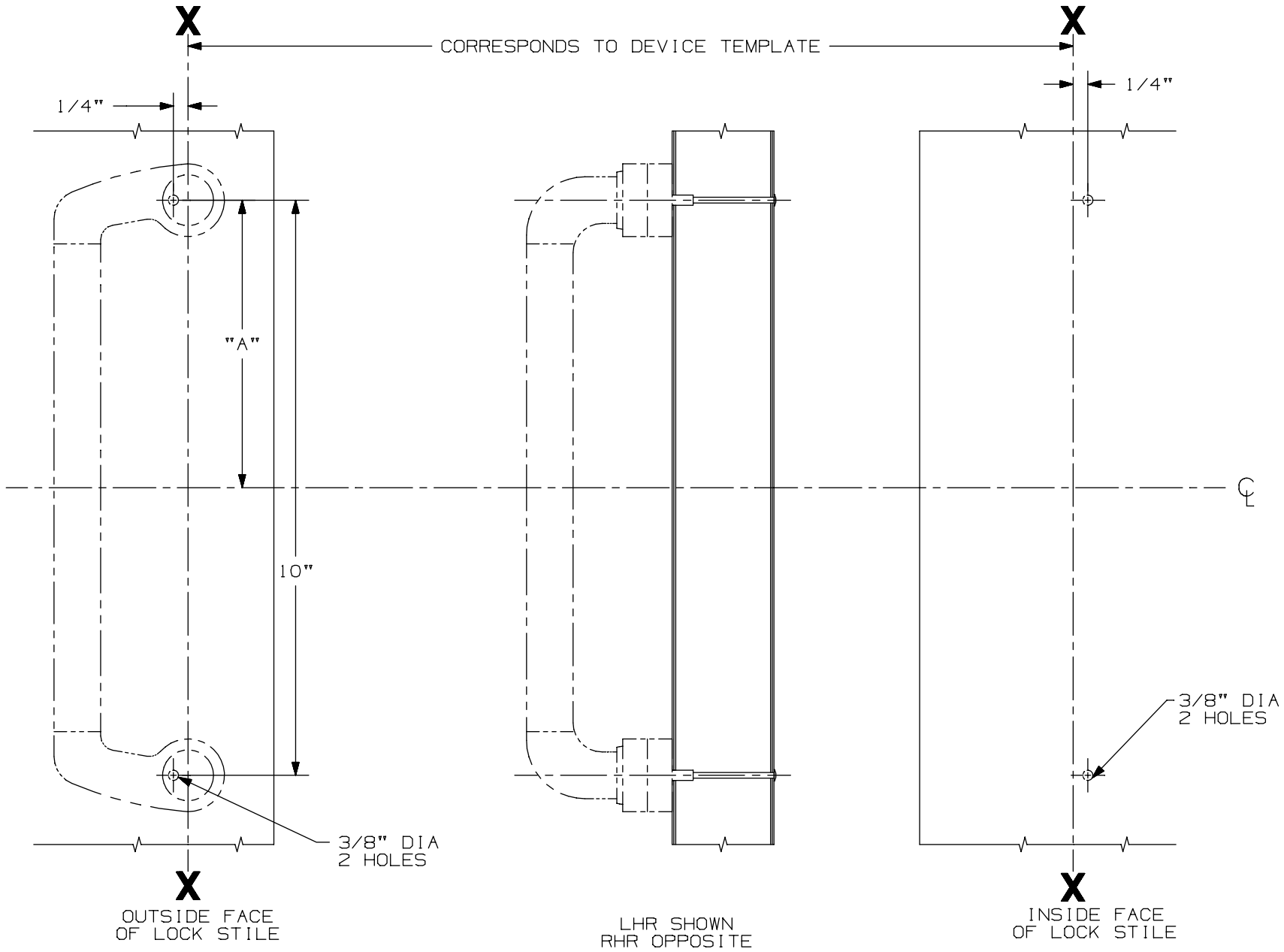

DEVICE APPLICATION SCHEDULE					
DEVICE	DIM. "A"	DEVICE	DIM. "A"	DEVICE	DIM. "A"
44 RIM	4 15/16"	44 MORT.	4 15/16"	44 VERT.	4 15/16"
55 RIM	4 15/16"	55 MORT.	4 15/16"	5547 VERT.	4 15/16"
88 RIM	4 15/16"	88 MORT.	4 15/16"	8827 VERT.	4 15/16"

FOR CUTOUTS ON INSIDE FACE OF DOOR: SEE DEVICE TEMPLATE

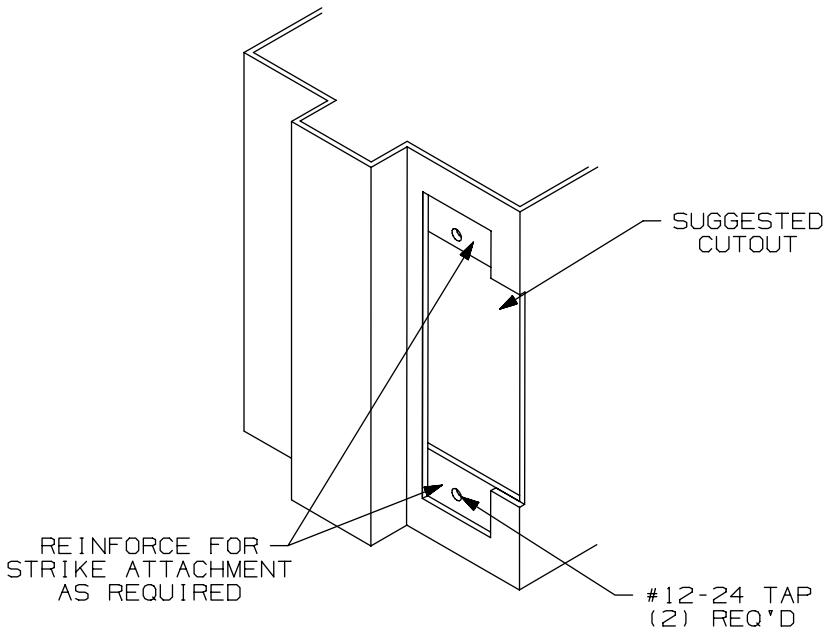

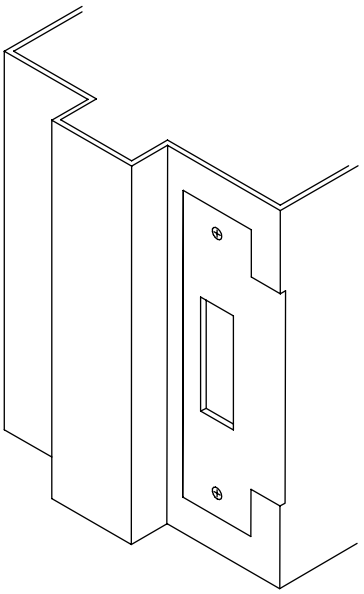

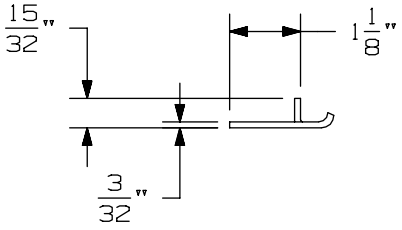

APPLICATION SCHEDULE	
DEVICE	DIM. "A"
9875 & 9875-F	11/16
9975 & 9975-F	11/16
8875 & 8875-F	1/2
5575 & 5575-F	1/2

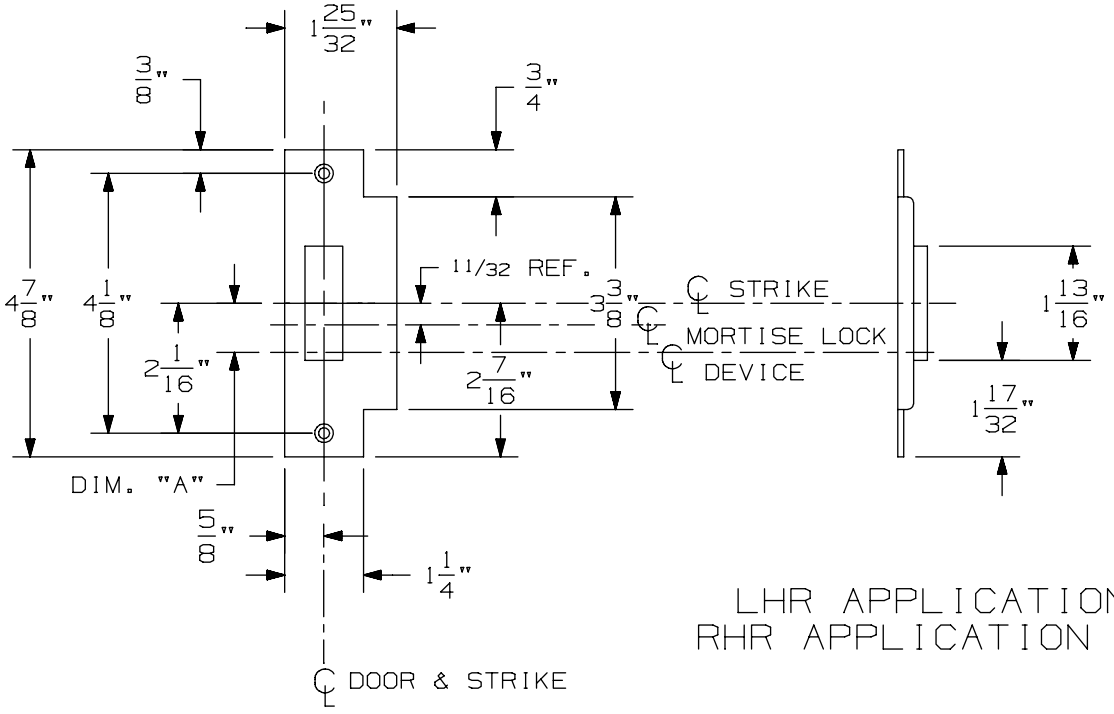

LHR APPLICATION SHOWN
RHR APPLICATION OPPOSITE

575 Mortise Strike (Single Door) for 7500 Mortise Lock

VON DUPRIN®

NOTES: SEE MASTER SHEET #10001 FOR SUGGESTED REINFORCING

TEMPLATE NUMBER: 30210_b

DATE: 07-22-13

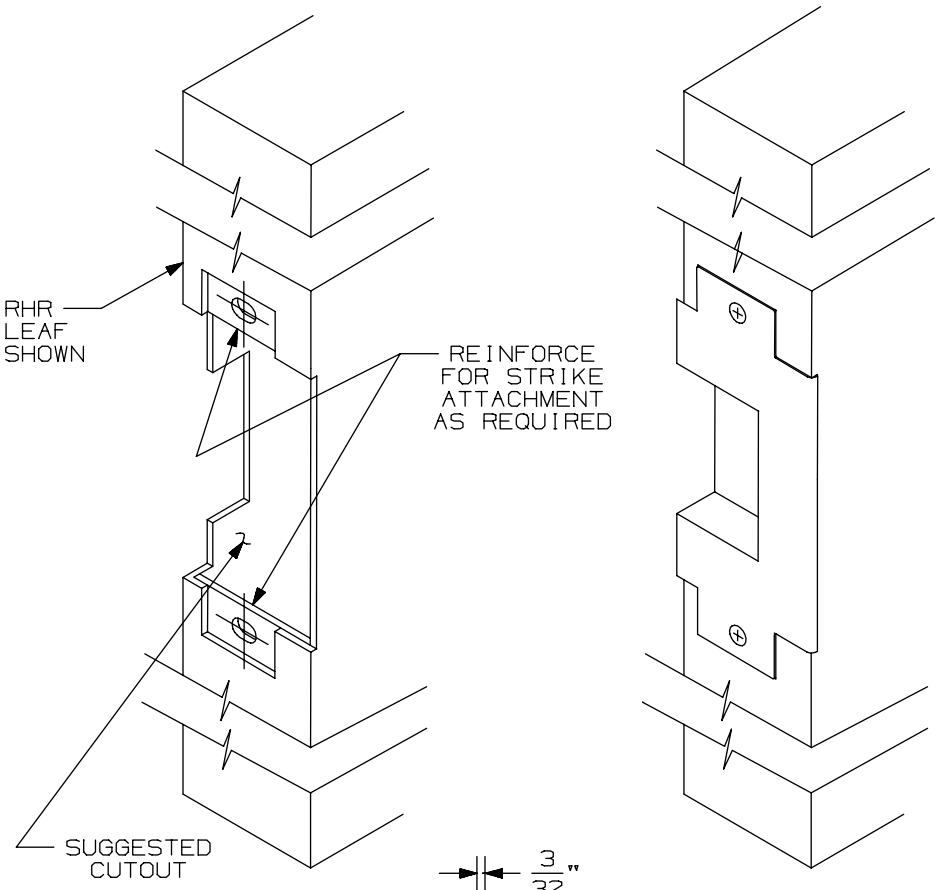

APPLICATION SCHEDULE	
DEVICE	DIM."A"
9875 & 9875-F	11/16
9975 & 9975-F	11/16
8875 & 8875-F	1/2
5575 & 5575-F	1/2

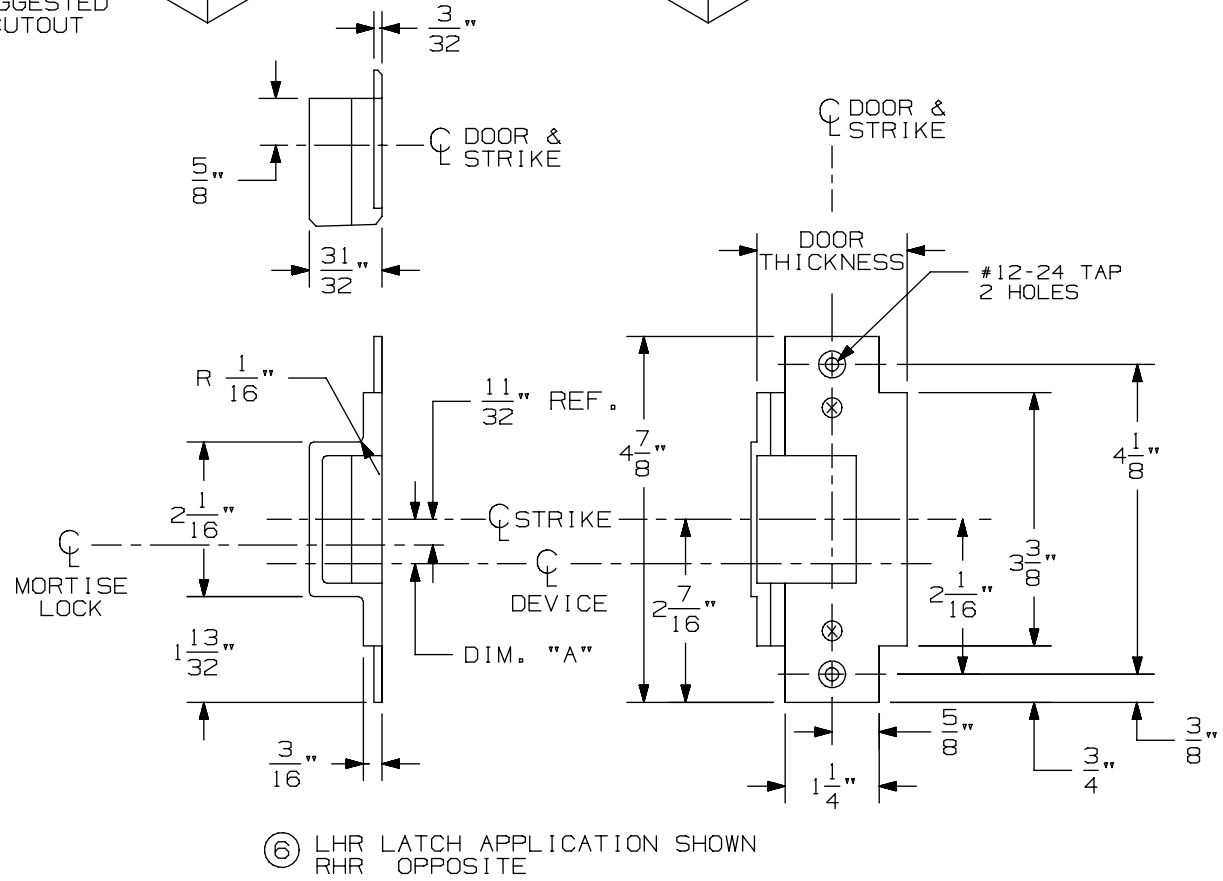

⑥ LHR LATCH APPLICATION SHOWN
RHR OPPOSITE

576A & 576B Mortise Strike for 7500 Mortise Lock

VON DUPRIN®

NOTES: SEE MASTER SHEET #10001 FOR SUGGESTED REINFORCING

TEMPLATE NUMBER: 30211_a

DATE: 05-28-13

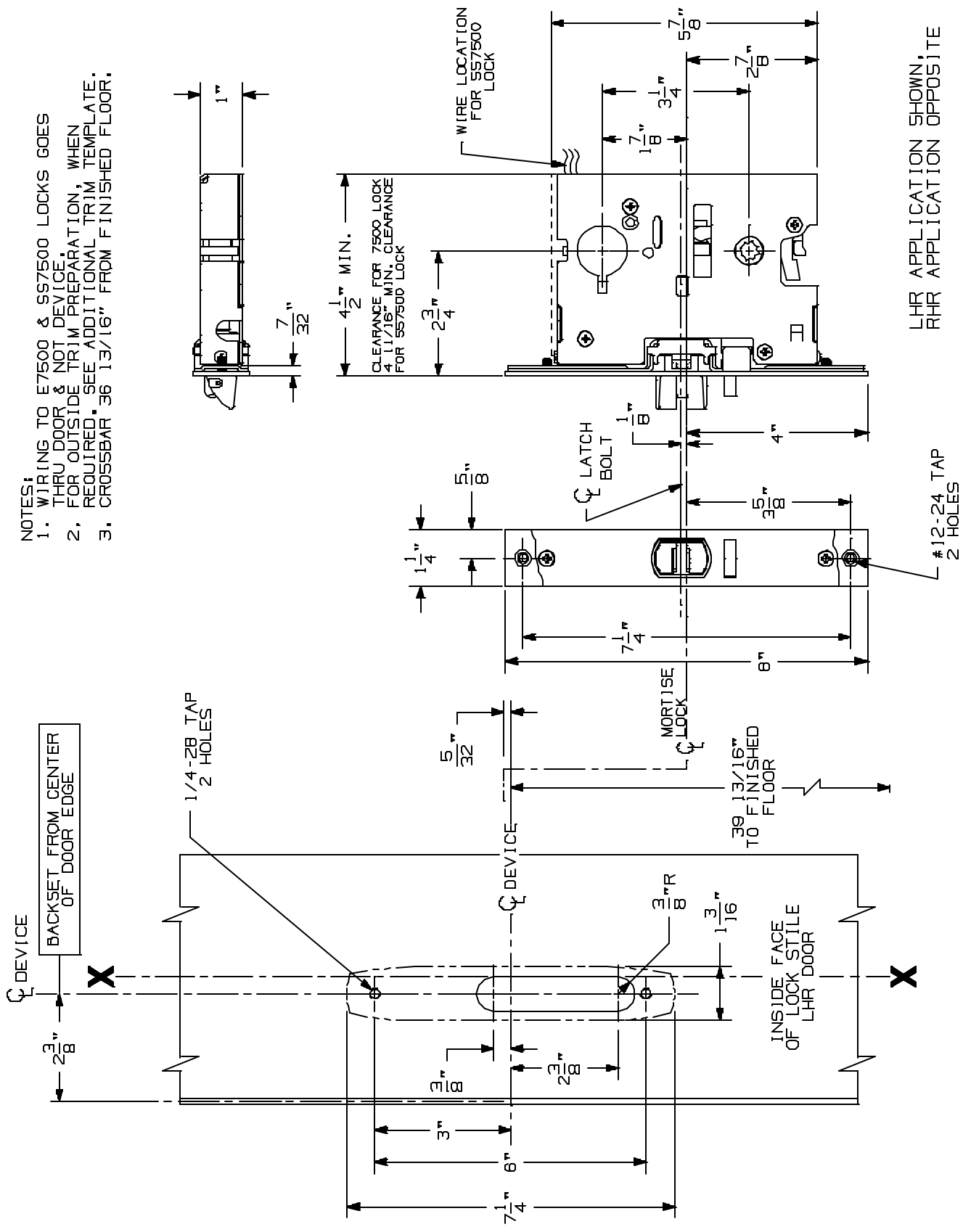

5575/5575-F Mortise Lock Devices

VON DUPRIN®

NOTES: SEE MASTER SHEET #10001 FOR SUGGESTED REINFORCING

TEMPLATE NUMBER: 10068_a

DATE: 05-15-13

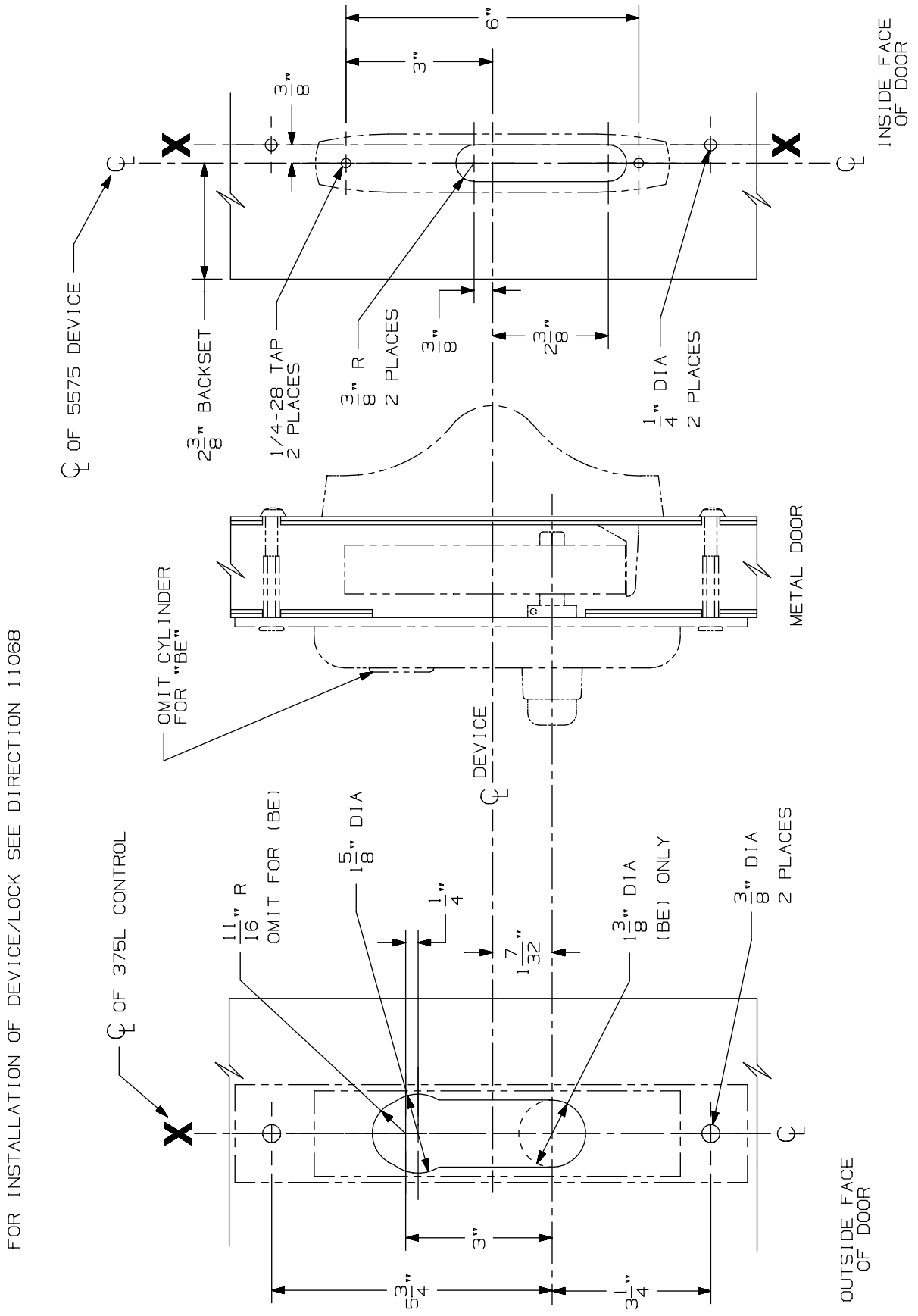

375-L & 375-L-BE Control for 5575 & 5575-F

VON DUPRIN®

NOTES: SEE MASTER SHEET #10001 FOR SUGGESTED REINFORCING

TEMPLATE NUMBER: 40127_a

DATE: 05-28-13

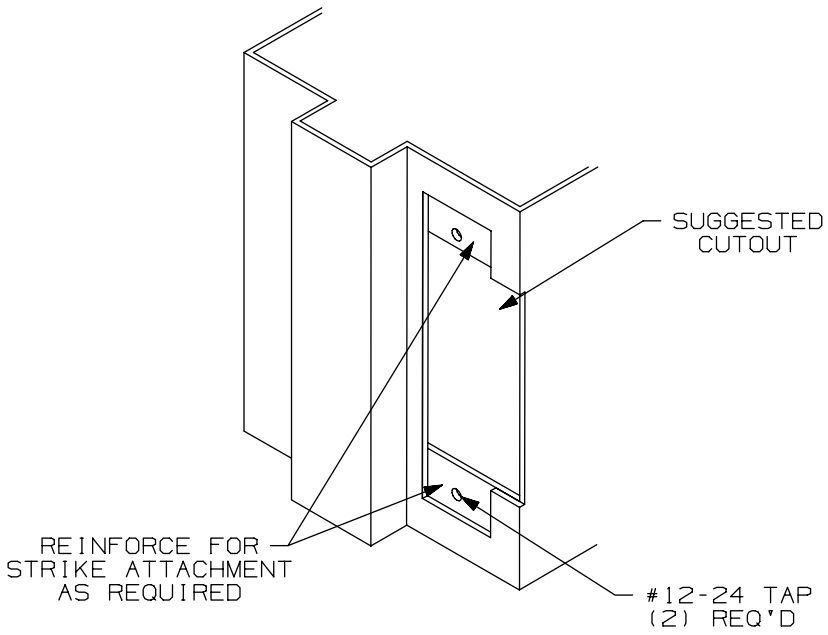

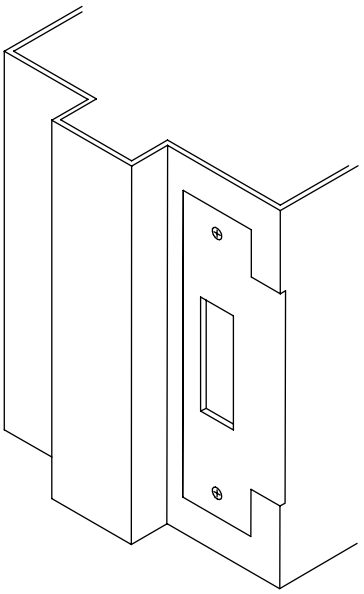

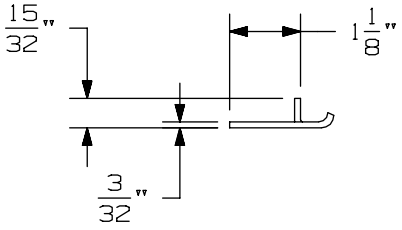

APPLICATION SCHEDULE	
DEVICE	DIM. "A"
9875 & 9875-F	11/16
9975 & 9975-F	11/16
8875 & 8875-F	1/2
5575 & 5575-F	1/2

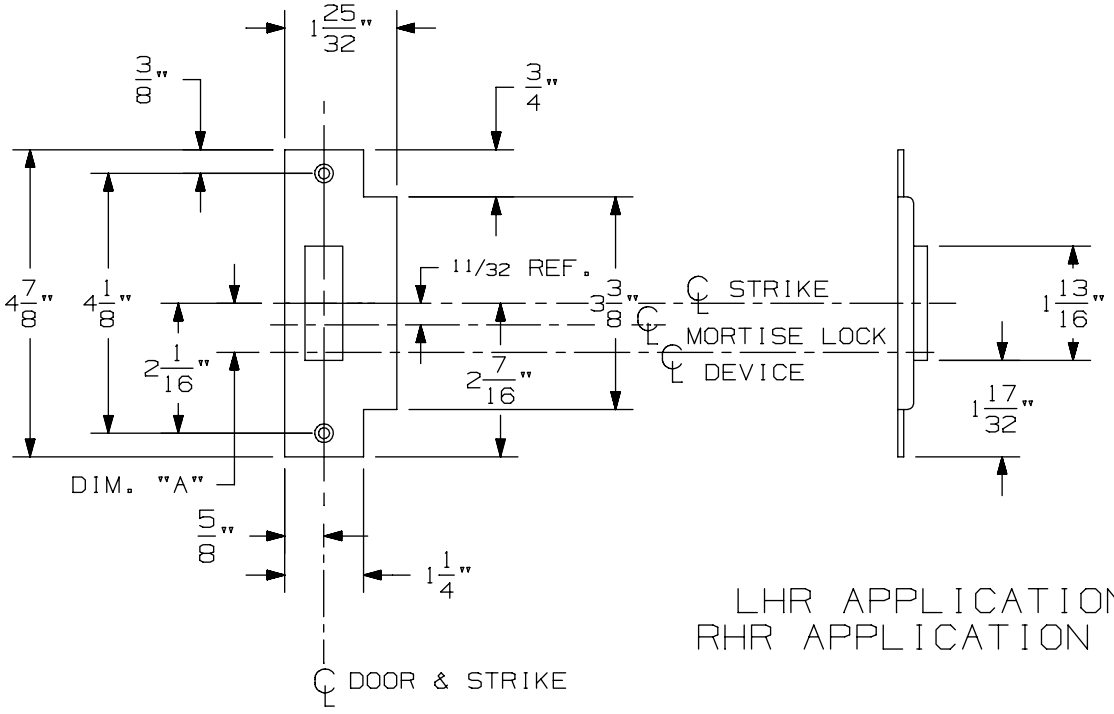

LHR APPLICATION SHOWN
RHR APPLICATION OPPOSITE

575 Mortise Strike (Single Door) for 7500 Mortise Lock

VON DUPRIN®

NOTES: SEE MASTER SHEET #10001 FOR SUGGESTED REINFORCING

TEMPLATE NUMBER: 30210_b

DATE: 07-22-13

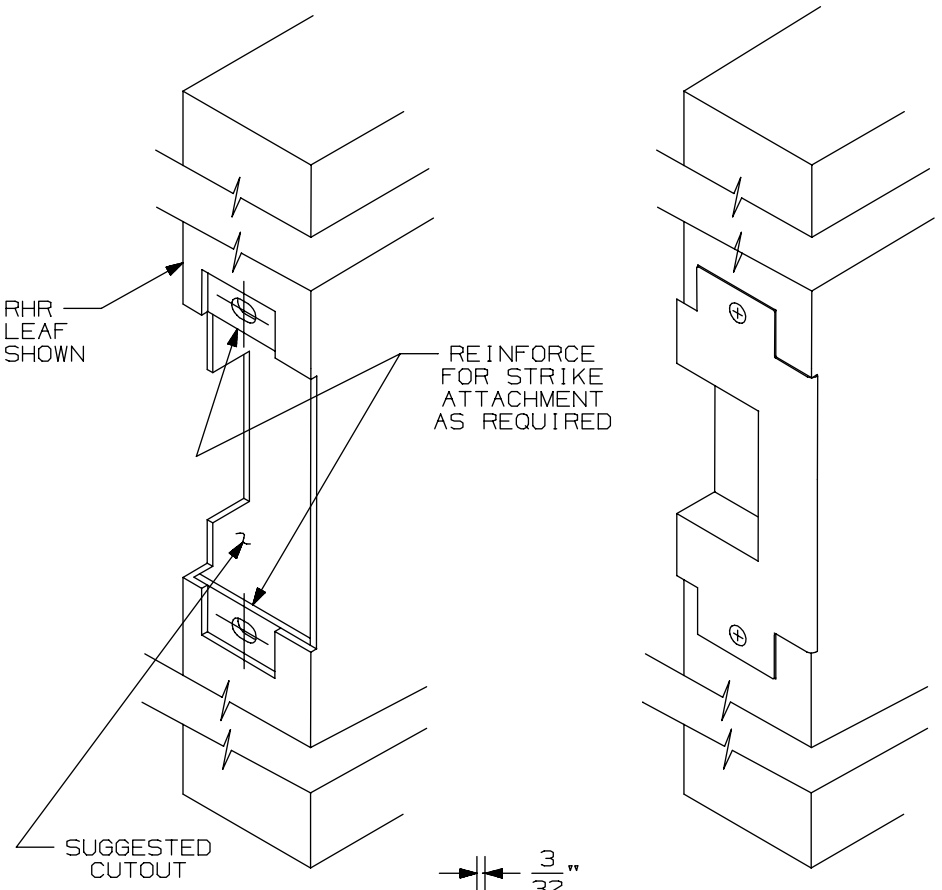

APPLICATION SCHEDULE	
DEVICE	DIM."A"
9875 & 9875-F	11/16
9975 & 9975-F	11/16
8875 & 8875-F	1/2
5575 & 5575-F	1/2

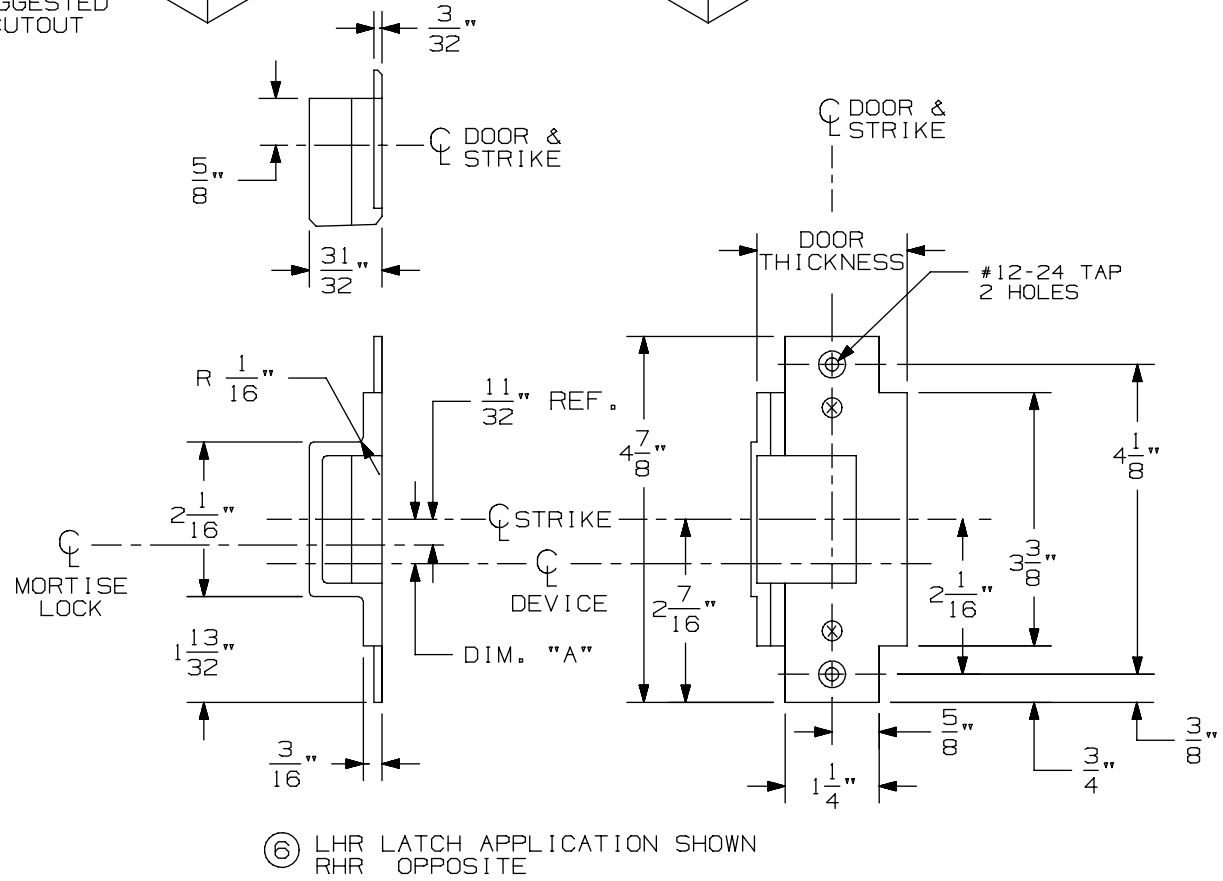

⑥ LHR LATCH APPLICATION SHOWN
RHR OPPOSITE

576A & 576B Mortise Strike for 7500 Mortise Lock

VON DUPRIN®

NOTES: SEE MASTER SHEET #10001 FOR SUGGESTED REINFORCING

TEMPLATE NUMBER: 30211_a

DATE: 05-28-13

55 Series Exit Devices

-

5575-F Mortise Fire

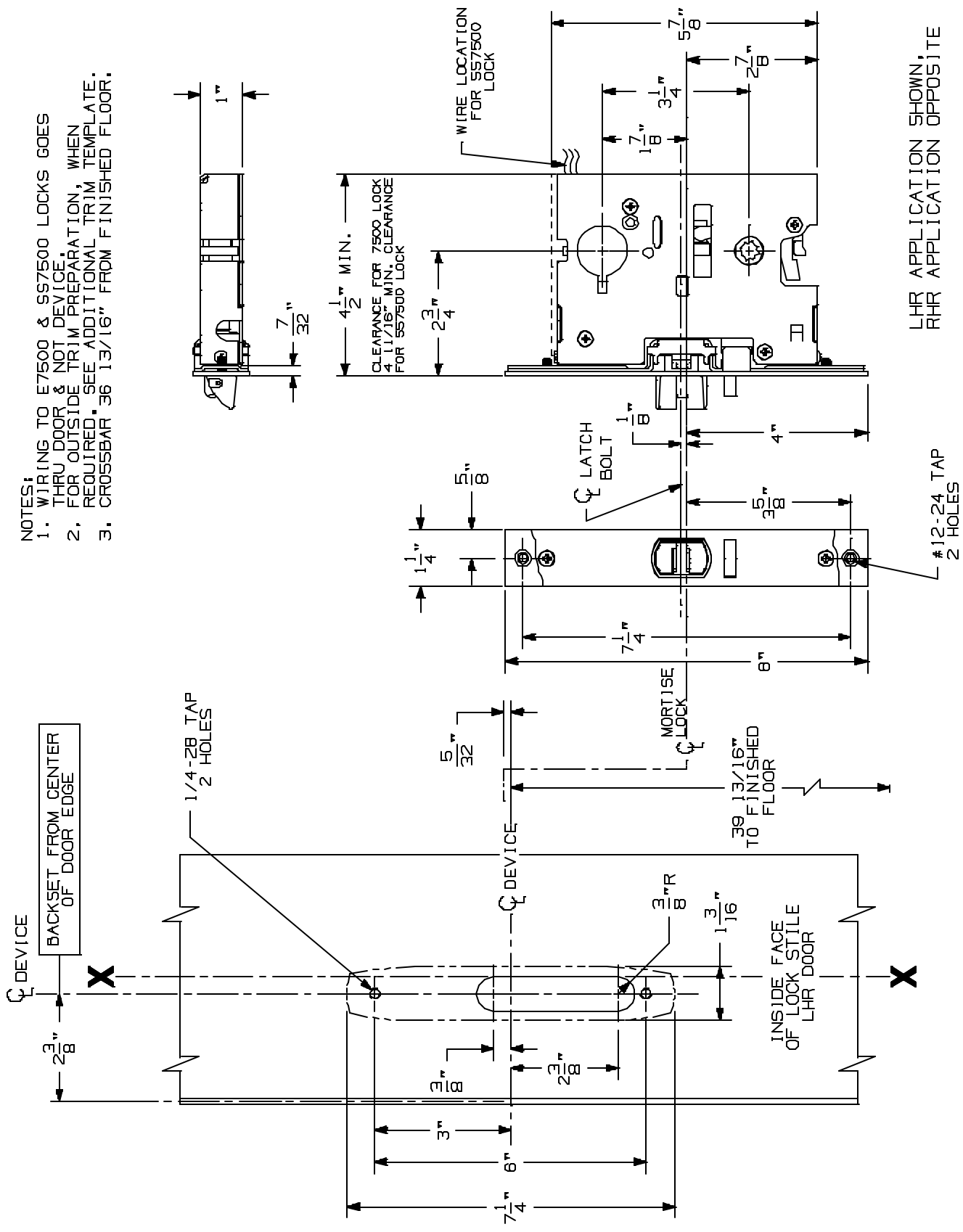

5575/5575-F Mortise Lock Devices

VON DUPRIN®

NOTES: SEE MASTER SHEET #10001 FOR SUGGESTED REINFORCING

TEMPLATE NUMBER: 10068_a

DATE: 05-15-13

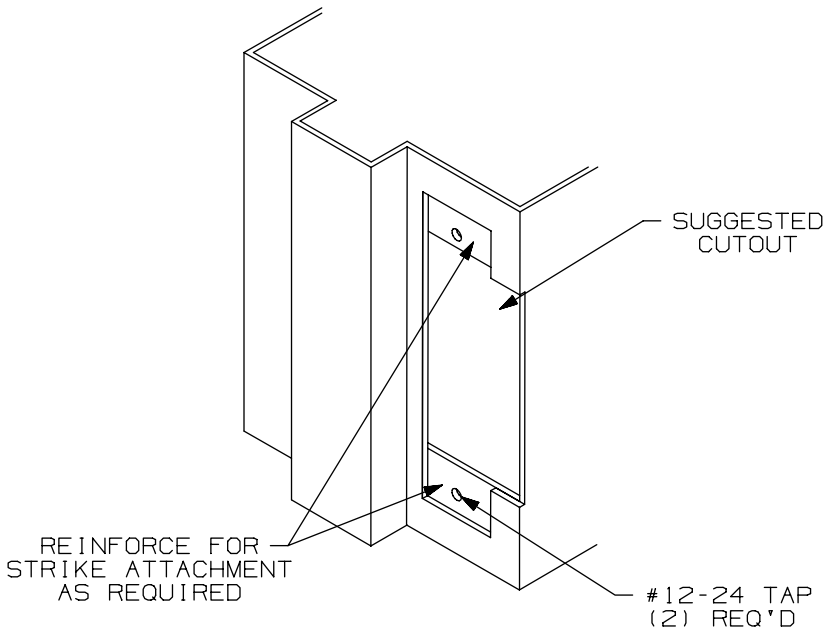

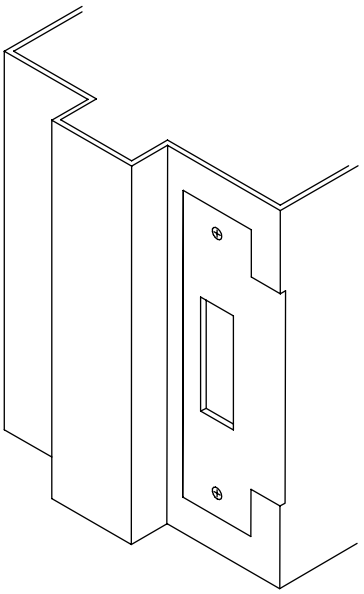

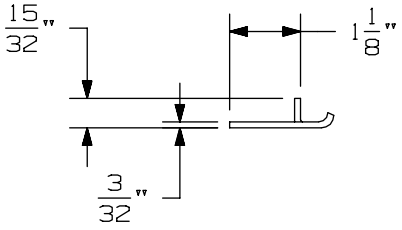

APPLICATION SCHEDULE	
DEVICE	DIM. "A"
9875 & 9875-F	11/16
9975 & 9975-F	11/16
8875 & 8875-F	1/2
5575 & 5575-F	1/2

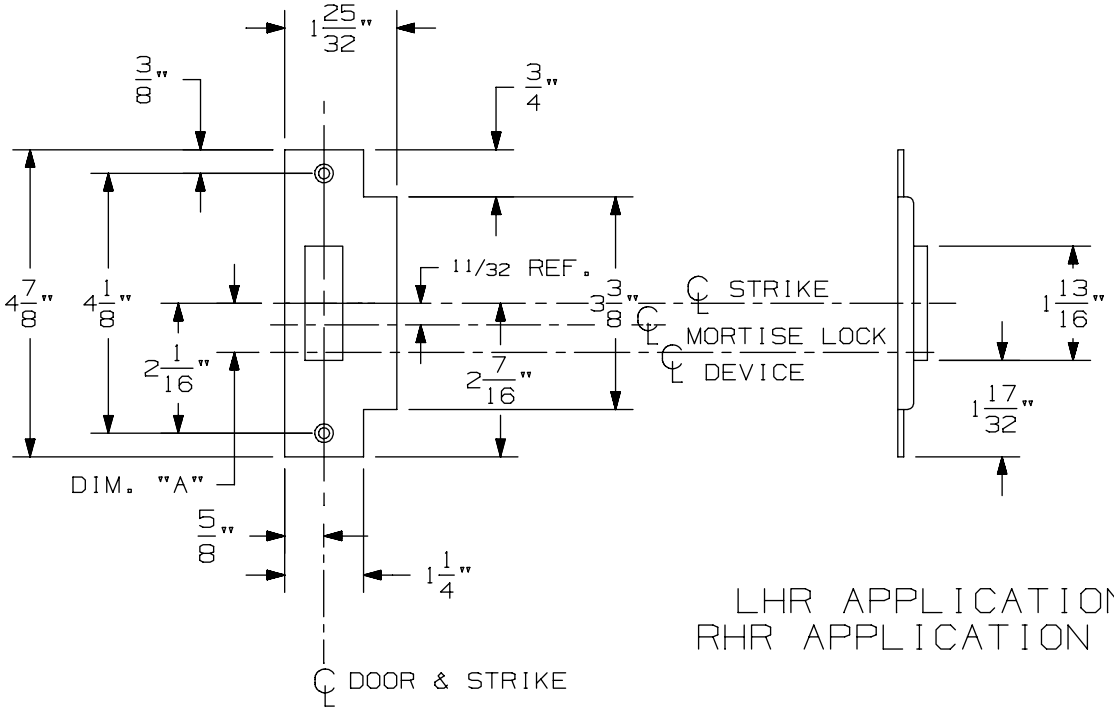

LHR APPLICATION SHOWN
RHR APPLICATION OPPOSITE

575 Mortise Strike (Single Door) for 7500 Mortise Lock

VON DUPRIN®

NOTES: SEE MASTER SHEET #10001 FOR SUGGESTED REINFORCING

TEMPLATE NUMBER: 30210_b

DATE: 07-22-13

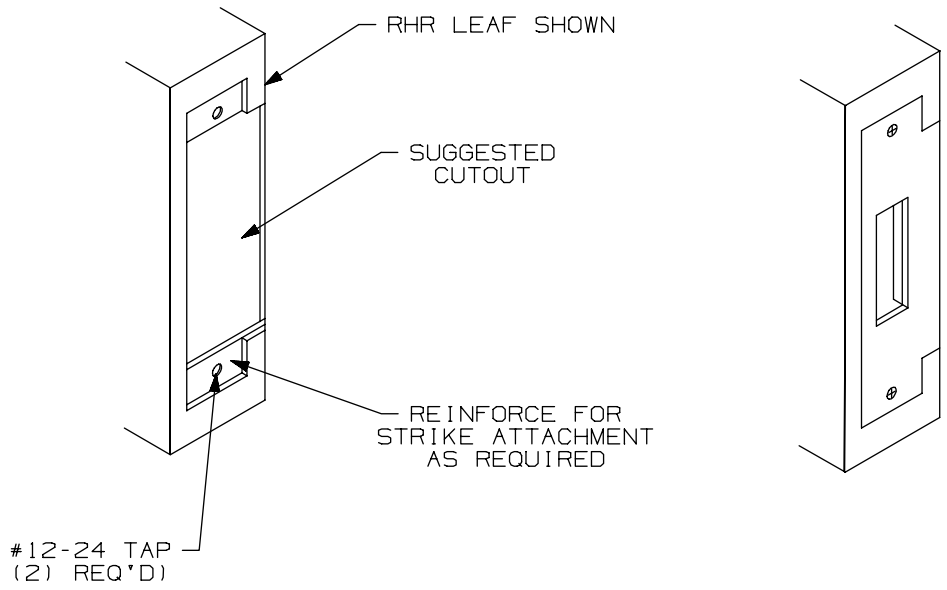

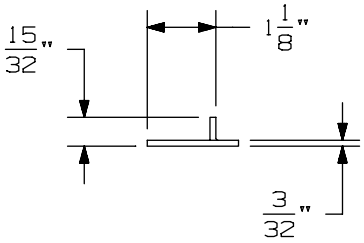

APPLICATION SCHEDULE	
DEVICE	DIM. "A"
9875 & 9875-F	11/16
9975 & 9975-F	11/16
8875 & 8875-F	1/2
5575 & 5575-F	1/2

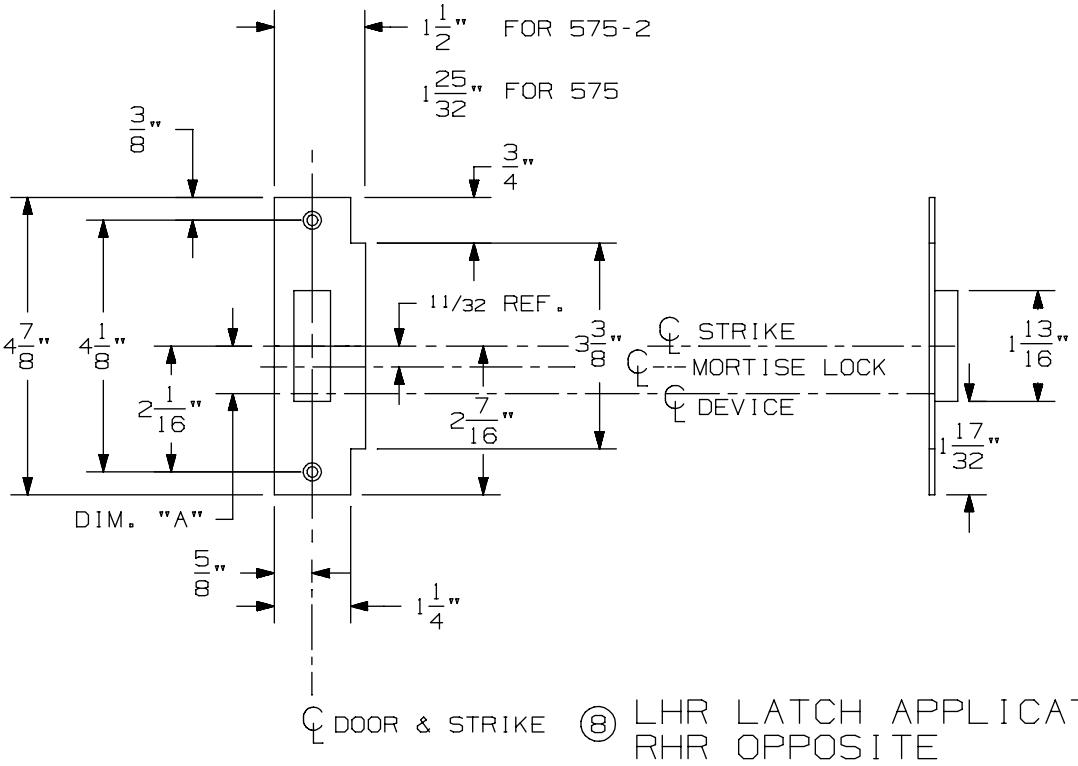

⑧ LHR LATCH APPLICATION SHOWN
RHR OPPOSITE

575-2 Mortise Strike (Double Doors) for 7500 Mortise Lock

VON DUPRIN®

NOTES: SEE MASTER SHEET #10001 FOR SUGGESTED REINFORCING

TEMPLATE NUMBER: 30212_b

DATE: 07-22-13

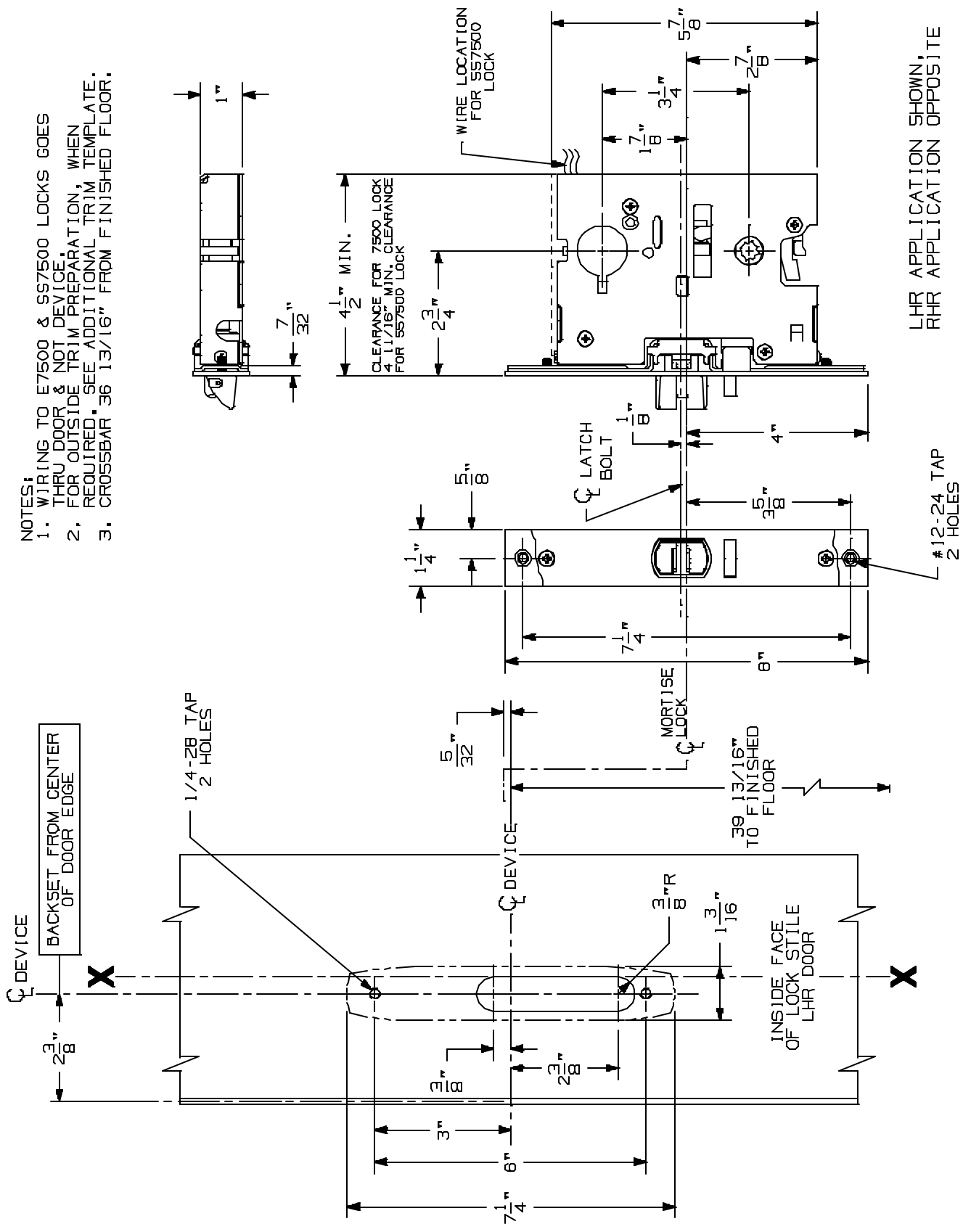

5575/5575-F Mortise Lock Devices

VON DUPRIN®

NOTES: SEE MASTER SHEET #10001 FOR SUGGESTED REINFORCING

TEMPLATE NUMBER: 10068_a

DATE: 05-15-13

NOTES: SEE MASTER SHEET #10001 FOR SUGGESTED REINFORCING

550 DT Trim

VON DUPRIN®

TEMPLATE NUMBER: 20026_a

DATE: 05-23-13

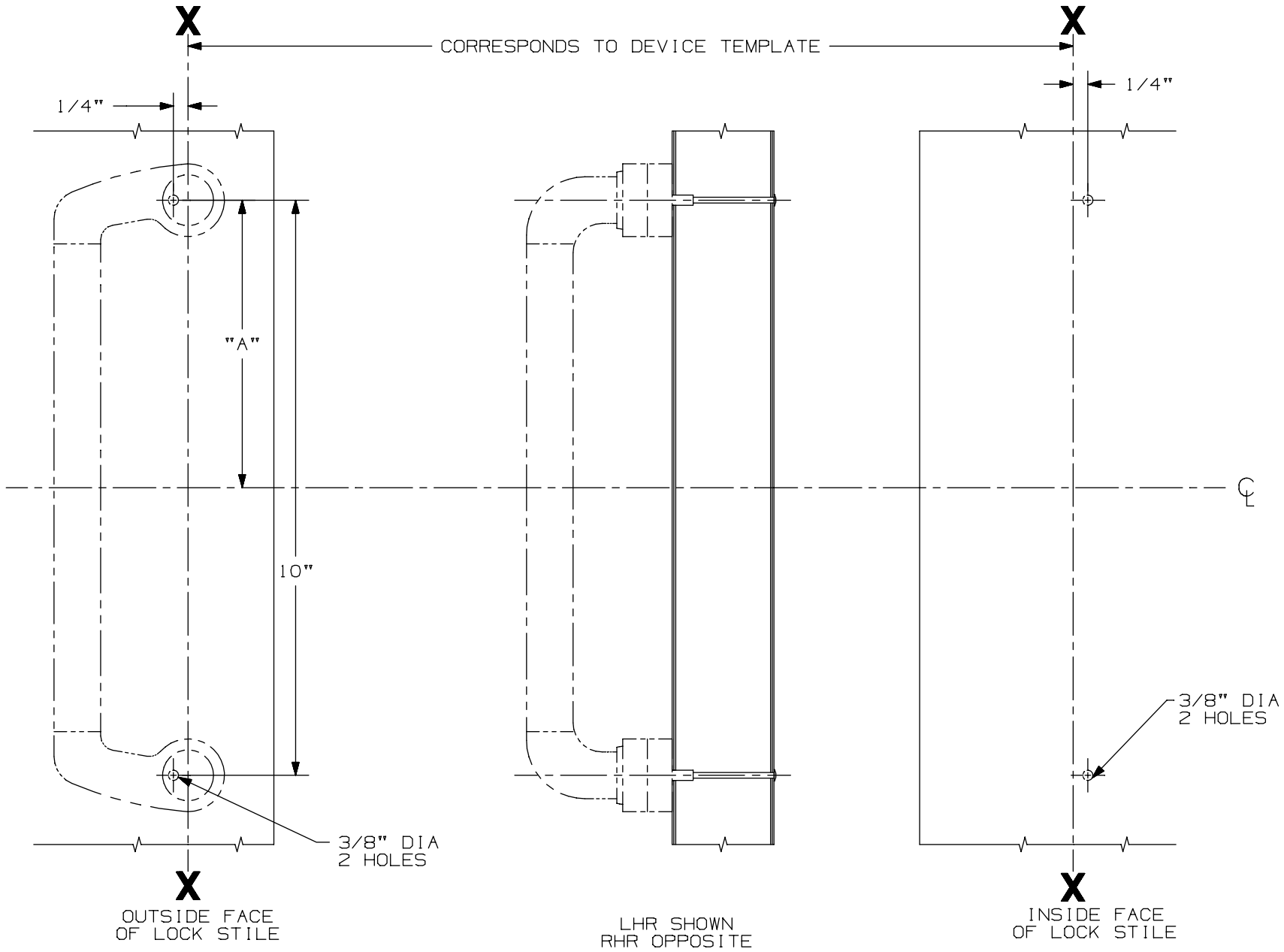

DEVICE APPLICATION SCHEDULE					
DEVICE	DIM. "A"	DEVICE	DIM. "A"	DEVICE	DIM. "A"
44 RIM	4 15/16"	44 MORT.	4 15/16"	44 VERT.	4 15/16"
55 RIM	4 15/16"	55 MORT.	4 15/16"	5547 VERT.	4 15/16"
88 RIM	4 15/16"	88 MORT.	4 15/16"	8827 VERT.	4 15/16"

FOR CUTOUTS ON INSIDE FACE OF DOOR: SEE DEVICE TEMPLATE

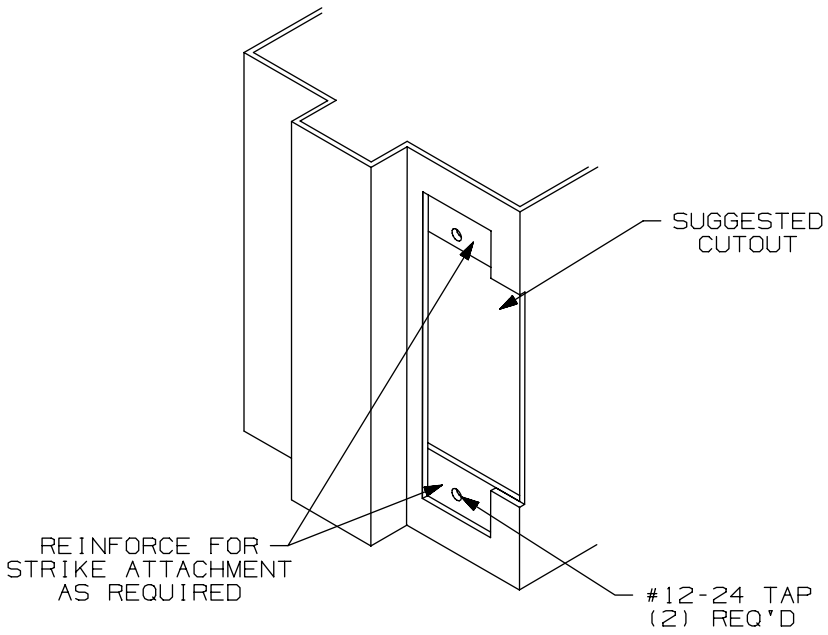

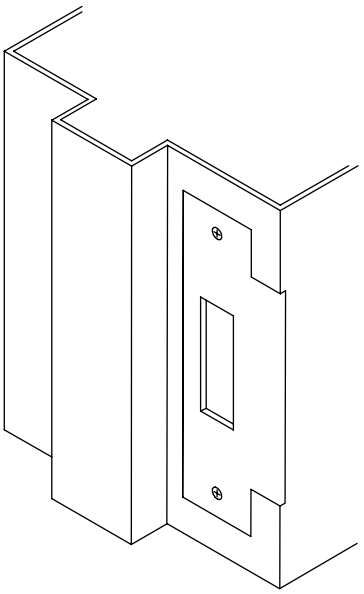

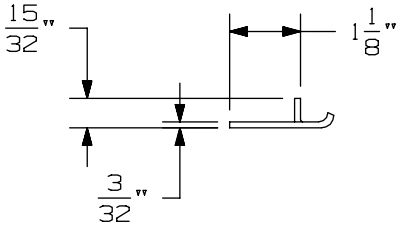

APPLICATION SCHEDULE	
DEVICE	DIM. "A"
9875 & 9875-F	11/16
9975 & 9975-F	11/16
8875 & 8875-F	1/2
5575 & 5575-F	1/2

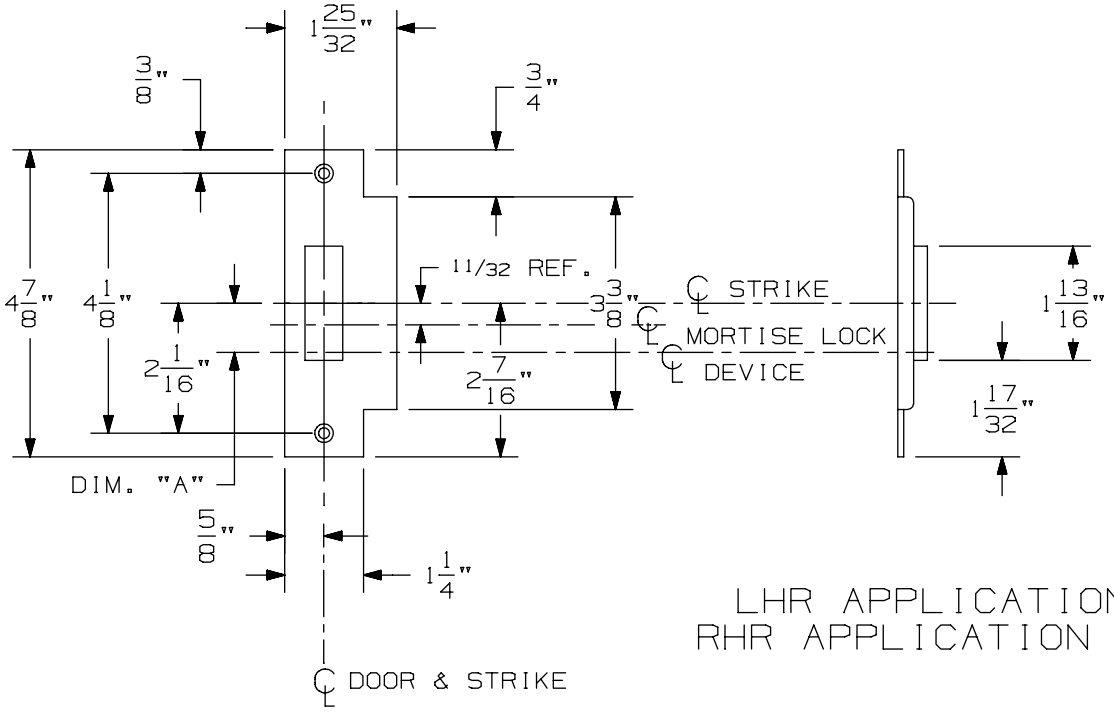

LHR APPLICATION SHOWN
RHR APPLICATION OPPOSITE

575 Mortise Strike (Single Door) for 7500 Mortise Lock

VON DUPRIN®

NOTES: SEE MASTER SHEET #10001 FOR SUGGESTED REINFORCING

TEMPLATE NUMBER: 30210_b

DATE: 07-22-13

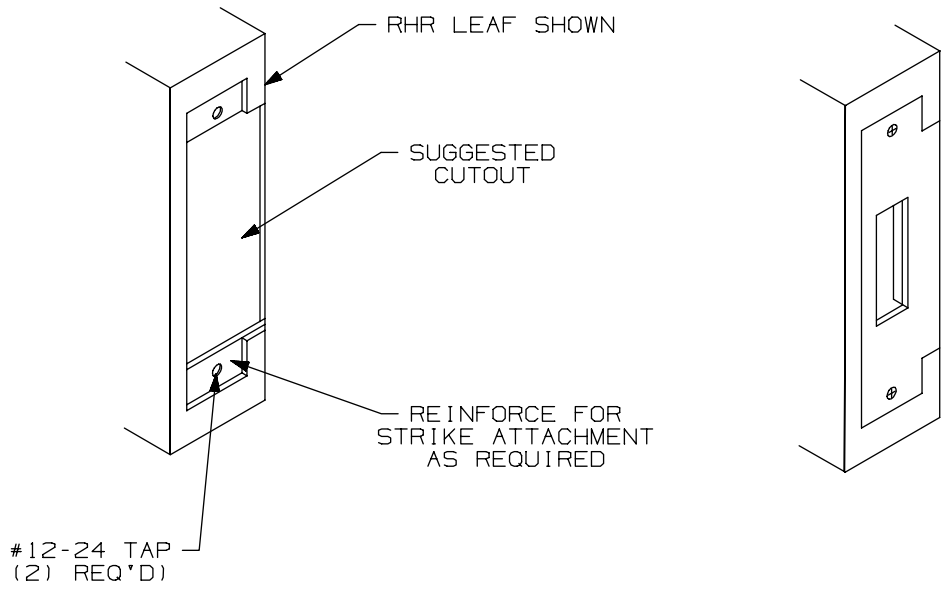

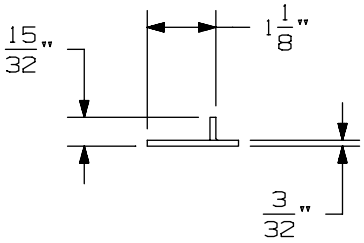

APPLICATION SCHEDULE	
DEVICE	DIM. "A"
9875 & 9875-F	11/16
9975 & 9975-F	11/16
8875 & 8875-F	1/2
5575 & 5575-F	1/2

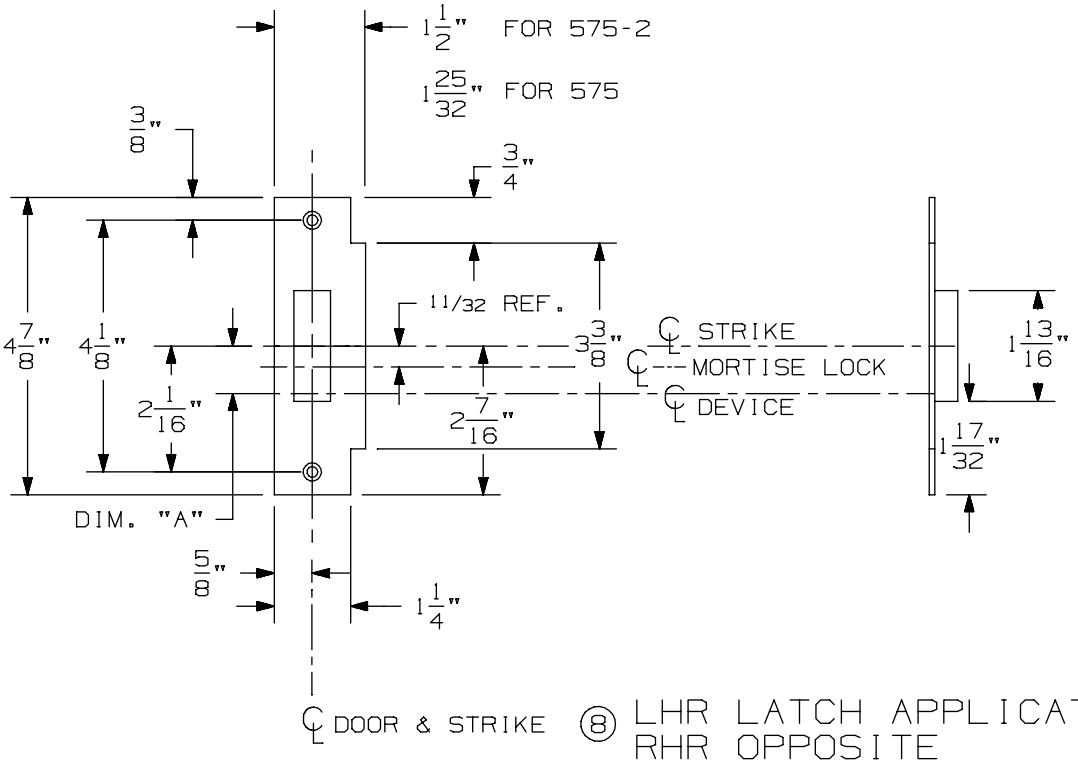

⑧ LHR LATCH APPLICATION SHOWN
RHR OPPOSITE

575-2 Mortise Strike (Double Doors) for 7500 Mortise Lock

VON DUPRIN®

NOTES: SEE MASTER SHEET #10001 FOR SUGGESTED REINFORCING

TEMPLATE NUMBER: 30212_b

DATE: 07-22-13

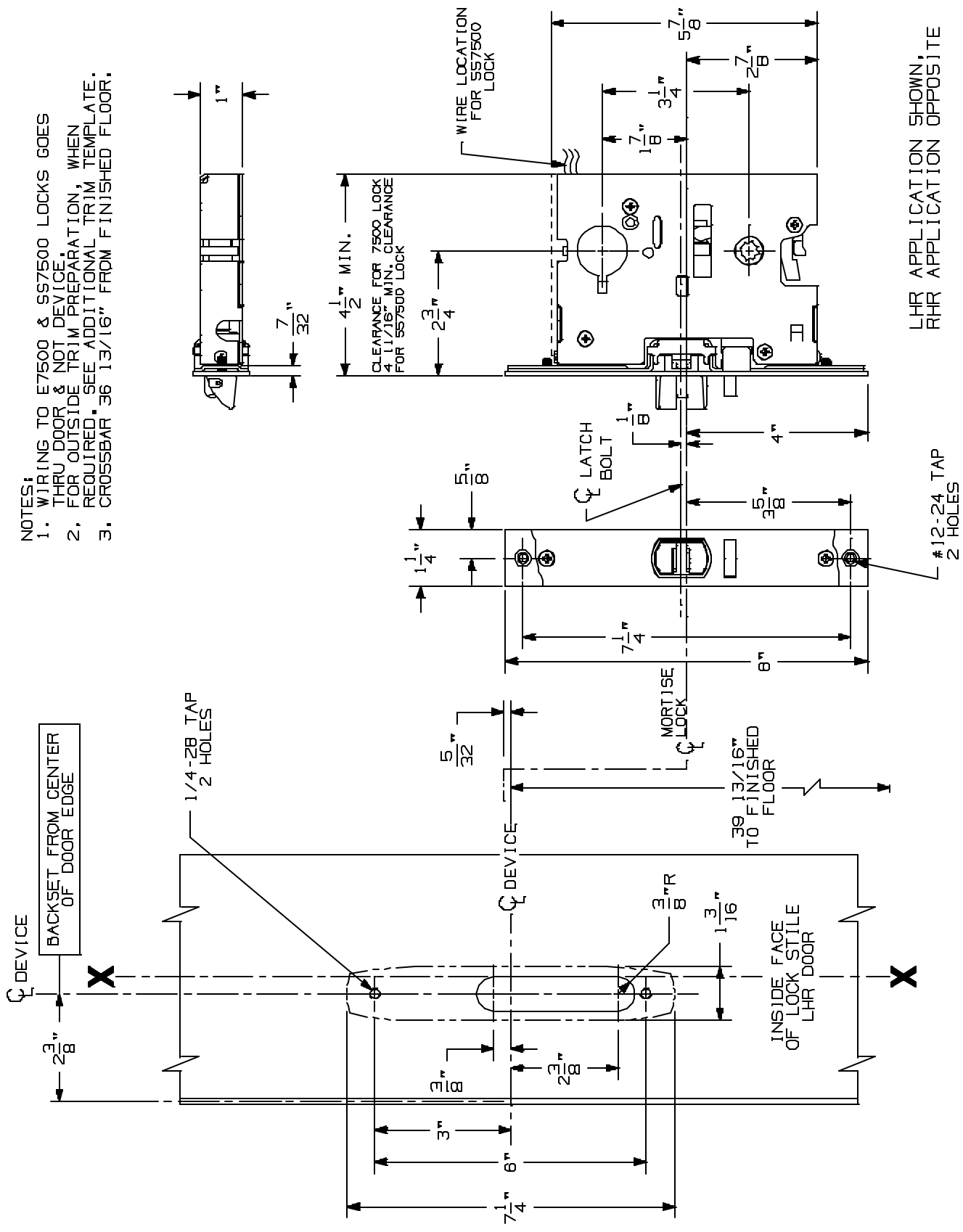

5575/5575-F Mortise Lock Devices

VON DUPRIN®

NOTES: SEE MASTER SHEET #10001 FOR SUGGESTED REINFORCING

TEMPLATE NUMBER: 10068_a

DATE: 05-15-13

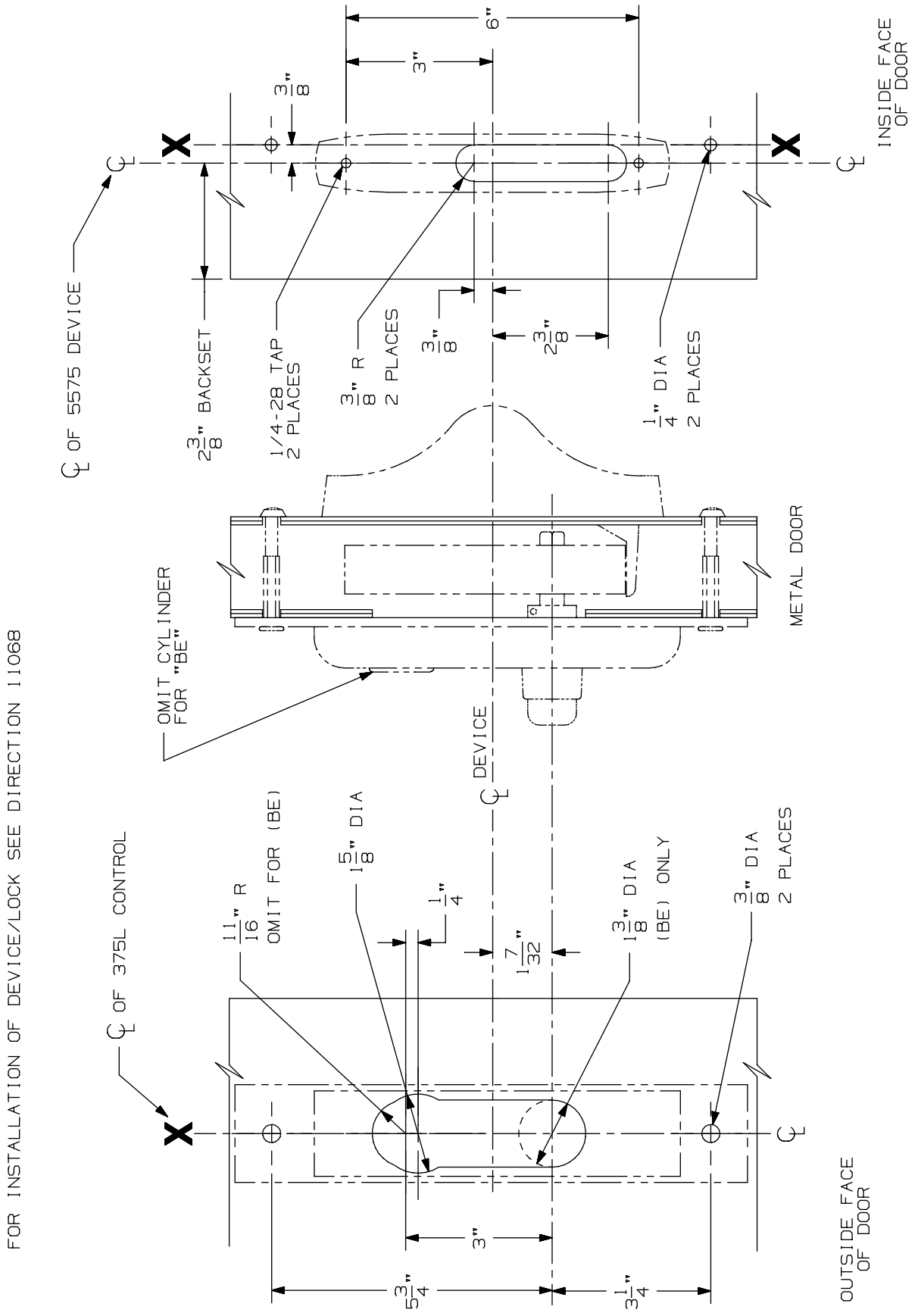

375-L & 375-L-BE Control for 5575 & 5575-F

VON DUPRIN®

NOTES: SEE MASTER SHEET #10001 FOR SUGGESTED REINFORCING

TEMPLATE NUMBER: 40127_a

DATE: 05-28-13

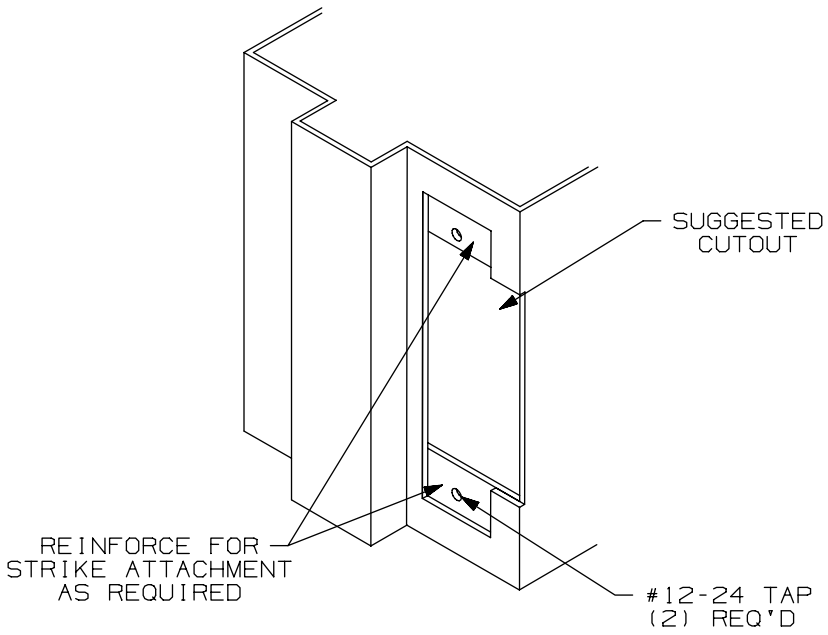

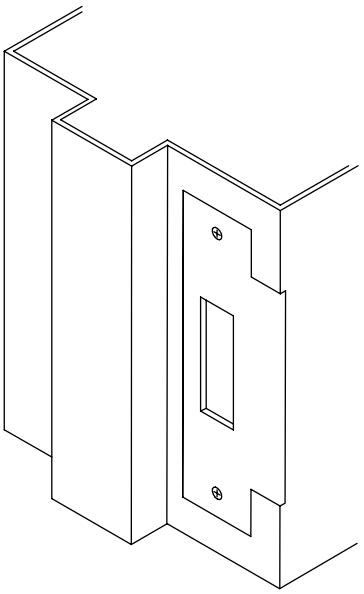

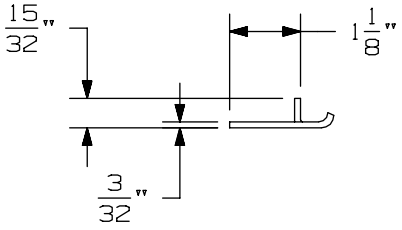

APPLICATION SCHEDULE	
DEVICE	DIM. "A"
9875 & 9875-F	11/16
9975 & 9975-F	11/16
8875 & 8875-F	1/2
5575 & 5575-F	1/2

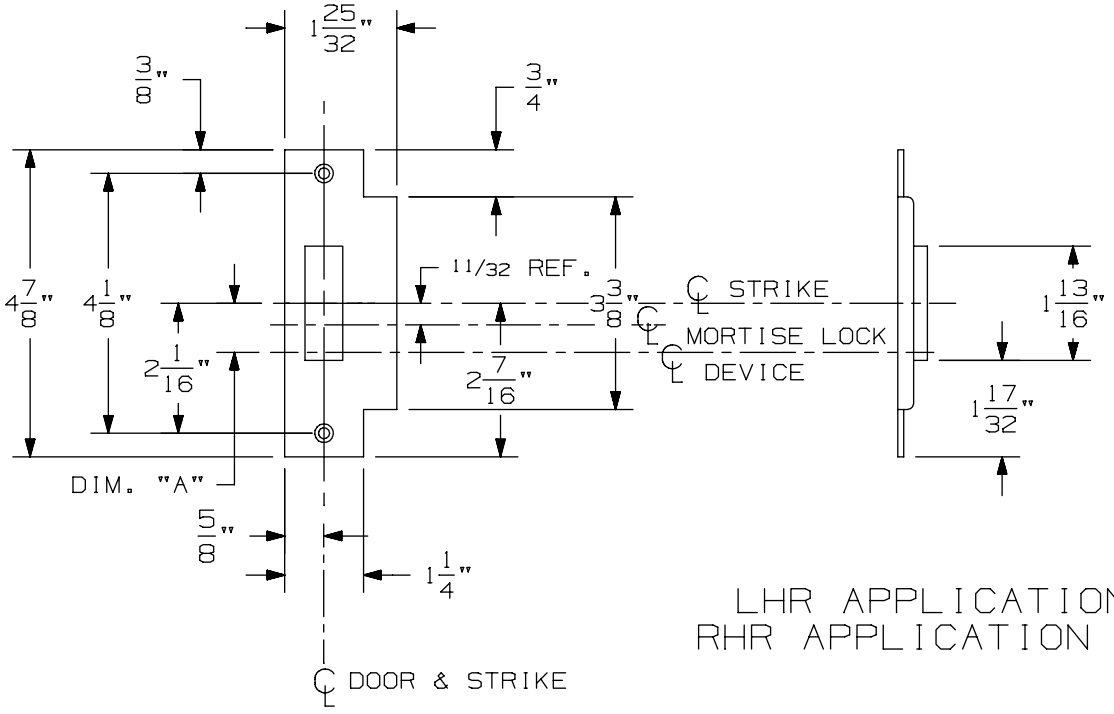

LHR APPLICATION SHOWN
RHR APPLICATION OPPOSITE

575 Mortise Strike (Single Door) for 7500 Mortise Lock

VON DUPRIN®

NOTES: SEE MASTER SHEET #10001 FOR SUGGESTED REINFORCING

TEMPLATE NUMBER: 30210_b

DATE: 07-22-13

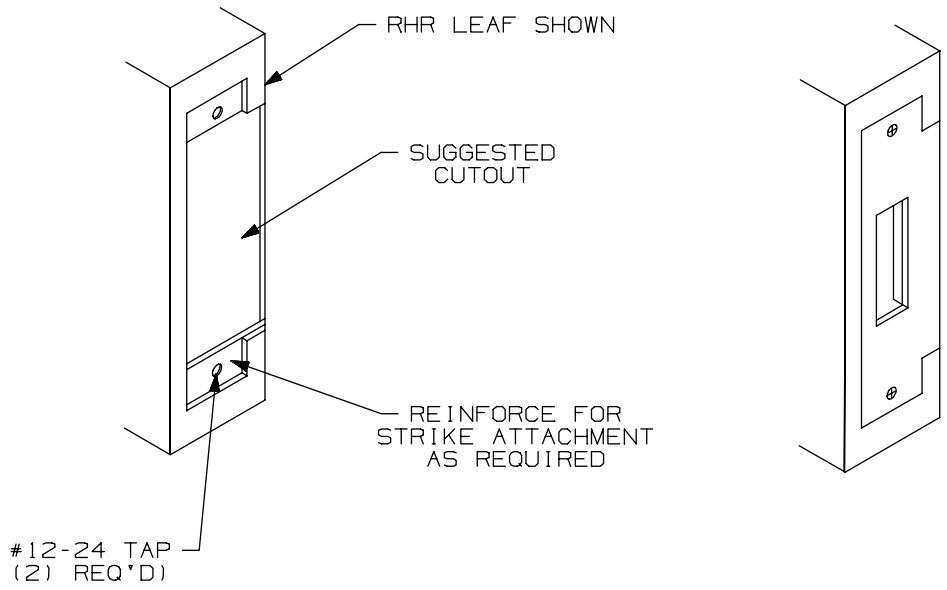

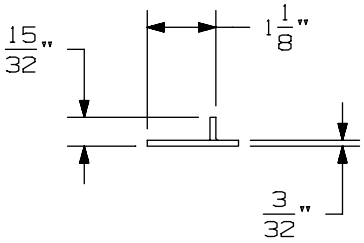

APPLICATION SCHEDULE	
DEVICE	DIM. "A"
9875 & 9875-F	11/16
9975 & 9975-F	11/16
8875 & 8875-F	1/2
5575 & 5575-F	1/2

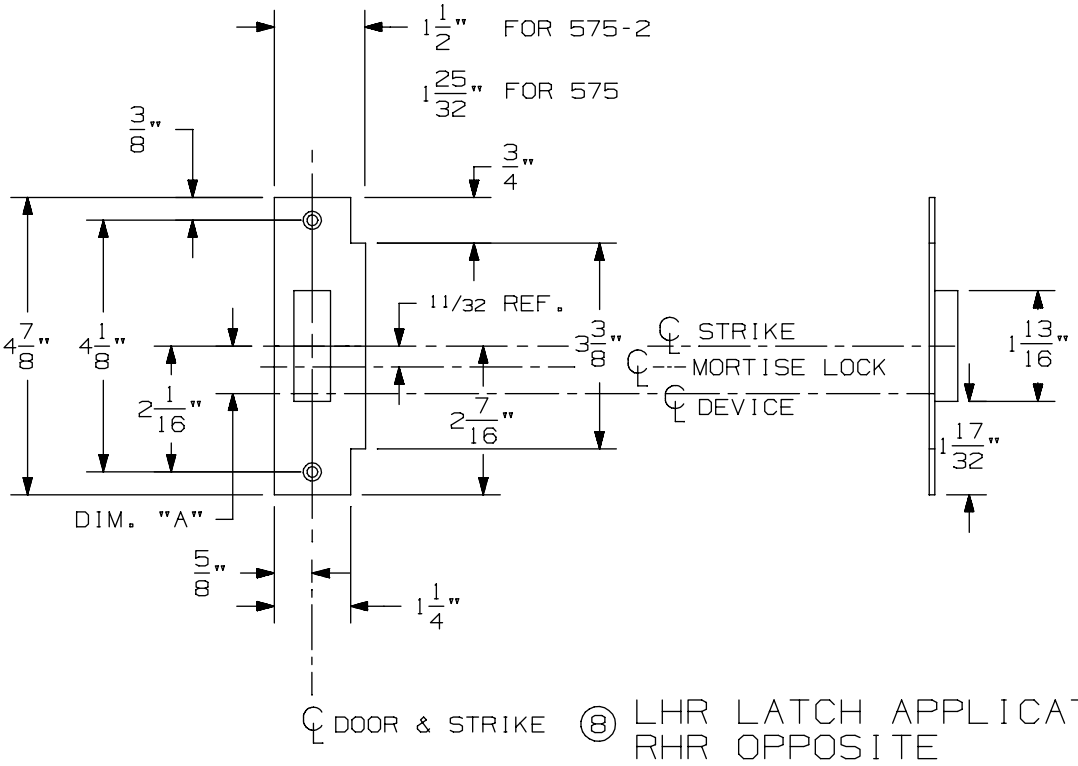

⑧ LHR LATCH APPLICATION SHOWN
RHR OPPOSITE

575-2 Mortise Strike (Double Doors) for 7500 Mortise Lock

VON DUPRIN®

NOTES: SEE MASTER SHEET #10001 FOR SUGGESTED REINFORCING

TEMPLATE NUMBER: 30212_b

DATE: 07-22-13

55 Series Trims & Strikes

55 Series Trims & Strikes

-

55 Series Trims

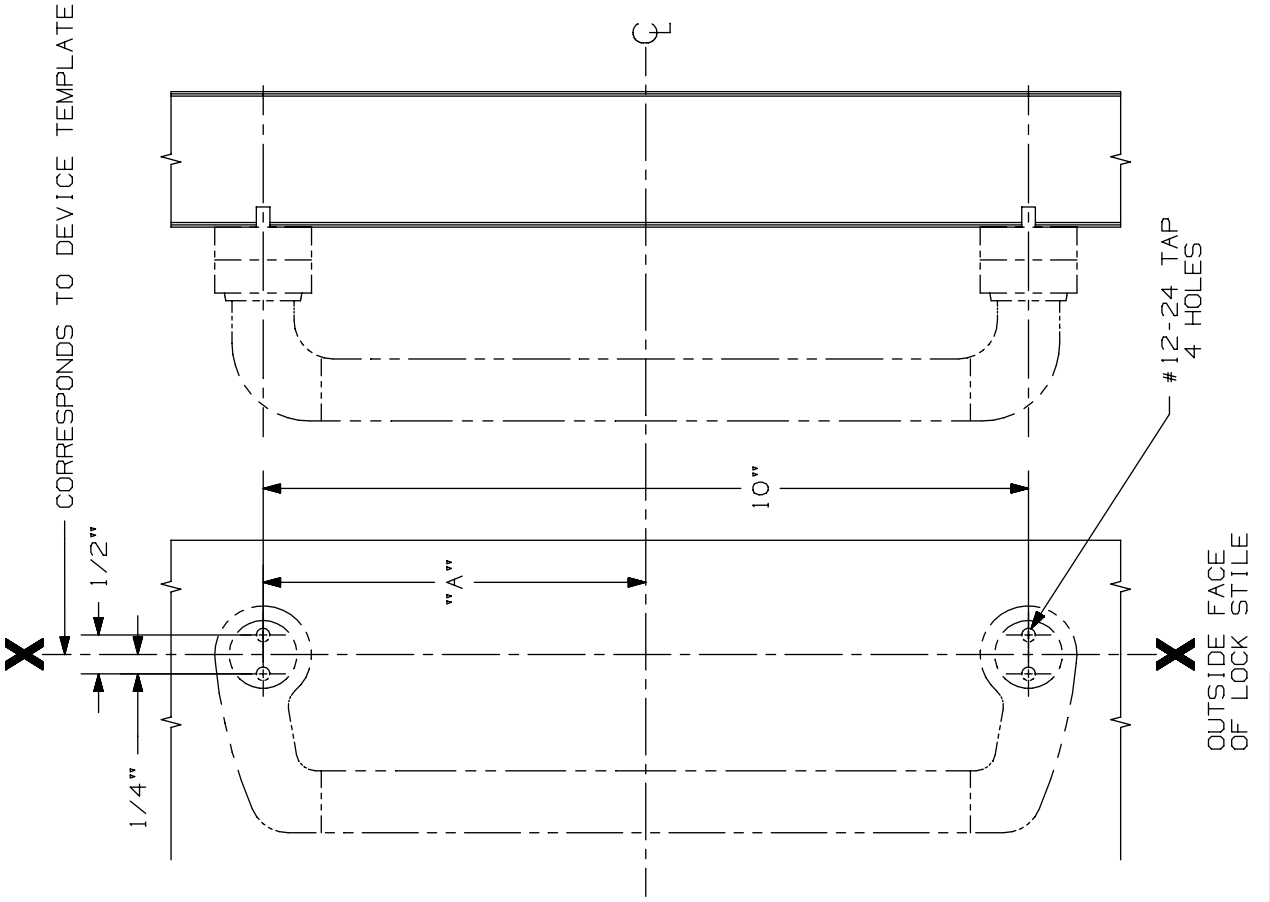

FOR CUTOUTS ON INSIDE FACE OF DOOR: SEE DEVICE TEMPLATE

DEVICE APP. SCHEDULE	
DEVICE	DIM. "A"
44 S.A.	4 15/16"
55 S.A.	4 15/16"
88 S.A.	4 15/16"

550 DT-SA Trim

VON DUPRIN®

NOTES: SEE MASTER SHEET #10001 FOR SUGGESTED REINFORCING

TEMPLATE NUMBER: 20025_a

DATE: 05-23-13

NOTES: SEE MASTER SHEET #10001 FOR SUGGESTED REINFORCING

550 DT Trim

VON DUPRIN®

TEMPLATE NUMBER: 20026_a

DATE: 05-23-13

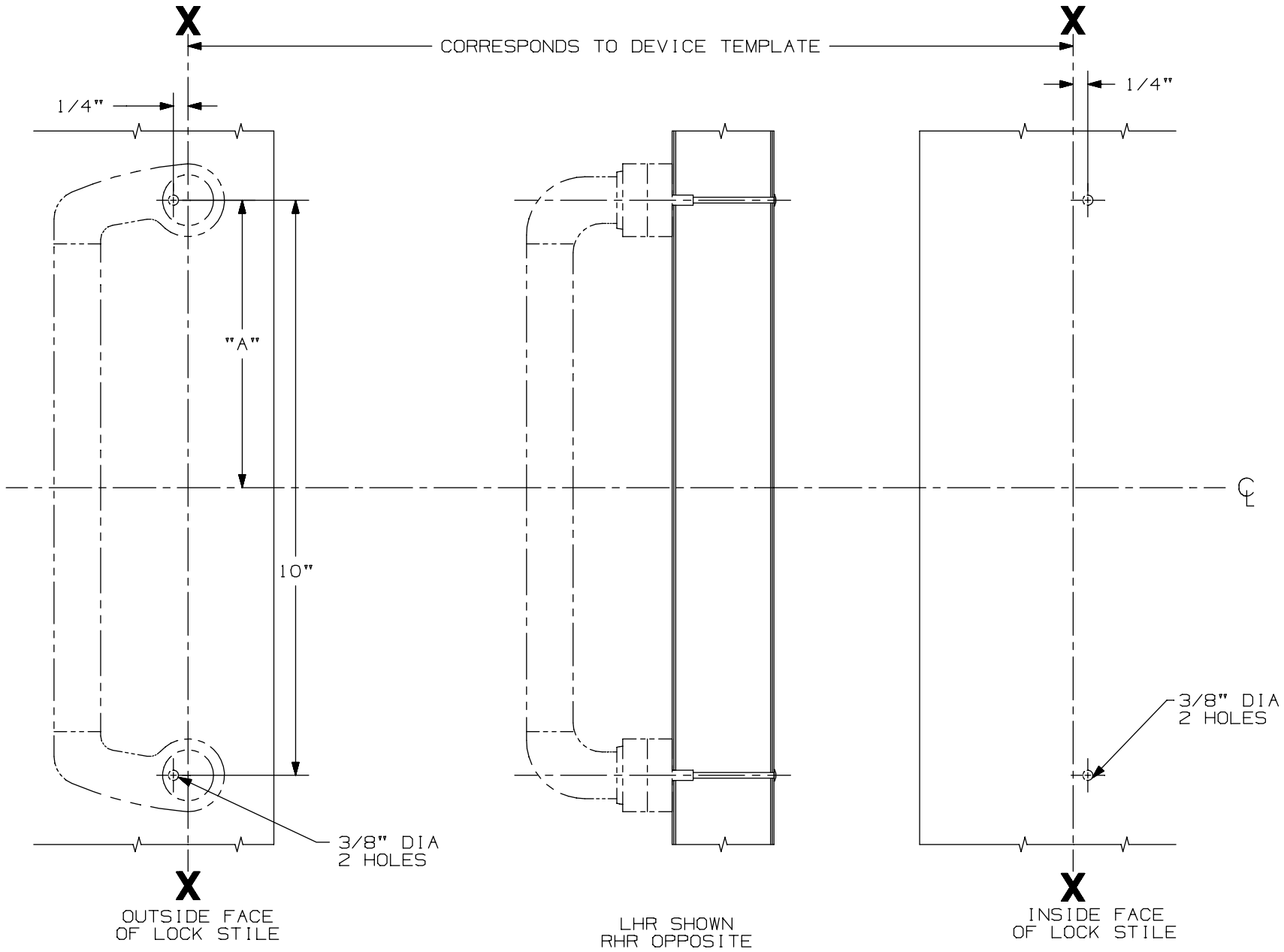

DEVICE APPLICATION SCHEDULE					
DEVICE	DIM. "A"	DEVICE	DIM. "A"	DEVICE	DIM. "A"
44 RIM	4 15/16"	44 MORT.	4 15/16"	44 VERT.	4 15/16"
55 RIM	4 15/16"	55 MORT.	4 15/16"	5547 VERT.	4 15/16"
88 RIM	4 15/16"	88 MORT.	4 15/16"	8827 VERT.	4 15/16"

FOR CUTOUTS ON INSIDE FACE OF DOOR: SEE DEVICE TEMPLATE

NOTES: SEE MASTER SHEET #10001 FOR SUGGESTED REINFORCING

550 NL Trim

TEMPLATE NUMBER: 20027_a

DATE: 05-23-13

VON DUPRIN®

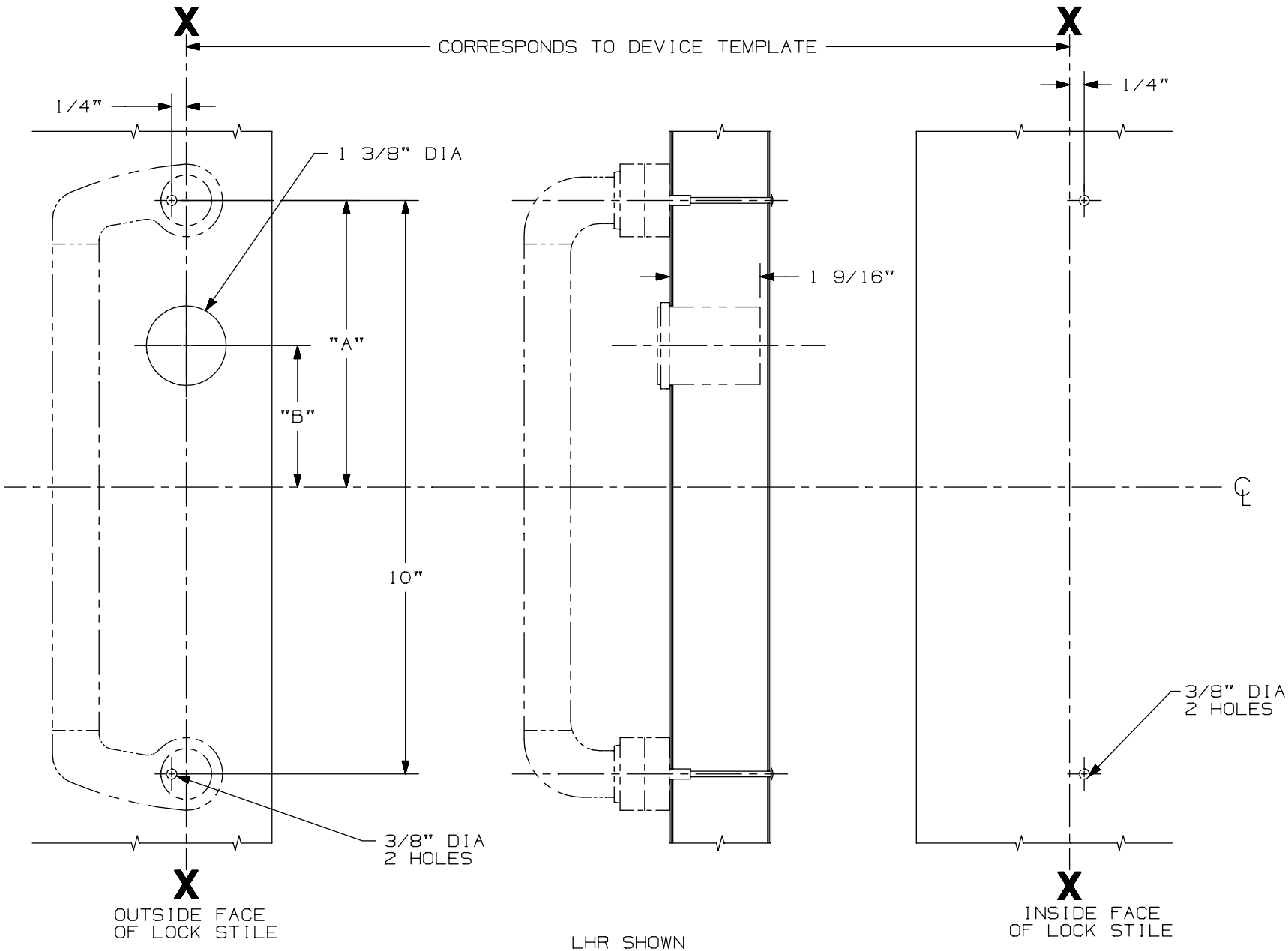

DEVICE APPLICATION SCHEDULE						FOR CUTOUTS ON INSIDE FACE OF DOOR: SEE DEVICE TEMPLATE
DEVICE	DIM. "A"	DIM. "B"	DEVICE	DIM. "A"	DIM. "B"	
44 RIM	4 15/16"	1/4"	44 MORT.	4 15/16"	2 1/16"	
55 RIM	4 15/16"	1 3/4"				
88 RIM	4 15/16"	1/4"	88 MORT.	4 15/16"	2"	

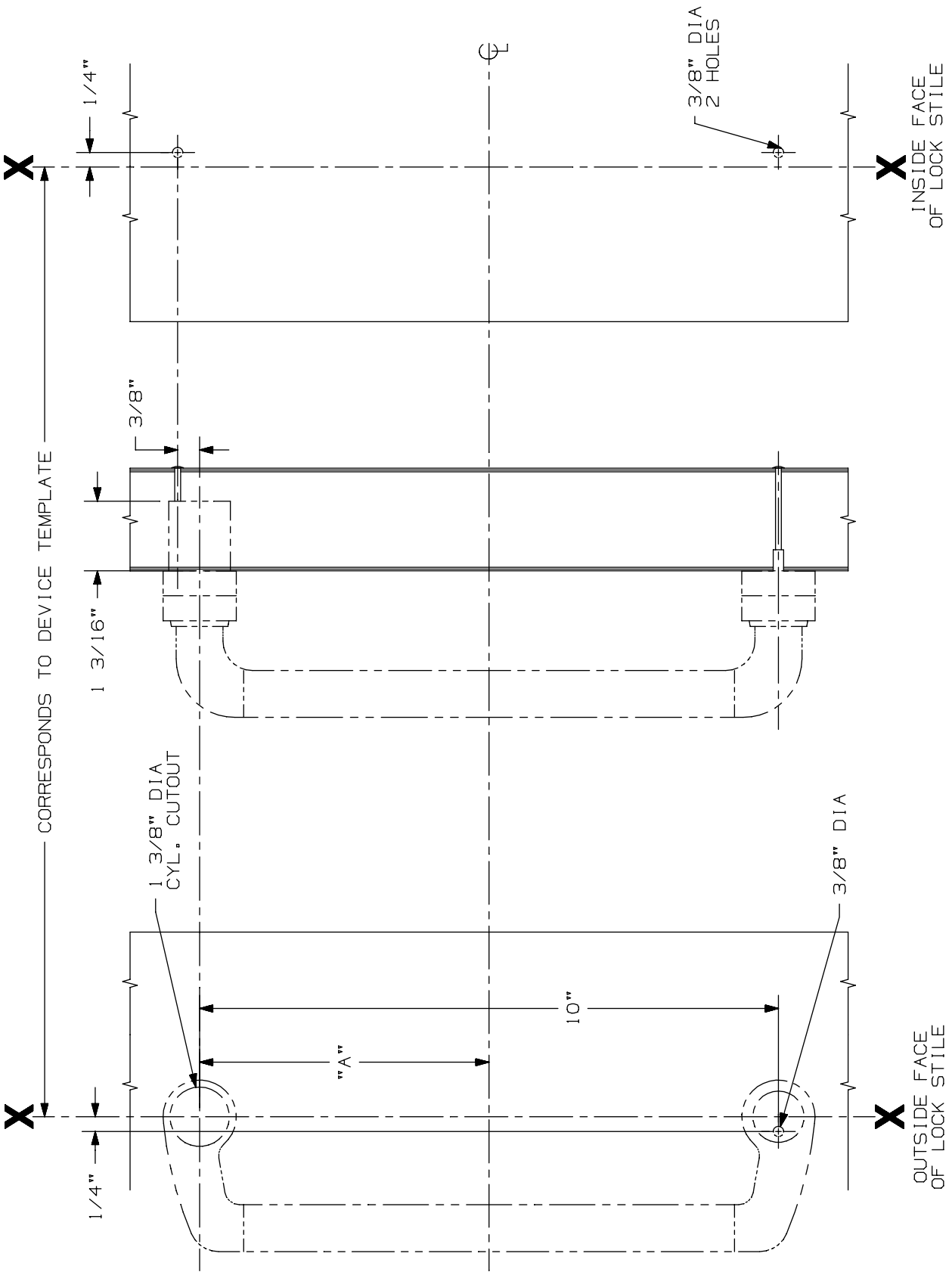

DEVICE APP. SCHEDULE	
DEVICE	DIM. "A"
5547 VERT.	4 15/16"

FOR CUTOUTS ON INSIDE FACE OF DOOR: SEE DEVICE TEMPLATE

555 NL Trim

VON DUPRIN®

NOTES: SEE MASTER SHEET #10001 FOR SUGGESTED REINFORCING

TEMPLATE NUMBER: 20028_a

DATE: 05-23-13

DEVICE APPLICATION SCHEDULE	
DEVICE	DIM "A"
5547-F CONCEALED VERT.	3 3/16"
8847-F CONCEALED VERT.	3 3/16"

FOR CUTOUTS ON INSIDE FACE OF DOOR SEE DEVICE TEMPLATE

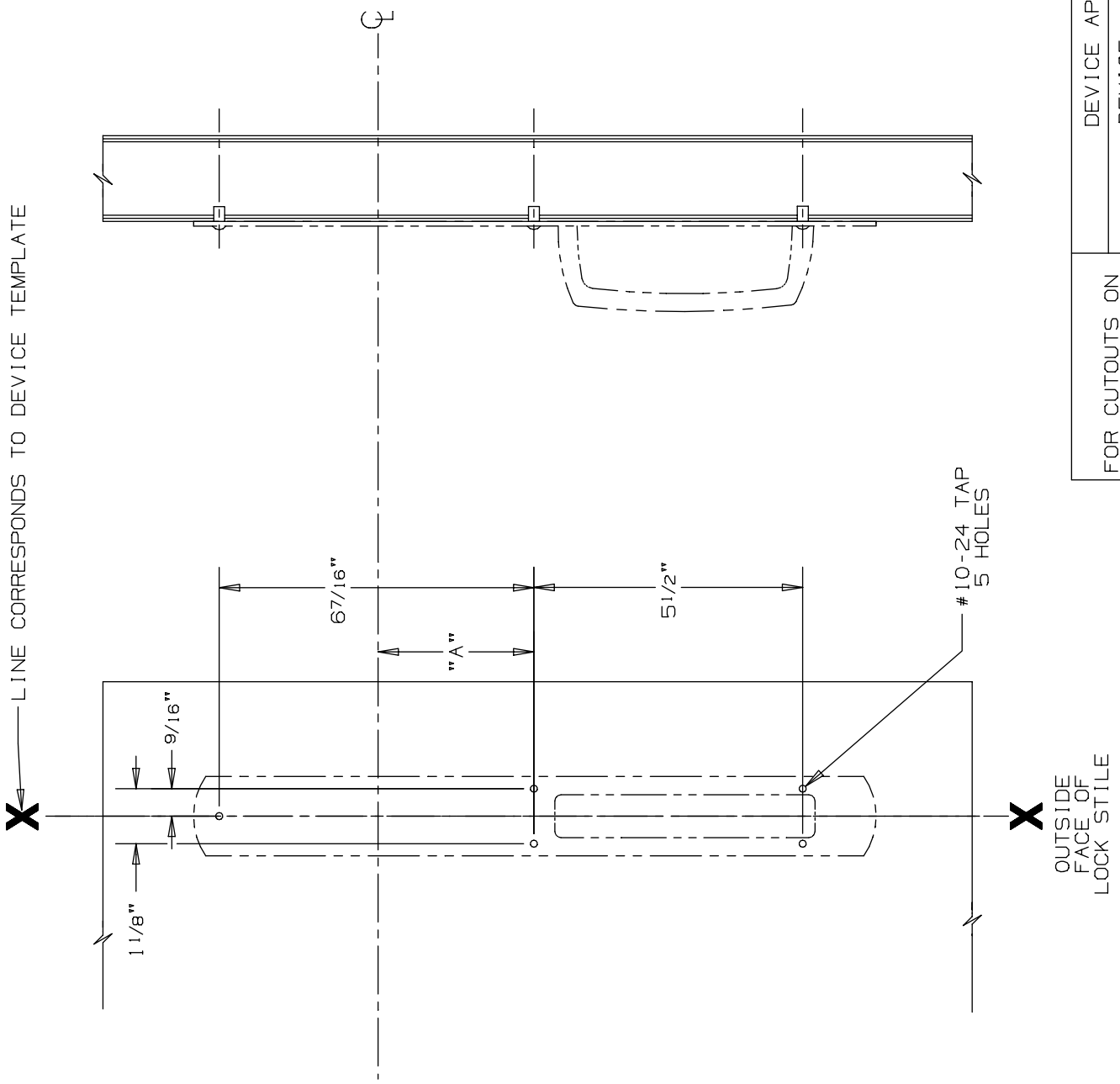

609DT Surface Applied Trim

VON DUPRIN®

NOTES: SEE MASTER SHEET #10001 FOR SUGGESTED REINFORCING

TEMPLATE NUMBER: 20070_a

DATE: 05-23-13

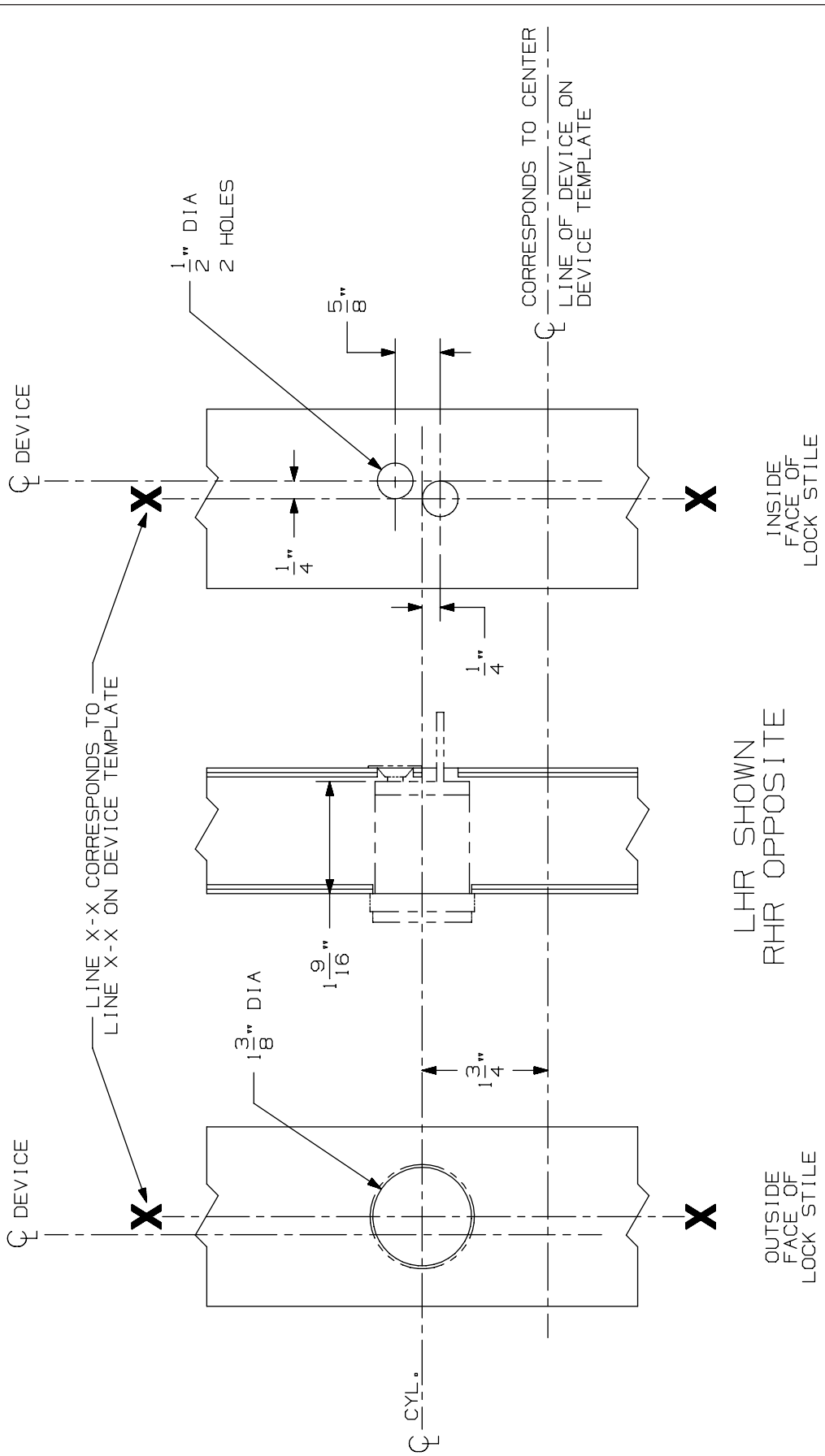

DEVICE APPLICATION SCHEDULE
55 RIM

110NL Cylinder Preparation

VON DUPRIN®

NOTES: SEE MASTER SHEET #10001 FOR SUGGESTED REINFORCING

TEMPLATE NUMBER: 40016_a

DATE: 05-28-13

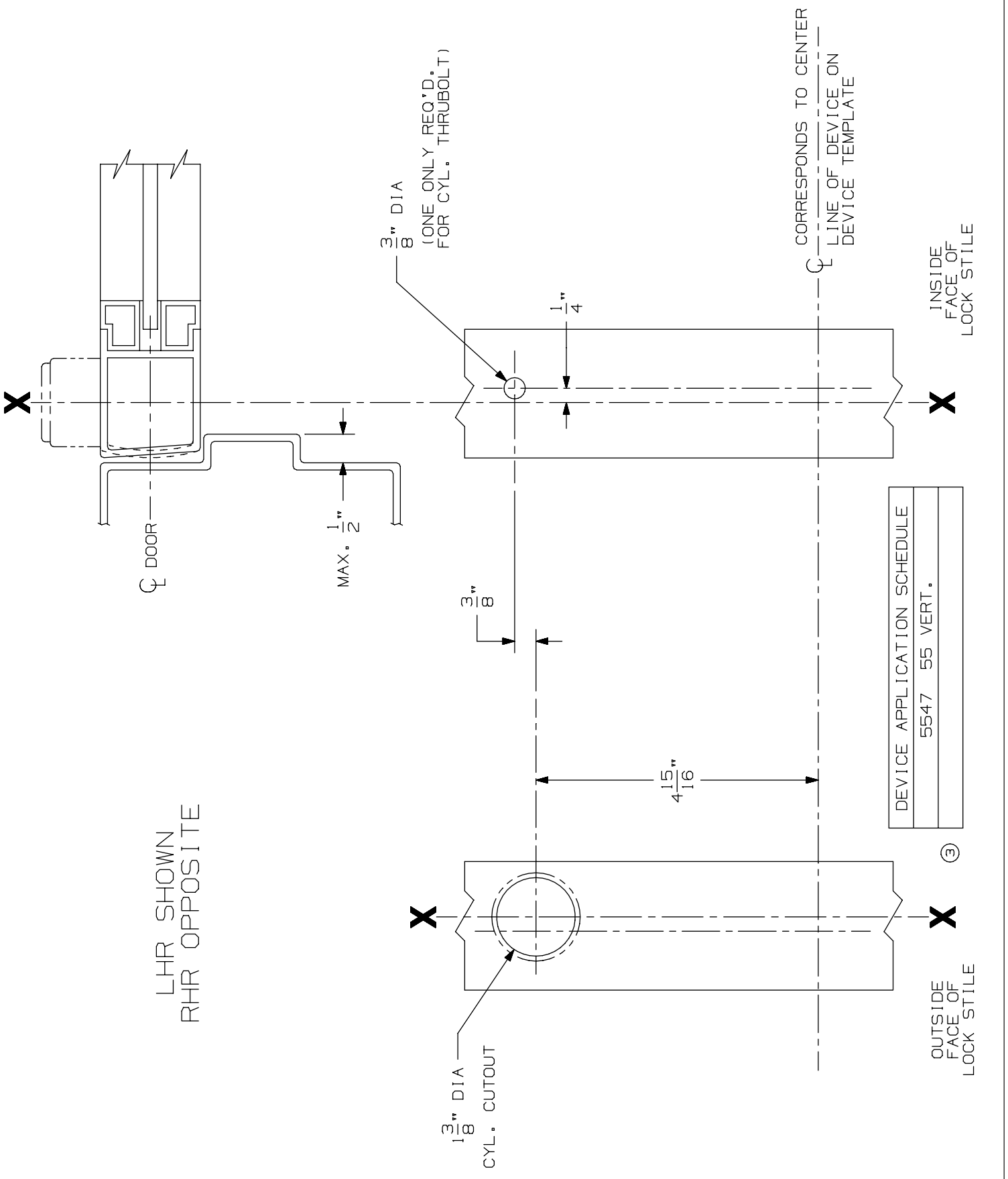

555NL Cylinder Preparation

VON DUPRIN®

NOTES: SEE MASTER SHEET #10001 FOR SUGGESTED REINFORCING

TEMPLATE NUMBER: 40017_a

DATE: 05-28-13

392-7 (PULL BELOW CENTER)

FOR NL, TL OR DT APPLICATIONS

DRILL 1/4" DIA. C'SINK TO 82° FOR 88 & 55 SERIES DEVICES
DRILL 1/4" DIA. THRU FOR 99 SERIES DEVICES
SCREW THRU BOLT TO 99 DEVICE CHASSIS

③

DEVICE APPLICATION SCHEDULE	DIM "A"
98/99 SERIES RIM	3 1/2"
98/99 SERIES SURFACE VERTICAL	3 1/2"
98/99 SERIES MORTISE	3 1/2"
88 SERIES RIM	3 11/16"
88 SERIES SURFACE VERTICAL	3 11/16"
88 SERIES MORTISE	3 11/16"
55 SERIES RIM	13/16"

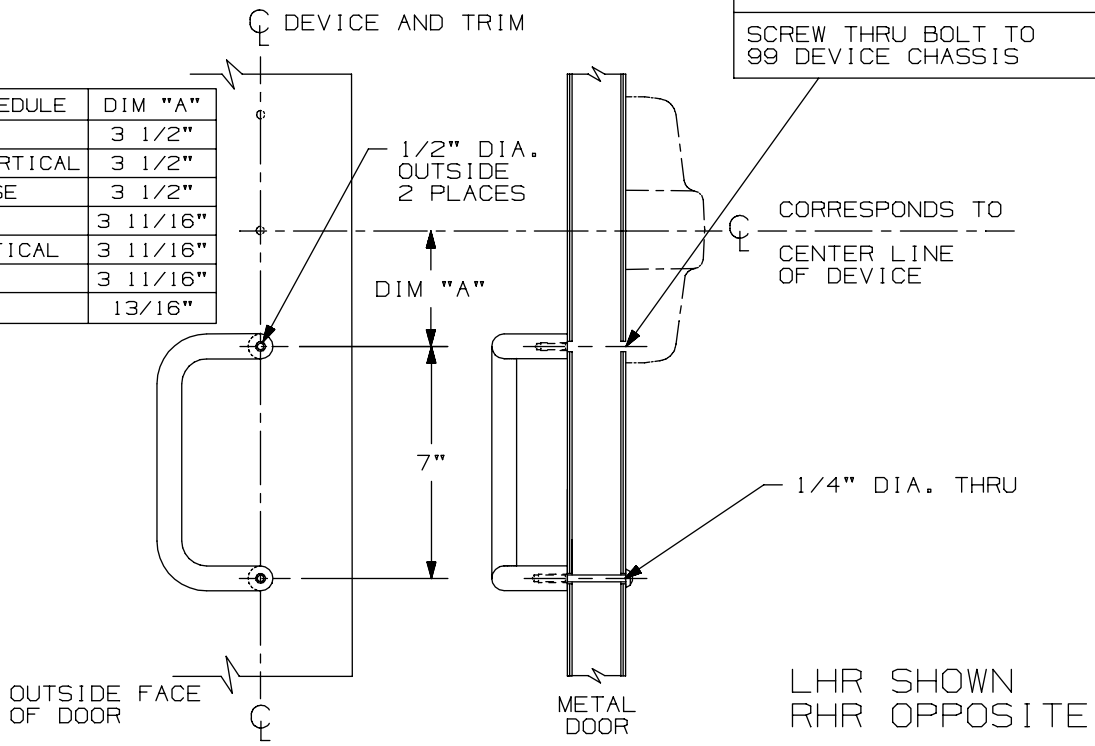

LHR SHOWN
RHR OPPOSITE

392-7 (PULL ON CENTER)

FOR NL, TL OR DT APPLICATIONS

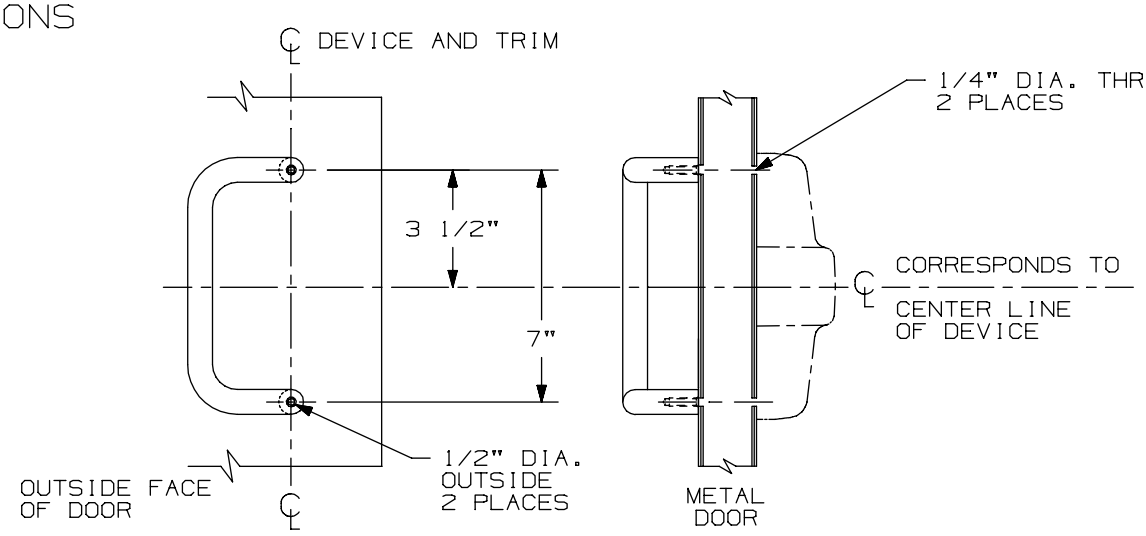

③

DEVICE APPLICATION SCHEDULE
98/99 SERIES RIM (DT OR NL)
98/99 SERIES SURFACE VERTICAL (DT, NL OR TL)
98/99 SERIES MORTISE (DT OR NL)
98/99 SERIES CONCEALED VERTICAL (DT, NL OR TL)

LHR SHOWN
RHR OPPOSITE

392-7 Pull

VON DUPRIN®

NOTES: SEE MASTER SHEET #10001 FOR SUGGESTED REINFORCING

TEMPLATE NUMBER: 20447_a

DATE: 05-23-13

55 Series Trims & Strikes - 55 Series Controls

NOTES: SEE MASTER SHEET #10001 FOR SUGGESTED REINFORCING

371-L Control

VON DUPRIN®

TEMPLATE NUMBER: 40100_a

DATE: 05-28-13

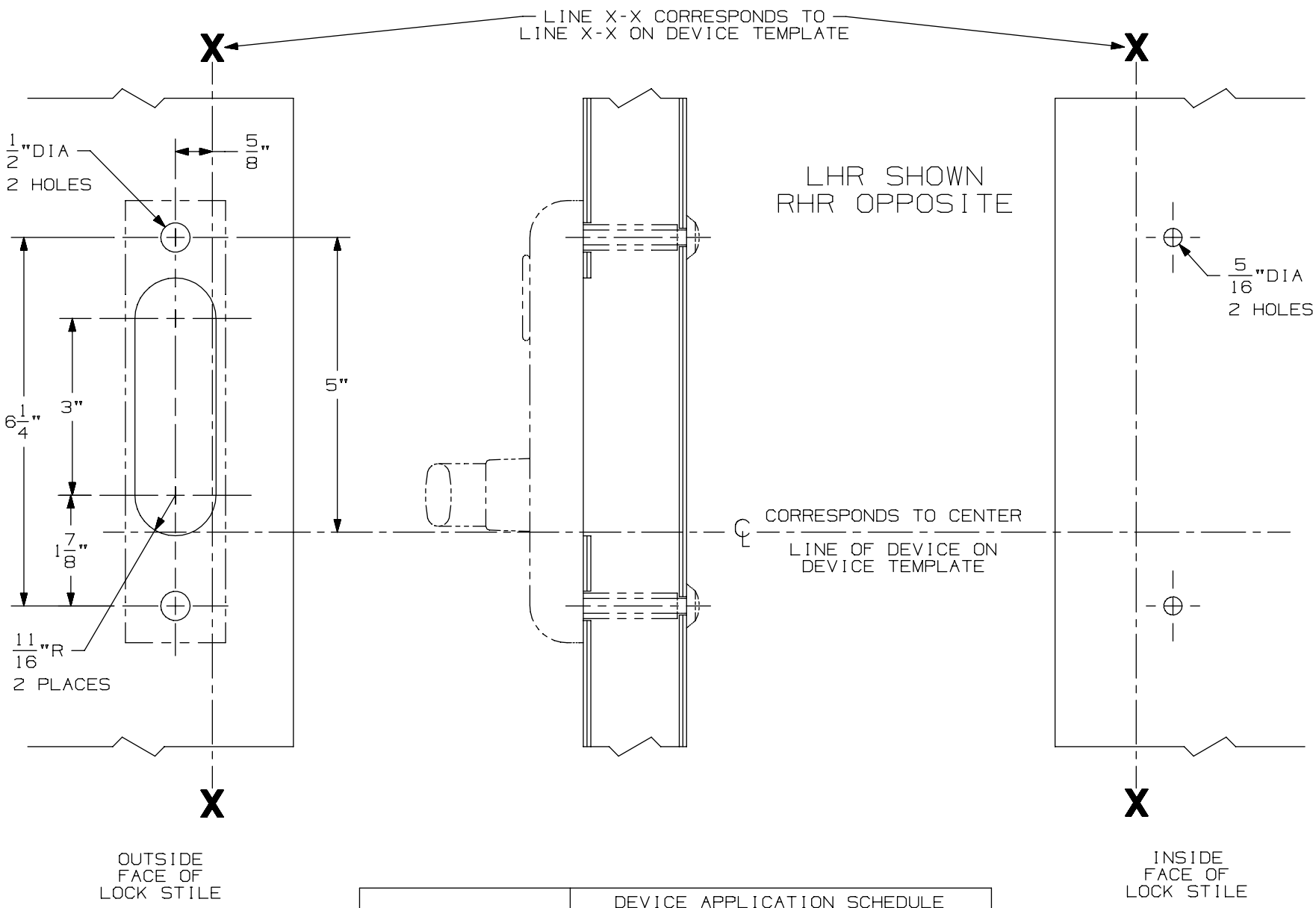

FOR CUTOUT ON INSIDE FACE OF DOOR SEE DEVICE TEMPLATE	DEVICE APPLICATION SCHEDULE
	5547-F VERTICAL ROD DEVICE

NOTES: SEE MASTER SHEET #10001 FOR SUGGESTED REINFORCING

371-L-BE Control

VON DUPRIN®

TEMPLATE NUMBER: 40101_a

DATE: 05-28-13

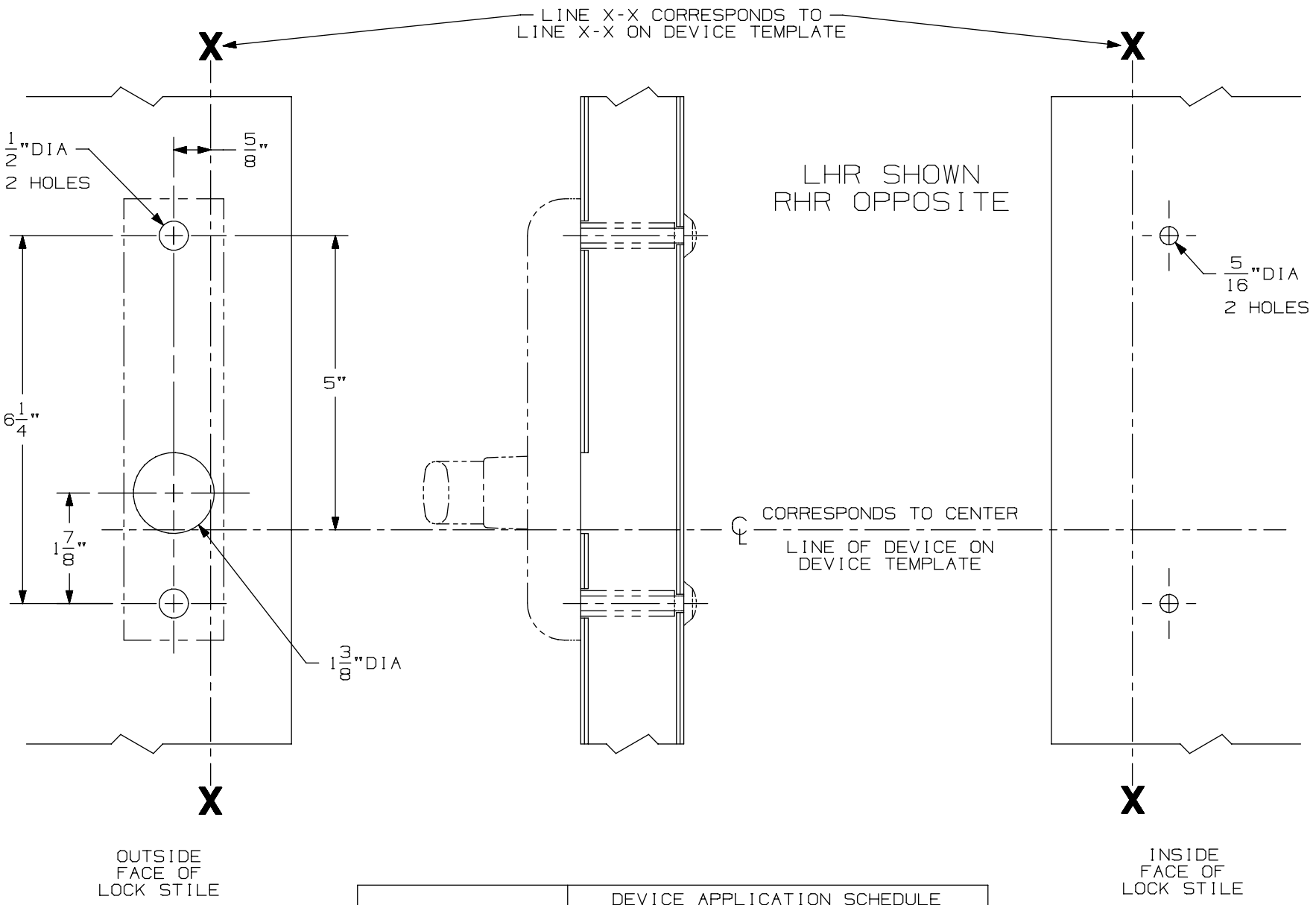

	DEVICE APPLICATION SCHEDULE
FOR CUTOUT ON INSIDE FACE OF DOOR SEE DEVICE TEMPLATE	5547-F VERTICAL ROD DEVICE

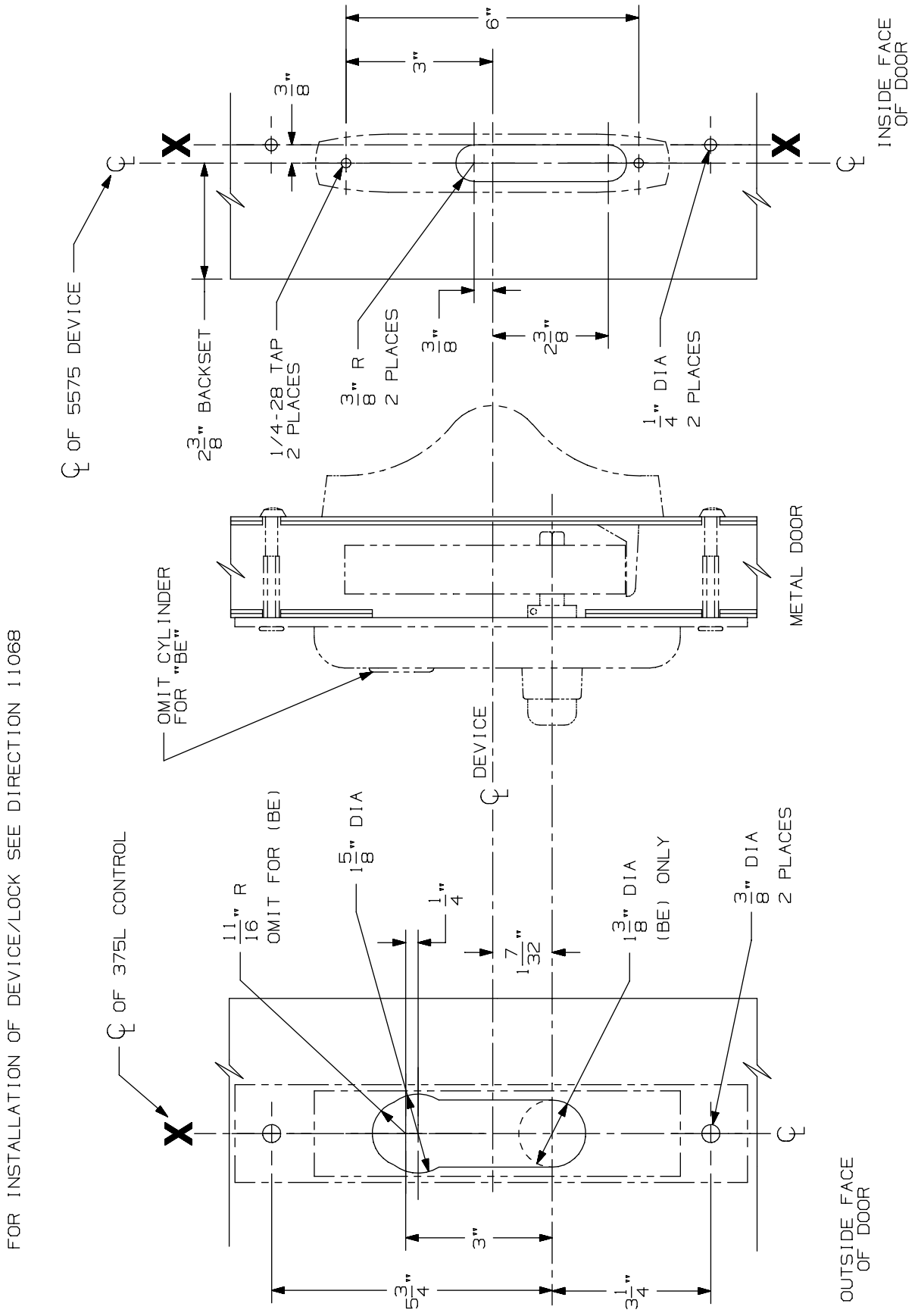

375-L & 375-L-BE Control for 5575 & 5575-F

VON DUPRIN®

NOTES: SEE MASTER SHEET #10001 FOR SUGGESTED REINFORCING

TEMPLATE NUMBER: 40127_a

DATE: 05-28-13

376-T Control

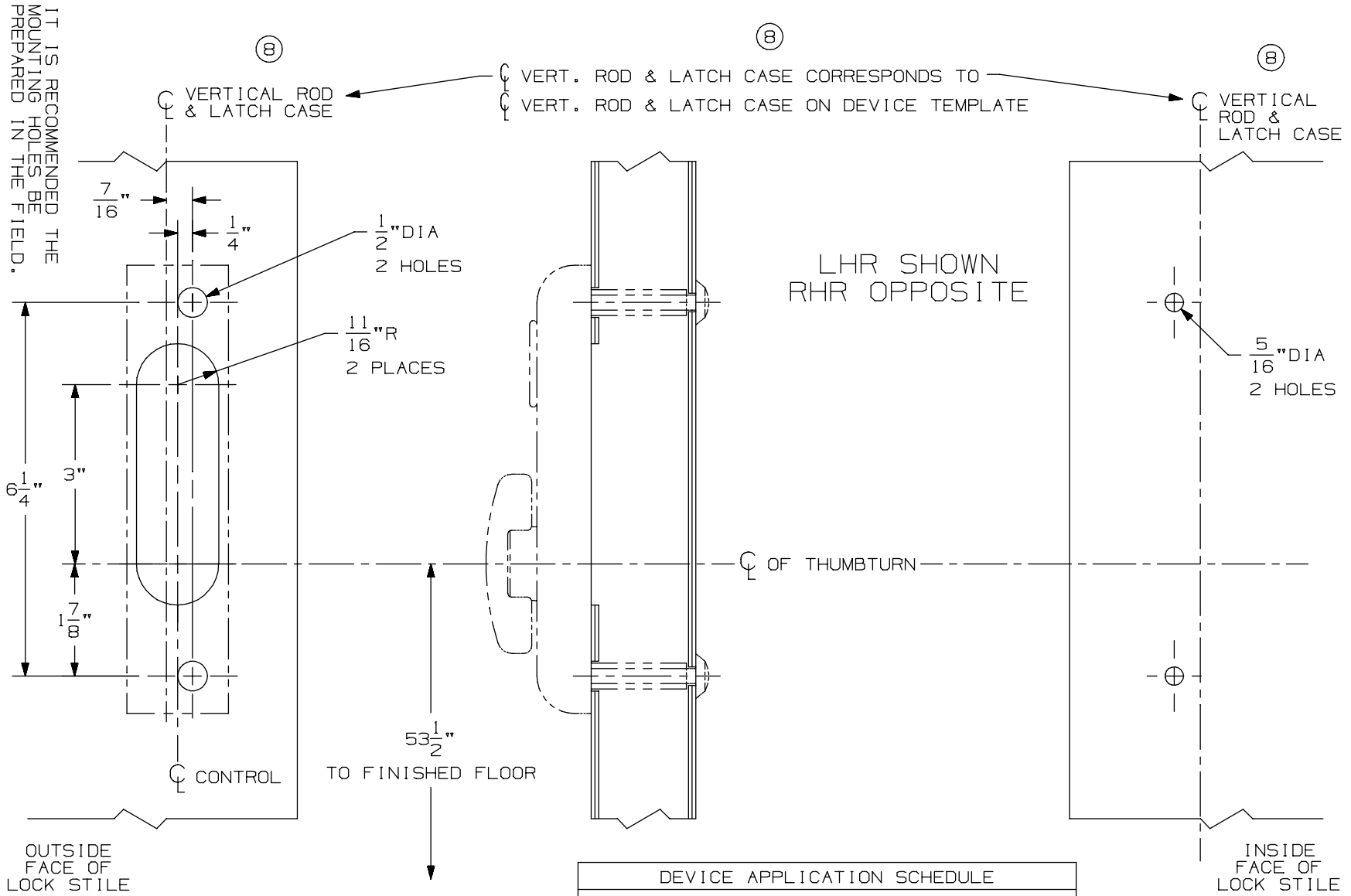

DEVICE APPLICATION SCHEDULE
5547/5547-F VERT. ROD DEVICE
8847-F VERT. ROD DEVICE
* 3347/3547 VERT. ROD DEVICE
3347-F/3547-F VERT. ROD DEVICE
⑧ * 3347A/3547A VERT. ROD DEVICE
⑧ 3347A-F/3547A-F VERT. ROD DEVICE
9847/9947 VERT. ROD DEVICE
9847-F/9947-F VERTICAL ROD DEVICE

⑧ * NOT TO BE USED WITH 1 1/16" LATCH CASE BACKSET ON BULLNOSE EDGE DOORS WITH WEATHERSTRIP CHANNEL.

NOTES: SEE MASTER SHEET #10001 FOR SUGGESTED REINFORCING

TEMPLATE NUMBER: 40114_a

DATE: 05-28-13

VON DUPRIN®

376-T-BE Control

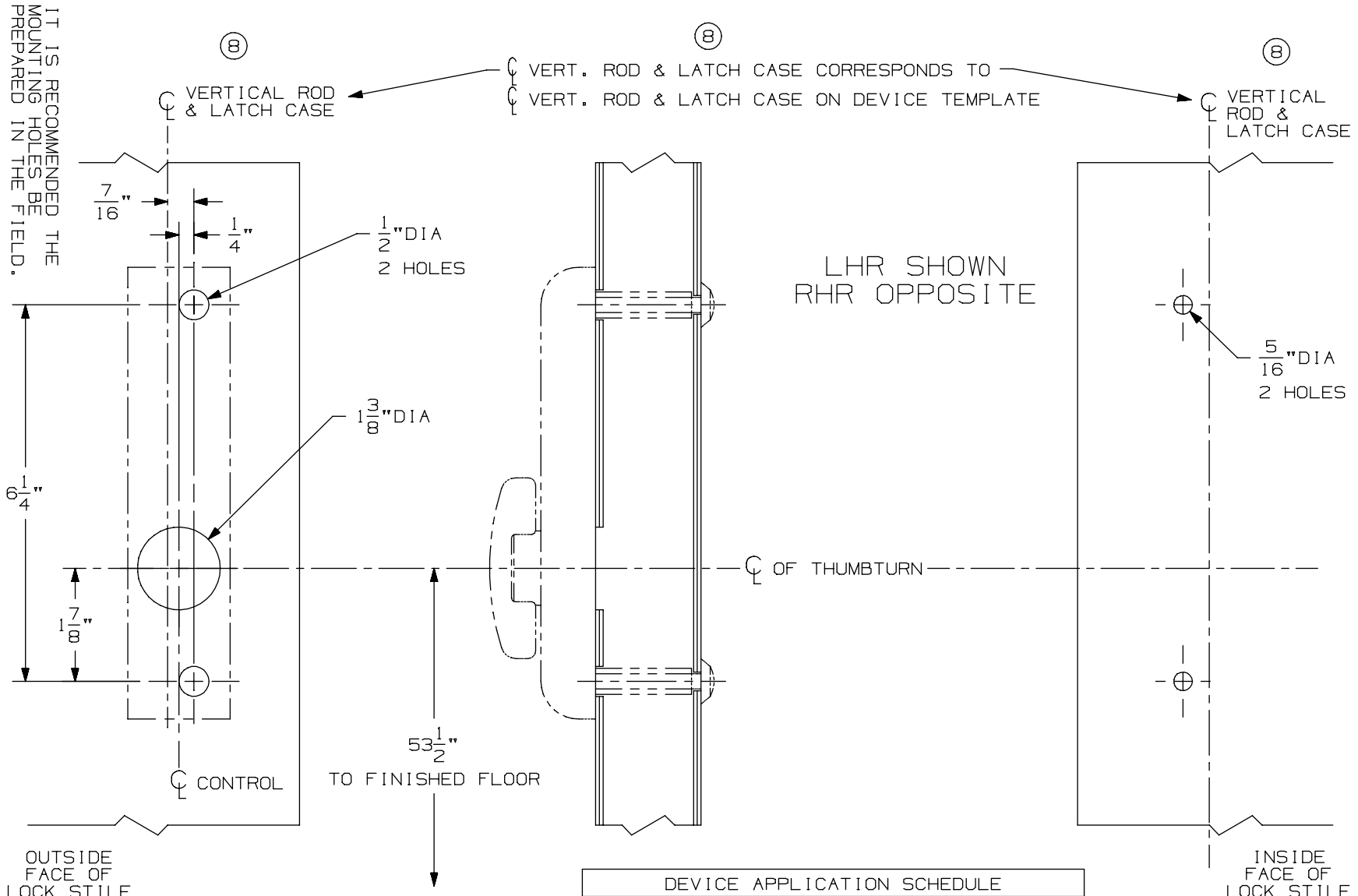

DEVICE APPLICATION SCHEDULE
5547/5547-F VERT. ROD DEVICE
8847-F VERT. ROD DEVICE
* 3347/3547 VERT. ROD DEVICE
3347-F/3547-F VERT. ROD DEVICE
⑧ * 3347A/3547A VERT. ROD DEVICE
⑧ 3347A-F/3547A-F VERT. ROD DEVICE
9847/9947 VERT. ROD DEVICE
9847-F/9947-F VERTICAL ROD DEVICE

* NOT TO BE USED WITH 1 1/16" ⑧ LATCH CASE BACKSET ON BULLNOSE EDGE DOORS WITH WEATHERSTRIP CHANNEL.

NOTES: SEE MASTER SHEET #10001 FOR SUGGESTED REINFORCING

TEMPLATE NUMBER: 40115_a

DATE: 05-28-13

VON DUPRIN®

55 Series Trims & Strikes

-

55 Series Strike5575

RIM APPLICATION

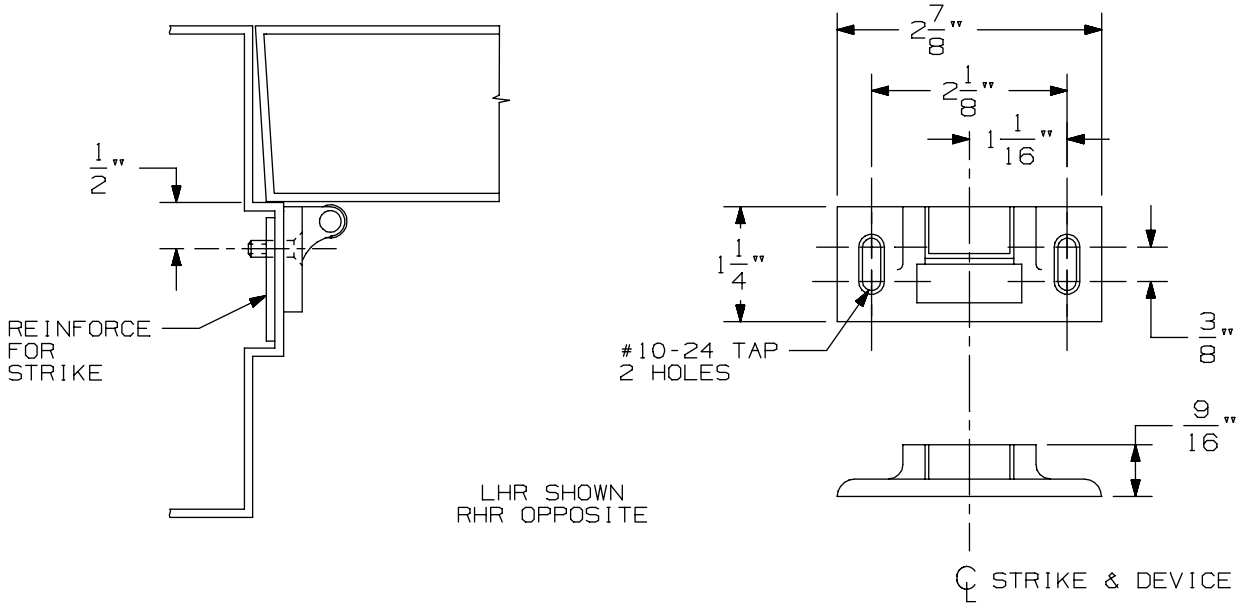

VERTICAL APPLICATION

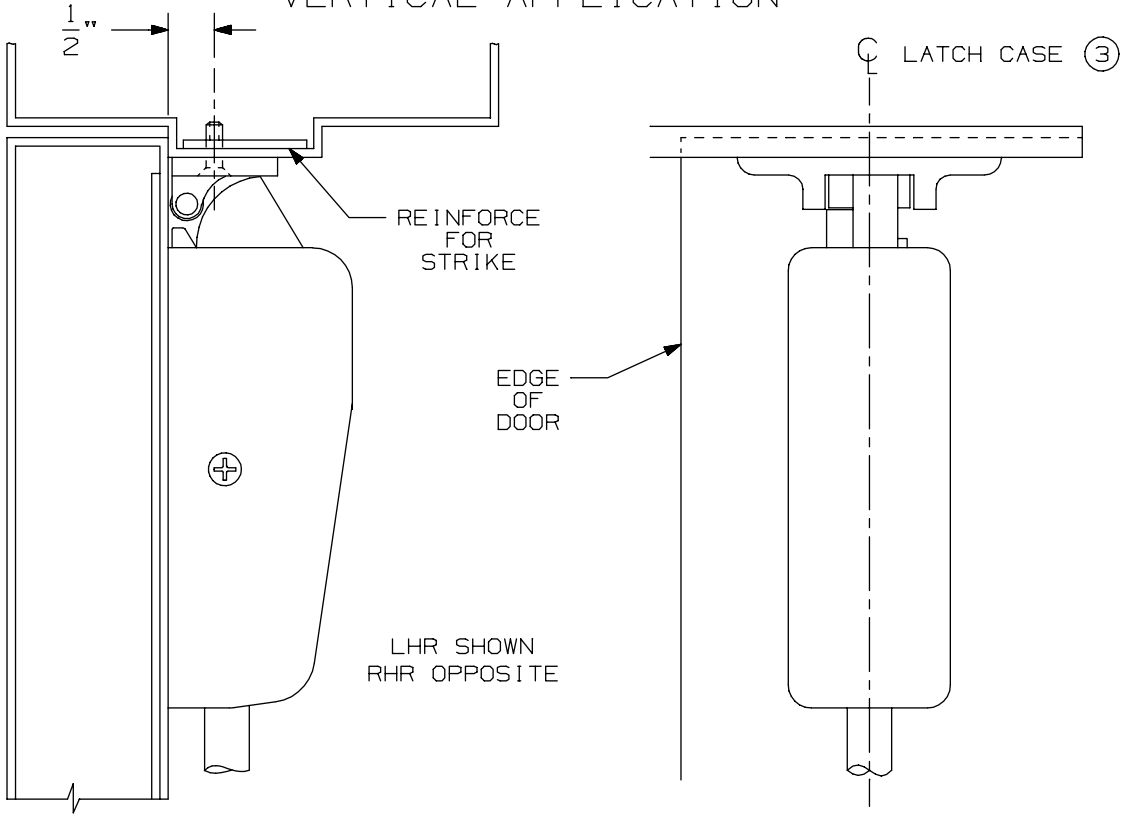

NOTE: LATCH CASE MOUNTING HOLES TO BE PREPARED AT INSTALLATION ON DOOR.

264 Strike

VON DUPRIN®

NOTES: SEE MASTER SHEET #10001 FOR SUGGESTED REINFORCING

TEMPLATE NUMBER: 30009_a

DATE: 05-23-13

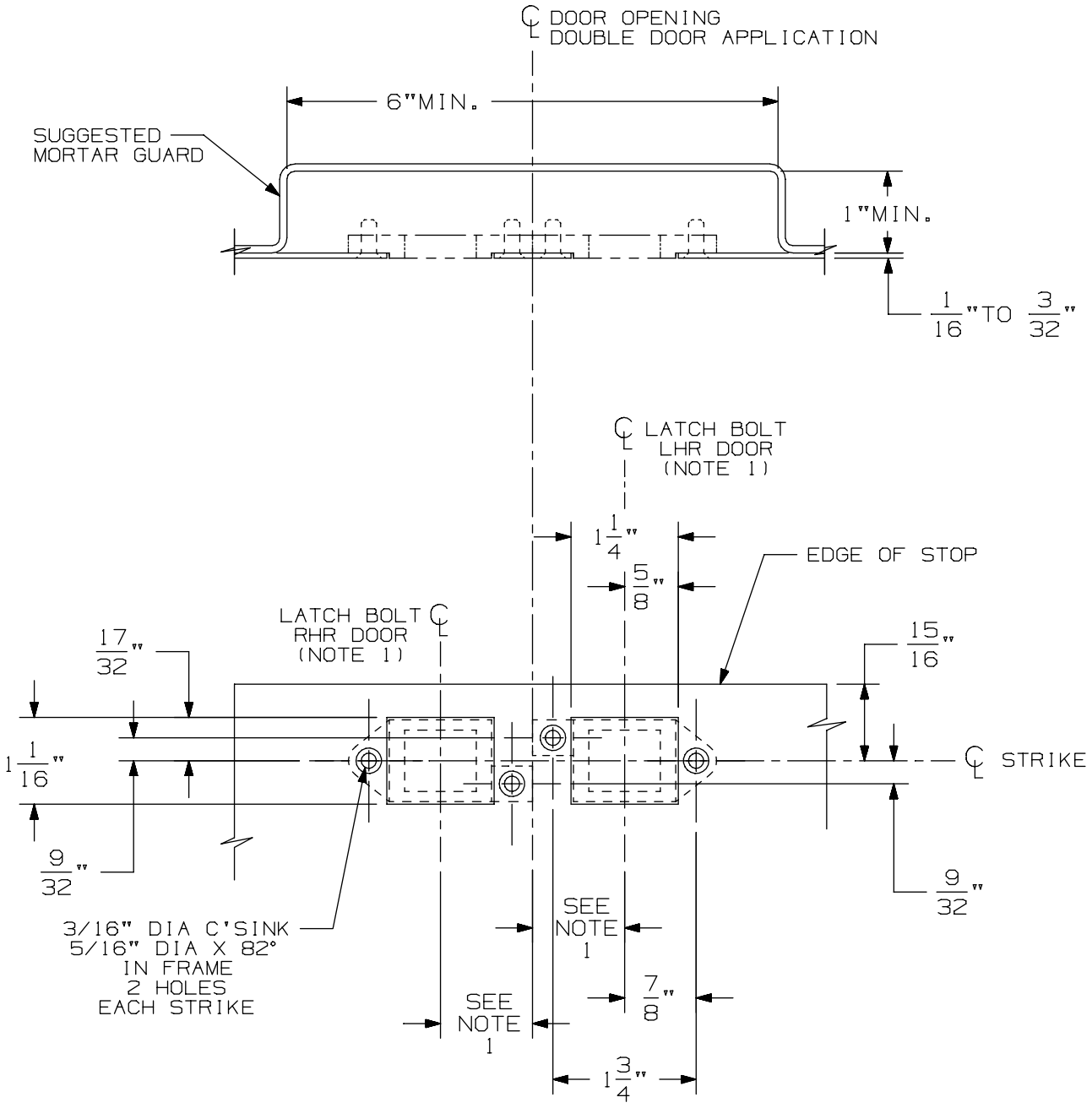

DOUBLE DOOR APPLICATION SHOWN.
FOR SINGLE DOOR APPLICATION USE
APPROPRIATE HANDING AS SHOWN.

NOTES: 1. SEE DEVICE TEMPLATE FOR
LOCATION OF LATCH BOLT.

471-U Strike for 5547
Hollow Metal Frame Preparation

VON DUPRIN®

NOTES: SEE MASTER SHEET #10001 FOR SUGGESTED REINFORCING

TEMPLATE NUMBER: 30013_a

DATE: 05-23-13

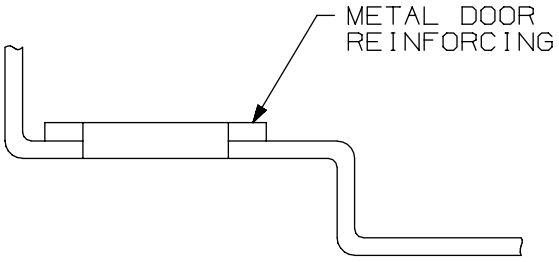

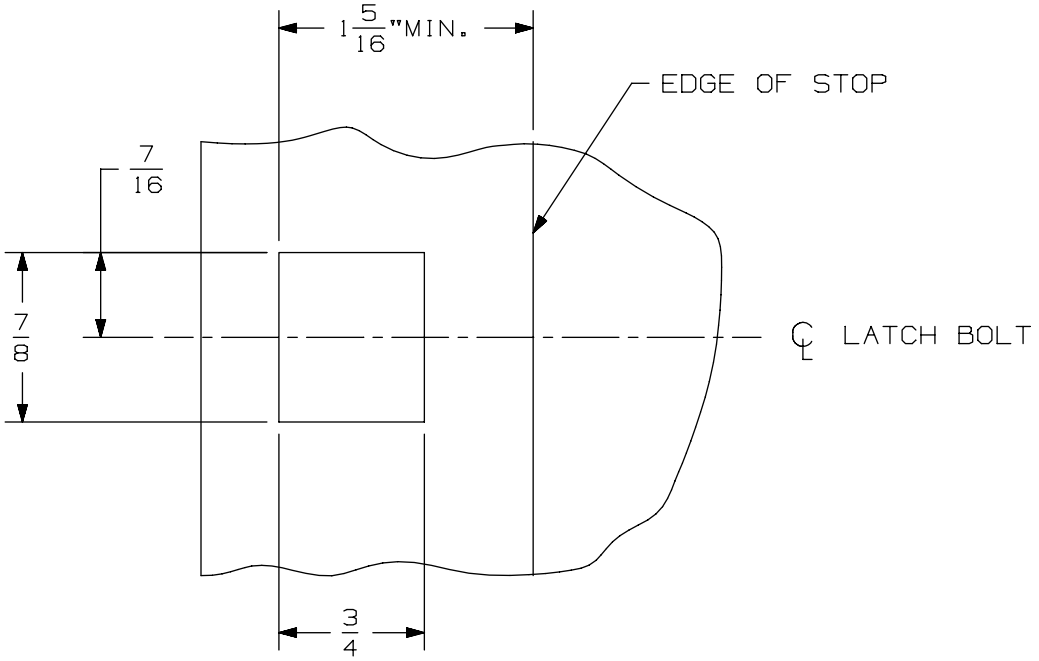

REINFORCED HOLLOW METAL AND
ALUMINUM FRAME PREPARATION

Frame Preparation for 5547 Series Vertical Rod Device	VON DUPRIN®	
NOTES: SEE MASTER SHEET #10001 FOR SUGGESTED REINFORCING	TEMPLATE NUMBER: 30014_a	DATE: 05-23-13

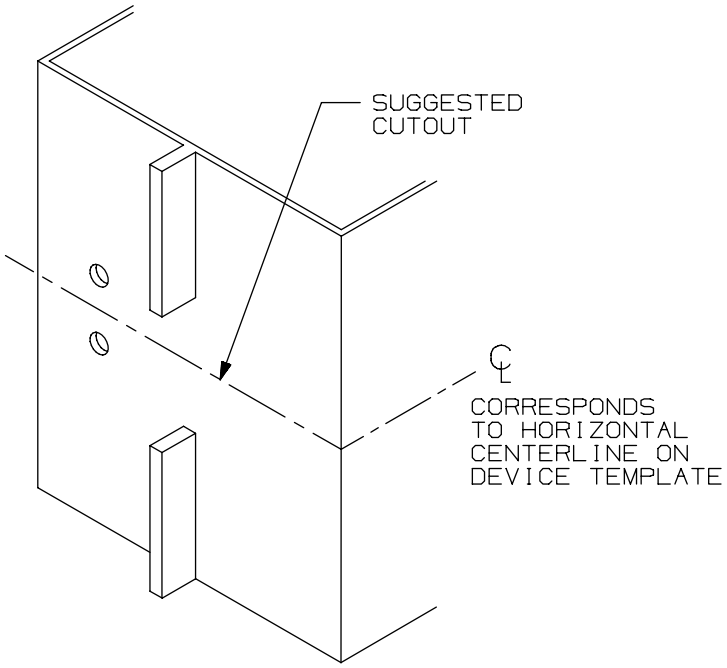

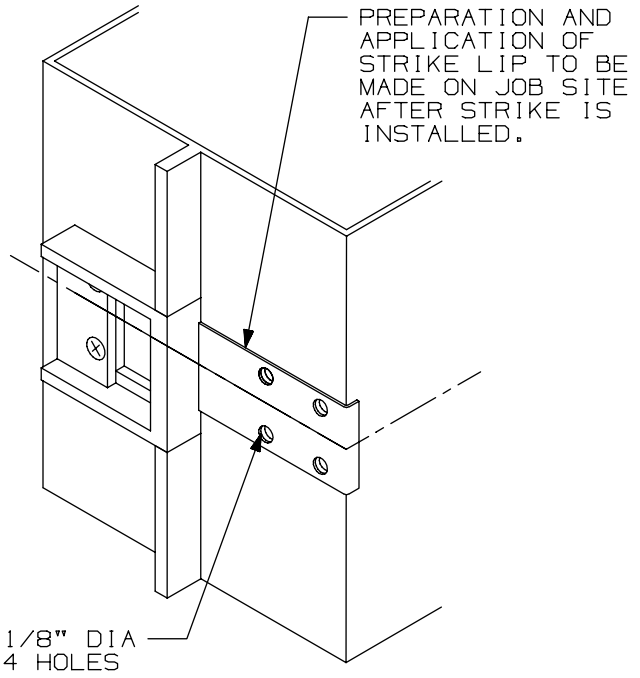

SINGLE DOOR INSTALLATION			
DEVICE	DIM "B"	DIM "C"	MIN STILE
33/35 RIM	19/32"	1 7/16"	1 3/4"
44 RIM EO,DT,NL,TP	1 11/16"	1 7/16"	3 3/8"
44 RIM K	1 9/16"	1 7/16"	3 3/8"
55 RIM	17/32"	1 7/16"	1 3/4"
22 RIM	1 9/16"	1 9/16"	3 13/16"
88 RIM EO,DT,NL,TP	1 11/16"	1 7/16"	3 3/8"
88 RIM K,L	1 9/16"	1 7/16"	3 3/8"
98/99 RIM	1 9/16"	1 9/16"	3 13/16"

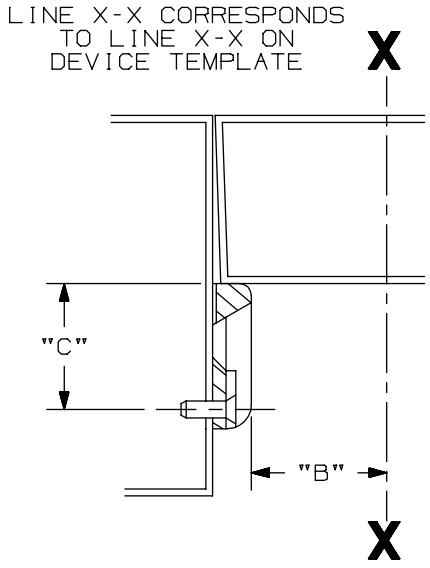

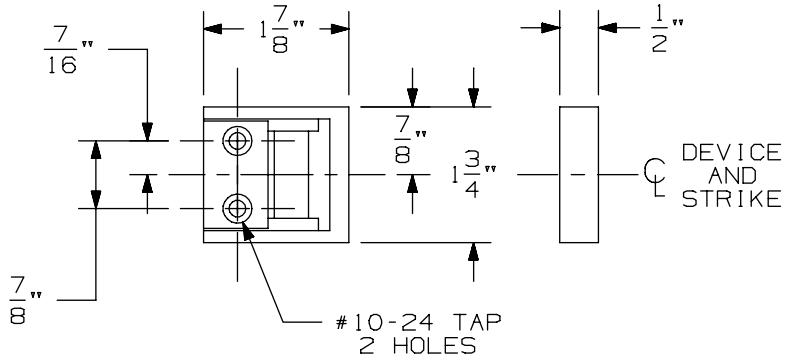

LHR APPLICATION SHOWN, RHR APPLICATION OPPOSITE

1409 Strike

VON DUPRIN®

NOTES: SEE MASTER SHEET #10001 FOR SUGGESTED REINFORCING

TEMPLATE NUMBER: 30022_a

DATE: 05-23-13

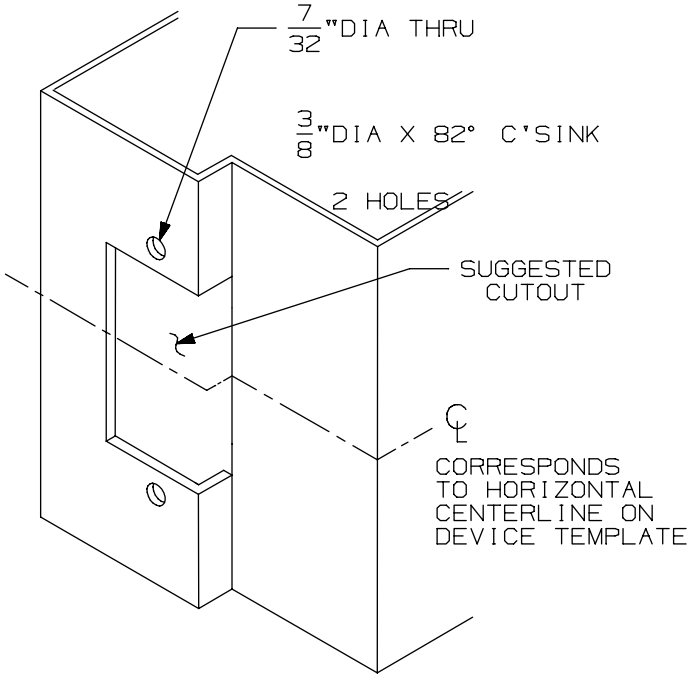

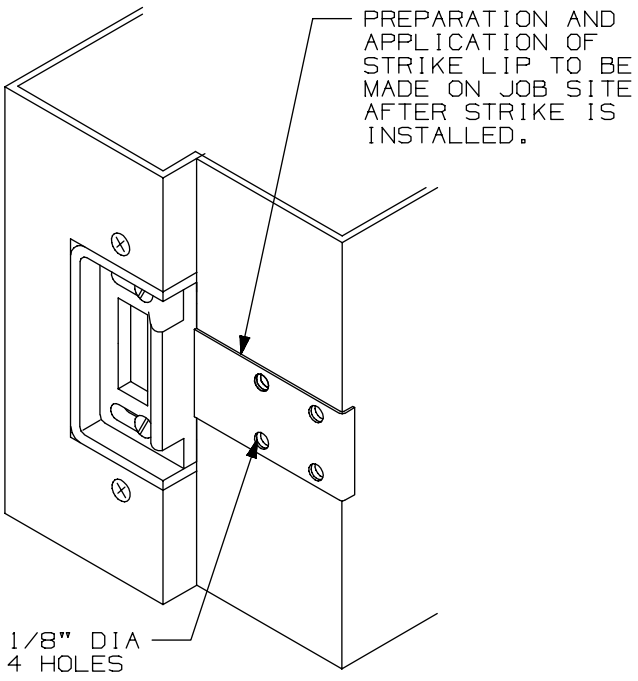

LHR APPLICATION SHOWN, RHR APPLICATION OPPOSITE.

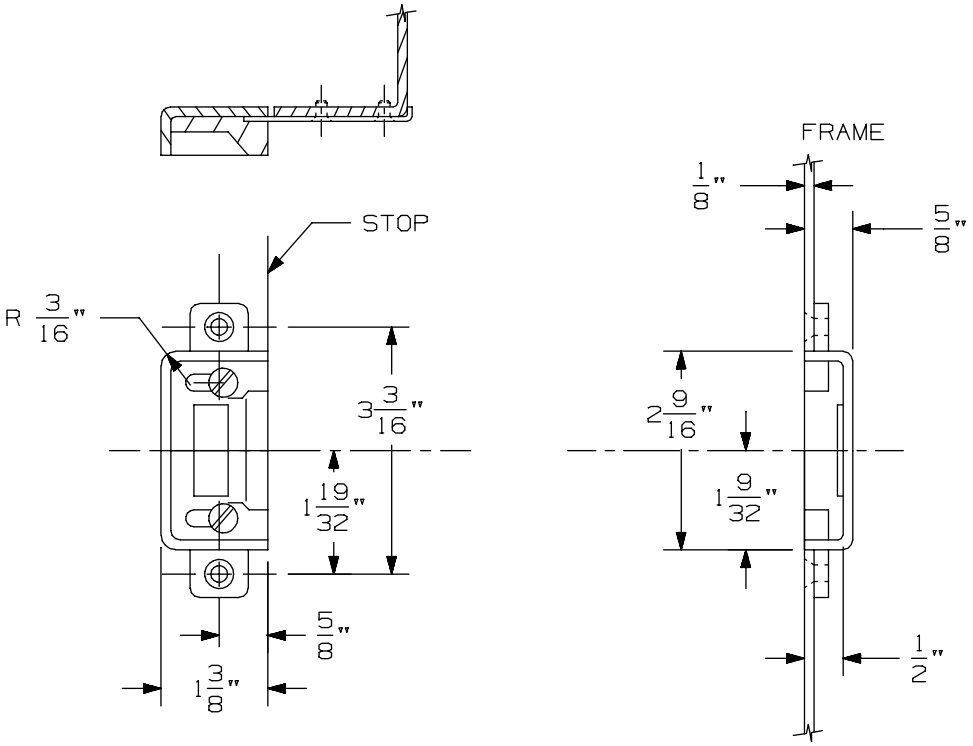

1410 Strike		VON DUPRIN®
NOTES: SEE MASTER SHEET #10001 FOR SUGGESTED REINFORCING	TEMPLATE NUMBER: 30023_a	DATE: 05-23-13

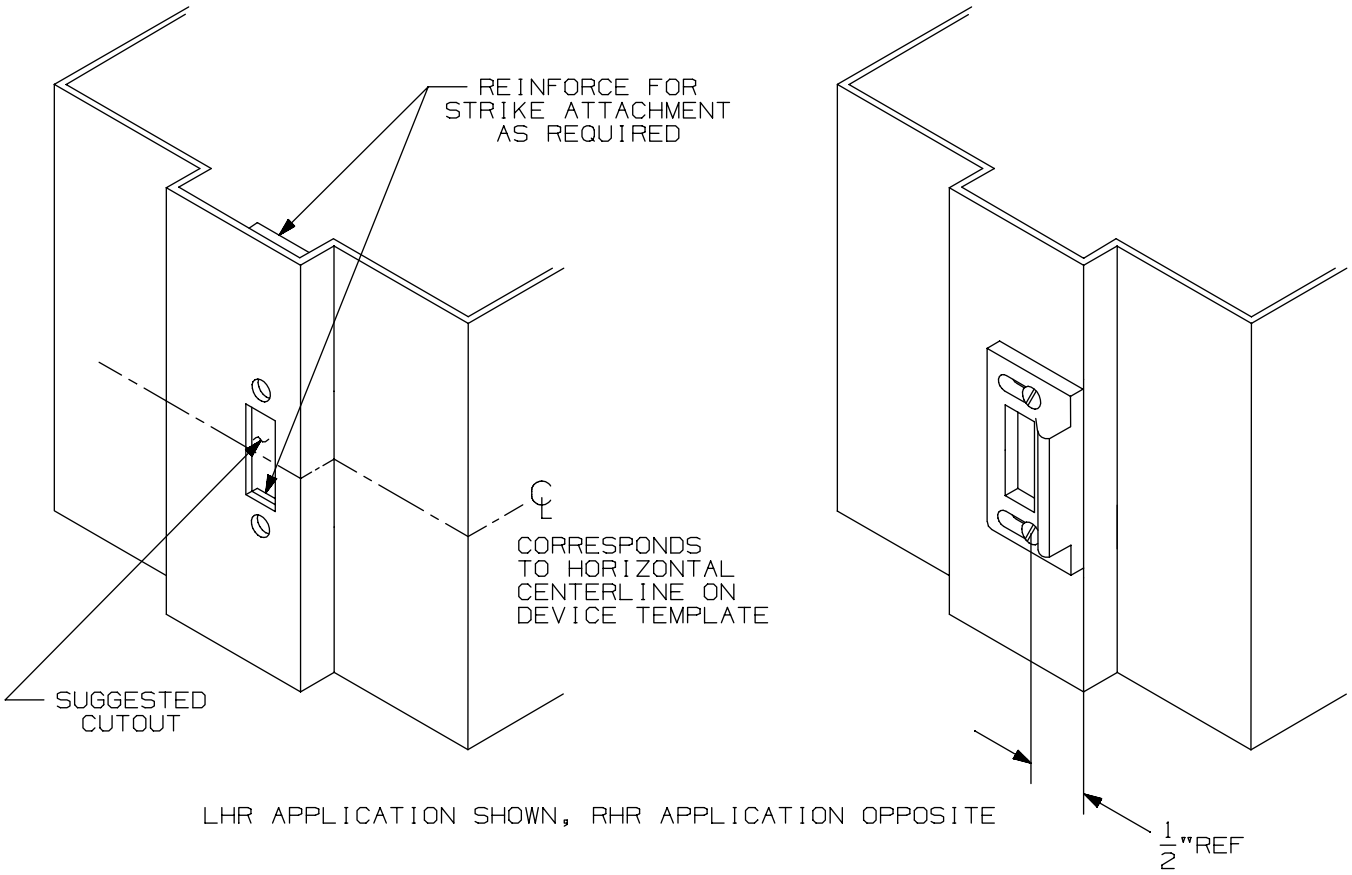

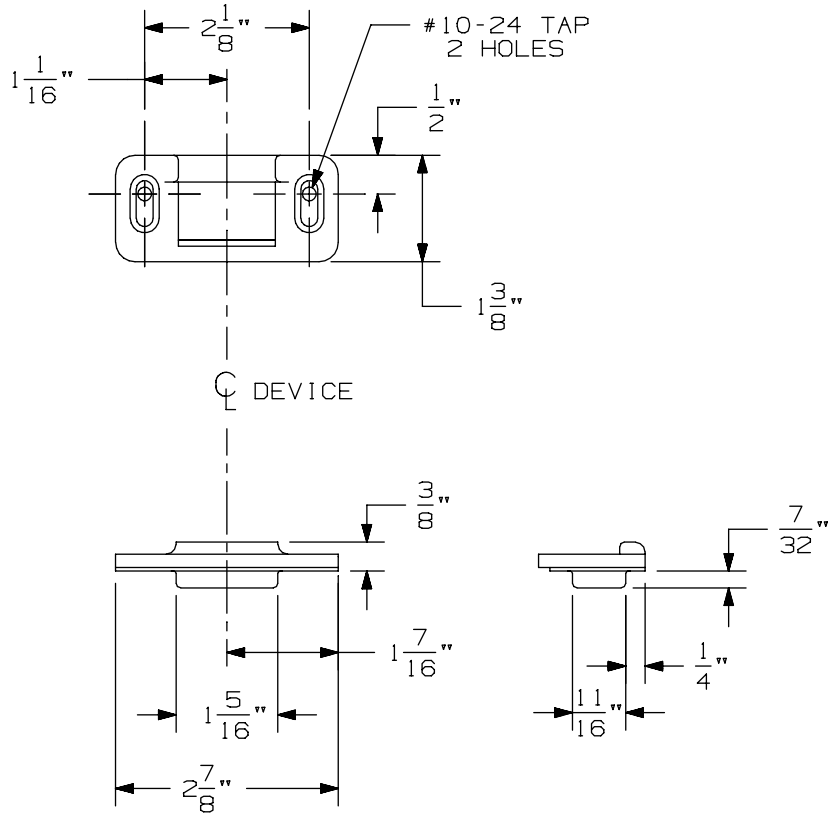

1606 Half Mortise Strike

VON DUPRIN®

NOTES: SEE MASTER SHEET #10001 FOR SUGGESTED REINFORCING

TEMPLATE NUMBER: 30024_a

DATE: 05-23-13

RIM APPLICATION

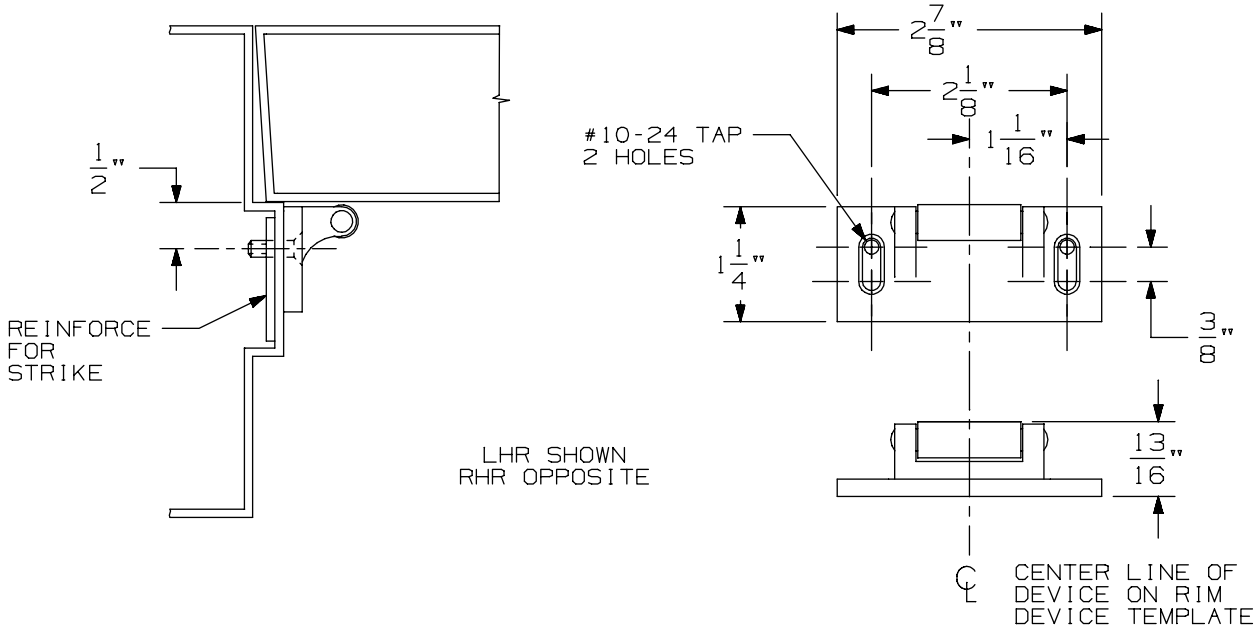

VERTICAL APPLICATION

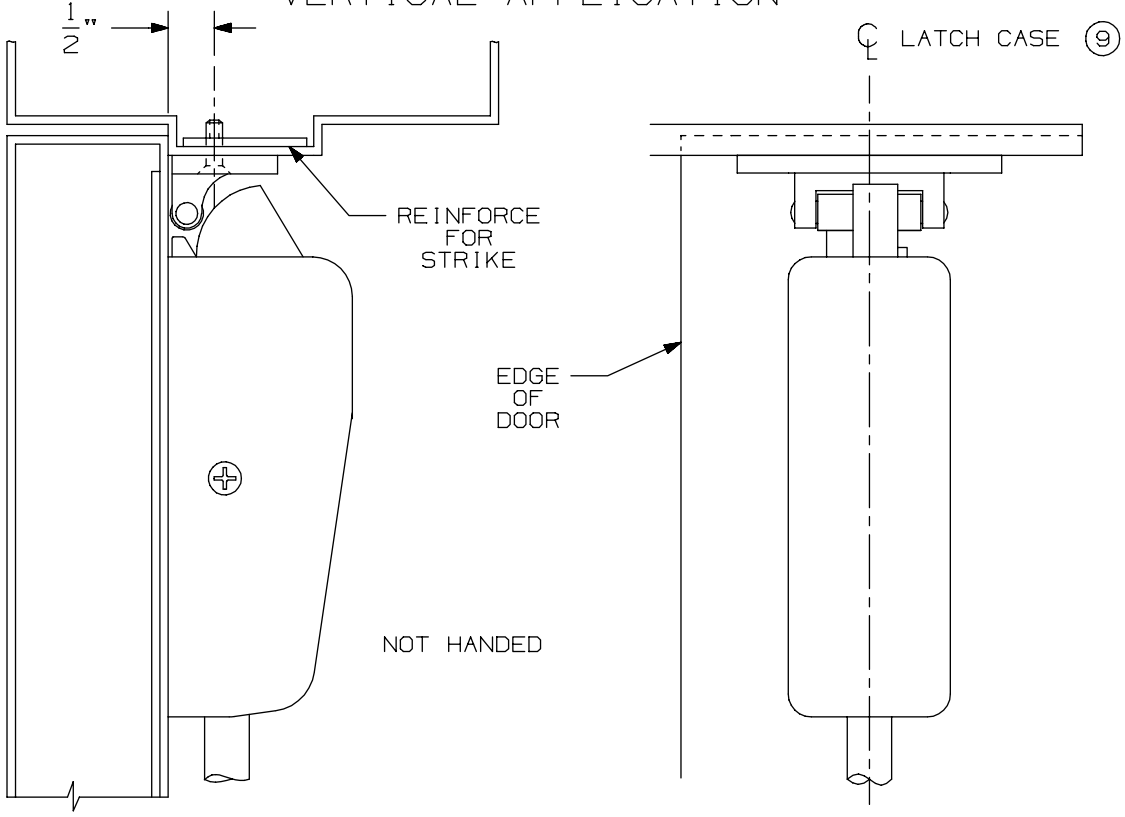

NOTE: LATCH CASE MOUNTING HOLES TO BE PREPARED AT INSTALLATION ON DOOR.

299 & 299F Strike

VON DUPRIN®

NOTES: SEE MASTER SHEET #10001 FOR SUGGESTED REINFORCING

TEMPLATE NUMBER: 30039_a

DATE: 05-23-13

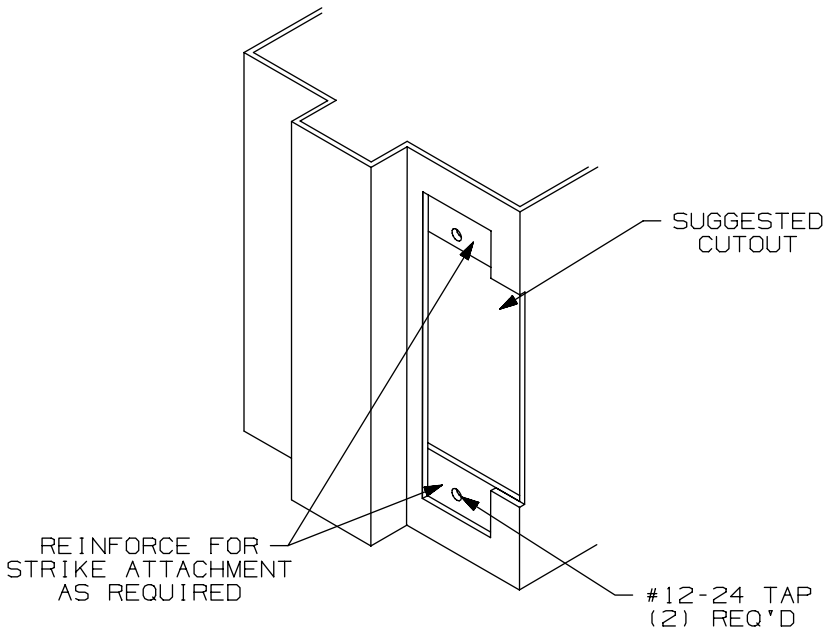

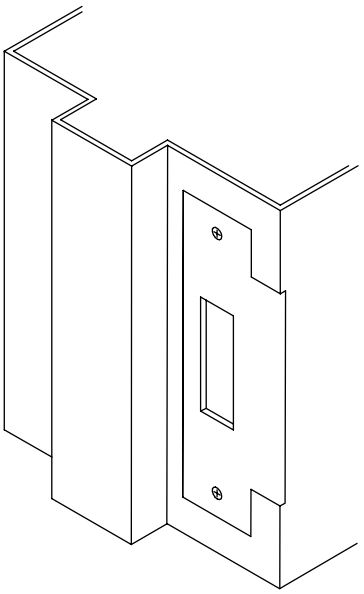

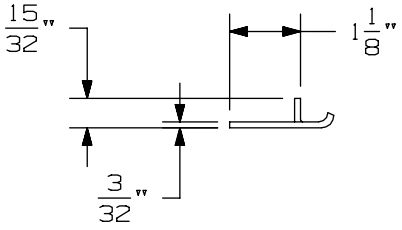

APPLICATION SCHEDULE	
DEVICE	DIM. "A"
9875 & 9875-F	11/16
9975 & 9975-F	11/16
8875 & 8875-F	1/2
5575 & 5575-F	1/2

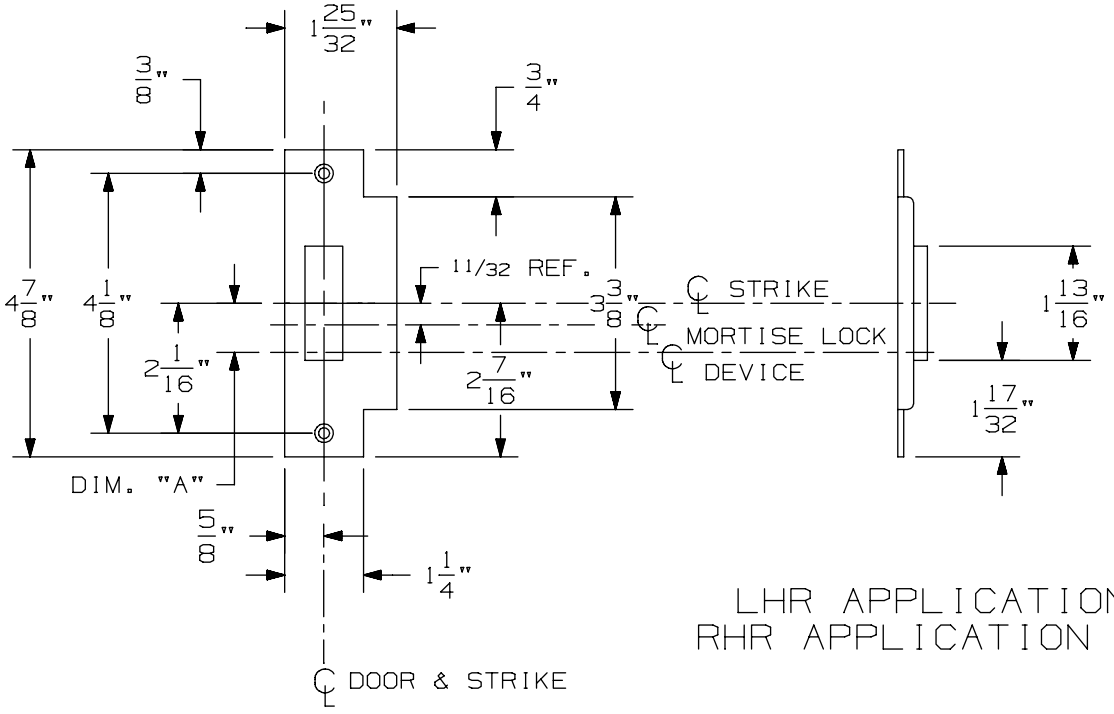

LHR APPLICATION SHOWN
RHR APPLICATION OPPOSITE

575 Mortise Strike (Single Door) for 7500 Mortise Lock

VON DUPRIN®

NOTES: SEE MASTER SHEET #10001 FOR SUGGESTED REINFORCING

TEMPLATE NUMBER: 30210_b

DATE: 07-22-13

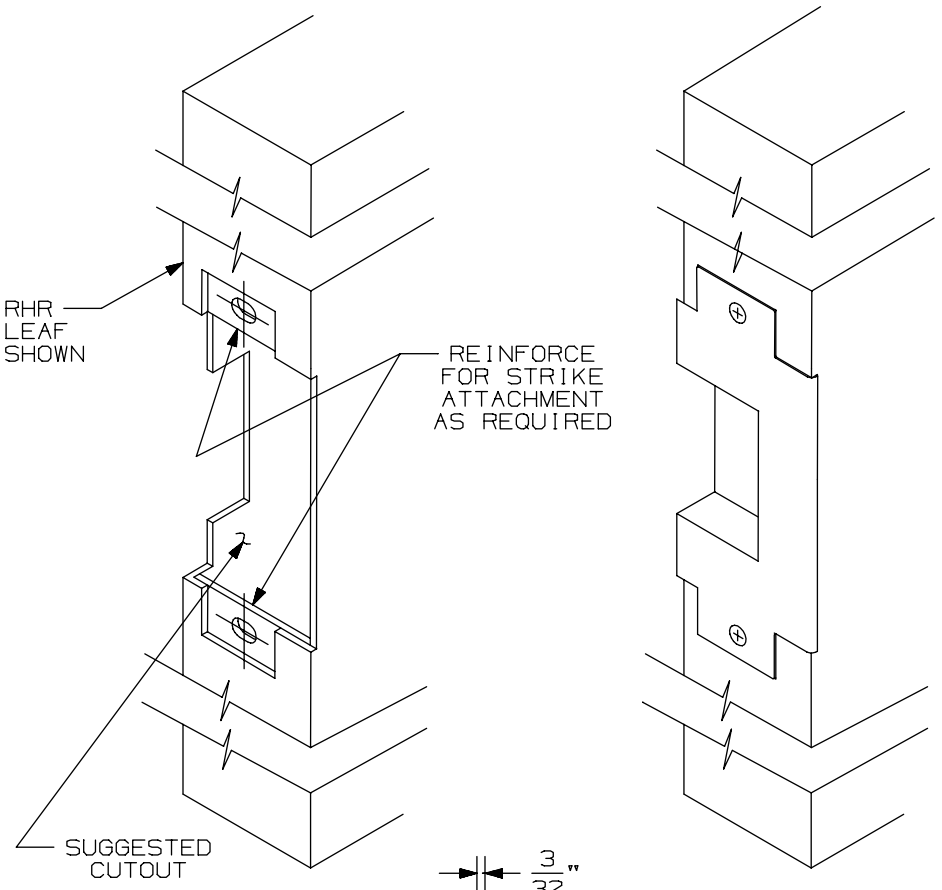

APPLICATION SCHEDULE	
DEVICE	DIM."A"
9875 & 9875-F	11/16
9975 & 9975-F	11/16
8875 & 8875-F	1/2
5575 & 5575-F	1/2

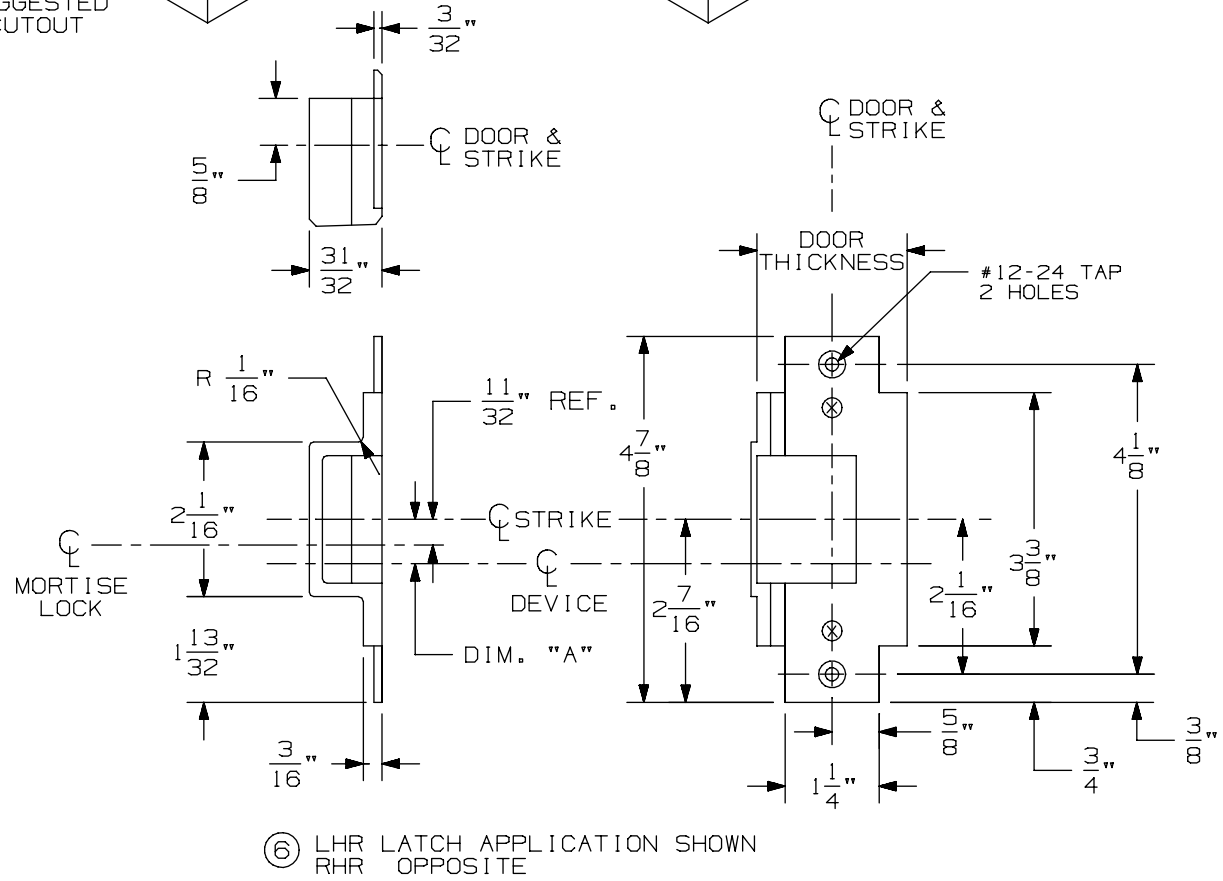

⑥ LHR LATCH APPLICATION SHOWN
RHR OPPOSITE

576A & 576B Mortise Strike for 7500 Mortise Lock

VON DUPRIN®

NOTES: SEE MASTER SHEET #10001 FOR SUGGESTED REINFORCING

TEMPLATE NUMBER: 30211_a

DATE: 05-28-13

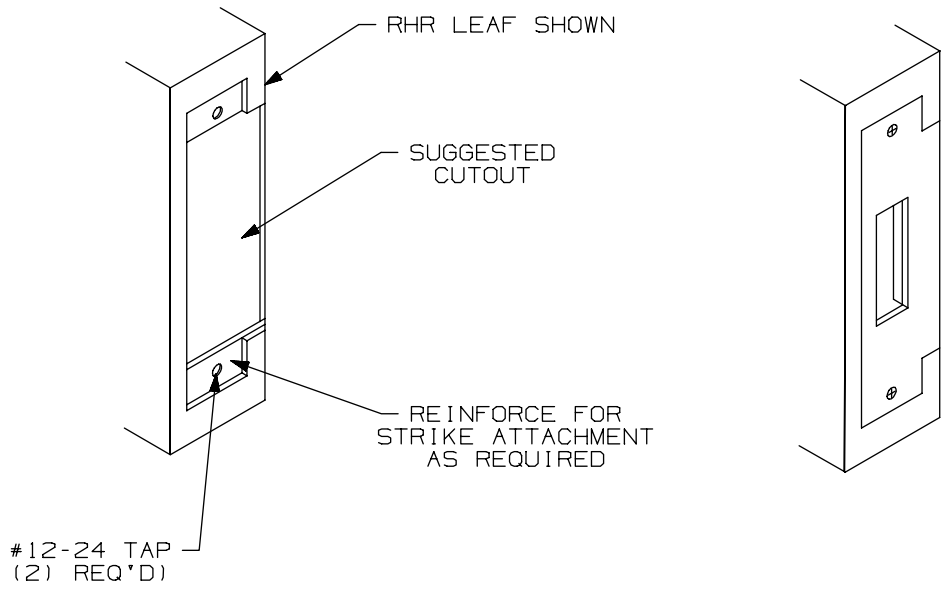

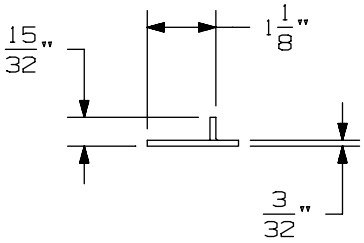

APPLICATION SCHEDULE	
DEVICE	DIM. "A"
9875 & 9875-F	11/16
9975 & 9975-F	11/16
8875 & 8875-F	1/2
5575 & 5575-F	1/2

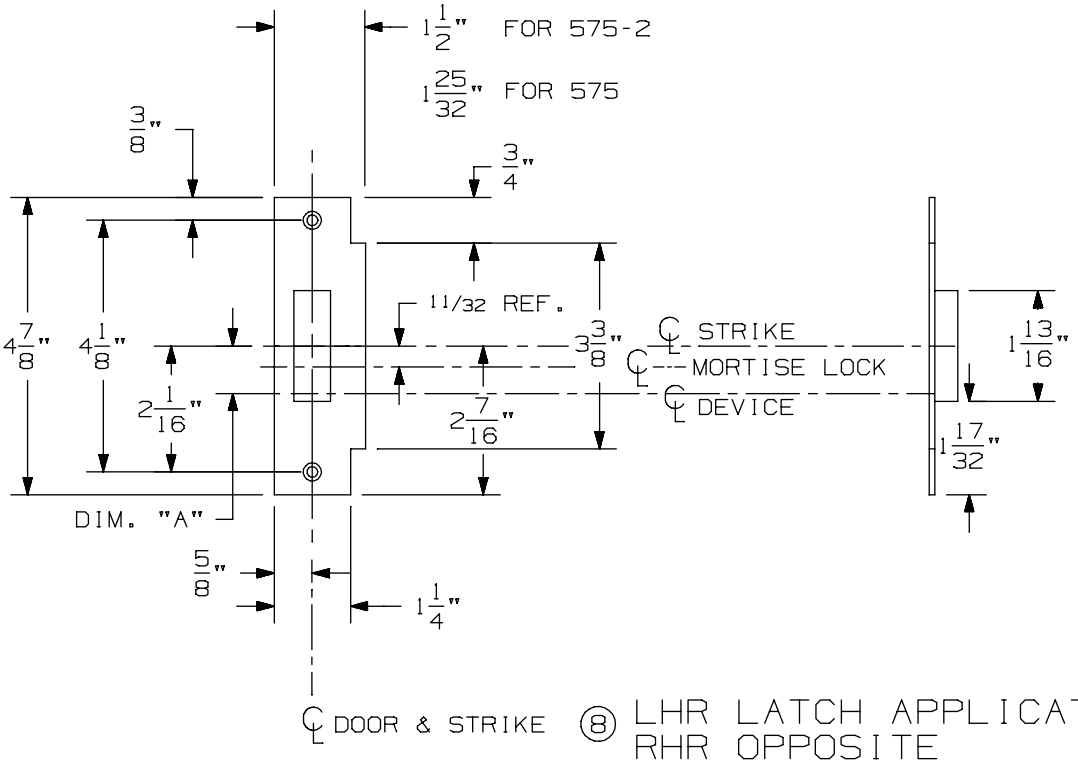

⑧ LHR LATCH APPLICATION SHOWN
RHR OPPOSITE

575-2 Mortise Strike (Double Doors) for 7500 Mortise Lock

VON DUPRIN®

NOTES: SEE MASTER SHEET #10001 FOR SUGGESTED REINFORCING

TEMPLATE NUMBER: 30212_b

DATE: 07-22-13

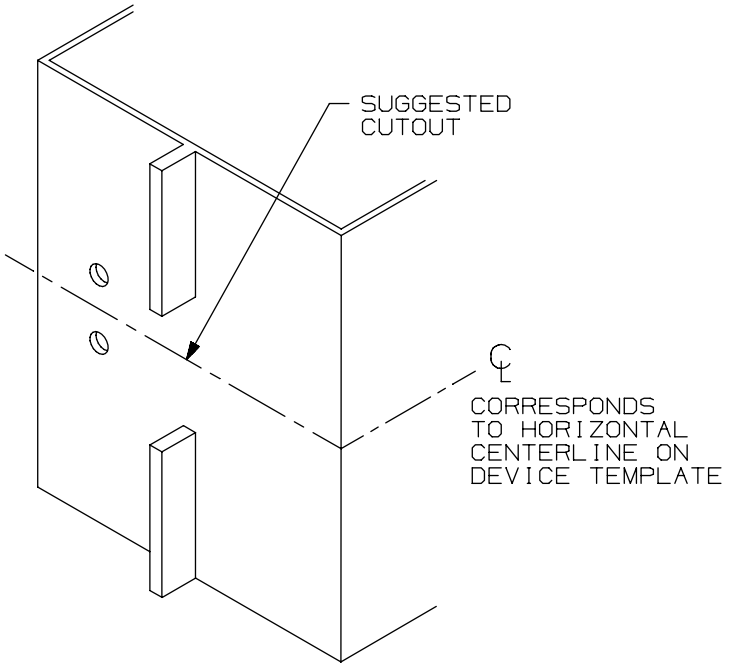

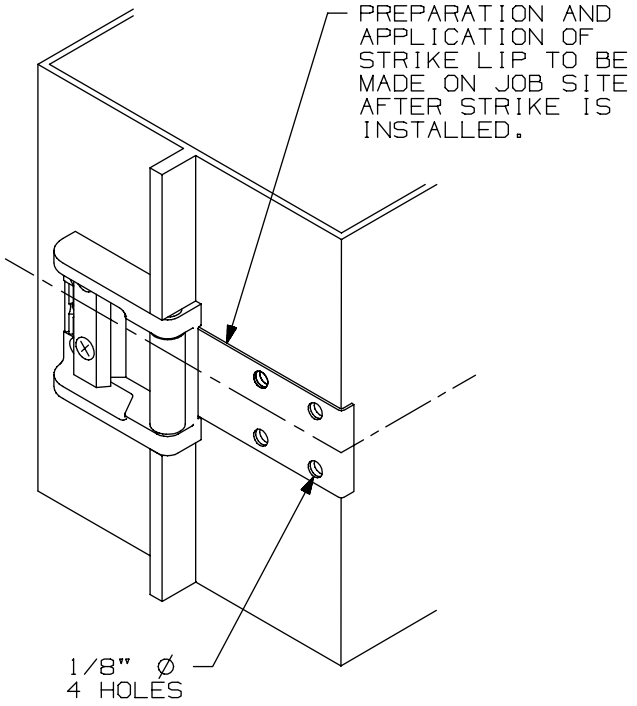

SINGLE DOOR INSTALLATION			
DEVICE	DIM "B"	DIM "C"	RECOMMENDED MIN STILE* (1)
33A/35A RIM	19/32"	1 9/16"	2"
44 RIM EO,DT,NL,TP	1 11/16"	1 9/16"	3 3/8"
44 RIM K	1 9/16"	1 9/16"	3 3/8"
55 RIM	17/32"	1 9/16"	1 3/4"
22 RIM	1 9/16"	1 9/16"	3 13/16"
88 RIM EO,DT,NL,TP	1 11/16"	1 9/16"	3 3/8"
44 RIM K,L	1 9/16"	1 9/16"	3 3/8"
98/99 RIM	1 9/16"	1 9/16"	3 13/16"

* CONSULT FACTORY FOR STILE WIDTHS LESS THAN
(1) MIN. RECOMMENDED TO ENSURE PROPER APPLICATION

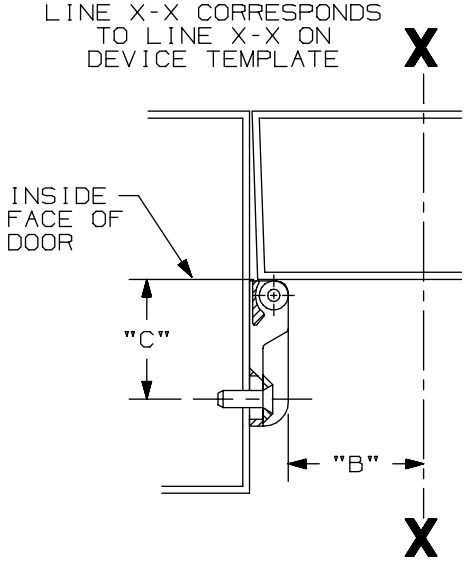

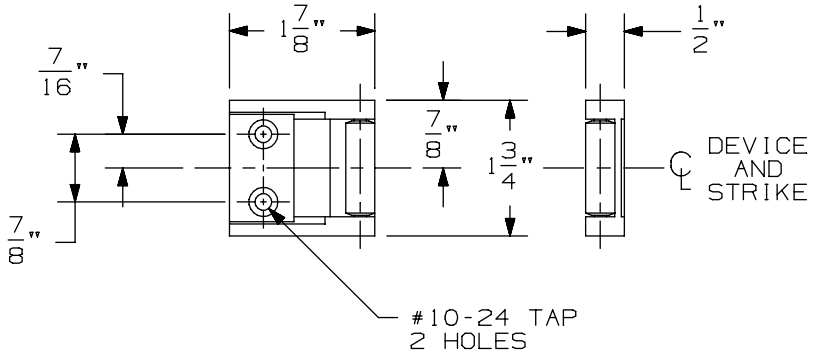

LHR APPLICATION SHOWN, RHR APPLICATION OPPOSITE

1439 Roller Strike

VON DUPRIN®

NOTES: SEE MASTER SHEET #10001 FOR SUGGESTED REINFORCING

TEMPLATE NUMBER: 30029_a

DATE: 05-23-13

88 Series Exit Devices

88 Series Exit Devices

-

88 Rim

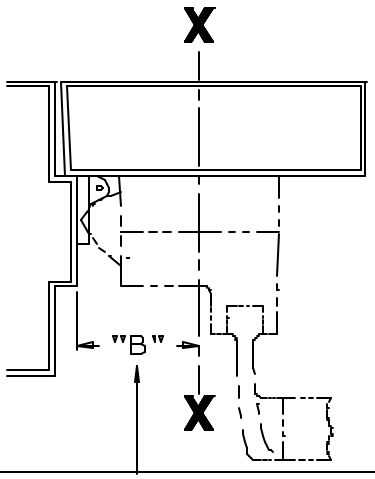

SINGLE DOOR INSTALLATION		
STRIKE	DIMENSION "B"	MIN. STILE
299	2 1/2"	4 3/8"
264	2 1/4"	4 1/8"
1606	2 1/16"	3 15/16"

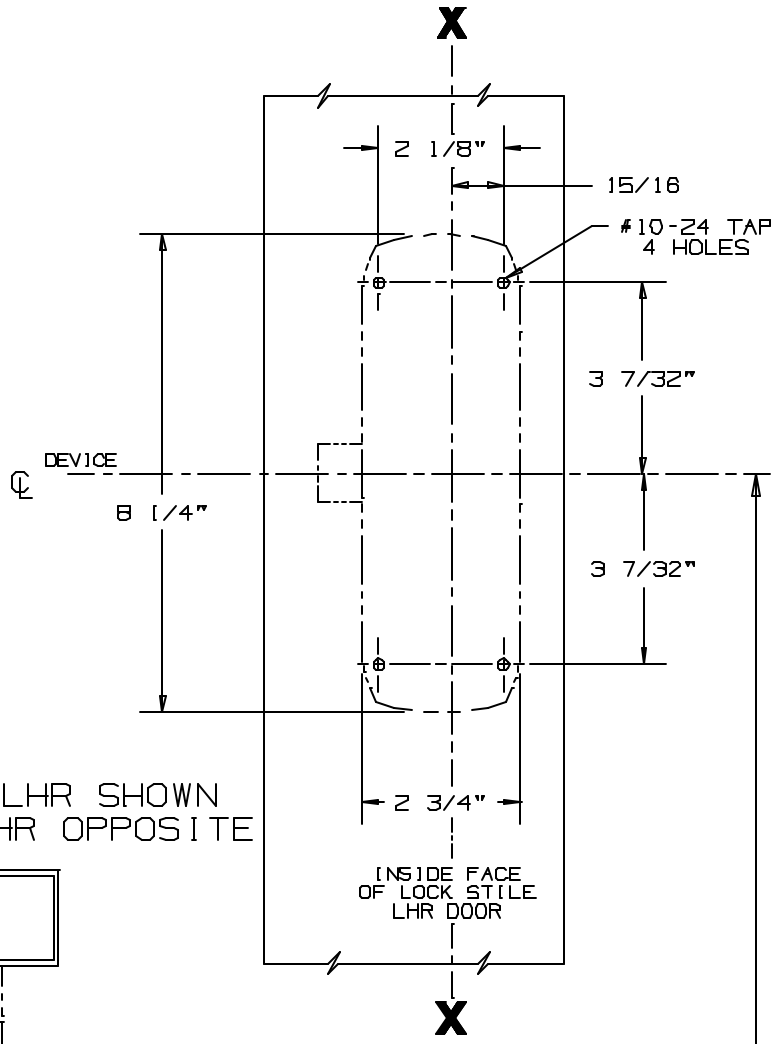

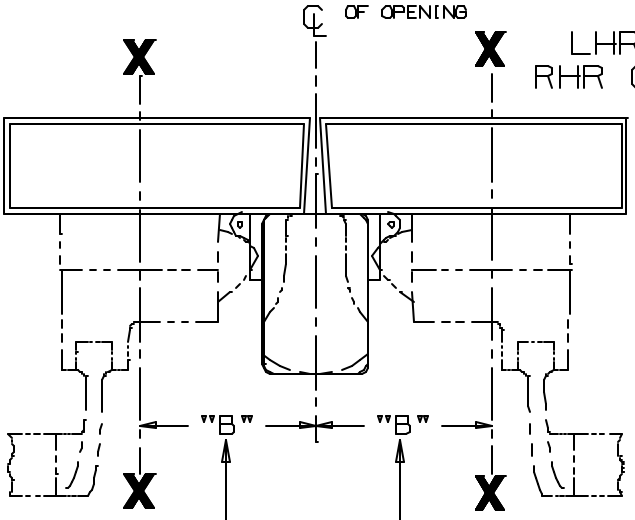

DOUBLE DOOR INSTALLATION WITH VON DUPRIN MULLIONS			
MULLION	STRIKE	DIMENSION "B"	MIN. STILE
5654	299	3 1/16"	4 1/4"
5654	264	2 13/16"	4"
4954	299	3 1/2"	4 11/16"
4954	264	3 1/4"	4 7/16"
1654	1606	3 1/16"	4 1/4"

SINGLE DOOR OPENING
39 13/16" TO FINISHED FLOOR

DOUBLE DOOR OPENING
WITH VON DUPRIN MULLION
39 11/16" (4)

FOR OUTSIDE TRIM PREPARATION, WHEN REQUIRED, SEE ADDITIONAL TRIM TEMPLATE.

CROSSBAR 36 13/16" FROM FINISHED FLOOR

88EO & 88DT Series Rim Devices

VON DUPRIN®

NOTES: SEE MASTER SHEET #10001 FOR SUGGESTED REINFORCING

TEMPLATE NUMBER: 10155_a

DATE: 05-16-13

RIM APPLICATION

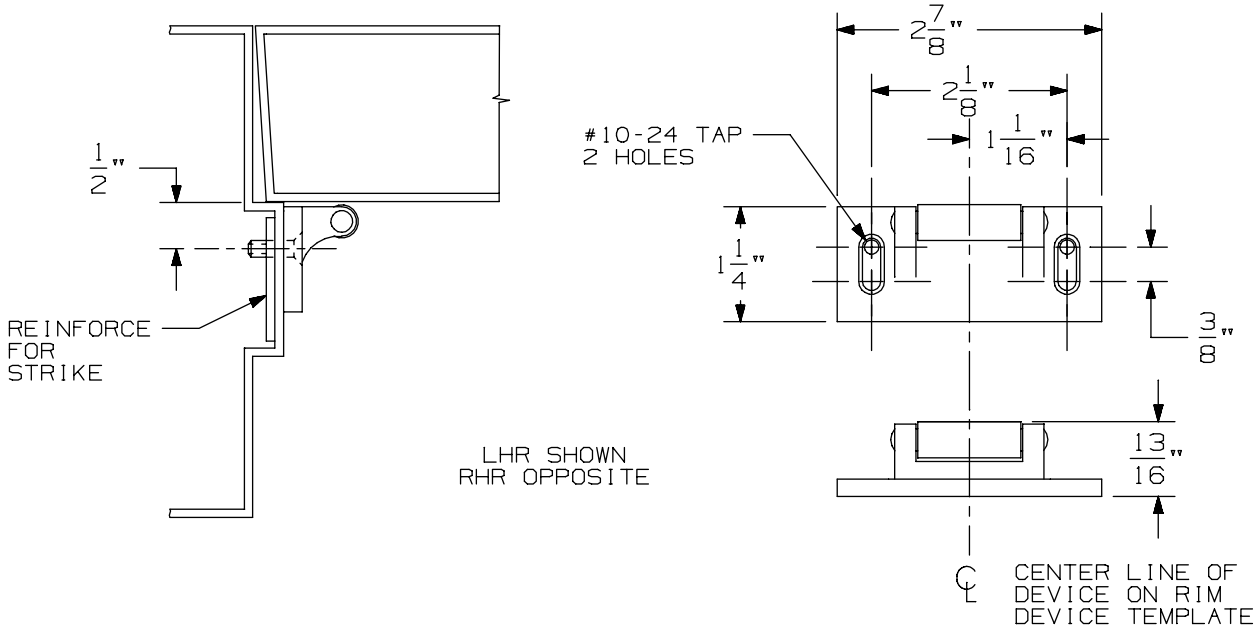

VERTICAL APPLICATION

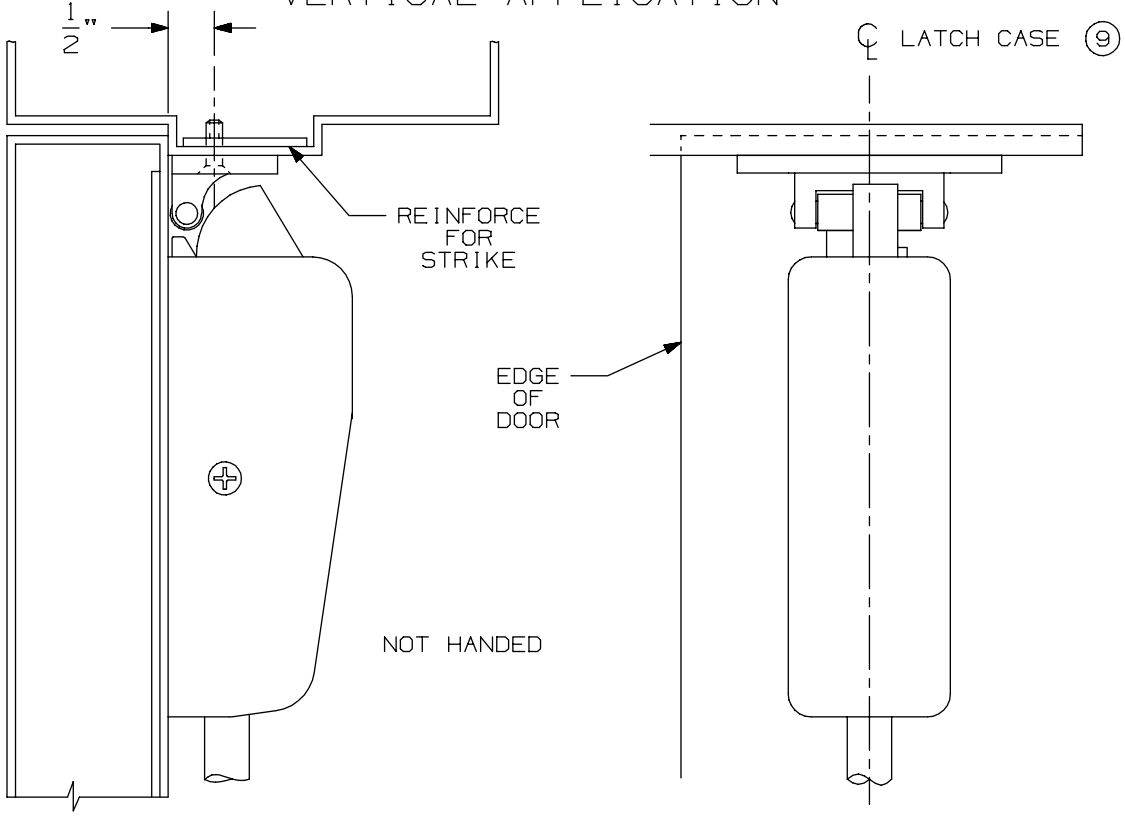

NOTE: LATCH CASE MOUNTING HOLES TO BE PREPARED AT INSTALLATION ON DOOR.

299 & 299F Strike

VON DUPRIN®

NOTES: SEE MASTER SHEET #10001 FOR SUGGESTED REINFORCING

TEMPLATE NUMBER: 30039_a

DATE: 05-23-13

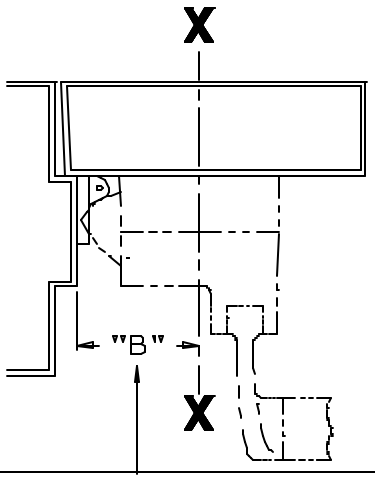

SINGLE DOOR INSTALLATION		
STRIKE	DIMENSION "B"	MIN. STILE
299	2 1/2"	4 3/8"
264	2 1/4"	4 1/8"
1606	2 1/16"	3 15/16"

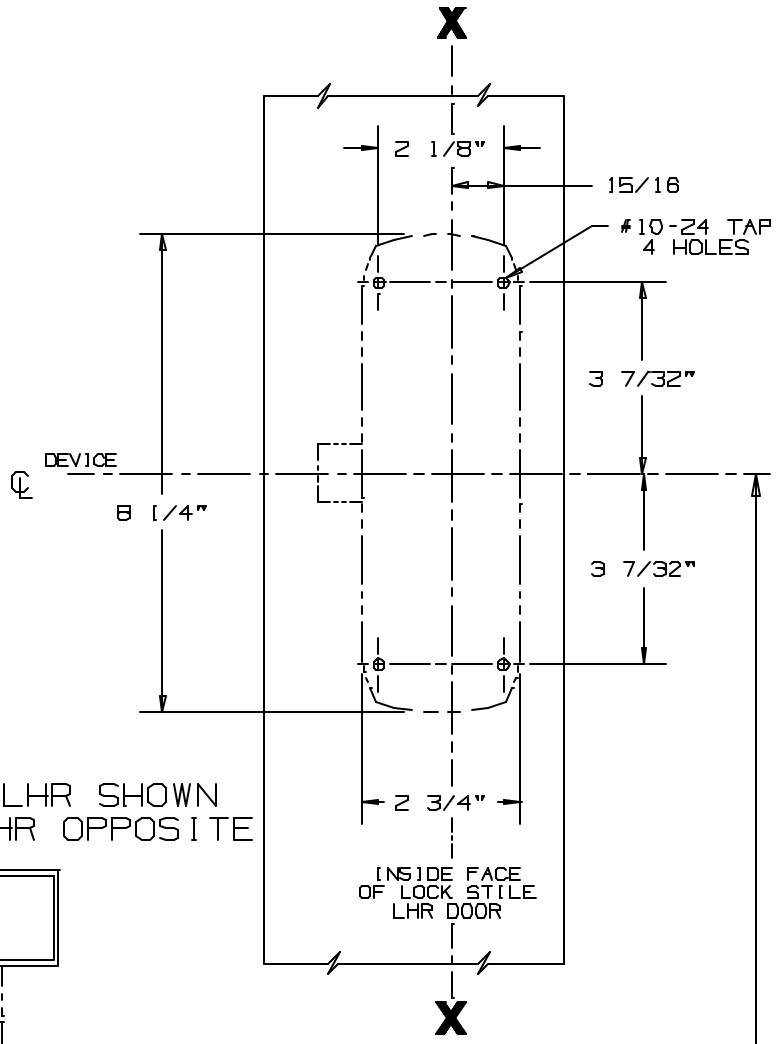

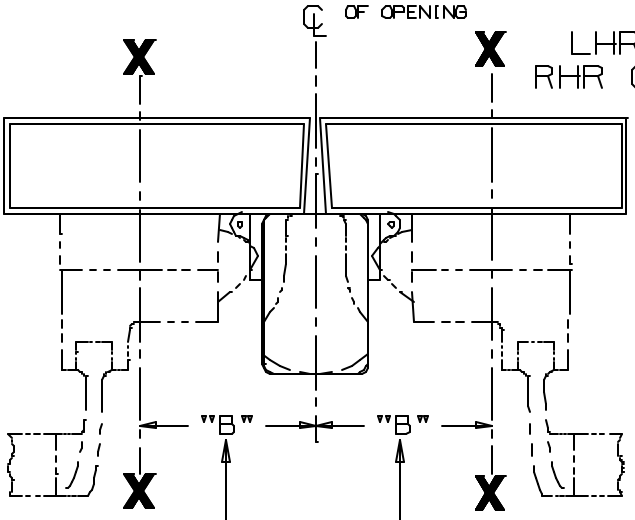

DOUBLE DOOR INSTALLATION WITH VON DUPRIN MULLIONS			
MULLION	STRIKE	DIMENSION "B"	MIN. STILE
5654	299	3 1/16"	4 1/4"
5654	264	2 13/16"	4"
4954	299	3 1/2"	4 11/16"
4954	264	3 1/4"	4 7/16"
1654	1606	3 1/16"	4 1/4"

SINGLE DOOR OPENING
39 13/16" TO FINISHED FLOOR

DOUBLE DOOR OPENING
WITH VON DUPRIN MULLION
39 11/16" (4)

FOR OUTSIDE TRIM PREPARATION, WHEN REQUIRED, SEE ADDITIONAL TRIM TEMPLATE.

CROSSBAR 36 13/16" FROM FINISHED FLOOR

88EO & 88DT Series Rim Devices

VON DUPRIN®

NOTES: SEE MASTER SHEET #10001 FOR SUGGESTED REINFORCING

TEMPLATE NUMBER: 10155_a

DATE: 05-16-13

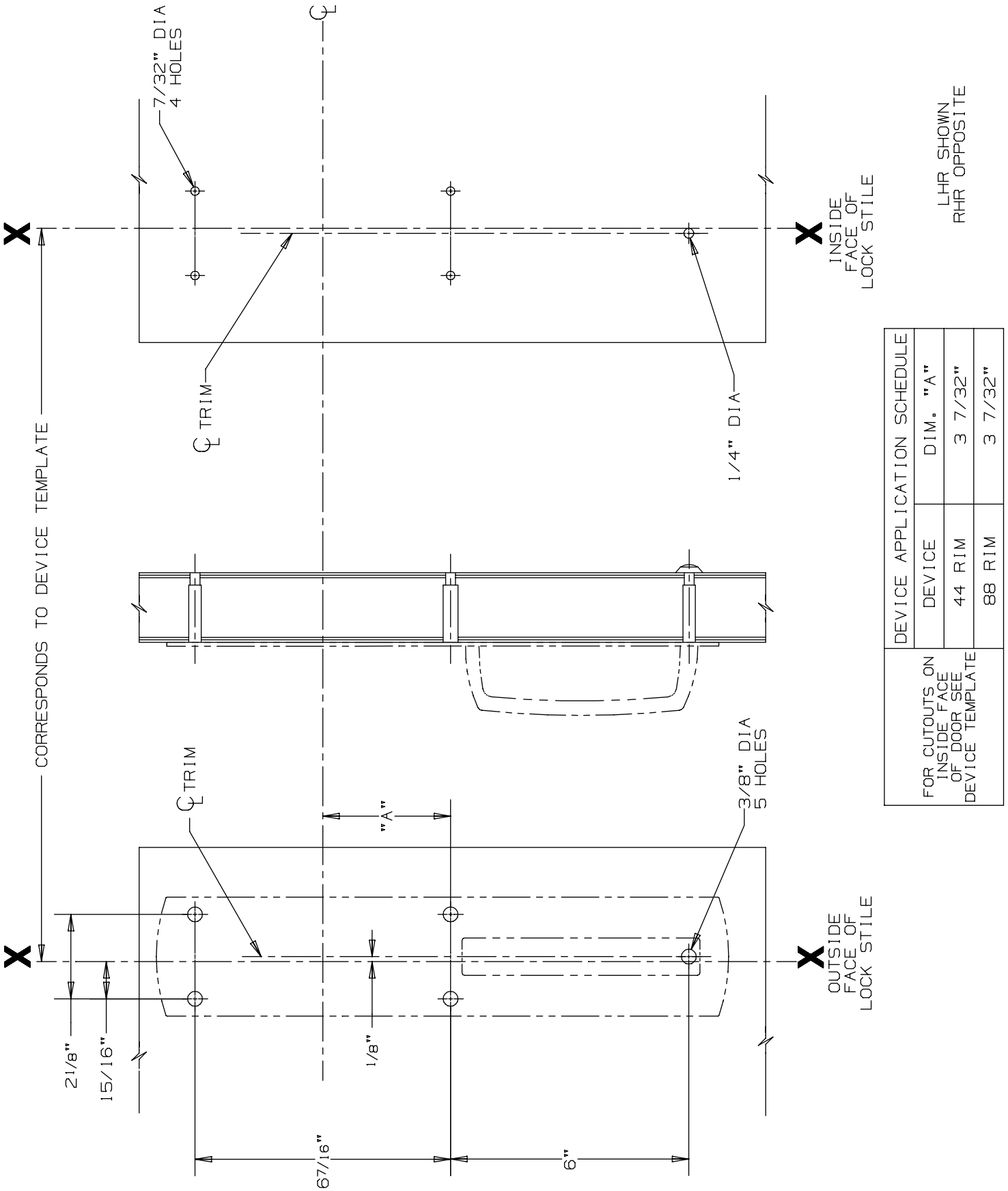

DEVICE APPLICATION SCHEDULE		
DEVICE	DIM. "A"	
44 RIM	3 7/32"	
88 RIM	3 7/32"	

FOR CUTOUTS ON INSIDE FACE OF DOOR SEE DEVICE TEMPLATE

880 DT Trim for 44 & 88 Rim Devices

VON DUPRIN®

NOTES: SEE MASTER SHEET #10001 FOR SUGGESTED REINFORCING

TEMPLATE NUMBER: 20251_a

DATE: 05-28-13

RIM APPLICATION

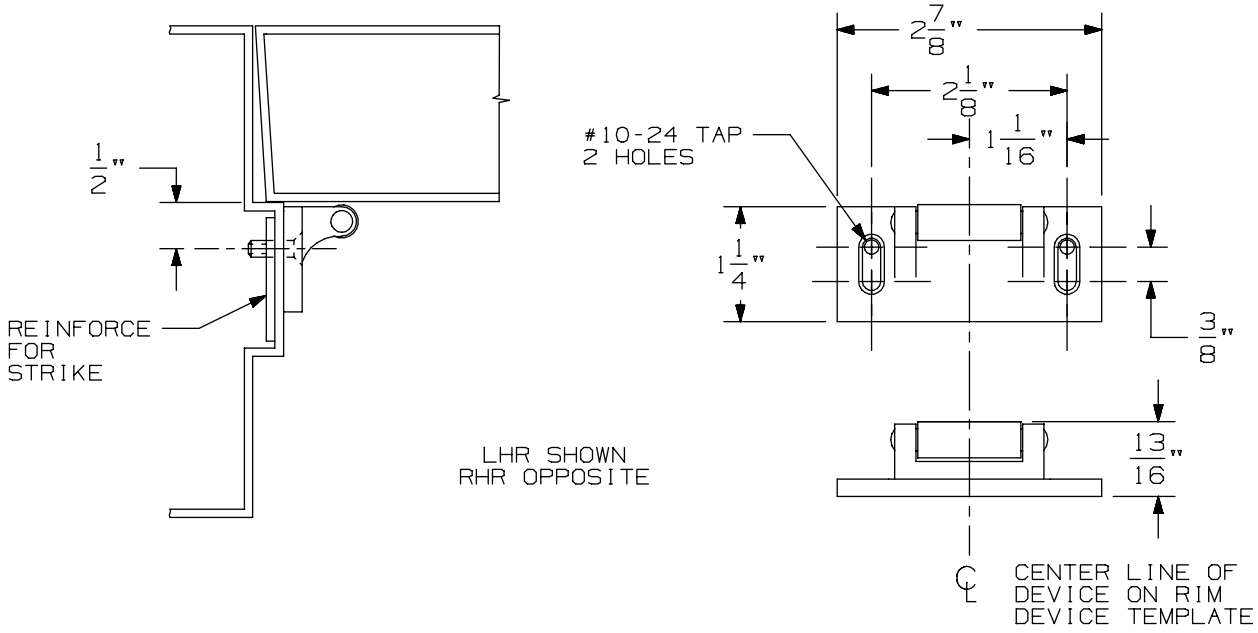

VERTICAL APPLICATION

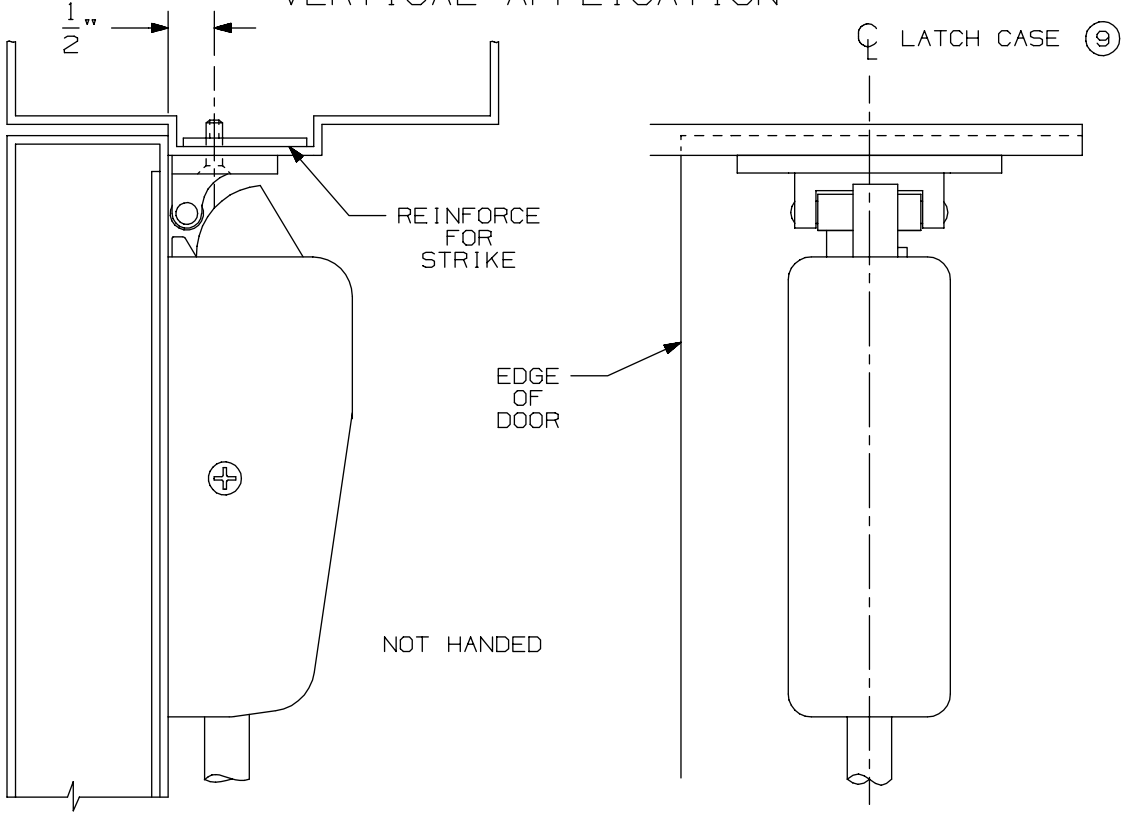

NOTE: LATCH CASE MOUNTING HOLES TO BE PREPARED AT INSTALLATION ON DOOR.

299 & 299F Strike

VON DUPRIN®

NOTES: SEE MASTER SHEET #10001 FOR SUGGESTED REINFORCING

TEMPLATE NUMBER: 30039_a

DATE: 05-23-13

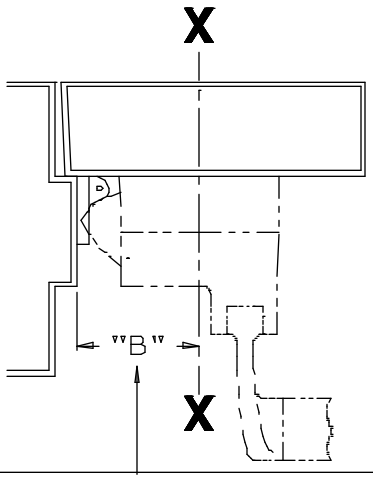

SINGLE DOOR INSTALLATION		
STRIKE	DIMENSION "B"	MIN. STILE
299	2 1/2"	4 3/8"
264	2 1/4"	4 1/8"
1606	2 1/16"	3 15/16"

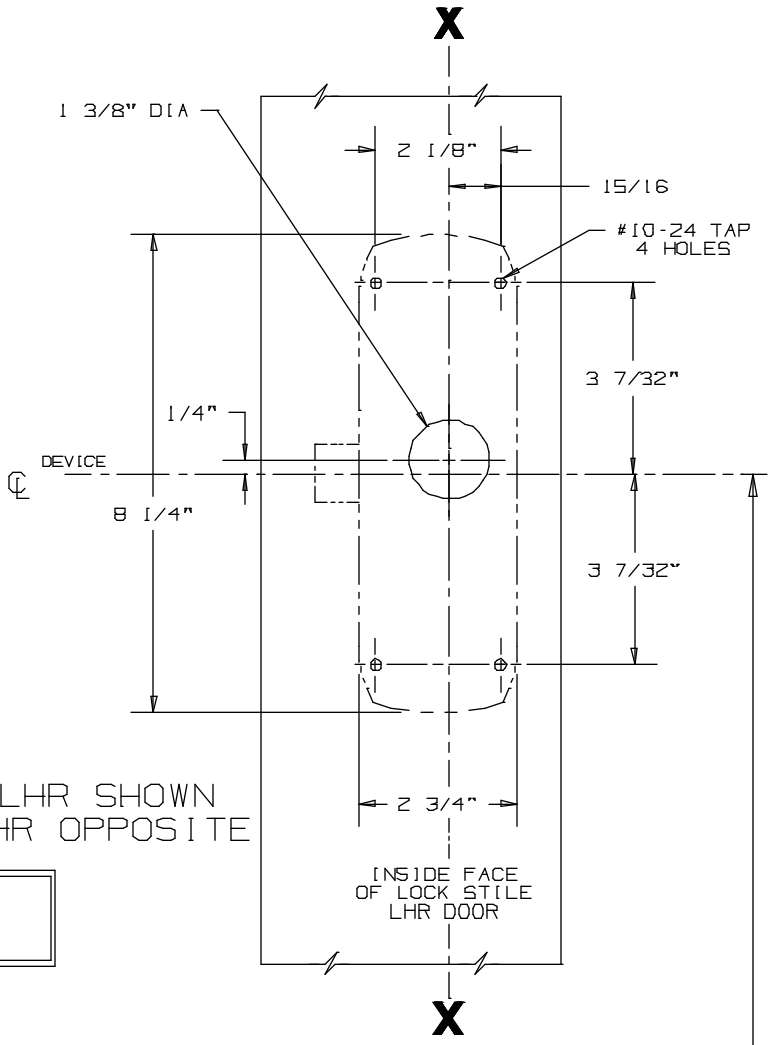

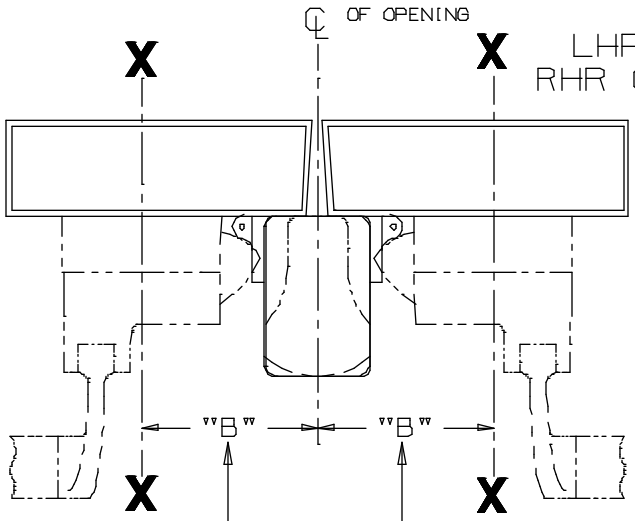

LHR SHOWN
RHR OPPOSITE

DOUBLE DOOR INSTALLATION WITH VON DUPRIN MULLIONS			
MULLION	STRIKE	DIMENSION "B"	MIN. STILE
5854	299	3 1/16"	4 1/4"
5654	264	2 13/16"	4"
4954	299	3 1/2"	4 11/16"
4954	264	3 1/4"	4 7/16"
1654	1606	3 1/16"	4 1/4"

FOR OUTSIDE TRIM PREPARATION,
SEE ADDITIONAL TRIM TEMPLATE.

SINGLE DOOR OPENING
39 13/16 TO FINISHED FLOOR

DOUBLE DOOR OPENING
WITH VON DUPRIN MULLION
39 11/16"

④

CROSSBAR 36 13/16" FROM FINISHED FLOOR

88NL Rim Devices

VON DUPRIN®

NOTES: SEE MASTER SHEET #10001 FOR SUGGESTED REINFORCING

TEMPLATE NUMBER: 10156_a

DATE: 05-16-13

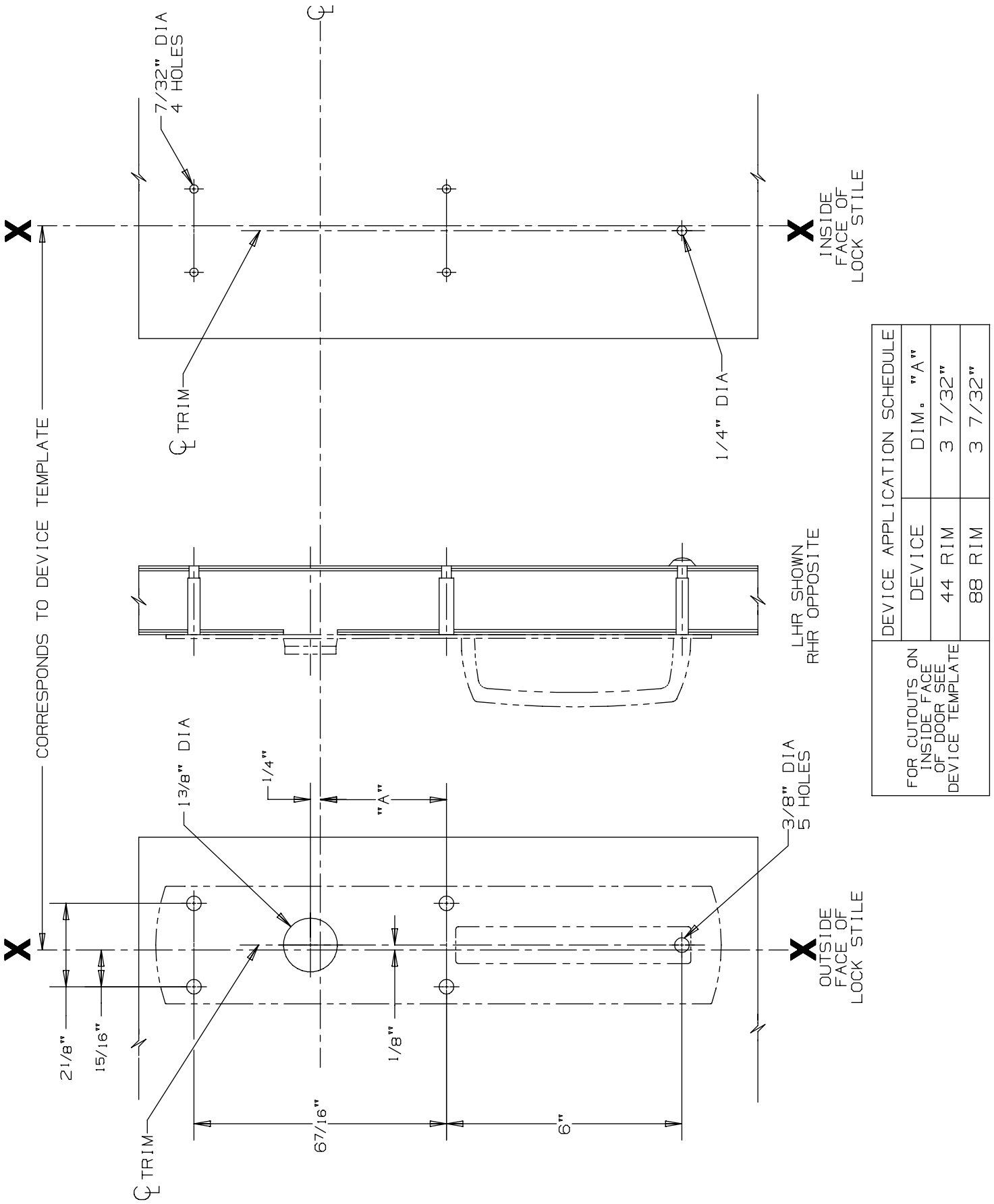

DEVICE APPLICATION SCHEDULE		
DEVICE	DIM. "A"	
44 RIM	3 7/32"	
88 RIM	3 7/32"	

FOR CUTOUTS ON INSIDE FACE OF DOOR SEE DEVICE TEMPLATE

880 NL Trim for 44 & 88 Rim Devices

VON DUPRIN®

NOTES: SEE MASTER SHEET #10001 FOR SUGGESTED REINFORCING

TEMPLATE NUMBER: 20252_a

DATE: 05-28-13

RIM APPLICATION

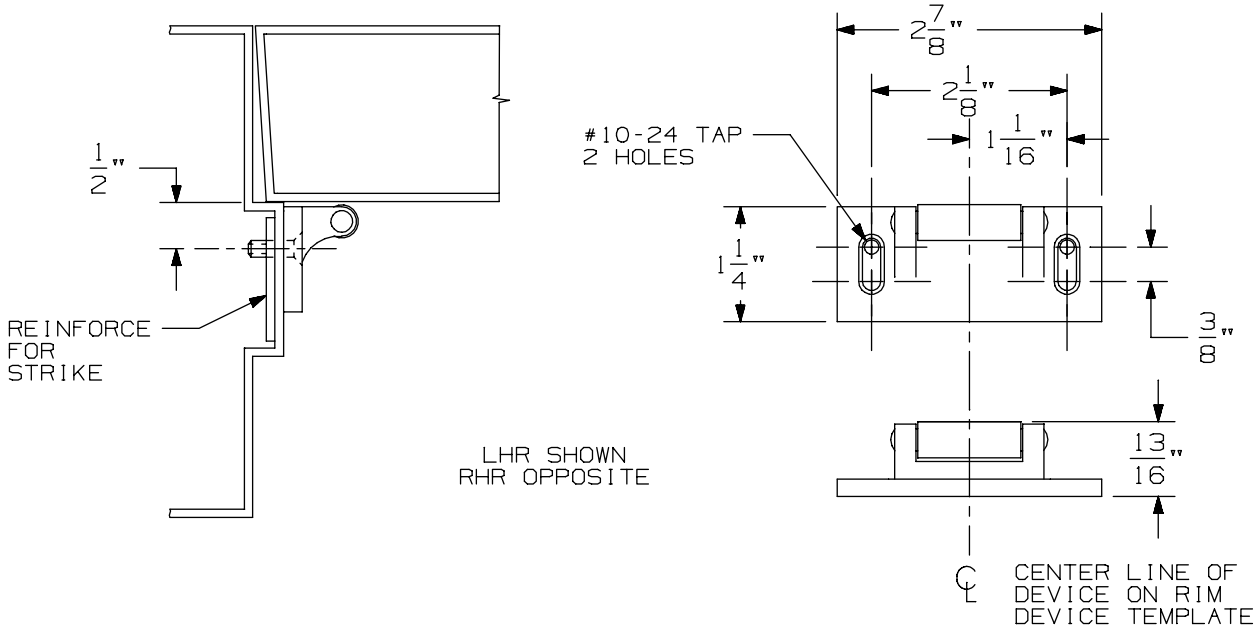

VERTICAL APPLICATION

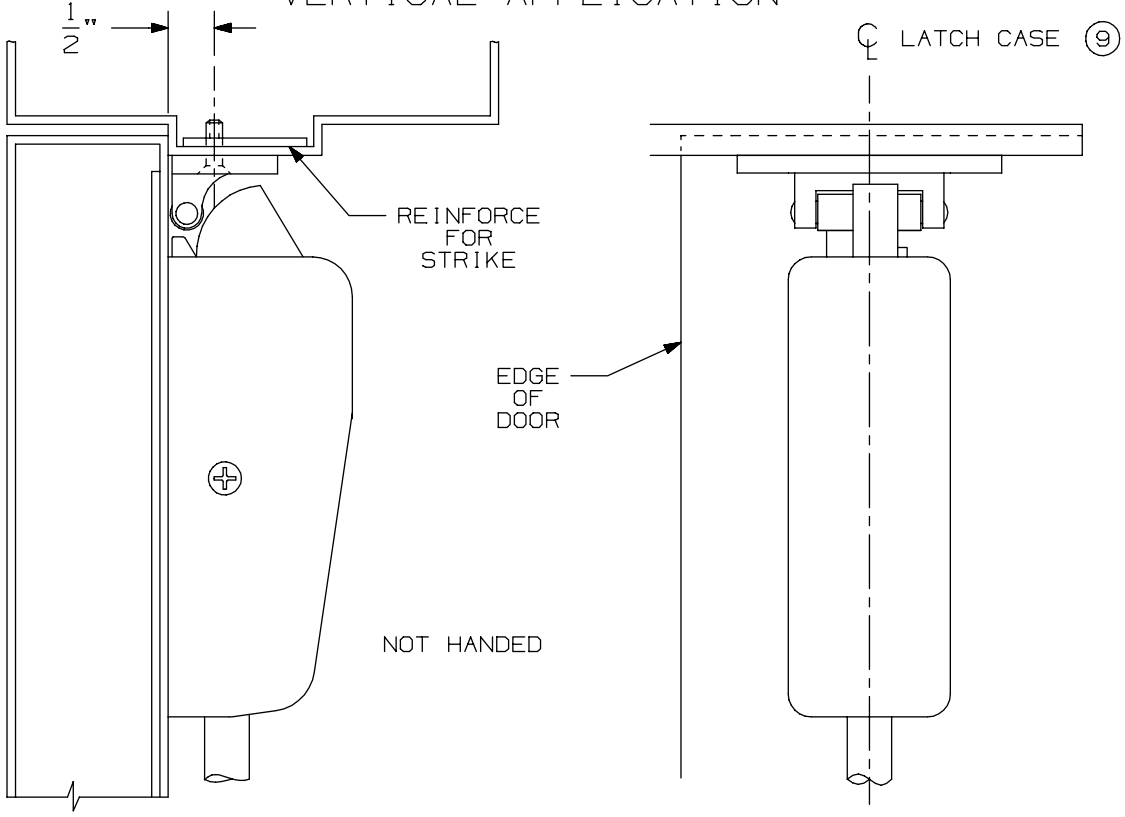

NOTE: LATCH CASE MOUNTING HOLES TO BE PREPARED AT INSTALLATION ON DOOR.

299 & 299F Strike

VON DUPRIN®

NOTES: SEE MASTER SHEET #10001 FOR SUGGESTED REINFORCING

TEMPLATE NUMBER: 30039_a

DATE: 05-23-13

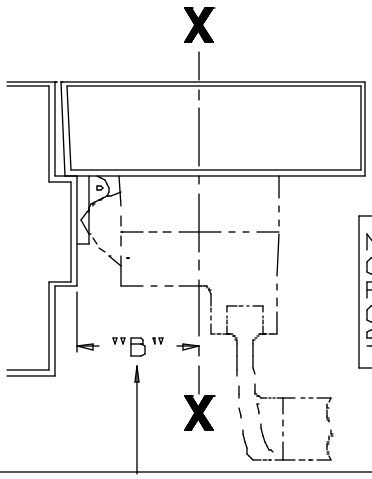

NOTE:
OMIT CYLINDER PREPARATION IF CONTROL IS SPECIFIED

SINGLE DOOR INSTALLATION		
STRIKE	DIMENSION "B"	MIN. STILE
299	2 3/8"	4 3/8"
264	2 1/8"	4 1/8"
1606	1 15/16"	3 15/16"

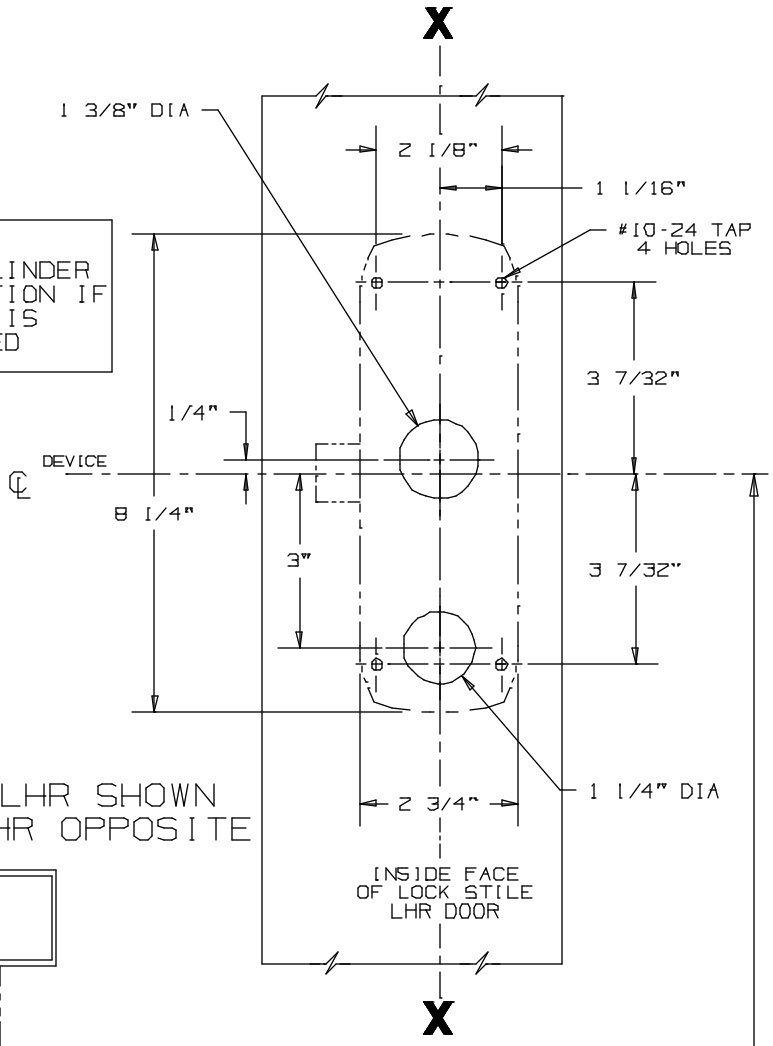

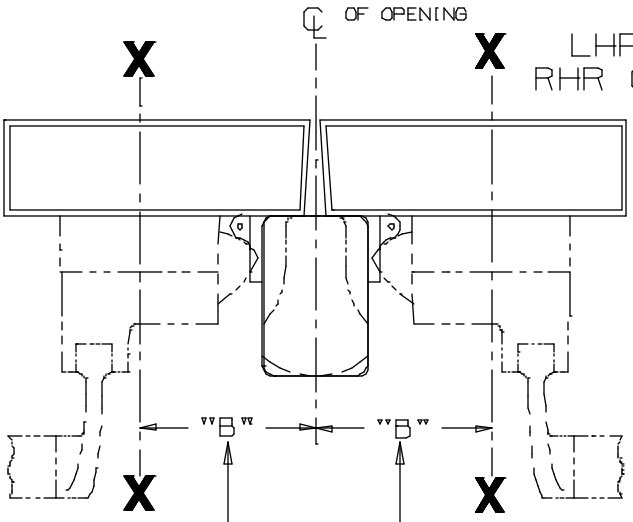

LHR SHOWN
RHR OPPOSITE

DOUBLE DOOR INSTALLATION WITH VON DUPRIN MULLIONS			
MULLION	STRIKE	DIMENSION "B"	MIN. STILE
5654	299	2 15/16"	4 1/4"
5654	264	2 11/16"	4"
4954	299	3 3/8"	4 11/16"
4954	264	3 1/8"	4 7/16"
1654	1606	2 15/16"	4 1/4"

FOR OUTSIDE TRIM PREPARATION,
SEE ADDITIONAL TRIM TEMPLATE.

SINGLE DOOR OPENING
39 13/16 TO FINISHED FLOOR

DOUBLE DOOR OPENING
WITH VON DUPRIN MULLION
39 11/16"

(5)

CROSSBAR 36 13/16" FROM FINISHED FLOOR

88K/L Series Rim Devices

VON DUPRIN®

NOTES: SEE MASTER SHEET #10001 FOR SUGGESTED REINFORCING

TEMPLATE NUMBER: 10158_a

DATE: 05-16-13

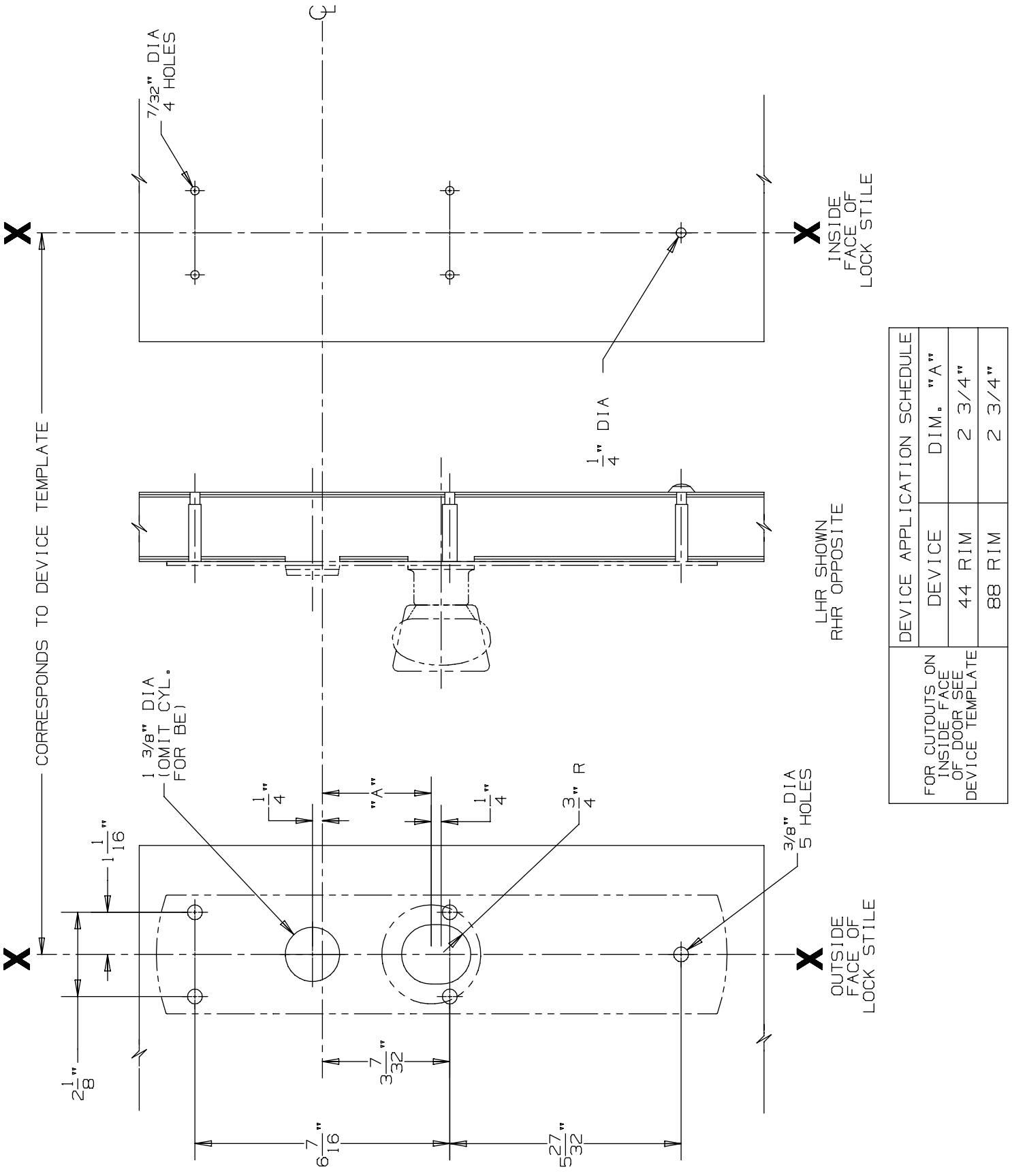

DEVICE APPLICATION SCHEDULE	
DEVICE	DIM. "A"
44 RIM	2 3/4"
88 RIM	2 3/4"

FOR CUTOUTS ON INSIDE FACE OF DOOR SEE DEVICE TEMPLATE

880 K & 880 K-BE Trim for 44 & 88 Rim Devices

VON DUPRIN®

NOTES: SEE MASTER SHEET #10001 FOR SUGGESTED REINFORCING

TEMPLATE NUMBER: 20254_a

DATE: 05-28-13

RIM APPLICATION

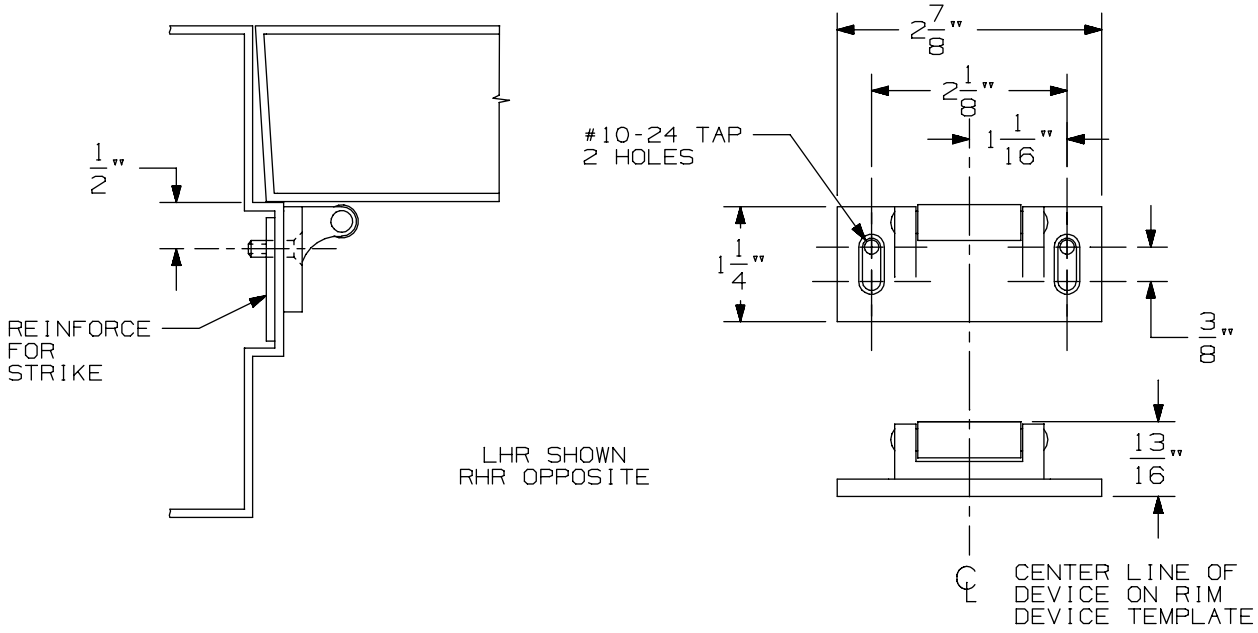

VERTICAL APPLICATION

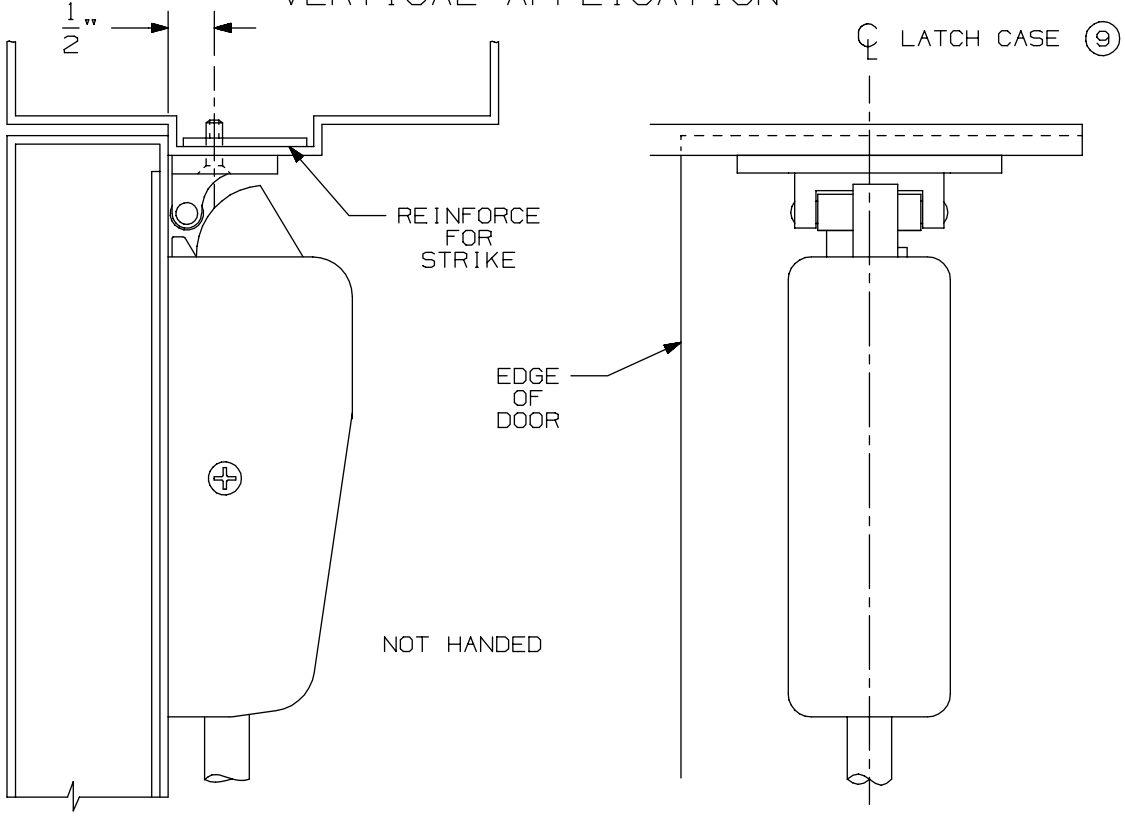

NOTE: LATCH CASE MOUNTING HOLES TO BE PREPARED AT INSTALLATION ON DOOR.

299 & 299F Strike

VON DUPRIN®

NOTES: SEE MASTER SHEET #10001 FOR SUGGESTED REINFORCING

TEMPLATE NUMBER: 30039_a

DATE: 05-23-13

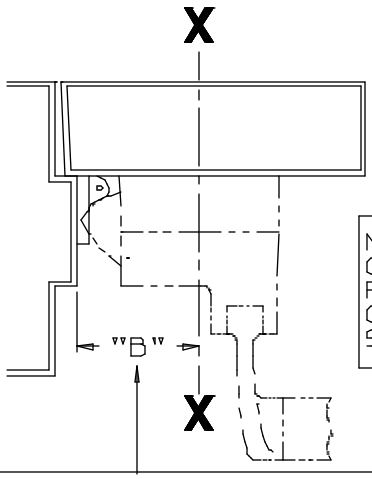

NOTE:
OMIT CYLINDER PREPARATION IF CONTROL IS SPECIFIED

SINGLE DOOR INSTALLATION		
STRIKE	DIMENSION "B"	MIN. STILE
299	2 3/8"	4 3/8"
264	2 1/8"	4 1/8"
1606	1 15/16"	3 15/16"

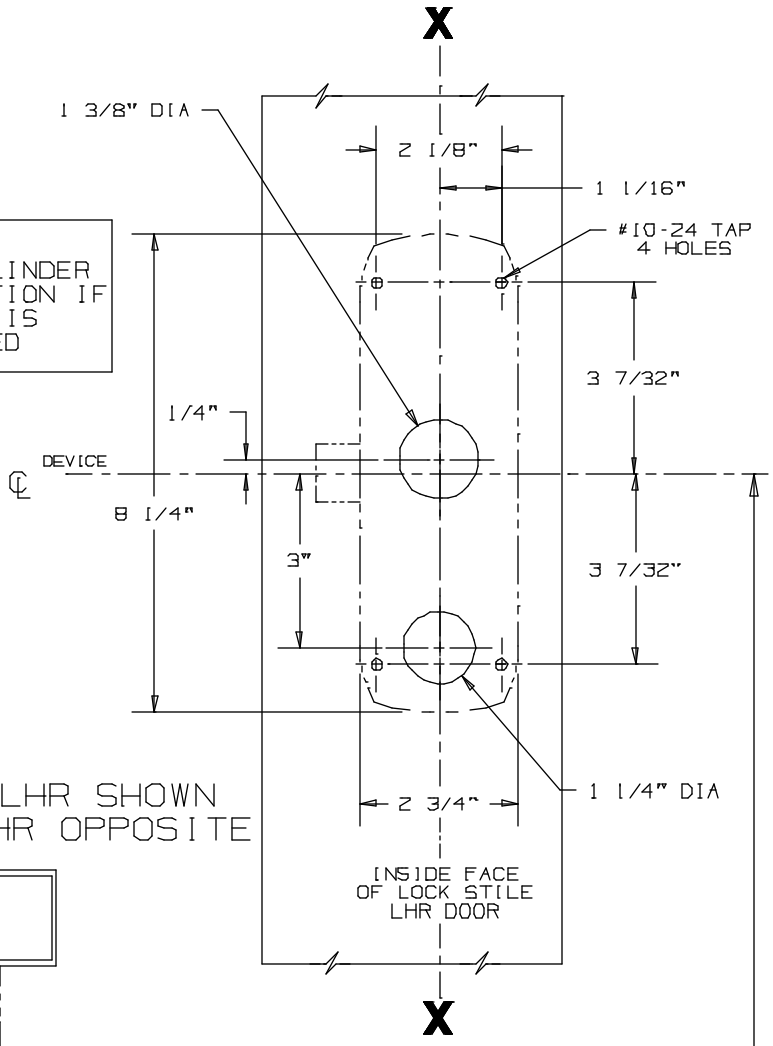

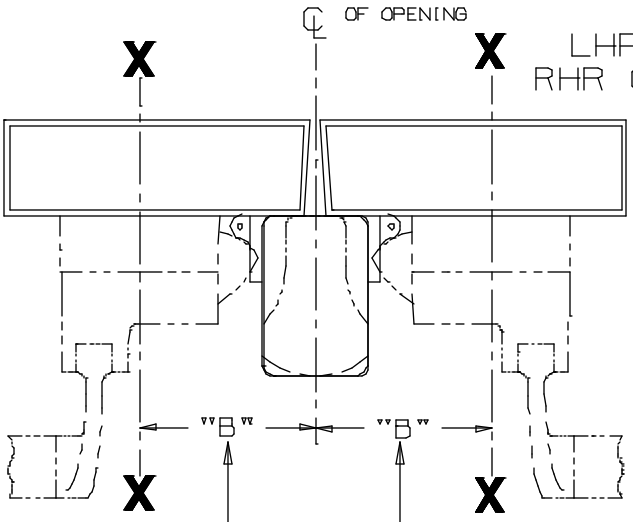

LHR SHOWN
RHR OPPOSITE

DOUBLE DOOR INSTALLATION WITH VON DUPRIN MULLIONS			
MULLION	STRIKE	DIMENSION "B"	MIN. STILE
5654	299	2 15/16"	4 1/4"
5654	264	2 11/16"	4"
4954	299	3 3/8"	4 11/16"
4954	264	3 1/8"	4 7/16"
1654	1606	2 15/16"	4 1/4"

FOR OUTSIDE TRIM PREPARATION,
SEE ADDITIONAL TRIM TEMPLATE.

SINGLE DOOR OPENING
39 13/16 TO FINISHED FLOOR

DOUBLE DOOR OPENING
WITH VON DUPRIN MULLION
39 11/16"

(5)

CROSSBAR 36 13/16" FROM FINISHED FLOOR

88K/L Series Rim Devices

VON DUPRIN®

NOTES: SEE MASTER SHEET #10001 FOR SUGGESTED REINFORCING

TEMPLATE NUMBER: 10158_a

DATE: 05-16-13

NOTES: SEE MASTER SHEET #10001 FOR SUGGESTED REINFORCING

373-L Control

VON DUPRIN®

TEMPLATE NUMBER: 40104_a

DATE: 05-28-13

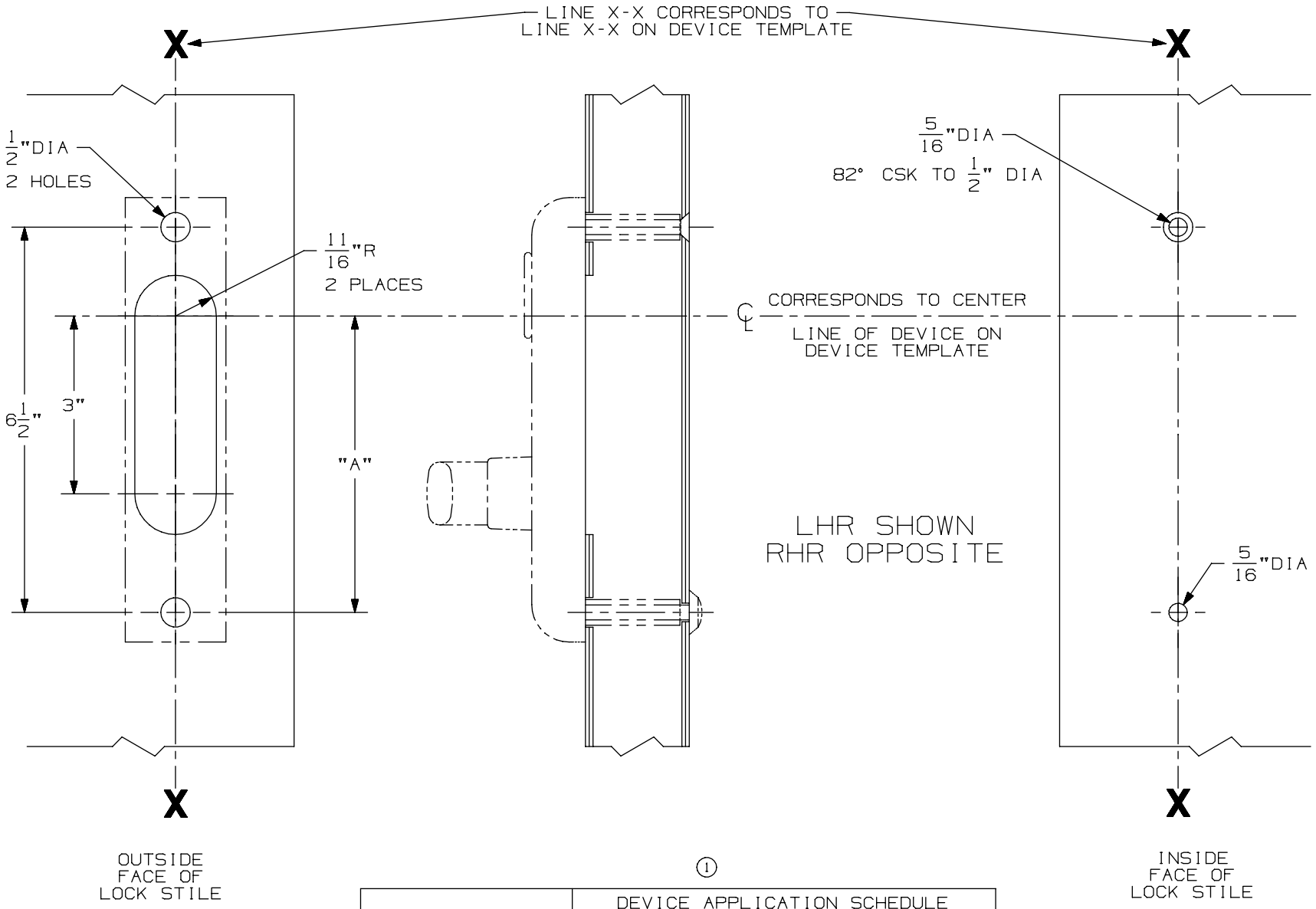

①

FOR CUTOUT ON INSIDE FACE OF DOOR SEE DEVICE TEMPLATE	DEVICE APPLICATION SCHEDULE	
	DEVICE	DIM "A"
	88L RIM	5"

RIM APPLICATION

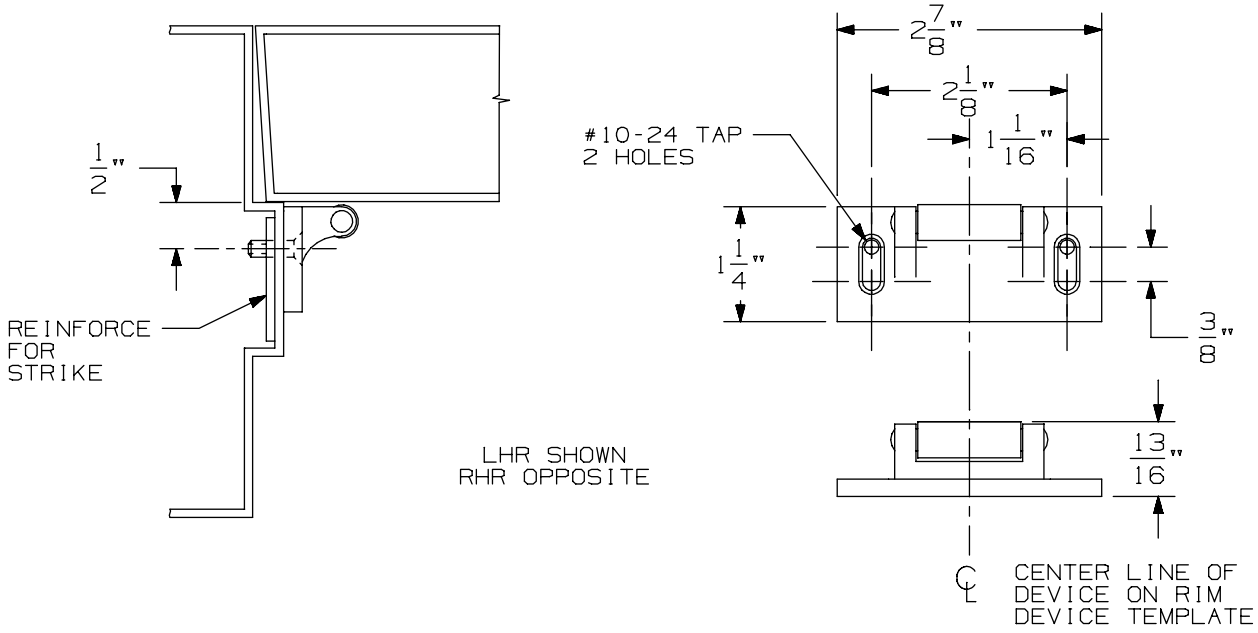

VERTICAL APPLICATION

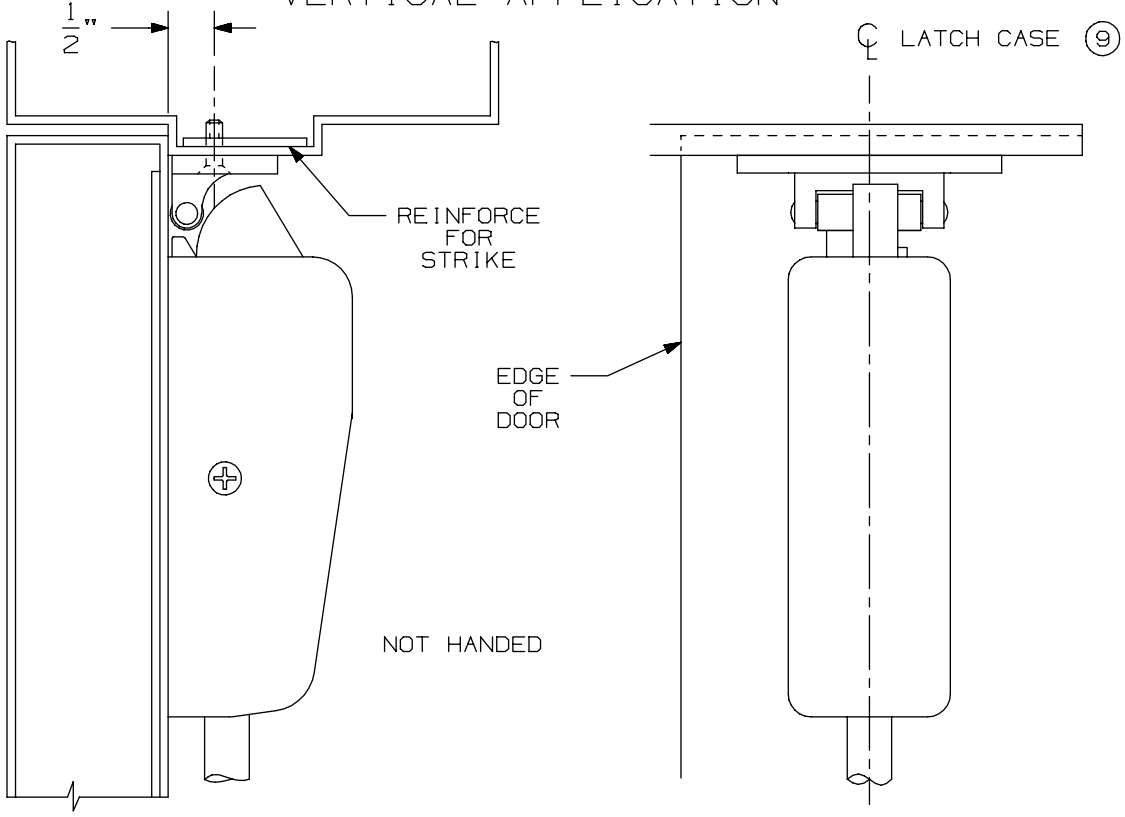

NOTE: LATCH CASE MOUNTING HOLES TO BE PREPARED AT INSTALLATION ON DOOR.

299 & 299F Strike

VON DUPRIN®

NOTES: SEE MASTER SHEET #10001 FOR SUGGESTED REINFORCING

TEMPLATE NUMBER: 30039_a

DATE: 05-23-13

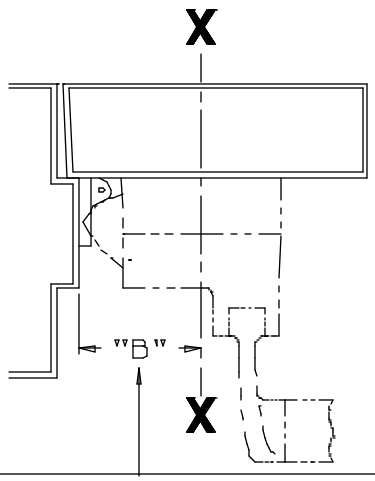

SINGLE DOOR INSTALLATION		
STRIKE	DIMENSION "B"	MIN. STILE
299	2 1/2"	4 3/8"
264	2 1/4"	4 1/8"
1606	2 1/16"	3 15/16"

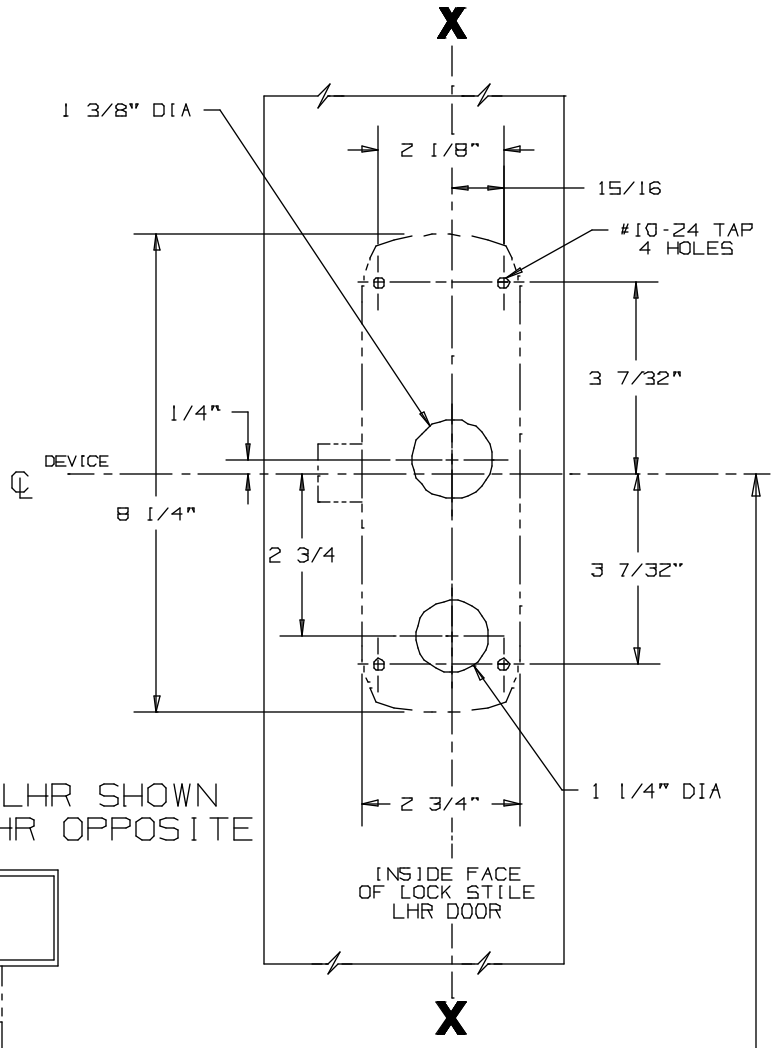

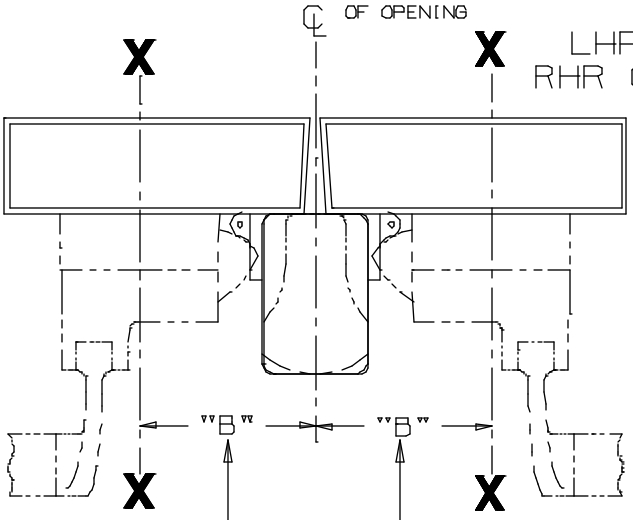

LHR SHOWN
RHR OPPOSITE

DOUBLE DOOR INSTALLATION WITH VON DUPRIN MULLIONS			
MULLION	STRIKE	DIMENSION "B"	MIN. STILE
5654	299	3 1/16"	4 1/4"
5654	264	2 13/16"	4"
4954	299	3 1/2"	4 11/16"
4954	264	3 1/4"	4 7/16"
1654	1606	3 1/16"	4 1/4"

FOR OUTSIDE TRIM PREPARATION,
SEE ADDITIONAL TRIM TEMPLATE.

SINGLE DOOR OPENING
39 13/16 TO FINISHED FLOOR

DOUBLE DOOR OPENING
WITH VON DUPRIN MULLION
39 11/16"

CROSSBAR 36 13/16" FROM FINISHED FLOOR

88TP & 88TP-2 Series Rim Devices

VON DUPRIN®

NOTES: SEE MASTER SHEET #10001 FOR SUGGESTED REINFORCING

TEMPLATE NUMBER: 10157_a

DATE: 05-16-13

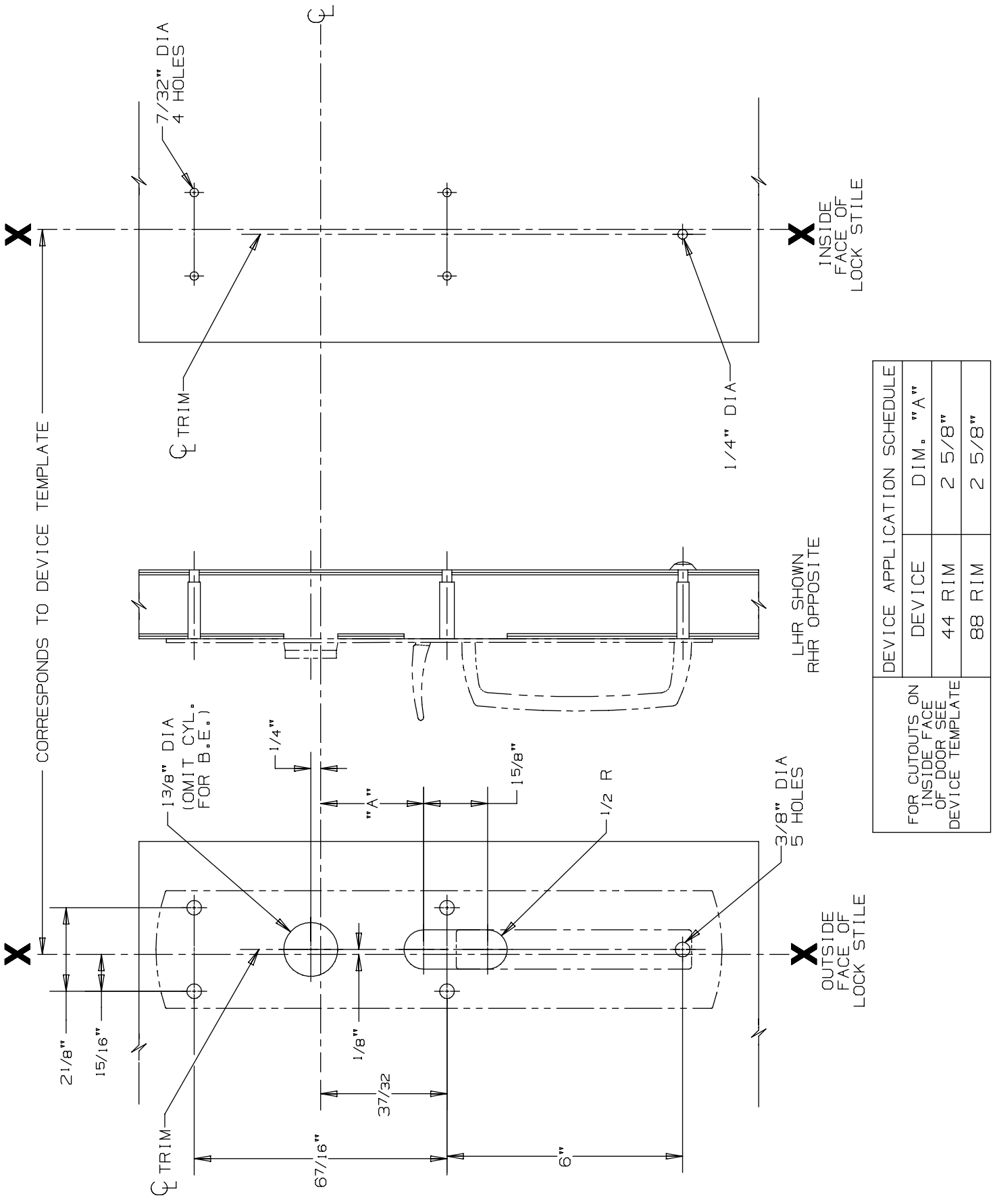

DEVICE APPLICATION SCHEDULE		
DEVICE	DIM. "A"	
44 RIM	2 5/8"	
88 RIM	2 5/8"	

FOR CUTOUTS ON INSIDE FACE OF DOOR SEE DEVICE TEMPLATE

880 TP & 880 TP-BE Trim for 44 & 88 Rim Devices

VON DUPRIN®

NOTES: SEE MASTER SHEET #10001 FOR SUGGESTED REINFORCING

TEMPLATE NUMBER: 20253_a

DATE: 05-28-13

RIM APPLICATION

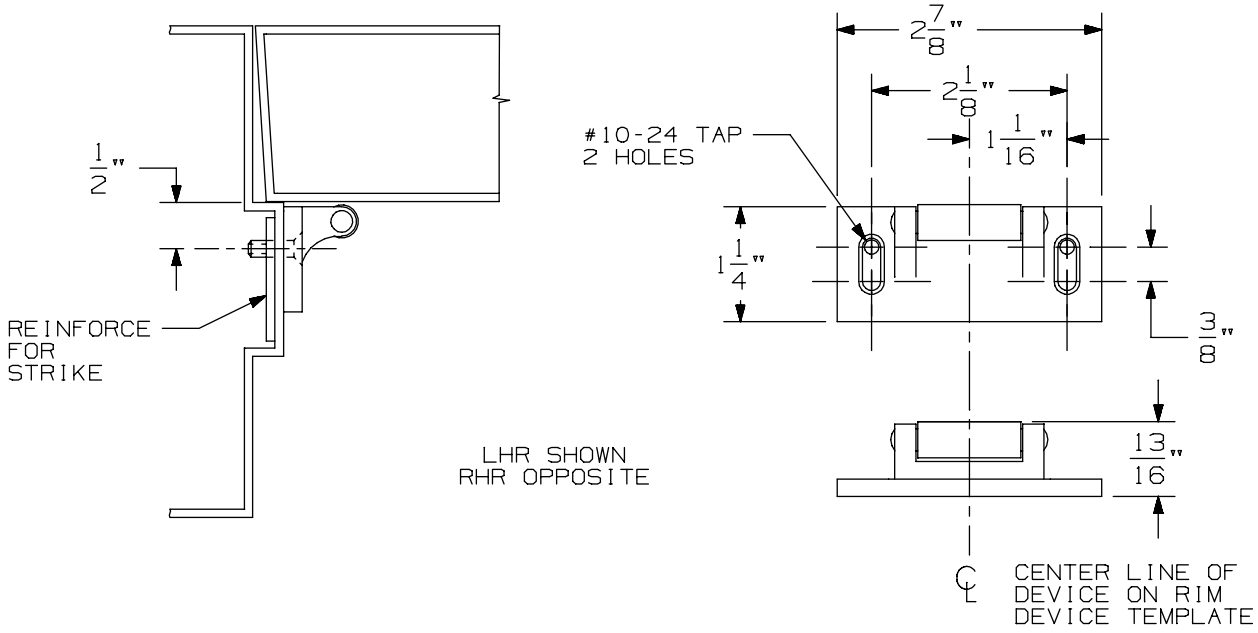

VERTICAL APPLICATION

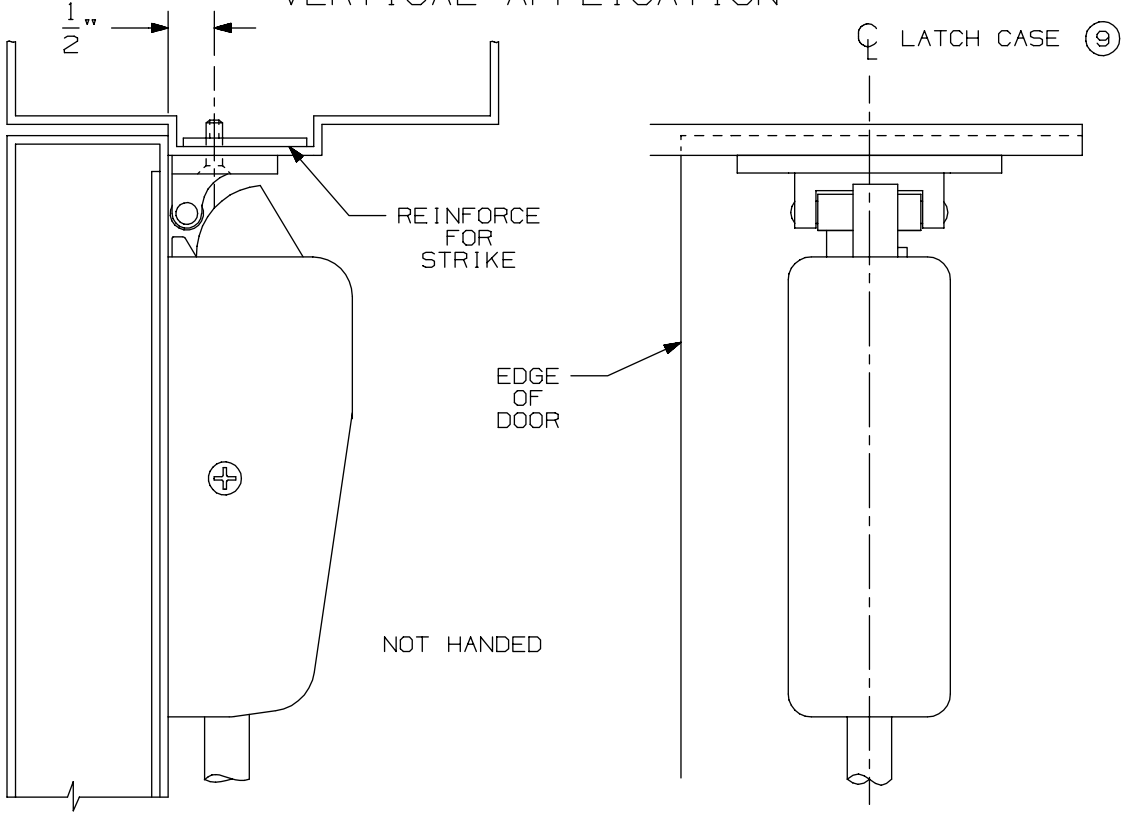

NOTE: LATCH CASE MOUNTING HOLES TO BE PREPARED AT INSTALLATION ON DOOR.

299 & 299F Strike

VON DUPRIN®

NOTES: SEE MASTER SHEET #10001 FOR SUGGESTED REINFORCING

TEMPLATE NUMBER: 30039_a

DATE: 05-23-13

88 Series Exit Devices

-

E88 Rim Electric Locking

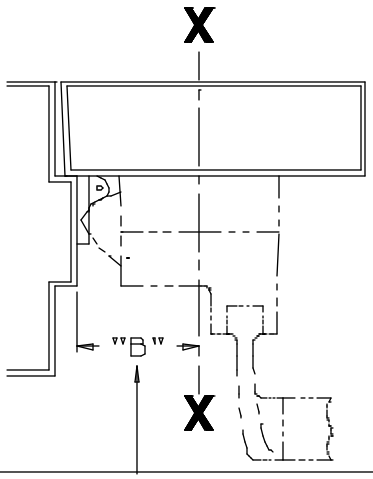

LHR SHOWN
RHR OPPOSITE

SINGLE DOOR INSTALLATION		
STRIKE	DIMENSION "B"	MIN. STILE
299	2 3/8"	4 3/8"
264	2 1/8"	4 1/8"
1606	1 15/16"	3 15/16"

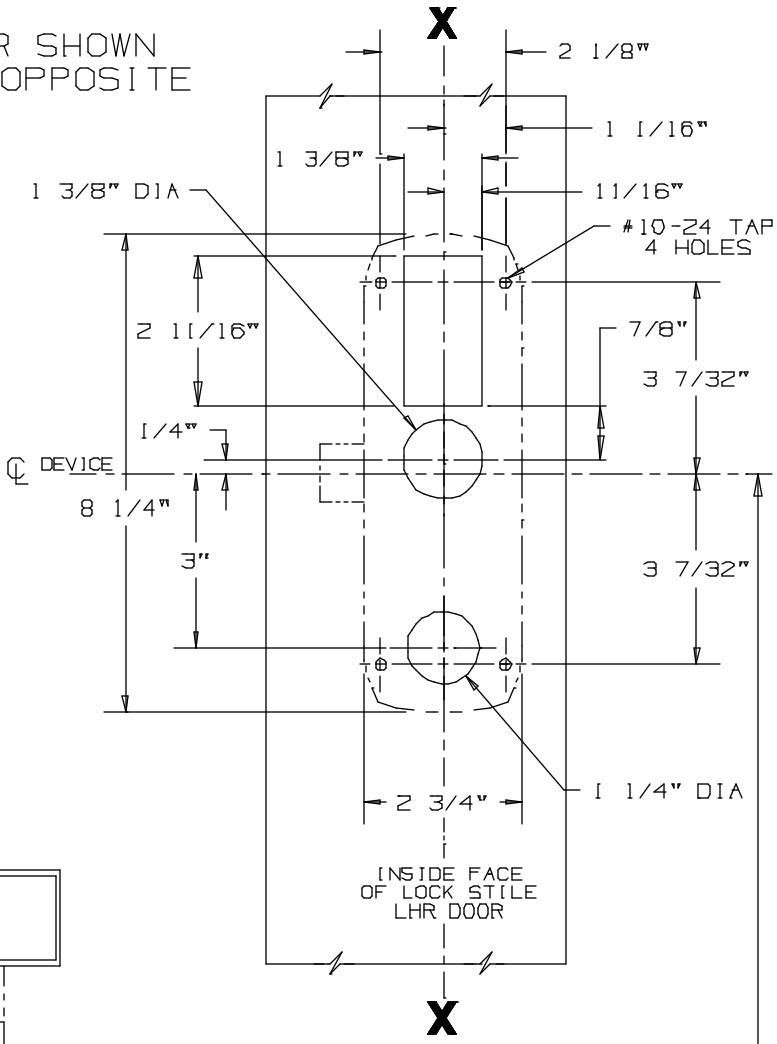

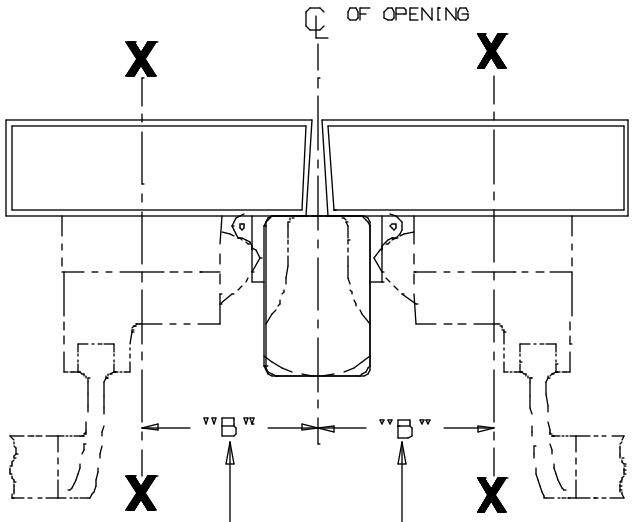

DOUBLE DOOR INSTALLATION WITH VON DUPRIN MULLIONS			
MULLION	STRIKE	DIMENSION "B"	MIN. STILE
5654	299	2 15/16"	4 1/4"
5654	264	2 11/16"	4"
4954	299	3 3/8"	4 11/16"
4954	264	3 1/8"	4 7/16"
1654	1606	2 15/16'	4 1/4"

FOR OUTSIDE TRIM PREPARATION,
SEE ADDITIONAL TRIM TEMPLATE.

SINGLE DOOR OPENING
39 13/16" TO FINISHED FLOOR

DOUBLE DOOR OPENING
WITH VON DUPRIN MULLION
39 11/16"

(3)

NOTE: WIRING GOES THROUGH DOOR AND NOT DEVICE

CROSSBAR 36 13/16" FROM FINISHED FLOOR

E-88K, E-88K (F. S.) Series Electric Locking Rim Device

VON DUPRIN®

NOTES: SEE MASTER SHEET #10001 FOR SUGGESTED REINFORCING

TEMPLATE NUMBER: 10184_a

DATE: 05-16-13

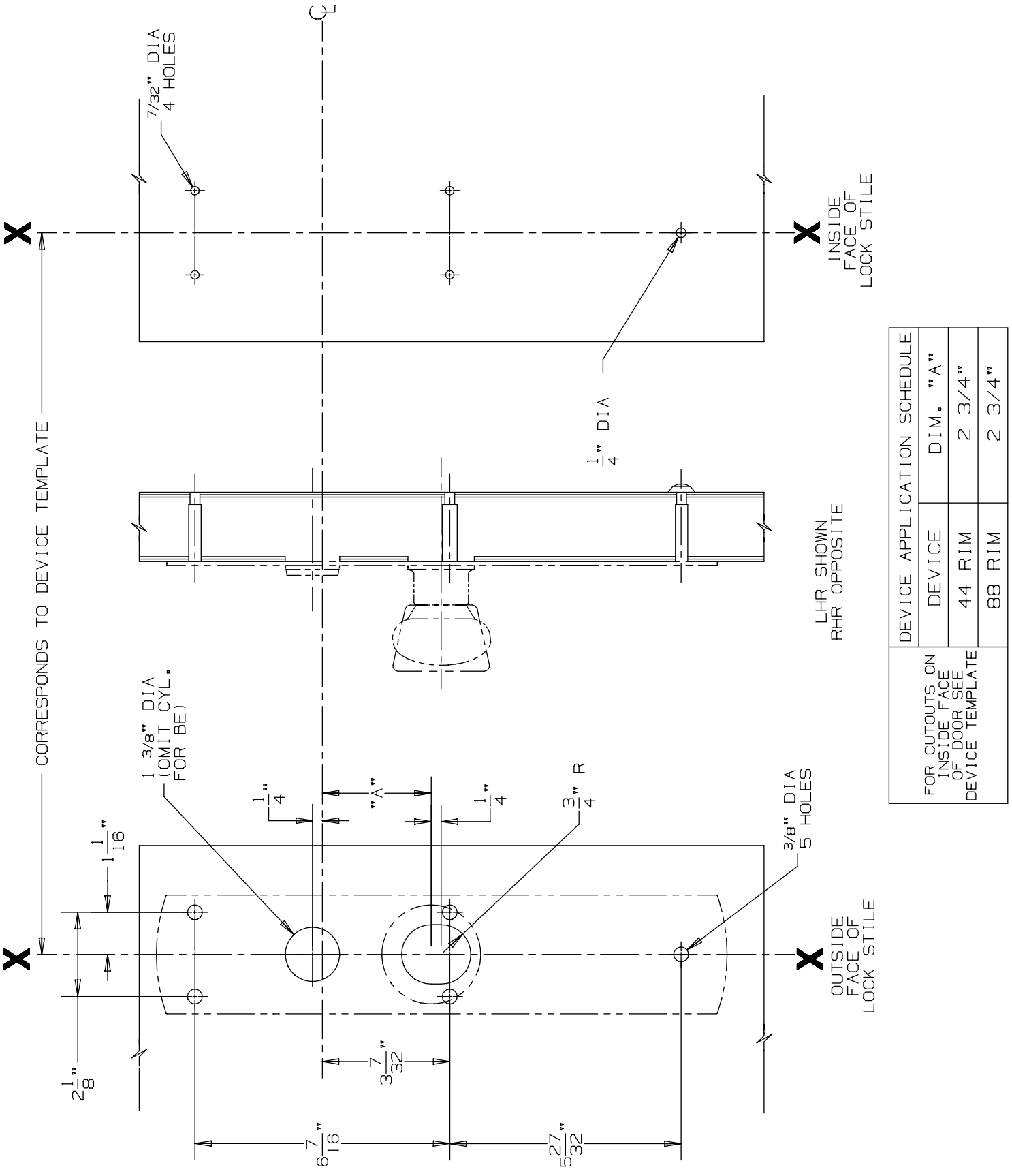

DEVICE APPLICATION SCHEDULE	
DEVICE	DIM. "A"
44 RIM	2 3/4"
88 RIM	2 3/4"

FOR CUTOUTS ON INSIDE FACE OF DOOR SEE DEVICE TEMPLATE

880 K & 880 K-BE Trim for 44 & 88 Rim Devices

VON DUPRIN®

NOTES: SEE MASTER SHEET #10001 FOR SUGGESTED REINFORCING

TEMPLATE NUMBER: 20254_a

DATE: 05-28-13

RIM APPLICATION

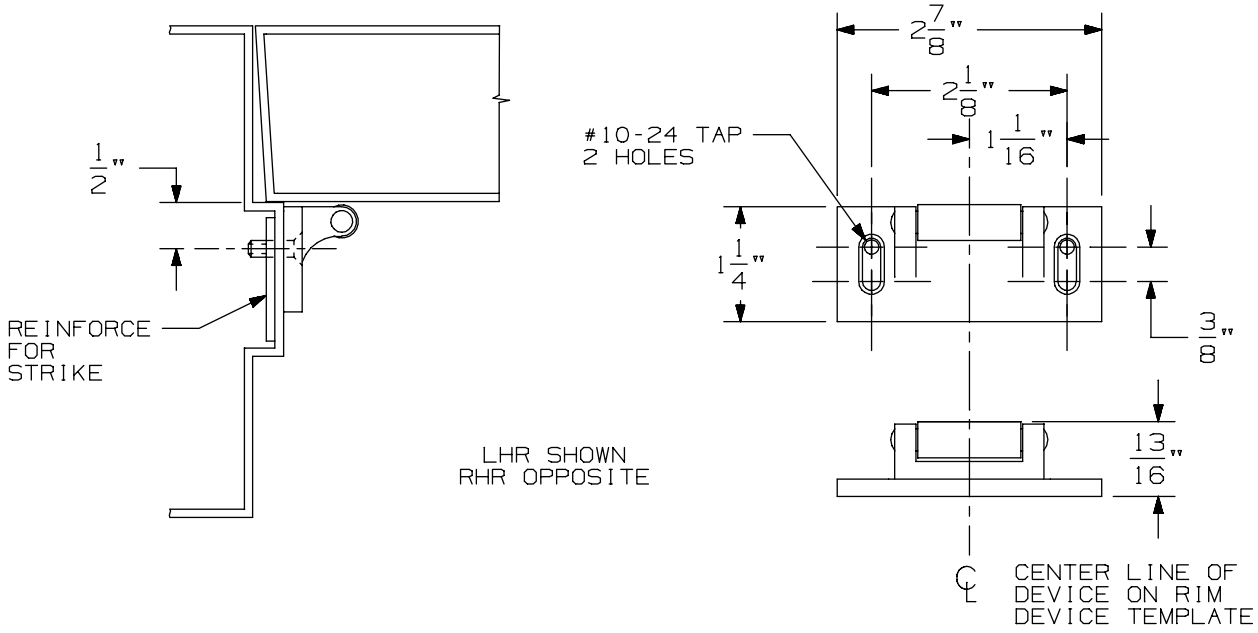

VERTICAL APPLICATION

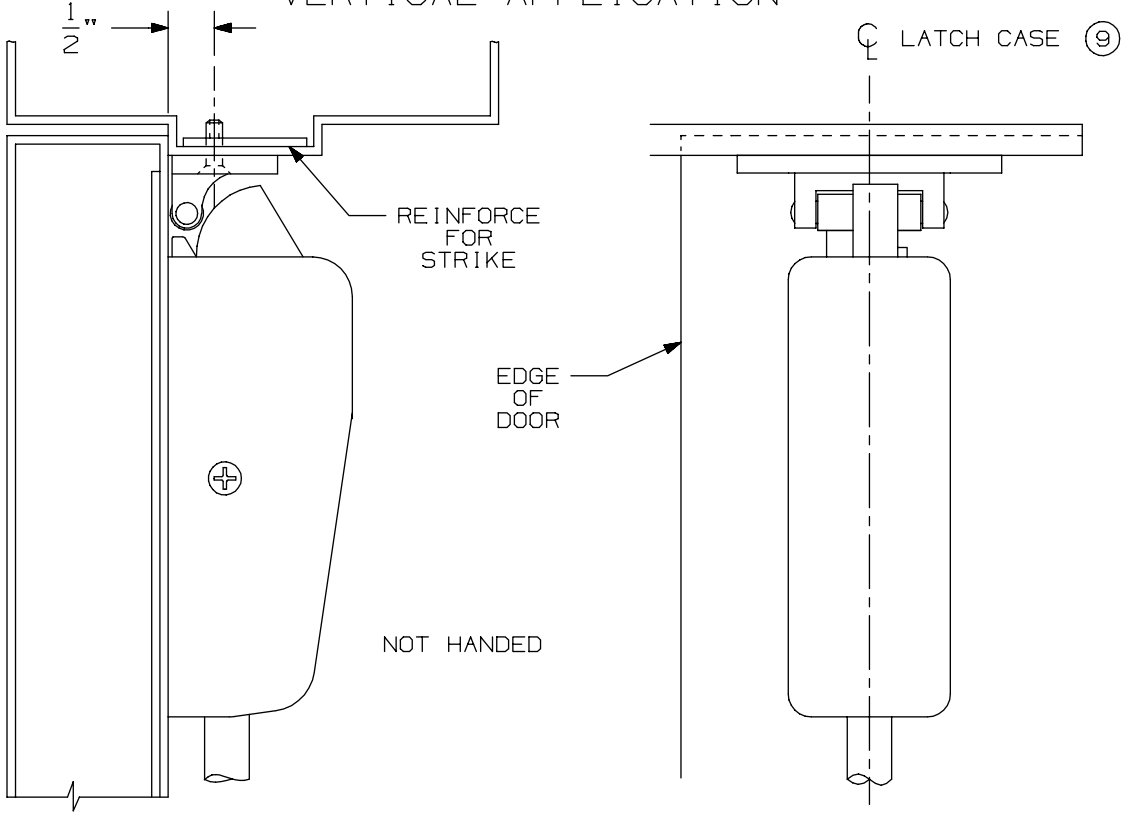

NOTE: LATCH CASE MOUNTING HOLES TO BE PREPARED AT INSTALLATION ON DOOR.

299 & 299F Strike

VON DUPRIN®

NOTES: SEE MASTER SHEET #10001 FOR SUGGESTED REINFORCING

TEMPLATE NUMBER: 30039_a

DATE: 05-23-13

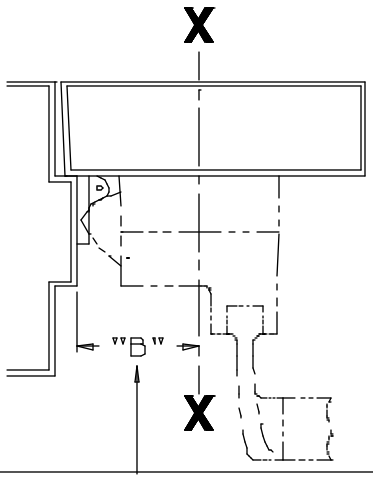

SINGLE DOOR INSTALLATION		
STRIKE	DIMENSION "B"	MIN. STILE
299	2 1/2"	4 3/8"
264	2 1/4"	4 1/8"
1606	2 1/16"	3 15/16"

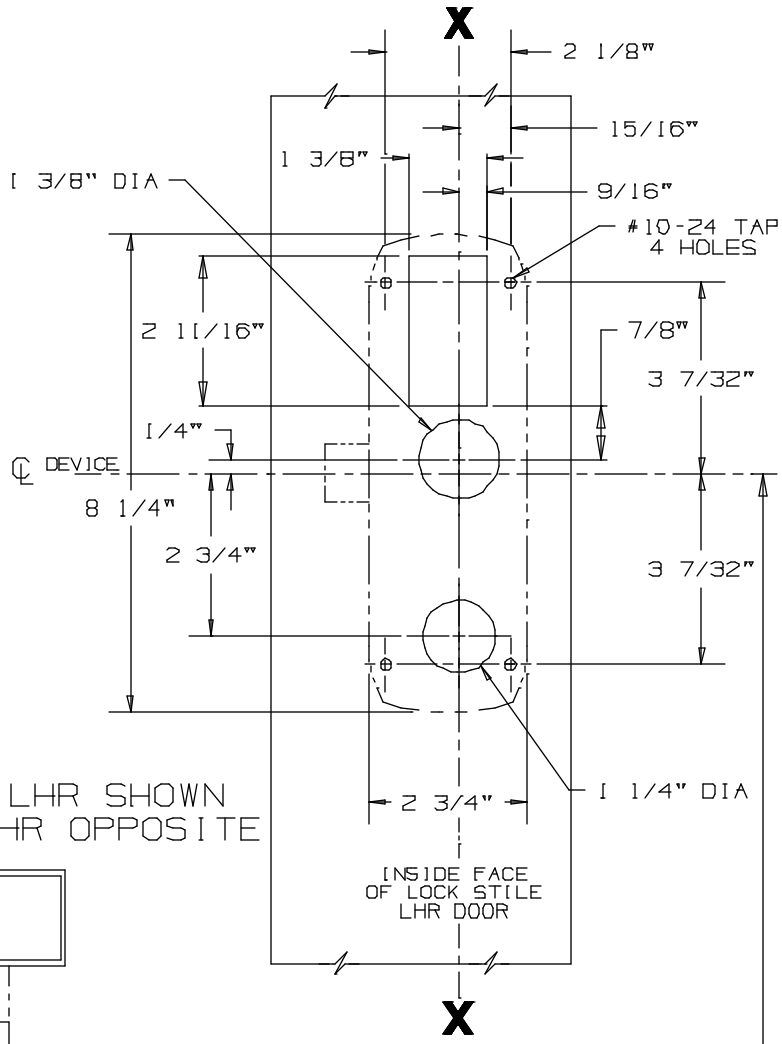

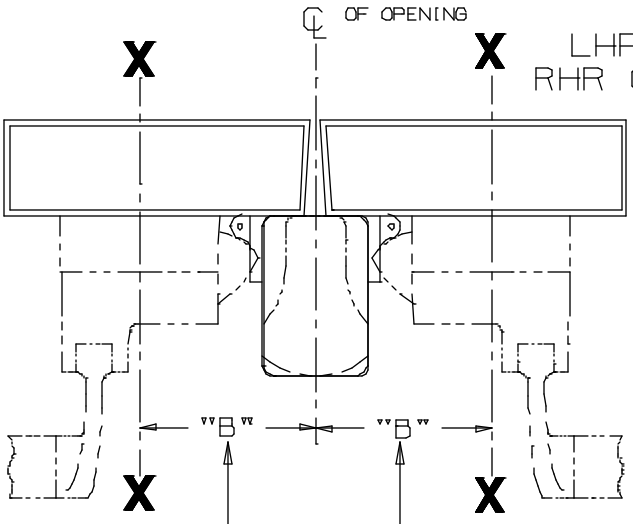

LHR SHOWN
RHR OPPOSITE

DOUBLE DOOR INSTALLATION WITH VON DUPRIN MULLIONS			
MULLION	STRIKE	DIMENSION "B"	MIN. STILE
5654	299	3 1/16"	4 1/4"
5654	264	2 13/16"	4"
4954	299	3 1/2"	4 11/16"
4954	264	3 1/4"	4 7/16"
1654	1606	3 1/16"	4 1/4"

SINGLE DOOR OPENING
39 13/16" TO FINISHED FLOOR

DOUBLE DOOR OPENING
WITH VON DUPRIN MULLION
39 11/16"

③

FOR OUTSIDE TRIM PREPARATION,
SEE ADDITIONAL TRIM TEMPLATE.

CROSSBAR 36 13/16" FROM FINISHED FLOOR

NOTE: WIRING GOES THROUGH DOOR AND NOT DEVICE

E-88TP, E-88TP (F. S.) Series Electric Locking Rim Device

VON DUPRIN®

NOTES: SEE MASTER SHEET #10001 FOR SUGGESTED REINFORCING

TEMPLATE NUMBER: 10183_a

DATE: 05-16-13

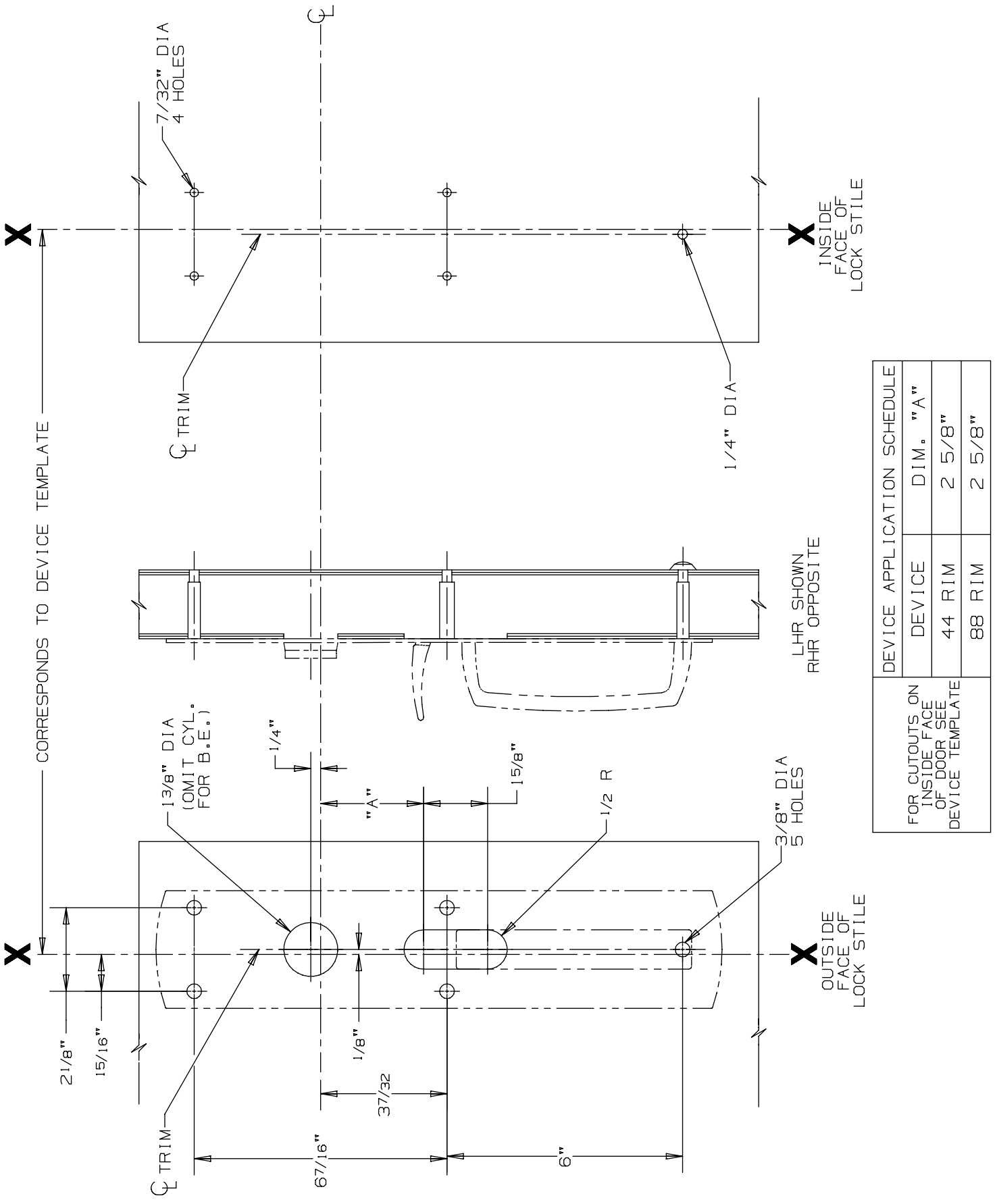

DEVICE APPLICATION SCHEDULE		
DEVICE	DIM. "A"	
44 RIM	2 5/8"	
88 RIM	2 5/8"	

FOR CUTOUTS ON INSIDE FACE OF DOOR SEE DEVICE TEMPLATE

880 TP & 880 TP-BE Trim for 44 & 88 Rim Devices

VON DUPRIN®

NOTES: SEE MASTER SHEET #10001 FOR SUGGESTED REINFORCING

TEMPLATE NUMBER: 20253_a

DATE: 05-28-13

RIM APPLICATION

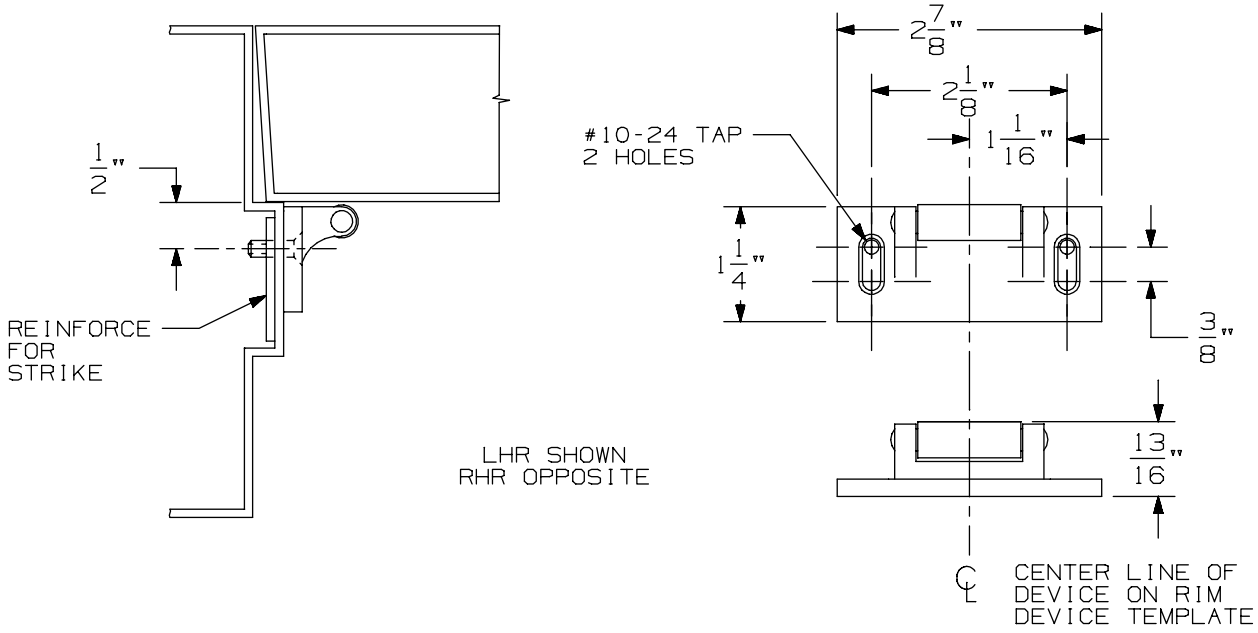

VERTICAL APPLICATION

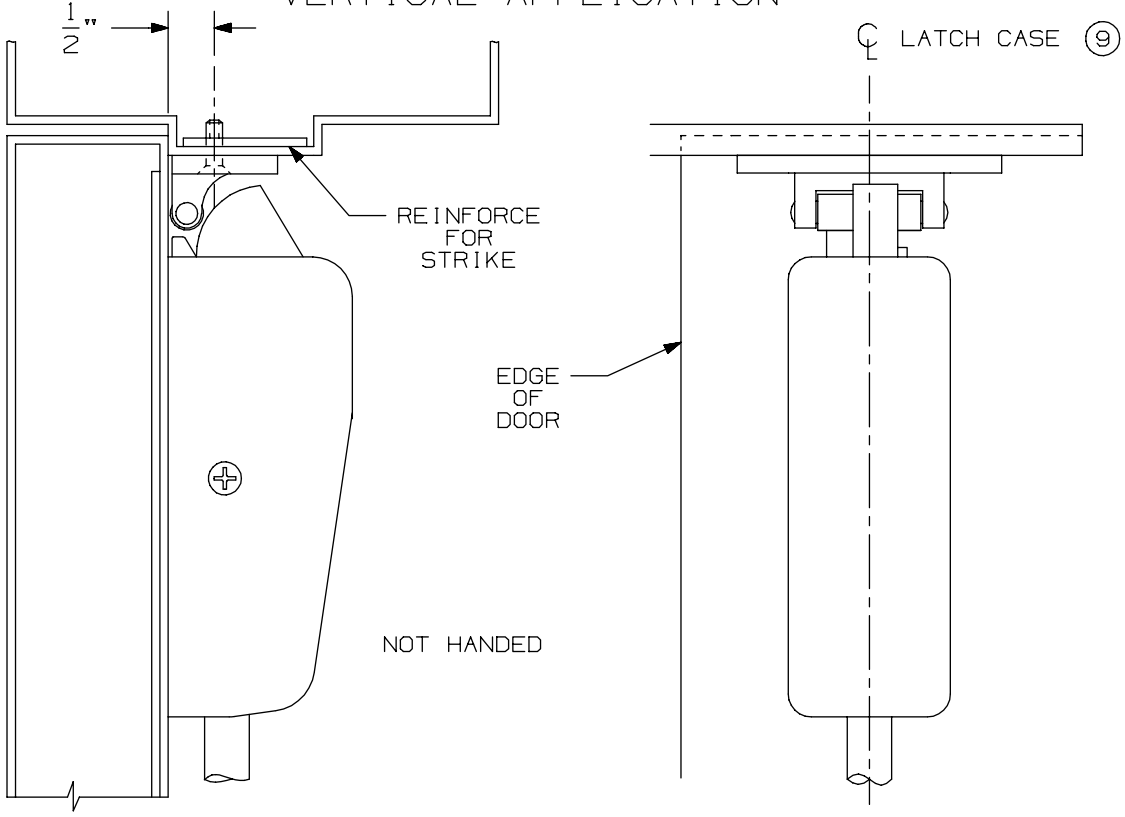

NOTE: LATCH CASE MOUNTING HOLES TO BE PREPARED AT INSTALLATION ON DOOR.

299 & 299F Strike

VON DUPRIN®

NOTES: SEE MASTER SHEET #10001 FOR SUGGESTED REINFORCING

TEMPLATE NUMBER: 30039_a

DATE: 05-23-13

88 Series Exit Devices

-

88-F Rim Fire

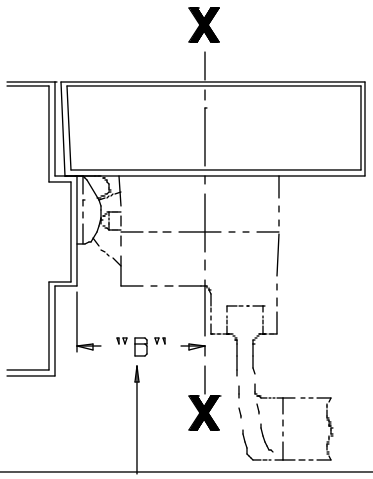

LHR SHOWN
RHR OPPOSITE

SINGLE DOOR INSTALLATION		
STRIKE	DIMENSION "B"	MIN. STILE
268	2 1/2"	4 3/8"

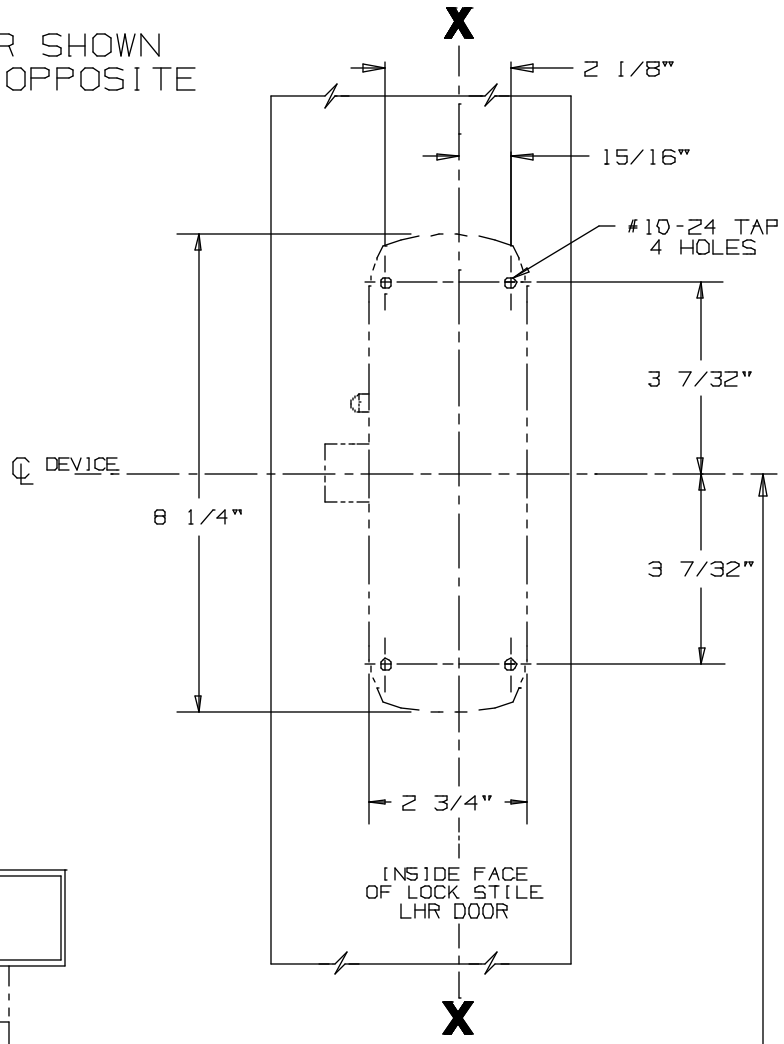

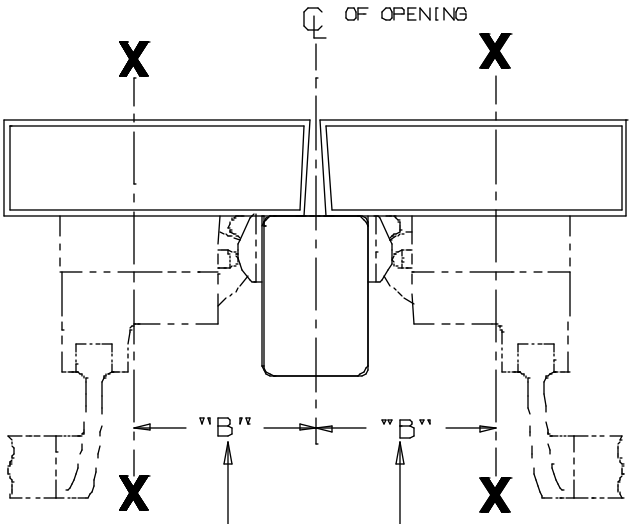

DOUBLE DOOR INSTALLATION WITH VON DUPRIN MULLIONS			
MULLION	STRIKE	DIMENSION "B"	MIN. STILE
9954	268	3 1/2"	4 11/16"

SINGLE DOOR OPENING
39 13/16" TO FINISHED FLOOR

DOUBLE DOOR OPENING
WITH VON DUPRIN MULLION
39 11/16"

③

FOR OUTSIDE TRIM PREPARATION, WHEN REQUIRED,
SEE ADDITIONAL TRIM TEMPLATE.

CROSSBAR 36 13/16" FROM FINISHED FLOOR

88EO-F & 88DT-F Series Rim Devices

VON DUPRIN®

NOTES: SEE MASTER SHEET #10001 FOR SUGGESTED REINFORCING

TEMPLATE NUMBER: 10169_a

DATE: 05-15-13

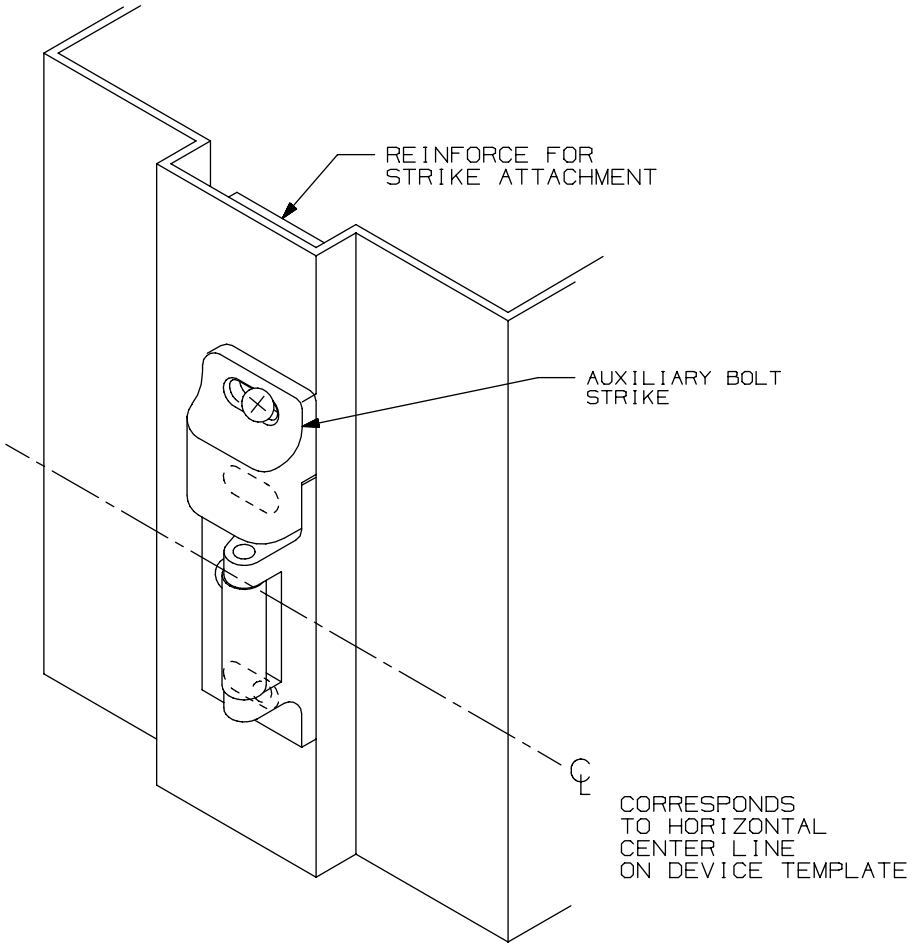

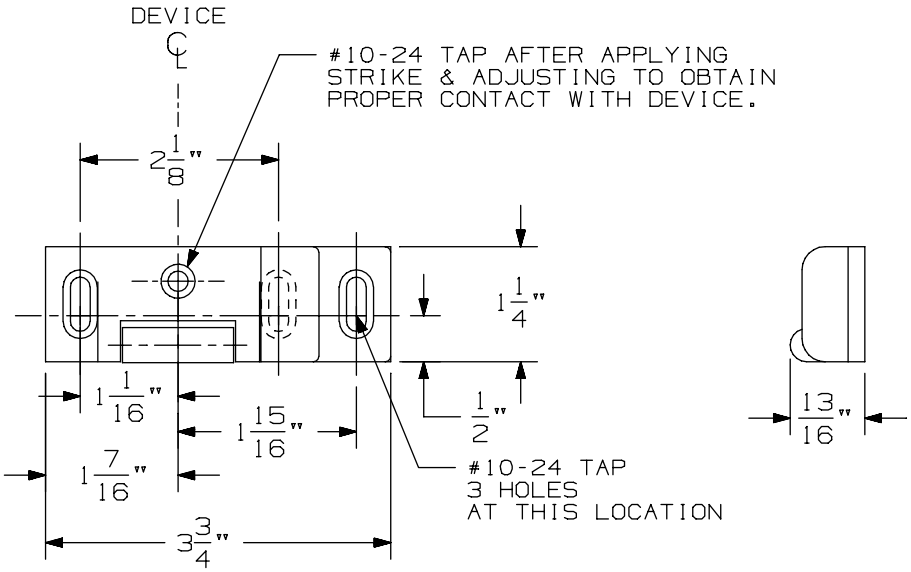

NOTE: AUXILARY BOLT STRIKE ALWAYS
ABOVE STRIKE ROLLER

268 Rim Strike

VON DUPRIN®

NOTES: SEE MASTER SHEET #10001 FOR SUGGESTED REINFORCING

TEMPLATE NUMBER: 30011_a

DATE: 05-23-13

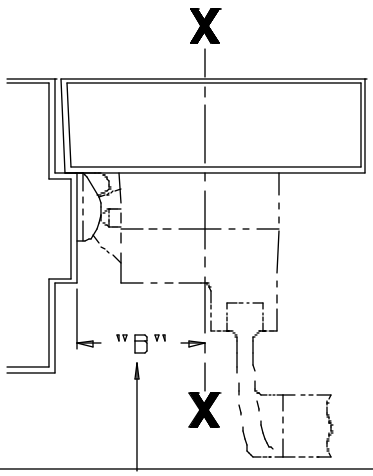

LHR SHOWN
RHR OPPOSITE

SINGLE DOOR INSTALLATION		
STRIKE	DIMENSION "B"	MIN. STILE
268	2 1/2"	4 3/8"

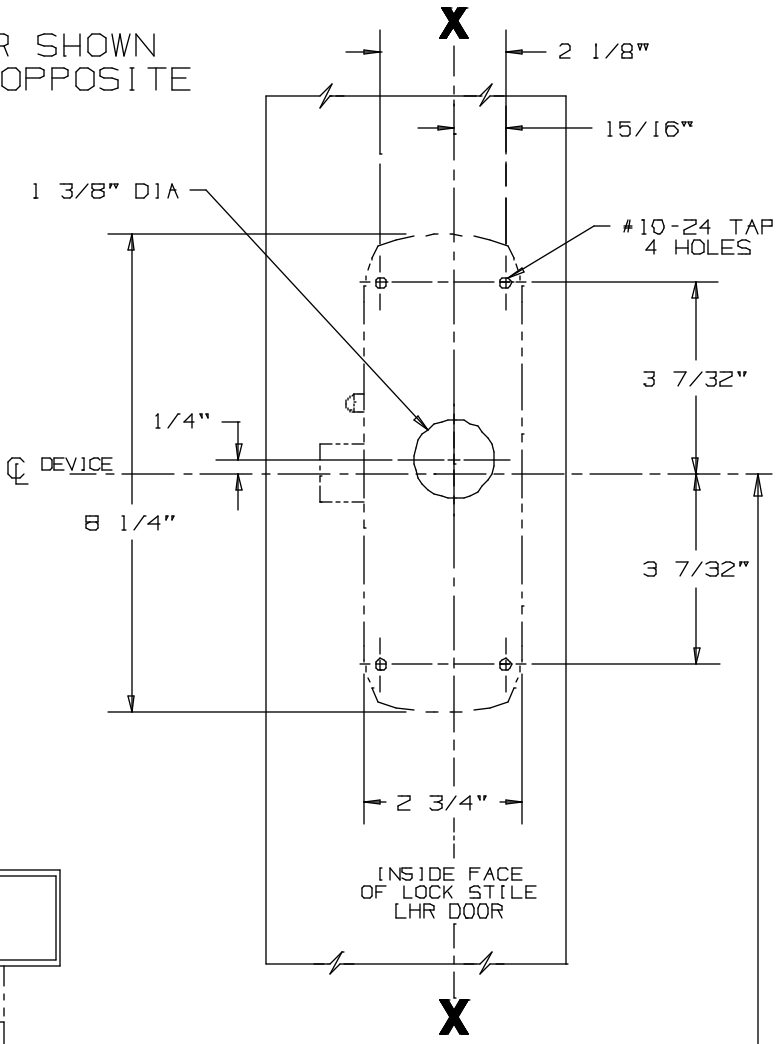

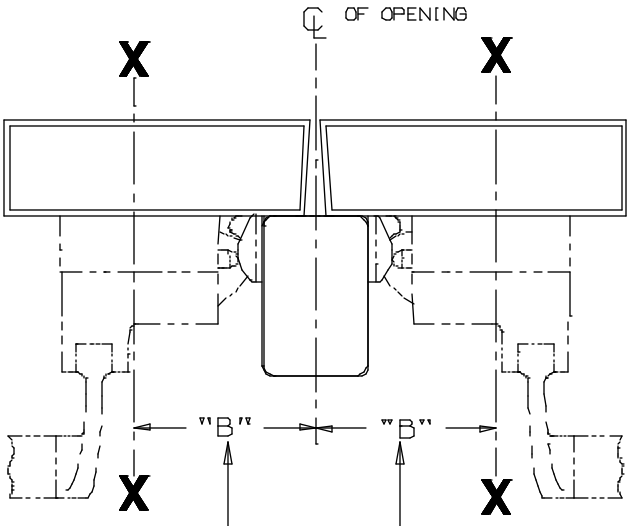

DOUBLE DOOR INSTALLATION WITH VON DUPRIN MULLIONS			
MULLION	STRIKE	DIMENSION "B"	MIN. STILE
9954	268	3 1/2"	4 11/16"

SINGLE DOOR OPENING
39 13/16" TO FINISHED FLOOR

DOUBLE DOOR OPENING
WITH VON DUPRIN MULLION
39 11/16"

③

FOR OUTSIDE TRIM PREPARATION,
SEE ADDITIONAL TRIM TEMPLATE.

CROSSBAR 36 13/16" FROM FINISHED FLOOR

88NL-F Rim Device

VON DUPRIN®

NOTES: SEE MASTER SHEET #10001 FOR SUGGESTED REINFORCING

TEMPLATE NUMBER: 10170_a

DATE: 05-15-13

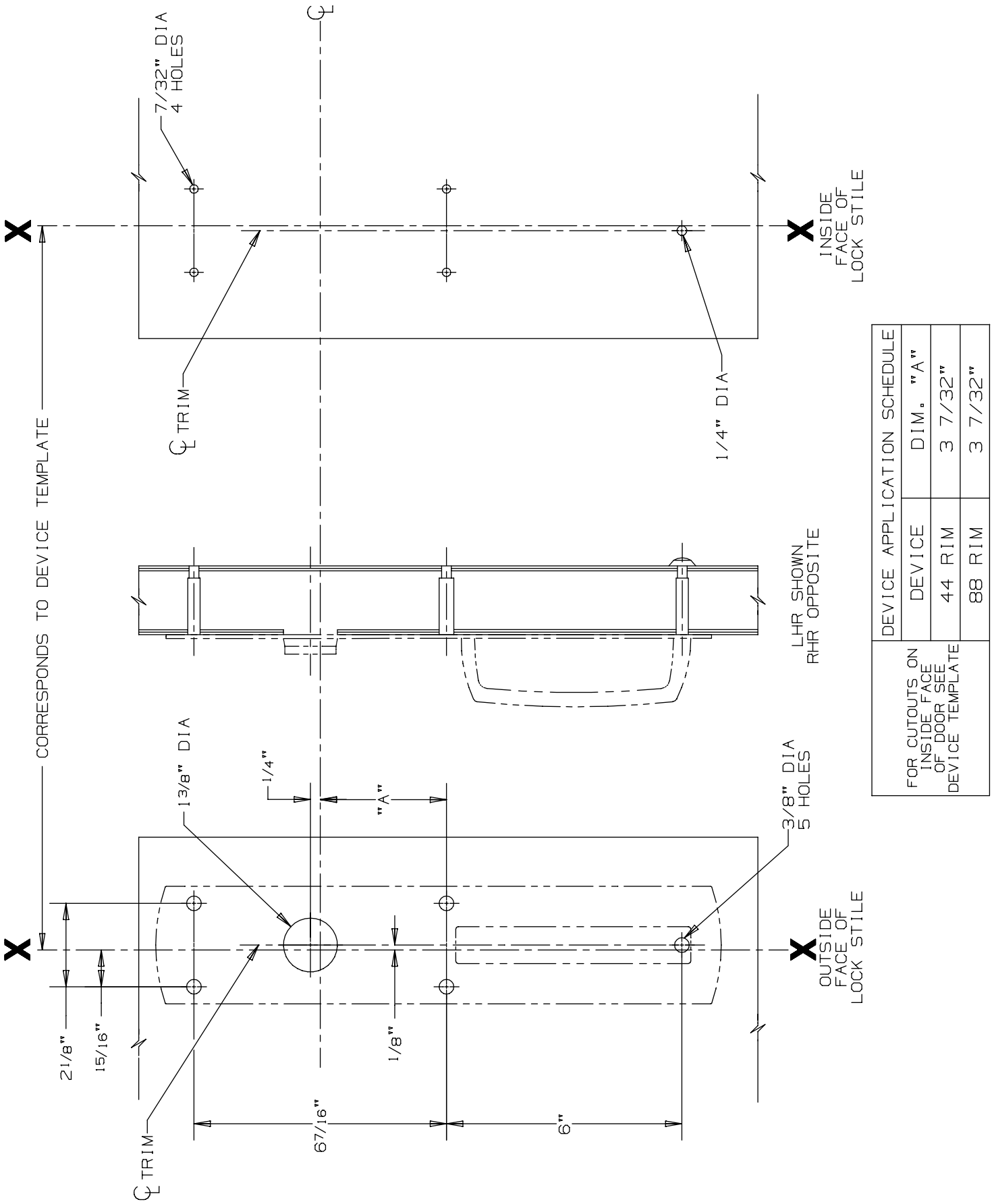

DEVICE APPLICATION SCHEDULE		
DEVICE	DIM. "A"	
44 RIM	3 7/32"	
88 RIM	3 7/32"	

FOR CUTOUTS ON INSIDE FACE OF DOOR SEE DEVICE TEMPLATE

880 NL Trim for 44 & 88 Rim Devices

VON DUPRIN®

NOTES: SEE MASTER SHEET #10001 FOR SUGGESTED REINFORCING

TEMPLATE NUMBER: 20252_a

DATE: 05-28-13

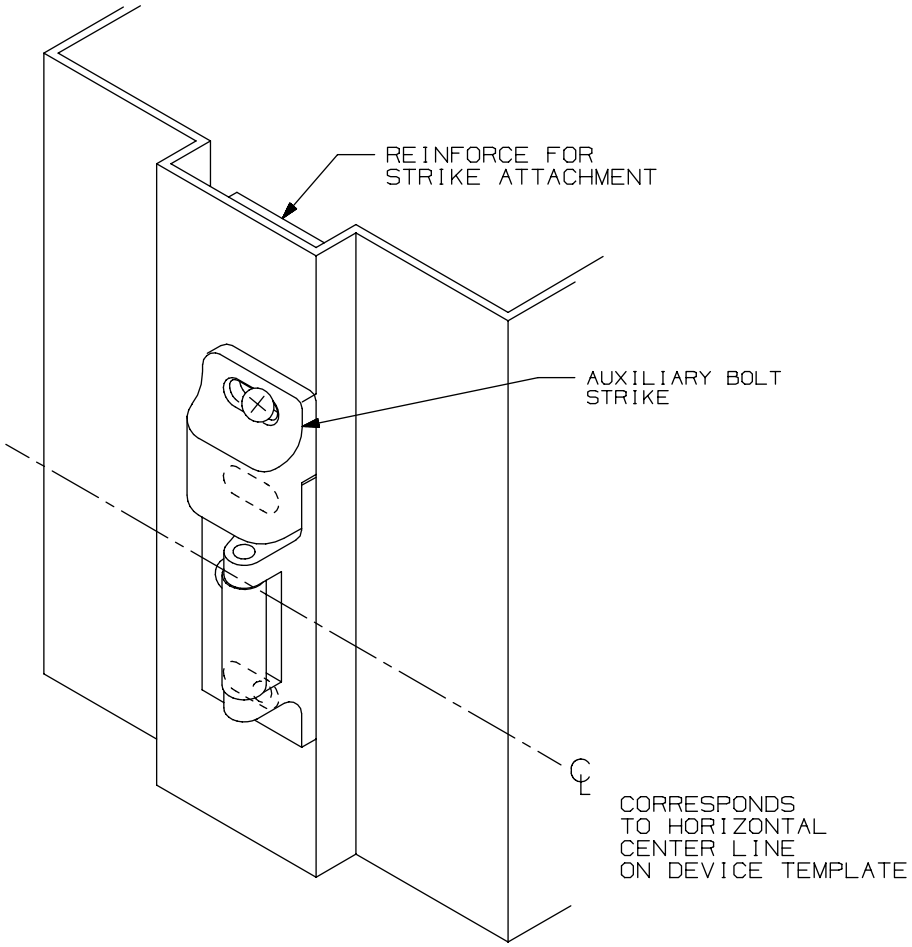

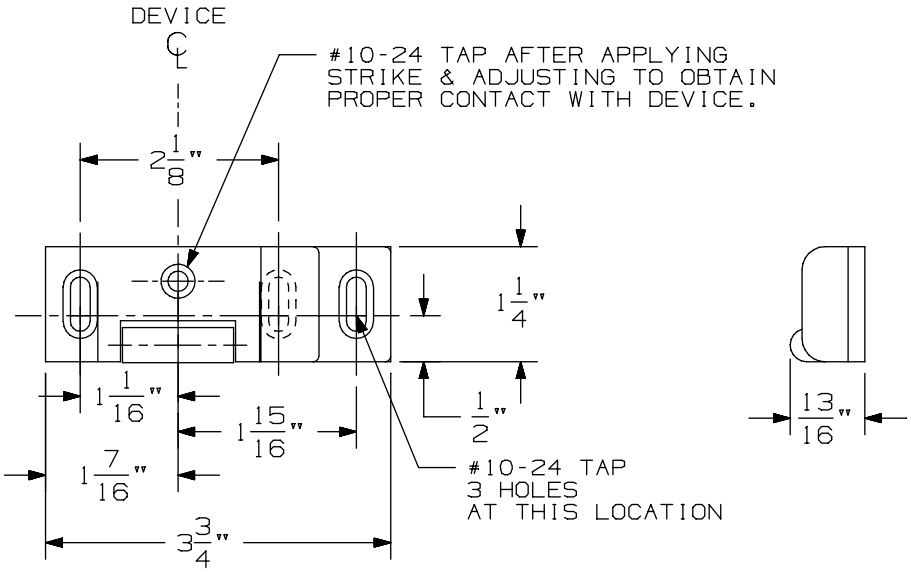

NOTE: AUXILARY BOLT STRIKE ALWAYS
ABOVE STRIKE ROLLER

268 Rim Strike

VON DUPRIN®

NOTES: SEE MASTER SHEET #10001 FOR SUGGESTED REINFORCING

TEMPLATE NUMBER: 30011_a

DATE: 05-23-13

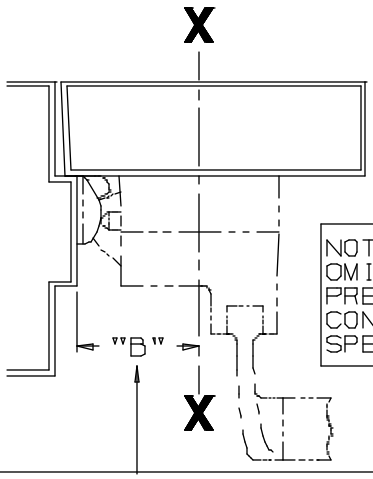

LHR SHOWN
RHR OPPOSITE

NOTE:
OMIT CYLINDER PREPARATION IF CONTROL IS SPECIFIED

SINGLE DOOR INSTALLATION		
STRIKE	DIMENSION "B"	MIN. STILE
268	2 3/8"	4 3/8"

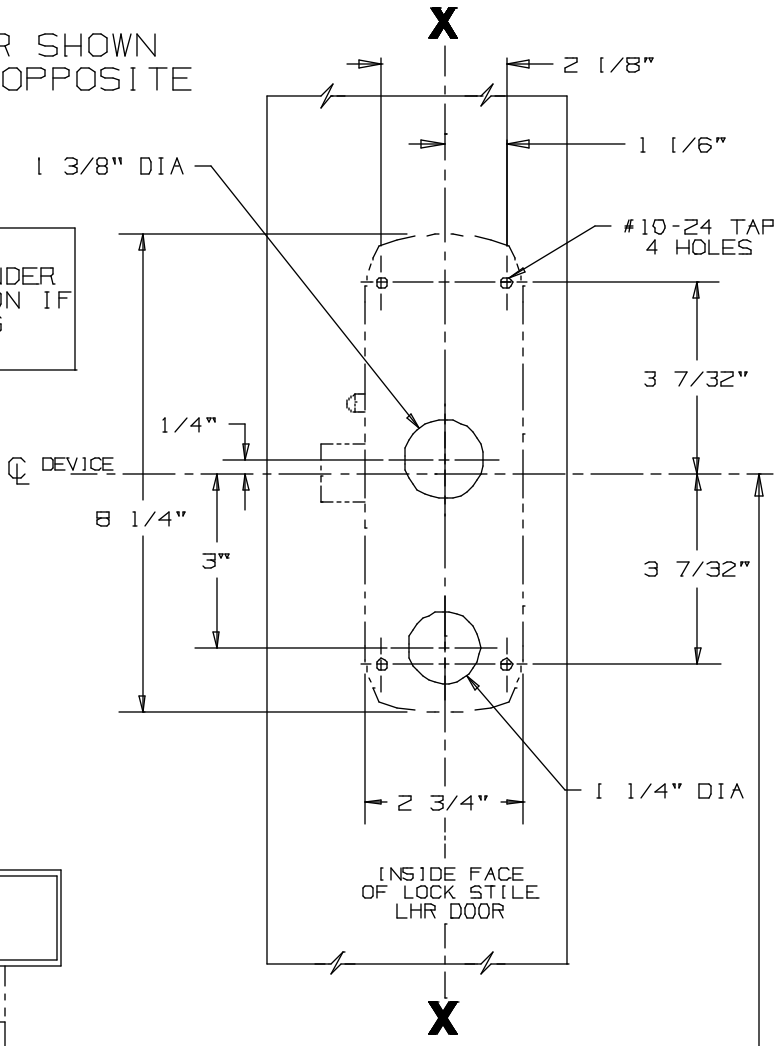

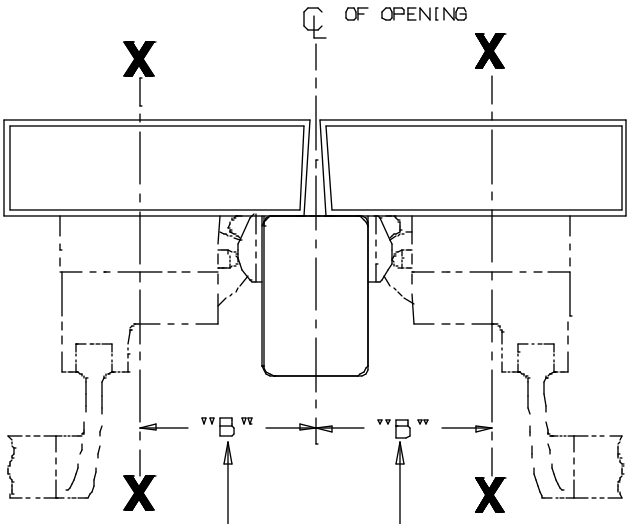

DOUBLE DOOR INSTALLATION WITH VON DUPRIN MULLIONS			
MULLION	STRIKE	DIMENSION "B"	MIN. STILE
9954	268	3 3/8"	4 11/16"

SINGLE DOOR OPENING
39 13/16" TO FINISHED FLOOR

DOUBLE DOOR OPENING
WITH VON DUPRIN MULLION
39 11/16"

(5)

FOR OUTSIDE TRIM PREPARATION, SEE ADDITIONAL TRIM TEMPLATE.

CROSSBAR 36 13/16" FROM FINISHED FLOOR

88L-F Rim Device

VON DUPRIN®

NOTES: SEE MASTER SHEET #10001 FOR SUGGESTED REINFORCING

TEMPLATE NUMBER: 10172_a

DATE: 05-15-13

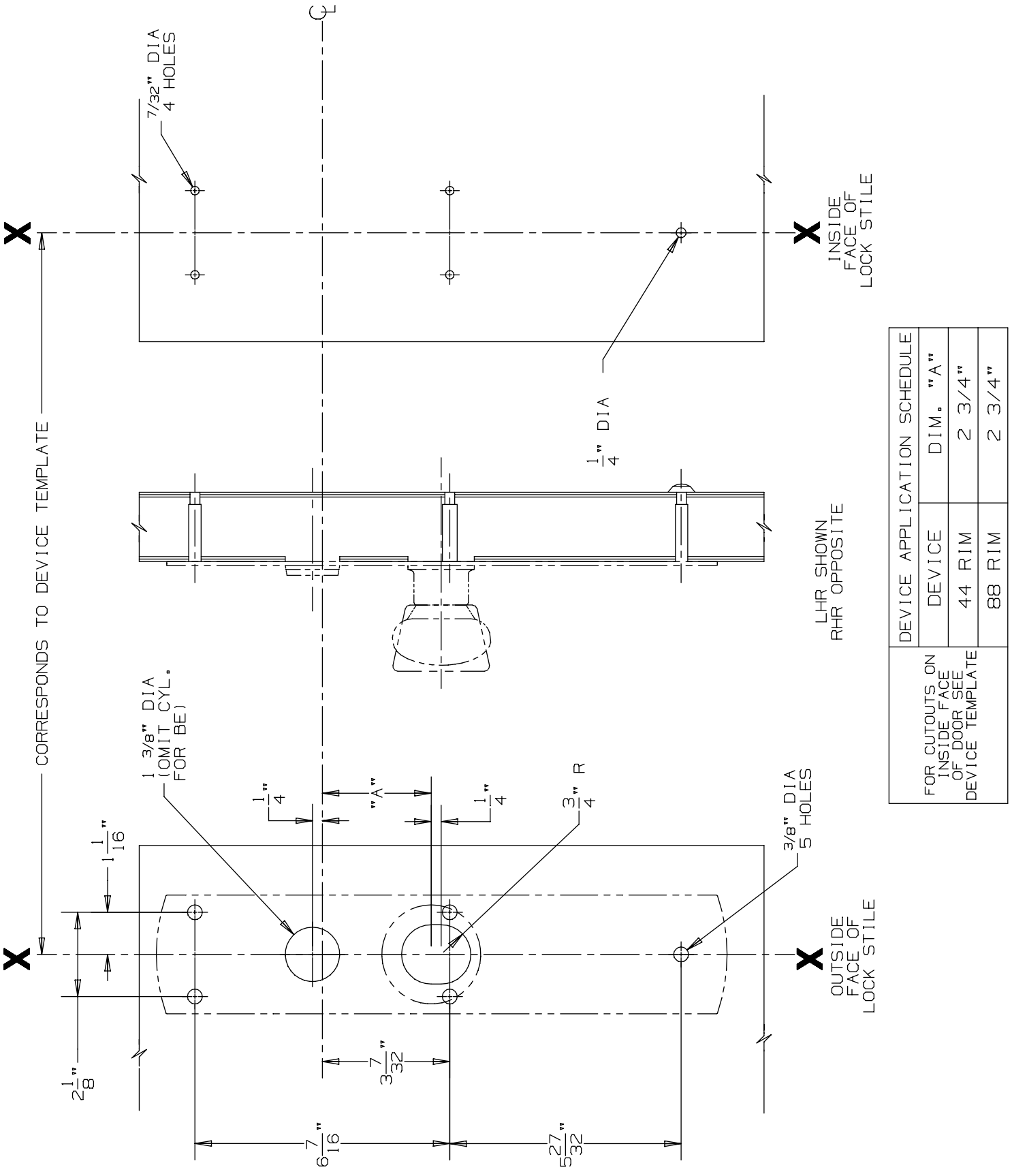

DEVICE APPLICATION SCHEDULE	
DEVICE	DIM. "A"
44 RIM	2 3/4"
88 RIM	2 3/4"

FOR CUTOUTS ON INSIDE FACE OF DOOR SEE DEVICE TEMPLATE

880 K & 880 K-BE Trim for 44 & 88 Rim Devices

VON DUPRIN®

NOTES: SEE MASTER SHEET #10001 FOR SUGGESTED REINFORCING

TEMPLATE NUMBER: 20254_a

DATE: 05-28-13

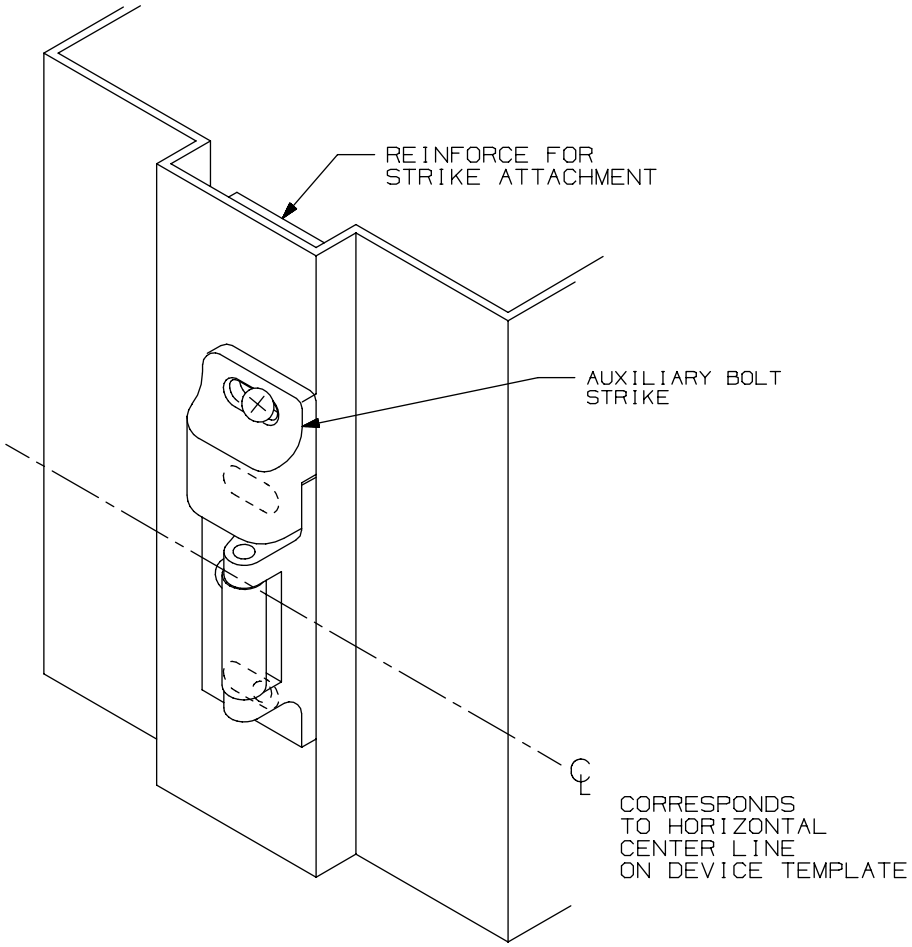

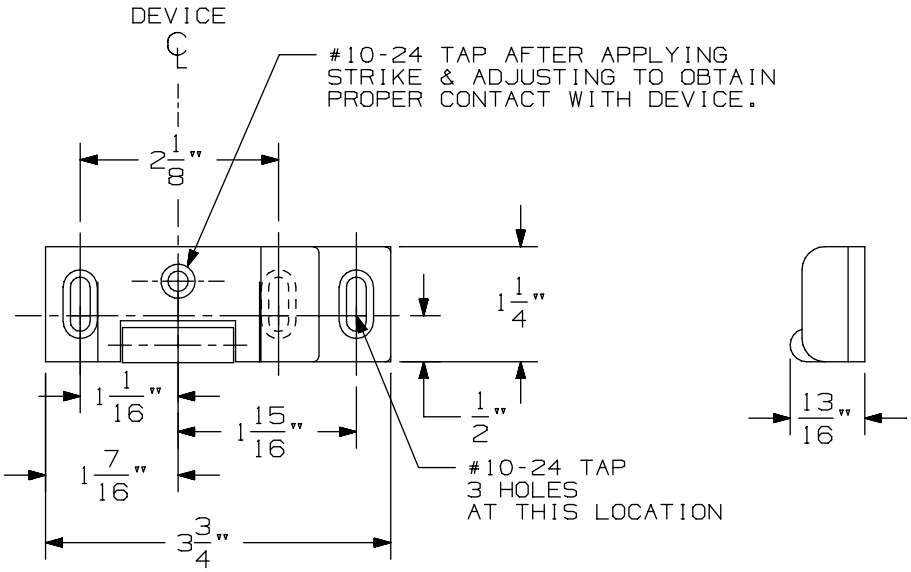

NOTE: AUXILARY BOLT STRIKE ALWAYS
ABOVE STRIKE ROLLER

268 Rim Strike

VON DUPRIN®

NOTES: SEE MASTER SHEET #10001 FOR SUGGESTED REINFORCING

TEMPLATE NUMBER: 30011_a

DATE: 05-23-13

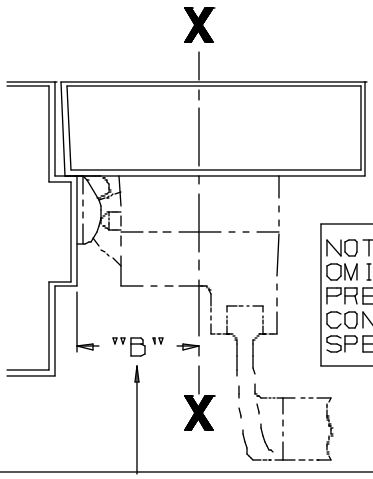

LHR SHOWN
RHR OPPOSITE

NOTE:
OMIT CYLINDER PREPARATION IF CONTROL IS SPECIFIED

SINGLE DOOR INSTALLATION		
STRIKE	DIMENSION "B"	MIN. STILE
268	2 3/8"	4 3/8"

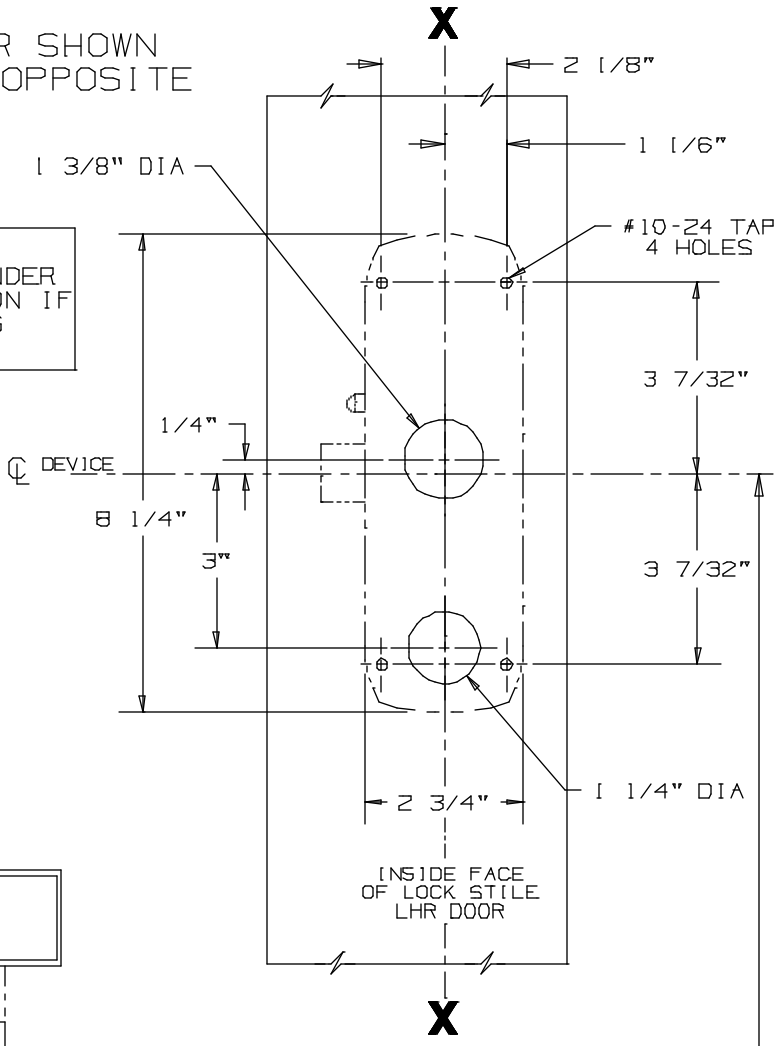

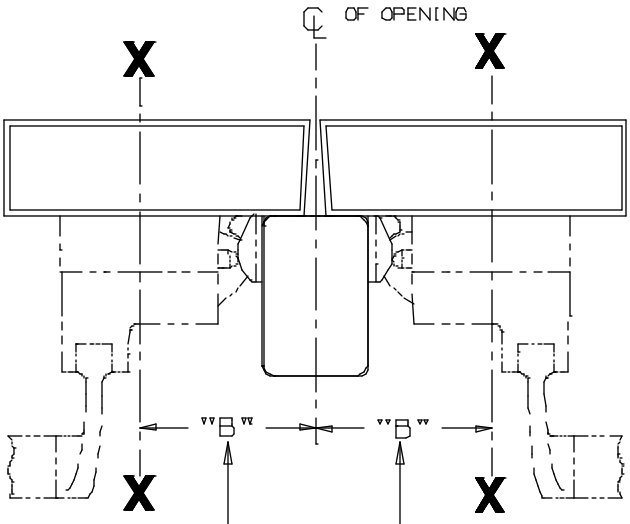

DOUBLE DOOR INSTALLATION WITH VON DUPRIN MULLIONS			
MULLION	STRIKE	DIMENSION "B"	MIN. STILE
9954	268	3 3/8"	4 11/16"

SINGLE DOOR OPENING
39 13/16" TO FINISHED FLOOR

DOUBLE DOOR OPENING
WITH VON DUPRIN MULLION
39 11/16"

(5)

FOR OUTSIDE TRIM PREPARATION, SEE ADDITIONAL TRIM TEMPLATE.

CROSSBAR 36 13/16" FROM FINISHED FLOOR

88L-F Rim Device

VON DUPRIN®

NOTES: SEE MASTER SHEET #10001 FOR SUGGESTED REINFORCING

TEMPLATE NUMBER: 10172_a

DATE: 05-15-13

NOTES: SEE MASTER SHEET #10001 FOR SUGGESTED REINFORCING

373-L Control

VON DUPRIN®

TEMPLATE NUMBER: 40104_a

DATE: 05-28-13

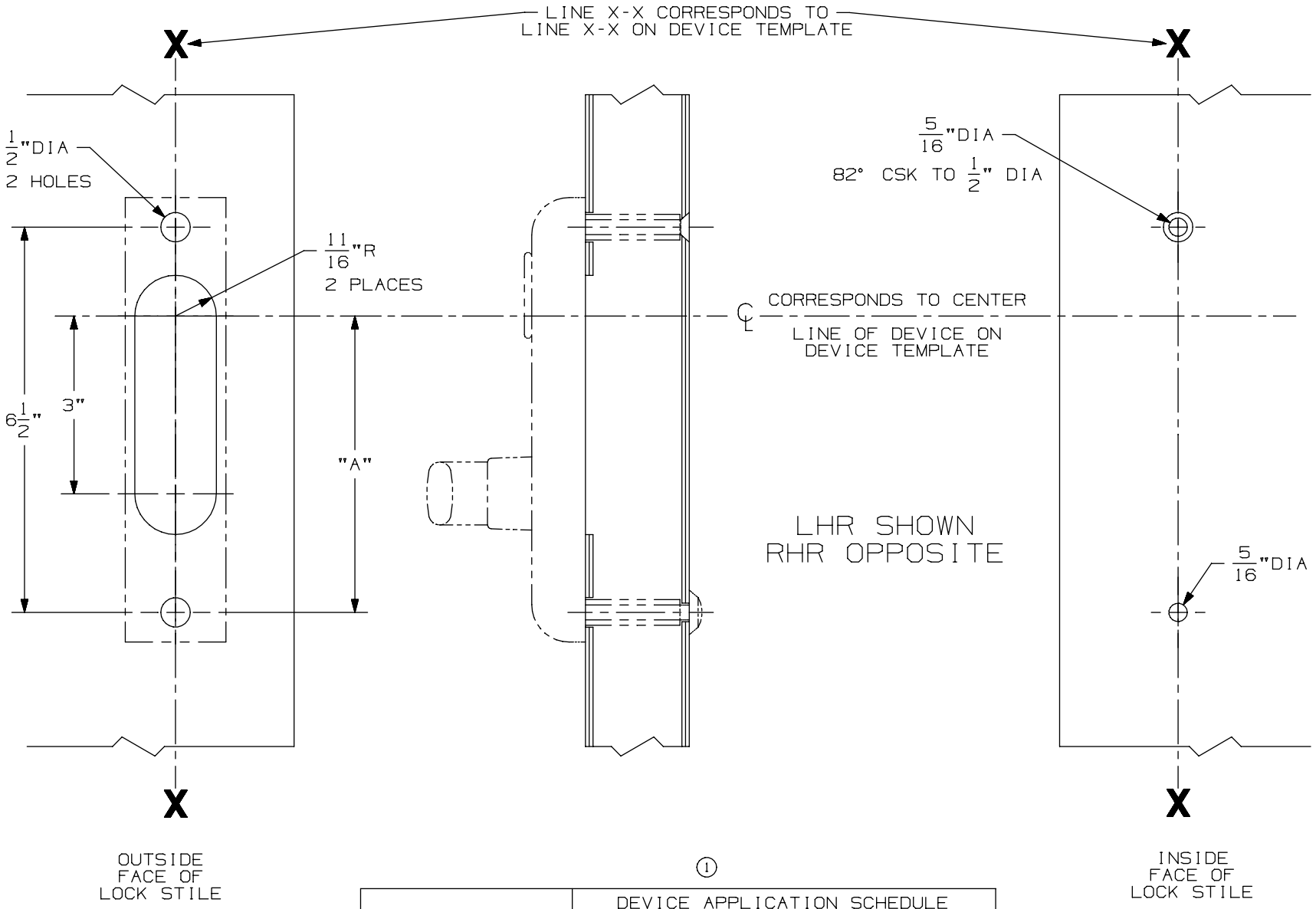

①

FOR CUTOUT ON INSIDE FACE OF DOOR SEE DEVICE TEMPLATE	DEVICE APPLICATION SCHEDULE	
	DEVICE	DIM "A"
	88L RIM	5"

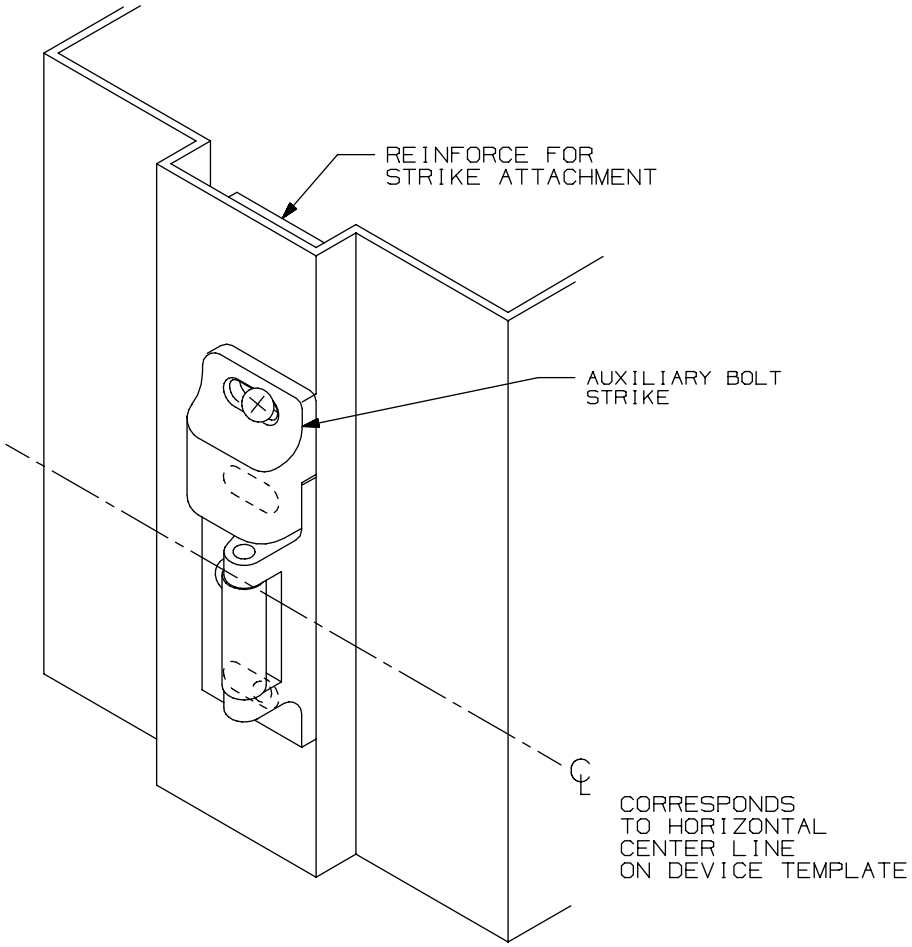

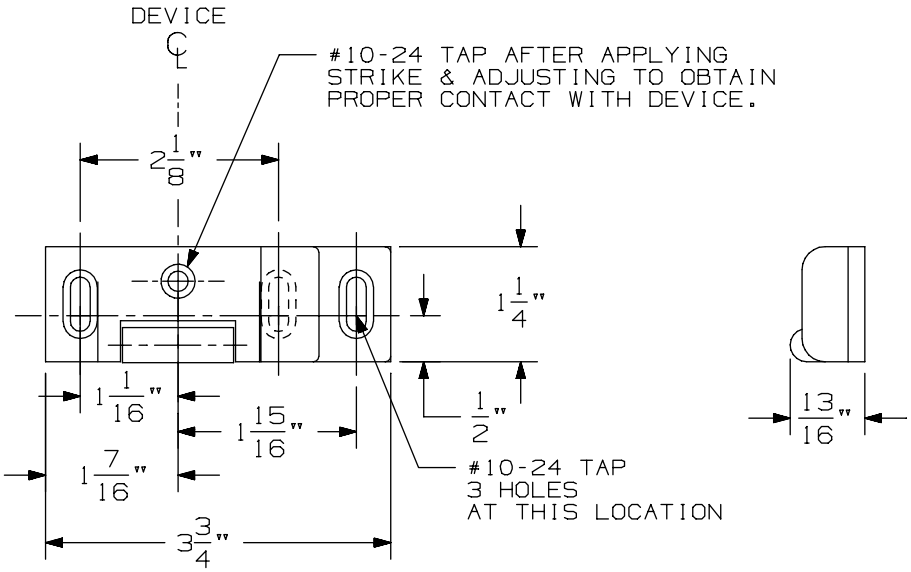

NOTE: AUXILARY BOLT STRIKE ALWAYS
ABOVE STRIKE ROLLER

268 Rim Strike

VON DUPRIN®

NOTES: SEE MASTER SHEET #10001 FOR SUGGESTED REINFORCING

TEMPLATE NUMBER: 30011_a

DATE: 05-23-13

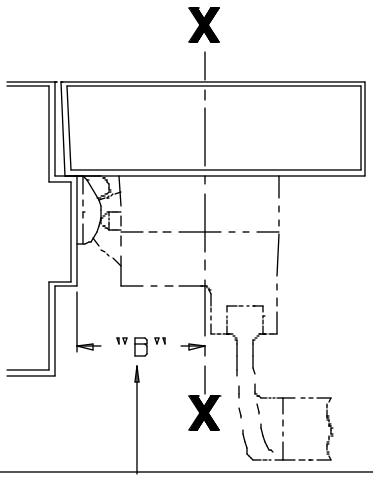

LHR SHOWN
RHR OPPOSITE

SINGLE DOOR INSTALLATION		
STRIKE	DIMENSION "B"	MIN. STILE
268	2 1/2"	4 3/8"

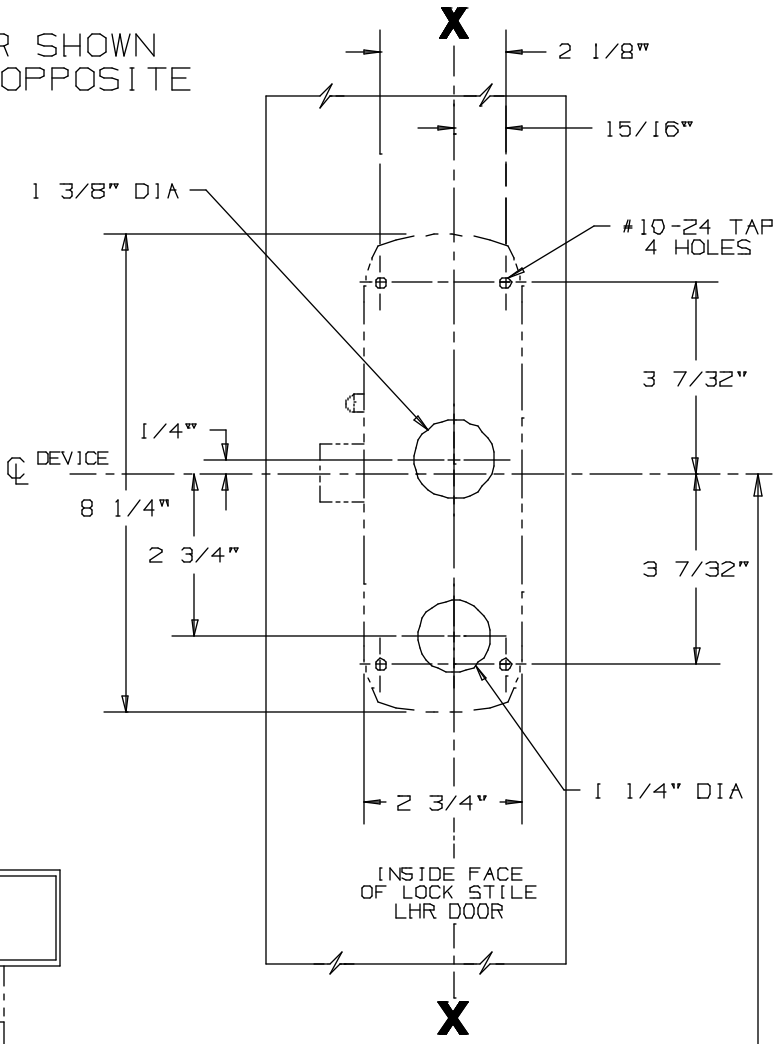

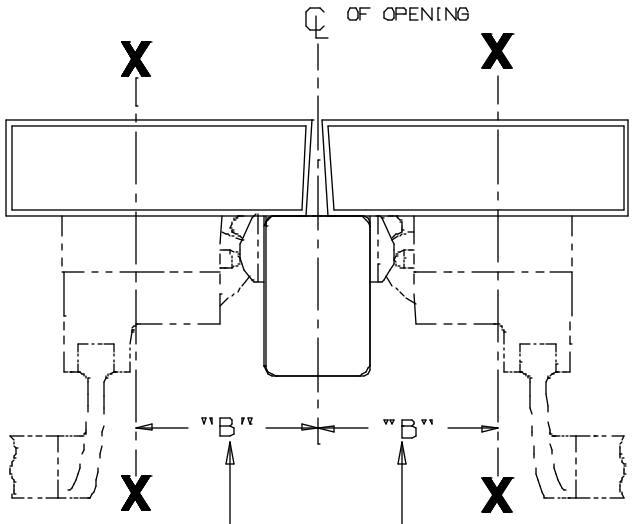

DOUBLE DOOR INSTALLATION WITH VON DUPRIN MULLIONS			
MULLION	STRIKE	DIMENSION "B"	MIN. STILE
9954	268	3 1/2"	4 11/16"

SINGLE DOOR OPENING
39 13/16" TO FINISHED FLOOR

DOUBLE DOOR OPENING
WITH VON DUPRIN MULLION
39 11/16"

(3)

FOR OUTSIDE TRIM PREPARATION,
SEE ADDITIONAL TRIM TEMPLATE.

CROSSBAR 36 13/16" FROM FINISHED FLOOR

88TP-F Rim Device

VON DUPRIN®

NOTES: SEE MASTER SHEET #10001 FOR SUGGESTED REINFORCING

TEMPLATE NUMBER: 10171_a

DATE: 05-15-13

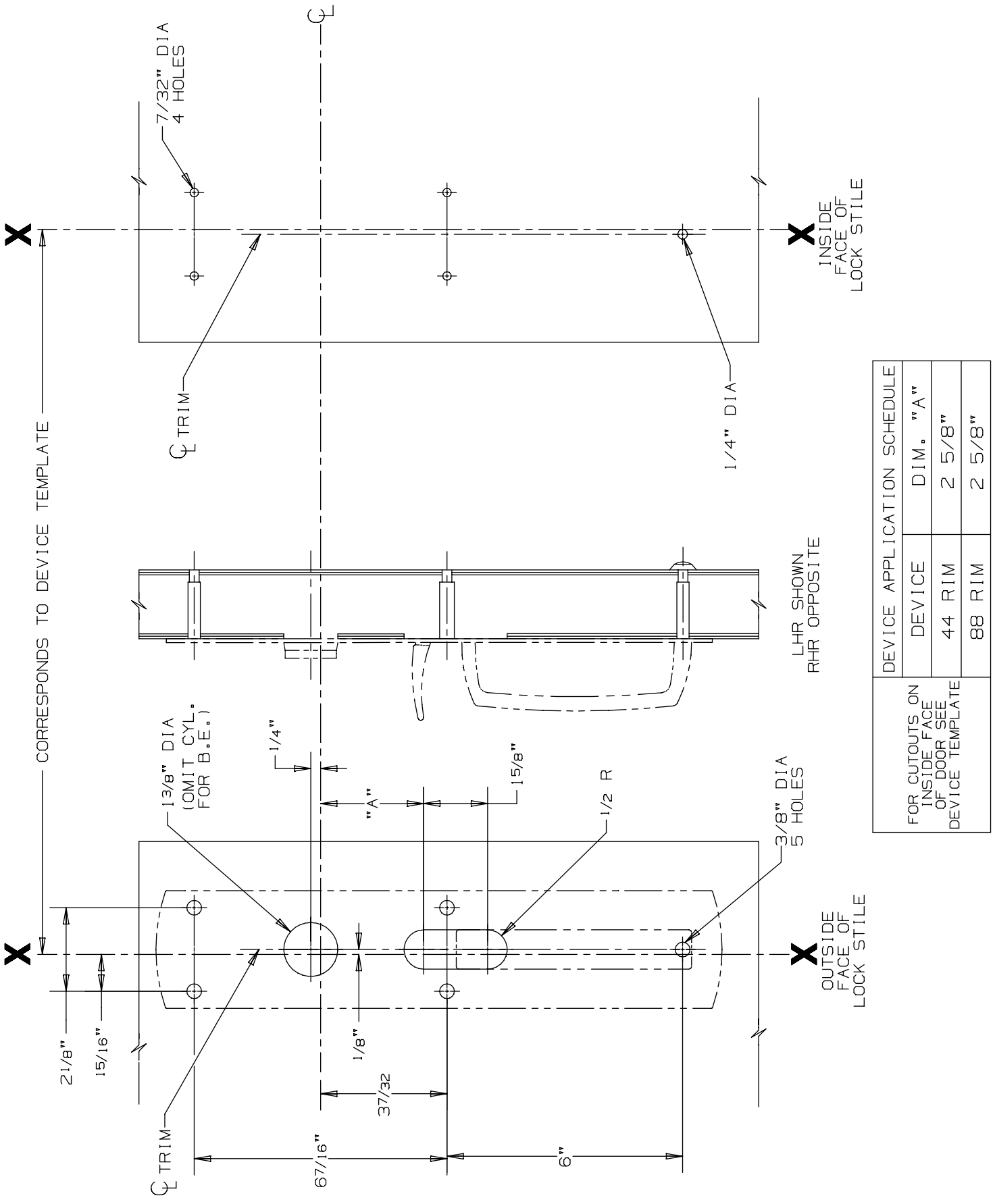

DEVICE APPLICATION SCHEDULE		
DEVICE	DIM. "A"	
44 RIM	2 5/8"	
88 RIM	2 5/8"	

FOR CUTOUTS ON INSIDE FACE OF DOOR SEE DEVICE TEMPLATE

880 TP & 880 TP-BE Trim for 44 & 88 Rim Devices

VON DUPRIN®

NOTES: SEE MASTER SHEET #10001 FOR SUGGESTED REINFORCING

TEMPLATE NUMBER: 20253_a

DATE: 05-28-13

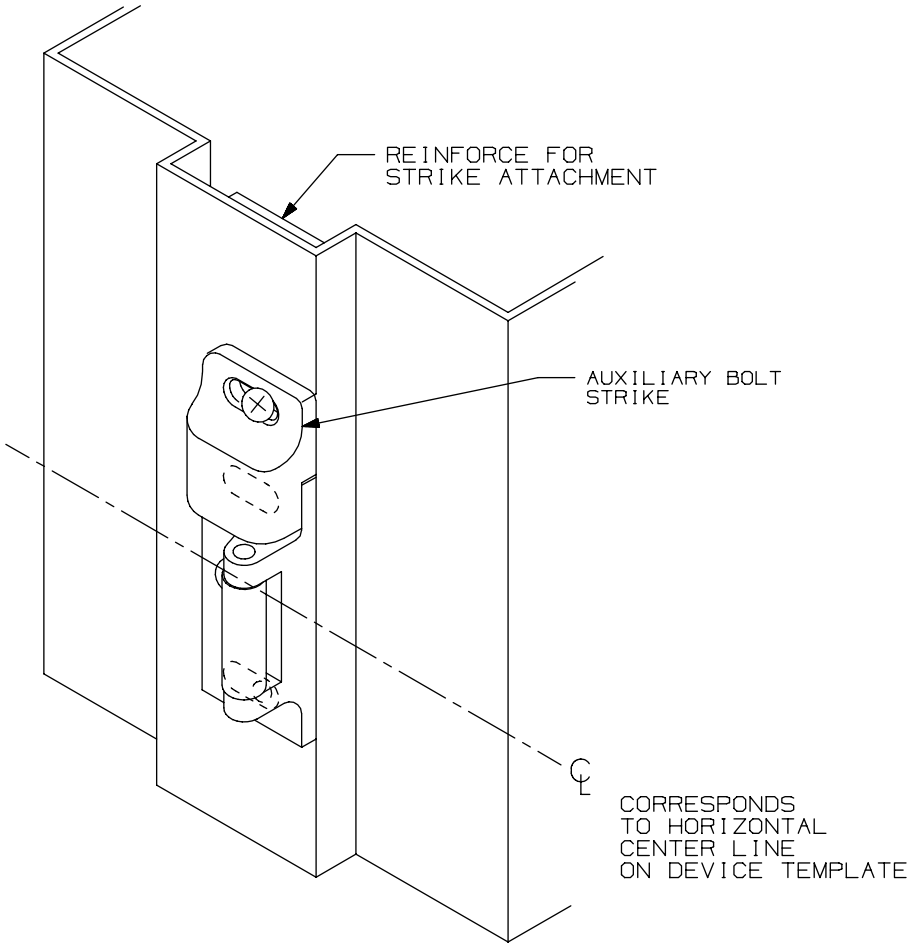

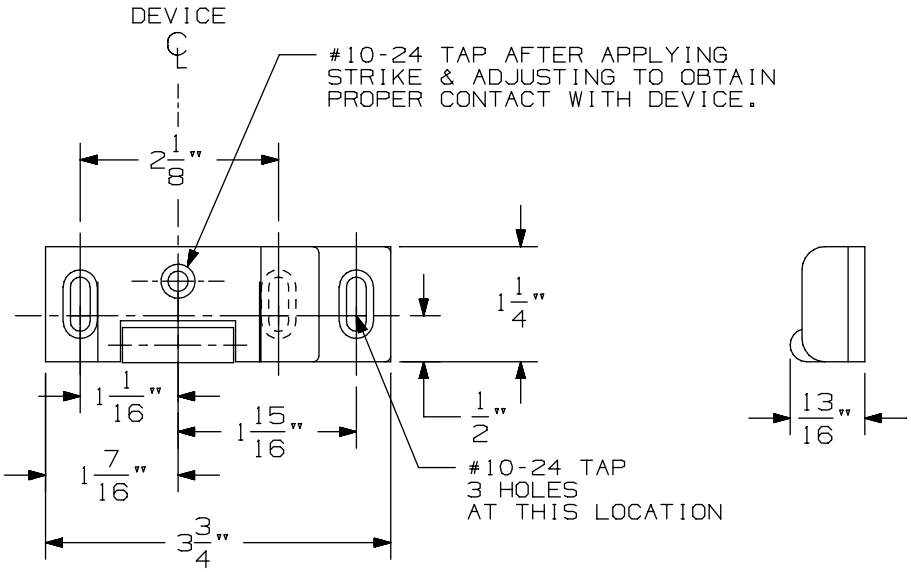

NOTE: AUXILARY BOLT STRIKE ALWAYS
ABOVE STRIKE ROLLER

268 Rim Strike

VON DUPRIN®

NOTES: SEE MASTER SHEET #10001 FOR SUGGESTED REINFORCING

TEMPLATE NUMBER: 30011_a

DATE: 05-23-13

88 Series Exit Devices

-

E88-F Rim Fire Electric Locking

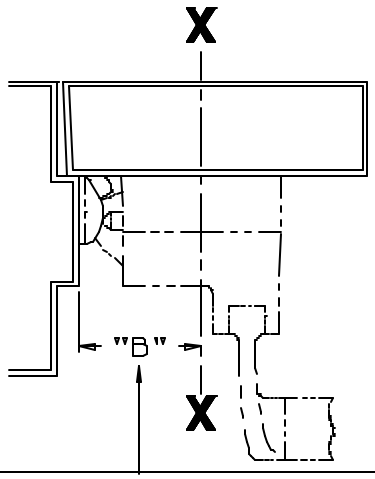

LHR SHOWN
RHR OPPOSITE

SINGLE DOOR INSTALLATION		
STRIKE	DIMENSION "B"	MIN. STILE
268	2 3/8"	4 3/8"

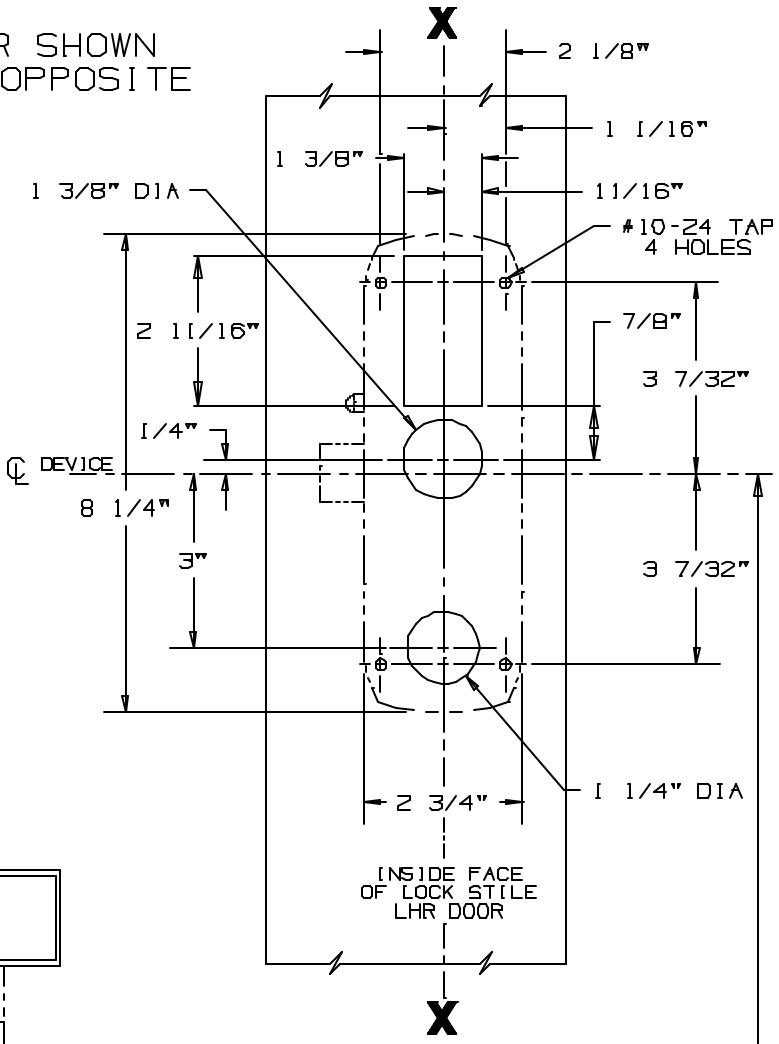

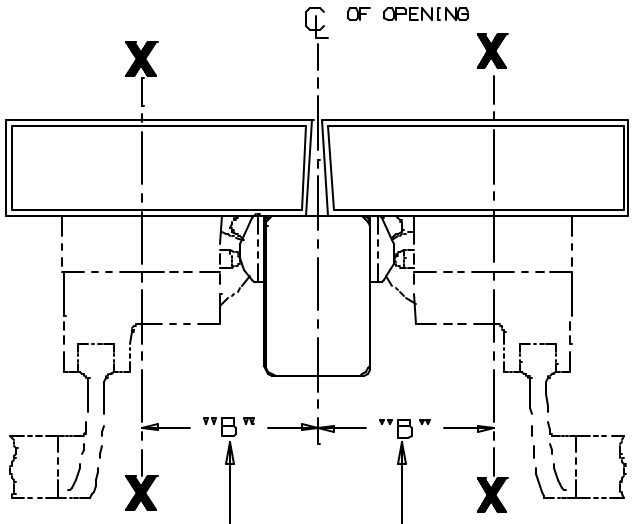

DOUBLE DOOR INSTALLATION WITH VON DUPRIN MULLIONS			
MULLION	STRIKE	DIMENSION "B"	MIN. STILE
9954	268	3 3/8"	4 11/16"

SINGLE DOOR OPENING
39 13/16" TO FINISHED FLOOR

DOUBLE DOOR OPENING
WITH VON DUPRIN MULLION
39 11/16"

③

FOR OUTSIDE TRIM PREPARATION,
SEE ADDITIONAL TRIM TEMPLATE.

NOTE: WIRING GOES THROUGH DOOR AND NOT DEVICE

CROSSBAR 36 13/16" FROM FINISHED FLOOR

E-88K-F & E-88K-F (F.S.) Series Electric Locking Rim Device

VON DUPRIN®

NOTES: SEE MASTER SHEET #10001 FOR SUGGESTED REINFORCING

TEMPLATE NUMBER: 10186_a

DATE: 05-16-13

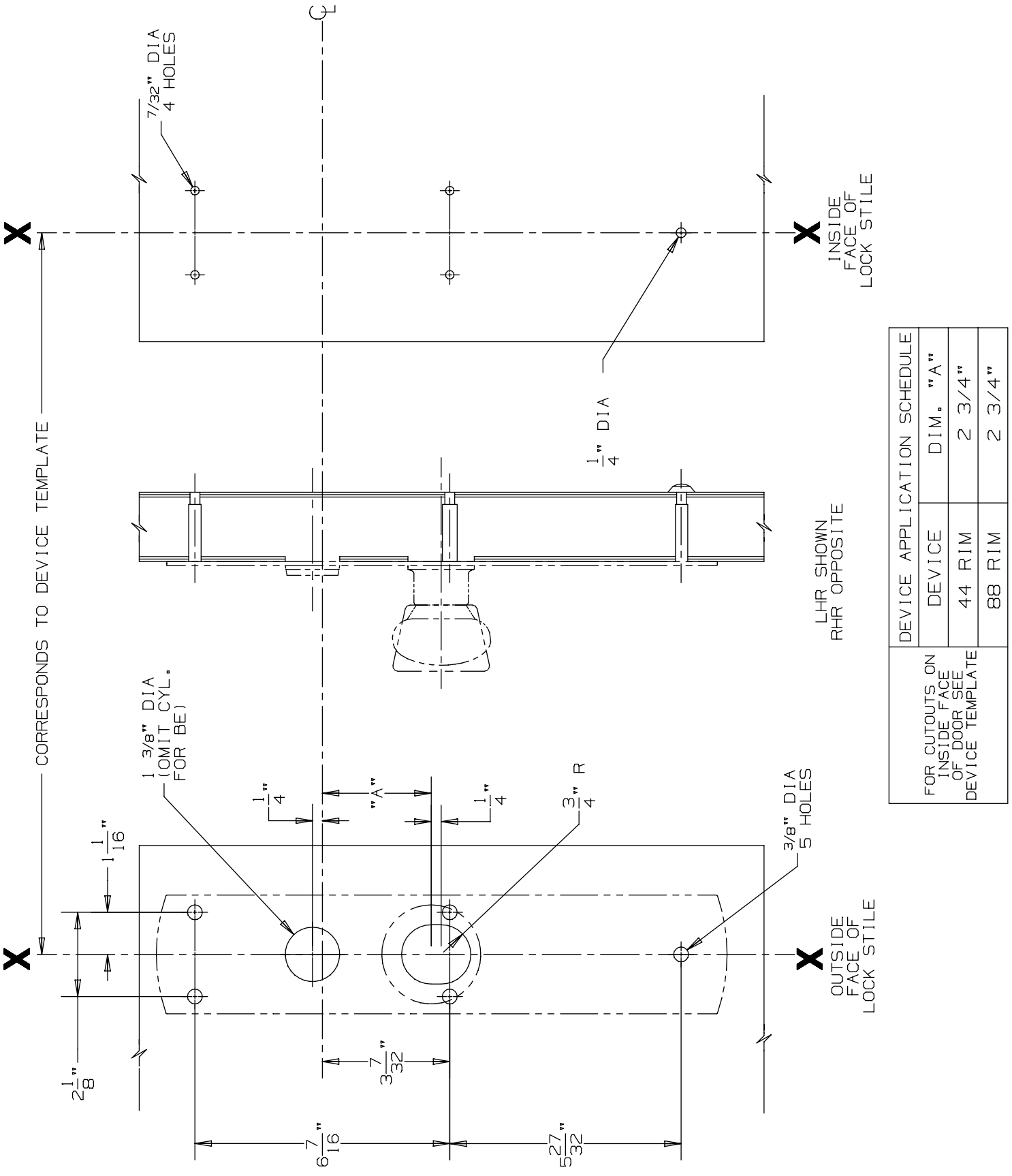

DEVICE APPLICATION SCHEDULE	
DEVICE	DIM. "A"
44 RIM	2 3/4"
88 RIM	2 3/4"

FOR CUTOUTS ON INSIDE FACE OF DOOR SEE DEVICE TEMPLATE

880 K & 880 K-BE Trim for 44 & 88 Rim Devices

VON DUPRIN®

NOTES: SEE MASTER SHEET #10001 FOR SUGGESTED REINFORCING

TEMPLATE NUMBER: 20254_a

DATE: 05-28-13

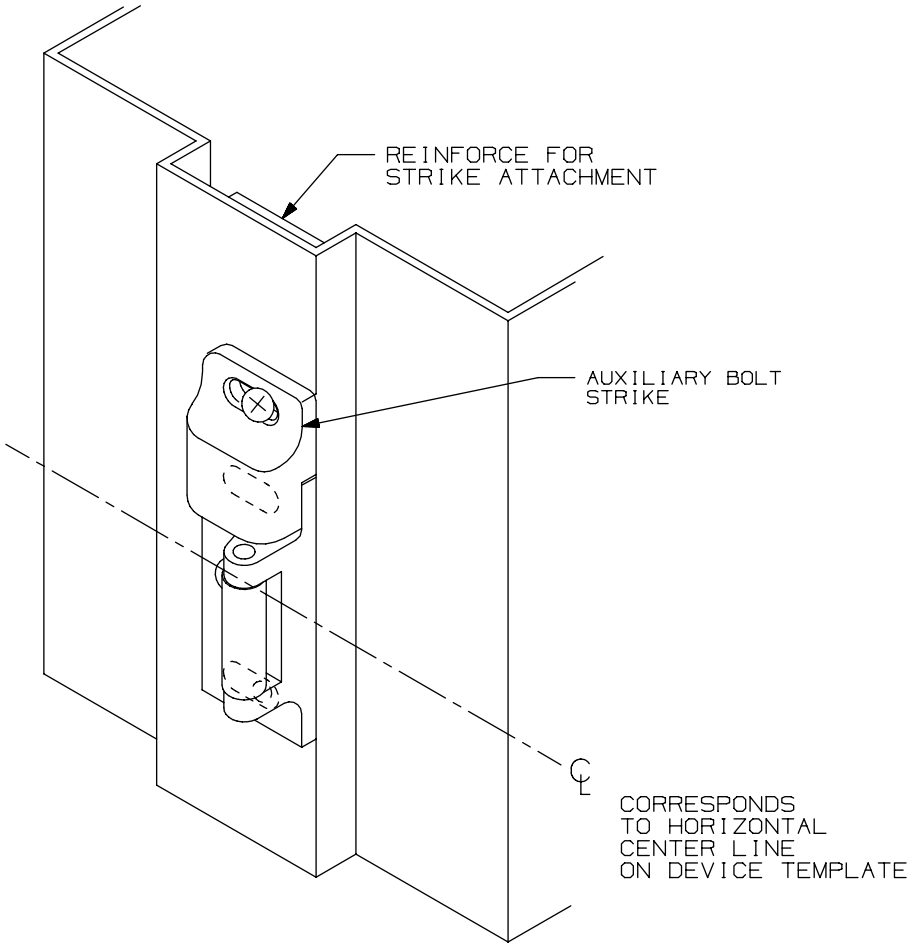

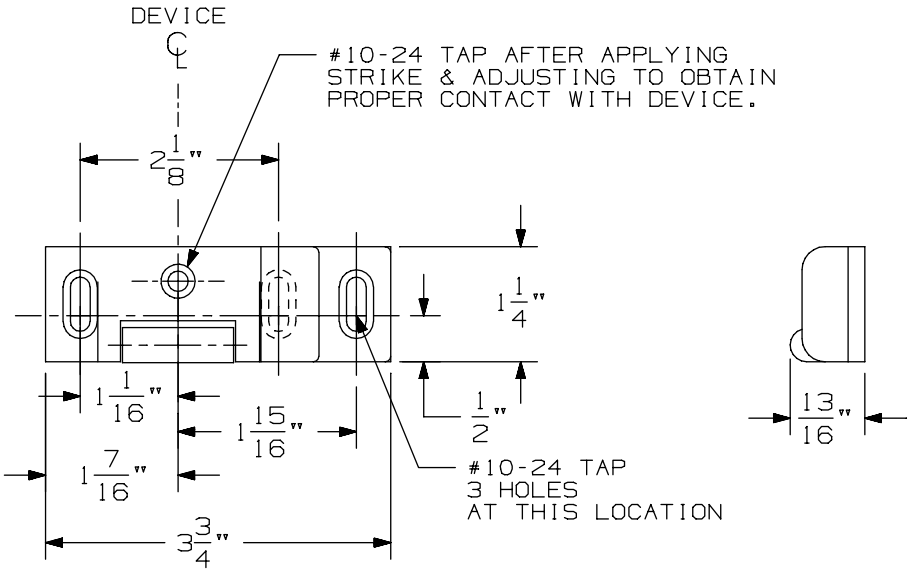

NOTE: AUXILARY BOLT STRIKE ALWAYS
ABOVE STRIKE ROLLER

268 Rim Strike

VON DUPRIN®

NOTES: SEE MASTER SHEET #10001 FOR SUGGESTED REINFORCING

TEMPLATE NUMBER: 30011_a

DATE: 05-23-13

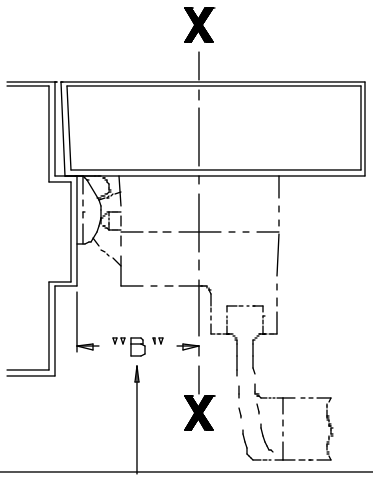

LHR SHOWN
RHR OPPOSITE

SINGLE DOOR INSTALLATION		
STRIKE	DIMENSION "B"	MIN. STILE
268	2 1/2"	4 3/8"

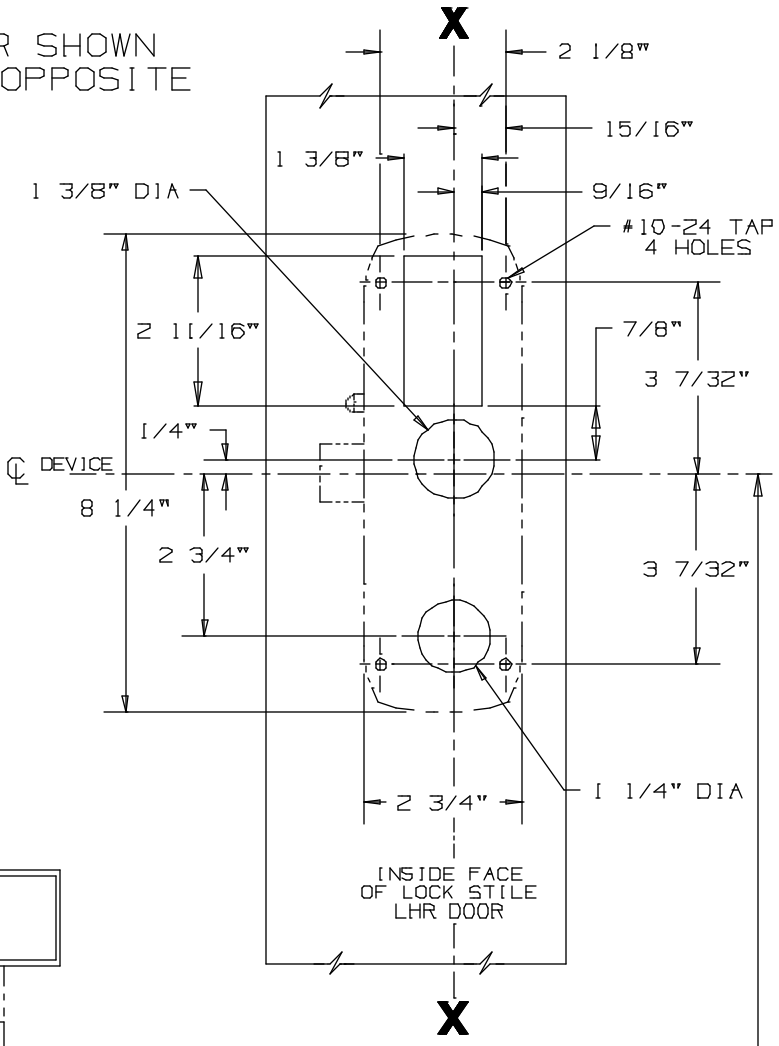

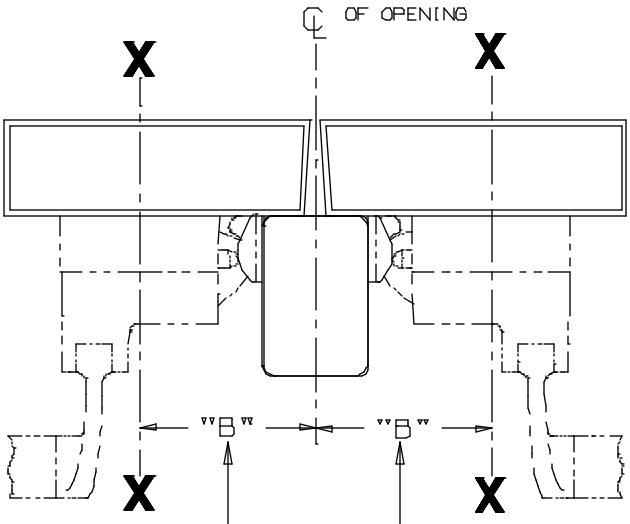

DOUBLE DOOR INSTALLATION WITH VON DUPRIN MULLIONS			
MULLION	STRIKE	DIMENSION "B"	MIN. STILE
9954	268	3 1/2"	4 11/16"

SINGLE DOOR OPENING
39 13/16" TO FINISHED FLOOR

DOUBLE DOOR OPENING
WITH VON DUPRIN MULLION
39 11/16"

③

FOR OUTSIDE TRIM PREPARATION,
SEE ADDITIONAL TRIM TEMPLATE.

NOTE: WIRING GOES THROUGH DOOR AND NOT DEVICE

CROSSBAR 36 13/16" FROM FINISHED FLOOR

E-88TP-F & E-88TP-F (F.S.) Series Electric Locking Rim Device

VON DUPRIN®

NOTES: SEE MASTER SHEET #10001 FOR SUGGESTED REINFORCING

TEMPLATE NUMBER: 10185_a

DATE: 05-16-13

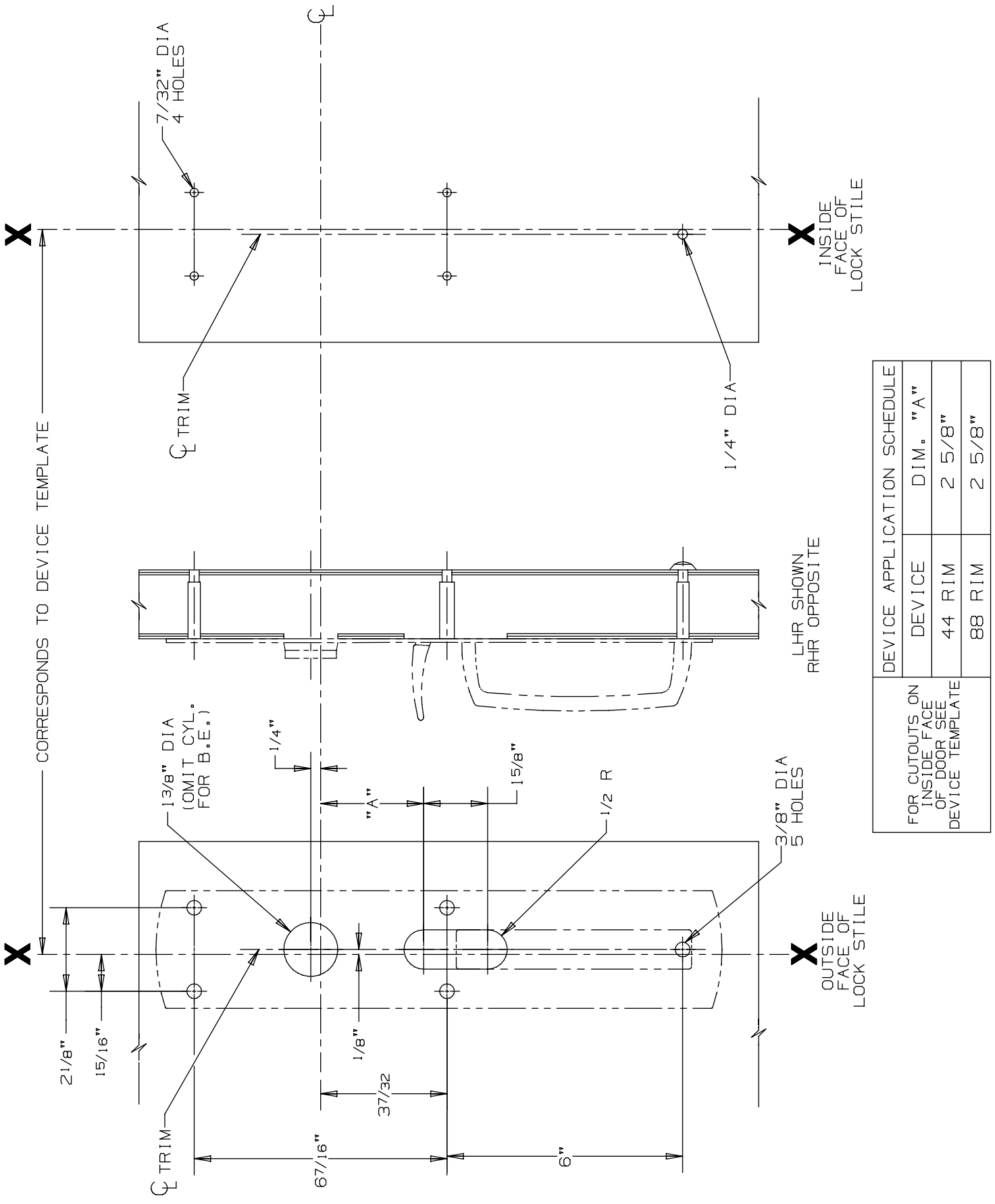

DEVICE APPLICATION SCHEDULE		
DEVICE	DIM. "A"	
44 RIM	2 5/8"	
88 RIM	2 5/8"	

FOR CUTOUTS ON INSIDE FACE OF DOOR SEE DEVICE TEMPLATE

880 TP & 880 TP-BE Trim for 44 & 88 Rim Devices

VON DUPRIN®

NOTES: SEE MASTER SHEET #10001 FOR SUGGESTED REINFORCING

TEMPLATE NUMBER: 20253_a

DATE: 05-28-13

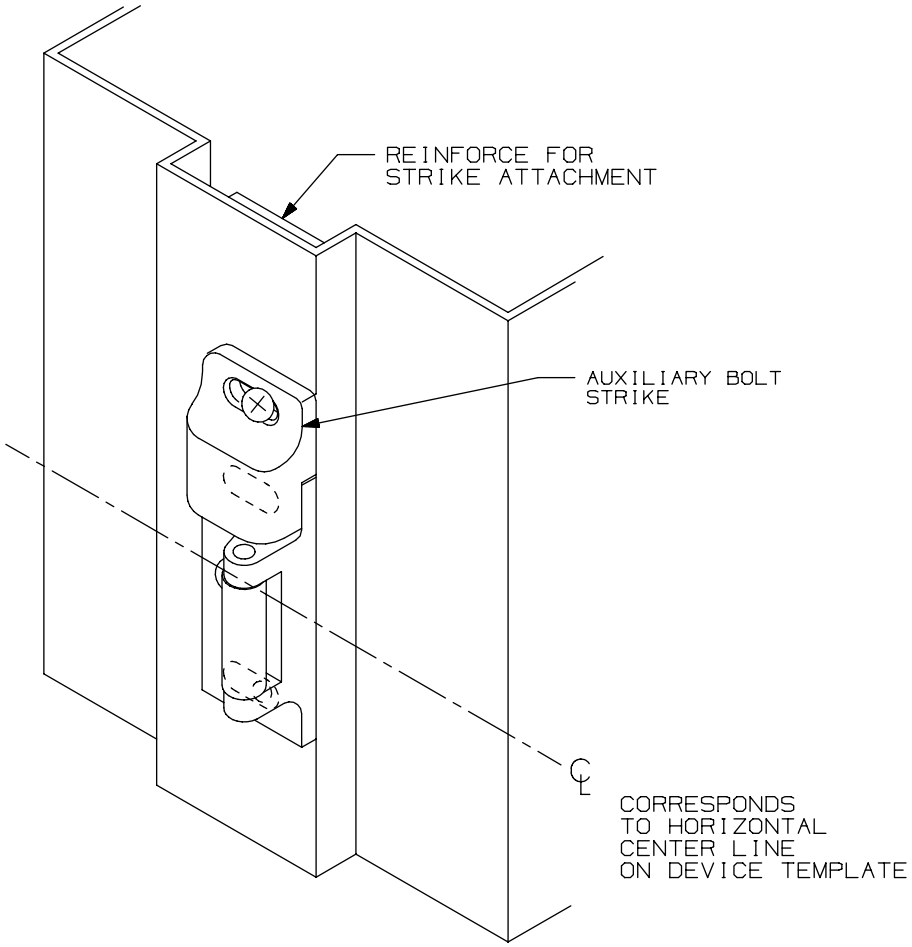

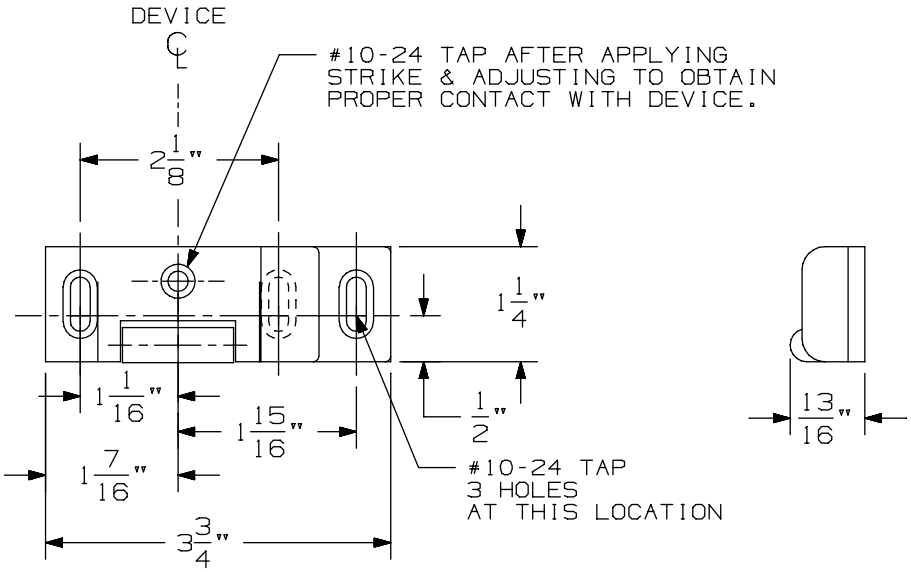

NOTE: AUXILARY BOLT STRIKE ALWAYS
ABOVE STRIKE ROLLER

268 Rim Strike

VON DUPRIN®

NOTES: SEE MASTER SHEET #10001 FOR SUGGESTED REINFORCING

TEMPLATE NUMBER: 30011_a

DATE: 05-23-13

88 Series Exit Devices

-

8827 Surface Vertical Rod

DEVICE APPLICATION SCHEDULE		
INSTALLATION	PANELED DOOR	FLUSH DOOR
TWO VERT. ROD DEVICES	1/2 OF STILE	2 1/2"
VERT. ROD & MORT. DEVICE	2 3/4"	2 3/4"
SINGLE DOOR	1/2 OF STILE	2 3/4"
VERT. ROD & RIM DEVICE REQUIRES 1609J STRIKE	3"	3"

NOTE: BACKSET MAY VARY WHEN USED WITH COORDINATOR DEPENDING ON TYPE USED.

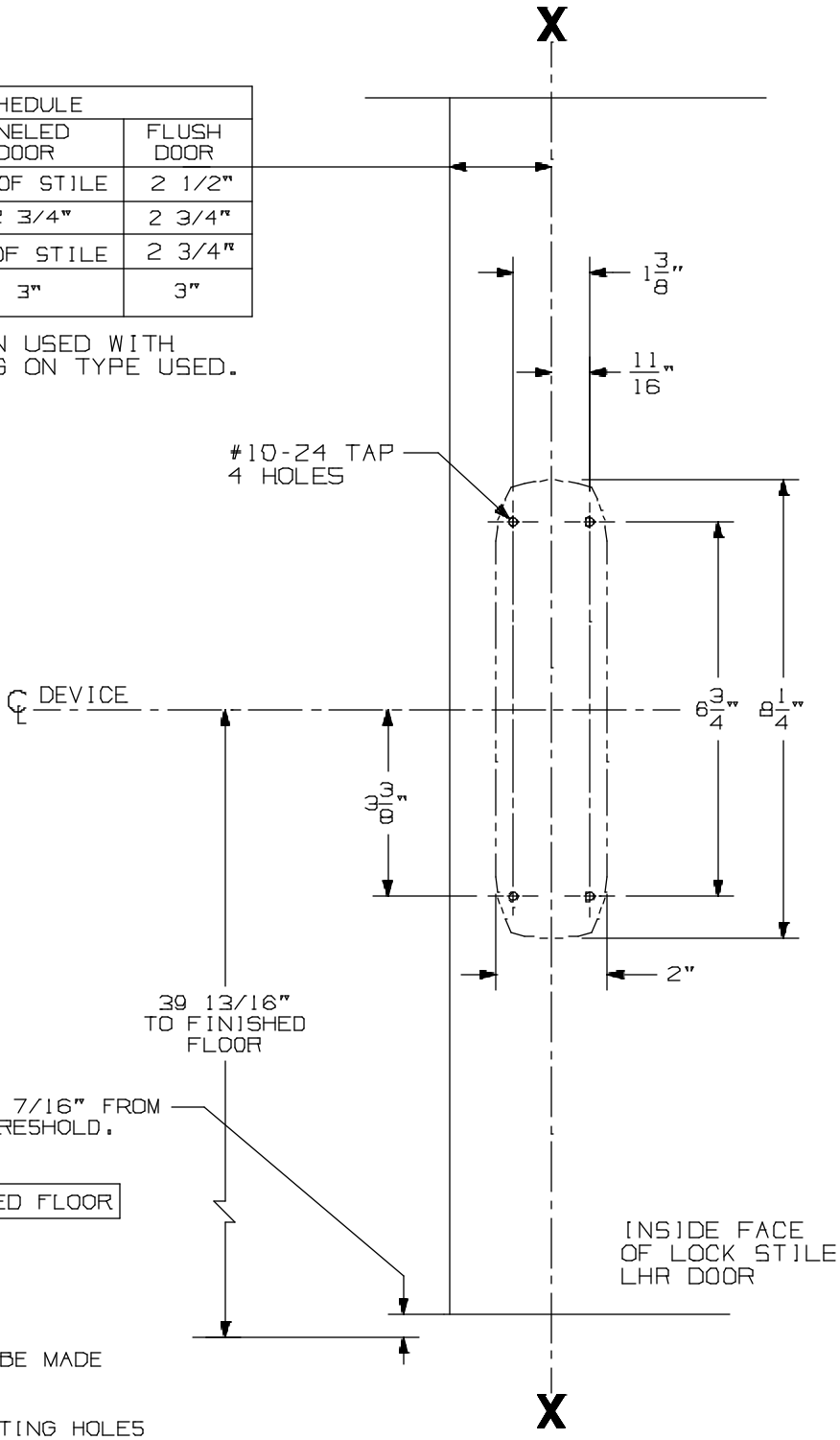

④

NOTE: REQUIRED DOOR UNDERCUT IS 7/16" FROM FINISHED FLOOR OR 1/18" FROM THRESHOLD.

CROSSBAR 36 13/16" FROM FINISHED FLOOR

NOTE: LATCH CASE PREPARATION TO BE MADE AT INSTALLATION ON DOOR.

NOTE: IT IS RECOMMENDED THE MOUNTING HOLES BE PREPARED IN THE FIELD.

FOR OUTSIDE TRIM PREPARATION, WHEN REQUIRED, SEE ADDITIONAL TRIM TEMPLATE.

LHR SHOWN
RHR OPPOSITE

8827EO, 8827DT, & 8827TL Series Vertical Rod Device

VON DUPRIN®

NOTES: SEE MASTER SHEET #10001 FOR SUGGESTED REINFORCING

TEMPLATE NUMBER: 10160_a

DATE: 05-16-13

RIM APPLICATION

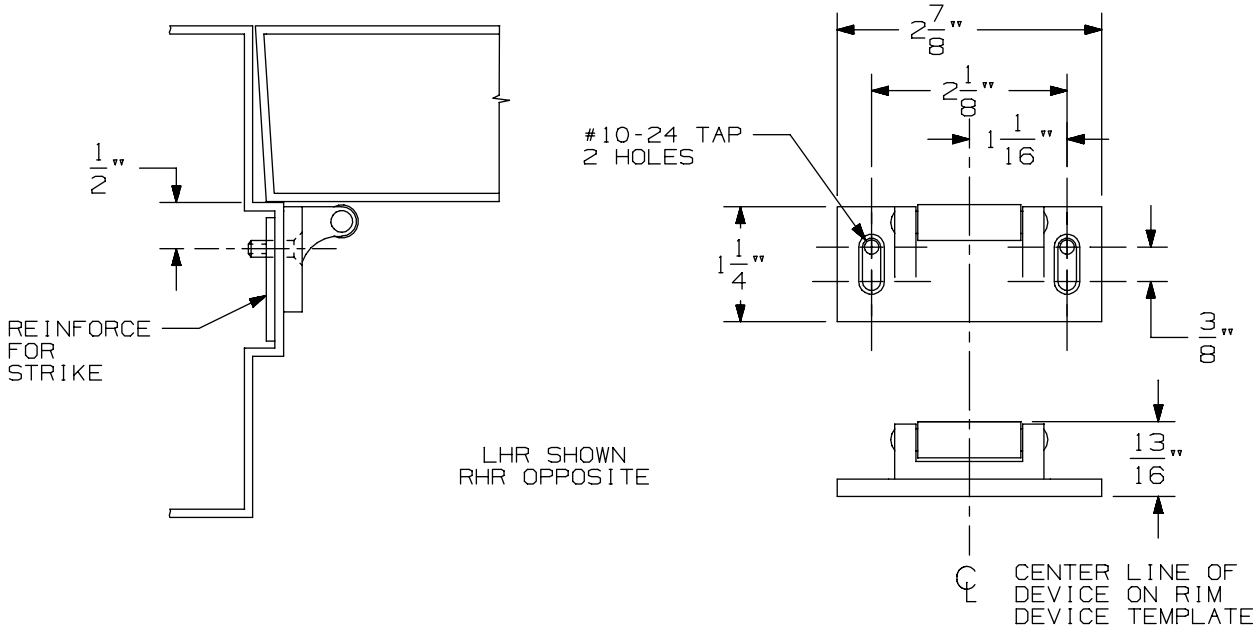

VERTICAL APPLICATION

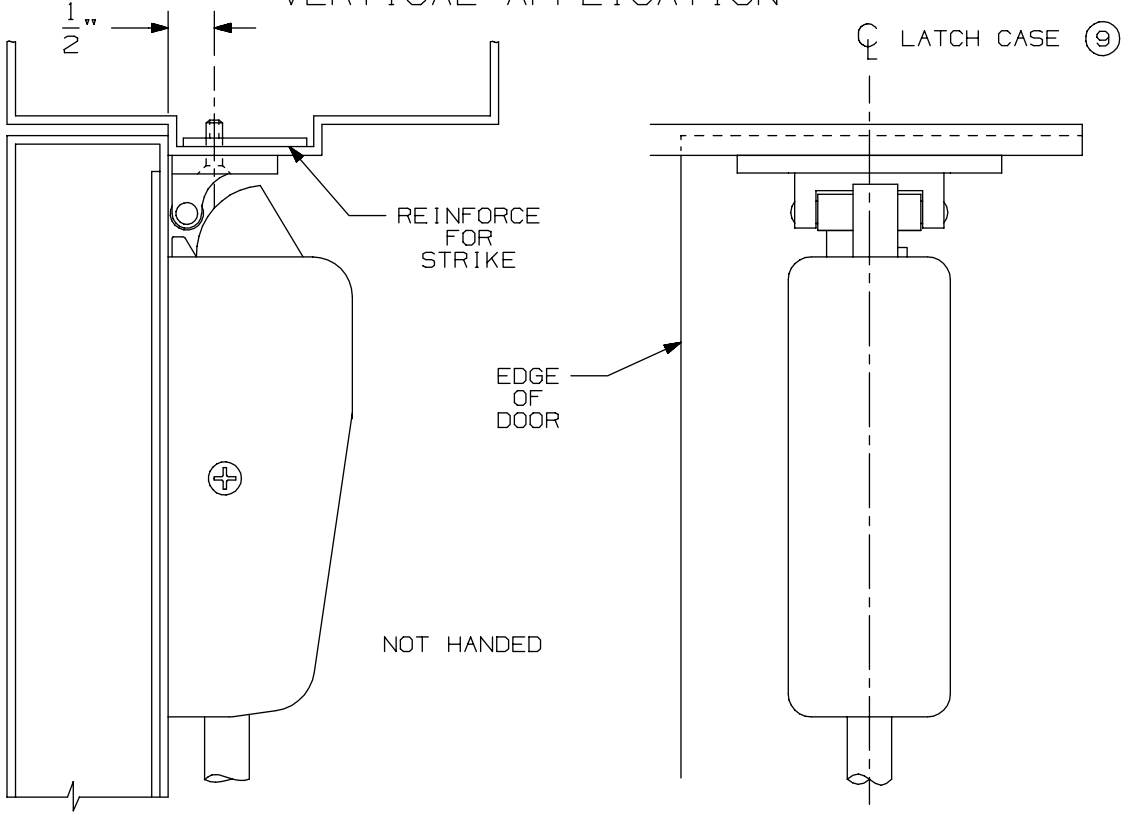

NOTE: LATCH CASE MOUNTING HOLES TO BE PREPARED AT INSTALLATION ON DOOR.

299 & 299F Strike

VON DUPRIN®

NOTES: SEE MASTER SHEET #10001 FOR SUGGESTED REINFORCING

TEMPLATE NUMBER: 30039_a

DATE: 05-23-13

DEVICE APPLICATION SCHEDULE		
INSTALLATION	PANELED DOOR	FLUSH DOOR
TWO VERT. ROD DEVICES	1/2 OF STILE	2 1/2"
VERT. ROD & MORT. DEVICE	2 3/4"	2 3/4"
SINGLE DOOR	1/2 OF STILE	2 3/4"
VERT. ROD & RIM DEVICE REQUIRES 1609J STRIKE	3"	3"

NOTE: BACKSET MAY VARY WHEN USED WITH COORDINATOR DEPENDING ON TYPE USED.

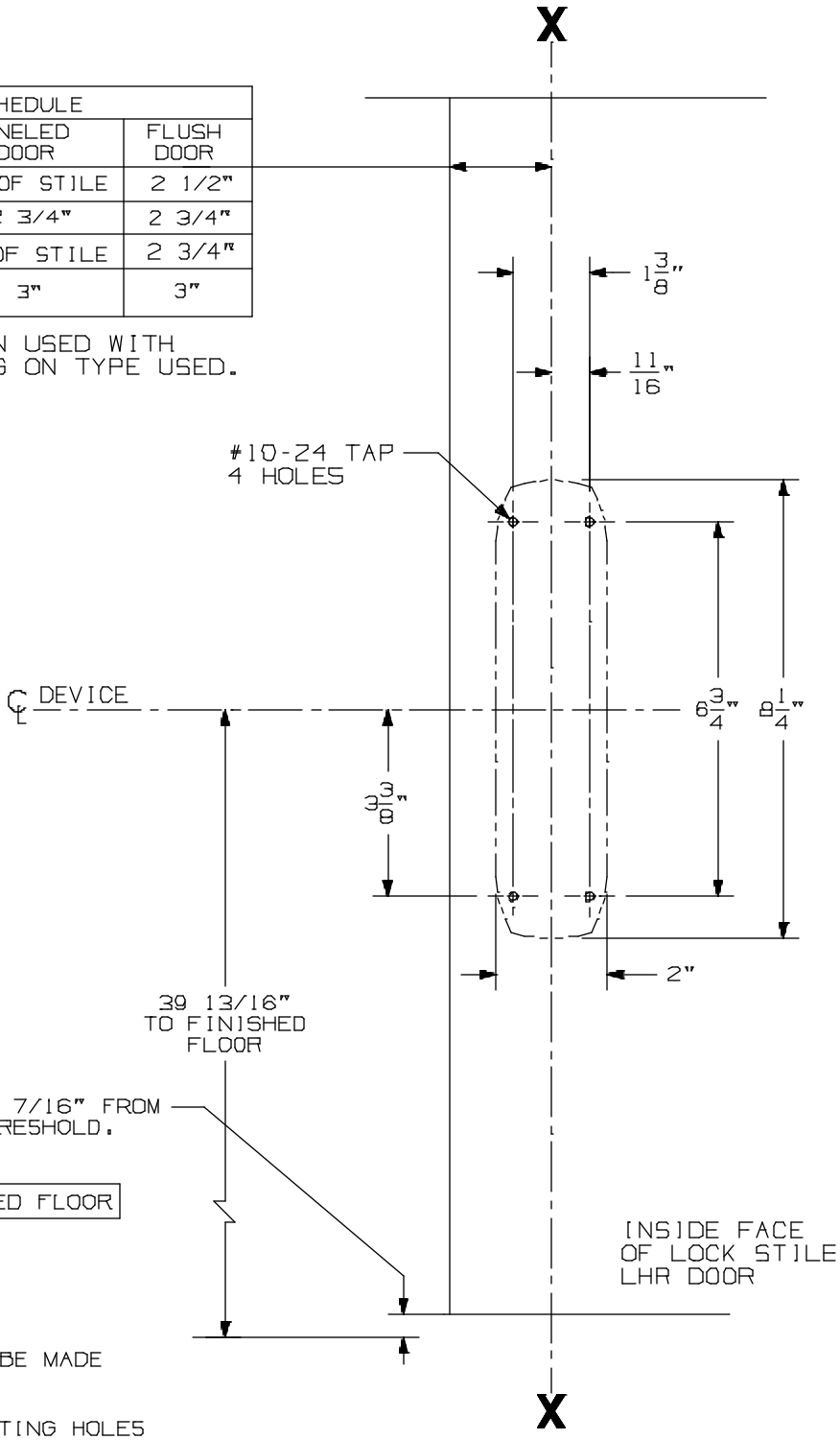

④

NOTE: REQUIRED DOOR UNDERCUT IS 7/16" FROM FINISHED FLOOR OR 1/18" FROM THRESHOLD.

CROSSBAR 36 13/16" FROM FINISHED FLOOR

NOTE: LATCH CASE PREPARATION TO BE MADE AT INSTALLATION ON DOOR.

NOTE: IT IS RECOMMENDED THE MOUNTING HOLES BE PREPARED IN THE FIELD.

FOR OUTSIDE TRIM PREPARATION, WHEN REQUIRED, SEE ADDITIONAL TRIM TEMPLATE.

LHR SHOWN
RHR OPPOSITE

8827EO, 8827DT, & 8827TL Series Vertical Rod Device

VON DUPRIN®

NOTES: SEE MASTER SHEET #10001 FOR SUGGESTED REINFORCING

TEMPLATE NUMBER: 10160_a

DATE: 05-16-13

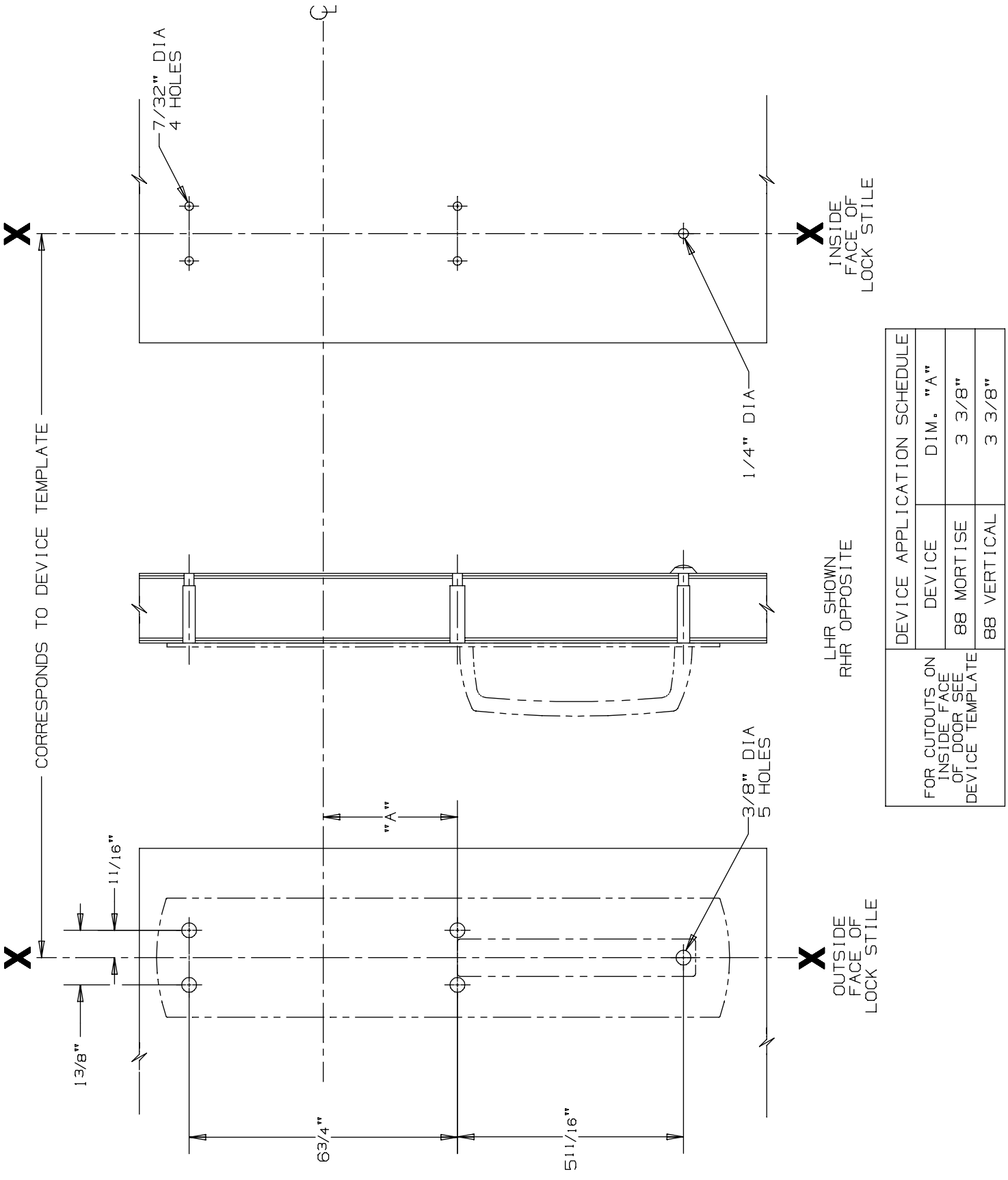

DEVICE APPLICATION SCHEDULE		
DEVICE	DIM. "A"	
88 MORTISE	3 3/8"	
88 VERTICAL	3 3/8"	

FOR CUTOUTS ON INSIDE FACE OF DOOR SEE DEVICE TEMPLATE

880 DT Trim for 88 Mortise & Vertical Devices

VON DUPRIN®

NOTES: SEE MASTER SHEET #10001 FOR SUGGESTED REINFORCING

TEMPLATE NUMBER: 20258_a

DATE: 05-28-13

RIM APPLICATION

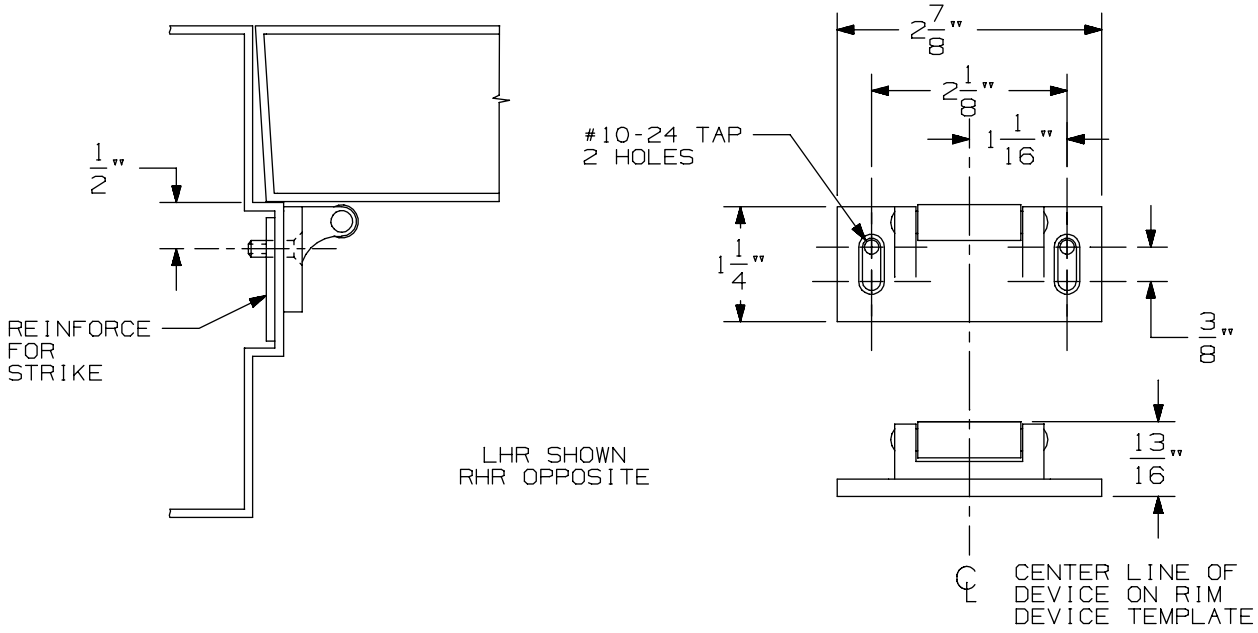

VERTICAL APPLICATION

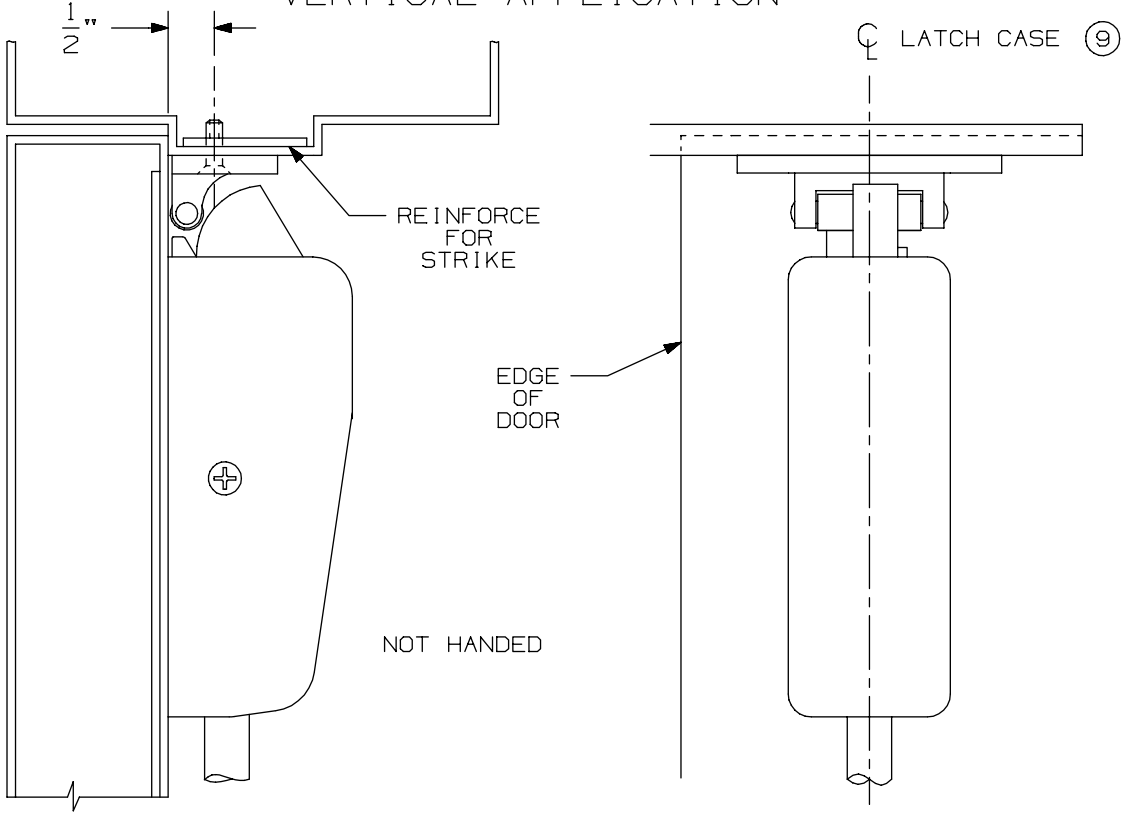

NOTE: LATCH CASE MOUNTING HOLES TO BE PREPARED AT INSTALLATION ON DOOR.

299 & 299F Strike

VON DUPRIN®

NOTES: SEE MASTER SHEET #10001 FOR SUGGESTED REINFORCING

TEMPLATE NUMBER: 30039_a

DATE: 05-23-13

DEVICE APPLICATION SCHEDULE		
INSTALLATION	PANELED DOOR	FLUSH DOOR
TWO VERT. ROD DEVICES	1/2 OF STILE	2 1/2"
VERT. ROD & MORT. DEVICE	2 3/4"	2 3/4"
SINGLE DOOR	1/2 OF STILE	2 3/4"
VERT. ROD & RIM DEVICE REQUIRES 1609J STRIKE	3"	3"

NOTE: BACKSET MAY VARY WHEN USED WITH COORDINATOR DEPENDING ON TYPE USED.

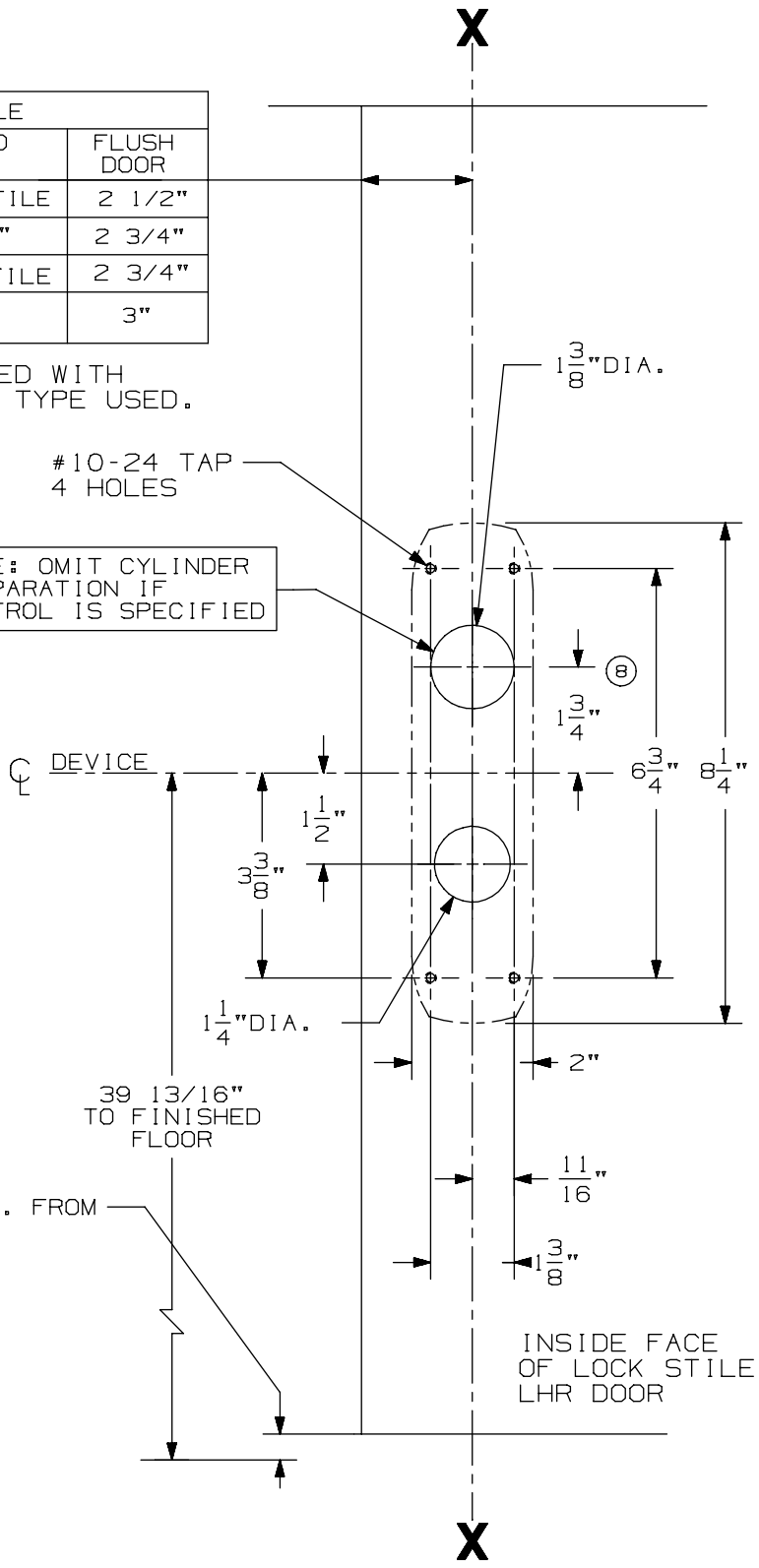

NOTE: REQUIRED DOOR UNDERCUT IS 7/16" MAX. FROM FINISHED FLOOR OR 1/8" FROM THRESHOLD.

CROSSBAR 36 13/16" FROM FINISHED FLOOR

NOTE: LATCH CASE PREPARATION TO BE MADE AT INSTALLATION ON DOOR.

NOTE: IT IS RECOMMENDED THE MOUNTING HOLES BE PREPARED IN THE FIELD.

FOR OUTSIDE TRIM PREPARATION, WHEN REQUIRED, SEE ADDITIONAL TRIM TEMPLATE.

LHR SHOWN
RHR OPPOSITE

8827K/L & 8827K/L-NL Series
Vertical Rod Device

VON DUPRIN®

NOTES: SEE MASTER SHEET #10001 FOR SUGGESTED REINFORCING

TEMPLATE NUMBER: 10162_a

DATE: 05-16-13

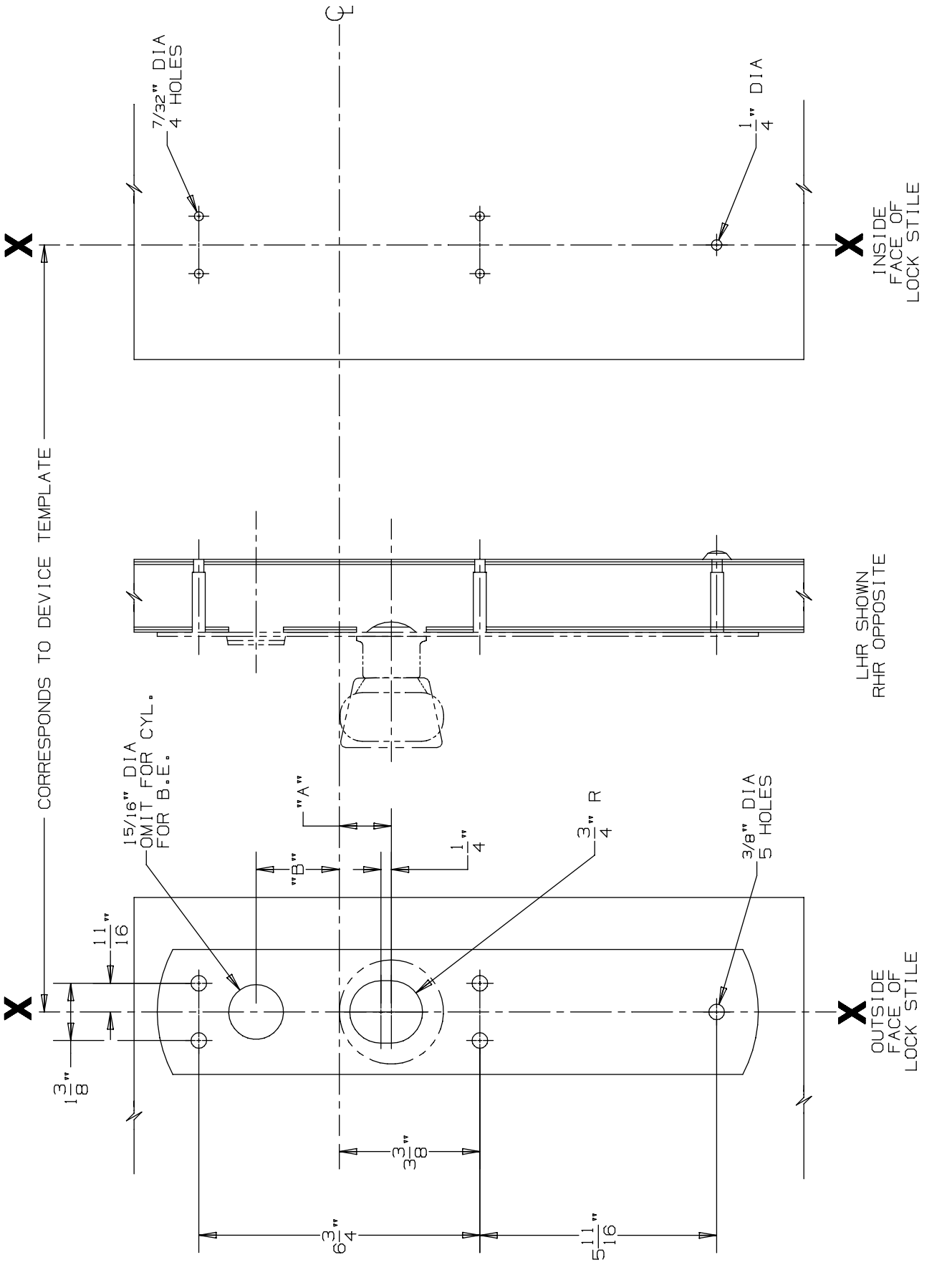

DEVICE APPLICATION SCHEDULE			
DEVICE	DIM. "A"	DIM. "B"
88 MORTISE	1 1/4"	2"
88 VERTICAL	1 1/2"	1 3/4"

FOR CUTOUTS ON INSIDE FACE OF DOOR SEE DEVICE TEMPLATE

880 K & 880 K-BE Trim for 88 Mortise & Vertical Devices

VON DUPRIN®

NOTES: SEE MASTER SHEET #10001 FOR SUGGESTED REINFORCING

TEMPLATE NUMBER: 20261_a

DATE: 05-23-13

RIM APPLICATION

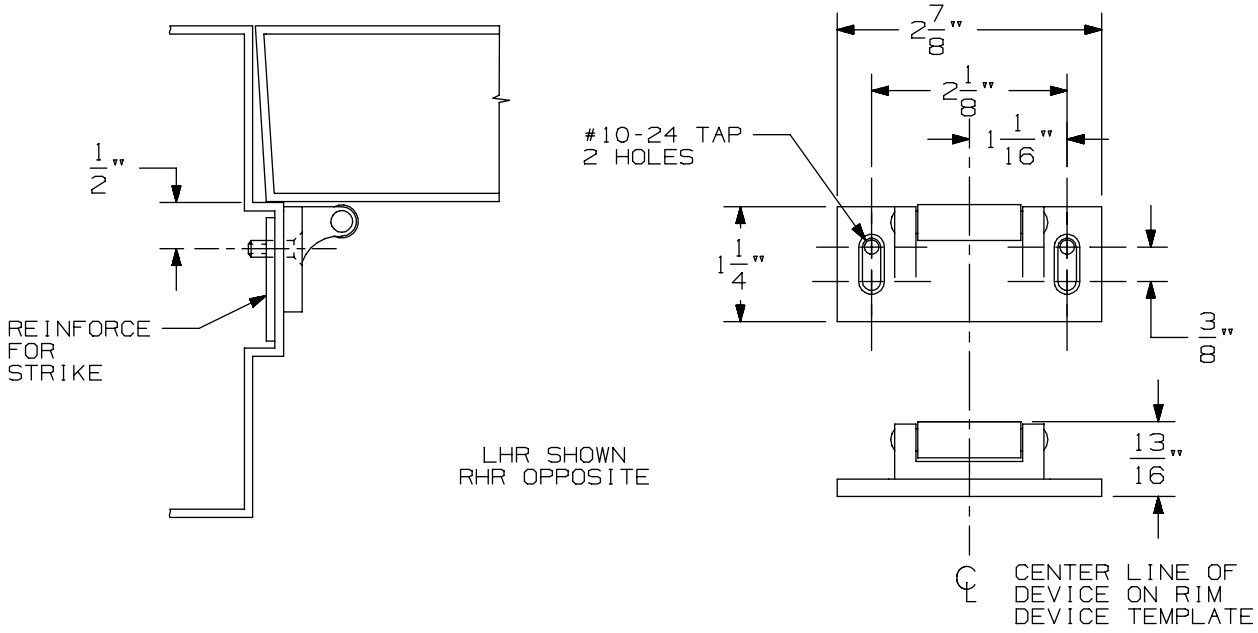

VERTICAL APPLICATION

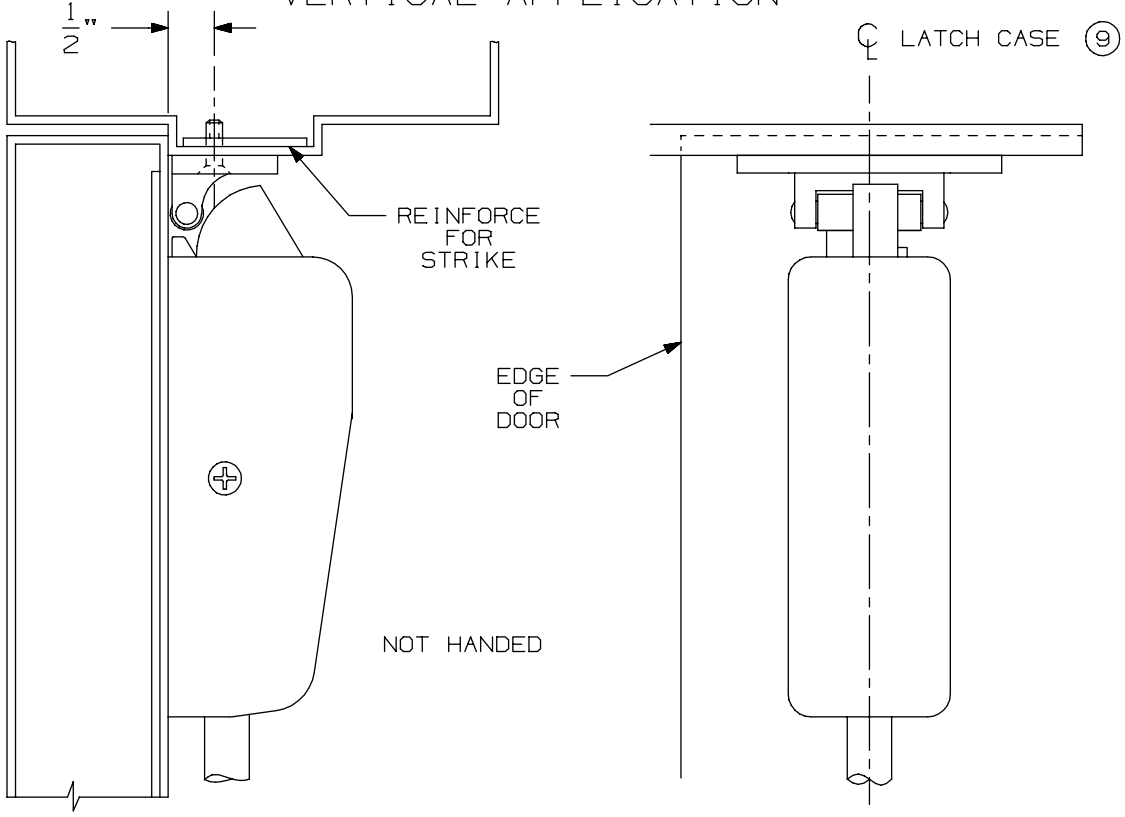

NOTE: LATCH CASE MOUNTING HOLES TO BE PREPARED AT INSTALLATION ON DOOR.

299 & 299F Strike

VON DUPRIN®

NOTES: SEE MASTER SHEET #10001 FOR SUGGESTED REINFORCING

TEMPLATE NUMBER: 30039_a

DATE: 05-23-13

DEVICE APPLICATION SCHEDULE		
INSTALLATION	PANELED DOOR	FLUSH DOOR
TWO VERT. ROD DEVICES	1/2 OF STILE	2 1/2"
VERT. ROD & MORT. DEVICE	2 3/4"	2 3/4"
SINGLE DOOR	1/2 OF STILE	2 3/4"
VERT. ROD & RIM DEVICE REQUIRES 1609J STRIKE	3"	3"

NOTE: BACKSET MAY VARY WHEN USED WITH COORDINATOR DEPENDING ON TYPE USED.

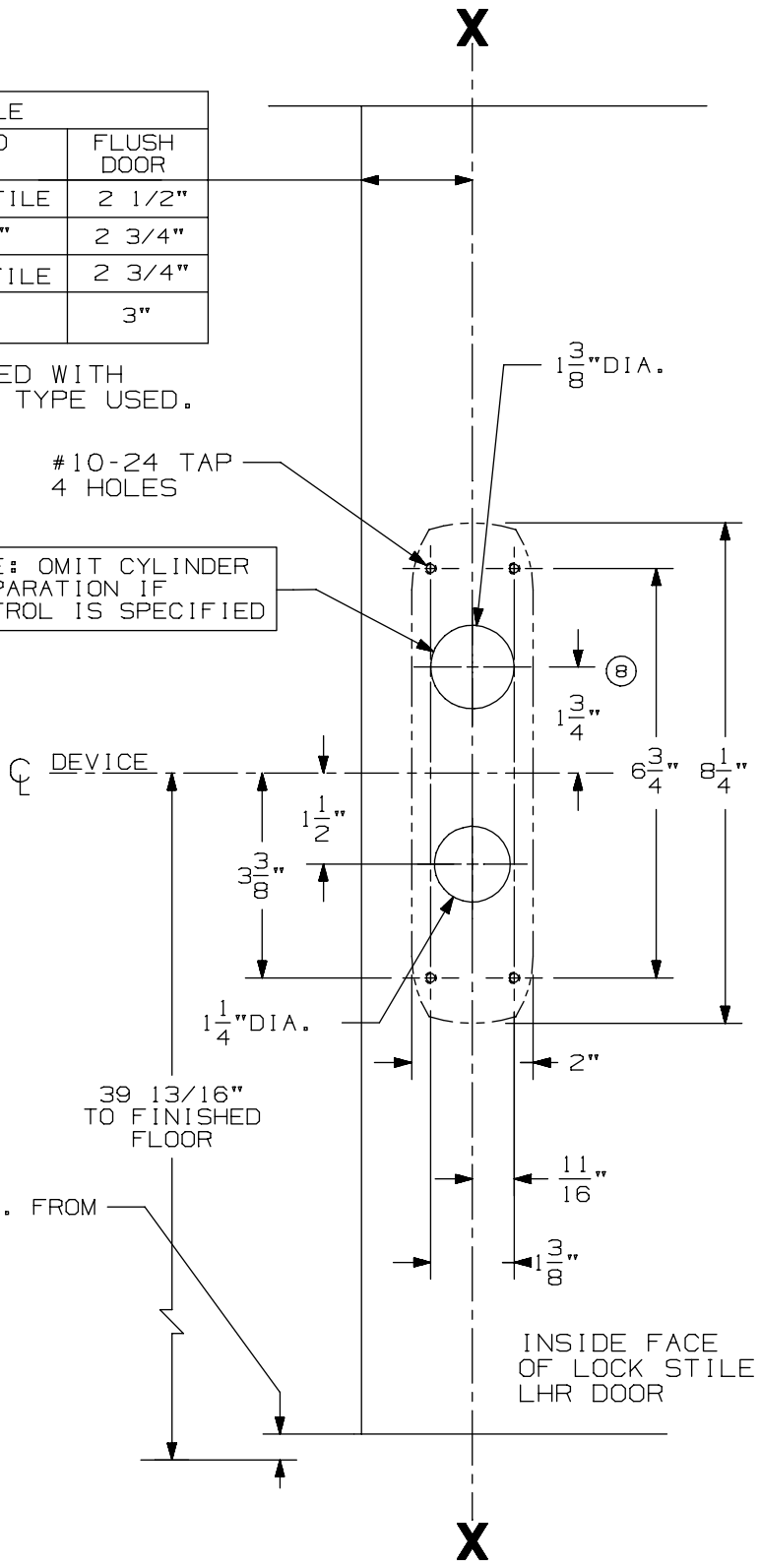

NOTE: REQUIRED DOOR UNDERCUT IS 7/16" MAX. FROM FINISHED FLOOR OR 1/8" FROM THRESHOLD.

CROSSBAR 36 13/16" FROM FINISHED FLOOR

NOTE: LATCH CASE PREPARATION TO BE MADE AT INSTALLATION ON DOOR.

NOTE: IT IS RECOMMENDED THE MOUNTING HOLES BE PREPARED IN THE FIELD.

FOR OUTSIDE TRIM PREPARATION, WHEN REQUIRED, SEE ADDITIONAL TRIM TEMPLATE.

LHR SHOWN
RHR OPPOSITE

8827K/L & 8827K/L-NL Series
Vertical Rod Device

VON DUPRIN®

NOTES: SEE MASTER SHEET #10001 FOR SUGGESTED REINFORCING

TEMPLATE NUMBER: 10162_a

DATE: 05-16-13

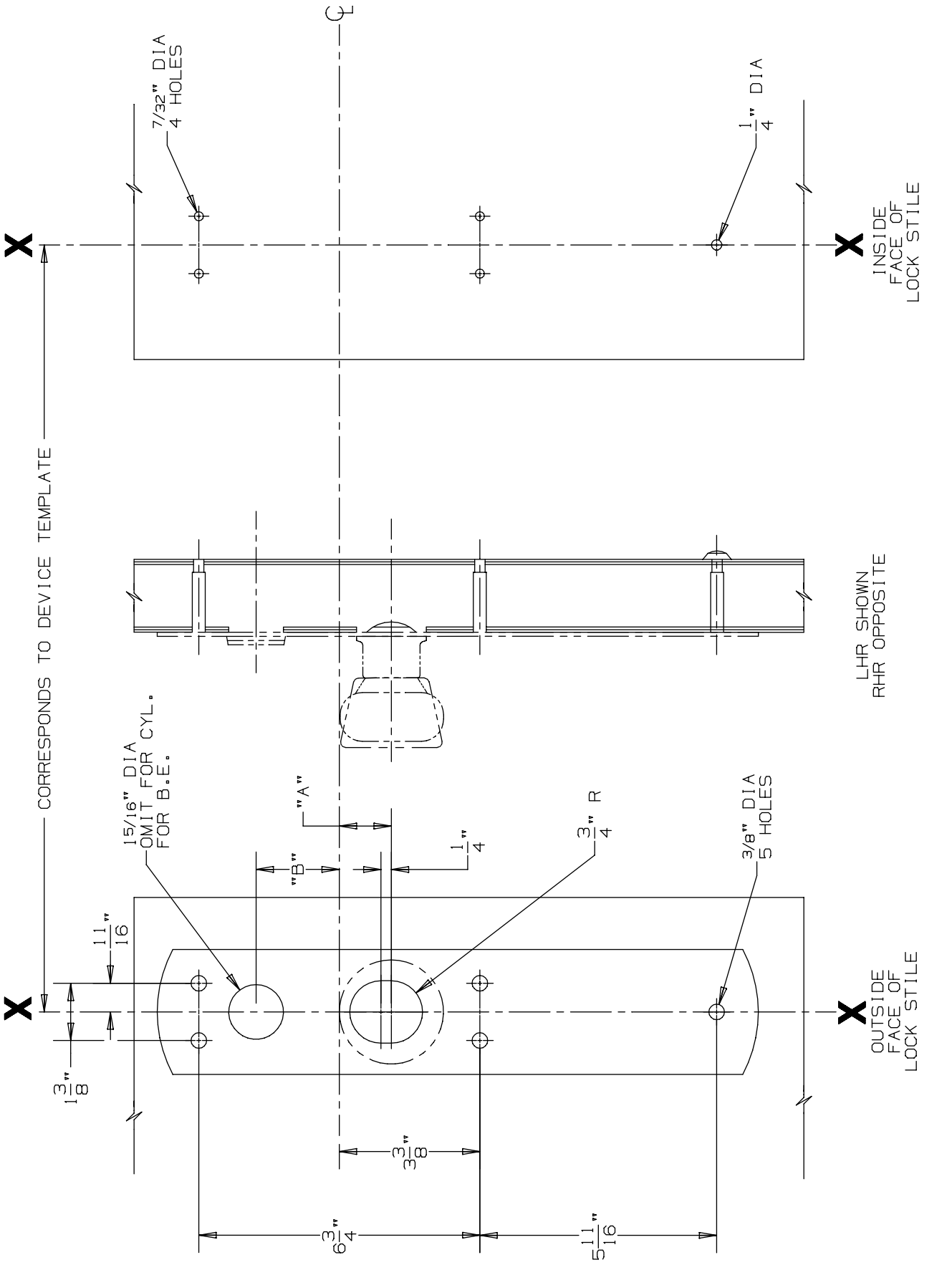

DEVICE APPLICATION SCHEDULE			
DEVICE	DIM. "A"	DIM. "B"
88 MORTISE	1 1/4"	2"
88 VERTICAL	1 1/2"	1 3/4"

FOR CUTOUTS ON INSIDE FACE OF DOOR SEE DEVICE TEMPLATE

880 K & 880 K-BE Trim for 88 Mortise & Vertical Devices

VON DUPRIN®

NOTES: SEE MASTER SHEET #10001 FOR SUGGESTED REINFORCING

TEMPLATE NUMBER: 20261_a

DATE: 05-23-13

RIM APPLICATION

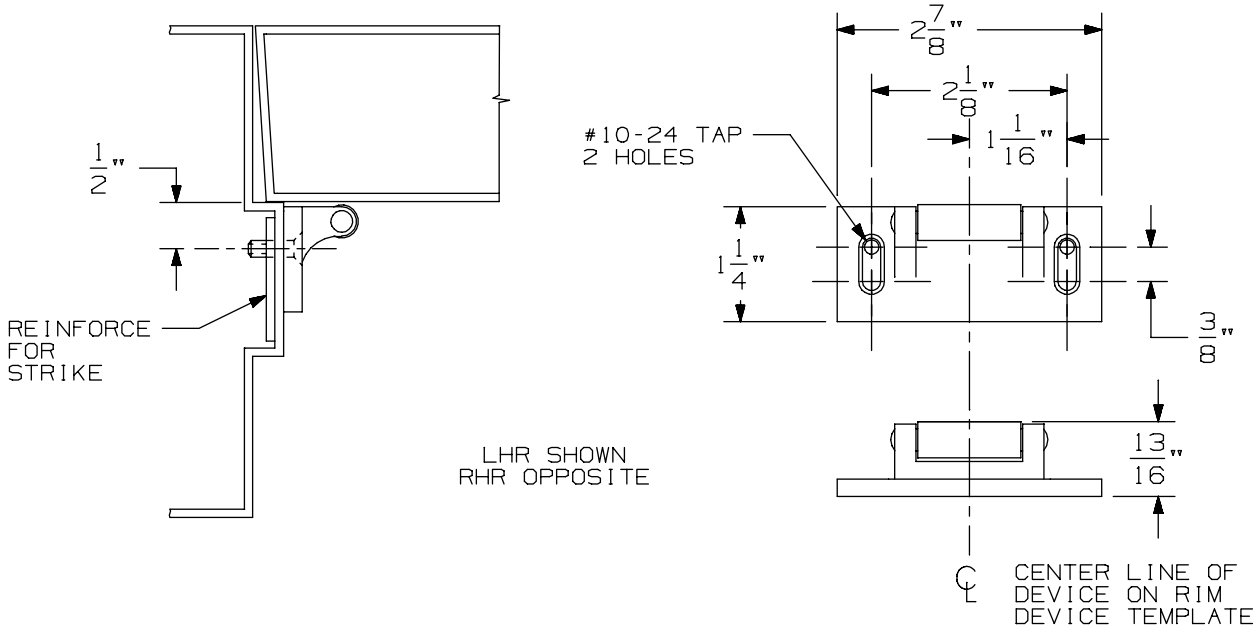

VERTICAL APPLICATION

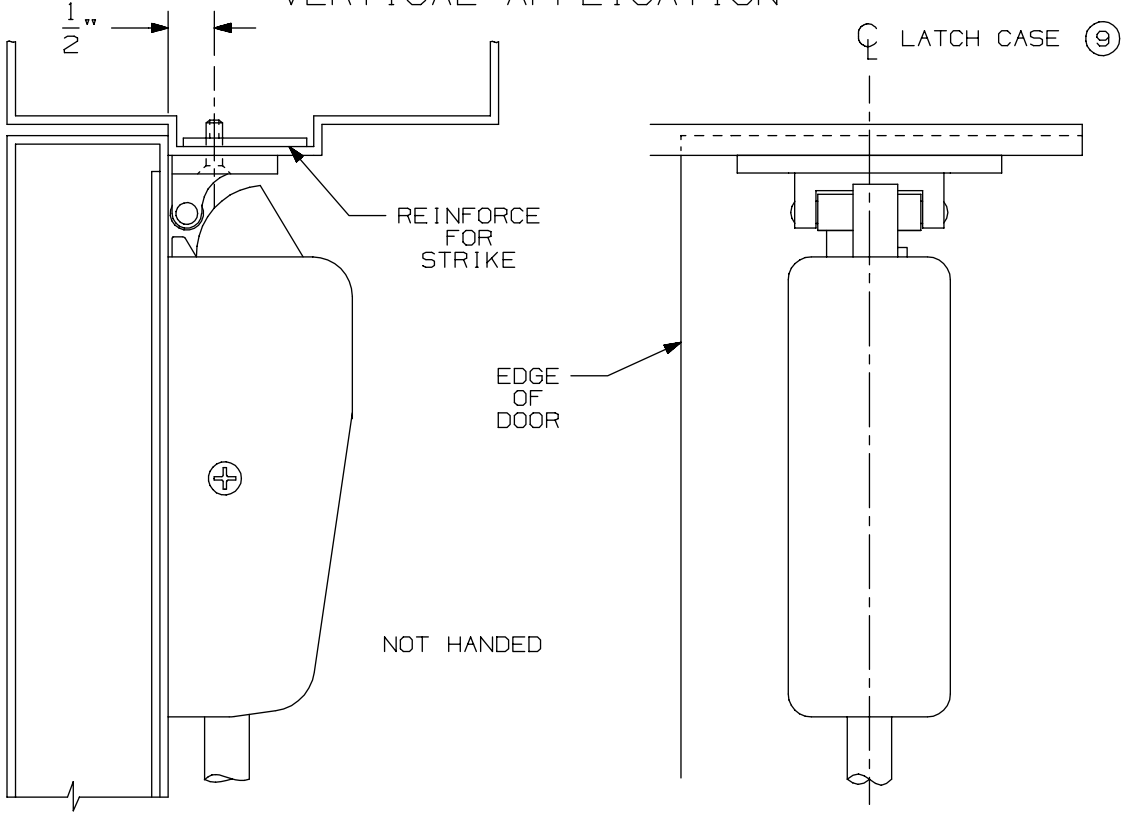

NOTE: LATCH CASE MOUNTING HOLES TO BE PREPARED AT INSTALLATION ON DOOR.

299 & 299F Strike

VON DUPRIN®

NOTES: SEE MASTER SHEET #10001 FOR SUGGESTED REINFORCING

TEMPLATE NUMBER: 30039_a

DATE: 05-23-13

DEVICE APPLICATION SCHEDULE		
INSTALLATION	PANELED DOOR	FLUSH DOOR
TWO VERT. ROD DEVICES	1/2 OF STILE	2 1/2"
VERT. ROD & MORT. DEVICE	2 3/4"	2 3/4"
SINGLE DOOR	1/2 OF STILE	2 3/4"
VERT. ROD & RIM DEVICE REQUIRES 1609J STRIKE	3"	3"

NOTE: BACKSET MAY VARY WHEN USED WITH COORDINATOR DEPENDING ON TYPE USED.

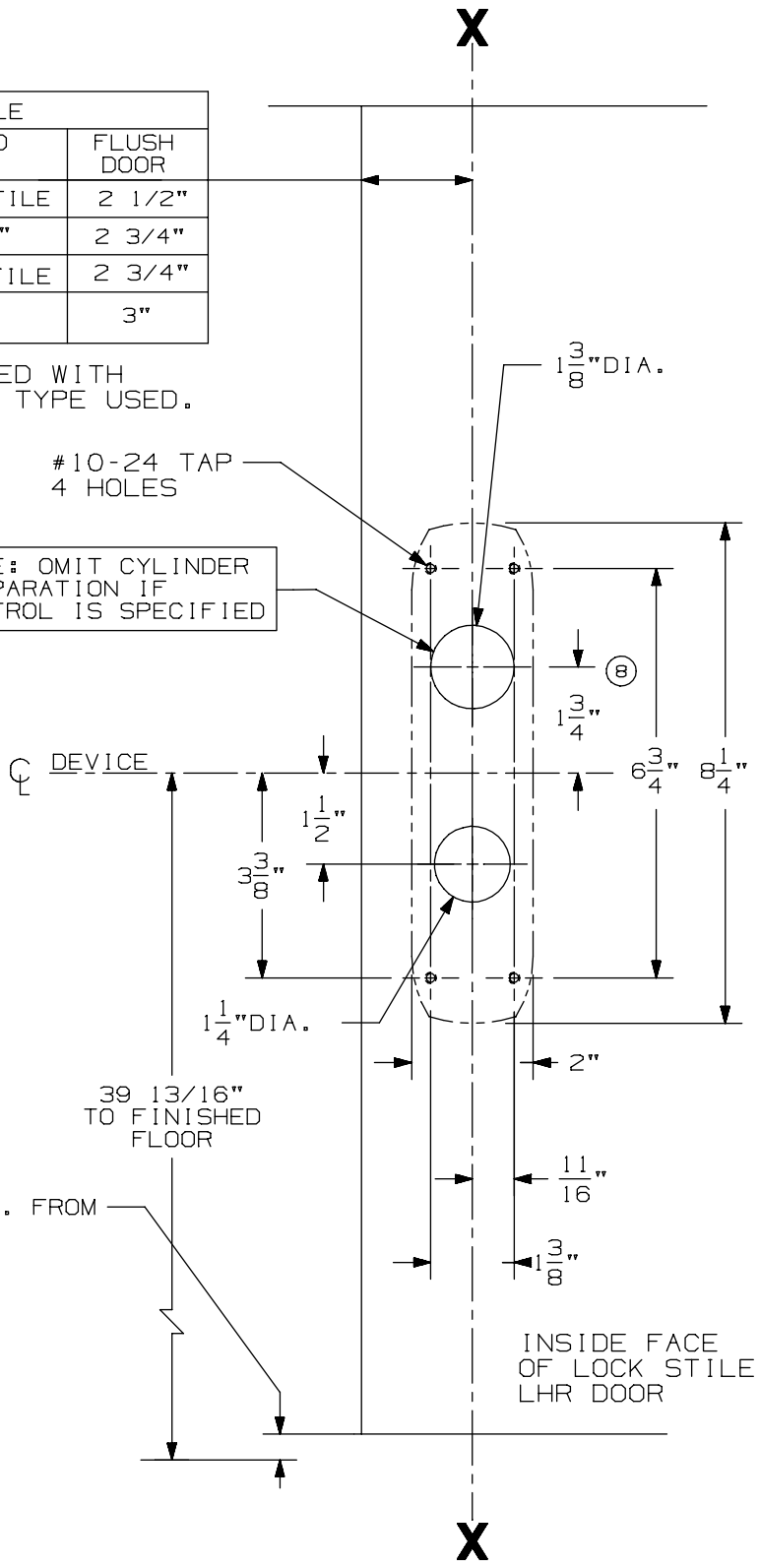

NOTE: REQUIRED DOOR UNDERCUT IS 7/16" MAX. FROM FINISHED FLOOR OR 1/8" FROM THRESHOLD.

CROSSBAR 36 13/16" FROM FINISHED FLOOR

NOTE: LATCH CASE PREPARATION TO BE MADE AT INSTALLATION ON DOOR.

NOTE: IT IS RECOMMENDED THE MOUNTING HOLES BE PREPARED IN THE FIELD.

FOR OUTSIDE TRIM PREPARATION, WHEN REQUIRED, SEE ADDITIONAL TRIM TEMPLATE.

LHR SHOWN
RHR OPPOSITE

8827K/L & 8827K/L-NL Series
Vertical Rod Device

VON DUPRIN®

NOTES: SEE MASTER SHEET #10001 FOR SUGGESTED REINFORCING

TEMPLATE NUMBER: 10162_a

DATE: 05-16-13

NOTES: SEE MASTER SHEET #10001 FOR SUGGESTED REINFORCING

373-L Control

VON DUPRIN®

TEMPLATE NUMBER: 40108_a

DATE: 05-28-13

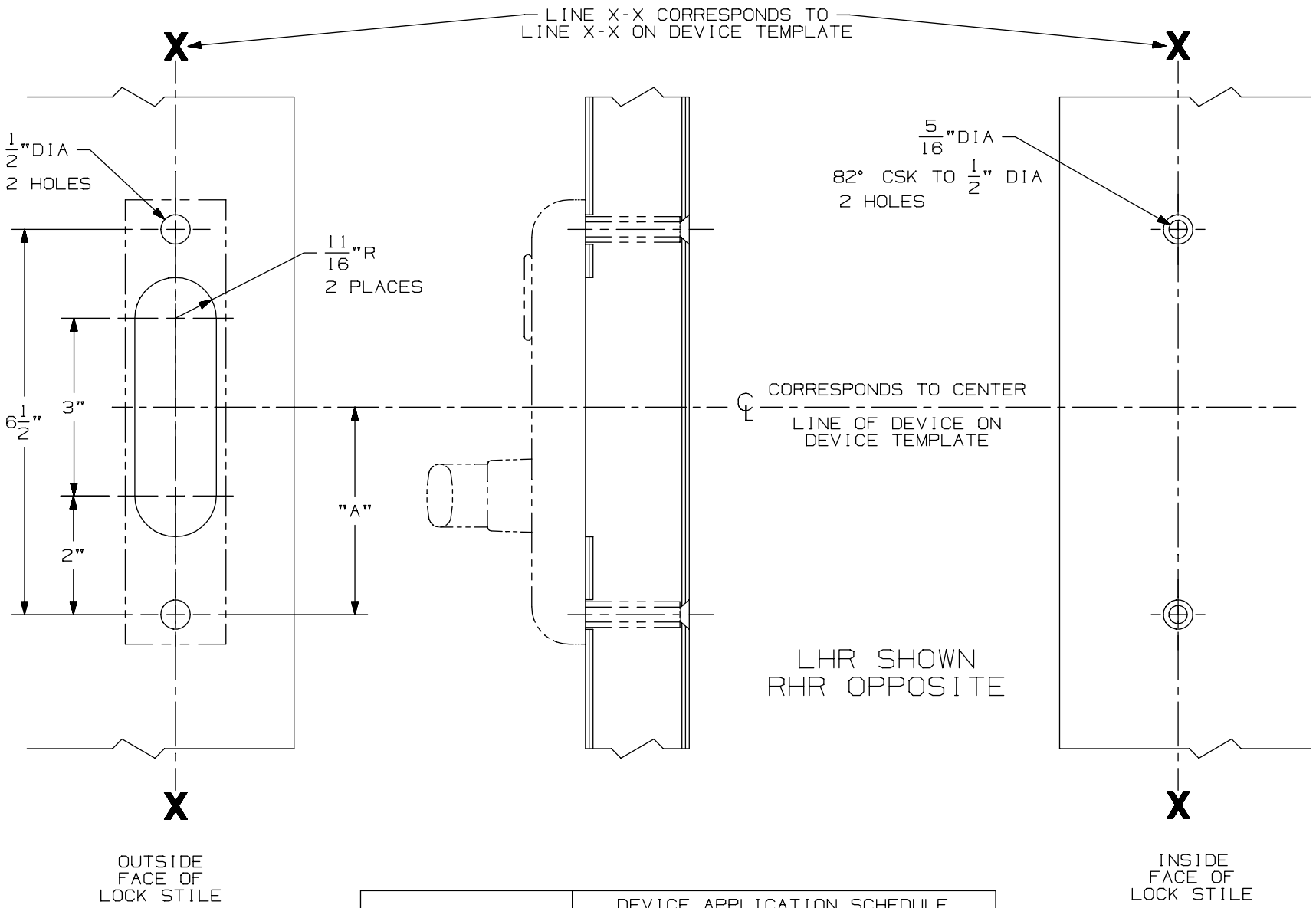

FOR CUTOUT ON INSIDE FACE OF DOOR SEE DEVICE TEMPLATE	DEVICE APPLICATION SCHEDULE	
	DEVICE	DIM "A"
	8827/8827-F	3 1/2"
	88 MORTISE	3 1/4"

RIM APPLICATION

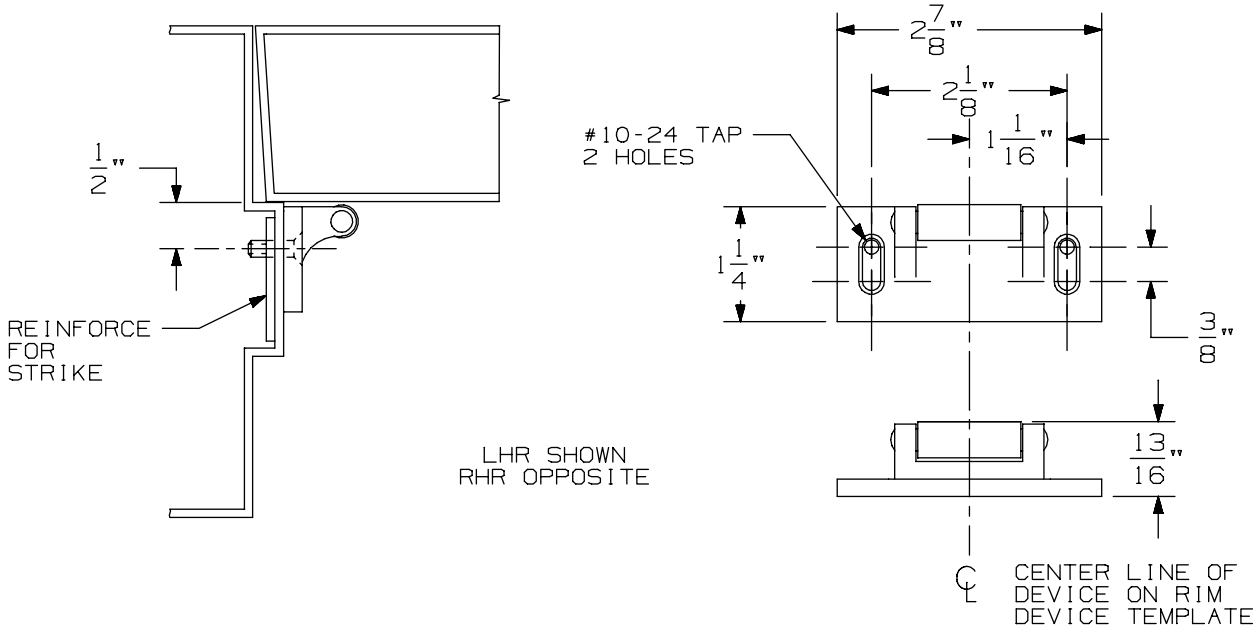

VERTICAL APPLICATION

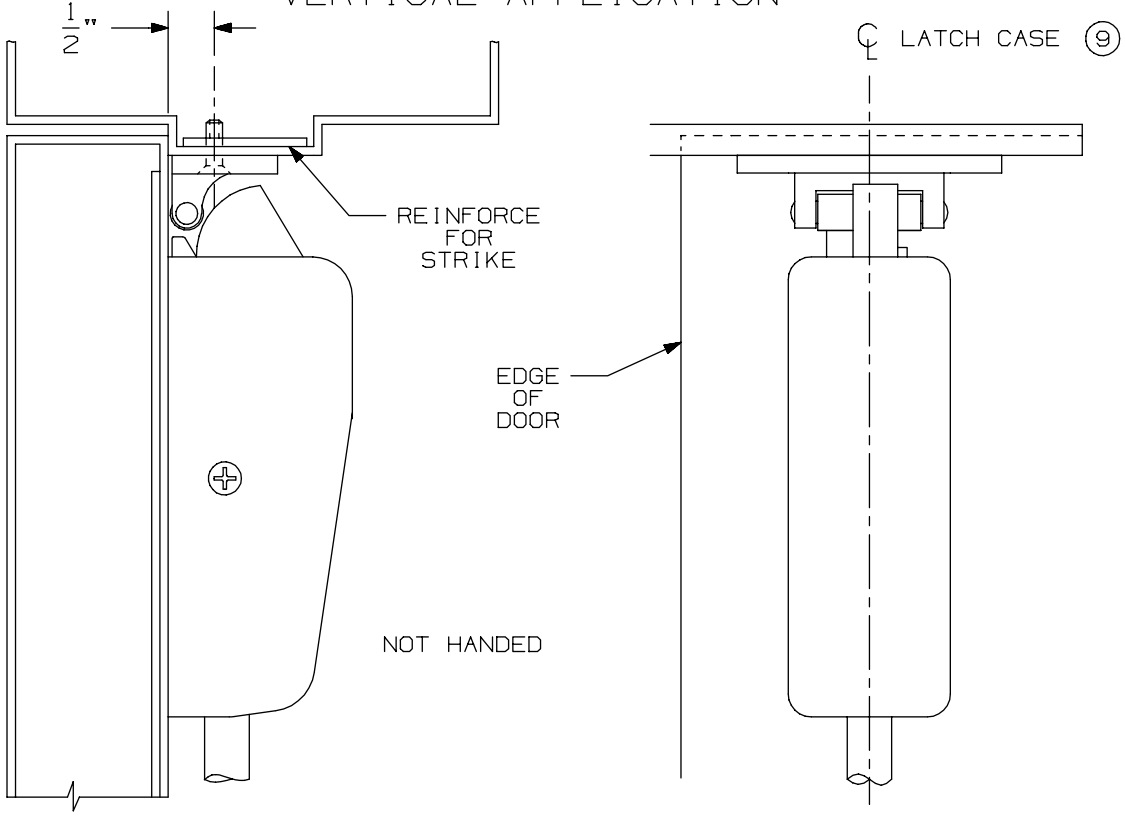

NOTE: LATCH CASE MOUNTING HOLES TO BE PREPARED AT INSTALLATION ON DOOR.

299 & 299F Strike

VON DUPRIN®

NOTES: SEE MASTER SHEET #10001 FOR SUGGESTED REINFORCING

TEMPLATE NUMBER: 30039_a

DATE: 05-23-13

DEVICE APPLICATION SCHEDULE		
INSTALLATION	PANELED DOOR	FLUSH DOOR
TWO VERT. ROD DEVICES	1/2 OF STILE	2 1/2"
VERT. ROD & MORT. DEVICE	2 3/4"	2 3/4"
SINGLE DOOR	1/2 OF STILE	2 3/4"
VERT. ROD & RIM DEVICE REQUIRES 1609J STRIKE	3"	3"

NOTE: BACKSET MAY VARY WHEN USED WITH COORDINATOR DEPENDING ON TYPE USED.

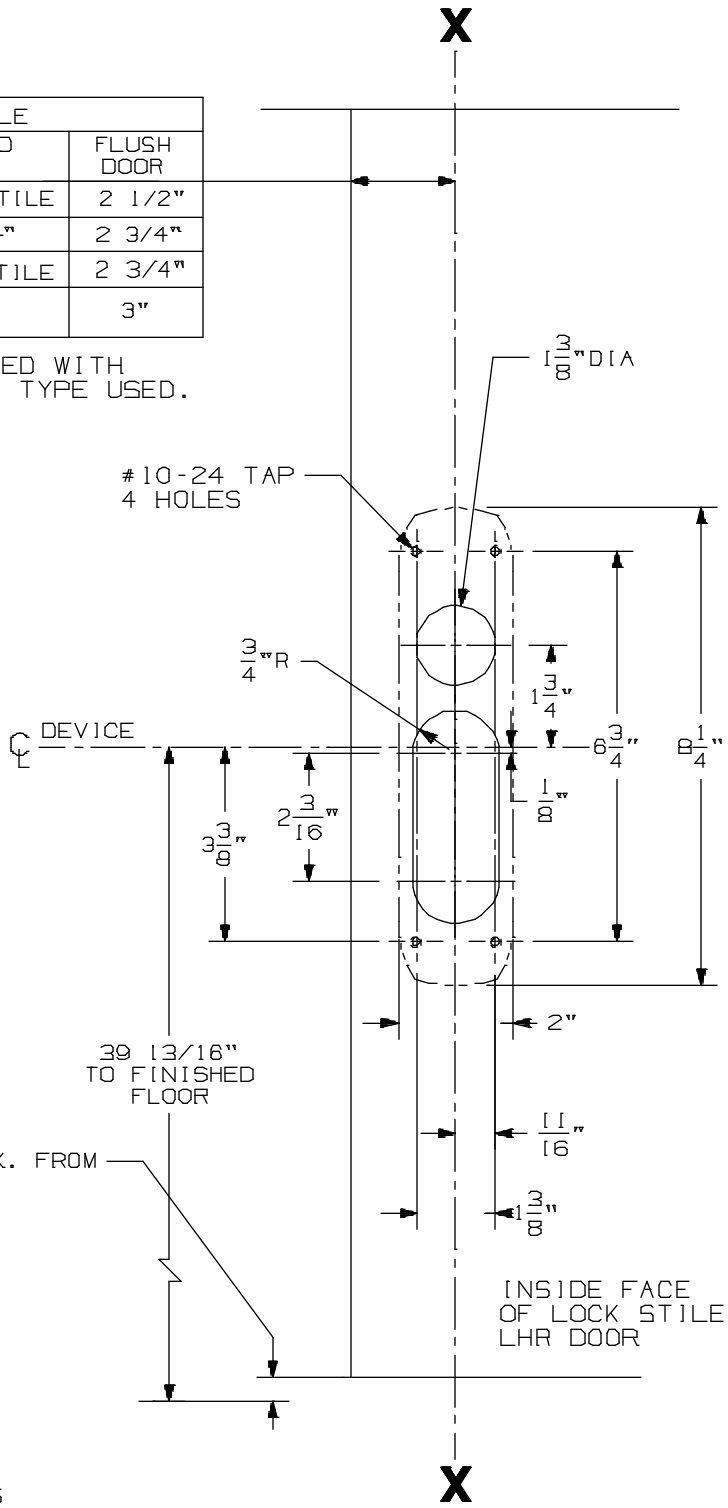

NOTE: REQUIRED DOOR UNDERCUT IS 7/16" MAX. FROM FINISHED FLOOR OR 1/8" FROM THRESHOLD.

CROSSBAR 36 13/16" FROM FINISHED FLOOR

NOTE: LATCH CASE PREPARATION TO BE MADE AT INSTALLATION ON DOOR.

NOTE: IT IS RECOMMENDED THE MOUNTING HOLES BE PREPARED IN THE FIELD.

FOR OUTSIDE TRIM PREPARATION, WHEN REQUIRED, SEE ADDITIONAL TRIM TEMPLATE.

LHR SHOWN
RHR OPPOSITE

8827TP & 8827TP-NL Series
Vertical Rod Device

VON DUPRIN®

NOTES: SEE MASTER SHEET #10001 FOR SUGGESTED REINFORCING

TEMPLATE NUMBER: 10161_a

DATE: 05-16-13

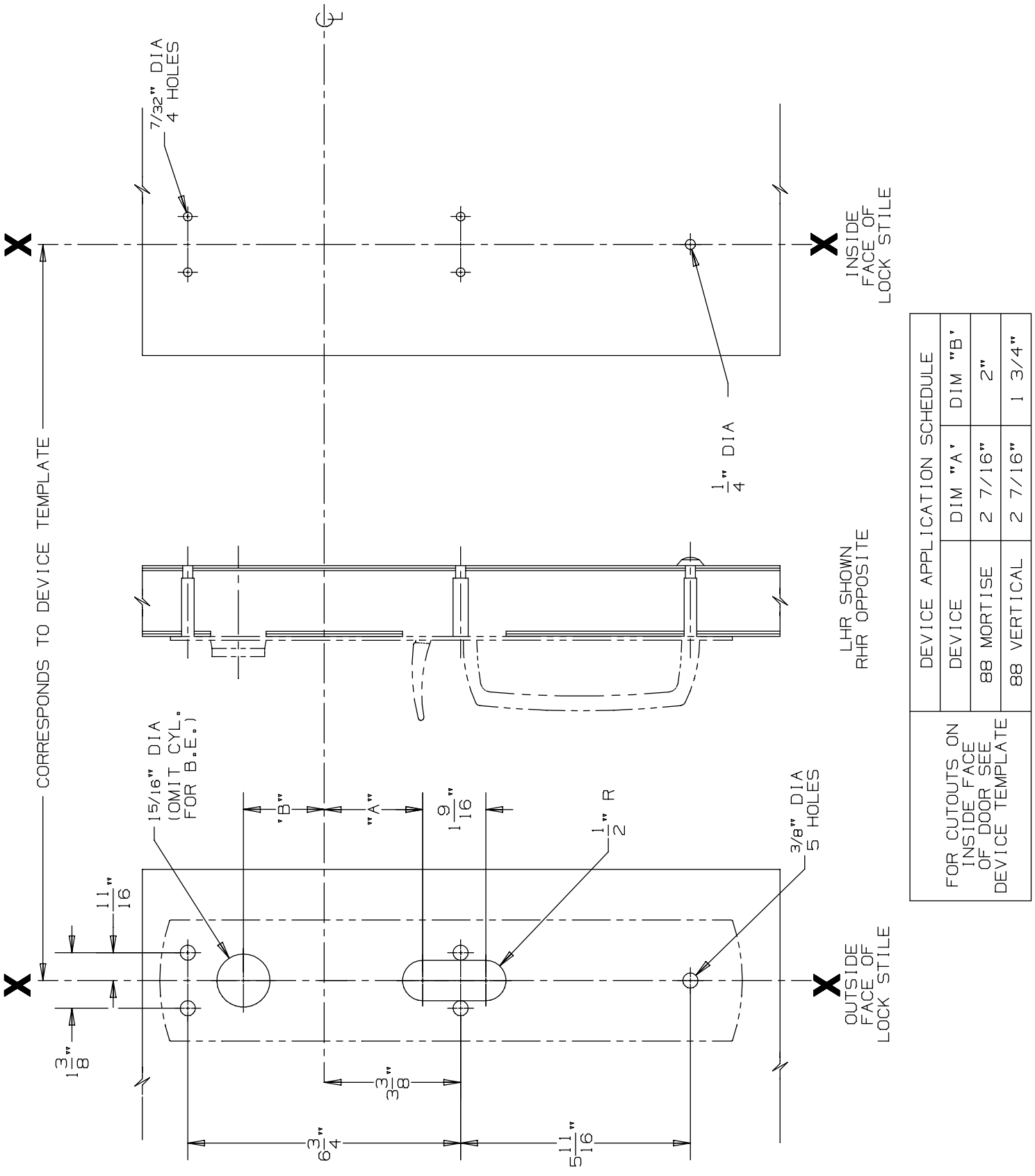

DEVICE APPLICATION SCHEDULE		
DEVICE	DIM "A"	DIM "B"
88 MORTISE	2 7/16"	2"
88 VERTICAL	2 7/16"	1 3/4"

FOR CUTOUTS ON INSIDE FACE OF DOOR SEE DEVICE TEMPLATE

880 TP & 880 TP-BE Trim for 88 Mortise & Vertical Devices

VON DUPRIN®

NOTES: SEE MASTER SHEET #10001 FOR SUGGESTED REINFORCING

TEMPLATE NUMBER: 20260_a

DATE: 05-28-13

RIM APPLICATION

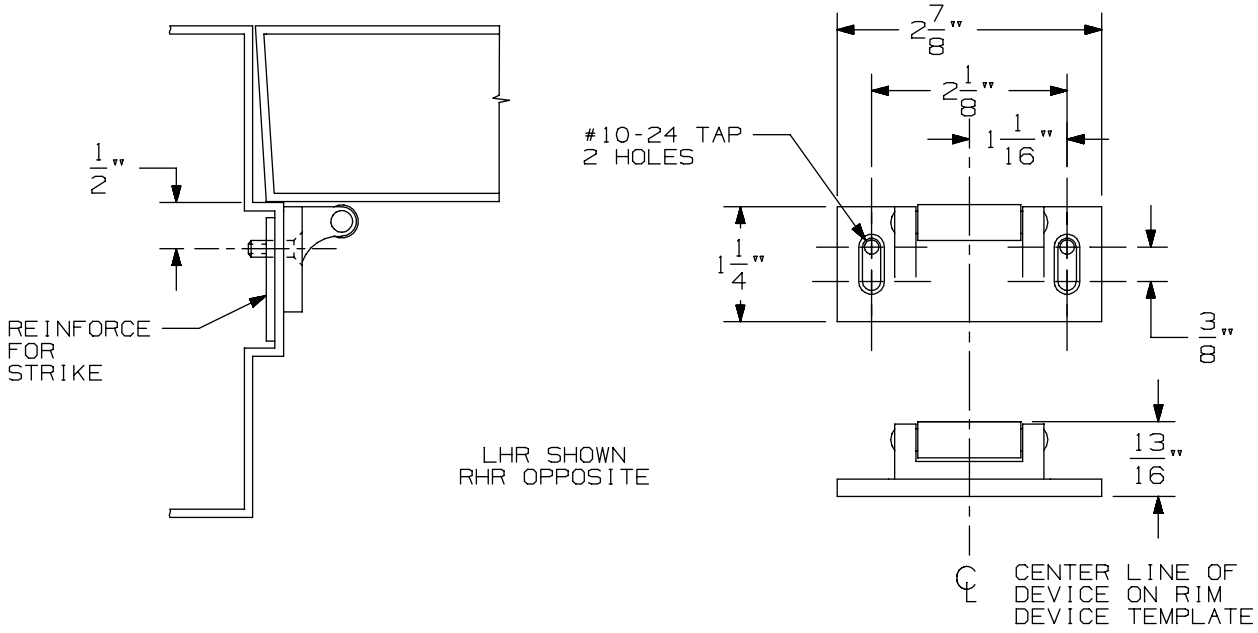

VERTICAL APPLICATION

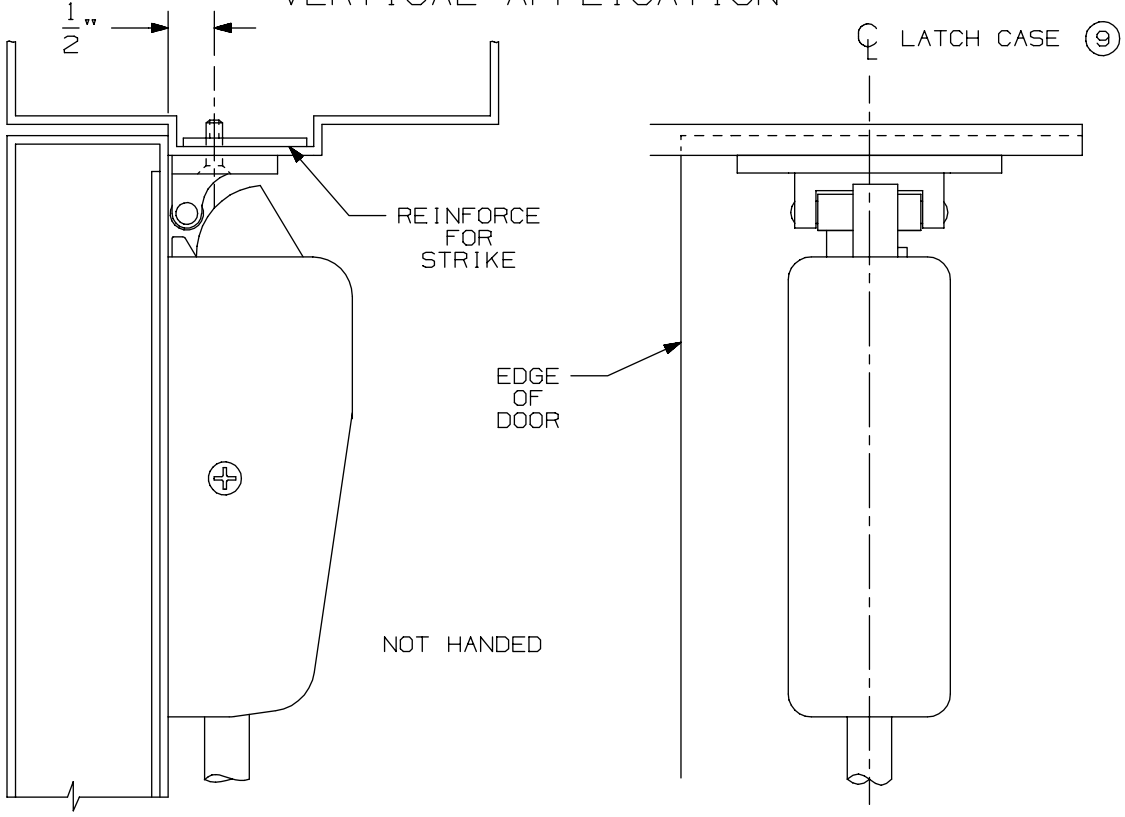

NOTE: LATCH CASE MOUNTING HOLES TO BE PREPARED AT INSTALLATION ON DOOR.

299 & 299F Strike

VON DUPRIN®

NOTES: SEE MASTER SHEET #10001 FOR SUGGESTED REINFORCING

TEMPLATE NUMBER: 30039_a

DATE: 05-23-13

DEVICE APPLICATION SCHEDULE		
INSTALLATION	PANELED DOOR	FLUSH DOOR
TWO VERT. ROD DEVICES	1/2 OF STILE	2 1/2"
VERT. ROD & MORT. DEVICE	2 3/4"	2 3/4"
SINGLE DOOR	1/2 OF STILE	2 3/4"
VERT. ROD & RIM DEVICE REQUIRES 1609J STRIKE	3"	3"

NOTE: BACKSET MAY VARY WHEN USED WITH COORDINATOR DEPENDING ON TYPE USED.

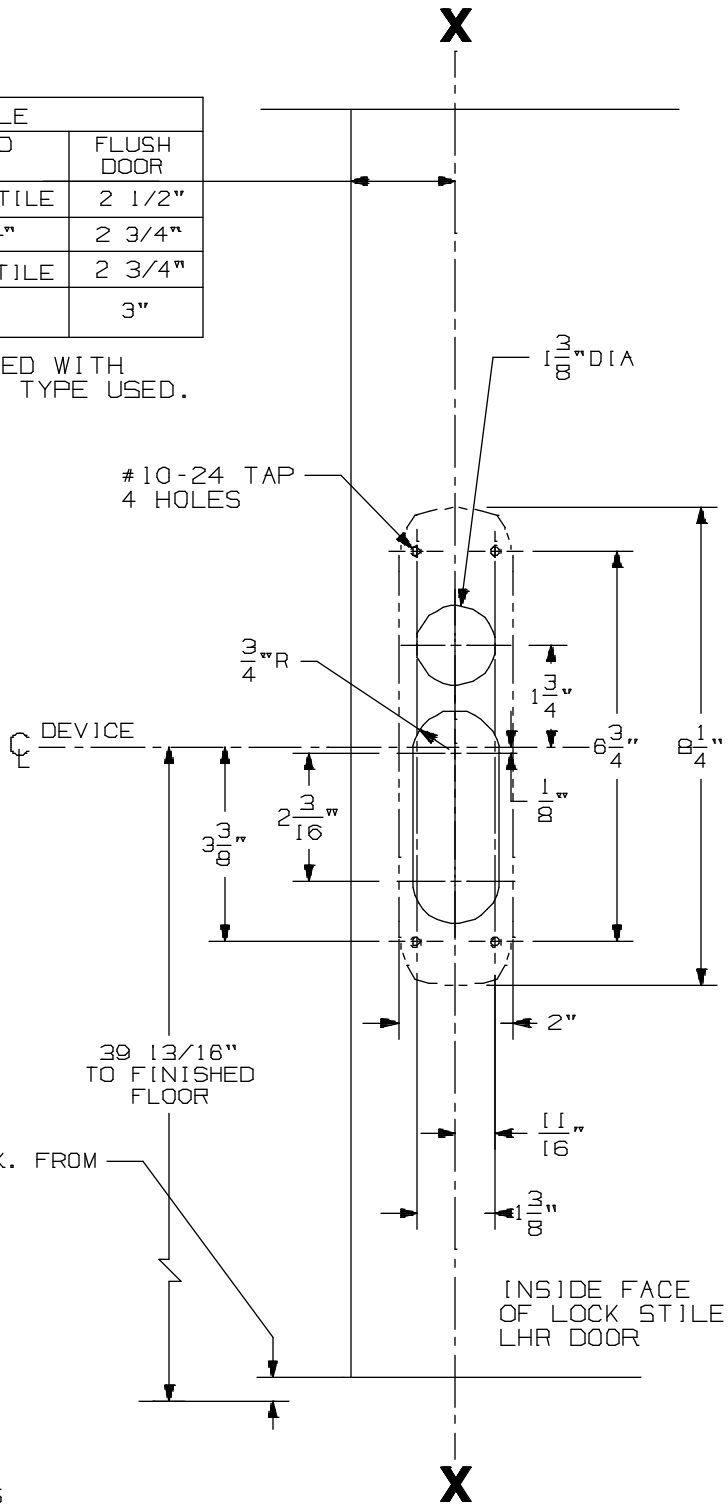

NOTE: REQUIRED DOOR UNDERCUT IS 7/16" MAX. FROM FINISHED FLOOR OR 1/8" FROM THRESHOLD.

CROSSBAR 36 13/16" FROM FINISHED FLOOR

NOTE: LATCH CASE PREPARATION TO BE MADE AT INSTALLATION ON DOOR.

NOTE: IT IS RECOMMENDED THE MOUNTING HOLES BE PREPARED IN THE FIELD.

FOR OUTSIDE TRIM PREPARATION, WHEN REQUIRED, SEE ADDITIONAL TRIM TEMPLATE.

LHR SHOWN
RHR OPPOSITE

8827TP & 8827TP-NL Series
Vertical Rod Device

VON DUPRIN®

NOTES: SEE MASTER SHEET #10001 FOR SUGGESTED REINFORCING

TEMPLATE NUMBER: 10161_a

DATE: 05-16-13

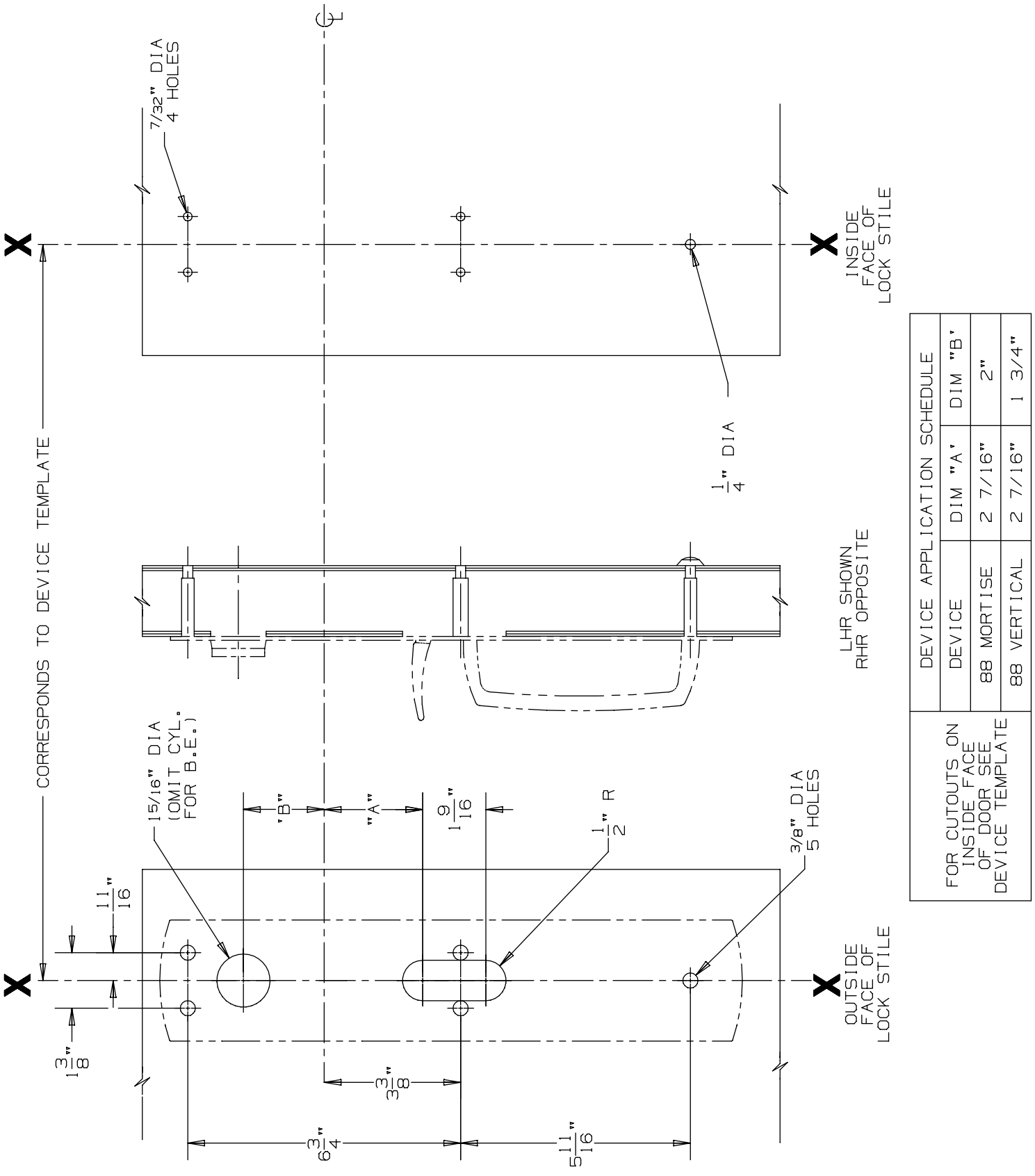

DEVICE APPLICATION SCHEDULE		
DEVICE	DIM "A"	DIM "B"
88 MORTISE	2 7/16"	2"
88 VERTICAL	2 7/16"	1 3/4"

FOR CUTOUTS ON INSIDE FACE OF DOOR SEE DEVICE TEMPLATE

880 TP & 880 TP-BE Trim for 88 Mortise & Vertical Devices

VON DUPRIN®

NOTES: SEE MASTER SHEET #10001 FOR SUGGESTED REINFORCING

TEMPLATE NUMBER: 20260_a

DATE: 05-28-13

RIM APPLICATION

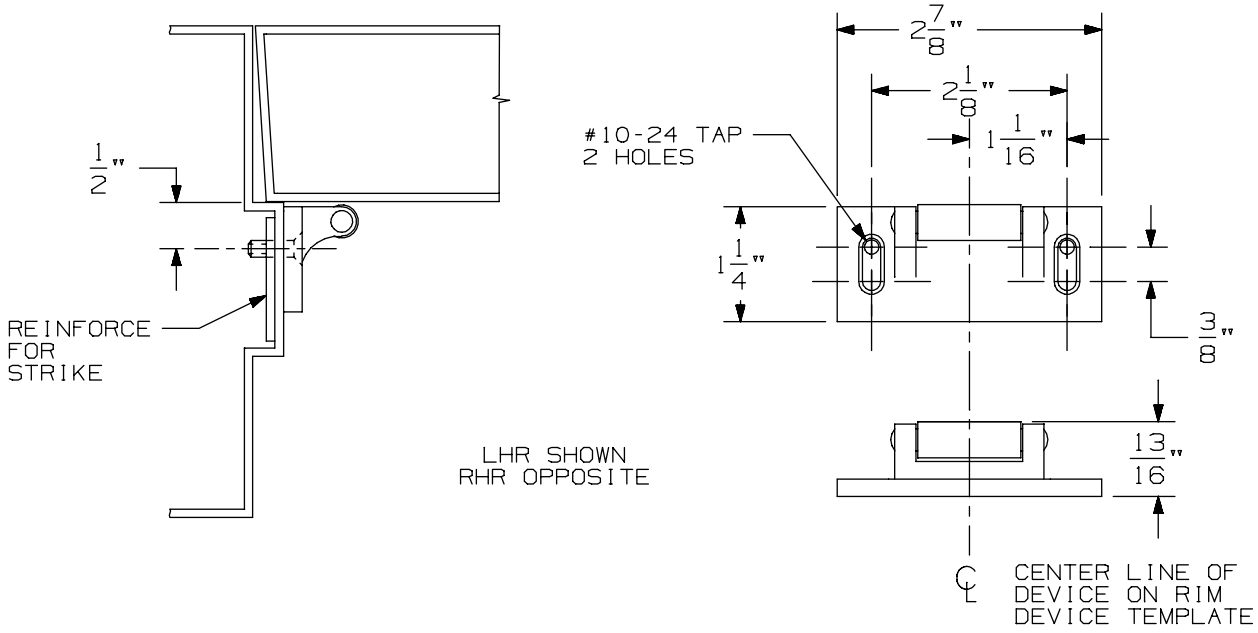

VERTICAL APPLICATION

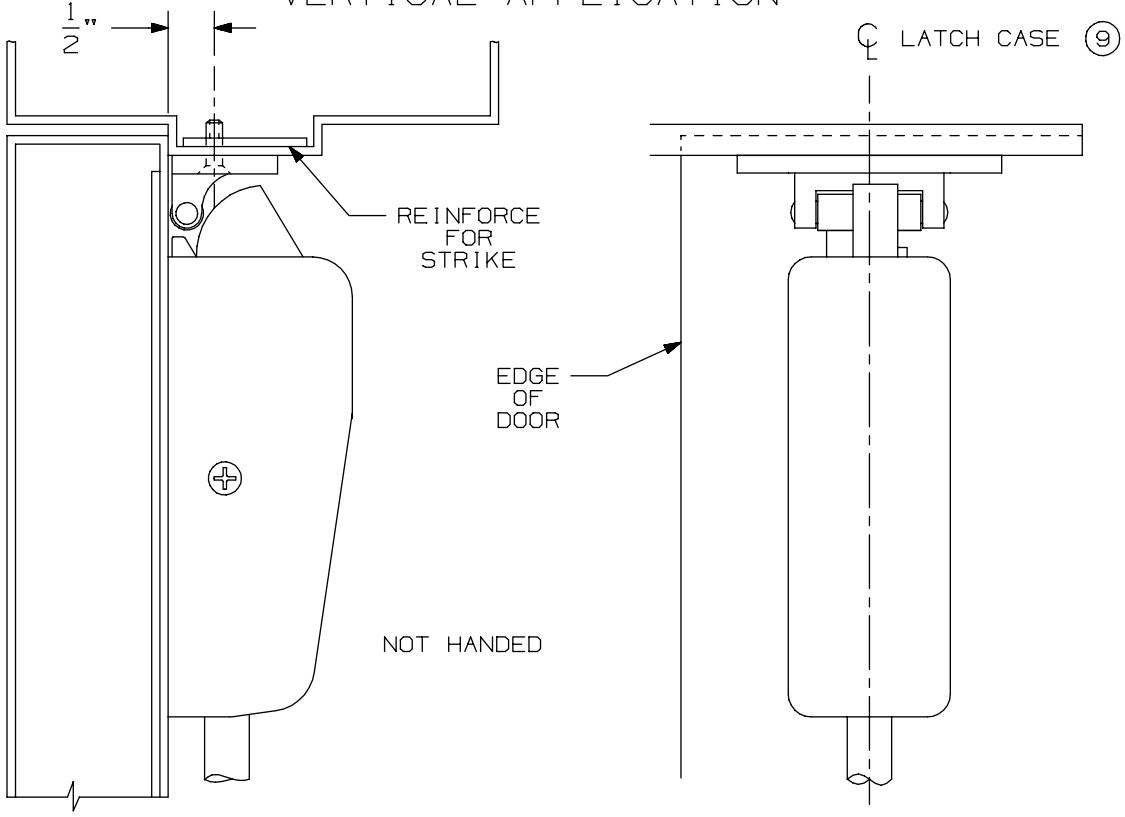

NOTE: LATCH CASE MOUNTING HOLES TO BE PREPARED AT INSTALLATION ON DOOR.

299 & 299F Strike

VON DUPRIN®

NOTES: SEE MASTER SHEET #10001 FOR SUGGESTED REINFORCING

TEMPLATE NUMBER: 30039_a

DATE: 05-23-13

DEVICE APPLICATION SCHEDULE		
INSTALLATION	PANELED DOOR	FLUSH DOOR
TWO VERT. ROD DEVICES	1/2 OF STILE	2 1/2"
VERT. ROD & MORT. DEVICE	2 3/4"	2 3/4"
SINGLE DOOR	1/2 OF STILE	2 3/4"
VERT. ROD & RIM DEVICE REQUIRES 1609J STRIKE	3"	3"

NOTE: BACKSET MAY VARY WHEN USED WITH COORDINATOR DEPENDING ON TYPE USED.

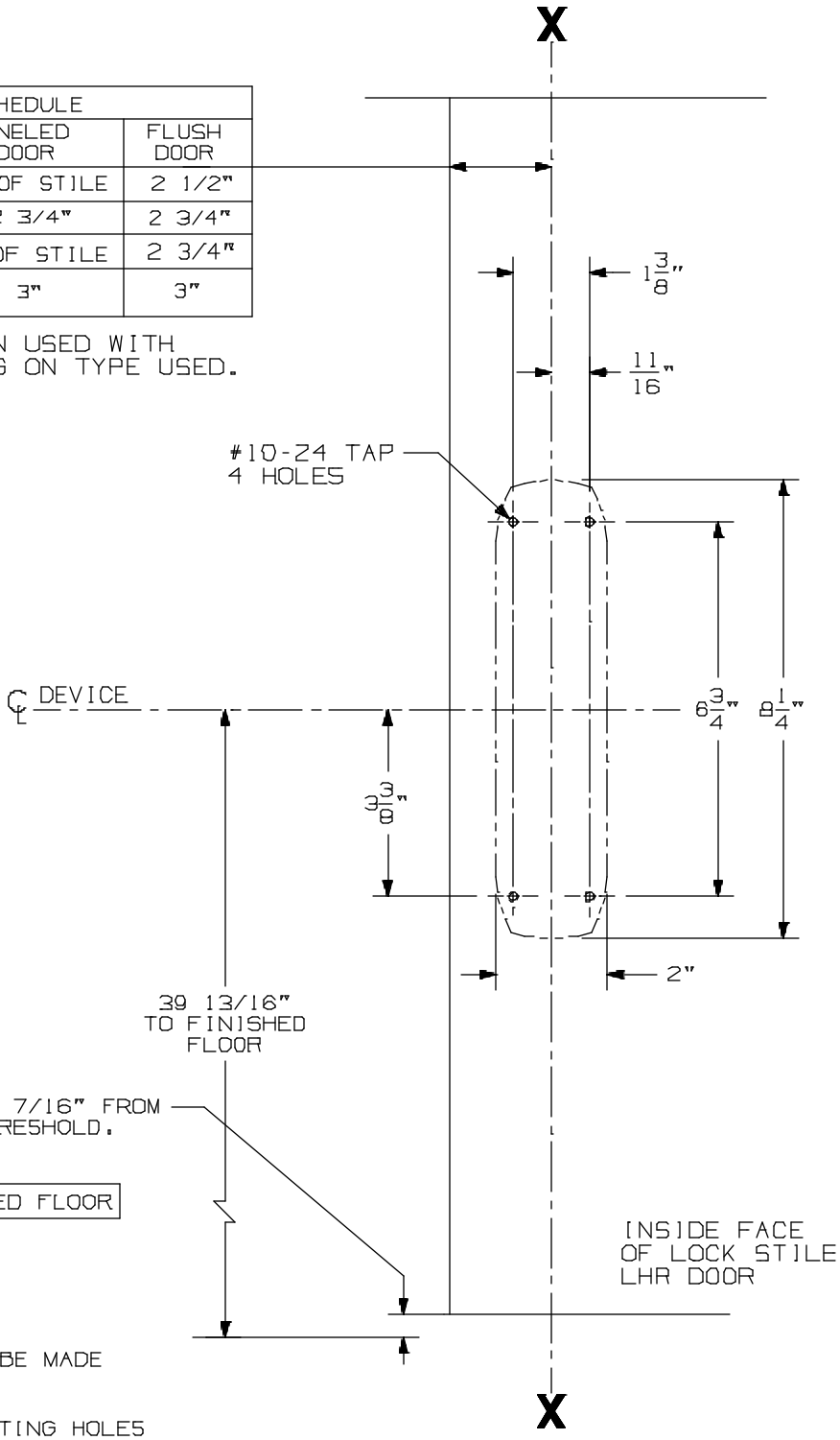

④

NOTE: REQUIRED DOOR UNDERCUT IS 7/16" FROM FINISHED FLOOR OR 1/18" FROM THRESHOLD.

CROSSBAR 36 13/16" FROM FINISHED FLOOR

NOTE: LATCH CASE PREPARATION TO BE MADE AT INSTALLATION ON DOOR.

NOTE: IT IS RECOMMENDED THE MOUNTING HOLES BE PREPARED IN THE FIELD.

FOR OUTSIDE TRIM PREPARATION, WHEN REQUIRED, SEE ADDITIONAL TRIM TEMPLATE.

LHR SHOWN
RHR OPPOSITE

8827EO, 8827DT, & 8827TL Series Vertical Rod Device

VON DUPRIN®

NOTES: SEE MASTER SHEET #10001 FOR SUGGESTED REINFORCING

TEMPLATE NUMBER: 10160_a

DATE: 05-16-13

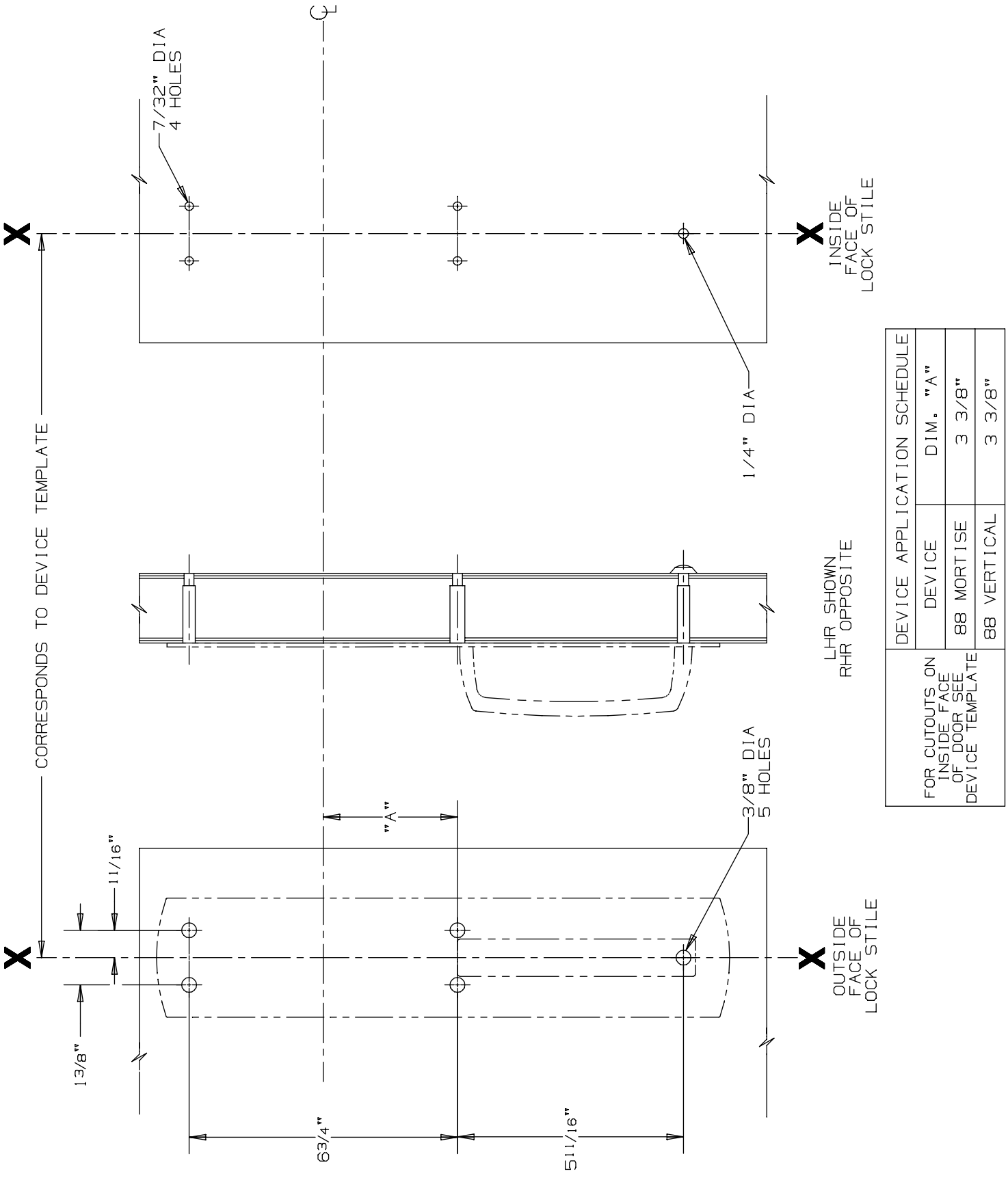

DEVICE APPLICATION SCHEDULE		
DEVICE	DIM. "A"	
88 MORTISE	3 3/8"	
88 VERTICAL	3 3/8"	

FOR CUTOUTS ON INSIDE FACE OF DOOR SEE DEVICE TEMPLATE

880 DT Trim for 88 Mortise & Vertical Devices

VON DUPRIN®

NOTES: SEE MASTER SHEET #10001 FOR SUGGESTED REINFORCING

TEMPLATE NUMBER: 20258_a

DATE: 05-28-13

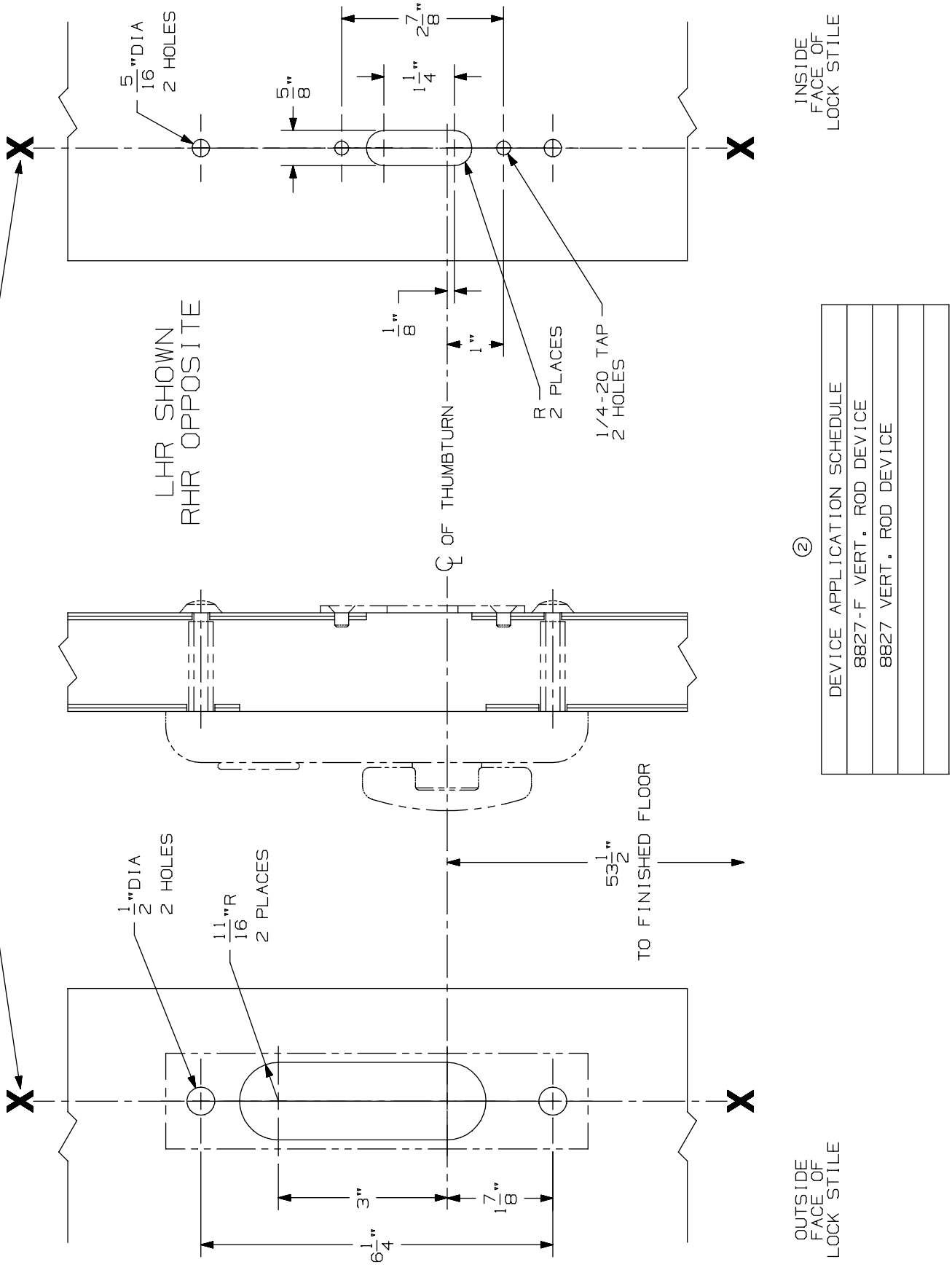

② DEVICE APPLICATION SCHEDULE

8827-F VERT. ROD DEVICE
8827 VERT. ROD DEVICE

377-T Control

VON DUPRIN®

NOTES: SEE MASTER SHEET #10001 FOR SUGGESTED REINFORCING

TEMPLATE NUMBER: 40116_a

DATE: 05-28-13

RIM APPLICATION

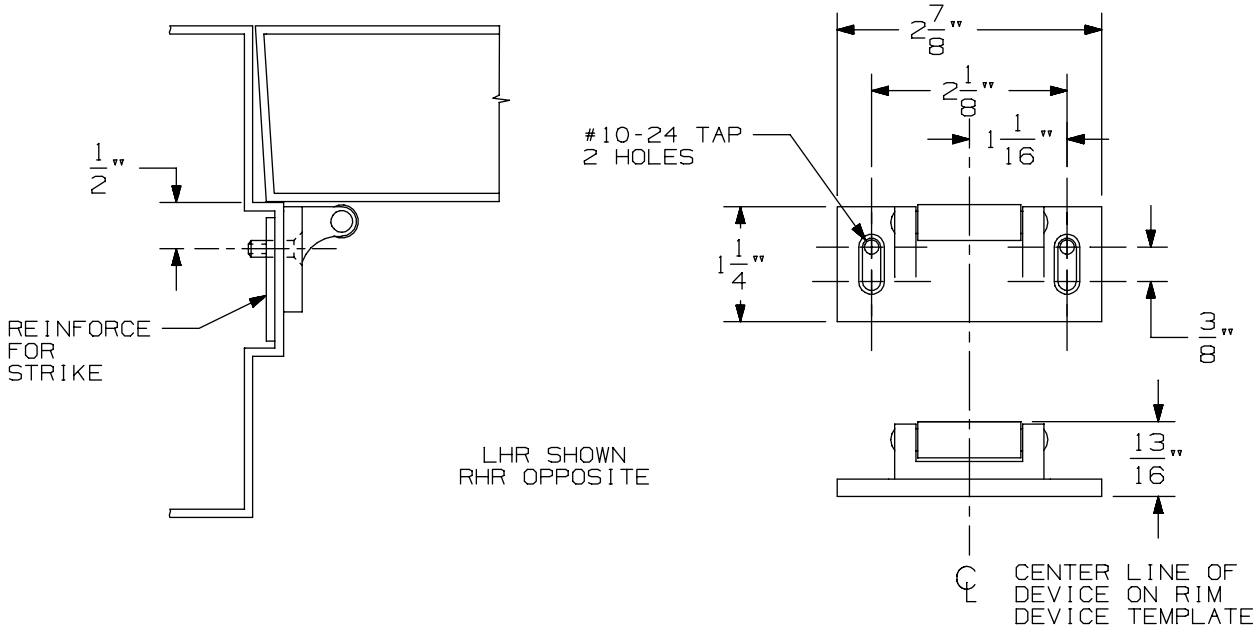

VERTICAL APPLICATION

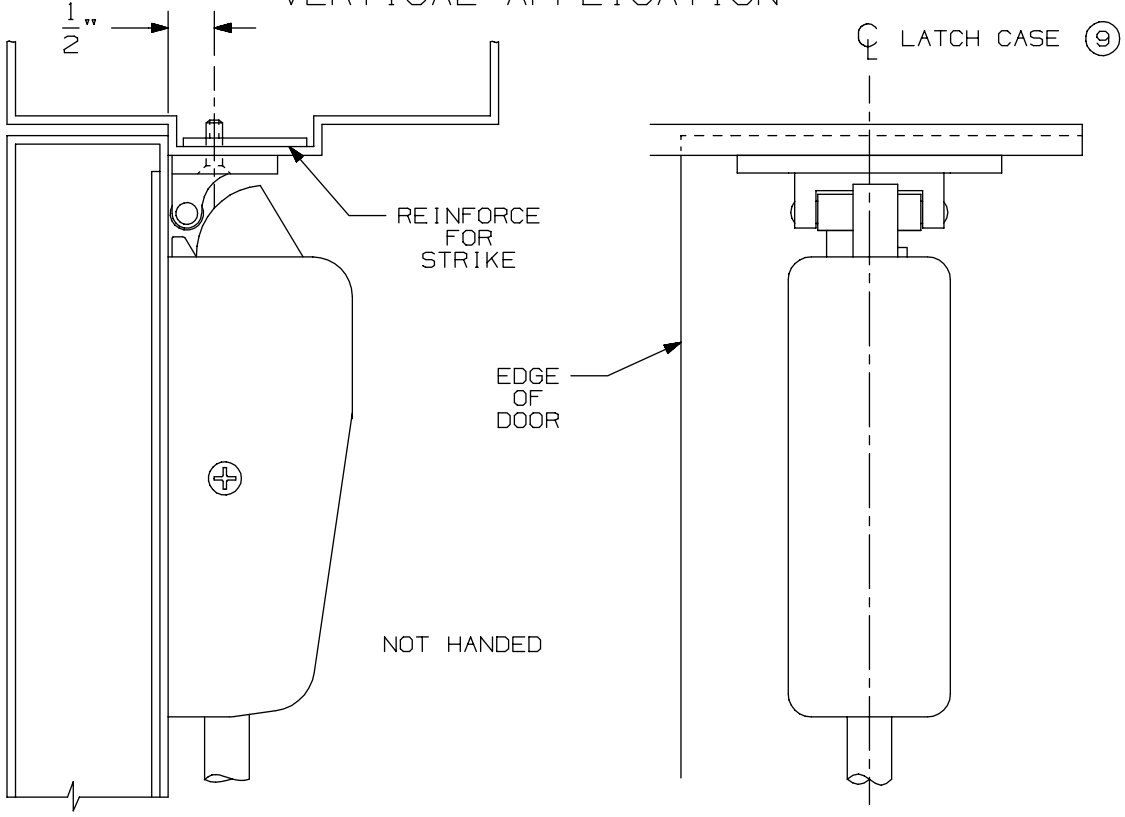

NOTE: LATCH CASE MOUNTING HOLES TO BE PREPARED AT INSTALLATION ON DOOR.

299 & 299F Strike

VON DUPRIN®

NOTES: SEE MASTER SHEET #10001 FOR SUGGESTED REINFORCING

TEMPLATE NUMBER: 30039_a

DATE: 05-23-13

88 Series Exit Devices

-

8827-F Surface Vertical Rod Fire

DEVICE INSTALLATION SCHEDULE	
VERT. ROD & MORT. DEVICE	2 3/4"
TWO VERT. ROD DEVICES	2 3/4"
SINGLE DOOR	2 3/4"
WHEN SURFACE APPLIED COORDINATOR IS USED, BACKSET OF VERTICAL ROD DEVICE MUST BE	2 3/4"

NOTE: MORTAR GUARD SHOULD BE PROVIDED TO PROTECT SOFFIT LATCH BOLT ASSEMBLY

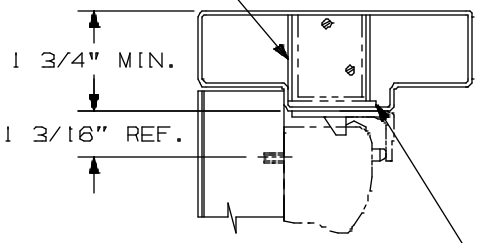

REINFORCING REQUIRED FOR SOFFIT LATCH MUST BE RECESSED 1/8" FROM TOP SURFACE OF STOP

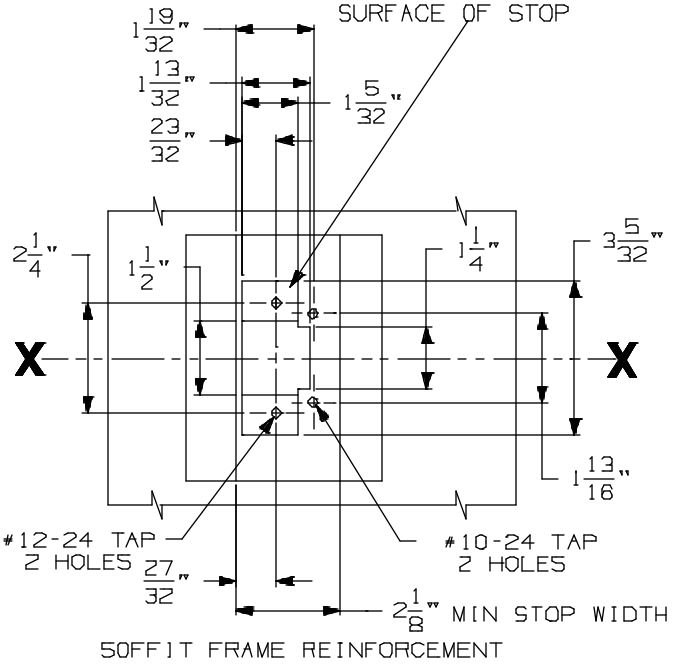

SOFFIT FRAME REINFORCEMENT

LHR SHOWN
RHR OPPOSITE

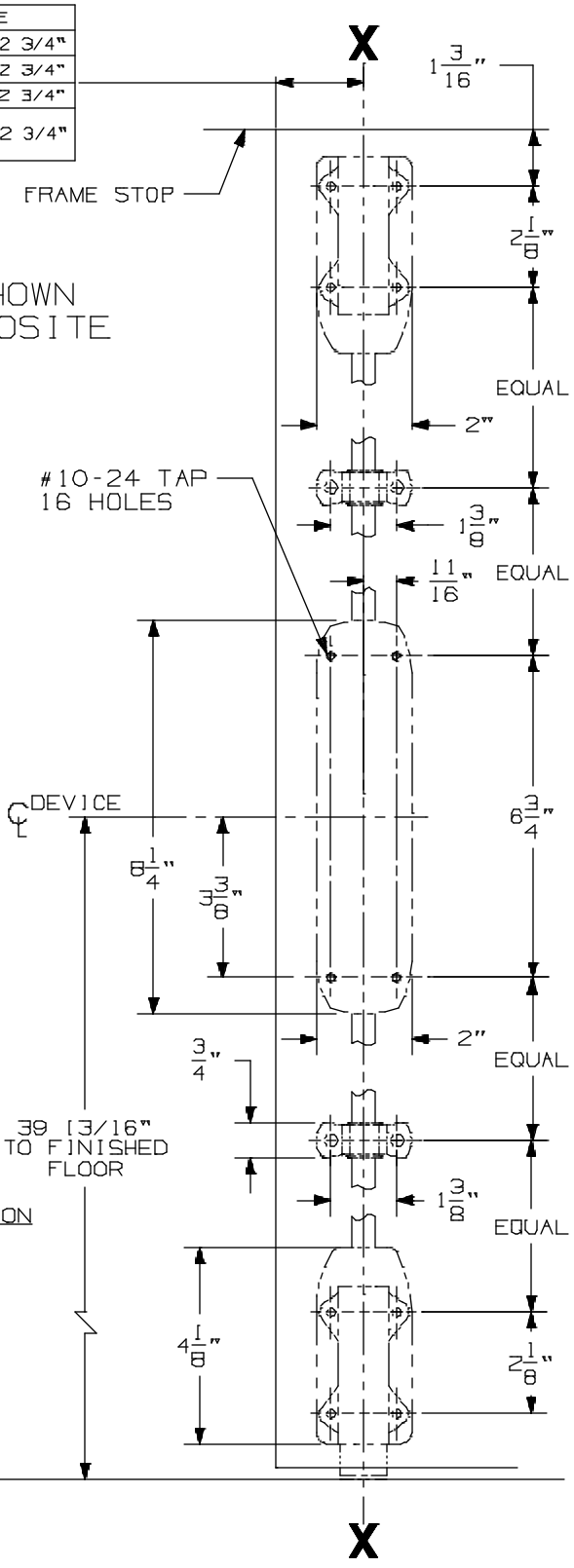

304L STRIKE APPLICATION

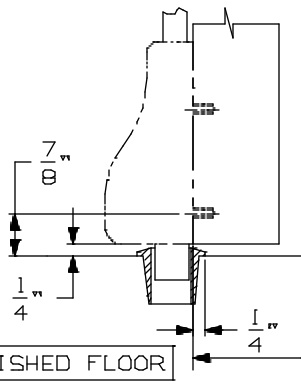

CROSSBAR 36 13/16" FROM FINISHED FLOOR

FOR OUTSIDE TRIM PREPARATION, WHEN REQUIRED, SEE ADDITIONAL TRIM TEMPLATE.

INSIDE FACE OF LOCK STILE LHR DOOR

8827-F & 8827TL-F Surface Applied Device

VON DUPRIN®

NOTES: SEE MASTER SHEET #10001 FOR SUGGESTED REINFORCING

TEMPLATE NUMBER: 10164_a

DATE: 05-15-13

DEVICE INSTALLATION SCHEDULE	
VERT. ROD & MORT. DEVICE	2 3/4"
TWO VERT. ROD DEVICES	2 3/4"
SINGLE DOOR	2 3/4"
WHEN SURFACE APPLIED COORDINATOR IS USED, BACKSET OF VERTICAL ROD DEVICE MUST BE	2 3/4"

NOTE: MORTAR GUARD SHOULD BE PROVIDED TO PROTECT SOFFIT LATCH BOLT ASSEMBLY

LHR SHOWN
RHR OPPOSITE

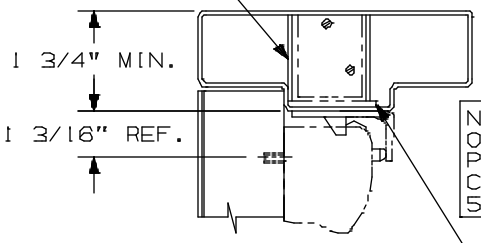

NOTE:
OMIT CYLINDER PREPARATION IF CONTROL IS SPECIFIED

CYLINDER SCHEDULE	HOLE SIZE
	(8)
SCHLAGE	
CORBIN	
RUSSWIN	1 5/16"
LOCKWOOD	
YALE	
SARGENT	1 3/8"

REINFORCING REQUIRED FOR SOFFIT LATCH MUST BE RECESSED 1/8" FROM TOP SURFACE OF STOP

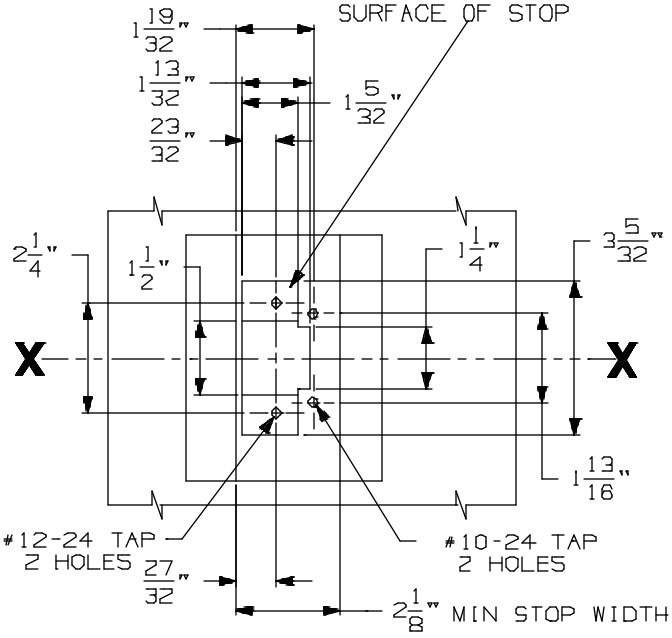

SOFFIT FRAME REINFORCEMENT

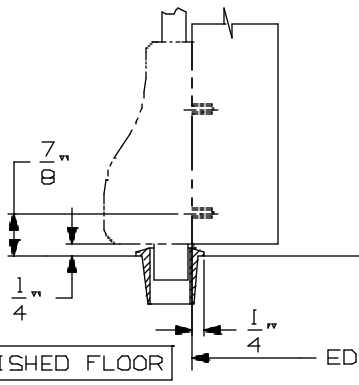

304L STRIKE APPLICATION

CROSSBAR 36 13/16" FROM FINISHED FLOOR

FOR OUTSIDE TRIM PREPARATION, SEE ADDITIONAL TRIM TEMPLATE.

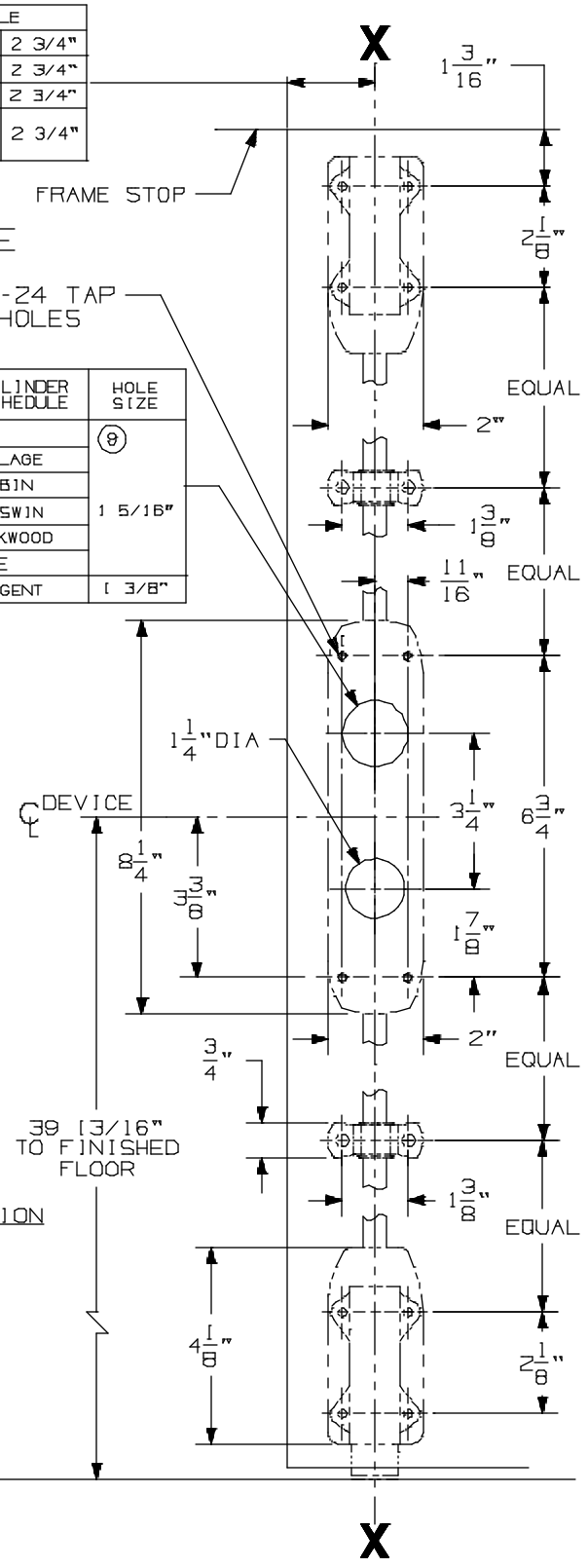

8827K/L-F Surface Applied Device

VON DUPRIN®

NOTES: SEE MASTER SHEET #10001 FOR SUGGESTED REINFORCING

TEMPLATE NUMBER: 10166_a

DATE: 05-15-13

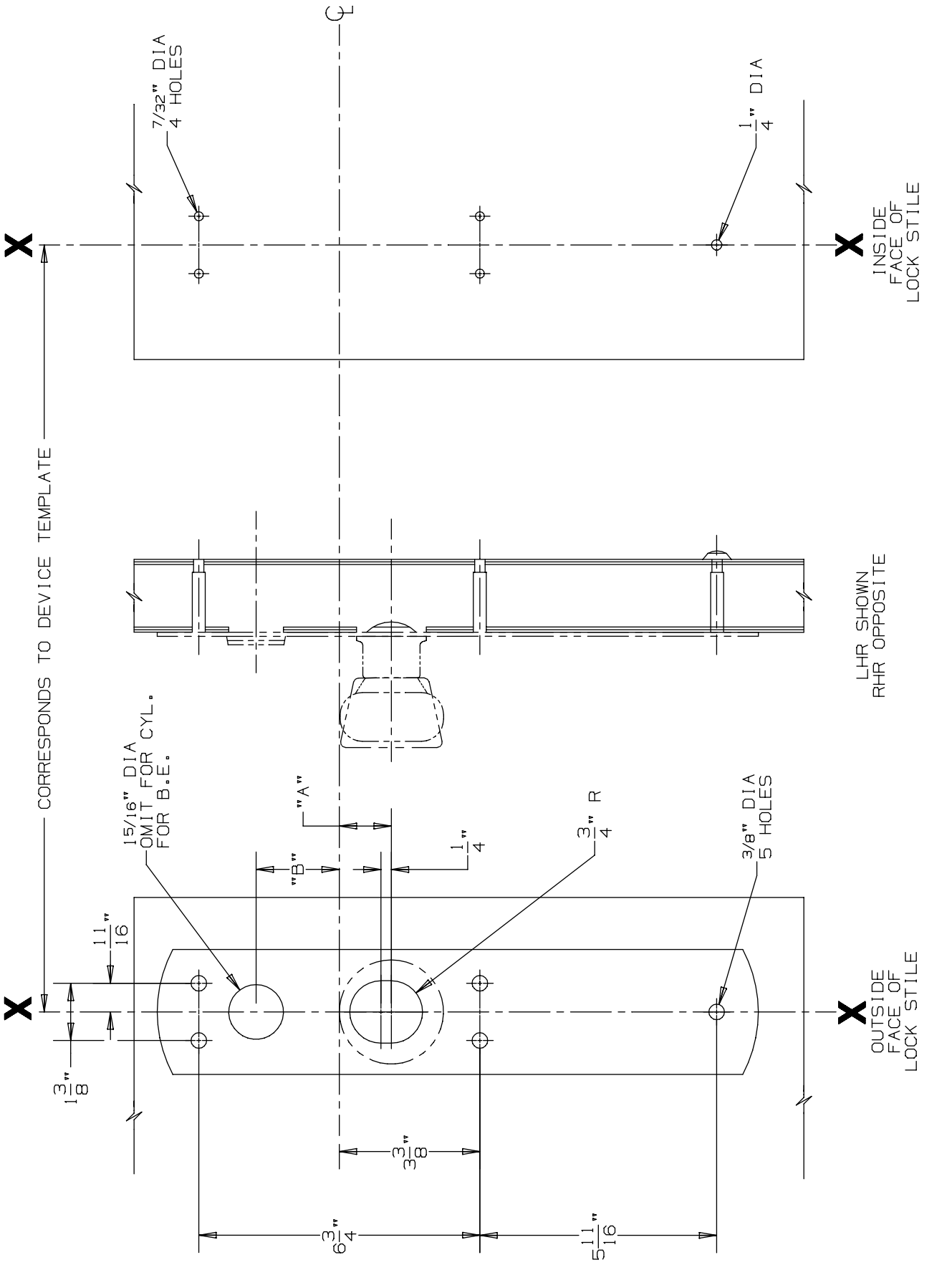

DEVICE APPLICATION SCHEDULE			
DEVICE	DIM. "A"	DIM. "B"
88 MORTISE	1 1/4"	2"
88 VERTICAL	1 1/2"	1 3/4"

FOR CUTOUTS ON INSIDE FACE OF DOOR SEE DEVICE TEMPLATE

880 K & 880 K-BE Trim for 88 Mortise & Vertical Devices

VON DUPRIN®

NOTES: SEE MASTER SHEET #10001 FOR SUGGESTED REINFORCING

TEMPLATE NUMBER: 20261_a

DATE: 05-23-13

DEVICE INSTALLATION SCHEDULE	
VERT. ROD & MORT. DEVICE	2 3/4"
TWO VERT. ROD DEVICES	2 3/4"
SINGLE DOOR	2 3/4"
WHEN SURFACE APPLIED COORDINATOR IS USED, BACKSET OF VERTICAL ROD DEVICE MUST BE	2 3/4"

NOTE: MORTAR GUARD SHOULD BE PROVIDED TO PROTECT SOFFIT LATCH BOLT ASSEMBLY

LHR SHOWN
RHR OPPOSITE

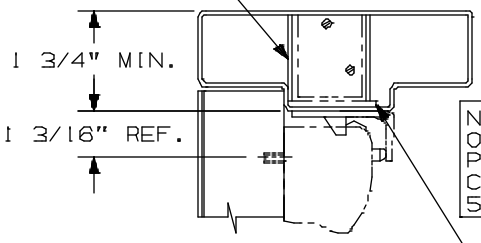

NOTE:
OMIT CYLINDER PREPARATION IF CONTROL IS SPECIFIED

CYLINDER SCHEDULE	HOLE SIZE
	(8)
SCHLAGE	
CORBIN	
RUSSWIN	1 5/16"
LOCKWOOD	
YALE	
SARGENT	1 3/8"

REINFORCING REQUIRED FOR SOFFIT LATCH MUST BE RECESSED 1/8" FROM TOP SURFACE OF STOP

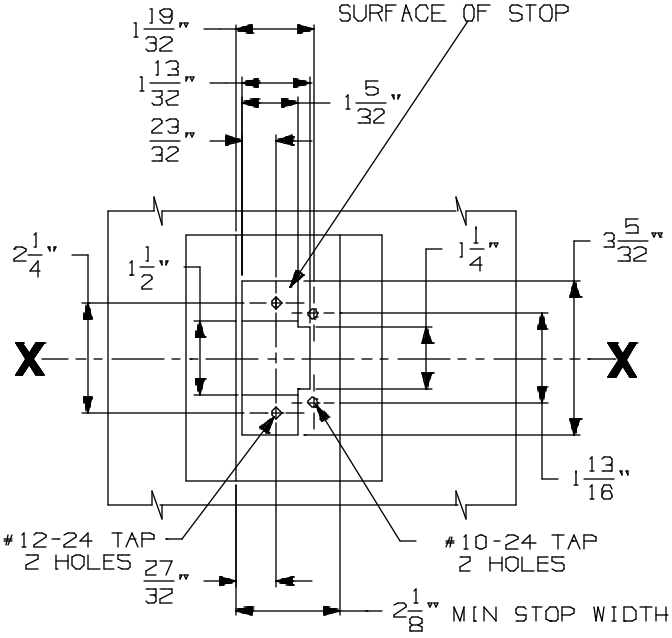

SOFFIT FRAME REINFORCEMENT

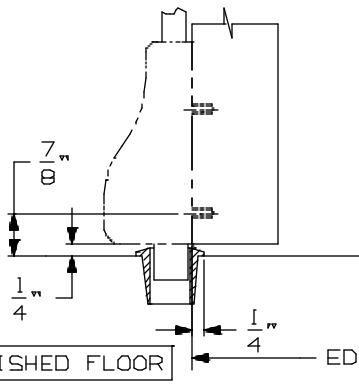

304L STRIKE APPLICATION

CROSSBAR 36 13/16" FROM FINISHED FLOOR

FOR OUTSIDE TRIM PREPARATION, SEE ADDITIONAL TRIM TEMPLATE.

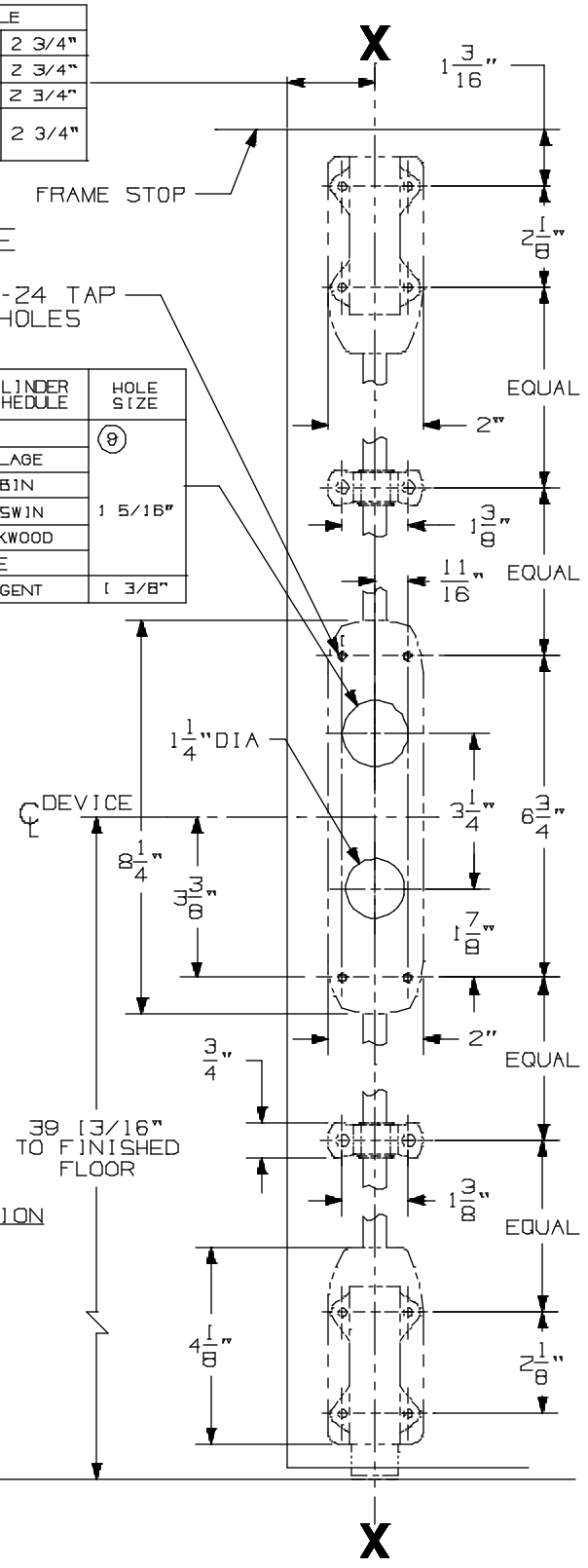

8827K/L-F Surface Applied Device

VON DUPRIN®

NOTES: SEE MASTER SHEET #10001 FOR SUGGESTED REINFORCING

TEMPLATE NUMBER: 10166_a

DATE: 05-15-13

NOTES: SEE MASTER SHEET #10001 FOR SUGGESTED REINFORCING

373-L Control

VON DUPRIN®

TEMPLATE NUMBER: 40108_a

DATE: 05-28-13

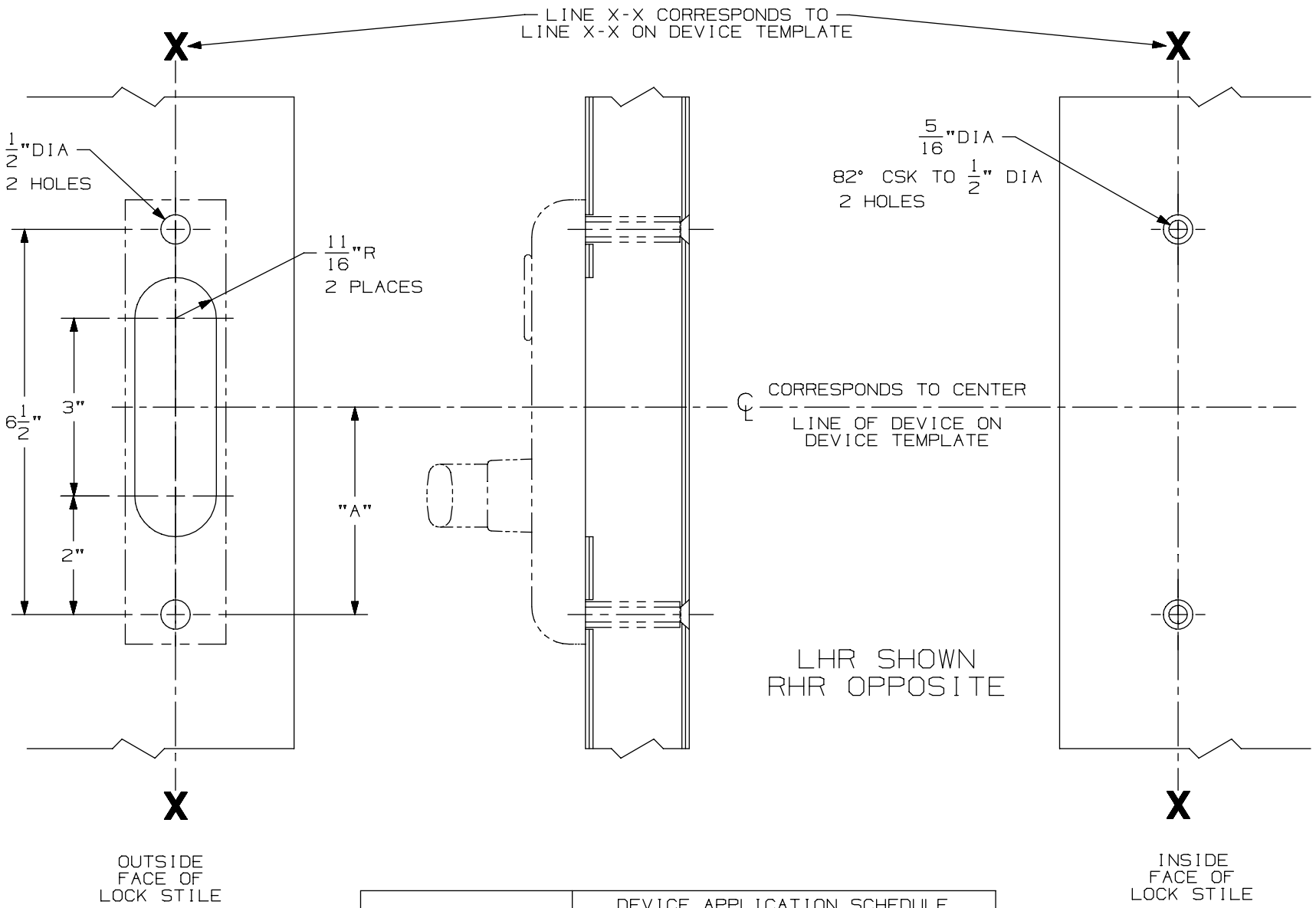

FOR CUTOUT ON INSIDE FACE OF DOOR SEE DEVICE TEMPLATE	DEVICE APPLICATION SCHEDULE	
	DEVICE	DIM "A"
	8827/8827-F	3 1/2"
	88 MORTISE	3 1/4"

DEVICE INSTALLATION SCHEDULE	
VERT. ROD & MORT. DEVICE	2 3/4"
TWO VERT. ROD DEVICES	2 3/4"
SINGLE DOOR	2 3/4"
WHEN SURFACE APPLIED COORDINATOR IS USED, BACKSET OF VERTICAL ROD DEVICE MUST BE	2 3/4"

NOTE: MORTAR GUARD SHOULD BE PROVIDED TO PROTECT SOFFIT LATCH BOLT ASSEMBLY

LHR SHOWN
RHR OPPOSITE

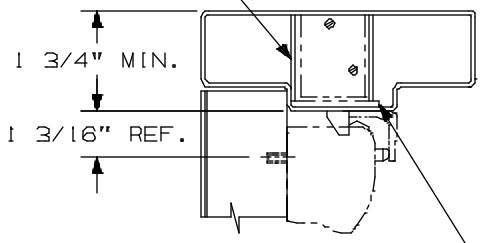

REINFORCING REQUIRED FOR SOFFIT LATCH MUST BE RECESSED 1/8" FROM TOP SURFACE OF STOP

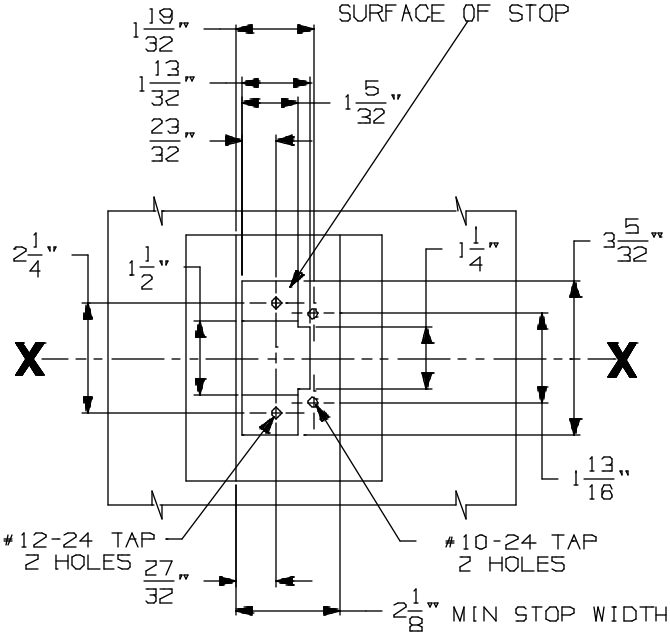

SOFFIT FRAME REINFORCEMENT

CYLINDER SCHEDULE	HOLE SIZE
⑨	
SCHLAGE	1 5/16"
CORBIN	
RUSSWIN	
LOCKWOOD	
YALE	
SARGENT	1 3/8"

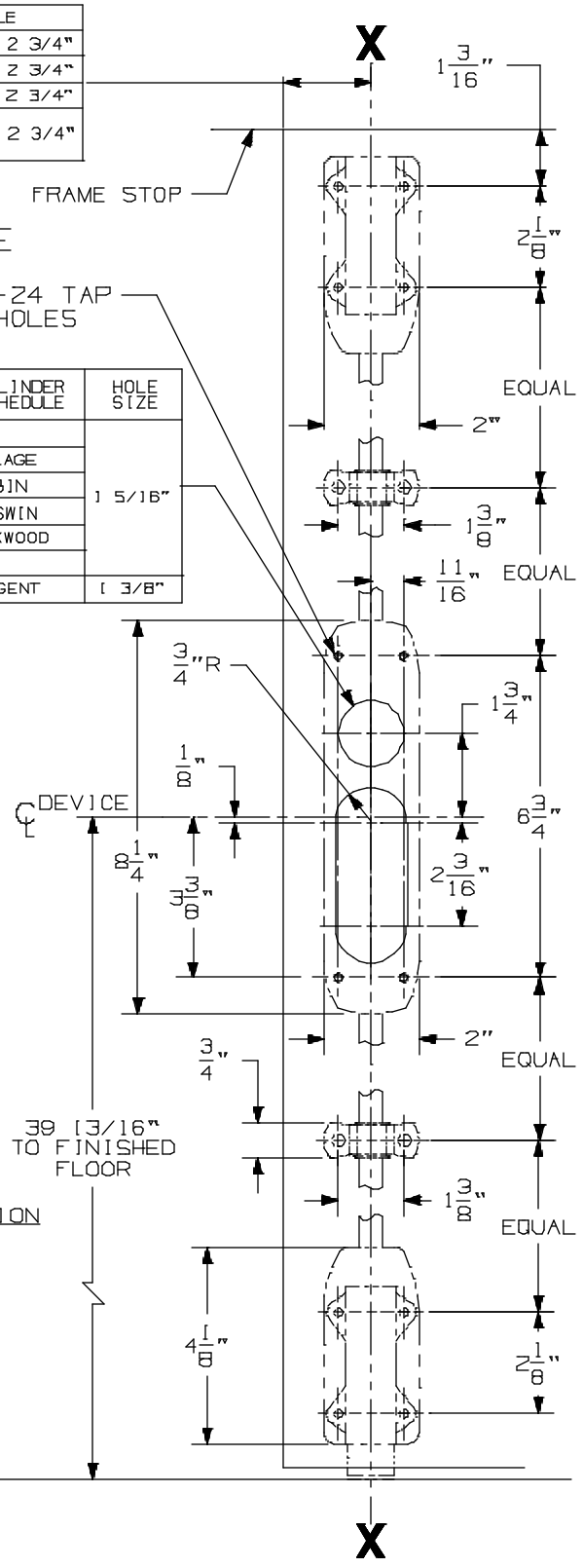

INSIDE FACE OF LOCK STILE LHR DOOR

304L STRIKE APPLICATION

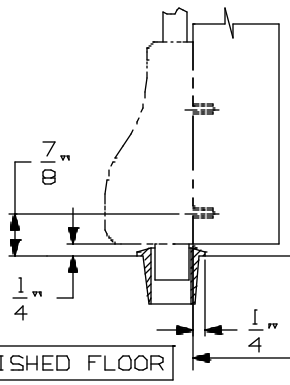

EDGE OF DOOR

CROSSBAR 36 13/16" FROM FINISHED FLOOR

FOR OUTSIDE TRIM PREPARATION, SEE ADDITIONAL TRIM TEMPLATE.

8827TP-F Surface Applied Device

VON DUPRIN®

NOTES: SEE MASTER SHEET #10001 FOR SUGGESTED REINFORCING

TEMPLATE NUMBER: 10165_a

DATE: 05-15-13

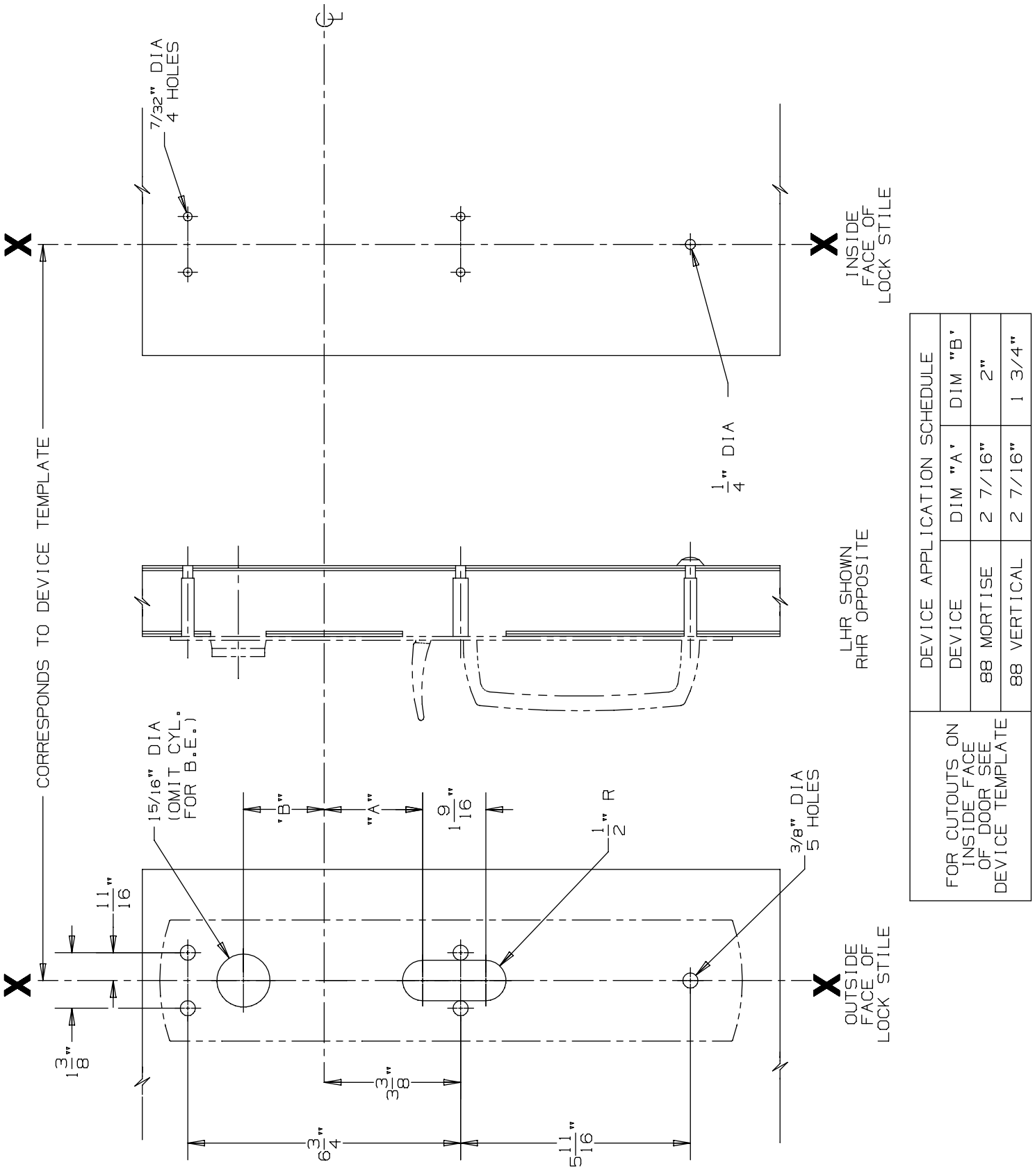

DEVICE APPLICATION SCHEDULE		
DEVICE	DIM "A"	DIM "B"
88 MORTISE	2 7/16"	2"
88 VERTICAL	2 7/16"	1 3/4"

FOR CUTOUTS ON INSIDE FACE OF DOOR SEE DEVICE TEMPLATE

880 TP & 880 TP-BE Trim for 88 Mortise & Vertical Devices

VON DUPRIN®

NOTES: SEE MASTER SHEET #10001 FOR SUGGESTED REINFORCING

TEMPLATE NUMBER: 20260_a

DATE: 05-28-13

DEVICE INSTALLATION SCHEDULE	
VERT. ROD & MORT. DEVICE	2 3/4"
TWO VERT. ROD DEVICES	2 3/4"
SINGLE DOOR	2 3/4"
WHEN SURFACE APPLIED COORDINATOR IS USED, BACKSET OF VERTICAL ROD DEVICE MUST BE	2 3/4"

NOTE: MORTAR GUARD SHOULD BE PROVIDED TO PROTECT SOFFIT LATCH BOLT ASSEMBLY

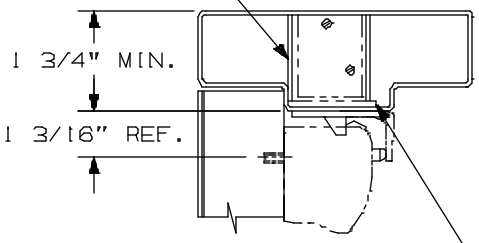

REINFORCING REQUIRED FOR SOFFIT LATCH MUST BE RECESSED 1/8" FROM TOP SURFACE OF STOP

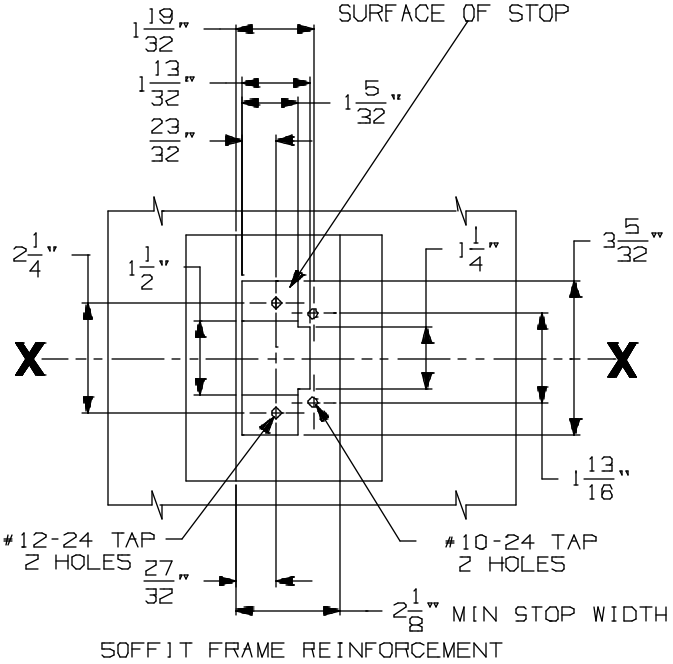

SOFFIT FRAME REINFORCEMENT

LHR SHOWN
RHR OPPOSITE

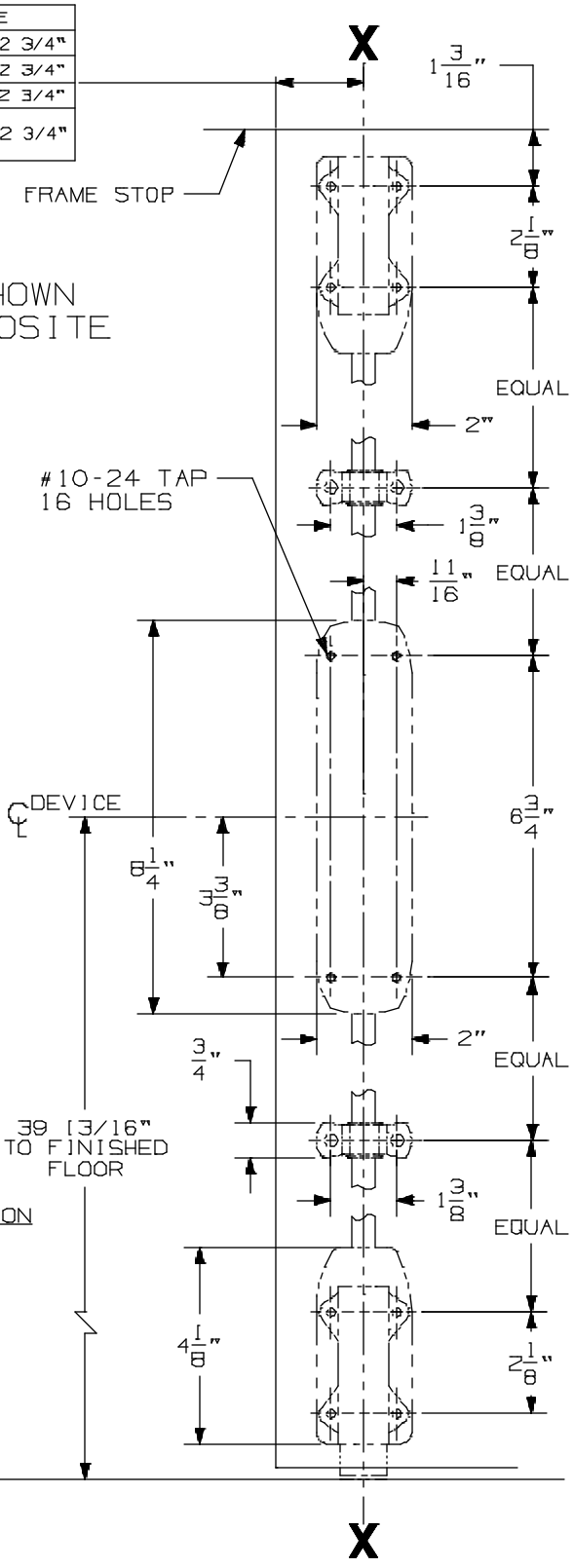

304L STRIKE APPLICATION

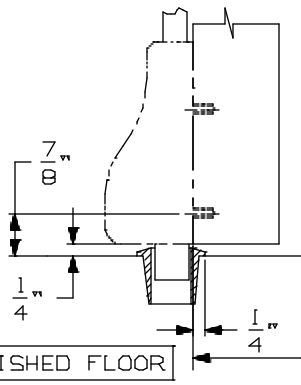

CROSSBAR 36 13/16" FROM FINISHED FLOOR

FOR OUTSIDE TRIM PREPARATION, WHEN REQUIRED, SEE ADDITIONAL TRIM TEMPLATE.

INSIDE FACE OF LOCK STILE LHR DOOR

8827-F & 8827TL-F Surface Applied Device

VON DUPRIN®

NOTES: SEE MASTER SHEET #10001 FOR SUGGESTED REINFORCING

TEMPLATE NUMBER: 10164_a

DATE: 05-15-13

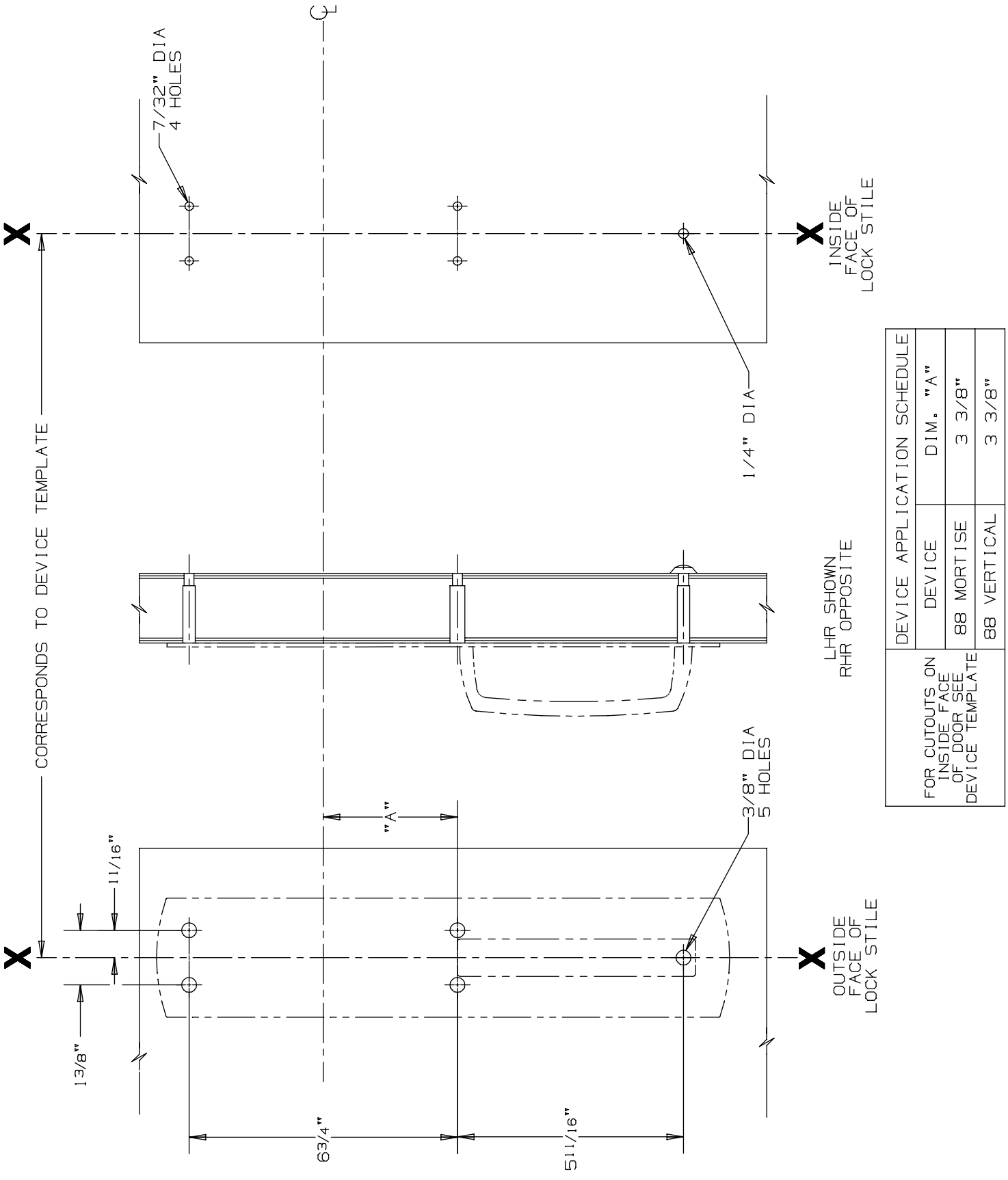

DEVICE APPLICATION SCHEDULE		
DEVICE	DIM. "A"	
88 MORTISE	3 3/8"	
88 VERTICAL	3 3/8"	

FOR CUTOUTS ON INSIDE FACE OF DOOR SEE DEVICE TEMPLATE

880 DT Trim for 88 Mortise & Vertical Devices

VON DUPRIN®

NOTES: SEE MASTER SHEET #10001 FOR SUGGESTED REINFORCING

TEMPLATE NUMBER: 20258_a

DATE: 05-28-13

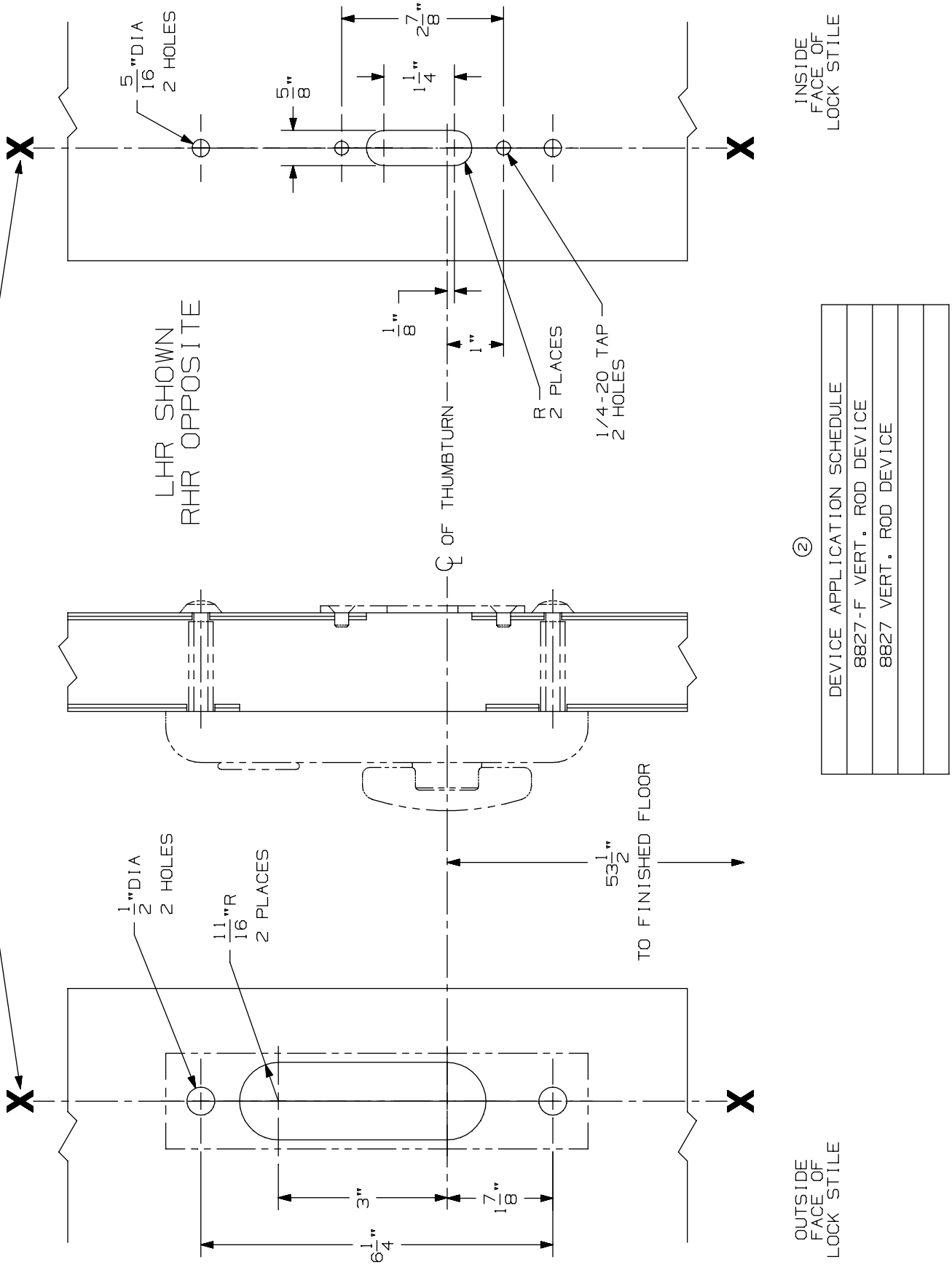

② DEVICE APPLICATION SCHEDULE

8827-F VERT. ROD DEVICE
8827 VERT. ROD DEVICE

377-T Control

VON DUPRIN®

NOTES: SEE MASTER SHEET #10001 FOR SUGGESTED REINFORCING

TEMPLATE NUMBER: 40116_a

DATE: 05-28-13

88 Series Exit Devices

-

8847-F Concealed Vertical Rod Fire

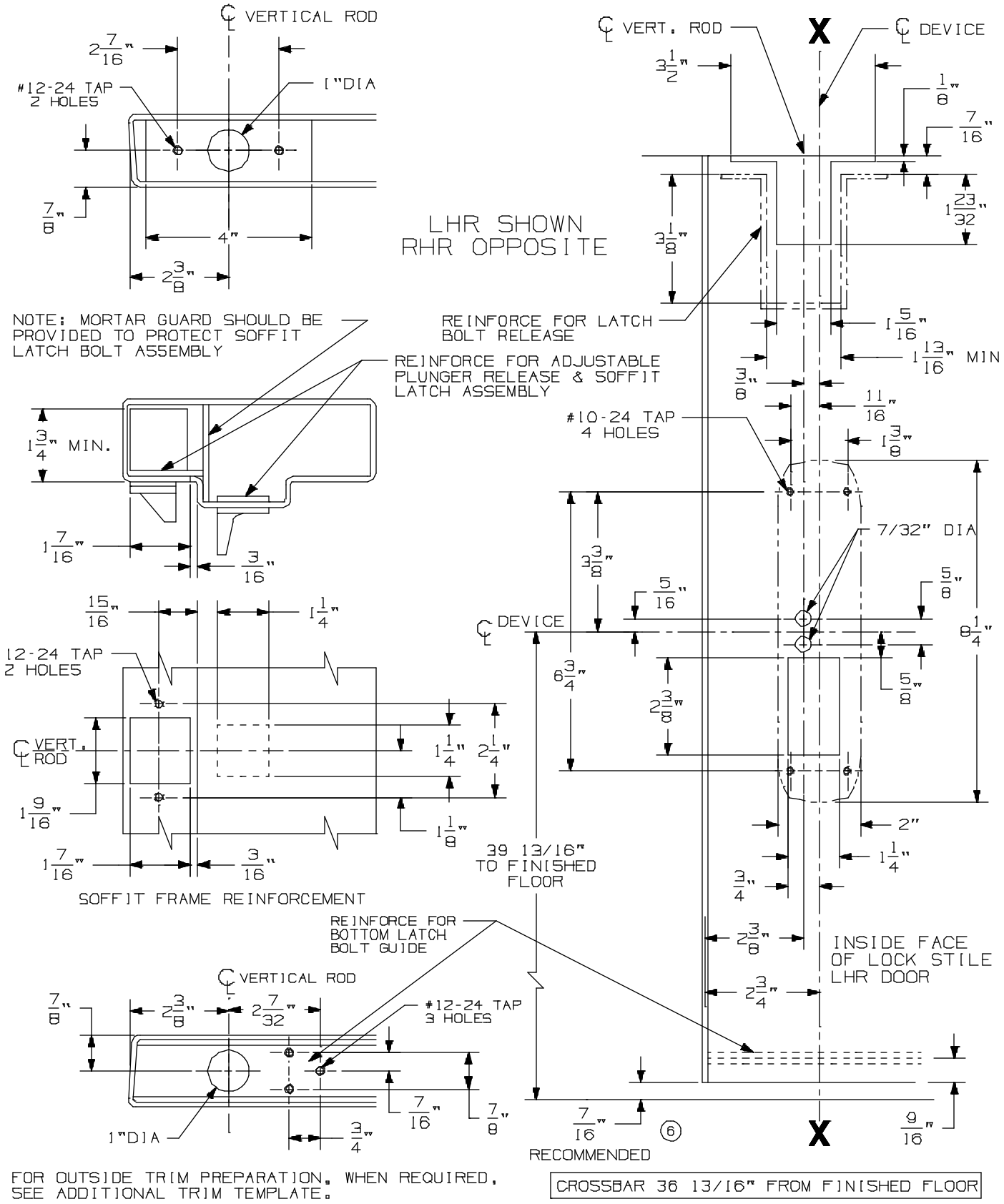

8847-F & 8847-F TL Concealed Vertical Rod Device

VON DUPRIN®

NOTES: SEE MASTER SHEET #10001 FOR SUGGESTED REINFORCING

TEMPLATE NUMBER: 10163_a

DATE: 05-15-13

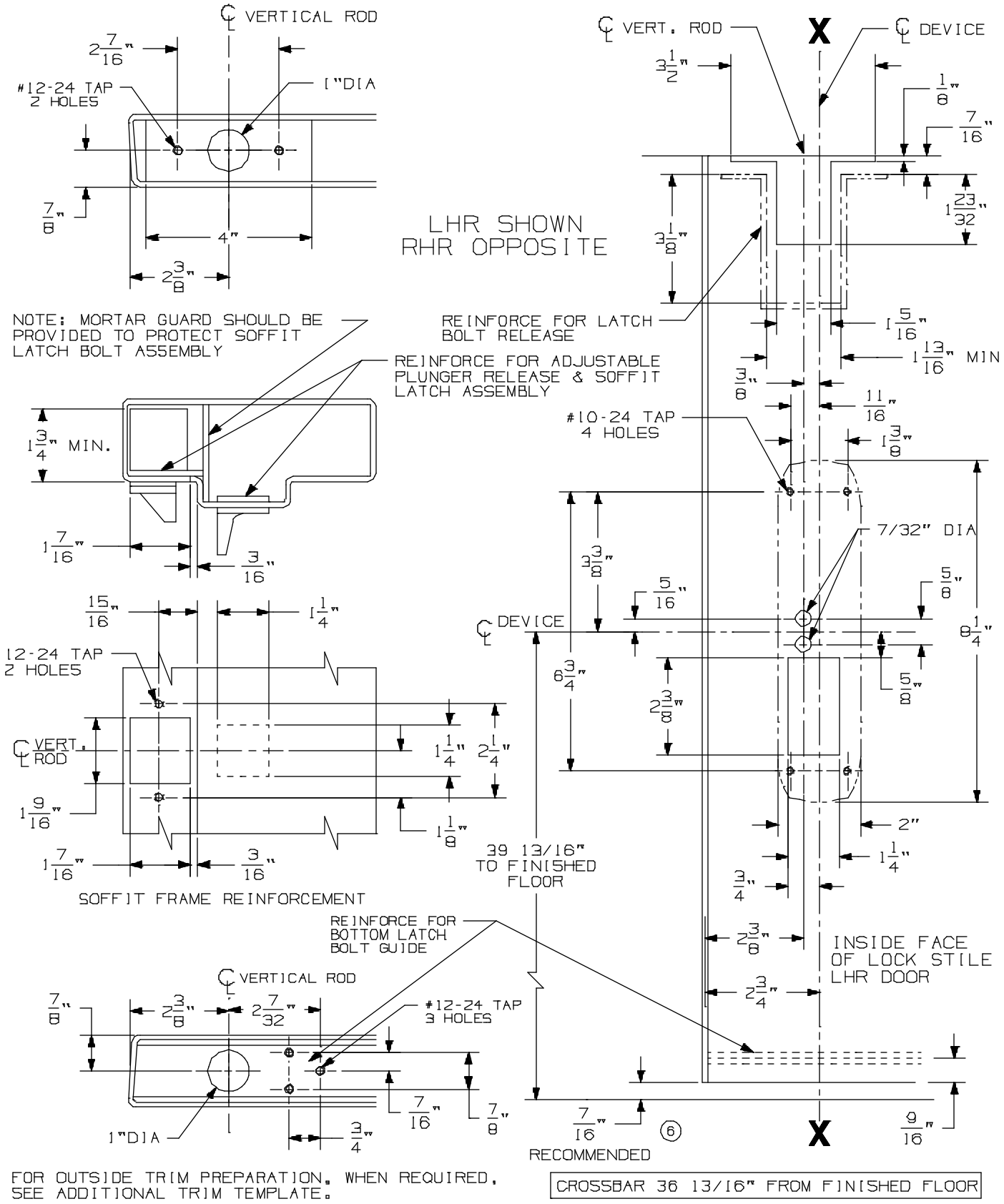

8847-F & 8847-F TL Concealed Vertical Rod Device

VON DUPRIN®

NOTES: SEE MASTER SHEET #10001 FOR SUGGESTED REINFORCING

TEMPLATE NUMBER: 10163_a

DATE: 05-15-13

NOTES: SEE MASTER SHEET #10001 FOR SUGGESTED REINFORCING

371-L Control

VON DUPRIN®

TEMPLATE NUMBER: 40098_a

DATE: 05-28-13

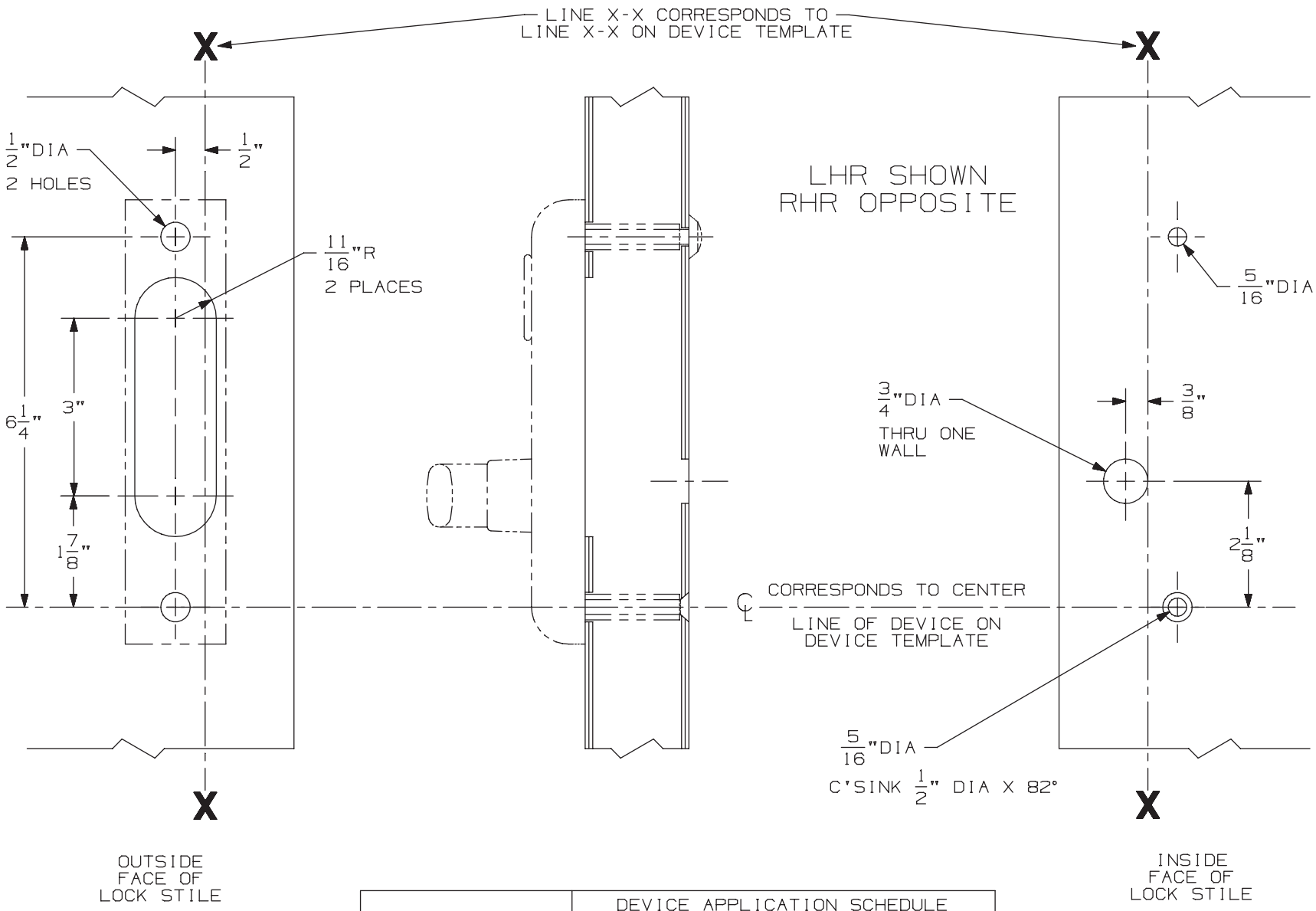

	DEVICE APPLICATION SCHEDULE
FOR CUTOUT ON INSIDE FACE OF DOOR SEE DEVICE TEMPLATE	8847-F VERTICAL ROD DEVICE

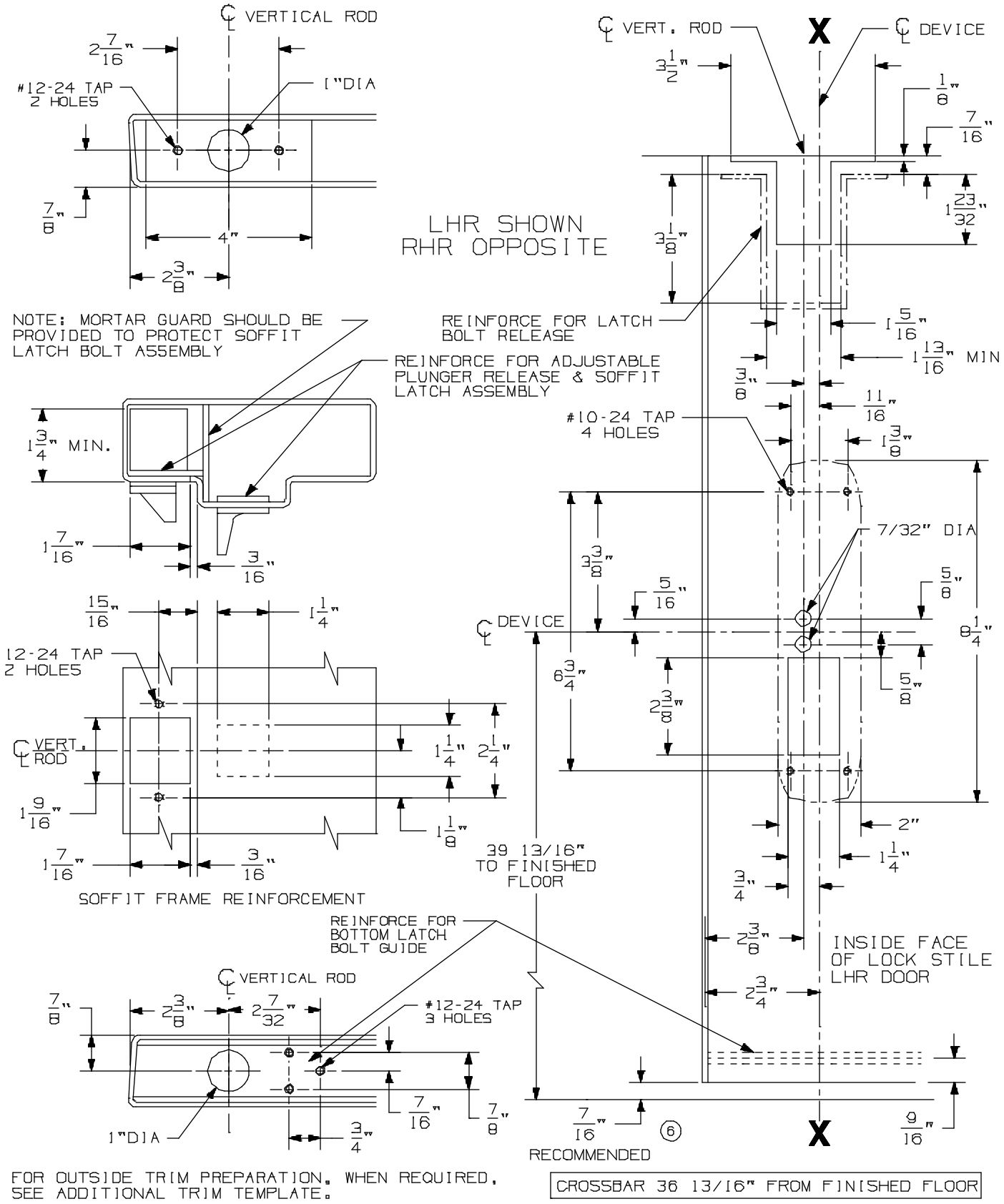

8847-F & 8847-F TL Concealed Vertical Rod Device

VON DUPRIN®

NOTES: SEE MASTER SHEET #10001 FOR SUGGESTED REINFORCING

TEMPLATE NUMBER: 10163_a

DATE: 05-15-13

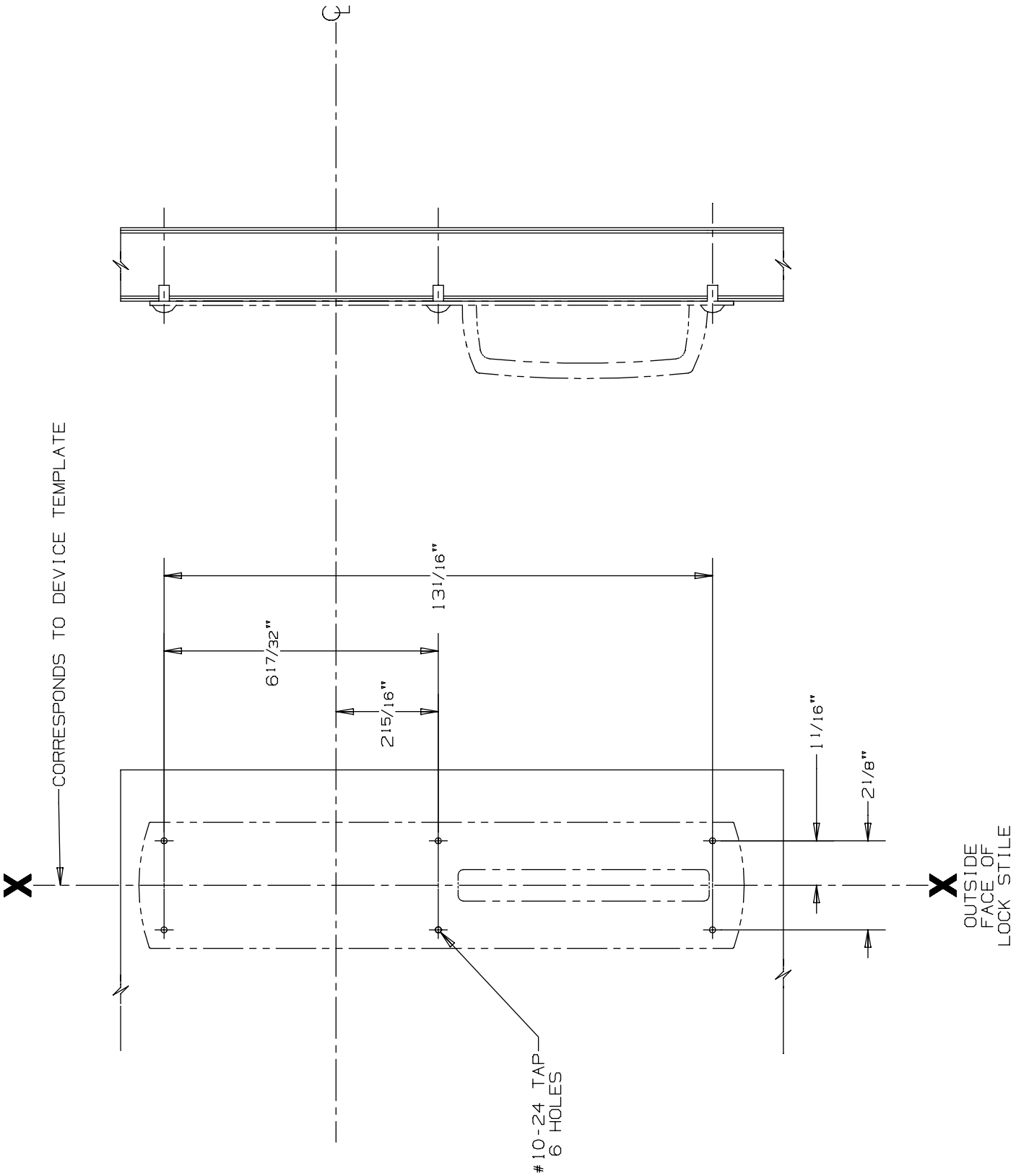

880 DT (Surface Applied) Trim
8847-F Vertical Rod Device

VON DUPRIN®

NOTES: SEE MASTER SHEET #10001 FOR SUGGESTED REINFORCING

TEMPLATE NUMBER: 20249_a

DATE: 05-28-13

376-T Control

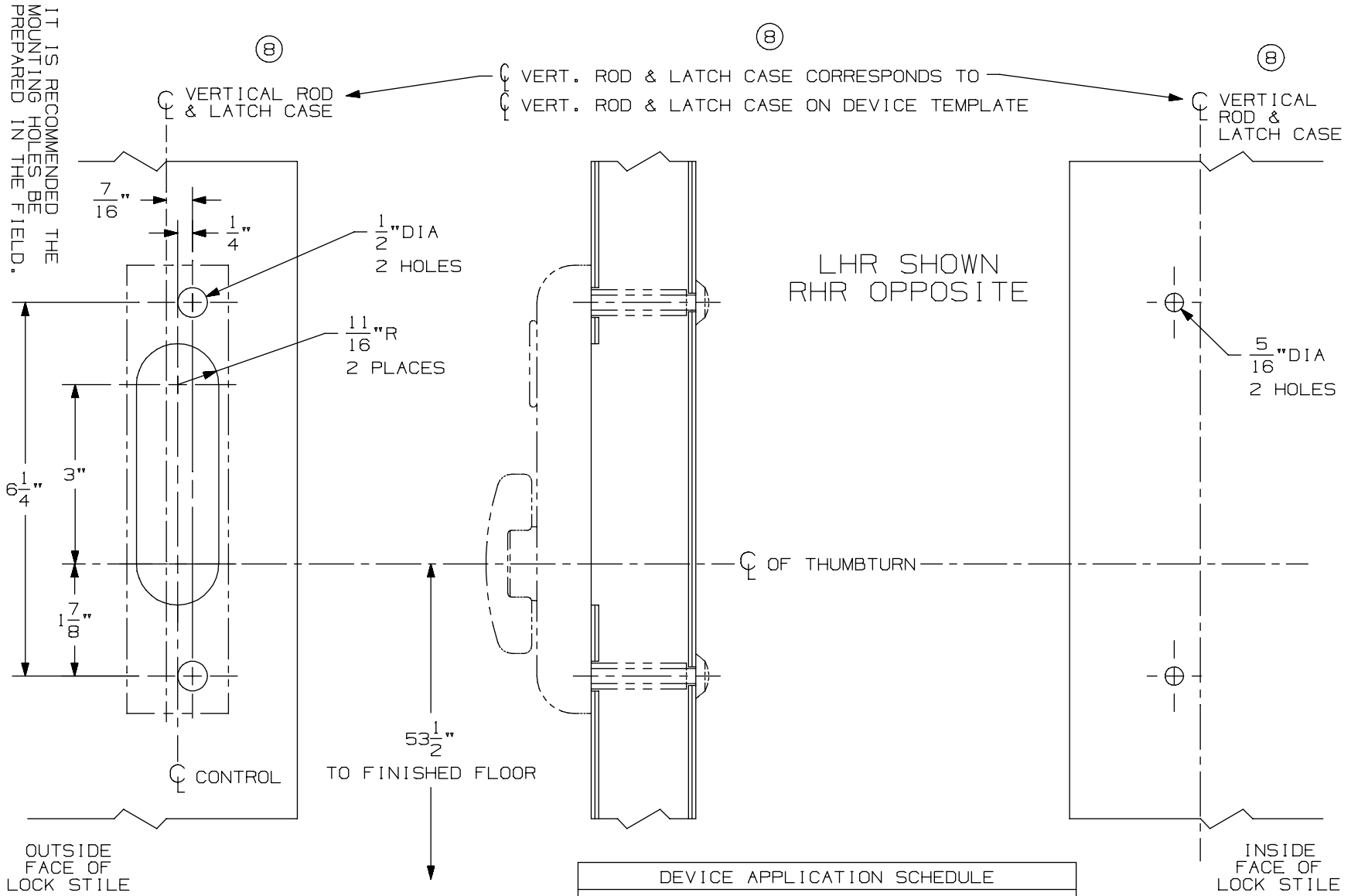

DEVICE APPLICATION SCHEDULE
5547/5547-F VERT. ROD DEVICE
8847-F VERT. ROD DEVICE
* 3347/3547 VERT. ROD DEVICE
3347-F/3547-F VERT. ROD DEVICE
⑧ * 3347A/3547A VERT. ROD DEVICE
⑧ 3347A-F/3547A-F VERT. ROD DEVICE
9847/9947 VERT. ROD DEVICE
9847-F/9947-F VERTICAL ROD DEVICE

⑧ * NOT TO BE USED WITH 1 1/16" LATCH CASE BACKSET ON BULLNOSE EDGE DOORS WITH WEATHERSTRIP CHANNEL.

NOTES: SEE MASTER SHEET #10001 FOR SUGGESTED REINFORCING

TEMPLATE NUMBER: 40114_a

DATE: 05-28-13

VON DUPRIN®

88 Series Exit Devices

-

8875 575-2 Dbl. Door StrikeMortise

NOTES:
1. FOR OUTSIDE TRIM PREPARATION, WHEN REQUIRED, SEE TRIM TEMPLATE.
2. WIRING TO E7500 & SS7500 LOCKS GOES THROUGH DOOR AND NOT DEVICE.
3. LHR APPLICATION SHOWN, RHR APPLICATION OPPOSITE.

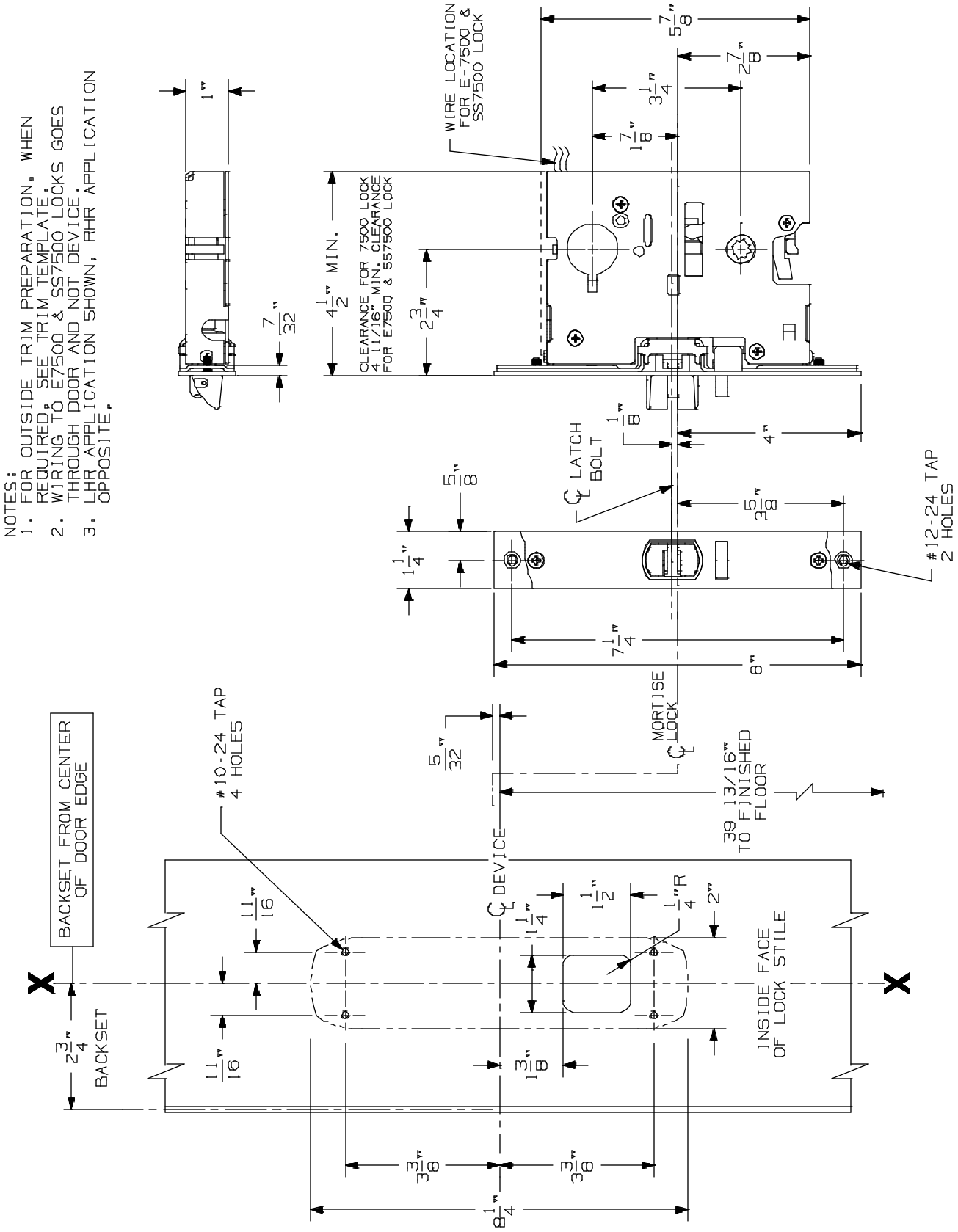

8875/8875-F Mortise Lock Device

VON DUPRIN®

NOTES: SEE MASTER SHEET #10001 FOR SUGGESTED REINFORCING

TEMPLATE NUMBER: 10179_a

DATE: 05-15-13

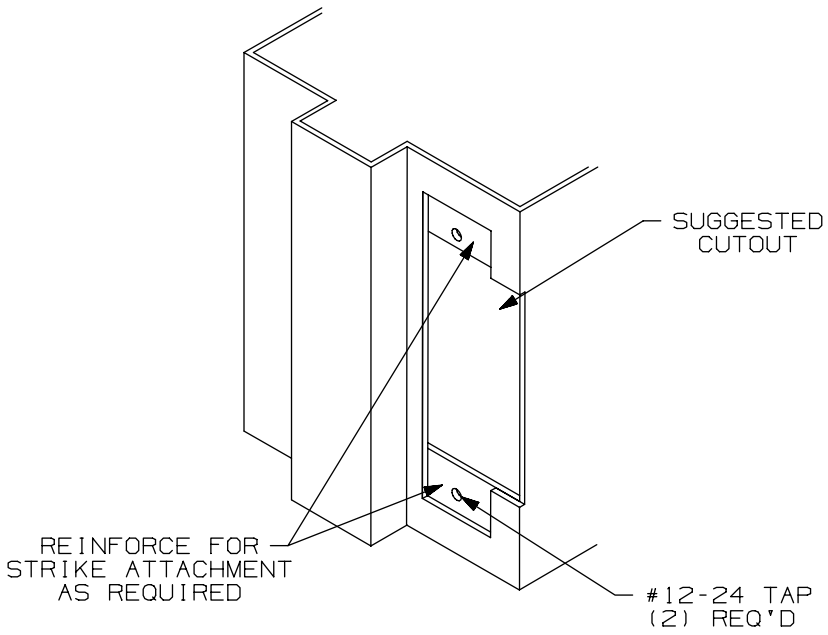

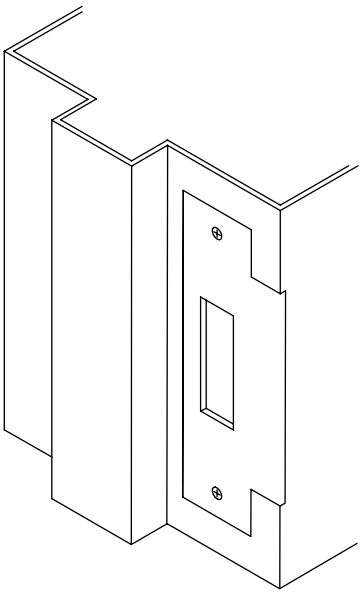

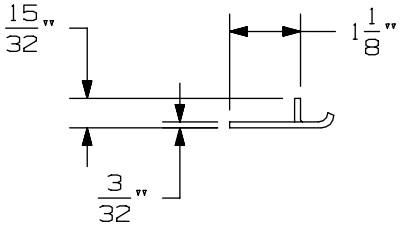

APPLICATION SCHEDULE	
DEVICE	DIM. "A"
9875 & 9875-F	11/16
9975 & 9975-F	11/16
8875 & 8875-F	1/2
5575 & 5575-F	1/2

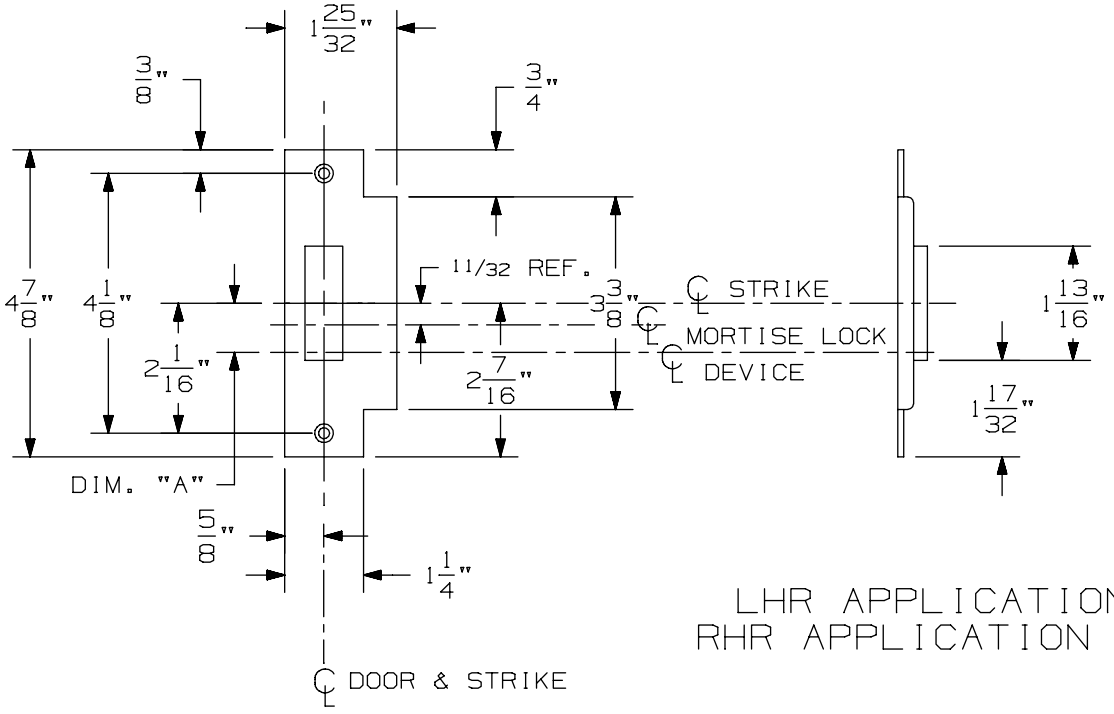

LHR APPLICATION SHOWN
RHR APPLICATION OPPOSITE

575 Mortise Strike (Single Door) for 7500 Mortise Lock

VON DUPRIN®

NOTES: SEE MASTER SHEET #10001 FOR SUGGESTED REINFORCING

TEMPLATE NUMBER: 30210_b

DATE: 07-22-13

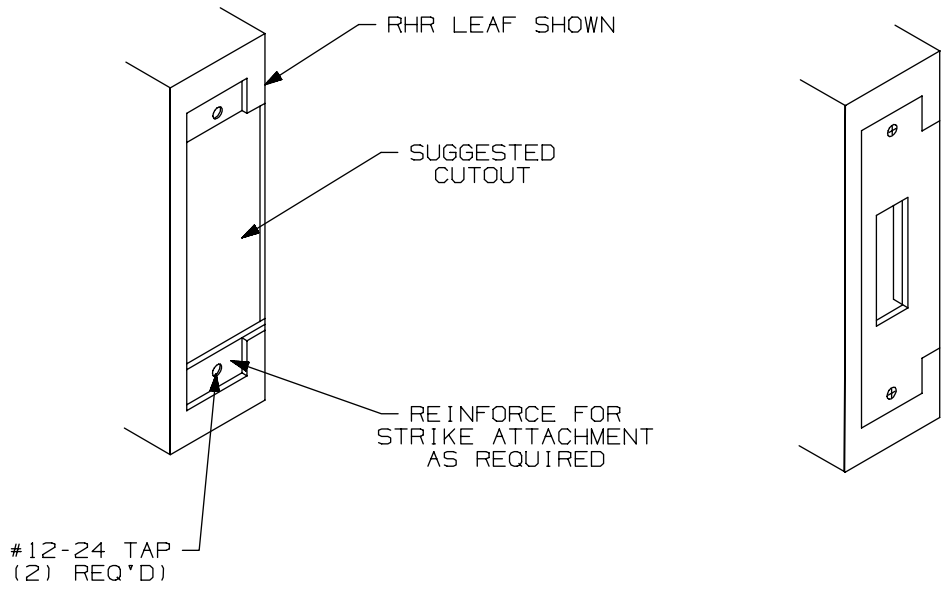

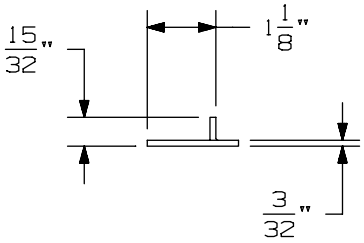

APPLICATION SCHEDULE	
DEVICE	DIM. "A"
9875 & 9875-F	11/16
9975 & 9975-F	11/16
8875 & 8875-F	1/2
5575 & 5575-F	1/2

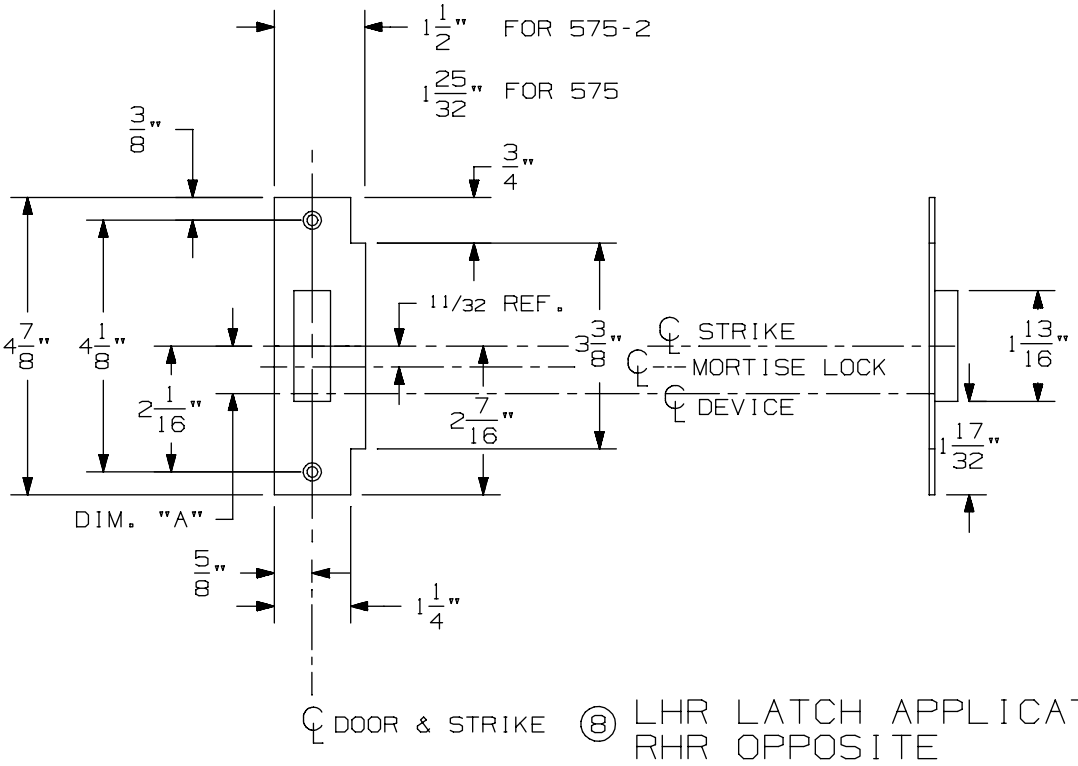

⑧ LHR LATCH APPLICATION SHOWN
RHR OPPOSITE

575-2 Mortise Strike (Double Doors) for 7500 Mortise Lock

VON DUPRIN®

NOTES: SEE MASTER SHEET #10001 FOR SUGGESTED REINFORCING

TEMPLATE NUMBER: 30212_b

DATE: 07-22-13

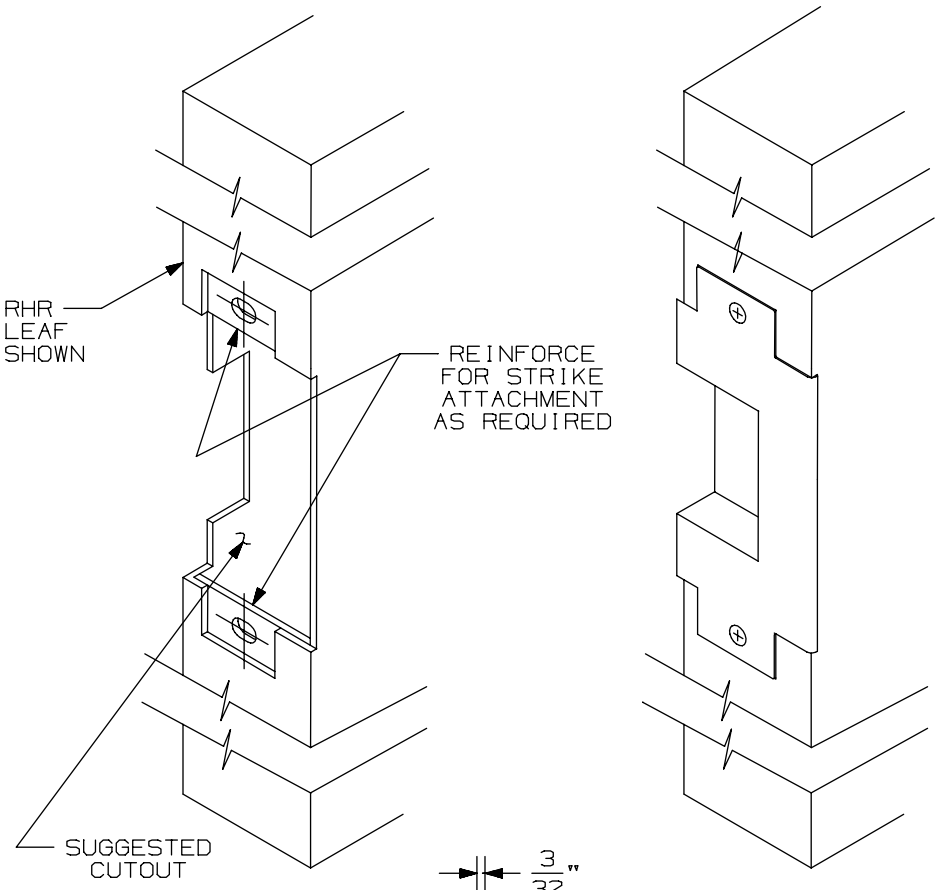

APPLICATION SCHEDULE	
DEVICE	DIM."A"
9875 & 9875-F	11/16
9975 & 9975-F	11/16
8875 & 8875-F	1/2
5575 & 5575-F	1/2

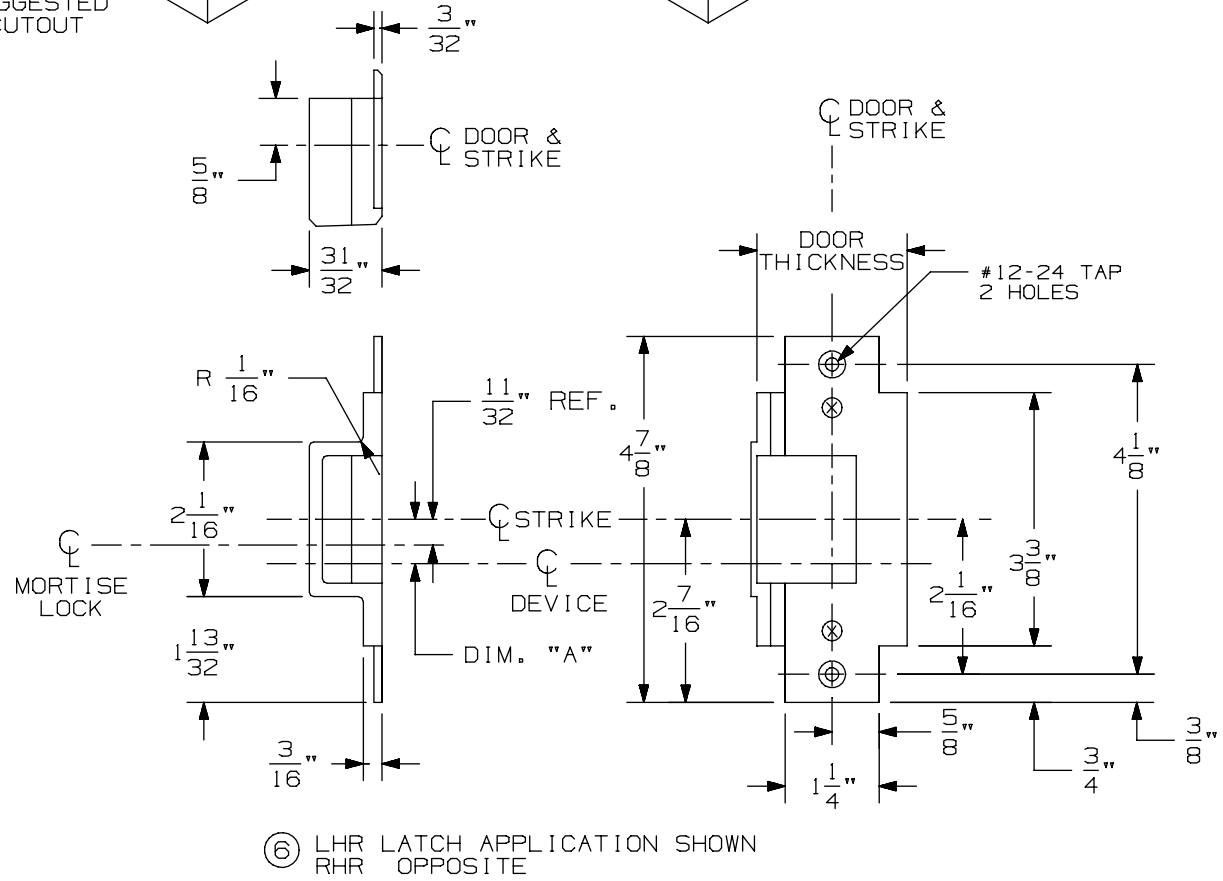

⑥ LHR LATCH APPLICATION SHOWN
RHR OPPOSITE

576A & 576B Mortise Strike for 7500 Mortise Lock

VON DUPRIN®

NOTES: SEE MASTER SHEET #10001 FOR SUGGESTED REINFORCING

TEMPLATE NUMBER: 30211_a

DATE: 05-28-13

NOTES:
1. FOR OUTSIDE TRIM PREPARATION, WHEN REQUIRED, SEE TRIM TEMPLATE.
2. WIRING TO E7500 & SS7500 LOCKS GOES THROUGH DOOR AND NOT DEVICE.
3. LHR APPLICATION SHOWN, RHR APPLICATION OPPOSITE.

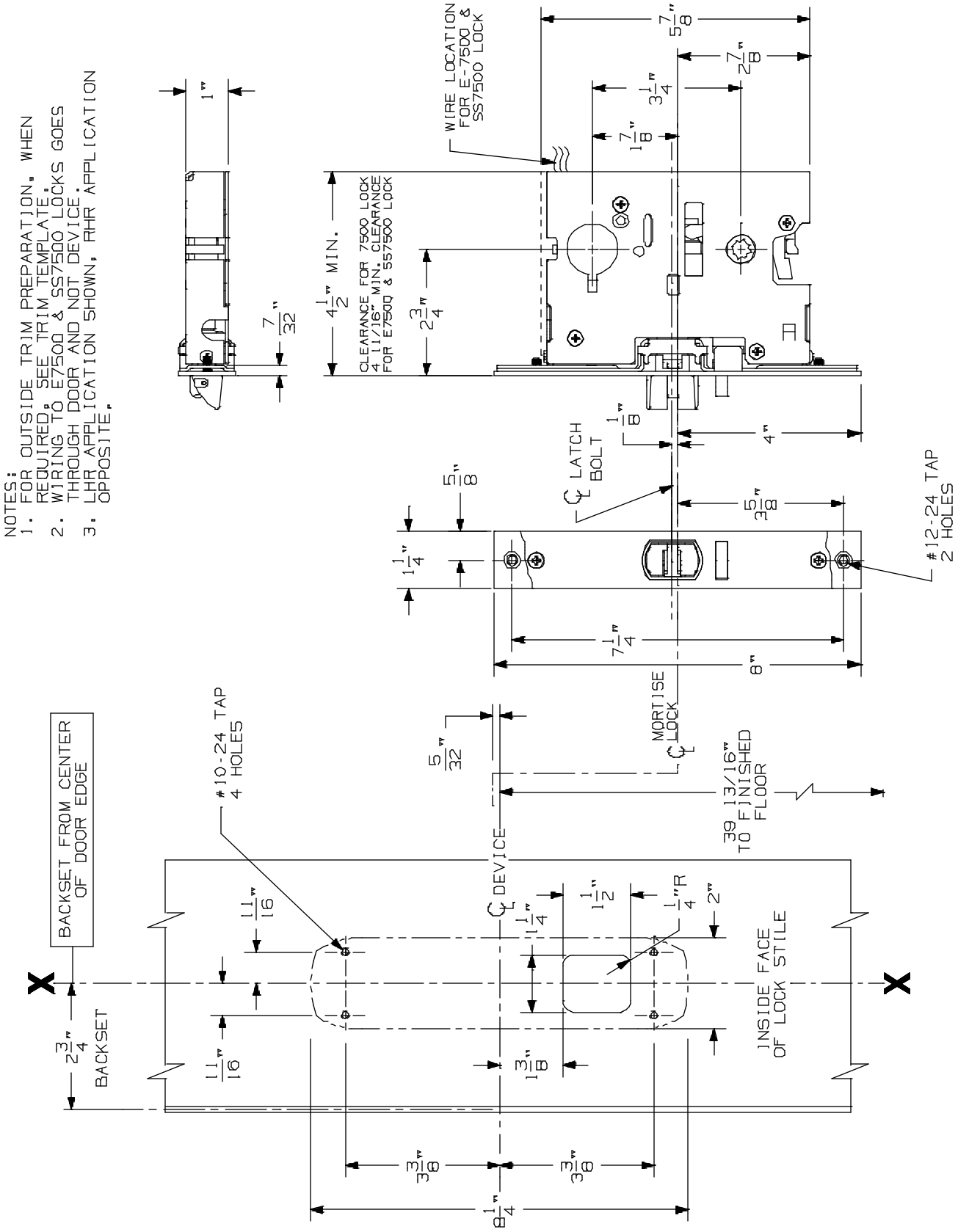

8875/8875-F Mortise Lock Device

VON DUPRIN®

NOTES: SEE MASTER SHEET #10001 FOR SUGGESTED REINFORCING

TEMPLATE NUMBER: 10179_a

DATE: 05-15-13

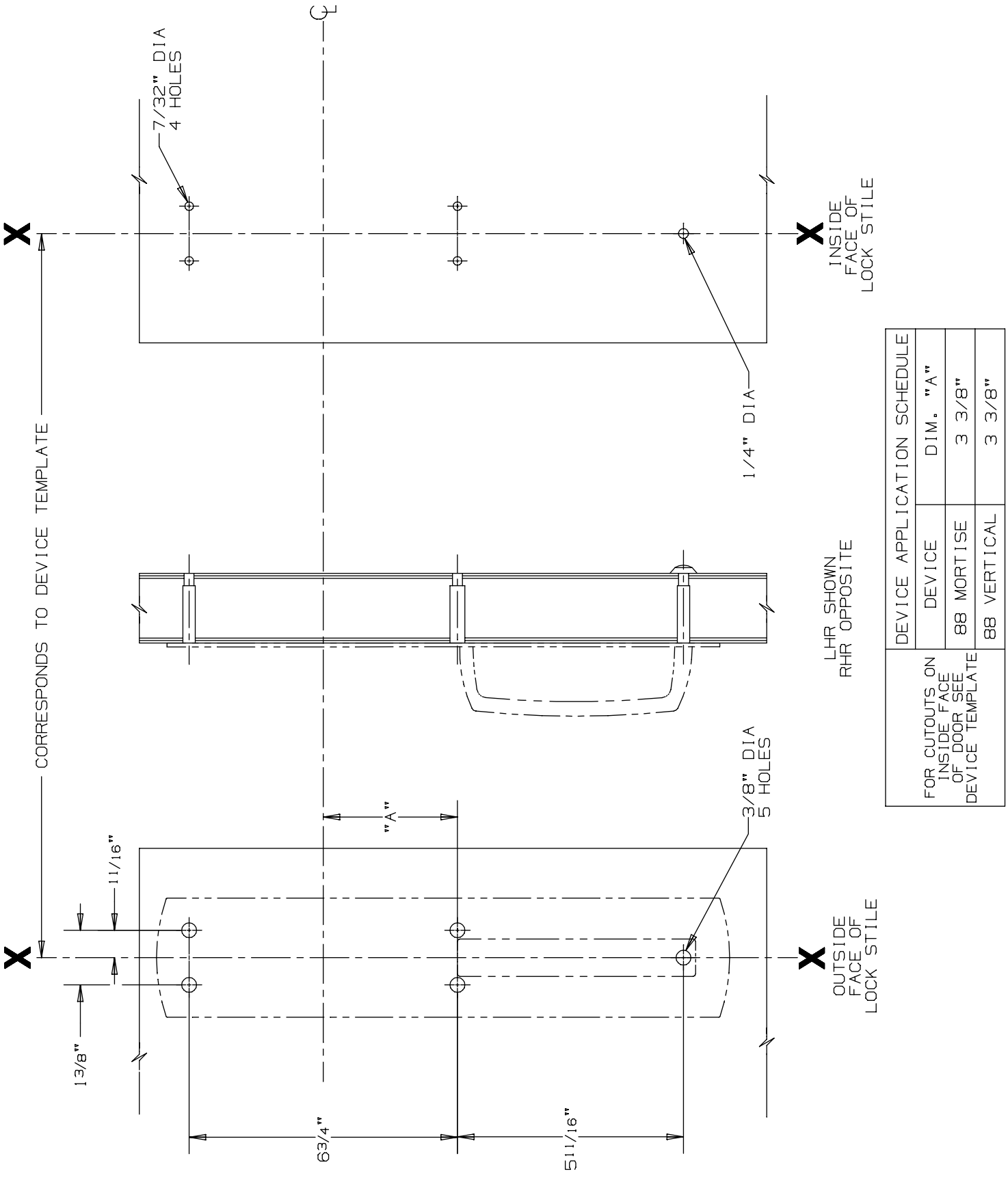

DEVICE APPLICATION SCHEDULE		
DEVICE	DIM. "A"	
88 MORTISE	3 3/8"	
88 VERTICAL	3 3/8"	

FOR CUTOUTS ON INSIDE FACE OF DOOR SEE DEVICE TEMPLATE

880 DT Trim for 88 Mortise & Vertical Devices

VON DUPRIN®

NOTES: SEE MASTER SHEET #10001 FOR SUGGESTED REINFORCING

TEMPLATE NUMBER: 20258_a

DATE: 05-28-13

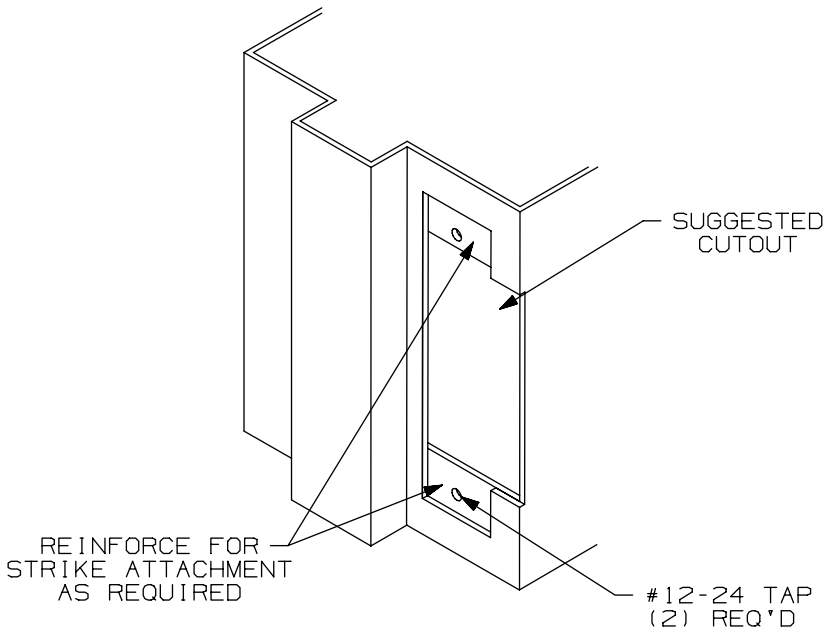

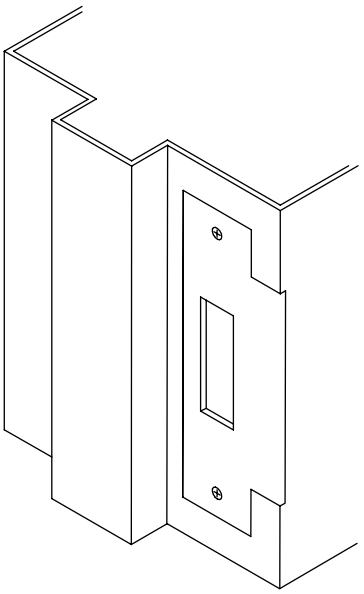

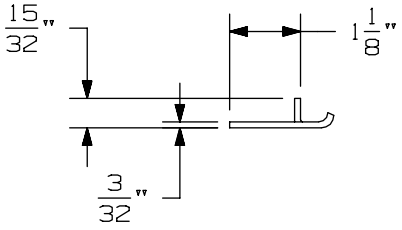

APPLICATION SCHEDULE	
DEVICE	DIM. "A"
9875 & 9875-F	11/16
9975 & 9975-F	11/16
8875 & 8875-F	1/2
5575 & 5575-F	1/2

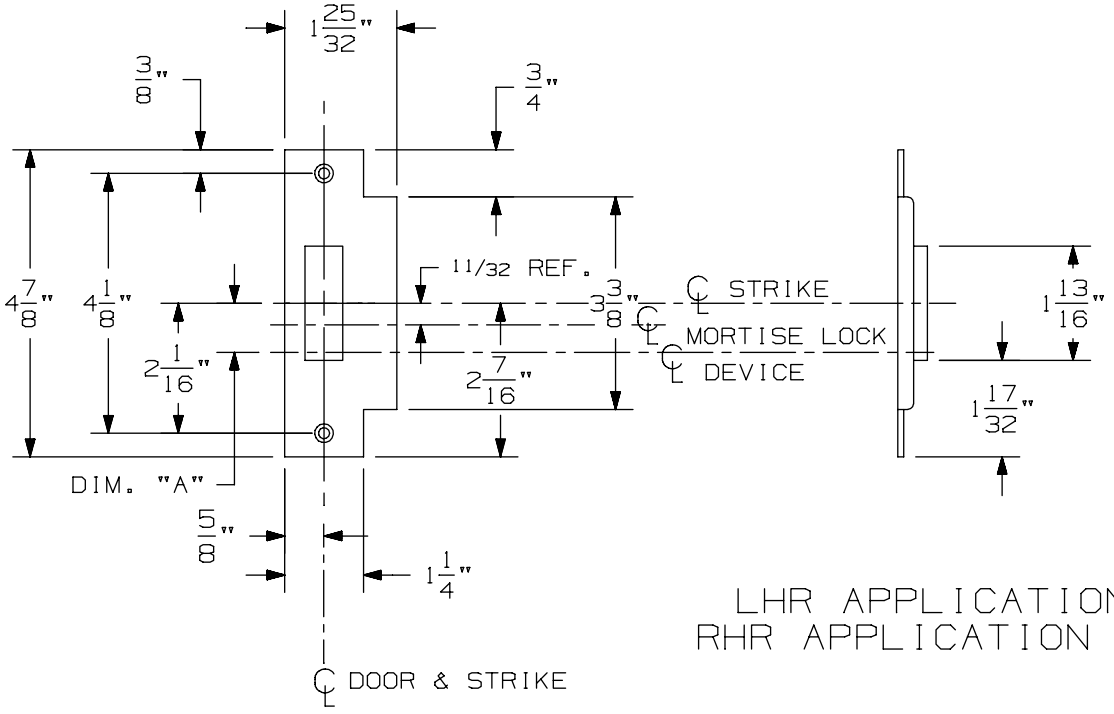

LHR APPLICATION SHOWN
RHR APPLICATION OPPOSITE

575 Mortise Strike (Single Door) for 7500 Mortise Lock

VON DUPRIN®

NOTES: SEE MASTER SHEET #10001 FOR SUGGESTED REINFORCING

TEMPLATE NUMBER: 30210_b

DATE: 07-22-13

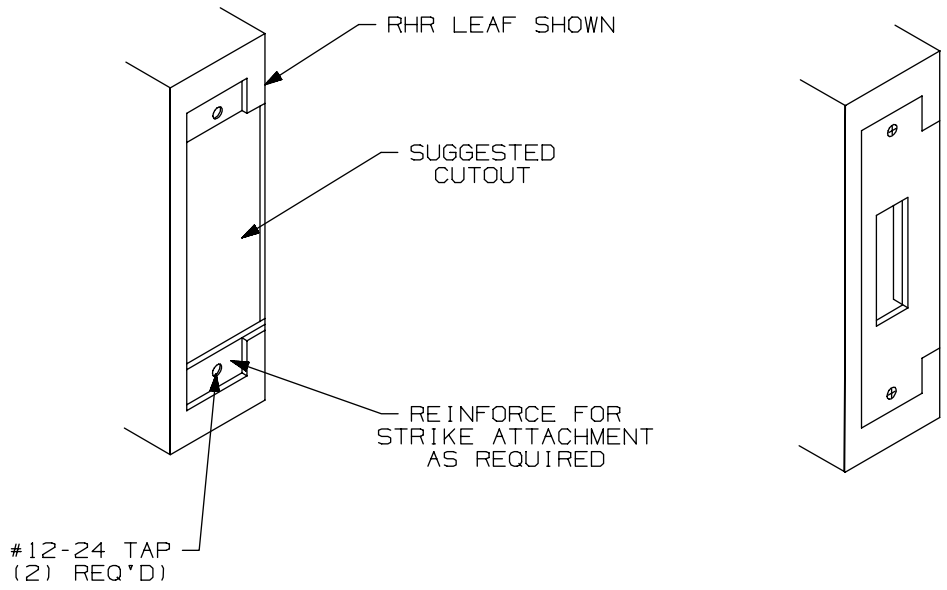

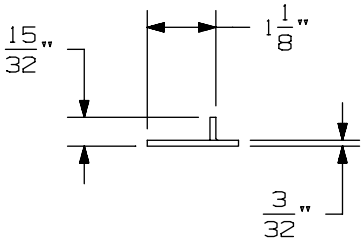

APPLICATION SCHEDULE	
DEVICE	DIM. "A"
9875 & 9875-F	11/16
9975 & 9975-F	11/16
8875 & 8875-F	1/2
5575 & 5575-F	1/2

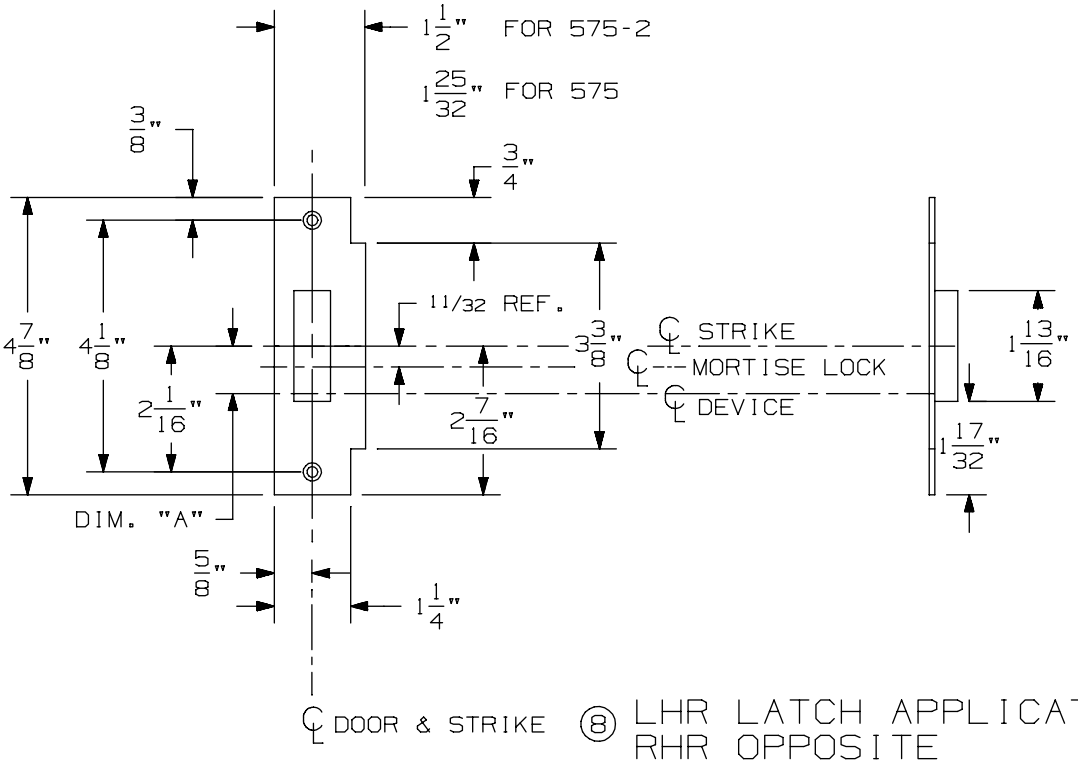

⑧ LHR LATCH APPLICATION SHOWN
RHR OPPOSITE

575-2 Mortise Strike (Double Doors) for 7500 Mortise Lock

VON DUPRIN®

NOTES: SEE MASTER SHEET #10001 FOR SUGGESTED REINFORCING

TEMPLATE NUMBER: 30212_b

DATE: 07-22-13

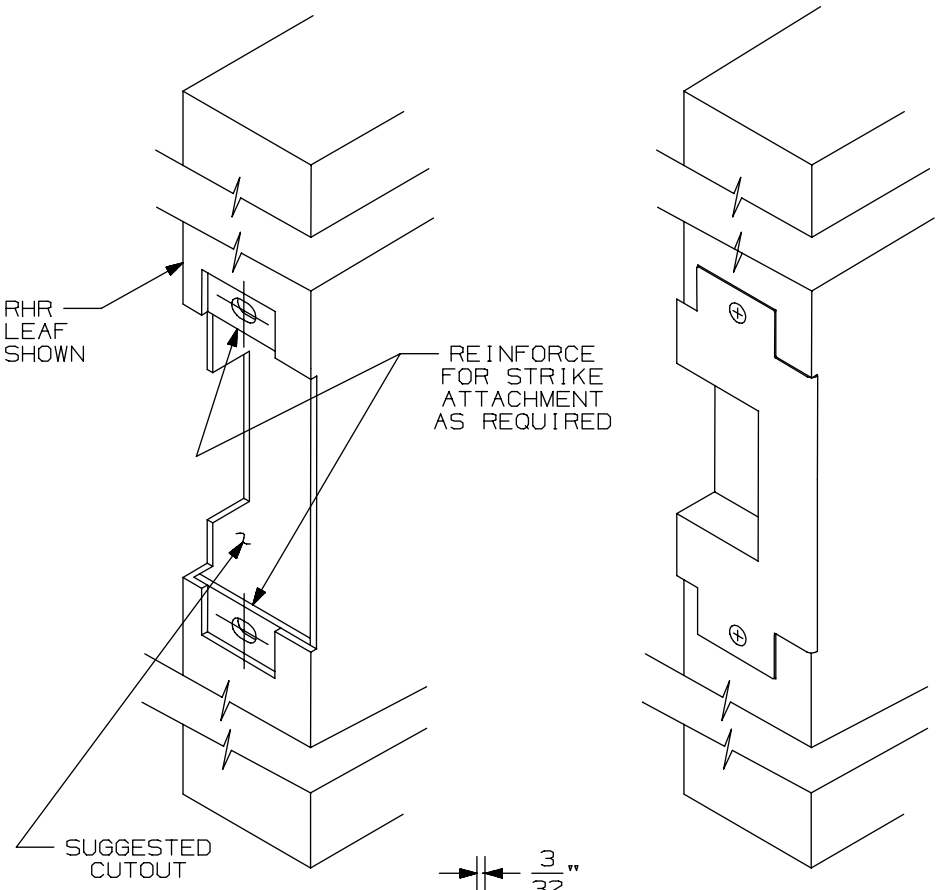

APPLICATION SCHEDULE	
DEVICE	DIM."A"
9875 & 9875-F	11/16
9975 & 9975-F	11/16
8875 & 8875-F	1/2
5575 & 5575-F	1/2

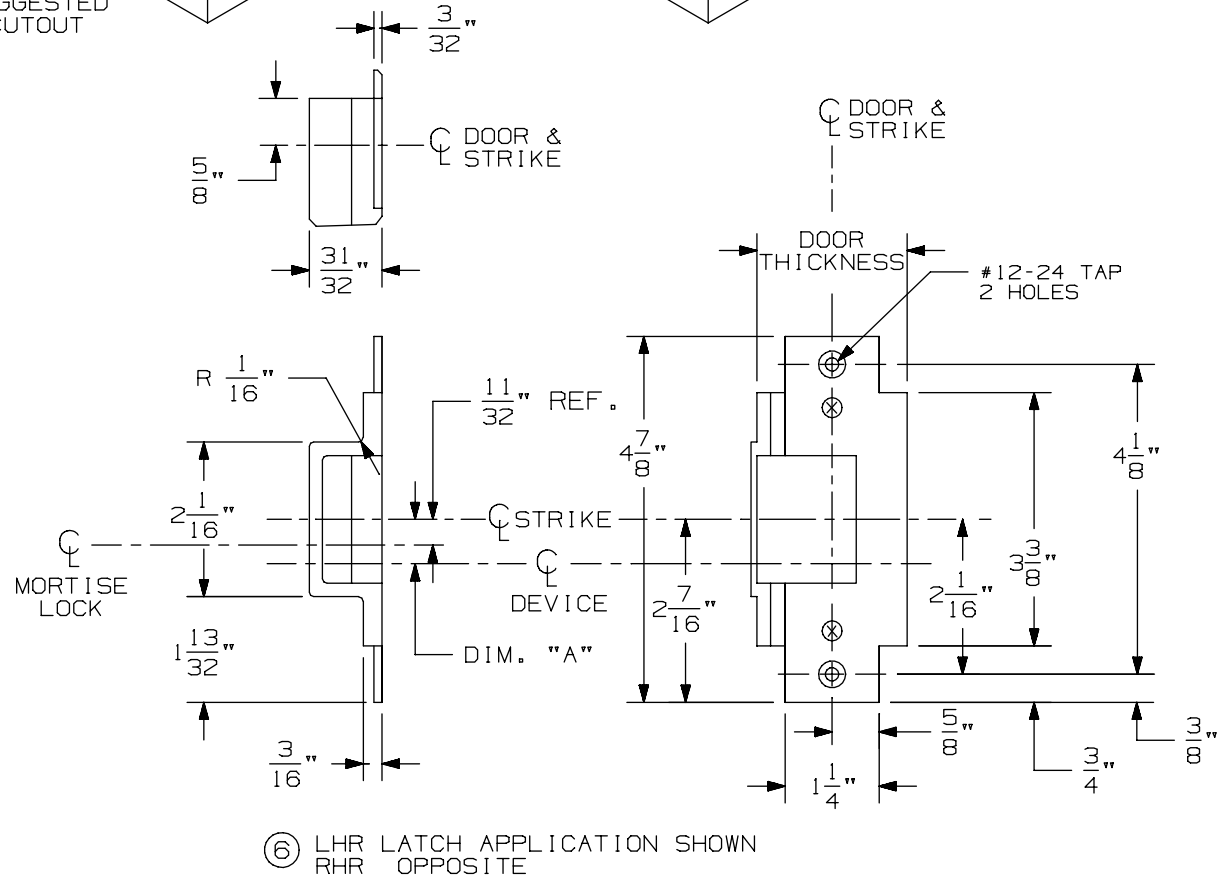

⑥ LHR LATCH APPLICATION SHOWN
RHR OPPOSITE

576A & 576B Mortise Strike for 7500 Mortise Lock

VON DUPRIN®

NOTES: SEE MASTER SHEET #10001 FOR SUGGESTED REINFORCING

TEMPLATE NUMBER: 30211_a

DATE: 05-28-13

NOTES:
1. FOR OUTSIDE TRIM PREPARATION, WHEN REQUIRED, SEE TRIM TEMPLATE.
2. WIRING TO E7500 & SS7500 LOCKS GOES THROUGH DOOR AND NOT DEVICE.
3. LHR APPLICATION SHOWN, RHR APPLICATION OPPOSITE.

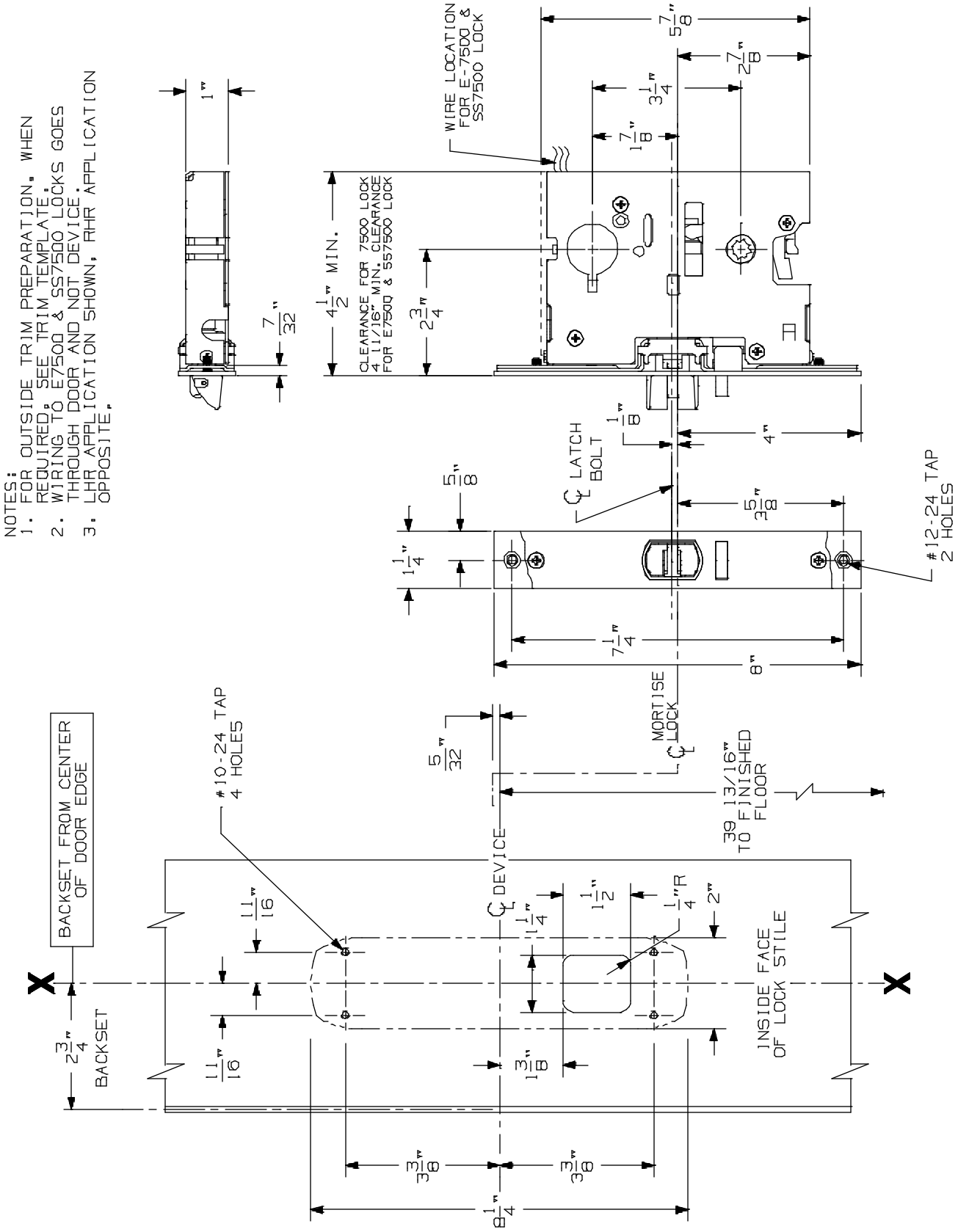

8875/8875-F Mortise Lock Device

VON DUPRIN®

NOTES: SEE MASTER SHEET #10001 FOR SUGGESTED REINFORCING

TEMPLATE NUMBER: 10179_a

DATE: 05-15-13

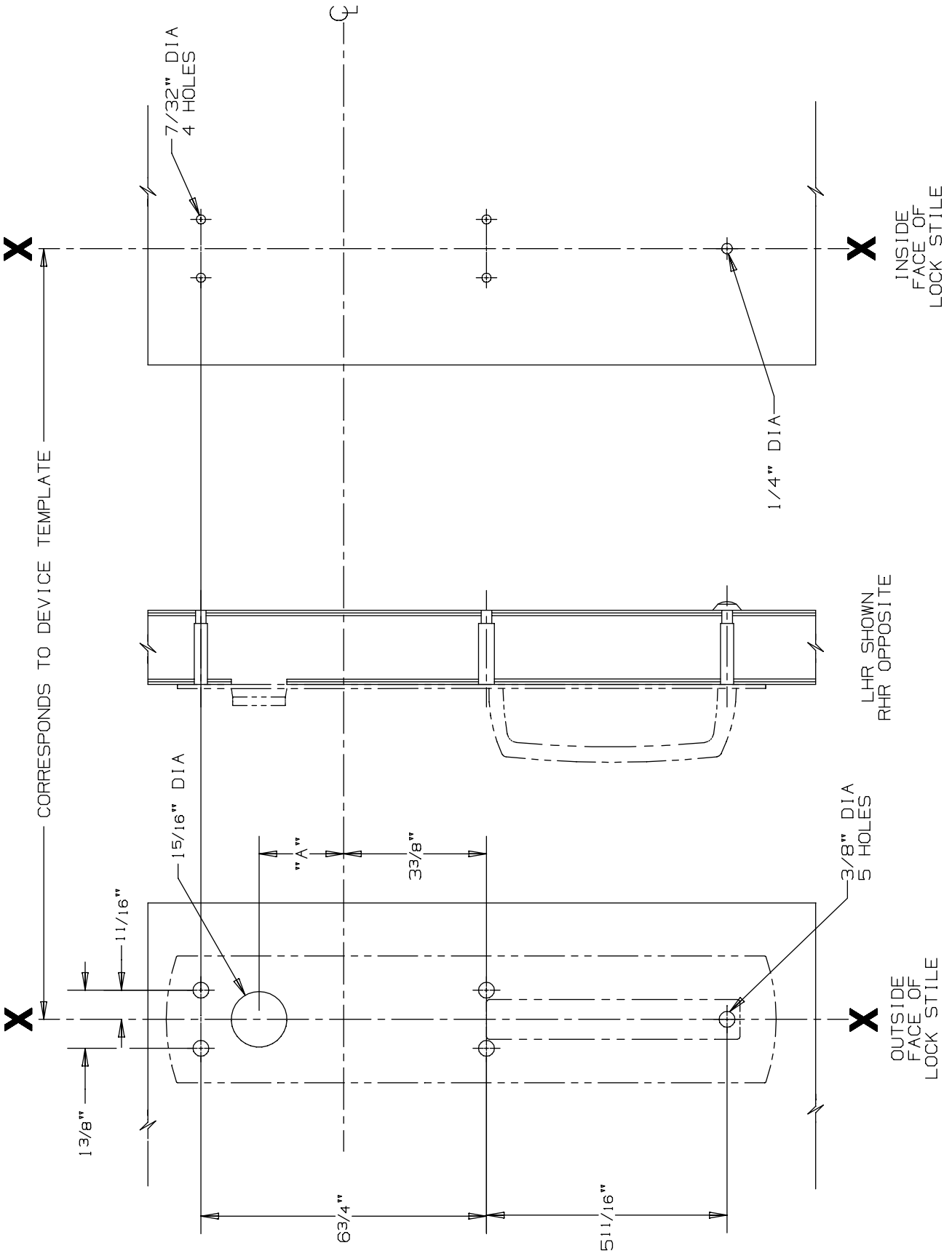

DEVICE APPLICATION SCHEDULE		
DEVICE	DIM. "A"	
88 MORTISE	2"	

FOR CUTOUTS ON INSIDE FACE OF DOOR SEE DEVICE TEMPLATE

880 NL Trim for 88 Mortise Devices

VON DUPRIN®

NOTES: SEE MASTER SHEET #10001 FOR SUGGESTED REINFORCING

TEMPLATE NUMBER: 20259_a

DATE: 05-28-13

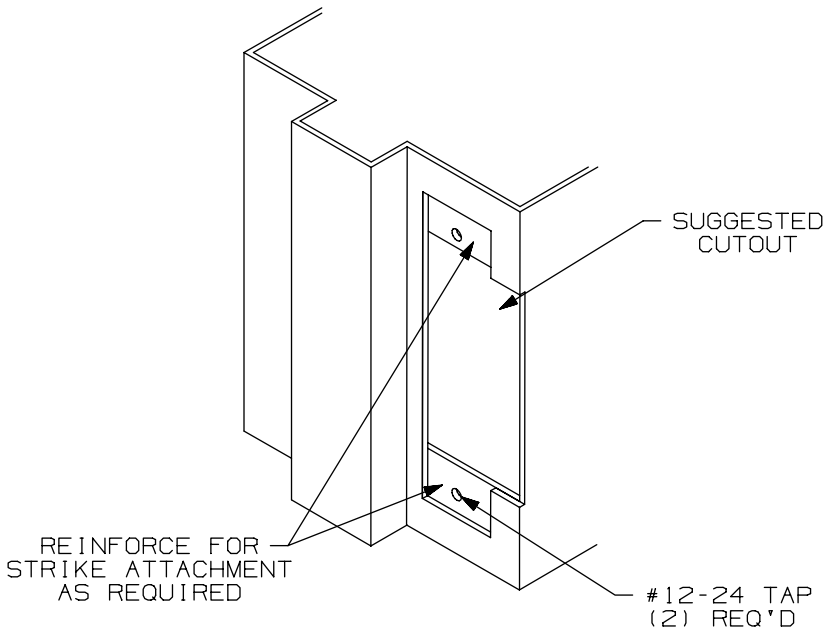

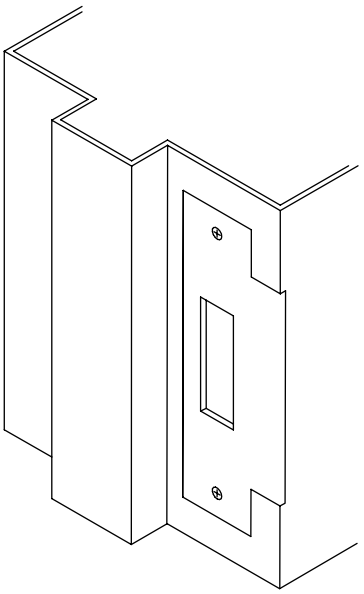

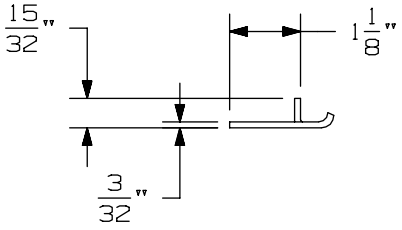

APPLICATION SCHEDULE	
DEVICE	DIM. "A"
9875 & 9875-F	11/16
9975 & 9975-F	11/16
8875 & 8875-F	1/2
5575 & 5575-F	1/2

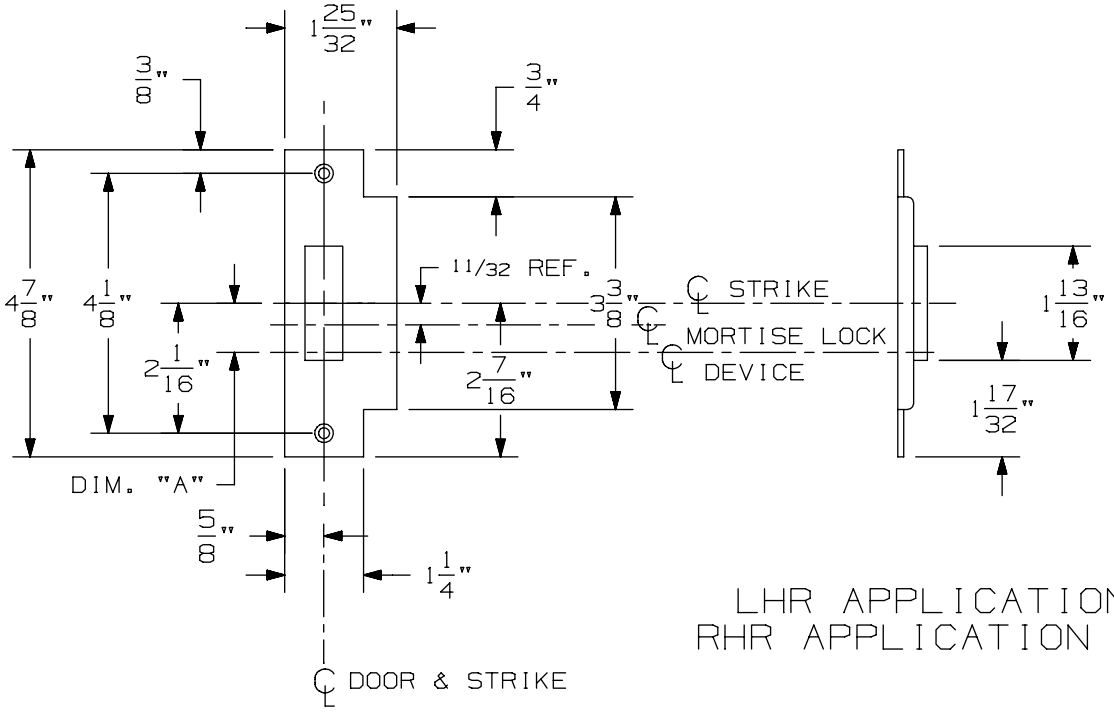

LHR APPLICATION SHOWN
RHR APPLICATION OPPOSITE

575 Mortise Strike (Single Door) for 7500 Mortise Lock

VON DUPRIN®

NOTES: SEE MASTER SHEET #10001 FOR SUGGESTED REINFORCING

TEMPLATE NUMBER: 30210_b

DATE: 07-22-13

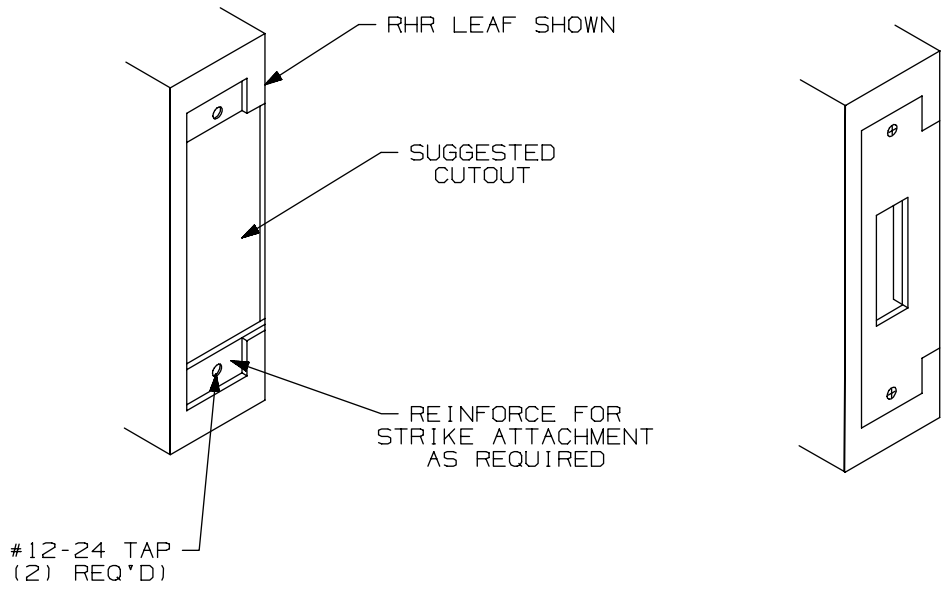

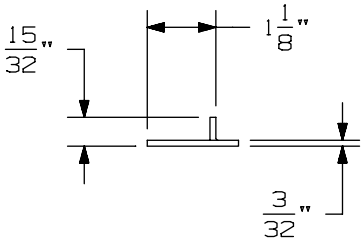

APPLICATION SCHEDULE	
DEVICE	DIM. "A"
9875 & 9875-F	11/16
9975 & 9975-F	11/16
8875 & 8875-F	1/2
5575 & 5575-F	1/2

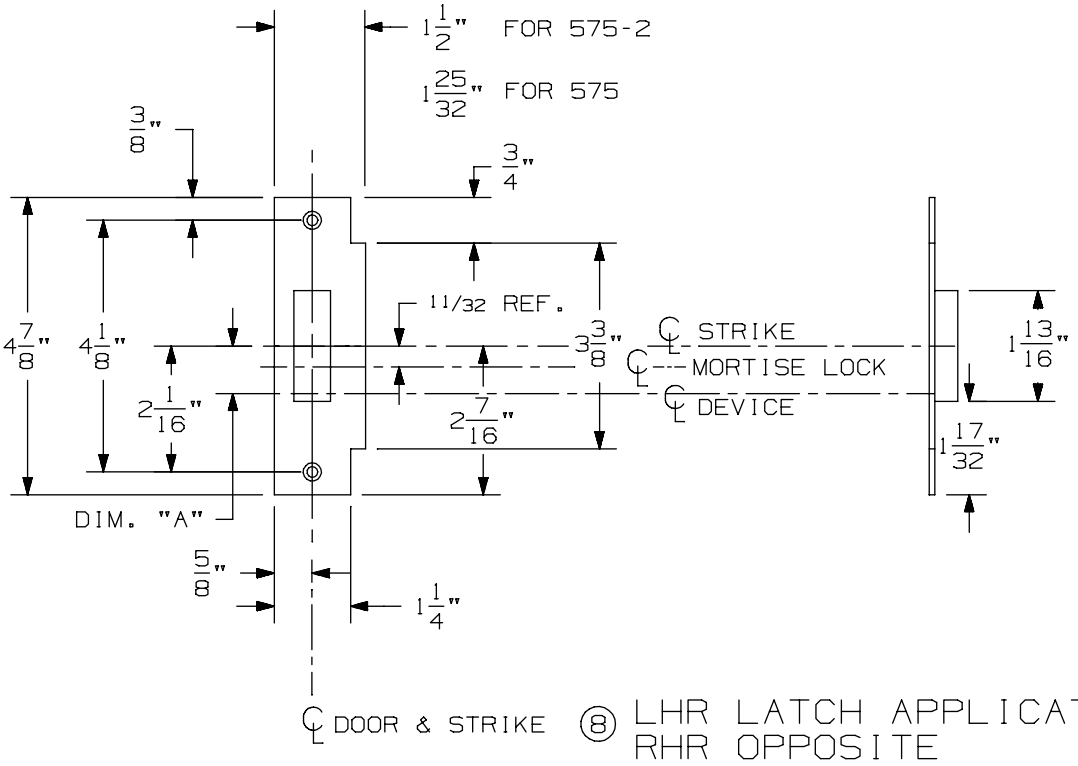

⑧ LHR LATCH APPLICATION SHOWN
RHR OPPOSITE

575-2 Mortise Strike (Double Doors) for 7500 Mortise Lock

VON DUPRIN®

NOTES: SEE MASTER SHEET #10001 FOR SUGGESTED REINFORCING

TEMPLATE NUMBER: 30212_b

DATE: 07-22-13

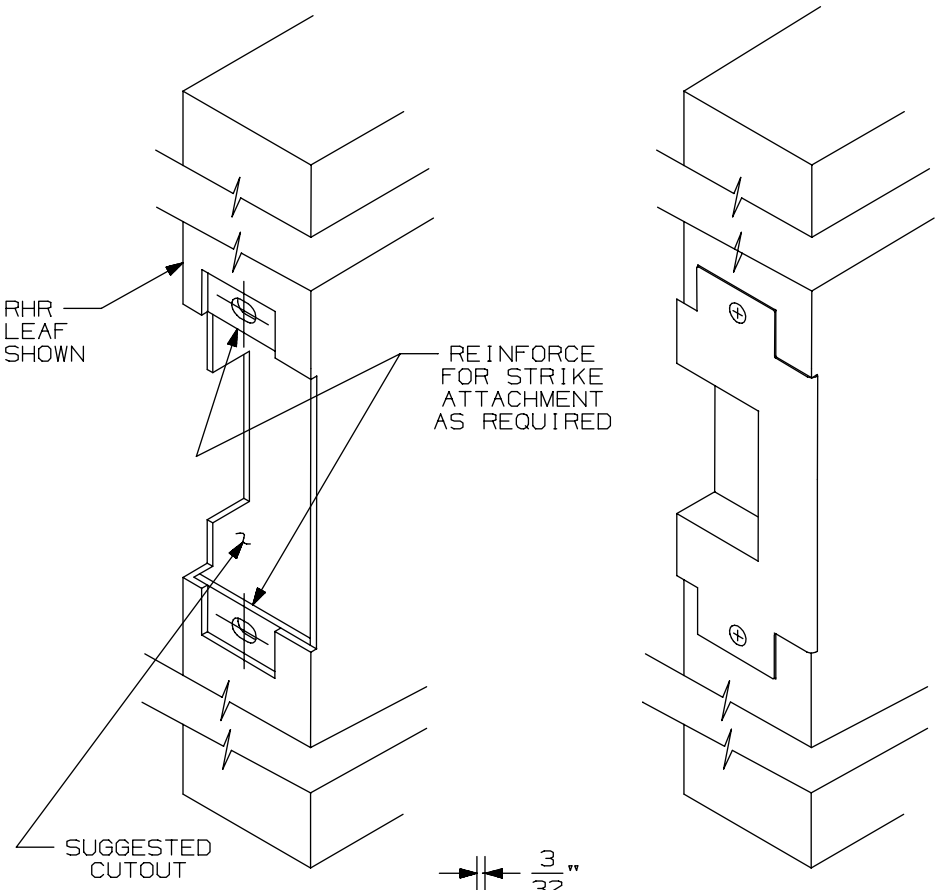

APPLICATION SCHEDULE	
DEVICE	DIM."A"
9875 & 9875-F	11/16
9975 & 9975-F	11/16
8875 & 8875-F	1/2
5575 & 5575-F	1/2

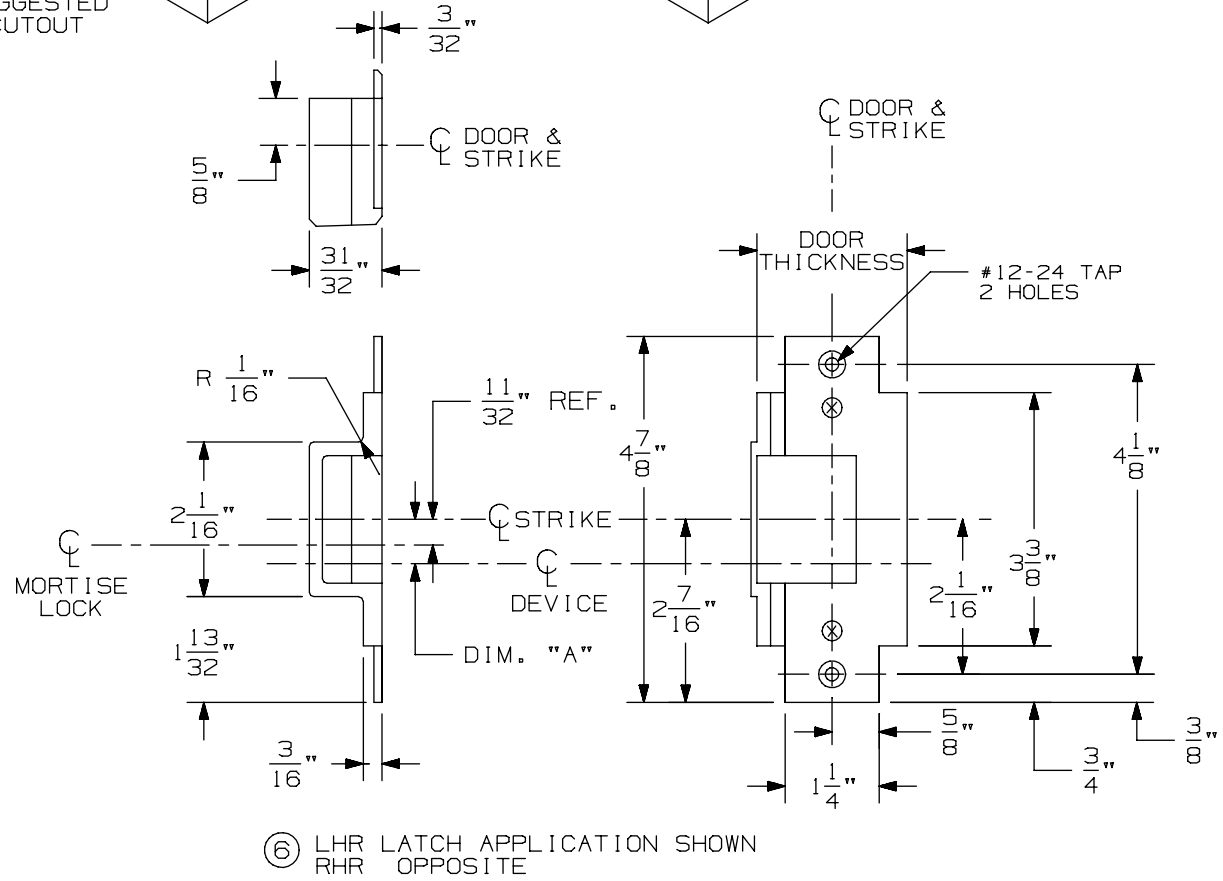

⑥ LHR LATCH APPLICATION SHOWN
RHR OPPOSITE

576A & 576B Mortise Strike for 7500 Mortise Lock

VON DUPRIN®

NOTES: SEE MASTER SHEET #10001 FOR SUGGESTED REINFORCING

TEMPLATE NUMBER: 30211_a

DATE: 05-28-13

NOTES:
1. FOR OUTSIDE TRIM PREPARATION, WHEN REQUIRED, SEE TRIM TEMPLATE.
2. WIRING TO E7500 & SS7500 LOCKS GOES THROUGH DOOR AND NOT DEVICE.
3. LHR APPLICATION SHOWN, RHR APPLICATION OPPOSITE.

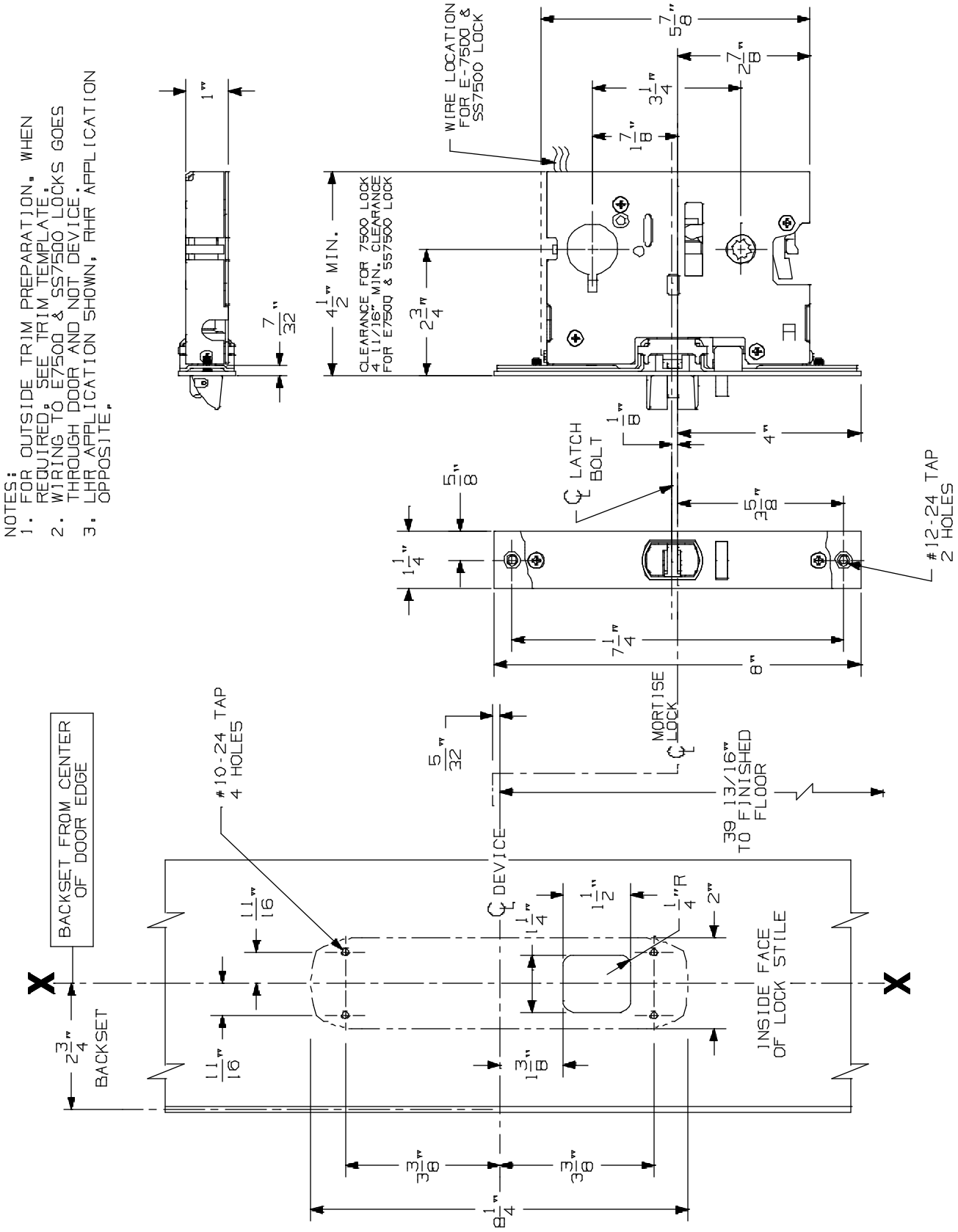

8875/8875-F Mortise Lock Device

VON DUPRIN®

NOTES: SEE MASTER SHEET #10001 FOR SUGGESTED REINFORCING

TEMPLATE NUMBER: 10179_a

DATE: 05-15-13

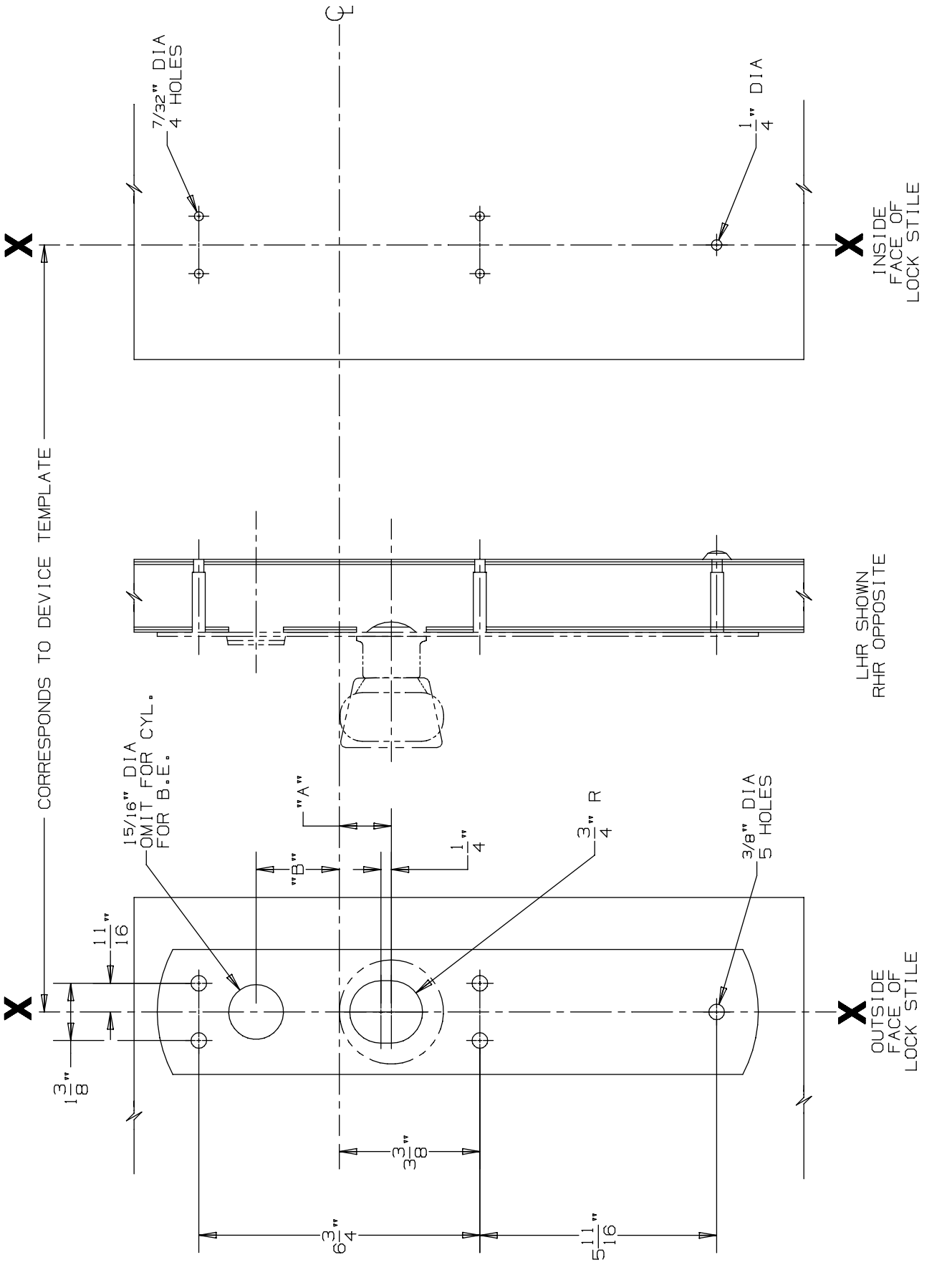

DEVICE APPLICATION SCHEDULE			
DEVICE	DIM. "A"	DIM. "B"
88 MORTISE	1 1/4"	2"
88 VERTICAL	1 1/2"	1 3/4"

FOR CUTOUTS ON INSIDE FACE OF DOOR SEE DEVICE TEMPLATE

880 K & 880 K-BE Trim for 88 Mortise & Vertical Devices

VON DUPRIN®

NOTES: SEE MASTER SHEET #10001 FOR SUGGESTED REINFORCING

TEMPLATE NUMBER: 20261_a

DATE: 05-23-13

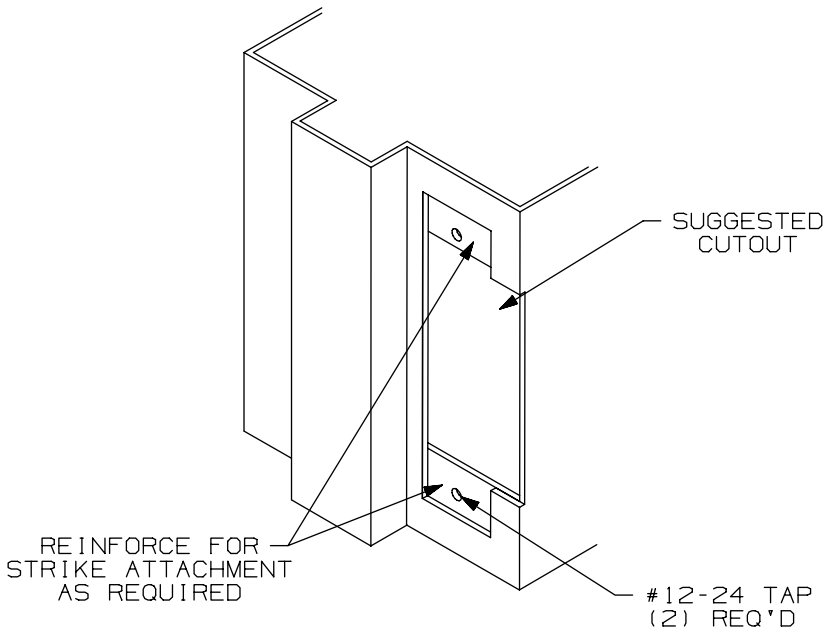

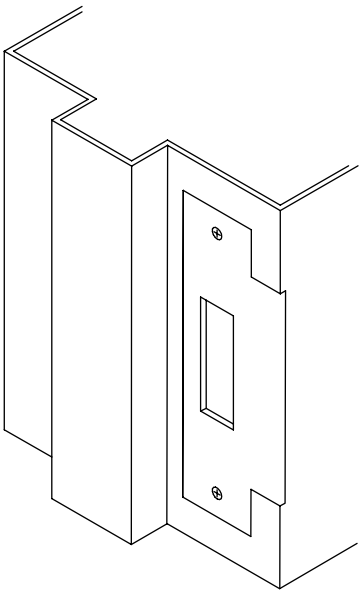

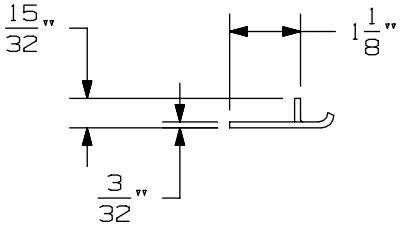

APPLICATION SCHEDULE	
DEVICE	DIM. "A"
9875 & 9875-F	11/16
9975 & 9975-F	11/16
8875 & 8875-F	1/2
5575 & 5575-F	1/2

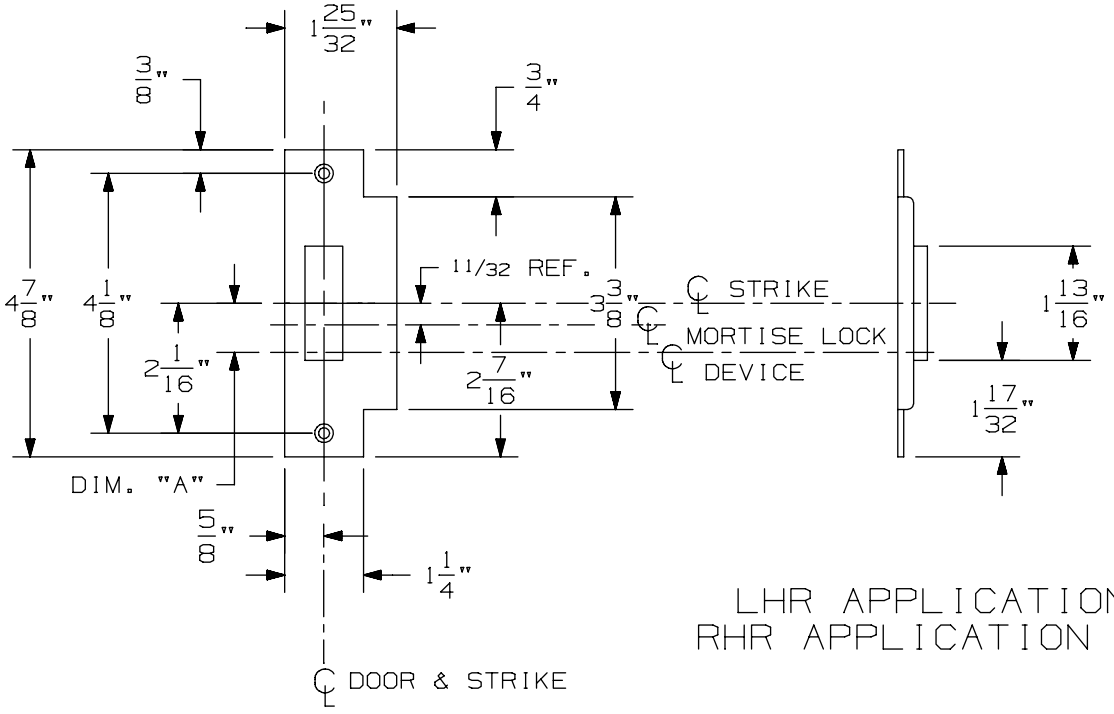

LHR APPLICATION SHOWN
RHR APPLICATION OPPOSITE

575 Mortise Strike (Single Door) for 7500 Mortise Lock

VON DUPRIN®

NOTES: SEE MASTER SHEET #10001 FOR SUGGESTED REINFORCING

TEMPLATE NUMBER: 30210_b

DATE: 07-22-13

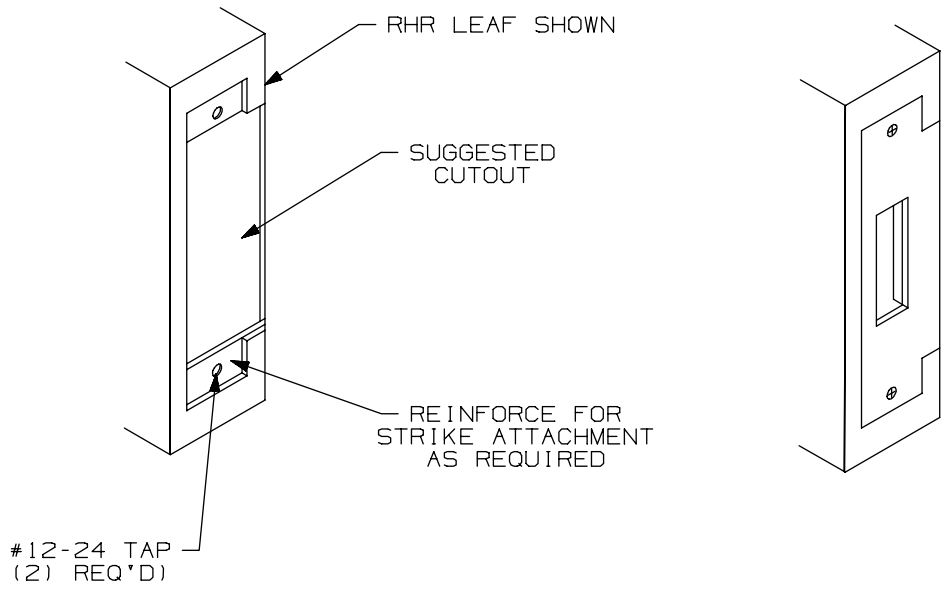

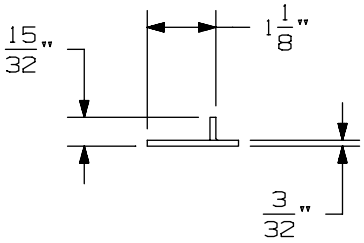

APPLICATION SCHEDULE	
DEVICE	DIM. "A"
9875 & 9875-F	11/16
9975 & 9975-F	11/16
8875 & 8875-F	1/2
5575 & 5575-F	1/2

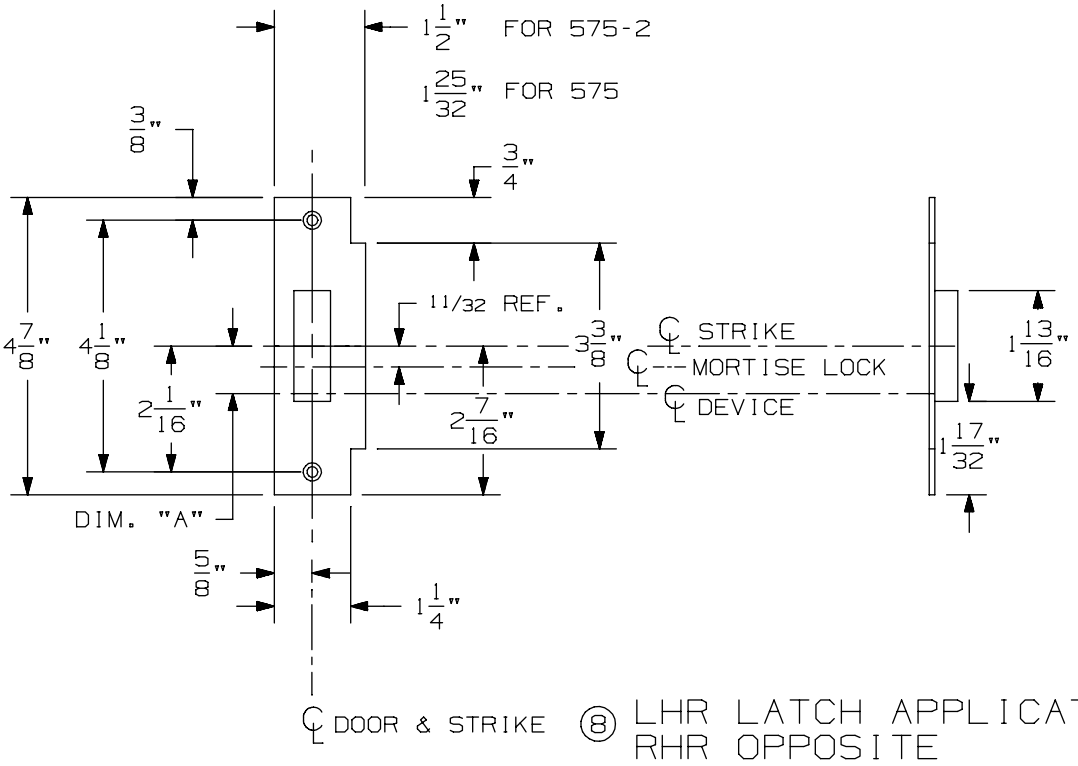

⑧ LHR LATCH APPLICATION SHOWN
RHR OPPOSITE

575-2 Mortise Strike (Double Doors) for 7500 Mortise Lock

VON DUPRIN®

NOTES: SEE MASTER SHEET #10001 FOR SUGGESTED REINFORCING

TEMPLATE NUMBER: 30212_b

DATE: 07-22-13

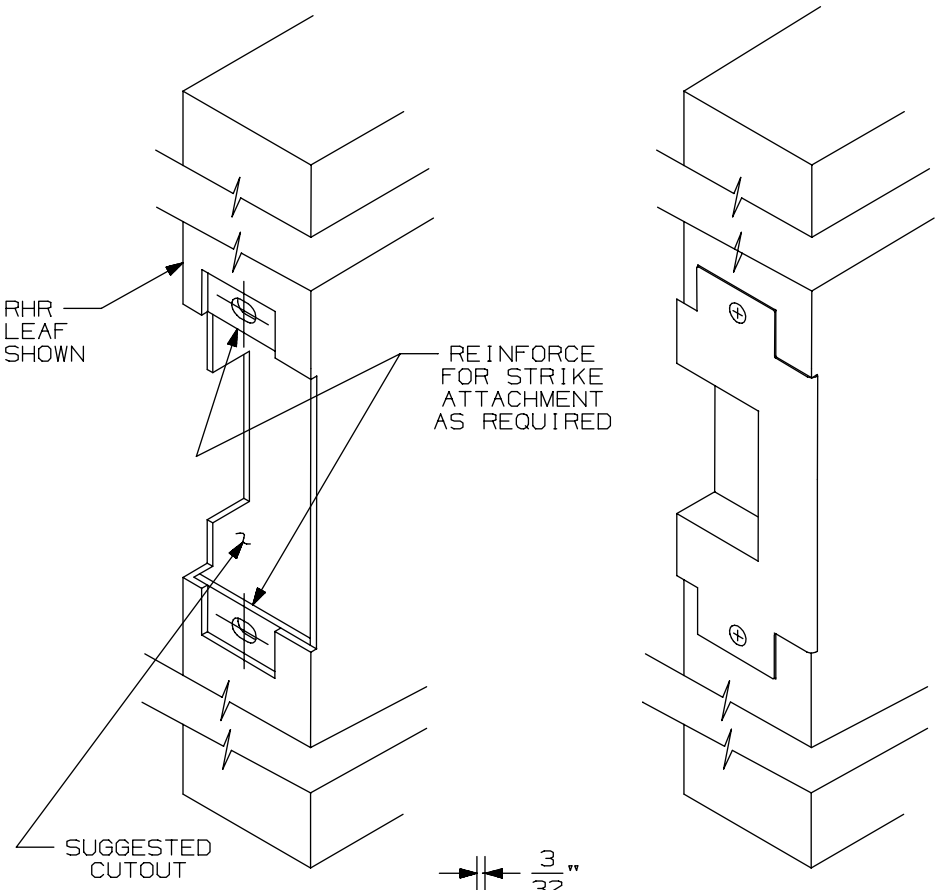

APPLICATION SCHEDULE	
DEVICE	DIM."A"
9875 & 9875-F	11/16
9975 & 9975-F	11/16
8875 & 8875-F	1/2
5575 & 5575-F	1/2

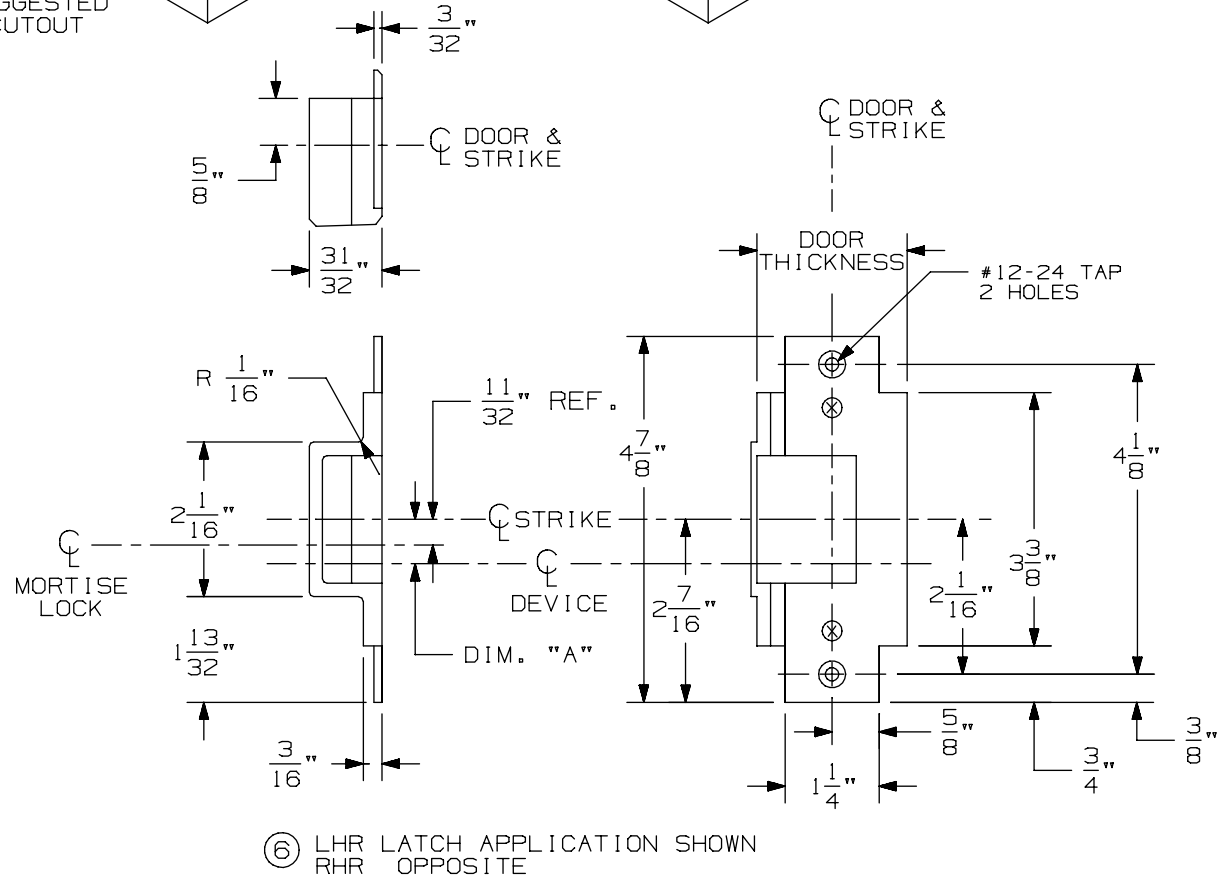

⑥ LHR LATCH APPLICATION SHOWN
RHR OPPOSITE

576A & 576B Mortise Strike for 7500 Mortise Lock

VON DUPRIN®

NOTES: SEE MASTER SHEET #10001 FOR SUGGESTED REINFORCING

TEMPLATE NUMBER: 30211_a

DATE: 05-28-13

NOTES:
1. FOR OUTSIDE TRIM PREPARATION, WHEN REQUIRED, SEE TRIM TEMPLATE.
2. WIRING TO E7500 & SS7500 LOCKS GOES THROUGH DOOR AND NOT DEVICE.
3. LHR APPLICATION SHOWN, RHR APPLICATION OPPOSITE.

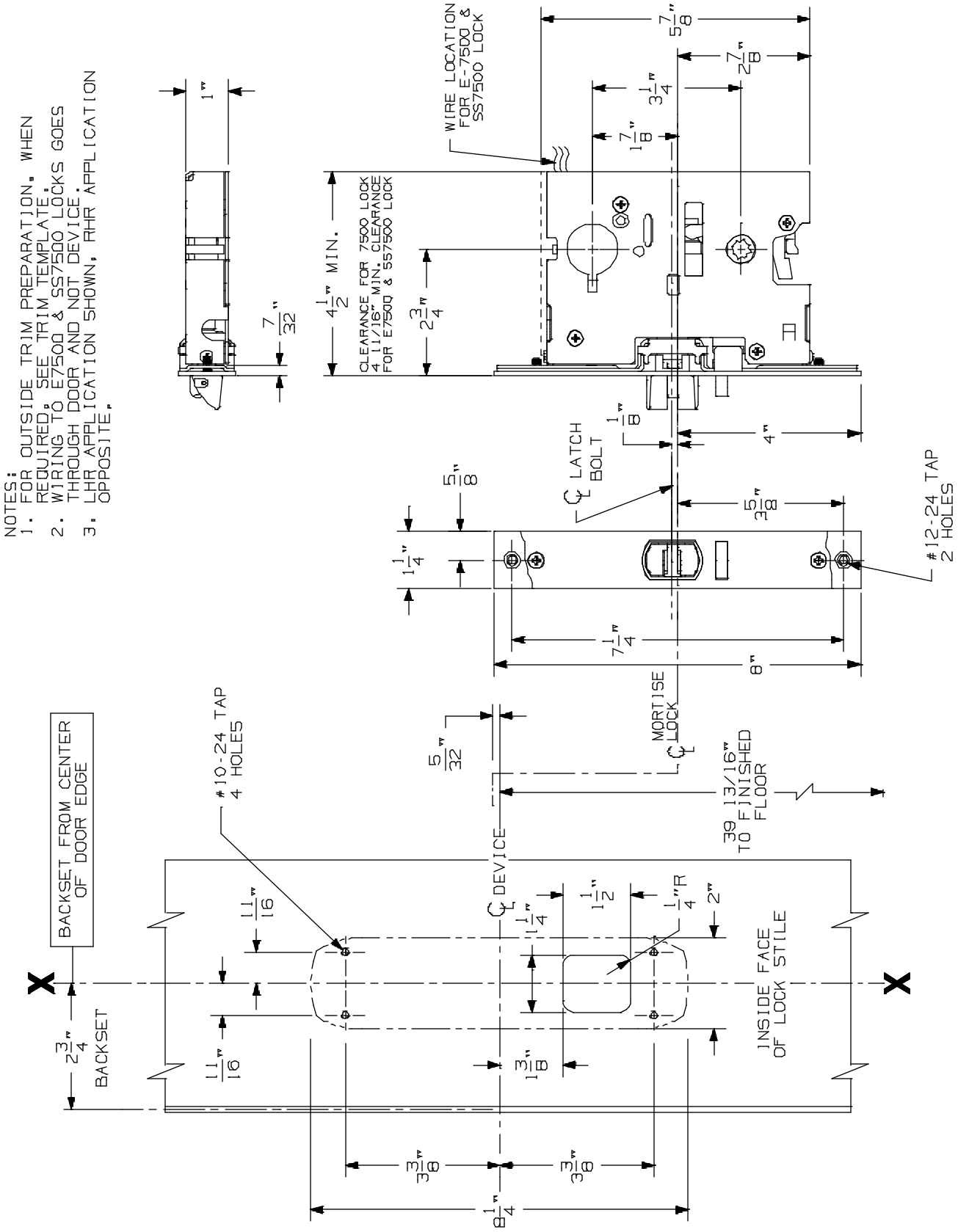

8875/8875-F Mortise Lock Device

VON DUPRIN®

NOTES: SEE MASTER SHEET #10001 FOR SUGGESTED REINFORCING

TEMPLATE NUMBER: 10179_a

DATE: 05-15-13

NOTES: SEE MASTER SHEET #10001 FOR SUGGESTED REINFORCING

373-L Control

VON DUPRIN®

TEMPLATE NUMBER: 40108_a

DATE: 05-28-13

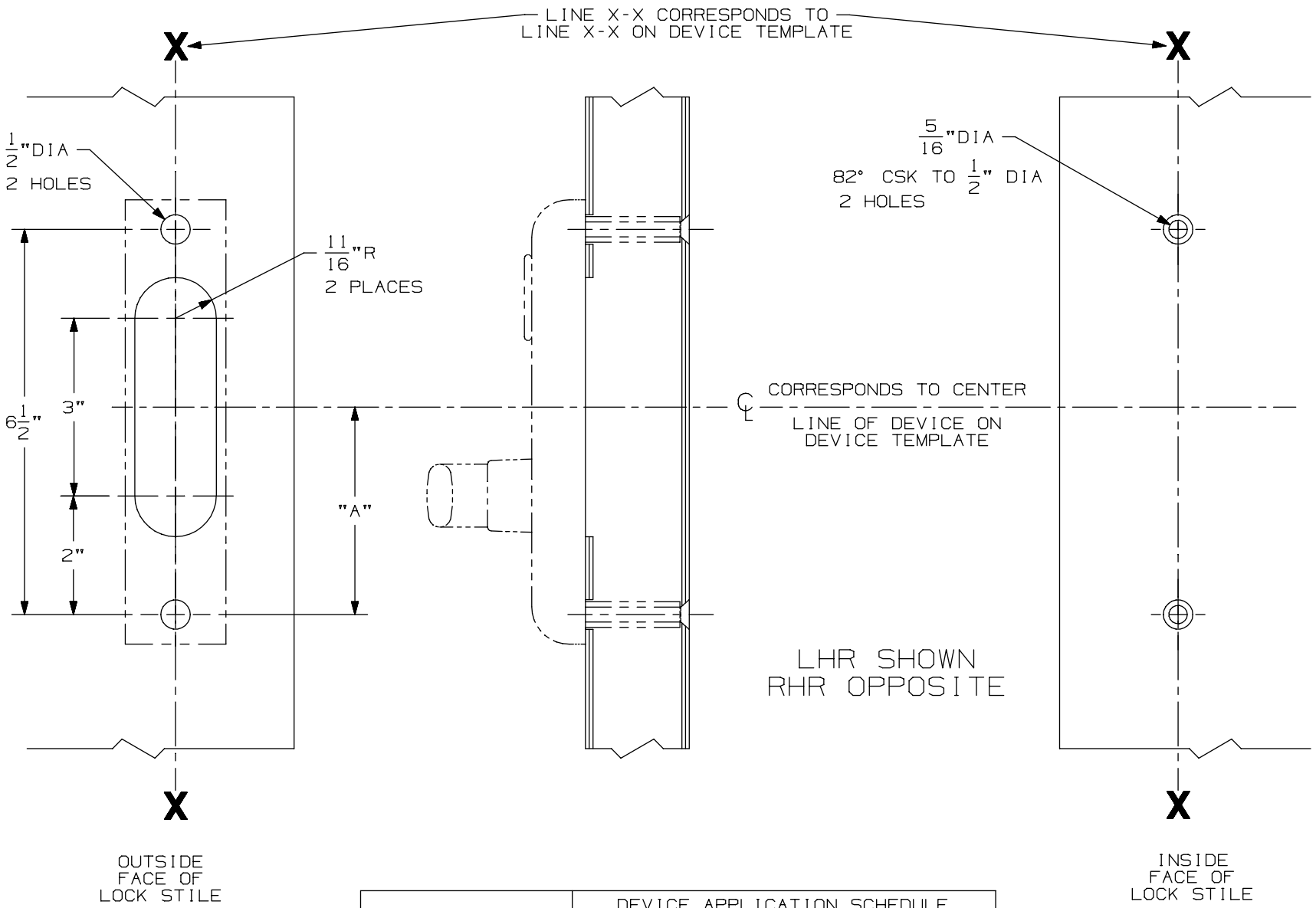

FOR CUTOUT ON INSIDE FACE OF DOOR SEE DEVICE TEMPLATE	DEVICE APPLICATION SCHEDULE	
	DEVICE	DIM "A"
	8827/8827-F	3 1/2"
	88 MORTISE	3 1/4"

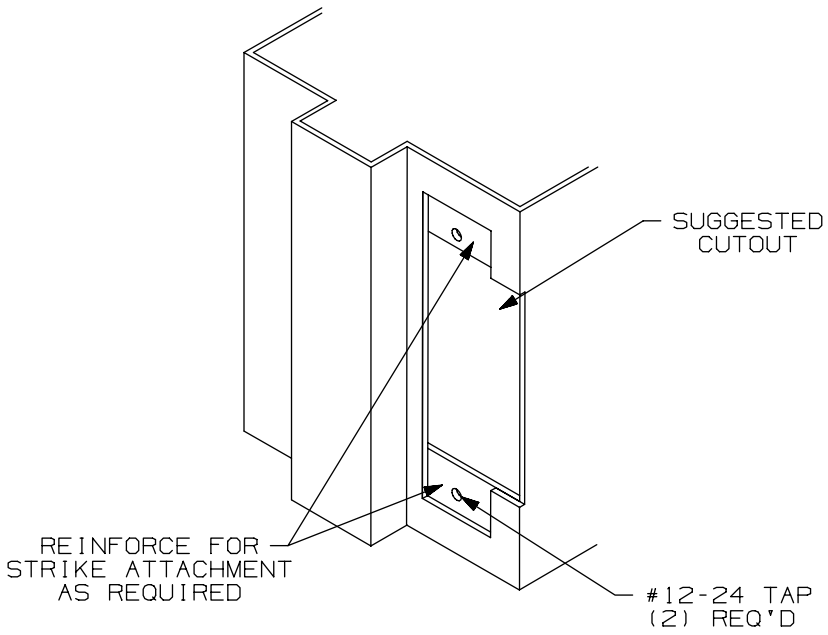

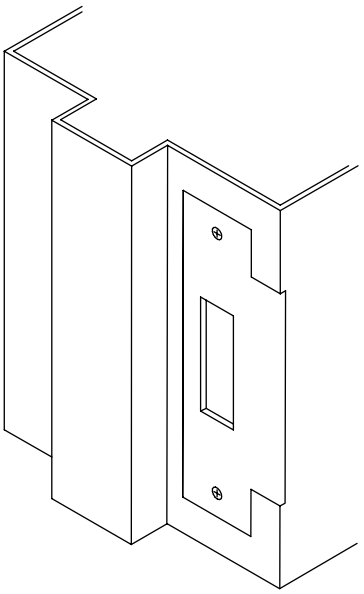

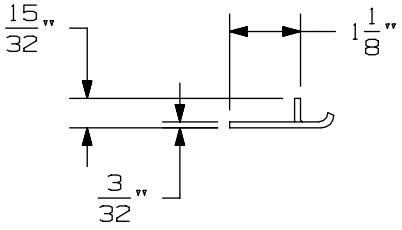

APPLICATION SCHEDULE	
DEVICE	DIM. "A"
9875 & 9875-F	11/16
9975 & 9975-F	11/16
8875 & 8875-F	1/2
5575 & 5575-F	1/2

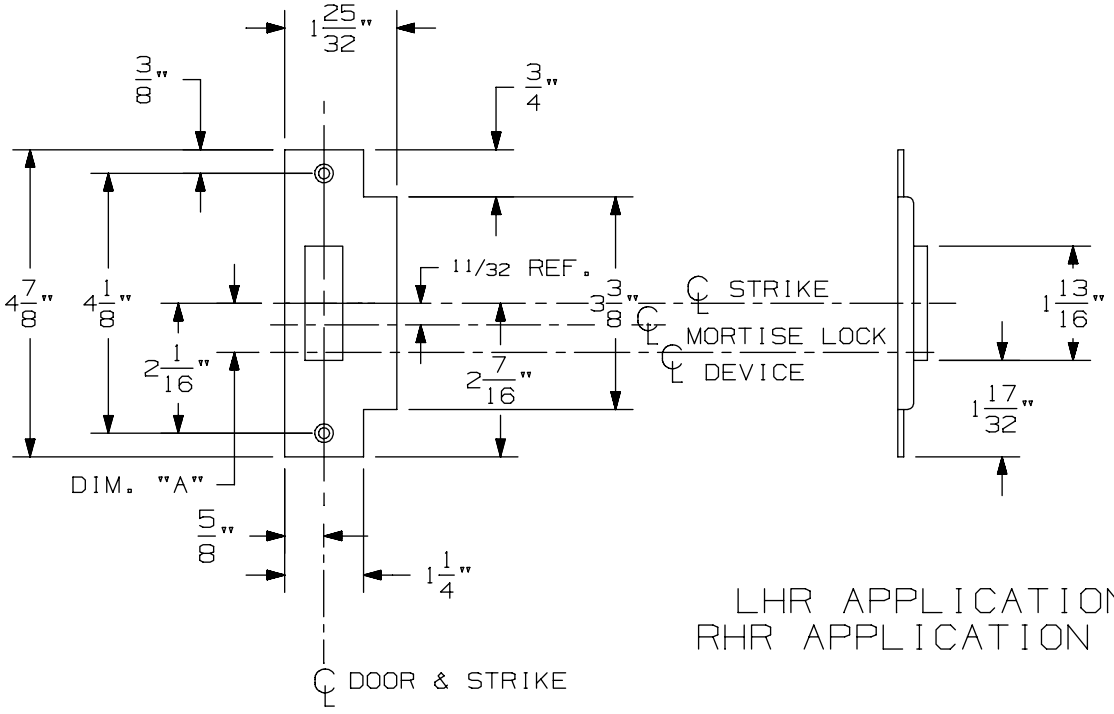

LHR APPLICATION SHOWN
RHR APPLICATION OPPOSITE

575 Mortise Strike (Single Door) for 7500 Mortise Lock

VON DUPRIN®

NOTES: SEE MASTER SHEET #10001 FOR SUGGESTED REINFORCING

TEMPLATE NUMBER: 30210_b

DATE: 07-22-13

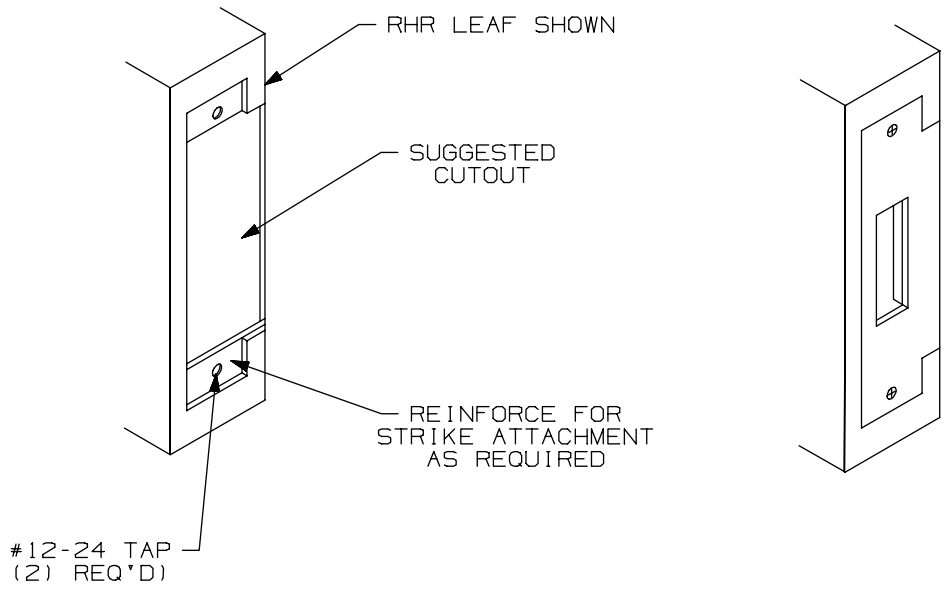

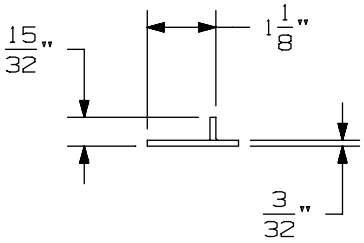

APPLICATION SCHEDULE	
DEVICE	DIM. "A"
9875 & 9875-F	11/16
9975 & 9975-F	11/16
8875 & 8875-F	1/2
5575 & 5575-F	1/2

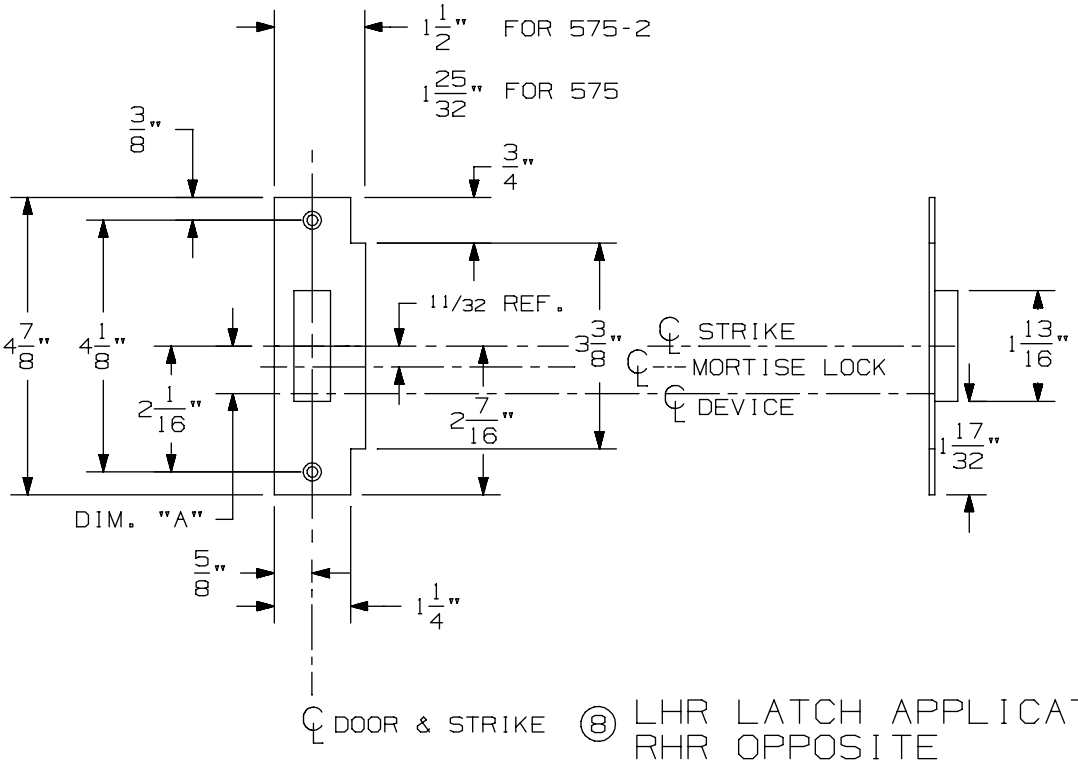

⑧ LHR LATCH APPLICATION SHOWN
RHR OPPOSITE

575-2 Mortise Strike (Double Doors) for 7500 Mortise Lock

VON DUPRIN®

NOTES: SEE MASTER SHEET #10001 FOR SUGGESTED REINFORCING

TEMPLATE NUMBER: 30212_b

DATE: 07-22-13

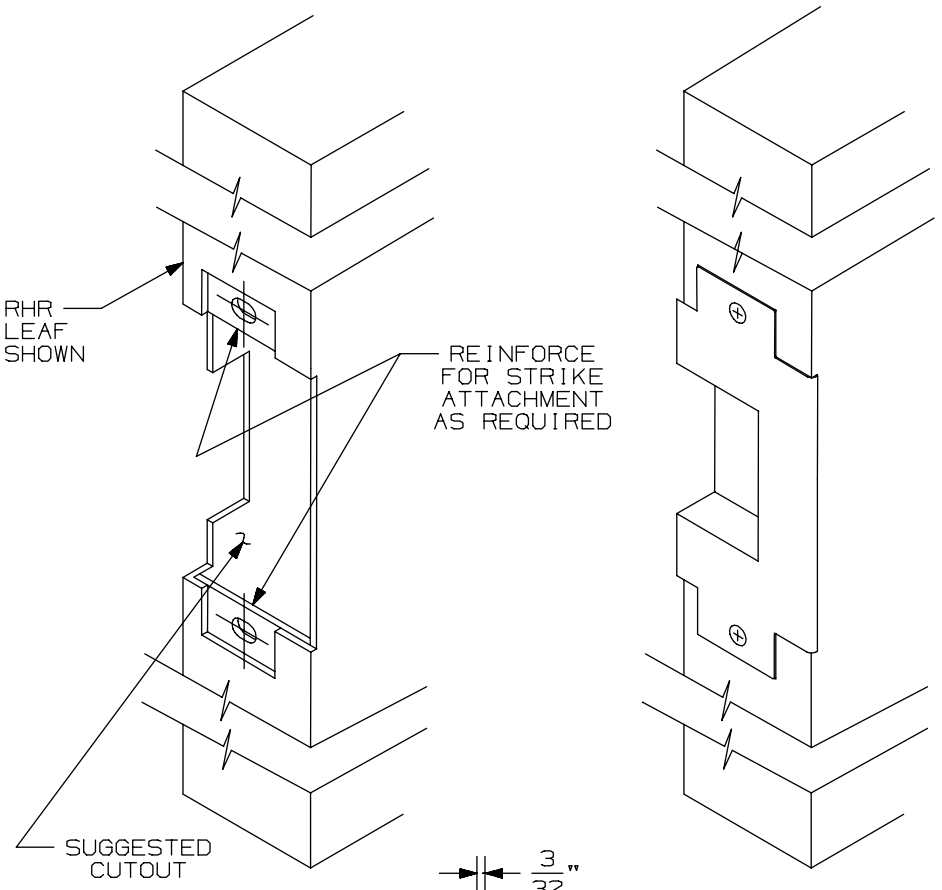

APPLICATION SCHEDULE	
DEVICE	DIM."A"
9875 & 9875-F	11/16
9975 & 9975-F	11/16
8875 & 8875-F	1/2
5575 & 5575-F	1/2

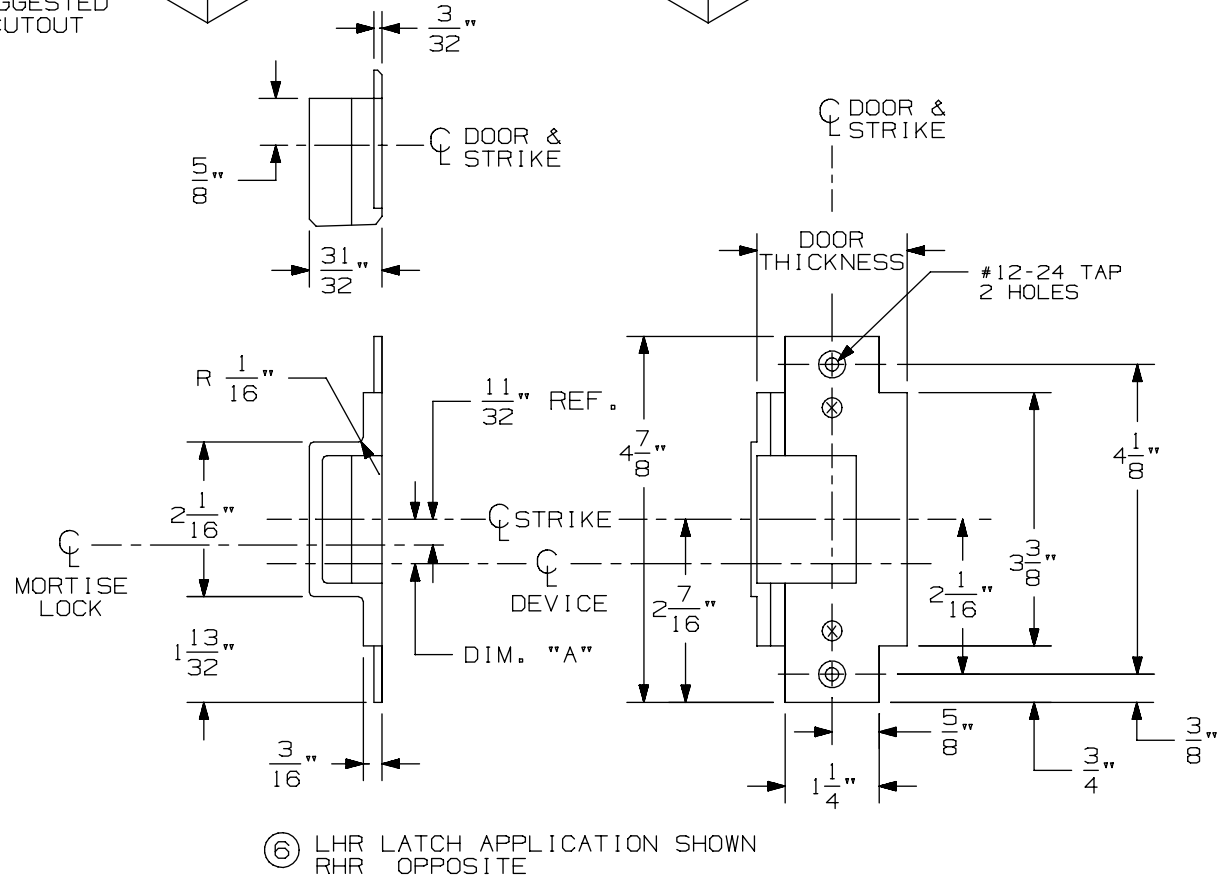

⑥ LHR LATCH APPLICATION SHOWN
RHR OPPOSITE

576A & 576B Mortise Strike for 7500 Mortise Lock

VON DUPRIN®

NOTES: SEE MASTER SHEET #10001 FOR SUGGESTED REINFORCING

TEMPLATE NUMBER: 30211_a

DATE: 05-28-13

NOTES:
1. FOR OUTSIDE TRIM PREPARATION, WHEN REQUIRED, SEE TRIM TEMPLATE.
2. WIRING TO E7500 & SS7500 LOCKS GOES THROUGH DOOR AND NOT DEVICE.
3. LHR APPLICATION SHOWN, RHR APPLICATION OPPOSITE.

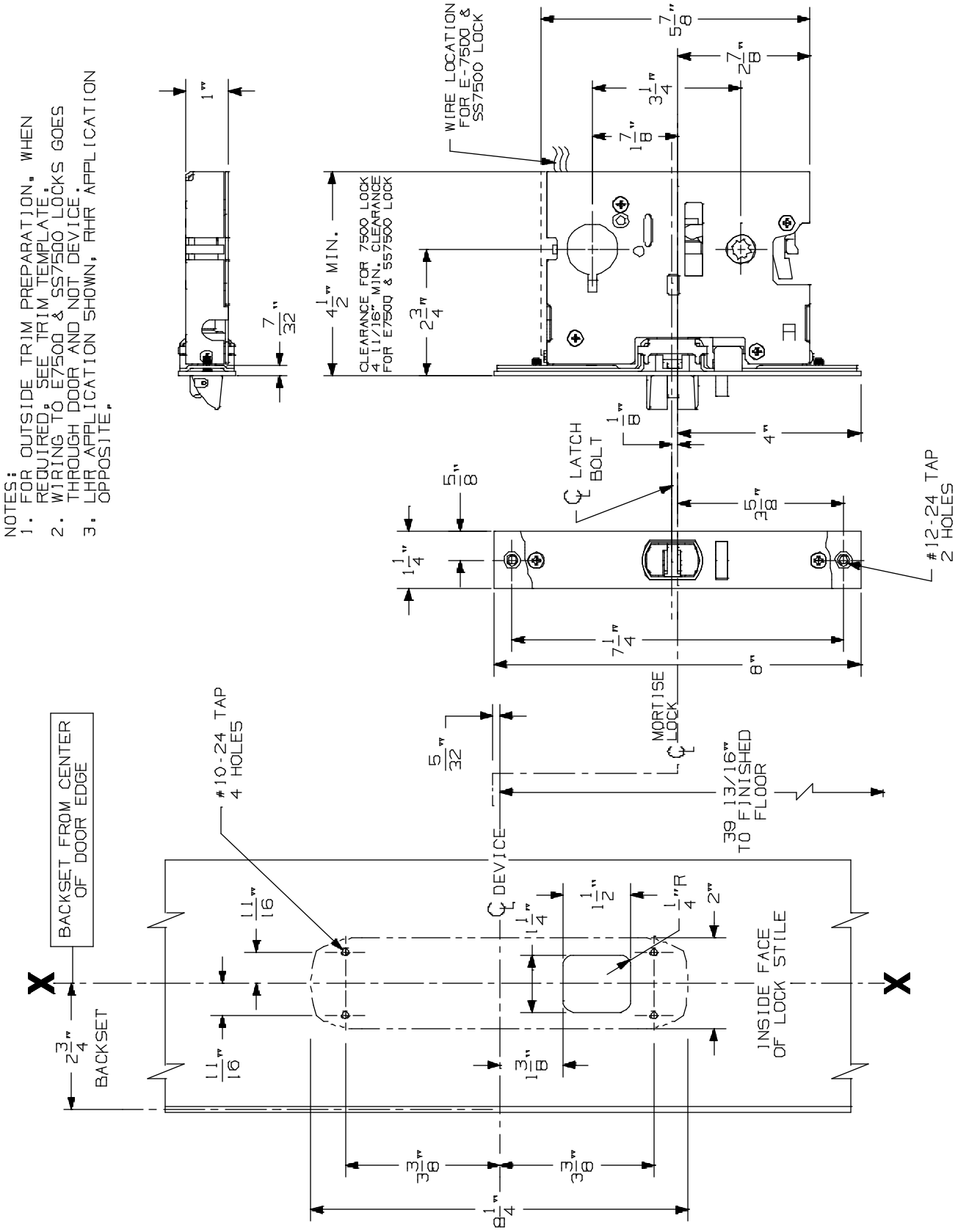

8875/8875-F Mortise Lock Device

VON DUPRIN®

NOTES: SEE MASTER SHEET #10001 FOR SUGGESTED REINFORCING

TEMPLATE NUMBER: 10179_a

DATE: 05-15-13

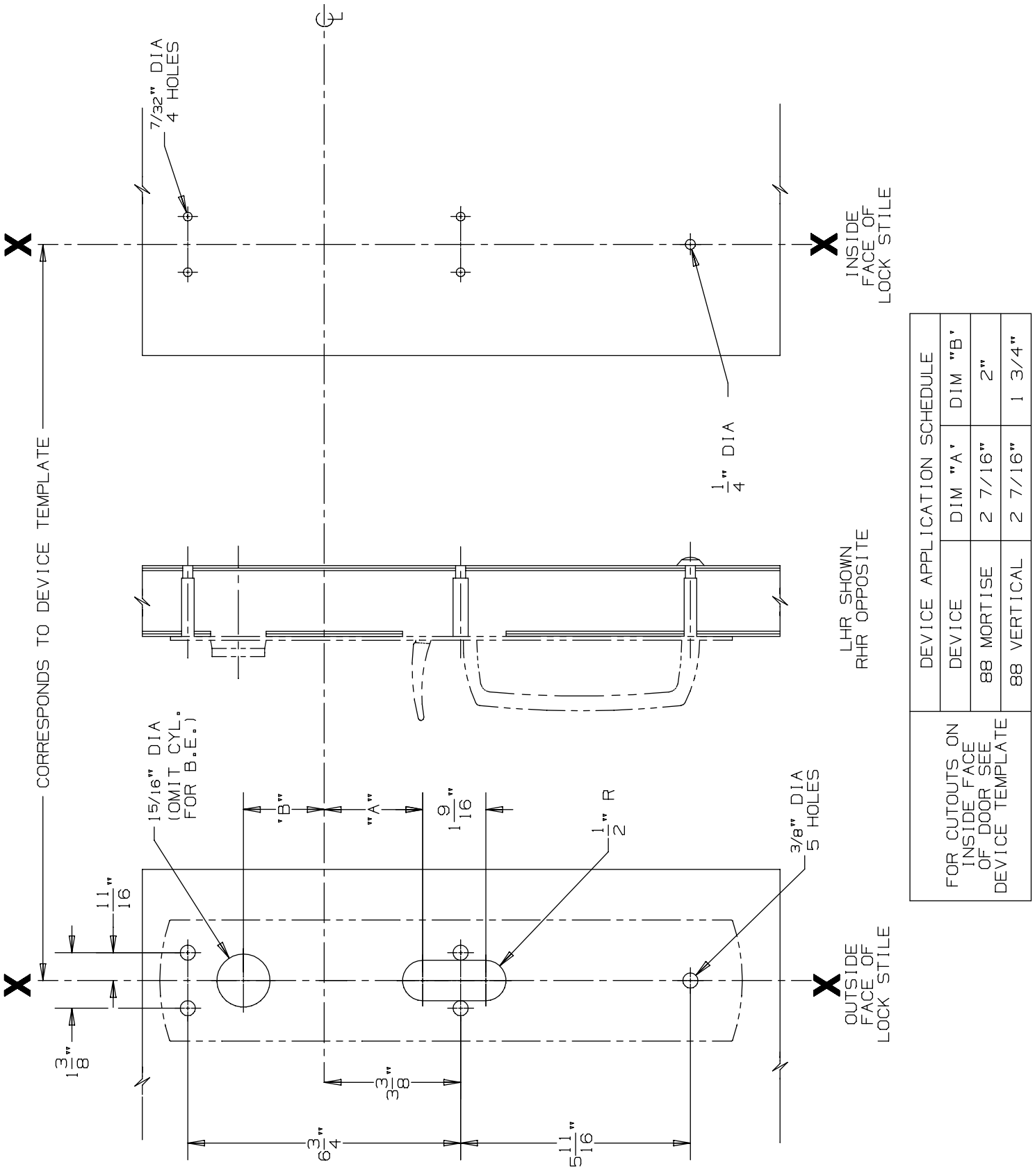

DEVICE APPLICATION SCHEDULE		
DEVICE	DIM "A"	DIM "B"
88 MORTISE	2 7/16"	2"
88 VERTICAL	2 7/16"	1 3/4"

FOR CUTOUTS ON INSIDE FACE OF DOOR SEE DEVICE TEMPLATE

880 TP & 880 TP-BE Trim for 88 Mortise & Vertical Devices

VON DUPRIN®

NOTES: SEE MASTER SHEET #10001 FOR SUGGESTED REINFORCING

TEMPLATE NUMBER: 20260_a

DATE: 05-28-13

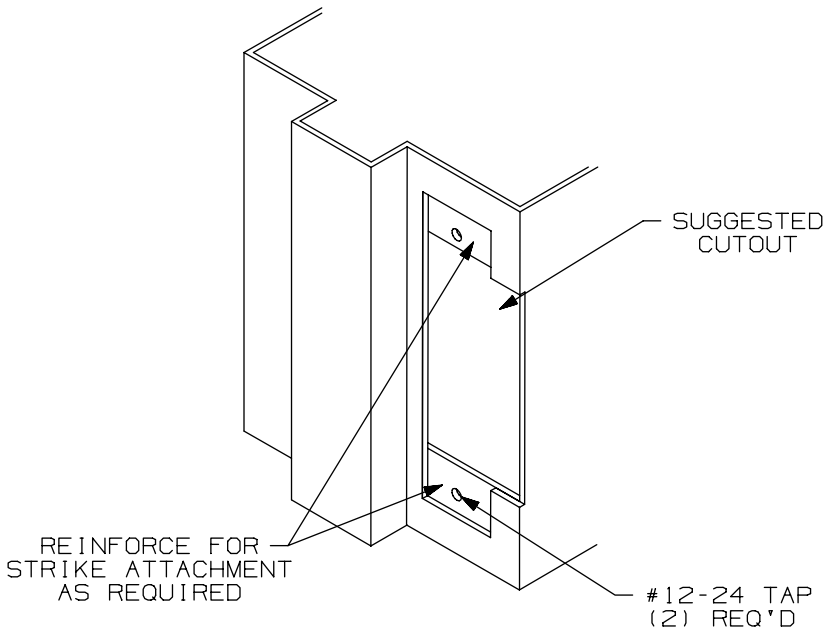

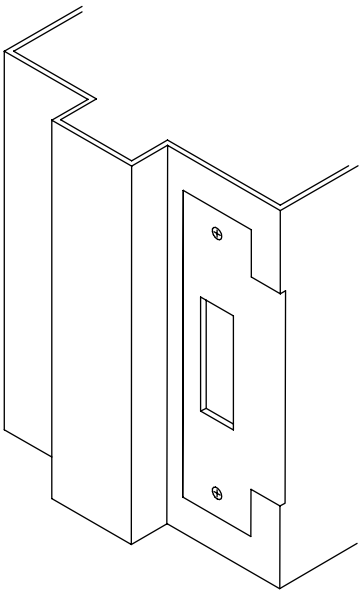

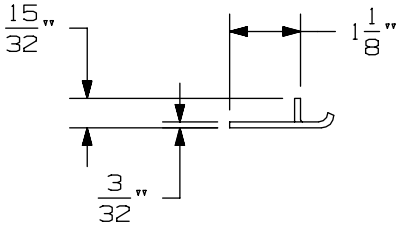

APPLICATION SCHEDULE	
DEVICE	DIM. "A"
9875 & 9875-F	11/16
9975 & 9975-F	11/16
8875 & 8875-F	1/2
5575 & 5575-F	1/2

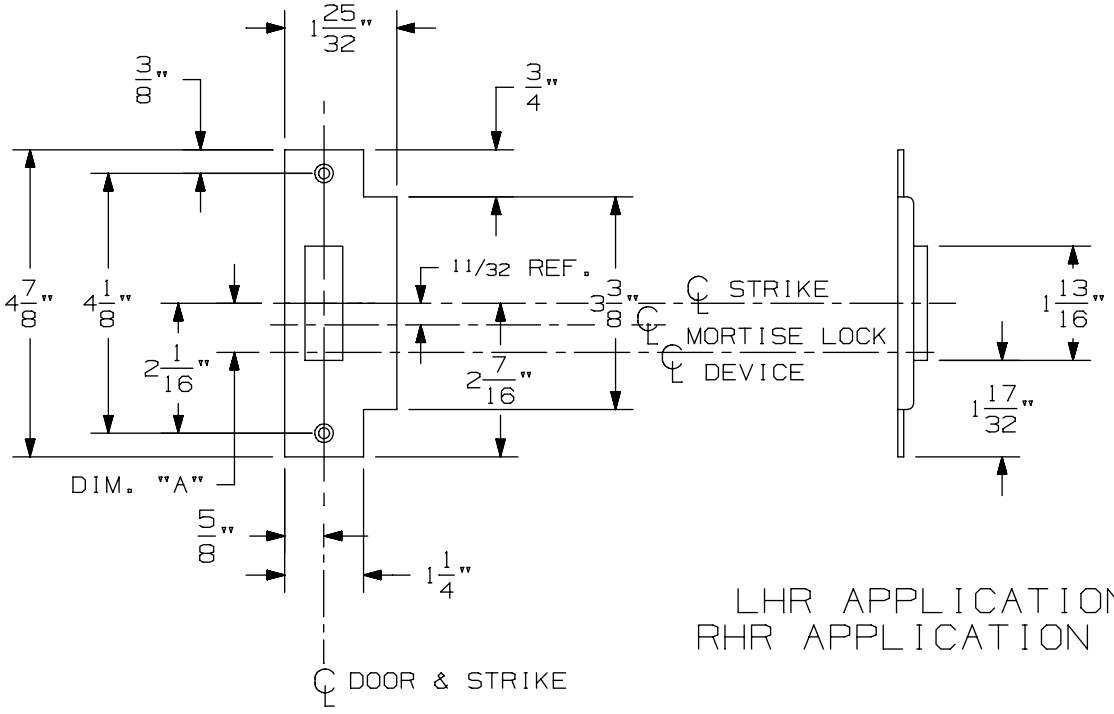

LHR APPLICATION SHOWN
RHR APPLICATION OPPOSITE

575 Mortise Strike (Single Door) for 7500 Mortise Lock

VON DUPRIN®

NOTES: SEE MASTER SHEET #10001 FOR SUGGESTED REINFORCING

TEMPLATE NUMBER: 30210_b

DATE: 07-22-13

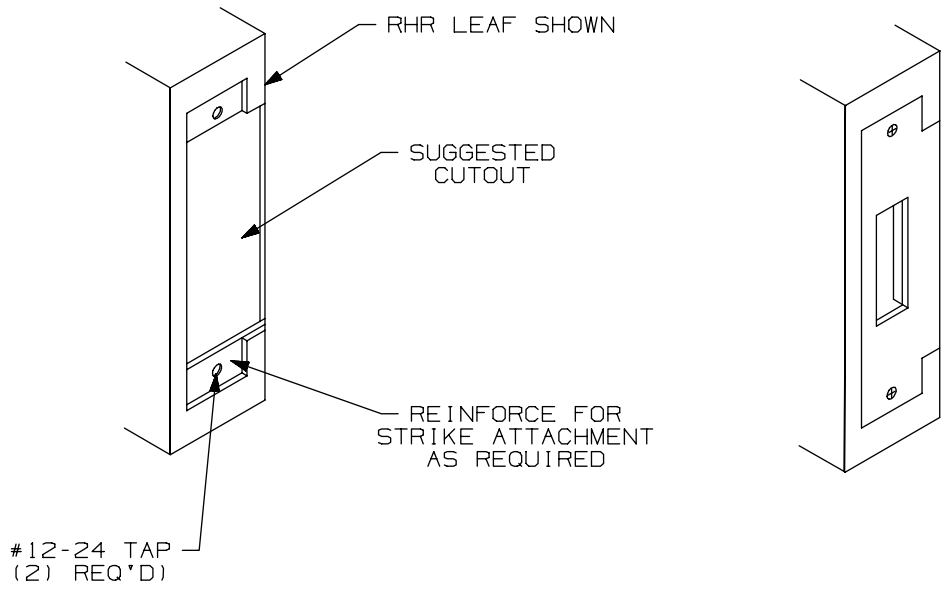

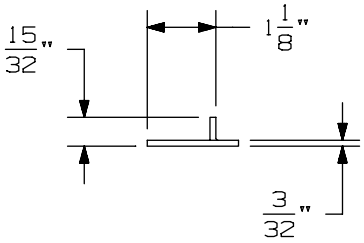

APPLICATION SCHEDULE	
DEVICE	DIM. "A"
9875 & 9875-F	11/16
9975 & 9975-F	11/16
8875 & 8875-F	1/2
5575 & 5575-F	1/2

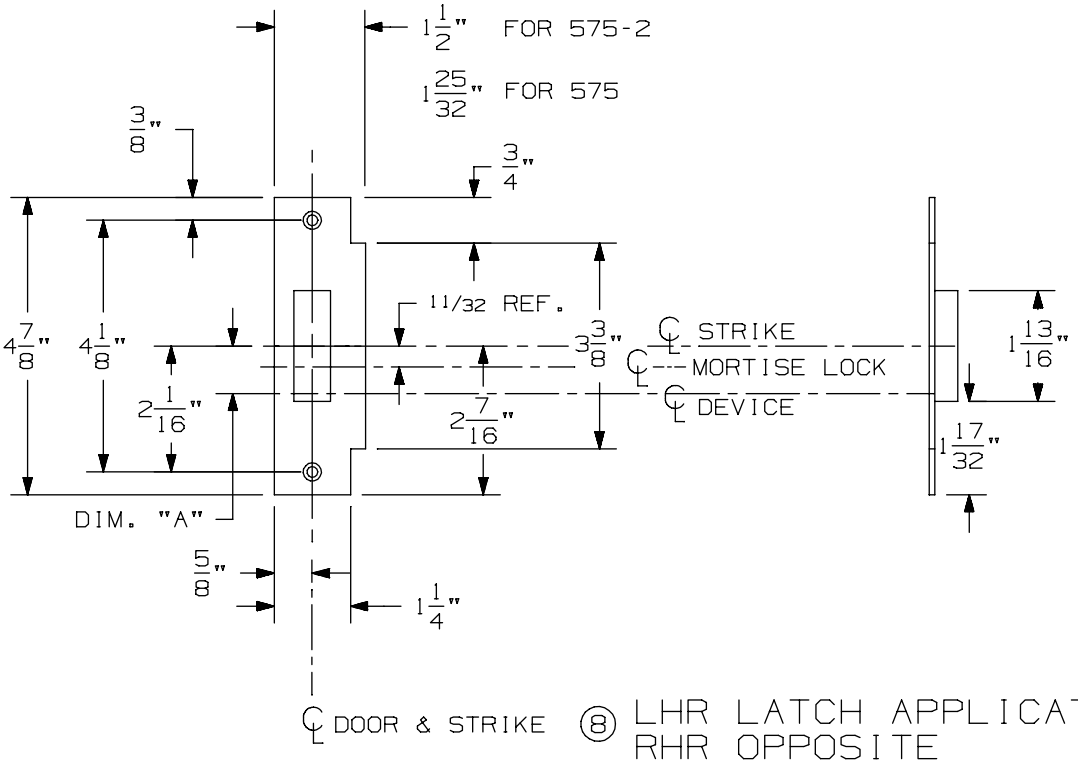

⑧ LHR LATCH APPLICATION SHOWN
RHR OPPOSITE

575-2 Mortise Strike (Double Doors) for 7500 Mortise Lock

VON DUPRIN®

NOTES: SEE MASTER SHEET #10001 FOR SUGGESTED REINFORCING

TEMPLATE NUMBER: 30212_b

DATE: 07-22-13

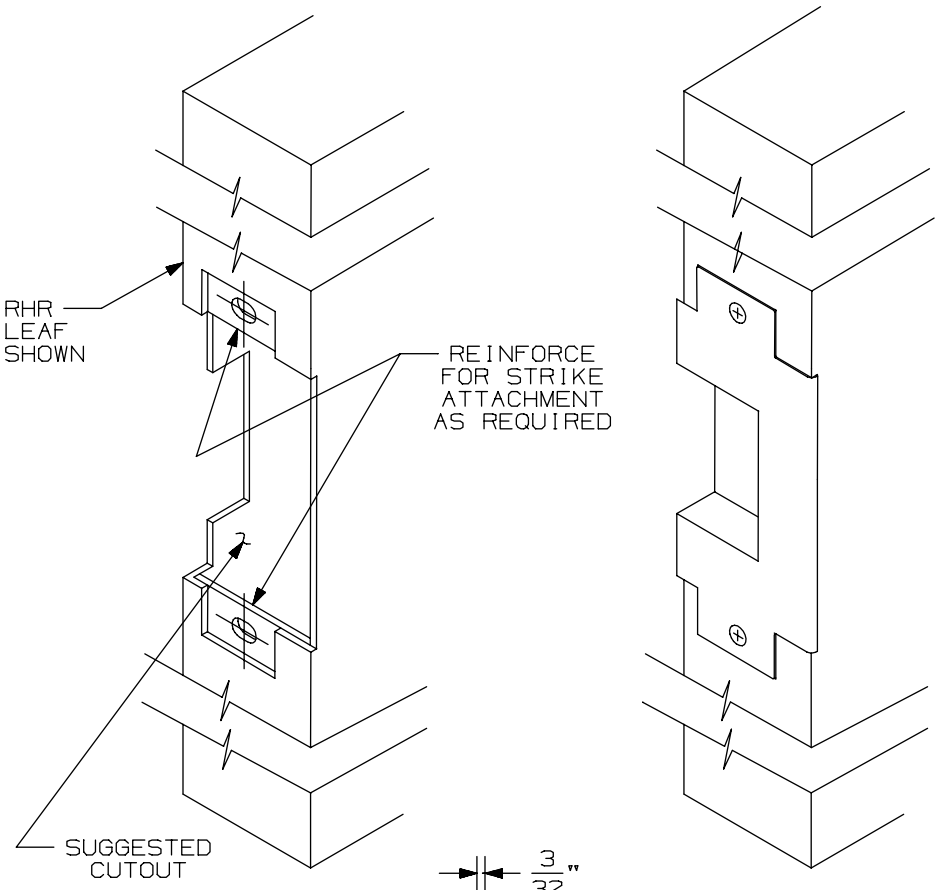

APPLICATION SCHEDULE	
DEVICE	DIM."A"
9875 & 9875-F	11/16
9975 & 9975-F	11/16
8875 & 8875-F	1/2
5575 & 5575-F	1/2

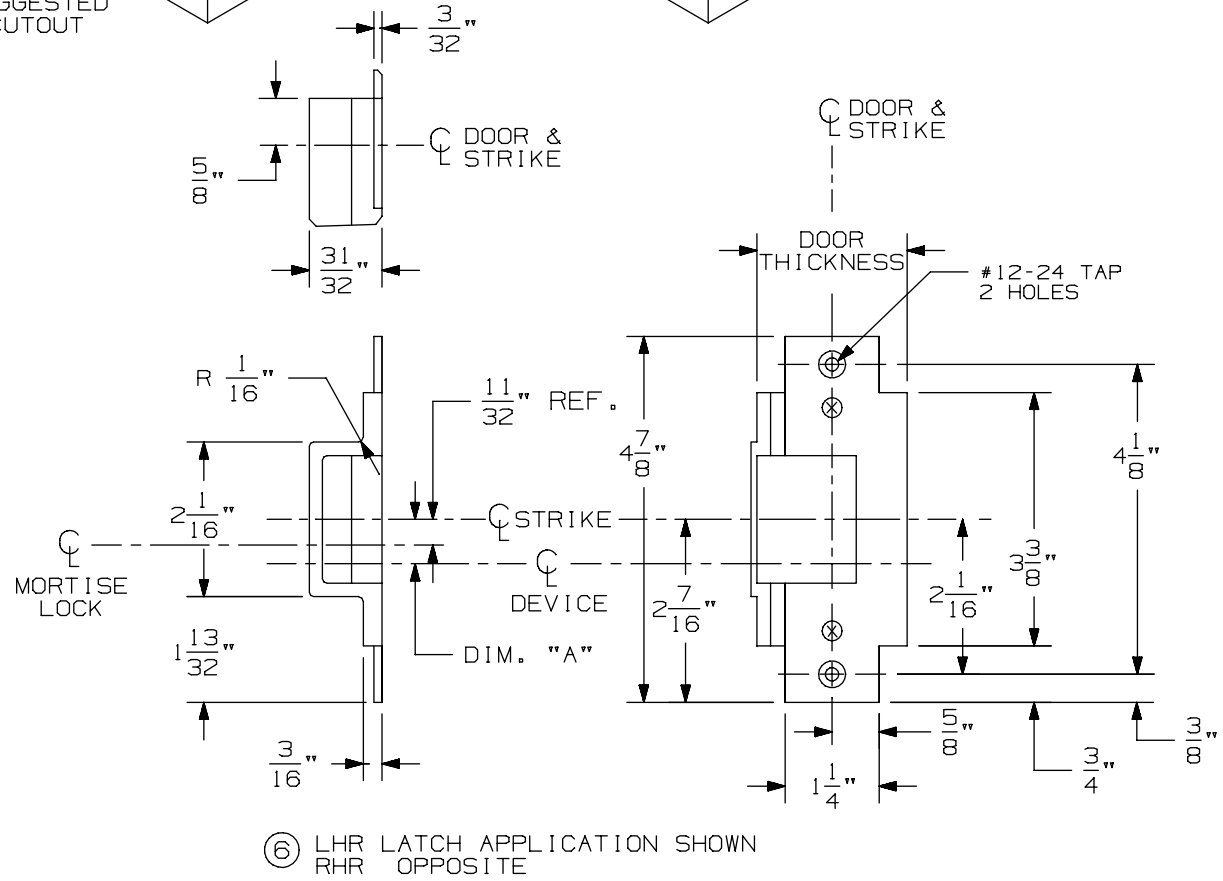

⑥ LHR LATCH APPLICATION SHOWN
RHR OPPOSITE

576A & 576B Mortise Strike for 7500 Mortise Lock

VON DUPRIN®

NOTES: SEE MASTER SHEET #10001 FOR SUGGESTED REINFORCING

TEMPLATE NUMBER: 30211_a

DATE: 05-28-13

88 Series Exit Devices

-

E8875 Mortise Electric Locking

NOTES:
1. FOR OUTSIDE TRIM PREPARATION, WHEN REQUIRED, SEE TRIM TEMPLATE.
2. WIRING TO E7500 & SS7500 LOCKS GOES THROUGH DOOR AND NOT DEVICE.
3. LHR APPLICATION SHOWN, RHR APPLICATION OPPOSITE.

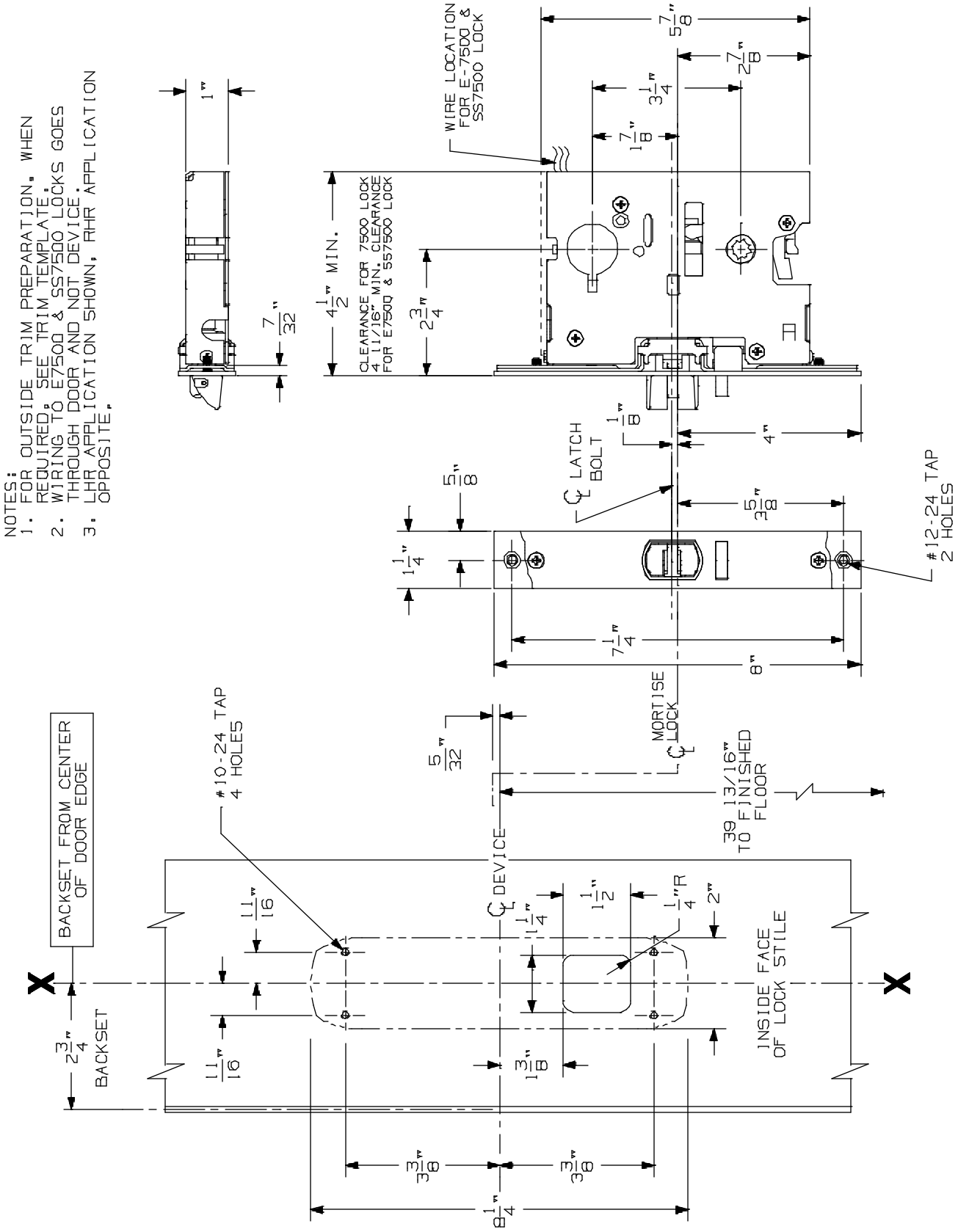

8875/8875-F Mortise Lock Device

VON DUPRIN®

NOTES: SEE MASTER SHEET #10001 FOR SUGGESTED REINFORCING

TEMPLATE NUMBER: 10179_a

DATE: 05-15-13

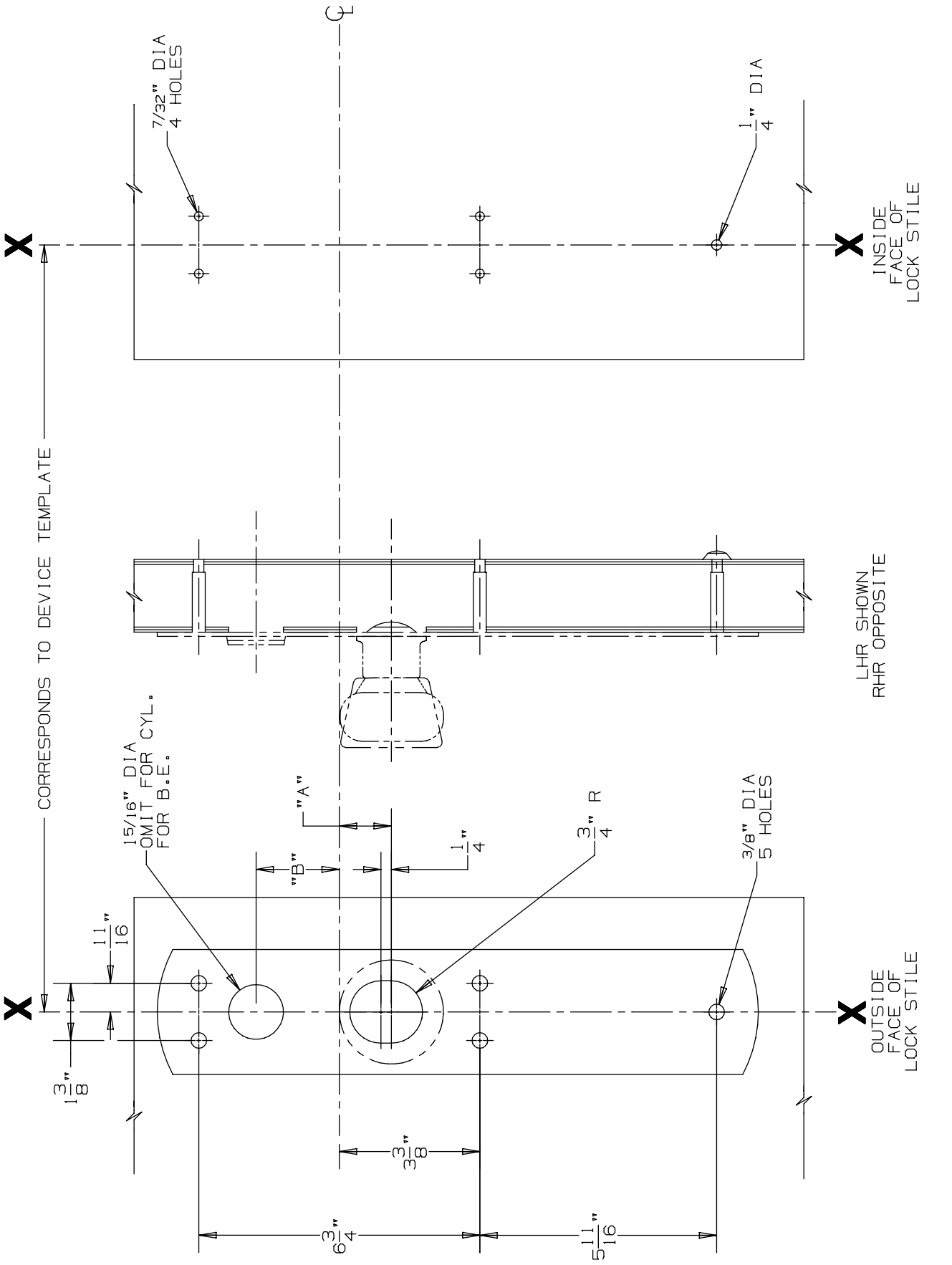

DEVICE APPLICATION SCHEDULE			
DEVICE	DIM. "A"	DIM. "B"
88 MORTISE	1 1/4"	2"
88 VERTICAL	1 1/2"	1 3/4"

FOR CUTOUTS ON INSIDE FACE OF DOOR SEE DEVICE TEMPLATE

880 K & 880 K-BE Trim for 88 Mortise & Vertical Devices

VON DUPRIN®

NOTES: SEE MASTER SHEET #10001 FOR SUGGESTED REINFORCING

TEMPLATE NUMBER: 20261_a

DATE: 05-23-13

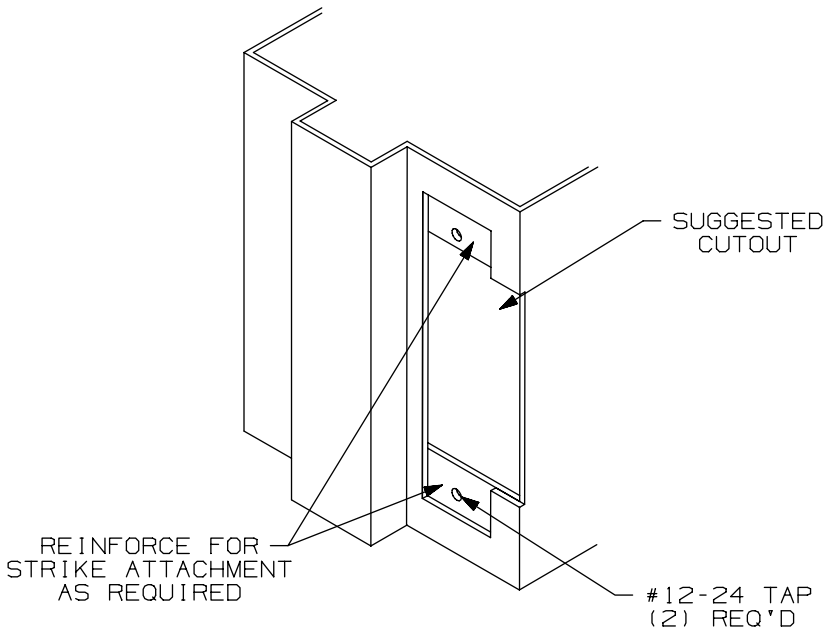

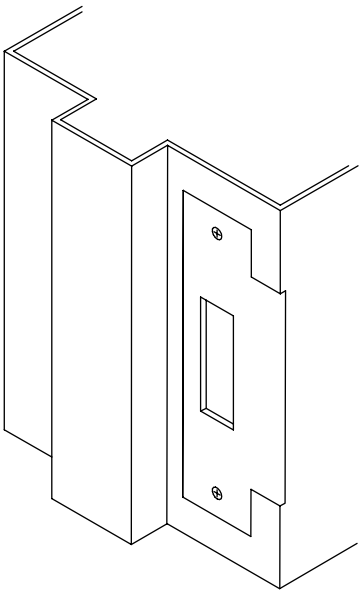

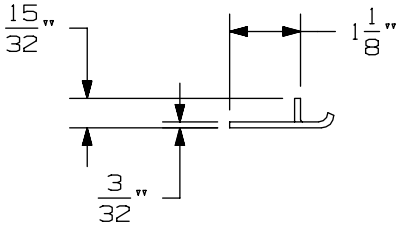

APPLICATION SCHEDULE	
DEVICE	DIM. "A"
9875 & 9875-F	11/16
9975 & 9975-F	11/16
8875 & 8875-F	1/2
5575 & 5575-F	1/2

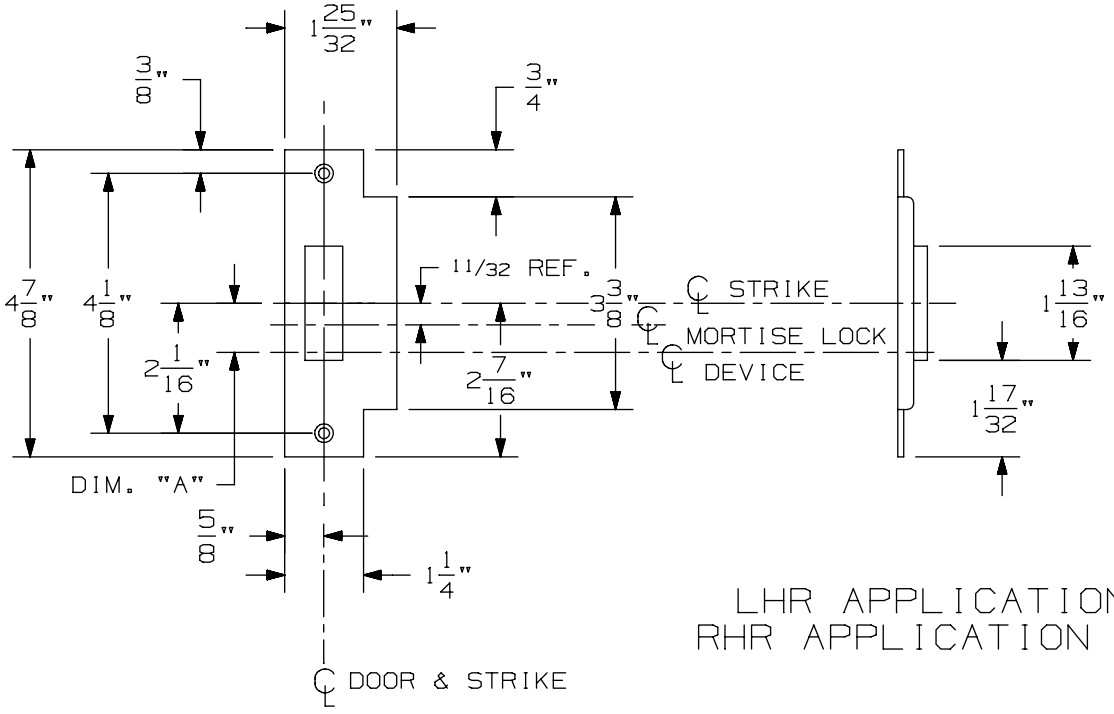

LHR APPLICATION SHOWN
RHR APPLICATION OPPOSITE

575 Mortise Strike (Single Door) for 7500 Mortise Lock

VON DUPRIN®

NOTES: SEE MASTER SHEET #10001 FOR SUGGESTED REINFORCING

TEMPLATE NUMBER: 30210_b

DATE: 07-22-13

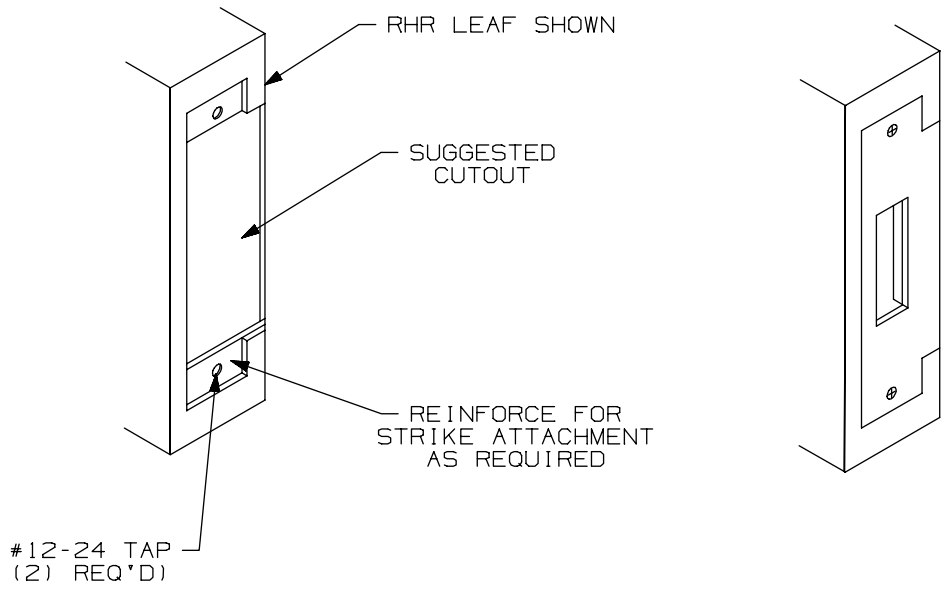

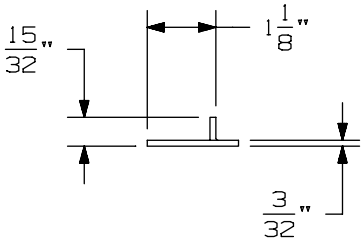

APPLICATION SCHEDULE	
DEVICE	DIM. "A"
9875 & 9875-F	11/16
9975 & 9975-F	11/16
8875 & 8875-F	1/2
5575 & 5575-F	1/2

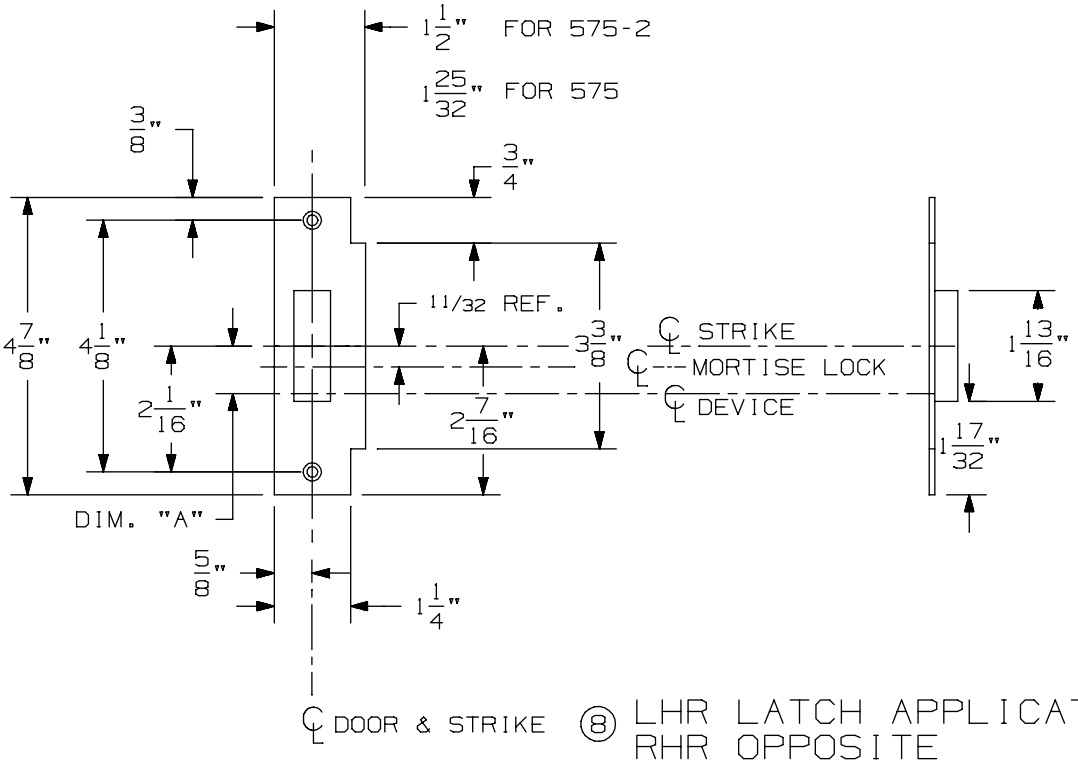

⑧ LHR LATCH APPLICATION SHOWN
RHR OPPOSITE

575-2 Mortise Strike (Double Doors) for 7500 Mortise Lock

VON DUPRIN®

NOTES: SEE MASTER SHEET #10001 FOR SUGGESTED REINFORCING

TEMPLATE NUMBER: 30212_b

DATE: 07-22-13

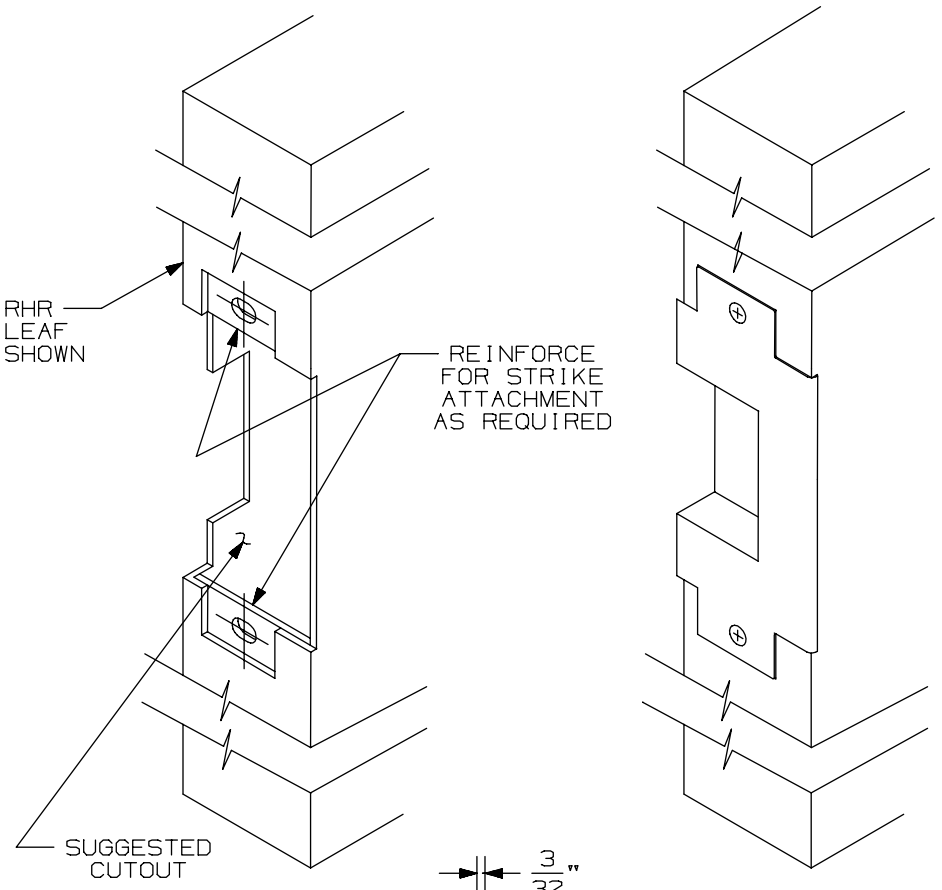

APPLICATION SCHEDULE	
DEVICE	DIM."A"
9875 & 9875-F	11/16
9975 & 9975-F	11/16
8875 & 8875-F	1/2
5575 & 5575-F	1/2

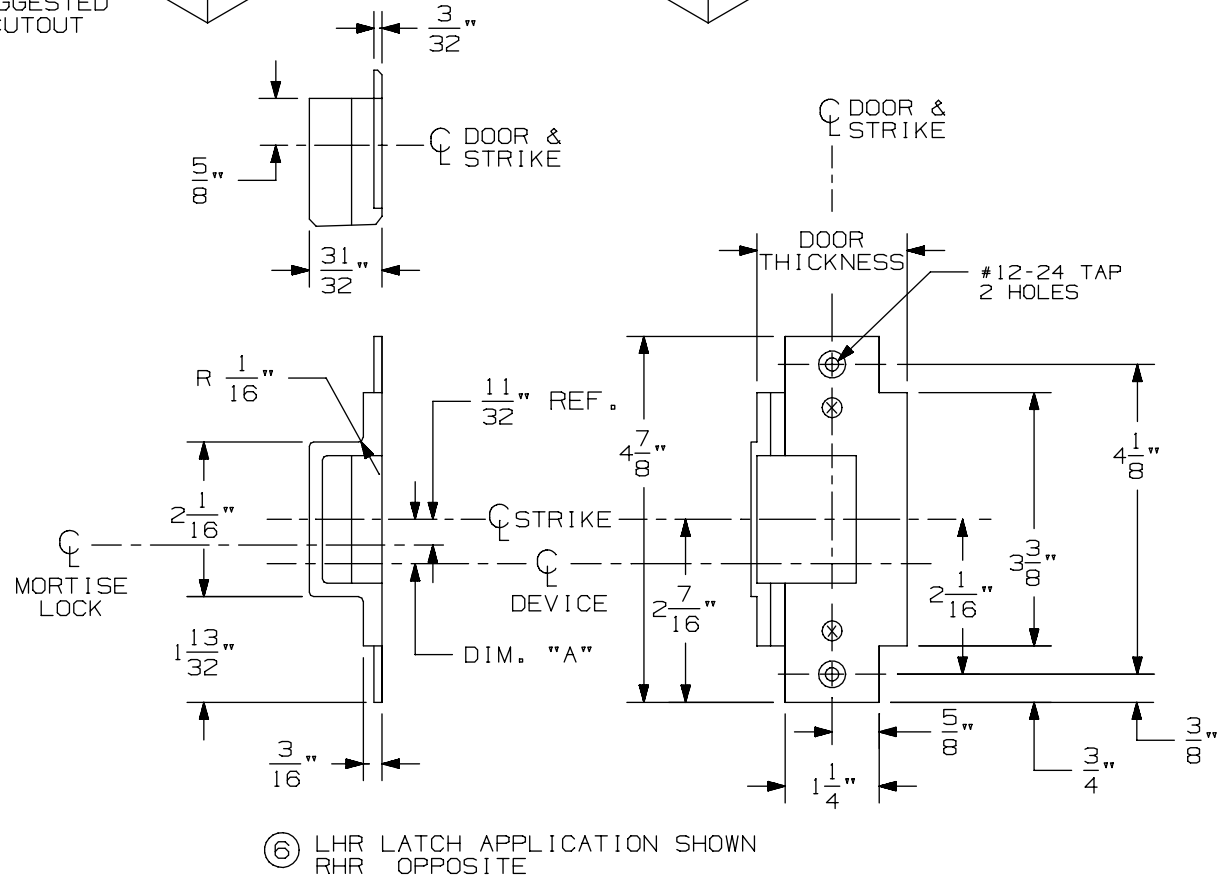

⑥ LHR LATCH APPLICATION SHOWN
RHR OPPOSITE

576A & 576B Mortise Strike for 7500 Mortise Lock

VON DUPRIN®

NOTES: SEE MASTER SHEET #10001 FOR SUGGESTED REINFORCING

TEMPLATE NUMBER: 30211_a

DATE: 05-28-13

NOTES:
1. FOR OUTSIDE TRIM PREPARATION, WHEN REQUIRED, SEE TRIM TEMPLATE.
2. WIRING TO E7500 & SS7500 LOCKS GOES THROUGH DOOR AND NOT DEVICE.
3. LHR APPLICATION SHOWN, RHR APPLICATION OPPOSITE.

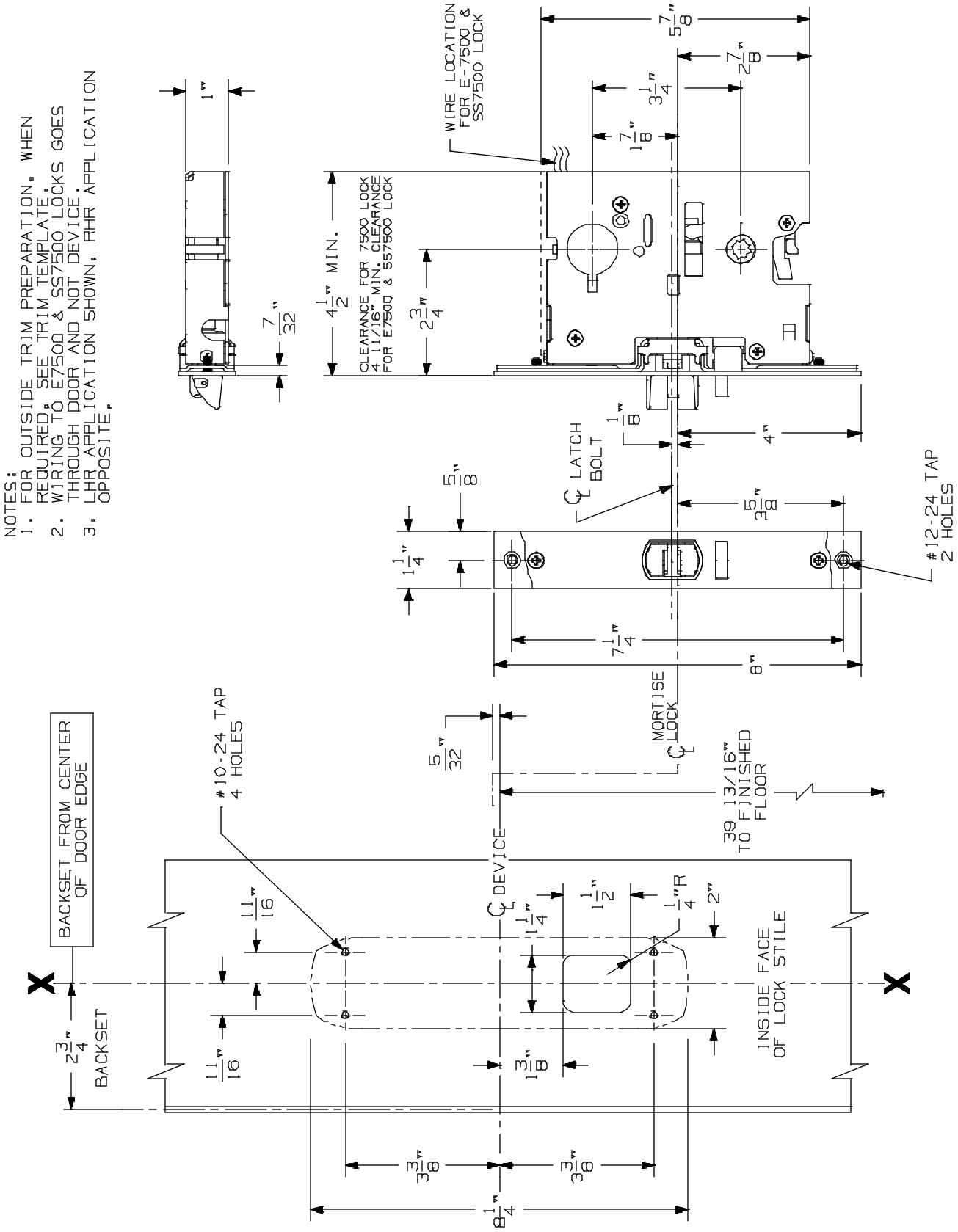

8875/8875-F Mortise Lock Device

VON DUPRIN®

NOTES: SEE MASTER SHEET #10001 FOR SUGGESTED REINFORCING

TEMPLATE NUMBER: 10179_a

DATE: 05-15-13

NOTES: SEE MASTER SHEET #10001 FOR SUGGESTED REINFORCING

373-L-BE Control

VON DUPRIN®

TEMPLATE NUMBER: 40109_a

DATE: 05-28-13

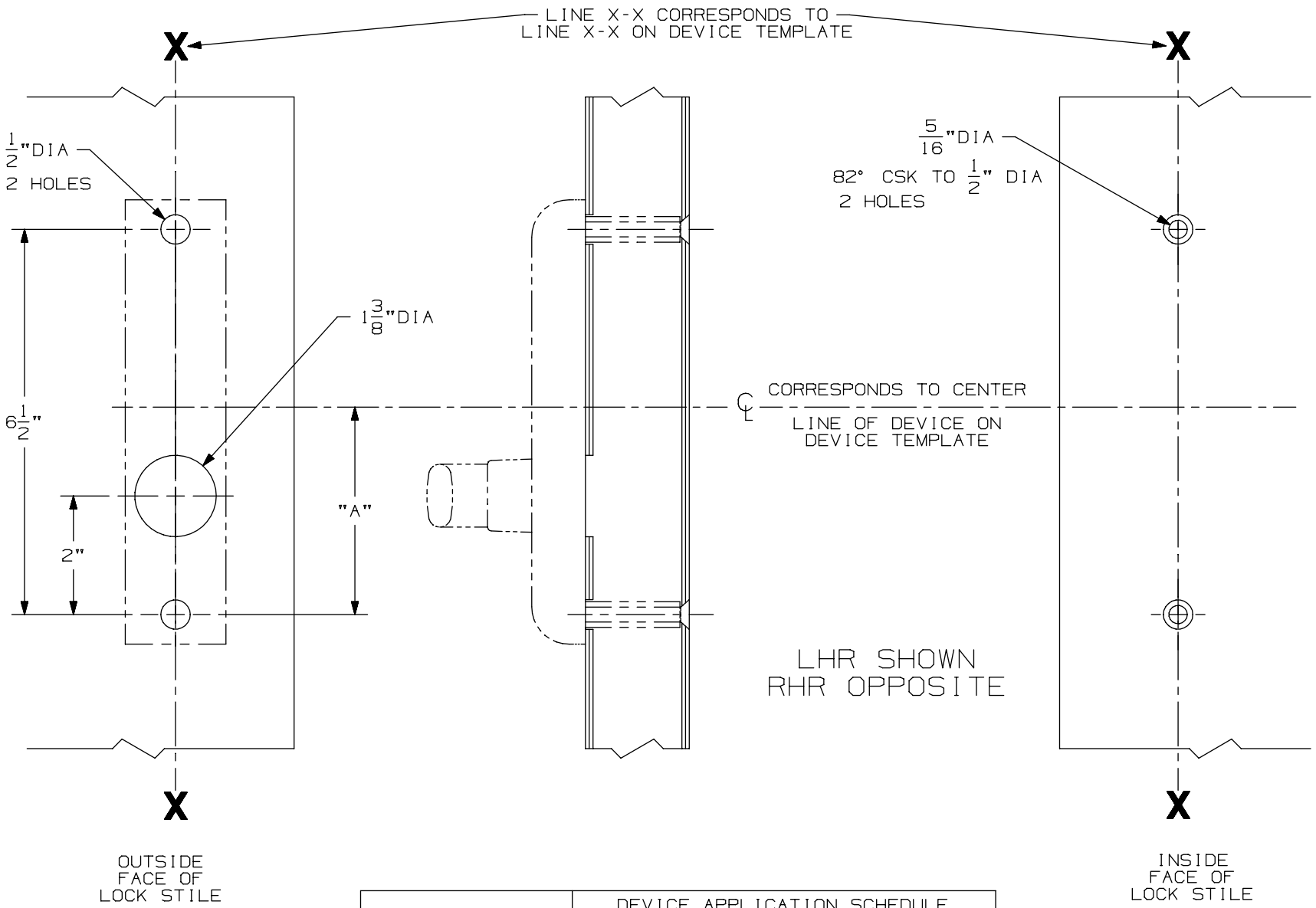

FOR CUTOUT ON INSIDE FACE OF DOOR SEE DEVICE TEMPLATE

DEVICE APPLICATION SCHEDULE	
DEVICE	DIM "A"
8827/8827-F	3 1/2"
88 MORTISE	3 1/4"

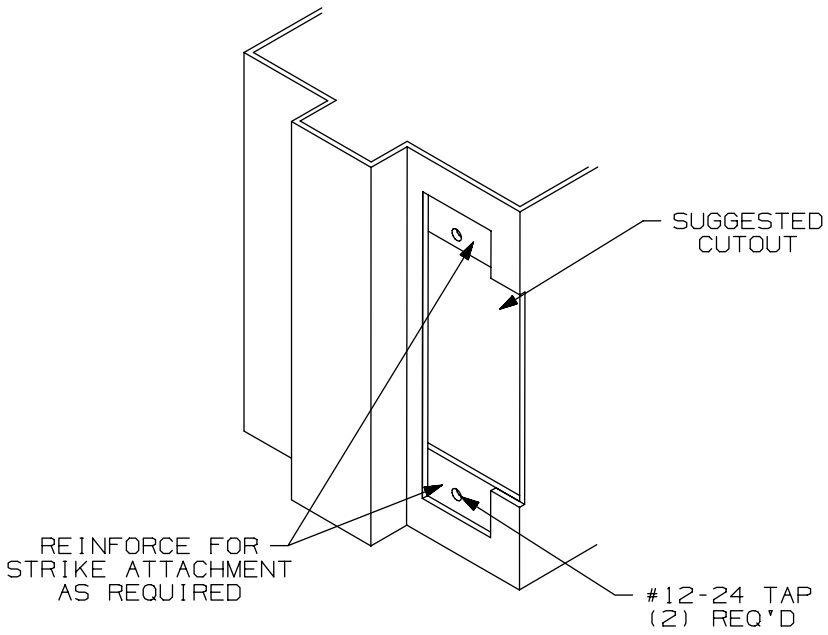

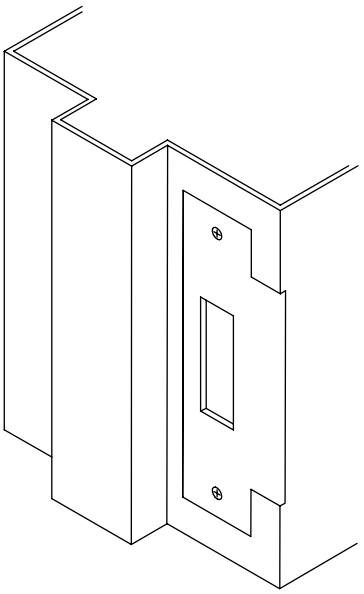

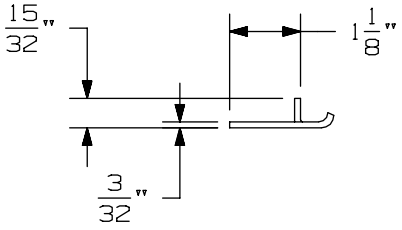

APPLICATION SCHEDULE	
DEVICE	DIM. "A"
9875 & 9875-F	11/16
9975 & 9975-F	11/16
8875 & 8875-F	1/2
5575 & 5575-F	1/2

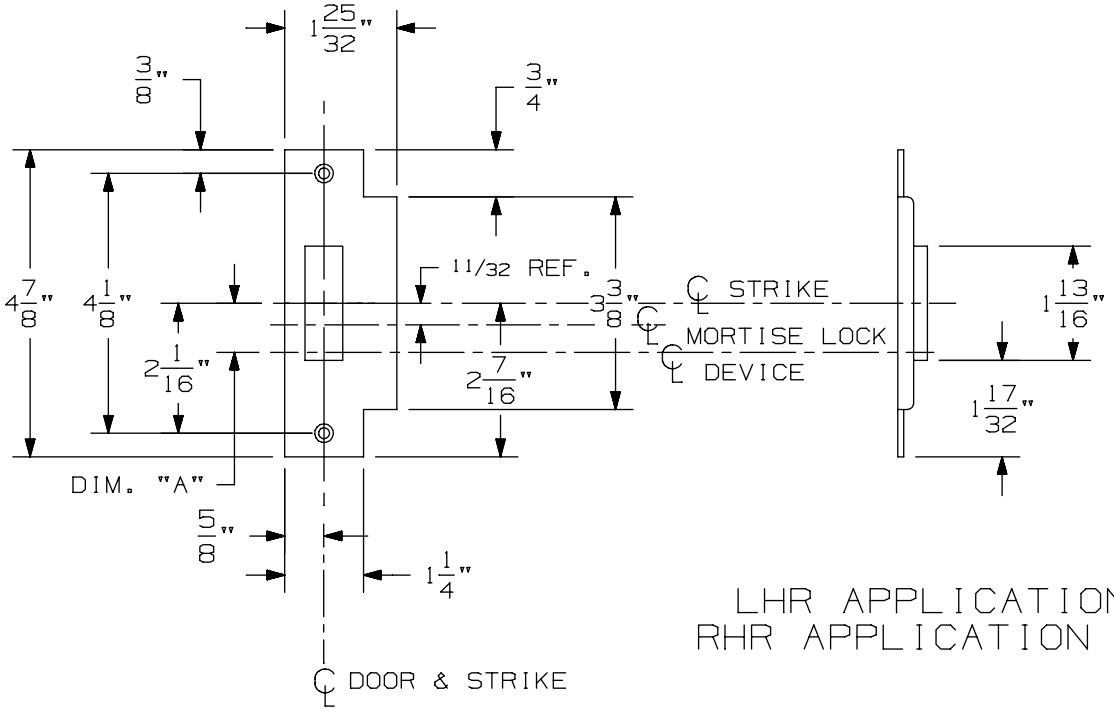

LHR APPLICATION SHOWN
RHR APPLICATION OPPOSITE

575 Mortise Strike (Single Door) for 7500 Mortise Lock

VON DUPRIN®

NOTES: SEE MASTER SHEET #10001 FOR SUGGESTED REINFORCING

TEMPLATE NUMBER: 30210_b

DATE: 07-22-13

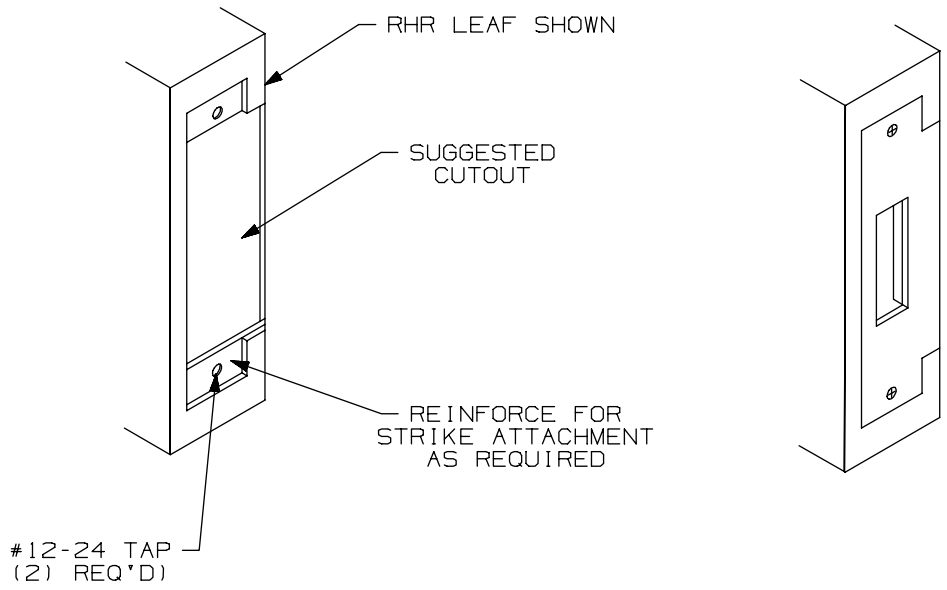

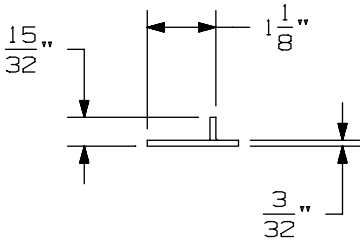

APPLICATION SCHEDULE	
DEVICE	DIM. "A"
9875 & 9875-F	11/16
9975 & 9975-F	11/16
8875 & 8875-F	1/2
5575 & 5575-F	1/2

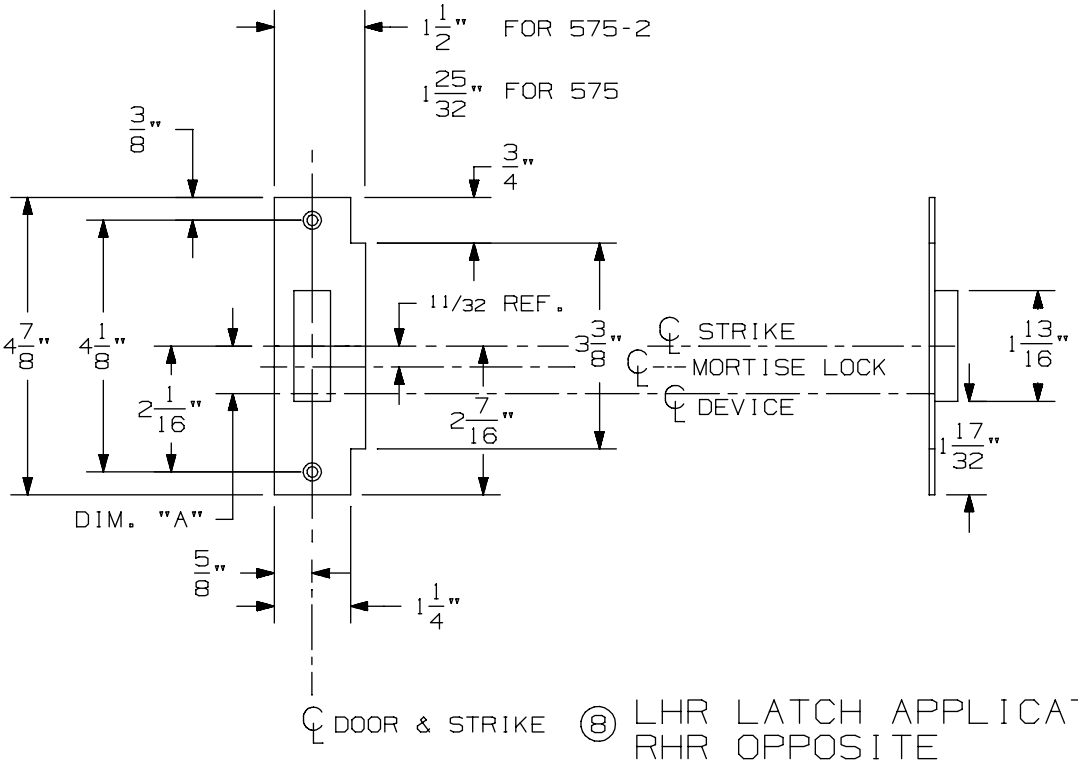

⑧ LHR LATCH APPLICATION SHOWN
RHR OPPOSITE

575-2 Mortise Strike (Double Doors) for 7500 Mortise Lock

VON DUPRIN®

NOTES: SEE MASTER SHEET #10001 FOR SUGGESTED REINFORCING

TEMPLATE NUMBER: 30212_b

DATE: 07-22-13

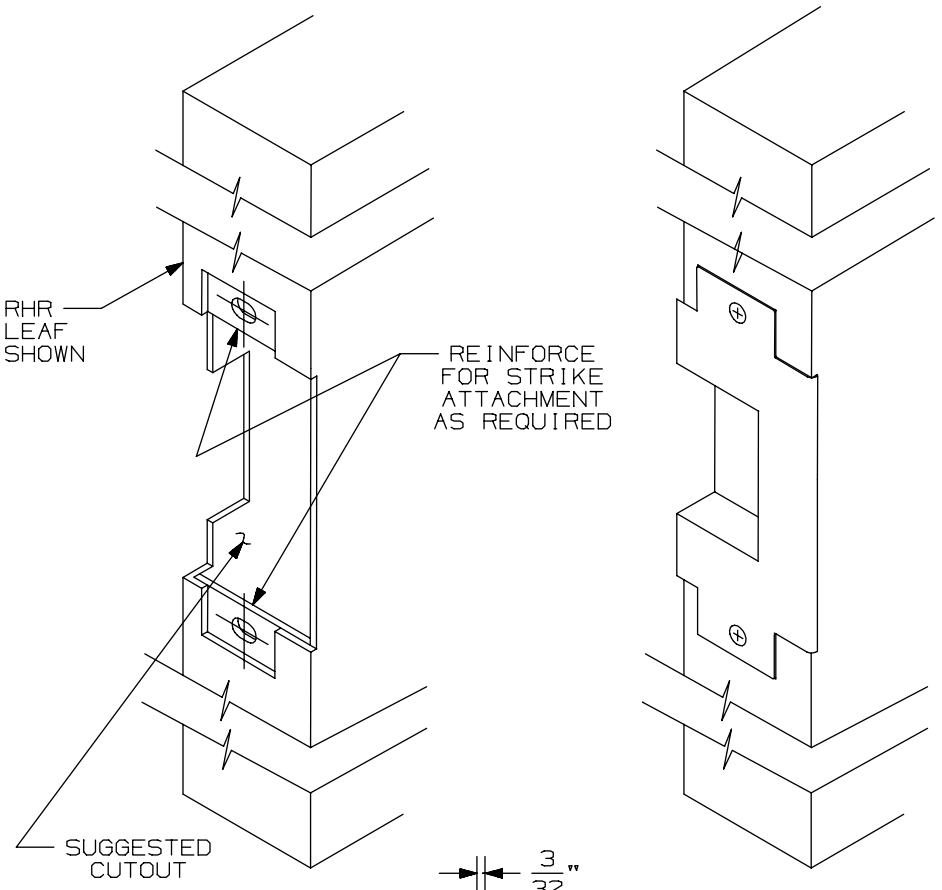

APPLICATION SCHEDULE	
DEVICE	DIM."A"
9875 & 9875-F	11/16
9975 & 9975-F	11/16
8875 & 8875-F	1/2
5575 & 5575-F	1/2

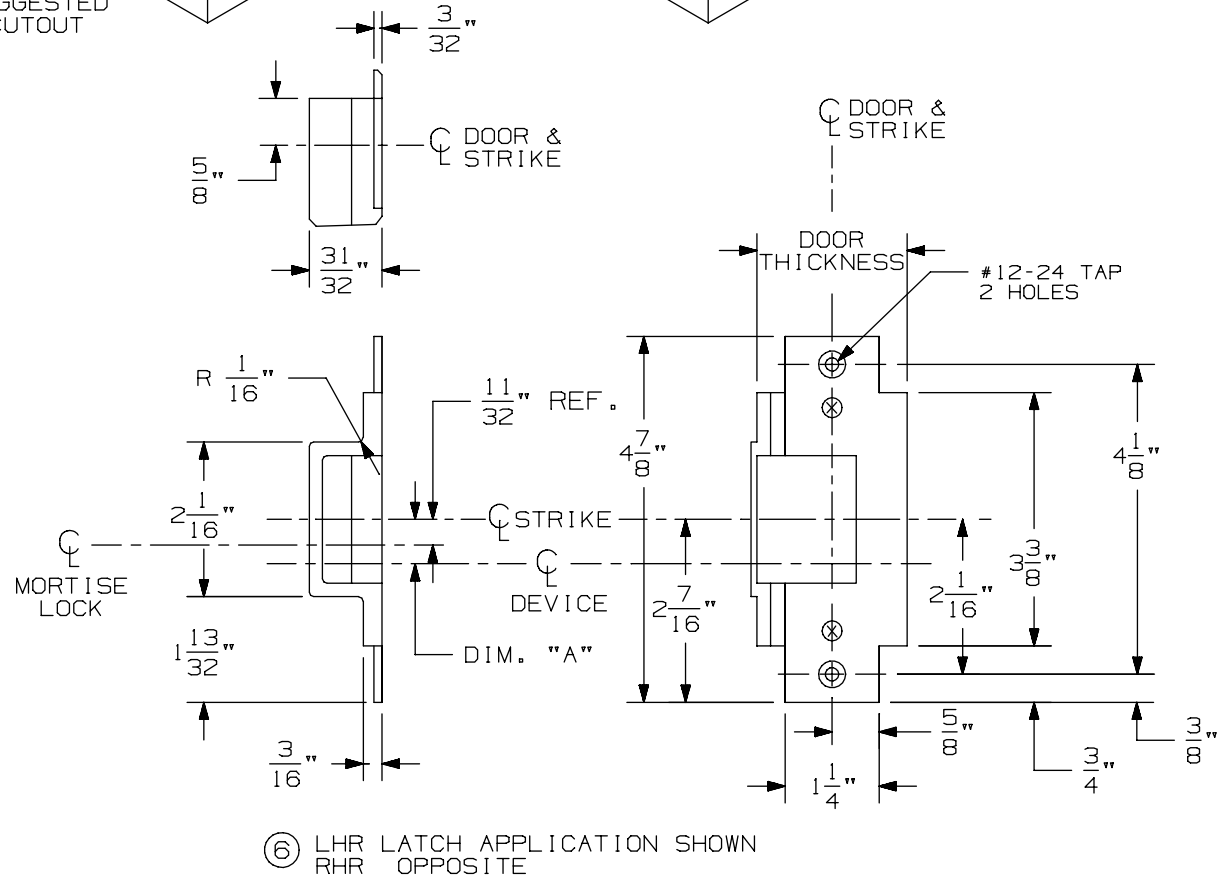

⑥ LHR LATCH APPLICATION SHOWN
RHR OPPOSITE

576A & 576B Mortise Strike for 7500 Mortise Lock

VON DUPRIN®

NOTES: SEE MASTER SHEET #10001 FOR SUGGESTED REINFORCING

TEMPLATE NUMBER: 30211_a

DATE: 05-28-13

NOTES:
1. FOR OUTSIDE TRIM PREPARATION, WHEN REQUIRED, SEE TRIM TEMPLATE.
2. WIRING TO E7500 & SS7500 LOCKS GOES THROUGH DOOR AND NOT DEVICE.
3. LHR APPLICATION SHOWN, RHR APPLICATION OPPOSITE.

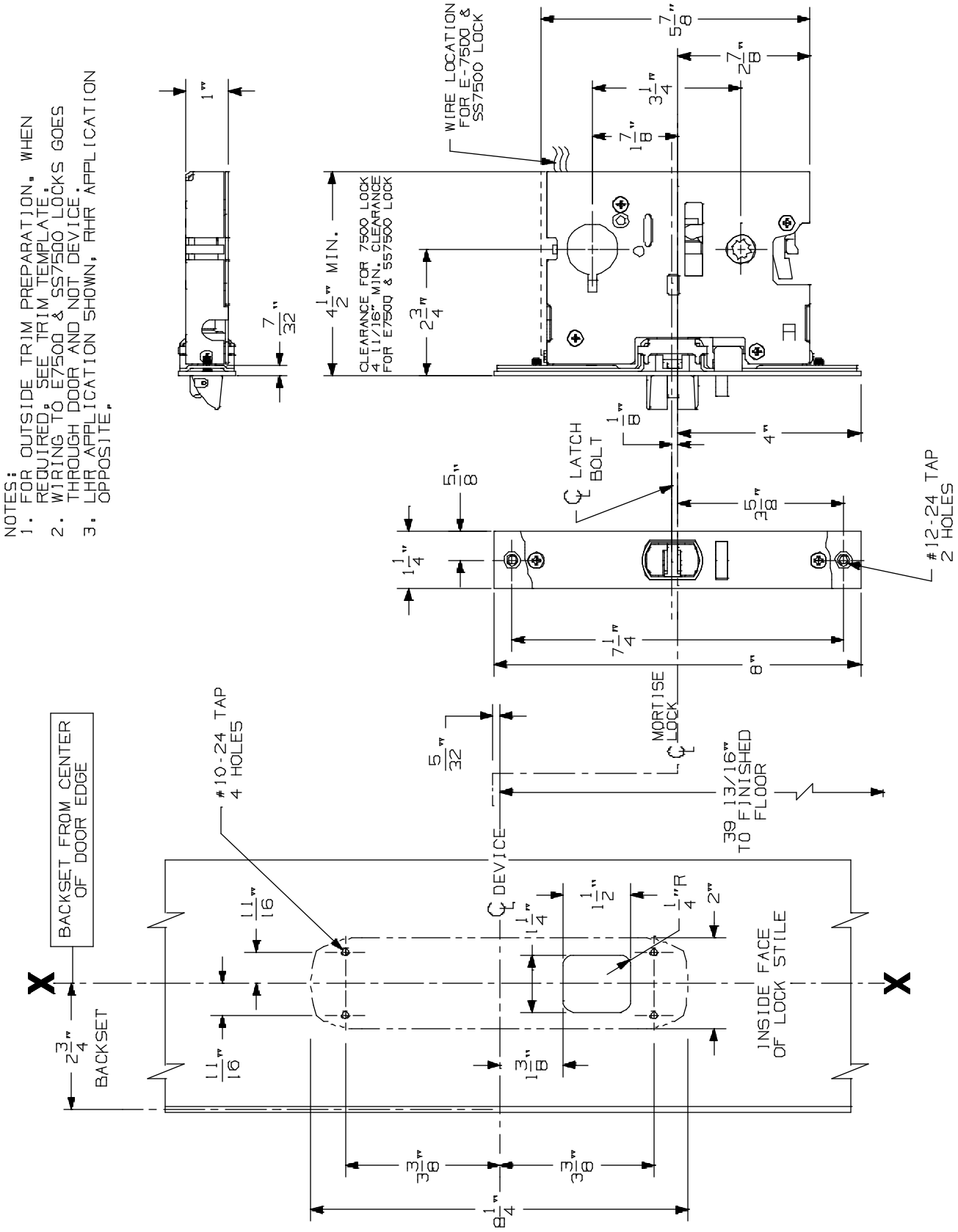

8875/8875-F Mortise Lock Device

VON DUPRIN®

NOTES: SEE MASTER SHEET #10001 FOR SUGGESTED REINFORCING

TEMPLATE NUMBER: 10179_a

DATE: 05-15-13

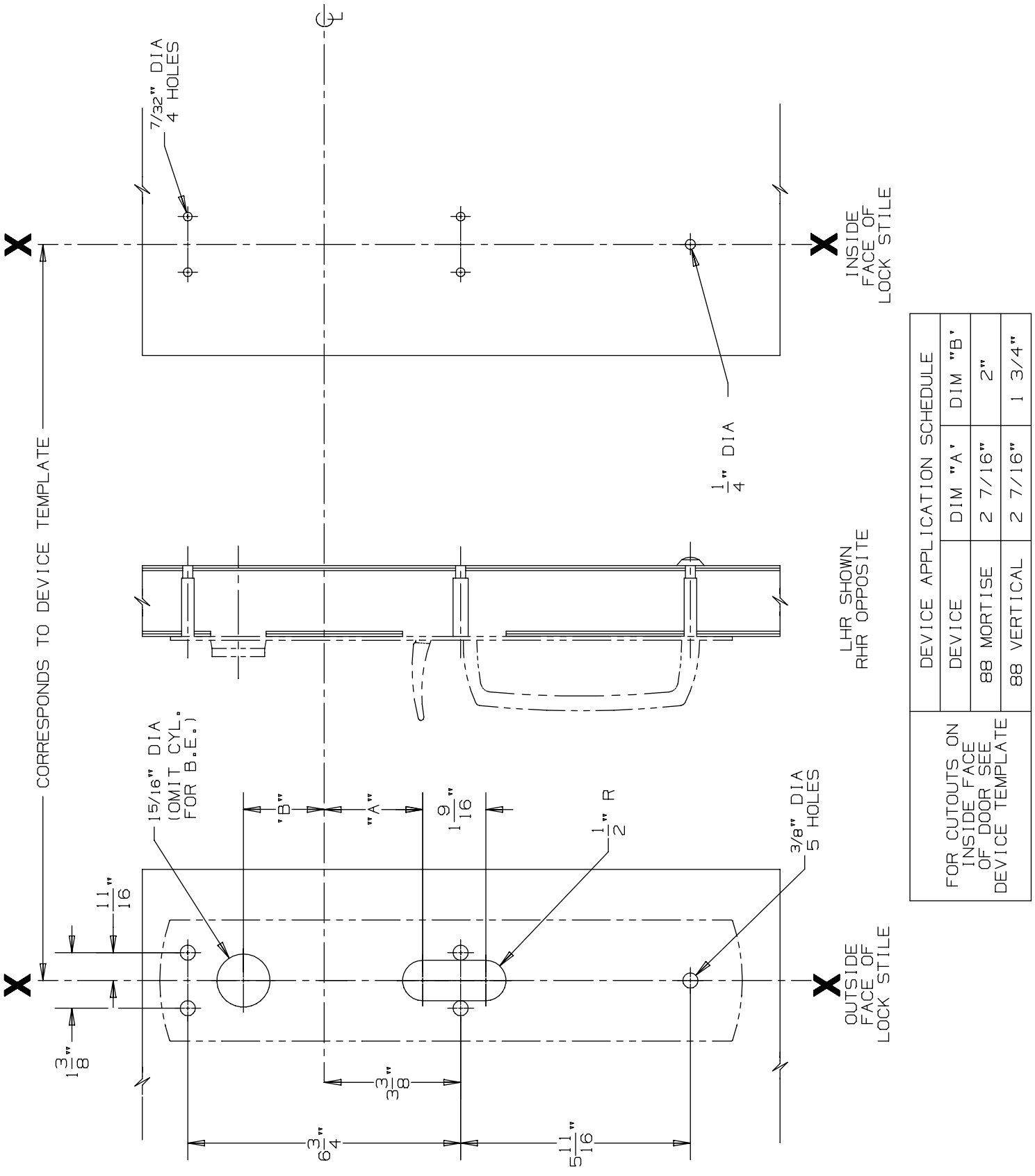

DEVICE APPLICATION SCHEDULE		
DEVICE	DIM "A"	DIM "B"
88 MORTISE	2 7/16"	2"
88 VERTICAL	2 7/16"	1 3/4"

FOR CUTOUTS ON INSIDE FACE OF DOOR SEE DEVICE TEMPLATE

880 TP & 880 TP-BE Trim for 88 Mortise & Vertical Devices

VON DUPRIN®

NOTES: SEE MASTER SHEET #10001 FOR SUGGESTED REINFORCING

TEMPLATE NUMBER: 20260_a

DATE: 05-28-13

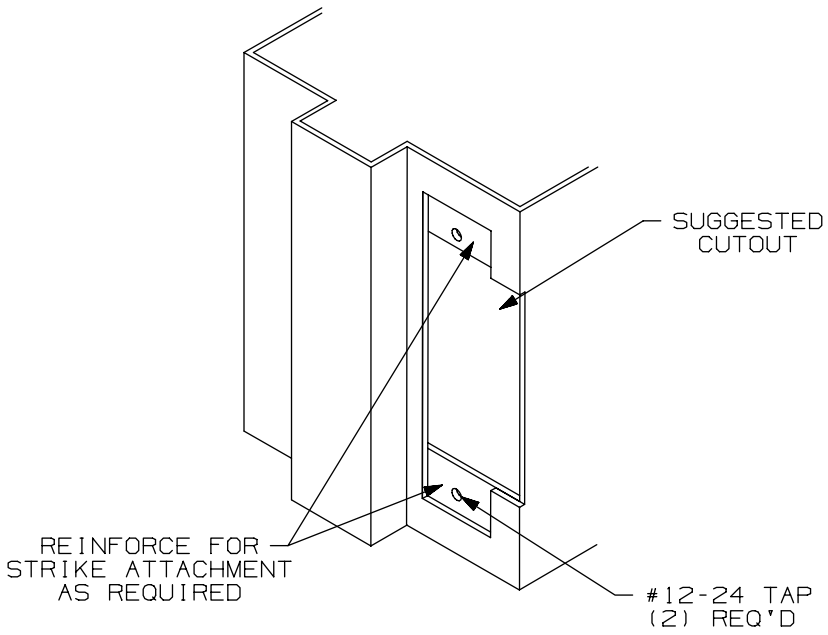

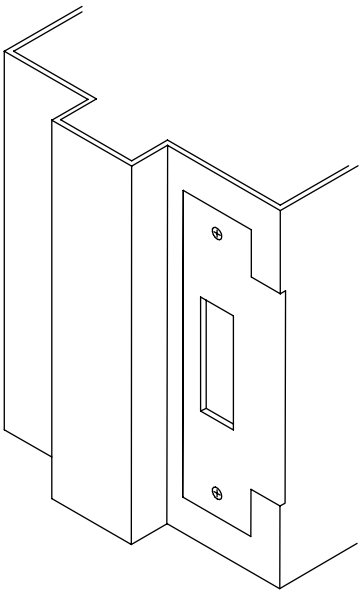

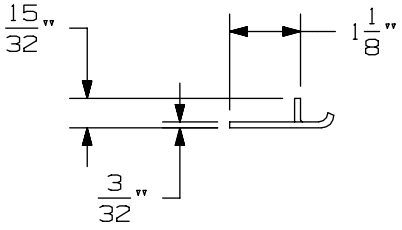

APPLICATION SCHEDULE	
DEVICE	DIM. "A"
9875 & 9875-F	11/16
9975 & 9975-F	11/16
8875 & 8875-F	1/2
5575 & 5575-F	1/2

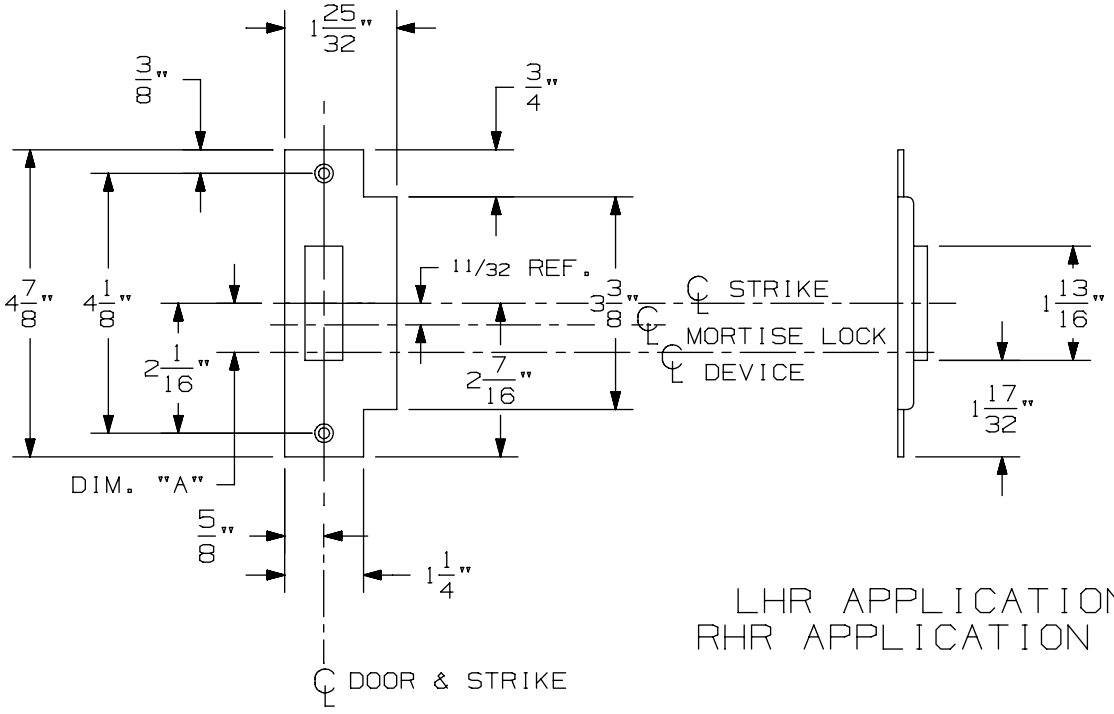

LHR APPLICATION SHOWN
RHR APPLICATION OPPOSITE

575 Mortise Strike (Single Door) for 7500 Mortise Lock

VON DUPRIN®

NOTES: SEE MASTER SHEET #10001 FOR SUGGESTED REINFORCING

TEMPLATE NUMBER: 30210_b

DATE: 07-22-13

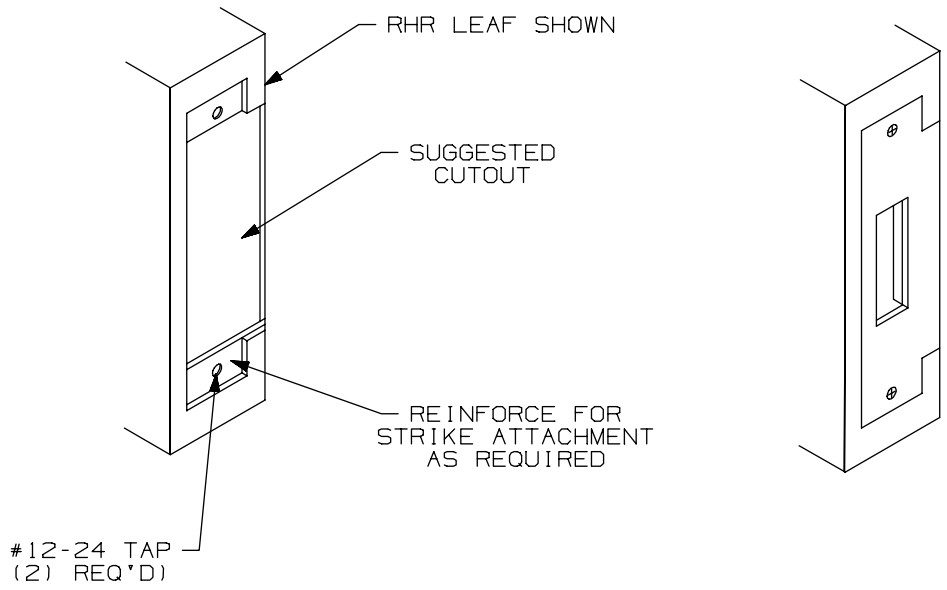

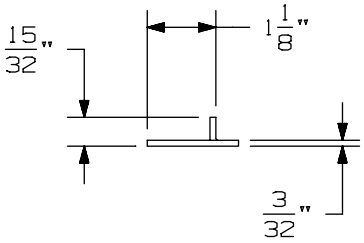

APPLICATION SCHEDULE	
DEVICE	DIM. "A"
9875 & 9875-F	11/16
9975 & 9975-F	11/16
8875 & 8875-F	1/2
5575 & 5575-F	1/2

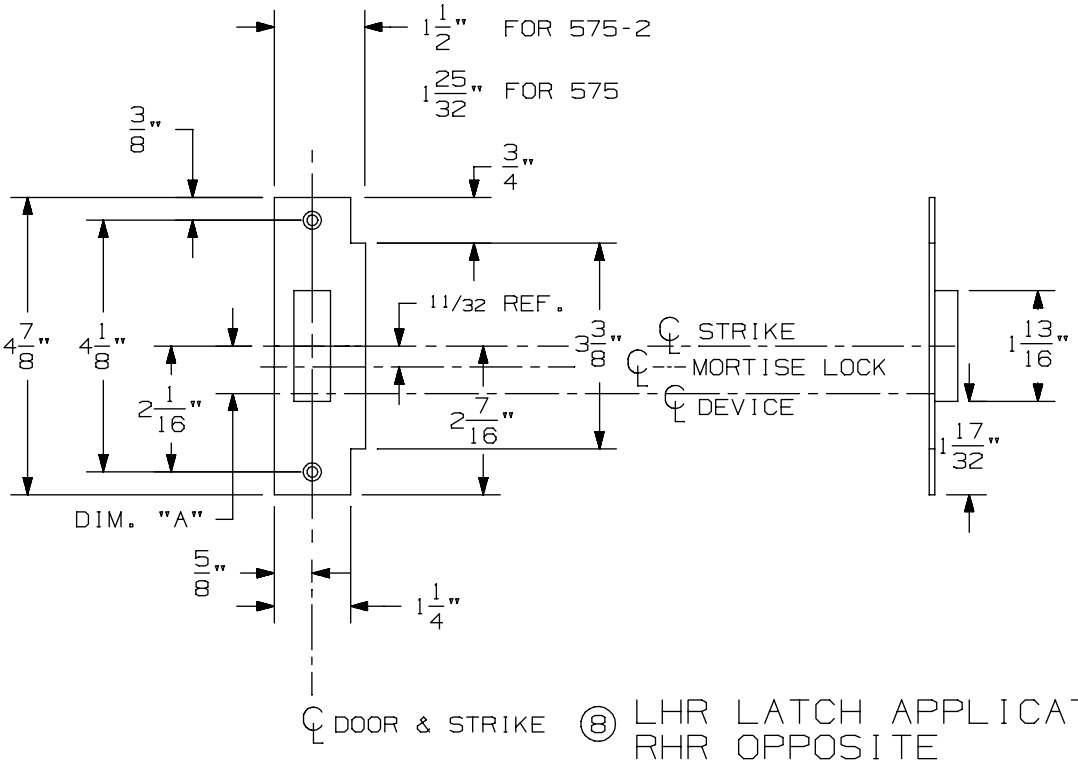

⑧ LHR LATCH APPLICATION SHOWN
RHR OPPOSITE

575-2 Mortise Strike (Double Doors) for 7500 Mortise Lock

VON DUPRIN®

NOTES: SEE MASTER SHEET #10001 FOR SUGGESTED REINFORCING

TEMPLATE NUMBER: 30212_b

DATE: 07-22-13

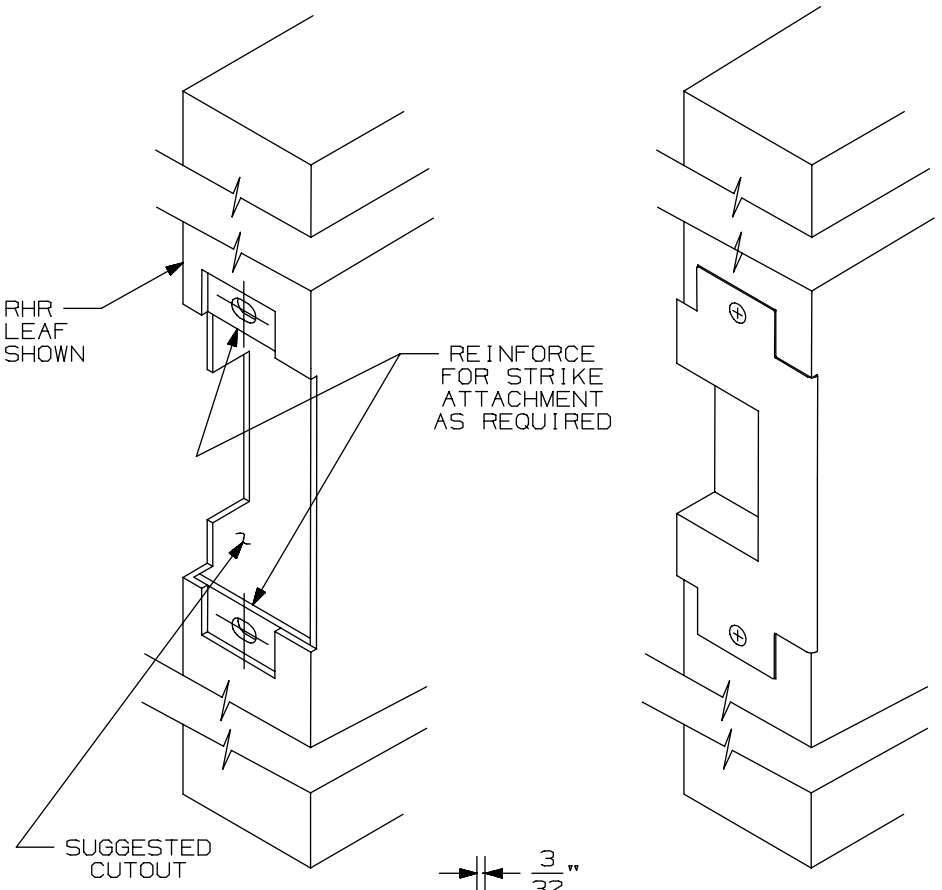

APPLICATION SCHEDULE	
DEVICE	DIM."A"
9875 & 9875-F	11/16
9975 & 9975-F	11/16
8875 & 8875-F	1/2
5575 & 5575-F	1/2

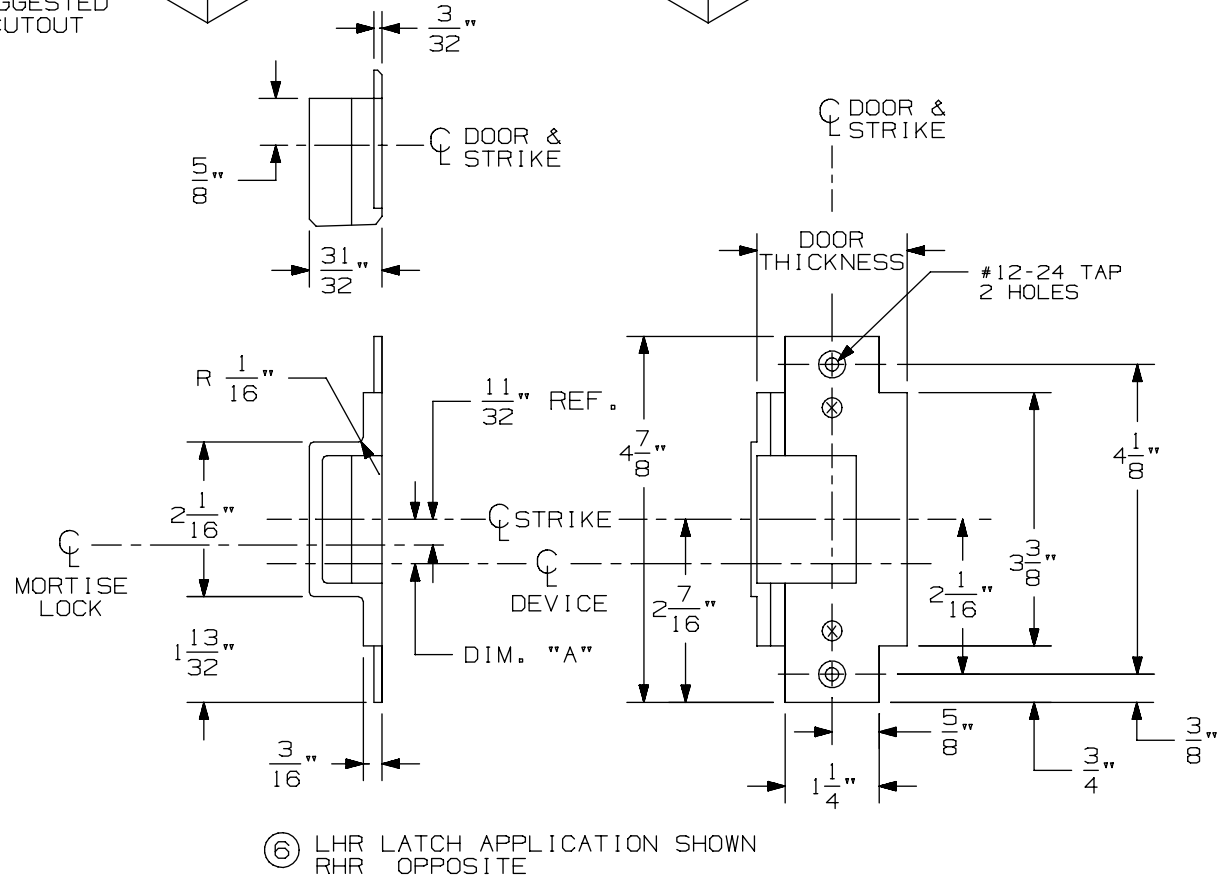

⑥ LHR LATCH APPLICATION SHOWN
RHR OPPOSITE

576A & 576B Mortise Strike for 7500 Mortise Lock

VON DUPRIN®

NOTES: SEE MASTER SHEET #10001 FOR SUGGESTED REINFORCING

TEMPLATE NUMBER: 30211_a

DATE: 05-28-13

88 Series Exit Devices

-

8875-F Mortise Fire575 Sgl. Door Strike

NOTES:
1. FOR OUTSIDE TRIM PREPARATION, WHEN REQUIRED, SEE TRIM TEMPLATE.
2. WIRING TO E7500 & SS7500 LOCKS GOES THROUGH DOOR AND NOT DEVICE.
3. LHR APPLICATION SHOWN, RHR APPLICATION OPPOSITE.

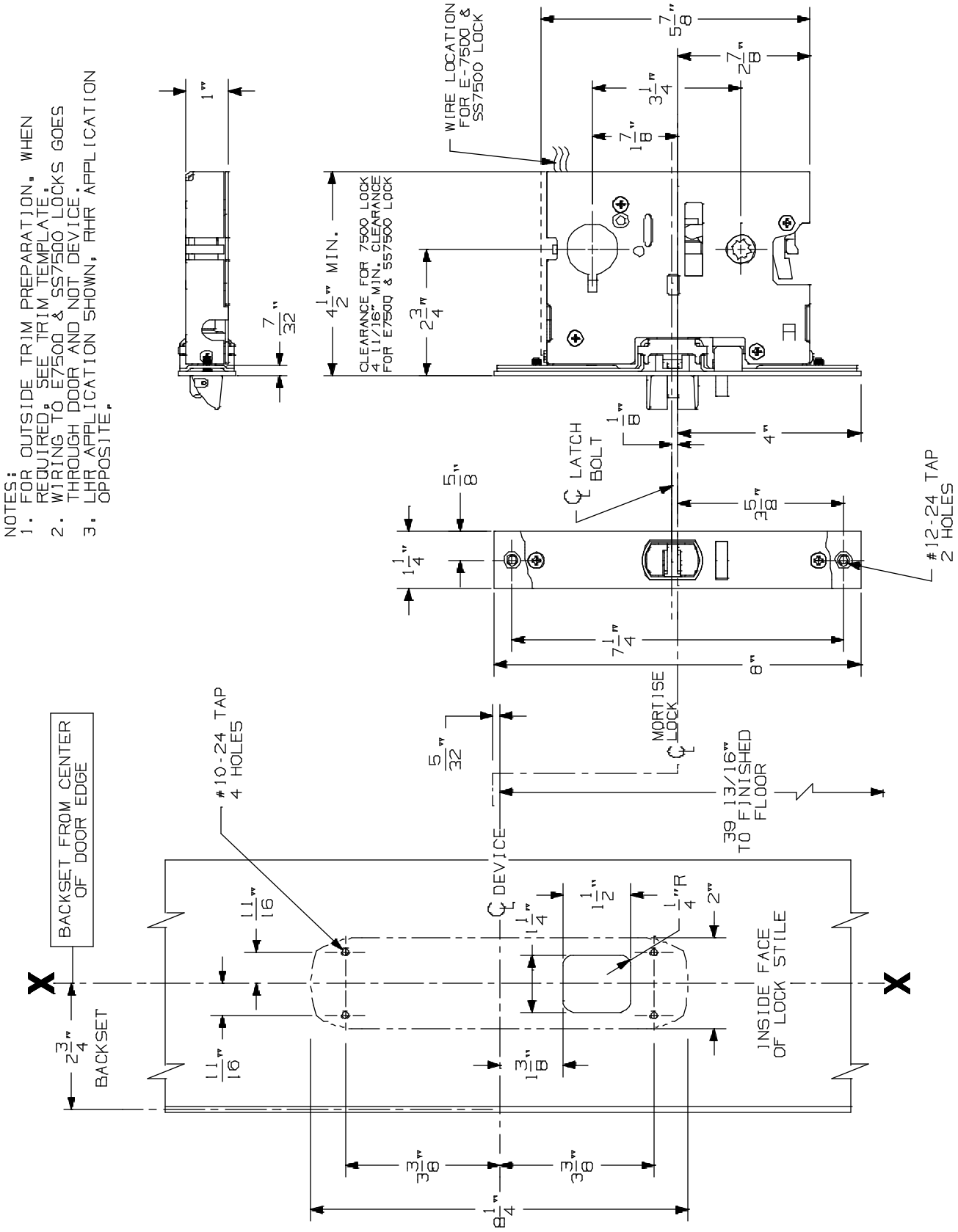

8875/8875-F Mortise Lock Device

VON DUPRIN®

NOTES: SEE MASTER SHEET #10001 FOR SUGGESTED REINFORCING

TEMPLATE NUMBER: 10179_a

DATE: 05-15-13

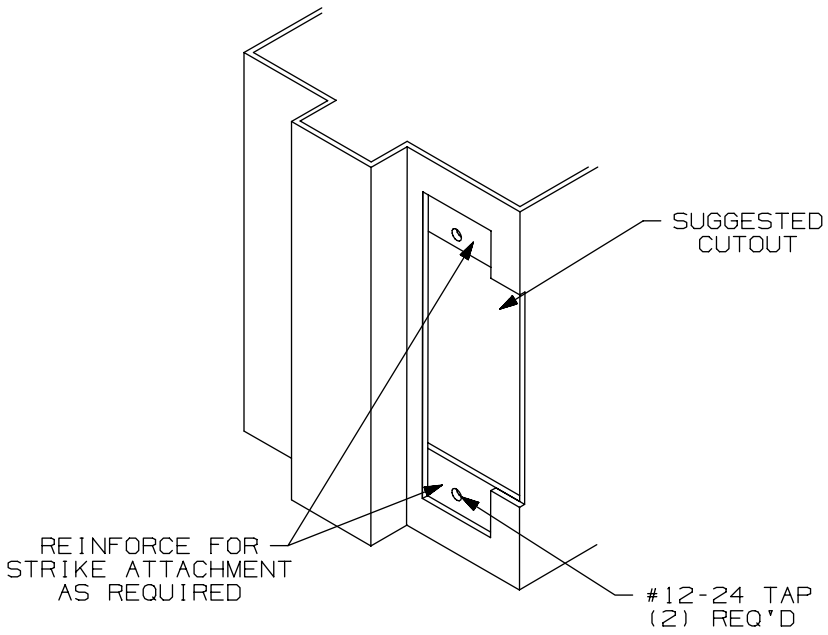

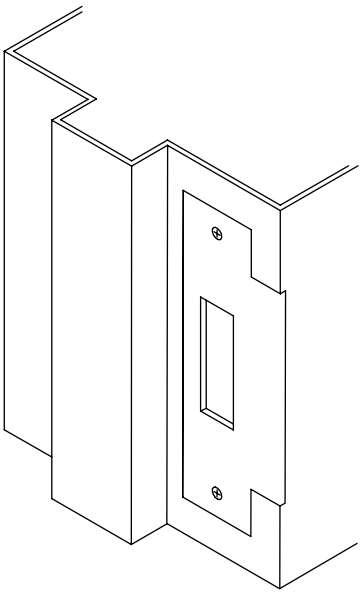

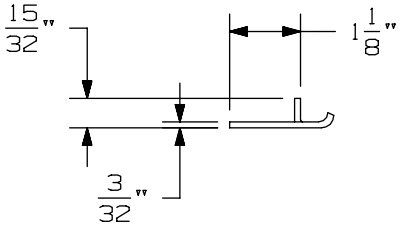

APPLICATION SCHEDULE	
DEVICE	DIM. "A"
9875 & 9875-F	11/16
9975 & 9975-F	11/16
8875 & 8875-F	1/2
5575 & 5575-F	1/2

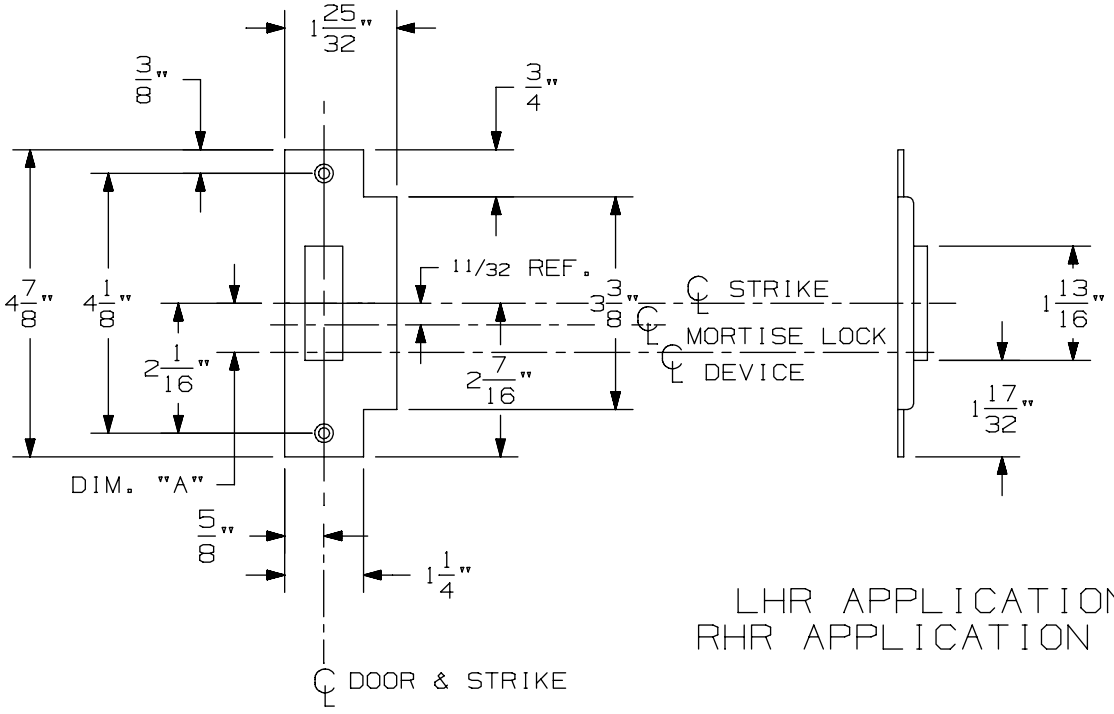

LHR APPLICATION SHOWN
RHR APPLICATION OPPOSITE

575 Mortise Strike (Single Door) for 7500 Mortise Lock

VON DUPRIN®

NOTES: SEE MASTER SHEET #10001 FOR SUGGESTED REINFORCING

TEMPLATE NUMBER: 30210_b

DATE: 07-22-13

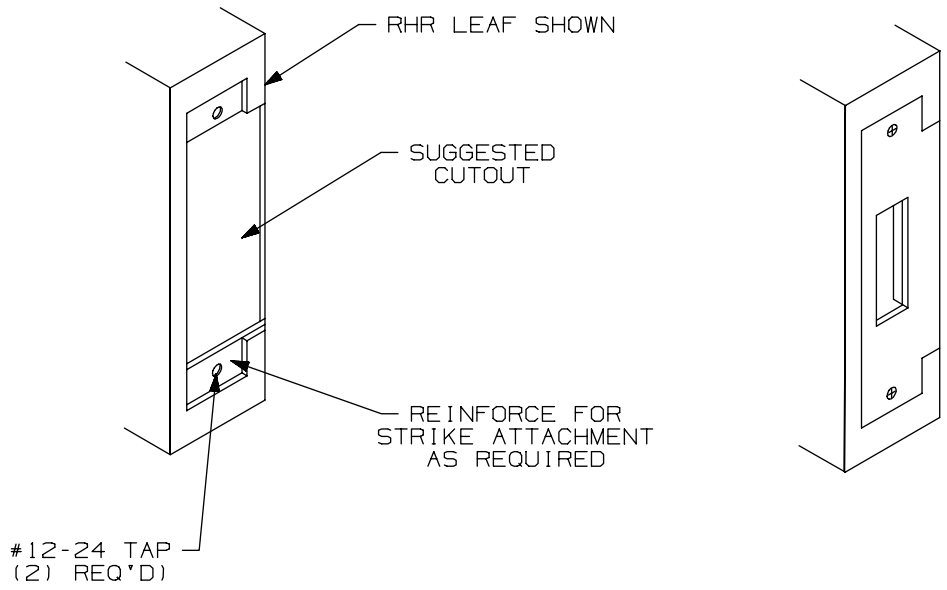

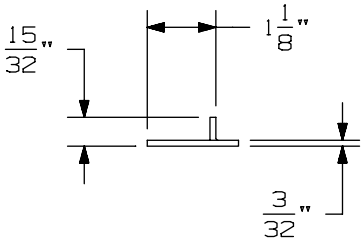

APPLICATION SCHEDULE	
DEVICE	DIM. "A"
9875 & 9875-F	11/16
9975 & 9975-F	11/16
8875 & 8875-F	1/2
5575 & 5575-F	1/2

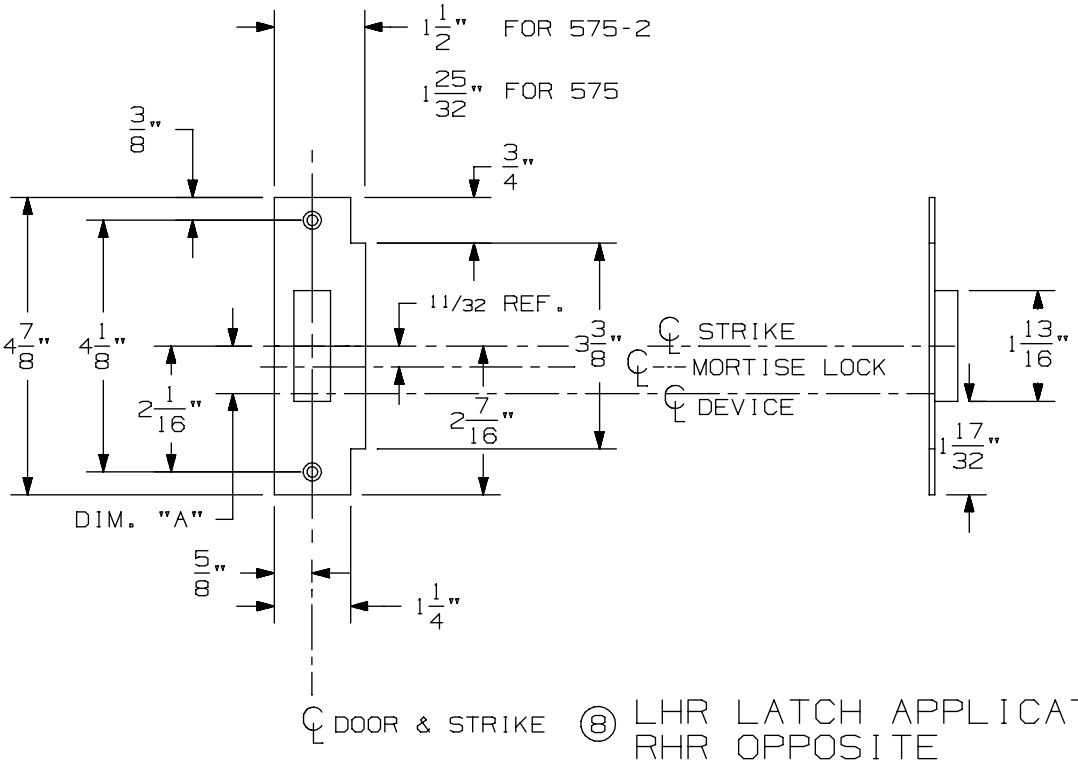

⑧ LHR LATCH APPLICATION SHOWN
RHR OPPOSITE

575-2 Mortise Strike (Double Doors) for 7500 Mortise Lock

VON DUPRIN®

NOTES: SEE MASTER SHEET #10001 FOR SUGGESTED REINFORCING

TEMPLATE NUMBER: 30212_b

DATE: 07-22-13

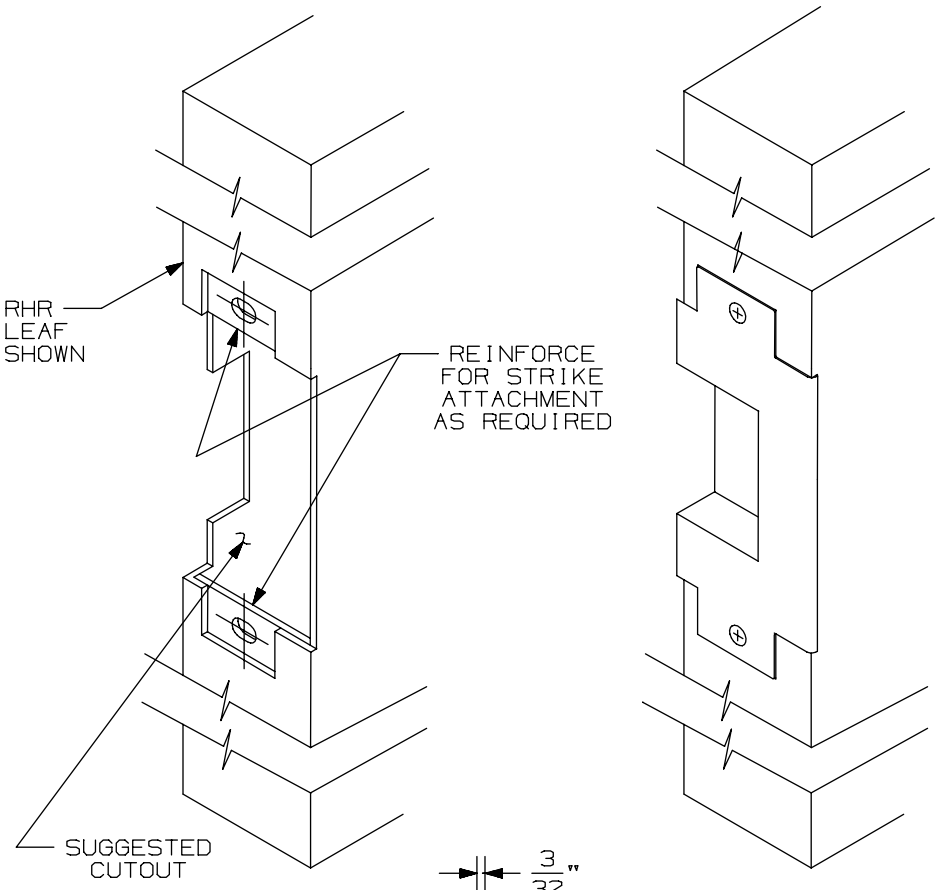

APPLICATION SCHEDULE	
DEVICE	DIM."A"
9875 & 9875-F	11/16
9975 & 9975-F	11/16
8875 & 8875-F	1/2
5575 & 5575-F	1/2

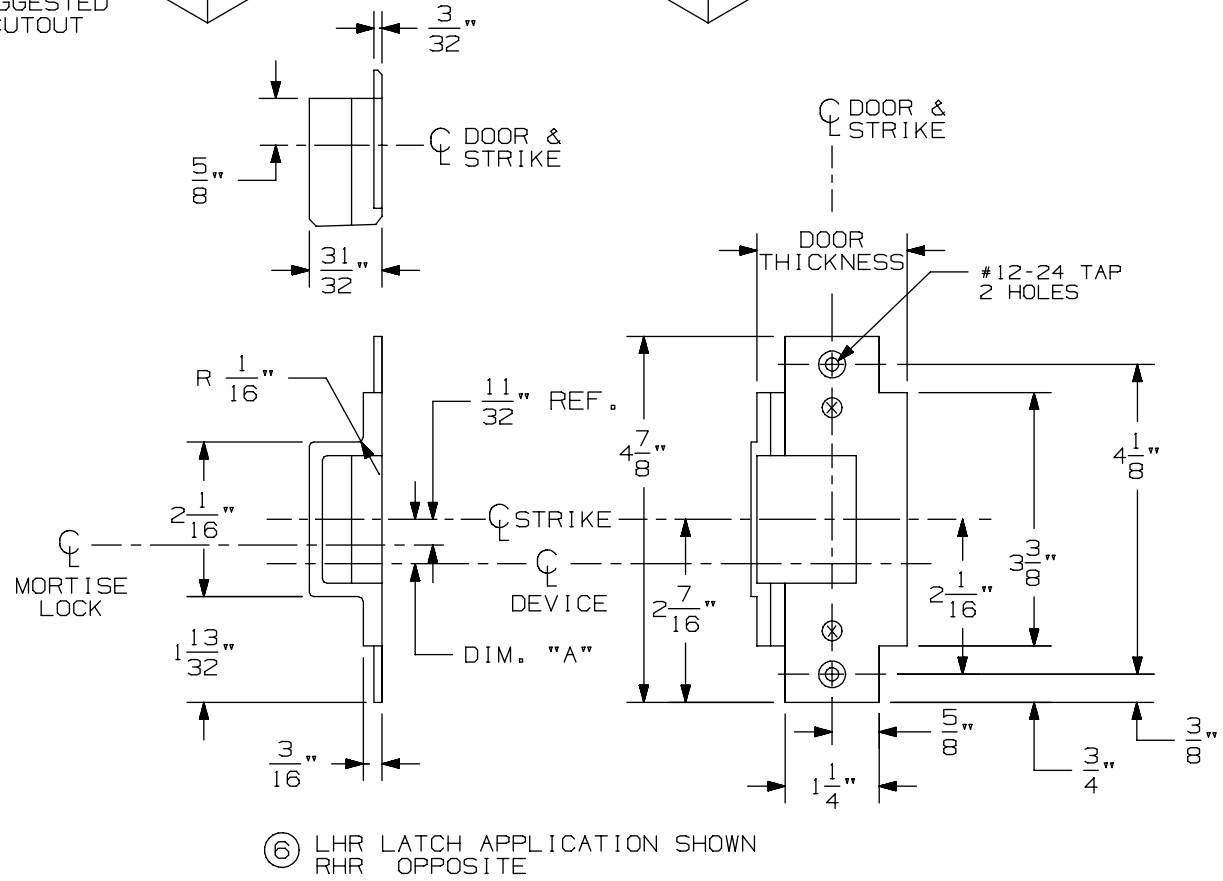

⑥ LHR LATCH APPLICATION SHOWN
RHR OPPOSITE

576A & 576B Mortise Strike for 7500 Mortise Lock

VON DUPRIN®

NOTES: SEE MASTER SHEET #10001 FOR SUGGESTED REINFORCING

TEMPLATE NUMBER: 30211_a

DATE: 05-28-13

NOTES:
1. FOR OUTSIDE TRIM PREPARATION, WHEN REQUIRED, SEE TRIM TEMPLATE.
2. WIRING TO E7500 & SS7500 LOCKS GOES THROUGH DOOR AND NOT DEVICE.
3. LHR APPLICATION SHOWN, RHR APPLICATION OPPOSITE.

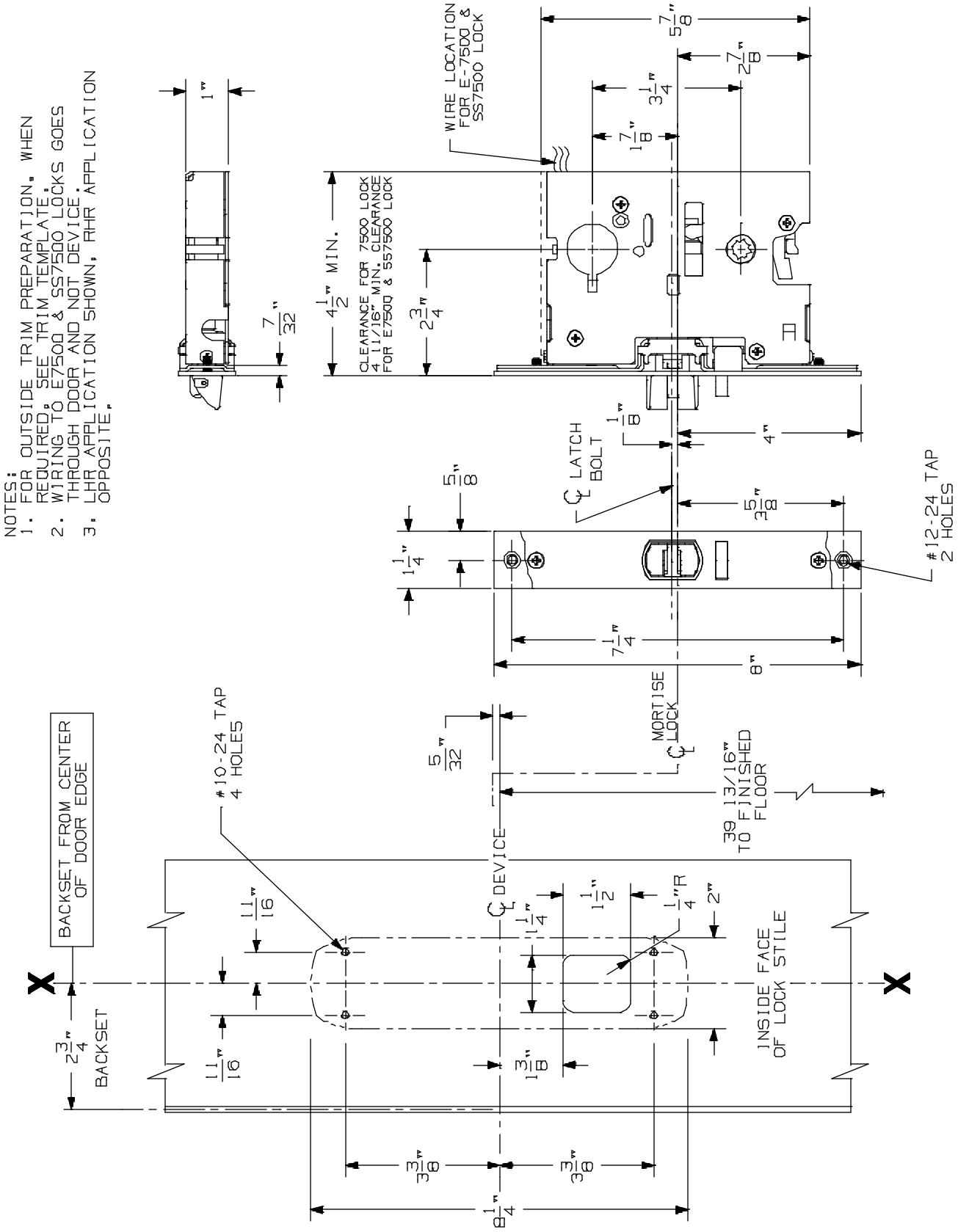

8875/8875-F Mortise Lock Device

VON DUPRIN®

NOTES: SEE MASTER SHEET #10001 FOR SUGGESTED REINFORCING

TEMPLATE NUMBER: 10179_a

DATE: 05-15-13

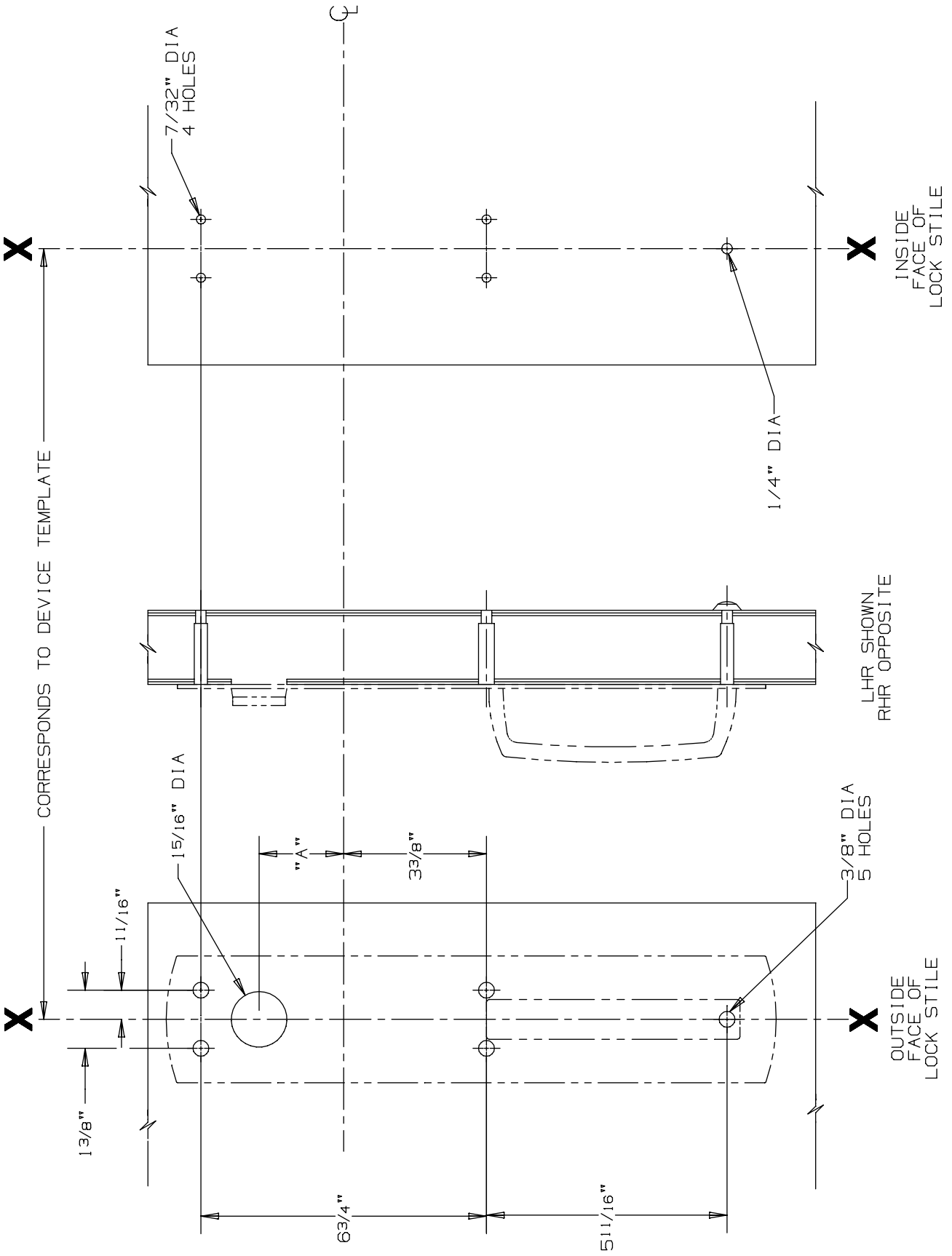

DEVICE APPLICATION SCHEDULE		
DEVICE	DIM. "A"	
88 MORTISE	2"	

FOR CUTOUTS ON INSIDE FACE OF DOOR SEE DEVICE TEMPLATE

880 NL Trim for 88 Mortise Devices

VON DUPRIN®

NOTES: SEE MASTER SHEET #10001 FOR SUGGESTED REINFORCING

TEMPLATE NUMBER: 20259_a

DATE: 05-28-13

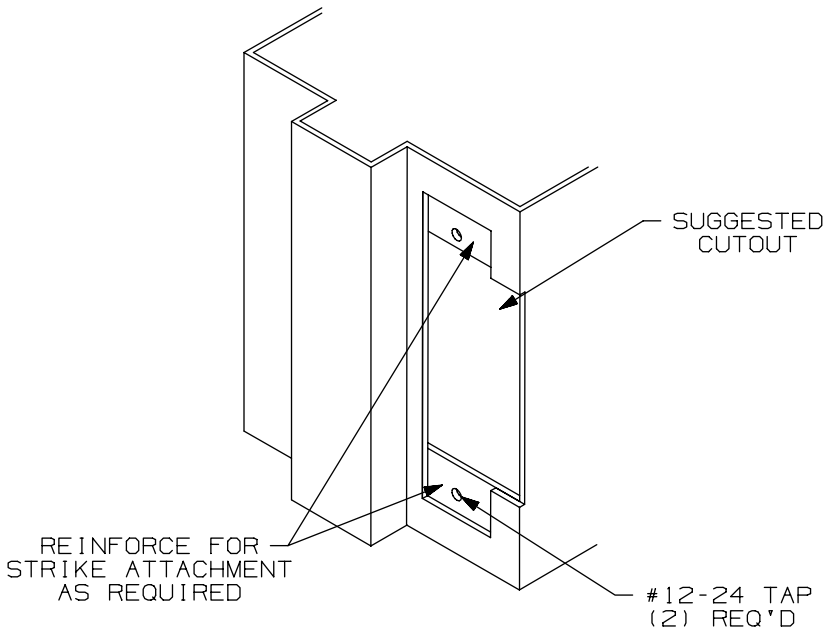

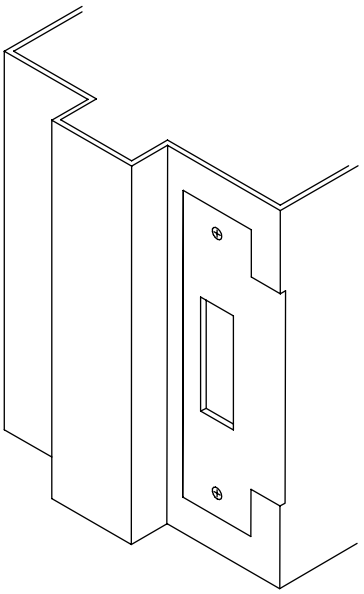

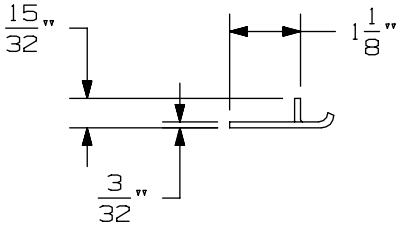

APPLICATION SCHEDULE	
DEVICE	DIM. "A"
9875 & 9875-F	11/16
9975 & 9975-F	11/16
8875 & 8875-F	1/2
5575 & 5575-F	1/2

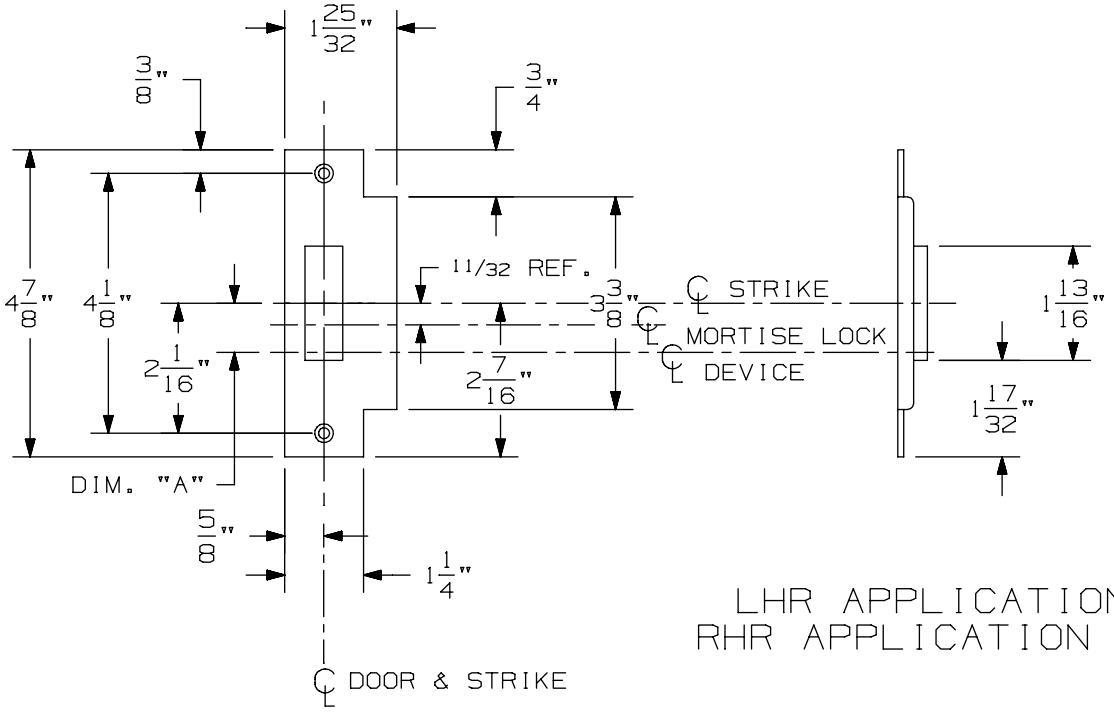

LHR APPLICATION SHOWN
RHR APPLICATION OPPOSITE

575 Mortise Strike (Single Door) for 7500 Mortise Lock

VON DUPRIN®

NOTES: SEE MASTER SHEET #10001 FOR SUGGESTED REINFORCING

TEMPLATE NUMBER: 30210_b

DATE: 07-22-13

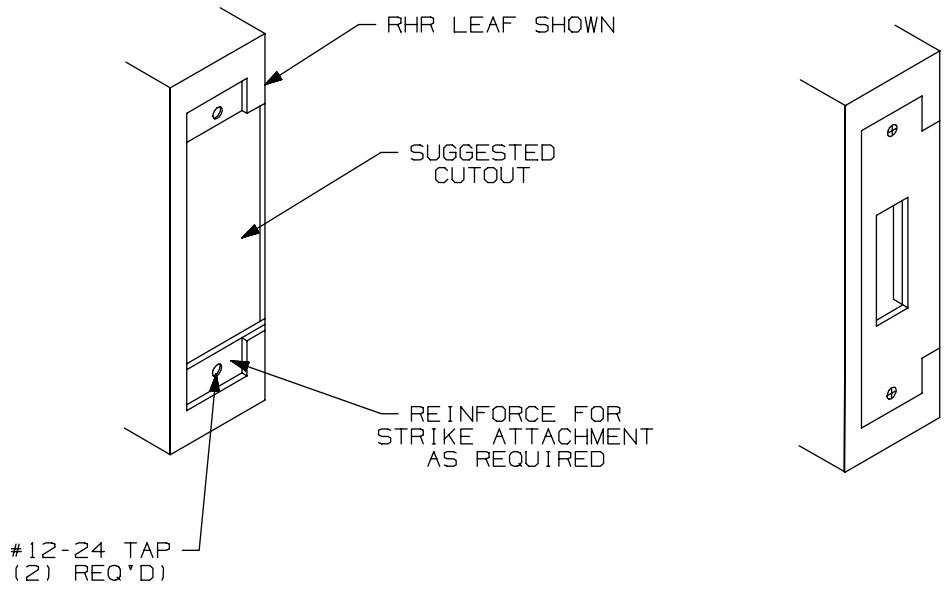

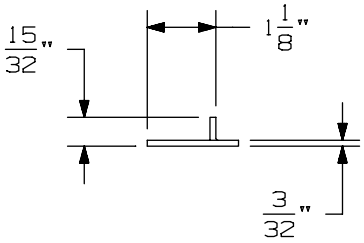

APPLICATION SCHEDULE	
DEVICE	DIM. "A"
9875 & 9875-F	11/16
9975 & 9975-F	11/16
8875 & 8875-F	1/2
5575 & 5575-F	1/2

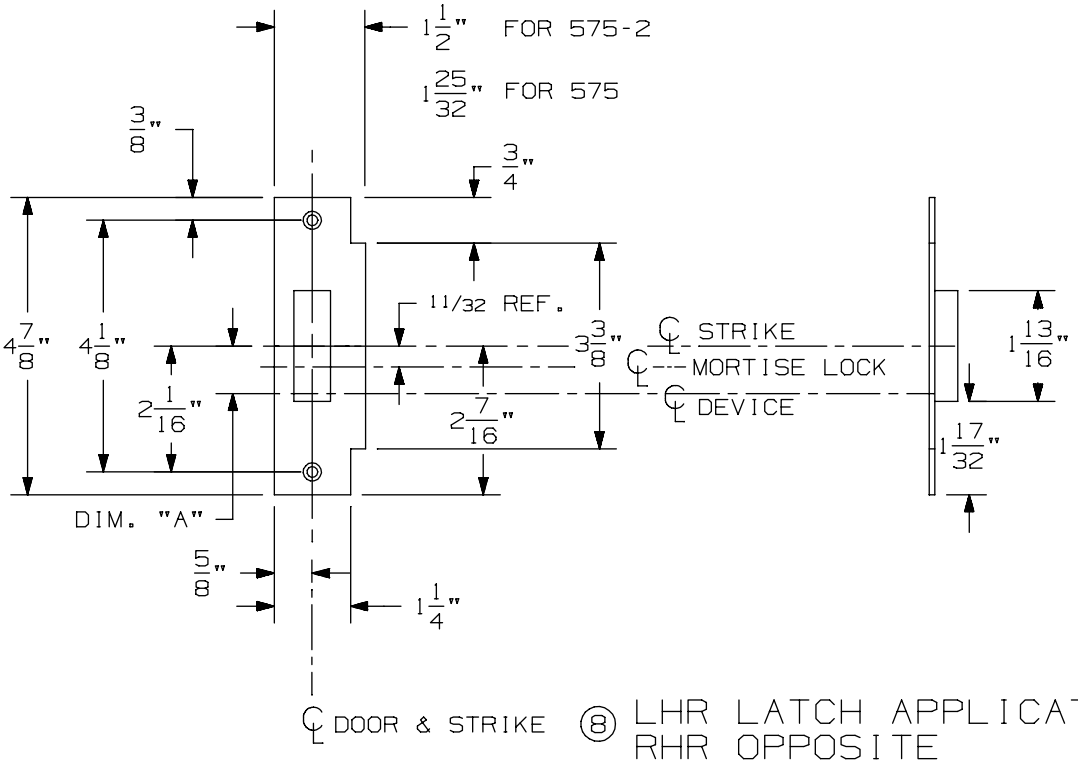

⑧ LHR LATCH APPLICATION SHOWN
RHR OPPOSITE

575-2 Mortise Strike (Double Doors) for 7500 Mortise Lock

VON DUPRIN®

NOTES: SEE MASTER SHEET #10001 FOR SUGGESTED REINFORCING

TEMPLATE NUMBER: 30212_b

DATE: 07-22-13

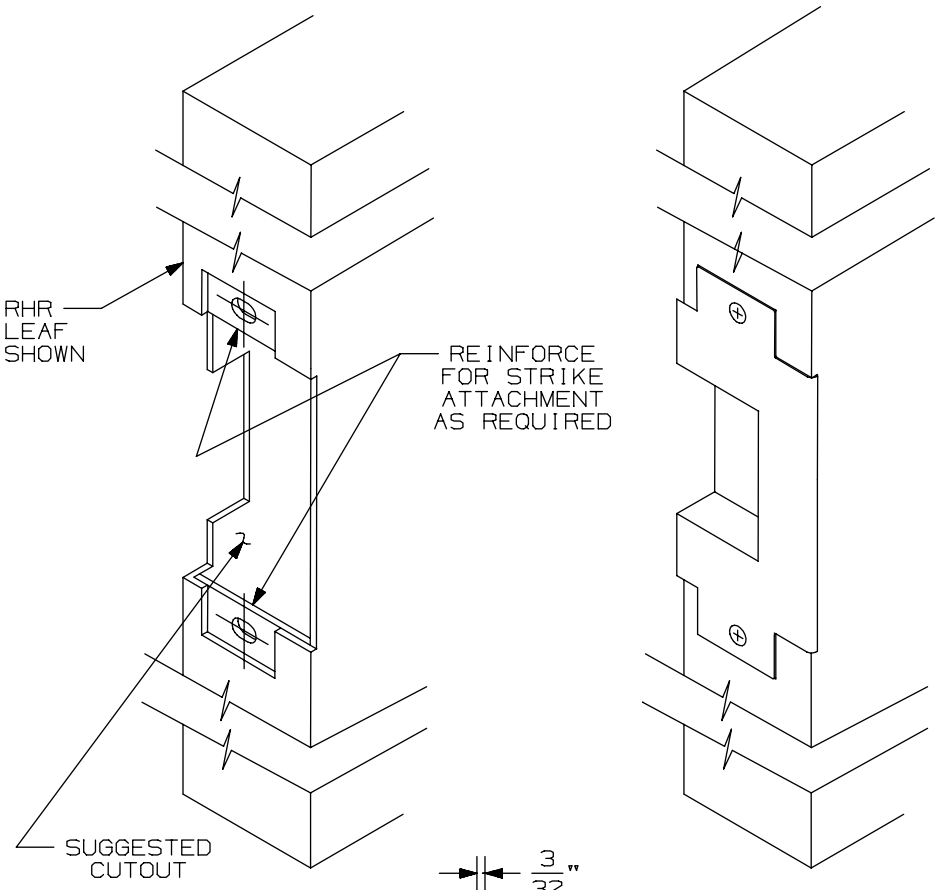

APPLICATION SCHEDULE	
DEVICE	DIM."A"
9875 & 9875-F	11/16
9975 & 9975-F	11/16
8875 & 8875-F	1/2
5575 & 5575-F	1/2

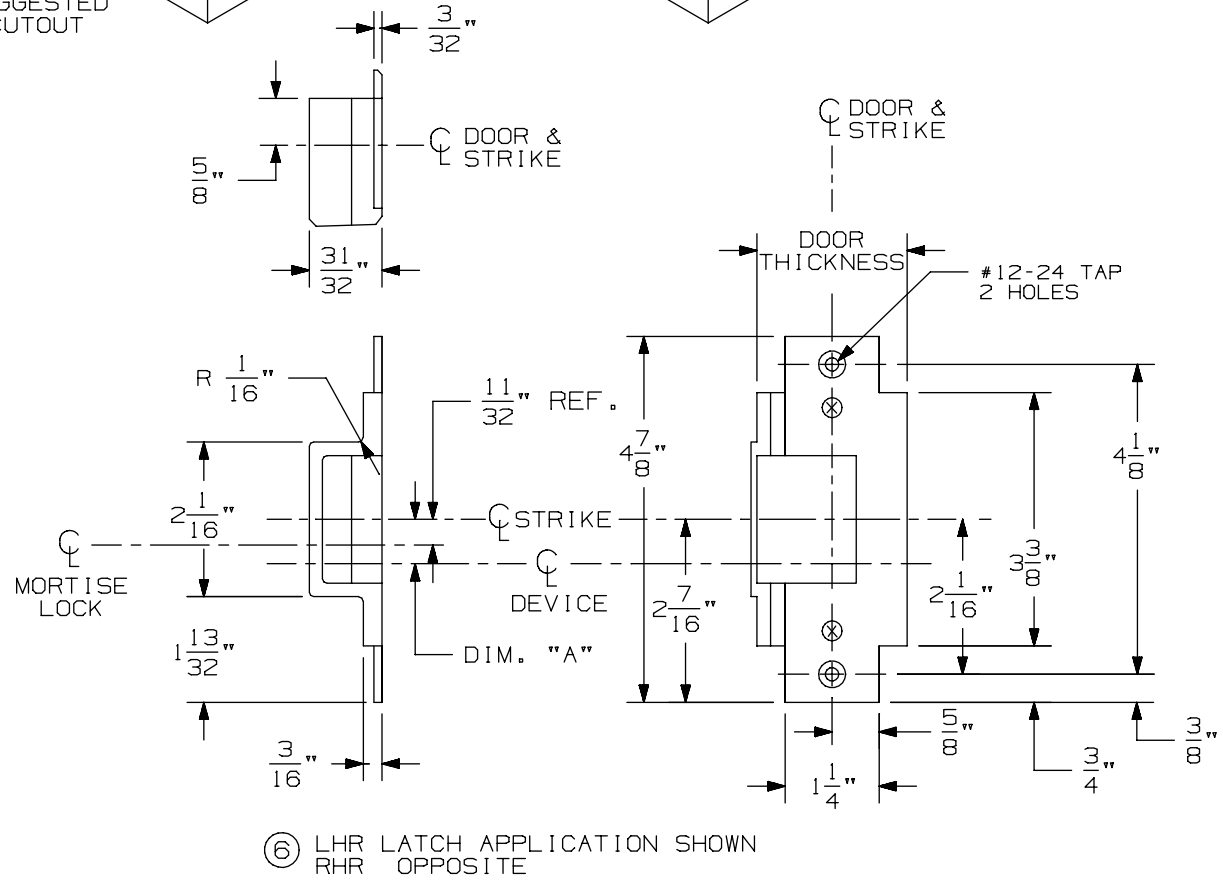

⑥ LHR LATCH APPLICATION SHOWN
RHR OPPOSITE

576A & 576B Mortise Strike for 7500 Mortise Lock

VON DUPRIN®

NOTES: SEE MASTER SHEET #10001 FOR SUGGESTED REINFORCING

TEMPLATE NUMBER: 30211_a

DATE: 05-28-13

NOTES:
1. FOR OUTSIDE TRIM PREPARATION, WHEN REQUIRED, SEE TRIM TEMPLATE.
2. WIRING TO E7500 & SS7500 LOCKS GOES THROUGH DOOR AND NOT DEVICE.
3. LHR APPLICATION SHOWN, RHR APPLICATION OPPOSITE.

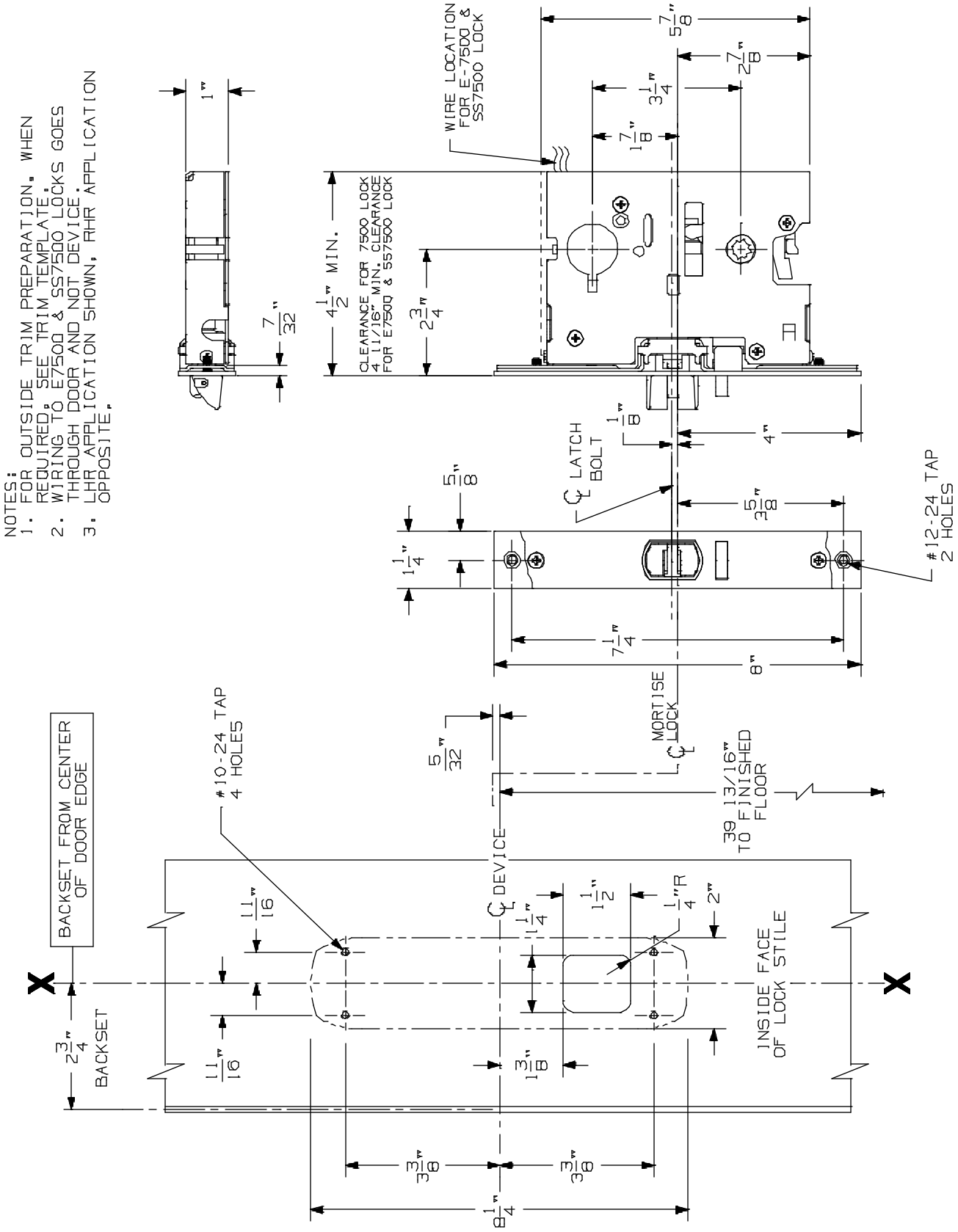

8875/8875-F Mortise Lock Device

VON DUPRIN®

NOTES: SEE MASTER SHEET #10001 FOR SUGGESTED REINFORCING

TEMPLATE NUMBER: 10179_a

DATE: 05-15-13

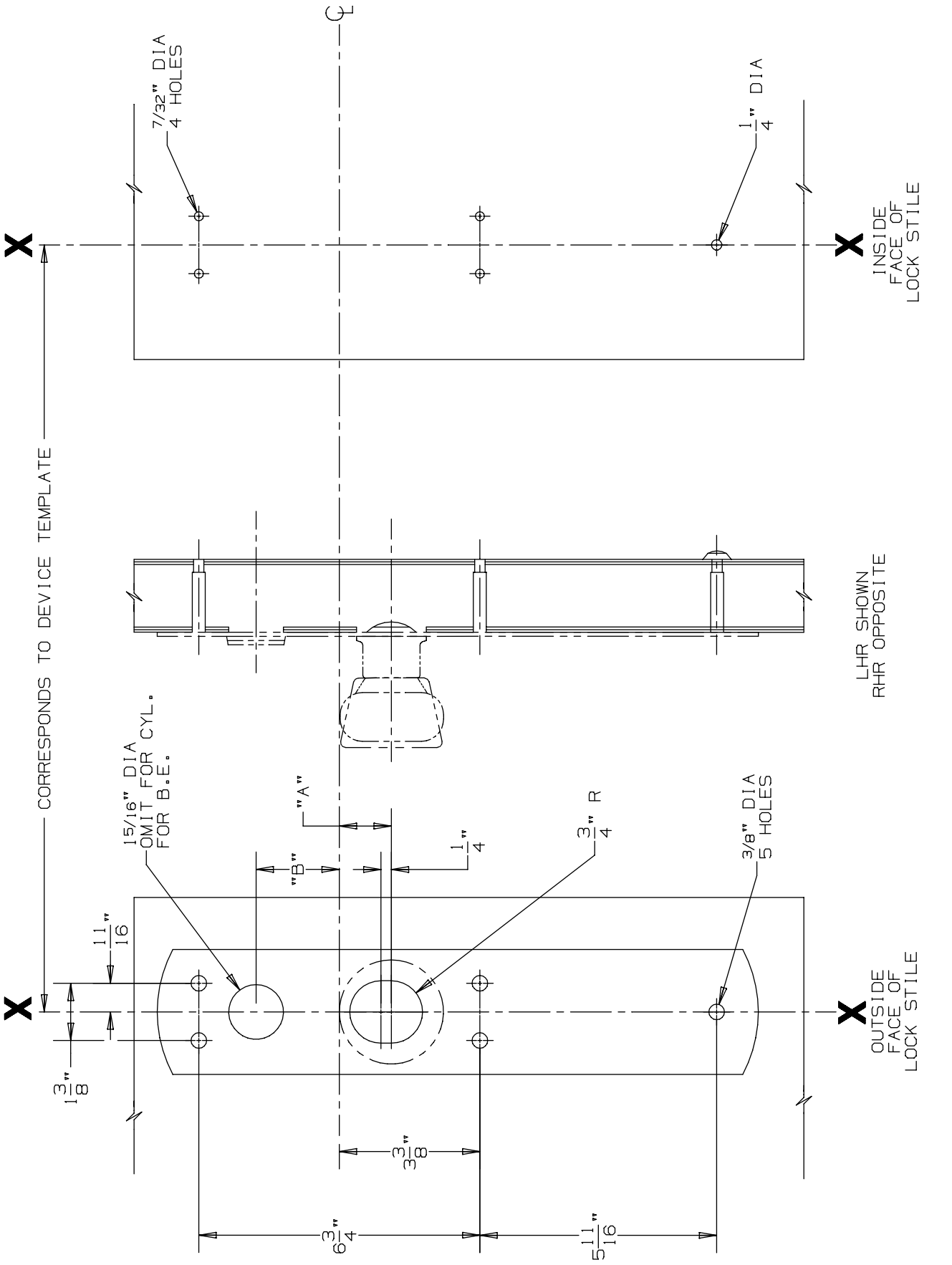

DEVICE APPLICATION SCHEDULE			
DEVICE	DIM. "A"	DIM. "B"
88 MORTISE	1 1/4"	2"
88 VERTICAL	1 1/2"	1 3/4"

FOR CUTOUTS ON INSIDE FACE OF DOOR SEE DEVICE TEMPLATE

880 K & 880 K-BE Trim for 88 Mortise & Vertical Devices

VON DUPRIN®

NOTES: SEE MASTER SHEET #10001 FOR SUGGESTED REINFORCING

TEMPLATE NUMBER: 20261_a

DATE: 05-23-13

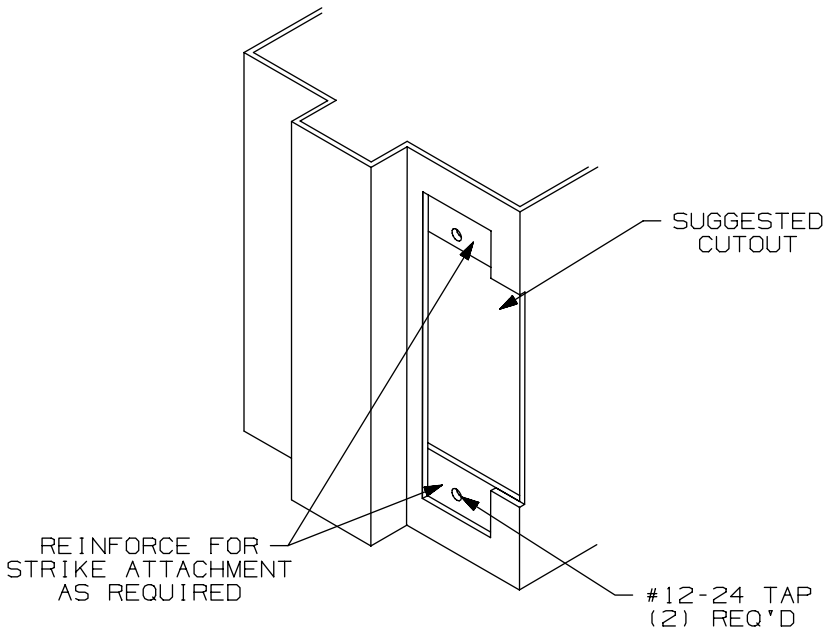

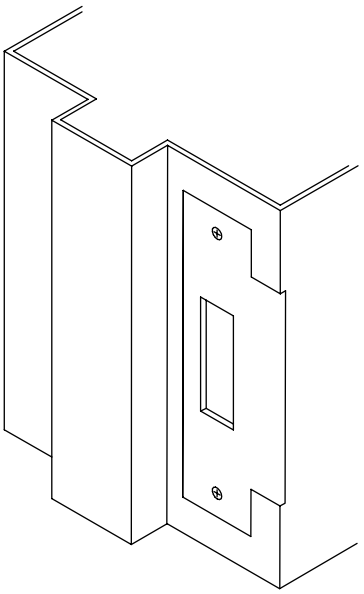

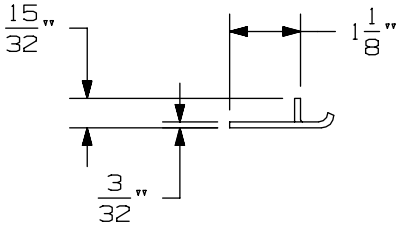

APPLICATION SCHEDULE	
DEVICE	DIM. "A"
9875 & 9875-F	11/16
9975 & 9975-F	11/16
8875 & 8875-F	1/2
5575 & 5575-F	1/2

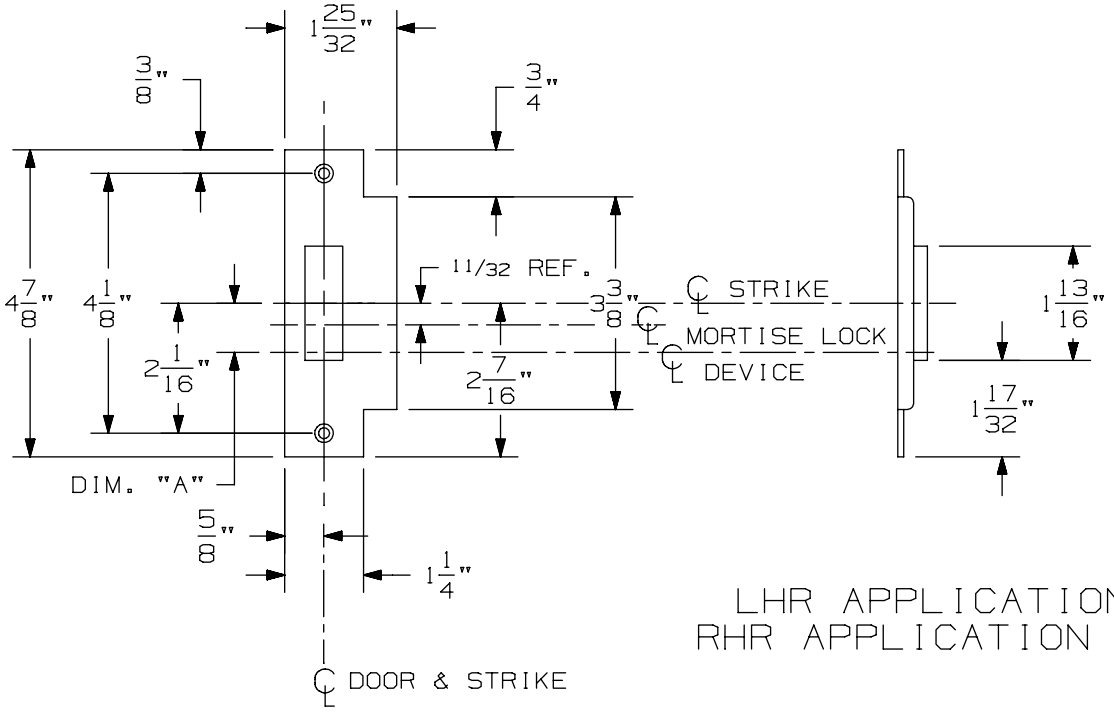

LHR APPLICATION SHOWN
RHR APPLICATION OPPOSITE

575 Mortise Strike (Single Door) for 7500 Mortise Lock

VON DUPRIN®

NOTES: SEE MASTER SHEET #10001 FOR SUGGESTED REINFORCING

TEMPLATE NUMBER: 30210_b

DATE: 07-22-13

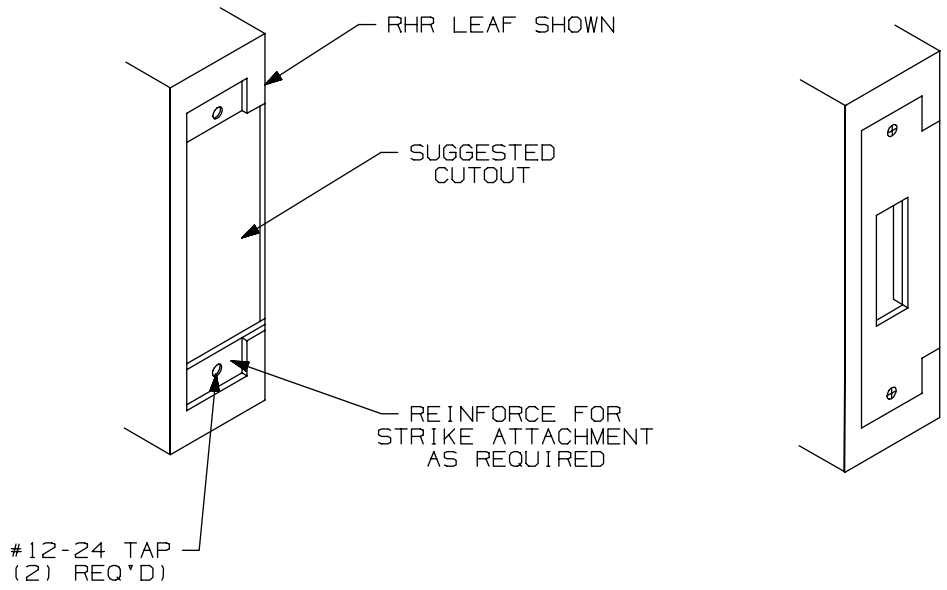

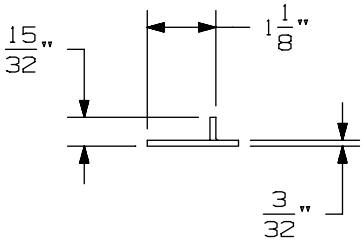

APPLICATION SCHEDULE	
DEVICE	DIM. "A"
9875 & 9875-F	11/16
9975 & 9975-F	11/16
8875 & 8875-F	1/2
5575 & 5575-F	1/2

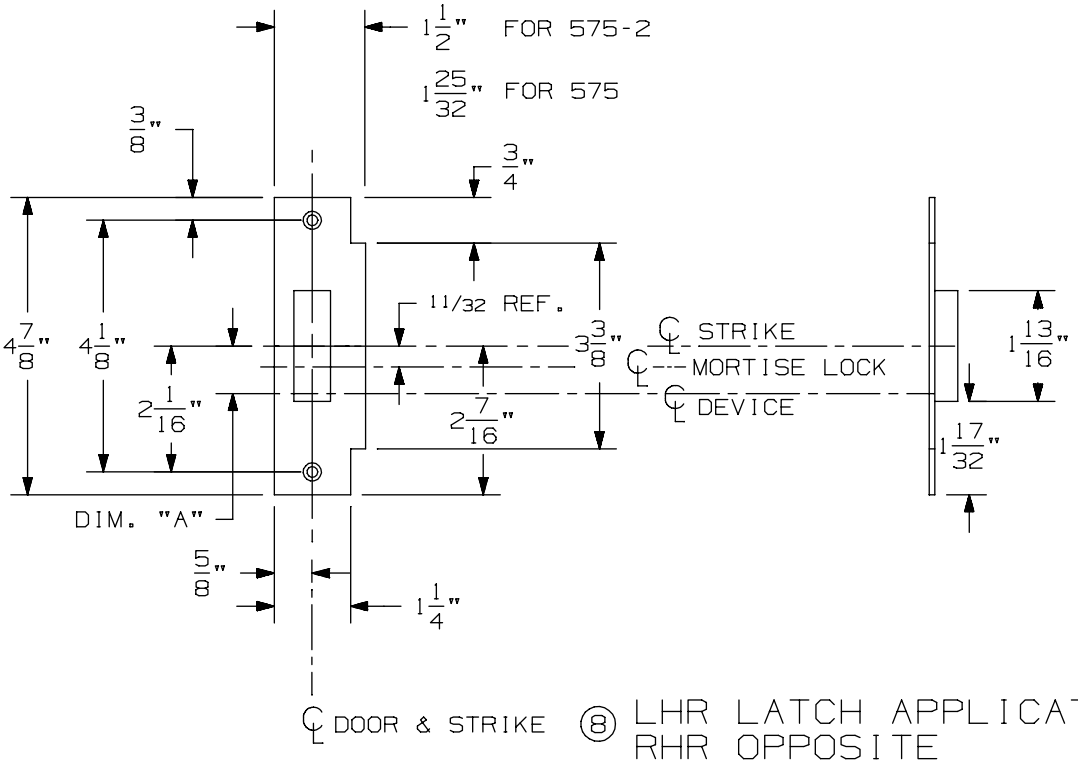

⑧ LHR LATCH APPLICATION SHOWN
RHR OPPOSITE

575-2 Mortise Strike (Double Doors) for 7500 Mortise Lock

VON DUPRIN®

NOTES: SEE MASTER SHEET #10001 FOR SUGGESTED REINFORCING

TEMPLATE NUMBER: 30212_b

DATE: 07-22-13

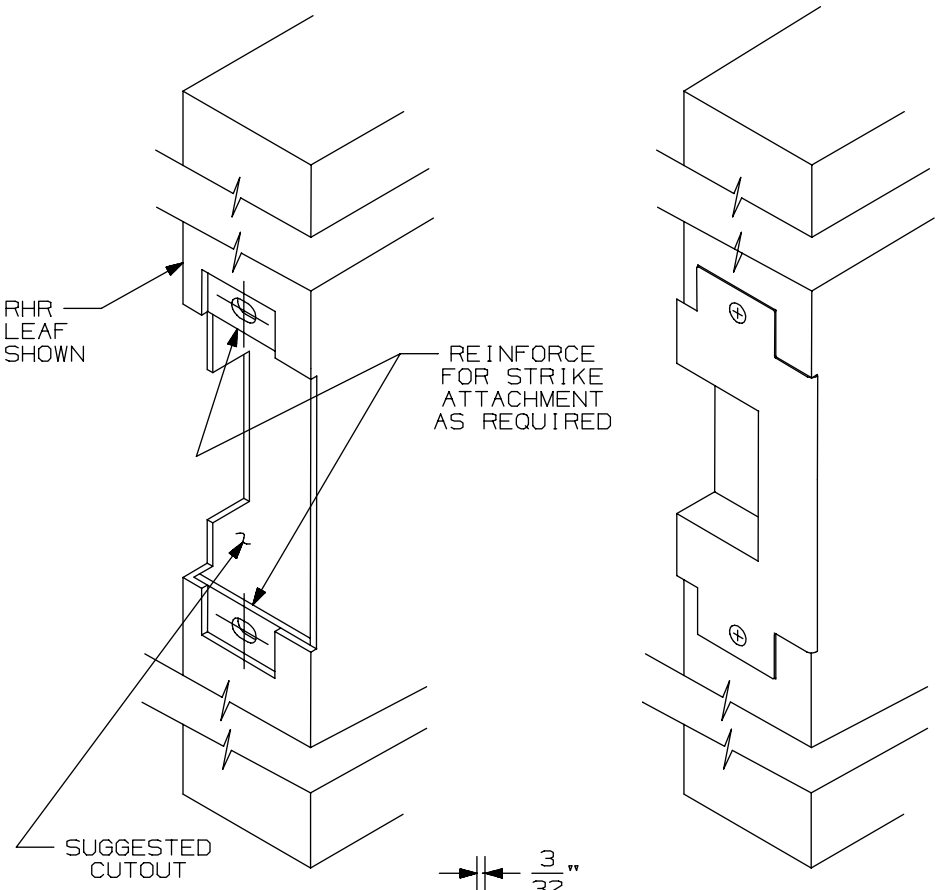

APPLICATION SCHEDULE	
DEVICE	DIM."A"
9875 & 9875-F	11/16
9975 & 9975-F	11/16
8875 & 8875-F	1/2
5575 & 5575-F	1/2

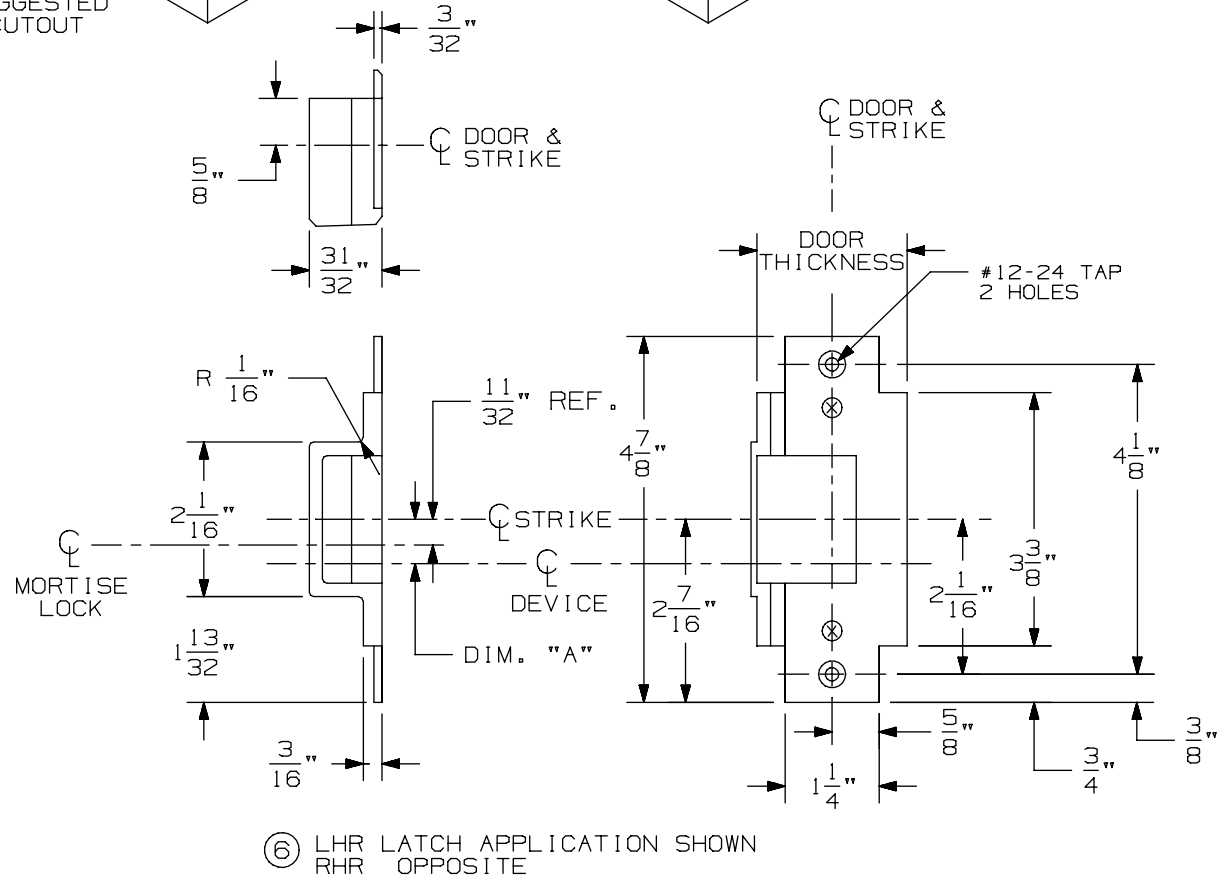

⑥ LHR LATCH APPLICATION SHOWN
RHR OPPOSITE

576A & 576B Mortise Strike for 7500 Mortise Lock

VON DUPRIN®

NOTES: SEE MASTER SHEET #10001 FOR SUGGESTED REINFORCING

TEMPLATE NUMBER: 30211_a

DATE: 05-28-13

NOTES:
1. FOR OUTSIDE TRIM PREPARATION, WHEN REQUIRED, SEE TRIM TEMPLATE.
2. WIRING TO E7500 & SS7500 LOCKS GOES THROUGH DOOR AND NOT DEVICE.
3. LHR APPLICATION SHOWN, RHR APPLICATION OPPOSITE.

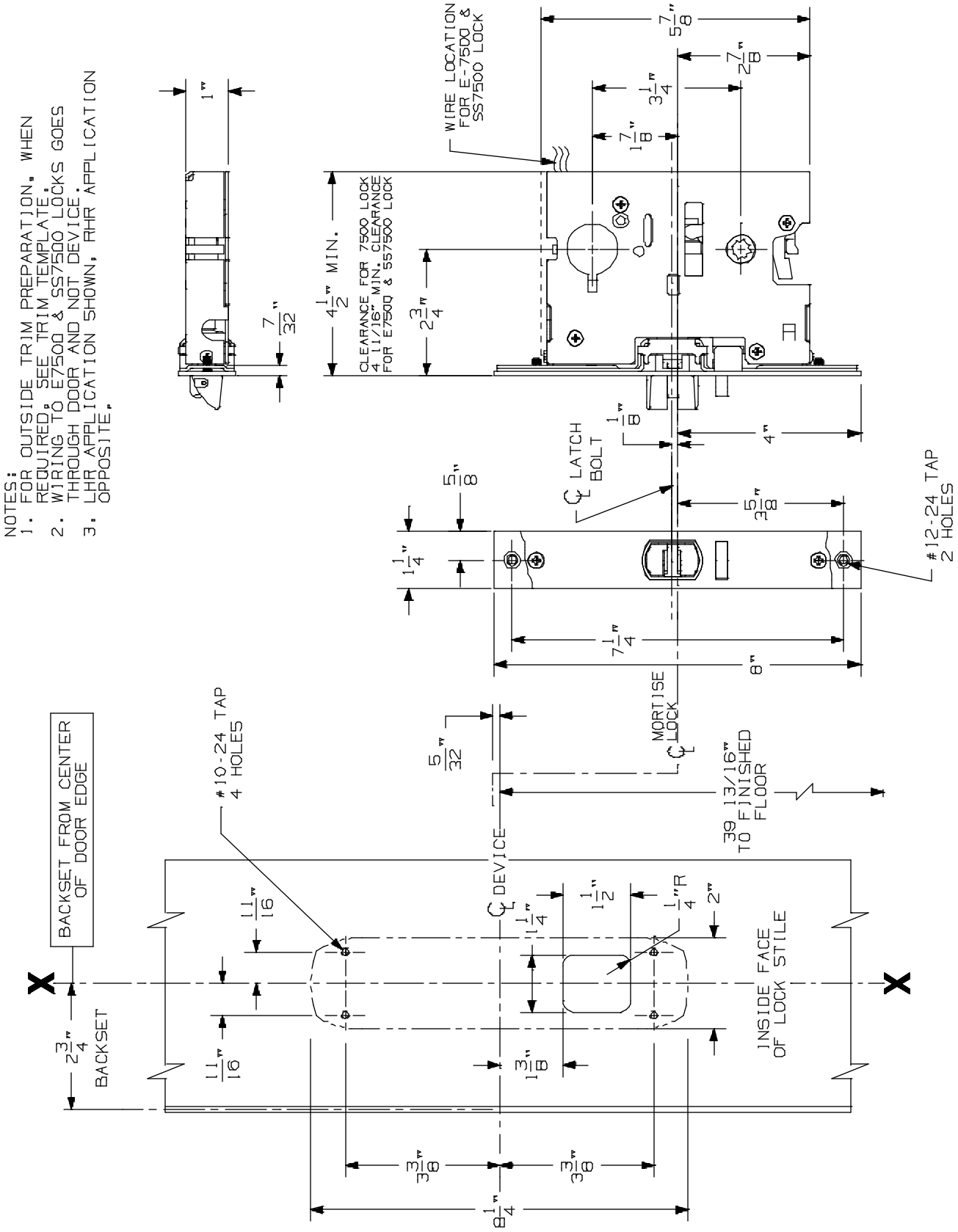

8875/8875-F Mortise Lock Device

VON DUPRIN®

NOTES: SEE MASTER SHEET #10001 FOR SUGGESTED REINFORCING

TEMPLATE NUMBER: 10179_a

DATE: 05-15-13

NOTES: SEE MASTER SHEET #10001 FOR SUGGESTED REINFORCING

373-L Control

VON DUPRIN®

TEMPLATE NUMBER: 40108_a

DATE: 05-28-13

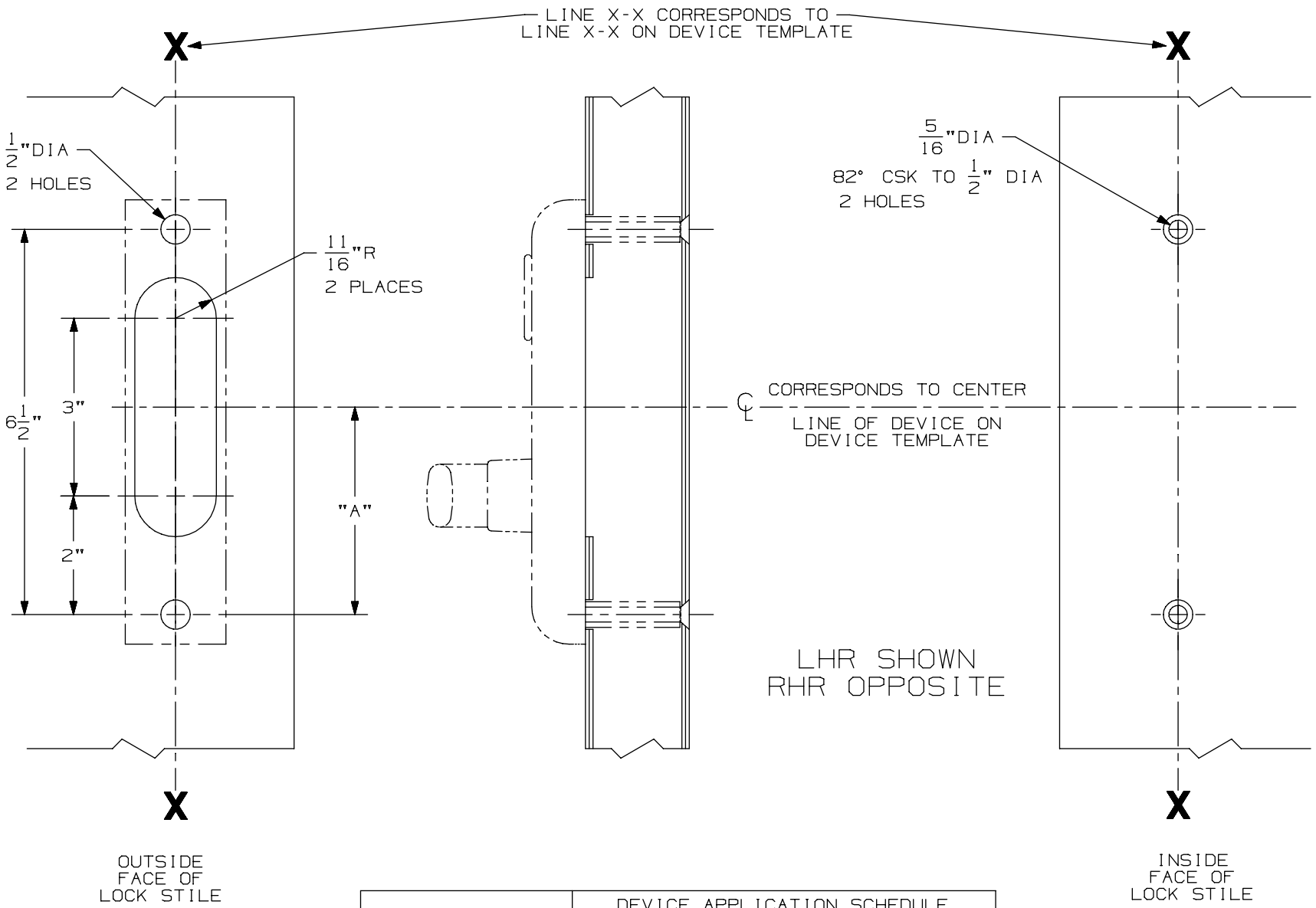

FOR CUTOUT ON INSIDE FACE OF DOOR SEE DEVICE TEMPLATE	DEVICE APPLICATION SCHEDULE	
	DEVICE	DIM "A"
	8827/8827-F	3 1/2"
	88 MORTISE	3 1/4"

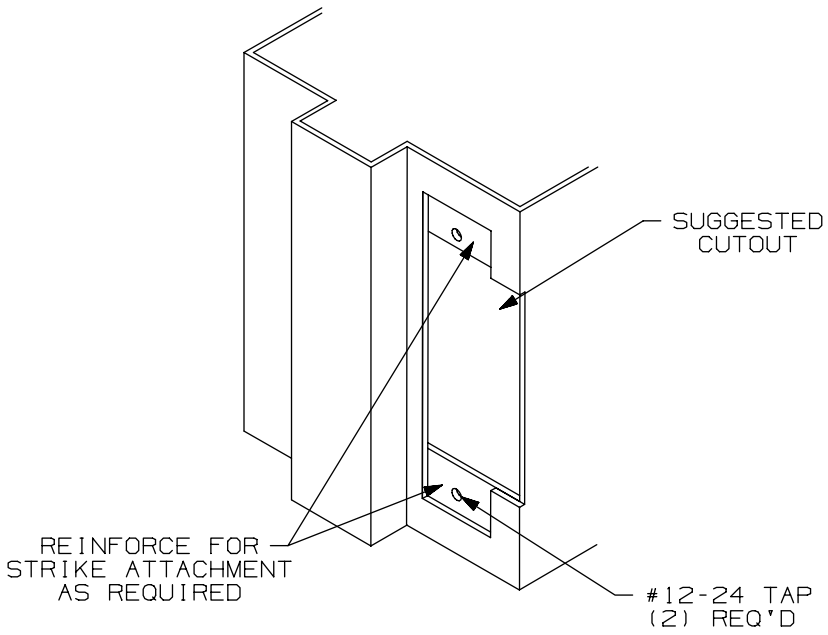

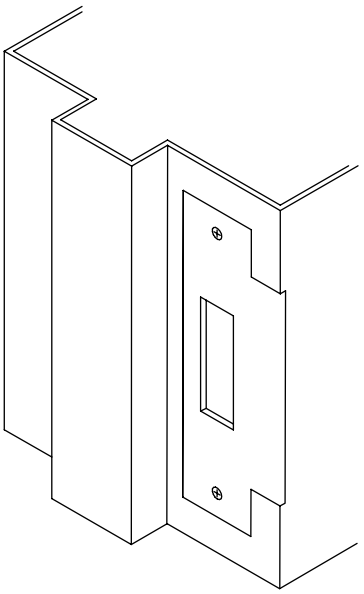

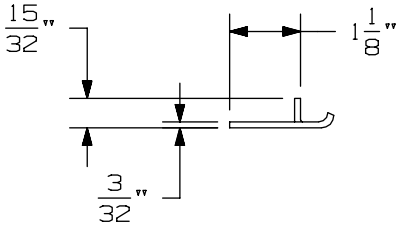

APPLICATION SCHEDULE	
DEVICE	DIM. "A"
9875 & 9875-F	11/16
9975 & 9975-F	11/16
8875 & 8875-F	1/2
5575 & 5575-F	1/2

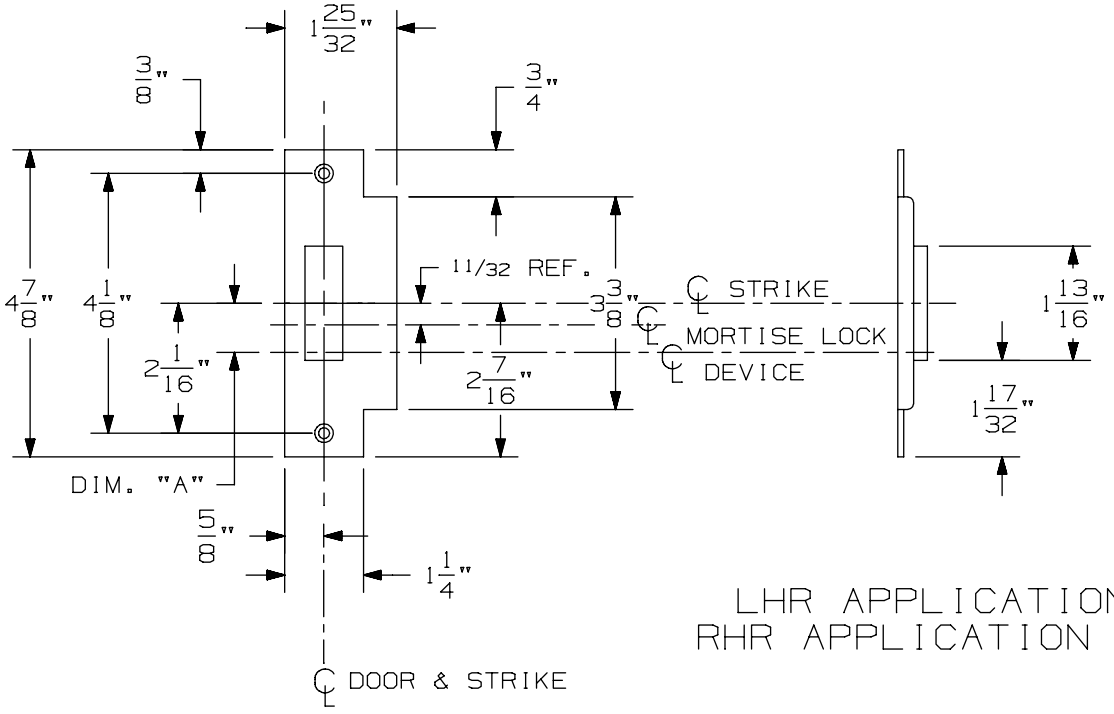

LHR APPLICATION SHOWN
RHR APPLICATION OPPOSITE

575 Mortise Strike (Single Door) for 7500 Mortise Lock

VON DUPRIN®

NOTES: SEE MASTER SHEET #10001 FOR SUGGESTED REINFORCING

TEMPLATE NUMBER: 30210_b

DATE: 07-22-13

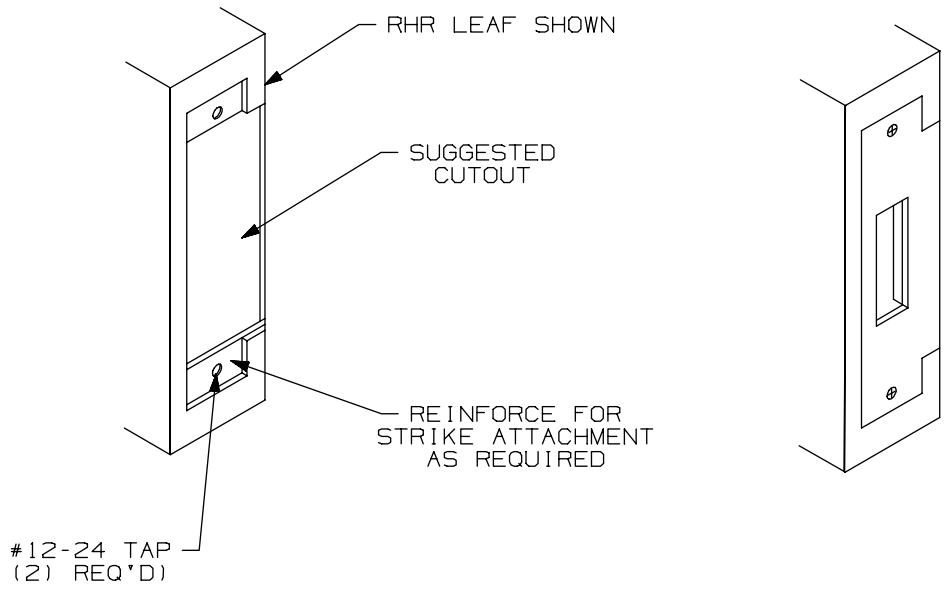

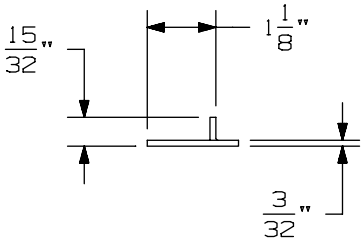

APPLICATION SCHEDULE	
DEVICE	DIM. "A"
9875 & 9875-F	11/16
9975 & 9975-F	11/16
8875 & 8875-F	1/2
5575 & 5575-F	1/2

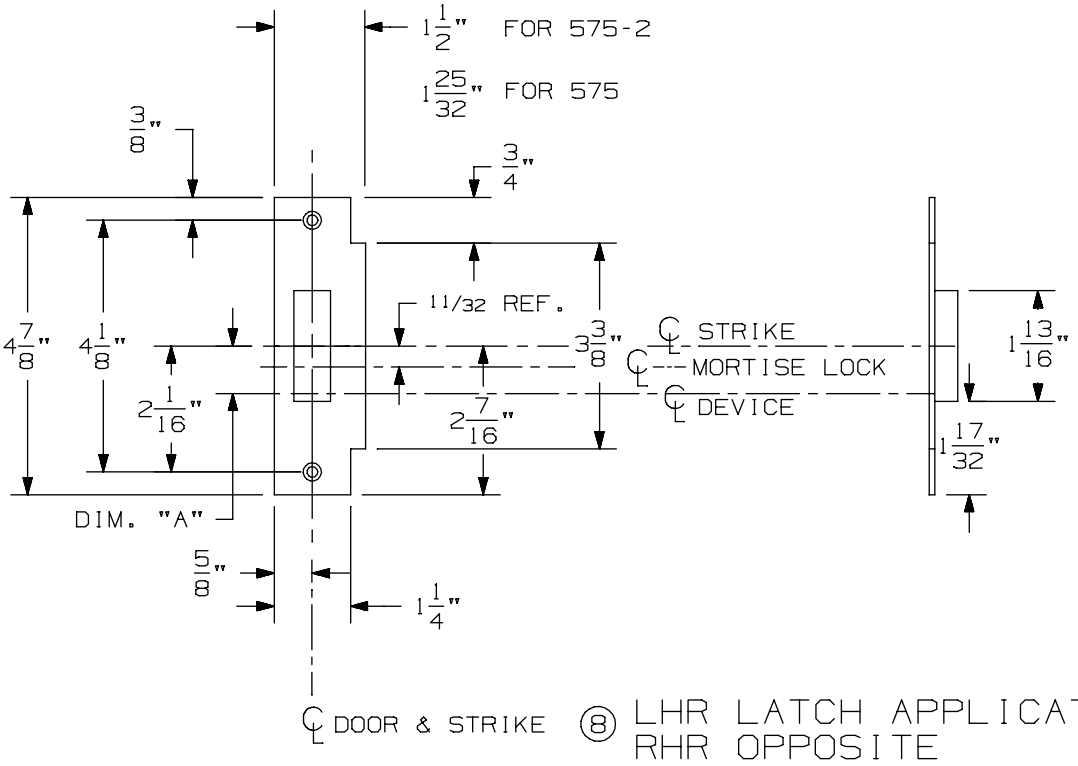

⑧ LHR LATCH APPLICATION SHOWN
RHR OPPOSITE

575-2 Mortise Strike (Double Doors) for 7500 Mortise Lock

VON DUPRIN®

NOTES: SEE MASTER SHEET #10001 FOR SUGGESTED REINFORCING

TEMPLATE NUMBER: 30212_b

DATE: 07-22-13

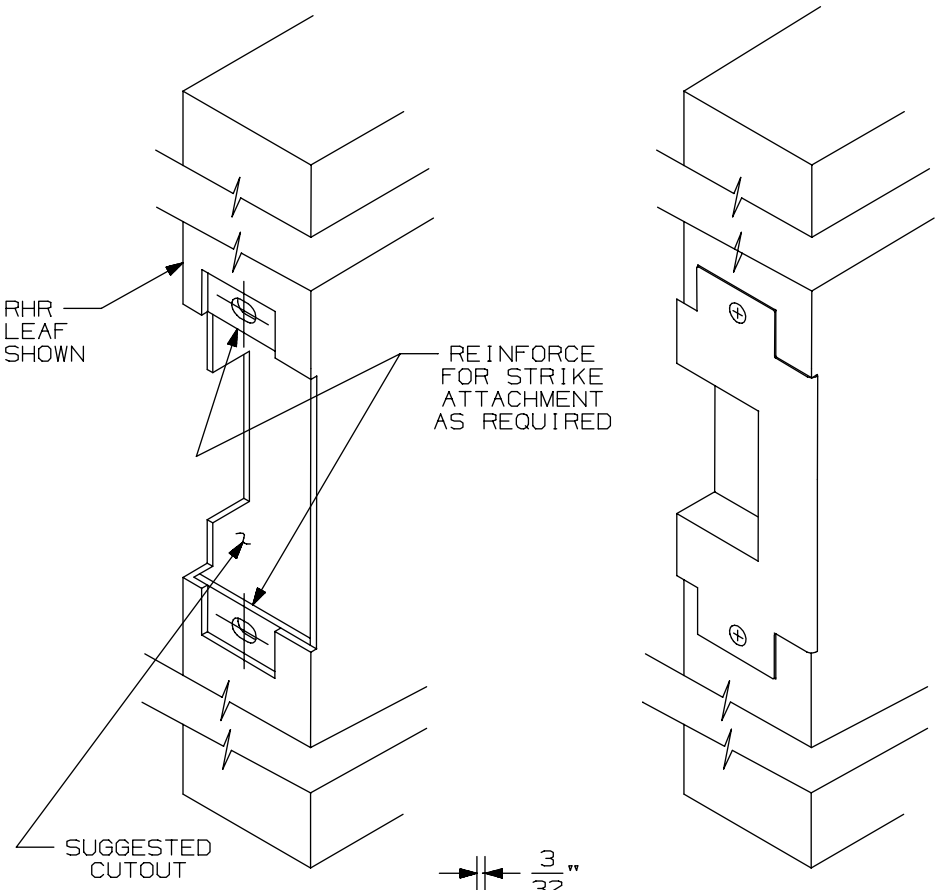

APPLICATION SCHEDULE	
DEVICE	DIM."A"
9875 & 9875-F	11/16
9975 & 9975-F	11/16
8875 & 8875-F	1/2
5575 & 5575-F	1/2

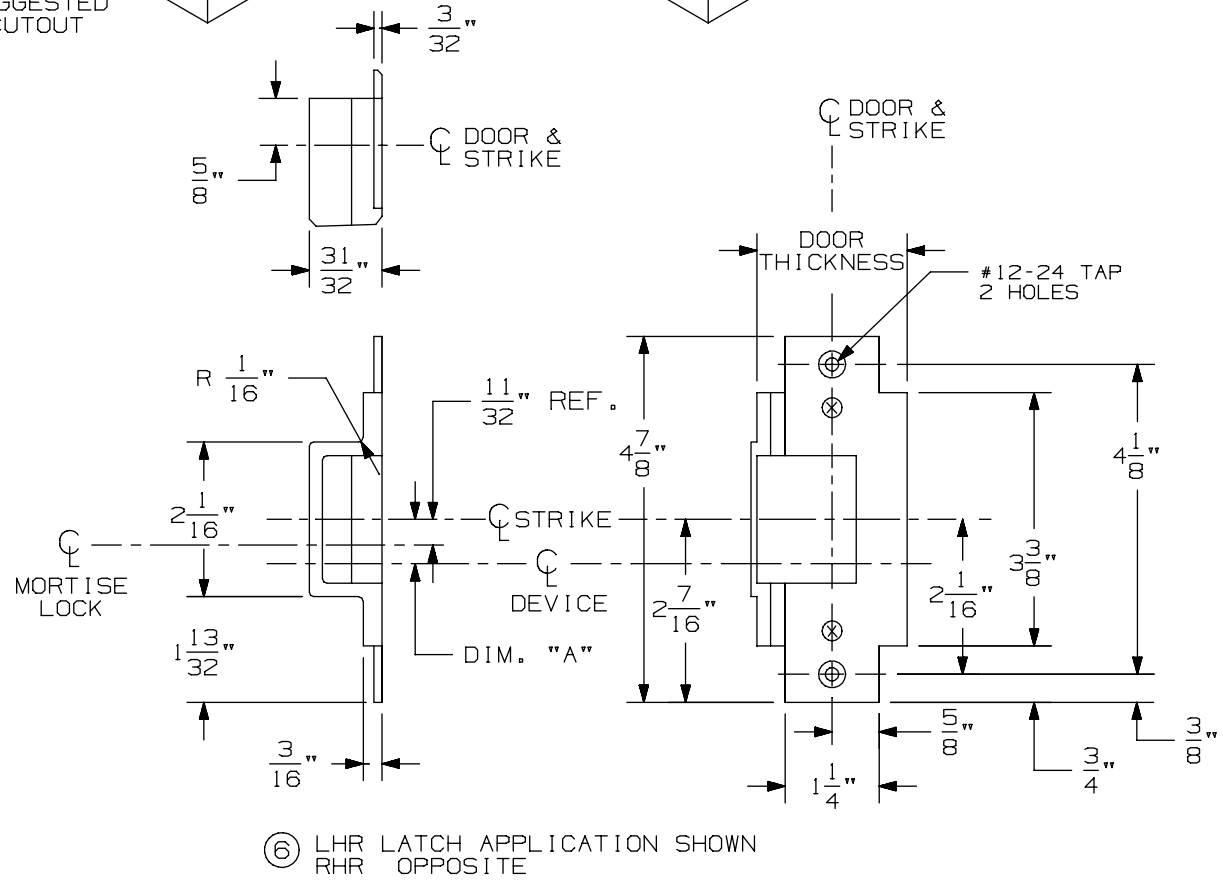

⑥ LHR LATCH APPLICATION SHOWN
RHR OPPOSITE

576A & 576B Mortise Strike for 7500 Mortise Lock

VON DUPRIN®

NOTES: SEE MASTER SHEET #10001 FOR SUGGESTED REINFORCING

TEMPLATE NUMBER: 30211_a

DATE: 05-28-13

NOTES:
1. FOR OUTSIDE TRIM PREPARATION, WHEN REQUIRED, SEE TRIM TEMPLATE.
2. WIRING TO E7500 & SS7500 LOCKS GOES THROUGH DOOR AND NOT DEVICE.
3. LHR APPLICATION SHOWN, RHR APPLICATION OPPOSITE.

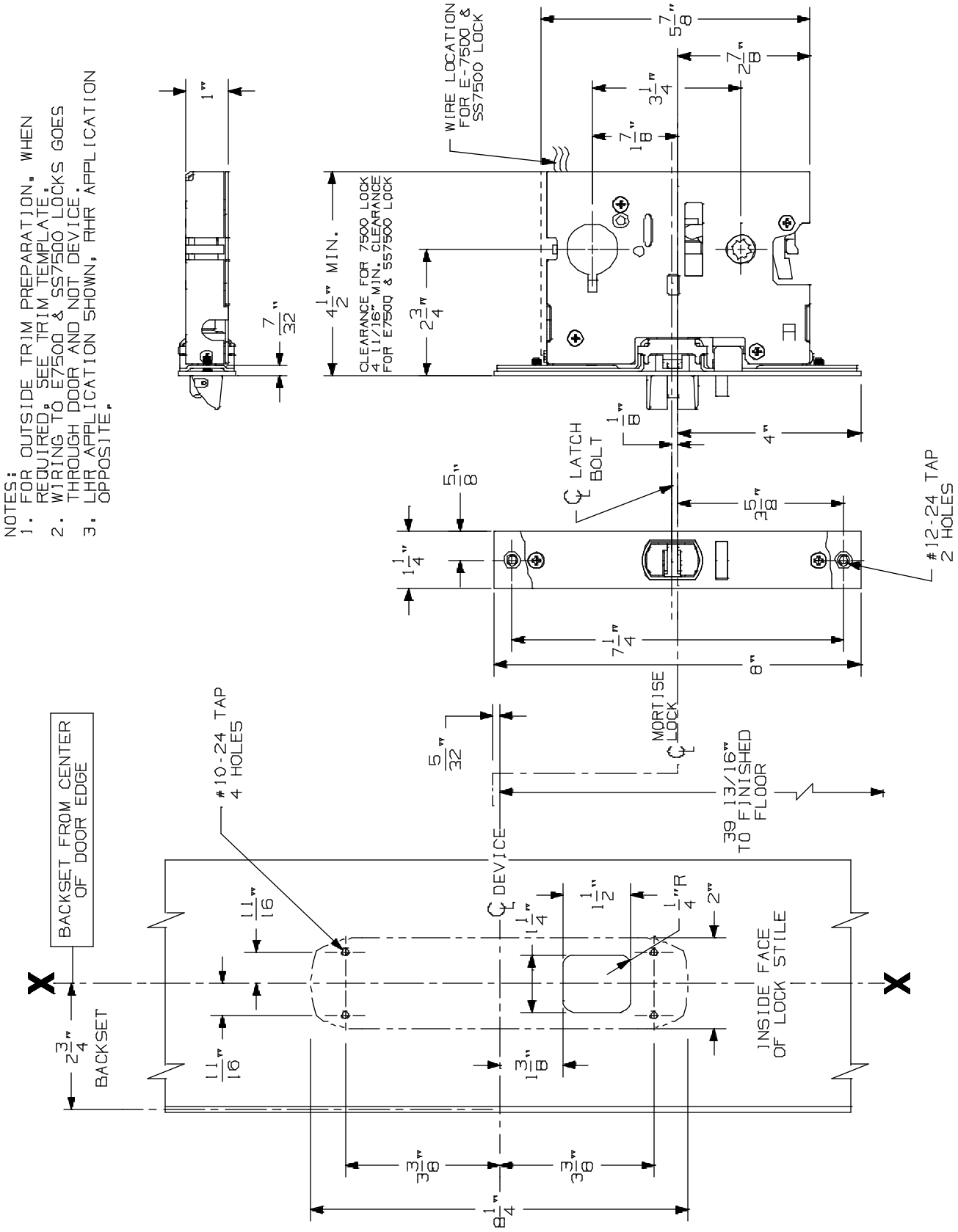

8875/8875-F Mortise Lock Device

VON DUPRIN®

NOTES: SEE MASTER SHEET #10001 FOR SUGGESTED REINFORCING

TEMPLATE NUMBER: 10179_a

DATE: 05-15-13

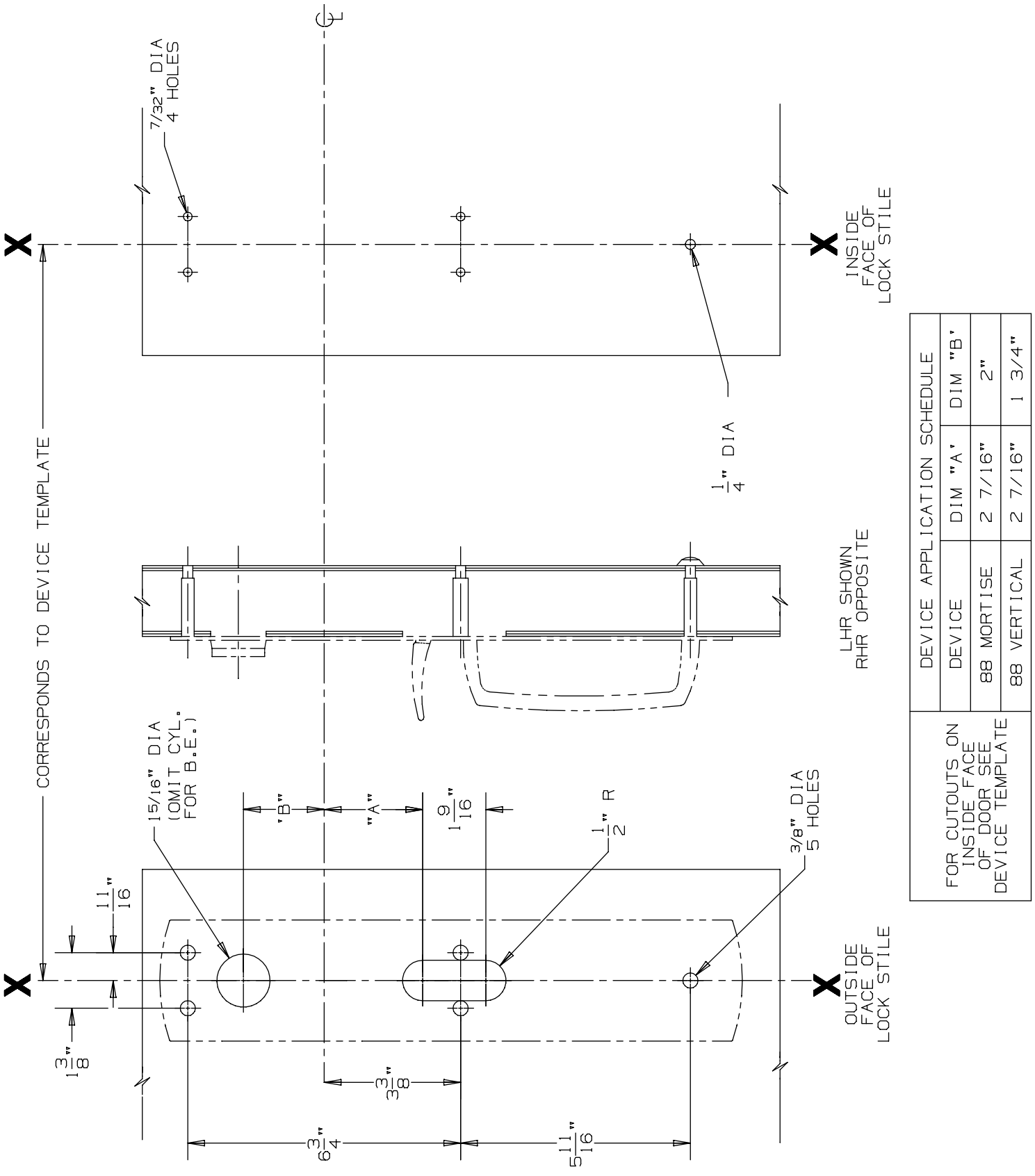

DEVICE APPLICATION SCHEDULE		
DEVICE	DIM "A"	DIM "B"
88 MORTISE	2 7/16"	2"
88 VERTICAL	2 7/16"	1 3/4"

FOR CUTOUTS ON INSIDE FACE OF DOOR SEE DEVICE TEMPLATE

880 TP & 880 TP-BE Trim for 88 Mortise & Vertical Devices

VON DUPRIN®

NOTES: SEE MASTER SHEET #10001 FOR SUGGESTED REINFORCING

TEMPLATE NUMBER: 20260_a

DATE: 05-28-13

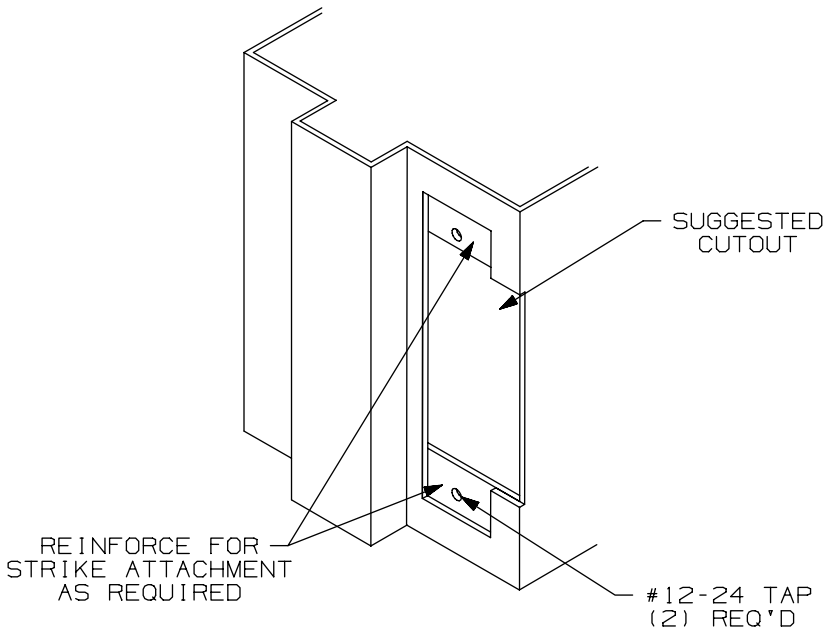

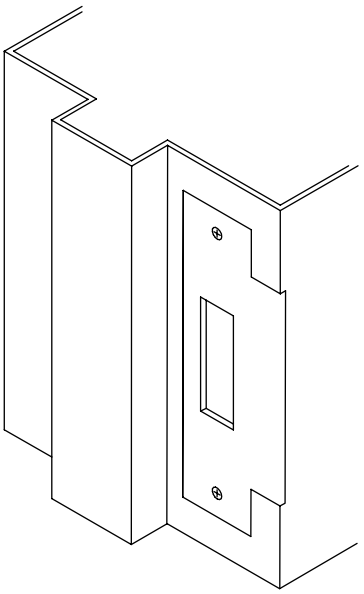

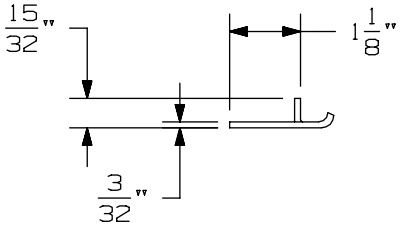

APPLICATION SCHEDULE	
DEVICE	DIM. "A"
9875 & 9875-F	11/16
9975 & 9975-F	11/16
8875 & 8875-F	1/2
5575 & 5575-F	1/2

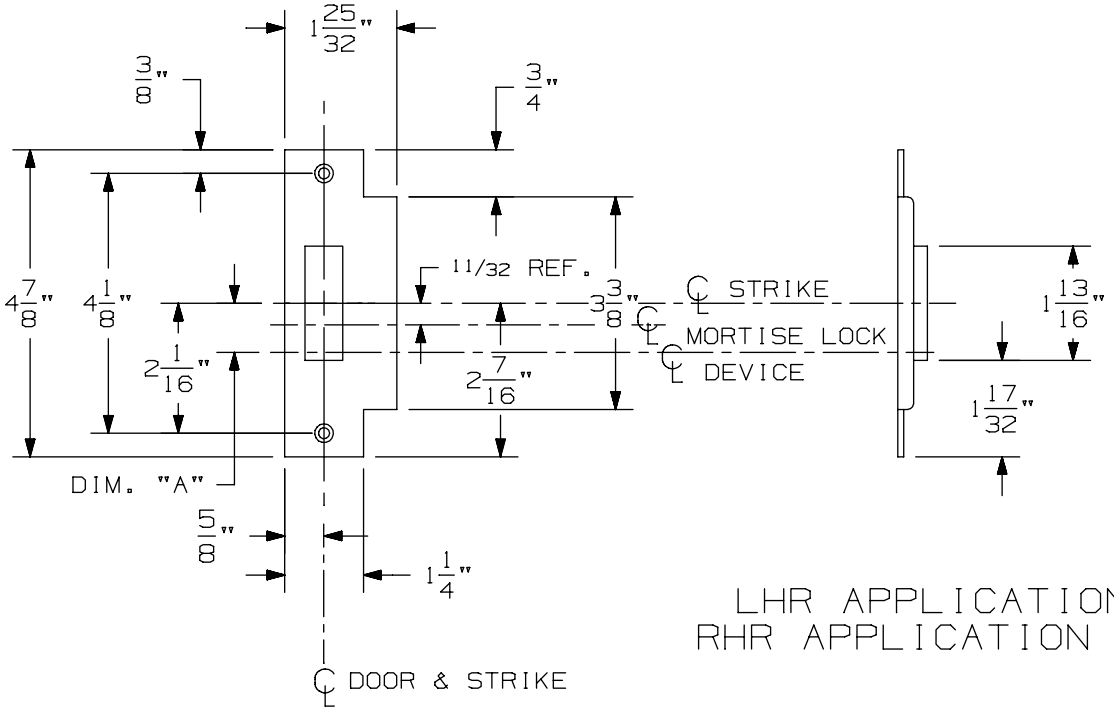

LHR APPLICATION SHOWN
RHR APPLICATION OPPOSITE

575 Mortise Strike (Single Door) for 7500 Mortise Lock

VON DUPRIN®

NOTES: SEE MASTER SHEET #10001 FOR SUGGESTED REINFORCING

TEMPLATE NUMBER: 30210_b

DATE: 07-22-13

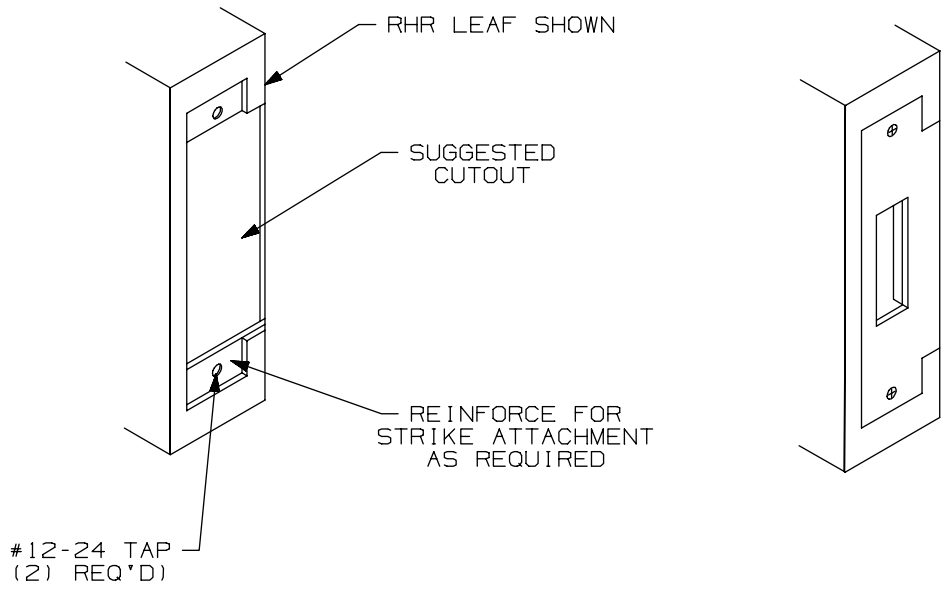

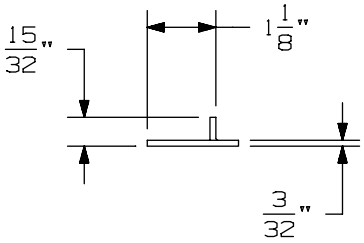

APPLICATION SCHEDULE	
DEVICE	DIM. "A"
9875 & 9875-F	11/16
9975 & 9975-F	11/16
8875 & 8875-F	1/2
5575 & 5575-F	1/2

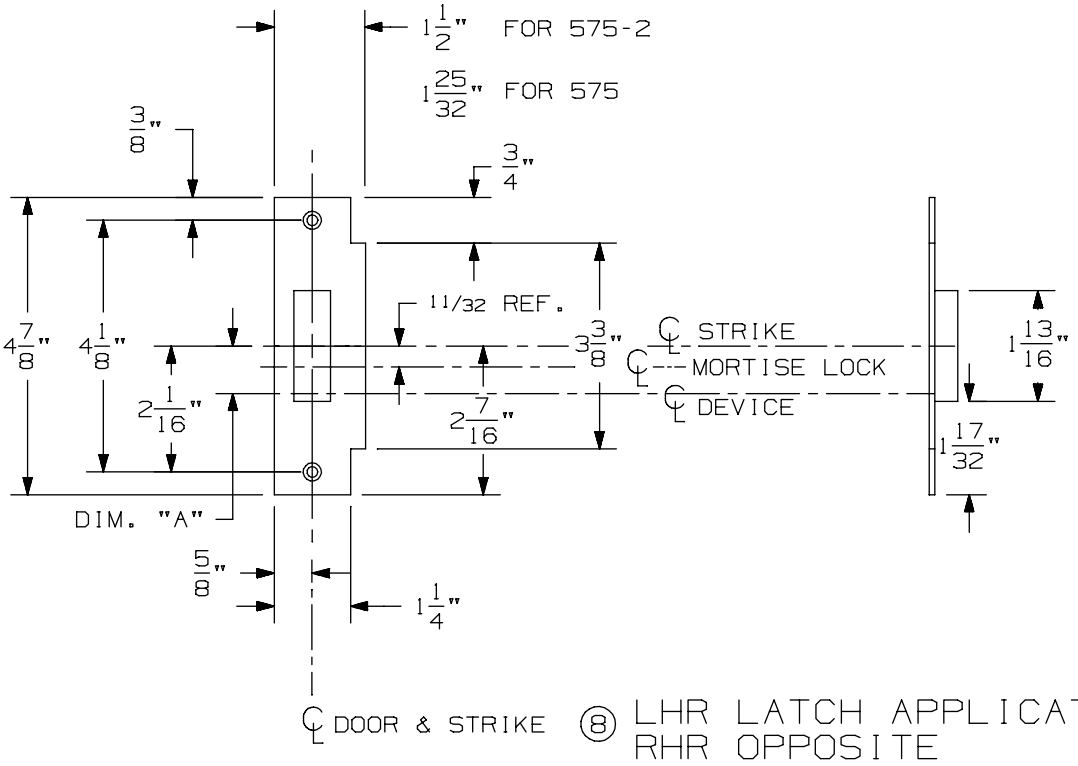

⑧ LHR LATCH APPLICATION SHOWN
RHR OPPOSITE

575-2 Mortise Strike (Double Doors) for 7500 Mortise Lock

VON DUPRIN®

NOTES: SEE MASTER SHEET #10001 FOR SUGGESTED REINFORCING

TEMPLATE NUMBER: 30212_b

DATE: 07-22-13

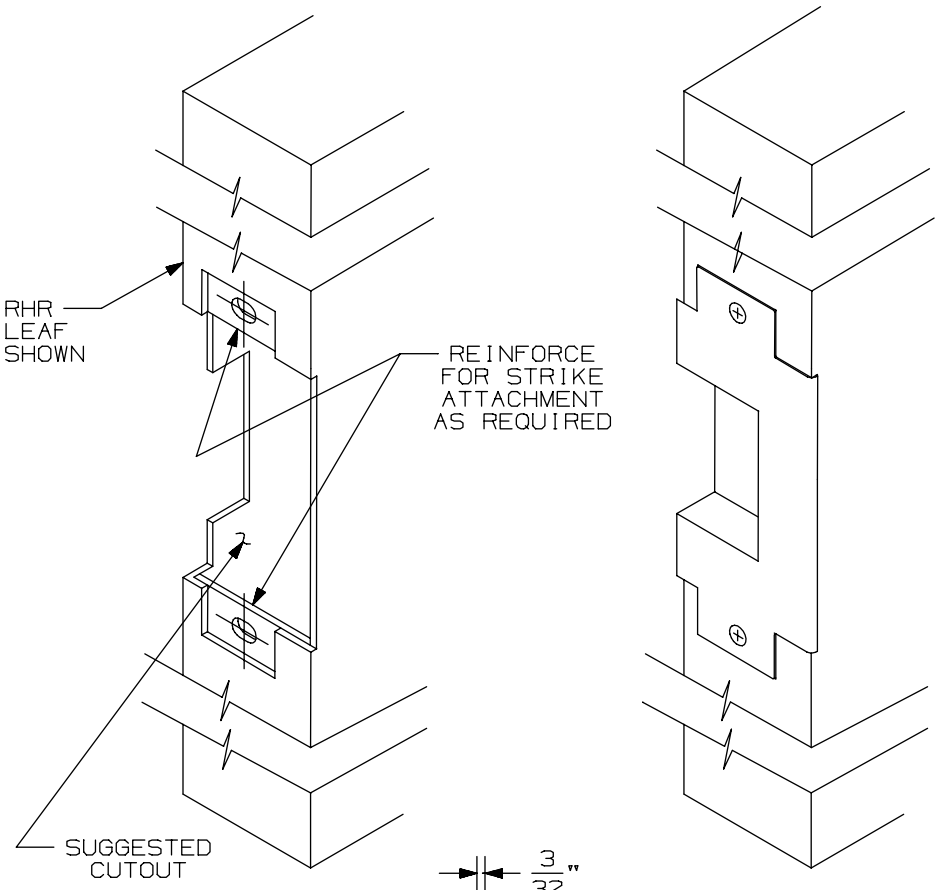

APPLICATION SCHEDULE	
DEVICE	DIM."A"
9875 & 9875-F	11/16
9975 & 9975-F	11/16
8875 & 8875-F	1/2
5575 & 5575-F	1/2

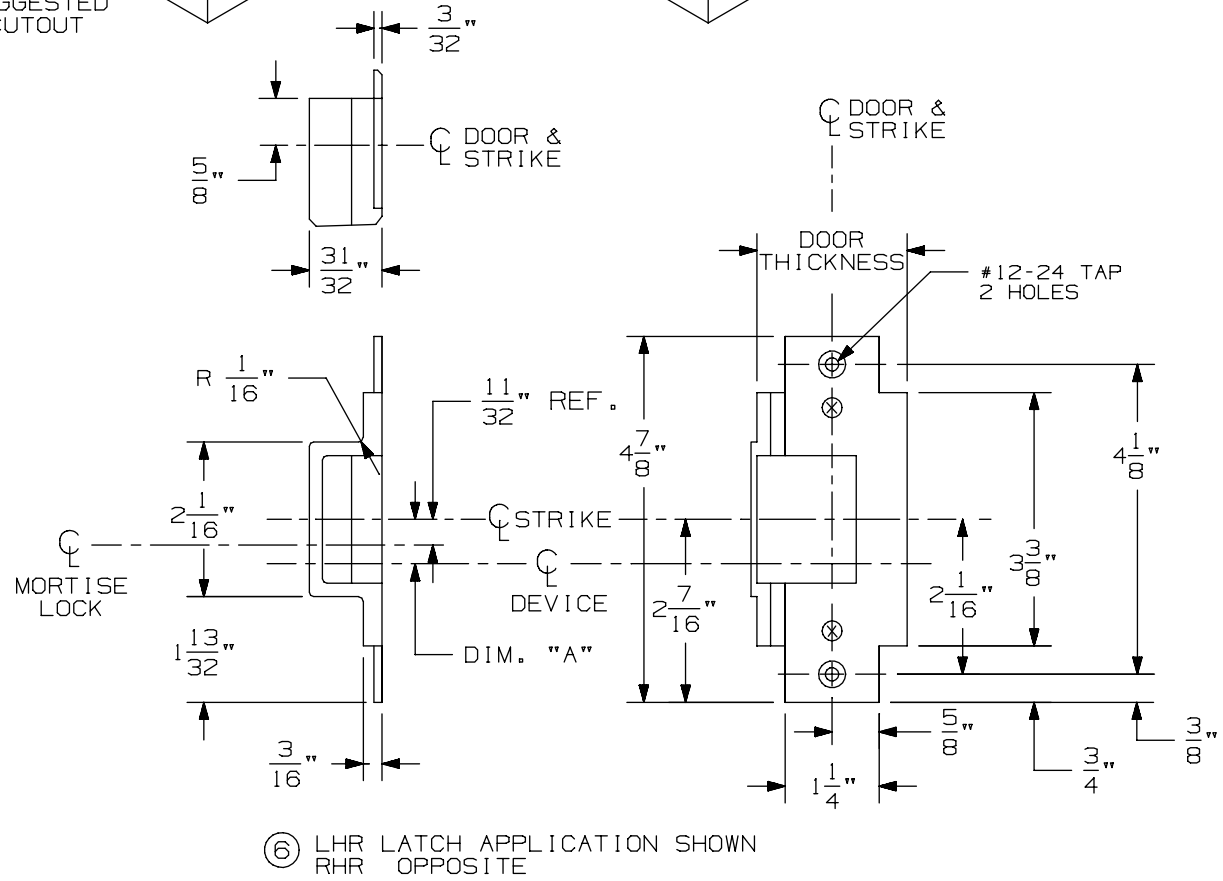

⑥ LHR LATCH APPLICATION SHOWN
RHR OPPOSITE

576A & 576B Mortise Strike for 7500 Mortise Lock

VON DUPRIN®

NOTES: SEE MASTER SHEET #10001 FOR SUGGESTED REINFORCING

TEMPLATE NUMBER: 30211_a

DATE: 05-28-13

88 Series Exit Devices

-

E8875-F Mortise Fire Electric

NOTES:
1. FOR OUTSIDE TRIM PREPARATION, WHEN REQUIRED, SEE TRIM TEMPLATE.
2. WIRING TO E7500 & SS7500 LOCKS GOES THROUGH DOOR AND NOT DEVICE.
3. LHR APPLICATION SHOWN, RHR APPLICATION OPPOSITE.

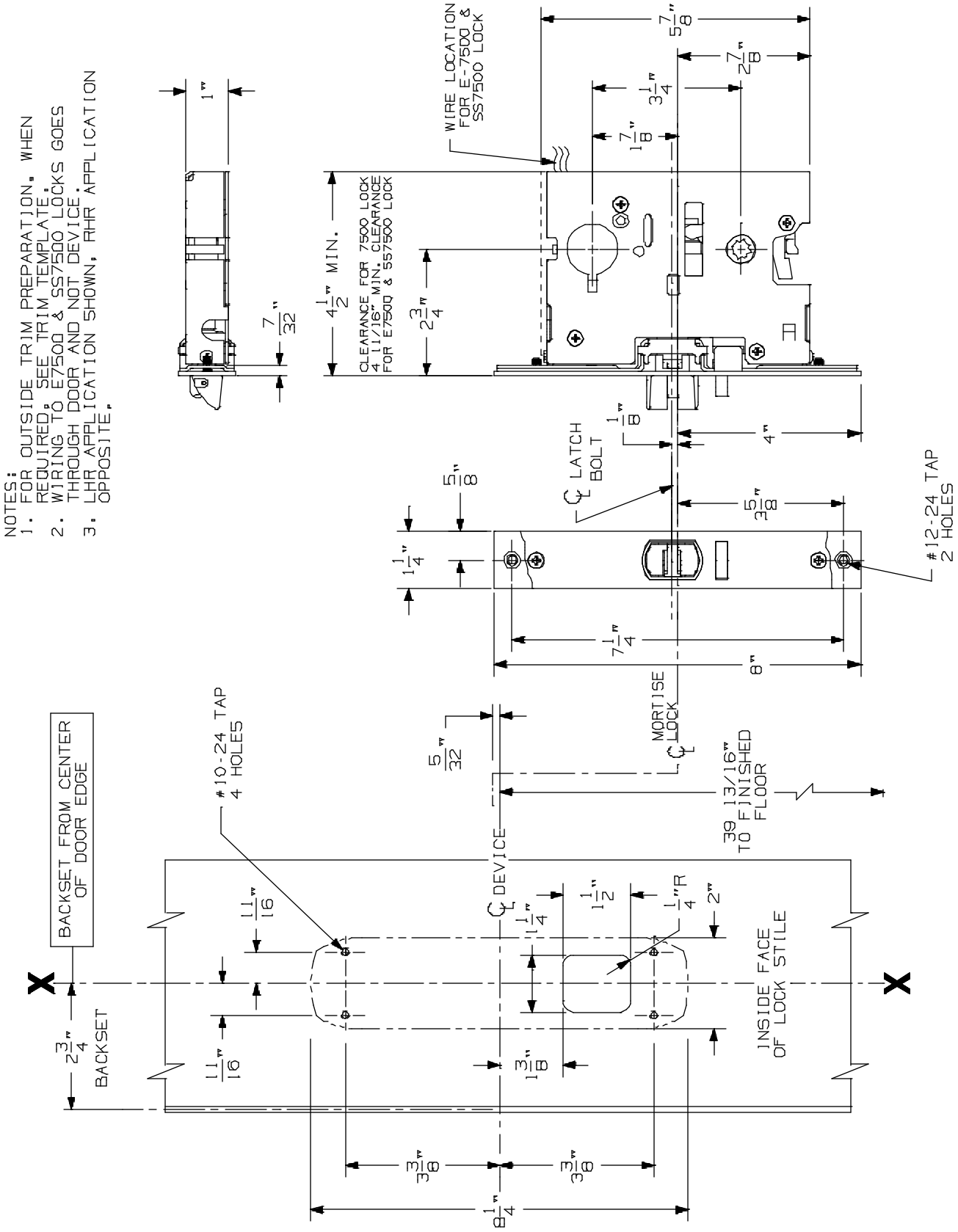

8875/8875-F Mortise Lock Device

VON DUPRIN®

NOTES: SEE MASTER SHEET #10001 FOR SUGGESTED REINFORCING

TEMPLATE NUMBER: 10179_a

DATE: 05-15-13

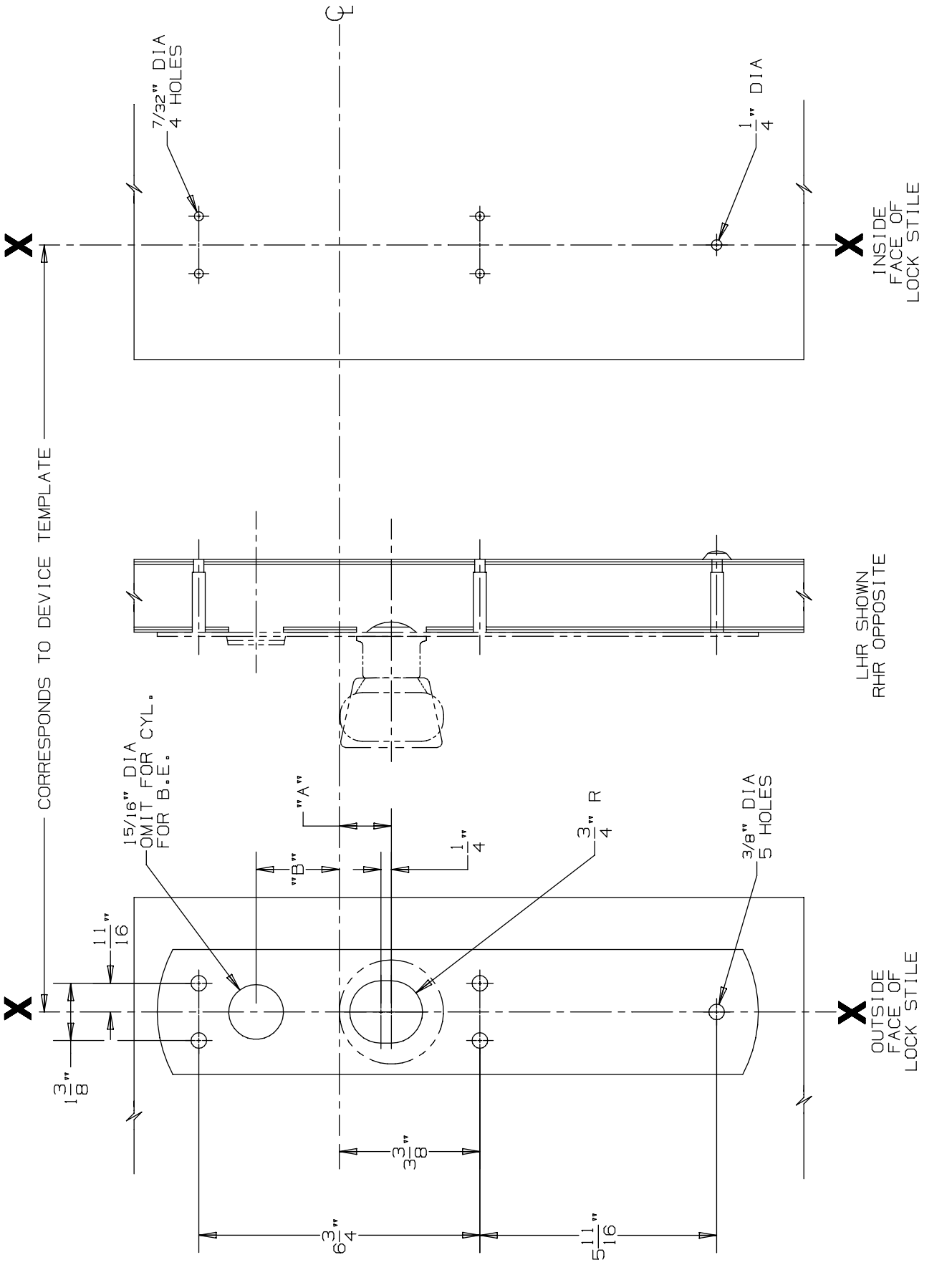

DEVICE APPLICATION SCHEDULE			
DEVICE	DIM. "A"	DIM. "B"
88 MORTISE	1 1/4"	2"
88 VERTICAL	1 1/2"	1 3/4"

FOR CUTOUTS ON INSIDE FACE OF DOOR SEE DEVICE TEMPLATE

880 K & 880 K-BE Trim for 88 Mortise & Vertical Devices

VON DUPRIN®

NOTES: SEE MASTER SHEET #10001 FOR SUGGESTED REINFORCING

TEMPLATE NUMBER: 20261_a

DATE: 05-23-13

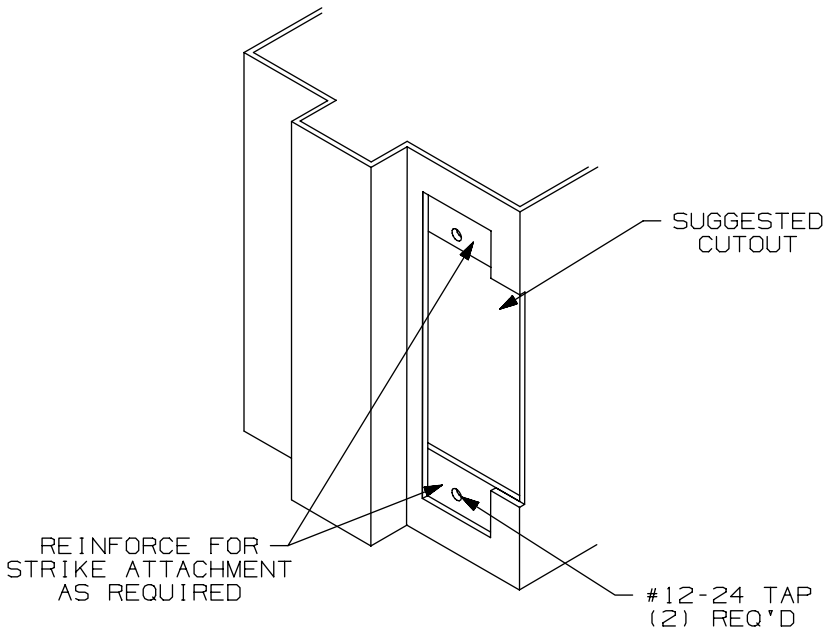

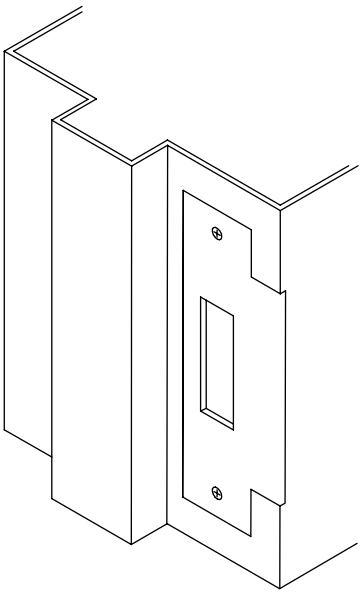

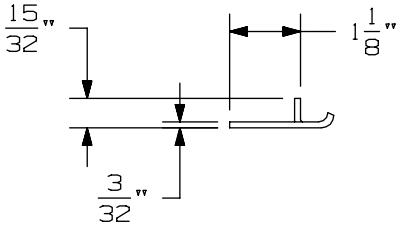

APPLICATION SCHEDULE	
DEVICE	DIM. "A"
9875 & 9875-F	11/16
9975 & 9975-F	11/16
8875 & 8875-F	1/2
5575 & 5575-F	1/2

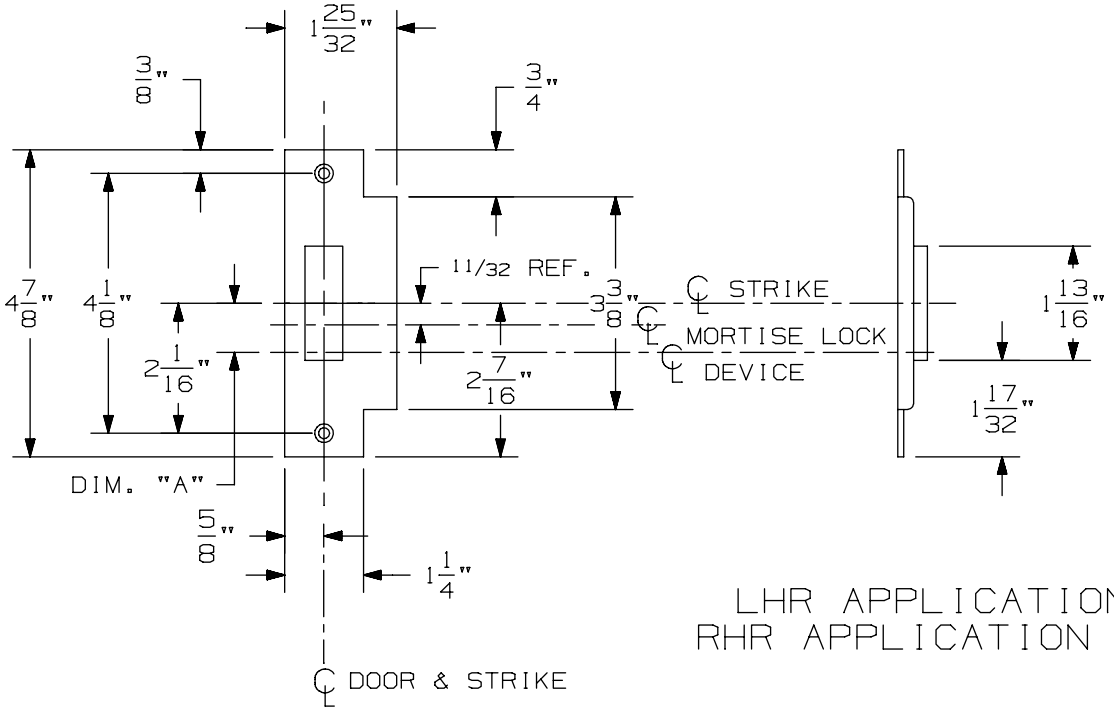

LHR APPLICATION SHOWN
RHR APPLICATION OPPOSITE

575 Mortise Strike (Single Door) for 7500 Mortise Lock

VON DUPRIN®

NOTES: SEE MASTER SHEET #10001 FOR SUGGESTED REINFORCING

TEMPLATE NUMBER: 30210_b

DATE: 07-22-13

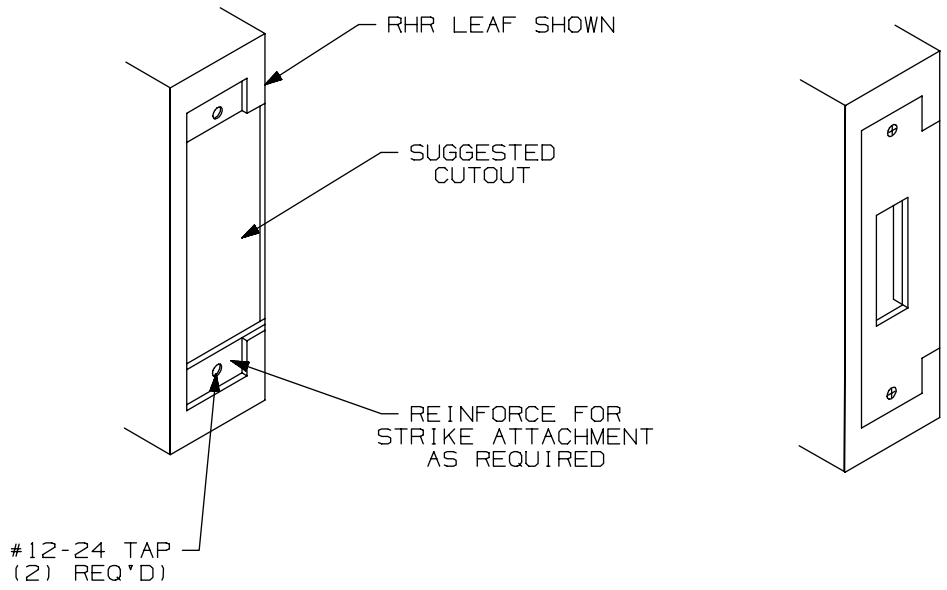

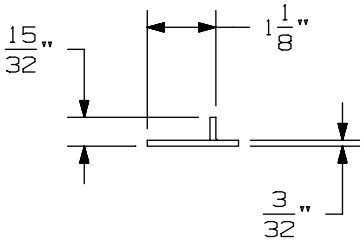

APPLICATION SCHEDULE	
DEVICE	DIM. "A"
9875 & 9875-F	11/16
9975 & 9975-F	11/16
8875 & 8875-F	1/2
5575 & 5575-F	1/2

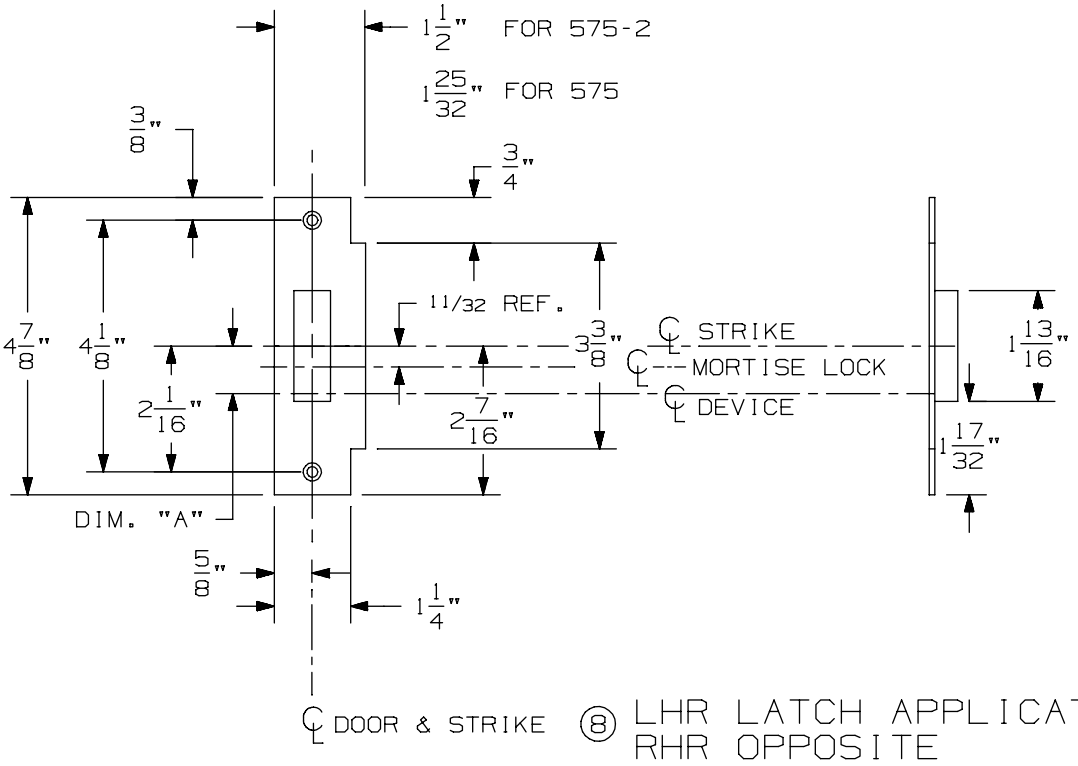

⑧ LHR LATCH APPLICATION SHOWN
RHR OPPOSITE

575-2 Mortise Strike (Double Doors) for 7500 Mortise Lock

VON DUPRIN®

NOTES: SEE MASTER SHEET #10001 FOR SUGGESTED REINFORCING

TEMPLATE NUMBER: 30212_b

DATE: 07-22-13

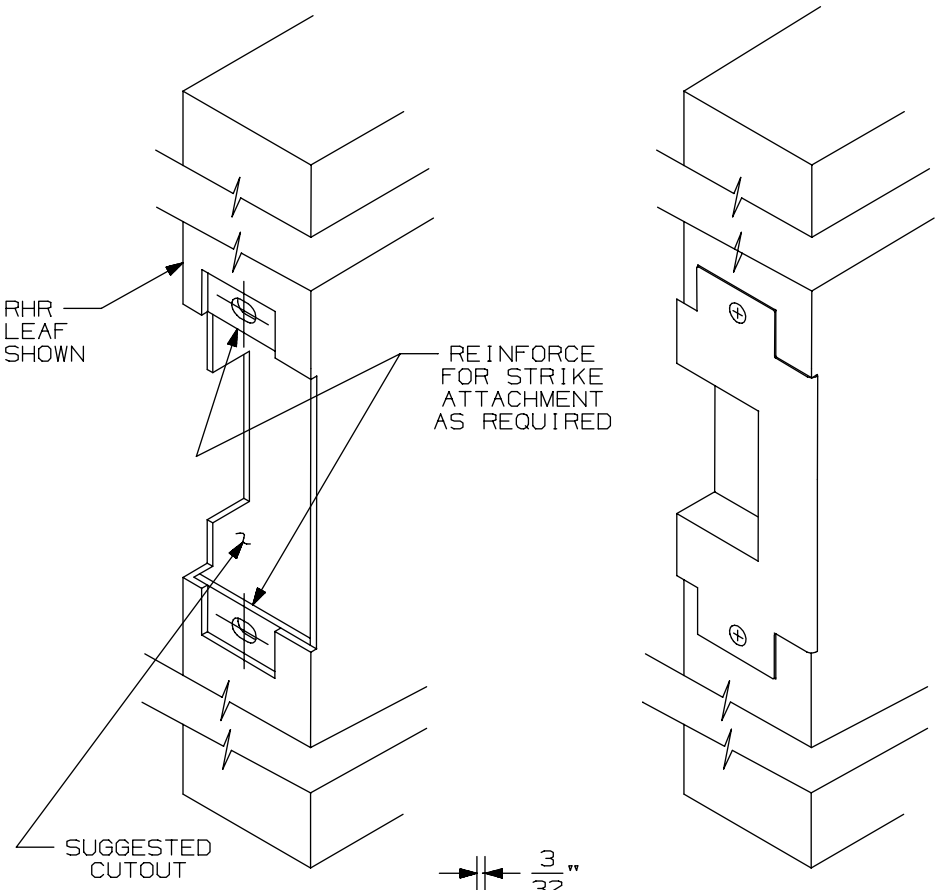

APPLICATION SCHEDULE	
DEVICE	DIM."A"
9875 & 9875-F	11/16
9975 & 9975-F	11/16
8875 & 8875-F	1/2
5575 & 5575-F	1/2

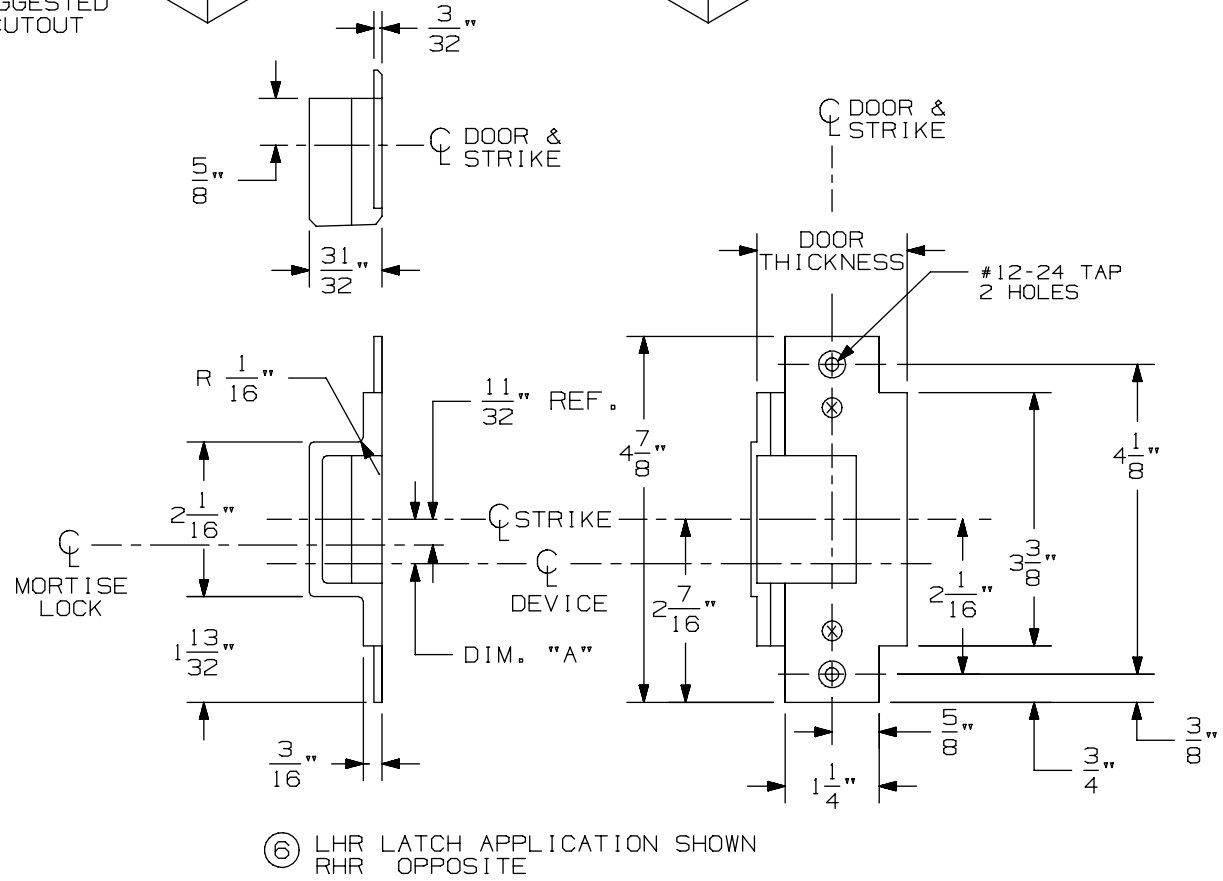

⑥ LHR LATCH APPLICATION SHOWN
RHR OPPOSITE

576A & 576B Mortise Strike for 7500 Mortise Lock

VON DUPRIN®

NOTES: SEE MASTER SHEET #10001 FOR SUGGESTED REINFORCING

TEMPLATE NUMBER: 30211_a

DATE: 05-28-13

NOTES:
1. FOR OUTSIDE TRIM PREPARATION, WHEN REQUIRED, SEE TRIM TEMPLATE.
2. WIRING TO E7500 & SS7500 LOCKS GOES THROUGH DOOR AND NOT DEVICE.
3. LHR APPLICATION SHOWN, RHR APPLICATION OPPOSITE.

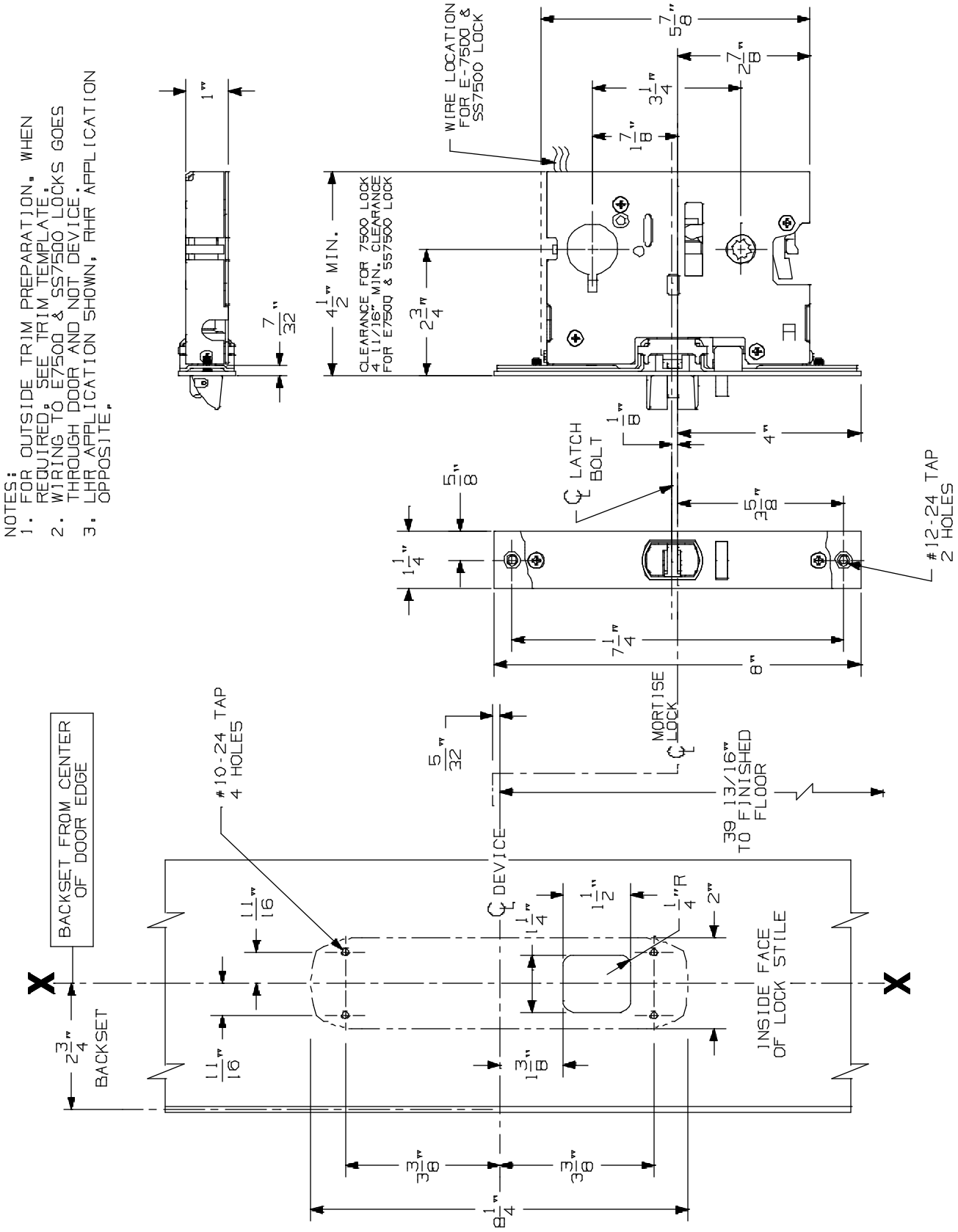

8875/8875-F Mortise Lock Device

VON DUPRIN®

NOTES: SEE MASTER SHEET #10001 FOR SUGGESTED REINFORCING

TEMPLATE NUMBER: 10179_a

DATE: 05-15-13

NOTES: SEE MASTER SHEET #10001 FOR SUGGESTED REINFORCING

373-L-BE Control

VON DUPRIN®

TEMPLATE NUMBER: 40109_a

DATE: 05-28-13

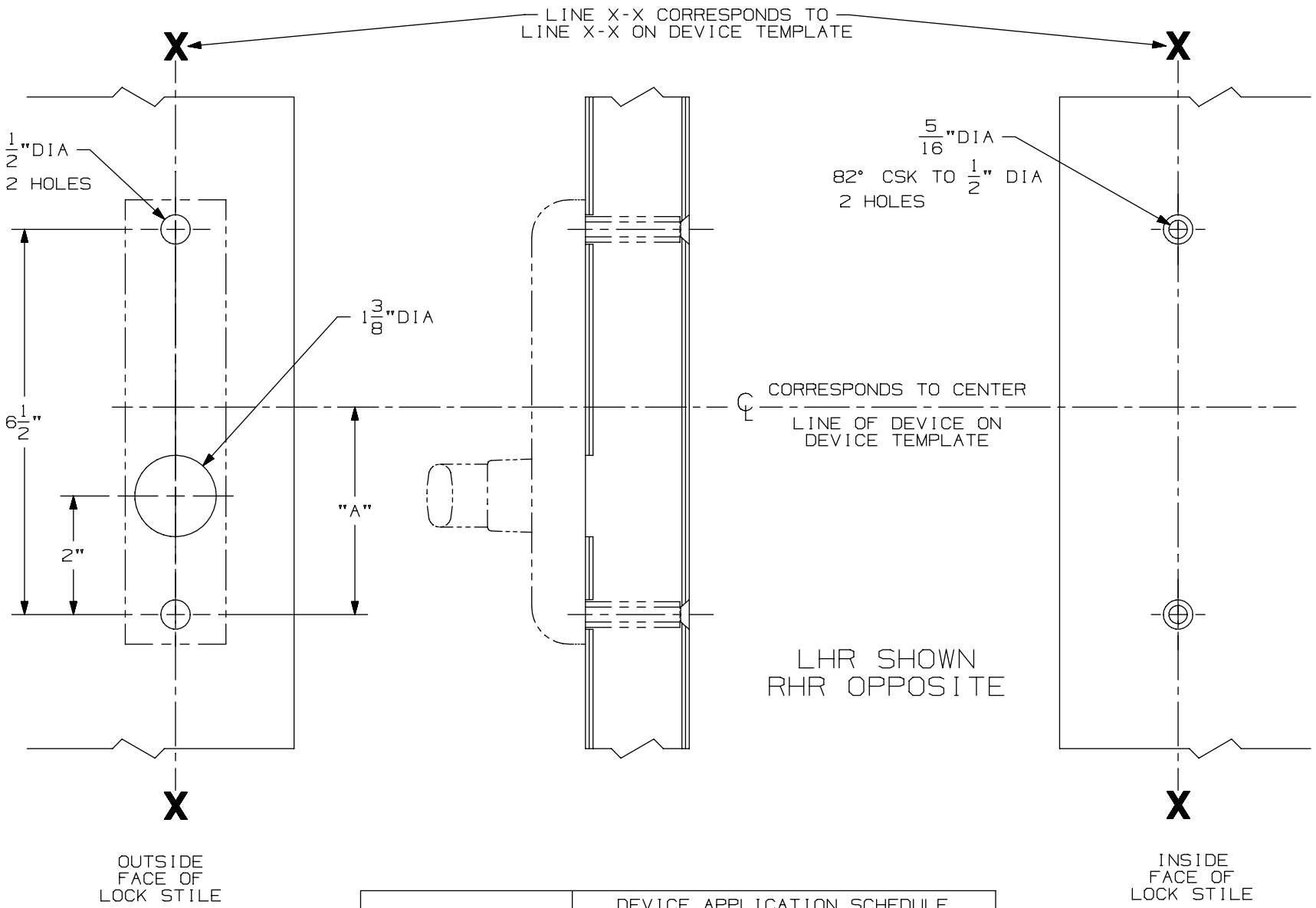

FOR CUTOUT ON INSIDE FACE OF DOOR SEE DEVICE TEMPLATE

DEVICE APPLICATION SCHEDULE	
DEVICE	DIM "A"
8827/8827-F	3 1/2"
88 MORTISE	3 1/4"

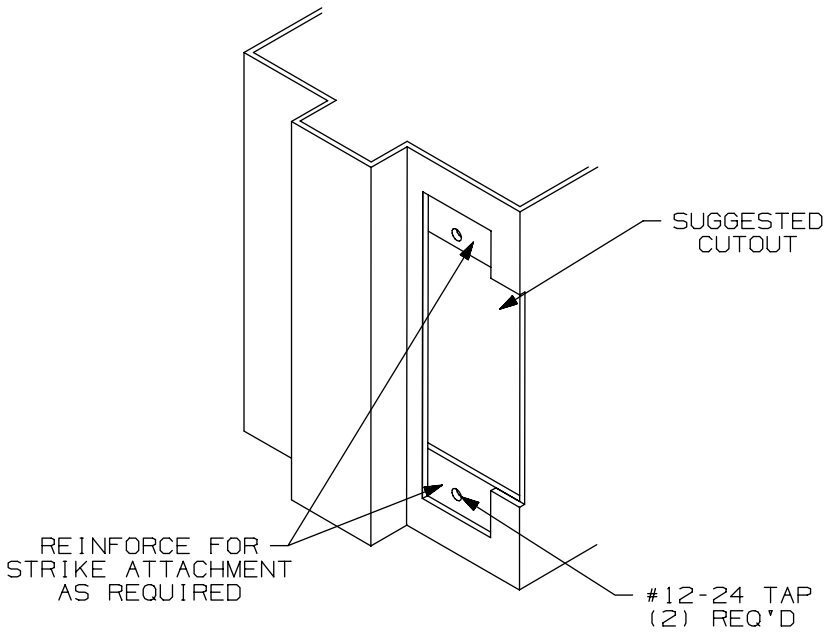

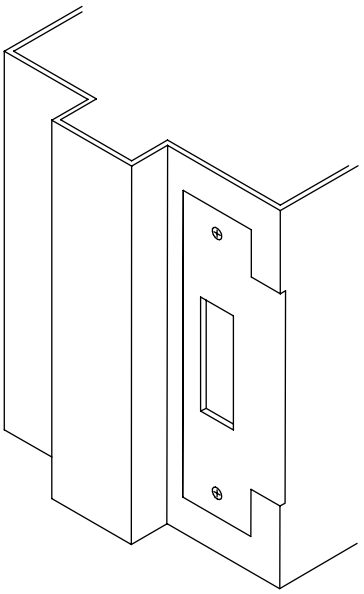

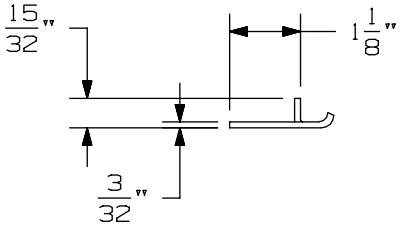

APPLICATION SCHEDULE	
DEVICE	DIM. "A"
9875 & 9875-F	11/16
9975 & 9975-F	11/16
8875 & 8875-F	1/2
5575 & 5575-F	1/2

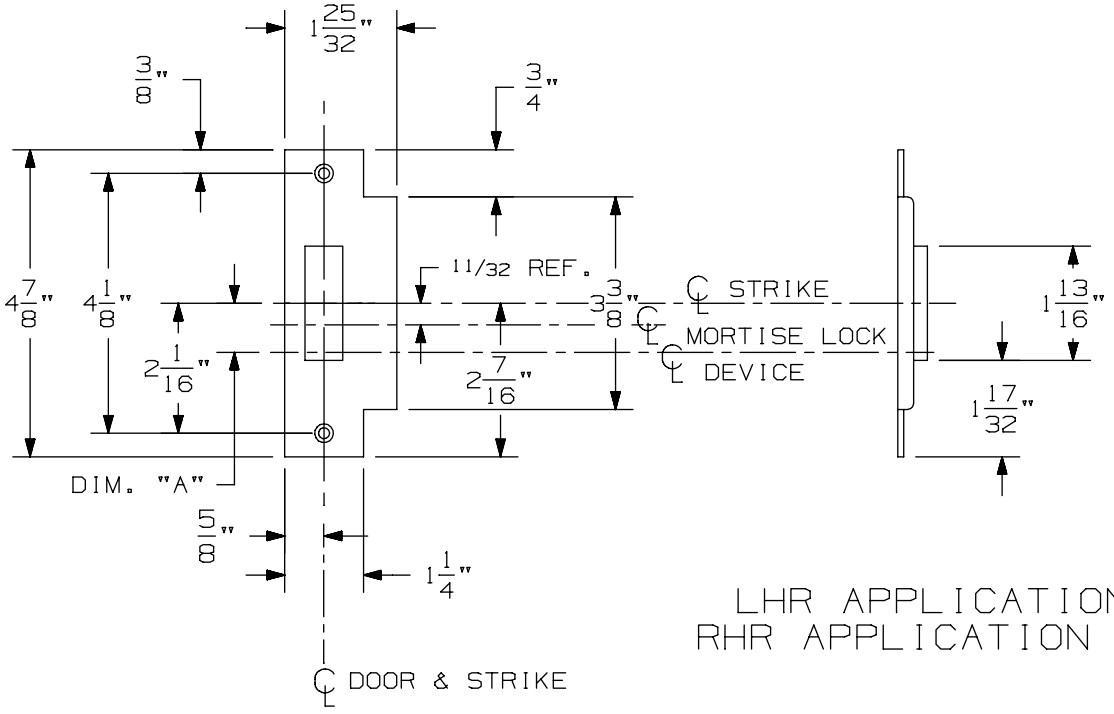

LHR APPLICATION SHOWN
RHR APPLICATION OPPOSITE

575 Mortise Strike (Single Door) for 7500 Mortise Lock

VON DUPRIN®

NOTES: SEE MASTER SHEET #10001 FOR SUGGESTED REINFORCING

TEMPLATE NUMBER: 30210_b

DATE: 07-22-13

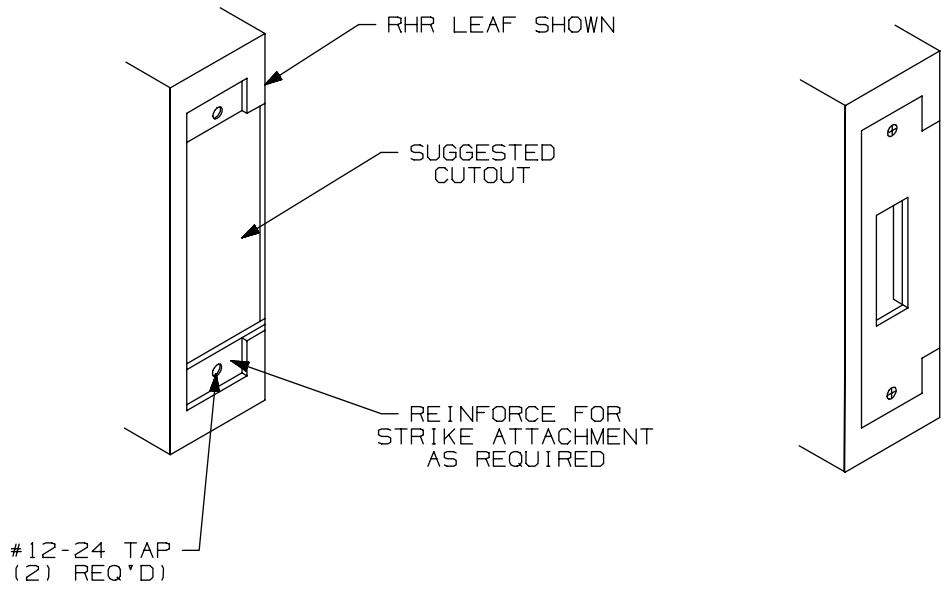

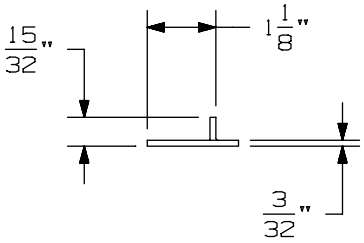

APPLICATION SCHEDULE	
DEVICE	DIM. "A"
9875 & 9875-F	11/16
9975 & 9975-F	11/16
8875 & 8875-F	1/2
5575 & 5575-F	1/2

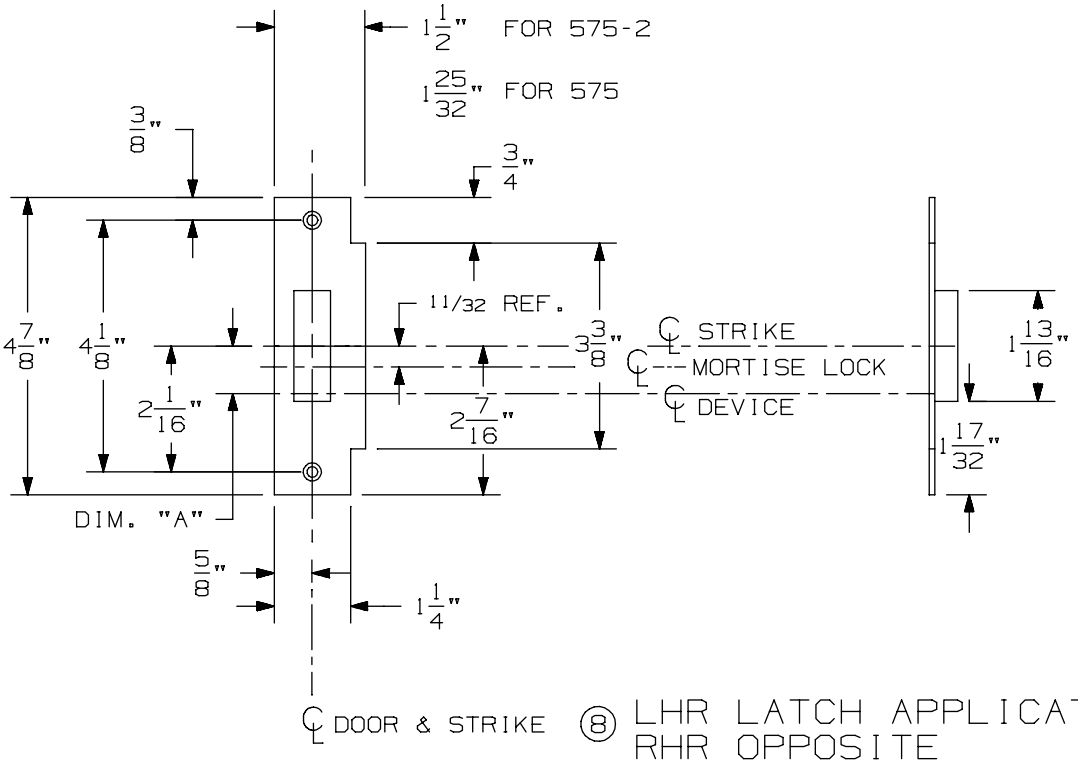

⑧ LHR LATCH APPLICATION SHOWN
RHR OPPOSITE

575-2 Mortise Strike (Double Doors) for 7500 Mortise Lock

VON DUPRIN®

NOTES: SEE MASTER SHEET #10001 FOR SUGGESTED REINFORCING

TEMPLATE NUMBER: 30212_b

DATE: 07-22-13

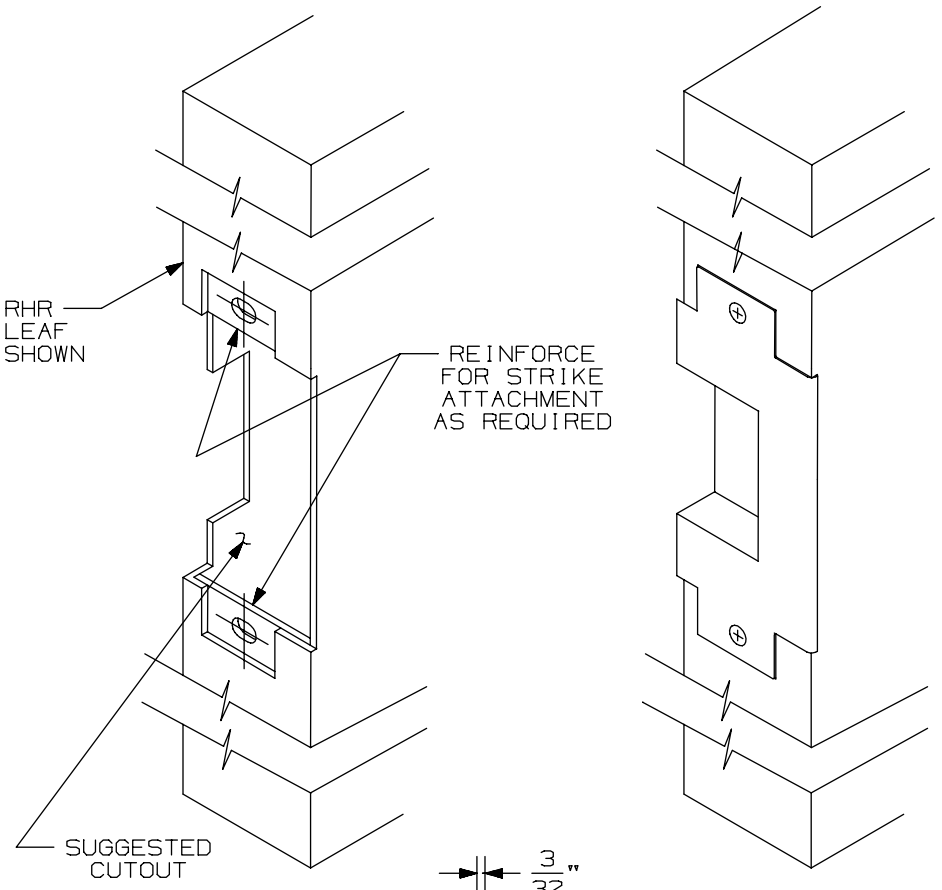

APPLICATION SCHEDULE	
DEVICE	DIM."A"
9875 & 9875-F	11/16
9975 & 9975-F	11/16
8875 & 8875-F	1/2
5575 & 5575-F	1/2

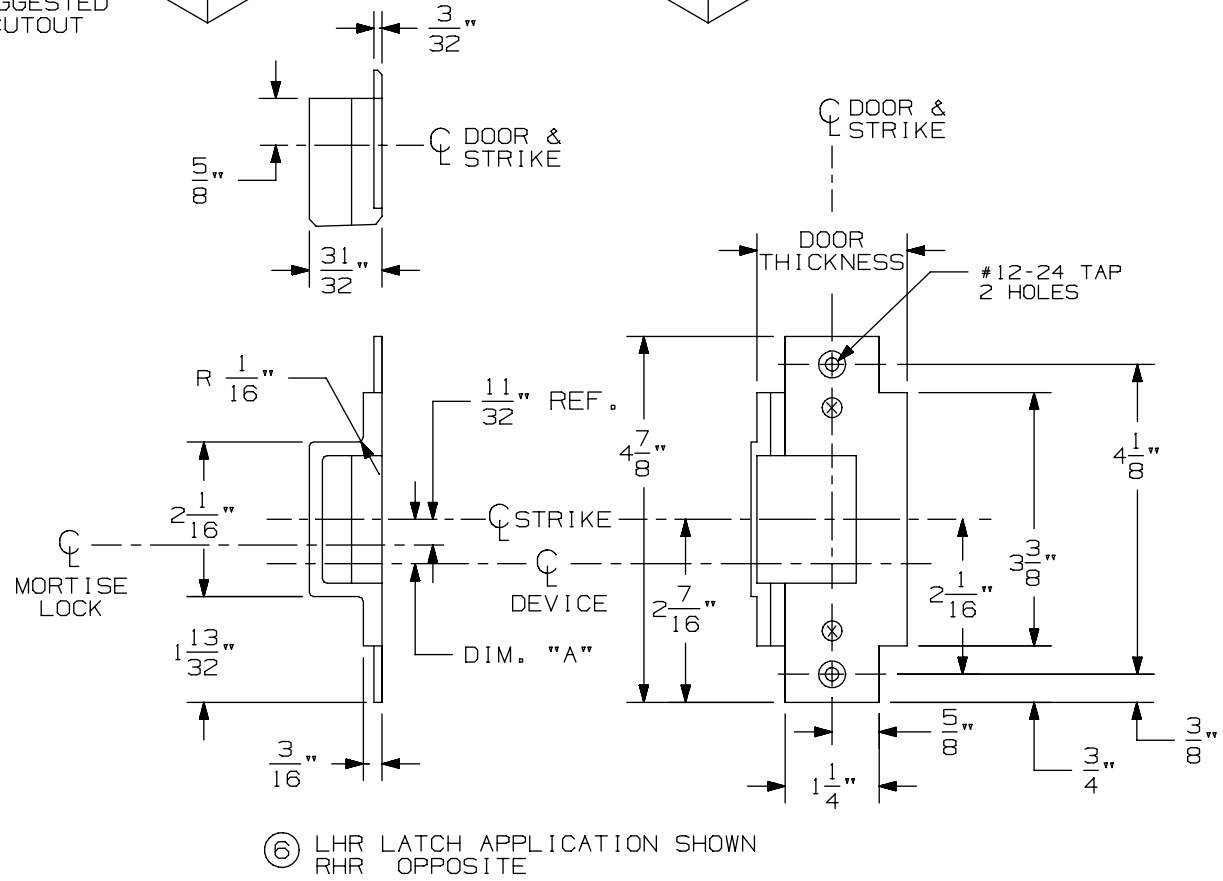

⑥ LHR LATCH APPLICATION SHOWN
RHR OPPOSITE

576A & 576B Mortise Strike for 7500 Mortise Lock

VON DUPRIN®

NOTES: SEE MASTER SHEET #10001 FOR SUGGESTED REINFORCING

TEMPLATE NUMBER: 30211_a

DATE: 05-28-13

NOTES:
1. FOR OUTSIDE TRIM PREPARATION, WHEN REQUIRED, SEE TRIM TEMPLATE.
2. WIRING TO E7500 & SS7500 LOCKS GOES THROUGH DOOR AND NOT DEVICE.
3. LHR APPLICATION SHOWN, RHR APPLICATION OPPOSITE.

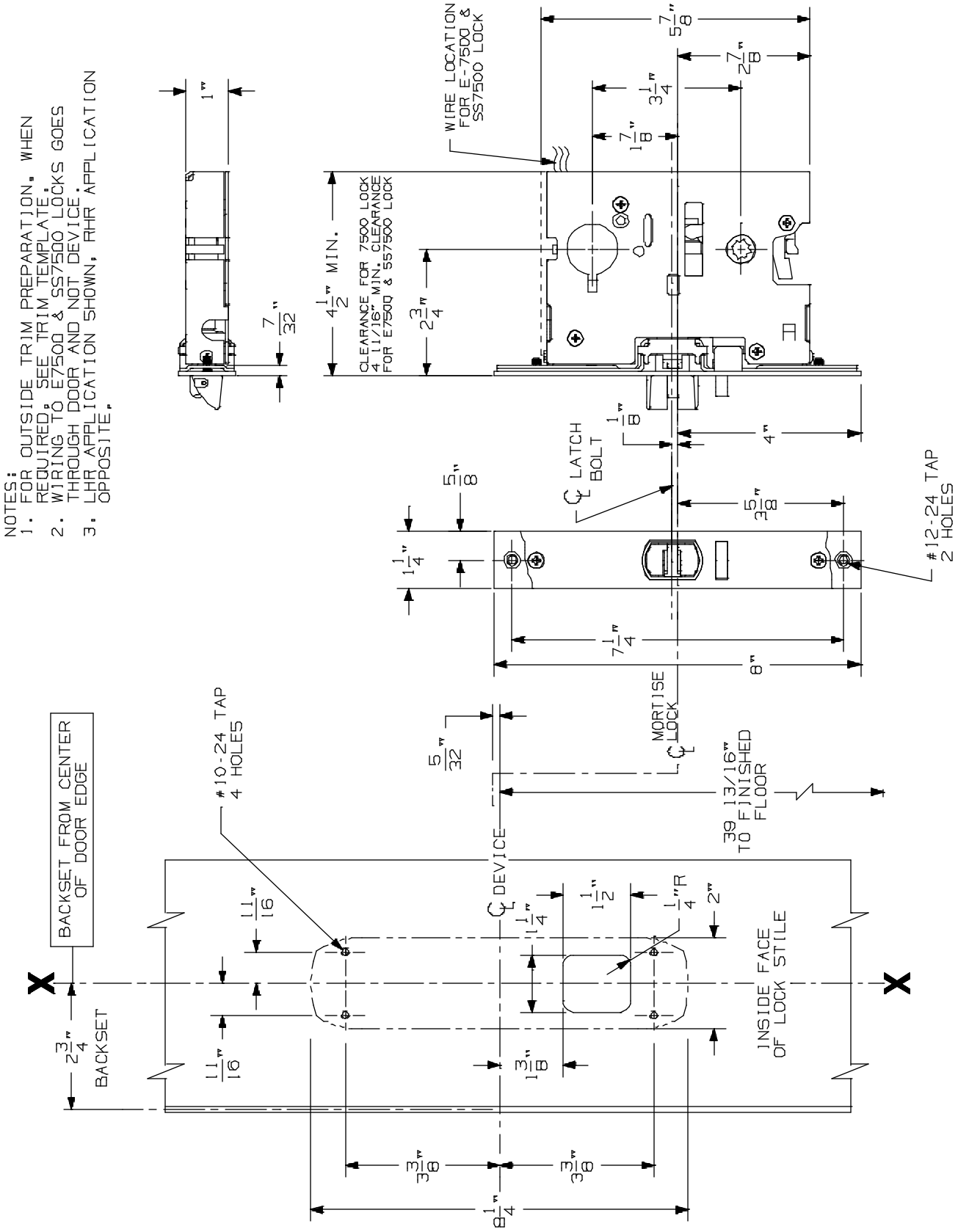

8875/8875-F Mortise Lock Device

VON DUPRIN®

NOTES: SEE MASTER SHEET #10001 FOR SUGGESTED REINFORCING

TEMPLATE NUMBER: 10179_a

DATE: 05-15-13

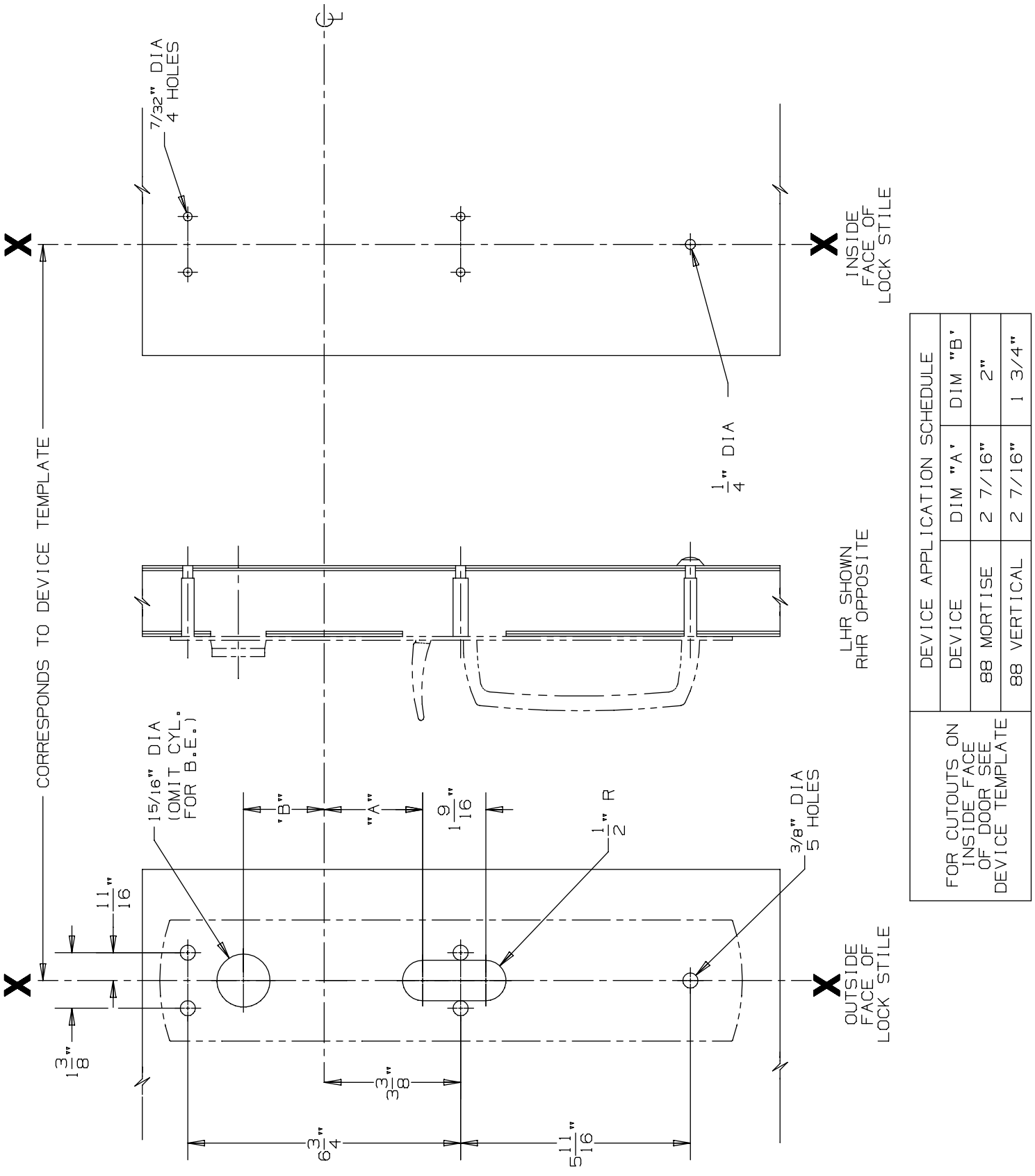

DEVICE APPLICATION SCHEDULE		
DEVICE	DIM "A"	DIM "B"
88 MORTISE	2 7/16"	2"
88 VERTICAL	2 7/16"	1 3/4"

FOR CUTOUTS ON INSIDE FACE OF DOOR SEE DEVICE TEMPLATE

880 TP & 880 TP-BE Trim for 88 Mortise & Vertical Devices

VON DUPRIN®

NOTES: SEE MASTER SHEET #10001 FOR SUGGESTED REINFORCING

TEMPLATE NUMBER: 20260_a

DATE: 05-28-13

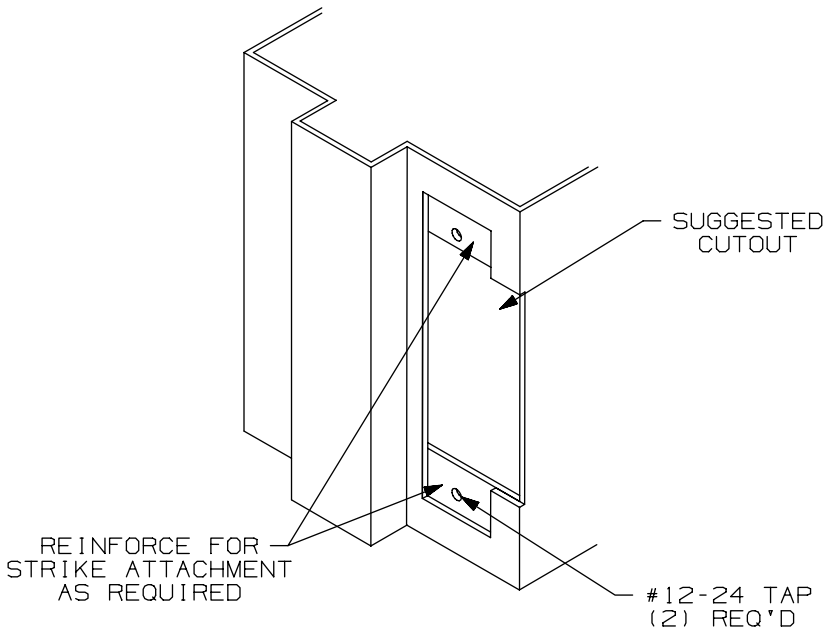

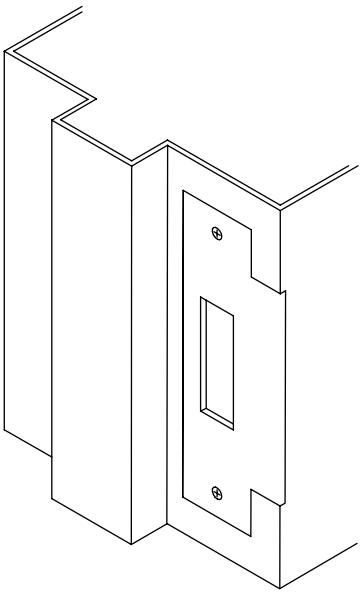

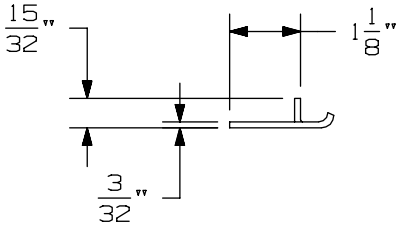

APPLICATION SCHEDULE	
DEVICE	DIM. "A"
9875 & 9875-F	11/16
9975 & 9975-F	11/16
8875 & 8875-F	1/2
5575 & 5575-F	1/2

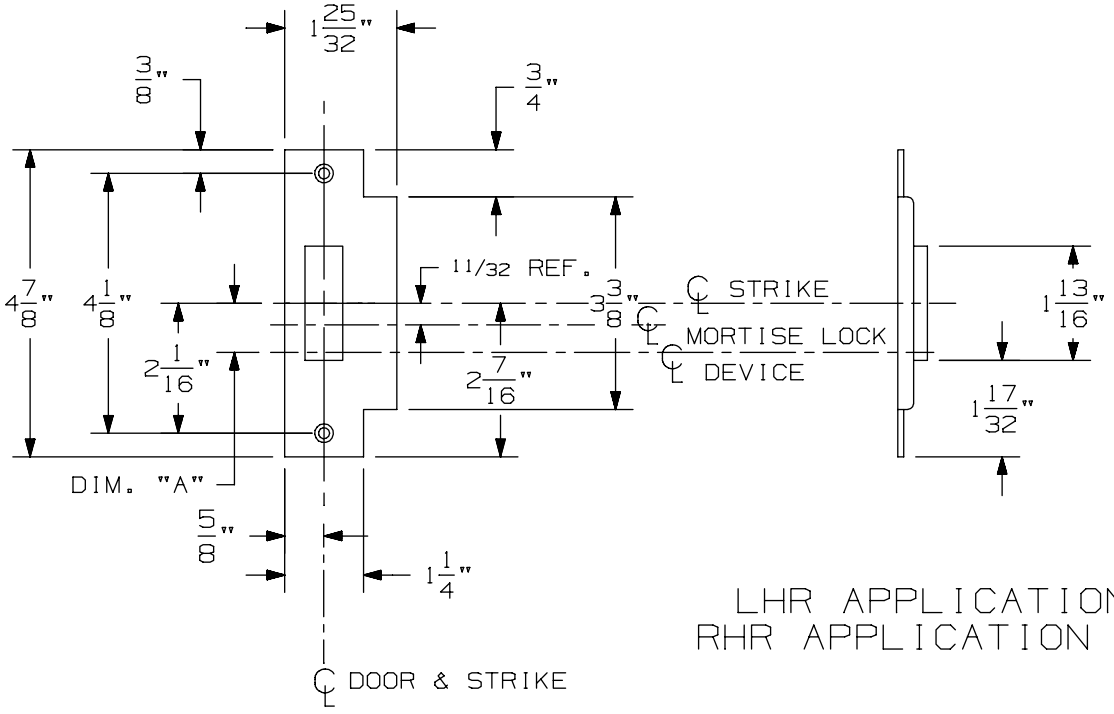

LHR APPLICATION SHOWN
RHR APPLICATION OPPOSITE

575 Mortise Strike (Single Door) for 7500 Mortise Lock

VON DUPRIN®

NOTES: SEE MASTER SHEET #10001 FOR SUGGESTED REINFORCING

TEMPLATE NUMBER: 30210_b

DATE: 07-22-13

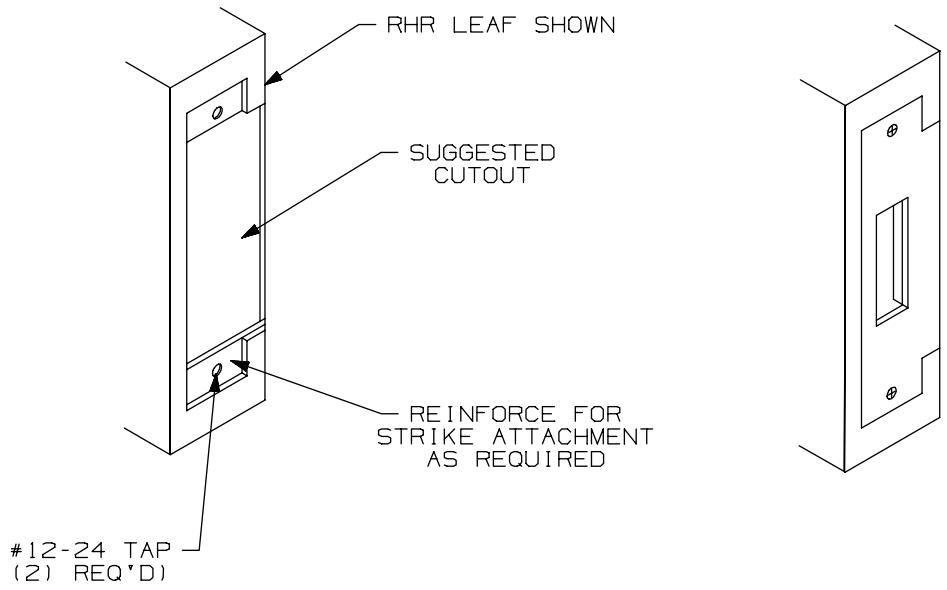

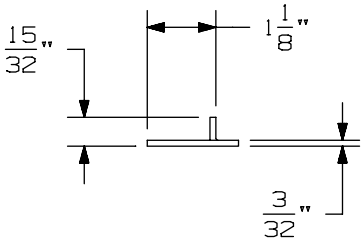

APPLICATION SCHEDULE	
DEVICE	DIM. "A"
9875 & 9875-F	11/16
9975 & 9975-F	11/16
8875 & 8875-F	1/2
5575 & 5575-F	1/2

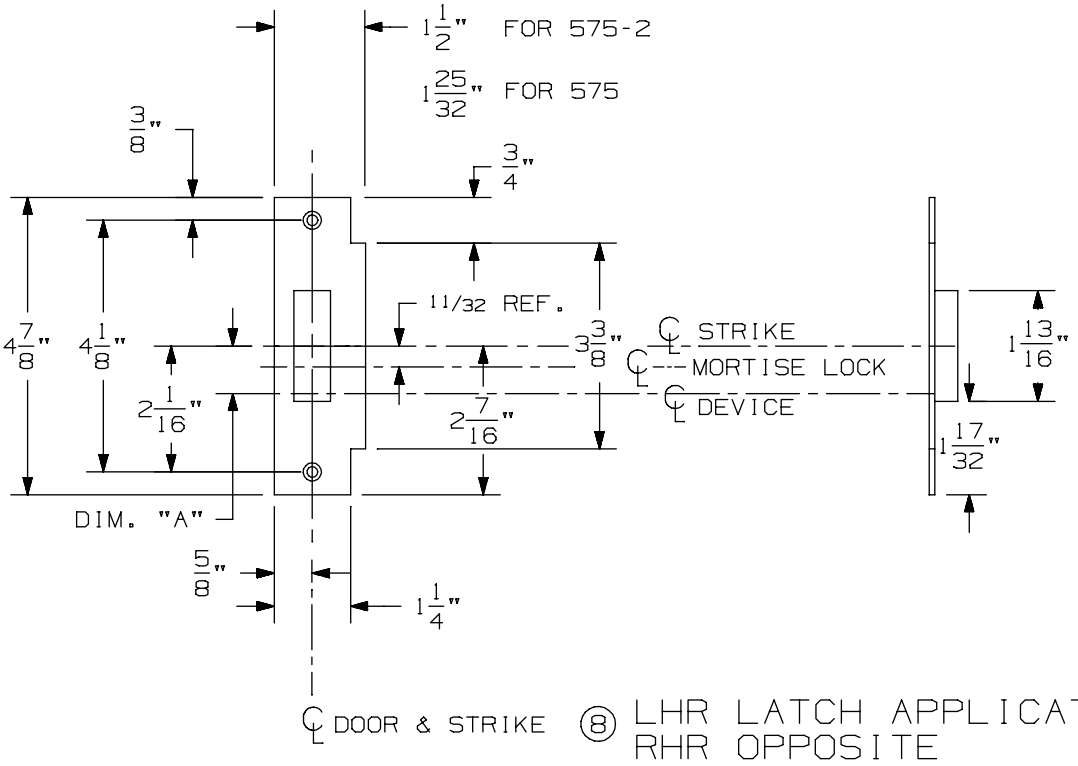

⑧ LHR LATCH APPLICATION SHOWN
RHR OPPOSITE

575-2 Mortise Strike (Double Doors) for 7500 Mortise Lock

VON DUPRIN®

NOTES: SEE MASTER SHEET #10001 FOR SUGGESTED REINFORCING

TEMPLATE NUMBER: 30212_b

DATE: 07-22-13

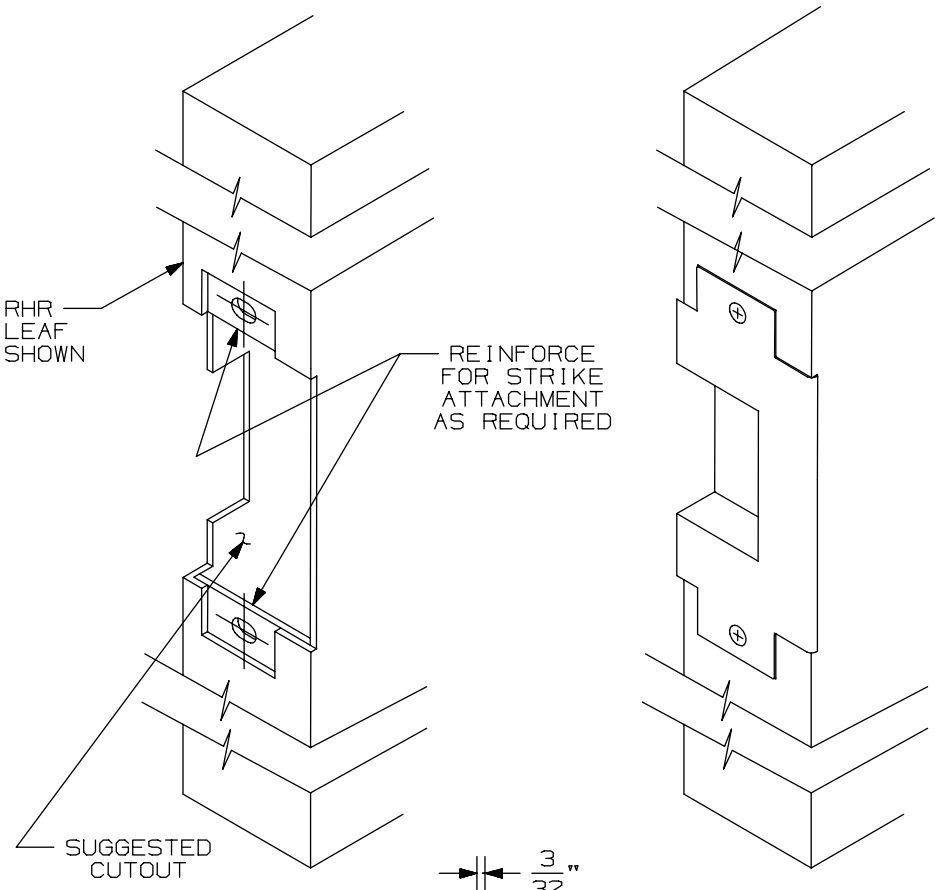

APPLICATION SCHEDULE	
DEVICE	DIM."A"
9875 & 9875-F	11/16
9975 & 9975-F	11/16
8875 & 8875-F	1/2
5575 & 5575-F	1/2

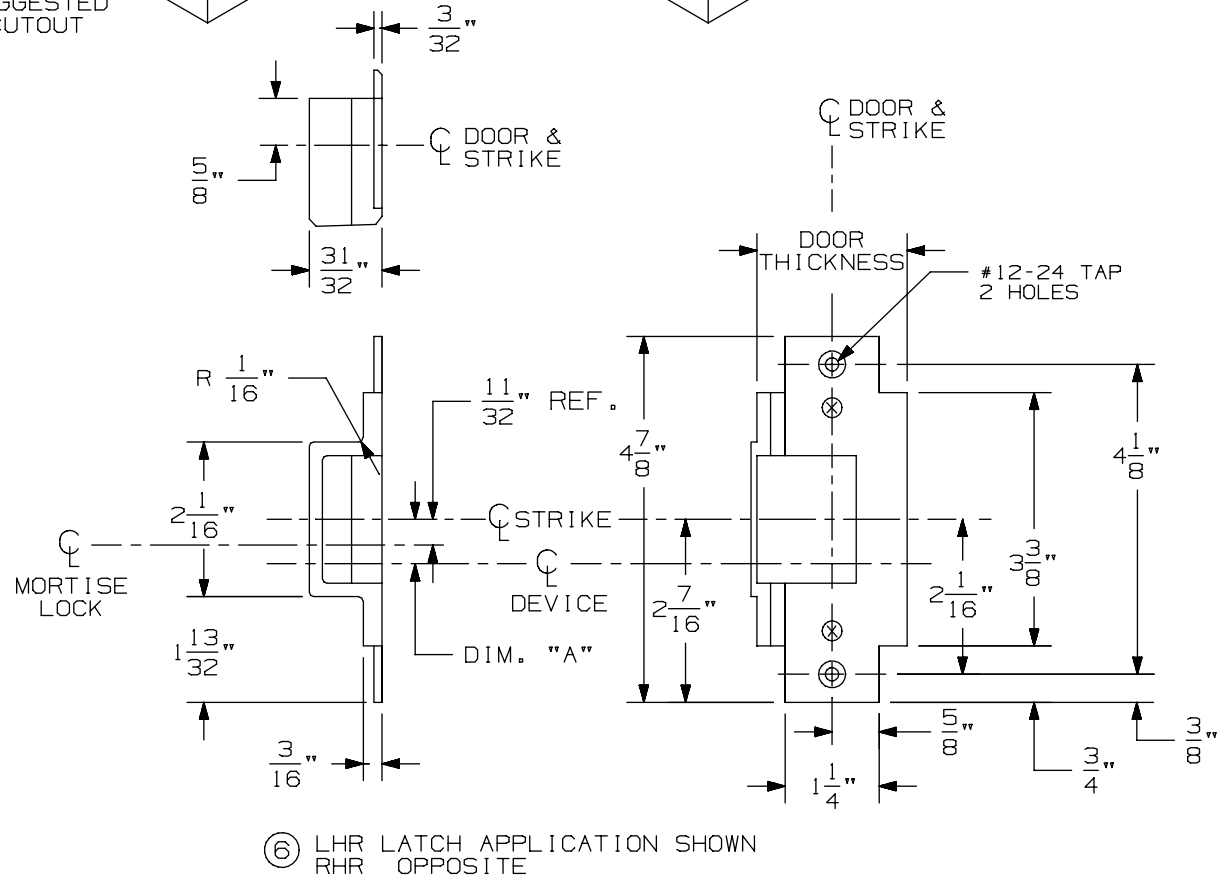

⑥ LHR LATCH APPLICATION SHOWN
RHR OPPOSITE

576A & 576B Mortise Strike for 7500 Mortise Lock

VON DUPRIN®

NOTES: SEE MASTER SHEET #10001 FOR SUGGESTED REINFORCING

TEMPLATE NUMBER: 30211_a

DATE: 05-28-13

88 Series Trims, Controls & Strikes

88 Series Trims, Controls & Strikes

-

88 Series Trims

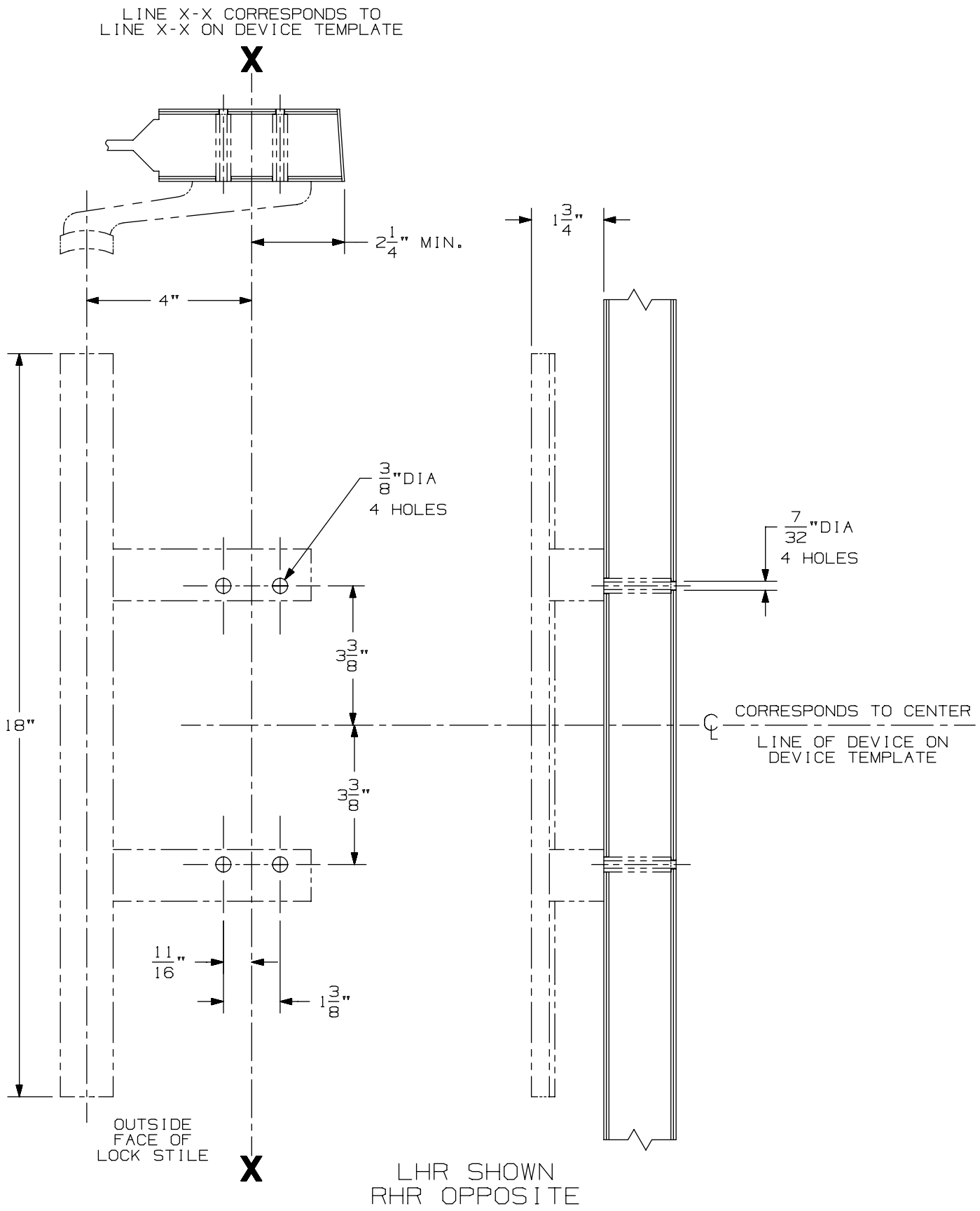

01 Mod, 01DT Mod Trim for 8827 & 8847

VON DUPRIN®

NOTES: SEE MASTER SHEET #10001 FOR SUGGESTED REINFORCING

TEMPLATE NUMBER: 20436_a

DATE: 05-23-13

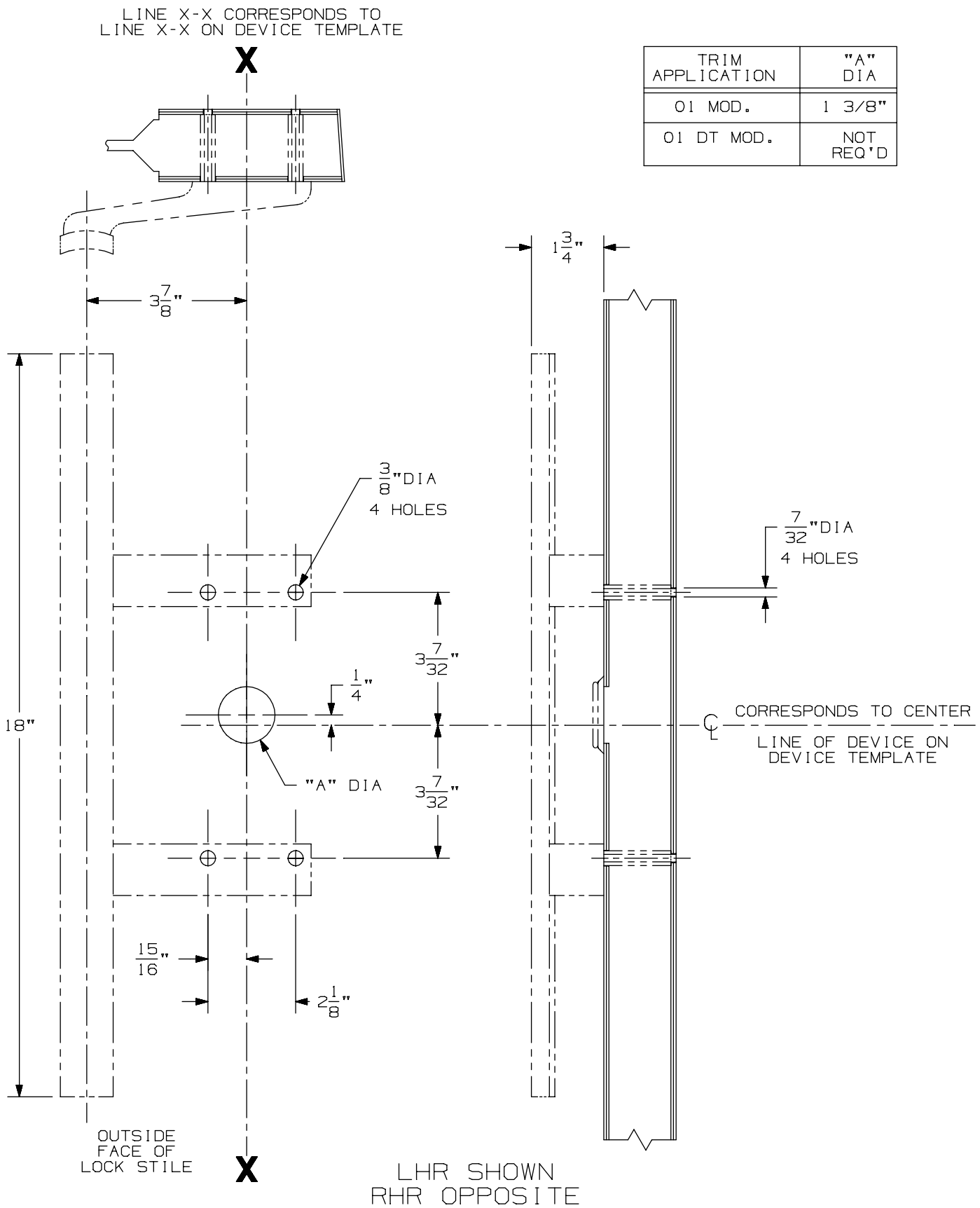

TRIM APPLICATION	"A" DIA
01 MOD.	1 3/8"
01 DT MOD.	NOT REQ'D

01 Mod, 01DT Mod
Trim for 88 Rim

VON DUPRIN®

NOTES: SEE MASTER SHEET #10001 FOR SUGGESTED REINFORCING

TEMPLATE NUMBER: 20437_a

DATE: 05-23-13

NOTES: SEE MASTER SHEET #10001 FOR SUGGESTED REINFORCING

550 DT Trim

VON DUPRIN®

TEMPLATE NUMBER: 20026_a

DATE: 05-23-13

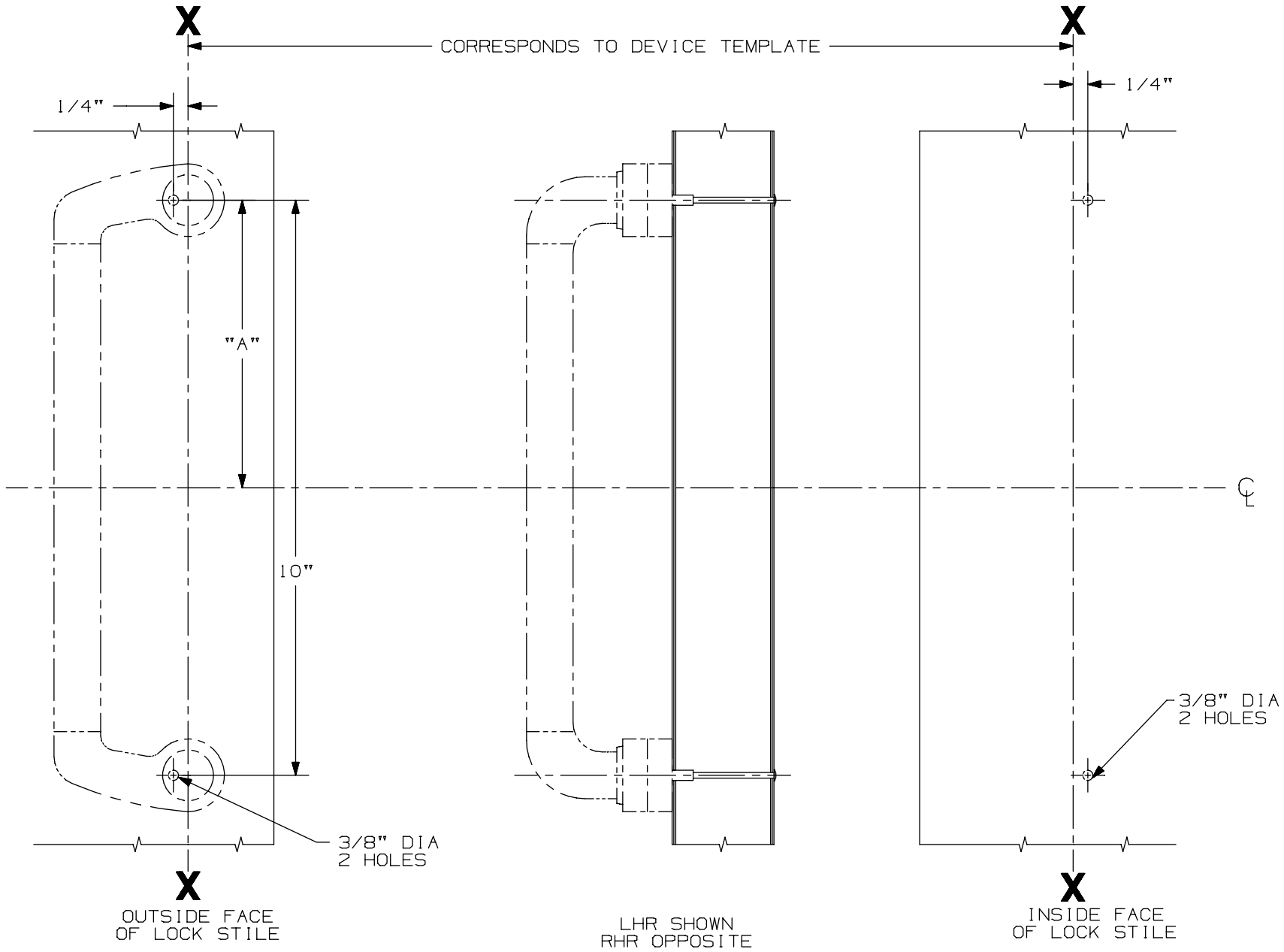

DEVICE APPLICATION SCHEDULE					
DEVICE	DIM. "A"	DEVICE	DIM. "A"	DEVICE	DIM. "A"
44 RIM	4 15/16"	44 MORT.	4 15/16"	44 VERT.	4 15/16"
55 RIM	4 15/16"	55 MORT.	4 15/16"	5547 VERT.	4 15/16"
88 RIM	4 15/16"	88 MORT.	4 15/16"	8827 VERT.	4 15/16"

FOR CUTOUTS ON INSIDE FACE OF DOOR: SEE DEVICE TEMPLATE

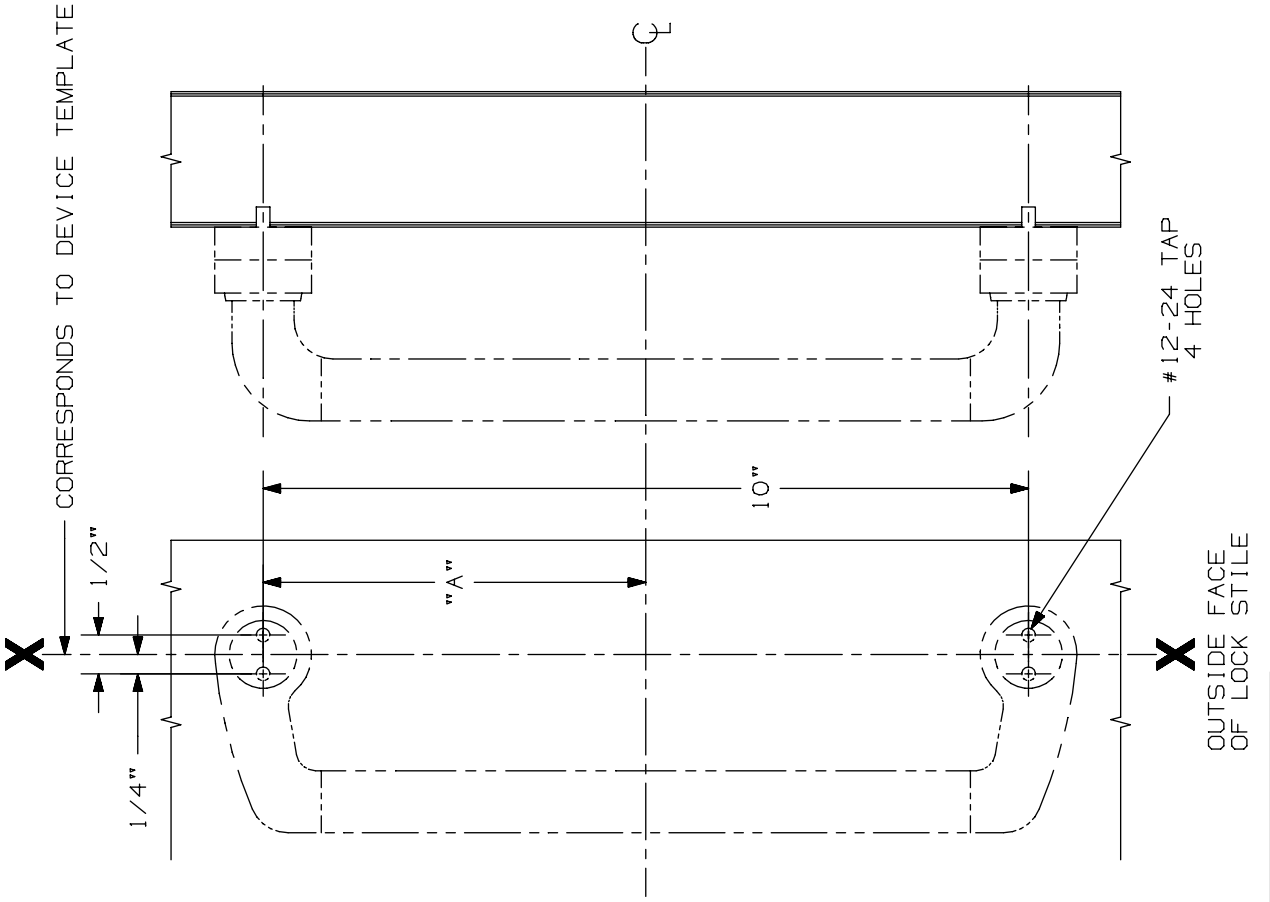

FOR CUTOUTS ON INSIDE FACE OF DOOR: SEE DEVICE TEMPLATE

DEVICE APP. SCHEDULE	
DEVICE	DIM. "A"
44 S.A.	4 15/16"
55 S.A.	4 15/16"
88 S.A.	4 15/16"

550 DT-SA Trim

VON DUPRIN®

NOTES: SEE MASTER SHEET #10001 FOR SUGGESTED REINFORCING

TEMPLATE NUMBER: 20025_a

DATE: 05-23-13

NOTES: SEE MASTER SHEET #10001 FOR SUGGESTED REINFORCING

550 NL Trim

TEMPLATE NUMBER: 20027_a

DATE: 05-23-13

VON DUPRIN®

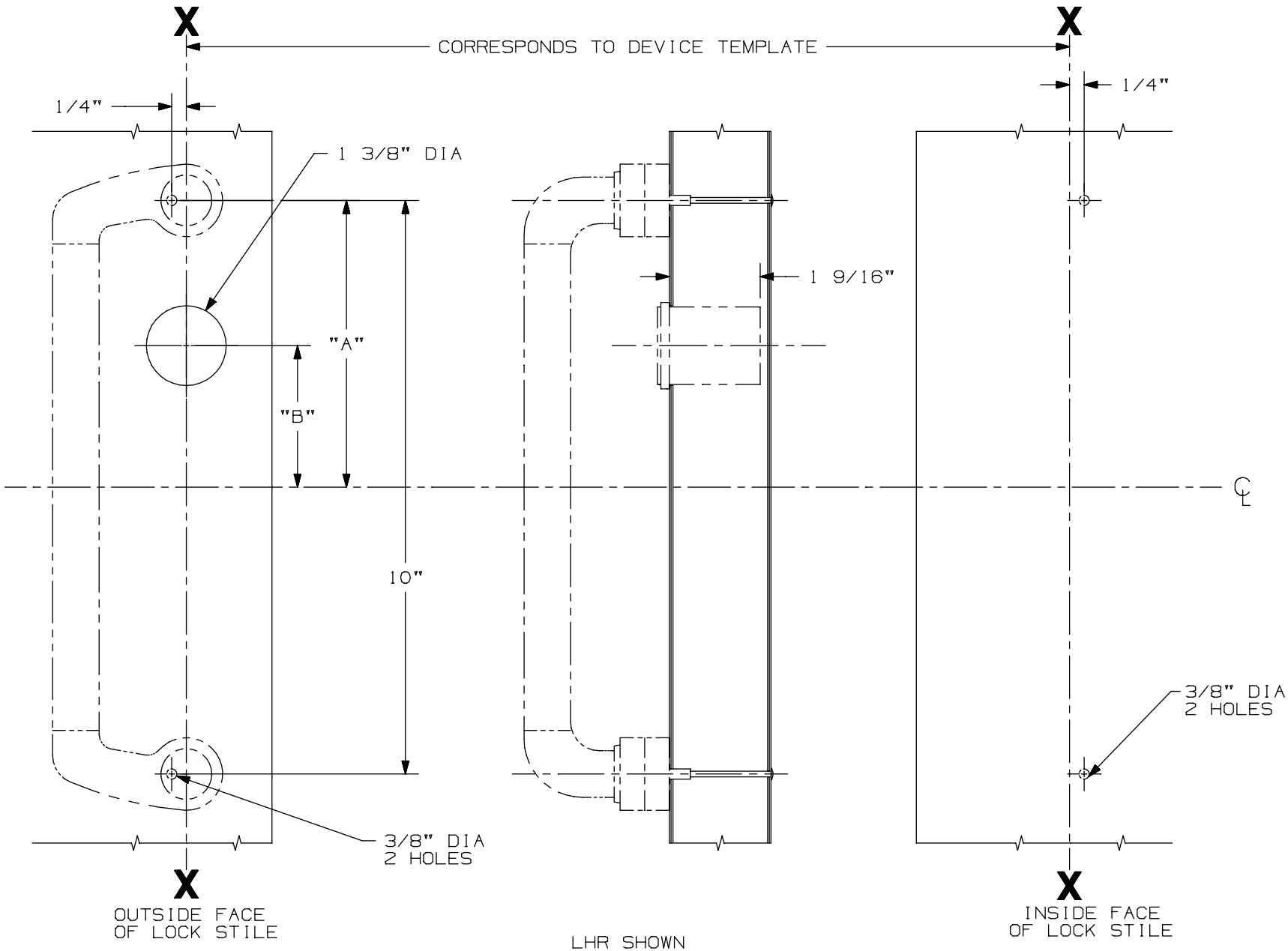

DEVICE APPLICATION SCHEDULE						FOR CUTOUTS ON INSIDE FACE OF DOOR: SEE DEVICE TEMPLATE
DEVICE	DIM. "A"	DIM. "B"	DEVICE	DIM. "A"	DIM. "B"	
44 RIM	4 15/16"	1/4"	44 MORT.	4 15/16"	2 1/16"	
55 RIM	4 15/16"	1 3/4"				
88 RIM	4 15/16"	1/4"	88 MORT.	4 15/16"	2"	

606 K-DT Trim for 44 Rim & 88 Rim, Mortise, & Vertical Devices

NOTES: SEE MASTER SHEET #10001 FOR SUGGESTED REINFORCING

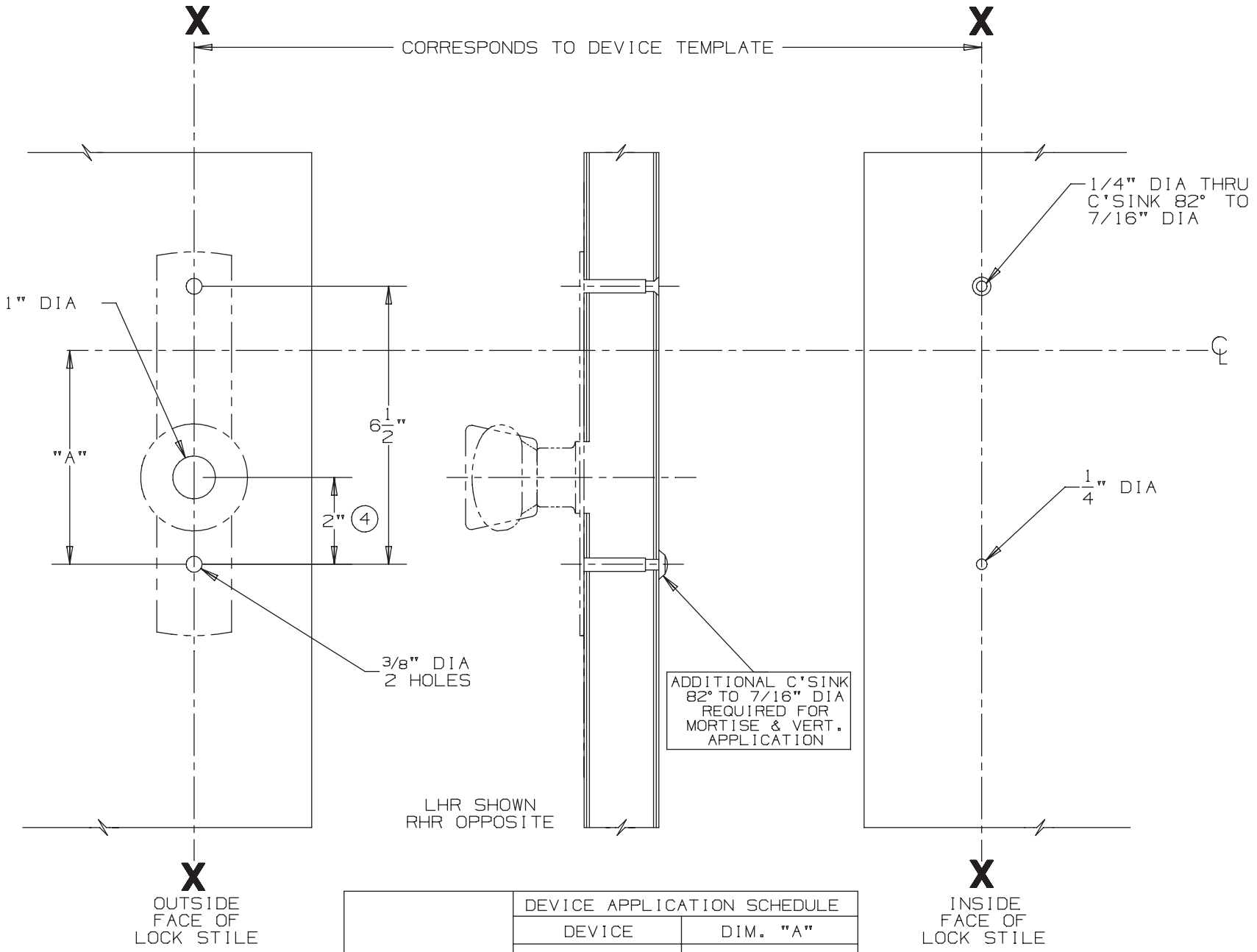

FOR CUTOUTS ON INSIDE FACE OF DOOR SEE DEVICE TEMPLATE	DEVICE APPLICATION SCHEDULE	
	DEVICE	DIM. "A"
	44 RIM	5"
	88 RIM	5"
	88 MORTISE	3 1/4"
	88 VERTICAL	3 1/4"

(4)

VON DUPRIN®

TEMPLATE NUMBER: 20059_a

DATE: 05-23-13

606 K & 606 K-BE Trim for 44 Rim & 88 Rim, Mortise, Vertical Devices

NOTES: SEE MASTER SHEET #10001 FOR SUGGESTED REINFORCING

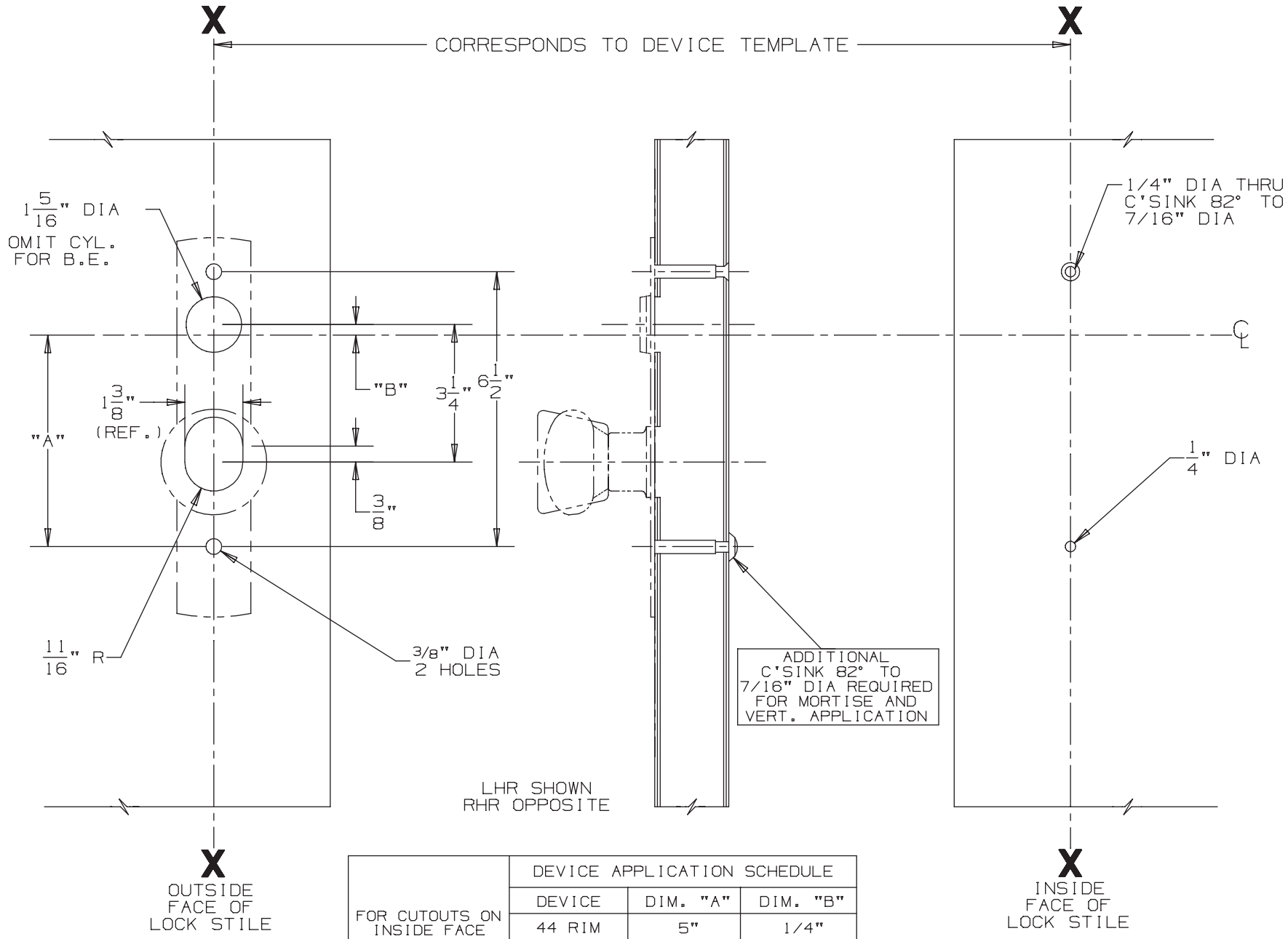

FOR CUTOUTS ON INSIDE FACE OF DOOR SEE DEVICE TEMPLATE	DEVICE APPLICATION SCHEDULE		
	DEVICE	DIM. "A"	DIM. "B"
	44 RIM	5"	1/4"
	88 RIM	5"	1/4"
	88 MORT.	3 1/4"	2"
	8827	3 1/4"	1 3/4"

VON DUPRIN®

TEMPLATE NUMBER: 20061_a

DATE: 05-23-13

606 KR Trim (Rigid Knob)

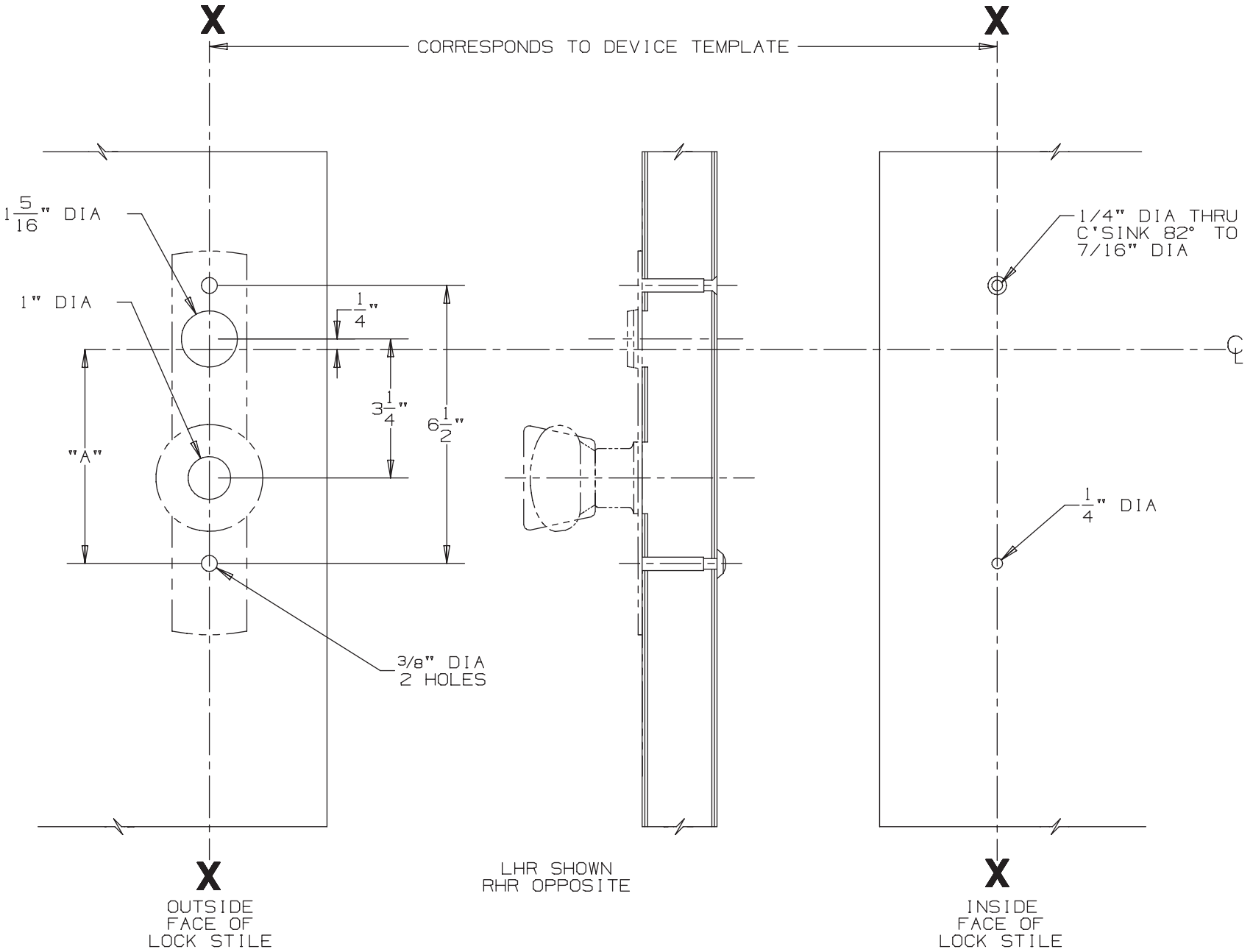

FOR CUTOUTS ON INSIDE FACE OF DOOR SEE DEVICE TEMPLATE	DEVICE APPLICATION SCHEDULE	
	DEVICE	DIM. "A"
	88 RIM	5"

NOTES: SEE MASTER SHEET #10001 FOR SUGGESTED REINFORCING

TEMPLATE NUMBER: 20063_a

DATE: 05-23-13

VON DUPRIN®

NOTES: SEE MASTER SHEET #10001 FOR SUGGESTED REINFORCING

608DT Trim

TEMPLATE NUMBER: 20067_a

DATE: 05-23-13

VON DUPRIN®

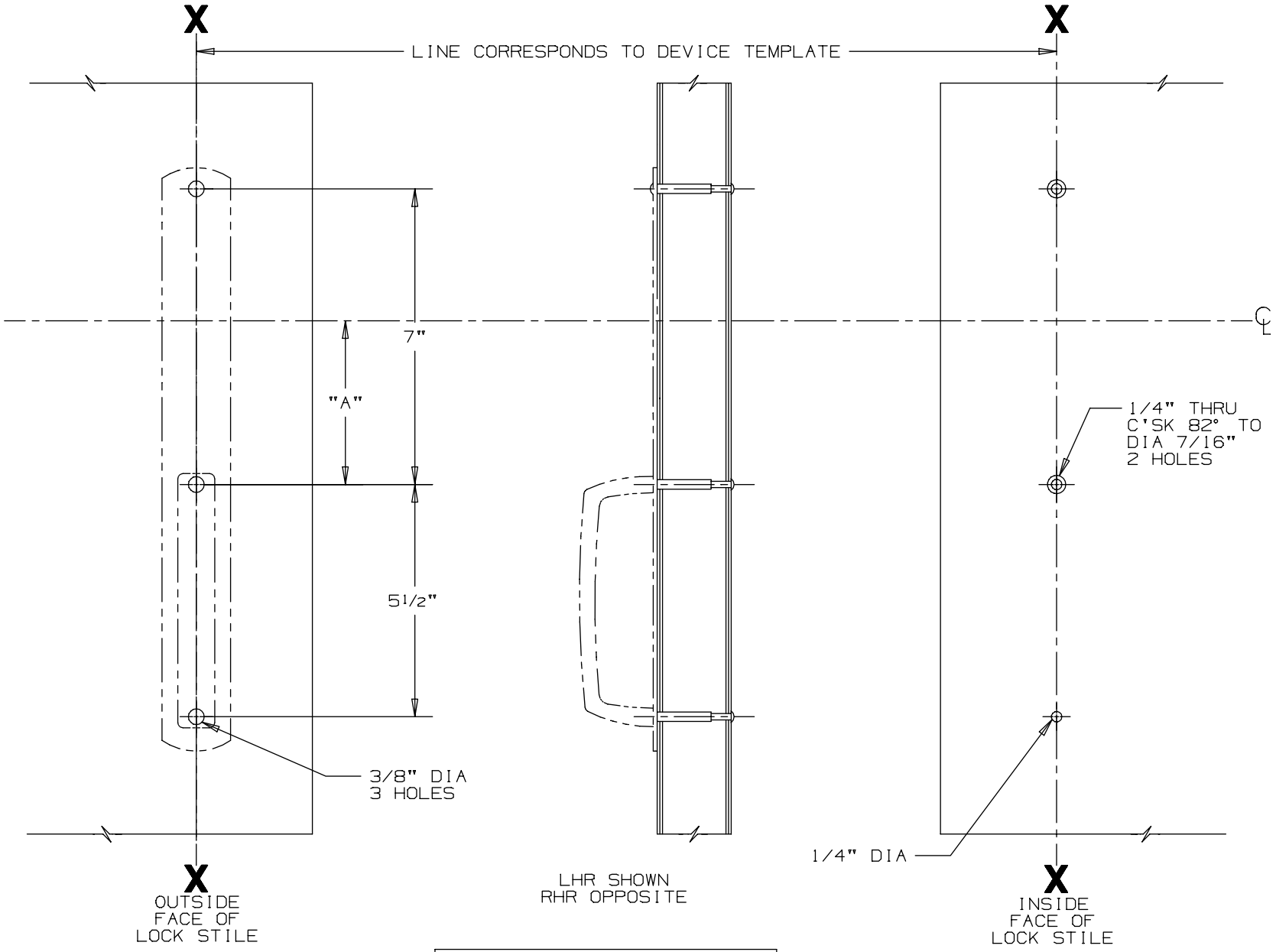

DEVICE APPLICATION SCHEDULE

FOR CUTOUTS ON INSIDE FACE OF DOOR SEE DEVICE TEMPLATE	DEVICE	DIM "A"	DEVICE	DIM "A"	DEVICE	DIM "A"
	44 RIM	3 7/8"	44 VERT.& RIM	3 7/8"	88 VERT.& RIM	3 7/8"
	88 RIM	3 7/8"	44 VERT.& MORT.	3 11/16"	88 VERT.& MORT.	3 3/4"
	88 MORT.	3 3/4"				

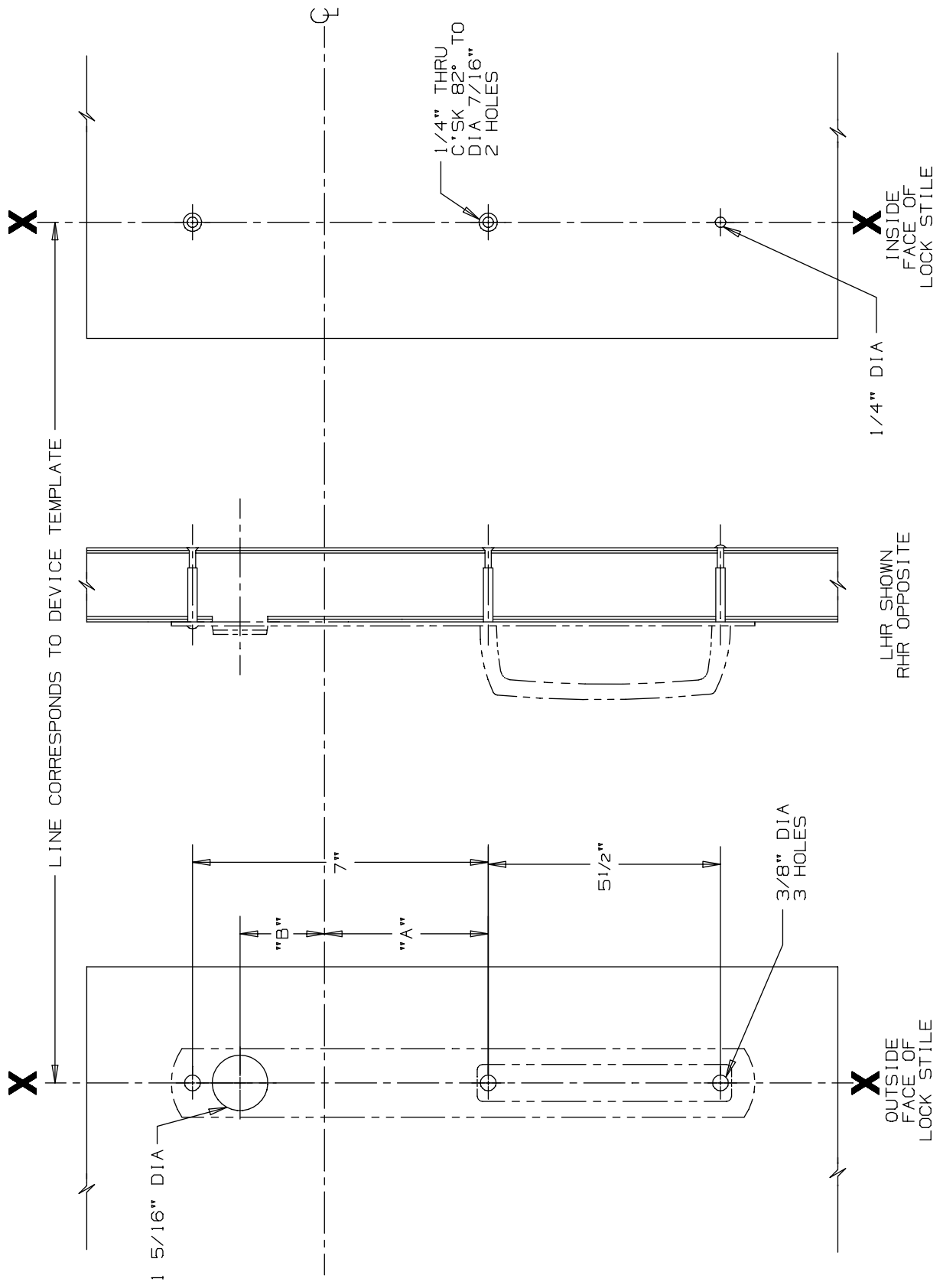

DEVICE APPLICATION SCHEDULE

DEVICE	DIM "A"	DIM "B"
44 RIM	3 7/8"	1/4"
88 RIM	3 7/8"	1/4"
88 MORT.	3 3/4"	2"

FOR CUTOUTS ON INSIDE FACE OF DOOR SEE DEVICE TEMPLATE

608NL Trim

VON DUPRIN®

NOTES: SEE MASTER SHEET #10001 FOR SUGGESTED REINFORCING

TEMPLATE NUMBER: 20068_a

DATE: 05-23-13

608TP & 608TP-BE Trim

NOTES: SEE MASTER SHEET #10001 FOR SUGGESTED REINFORCING

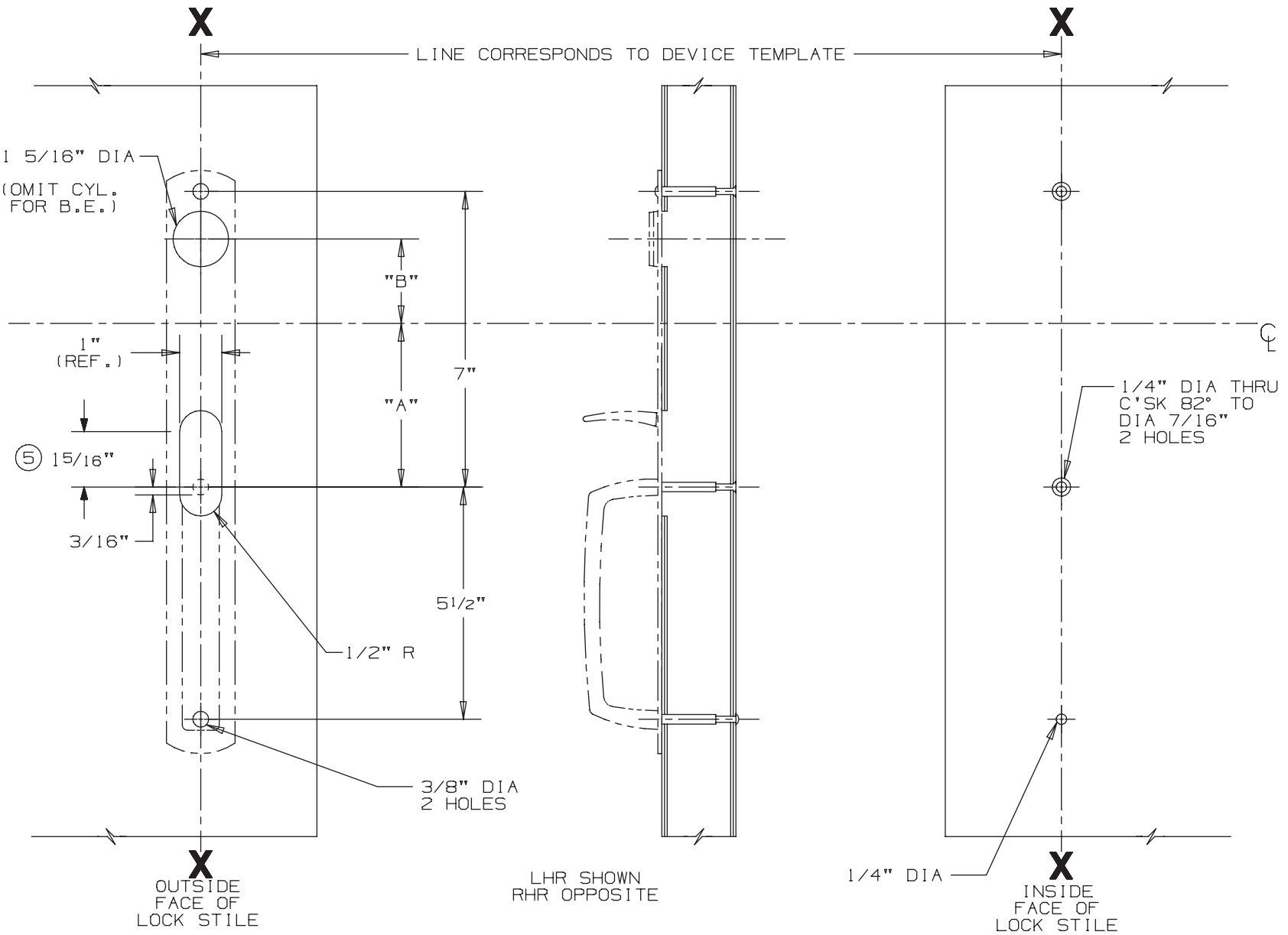

FOR CUTOUTS ON INSIDE FACE OF DOOR SEE DEVICE TEMPLATE

DEVICE APPLICATION SCHEDULE		
DEVICE	DIM "A"	DIM "B"
44 RIM	3 7/8"	1/4"
88 RIM	3 7/8"	1/4"
88 MORT.	3 3/4"	2"
8827	3 7/8"	1 3/4"

IT IS RECOMMENDED THE MOUNTING HOLES BE PREPARED IN THE FIELD

VON DUPRIN®

TEMPLATE NUMBER: 20069_a

DATE: 05-23-13

DEVICE APPLICATION SCHEDULE	
DEVICE	DIM "A"
5547-F CONCEALED VERT.	3 3/16"
8847-F CONCEALED VERT.	3 3/16"

FOR CUTOUTS ON INSIDE FACE OF DOOR SEE DEVICE TEMPLATE

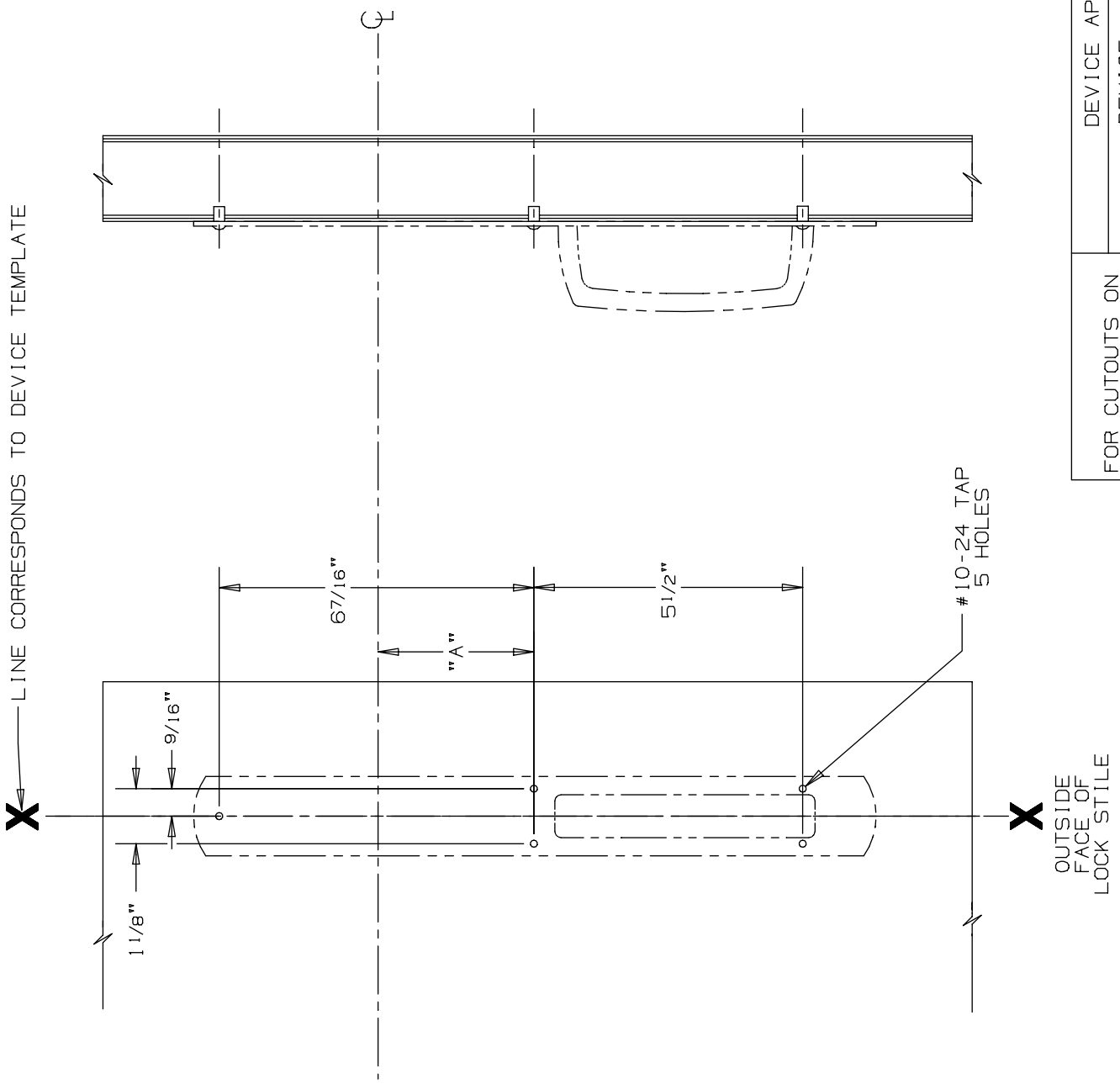

609DT Surface Applied Trim

VON DUPRIN®

NOTES: SEE MASTER SHEET #10001 FOR SUGGESTED REINFORCING

TEMPLATE NUMBER: 20070_a

DATE: 05-23-13

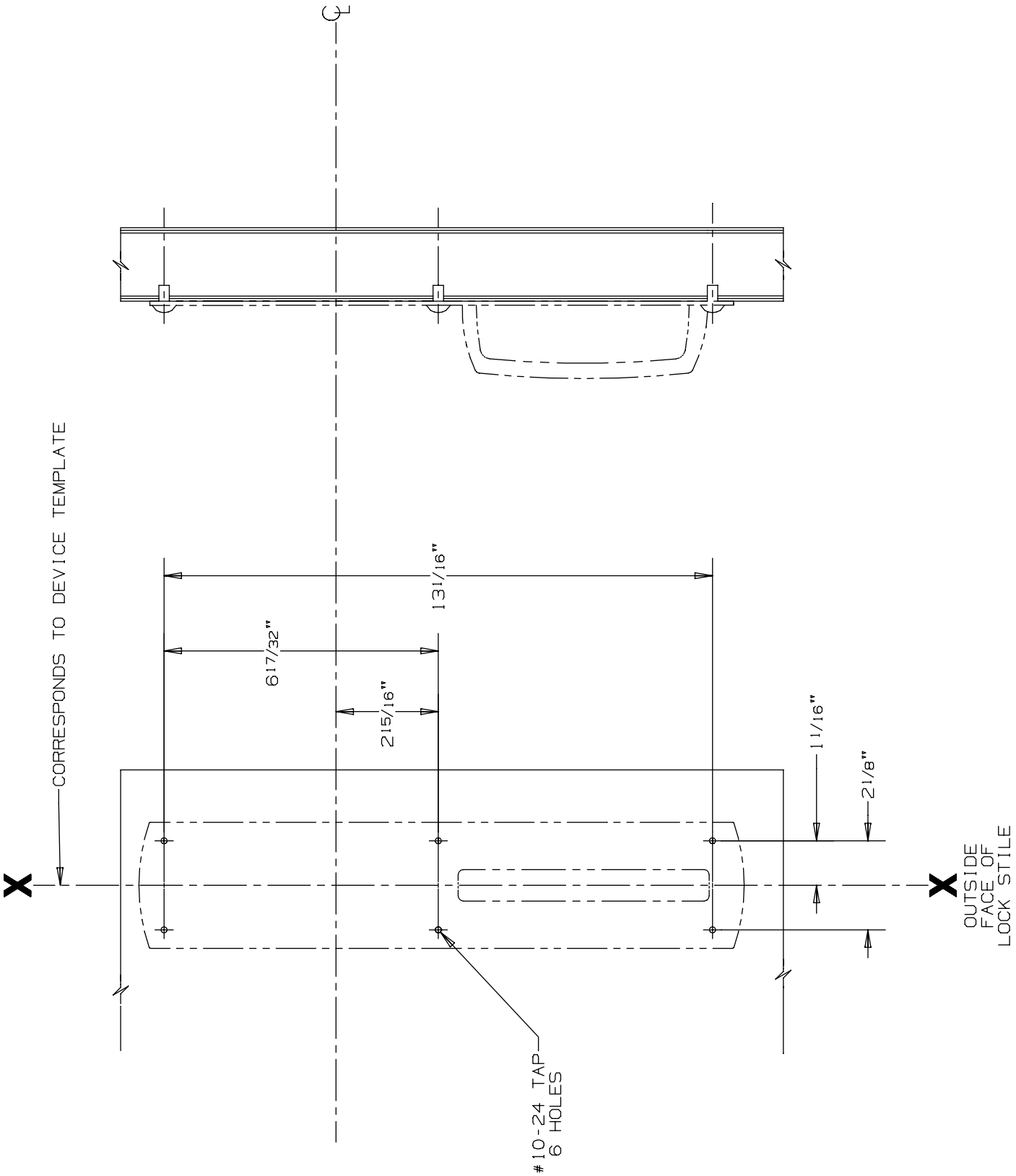

880 DT (Surface Applied) Trim
8847-F Vertical Rod Device

VON DUPRIN®

NOTES: SEE MASTER SHEET #10001 FOR SUGGESTED REINFORCING

TEMPLATE NUMBER: 20249_a

DATE: 05-28-13

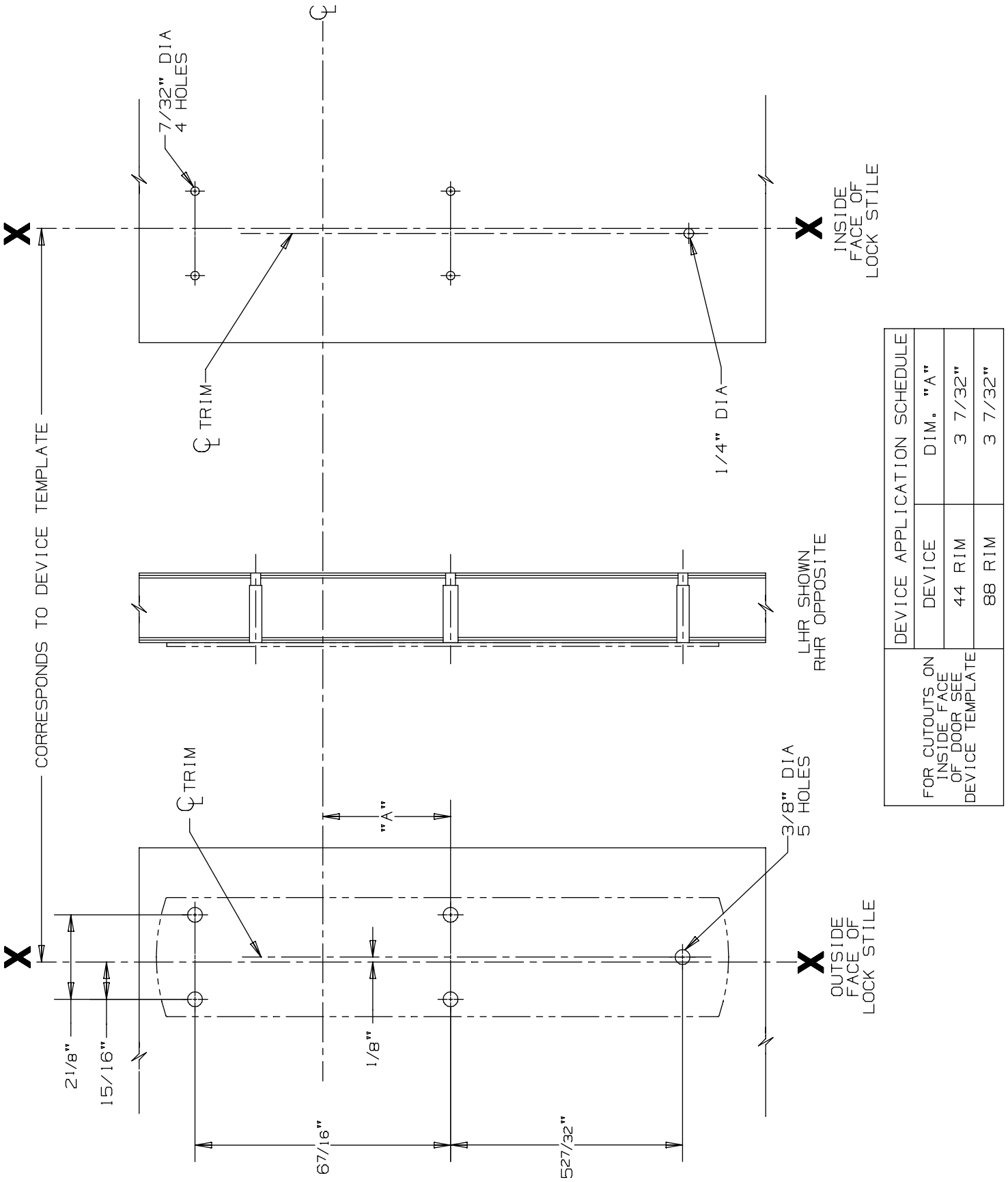

DEVICE APPLICATION SCHEDULE		
DEVICE	DIM. "A"	
44 RIM	3 7/32"	
88 RIM	3 7/32"	

FOR CUTOUTS ON INSIDE FACE OF DOOR SEE DEVICE TEMPLATE

880 EO Trim for 44 & 88 Rim Devices

VON DUPRIN®

NOTES: SEE MASTER SHEET #10001 FOR SUGGESTED REINFORCING

TEMPLATE NUMBER: 20250_a

DATE: 05-28-13

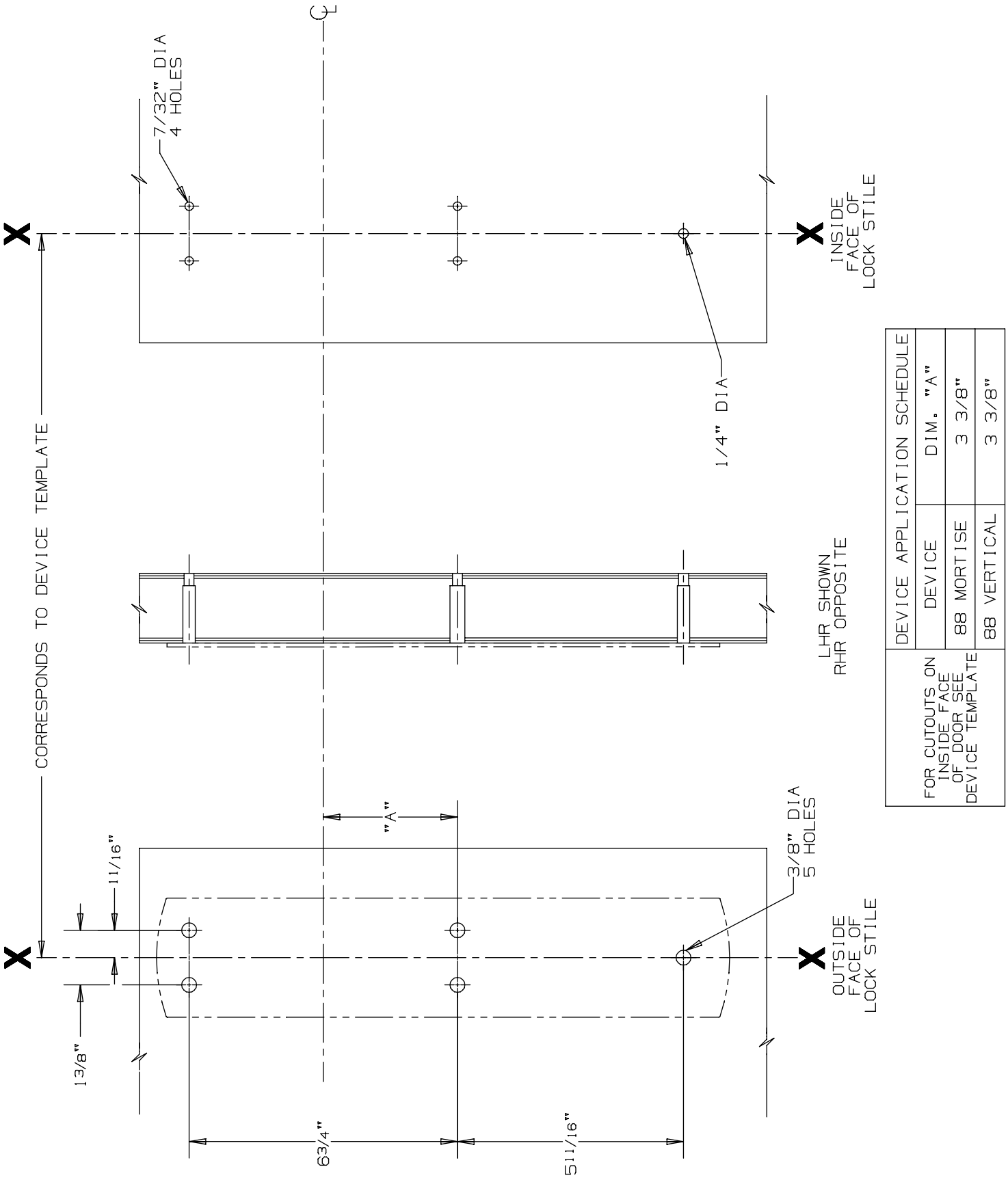

DEVICE APPLICATION SCHEDULE		
DEVICE	DIM. "A"	
88 MORTISE	3 3/8"	
88 VERTICAL	3 3/8"	

FOR CUTOUTS ON INSIDE FACE OF DOOR SEE DEVICE TEMPLATE

880 EO Trim for 88 Mortise & Vertical Devices

VON DUPRIN®

NOTES: SEE MASTER SHEET #10001 FOR SUGGESTED REINFORCING

TEMPLATE NUMBER: 20257_a

DATE: 05-28-13

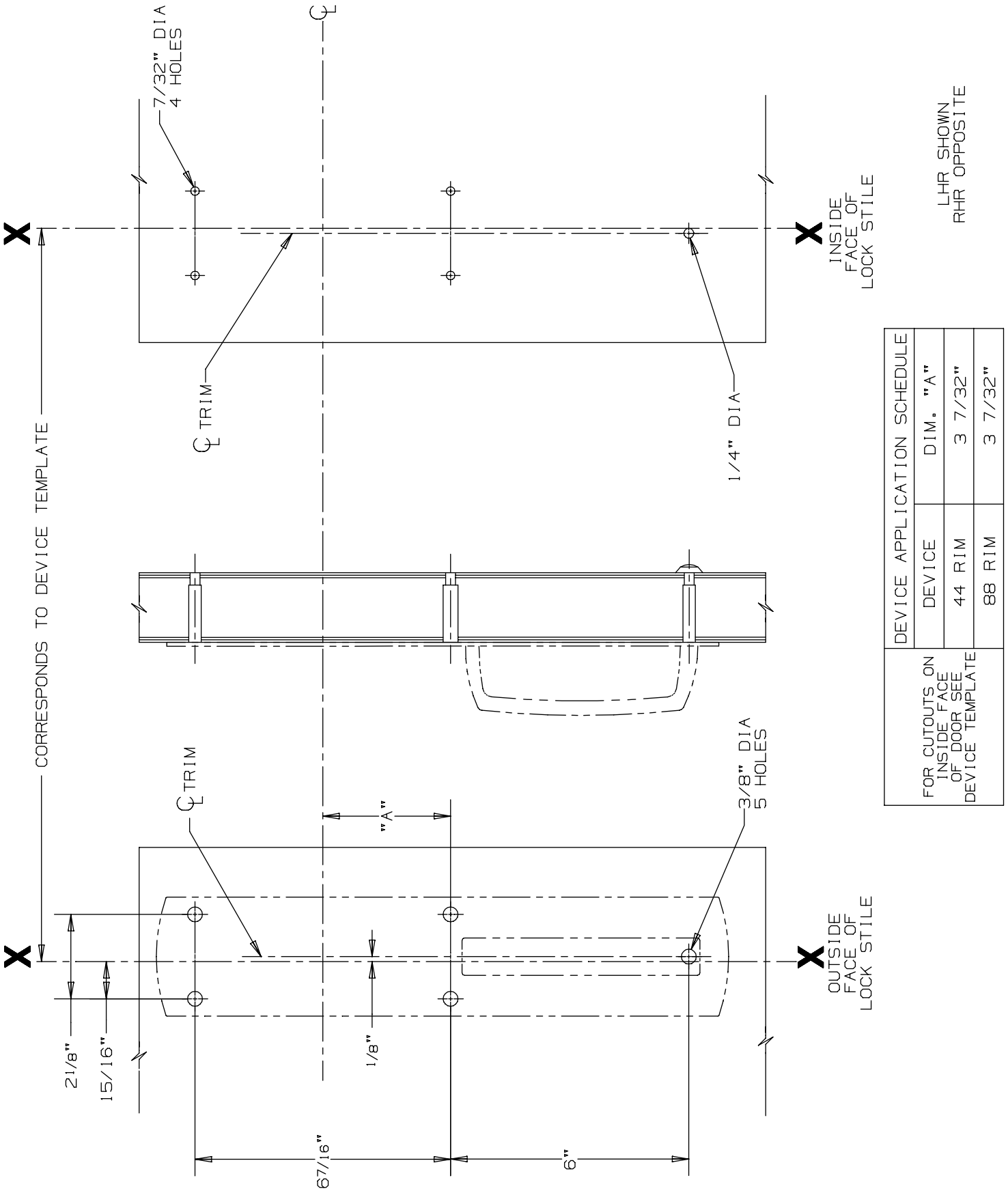

DEVICE APPLICATION SCHEDULE		
DEVICE	DIM. "A"	
44 RIM	3 7/32"	
88 RIM	3 7/32"	

FOR CUTOUTS ON INSIDE FACE OF DOOR SEE DEVICE TEMPLATE

880 DT Trim for 44 & 88 Rim Devices

VON DUPRIN®

NOTES: SEE MASTER SHEET #10001 FOR SUGGESTED REINFORCING

TEMPLATE NUMBER: 20251_a

DATE: 05-28-13

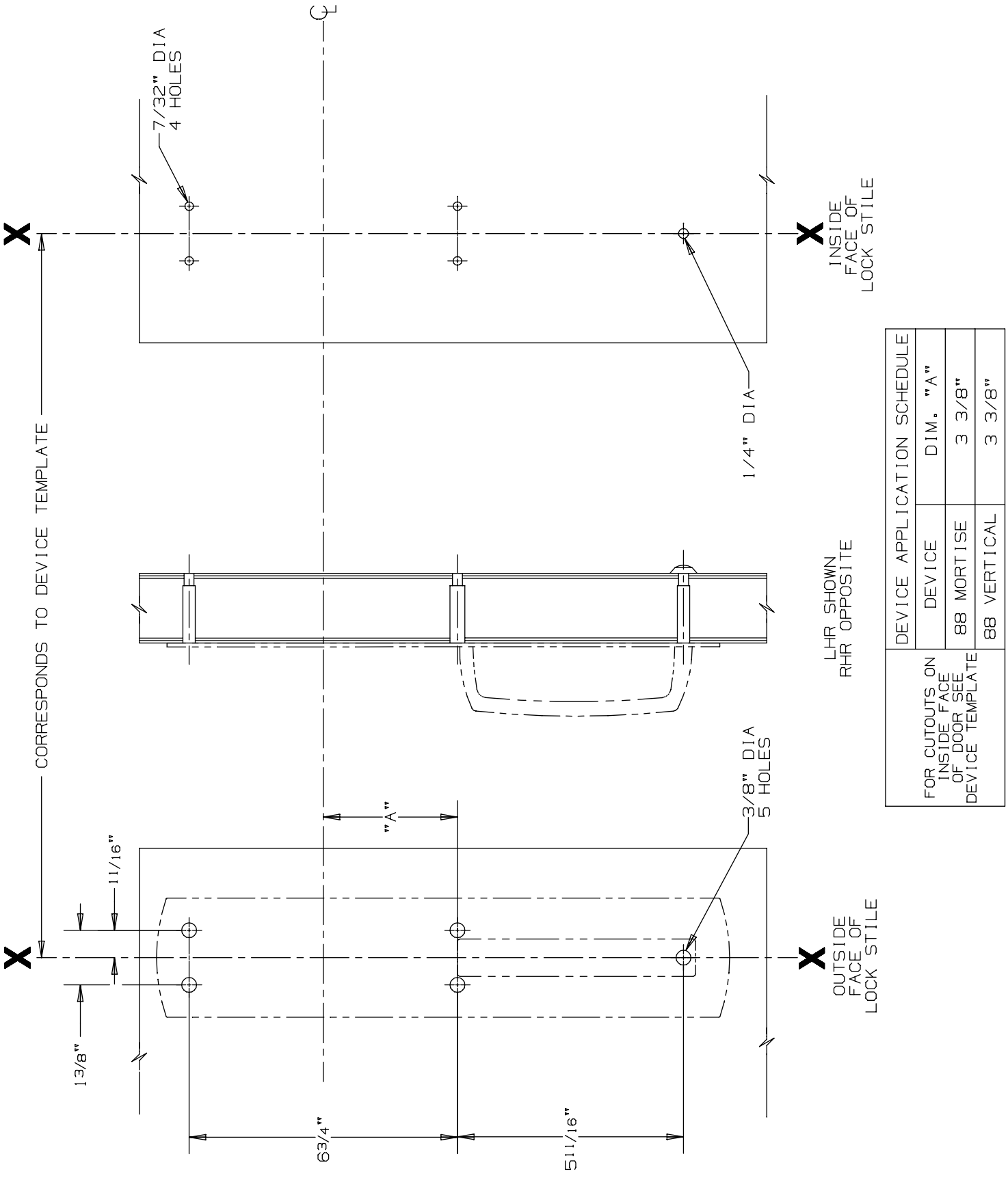

DEVICE APPLICATION SCHEDULE		
DEVICE	DIM. "A"	
88 MORTISE	3 3/8"	
88 VERTICAL	3 3/8"	

FOR CUTOUTS ON INSIDE FACE OF DOOR SEE DEVICE TEMPLATE

880 DT Trim for 88 Mortise & Vertical Devices

VON DUPRIN®

NOTES: SEE MASTER SHEET #10001 FOR SUGGESTED REINFORCING

TEMPLATE NUMBER: 20258_a

DATE: 05-28-13

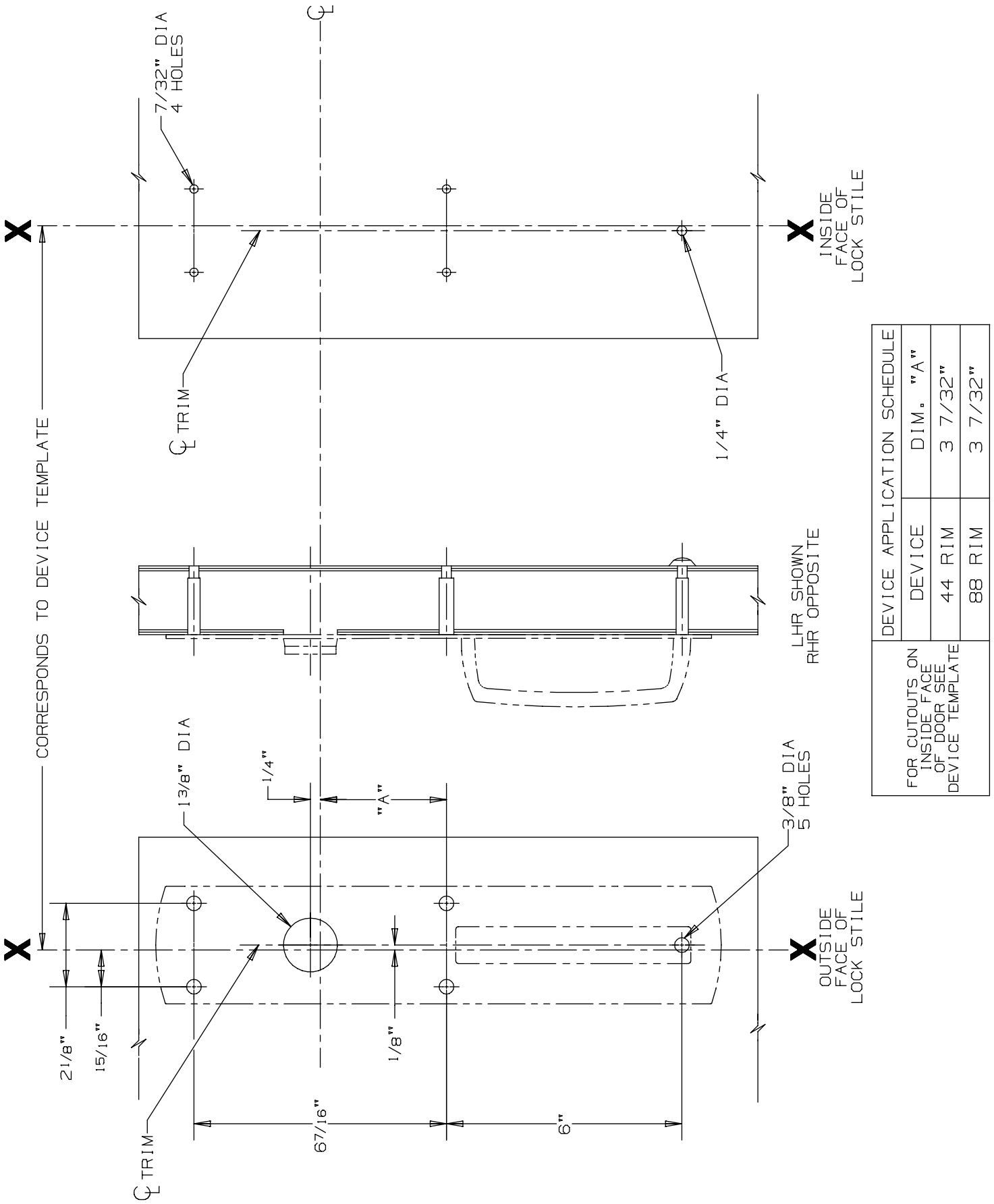

DEVICE APPLICATION SCHEDULE		
DEVICE	DIM. "A"	
44 RIM	3 7/32"	
88 RIM	3 7/32"	

FOR CUTOUTS ON INSIDE FACE OF DOOR SEE DEVICE TEMPLATE

880 NL Trim for 44 & 88 Rim Devices

VON DUPRIN®

NOTES: SEE MASTER SHEET #10001 FOR SUGGESTED REINFORCING

TEMPLATE NUMBER: 20252_a

DATE: 05-28-13

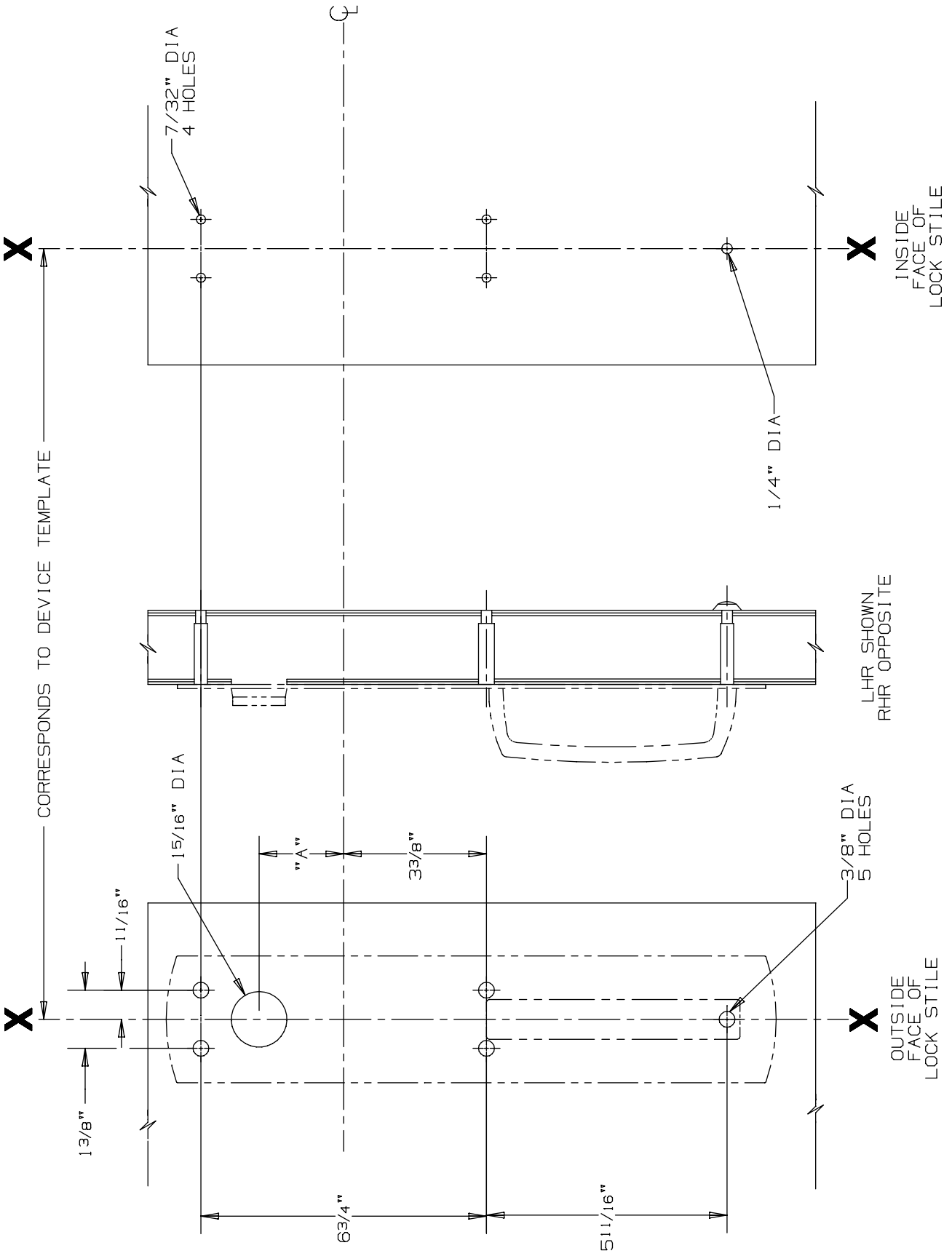

DEVICE APPLICATION SCHEDULE		
DEVICE	DIM. "A"	
88 MORTISE	2"	

FOR CUTOUTS ON INSIDE FACE OF DOOR SEE DEVICE TEMPLATE

880 NL Trim for 88 Mortise Devices

VON DUPRIN®

NOTES: SEE MASTER SHEET #10001 FOR SUGGESTED REINFORCING

TEMPLATE NUMBER: 20259_a

DATE: 05-28-13

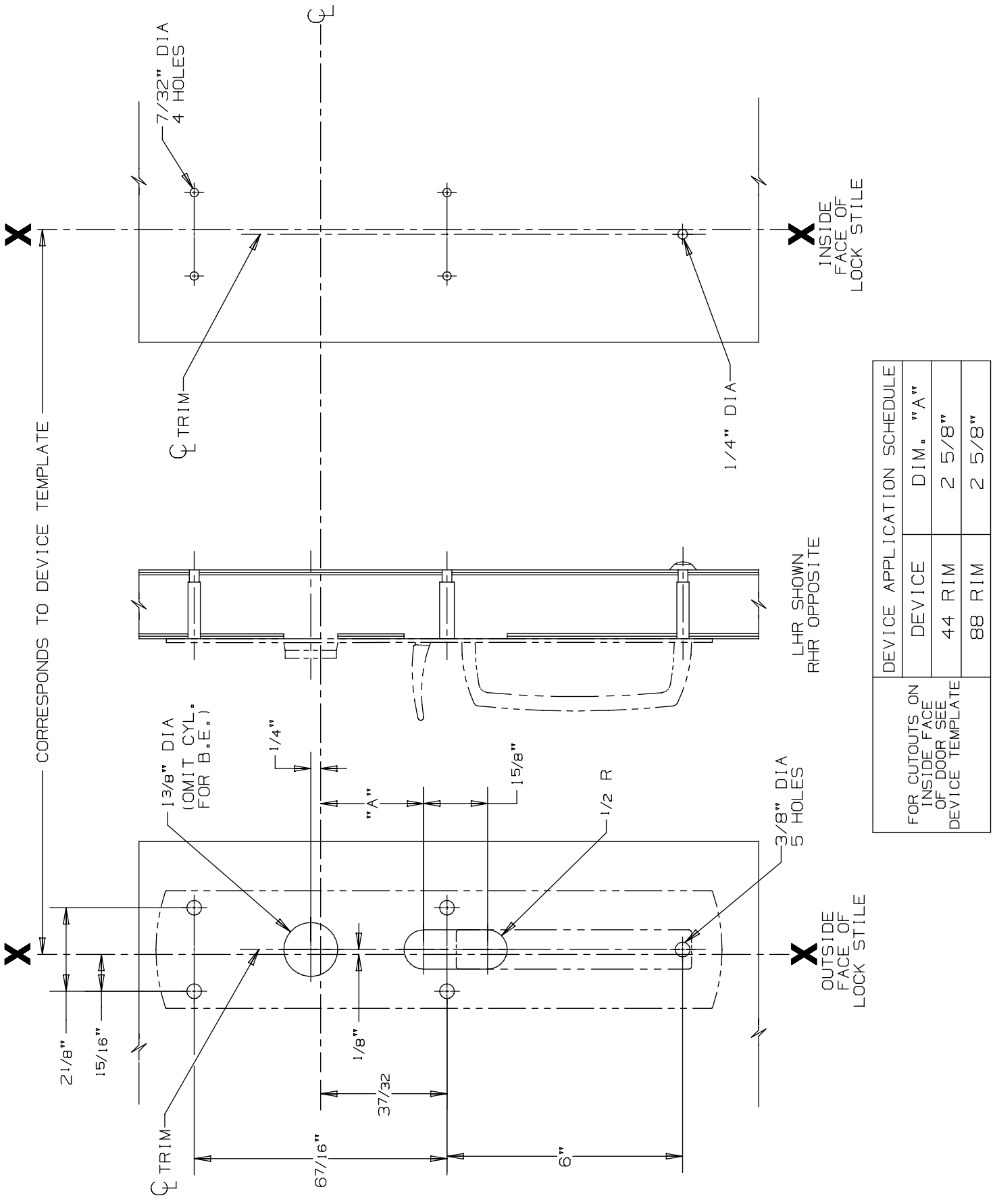

DEVICE APPLICATION SCHEDULE		
DEVICE	DIM. "A"	
44 RIM	2 5/8"	
88 RIM	2 5/8"	

FOR CUTOUTS ON INSIDE FACE OF DOOR SEE DEVICE TEMPLATE

880 TP & 880 TP-BE Trim for 44 & 88 Rim Devices

VON DUPRIN®

NOTES: SEE MASTER SHEET #10001 FOR SUGGESTED REINFORCING

TEMPLATE NUMBER: 20253_a

DATE: 05-28-13

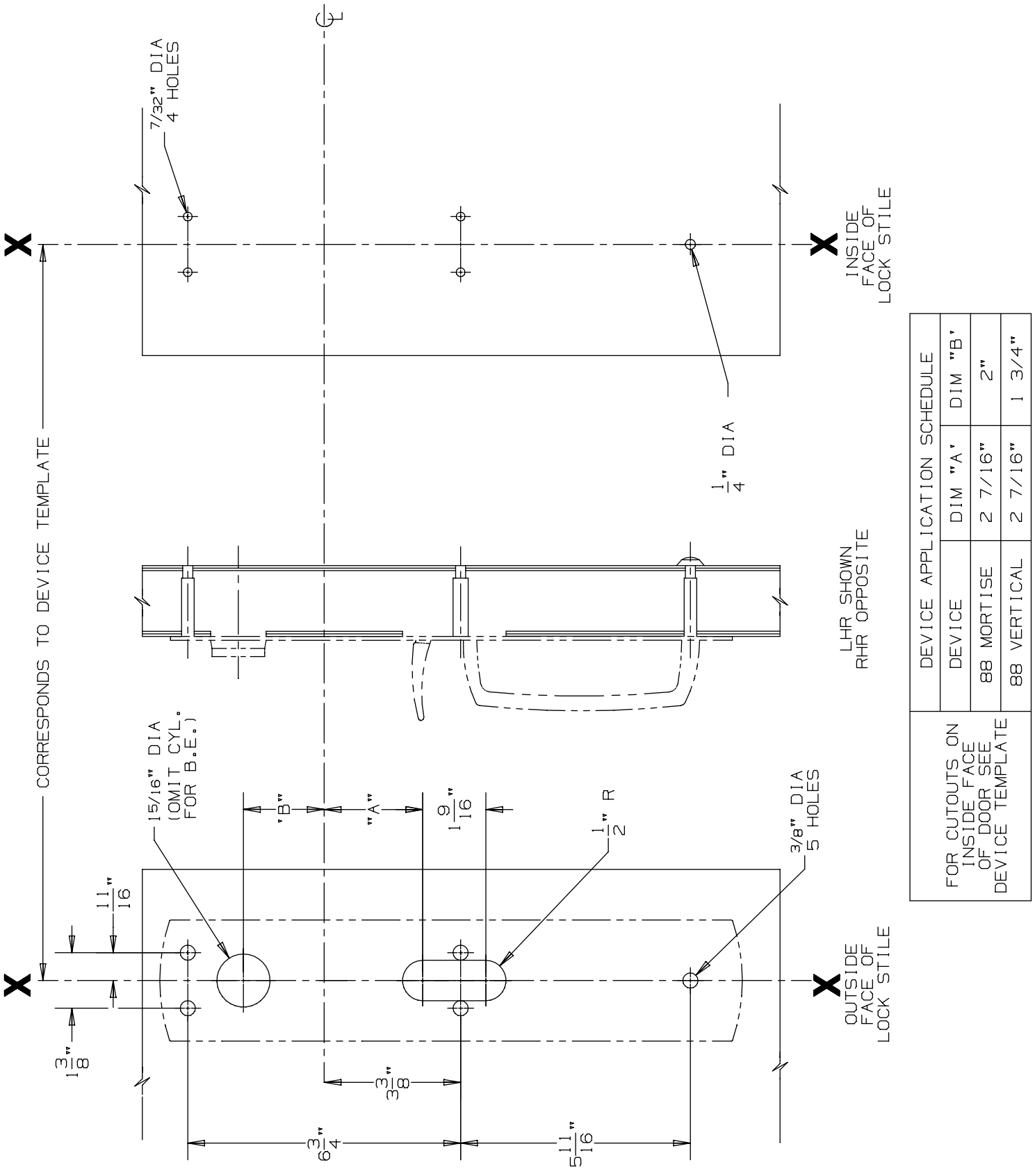

DEVICE APPLICATION SCHEDULE		
DEVICE	DIM "A"	DIM "B"
88 MORTISE	2 7/16"	2"
88 VERTICAL	2 7/16"	1 3/4"

FOR CUTOUTS ON INSIDE FACE OF DOOR SEE DEVICE TEMPLATE

880 TP & 880 TP-BE Trim for 88 Mortise & Vertical Devices

VON DUPRIN®

NOTES: SEE MASTER SHEET #10001 FOR SUGGESTED REINFORCING

TEMPLATE NUMBER: 20260_a

DATE: 05-28-13

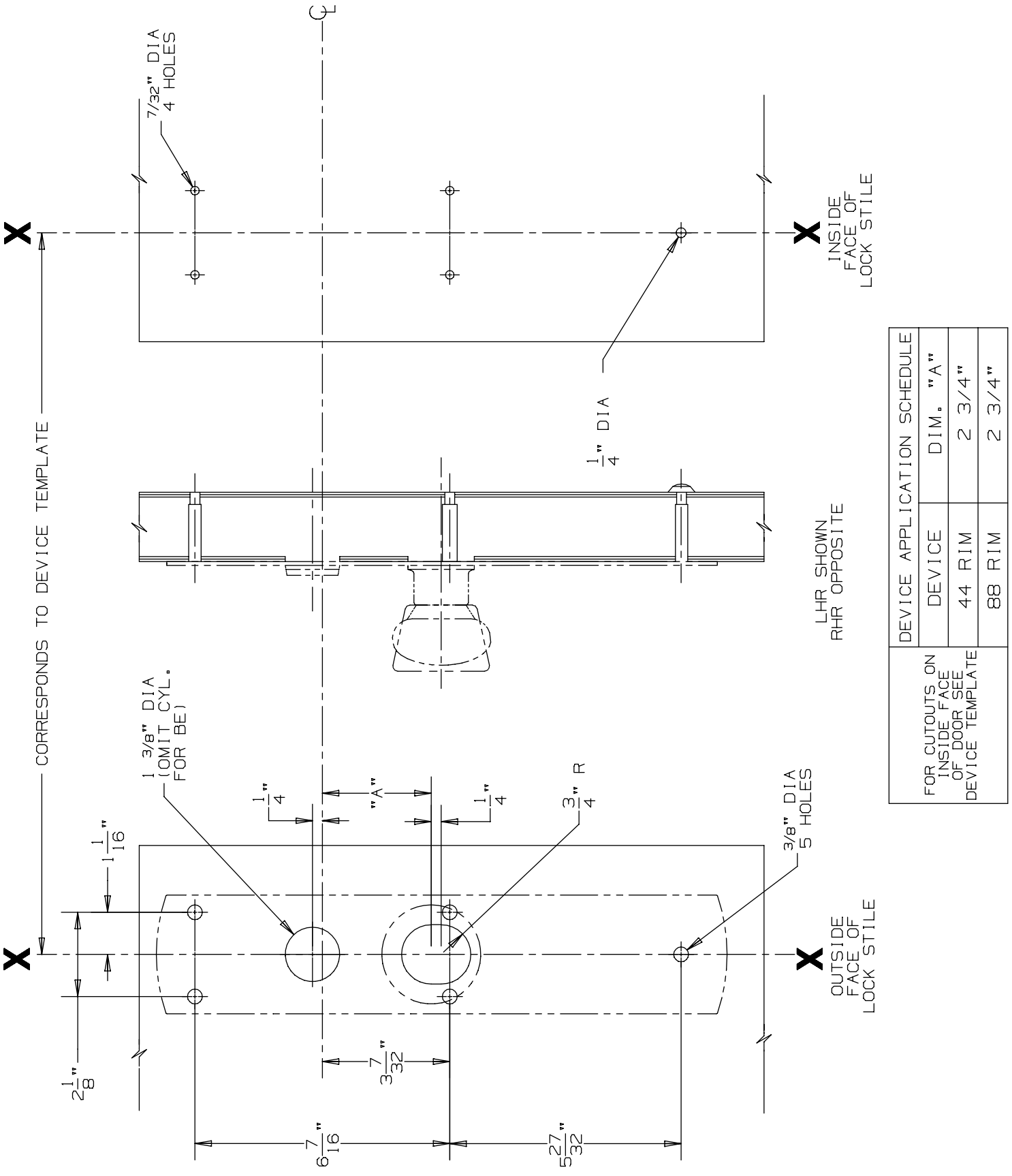

DEVICE APPLICATION SCHEDULE	
DEVICE	DIM. "A"
44 RIM	2 3/4"
88 RIM	2 3/4"

FOR CUTOUTS ON INSIDE FACE OF DOOR SEE DEVICE TEMPLATE

880 K & 880 K-BE Trim for 44 & 88 Rim Devices

VON DUPRIN®

NOTES: SEE MASTER SHEET #10001 FOR SUGGESTED REINFORCING

TEMPLATE NUMBER: 20254_a

DATE: 05-28-13

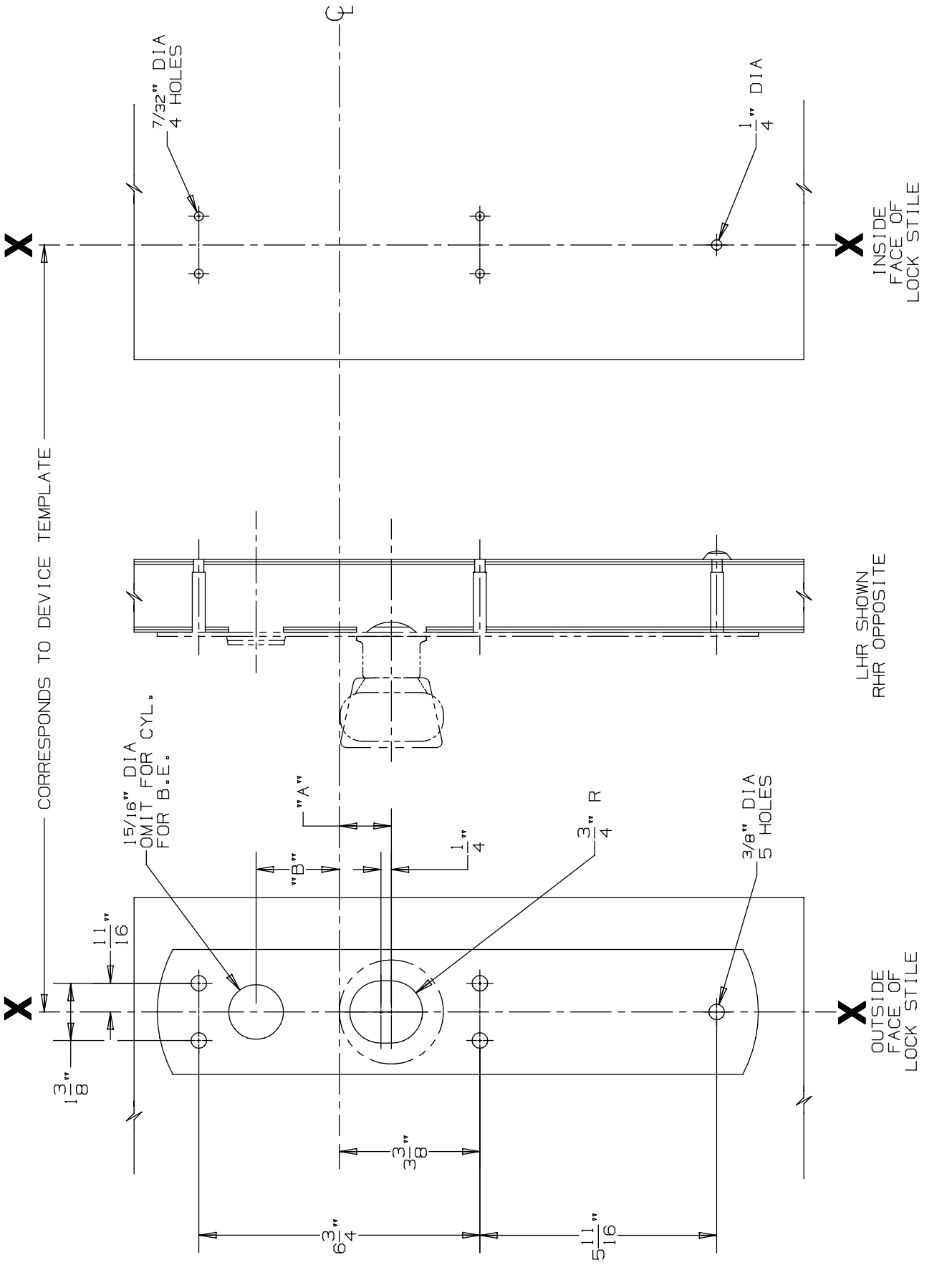

DEVICE APPLICATION SCHEDULE			
DEVICE	DIM. "A"	DIM. "B"
88 MORTISE	1 1/4"	2"
88 VERTICAL	1 1/2"	1 3/4"

FOR CUTOUTS ON INSIDE FACE OF DOOR SEE DEVICE TEMPLATE

880 K & 880 K-BE Trim for 88 Mortise & Vertical Devices

VON DUPRIN®

NOTES: SEE MASTER SHEET #10001 FOR SUGGESTED REINFORCING

TEMPLATE NUMBER: 20261_a

DATE: 05-23-13

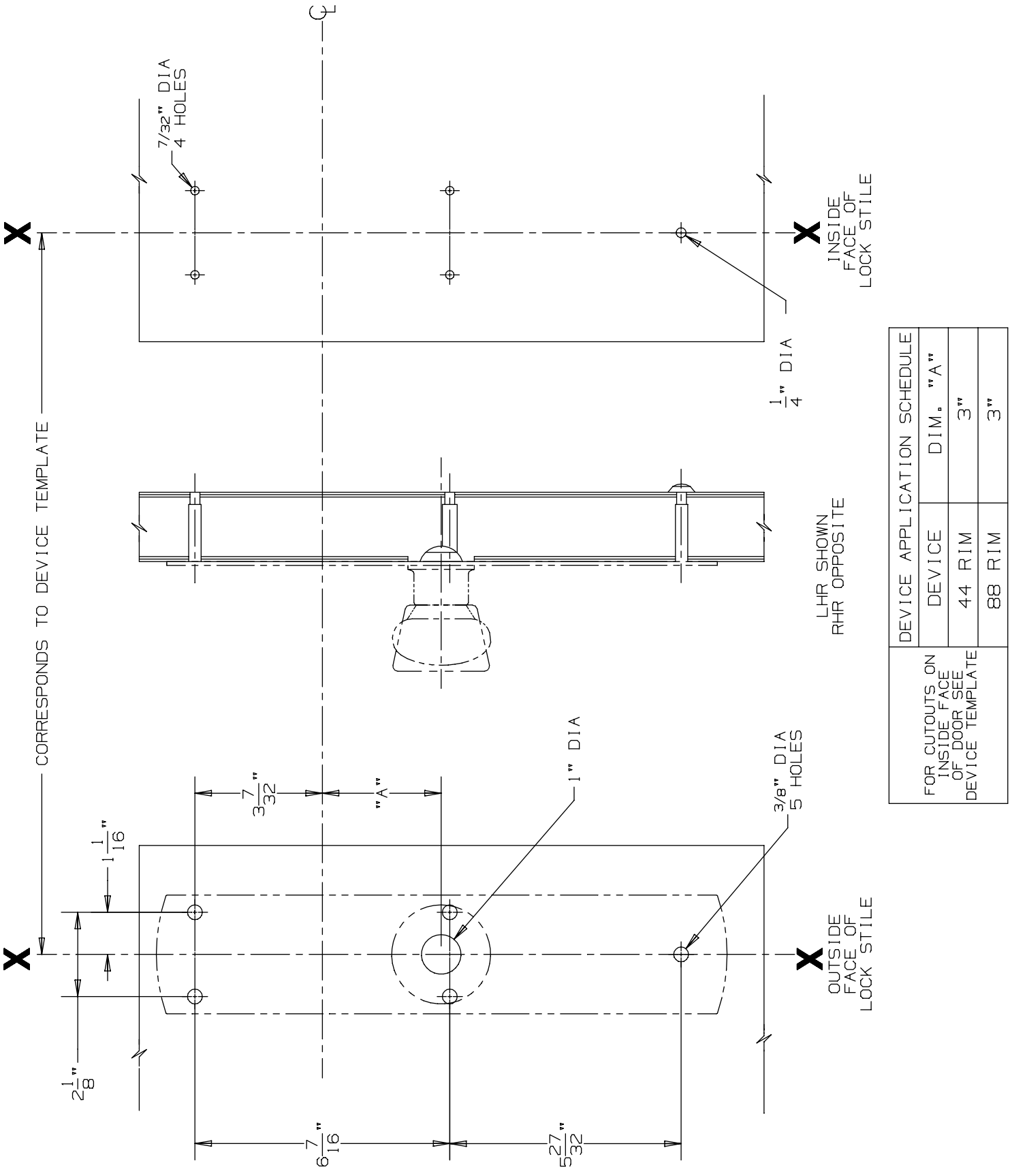

DEVICE APPLICATION SCHEDULE		
DEVICE	DIM. "A"	
44 RIM	3"	
88 RIM	3"	

FOR CUTOUTS ON INSIDE FACE OF DOOR SEE DEVICE TEMPLATE

880 K-DT Trim for 44 & 88 Rim Devices

VON DUPRIN®

NOTES: SEE MASTER SHEET #10001 FOR SUGGESTED REINFORCING

TEMPLATE NUMBER: 20255_a

DATE: 05-28-13

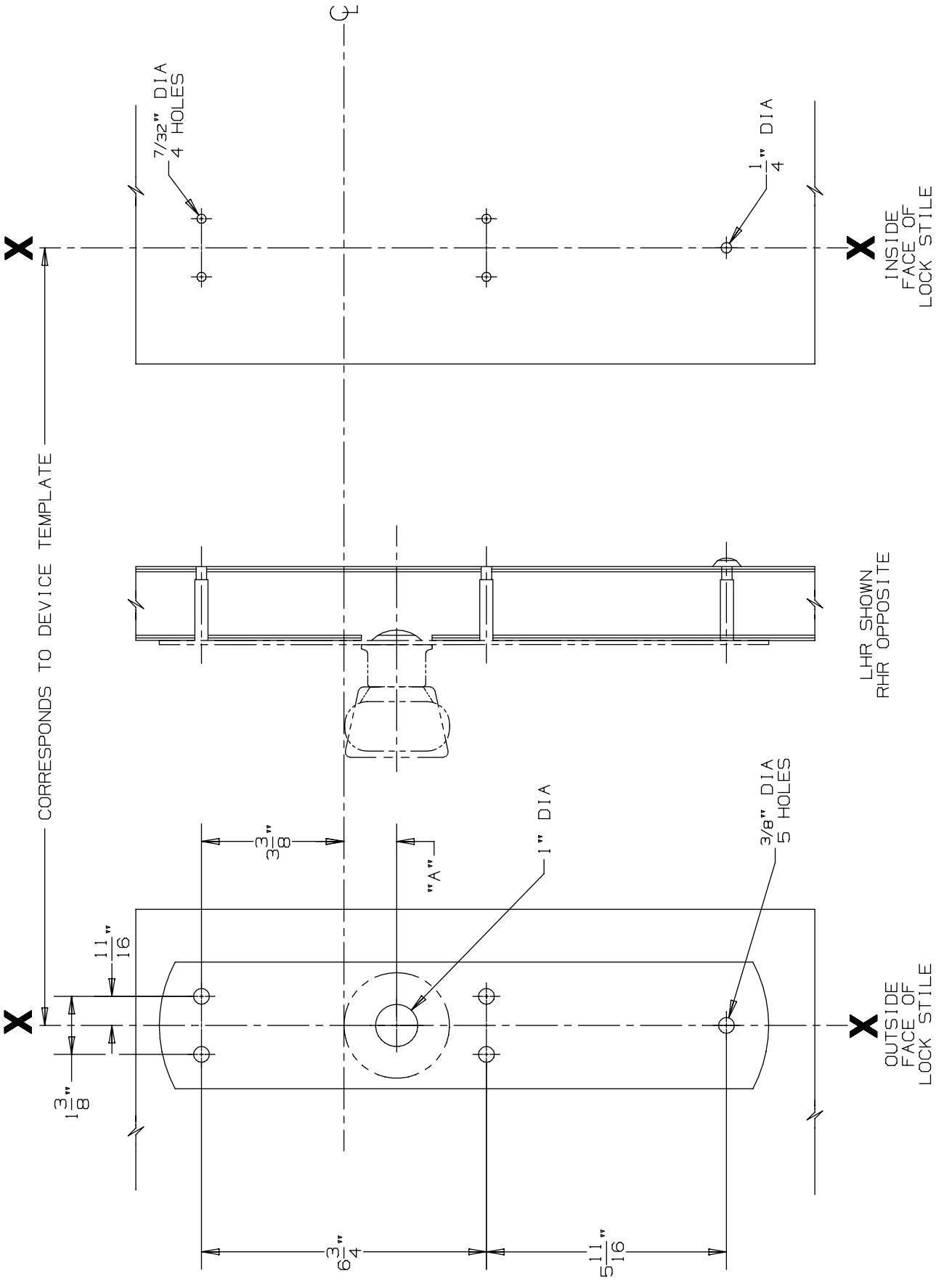

DEVICE APPLICATION SCHEDULE		
DEVICE	DIM. "A"	
88 MORTISE	1 1/4"	
88 VERTICAL	1 1/2"	

FOR CUTOUTS ON INSIDE FACE OF DOOR SEE DEVICE TEMPLATE

880 K-DT Trim for 88 Mortise & Vertical Devices

VON DUPRIN®

NOTES: SEE MASTER SHEET #10001 FOR SUGGESTED REINFORCING

TEMPLATE NUMBER: 20262_a

DATE: 05-23-13

880 KR Trim (Rigid Knob)

NOTES: SEE MASTER SHEET #10001 FOR SUGGESTED REINFORCING

TEMPLATE NUMBER: 20256_a

DATE: 05-28-13

VON DUPRIN®

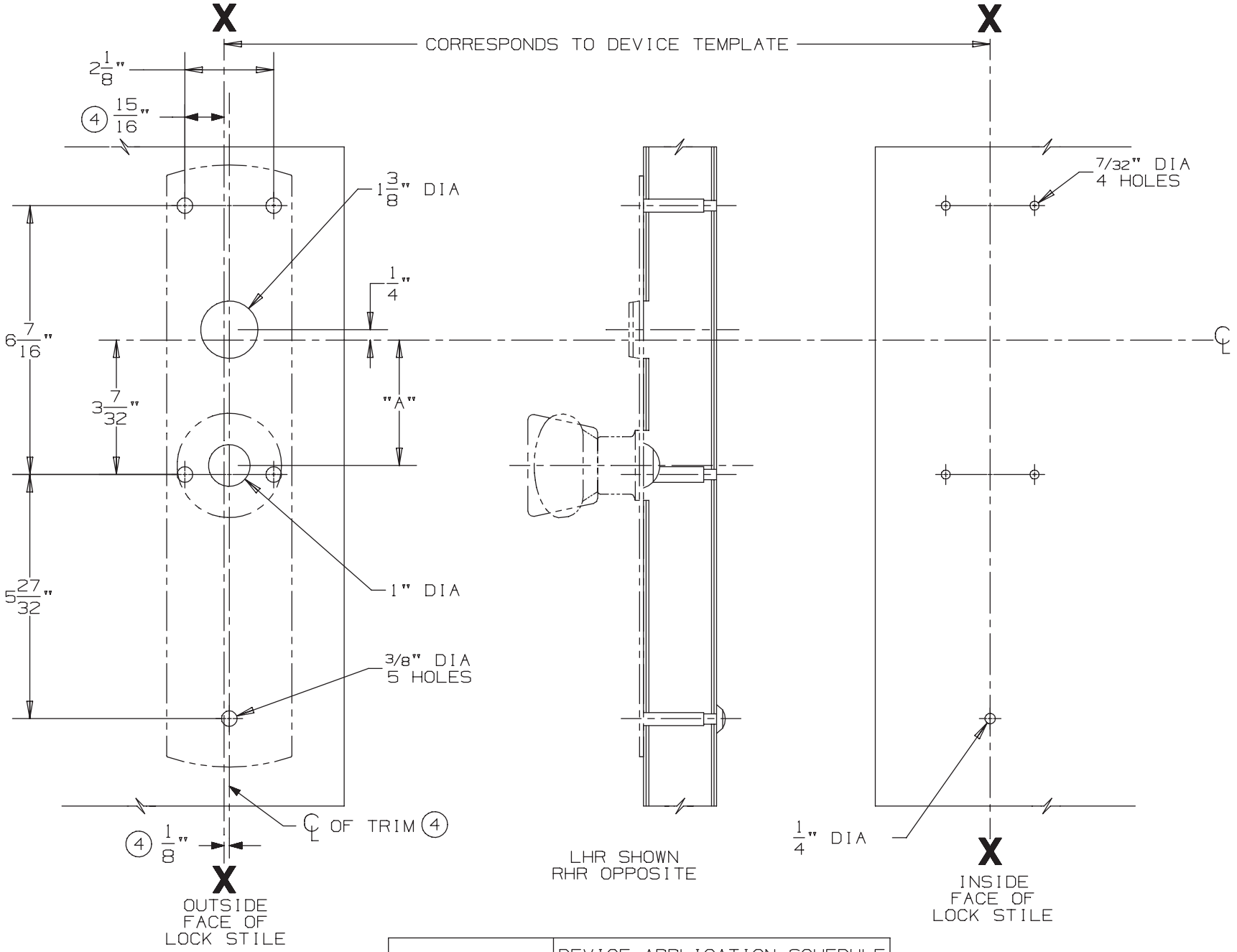

FOR CUTOUTS ON INSIDE FACE OF DOOR SEE DEVICE TEMPLATE	DEVICE APPLICATION SCHEDULE	
	DEVICE	DIM. "A"
	44 RIM	3"
	88 RIM	3"

392-7 (PULL BELOW CENTER)

FOR NL, TL OR DT APPLICATIONS

DRILL 1/4" DIA. C'SINK TO 82° FOR 88 & 55 SERIES DEVICES
DRILL 1/4" DIA. THRU FOR 99 SERIES DEVICES
SCREW THRU BOLT TO 99 DEVICE CHASSIS

③

DEVICE APPLICATION SCHEDULE	DIM "A"
98/99 SERIES RIM	3 1/2"
98/99 SERIES SURFACE VERTICAL	3 1/2"
98/99 SERIES MORTISE	3 1/2"
88 SERIES RIM	3 11/16"
88 SERIES SURFACE VERTICAL	3 11/16"
88 SERIES MORTISE	3 11/16"
55 SERIES RIM	13/16"

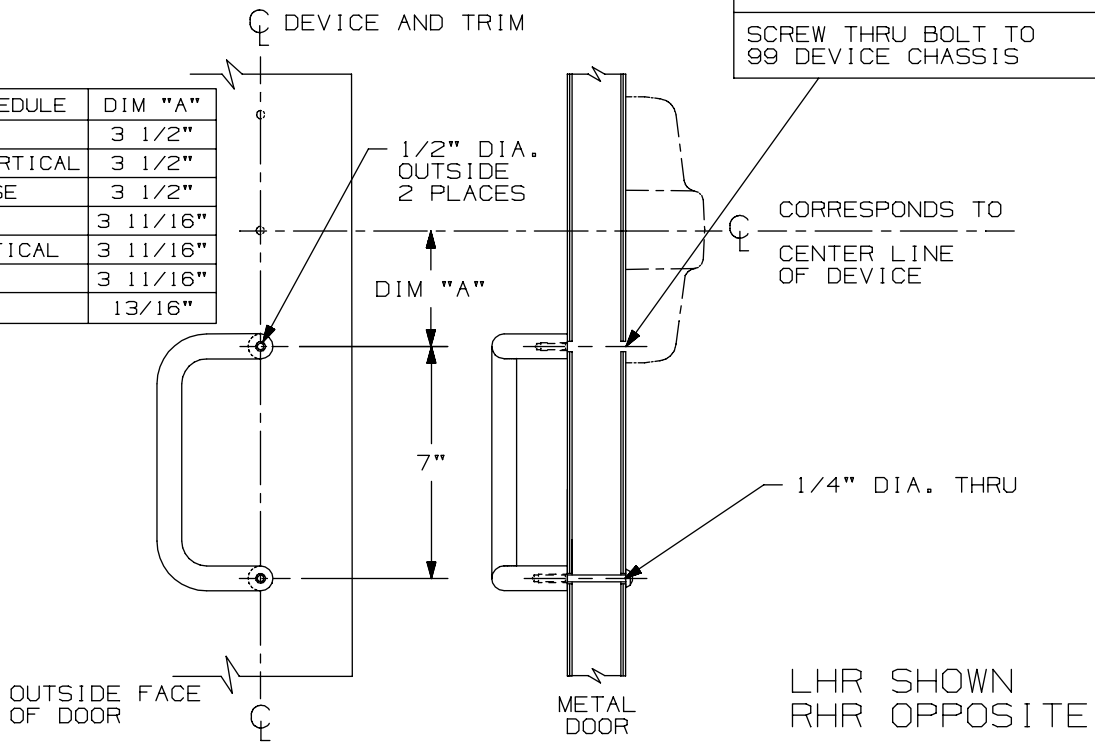

LHR SHOWN
RHR OPPOSITE

392-7 (PULL ON CENTER)

FOR NL, TL OR DT APPLICATIONS

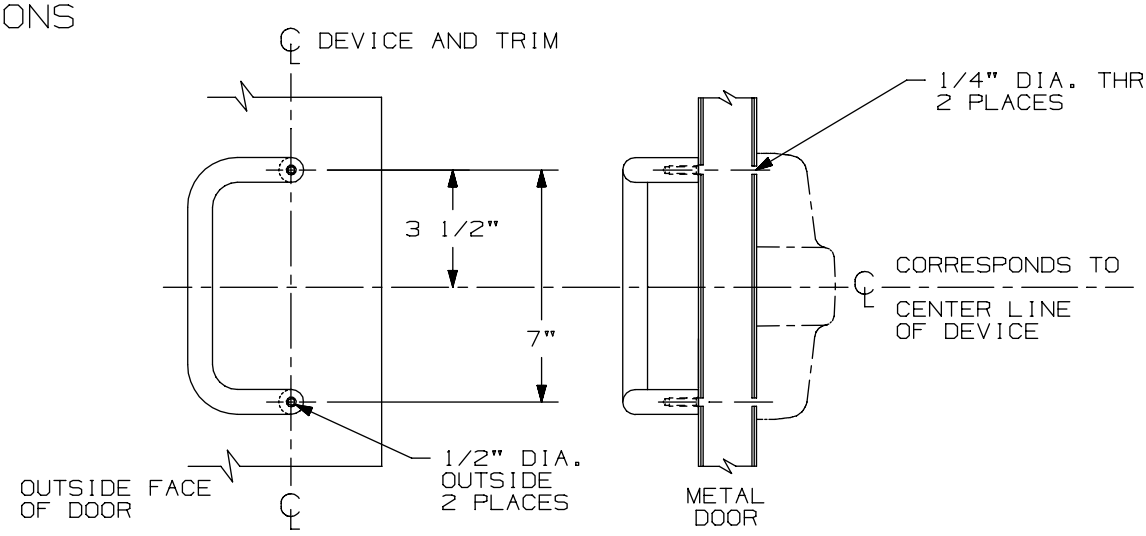

③

DEVICE APPLICATION SCHEDULE
98/99 SERIES RIM (DT OR NL)
98/99 SERIES SURFACE VERTICAL (DT, NL OR TL)
98/99 SERIES MORTISE (DT OR NL)
98/99 SERIES CONCEALED VERTICAL (DT, NL OR TL)

LHR SHOWN
RHR OPPOSITE

392-7 Pull

VON DUPRIN®

NOTES: SEE MASTER SHEET #10001 FOR SUGGESTED REINFORCING

TEMPLATE NUMBER: 20447_a

DATE: 05-23-13

88 Series Trims, Controls & Strikes

-

88 Series Controls

NOTES: SEE MASTER SHEET #10001 FOR SUGGESTED REINFORCING

371-L Control

VON DUPRIN®

TEMPLATE NUMBER: 40098_a

DATE: 05-28-13

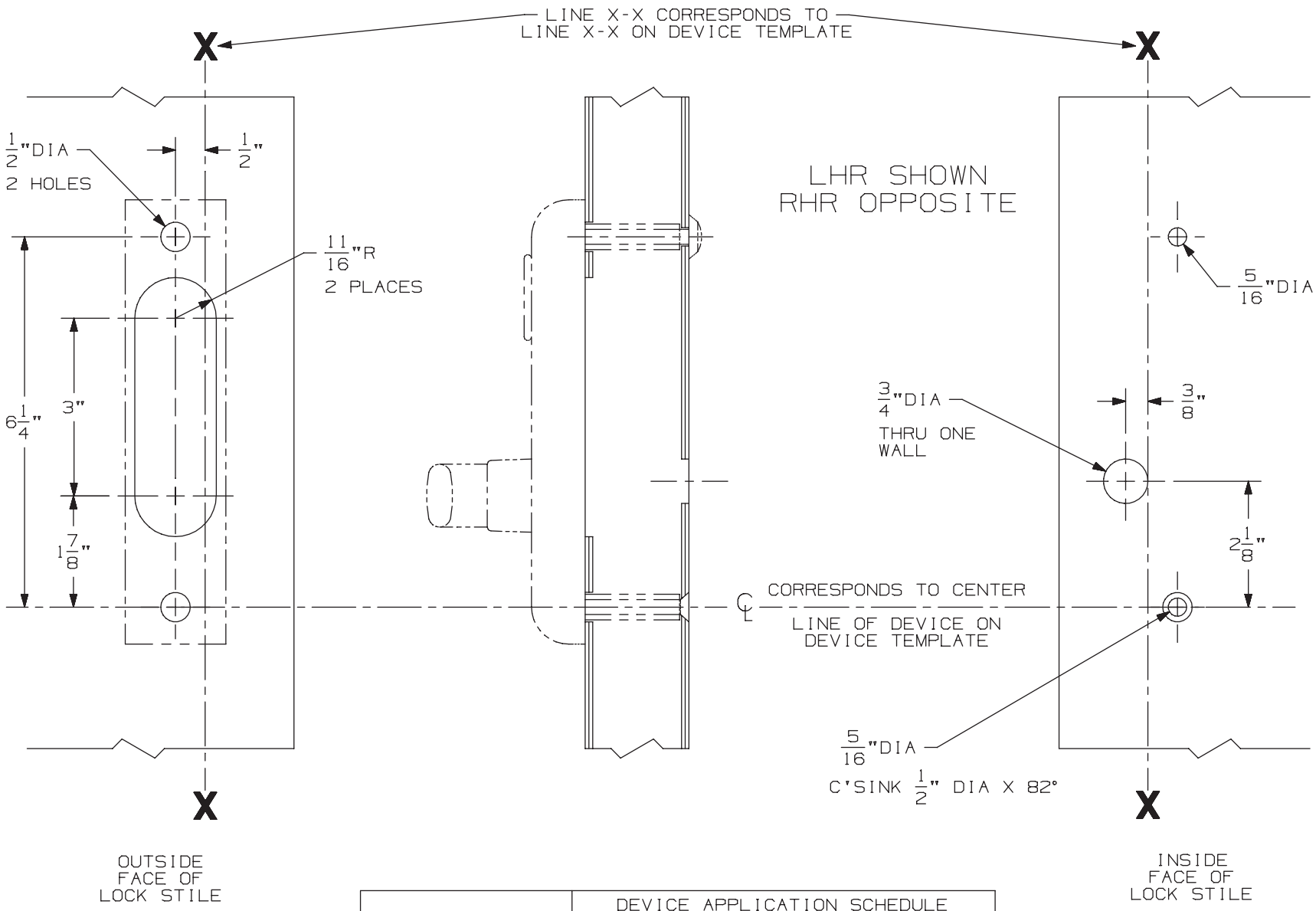

	DEVICE APPLICATION SCHEDULE
FOR CUTOUT ON INSIDE FACE OF DOOR SEE DEVICE TEMPLATE	8847-F VERTICAL ROD DEVICE

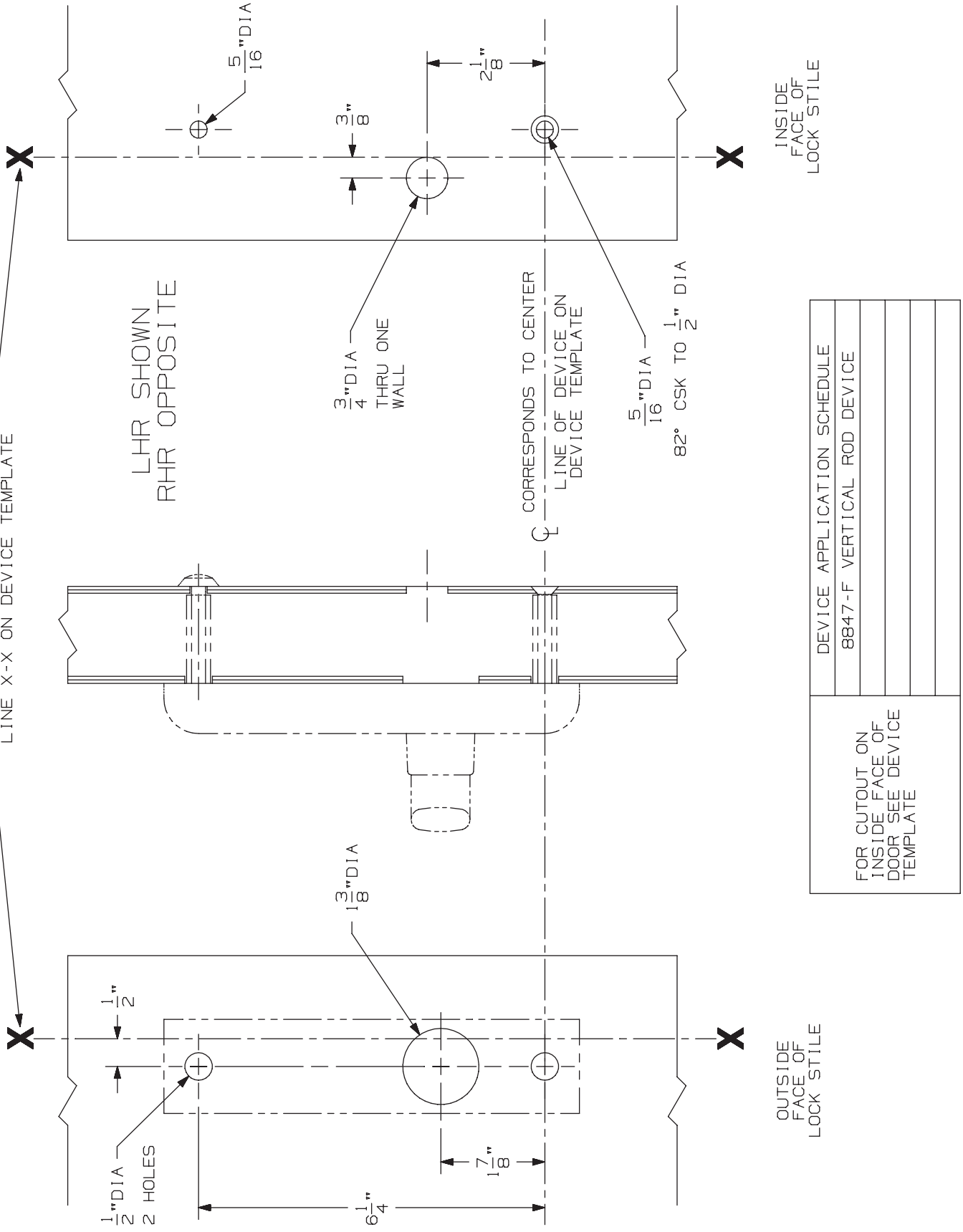

371-L-BE Control

VON DUPRIN®

NOTES: SEE MASTER SHEET #10001 FOR SUGGESTED REINFORCING

TEMPLATE NUMBER: 40099_a

DATE: 05-28-13

NOTES: SEE MASTER SHEET #10001 FOR SUGGESTED REINFORCING

373-L Control

VON DUPRIN®

TEMPLATE NUMBER: 40104_a

DATE: 05-28-13

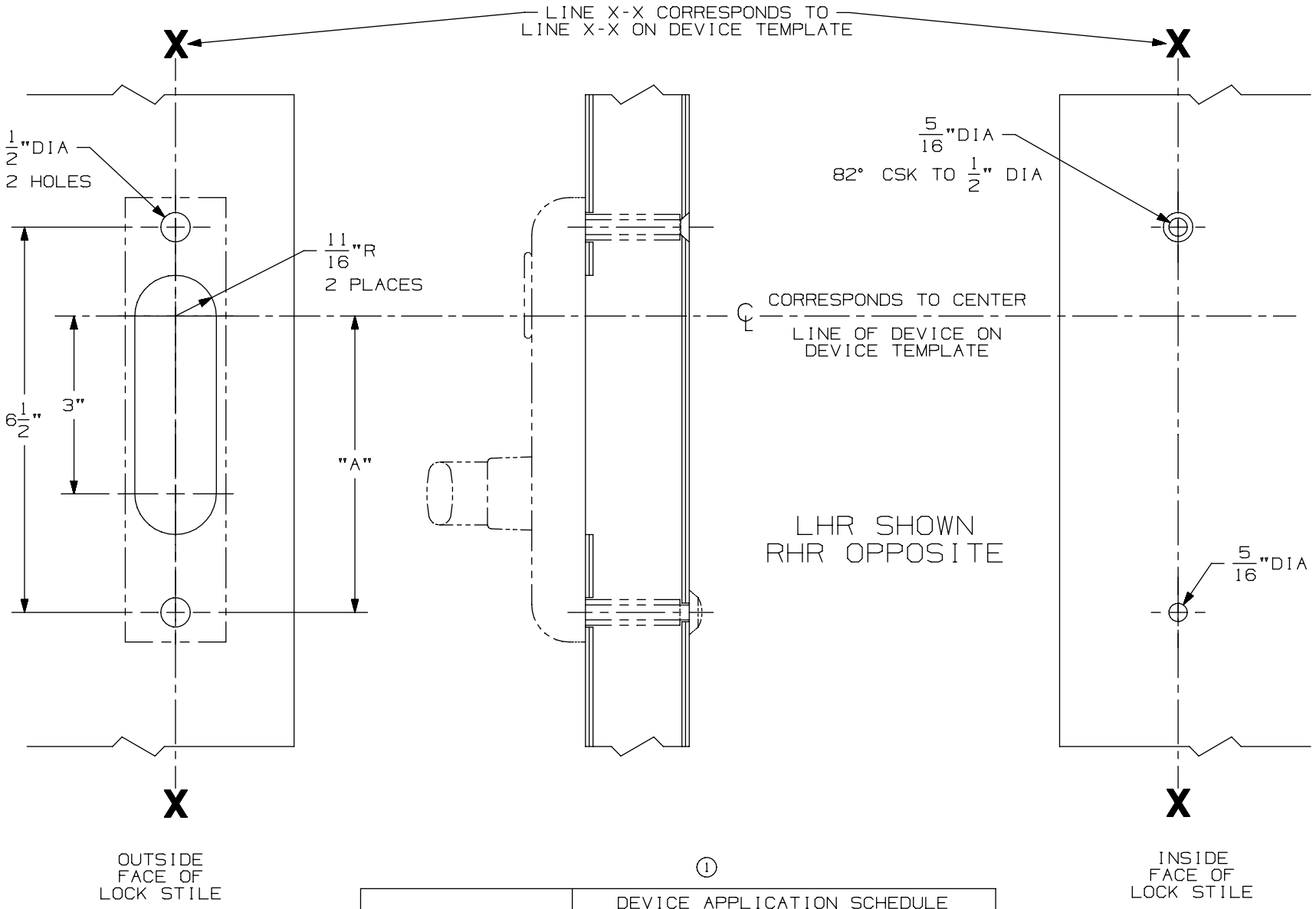

①

FOR CUTOUT ON INSIDE FACE OF DOOR SEE DEVICE TEMPLATE	DEVICE APPLICATION SCHEDULE	
	DEVICE	DIM "A"
	88L RIM	5"

NOTES: SEE MASTER SHEET #10001 FOR SUGGESTED REINFORCING

373-L-BE Control

VON DUPRIN®

TEMPLATE NUMBER: 40105_a

DATE: 05-28-13

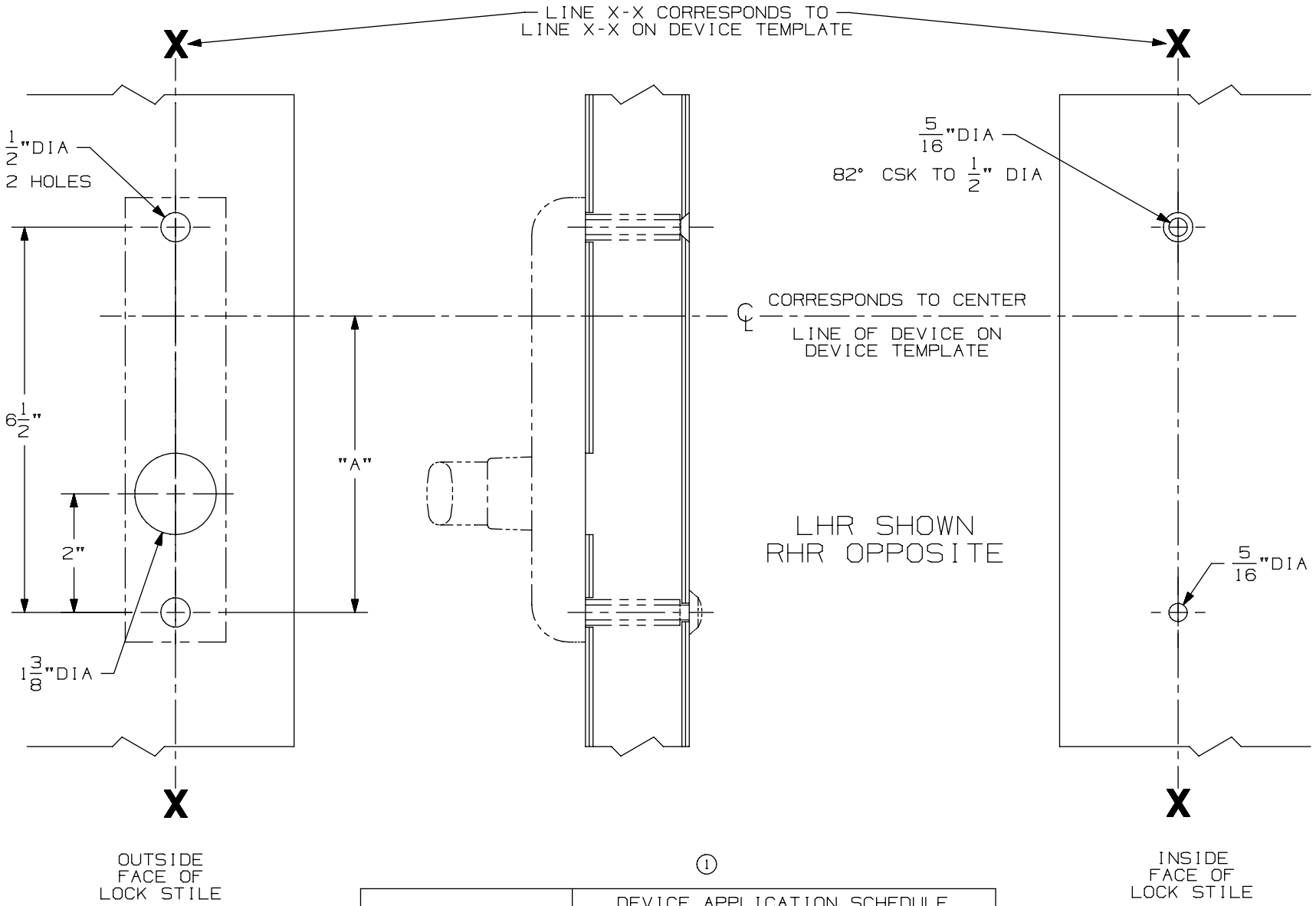

①

FOR CUTOUT ON INSIDE FACE OF DOOR SEE DEVICE TEMPLATE	DEVICE APPLICATION SCHEDULE	
	DEVICE	DIM "A"
	88L RIM	5"

NOTES: SEE MASTER SHEET #10001 FOR SUGGESTED REINFORCING

373-L-DT Control

VON DUPRIN®

TEMPLATE NUMBER: 40137_a

DATE: 05-28-13

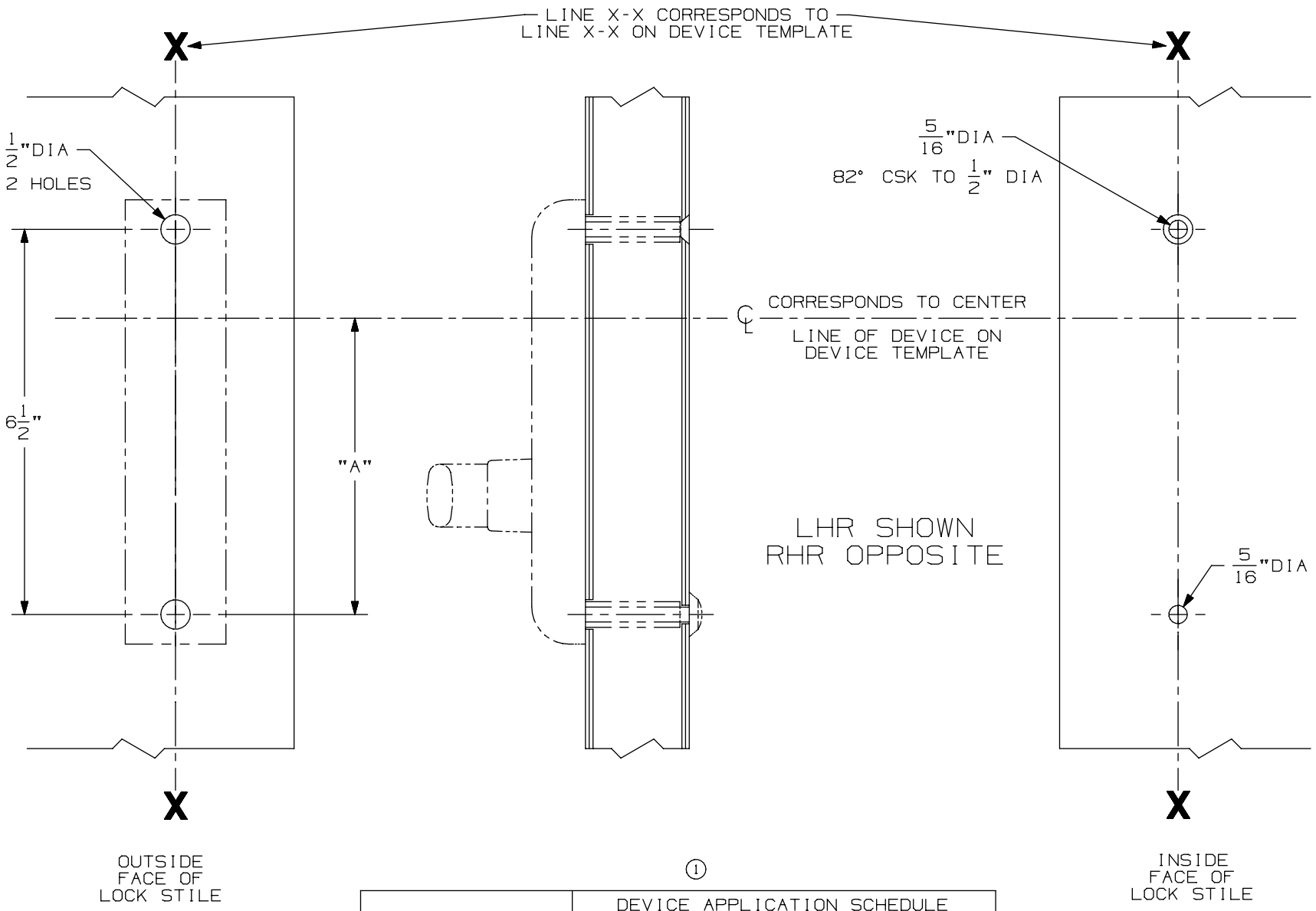

①

FOR CUTOUT ON INSIDE FACE OF DOOR SEE DEVICE TEMPLATE	DEVICE APPLICATION SCHEDULE	
	DEVICE	DIM "A"
	88 RIM	5"

NOTES: SEE MASTER SHEET #10001 FOR SUGGESTED REINFORCING

373-L Control

VON DUPRIN®

TEMPLATE NUMBER: 40108_a

DATE: 05-28-13

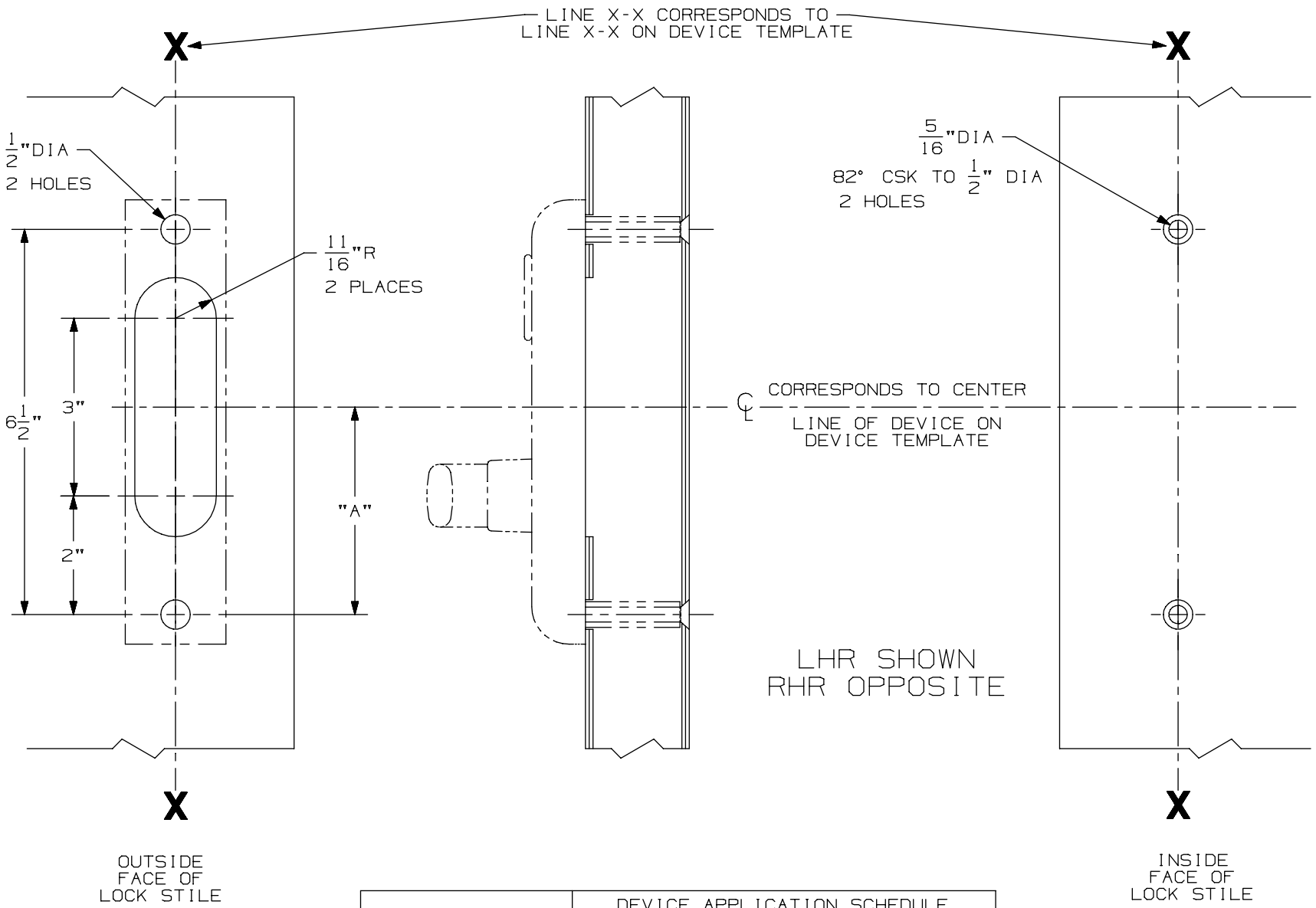

FOR CUTOUT ON INSIDE FACE OF DOOR SEE DEVICE TEMPLATE	DEVICE APPLICATION SCHEDULE	
	DEVICE	DIM "A"
	8827/8827-F	3 1/2"
	88 MORTISE	3 1/4"

NOTES: SEE MASTER SHEET #10001 FOR SUGGESTED REINFORCING

373-L-BE Control

VON DUPRIN®

TEMPLATE NUMBER: 40109_a

DATE: 05-28-13

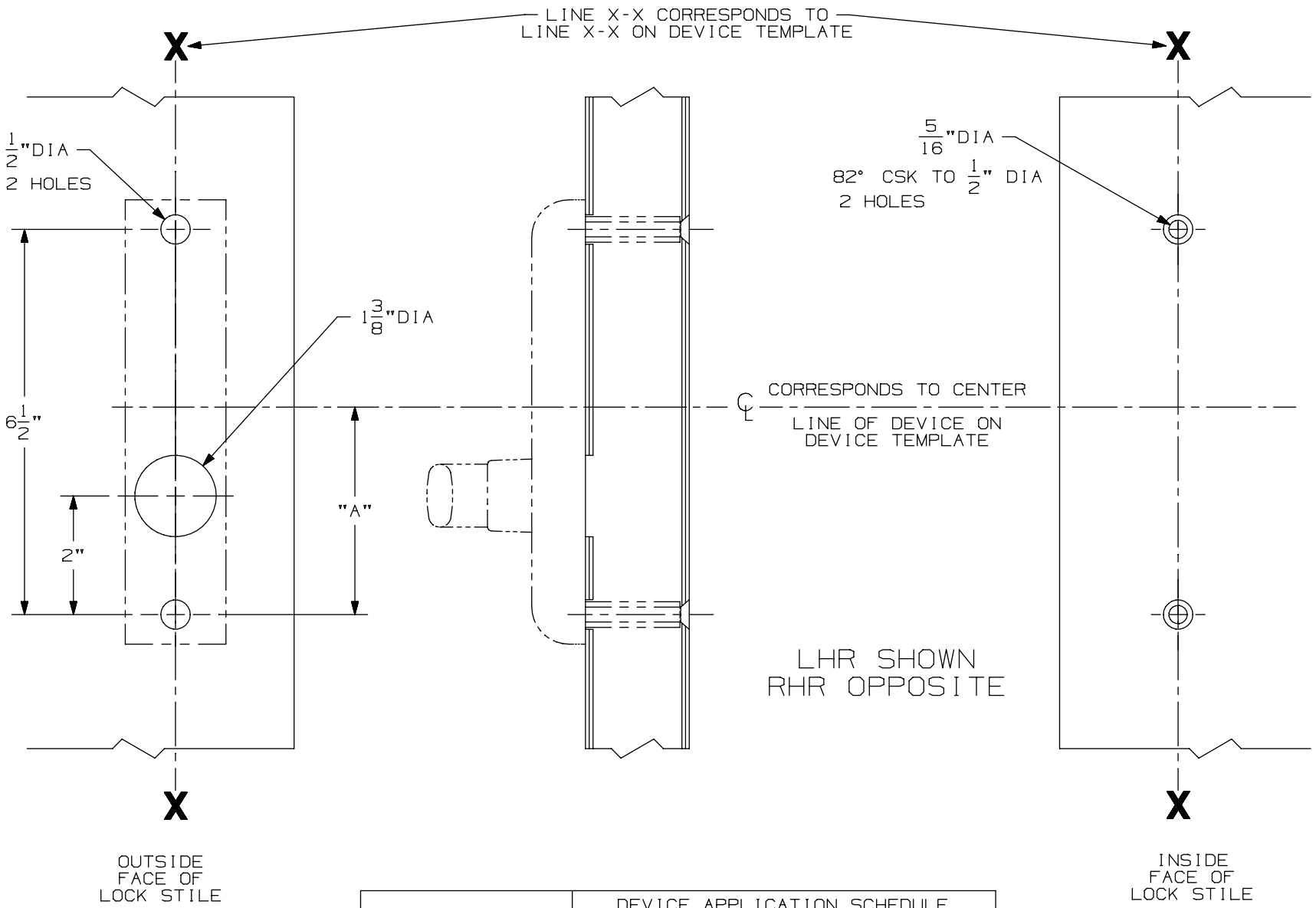

FOR CUTOUT ON INSIDE FACE OF DOOR SEE DEVICE TEMPLATE

DEVICE APPLICATION SCHEDULE	
DEVICE	DIM "A"
8827/8827-F	3 1/2"
88 MORTISE	3 1/4"

NOTES: SEE MASTER SHEET #10001 FOR SUGGESTED REINFORCING

373-L-DT Control

VON DUPRIN®

TEMPLATE NUMBER: 40138_a

DATE: 05-28-13

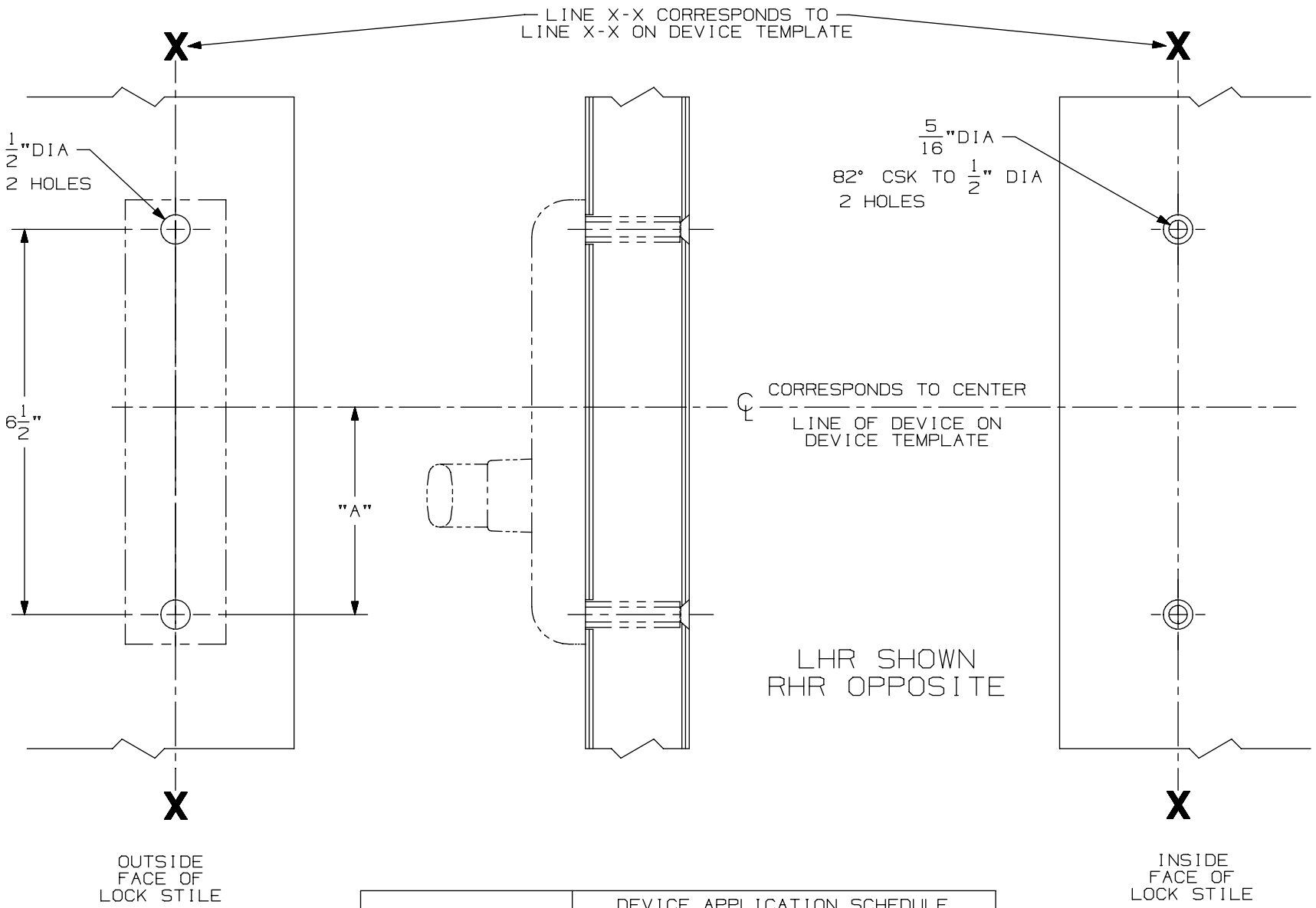

FOR CUTOUT ON INSIDE FACE OF DOOR SEE DEVICE TEMPLATE	DEVICE APPLICATION SCHEDULE	
	DEVICE	DIM "A"
	8827 DEVICE	3 1/2"
	88 MORTISE	3 1/4"

376-T Control

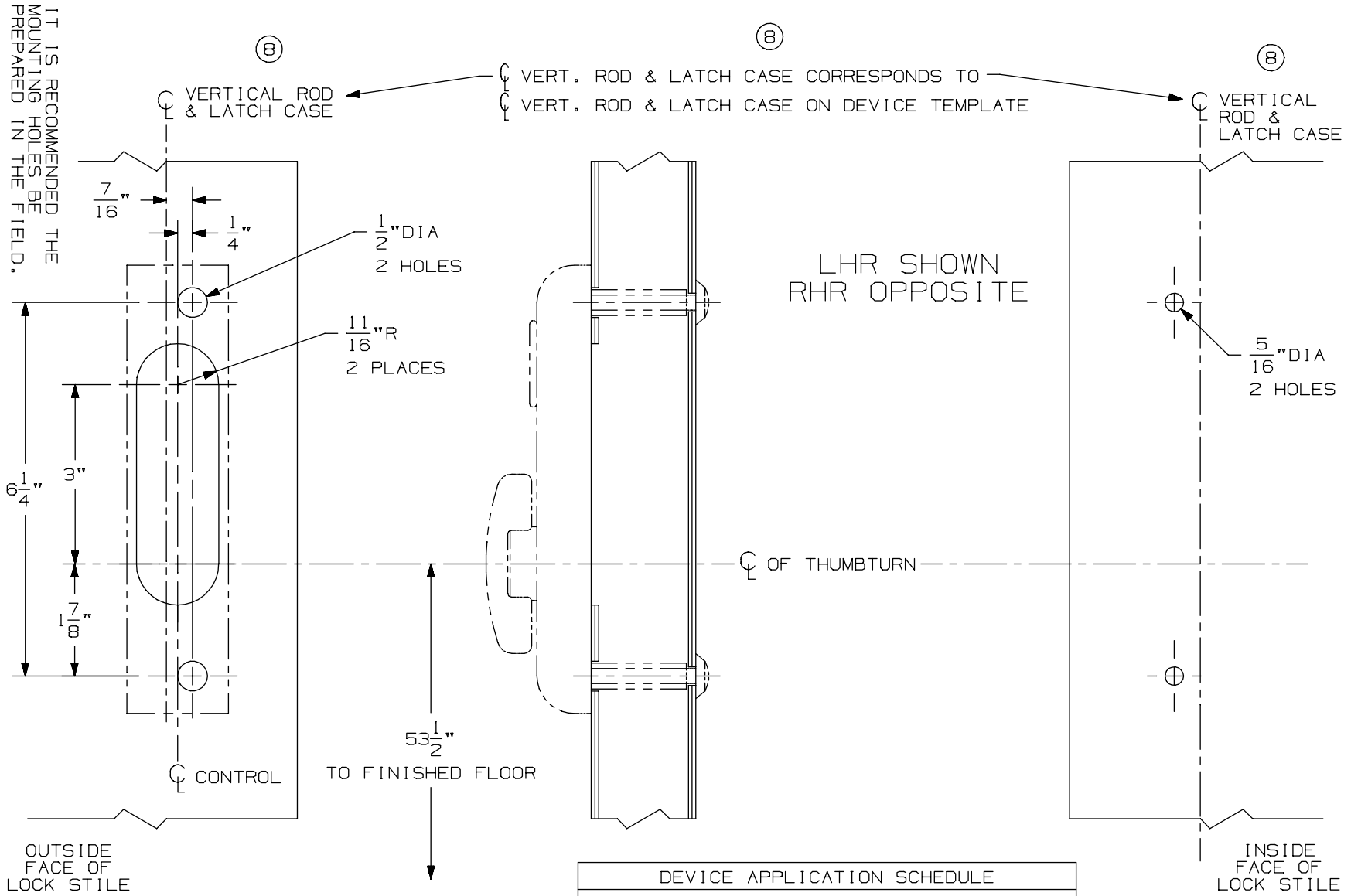

DEVICE APPLICATION SCHEDULE
5547/5547-F VERT. ROD DEVICE
8847-F VERT. ROD DEVICE
* 3347/3547 VERT. ROD DEVICE
3347-F/3547-F VERT. ROD DEVICE
⑧ * 3347A/3547A VERT. ROD DEVICE
⑧ 3347A-F/3547A-F VERT. ROD DEVICE
9847/9947 VERT. ROD DEVICE
9847-F/9947-F VERTICAL ROD DEVICE

⑧ * NOT TO BE USED WITH 1 1/16" LATCH CASE BACKSET ON BULLNOSE EDGE DOORS WITH WEATHERSTRIP CHANNEL.

NOTES: SEE MASTER SHEET #10001 FOR SUGGESTED REINFORCING

TEMPLATE NUMBER: 40114_a

DATE: 05-28-13

VON DUPRIN®

376-T-BE Control

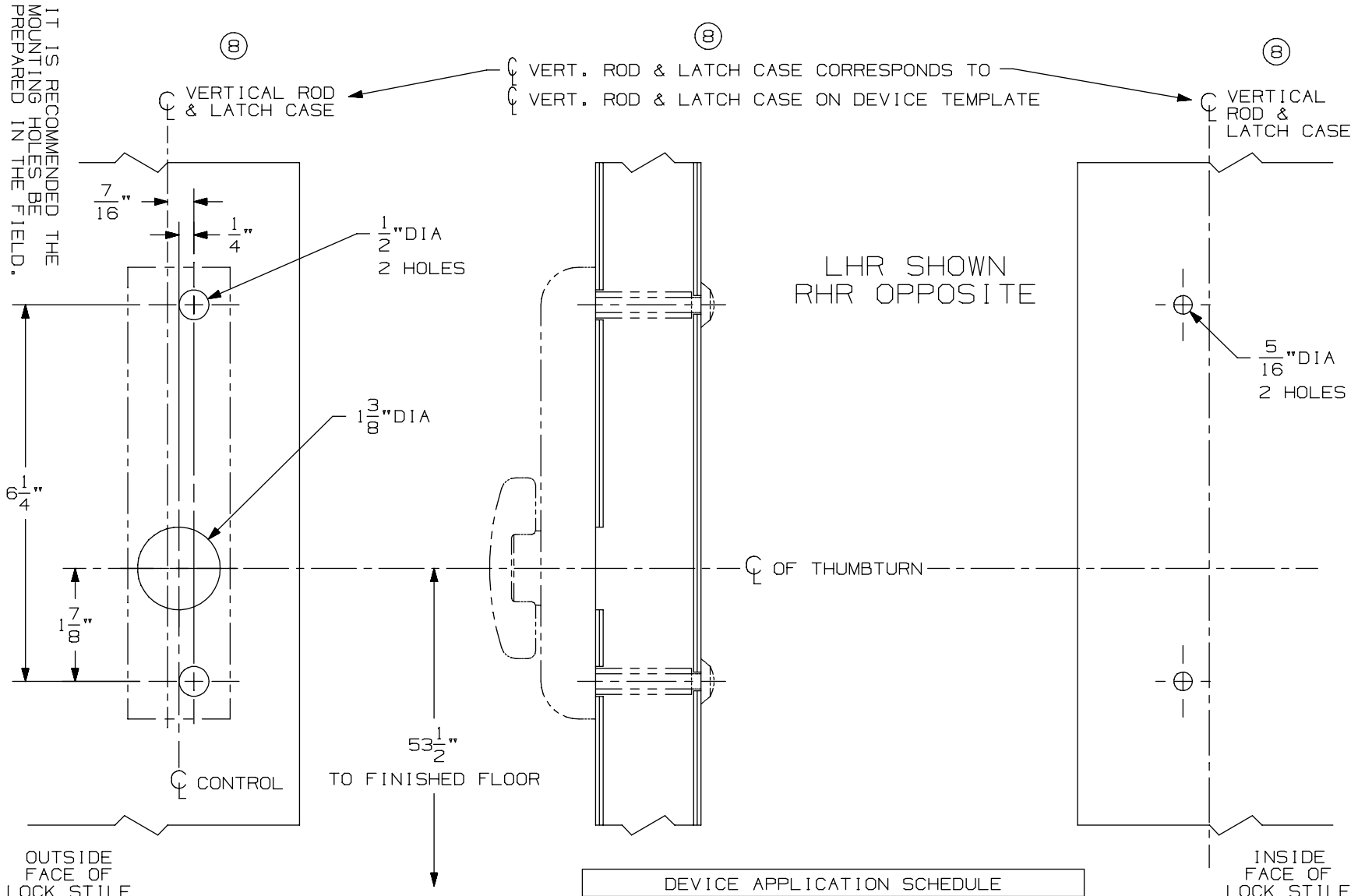

DEVICE APPLICATION SCHEDULE
5547/5547-F VERT. ROD DEVICE
8847-F VERT. ROD DEVICE
* 3347/3547 VERT. ROD DEVICE
3347-F/3547-F VERT. ROD DEVICE
⑧ * 3347A/3547A VERT. ROD DEVICE
⑧ 3347A-F/3547A-F VERT. ROD DEVICE
9847/9947 VERT. ROD DEVICE
9847-F/9947-F VERTICAL ROD DEVICE

* NOT TO BE USED WITH 1 1/16" ⑧ LATCH CASE BACKSET ON BULLNOSE EDGE DOORS WITH WEATHERSTRIP CHANNEL.

NOTES: SEE MASTER SHEET #10001 FOR SUGGESTED REINFORCING

TEMPLATE NUMBER: 40115_a

DATE: 05-28-13

VON DUPRIN®

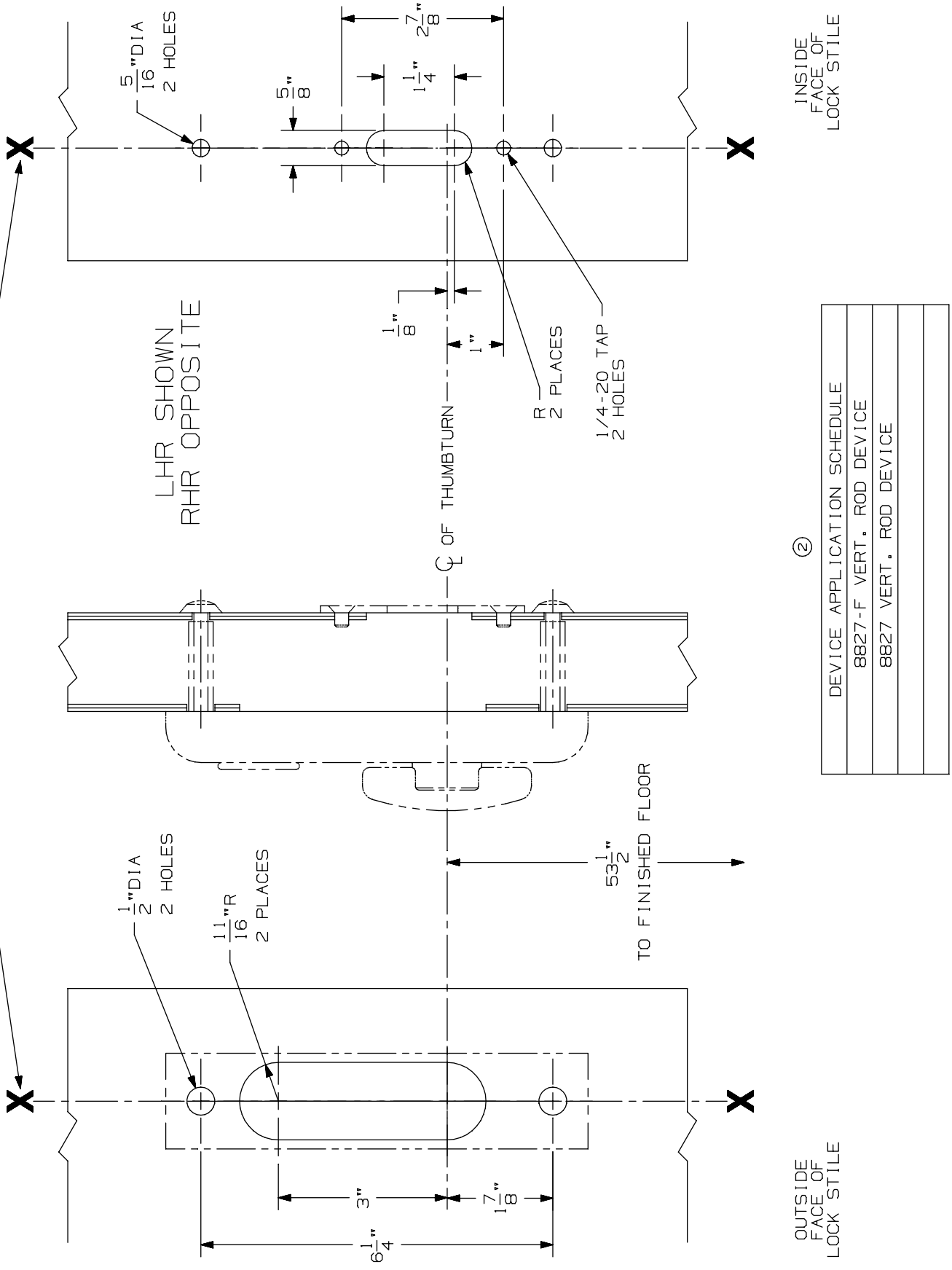

② DEVICE APPLICATION SCHEDULE

8827-F VERT. ROD DEVICE
8827 VERT. ROD DEVICE

377-T Control

VON DUPRIN®

NOTES: SEE MASTER SHEET #10001 FOR SUGGESTED REINFORCING

TEMPLATE NUMBER: 40116_a

DATE: 05-28-13

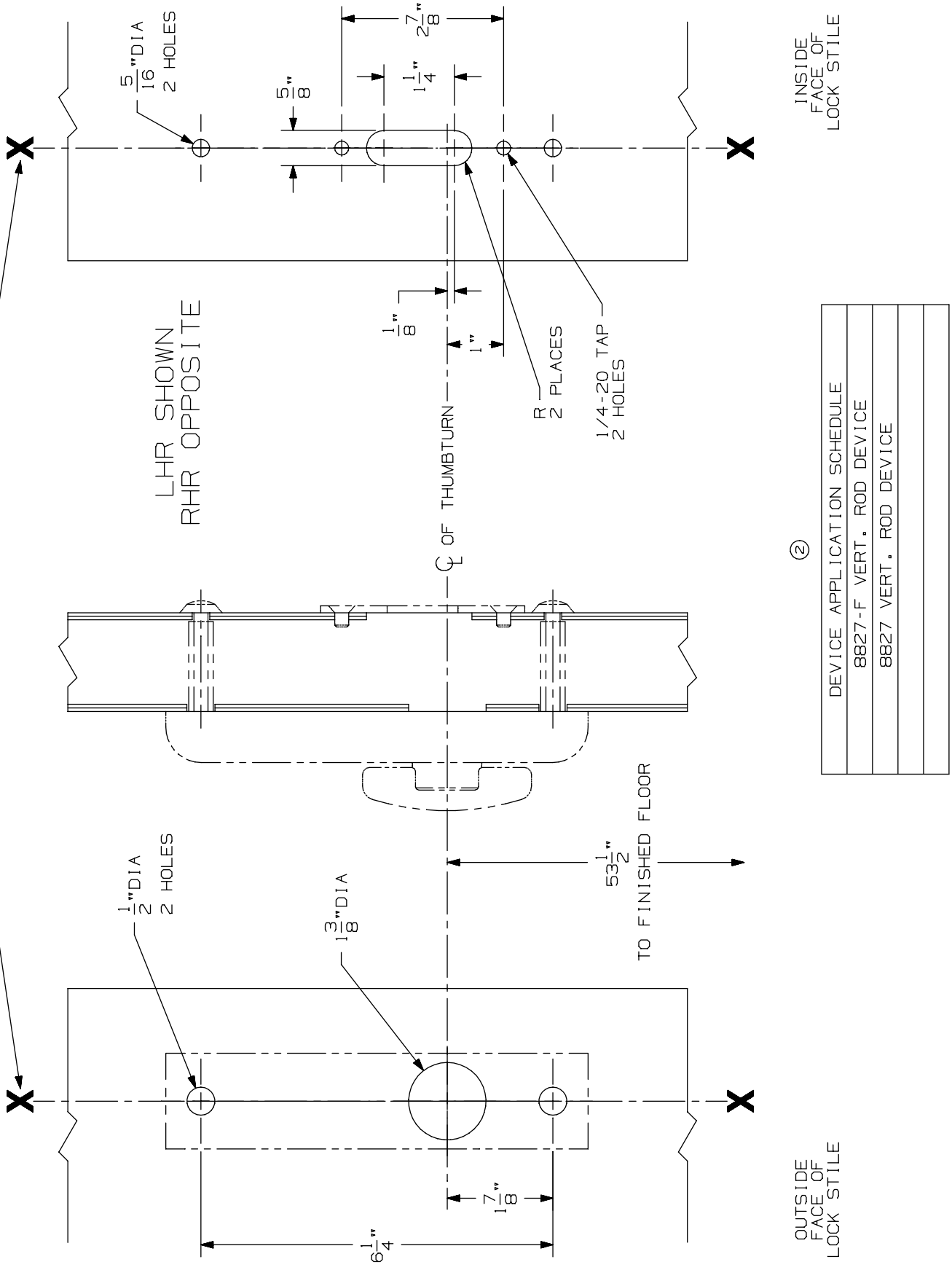

DEVICE APPLICATION SCHEDULE
8827-F VERT. ROD DEVICE
8827 VERT. ROD DEVICE

②

377-T-BE Control

VON DUPRIN®

NOTES: SEE MASTER SHEET #10001 FOR SUGGESTED REINFORCING

TEMPLATE NUMBER: 40117_a

DATE: 05-28-13

88 Series Trims, Controls & Strikes

-

88 Series Strikes

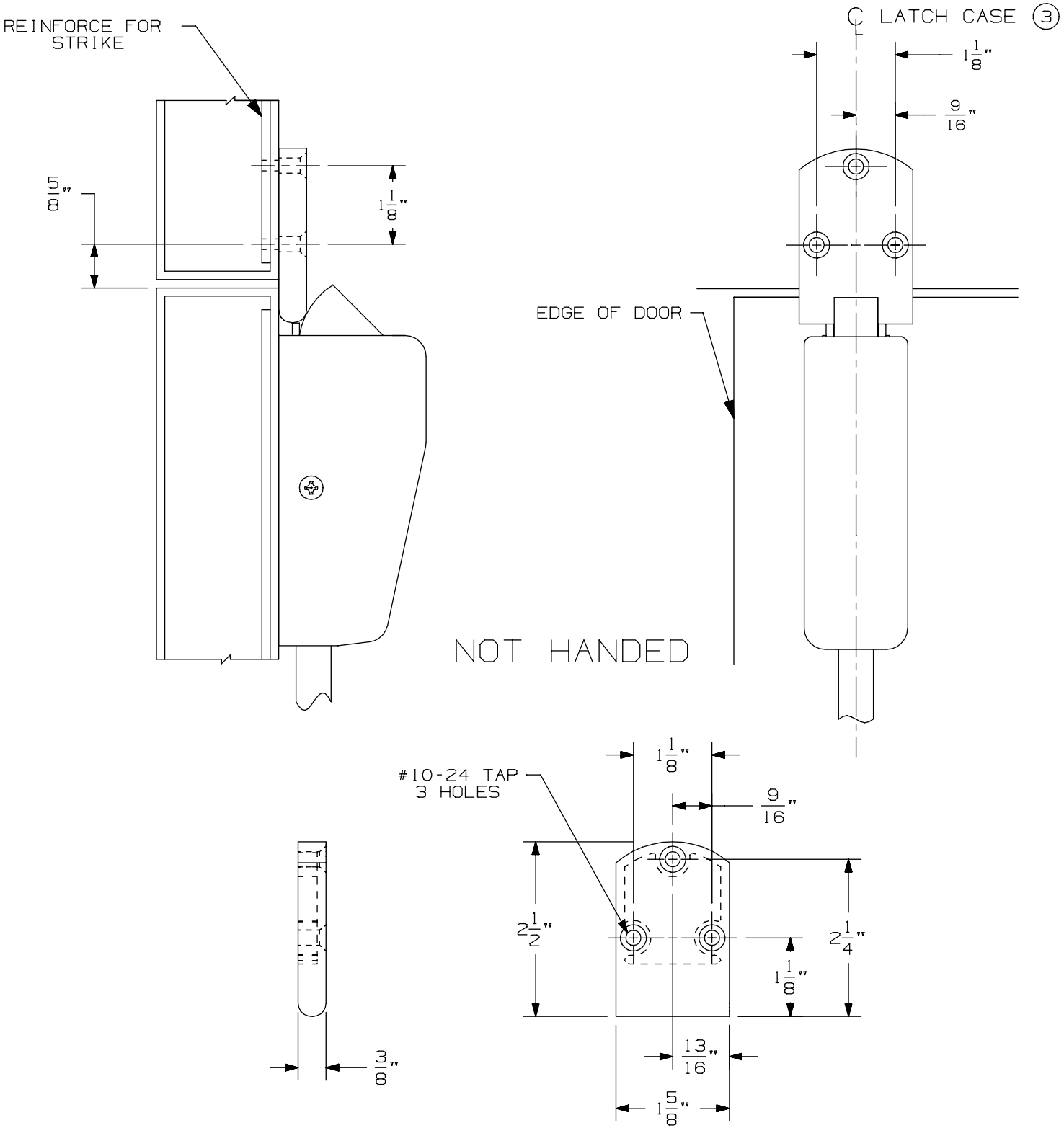

260U Vertical Strike

VON DUPRIN®

NOTES: Latch case mounting holes to be prepared at installation on door

TEMPLATE NUMBER: 30007_a

DATE: 05-23-13

RIM APPLICATION

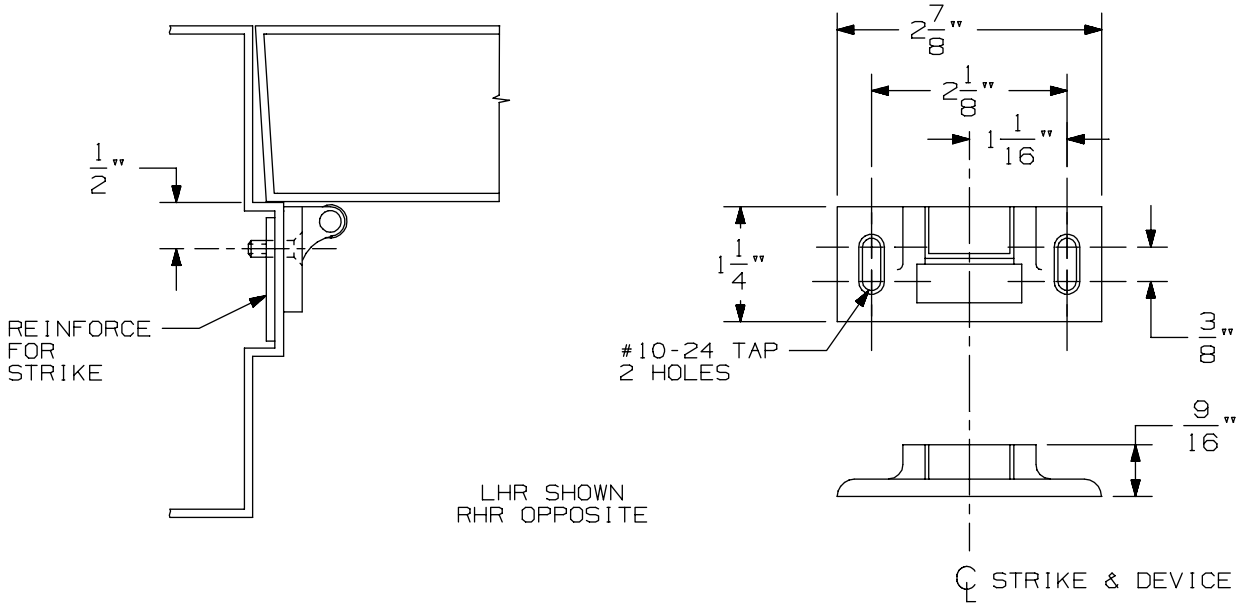

VERTICAL APPLICATION

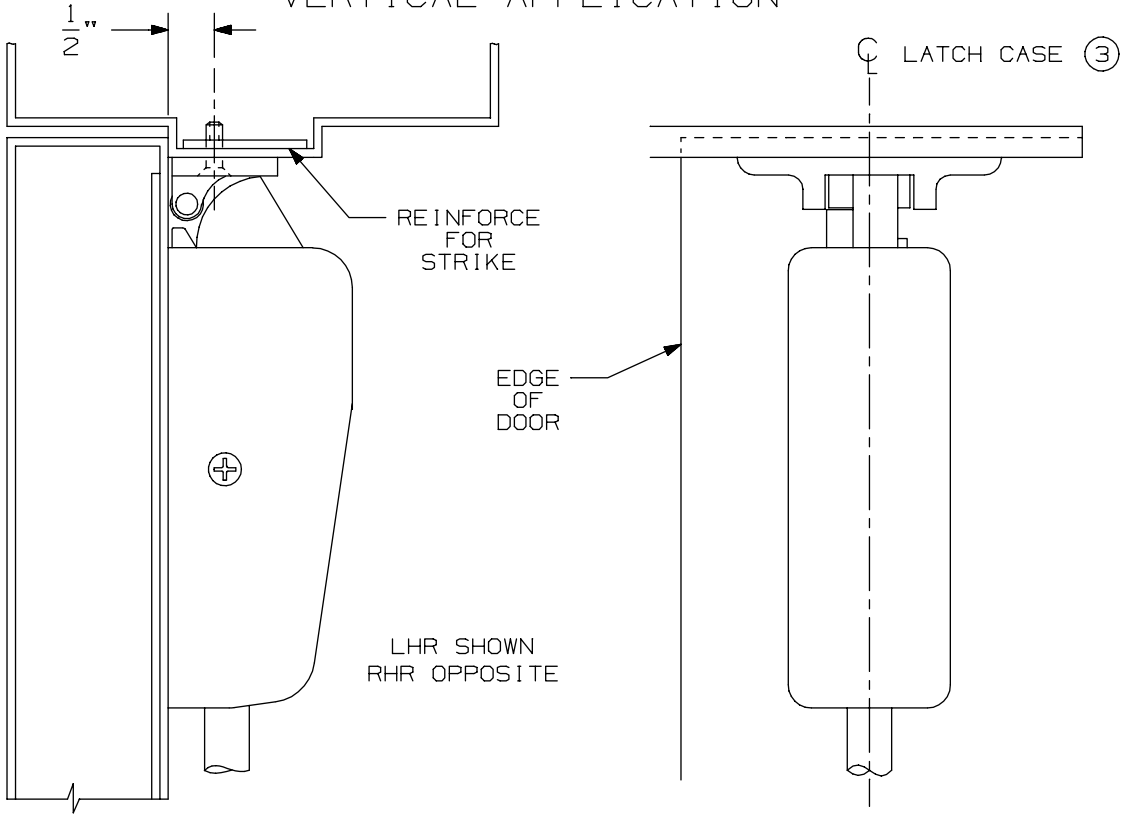

NOTE: LATCH CASE MOUNTING HOLES TO BE PREPARED AT INSTALLATION ON DOOR.

264 Strike

VON DUPRIN®

NOTES: SEE MASTER SHEET #10001 FOR SUGGESTED REINFORCING

TEMPLATE NUMBER: 30009_a

DATE: 05-23-13

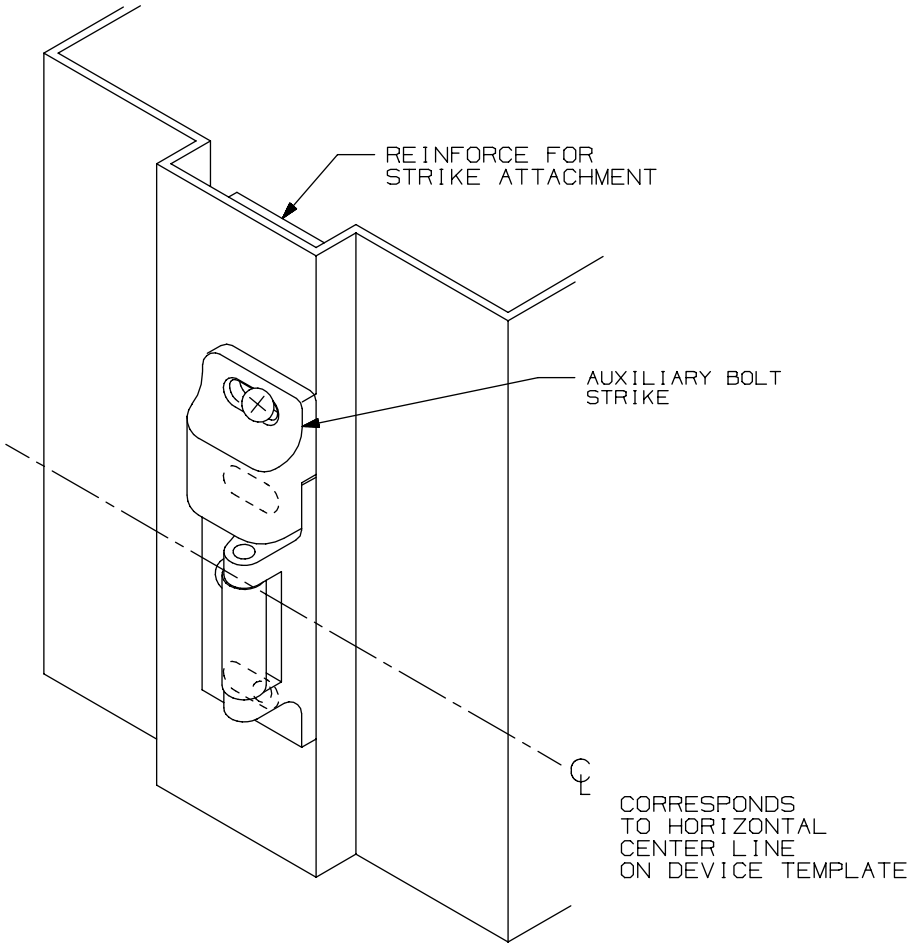

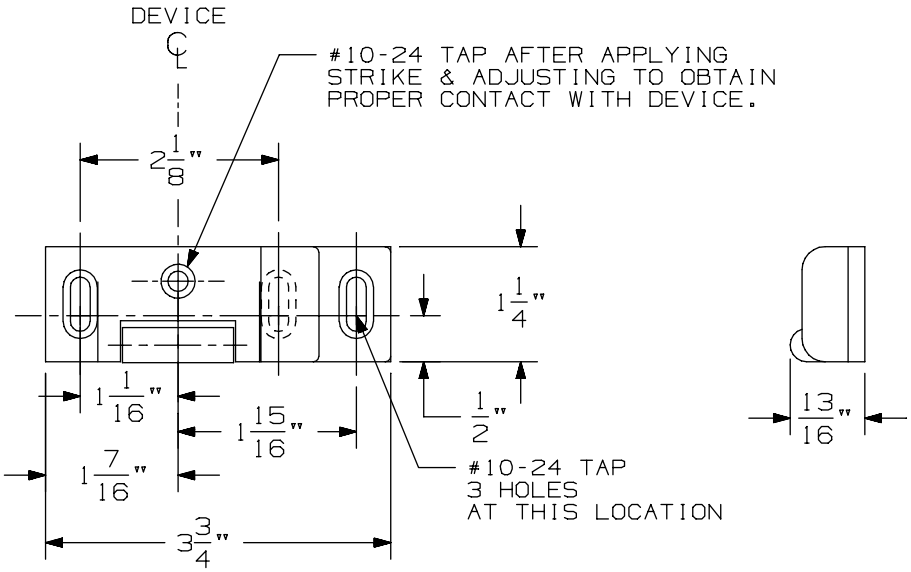

NOTE: AUXILARY BOLT STRIKE ALWAYS
ABOVE STRIKE ROLLER

268 Rim Strike

VON DUPRIN®

NOTES: SEE MASTER SHEET #10001 FOR SUGGESTED REINFORCING

TEMPLATE NUMBER: 30011_a

DATE: 05-23-13

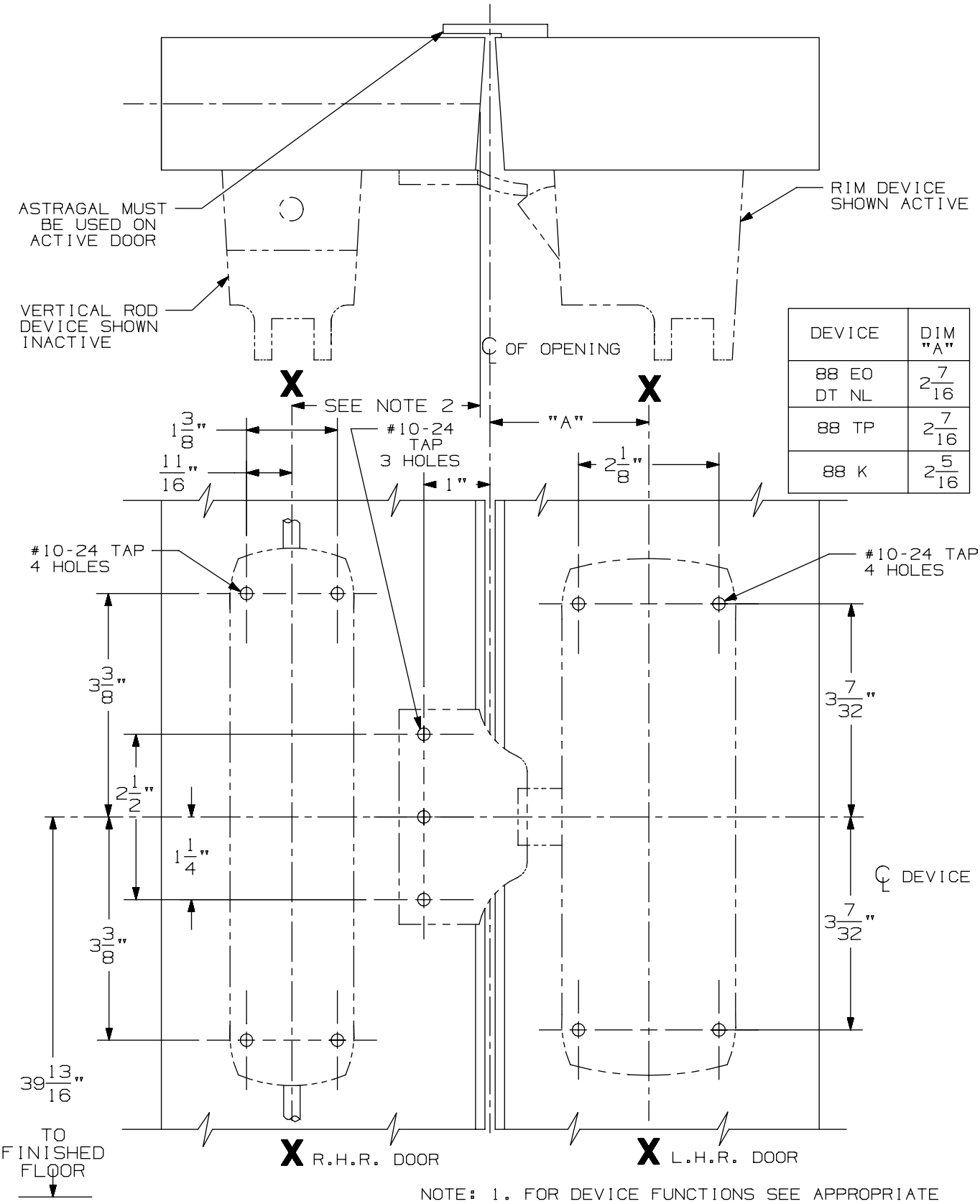

DEVICE	DIM "A"
88 EO DT NL	2 7/16
88 TP	2 7/16
88 K	2 5/16

LINE X-X CORRESPONDS TO LINE X-X ON DEVICE TEMPLATE

NOTE:
1. FOR DEVICE FUNCTIONS SEE APPROPRIATE DEVICE TEMPLATES.
2. FOR BACKSET SEE 8827 DEVICE TEMPLATE.
3. A COORDINATOR MUST BE USED ON INACTIVE DOOR.

1609 J Strike for 8827 Vertical Rod & 88 Rim Series Devices

VON DUPRIN®

NOTES: SEE MASTER SHEET #10001 FOR SUGGESTED REINFORCING

TEMPLATE NUMBER: 30021_a

DATE: 05-23-13

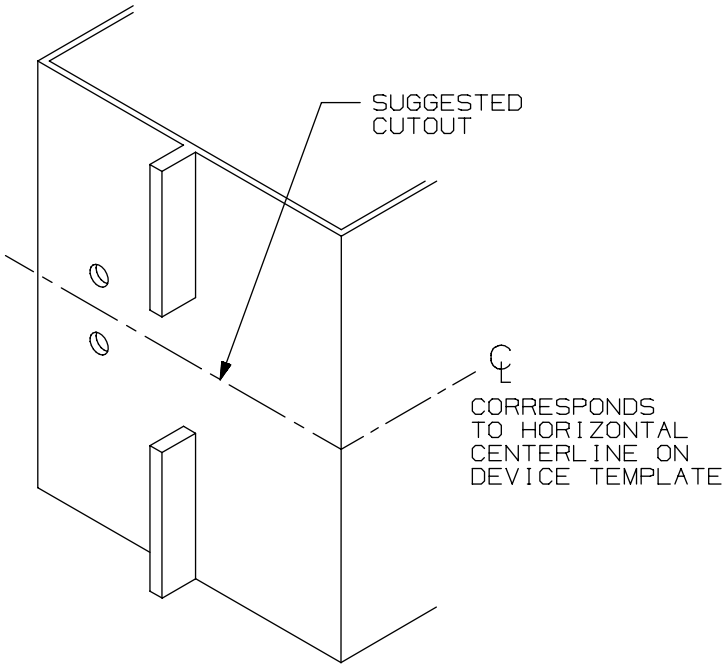

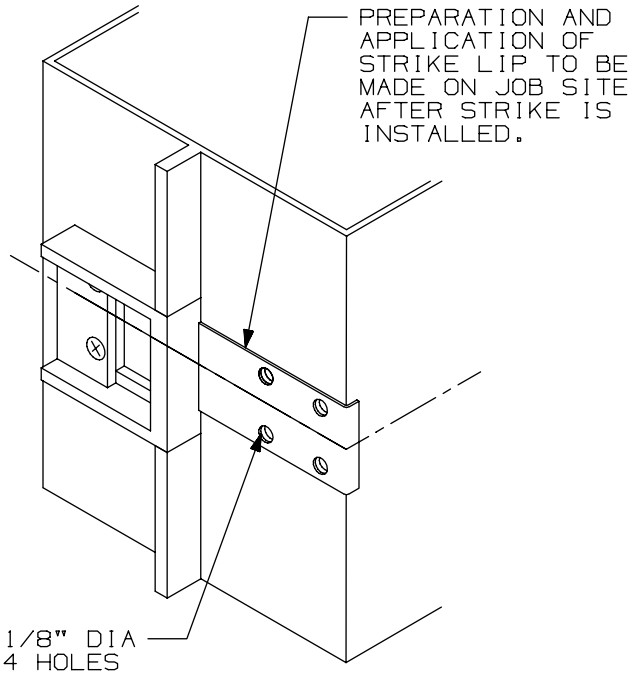

SINGLE DOOR INSTALLATION			
DEVICE	DIM "B"	DIM "C"	MIN STILE
33/35 RIM	19/32"	1 7/16"	1 3/4"
44 RIM EO,DT,NL,TP	1 11/16"	1 7/16"	3 3/8"
44 RIM K	1 9/16"	1 7/16"	3 3/8"
55 RIM	17/32"	1 7/16"	1 3/4"
22 RIM	1 9/16"	1 9/16"	3 13/16"
88 RIM EO,DT,NL,TP	1 11/16"	1 7/16"	3 3/8"
88 RIM K,L	1 9/16"	1 7/16"	3 3/8"
98/99 RIM	1 9/16"	1 9/16"	3 13/16"

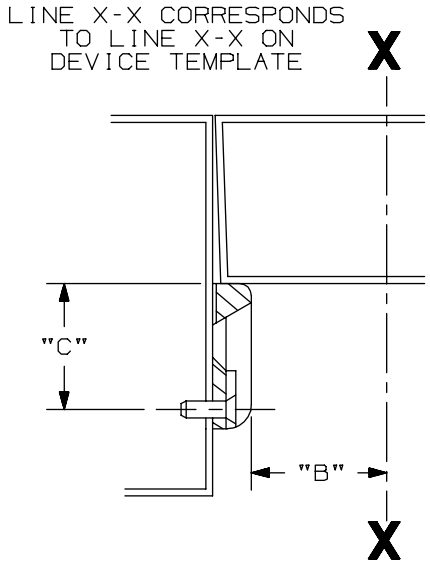

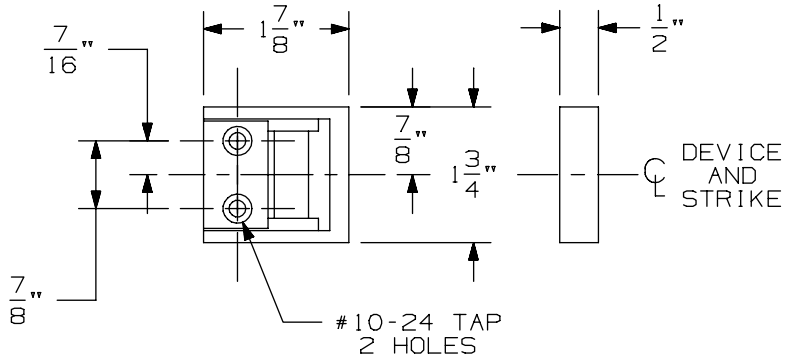

LHR APPLICATION SHOWN, RHR APPLICATION OPPOSITE

1409 Strike

VON DUPRIN®

NOTES: SEE MASTER SHEET #10001 FOR SUGGESTED REINFORCING

TEMPLATE NUMBER: 30022_a

DATE: 05-23-13

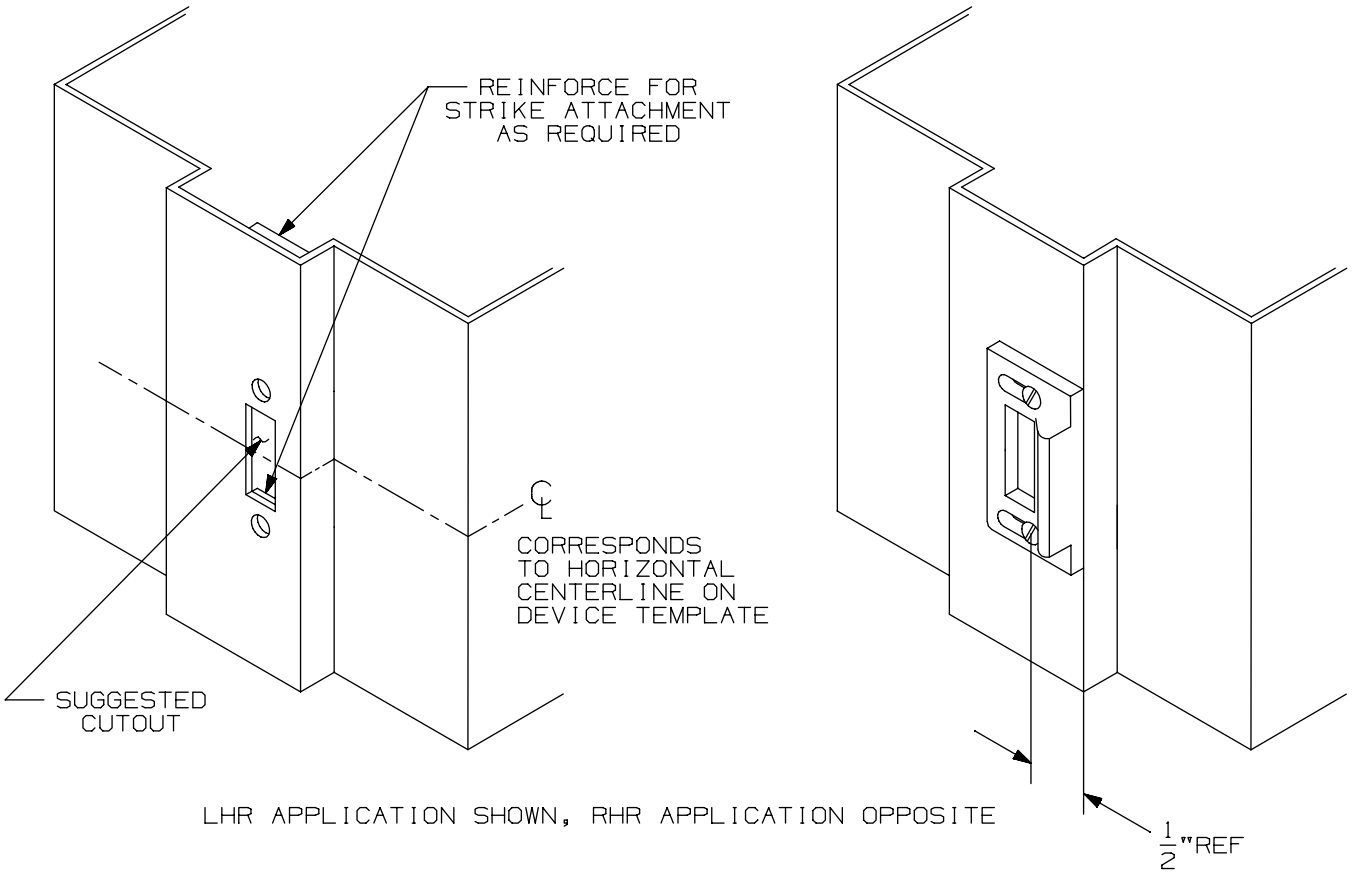

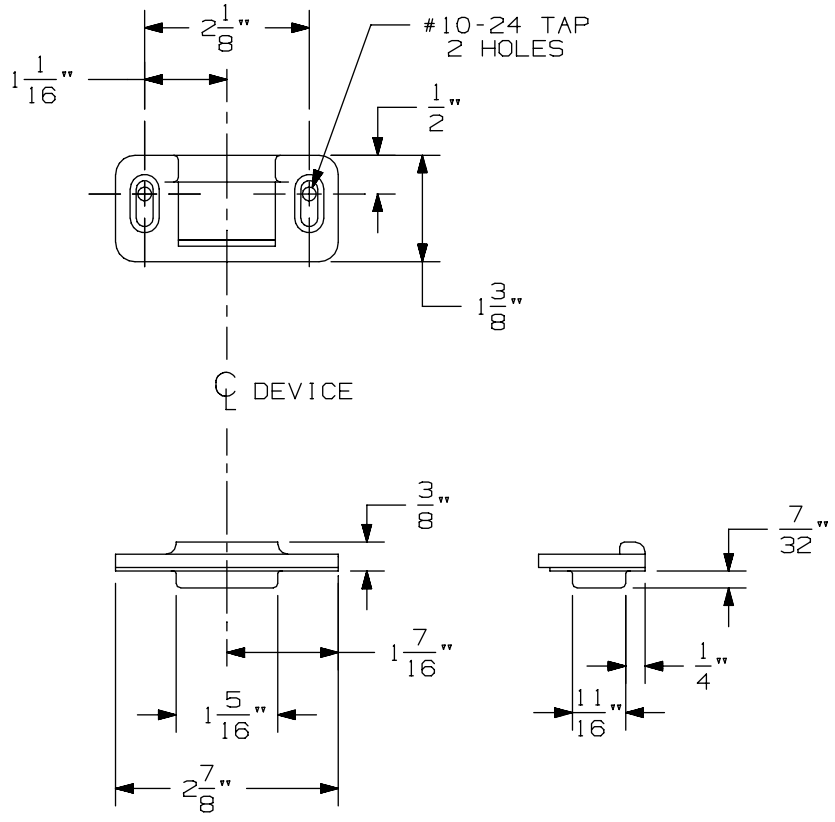

1606 Half Mortise Strike

VON DUPRIN®

NOTES: SEE MASTER SHEET #10001 FOR SUGGESTED REINFORCING

TEMPLATE NUMBER: 30024_a

DATE: 05-23-13

RIM APPLICATION

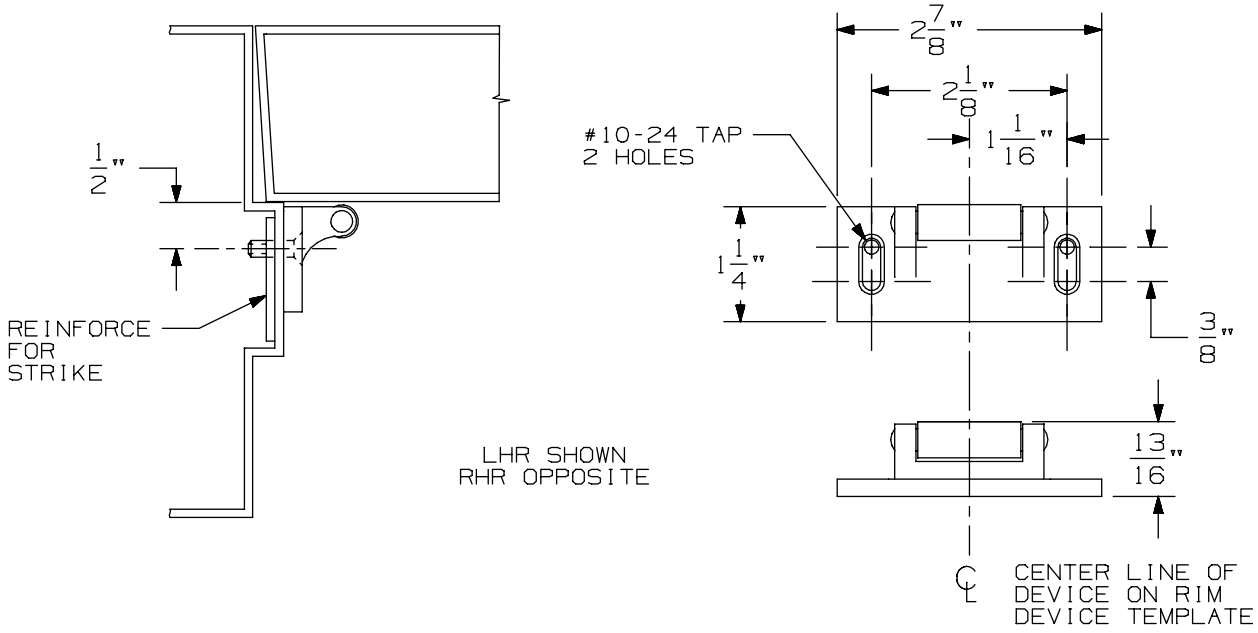

VERTICAL APPLICATION

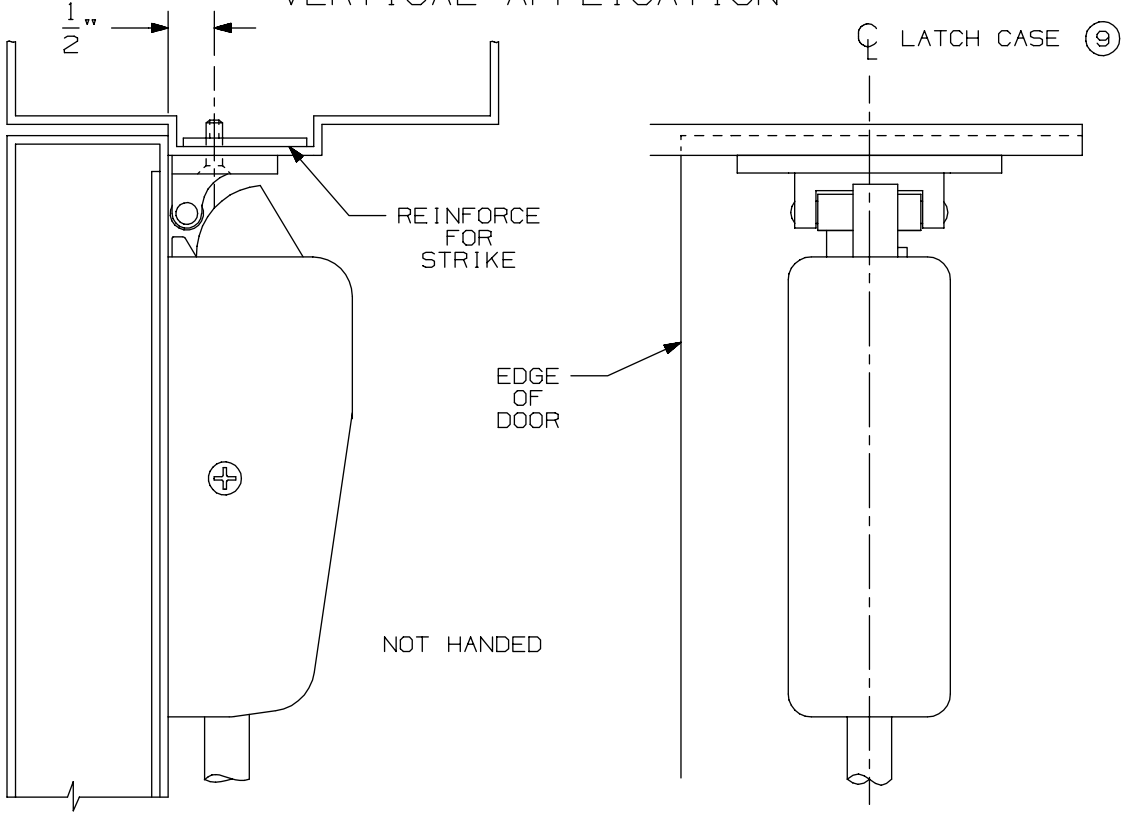

NOTE: LATCH CASE MOUNTING HOLES TO BE PREPARED AT INSTALLATION ON DOOR.

299 & 299F Strike

VON DUPRIN®

NOTES: SEE MASTER SHEET #10001 FOR SUGGESTED REINFORCING

TEMPLATE NUMBER: 30039_a

DATE: 05-23-13

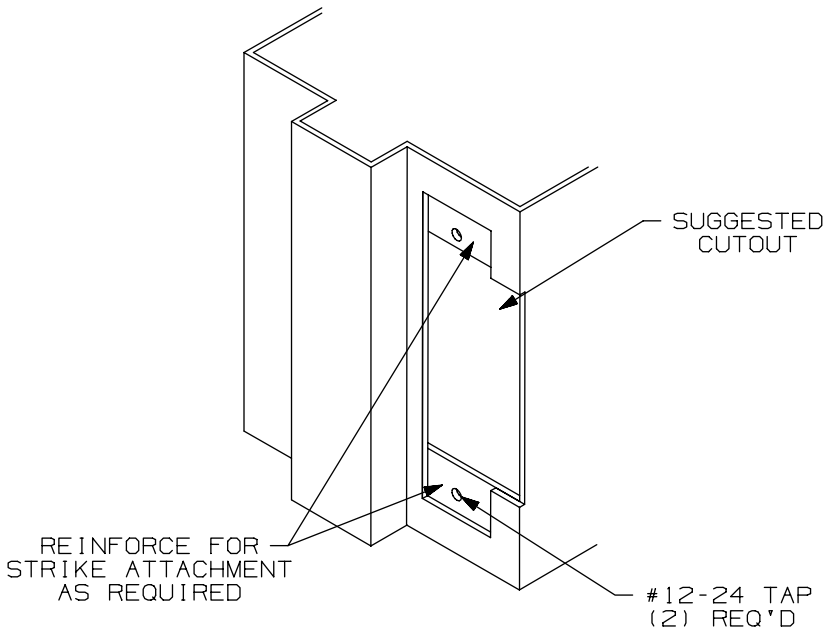

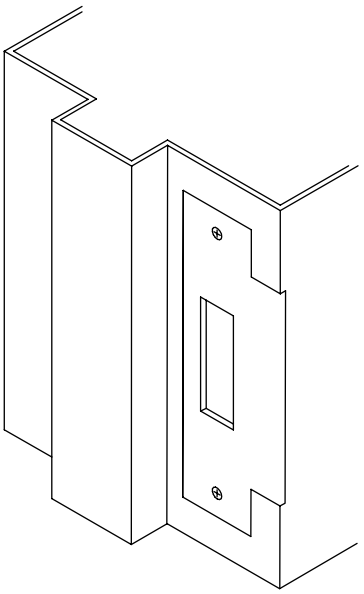

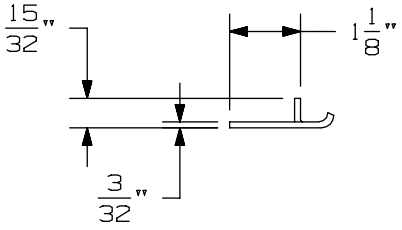

APPLICATION SCHEDULE	
DEVICE	DIM. "A"
9875 & 9875-F	11/16
9975 & 9975-F	11/16
8875 & 8875-F	1/2
5575 & 5575-F	1/2

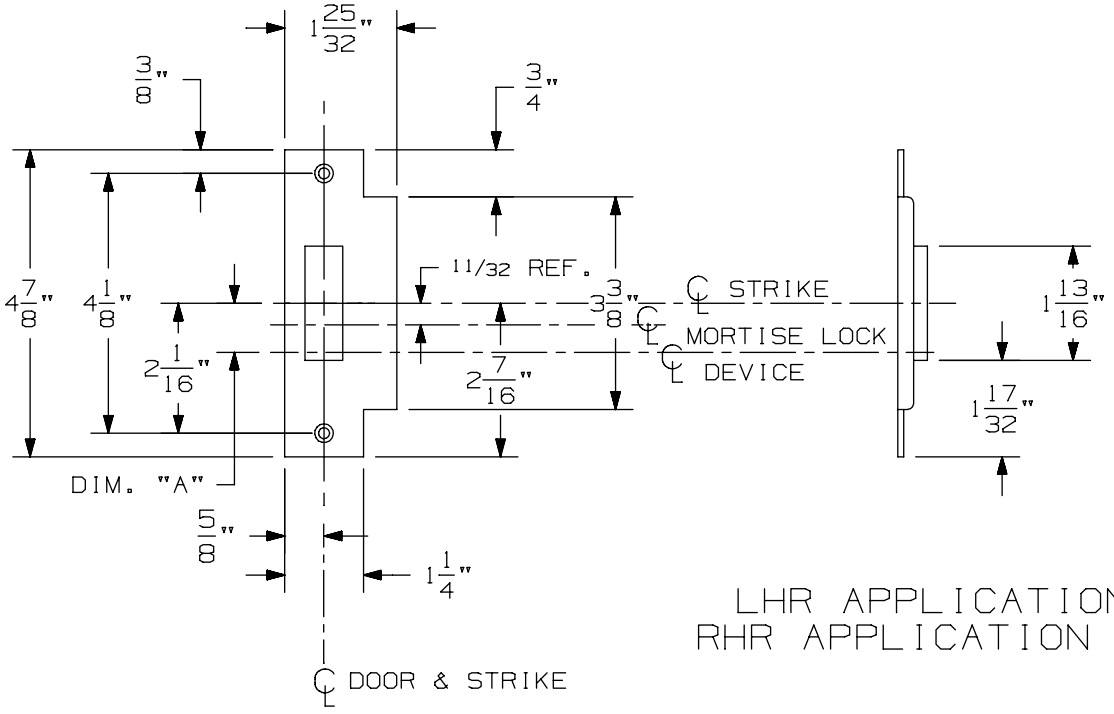

LHR APPLICATION SHOWN
RHR APPLICATION OPPOSITE

575 Mortise Strike (Single Door) for 7500 Mortise Lock

VON DUPRIN®

NOTES: SEE MASTER SHEET #10001 FOR SUGGESTED REINFORCING

TEMPLATE NUMBER: 30210_b

DATE: 07-22-13

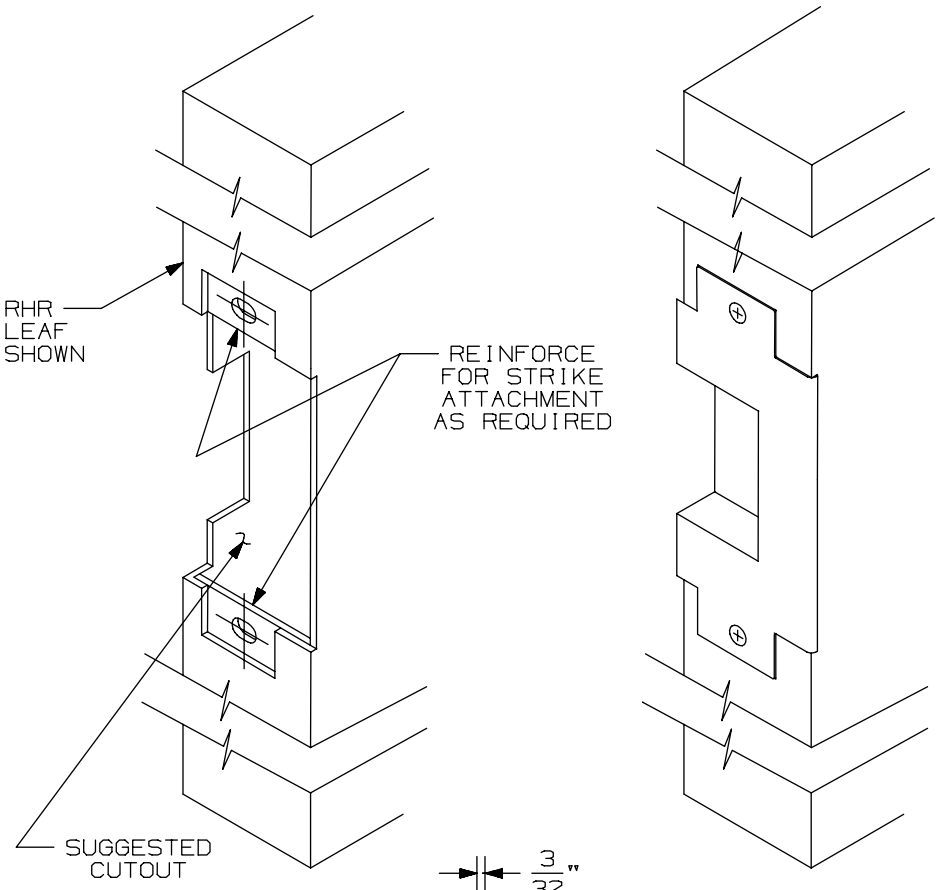

APPLICATION SCHEDULE	
DEVICE	DIM."A"
9875 & 9875-F	11/16
9975 & 9975-F	11/16
8875 & 8875-F	1/2
5575 & 5575-F	1/2

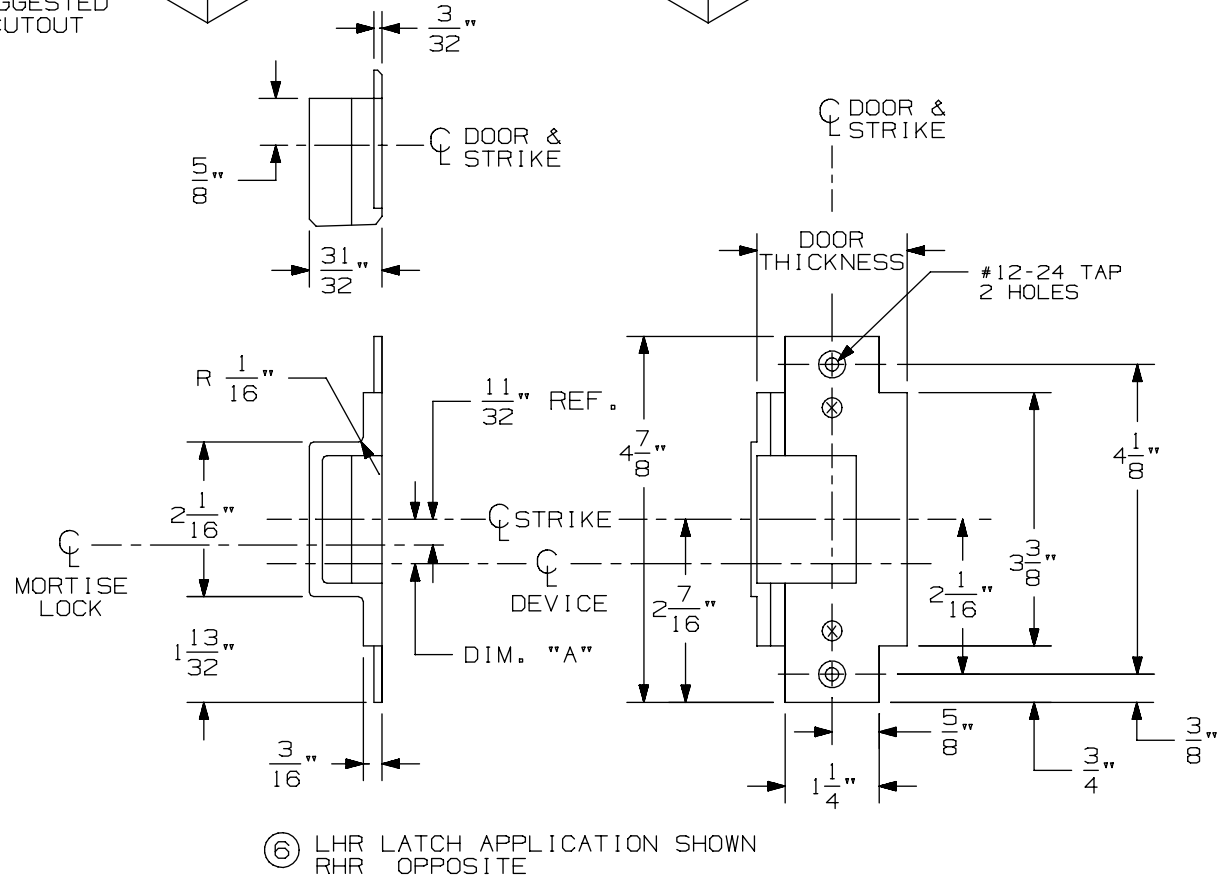

⑥ LHR LATCH APPLICATION SHOWN
RHR OPPOSITE

576A & 576B Mortise Strike for 7500 Mortise Lock

VON DUPRIN®

NOTES: SEE MASTER SHEET #10001 FOR SUGGESTED REINFORCING

TEMPLATE NUMBER: 30211_a

DATE: 05-28-13

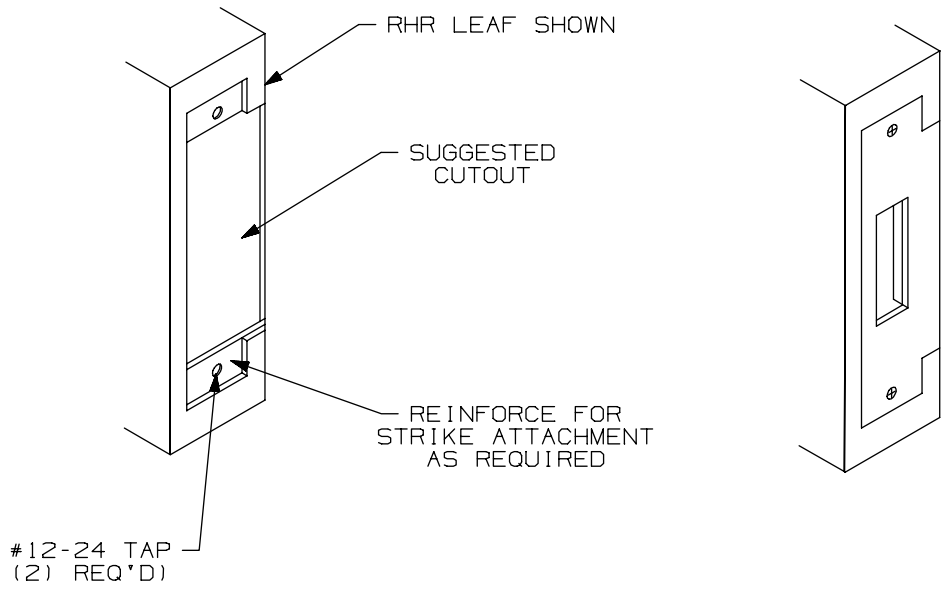

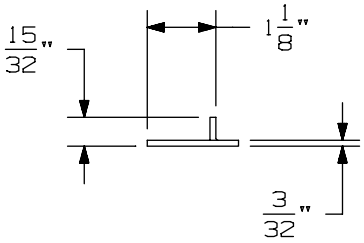

APPLICATION SCHEDULE	
DEVICE	DIM. "A"
9875 & 9875-F	11/16
9975 & 9975-F	11/16
8875 & 8875-F	1/2
5575 & 5575-F	1/2

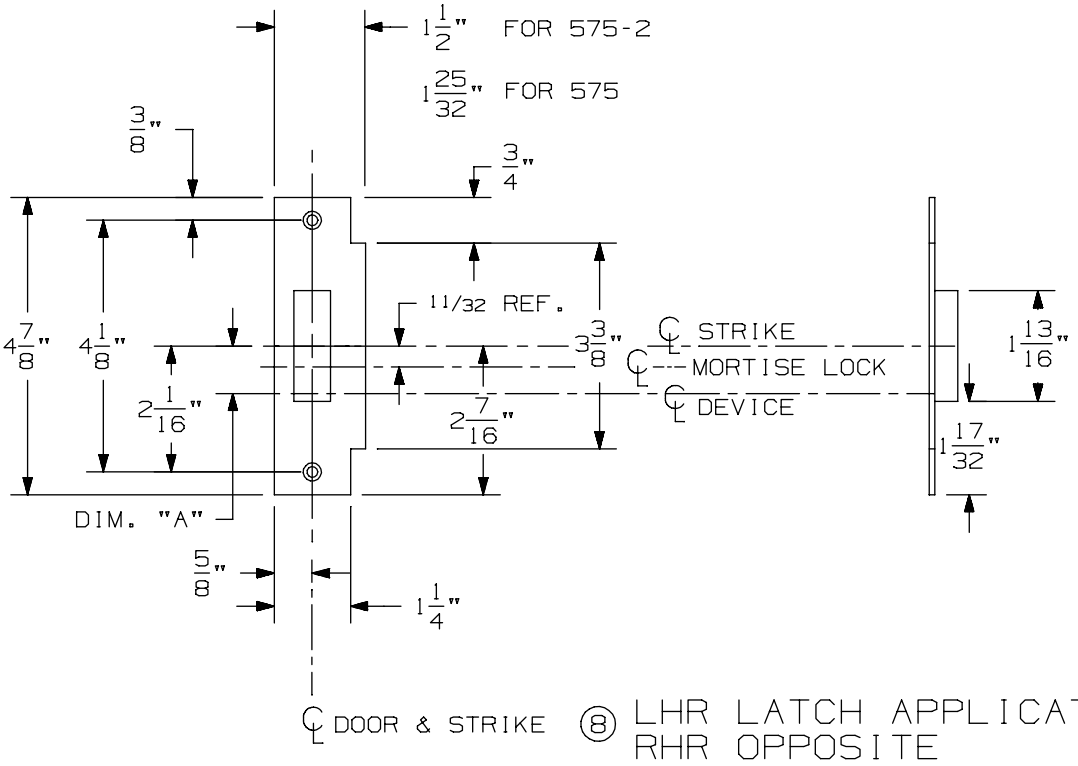

⑧ LHR LATCH APPLICATION SHOWN
RHR OPPOSITE

575-2 Mortise Strike (Double Doors) for 7500 Mortise Lock

VON DUPRIN®

NOTES: SEE MASTER SHEET #10001 FOR SUGGESTED REINFORCING

TEMPLATE NUMBER: 30212_b

DATE: 07-22-13

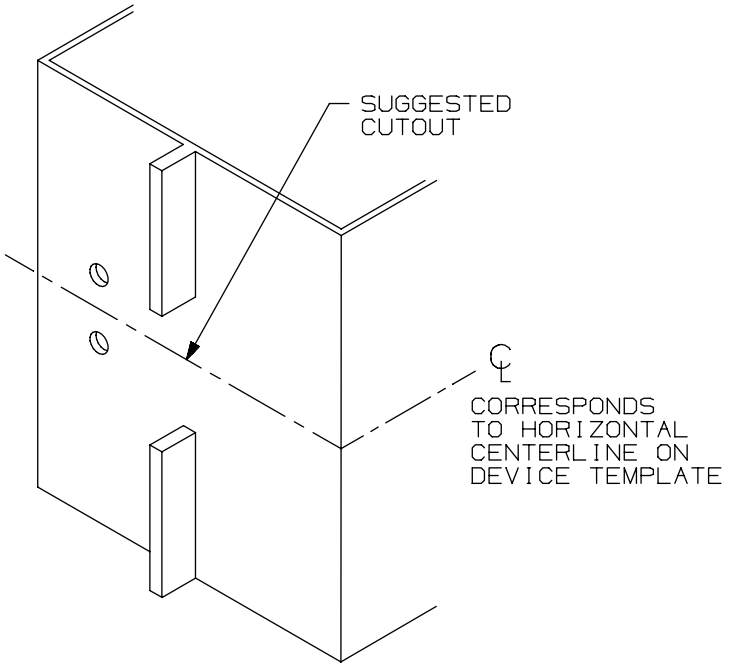

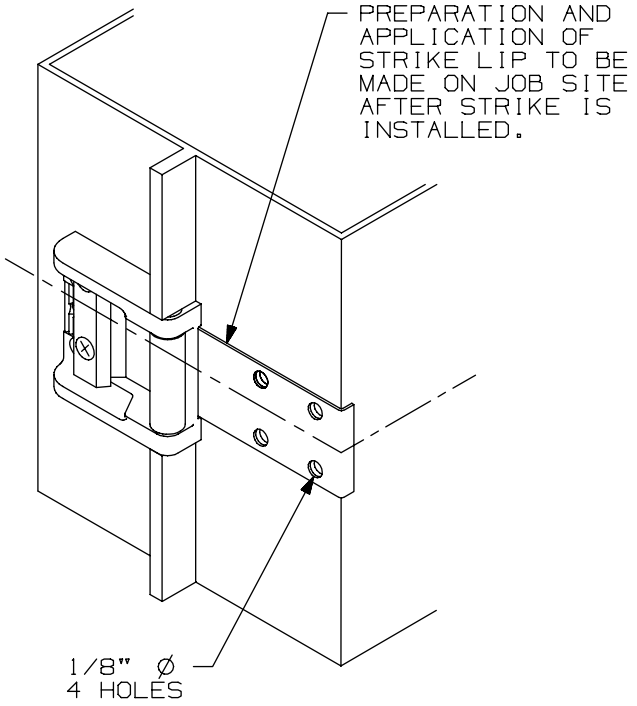

SINGLE DOOR INSTALLATION			
DEVICE	DIM "B"	DIM "C"	RECOMMENDED MIN STILE* (1)
33A/35A RIM	19/32"	1 9/16"	2"
44 RIM EO,DT,NL,TP	1 11/16"	1 9/16"	3 3/8"
44 RIM K	1 9/16"	1 9/16"	3 3/8"
55 RIM	17/32"	1 9/16"	1 3/4"
22 RIM	1 9/16"	1 9/16"	3 13/16"
88 RIM EO,DT,NL,TP	1 11/16"	1 9/16"	3 3/8"
44 RIM K,L	1 9/16"	1 9/16"	3 3/8"
98/99 RIM	1 9/16"	1 9/16"	3 13/16"

* CONSULT FACTORY FOR STILE WIDTHS LESS THAN
(1) MIN. RECOMMENDED TO ENSURE PROPER APPLICATION

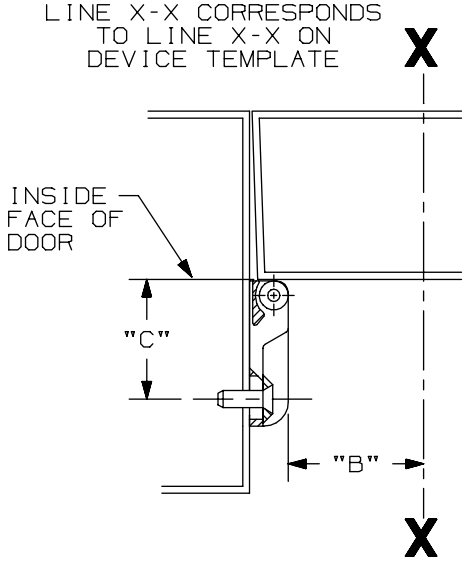

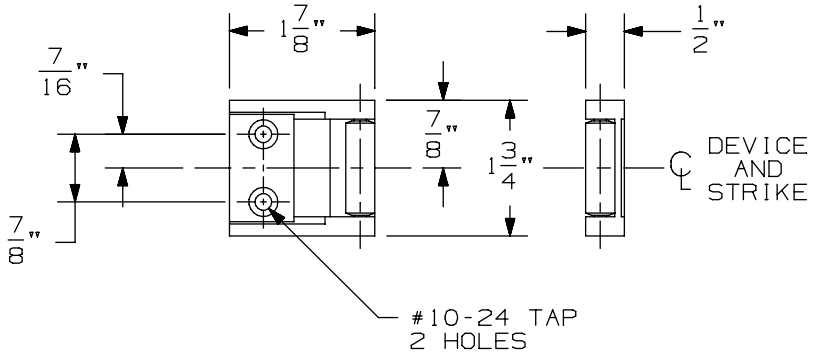

LHR APPLICATION SHOWN, RHR APPLICATION OPPOSITE

1439 Roller Strike

VON DUPRIN®

NOTES: SEE MASTER SHEET #10001 FOR SUGGESTED REINFORCING

TEMPLATE NUMBER: 30029_a

DATE: 05-23-13

88 Series for 86 Stock Hollow Metal Doors

88 Series for 86 Stock Hollow Metal Doors

-

88 Rim

FOR ADDITIONAL INFORMATION SEE TEMPLATE NO. 10155 OR 10169

NOTE: TYPE 86 STOCK HOLLOW METAL APPLICATIONS FOR 88 DEVICES WILL WORK WITH ALL STANDARD STRIKE APPLICATIONS, SEE CORRESPONDING 88 DEVICE TEMPLATE FOR CORRECT BACKSET AND DEVICE HEIGHT.

TYPE 86 STOCK HOLLOW METAL DOOR

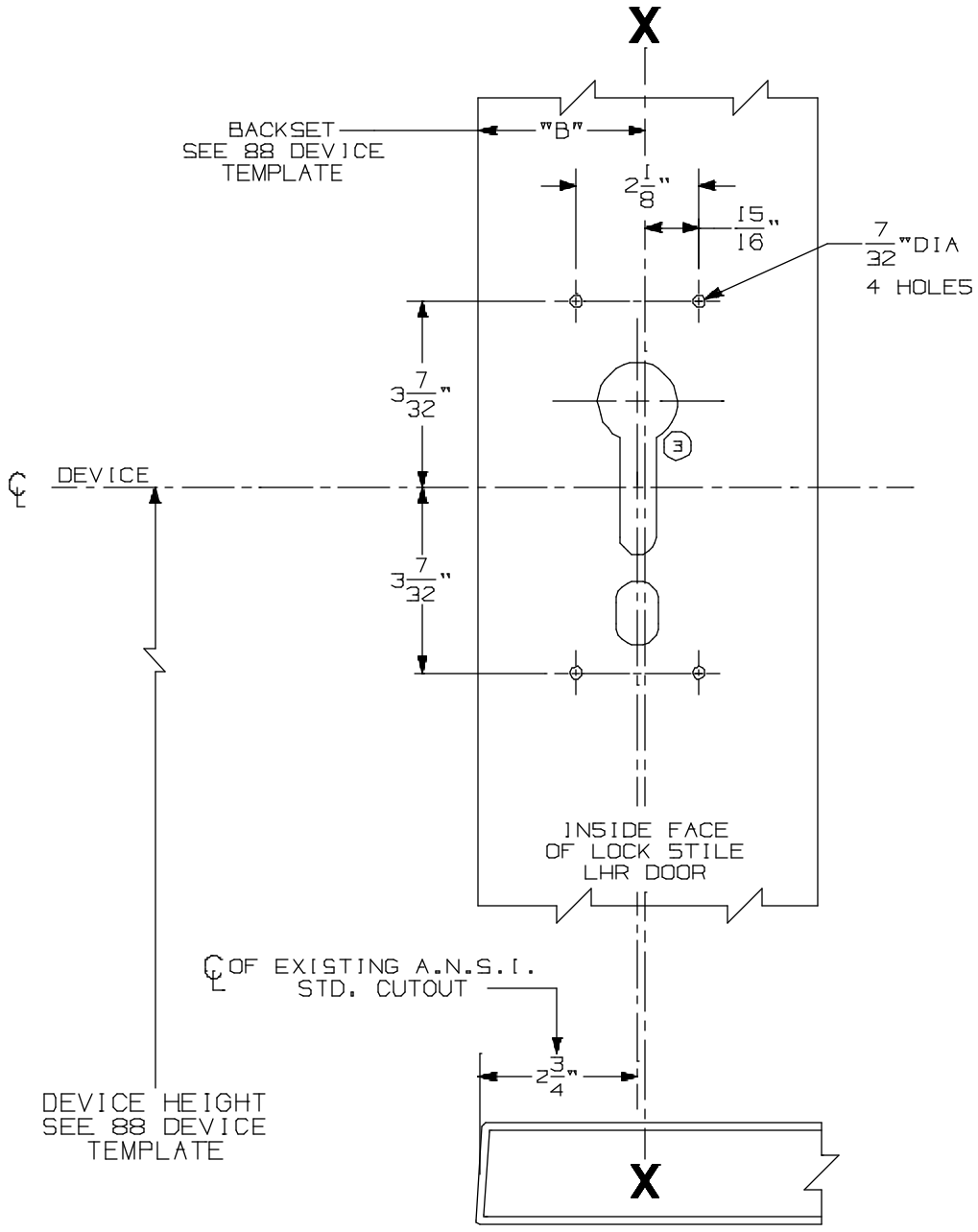

SEE A.N.S.I. SPECIFICATION NO. A115 FOR THE SIZE AND LOCATION OF STOCK CUTOUTS.

FOR OUTSIDE TRIM PREPARATION, SEE ADDITIONAL TRIM TEMPLATE.

LHR SHOWN
RHR OPPOSITE

88EO & DT Rim Devices w/880 Trim for Type "86" Stock Hollow Metal Applications

VON DUPRIN®

NOTES: SEE MASTER SHEET #10001 FOR SUGGESTED REINFORCING

TEMPLATE NUMBER: 10202_a

DATE: 05-16-13

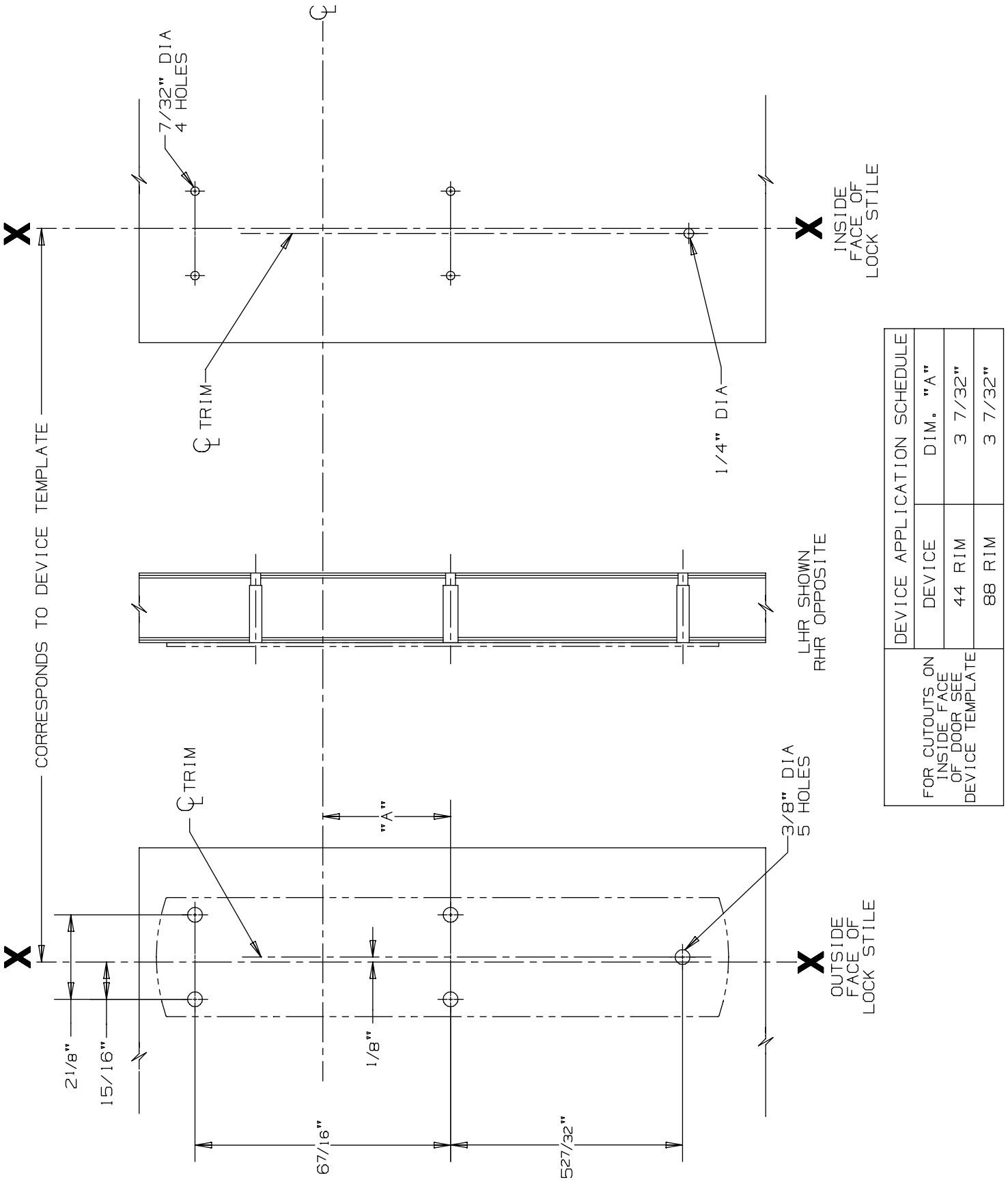

DEVICE APPLICATION SCHEDULE		
DEVICE	DIM. "A"	
44 RIM	3 7/32"	
88 RIM	3 7/32"	

FOR CUTOUTS ON INSIDE FACE OF DOOR SEE DEVICE TEMPLATE

880 EO Trim for 44 & 88 Rim Devices

VON DUPRIN®

NOTES: SEE MASTER SHEET #10001 FOR SUGGESTED REINFORCING

TEMPLATE NUMBER: 20250_a

DATE: 05-28-13

RIM APPLICATION

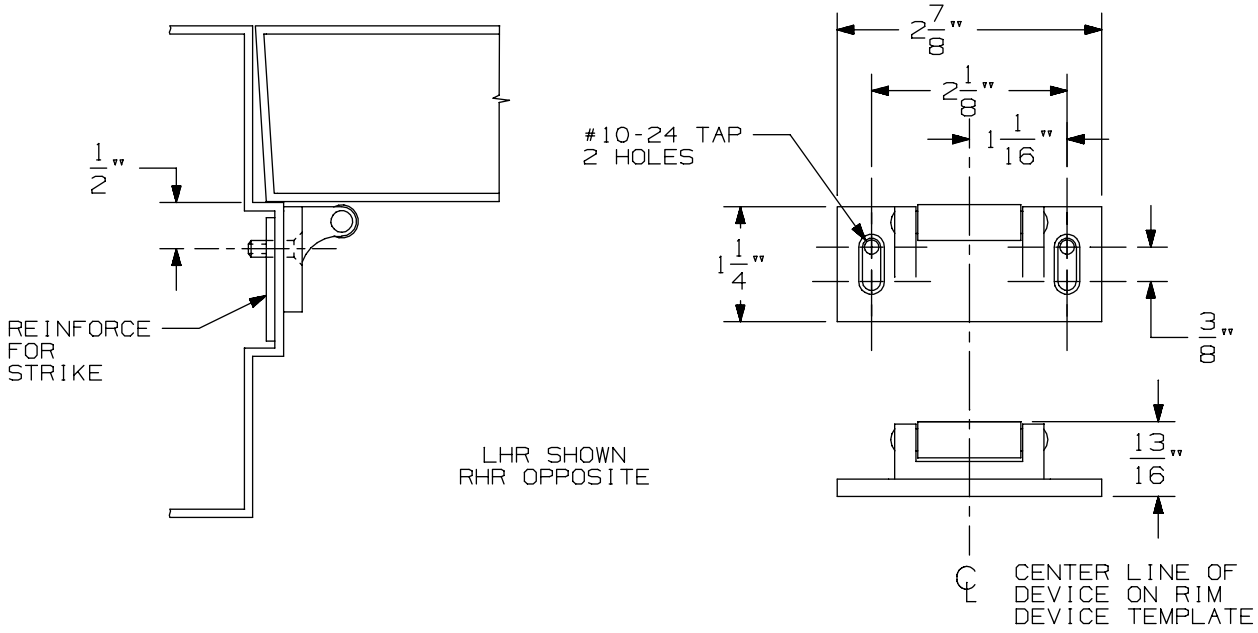

VERTICAL APPLICATION

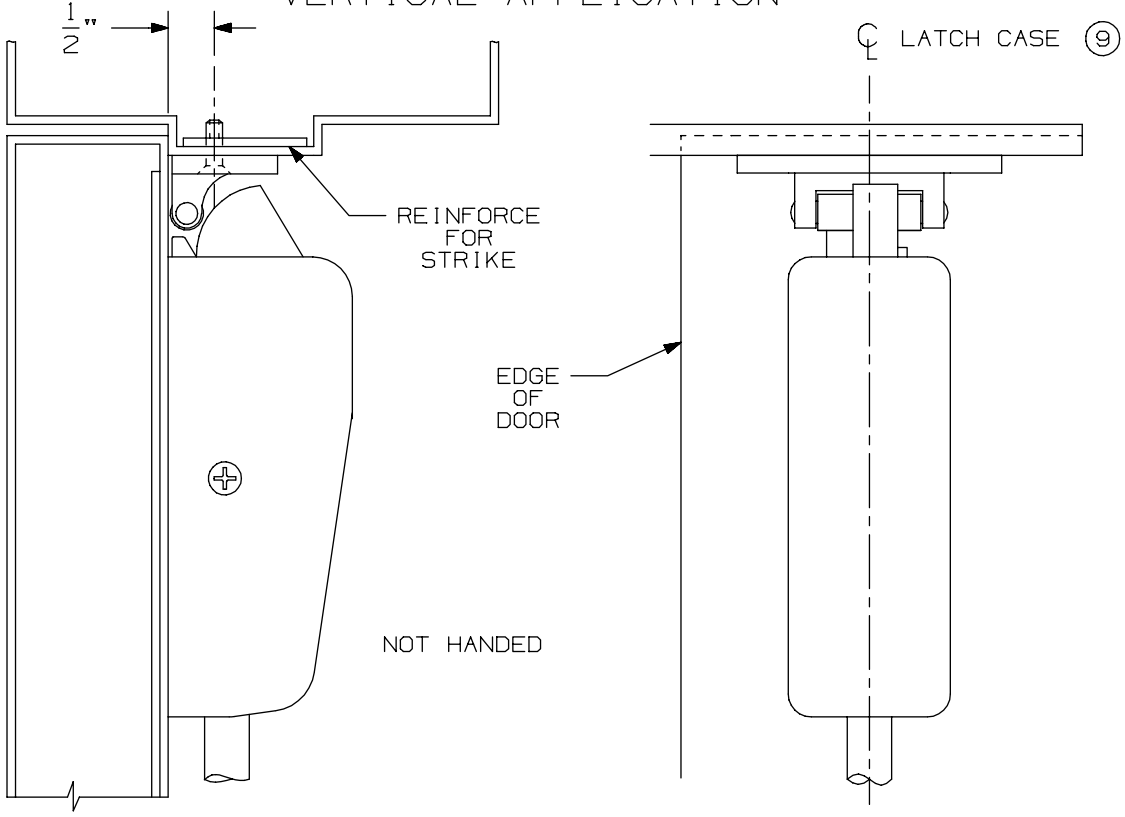

NOTE: LATCH CASE MOUNTING HOLES TO BE PREPARED AT INSTALLATION ON DOOR.

299 & 299F Strike

VON DUPRIN®

NOTES: SEE MASTER SHEET #10001 FOR SUGGESTED REINFORCING

TEMPLATE NUMBER: 30039_a

DATE: 05-23-13

FOR ADDITIONAL INFORMATION SEE TEMPLATE NO. 10155 OR 10169

NOTE: TYPE 86 STOCK HOLLOW METAL APPLICATIONS FOR 88 DEVICES WILL WORK WITH ALL STANDARD STRIKE APPLICATIONS, SEE CORRESPONDING 88 DEVICE TEMPLATE FOR CORRECT BACKSET AND DEVICE HEIGHT.

TYPE 86 STOCK HOLLOW METAL DOOR

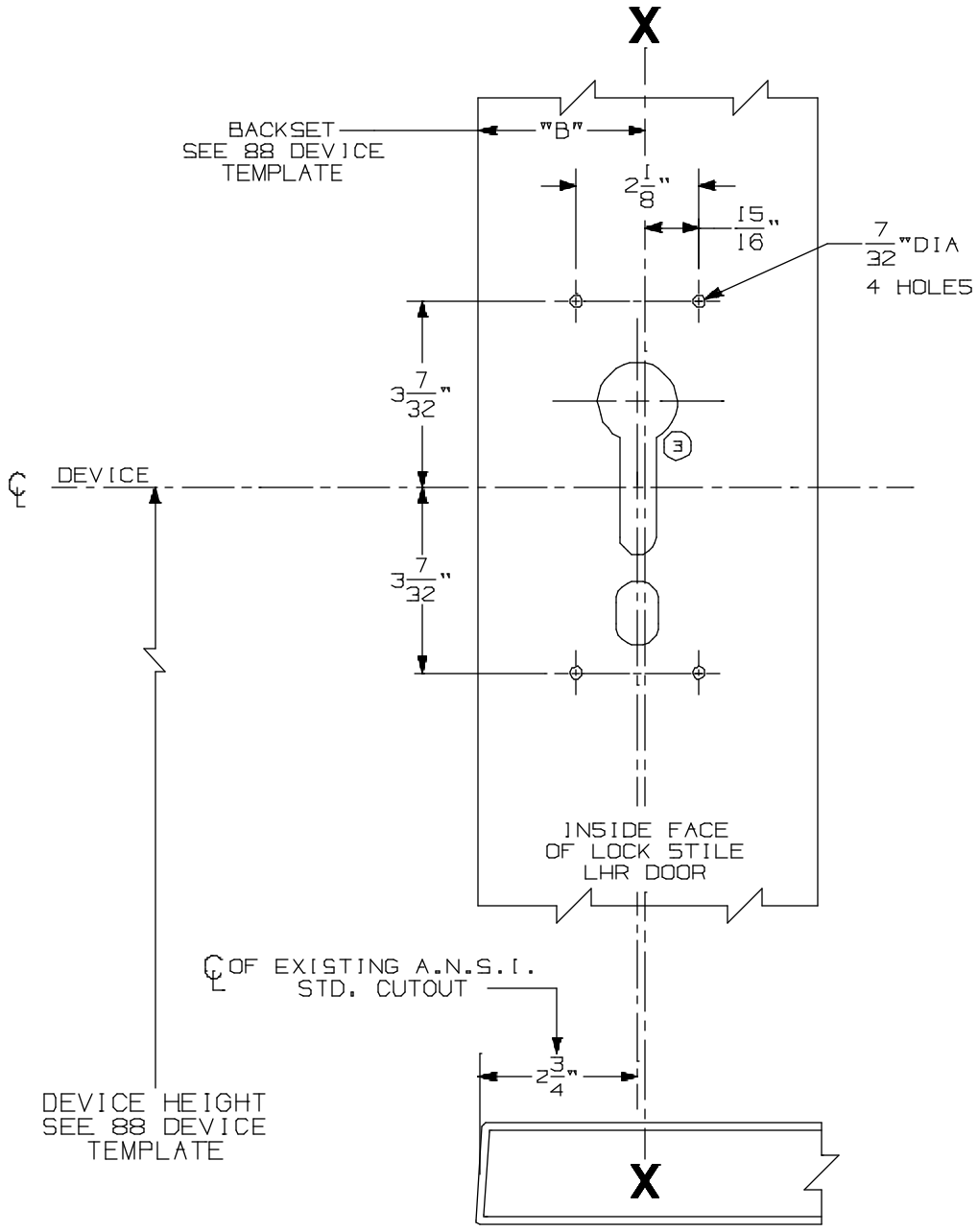

SEE A.N.S.I. SPECIFICATION NO. A115 FOR THE SIZE AND LOCATION OF STOCK CUTOUTS.

FOR OUTSIDE TRIM PREPARATION, SEE ADDITIONAL TRIM TEMPLATE.

LHR SHOWN
RHR OPPOSITE

88EO & DT Rim Devices w/880 Trim for Type "86" Stock Hollow Metal Applications

VON DUPRIN®

NOTES: SEE MASTER SHEET #10001 FOR SUGGESTED REINFORCING

TEMPLATE NUMBER: 10202_a

DATE: 05-16-13

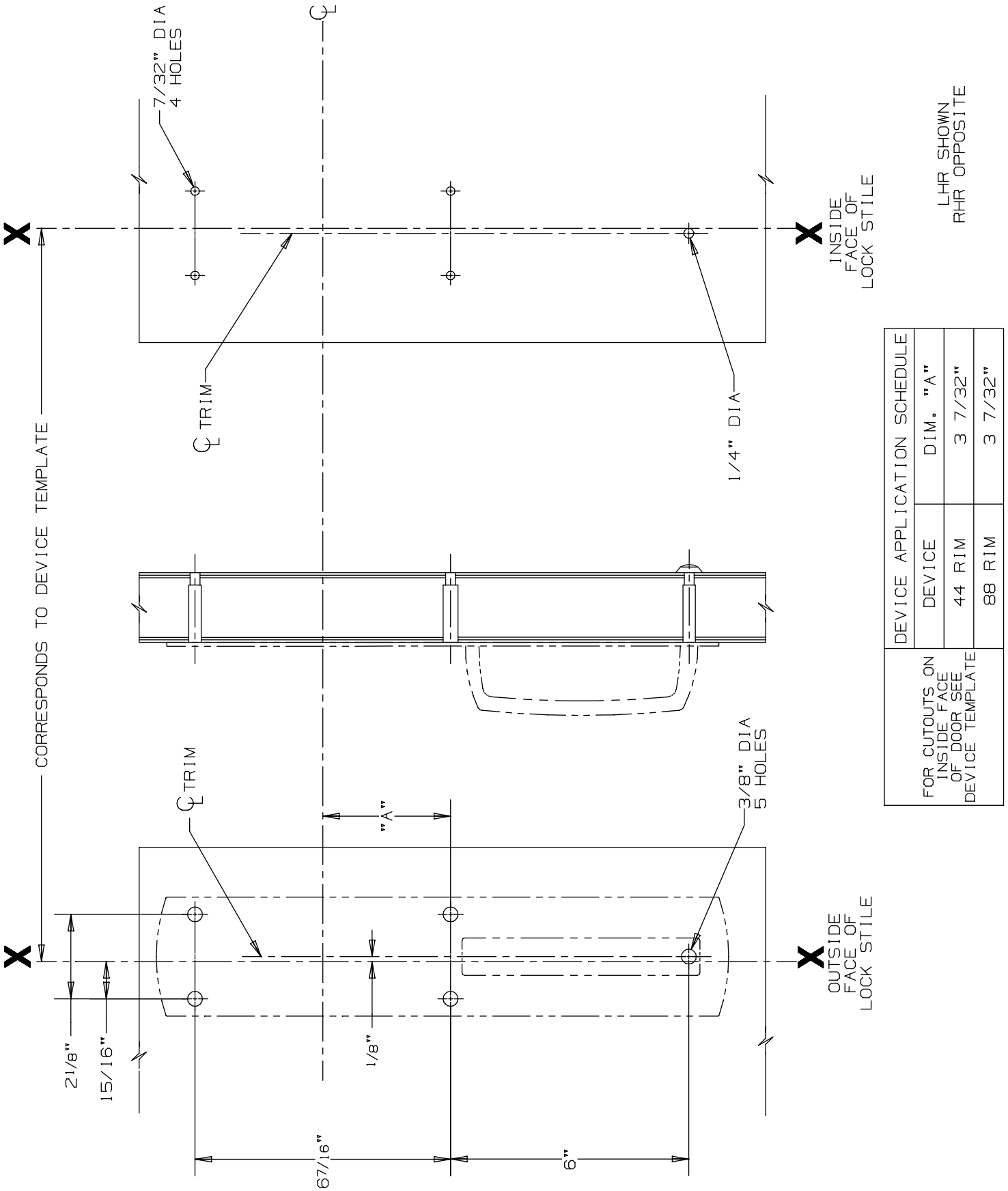

DEVICE APPLICATION SCHEDULE		
DEVICE	DIM. "A"	
44 RIM	3 7/32"	
88 RIM	3 7/32"	

FOR CUTOUTS ON INSIDE FACE OF DOOR SEE DEVICE TEMPLATE

880 DT Trim for 44 & 88 Rim Devices

VON DUPRIN®

NOTES: SEE MASTER SHEET #10001 FOR SUGGESTED REINFORCING

TEMPLATE NUMBER: 20251_a

DATE: 05-28-13

RIM APPLICATION

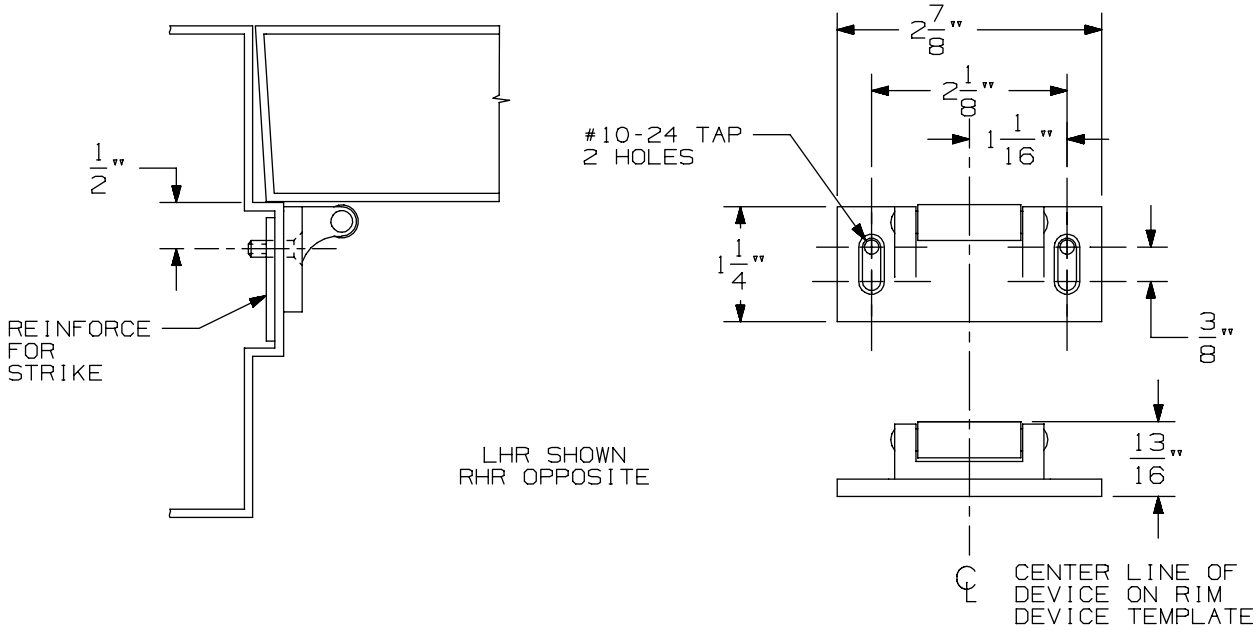

VERTICAL APPLICATION

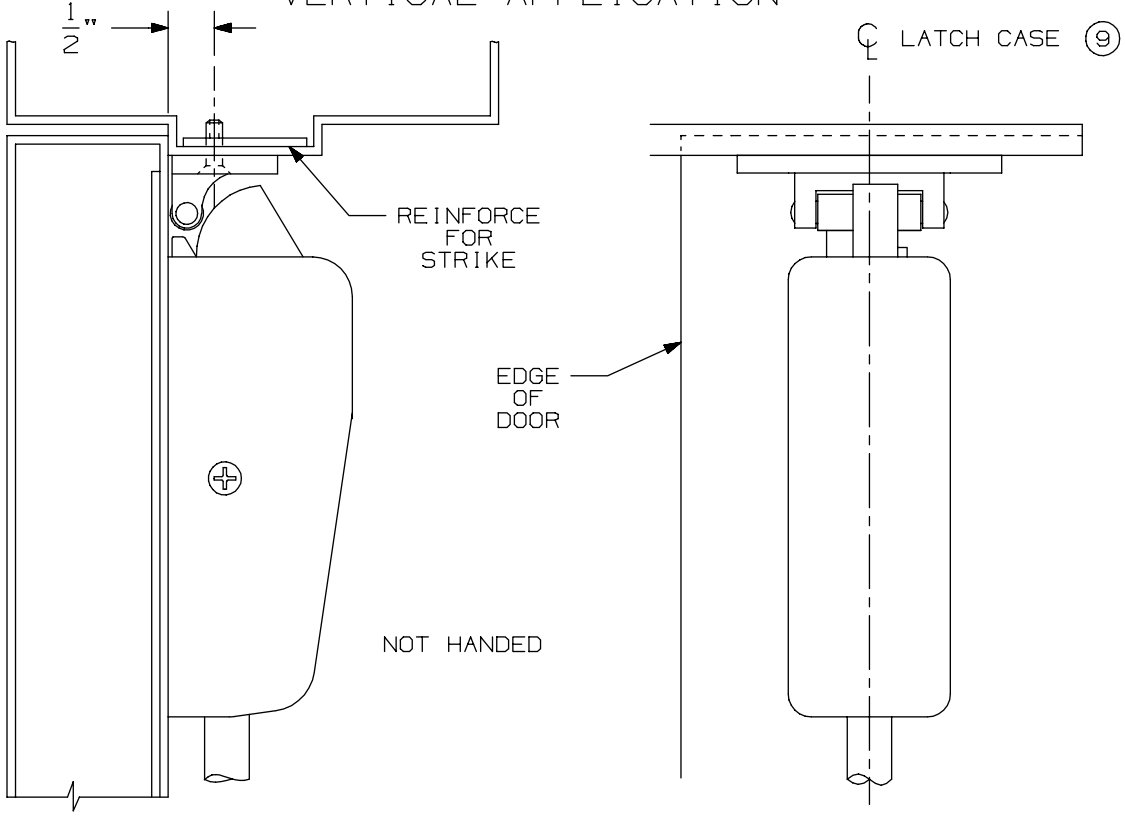

NOTE: LATCH CASE MOUNTING HOLES TO BE PREPARED AT INSTALLATION ON DOOR.

299 & 299F Strike

VON DUPRIN®

NOTES: SEE MASTER SHEET #10001 FOR SUGGESTED REINFORCING

TEMPLATE NUMBER: 30039_a

DATE: 05-23-13

FOR ADDITIONAL INFORMATION SEE TEMPLATE NO. 10156 OR NO. 10170

NOTE: TYPE 86 STOCK HOLLOW METAL APPLICATIONS FOR 88 DEVICES WILL WORK WITH ALL STANDARD STRIKE APPLICATIONS. SEE CORRESPONDING 88 DEVICE TEMPLATE FOR CORRECT BACKSET AND DEVICE HEIGHT.

TYPE 86 STOCK HOLLOW METAL DOOR & STD DOOR

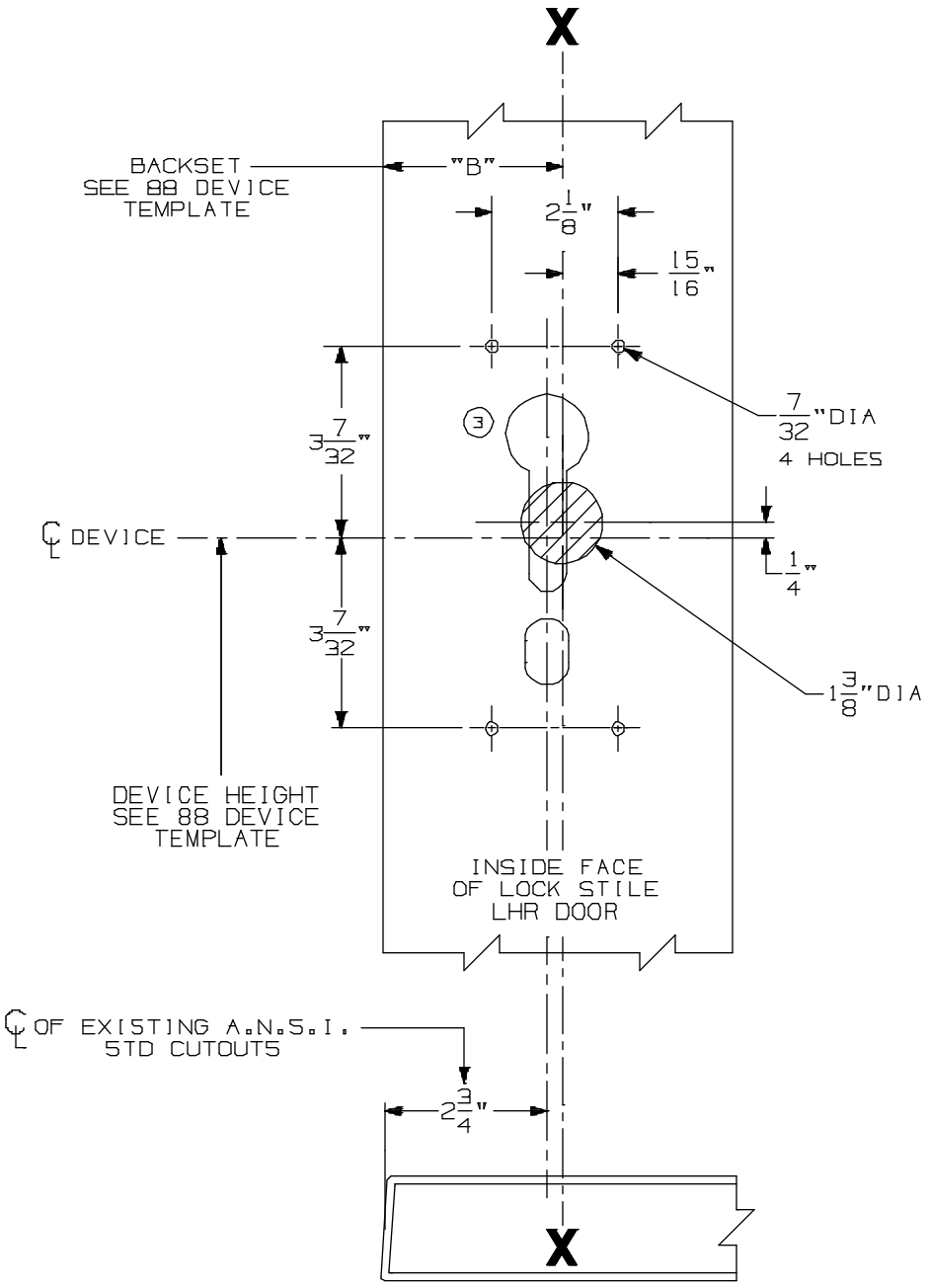

SEE A.N.S.I. SPECIFICATION NO. A115 FOR THE SIZE AND LOCATION OF STOCK CUTOUTS.

FOR OUTSIDE TRIM PREPARATION, SEE ADDITIONAL TRIM TEMPLATE.

LHR SHOWN
RHR OPPOSITE

88NL Rim Devices with 880 Trim for Type "86" Stock Hollow Metal Applications		VON DUPRIN®
NOTES: SEE MASTER SHEET #10001 FOR SUGGESTED REINFORCING	TEMPLATE NUMBER: 10203_a	DATE: 05-16-13

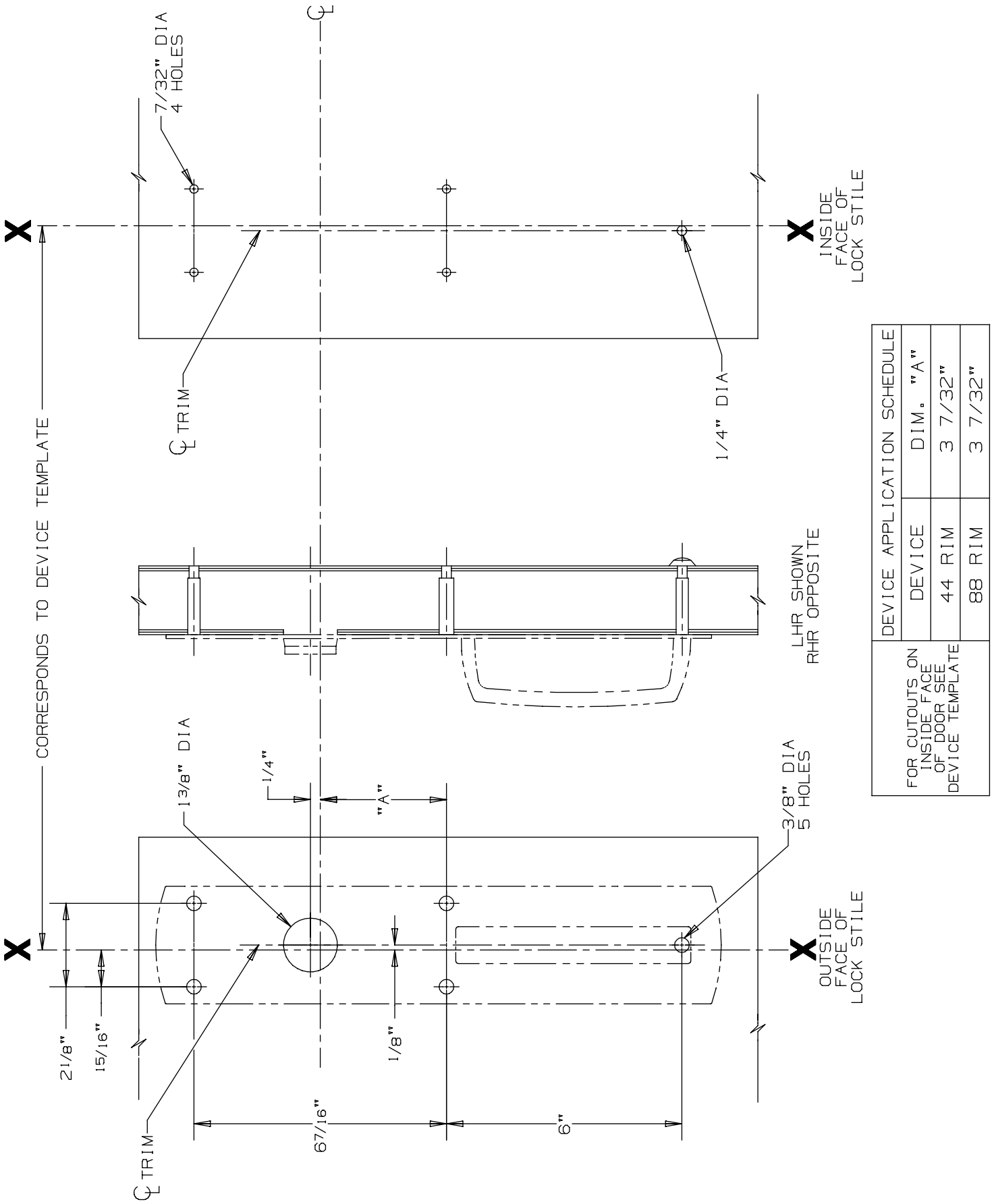

DEVICE APPLICATION SCHEDULE		
DEVICE	DIM. "A"	
44 RIM	3 7/32"	
88 RIM	3 7/32"	

FOR CUTOUTS ON INSIDE FACE OF DOOR SEE DEVICE TEMPLATE

880 NL Trim for 44 & 88 Rim Devices

VON DUPRIN®

NOTES: SEE MASTER SHEET #10001 FOR SUGGESTED REINFORCING

TEMPLATE NUMBER: 20252_a

DATE: 05-28-13

RIM APPLICATION

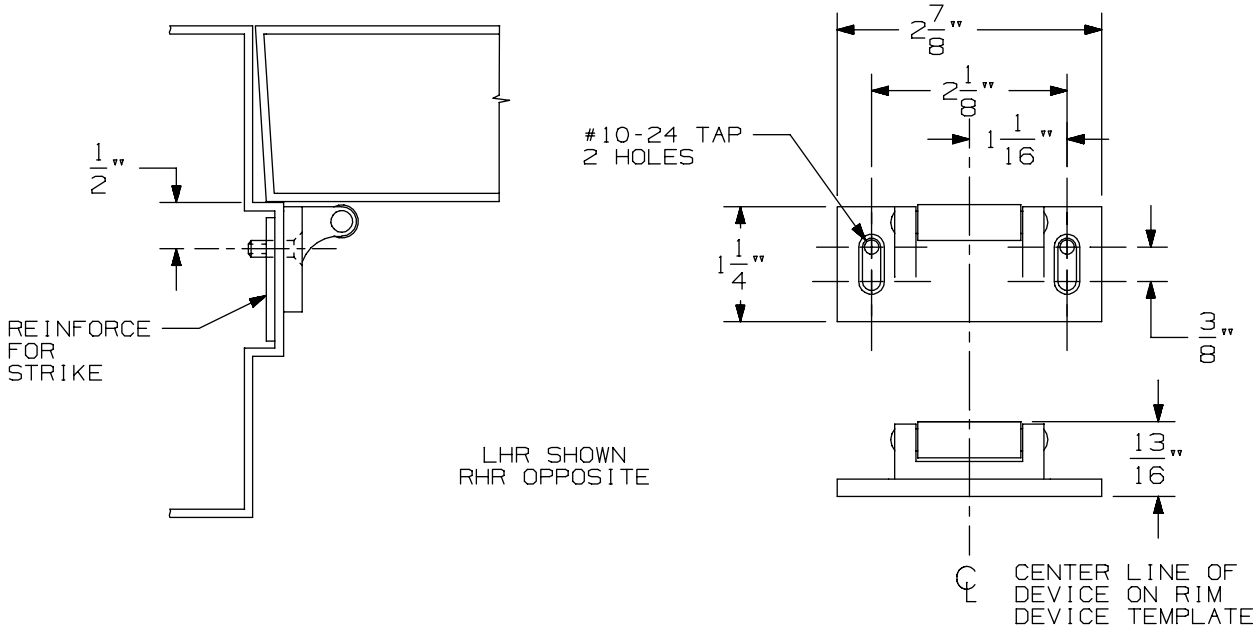

VERTICAL APPLICATION

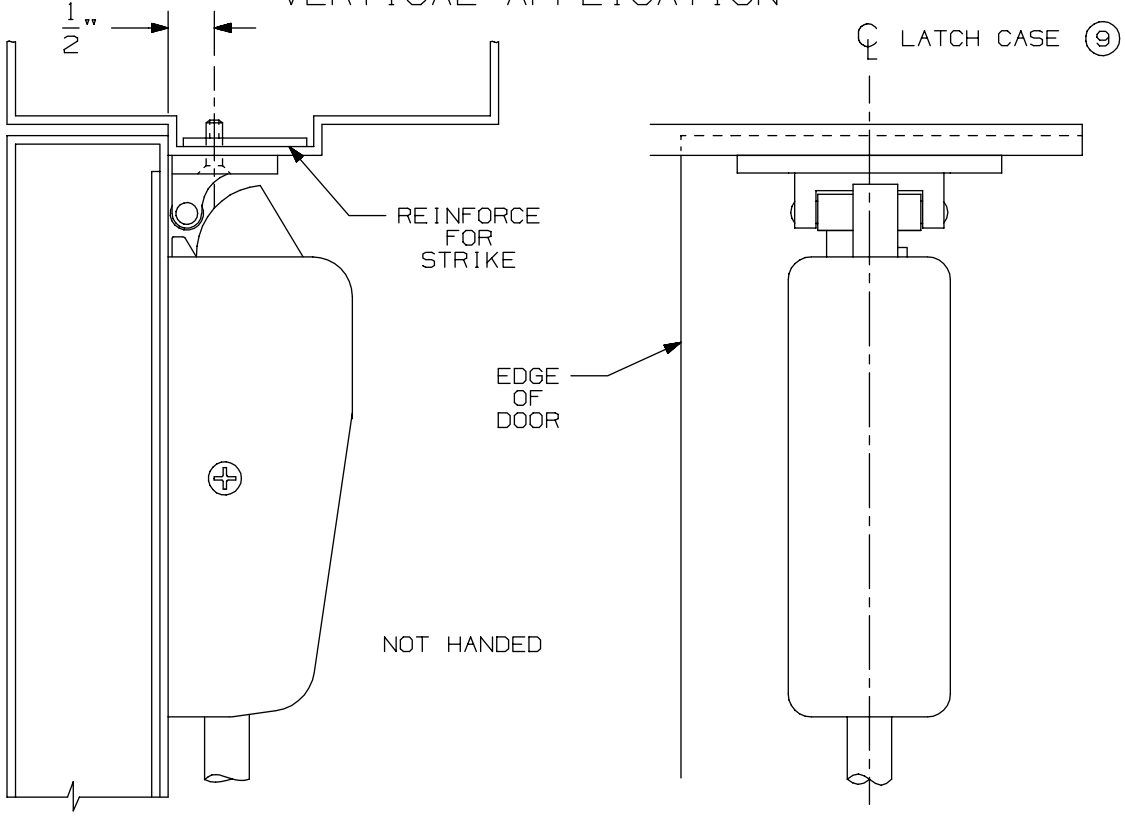

NOTE: LATCH CASE MOUNTING HOLES TO BE PREPARED AT INSTALLATION ON DOOR.

299 & 299F Strike

VON DUPRIN®

NOTES: SEE MASTER SHEET #10001 FOR SUGGESTED REINFORCING

TEMPLATE NUMBER: 30039_a

DATE: 05-23-13

FOR ADDITIONAL INFORMATION SEE TEMPLATE NO. 10158 OR NO. 10172

NOTE: TYPE 86 STOCK HOLLOW METAL APPLICATIONS FOR 88 DEVICES WILL WORK WITH ALL STANDARD STRIKE APPLICATIONS. SEE CORRESPONDING 88 DEVICE TEMPLATE FOR CORRECT BACKSET AND DEVICE HEIGHT.

TYPE 86 STOCK HOLLOW METAL DOOR & STD DOOR

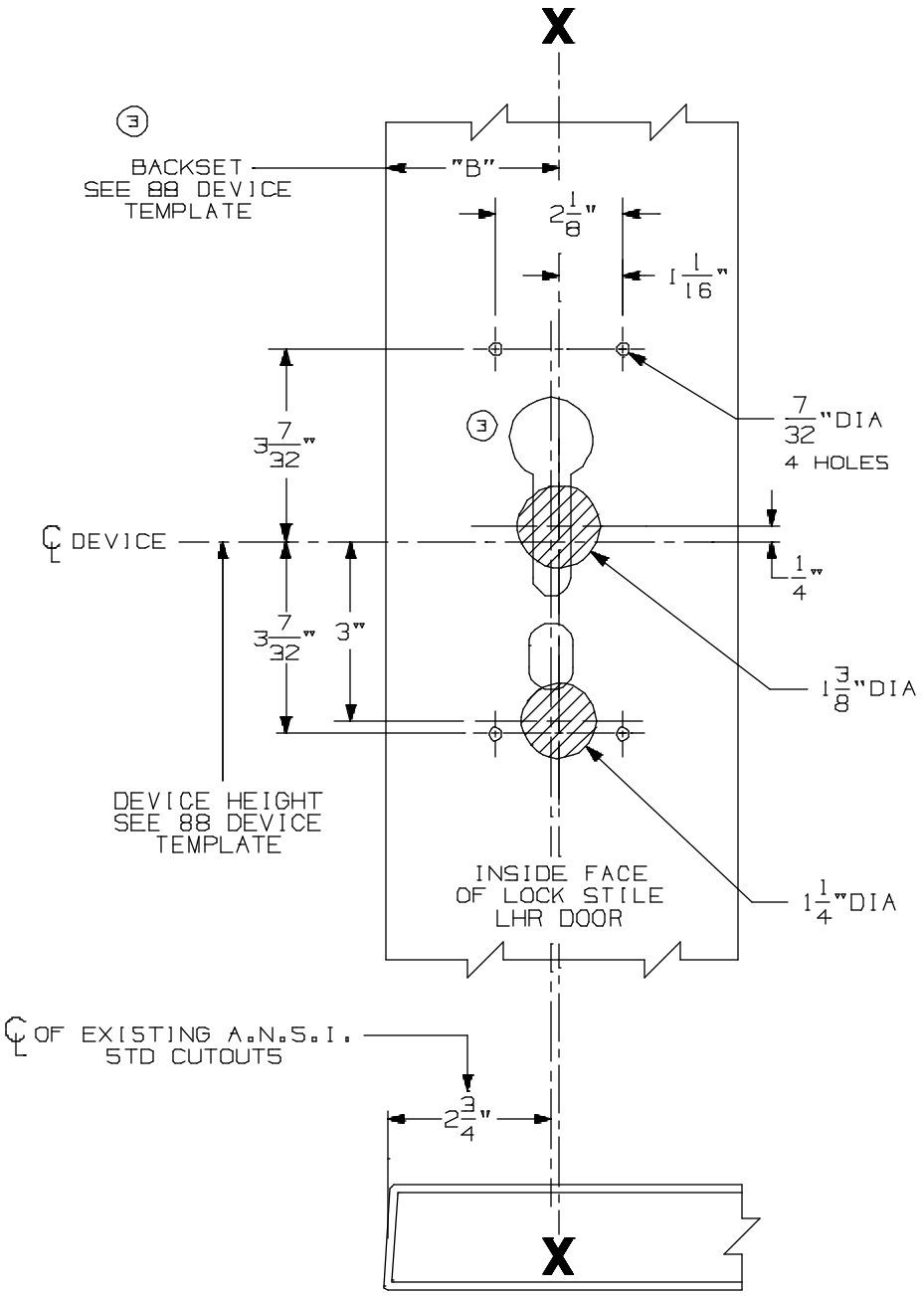

SEE A.N.S.I. SPECIFICATION NO. A115 FOR THE SIZE AND LOCATION OF STOCK CUTOUTS.

FOR OUTSIDE TRIM PREPARATION, SEE ADDITIONAL TRIM TEMPLATE.

LHR SHOWN
RHR OPPOSITE

88K Rim Devices w/ 880 Trim for Type "86" Stock Hollow Metal Applications	VON DUPRIN®	
NOTES: SEE MASTER SHEET #10001 FOR SUGGESTED REINFORCING	TEMPLATE NUMBER: 10205_a	DATE: 05-16-13

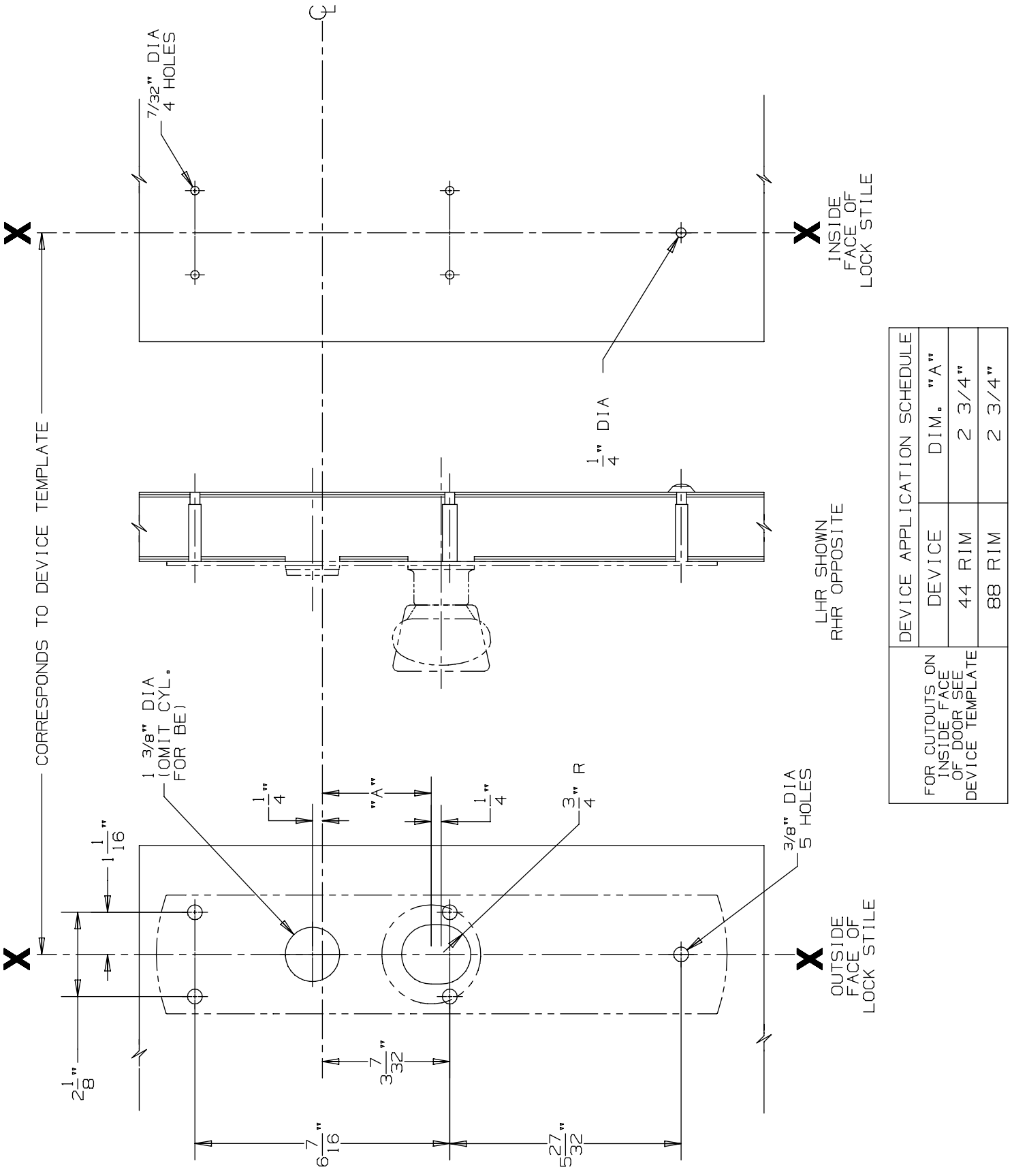

DEVICE APPLICATION SCHEDULE	
DEVICE	DIM. "A"
44 RIM	2 3/4"
88 RIM	2 3/4"

FOR CUTOUTS ON INSIDE FACE OF DOOR SEE DEVICE TEMPLATE

880 K & 880 K-BE Trim for 44 & 88 Rim Devices

VON DUPRIN®

NOTES: SEE MASTER SHEET #10001 FOR SUGGESTED REINFORCING

TEMPLATE NUMBER: 20254_a

DATE: 05-28-13

RIM APPLICATION

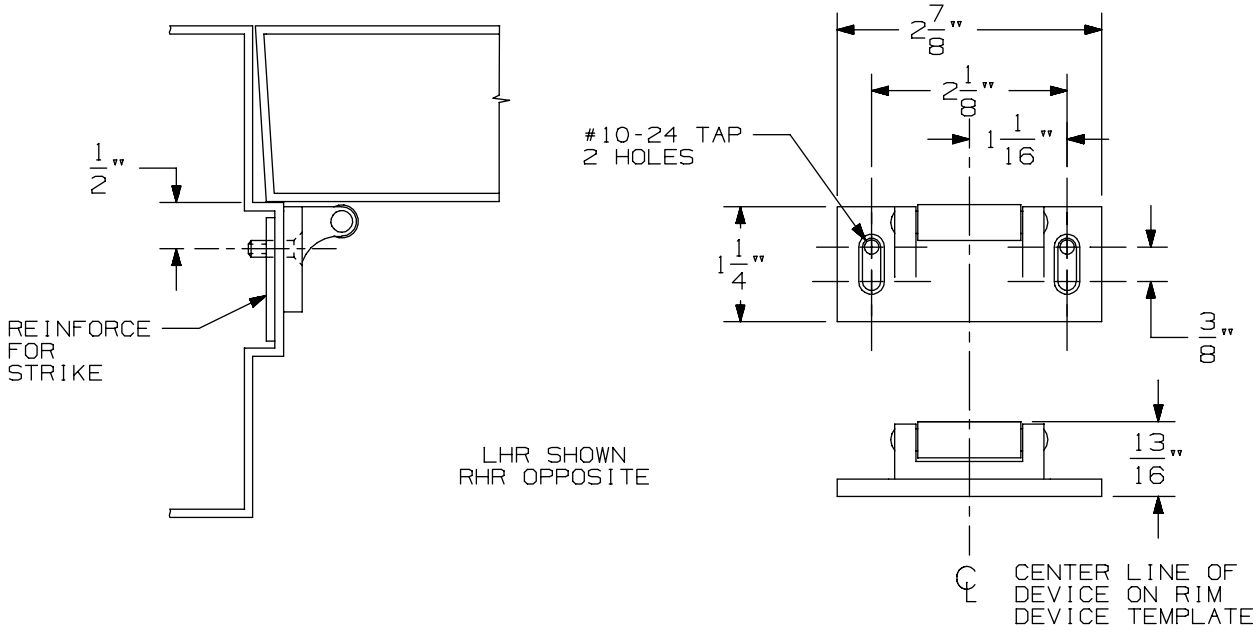

VERTICAL APPLICATION

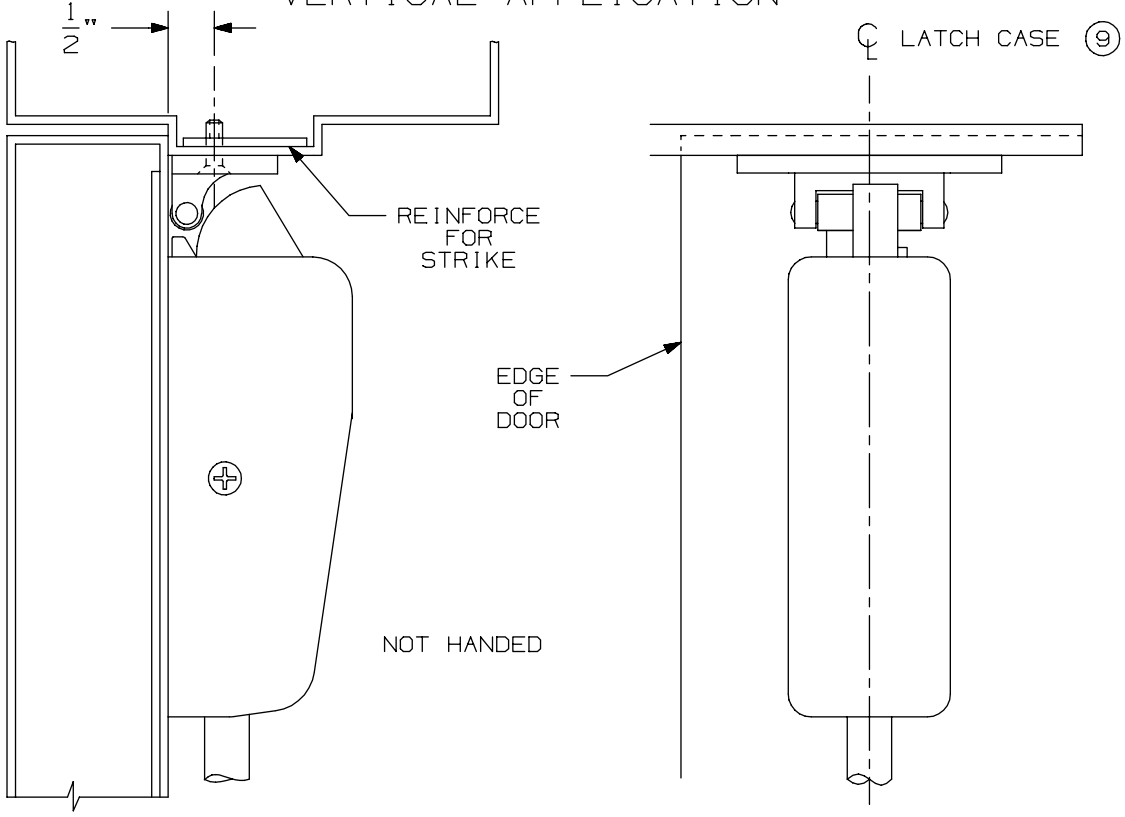

NOTE: LATCH CASE MOUNTING HOLES TO BE PREPARED AT INSTALLATION ON DOOR.

299 & 299F Strike

VON DUPRIN®

NOTES: SEE MASTER SHEET #10001 FOR SUGGESTED REINFORCING

TEMPLATE NUMBER: 30039_a

DATE: 05-23-13

FOR ADDITIONAL INFORMATION SEE TEMPLATE NO. 10157 OR NO. 10171

NOTE: TYPE 86 STOCK HOLLOW METAL APPLICATIONS FOR 88 DEVICES WILL WORK WITH ALL STANDARD STRIKE APPLICATIONS. SEE CORRESPONDING 88 DEVICE TEMPLATE FOR CORRECT BACKSET AND DEVICE HEIGHT.

TYPE 86 STOCK HOLLOW METAL DOOR & STD DOOR

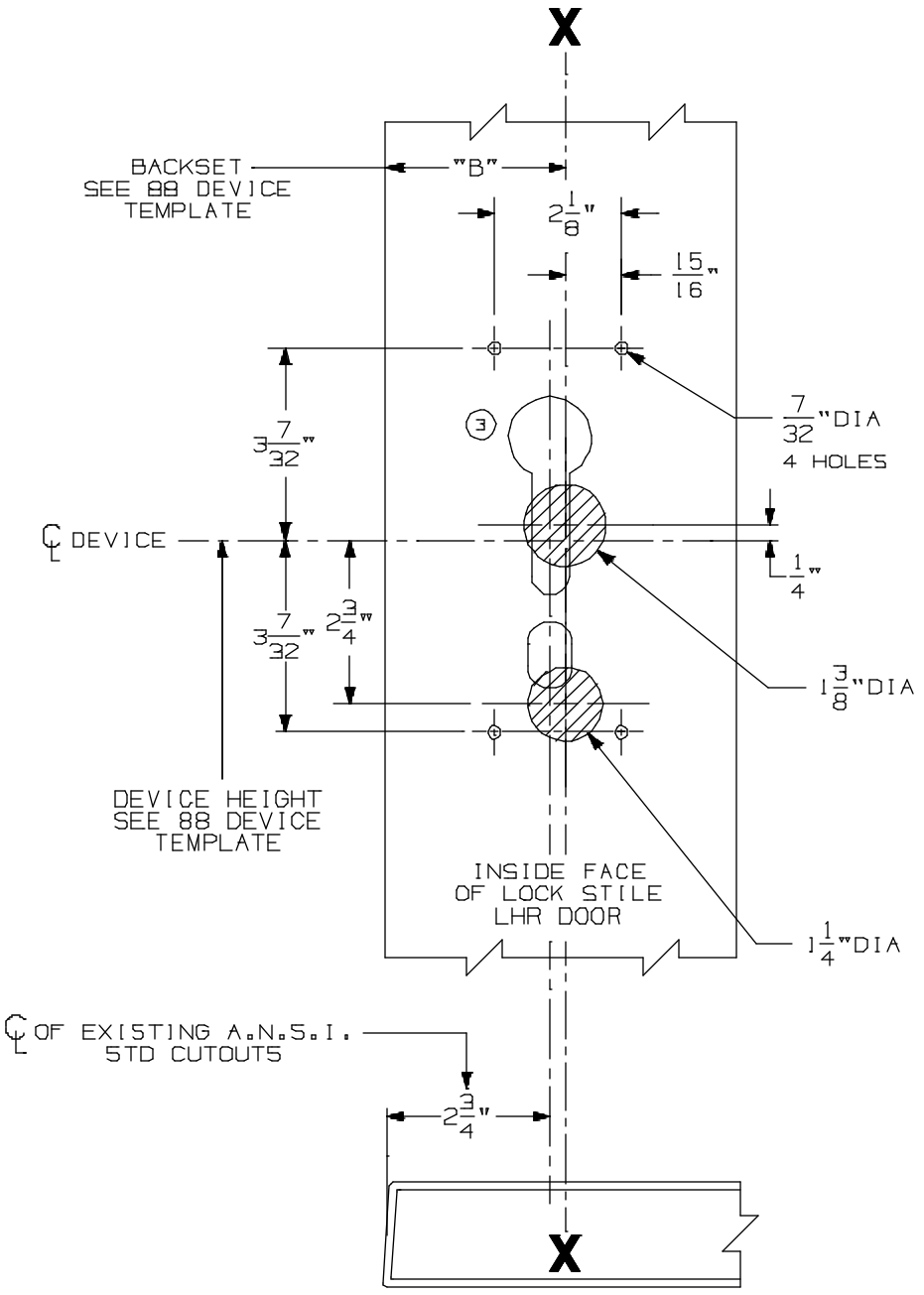

SEE A.N.S.I. SPECIFICATION NO. A115 FOR THE SIZE AND LOCATION OF STOCK CUTOUTS.

FOR OUTSIDE TRIM PREPARATION, SEE ADDITIONAL TRIM TEMPLATE.

LHR SHOWN
RHR OPPOSITE

88TP Rim Devices with 880 Trim for Type "86" Stock Hollow Metal Applications

VON DUPRIN®

NOTES: SEE MASTER SHEET #10001 FOR SUGGESTED REINFORCING

TEMPLATE NUMBER: 10204_a

DATE: 05-16-13

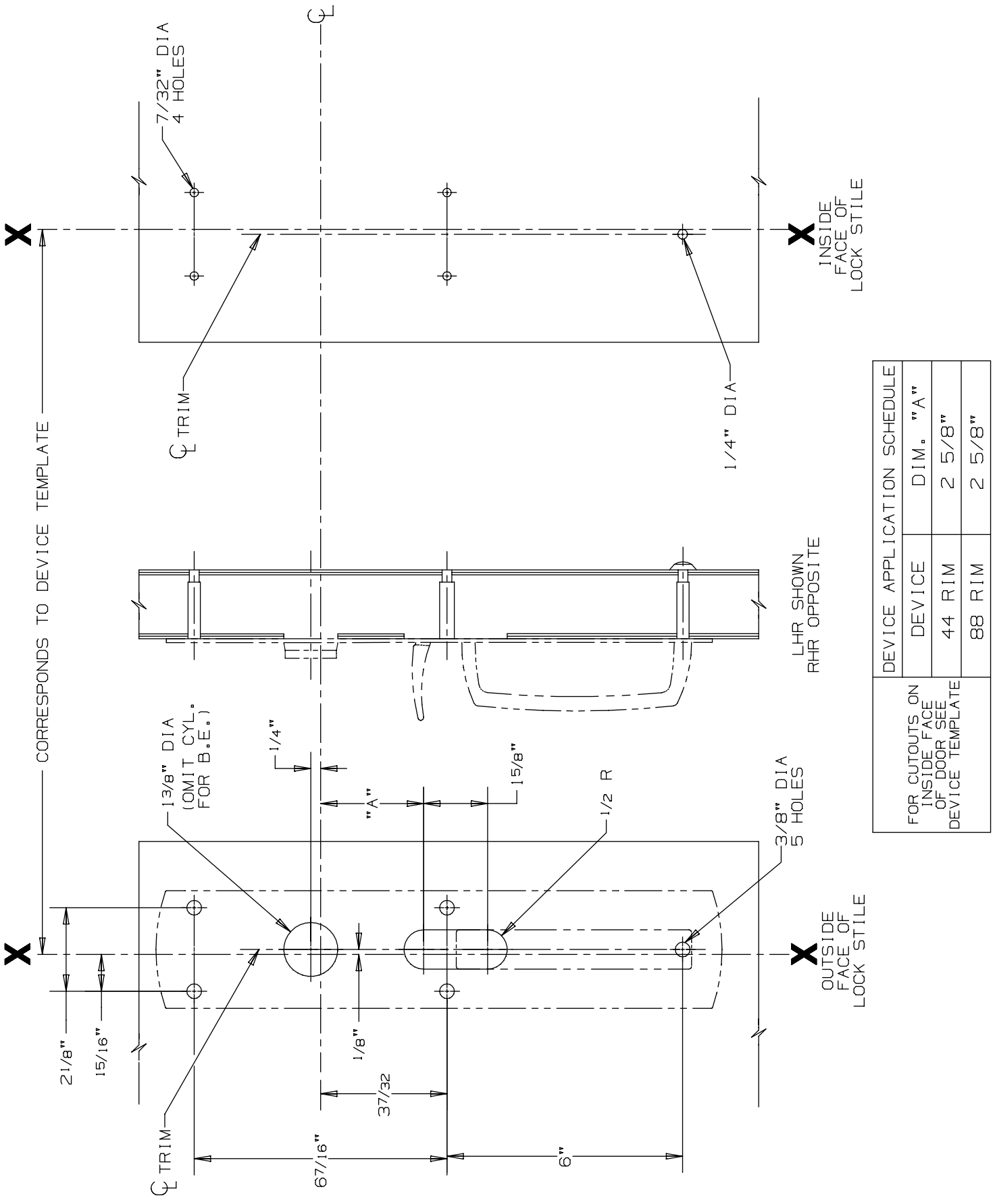

DEVICE APPLICATION SCHEDULE		
DEVICE	DIM. "A"	
44 RIM	2 5/8"	
88 RIM	2 5/8"	

FOR CUTOUTS ON INSIDE FACE OF DOOR SEE DEVICE TEMPLATE

880 TP & 880 TP-BE Trim for 44 & 88 Rim Devices

VON DUPRIN®

NOTES: SEE MASTER SHEET #10001 FOR SUGGESTED REINFORCING

TEMPLATE NUMBER: 20253_a

DATE: 05-28-13

RIM APPLICATION

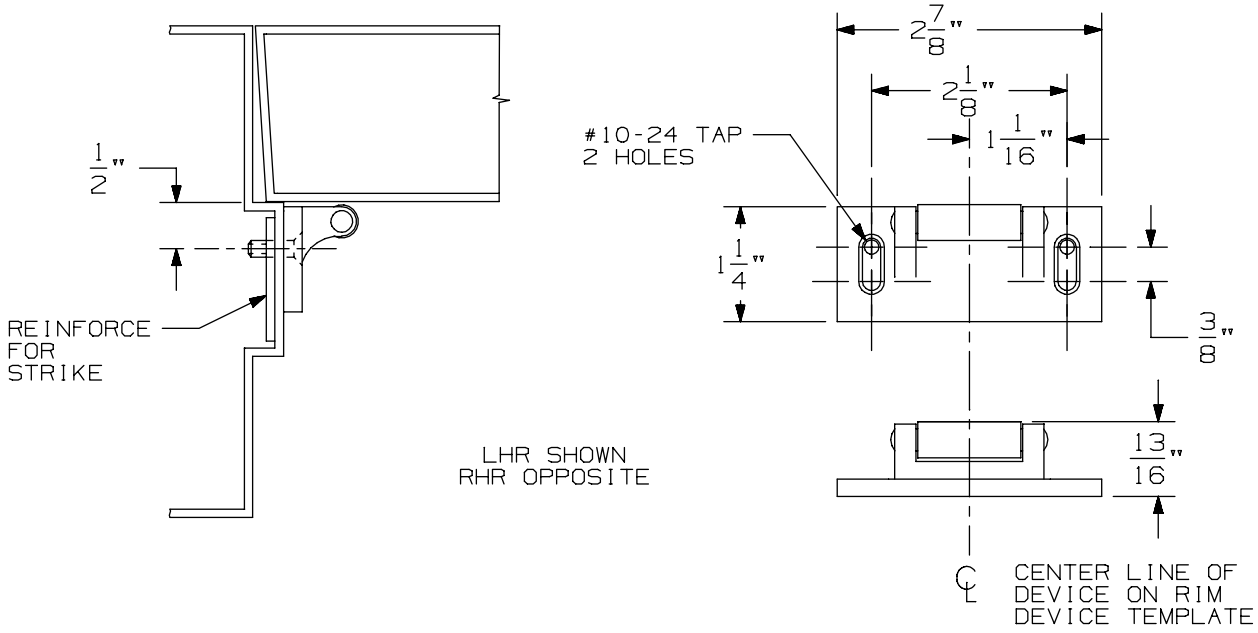

VERTICAL APPLICATION

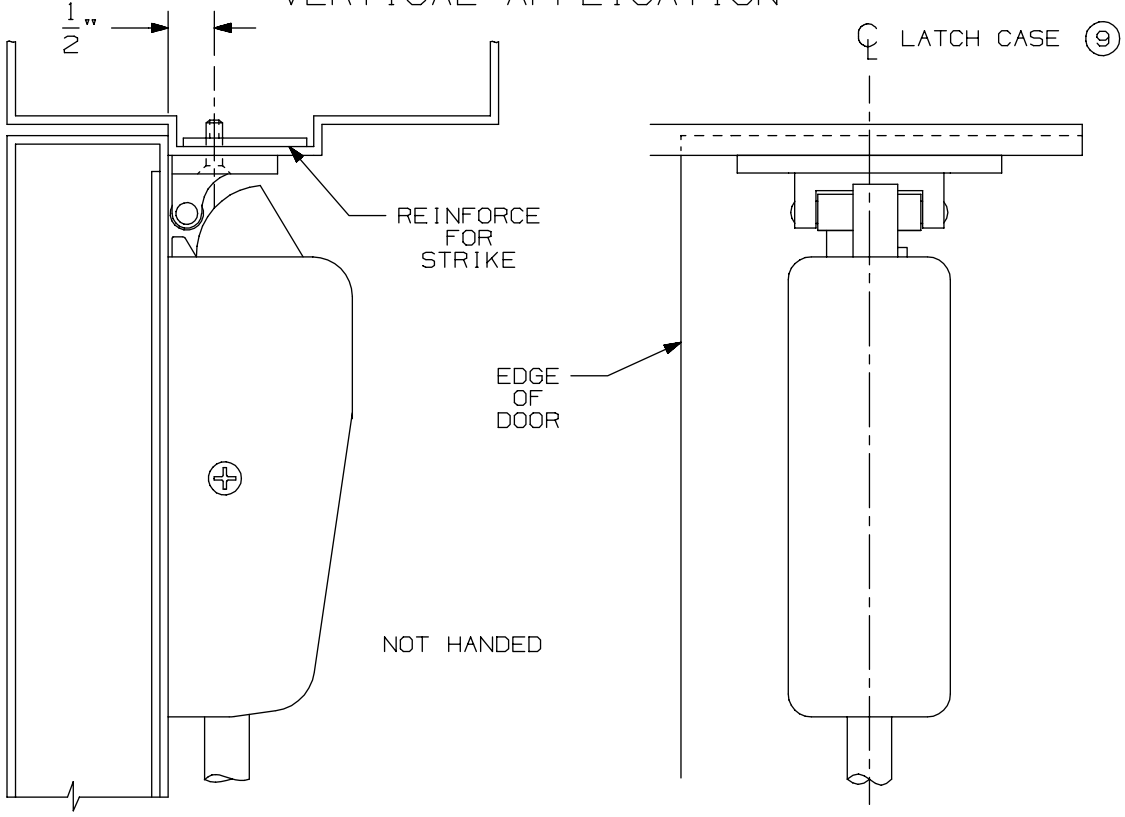

NOTE: LATCH CASE MOUNTING HOLES TO BE PREPARED AT INSTALLATION ON DOOR.

299 & 299F Strike

VON DUPRIN®

NOTES: SEE MASTER SHEET #10001 FOR SUGGESTED REINFORCING

TEMPLATE NUMBER: 30039_a

DATE: 05-23-13

88 Series for 86 Stock Hollow Metal Doors

-

8827 Surface Vertical Rod

FOR ADDITIONAL INFORMATION SEE TEMPLATE NO. 10160

TYPE 161 STOCK HOLLOW METAL DOOR

TYPE 86 STOCK HOLLOW METAL DOOR

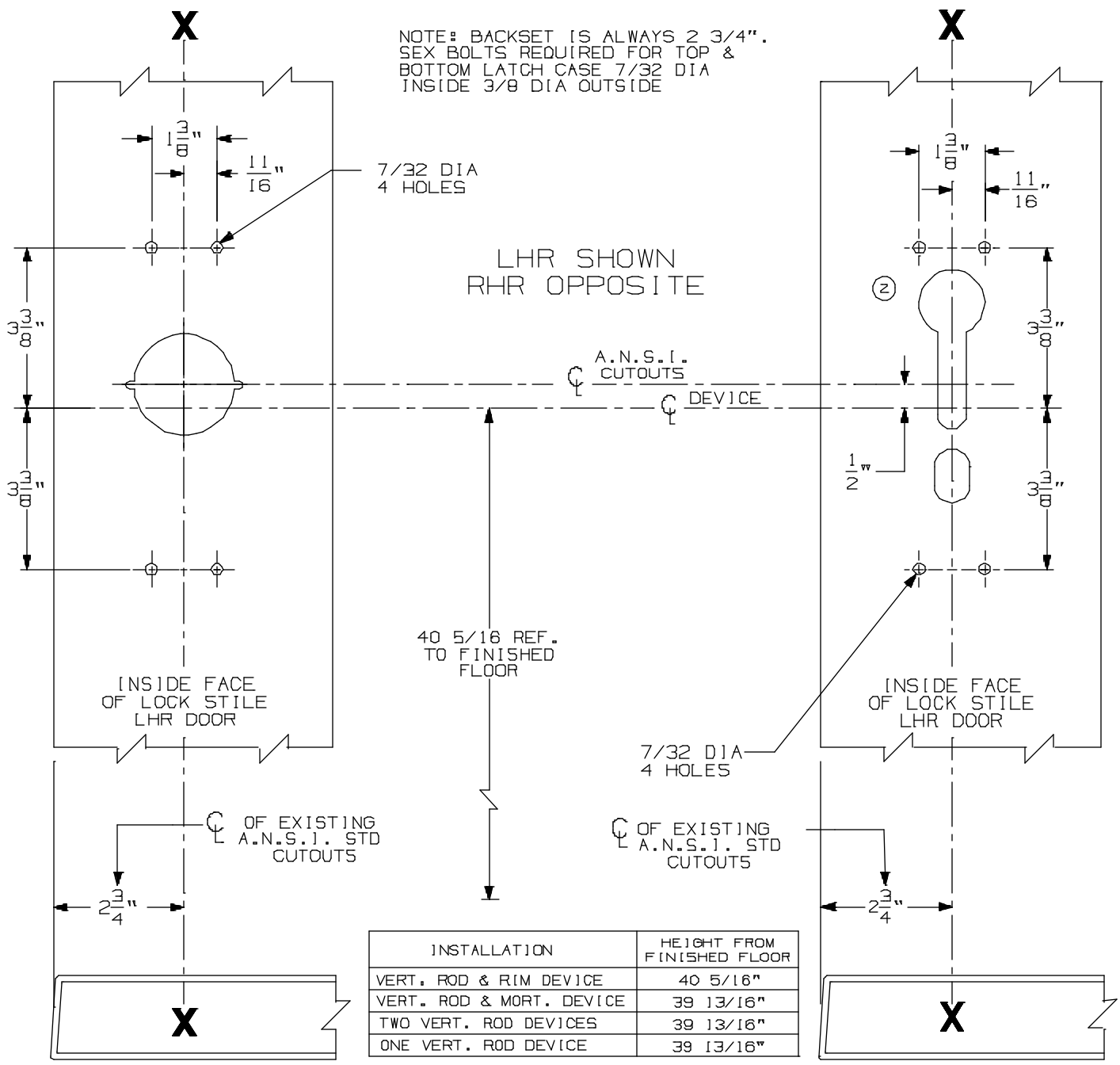

INSTALLATION	HEIGHT FROM FINISHED FLOOR
VERT. ROD & RIM DEVICE	40 5/16"
VERT. ROD & MORT. DEVICE	39 13/16"
TWO VERT. ROD DEVICES	39 13/16"
ONE VERT. ROD DEVICE	39 13/16"

VON DUPRIN CUTOUTS ARE LOCATED FROM A.N.S.I. CUTOUTS SEE A.N.S.I. SPECIFICATION NO. A115 FOR THE SIZE AND LOCATION OF THESE CUTOUTS.

FOR OUTSIDE TRIM PREPARATION, WHEN REQUIRED, SEE ADDITIONAL TRIM TEMPLATE.

8827EO & 8827DT Vertical Rod Devices w/ 880 Trim for Stock Hollow Metal Applications	VON DUPRIN®	
NOTES: SEE MASTER SHEET #10001 FOR SUGGESTED REINFORCING	TEMPLATE NUMBER: 10199_a	DATE: 05-16-13

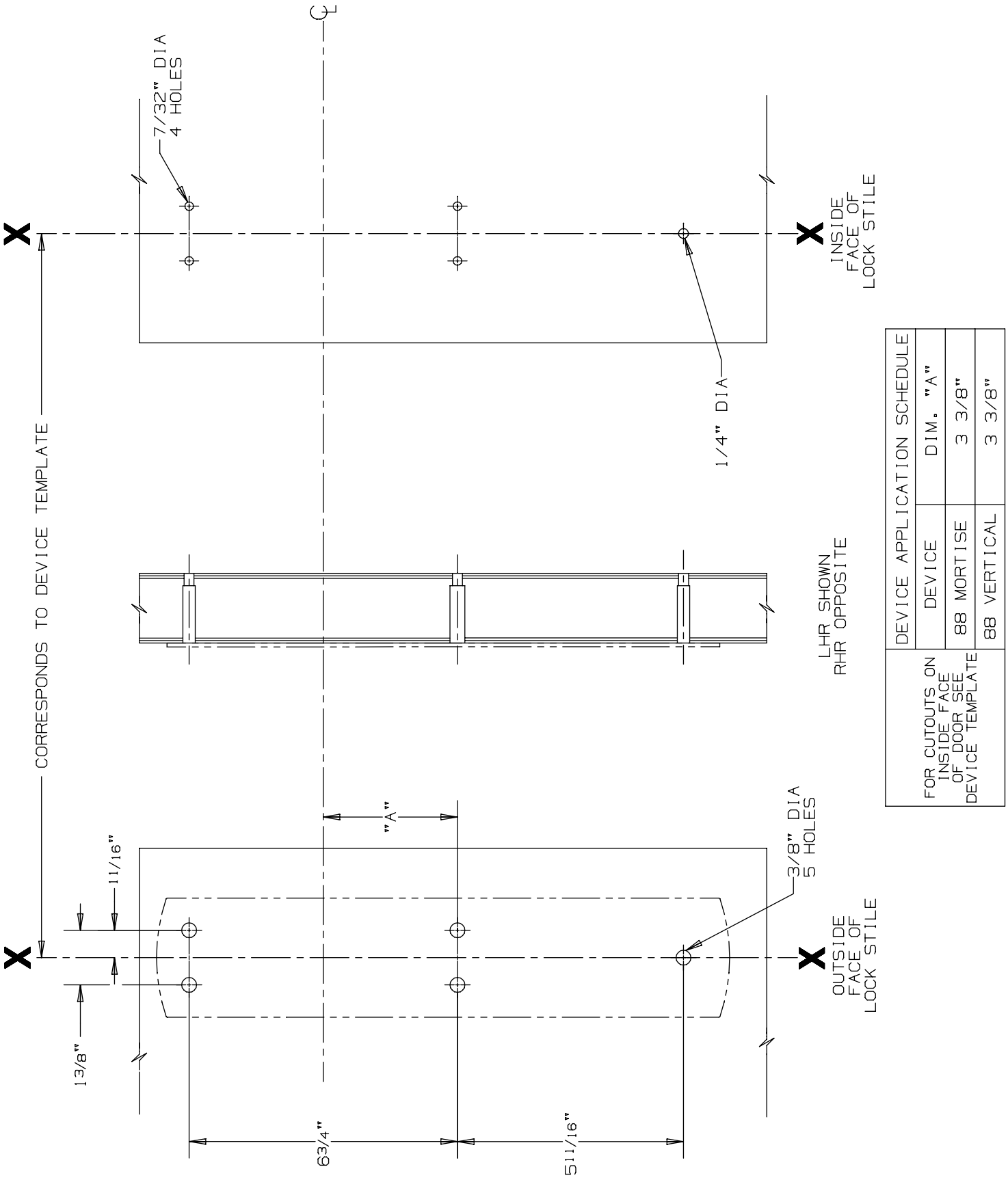

DEVICE APPLICATION SCHEDULE		
DEVICE	DIM. "A"	
88 MORTISE	3 3/8"	
88 VERTICAL	3 3/8"	

FOR CUTOUTS ON INSIDE FACE OF DOOR SEE DEVICE TEMPLATE

880 EO Trim for 88 Mortise & Vertical Devices

VON DUPRIN®

NOTES: SEE MASTER SHEET #10001 FOR SUGGESTED REINFORCING

TEMPLATE NUMBER: 20257_a

DATE: 05-28-13

RIM APPLICATION

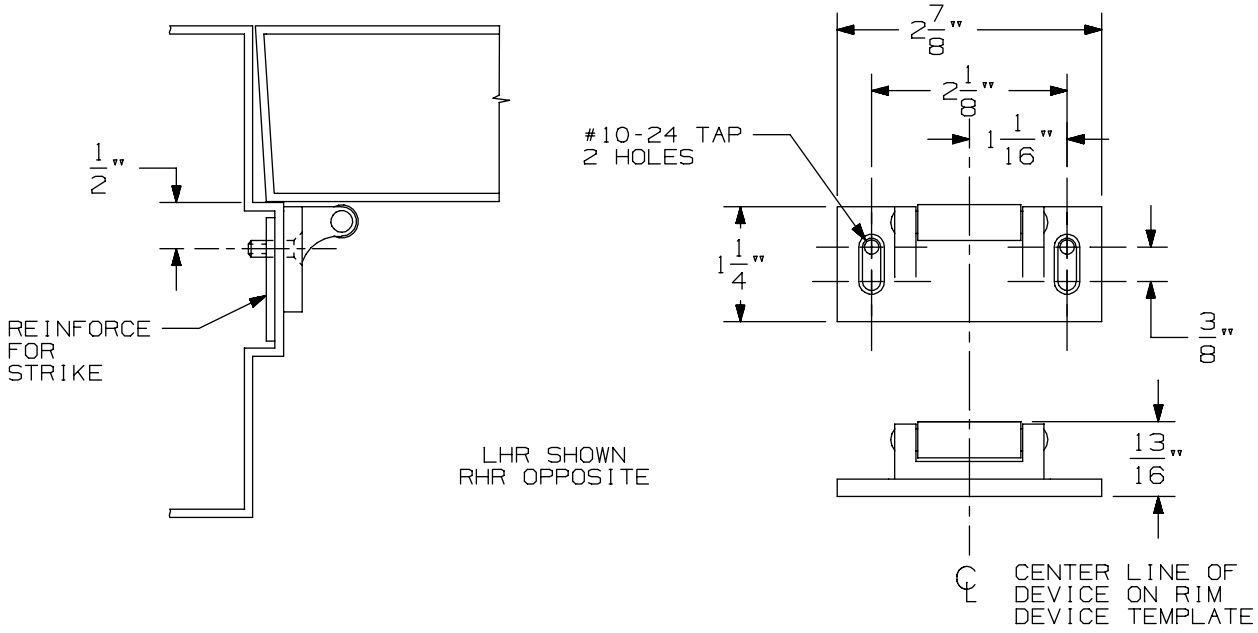

VERTICAL APPLICATION

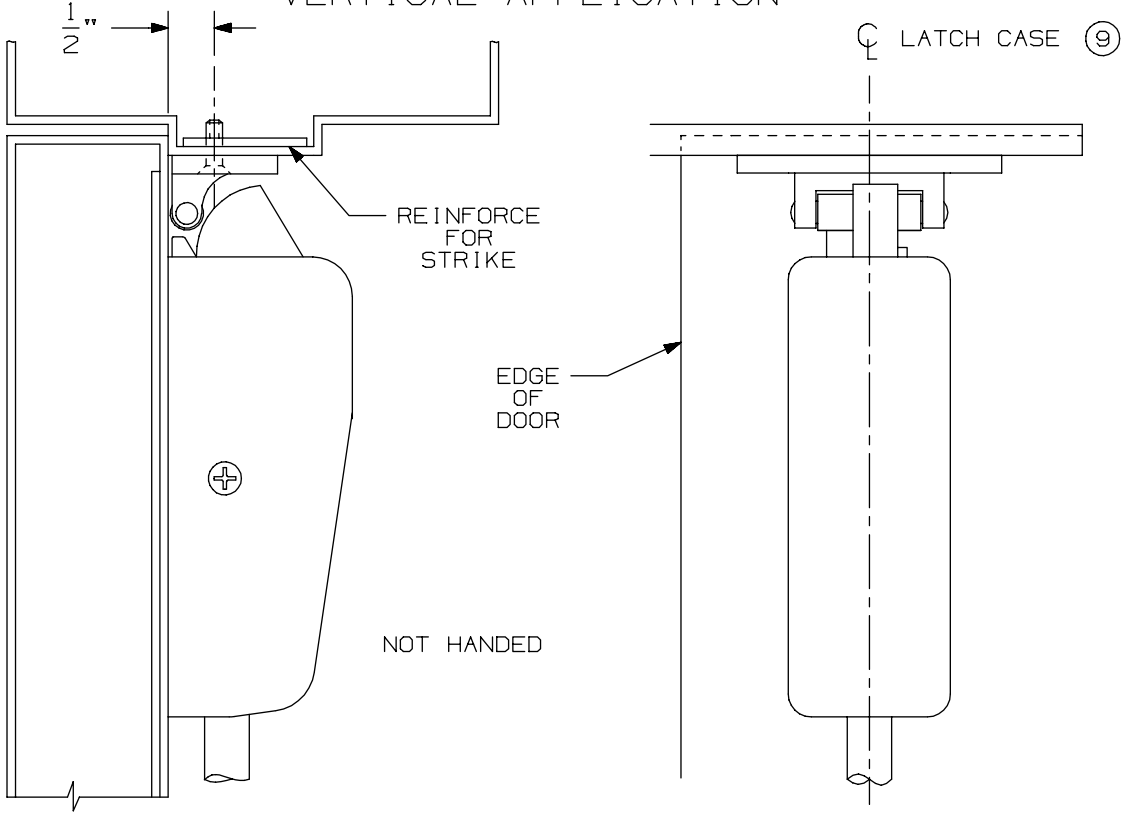

NOTE: LATCH CASE MOUNTING HOLES TO BE PREPARED AT INSTALLATION ON DOOR.

299 & 299F Strike

VON DUPRIN®

NOTES: SEE MASTER SHEET #10001 FOR SUGGESTED REINFORCING

TEMPLATE NUMBER: 30039_a

DATE: 05-23-13

FOR ADDITIONAL INFORMATION SEE TEMPLATE NO. 10160

TYPE 161 STOCK HOLLOW METAL DOOR

TYPE 86 STOCK HOLLOW METAL DOOR

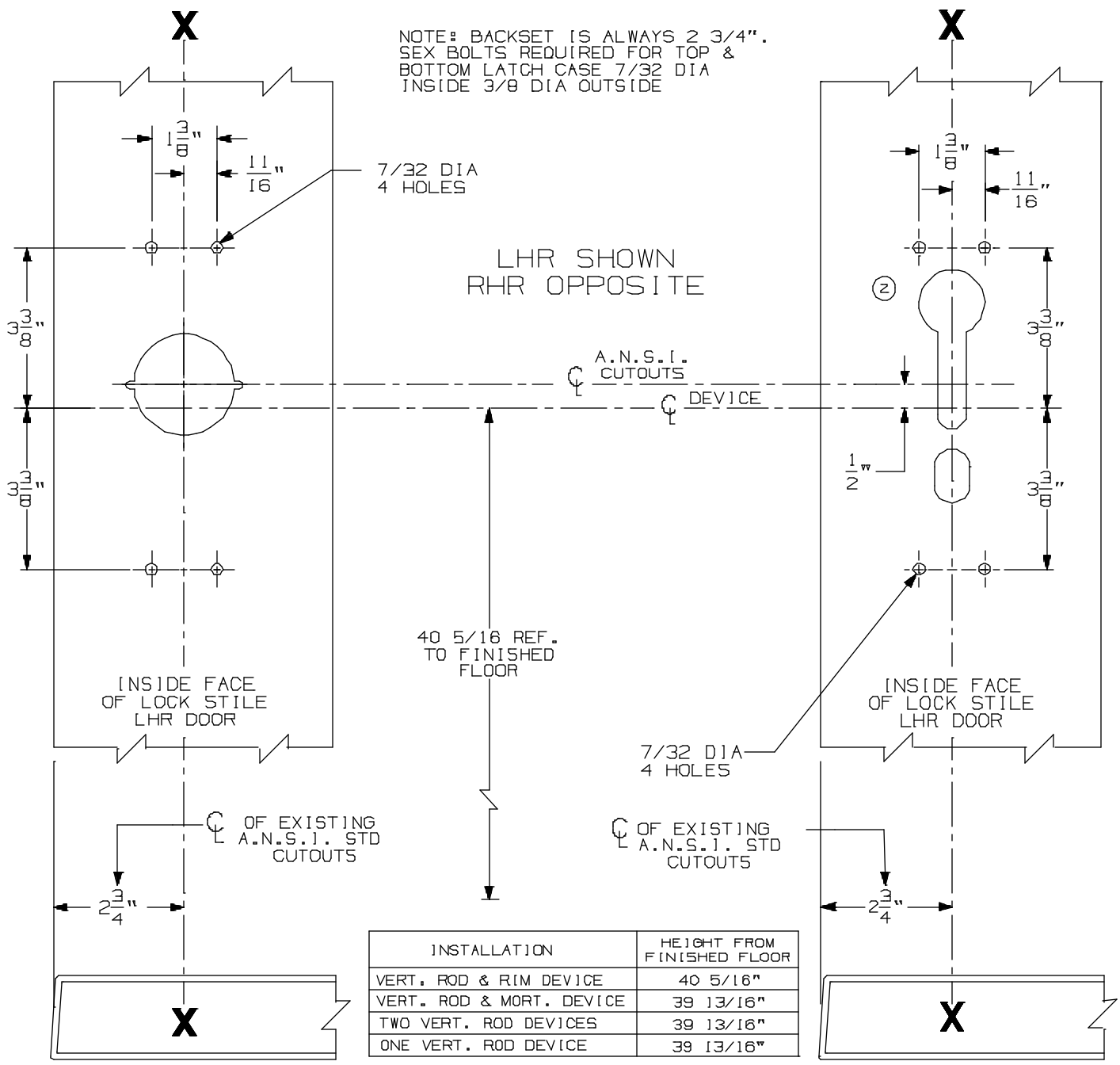

INSTALLATION	HEIGHT FROM FINISHED FLOOR
VERT. ROD & RIM DEVICE	40 5/16"
VERT. ROD & MORT. DEVICE	39 13/16"
TWO VERT. ROD DEVICES	39 13/16"
ONE VERT. ROD DEVICE	39 13/16"

VON DUPRIN CUTOUTS ARE LOCATED FROM A.N.S.I. CUTOUTS SEE A.N.S.I. SPECIFICATION NO. A115 FOR THE SIZE AND LOCATION OF THESE CUTOUTS.

FOR OUTSIDE TRIM PREPARATION, WHEN REQUIRED, SEE ADDITIONAL TRIM TEMPLATE.

8827EO & 8827DT Vertical Rod Devices w/ 880 Trim for Stock Hollow Metal Applications	VON DUPRIN®	
NOTES: SEE MASTER SHEET #10001 FOR SUGGESTED REINFORCING	TEMPLATE NUMBER: 10199_a	DATE: 05-16-13

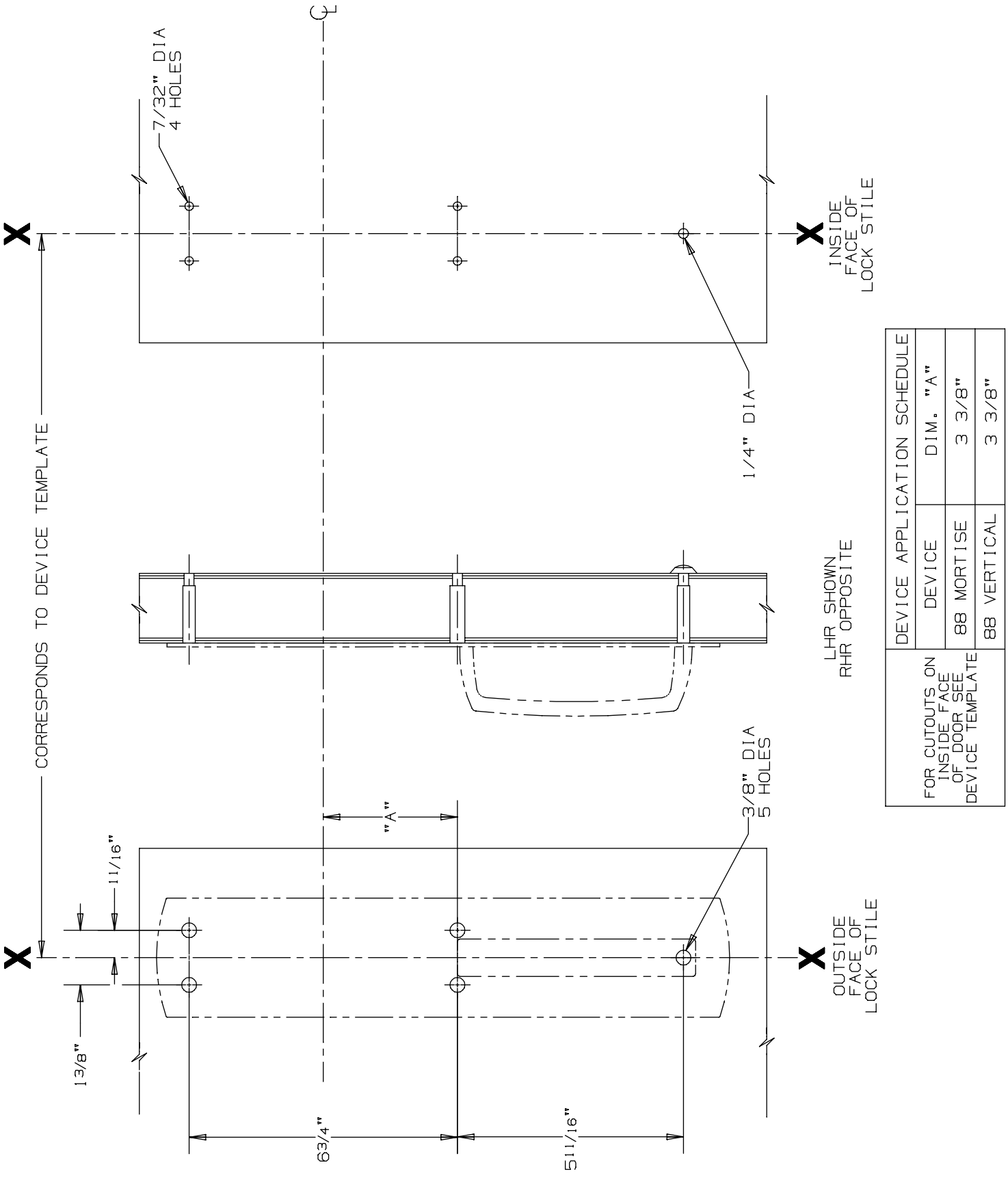

DEVICE APPLICATION SCHEDULE		
DEVICE	DIM. "A"	
88 MORTISE	3 3/8"	
88 VERTICAL	3 3/8"	

FOR CUTOUTS ON INSIDE FACE OF DOOR SEE DEVICE TEMPLATE

880 DT Trim for 88 Mortise & Vertical Devices

VON DUPRIN®

NOTES: SEE MASTER SHEET #10001 FOR SUGGESTED REINFORCING

TEMPLATE NUMBER: 20258_a

DATE: 05-28-13

RIM APPLICATION

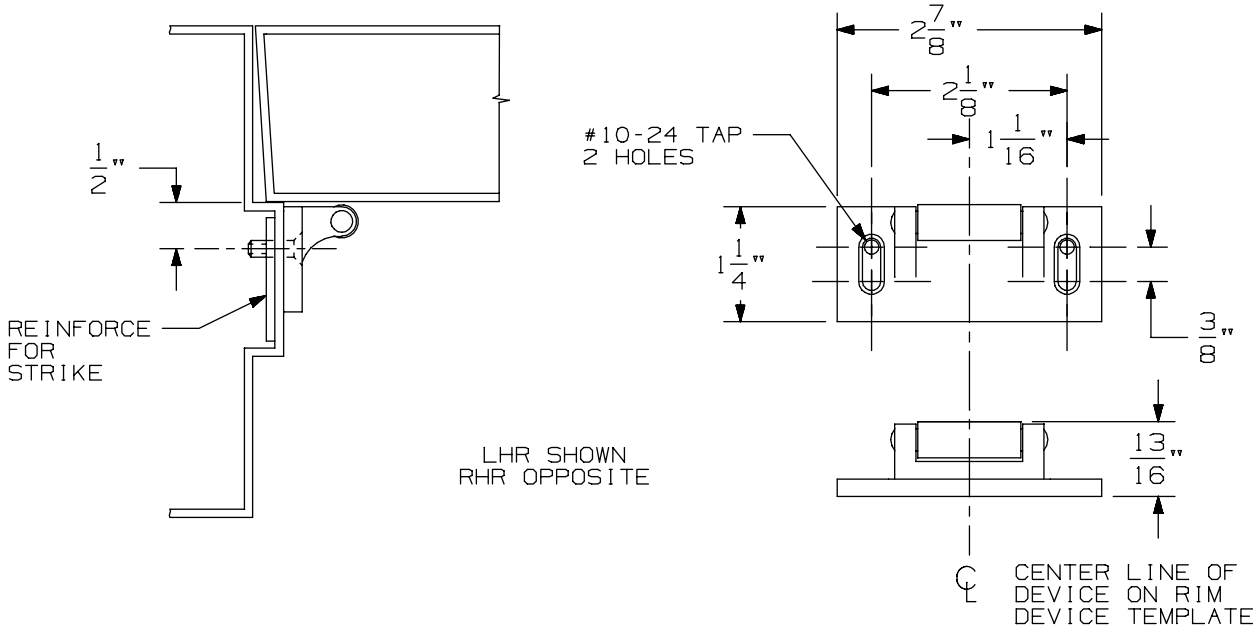

VERTICAL APPLICATION

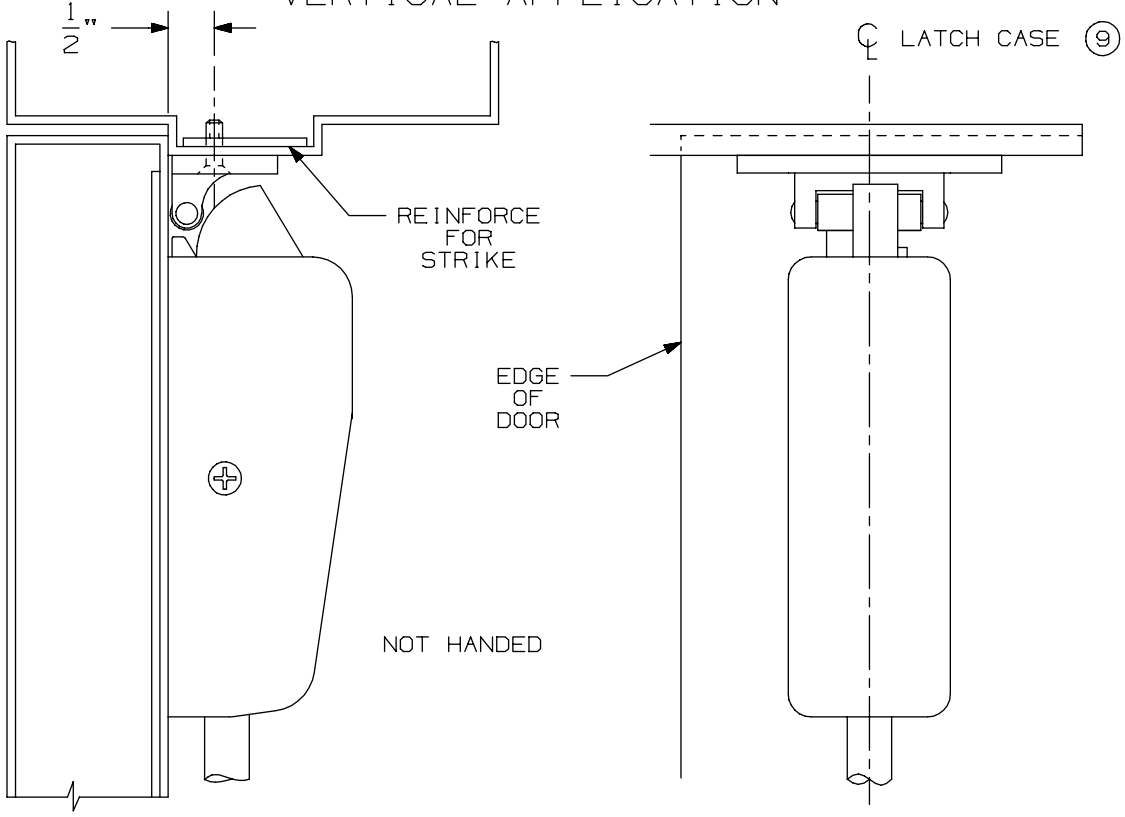

NOTE: LATCH CASE MOUNTING HOLES TO BE PREPARED AT INSTALLATION ON DOOR.

299 & 299F Strike

VON DUPRIN®

NOTES: SEE MASTER SHEET #10001 FOR SUGGESTED REINFORCING

TEMPLATE NUMBER: 30039_a

DATE: 05-23-13

FOR ADDITIONAL INFORMATION SEE TEMPLATE NO. 10162

TYPE 161 STOCK HOLLOW METAL DOOR

TYPE 86 STOCK HOLLOW METAL DOOR & STD DOOR

NOTE: BACKSET IS ALWAYS 2 3/4".
SEX BOLTS REQUIRED FOR TOP & BOTTOM LATCH CASE 7/32 DIA INSIDE 3/8 DIA OUTSIDE

CYLINDER SCHEDULE	HOLE SIZE
VON DUPRIN	1 5/16"
SCHLAGE	
CORBIN	
RUSSWIN	
LOCKWOOD	
YALE	
SARGENT	1 3/8"

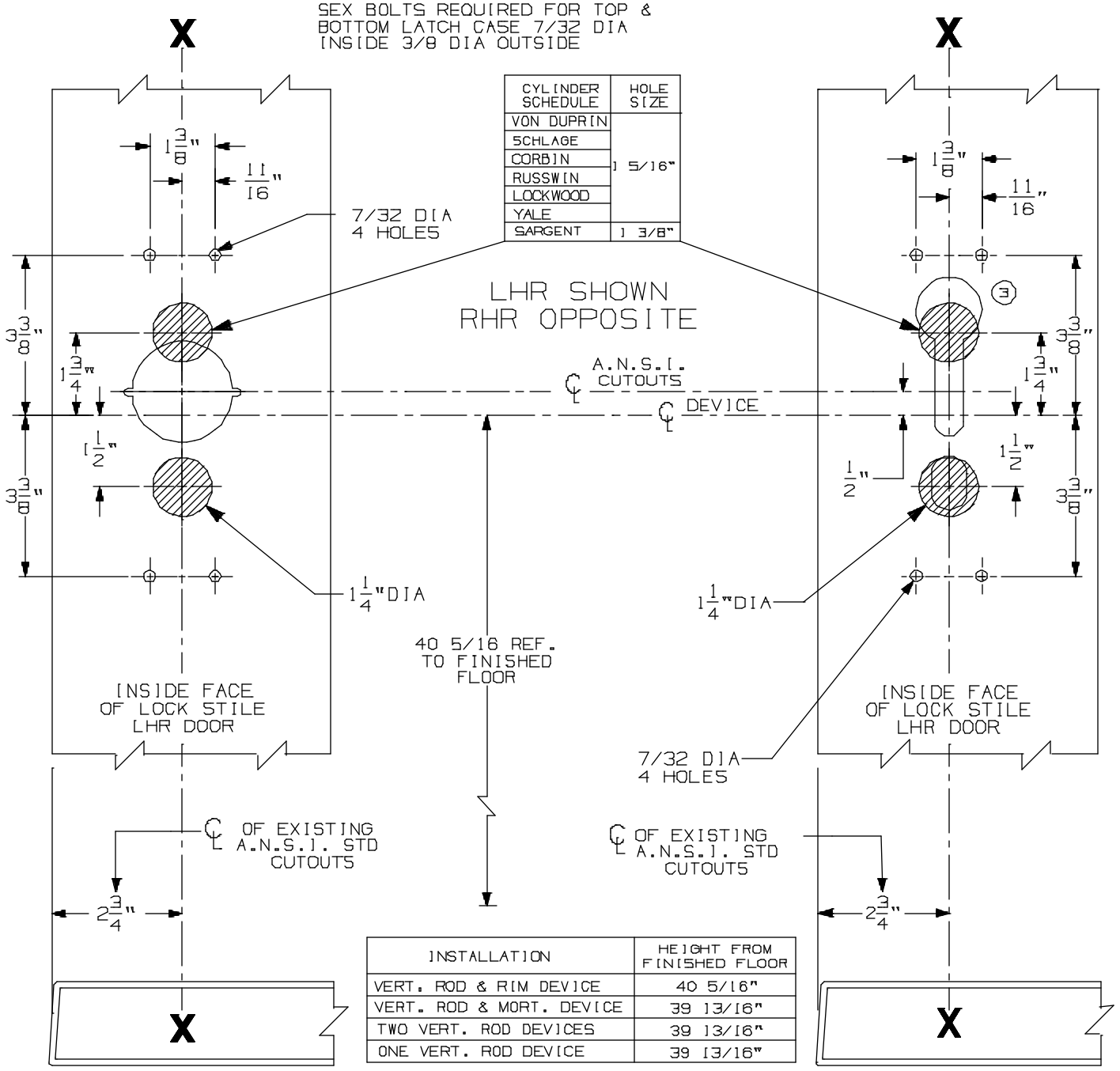

INSTALLATION	HEIGHT FROM FINISHED FLOOR
VERT. ROD & RIM DEVICE	40 5/16"
VERT. ROD & MORT. DEVICE	39 13/16"
TWO VERT. ROD DEVICES	39 13/16"
ONE VERT. ROD DEVICE	39 13/16"

VON DUPRIN CUTOUTS ARE LOCATED FROM A.N.S.I. CUTOUTS SEE A.N.S.I. SPECIFICATION NO. A115 FOR THE SIZE AND LOCATION OF THESE CUTOUTS.

FOR OUTSIDE TRIM PREPARATION, SEE ADDITIONAL TRIM TEMPLATE.

8827K Vertical Rod Device w/ 880 Trim for Stock Hollow Metal Applications

VON DUPRIN®

NOTES: SEE MASTER SHEET #10001 FOR SUGGESTED REINFORCING

TEMPLATE NUMBER: 10201_a

DATE: 05-16-13

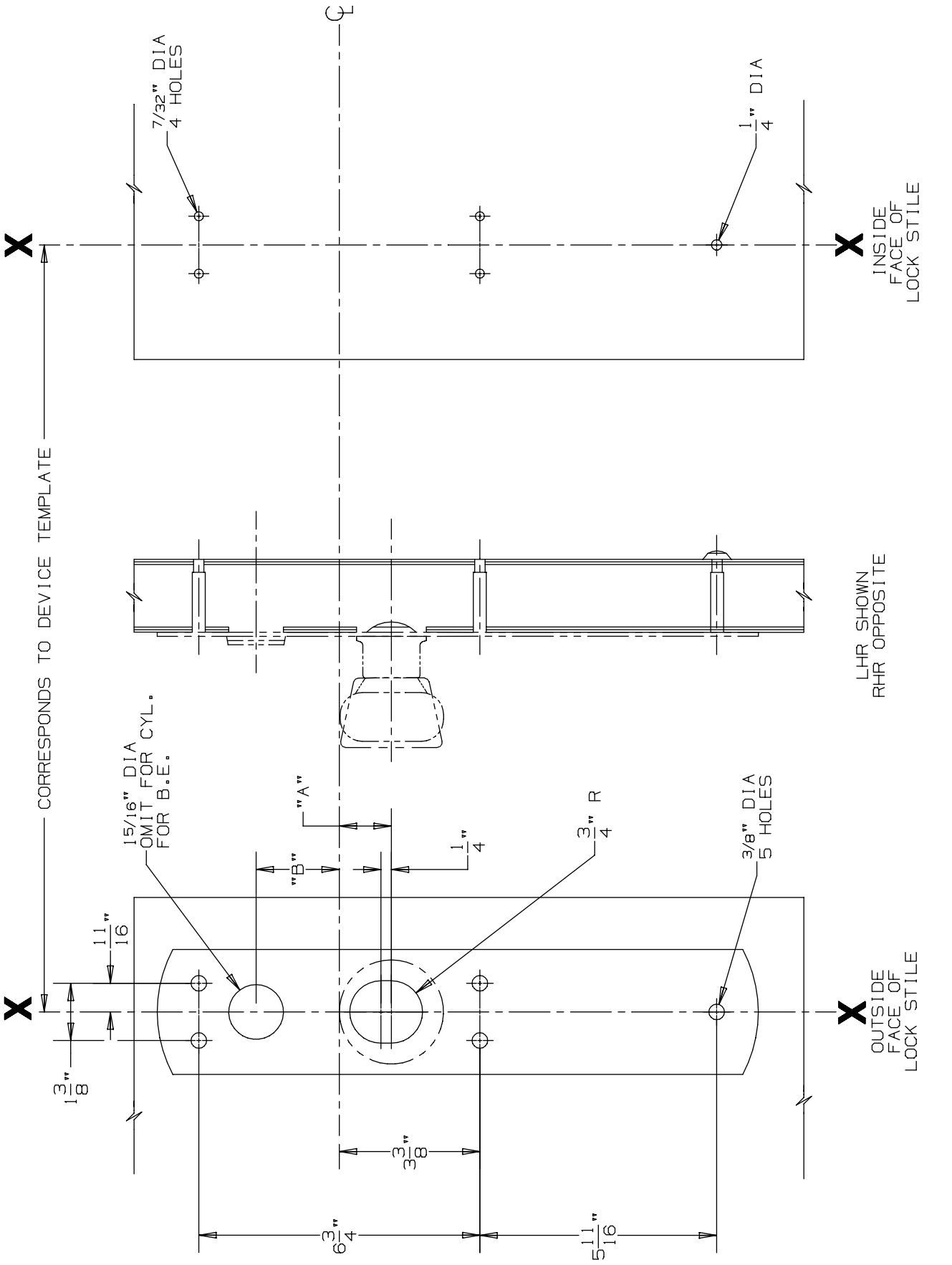

DEVICE APPLICATION SCHEDULE			
DEVICE	DIM. "A"	DIM. "B"
88 MORTISE	1 1/4"	2"
88 VERTICAL	1 1/2"	1 3/4"

FOR CUTOUTS ON INSIDE FACE OF DOOR SEE DEVICE TEMPLATE

880 K & 880 K-BE Trim for 88 Mortise & Vertical Devices

VON DUPRIN®

NOTES: SEE MASTER SHEET #10001 FOR SUGGESTED REINFORCING

TEMPLATE NUMBER: 20261_a

DATE: 05-23-13

RIM APPLICATION

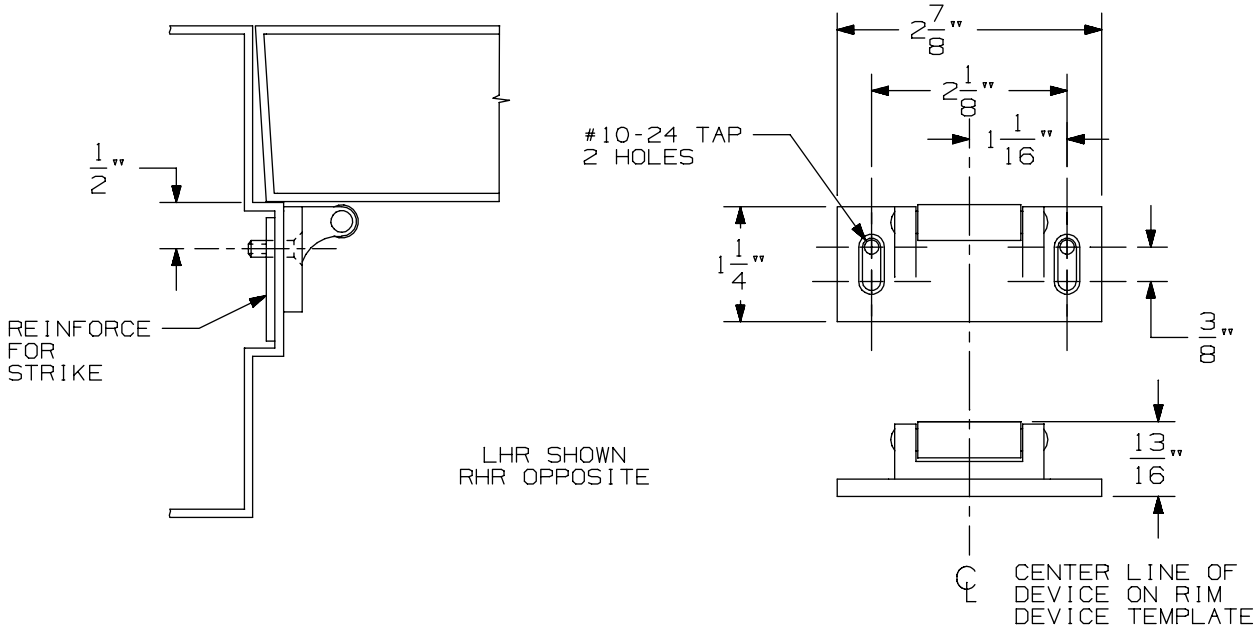

VERTICAL APPLICATION

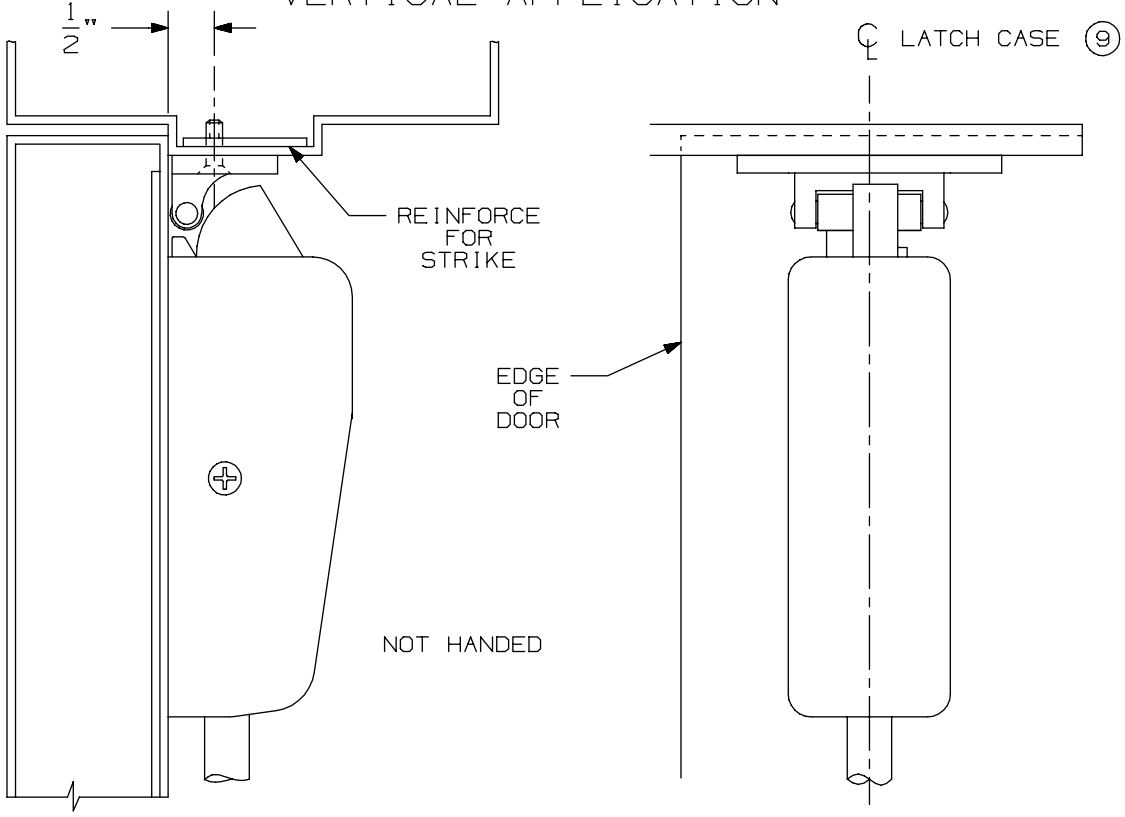

NOTE: LATCH CASE MOUNTING HOLES TO BE PREPARED AT INSTALLATION ON DOOR.

299 & 299F Strike

VON DUPRIN®

NOTES: SEE MASTER SHEET #10001 FOR SUGGESTED REINFORCING

TEMPLATE NUMBER: 30039_a

DATE: 05-23-13

FOR ADDITIONAL INFORMATION SEE TEMPLATE NO. 10162

TYPE 161 STOCK HOLLOW METAL DOOR

TYPE 86 STOCK HOLLOW METAL DOOR & STD DOOR

NOTE: BACKSET IS ALWAYS 2 3/4".
SEX BOLTS REQUIRED FOR TOP & BOTTOM LATCH CASE 7/32 DIA INSIDE 3/8 DIA OUTSIDE

CYLINDER SCHEDULE	HOLE SIZE
VON DUPRIN	1 5/16"
SCHLAGE	
CORBIN	
RUSSWIN	
LOCKWOOD	
YALE	
SARGENT	1 3/8"

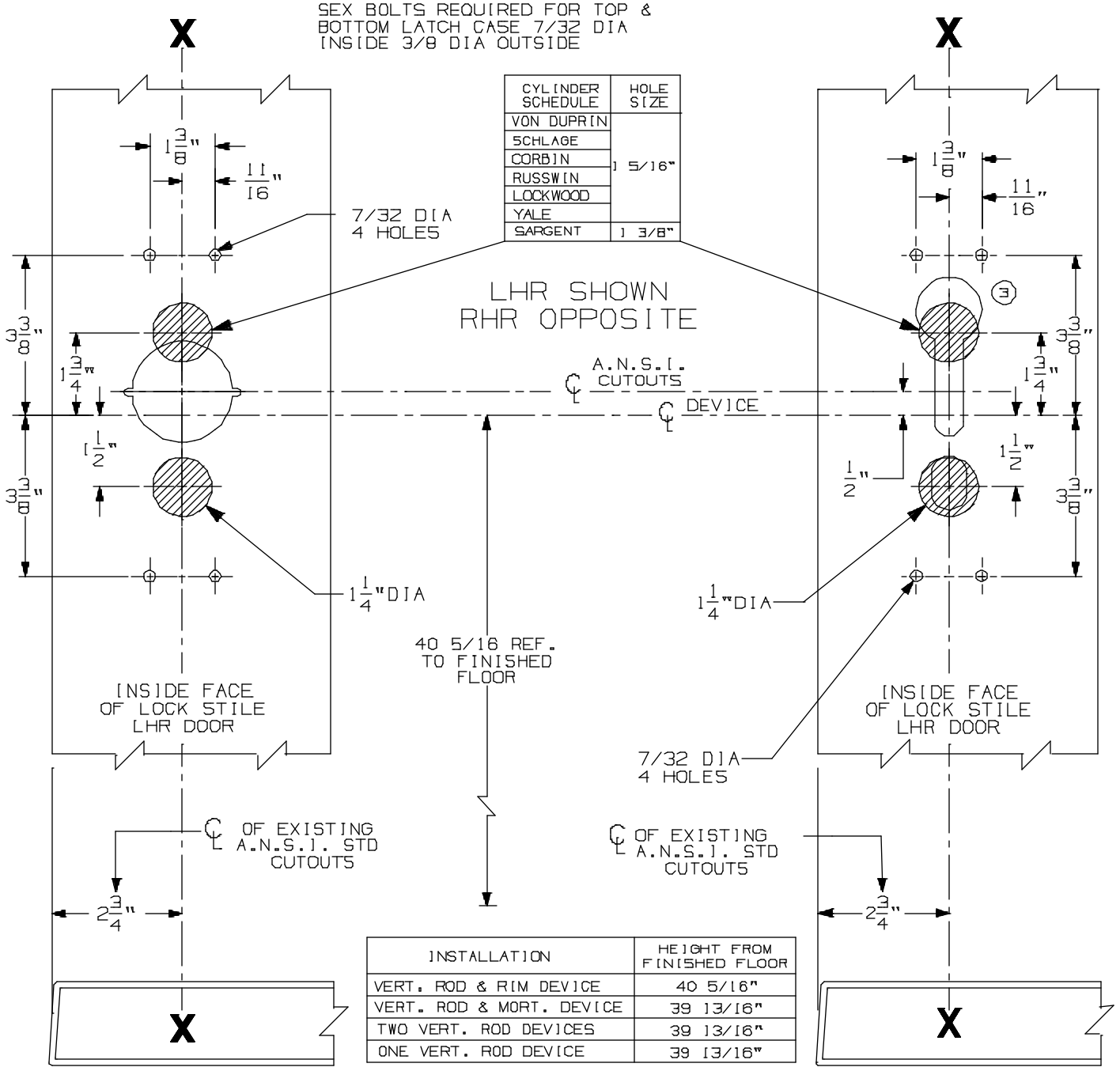

INSTALLATION	HEIGHT FROM FINISHED FLOOR
VERT. ROD & RIM DEVICE	40 5/16"
VERT. ROD & MORT. DEVICE	39 13/16"
TWO VERT. ROD DEVICES	39 13/16"
ONE VERT. ROD DEVICE	39 13/16"

VON DUPRIN CUTOUTS ARE LOCATED FROM A.N.S.I. CUTOUTS SEE A.N.S.I. SPECIFICATION NO. A115 FOR THE SIZE AND LOCATION OF THESE CUTOUTS.

FOR OUTSIDE TRIM PREPARATION, SEE ADDITIONAL TRIM TEMPLATE.

8827K Vertical Rod Device w/ 880 Trim for Stock Hollow Metal Applications

VON DUPRIN®

NOTES: SEE MASTER SHEET #10001 FOR SUGGESTED REINFORCING

TEMPLATE NUMBER: 10201_a

DATE: 05-16-13

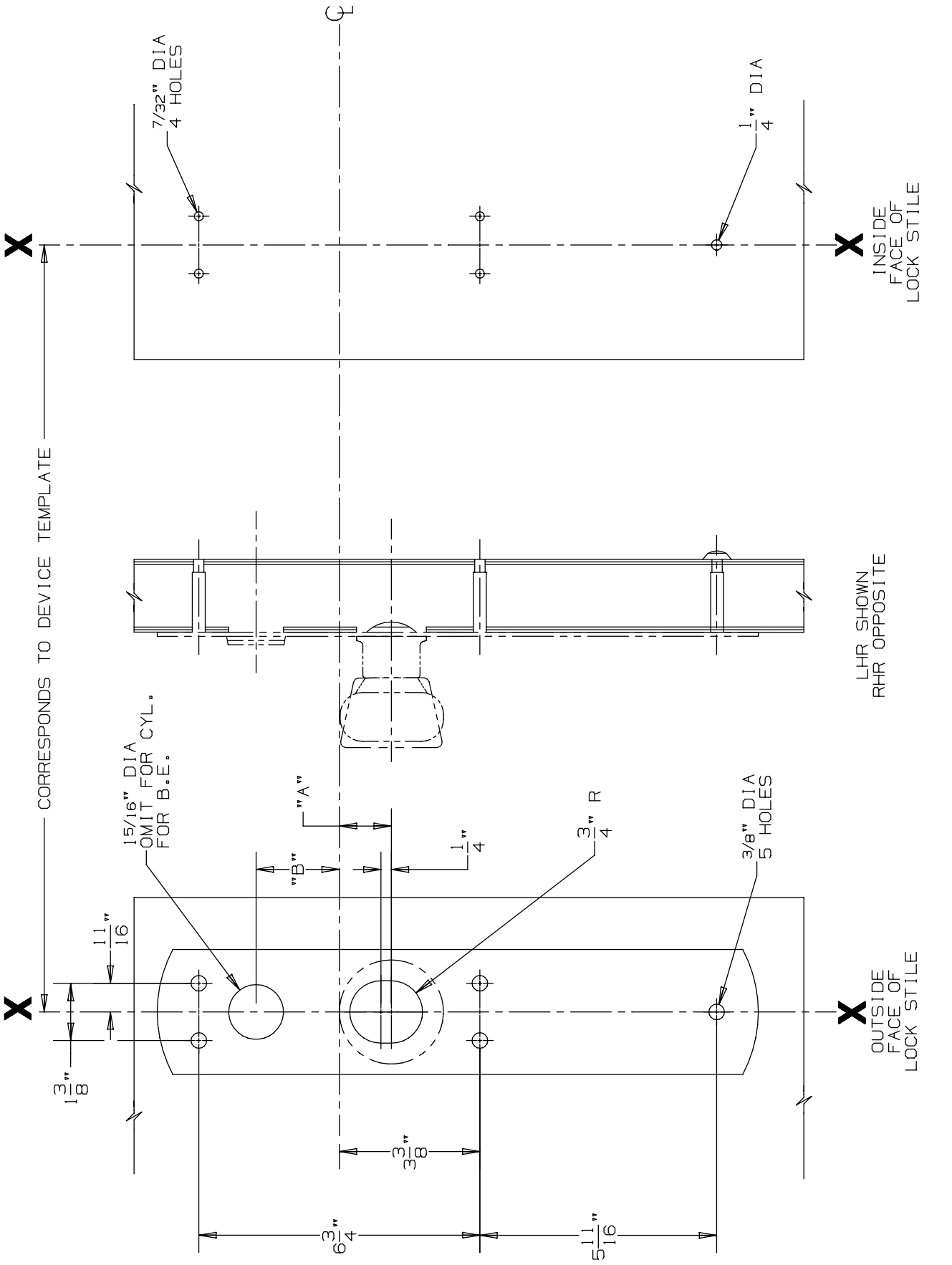

DEVICE APPLICATION SCHEDULE			
DEVICE	DIM. "A"	DIM. "B"
88 MORTISE	1 1/4"	2"
88 VERTICAL	1 1/2"	1 3/4"

FOR CUTOUTS ON INSIDE FACE OF DOOR SEE DEVICE TEMPLATE

880 K & 880 K-BE Trim for 88 Mortise & Vertical Devices

VON DUPRIN®

NOTES: SEE MASTER SHEET #10001 FOR SUGGESTED REINFORCING

TEMPLATE NUMBER: 20261_a

DATE: 05-23-13

RIM APPLICATION

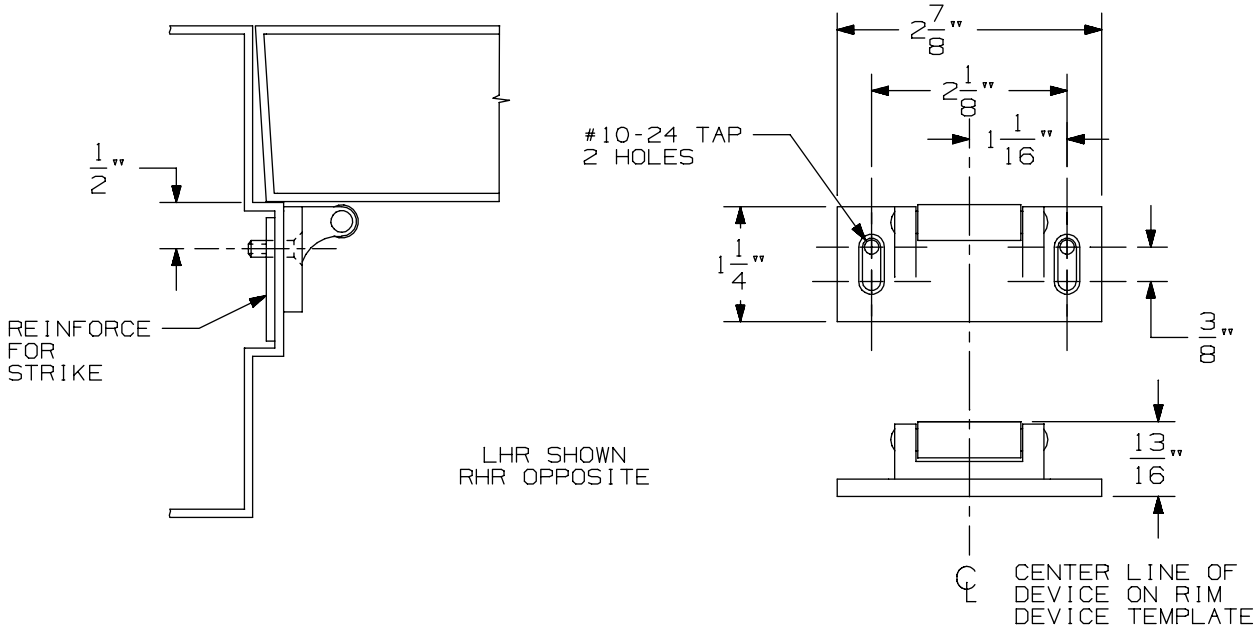

VERTICAL APPLICATION

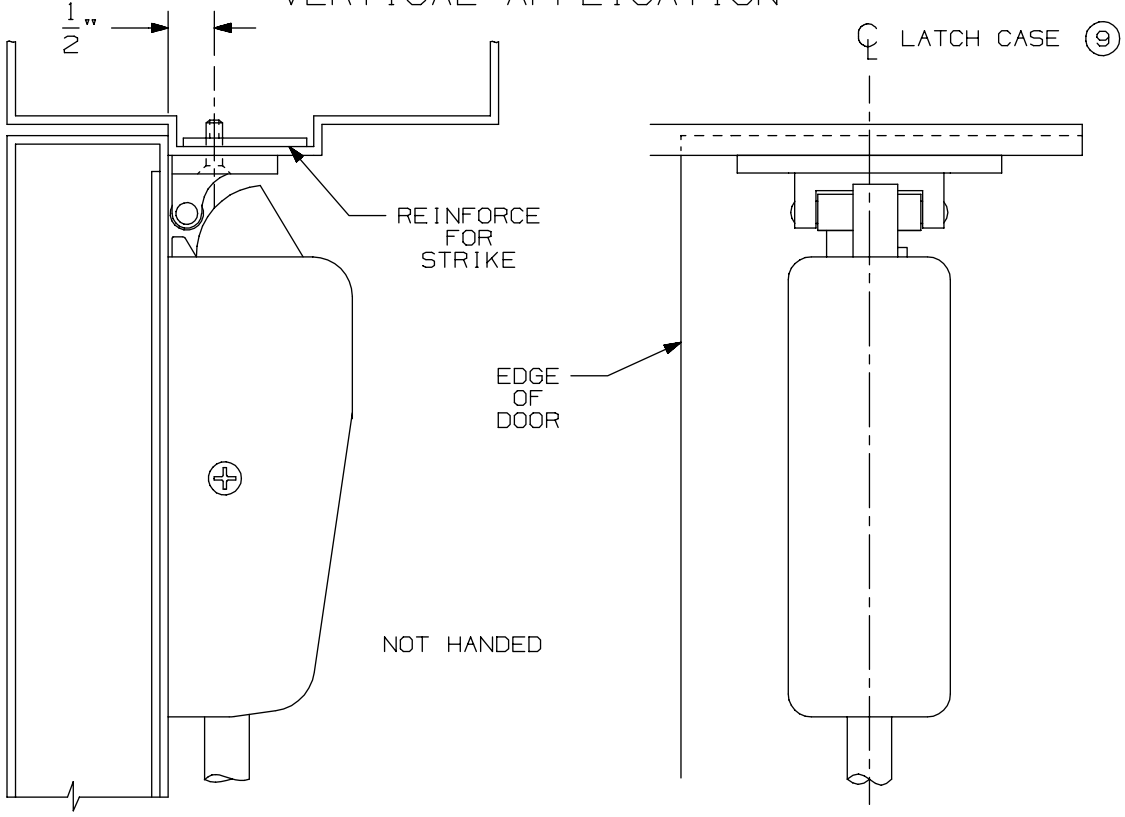

NOTE: LATCH CASE MOUNTING HOLES TO BE PREPARED AT INSTALLATION ON DOOR.

299 & 299F Strike

VON DUPRIN®

NOTES: SEE MASTER SHEET #10001 FOR SUGGESTED REINFORCING

TEMPLATE NUMBER: 30039_a

DATE: 05-23-13

FOR ADDITIONAL INFORMATION SEE TEMPLATE NO. 10161

TYPE 161 STOCK HOLLOW METAL DOOR

TYPE 86 STOCK HOLLOW METAL DOOR & STD DOOR

NOTE: BACKSET IS ALWAYS 2 3/4". SEX BOLTS REQUIRED FOR TOP & BOTTOM LATCH CASE 7/32 DIA INSIDE 3/8 DIA OUTSIDE

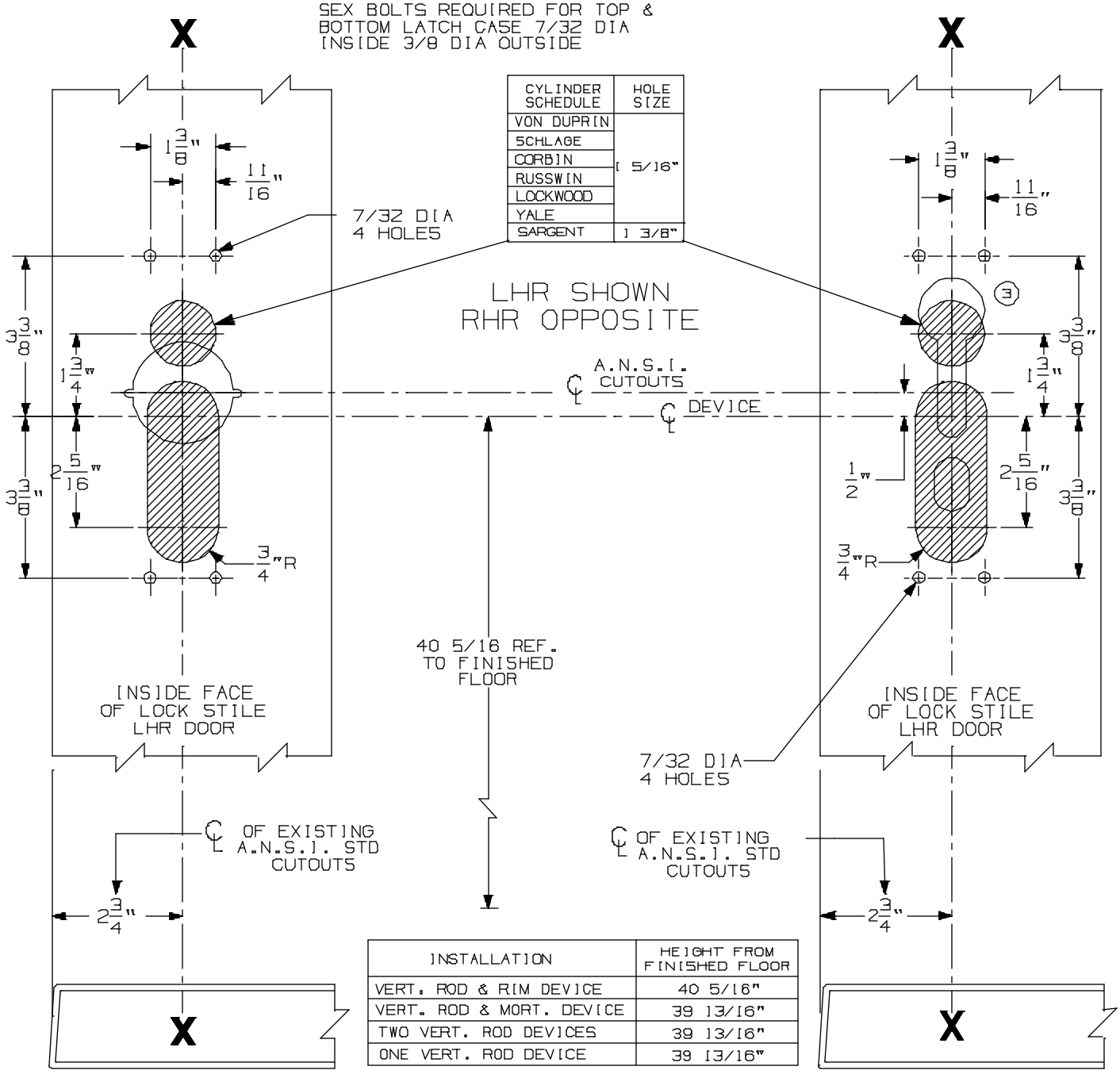

CYLINDER SCHEDULE	HOLE SIZE
VON DUPRIN	5/16"
SCHLAGE	
CORBIN	
RUSSWIN	
LOCKWOOD	
YALE	
SARGENT	1 3/8"

INSTALLATION	HEIGHT FROM FINISHED FLOOR
VERT. ROD & RIM DEVICE	40 5/16"
VERT. ROD & MORT. DEVICE	39 13/16"
TWO VERT. ROD DEVICES	39 13/16"
ONE VERT. ROD DEVICE	39 13/16"

VON DUPRIN CUTOUTS ARE LOCATED FROM A.N.S.I. CUTOUTS SEE A.N.S.I. SPECIFICATION NO. A115 FOR THE SIZE AND LOCATION OF THESE CUTOUTS.

FOR OUTSIDE TRIM PREPARATION, SEE ADDITIONAL TRIM TEMPLATE.

8827TP Vertical Rod Device w/ 880 Trim for Stock Hollow Metal Applications

VON DUPRIN®

NOTES: SEE MASTER SHEET #10001 FOR SUGGESTED REINFORCING

TEMPLATE NUMBER: 10200_a

DATE: 05-16-13

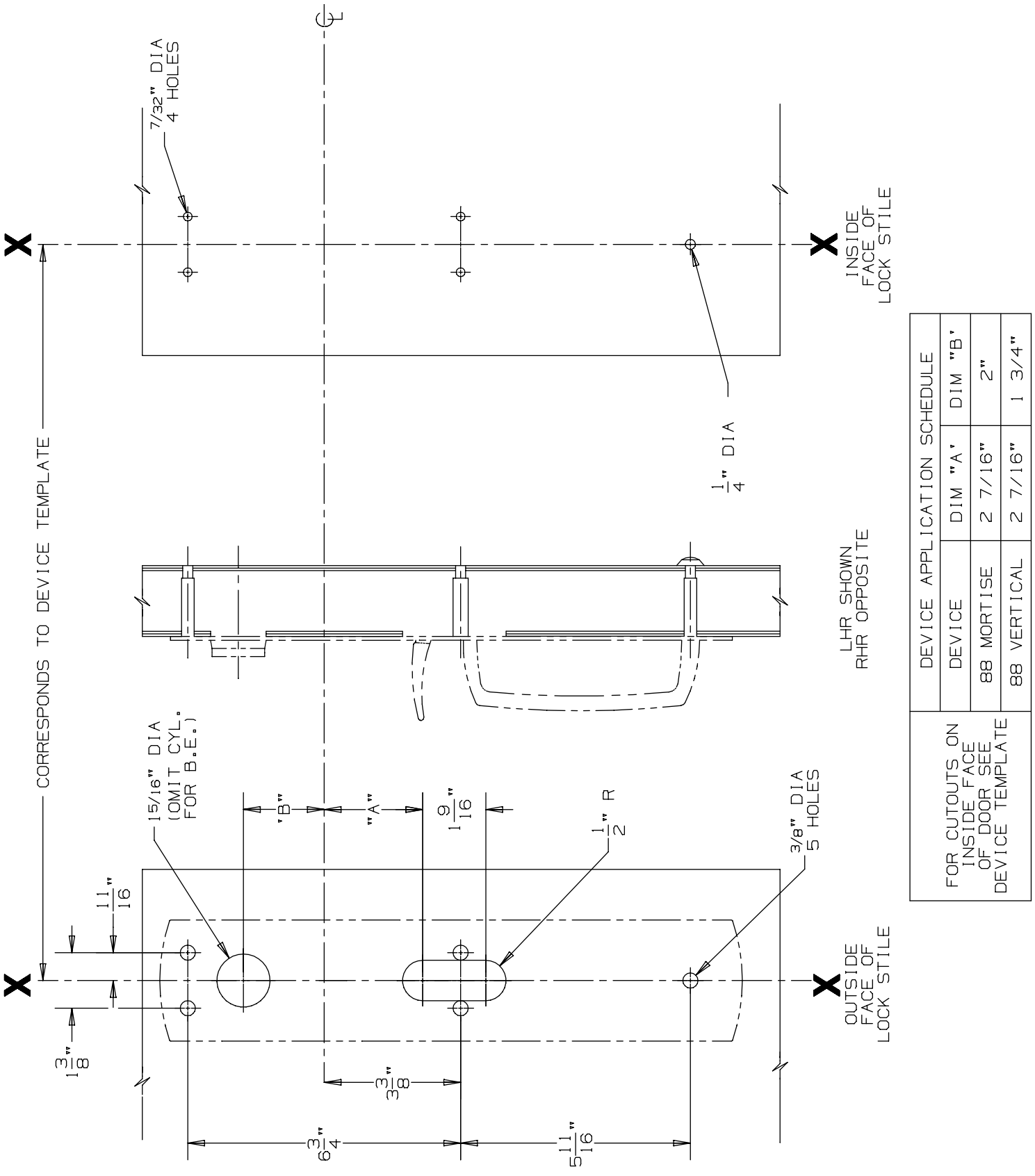

DEVICE APPLICATION SCHEDULE		
DEVICE	DIM "A"	DIM "B"
88 MORTISE	2 7/16"	2"
88 VERTICAL	2 7/16"	1 3/4"

FOR CUTOUTS ON INSIDE FACE OF DOOR SEE DEVICE TEMPLATE

880 TP & 880 TP-BE Trim for 88 Mortise & Vertical Devices

VON DUPRIN®

NOTES: SEE MASTER SHEET #10001 FOR SUGGESTED REINFORCING

TEMPLATE NUMBER: 20260_a

DATE: 05-28-13

RIM APPLICATION

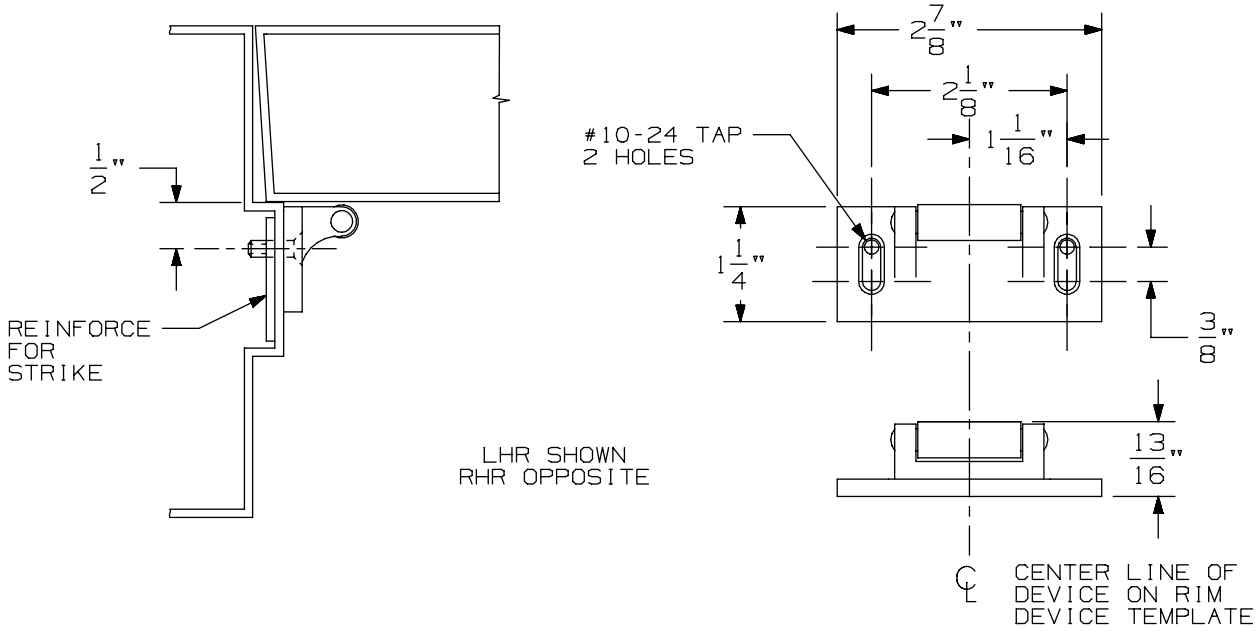

VERTICAL APPLICATION

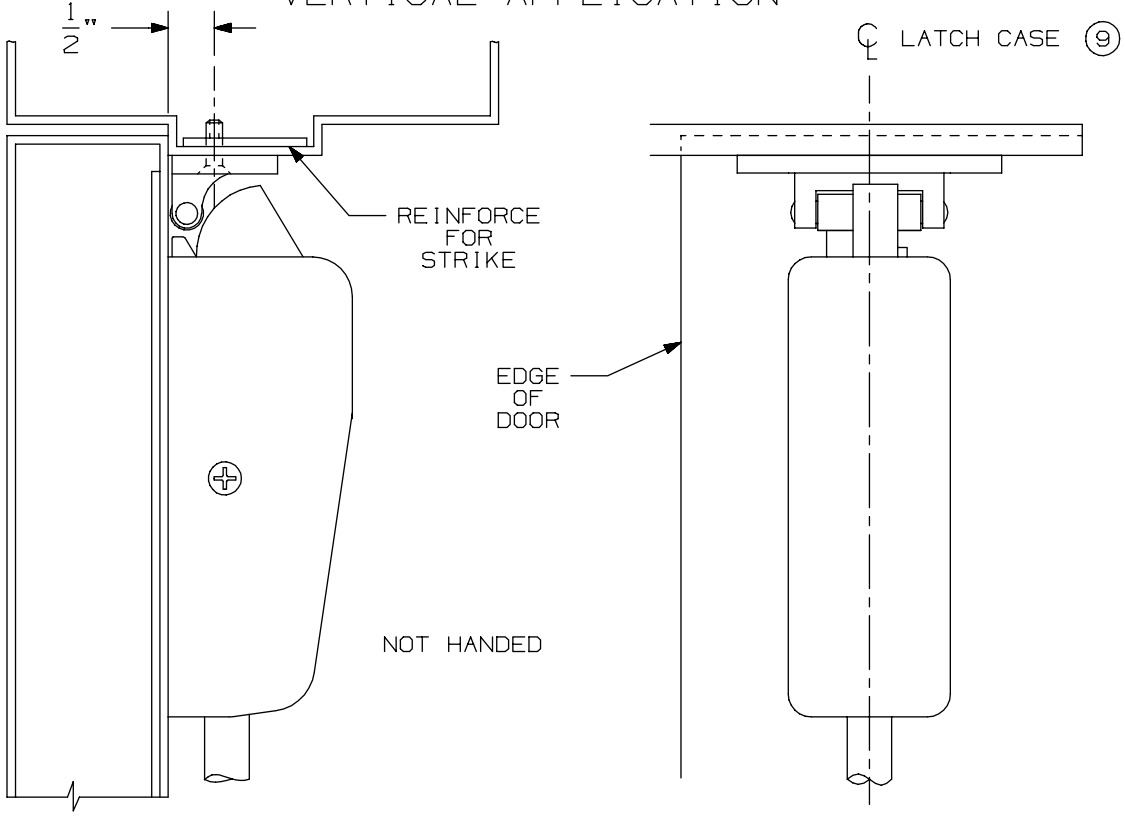

NOTE: LATCH CASE MOUNTING HOLES TO BE PREPARED AT INSTALLATION ON DOOR.

299 & 299F Strike

VON DUPRIN®

NOTES: SEE MASTER SHEET #10001 FOR SUGGESTED REINFORCING

TEMPLATE NUMBER: 30039_a

DATE: 05-23-13

FOR ADDITIONAL INFORMATION SEE TEMPLATE NO. 10161

TYPE 161 STOCK HOLLOW METAL DOOR

TYPE 86 STOCK HOLLOW METAL DOOR & STD DOOR

NOTE: BACKSET IS ALWAYS 2 3/4". SEX BOLTS REQUIRED FOR TOP & BOTTOM LATCH CASE 7/32 DIA INSIDE 3/8 DIA OUTSIDE

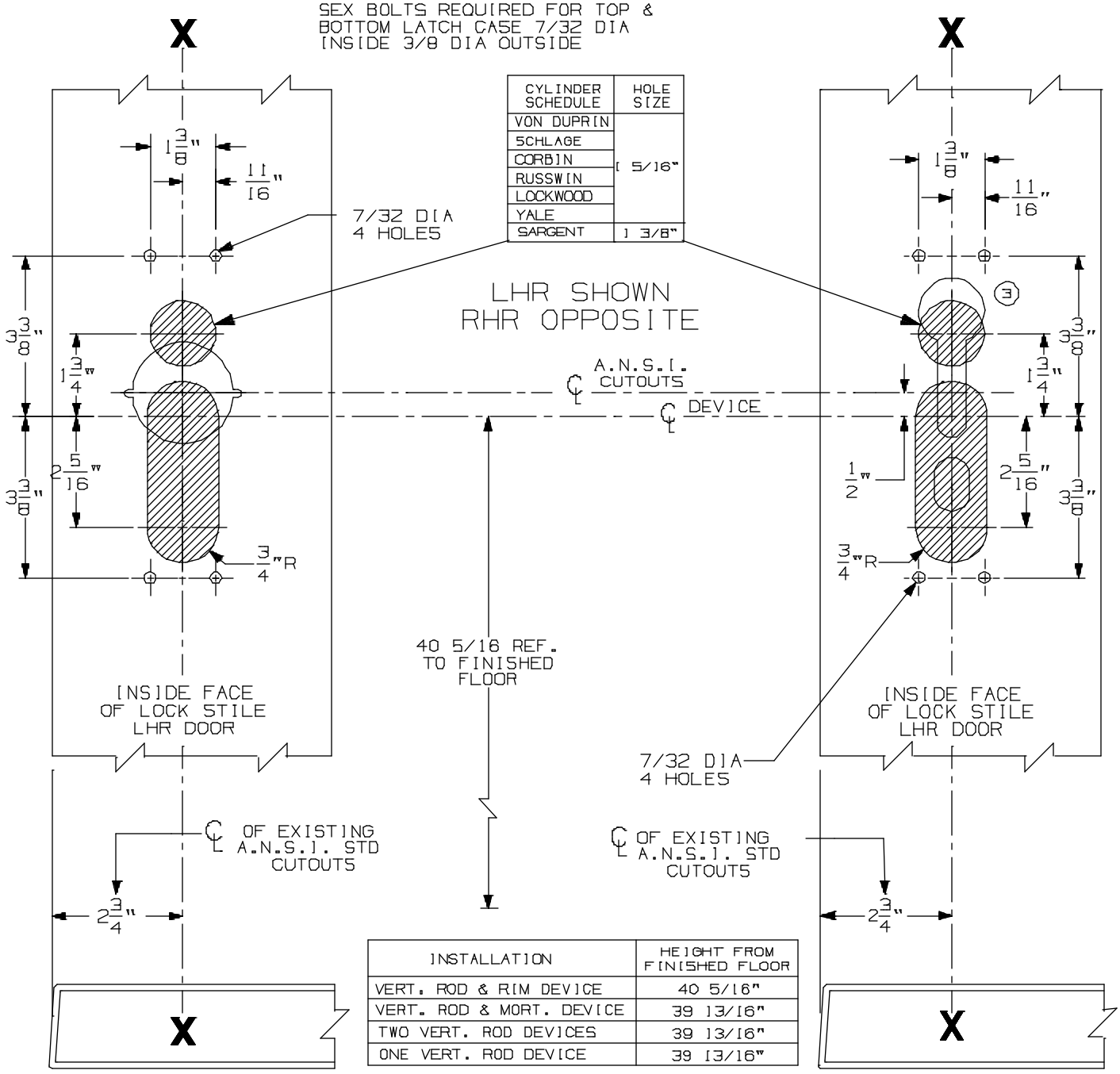

CYLINDER SCHEDULE	HOLE SIZE
VON DUPRIN	5/16"
SCHLAGE	
CORBIN	
RUSSWIN	
LOCKWOOD	
YALE	
SARGENT	1 3/8"

INSTALLATION	HEIGHT FROM FINISHED FLOOR
VERT. ROD & RIM DEVICE	40 5/16"
VERT. ROD & MORT. DEVICE	39 13/16"
TWO VERT. ROD DEVICES	39 13/16"
ONE VERT. ROD DEVICE	39 13/16"

VON DUPRIN CUTOUTS ARE LOCATED FROM A.N.S.I. CUTOUTS SEE A.N.S.I. SPECIFICATION NO. A115 FOR THE SIZE AND LOCATION OF THESE CUTOUTS.

FOR OUTSIDE TRIM PREPARATION, SEE ADDITIONAL TRIM TEMPLATE.

8827TP Vertical Rod Device w/ 880 Trim for Stock Hollow Metal Applications

VON DUPRIN®

NOTES: SEE MASTER SHEET #10001 FOR SUGGESTED REINFORCING

TEMPLATE NUMBER: 10200_a

DATE: 05-16-13

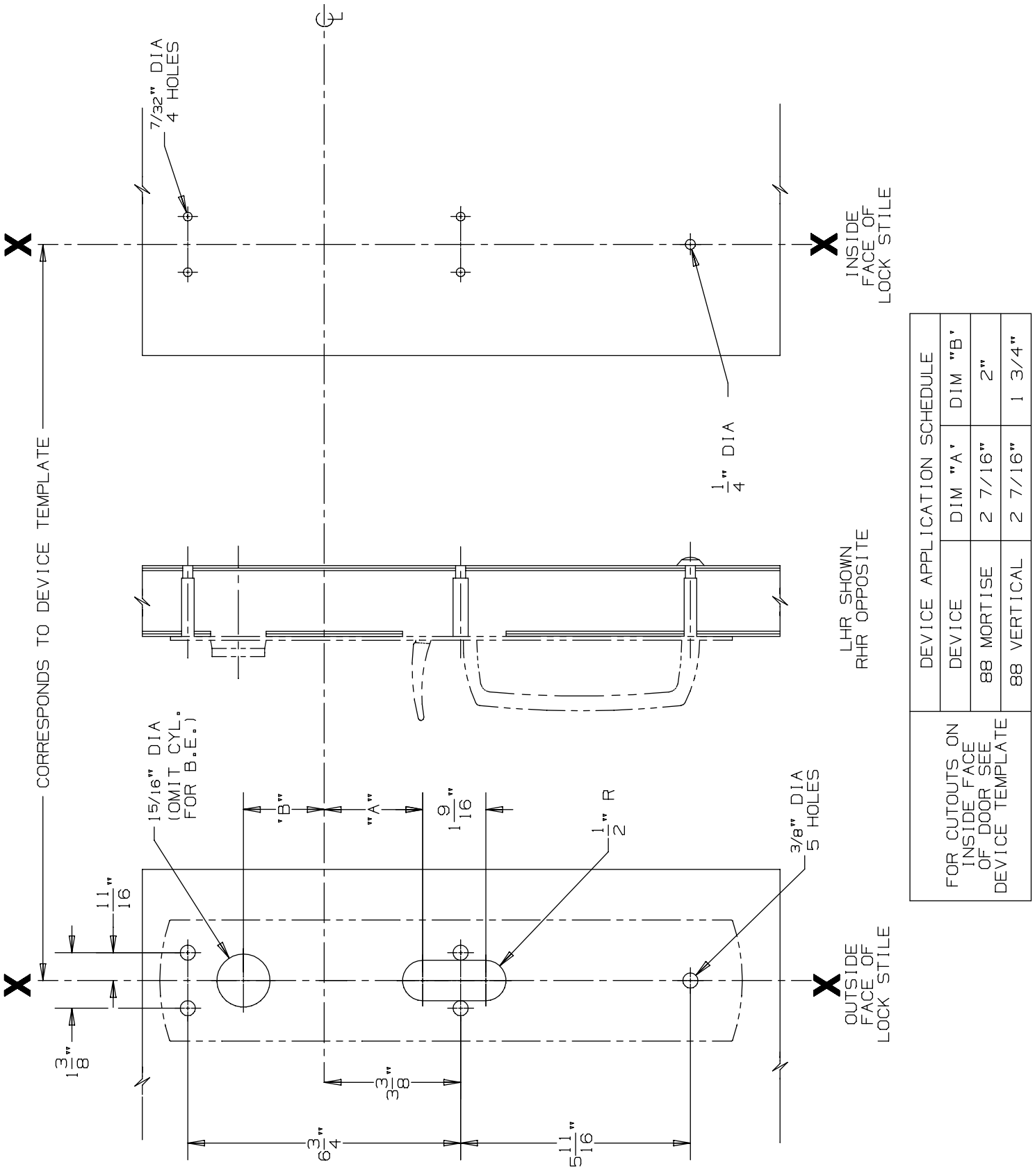

DEVICE APPLICATION SCHEDULE		
DEVICE	DIM "A"	DIM "B"
88 MORTISE	2 7/16"	2"
88 VERTICAL	2 7/16"	1 3/4"

FOR CUTOUTS ON INSIDE FACE OF DOOR SEE DEVICE TEMPLATE

880 TP & 880 TP-BE Trim for 88 Mortise & Vertical Devices

VON DUPRIN®

NOTES: SEE MASTER SHEET #10001 FOR SUGGESTED REINFORCING

TEMPLATE NUMBER: 20260_a

DATE: 05-28-13

RIM APPLICATION

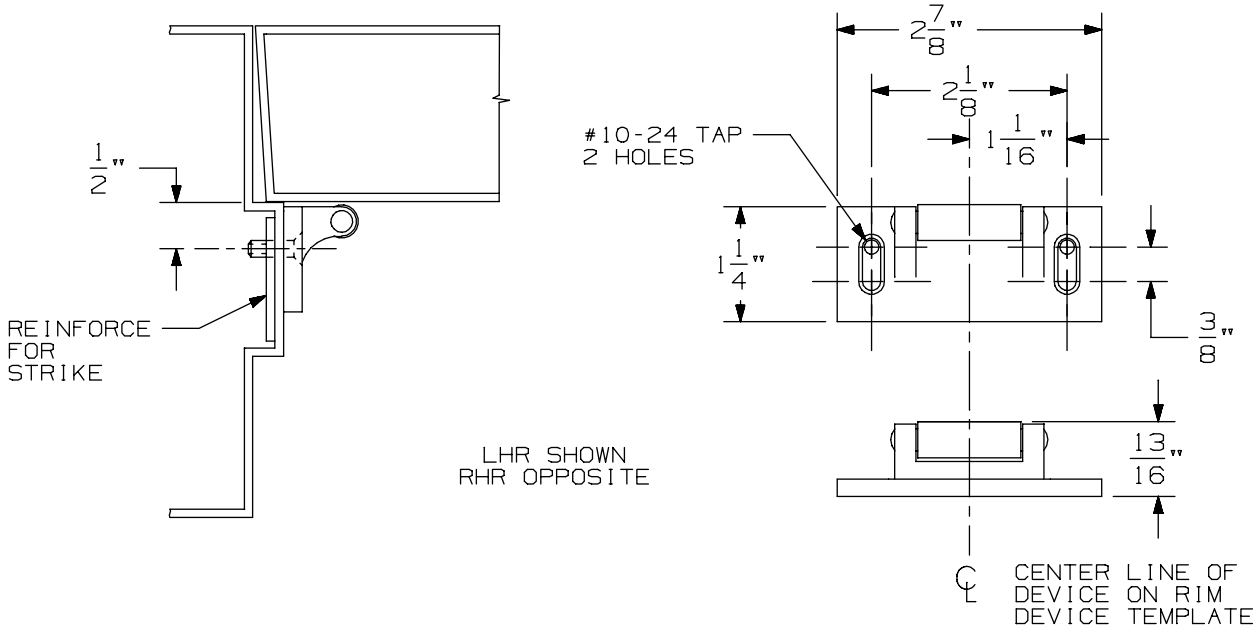

VERTICAL APPLICATION

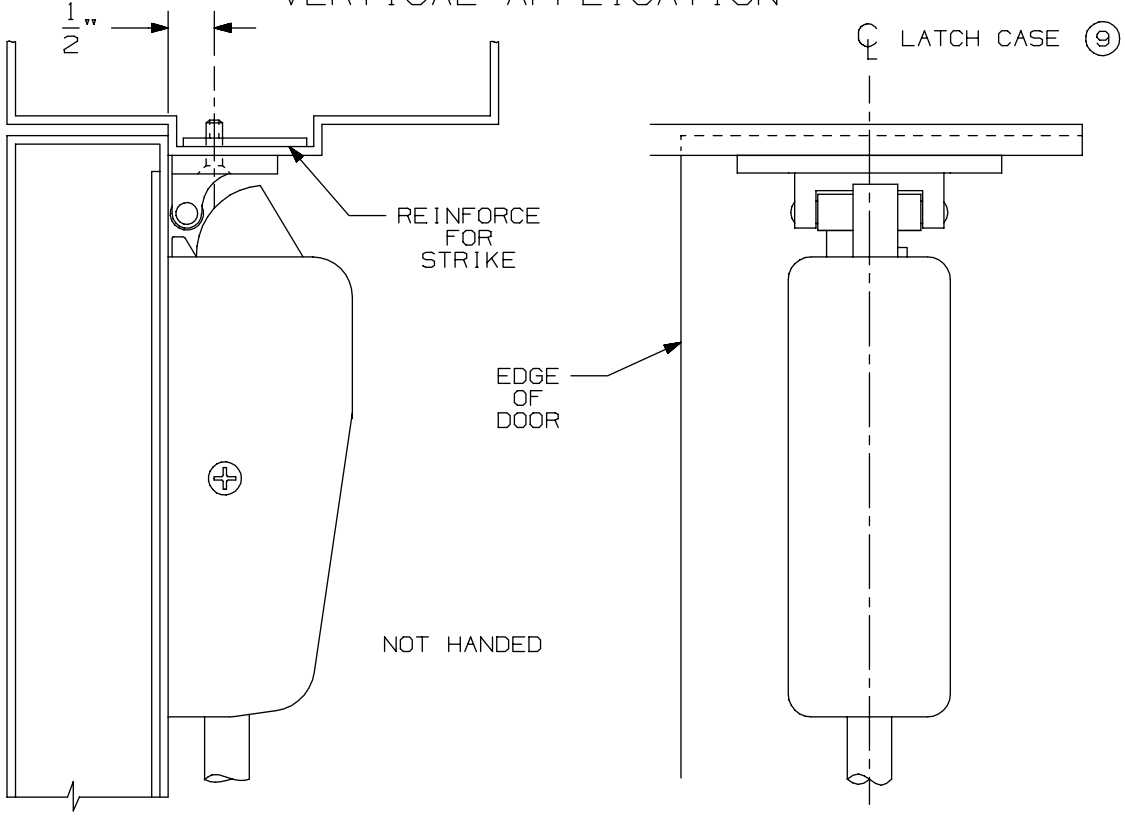

NOTE: LATCH CASE MOUNTING HOLES TO BE PREPARED AT INSTALLATION ON DOOR.

299 & 299F Strike

VON DUPRIN®

NOTES: SEE MASTER SHEET #10001 FOR SUGGESTED REINFORCING

TEMPLATE NUMBER: 30039_a

DATE: 05-23-13

88 Series for 161 Stock Hollow Metal Doors

88 Series for 161 Stock Hollow Metal Doors

-

88 Rim

FOR ADDITIONAL INFORMATION SEE TEMPLATE NO. 10155 OR NO. 10169

NOTE: TYPE 161 STOCK HOLLOW METAL APPLICATIONS FOR 88 DEVICES WILL WORK ONLY ON THESE APPLICATIONS: SINGLE DOOR & 299, 299F OR 268 STRIKE. (5)

TYPE 161 STOCK HOLLOW METAL DOOR

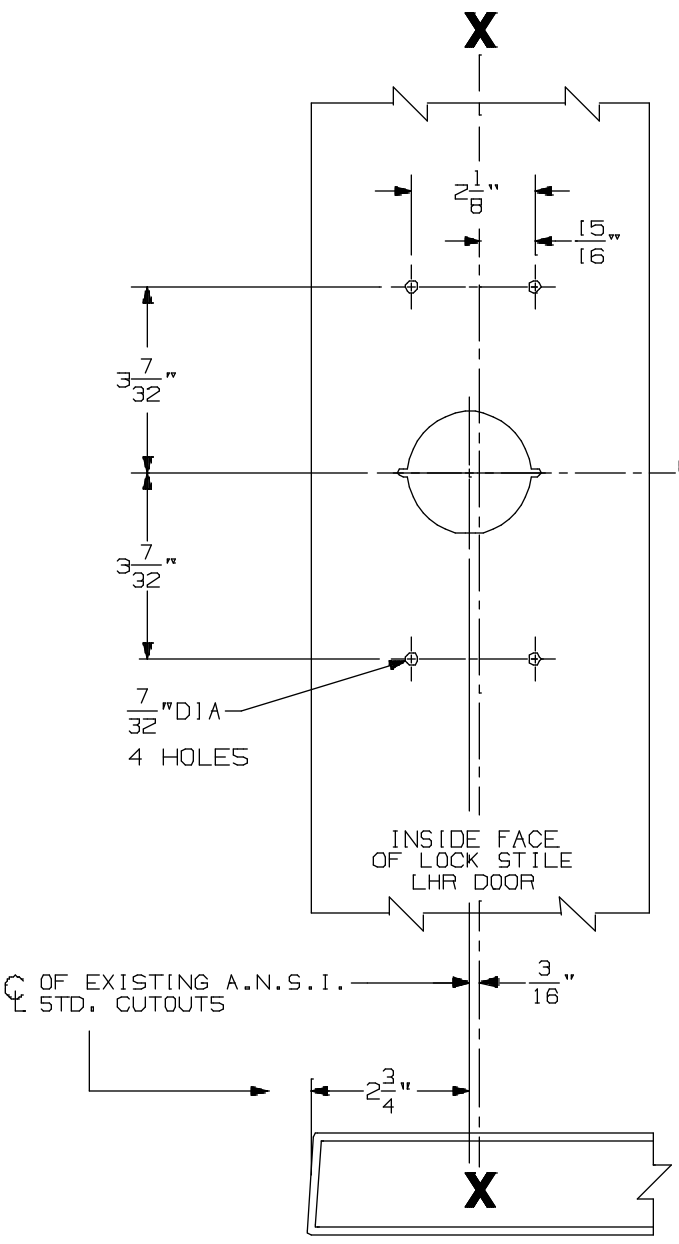

NOTE: ALL BACKSET DIMENSIONS FOR 5/8" STOP. USE STRIKE SHIMS SUPPLIED FOR 1/2" STOP

SINGLE DOOR OPENING
40 5/16" TO FINISHED FLOOR

DOUBLE DOOR OPENING
WITH VON DUPRIN MULLION
40 5/16" (5)

VON DUPRIN CUTOUTS ARE LOCATED FROM A.N.S.I. CUTOUTS SEE A.N.S.I. SPECIFICATION NO. A115 FOR THE SIZE AND LOCATION OF THESE CUTOUTS.

FOR OUTSIDE TRIM PREPARATION, WHEN REQUIRED, SEE ADDITIONAL TRIM TEMPLATE.

LHR SHOWN
RHR OPPOSITE

88EO & 88DT Rim Devices w/ 880 Trim for Type "161" Stock Hollow Metal Applications

VON DUPRIN®

NOTES: SEE MASTER SHEET #10001 FOR SUGGESTED REINFORCING

TEMPLATE NUMBER: 10194_a

DATE: 05-16-13

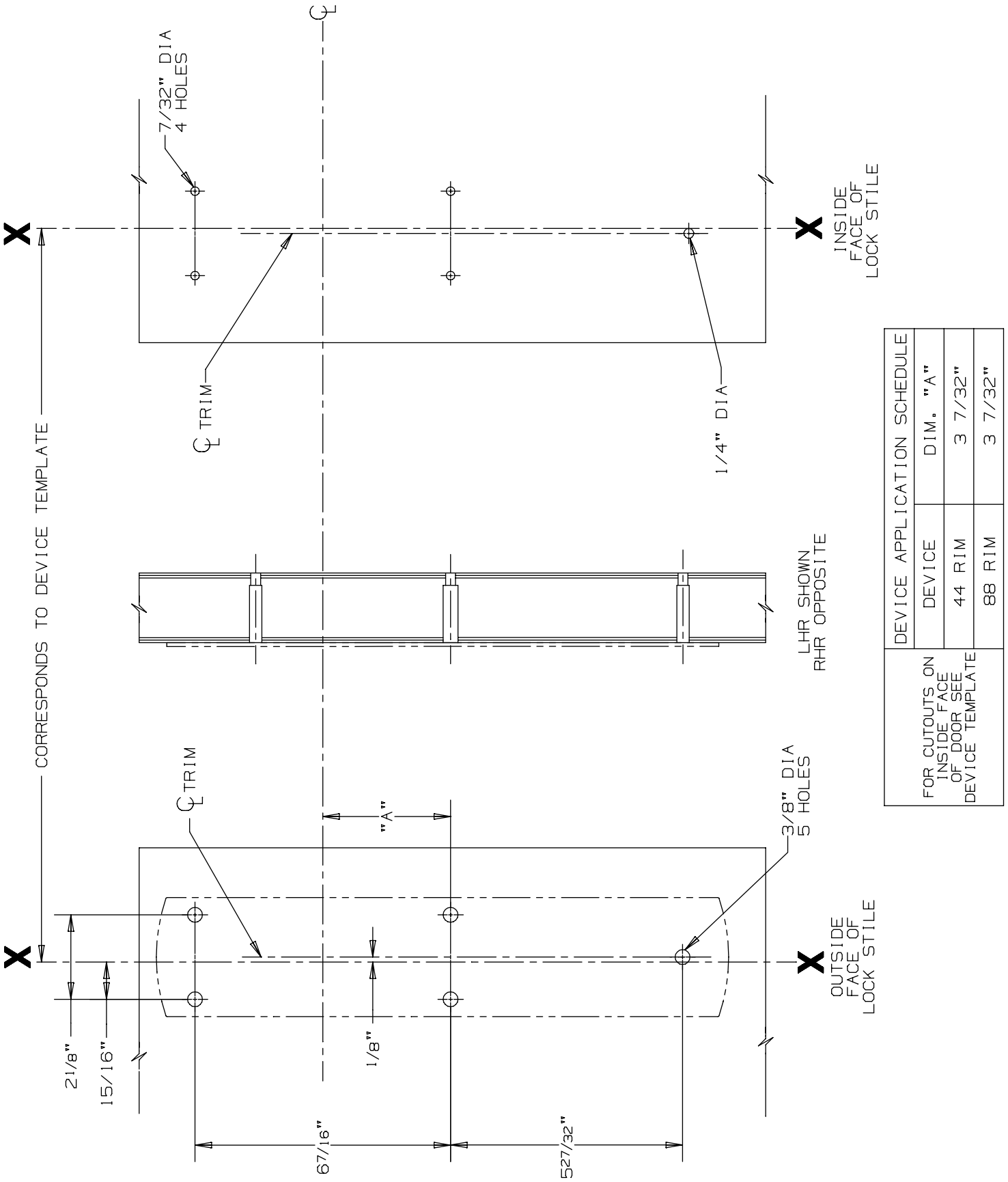

DEVICE APPLICATION SCHEDULE		
DEVICE	DIM. "A"	
44 RIM	3 7/32"	
88 RIM	3 7/32"	

FOR CUTOUTS ON INSIDE FACE OF DOOR SEE DEVICE TEMPLATE

880 EO Trim for 44 & 88 Rim Devices

VON DUPRIN®

NOTES: SEE MASTER SHEET #10001 FOR SUGGESTED REINFORCING

TEMPLATE NUMBER: 20250_a

DATE: 05-28-13

RIM APPLICATION

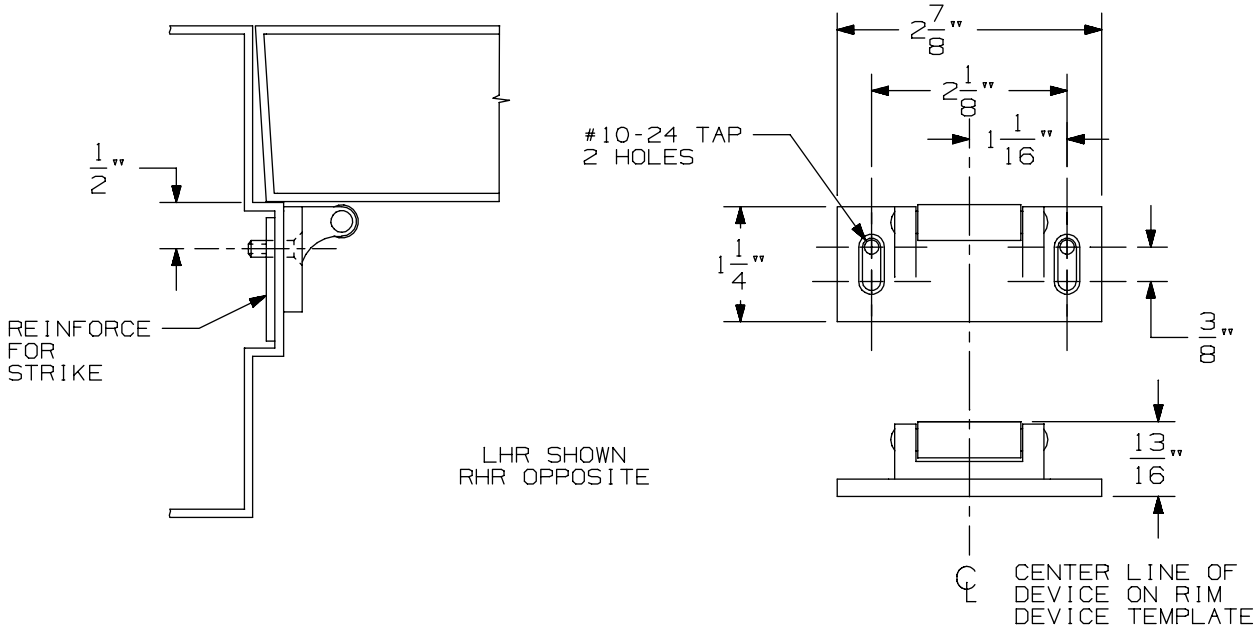

VERTICAL APPLICATION

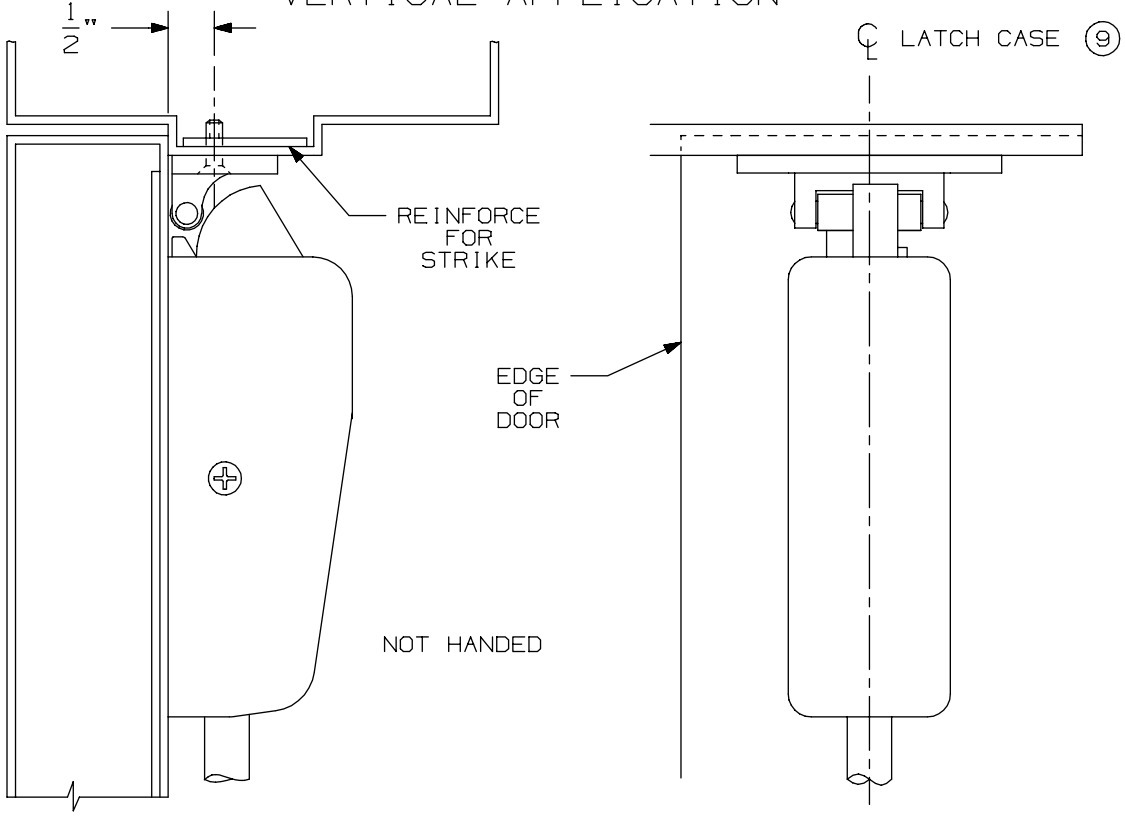

NOTE: LATCH CASE MOUNTING HOLES TO BE PREPARED AT INSTALLATION ON DOOR.

299 & 299F Strike

VON DUPRIN®

NOTES: SEE MASTER SHEET #10001 FOR SUGGESTED REINFORCING

TEMPLATE NUMBER: 30039_a

DATE: 05-23-13

FOR ADDITIONAL INFORMATION SEE TEMPLATE NO. 10155 OR NO. 10169

NOTE: TYPE 161 STOCK HOLLOW METAL APPLICATIONS FOR 88 DEVICES WILL WORK ONLY ON THESE APPLICATIONS: SINGLE DOOR & 299, 299F OR 268 STRIKE. (5)

TYPE 161 STOCK HOLLOW METAL DOOR

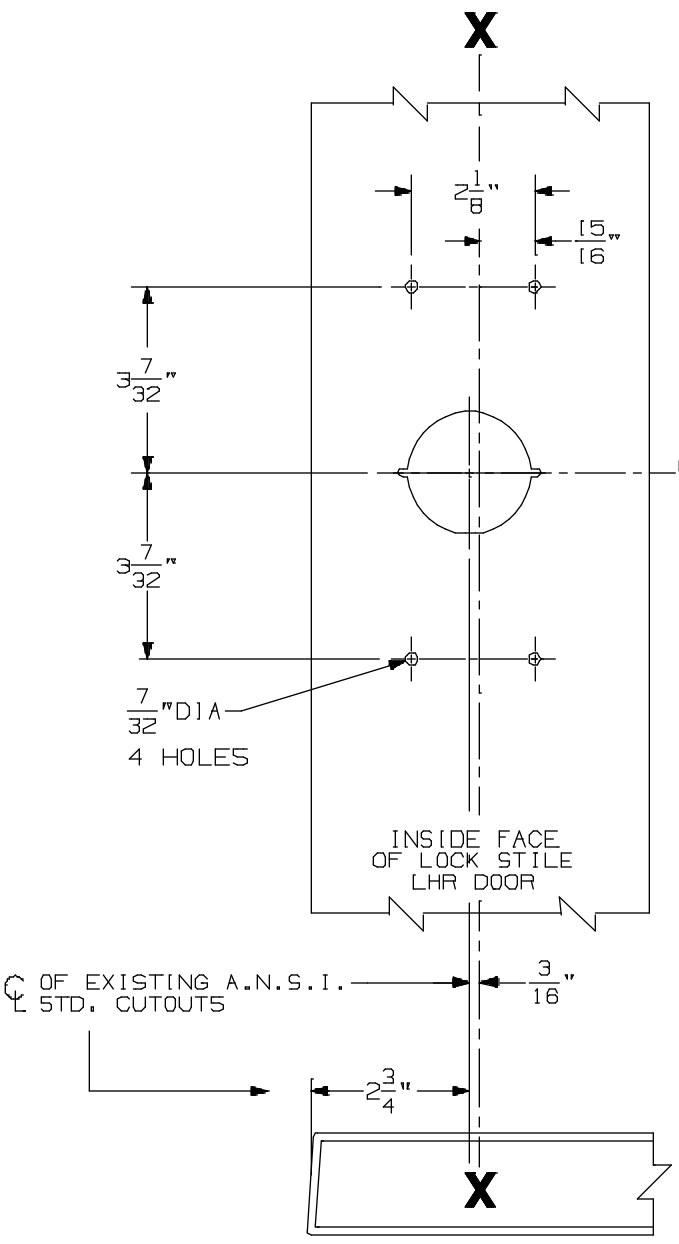

NOTE: ALL BACKSET DIMENSIONS FOR 5/8" STOP. USE STRIKE SHIMS SUPPLIED FOR 1/2" STOP

SINGLE DOOR OPENING
40 5/16" TO FINISHED FLOOR

DOUBLE DOOR OPENING
WITH VON DUPRIN MULLION
40 5/16" (5)

VON DUPRIN CUTOUTS ARE LOCATED FROM A.N.S.I. CUTOUTS SEE A.N.S.I. SPECIFICATION NO. A115 FOR THE SIZE AND LOCATION OF THESE CUTOUTS.

FOR OUTSIDE TRIM PREPARATION, WHEN REQUIRED, SEE ADDITIONAL TRIM TEMPLATE.

LHR SHOWN
RHR OPPOSITE

88EO & 88DT Rim Devices w/ 880 Trim for Type "161" Stock Hollow Metal Applications

VON DUPRIN®

NOTES: SEE MASTER SHEET #10001 FOR SUGGESTED REINFORCING

TEMPLATE NUMBER: 10194_a

DATE: 05-16-13

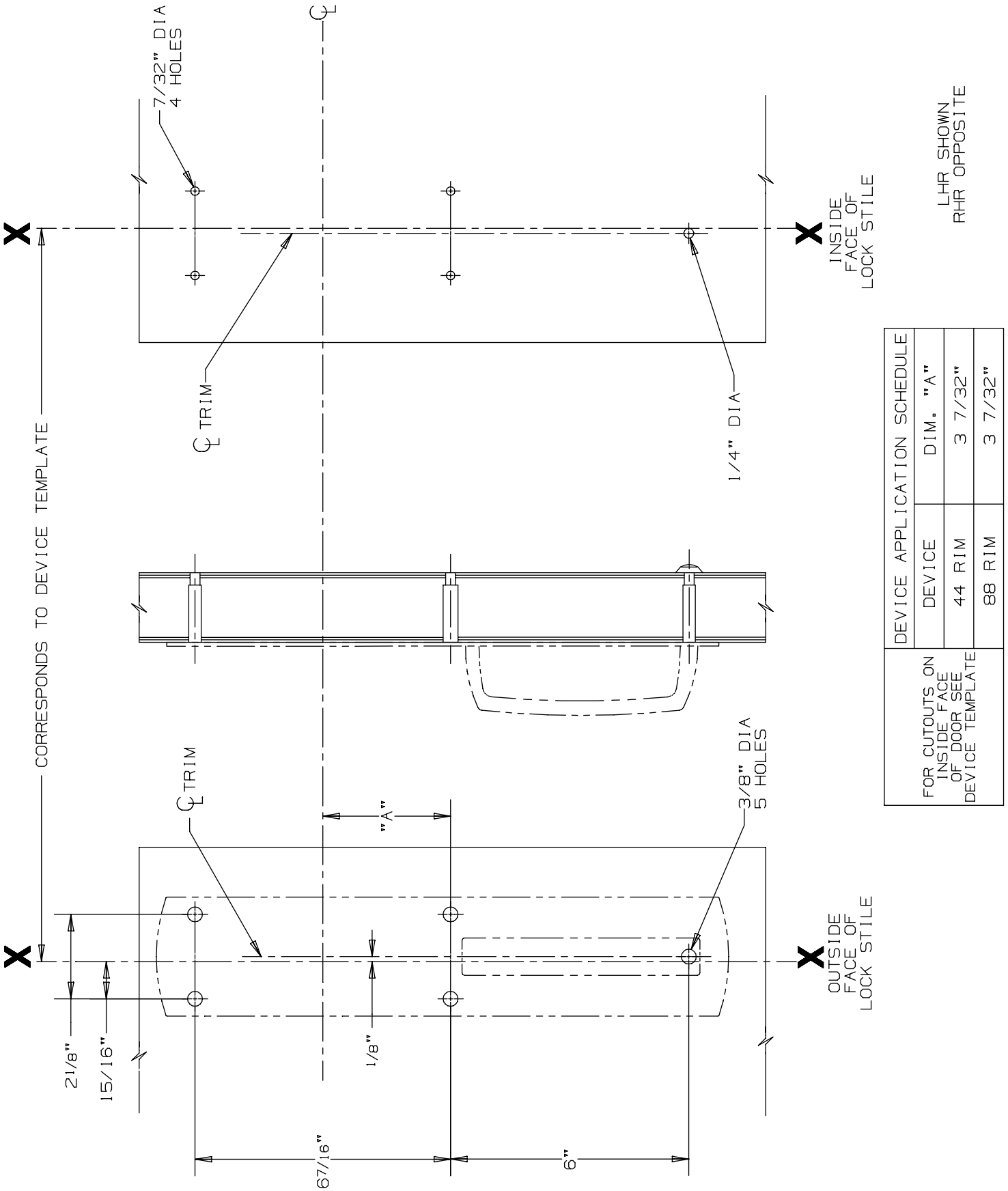

DEVICE APPLICATION SCHEDULE		
DEVICE	DIM. "A"	
44 RIM	3 7/32"	
88 RIM	3 7/32"	

FOR CUTOUTS ON INSIDE FACE OF DOOR SEE DEVICE TEMPLATE

880 DT Trim for 44 & 88 Rim Devices

VON DUPRIN®

NOTES: SEE MASTER SHEET #10001 FOR SUGGESTED REINFORCING

TEMPLATE NUMBER: 20251_a

DATE: 05-28-13

RIM APPLICATION

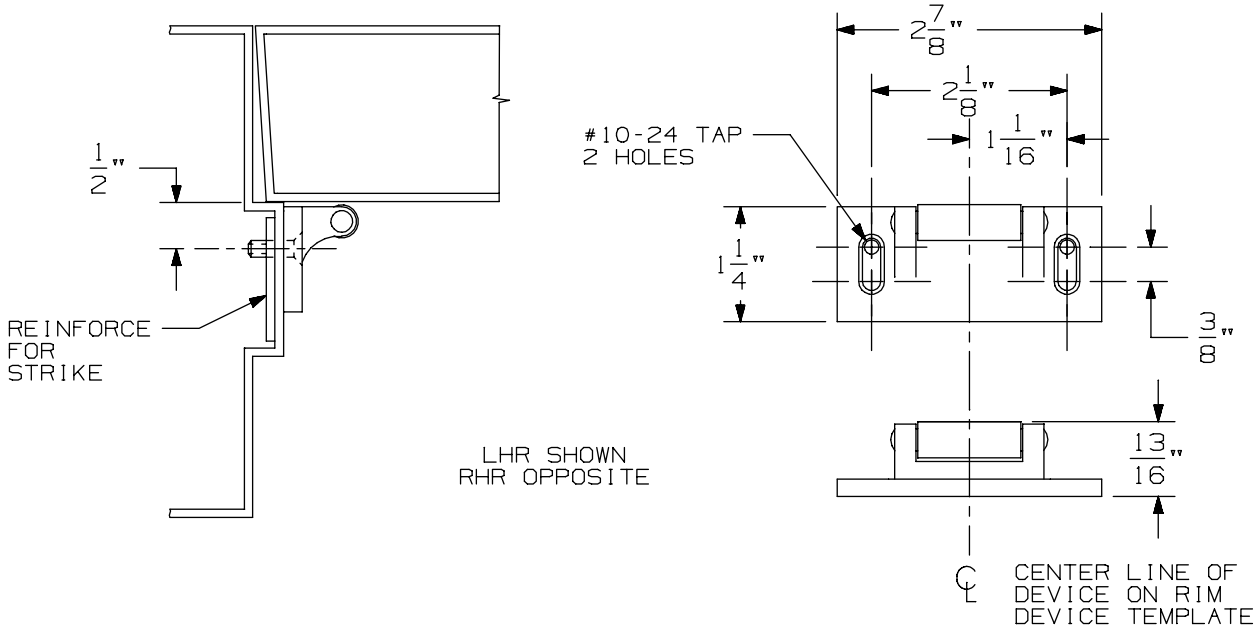

VERTICAL APPLICATION

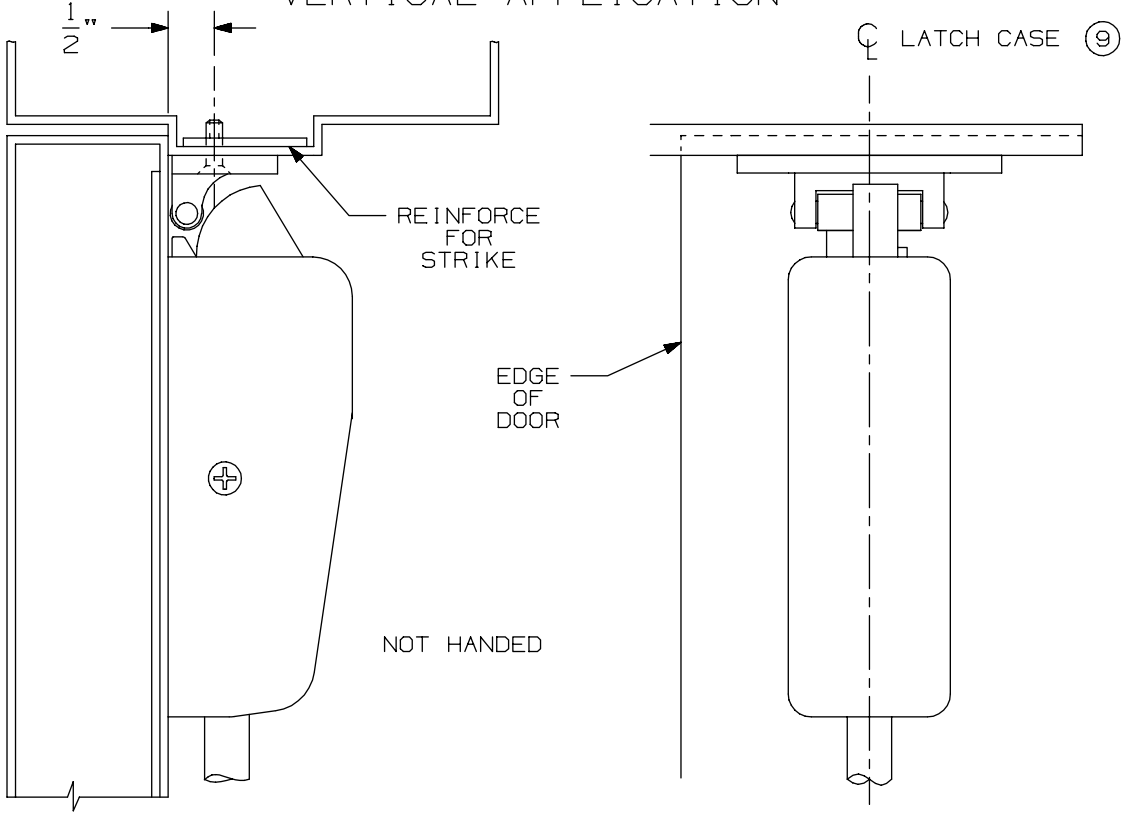

NOTE: LATCH CASE MOUNTING HOLES TO BE PREPARED AT INSTALLATION ON DOOR.

299 & 299F Strike

VON DUPRIN®

NOTES: SEE MASTER SHEET #10001 FOR SUGGESTED REINFORCING

TEMPLATE NUMBER: 30039_a

DATE: 05-23-13

FOR ADDITIONAL INFORMATION SEE TEMPLATE NO. 10156 OR NO. 10170

NOTE: TYPE 161 STOCK HOLLOW METAL APPLICATIONS FOR 88 DEVICES WILL WORK ONLY ON THESE APPLICATIONS: SINGLE DOOR & 299, 299F OR 268 STRIKE. ⑤

TYPE 161 STOCK HOLLOW METAL DOOR

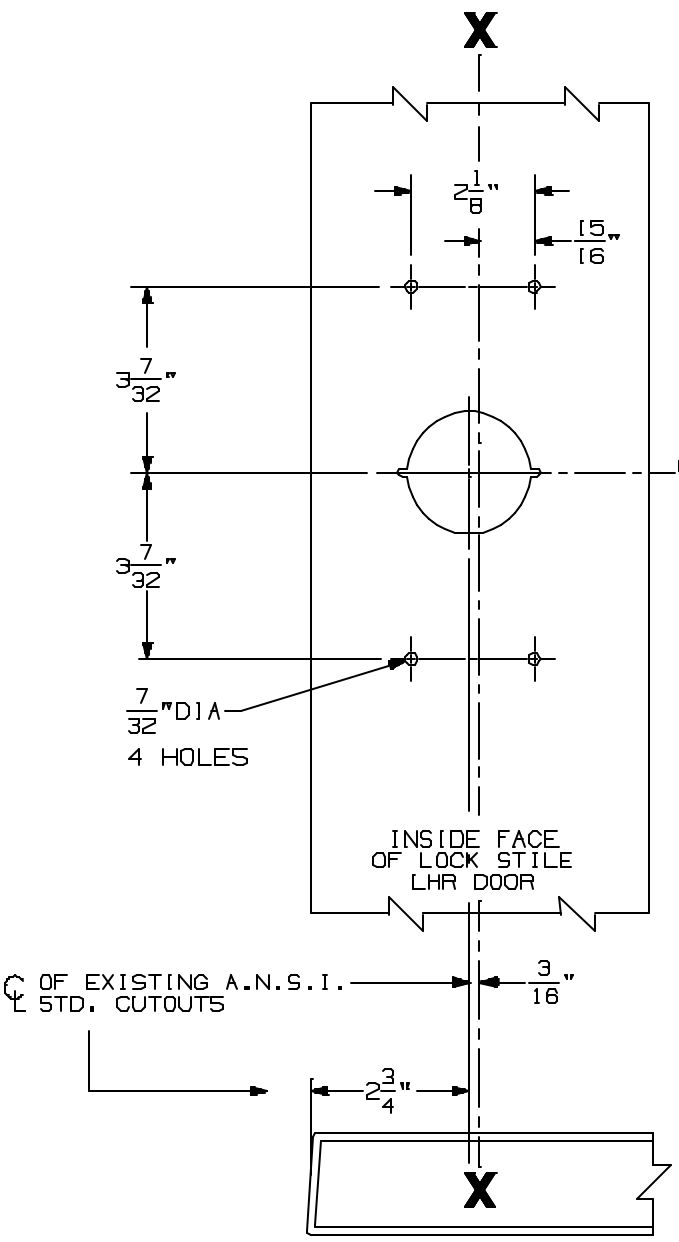

NOTE: ALL BACKSET DIMENSIONS FOR 5/8" STOP. USE STRIKE SHIMS SUPPLIED FOR 1/2" STOP

SINGLE DOOR OPENING
40 5/16" TO FINISHED FLOOR

DOUBLE DOOR OPENING
WITH VON DUPRIN MULLION
40 5/16" ⑤

VON DUPRIN CUTOUTS ARE LOCATED FROM A.N.S.I. CUTOUTS SEE A.N.S.I. SPECIFICATION NO. A115 FOR THE SIZE AND LOCATION OF THESE CUTOUTS.

FOR OUTSIDE TRIM PREPARATION, SEE ADDITIONAL TRIM TEMPLATE.

LHR SHOWN
RHR OPPOSITE

88NL Rim Device w/ 880 Trim for Type "161" Stock Hollow Metal Applications

VON DUPRIN®

NOTES: SEE MASTER SHEET #10001 FOR SUGGESTED REINFORCING

TEMPLATE NUMBER: 10195_a

DATE: 05-16-13

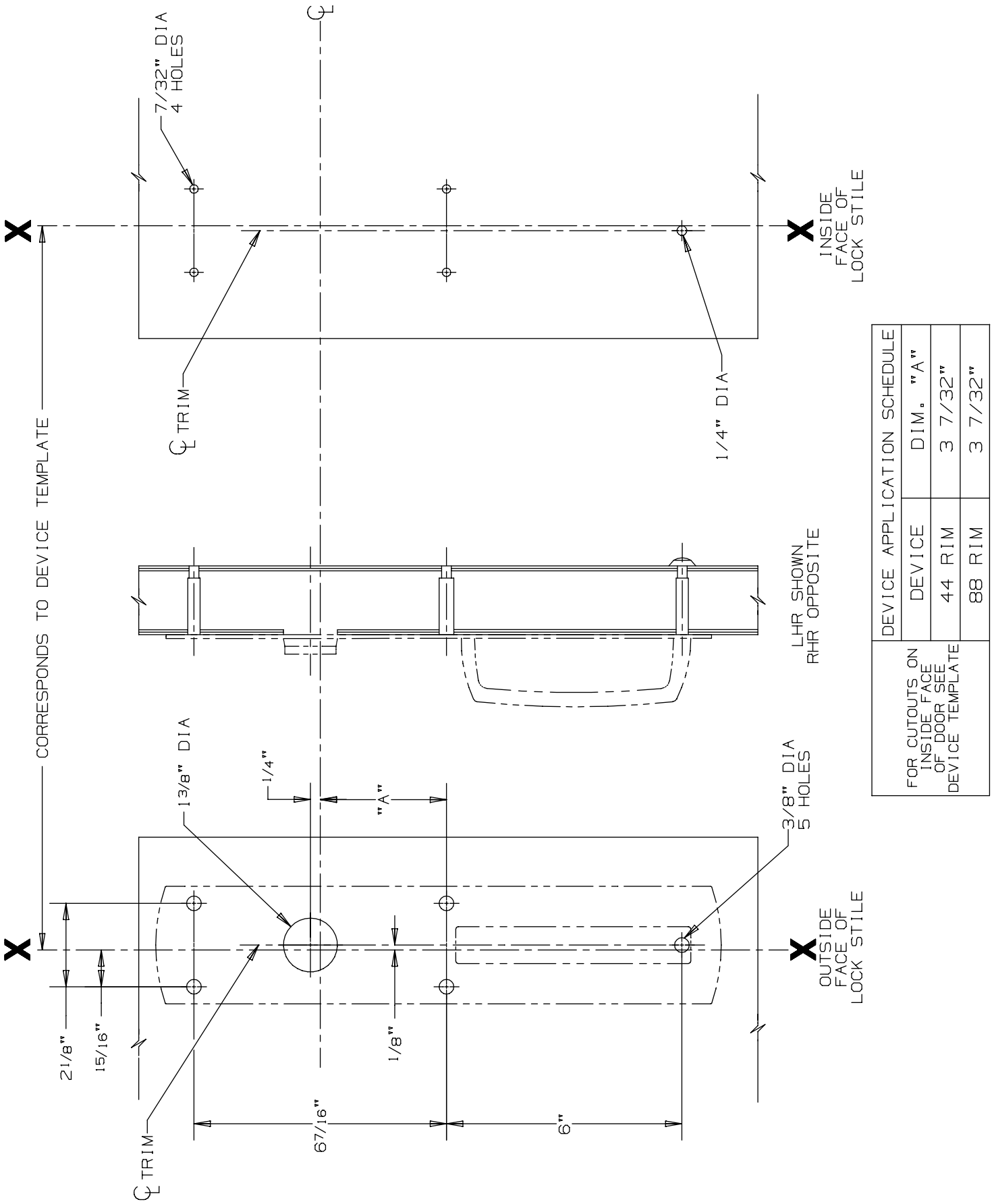

DEVICE APPLICATION SCHEDULE		
DEVICE	DIM. "A"	
44 RIM	3 7/32"	
88 RIM	3 7/32"	

FOR CUTOUTS ON INSIDE FACE OF DOOR SEE DEVICE TEMPLATE

880 NL Trim for 44 & 88 Rim Devices

VON DUPRIN®

NOTES: SEE MASTER SHEET #10001 FOR SUGGESTED REINFORCING

TEMPLATE NUMBER: 20252_a

DATE: 05-28-13

RIM APPLICATION

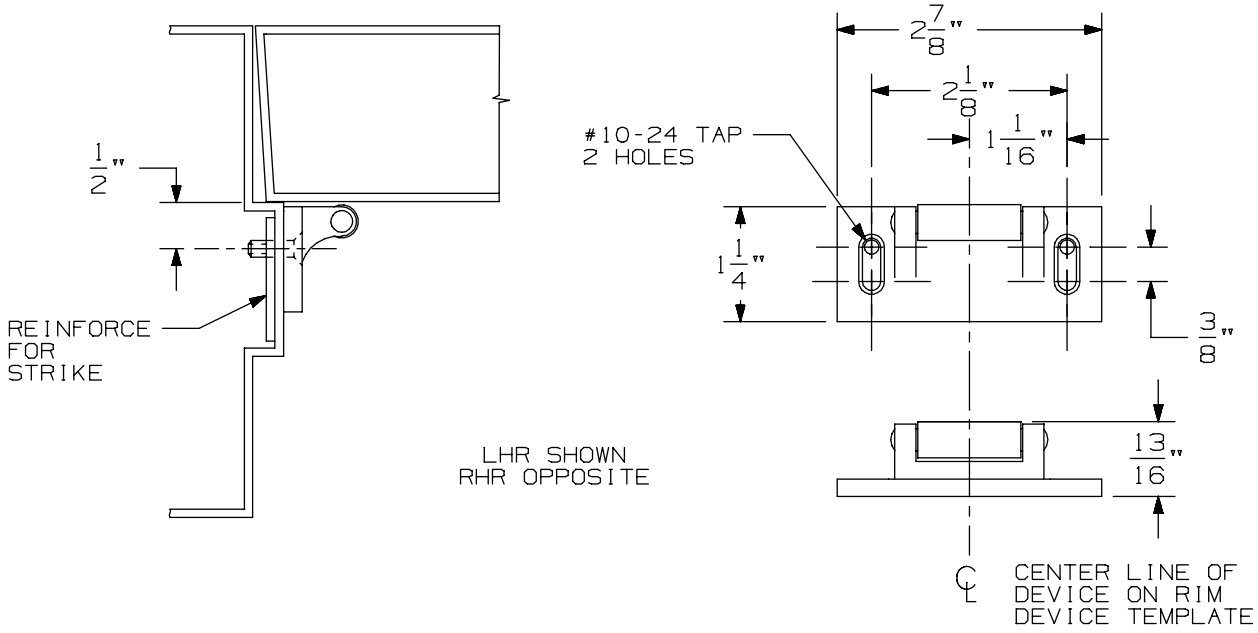

VERTICAL APPLICATION

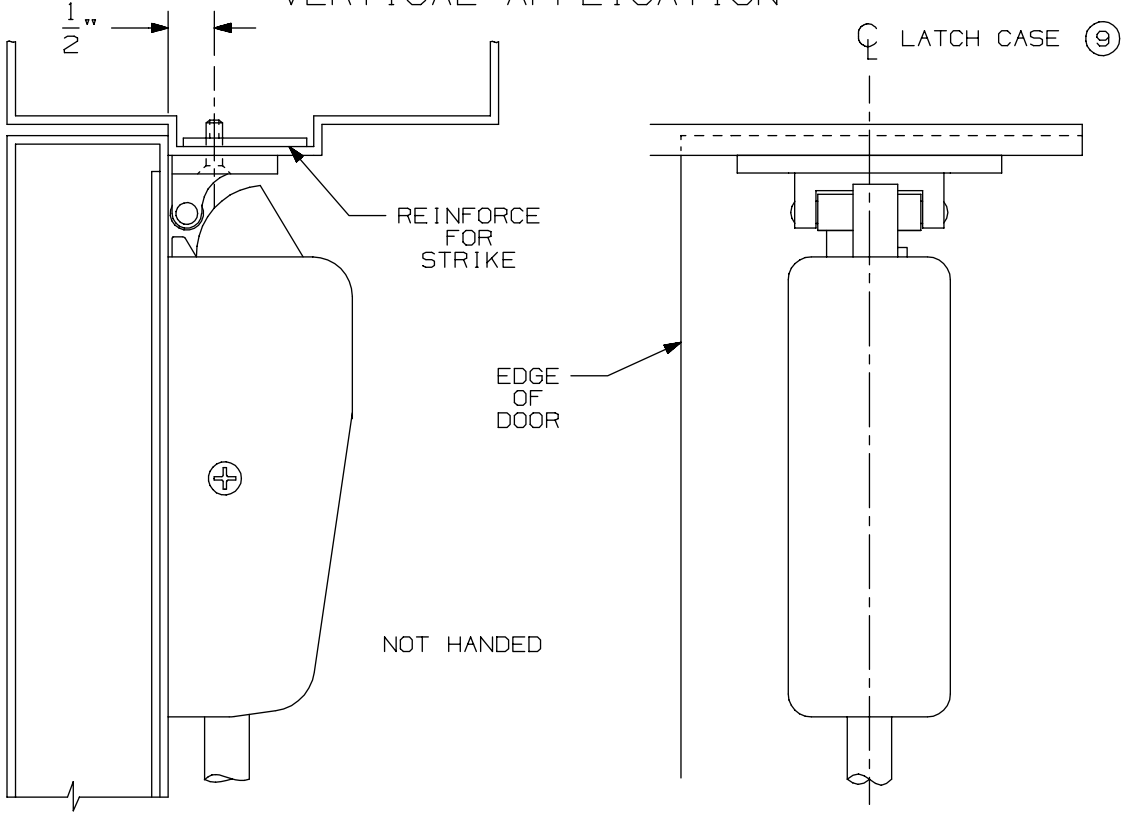

NOTE: LATCH CASE MOUNTING HOLES TO BE PREPARED AT INSTALLATION ON DOOR.

299 & 299F Strike

VON DUPRIN®

NOTES: SEE MASTER SHEET #10001 FOR SUGGESTED REINFORCING

TEMPLATE NUMBER: 30039_a

DATE: 05-23-13

FOR ADDITIONAL INFORMATION SEE TEMPLATE NO. 10158 OR NO. 10172

NOTE: TYPE 161 STOCK HOLLOW METAL APPLICATIONS FOR 88 DEVICES WILL WORK ONLY ON THESE APPLICATIONS: SINGLE DOOR & 299, 299F OR 268 STRIKE. (6)

TYPE 161 STOCK HOLLOW METAL DOOR

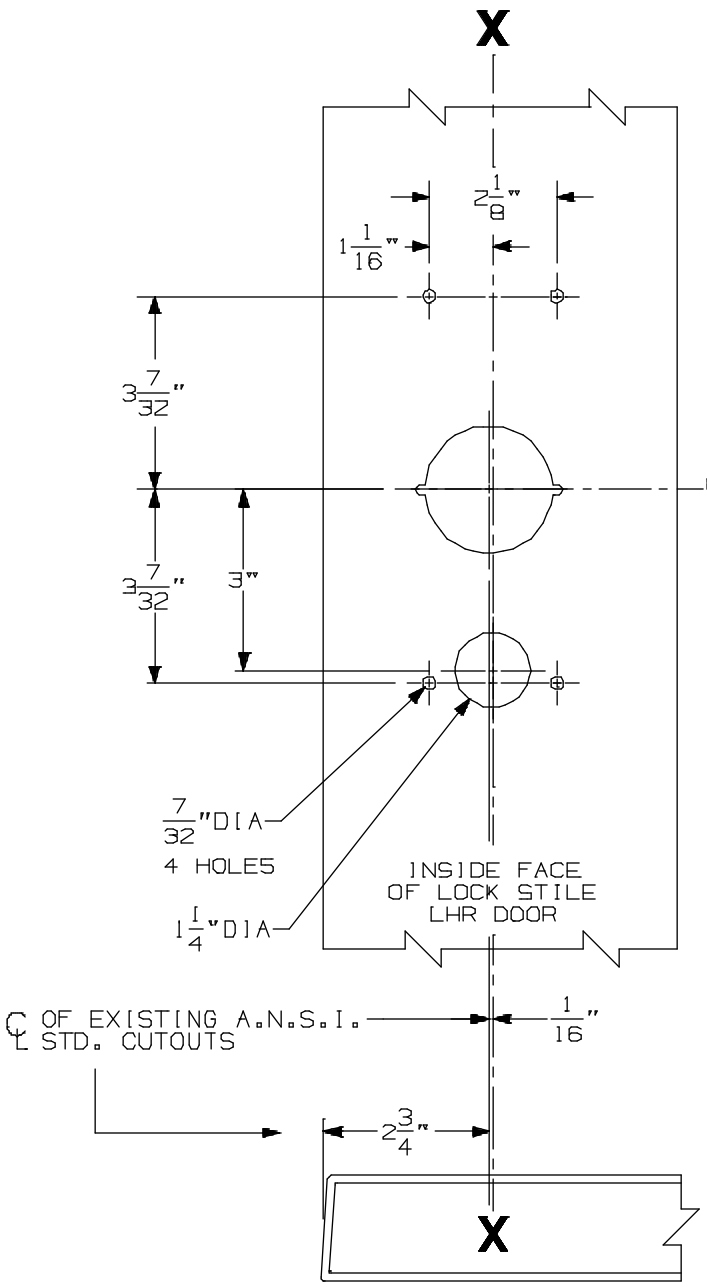

NOTE: ALL BACKSET DIMENSIONS FOR 5/8" STOP, USE STRIKE SHIMS SUPPLIED FOR 1/2" STOP

SINGLE DOOR OPENING
40 5/16" TO FINISHED FLOOR

DOUBLE DOOR OPENING
WITH VONDUPRIN MULLION
40 5/16" (6)

VON DUPRIN CUTOUTS ARE LOCATED FROM A.N.S.I. CUTOUTS SEE A.N.S.I. SPECIFICATION NO. A115 FOR THE SIZE AND LOCATION OF THESE CUTOUTS.

FOR OUTSIDE TRIM PREPARATION, SEE ADDITIONAL TRIM TEMPLATE.

LHR SHOWN
RHR OPPOSITE

88K Rim Devices w/ 880 Trim for Type "161" Stock Hollow Metal Applications

VON DUPRIN®

NOTES: SEE MASTER SHEET #10001 FOR SUGGESTED REINFORCING

TEMPLATE NUMBER: 10197_a

DATE: 05-16-13

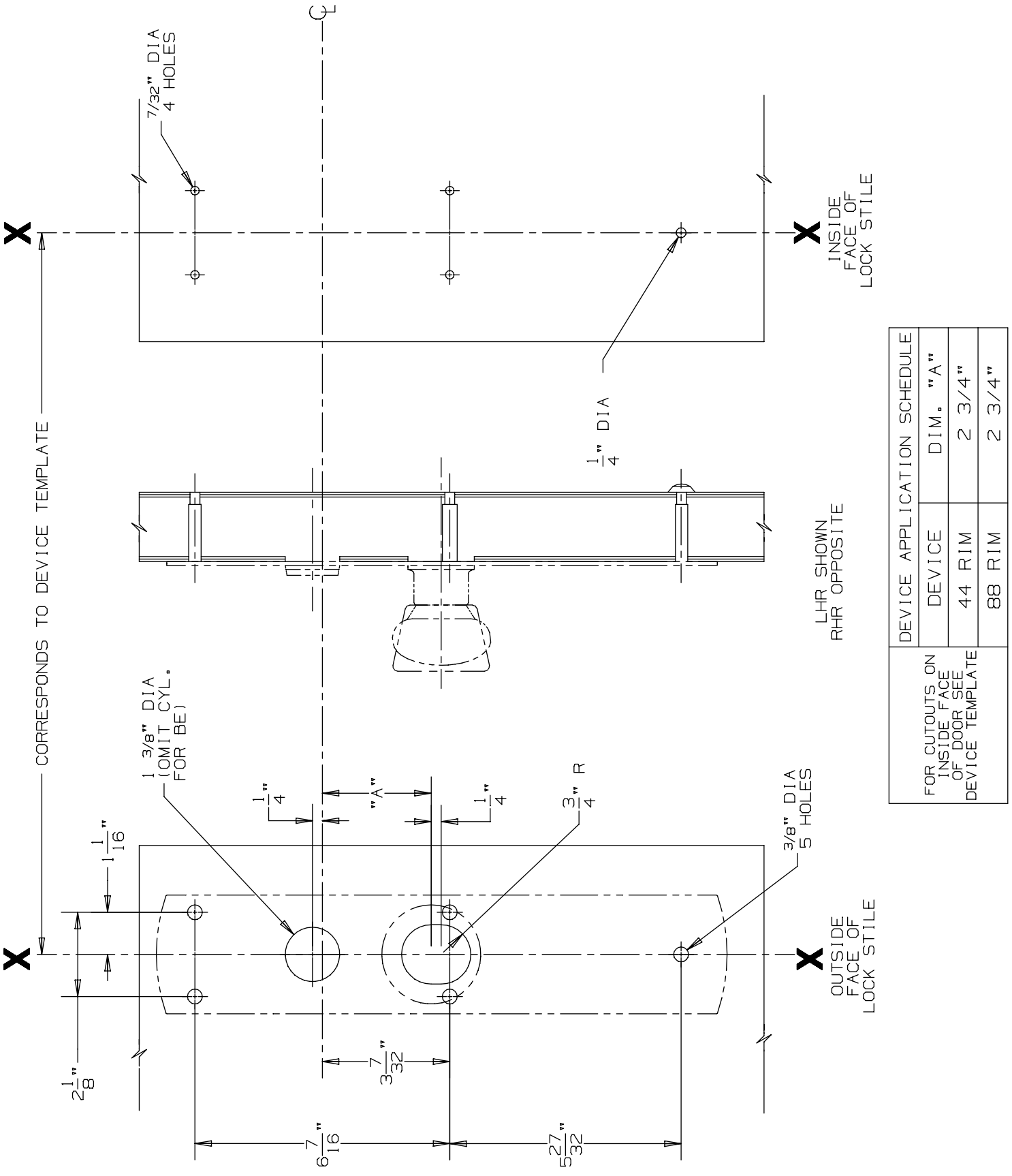

DEVICE APPLICATION SCHEDULE	
DEVICE	DIM. "A"
44 RIM	2 3/4"
88 RIM	2 3/4"

FOR CUTOUTS ON INSIDE FACE OF DOOR SEE DEVICE TEMPLATE

880 K & 880 K-BE Trim for 44 & 88 Rim Devices

VON DUPRIN®

NOTES: SEE MASTER SHEET #10001 FOR SUGGESTED REINFORCING

TEMPLATE NUMBER: 20254_a

DATE: 05-28-13

RIM APPLICATION

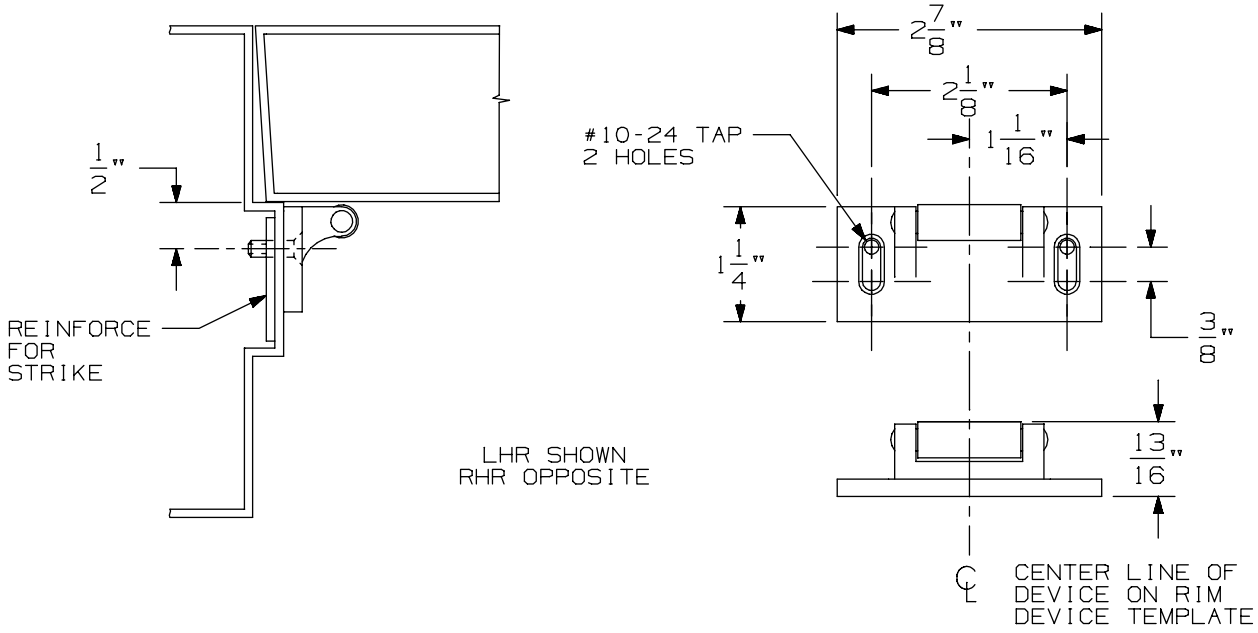

VERTICAL APPLICATION

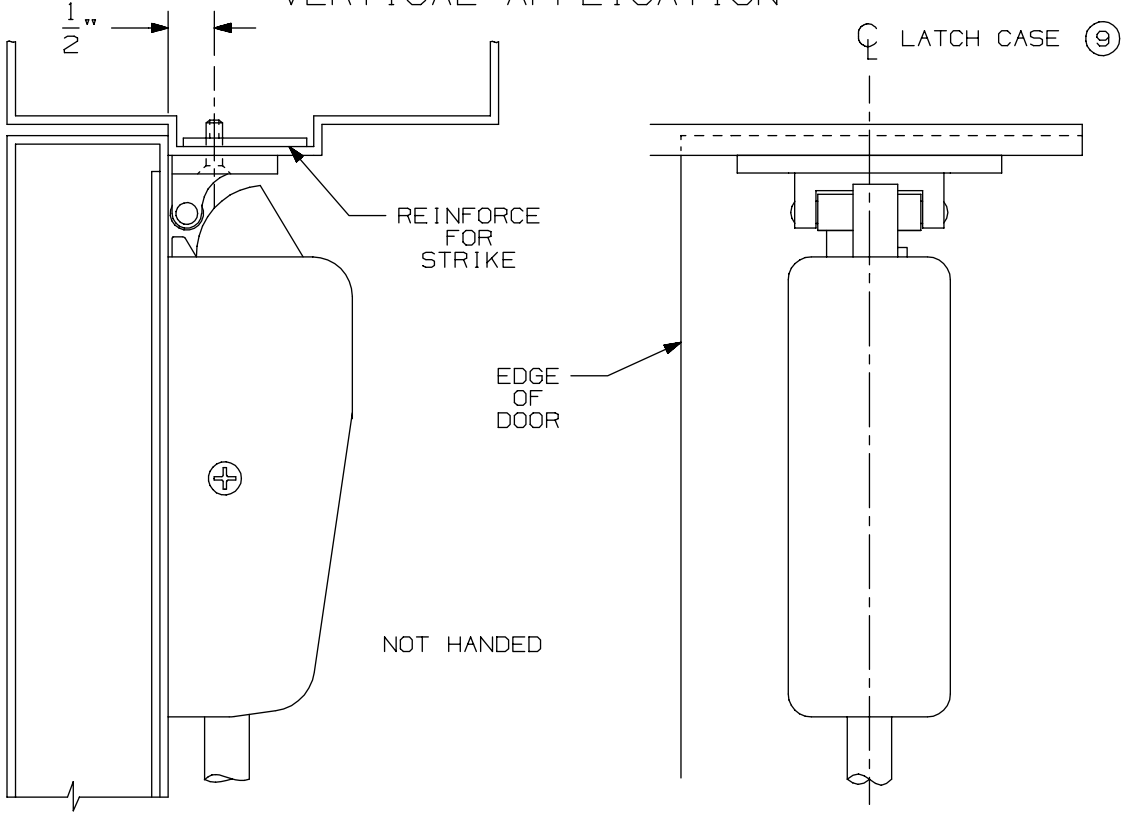

NOTE: LATCH CASE MOUNTING HOLES TO BE PREPARED AT INSTALLATION ON DOOR.

299 & 299F Strike

VON DUPRIN®

NOTES: SEE MASTER SHEET #10001 FOR SUGGESTED REINFORCING

TEMPLATE NUMBER: 30039_a

DATE: 05-23-13

FOR ADDITIONAL INFORMATION SEE TEMPLATE NO. 10157 OR NO. 10171

NOTE: TYPE 161 STOCK HOLLOW METAL APPLICATIONS FOR 88 DEVICES WILL WORK ONLY ON THESE APPLICATIONS: SINGLE DOOR & 299, 299F OR 268 STRIKE. (5)

TYPE 161 STOCK HOLLOW METAL DOOR

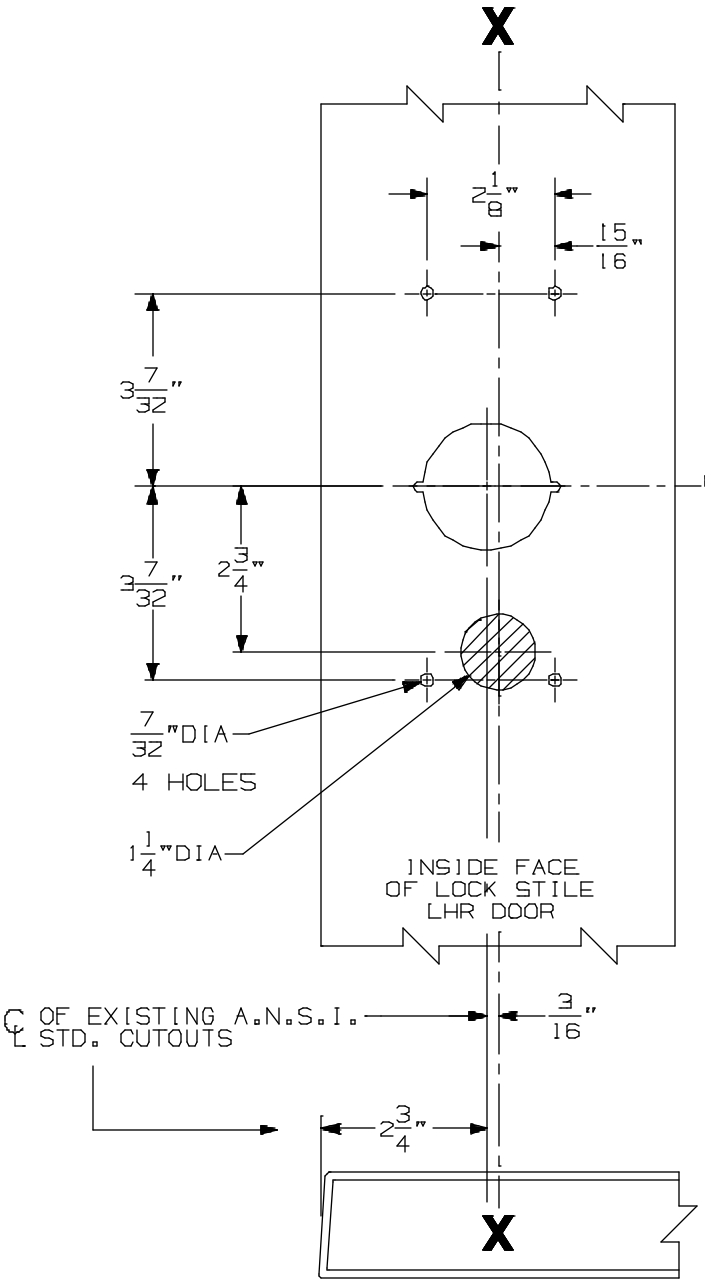

NOTE: ALL BACKSET DIMENSIONS FOR 5/8" STOP. USE STRIKE SHIMS SUPPLIED FOR 1/2" STOP

SINGLE DOOR OPENING
40 5/16" TO FINISHED FLOOR

DOUBLE DOOR OPENING
WITH VON DUPRIN MULLION
40 5/16" (5)

VON DUPRIN CUTOUTS ARE LOCATED FROM A.N.S.I. CUTOUTS SEE A.N.S.I. SPECIFICATION NO. A115 FOR THE SIZE AND LOCATION OF THESE CUTOUTS.

FOR OUTSIDE TRIM PREPARATION, SEE ADDITIONAL TRIM TEMPLATE.

LHR SHOWN
RHR OPPOSITE

88TP Rim Devices with 880 Trim for Type "86" Stock Hollow Metal Applications

VON DUPRIN®

NOTES: SEE MASTER SHEET #10001 FOR SUGGESTED REINFORCING

TEMPLATE NUMBER: 10196_a

DATE: 05-16-13

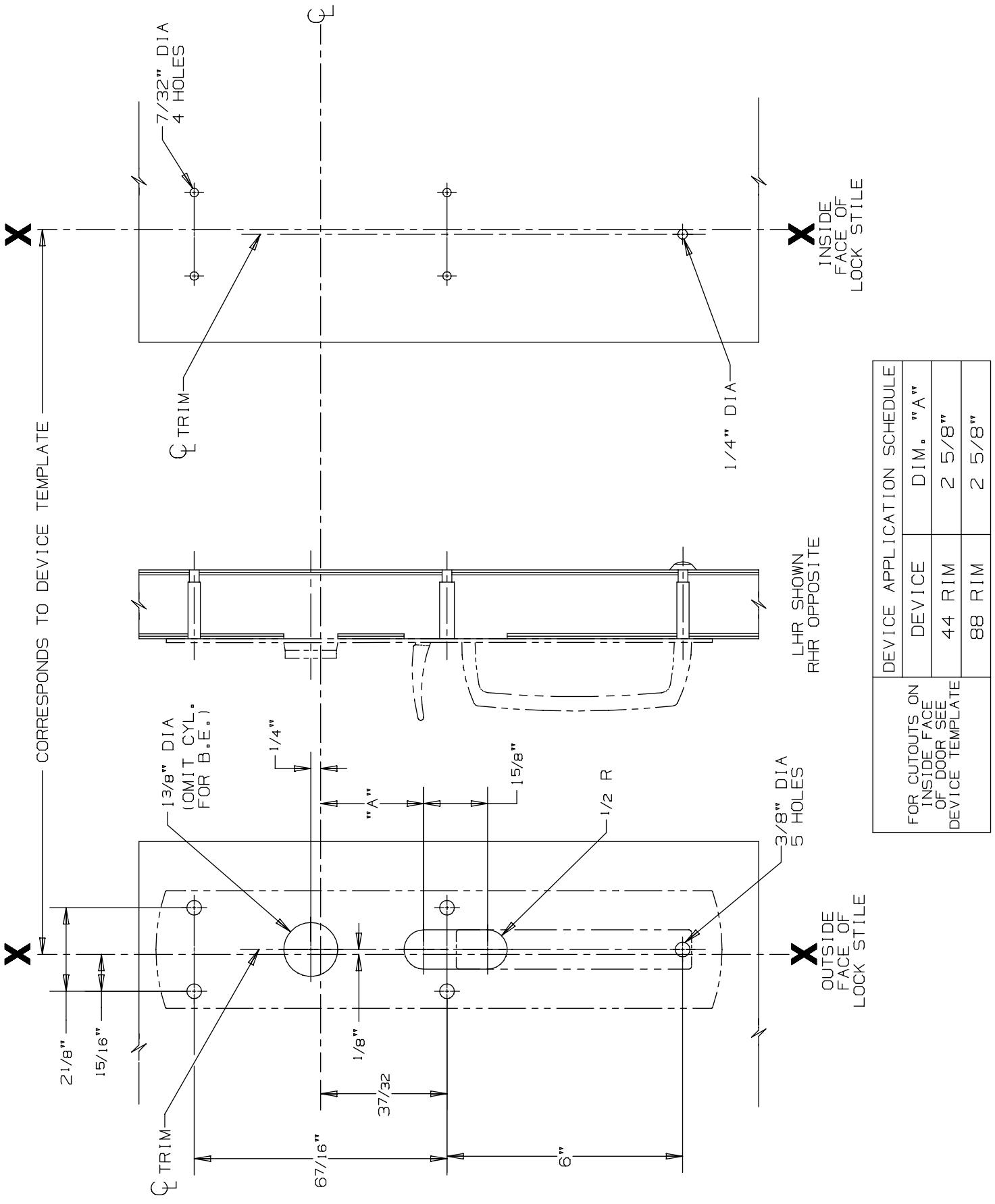

DEVICE APPLICATION SCHEDULE		
DEVICE	DIM. "A"	
44 RIM	2 5/8"	
88 RIM	2 5/8"	

FOR CUTOUTS ON INSIDE FACE OF DOOR SEE DEVICE TEMPLATE

880 TP & 880 TP-BE Trim for 44 & 88 Rim Devices

VON DUPRIN®

NOTES: SEE MASTER SHEET #10001 FOR SUGGESTED REINFORCING

TEMPLATE NUMBER: 20253_a

DATE: 05-28-13

RIM APPLICATION

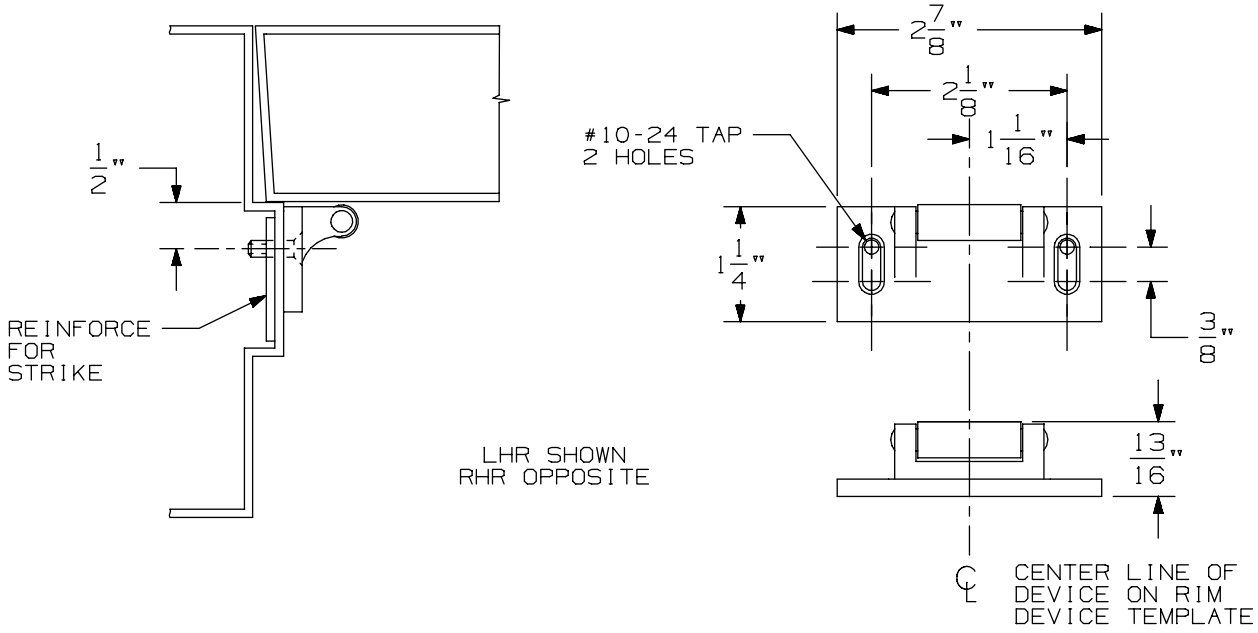

VERTICAL APPLICATION

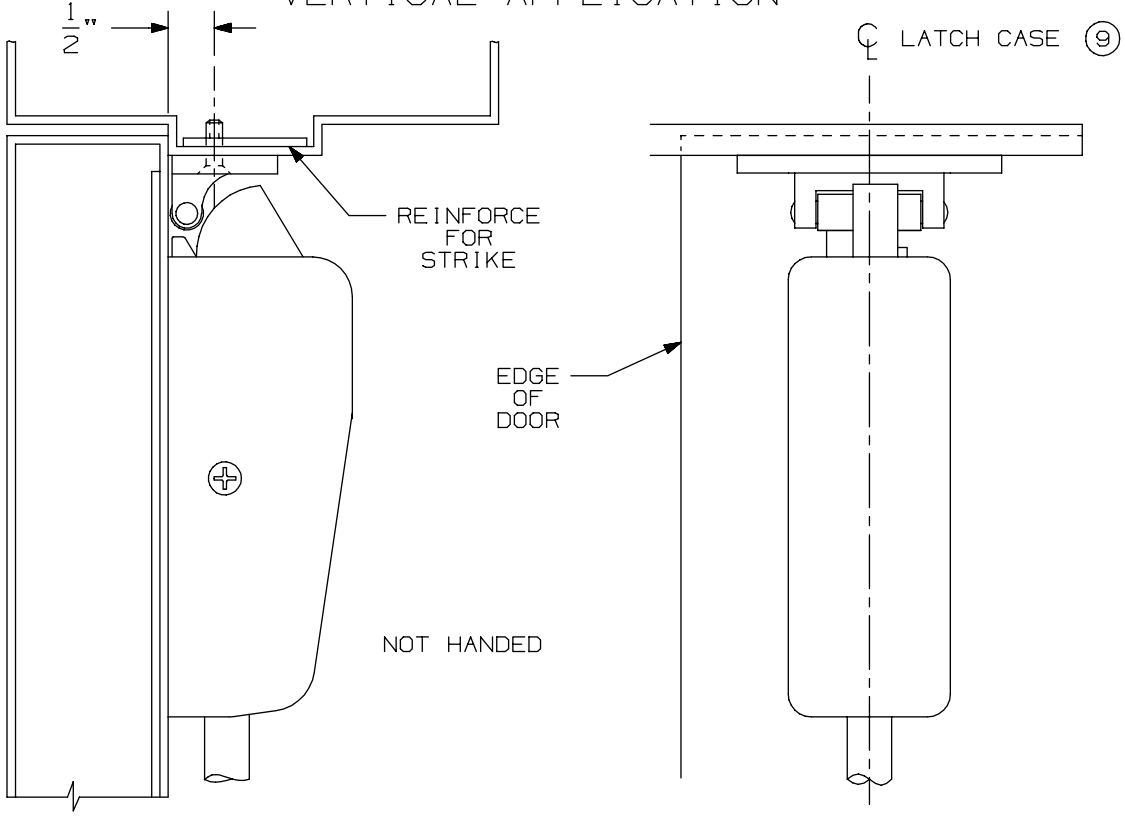

NOTE: LATCH CASE MOUNTING HOLES TO BE PREPARED AT INSTALLATION ON DOOR.

299 & 299F Strike

VON DUPRIN®

NOTES: SEE MASTER SHEET #10001 FOR SUGGESTED REINFORCING

TEMPLATE NUMBER: 30039_a

DATE: 05-23-13

88 Series for 161 Stock Hollow Metal Doors

-

8827 Surface Vertical Rod

FOR ADDITIONAL INFORMATION SEE TEMPLATE NO. 10160

TYPE 161 STOCK HOLLOW METAL DOOR

TYPE 86 STOCK HOLLOW METAL DOOR

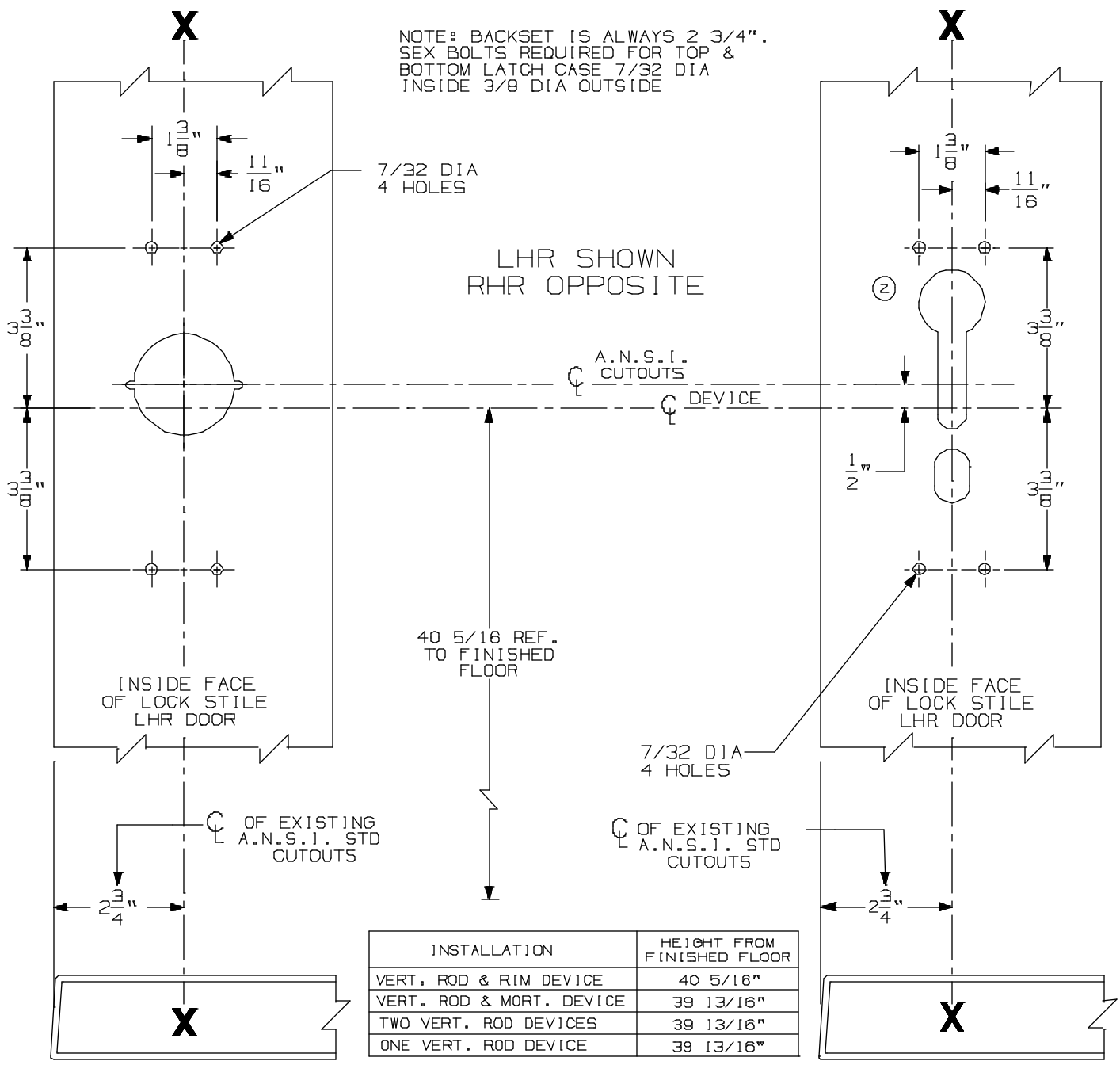

INSTALLATION	HEIGHT FROM FINISHED FLOOR
VERT. ROD & RIM DEVICE	40 5/16"
VERT. ROD & MORT. DEVICE	39 13/16"
TWO VERT. ROD DEVICES	39 13/16"
ONE VERT. ROD DEVICE	39 13/16"

VON DUPRIN CUTOUTS ARE LOCATED FROM A.N.S.I. CUTOUTS SEE A.N.S.I. SPECIFICATION NO. A115 FOR THE SIZE AND LOCATION OF THESE CUTOUTS.

FOR OUTSIDE TRIM PREPARATION, WHEN REQUIRED, SEE ADDITIONAL TRIM TEMPLATE.

8827EO & 8827DT Vertical Rod Devices w/ 880 Trim for Stock Hollow Metal Applications	VON DUPRIN®	
NOTES: SEE MASTER SHEET #10001 FOR SUGGESTED REINFORCING	TEMPLATE NUMBER: 10199_a	DATE: 05-16-13

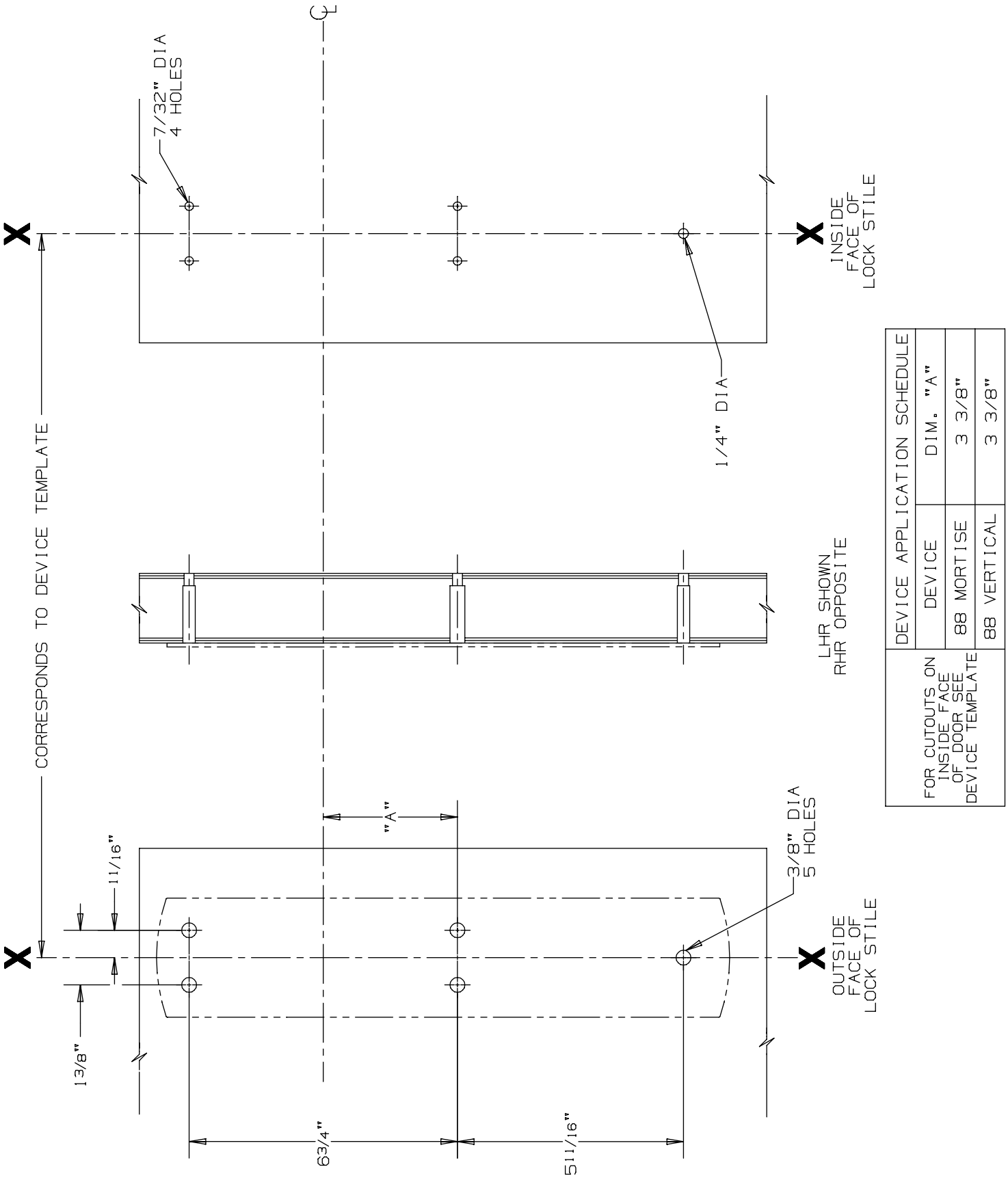

DEVICE APPLICATION SCHEDULE		
DEVICE	DIM. "A"	
88 MORTISE	3 3/8"	
88 VERTICAL	3 3/8"	

FOR CUTOUTS ON INSIDE FACE OF DOOR SEE DEVICE TEMPLATE

880 EO Trim for 88 Mortise & Vertical Devices

VON DUPRIN®

NOTES: SEE MASTER SHEET #10001 FOR SUGGESTED REINFORCING

TEMPLATE NUMBER: 20257_a

DATE: 05-28-13

RIM APPLICATION

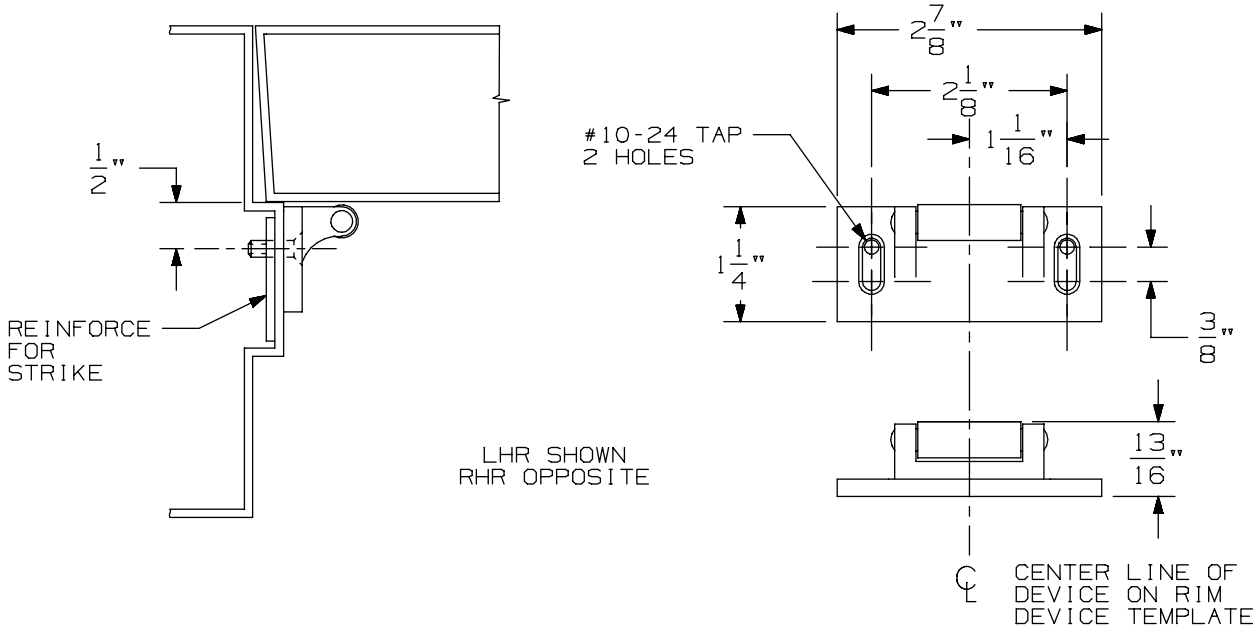

VERTICAL APPLICATION

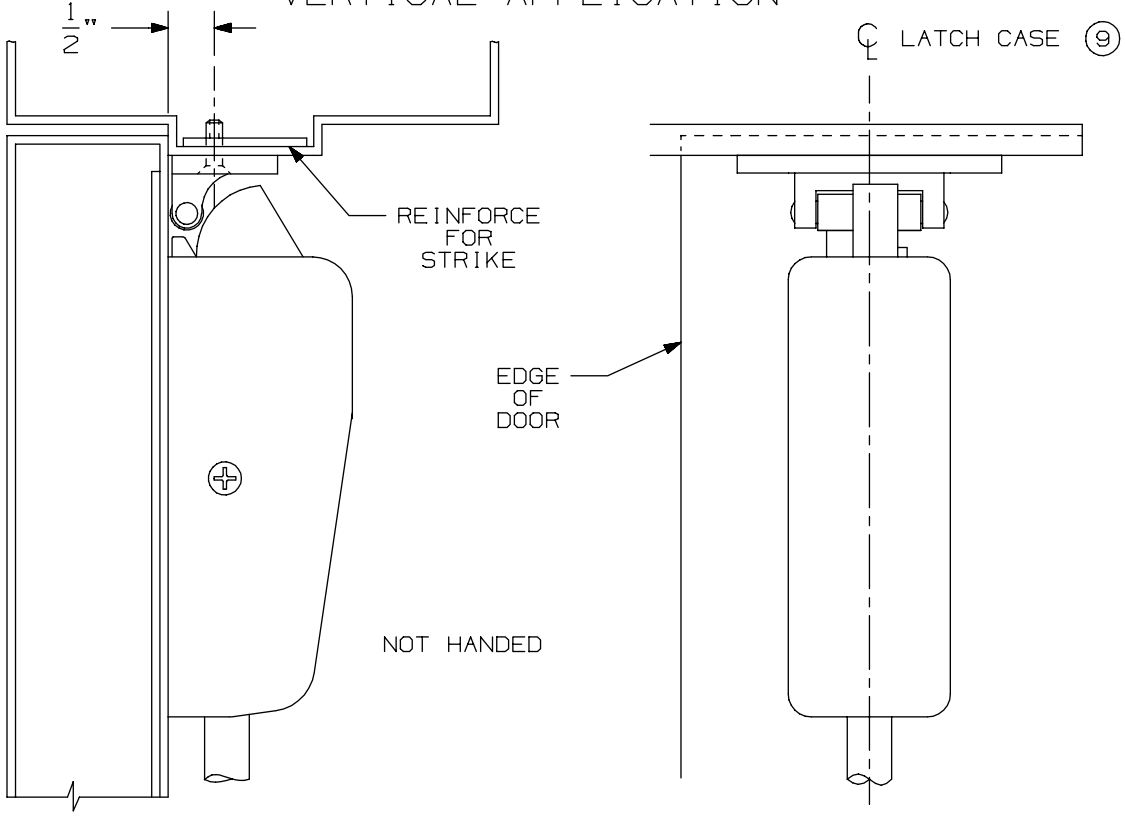

NOTE: LATCH CASE MOUNTING HOLES TO BE PREPARED AT INSTALLATION ON DOOR.

299 & 299F Strike

VON DUPRIN®

NOTES: SEE MASTER SHEET #10001 FOR SUGGESTED REINFORCING

TEMPLATE NUMBER: 30039_a

DATE: 05-23-13

FOR ADDITIONAL INFORMATION SEE TEMPLATE NO. 10160

TYPE 161 STOCK HOLLOW METAL DOOR

TYPE 86 STOCK HOLLOW METAL DOOR

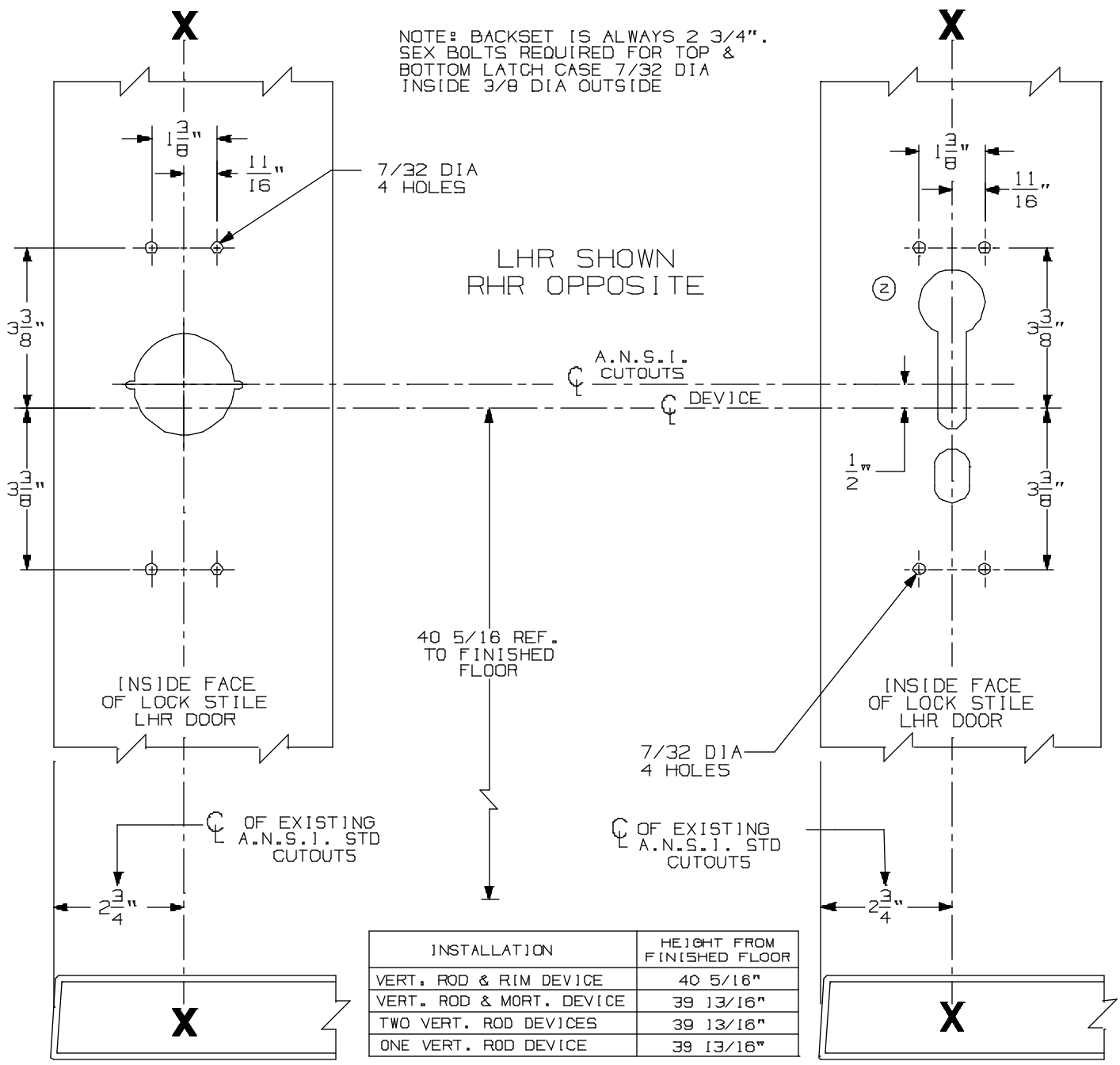

INSTALLATION	HEIGHT FROM FINISHED FLOOR
VERT. ROD & RIM DEVICE	40 5/16"
VERT. ROD & MORT. DEVICE	39 13/16"
TWO VERT. ROD DEVICES	39 13/16"
ONE VERT. ROD DEVICE	39 13/16"

VON DUPRIN CUTOUTS ARE LOCATED FROM A.N.S.I. CUTOUTS SEE A.N.S.I. SPECIFICATION NO. A115 FOR THE SIZE AND LOCATION OF THESE CUTOUTS.

FOR OUTSIDE TRIM PREPARATION, WHEN REQUIRED, SEE ADDITIONAL TRIM TEMPLATE.

8827EO & 8827DT Vertical Rod Devices w/ 880 Trim for Stock Hollow Metal Applications	VON DUPRIN®	
NOTES: SEE MASTER SHEET #10001 FOR SUGGESTED REINFORCING	TEMPLATE NUMBER: 10199_a	DATE: 05-16-13

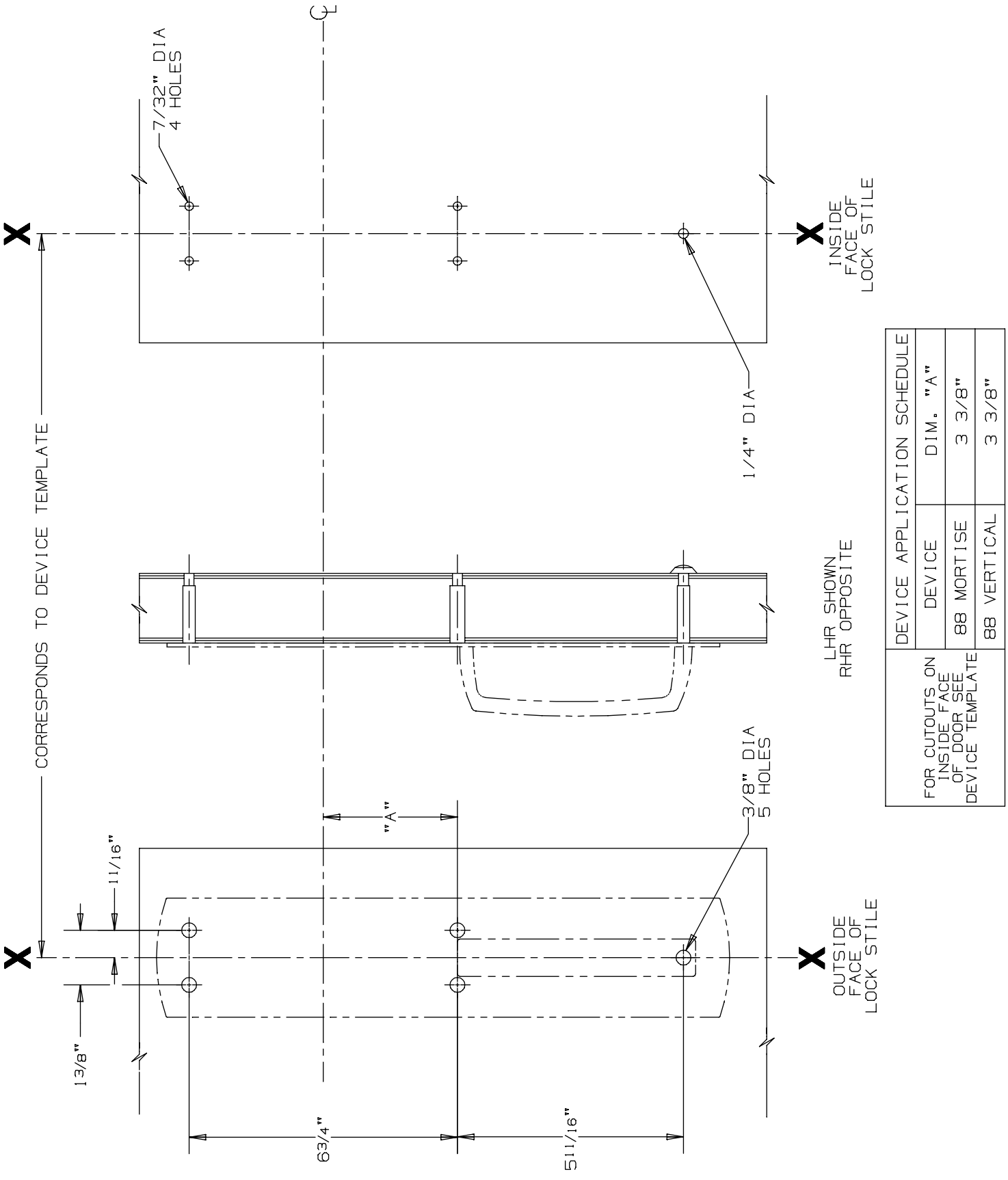

DEVICE APPLICATION SCHEDULE		
DEVICE	DIM. "A"	
88 MORTISE	3 3/8"	
88 VERTICAL	3 3/8"	

FOR CUTOUTS ON INSIDE FACE OF DOOR SEE DEVICE TEMPLATE

880 DT Trim for 88 Mortise & Vertical Devices

VON DUPRIN®

NOTES: SEE MASTER SHEET #10001 FOR SUGGESTED REINFORCING

TEMPLATE NUMBER: 20258_a

DATE: 05-28-13

RIM APPLICATION

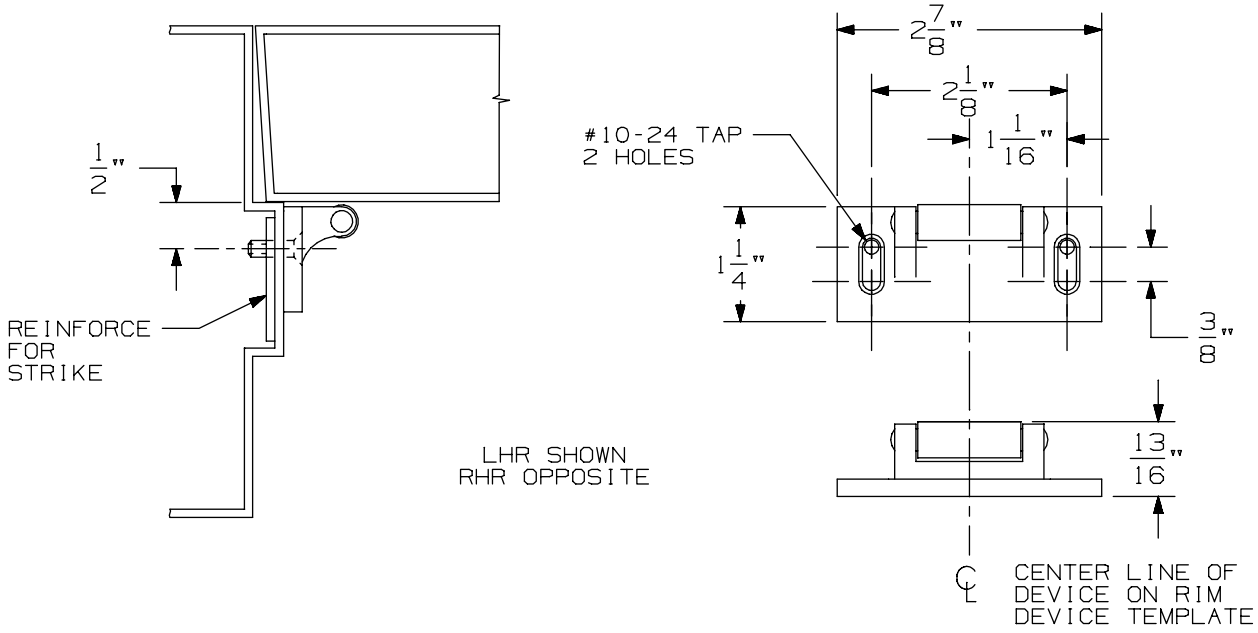

VERTICAL APPLICATION

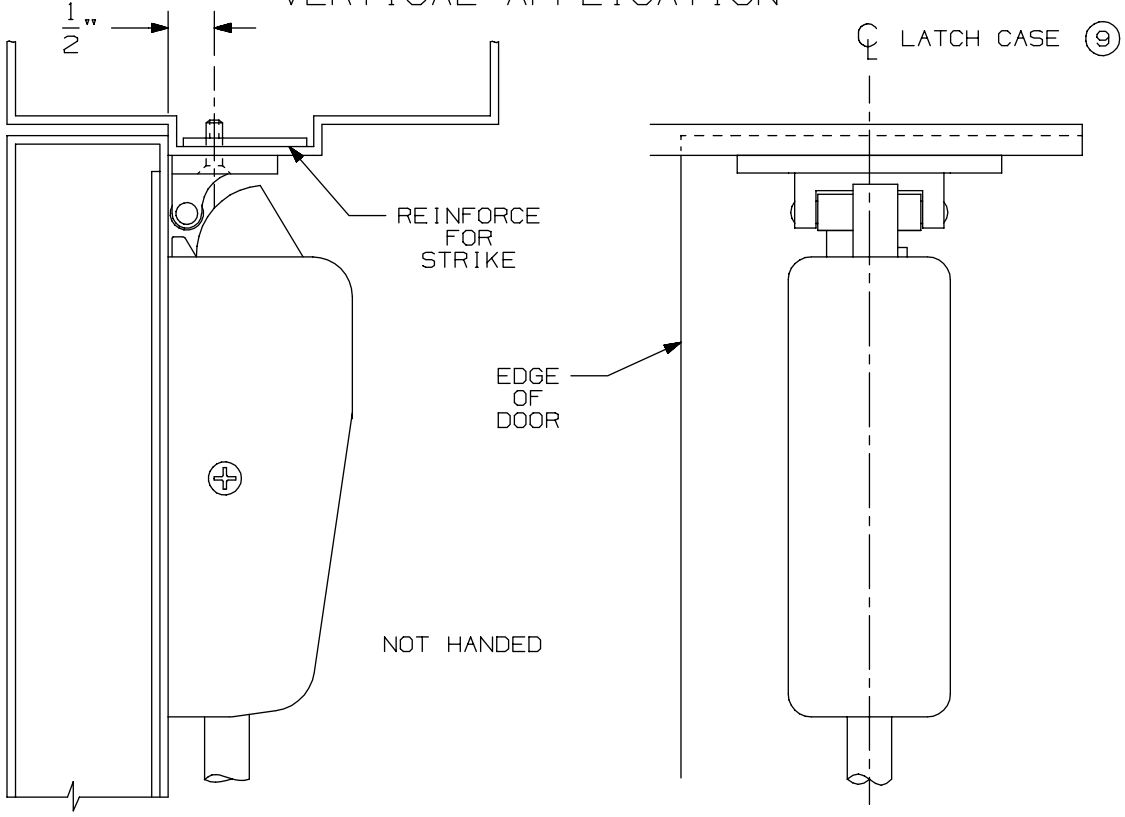

NOTE: LATCH CASE MOUNTING HOLES TO BE PREPARED AT INSTALLATION ON DOOR.

299 & 299F Strike

VON DUPRIN®

NOTES: SEE MASTER SHEET #10001 FOR SUGGESTED REINFORCING

TEMPLATE NUMBER: 30039_a

DATE: 05-23-13

FOR ADDITIONAL INFORMATION SEE TEMPLATE NO. 10162

TYPE 161 STOCK HOLLOW METAL DOOR

TYPE 86 STOCK HOLLOW METAL DOOR & STD DOOR

NOTE: BACKSET IS ALWAYS 2 3/4".
SEX BOLTS REQUIRED FOR TOP & BOTTOM LATCH CASE 7/32 DIA INSIDE 3/8 DIA OUTSIDE

CYLINDER SCHEDULE	HOLE SIZE
VON DUPRIN	1 5/16"
SCHLAGE	
CORBIN	
RUSSWIN	
LOCKWOOD	
YALE	
SARGENT	1 3/8"

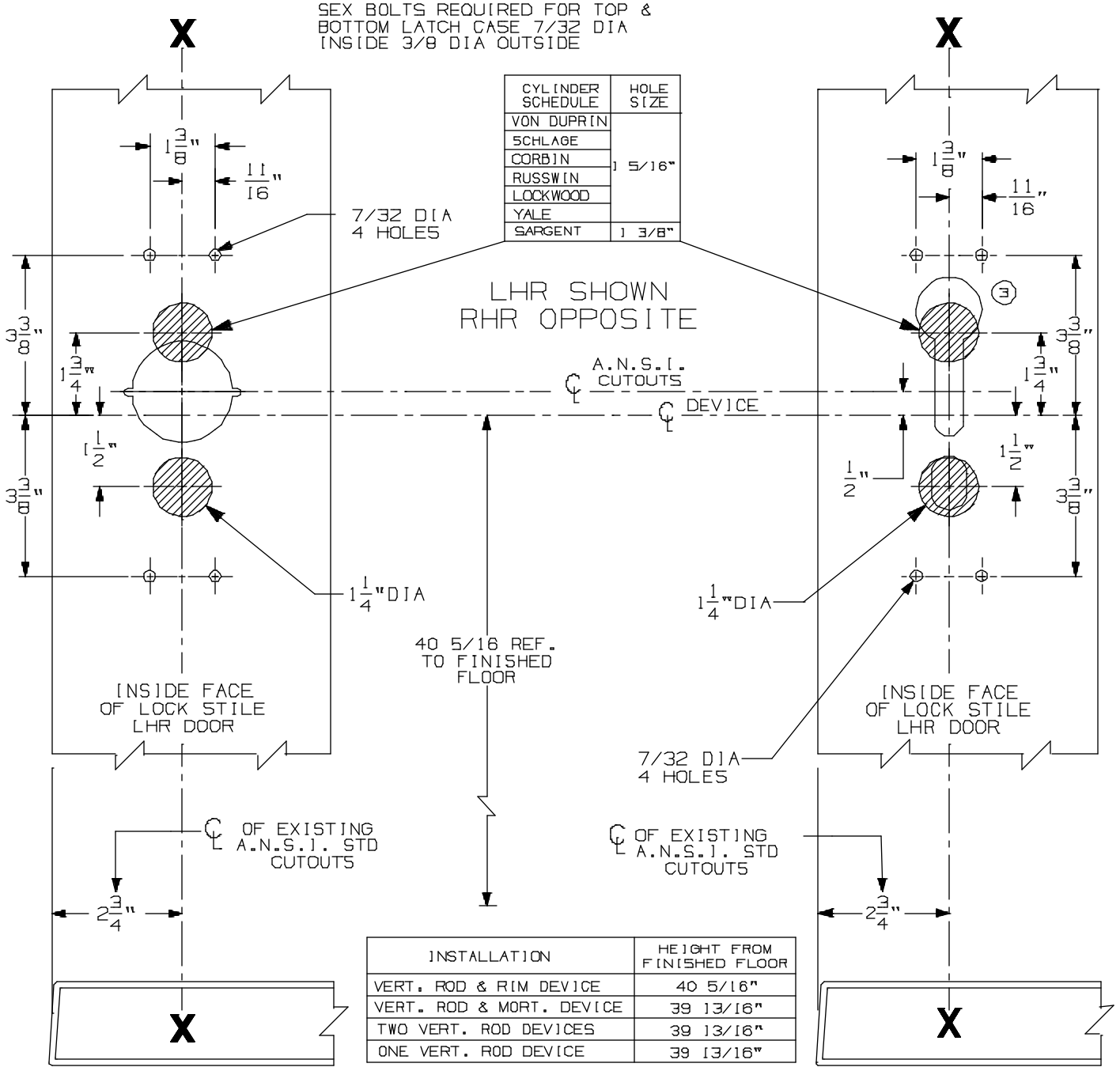

INSTALLATION	HEIGHT FROM FINISHED FLOOR
VERT. ROD & RIM DEVICE	40 5/16"
VERT. ROD & MORT. DEVICE	39 13/16"
TWO VERT. ROD DEVICES	39 13/16"
ONE VERT. ROD DEVICE	39 13/16"

VON DUPRIN CUTOUTS ARE LOCATED FROM A.N.S.I. CUTOUTS SEE A.N.S.I. SPECIFICATION NO. A115 FOR THE SIZE AND LOCATION OF THESE CUTOUTS.

FOR OUTSIDE TRIM PREPARATION, SEE ADDITIONAL TRIM TEMPLATE.

8827K Vertical Rod Device w/ 880 Trim for Stock Hollow Metal Applications

VON DUPRIN®

NOTES: SEE MASTER SHEET #10001 FOR SUGGESTED REINFORCING

TEMPLATE NUMBER: 10201_a

DATE: 05-16-13

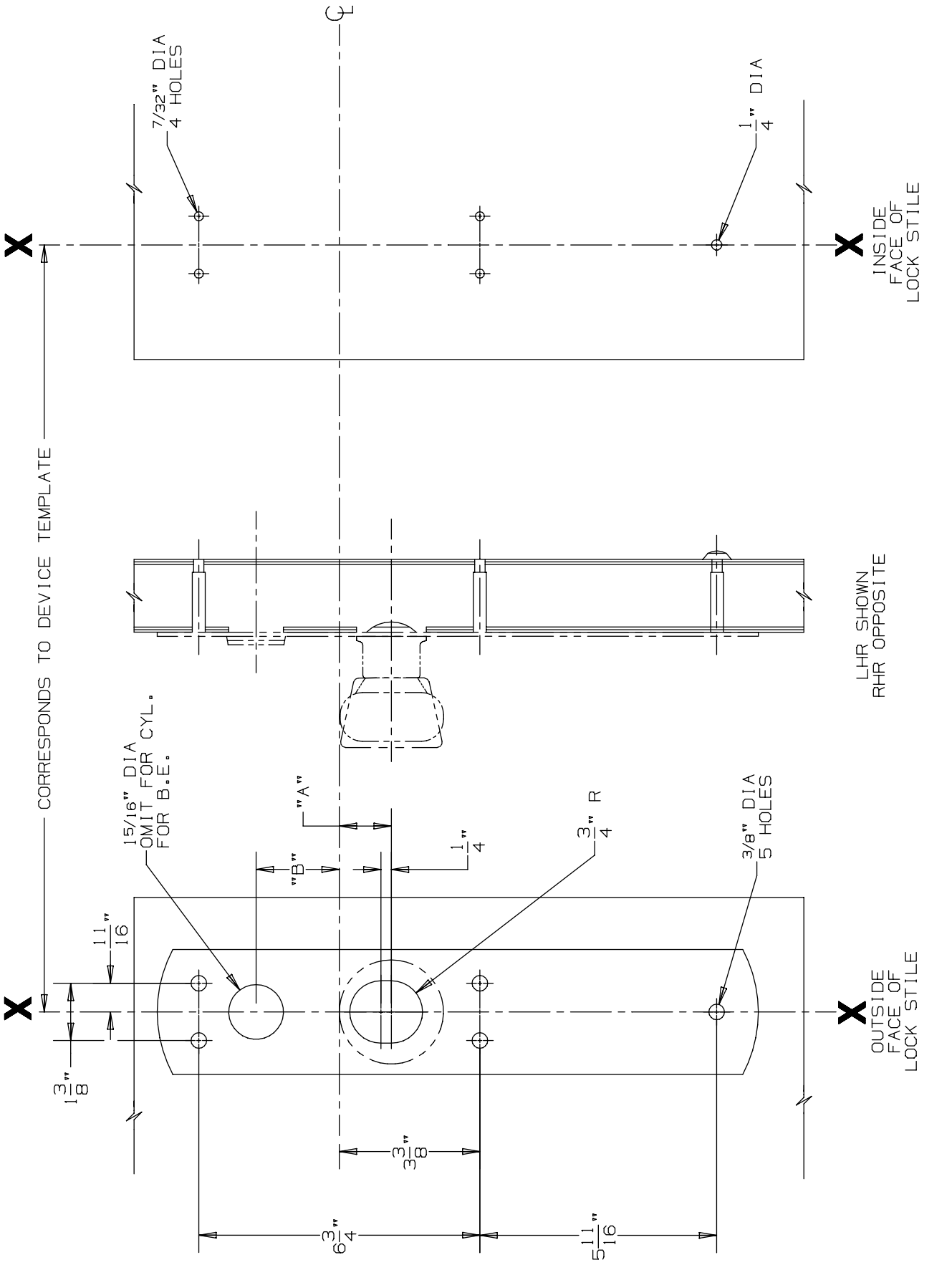

DEVICE APPLICATION SCHEDULE			
DEVICE	DIM. "A"	DIM. "B"
88 MORTISE	1 1/4"	2"
88 VERTICAL	1 1/2"	1 3/4"

FOR CUTOUTS ON INSIDE FACE OF DOOR SEE DEVICE TEMPLATE

880 K & 880 K-BE Trim for 88 Mortise & Vertical Devices

VON DUPRIN®

NOTES: SEE MASTER SHEET #10001 FOR SUGGESTED REINFORCING

TEMPLATE NUMBER: 20261_a

DATE: 05-23-13

RIM APPLICATION

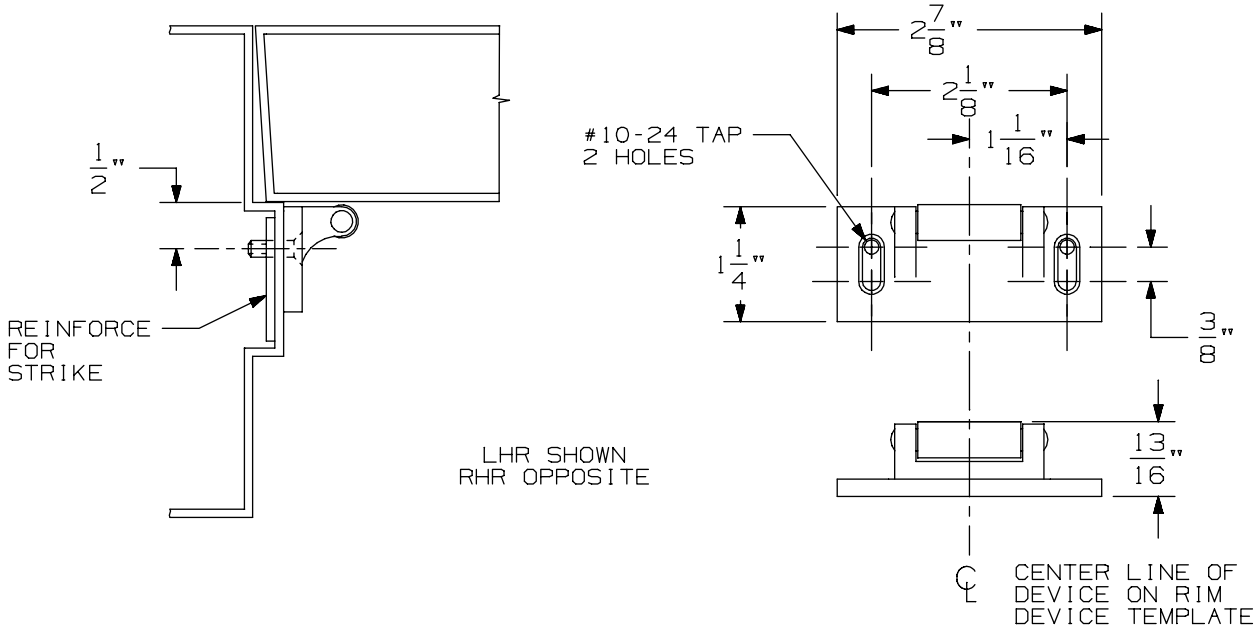

VERTICAL APPLICATION

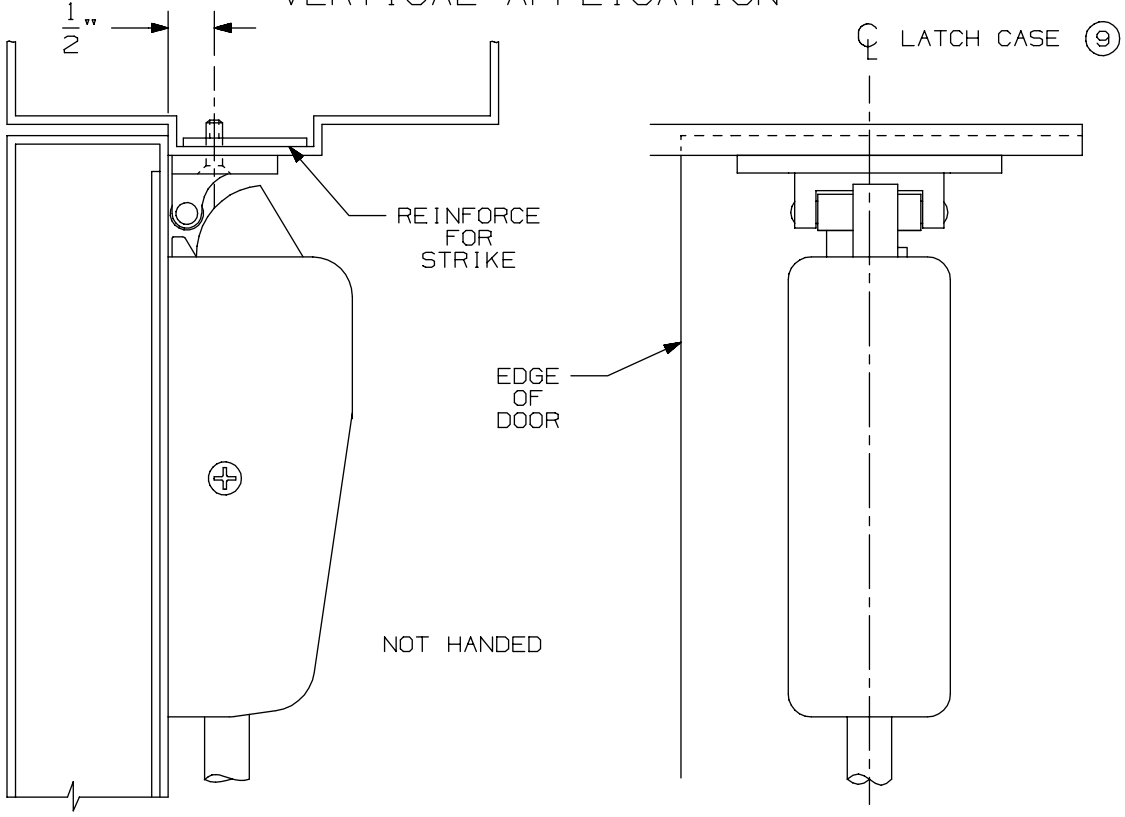

NOTE: LATCH CASE MOUNTING HOLES TO BE PREPARED AT INSTALLATION ON DOOR.

299 & 299F Strike

VON DUPRIN®

NOTES: SEE MASTER SHEET #10001 FOR SUGGESTED REINFORCING

TEMPLATE NUMBER: 30039_a

DATE: 05-23-13

FOR ADDITIONAL INFORMATION SEE TEMPLATE NO. 10162

TYPE 161 STOCK HOLLOW METAL DOOR

TYPE 86 STOCK HOLLOW METAL DOOR & STD DOOR

NOTE: BACKSET IS ALWAYS 2 3/4".
SEX BOLTS REQUIRED FOR TOP & BOTTOM LATCH CASE 7/32 DIA INSIDE 3/8 DIA OUTSIDE

CYLINDER SCHEDULE	HOLE SIZE
VON DUPRIN	1 5/16"
SCHLAGE	
CORBIN	
RUSSWIN	
LOCKWOOD	
YALE	
SARGENT	1 3/8"

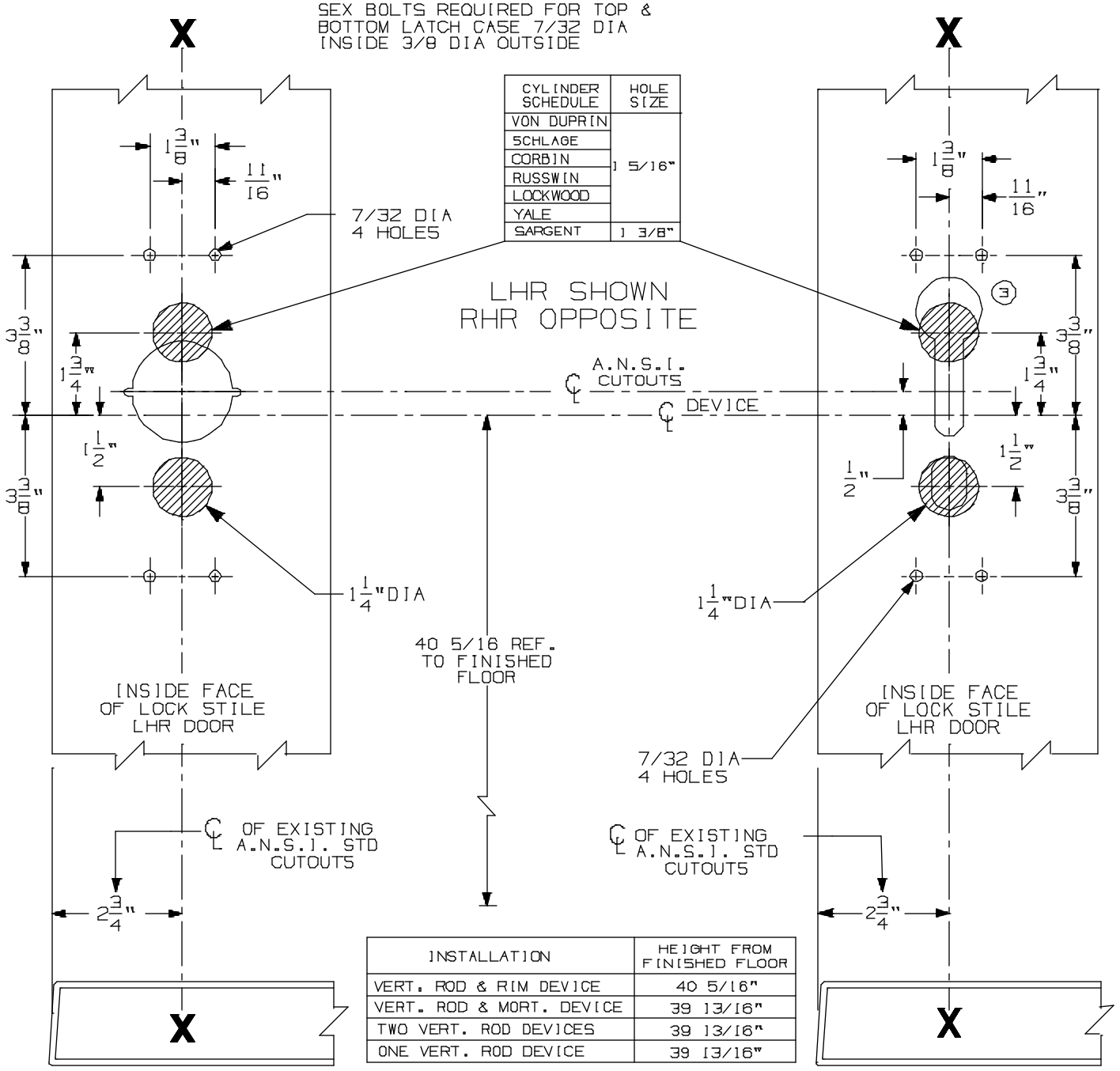

INSTALLATION	HEIGHT FROM FINISHED FLOOR
VERT. ROD & RIM DEVICE	40 5/16"
VERT. ROD & MORT. DEVICE	39 13/16"
TWO VERT. ROD DEVICES	39 13/16"
ONE VERT. ROD DEVICE	39 13/16"

VON DUPRIN CUTOUTS ARE LOCATED FROM A.N.S.I. CUTOUTS SEE A.N.S.I. SPECIFICATION NO. A115 FOR THE SIZE AND LOCATION OF THESE CUTOUTS.

FOR OUTSIDE TRIM PREPARATION, SEE ADDITIONAL TRIM TEMPLATE.

8827K Vertical Rod Device w/ 880 Trim for Stock Hollow Metal Applications

VON DUPRIN®

NOTES: SEE MASTER SHEET #10001 FOR SUGGESTED REINFORCING

TEMPLATE NUMBER: 10201_a

DATE: 05-16-13

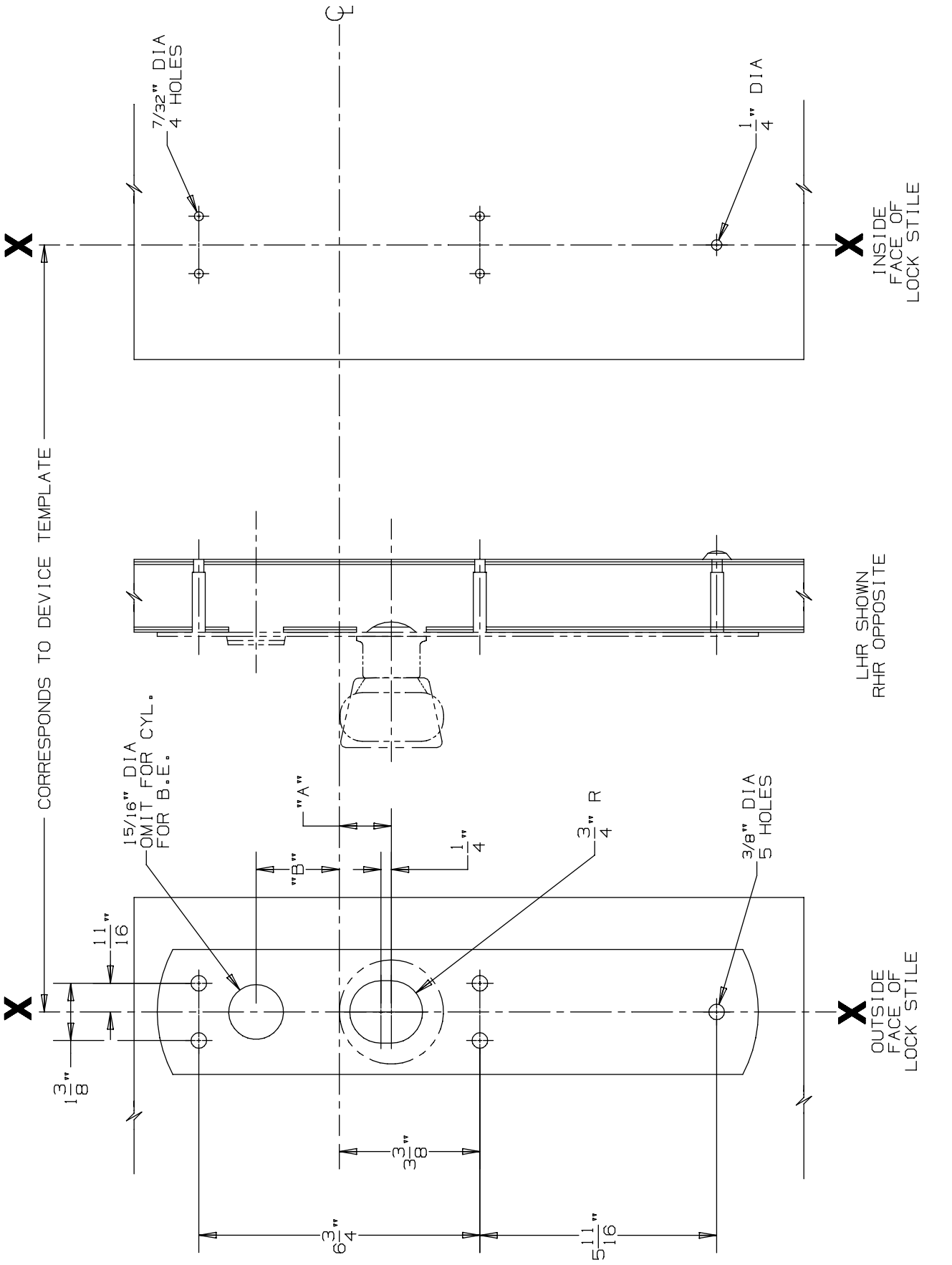

DEVICE APPLICATION SCHEDULE			
DEVICE	DIM. "A"	DIM. "B"
88 MORTISE	1 1/4"	2"
88 VERTICAL	1 1/2"	1 3/4"

FOR CUTOUTS ON INSIDE FACE OF DOOR SEE DEVICE TEMPLATE

880 K & 880 K-BE Trim for 88 Mortise & Vertical Devices

VON DUPRIN®

NOTES: SEE MASTER SHEET #10001 FOR SUGGESTED REINFORCING

TEMPLATE NUMBER: 20261_a

DATE: 05-23-13

RIM APPLICATION

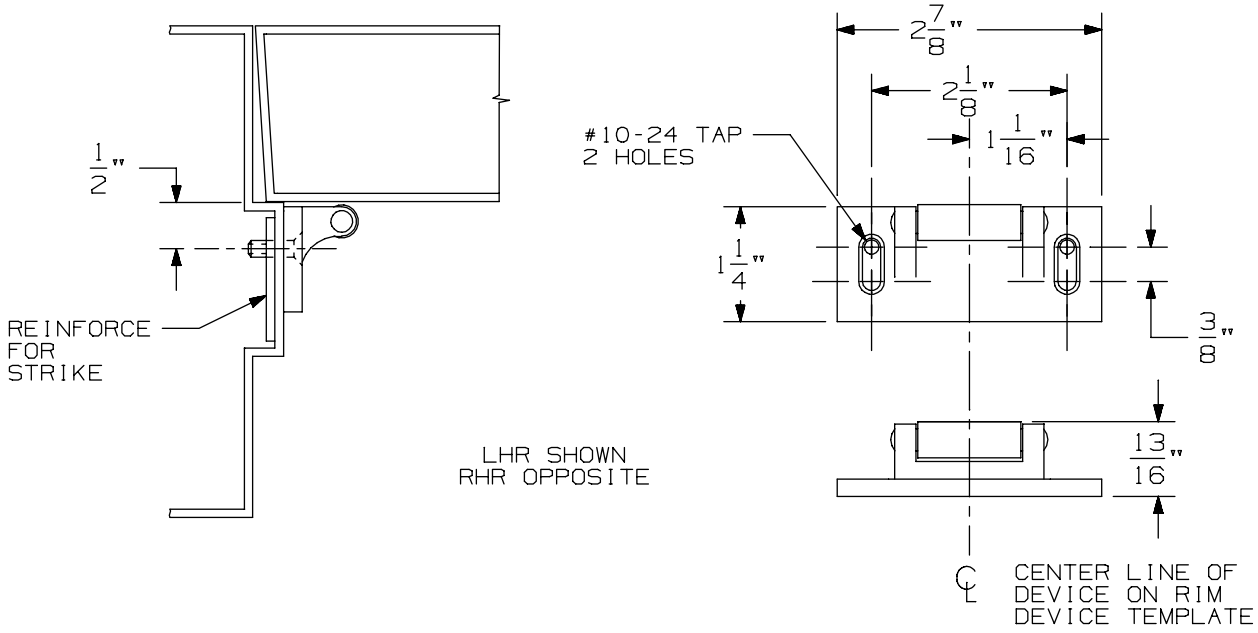

VERTICAL APPLICATION

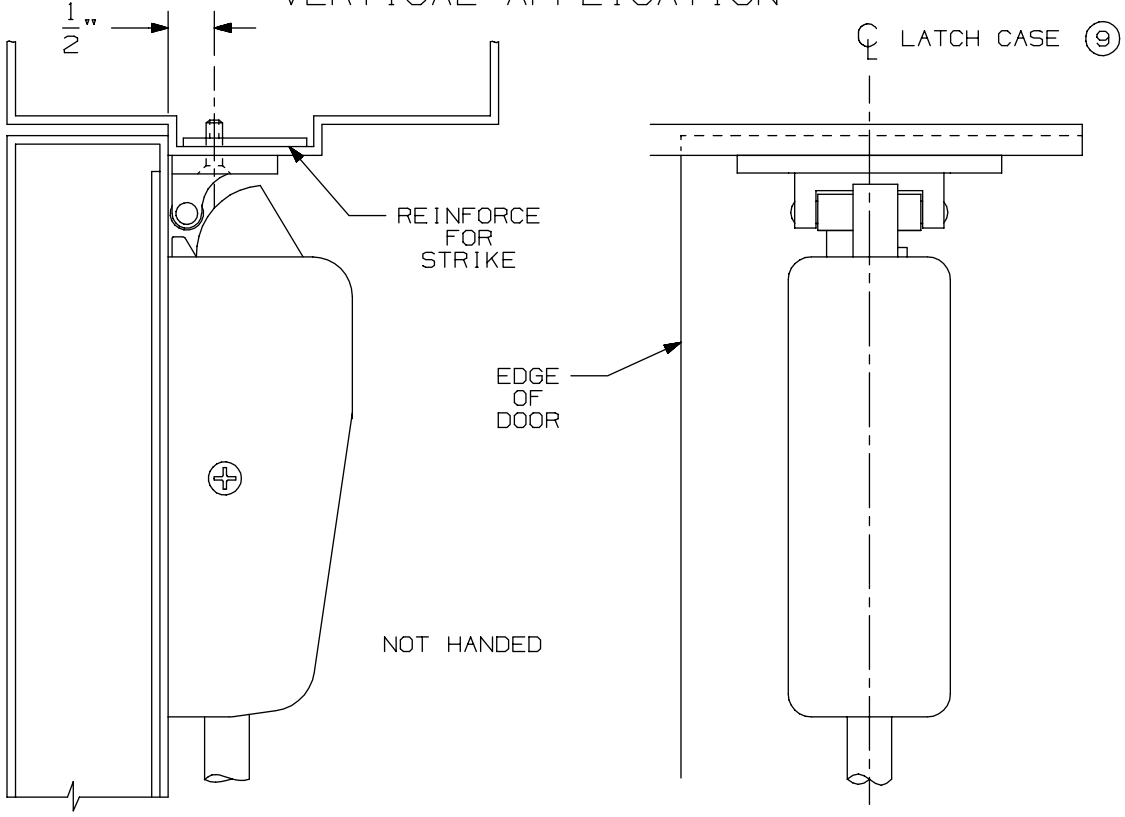

NOTE: LATCH CASE MOUNTING HOLES TO BE PREPARED AT INSTALLATION ON DOOR.

299 & 299F Strike

VON DUPRIN®

NOTES: SEE MASTER SHEET #10001 FOR SUGGESTED REINFORCING

TEMPLATE NUMBER: 30039_a

DATE: 05-23-13

FOR ADDITIONAL INFORMATION SEE TEMPLATE NO. 10161

TYPE 161 STOCK HOLLOW METAL DOOR

TYPE 86 STOCK HOLLOW METAL DOOR & STD DOOR

NOTE: BACKSET IS ALWAYS 2 3/4". SEX BOLTS REQUIRED FOR TOP & BOTTOM LATCH CASE 7/32 DIA INSIDE 3/8 DIA OUTSIDE

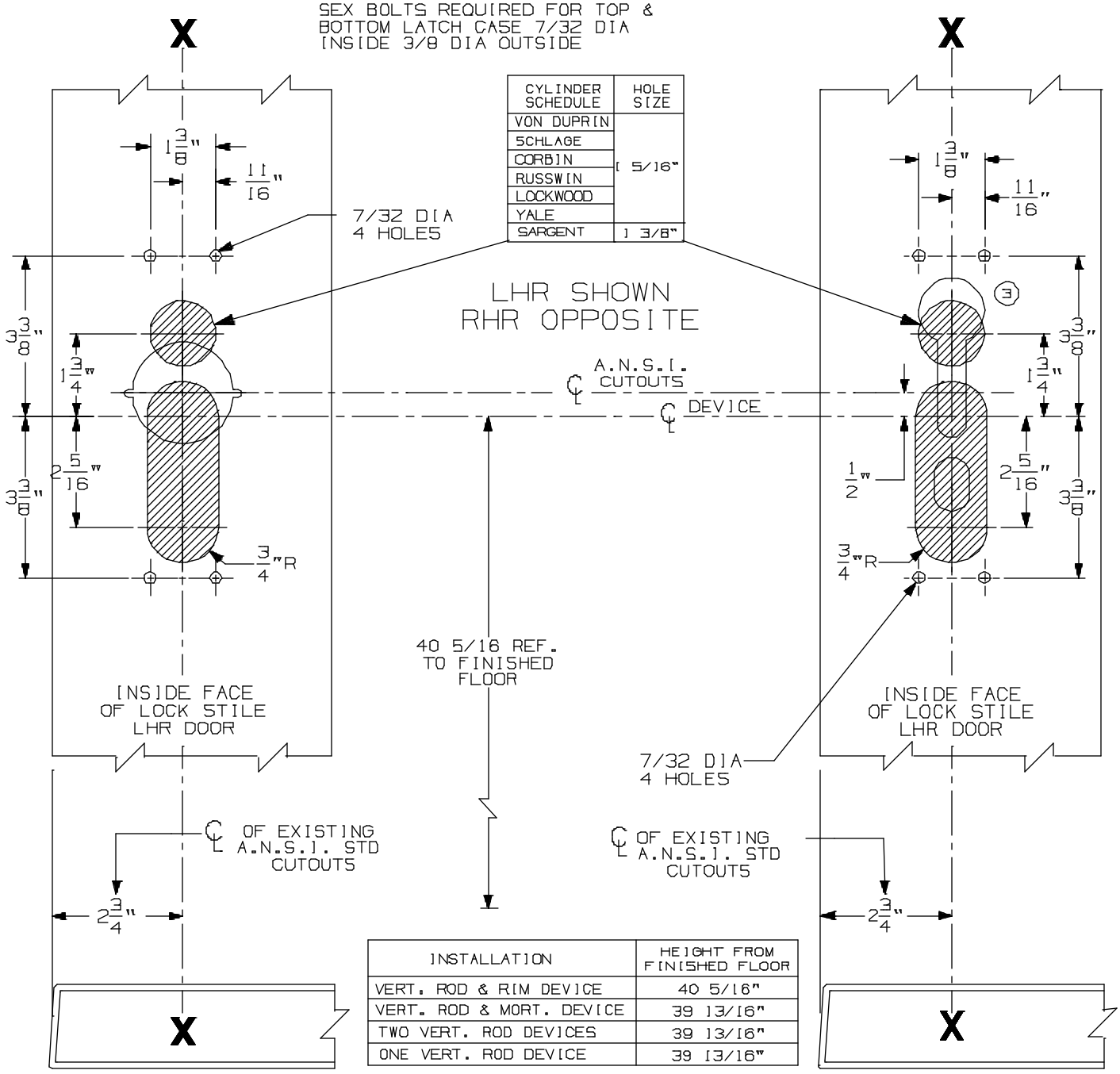

CYLINDER SCHEDULE	HOLE SIZE
VON DUPRIN	5/16"
SCHLAGE	
CORBIN	
RUSSWIN	
LOCKWOOD	
YALE	
SARGENT	1 3/8"

INSTALLATION	HEIGHT FROM FINISHED FLOOR
VERT. ROD & RIM DEVICE	40 5/16"
VERT. ROD & MORT. DEVICE	39 13/16"
TWO VERT. ROD DEVICES	39 13/16"
ONE VERT. ROD DEVICE	39 13/16"

VON DUPRIN CUTOUTS ARE LOCATED FROM A.N.S.I. CUTOUTS SEE A.N.S.I. SPECIFICATION NO. A115 FOR THE SIZE AND LOCATION OF THESE CUTOUTS.

FOR OUTSIDE TRIM PREPARATION, SEE ADDITIONAL TRIM TEMPLATE.

8827TP Vertical Rod Device w/ 880 Trim for Stock Hollow Metal Applications

VON DUPRIN®

NOTES: SEE MASTER SHEET #10001 FOR SUGGESTED REINFORCING

TEMPLATE NUMBER: 10200_a

DATE: 05-16-13

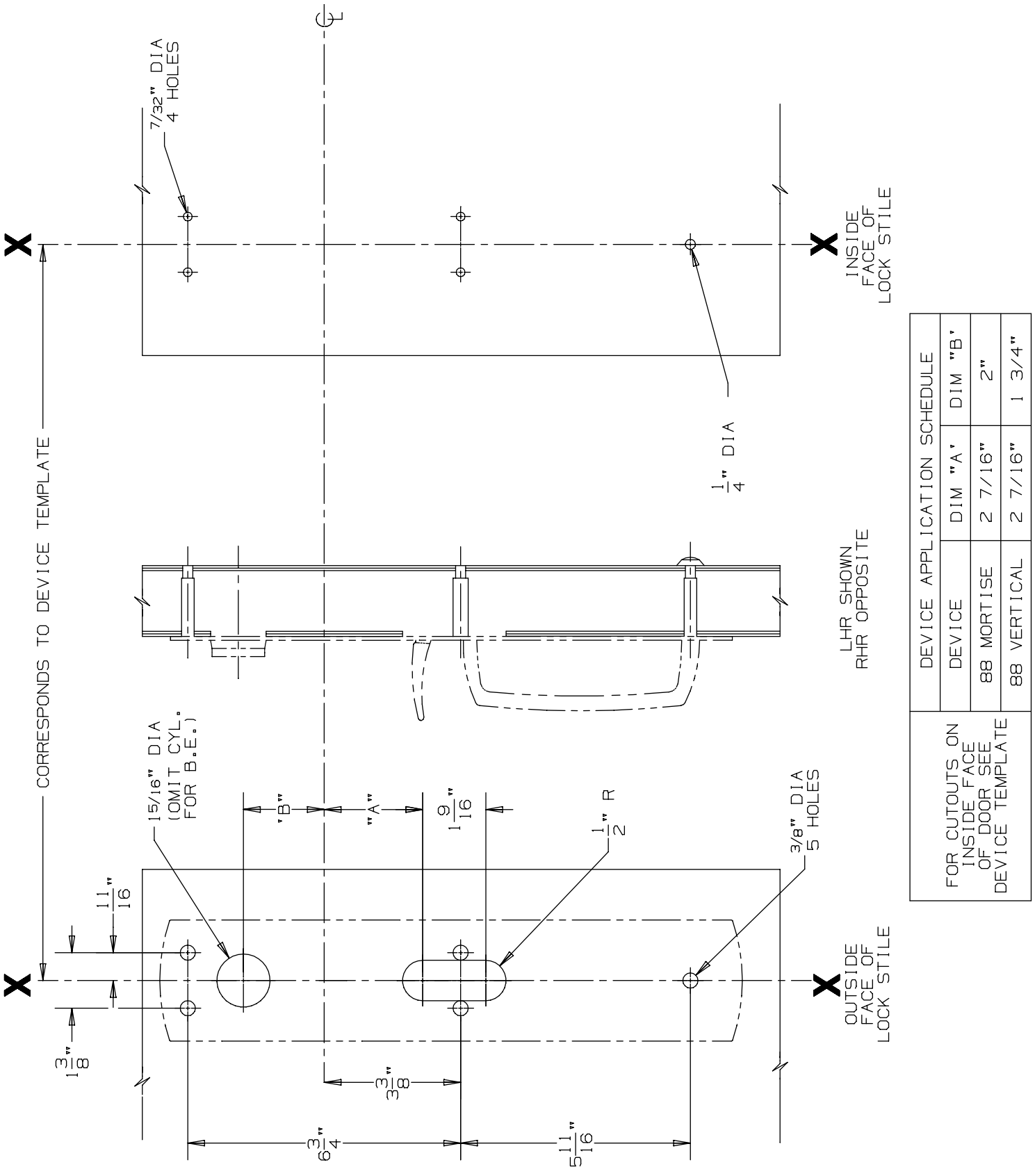

DEVICE APPLICATION SCHEDULE		
DEVICE	DIM "A"	DIM "B"
88 MORTISE	2 7/16"	2"
88 VERTICAL	2 7/16"	1 3/4"

FOR CUTOUTS ON INSIDE FACE OF DOOR SEE DEVICE TEMPLATE

880 TP & 880 TP-BE Trim for 88 Mortise & Vertical Devices

VON DUPRIN®

NOTES: SEE MASTER SHEET #10001 FOR SUGGESTED REINFORCING

TEMPLATE NUMBER: 20260_a

DATE: 05-28-13

RIM APPLICATION

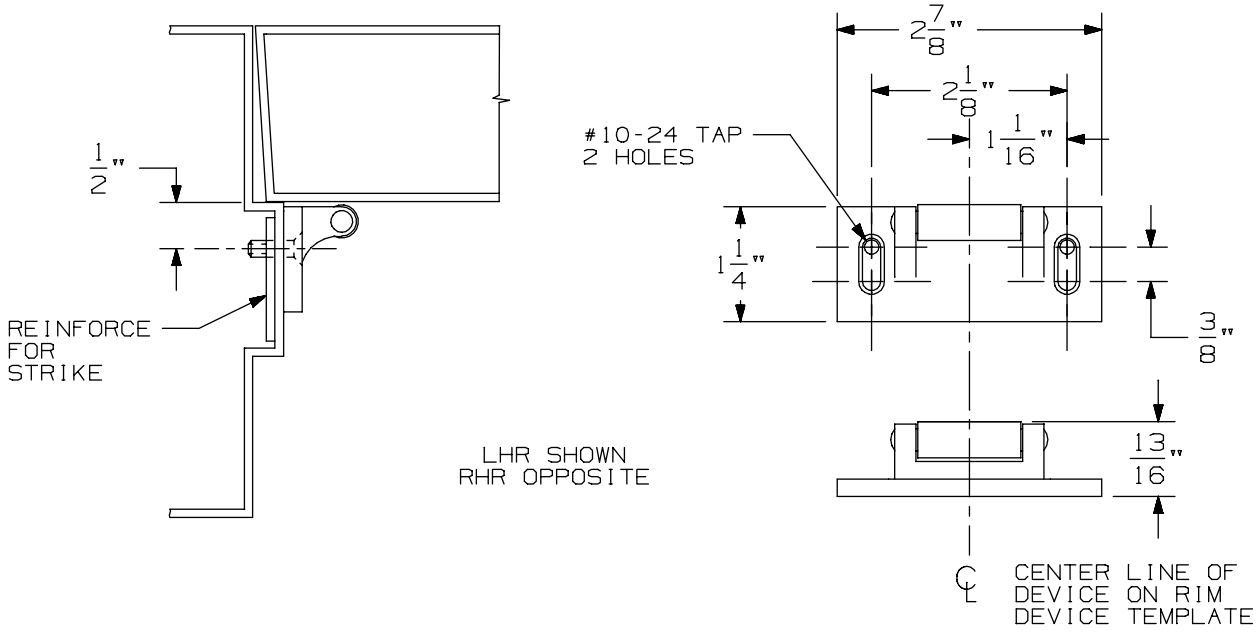

VERTICAL APPLICATION

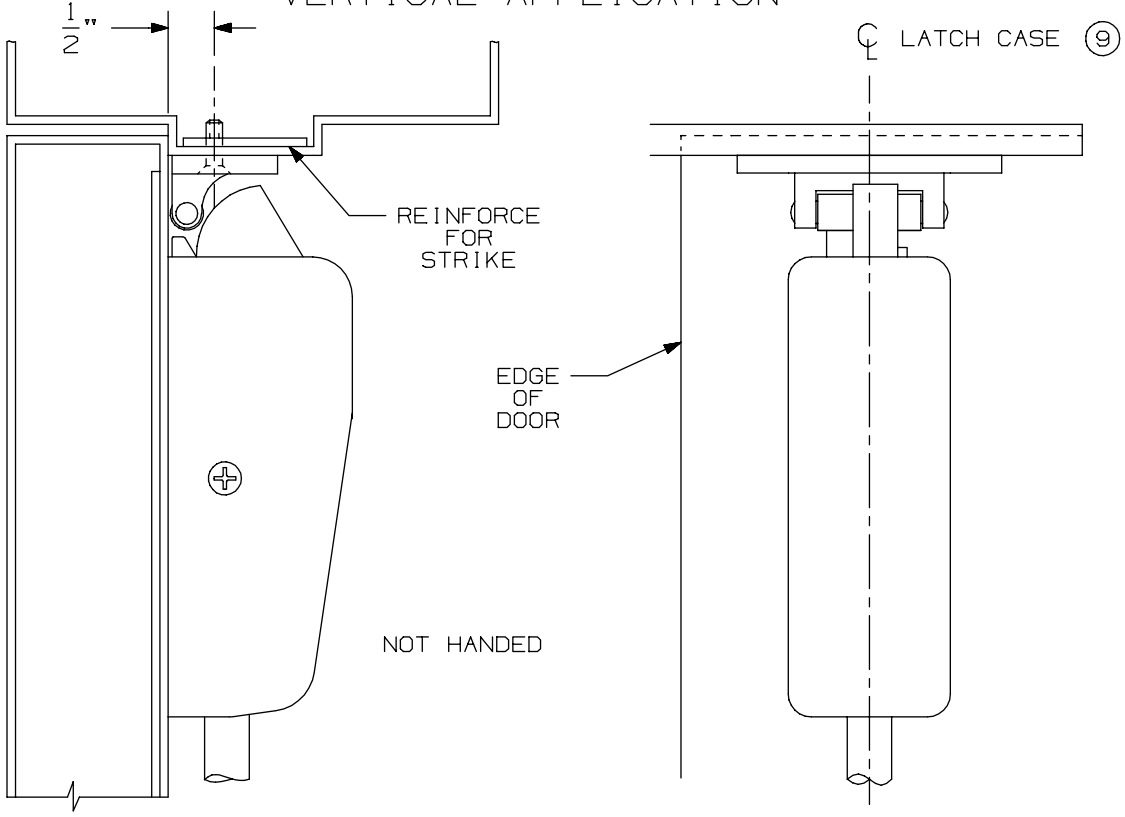

NOTE: LATCH CASE MOUNTING HOLES TO BE PREPARED AT INSTALLATION ON DOOR.

299 & 299F Strike

VON DUPRIN®

NOTES: SEE MASTER SHEET #10001 FOR SUGGESTED REINFORCING

TEMPLATE NUMBER: 30039_a

DATE: 05-23-13

FOR ADDITIONAL INFORMATION SEE TEMPLATE NO. 10161

TYPE 161 STOCK HOLLOW METAL DOOR

TYPE 86 STOCK HOLLOW METAL DOOR & STD DOOR

NOTE: BACKSET IS ALWAYS 2 3/4". SEX BOLTS REQUIRED FOR TOP & BOTTOM LATCH CASE 7/32 DIA INSIDE 3/8 DIA OUTSIDE

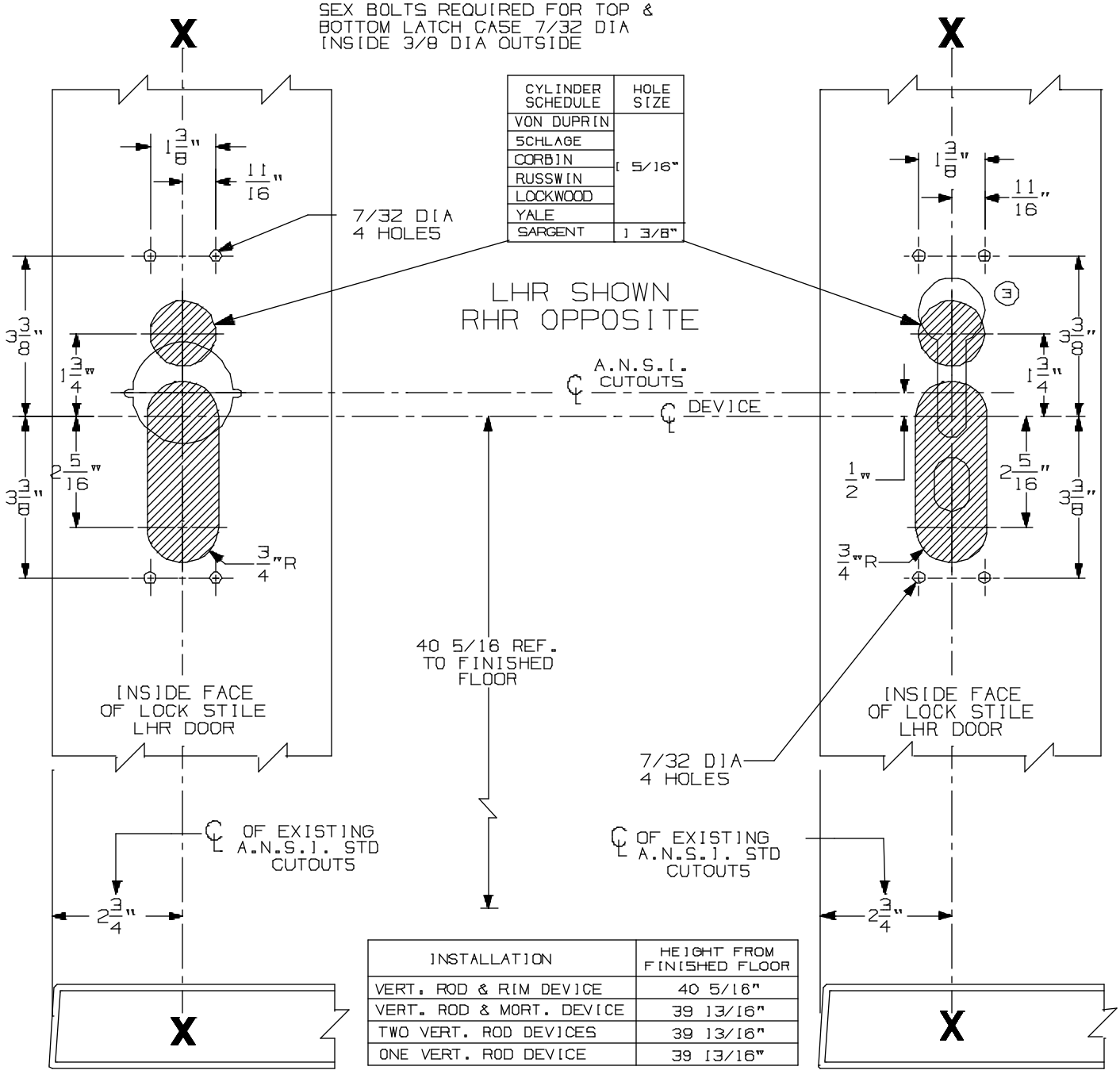

CYLINDER SCHEDULE	HOLE SIZE
VON DUPRIN	5/16"
SCHLAGE	
CORBIN	
RUSSWIN	
LOCKWOOD	
YALE	
SARGENT	1 3/8"

INSTALLATION	HEIGHT FROM FINISHED FLOOR
VERT. ROD & RIM DEVICE	40 5/16"
VERT. ROD & MORT. DEVICE	39 13/16"
TWO VERT. ROD DEVICES	39 13/16"
ONE VERT. ROD DEVICE	39 13/16"

VON DUPRIN CUTOUTS ARE LOCATED FROM A.N.S.I. CUTOUTS SEE A.N.S.I. SPECIFICATION NO. A115 FOR THE SIZE AND LOCATION OF THESE CUTOUTS.

FOR OUTSIDE TRIM PREPARATION, SEE ADDITIONAL TRIM TEMPLATE.

8827TP Vertical Rod Device w/ 880 Trim for Stock Hollow Metal Applications

VON DUPRIN®

NOTES: SEE MASTER SHEET #10001 FOR SUGGESTED REINFORCING

TEMPLATE NUMBER: 10200_a

DATE: 05-16-13

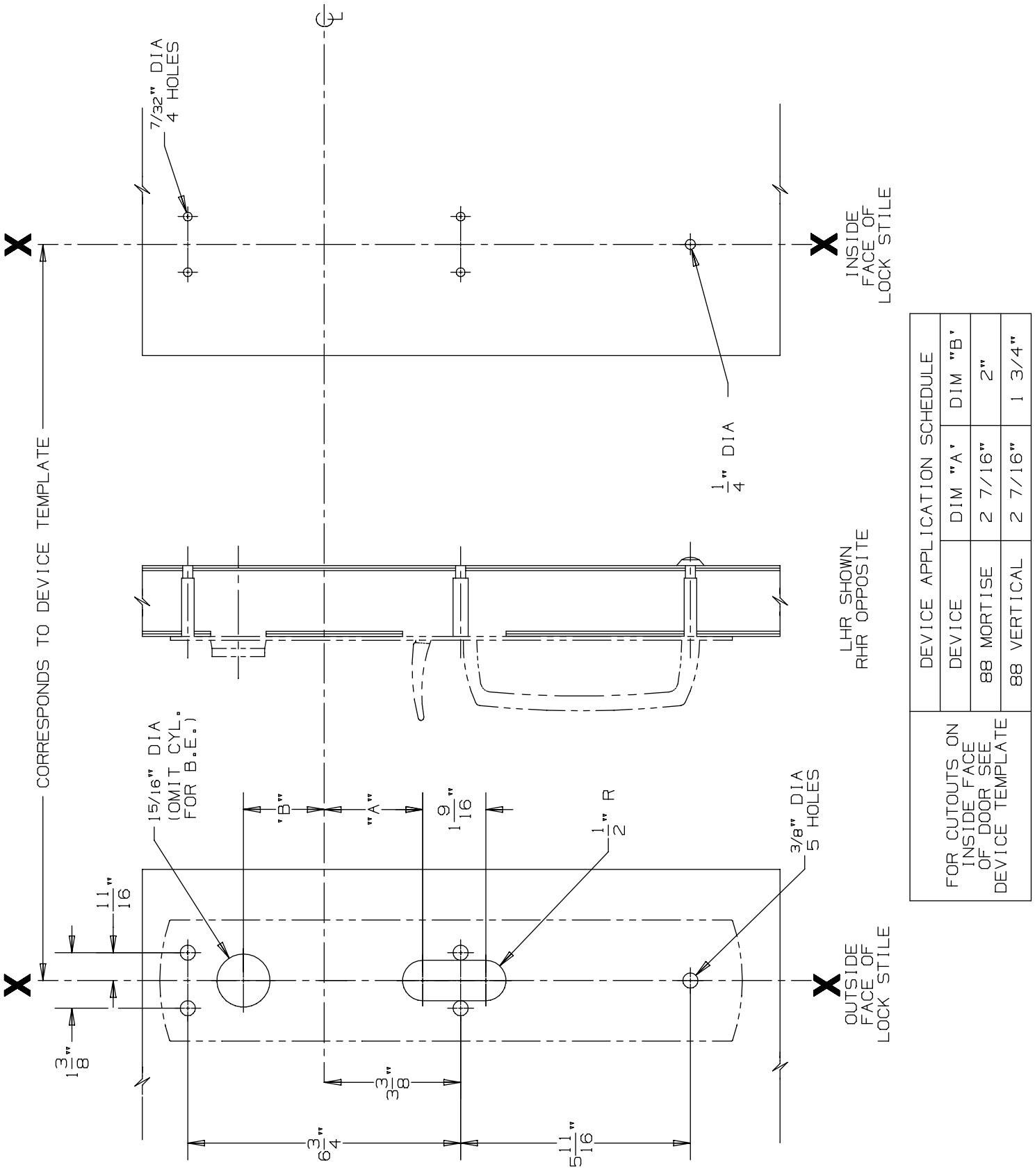

DEVICE APPLICATION SCHEDULE		
DEVICE	DIM "A"	DIM "B"
88 MORTISE	2 7/16"	2"
88 VERTICAL	2 7/16"	1 3/4"

FOR CUTOUTS ON INSIDE FACE OF DOOR SEE DEVICE TEMPLATE

880 TP & 880 TP-BE Trim for 88 Mortise & Vertical Devices

VON DUPRIN®

NOTES: SEE MASTER SHEET #10001 FOR SUGGESTED REINFORCING

TEMPLATE NUMBER: 20260_a

DATE: 05-28-13

RIM APPLICATION

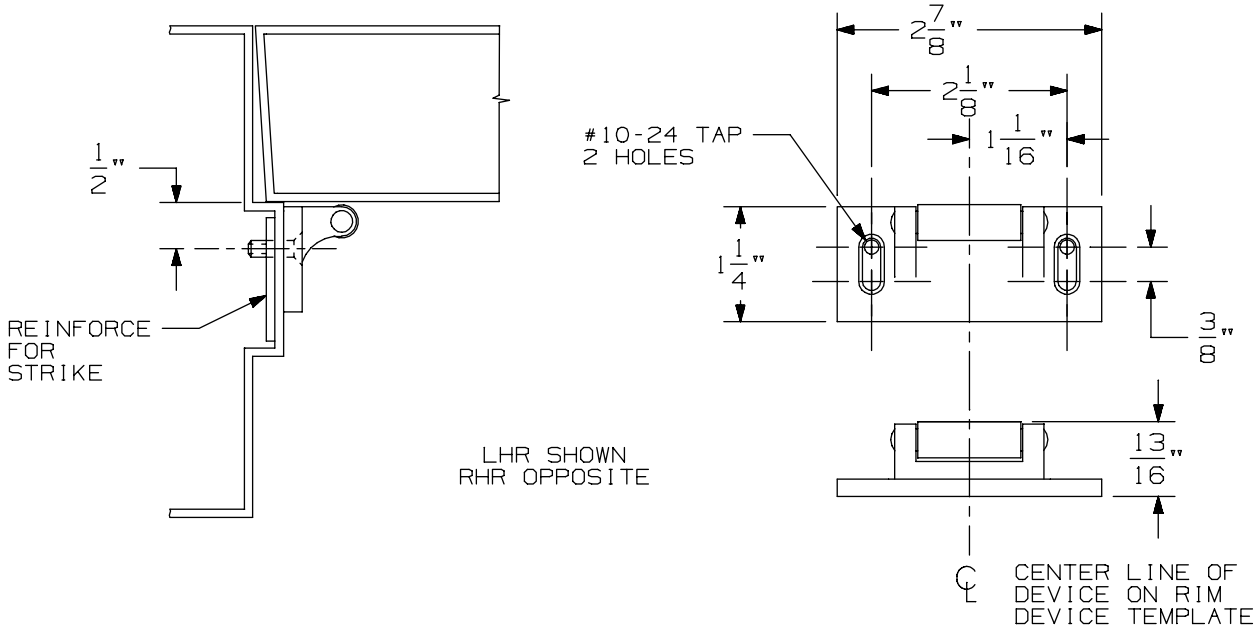

VERTICAL APPLICATION

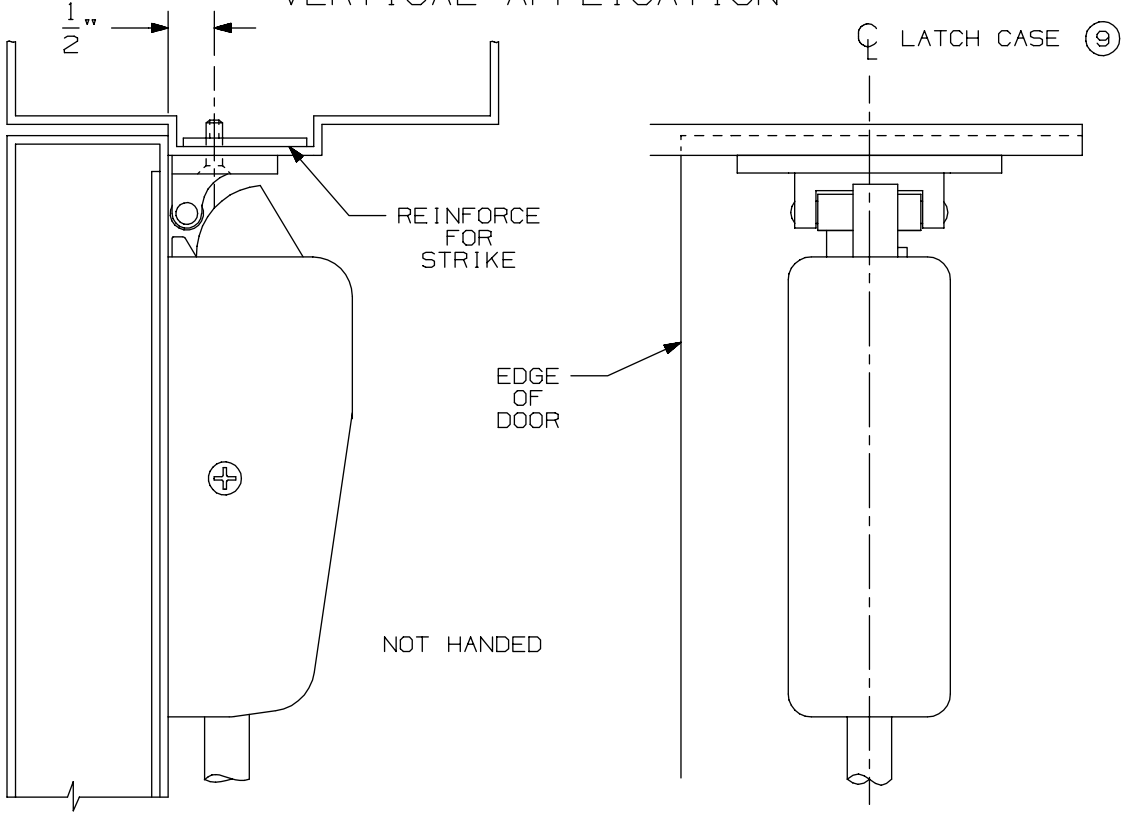

NOTE: LATCH CASE MOUNTING HOLES TO BE PREPARED AT INSTALLATION ON DOOR.

299 & 299F Strike

VON DUPRIN®

NOTES: SEE MASTER SHEET #10001 FOR SUGGESTED REINFORCING

TEMPLATE NUMBER: 30039_a

DATE: 05-23-13

88 Series for 161 Stock Hollow Metal Doors

-

88 Series Strikes

RIM APPLICATION

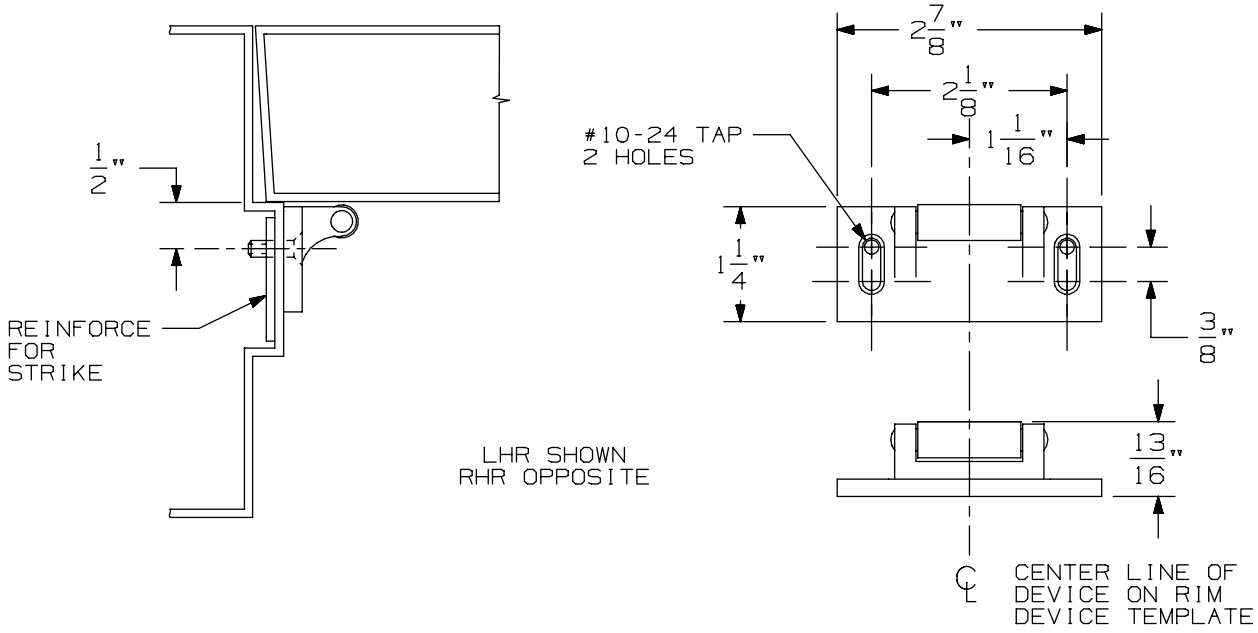

VERTICAL APPLICATION

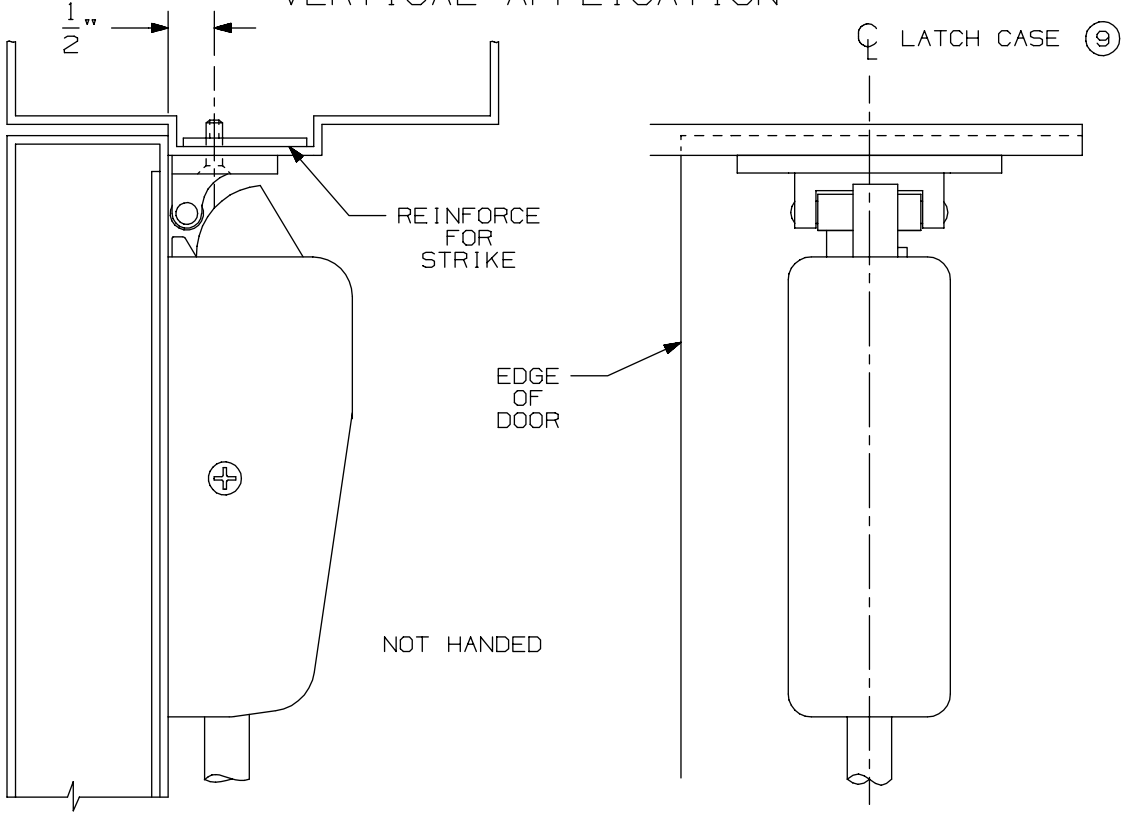

NOTE: LATCH CASE MOUNTING HOLES TO BE PREPARED AT INSTALLATION ON DOOR.

299 & 299F Strike

VON DUPRIN®

NOTES: SEE MASTER SHEET #10001 FOR SUGGESTED REINFORCING

TEMPLATE NUMBER: 30039_a

DATE: 05-23-13

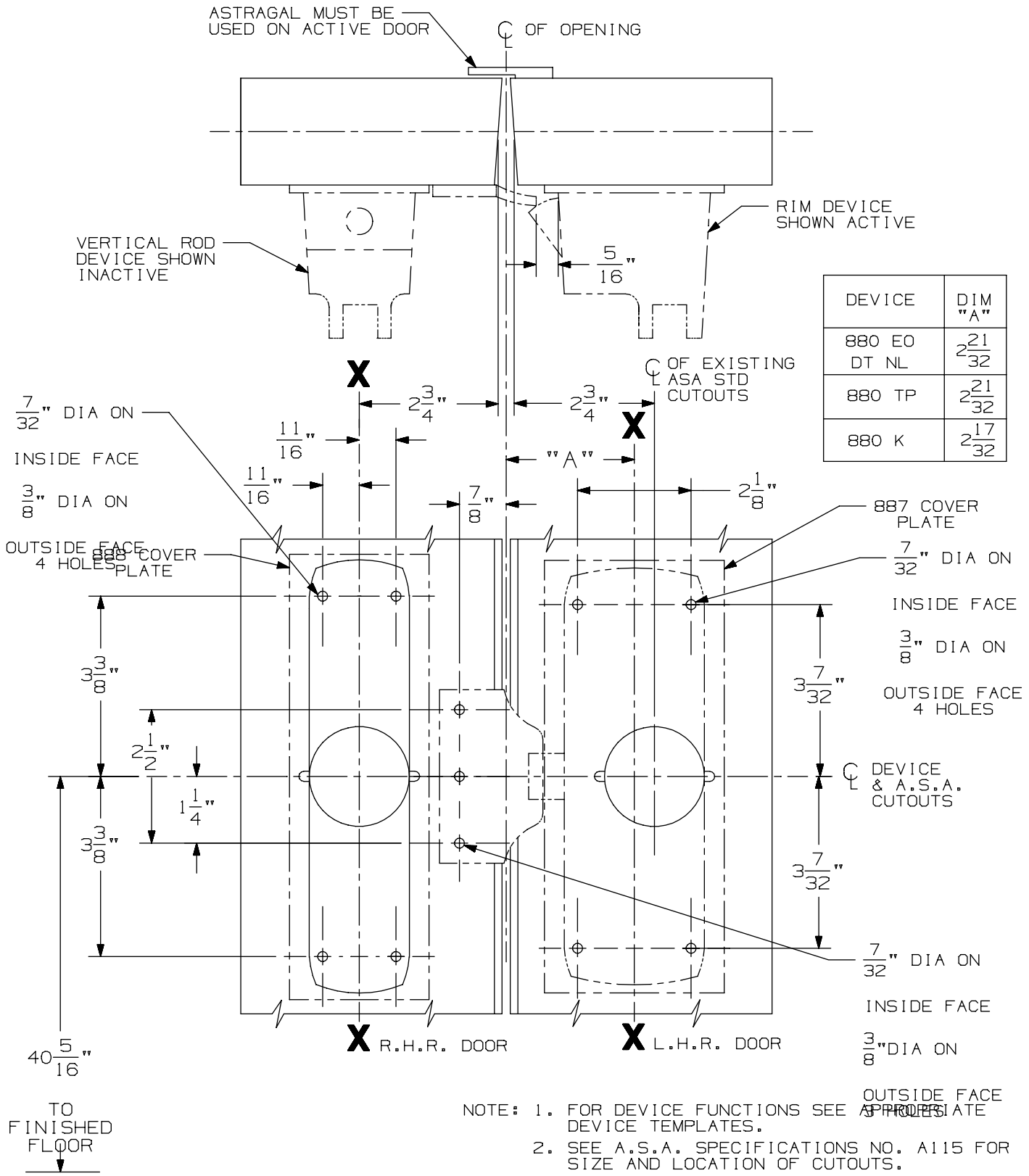

DEVICE	DIM "A"
880 EO DT NL	2 21/32
880 TP	2 21/32
880 K	2 17/32

NOTE:
1. FOR DEVICE FUNCTIONS SEE APPROPRIATE DEVICE TEMPLATES.
2. SEE A.S.A. SPECIFICATIONS NO. A115 FOR SIZE AND LOCATION OF CUTOUTS.
3. TYPE 161 STOCK HOLLOW METAL DOOR.
4. A COORDINATOR MUST BE USED ON INACTIVE DOOR.

1610 J Strike for 8827 Vertical Rod & 88 Rim Series Devices for Hollow Metal Applications

VON DUPRIN®

NOTES: SEE MASTER SHEET #10001 FOR SUGGESTED REINFORCING

TEMPLATE NUMBER: 30028_a

DATE: 05-23-13

INPACT® - 94 / 95 Series Exit Devices

INPACT® - 94 / 95 Series Exit Devices - 9447/9547 Concealed Vertical Rod (Standard, EL & LX)

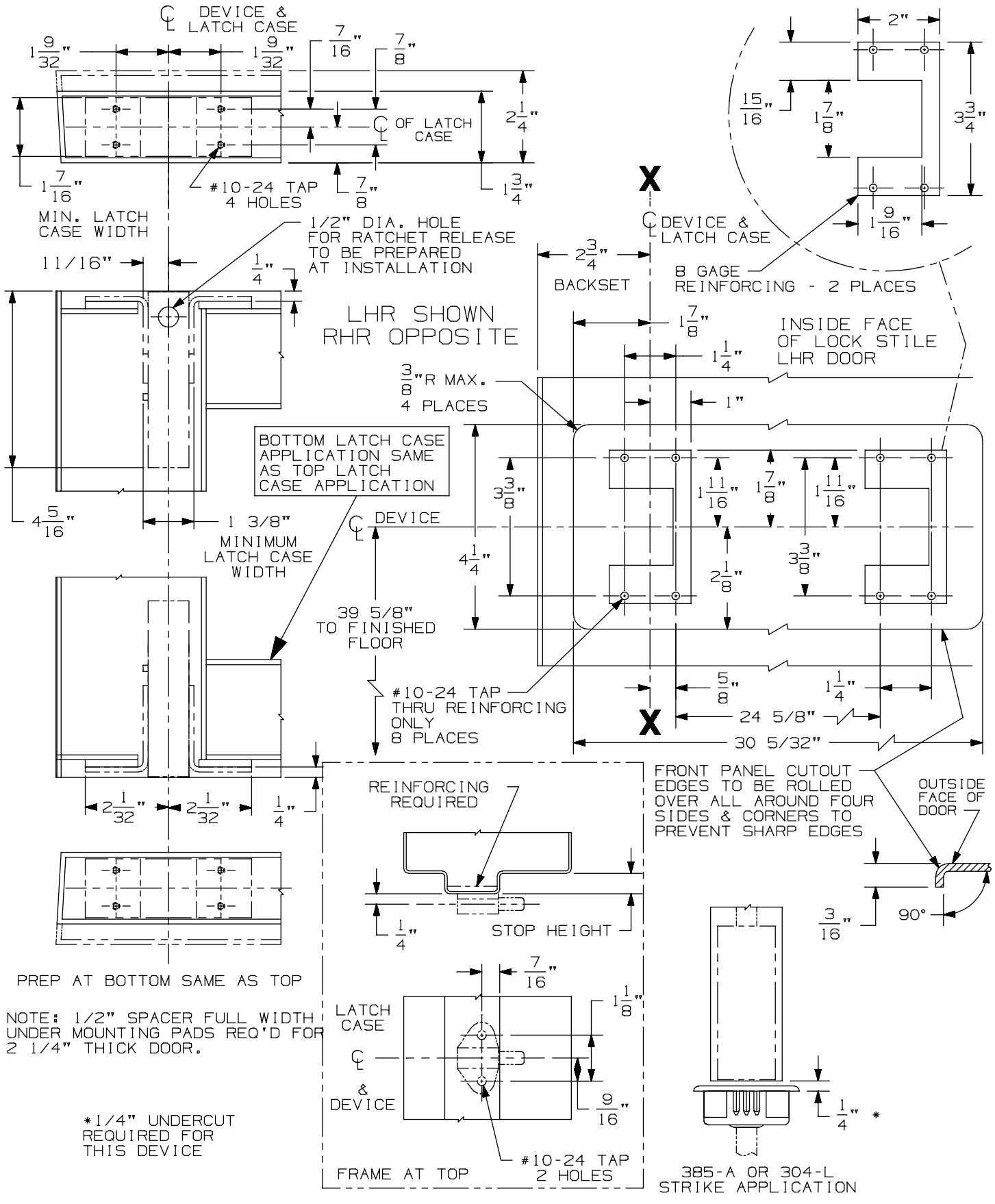

94/9547/47-F Concealed Vertical Rod Device on 2' 10" up to 4' 0" Wide Door

VON DUPRIN®

NOTES: For a door smaller than 2' 10" see template #10375

TEMPLATE NUMBER: 10324_a Sht1

DATE: 05-22-13

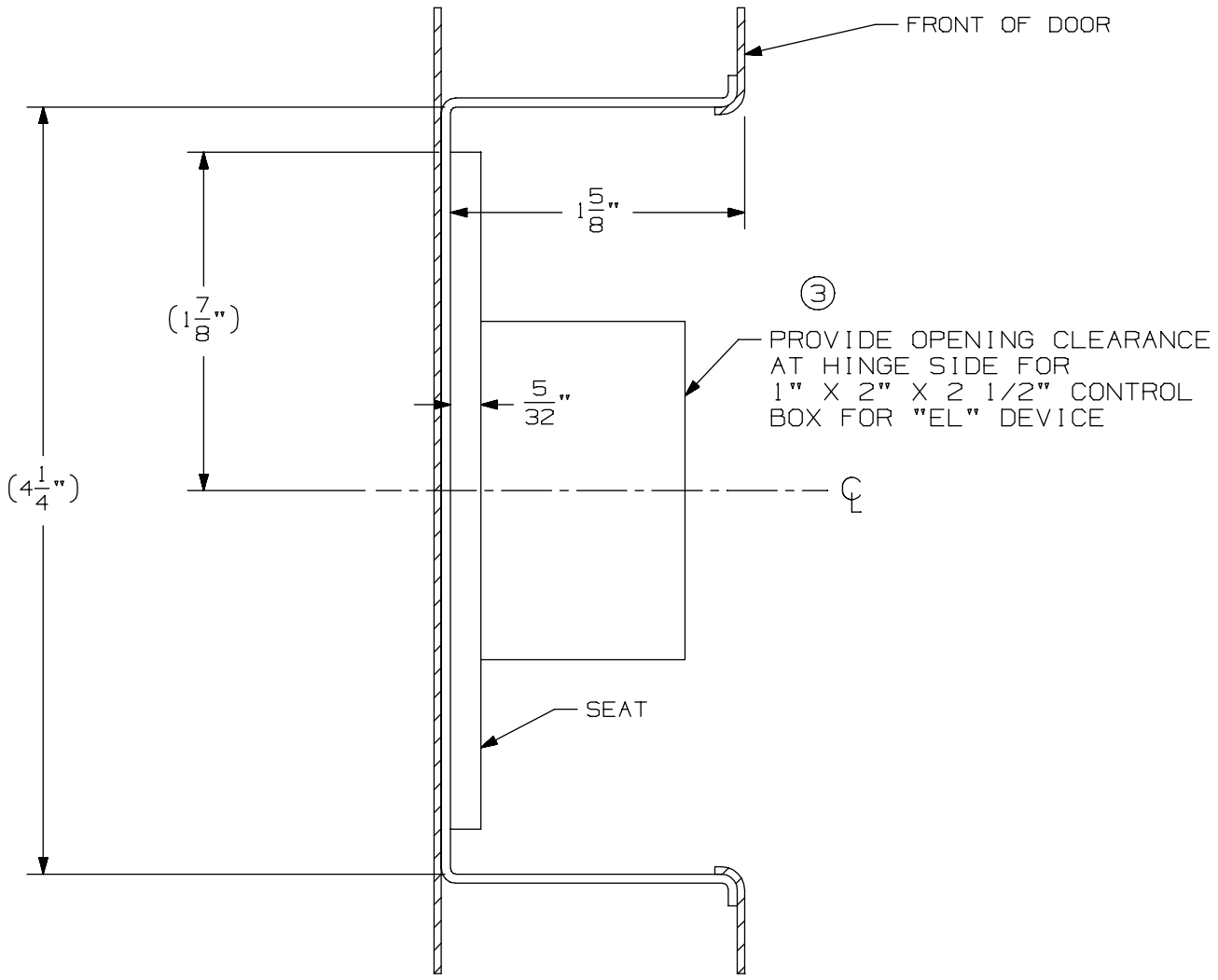

94/9547/47-F Concealed Vertical Rod Device on 2' 10" up to 4' 0" Wide Door

VON DUPRIN®

NOTES: For a door smaller than 2' 10" see template # 10375

TEMPLATE NUMBER: 10324_a Sht 2

DATE: 05-22-13

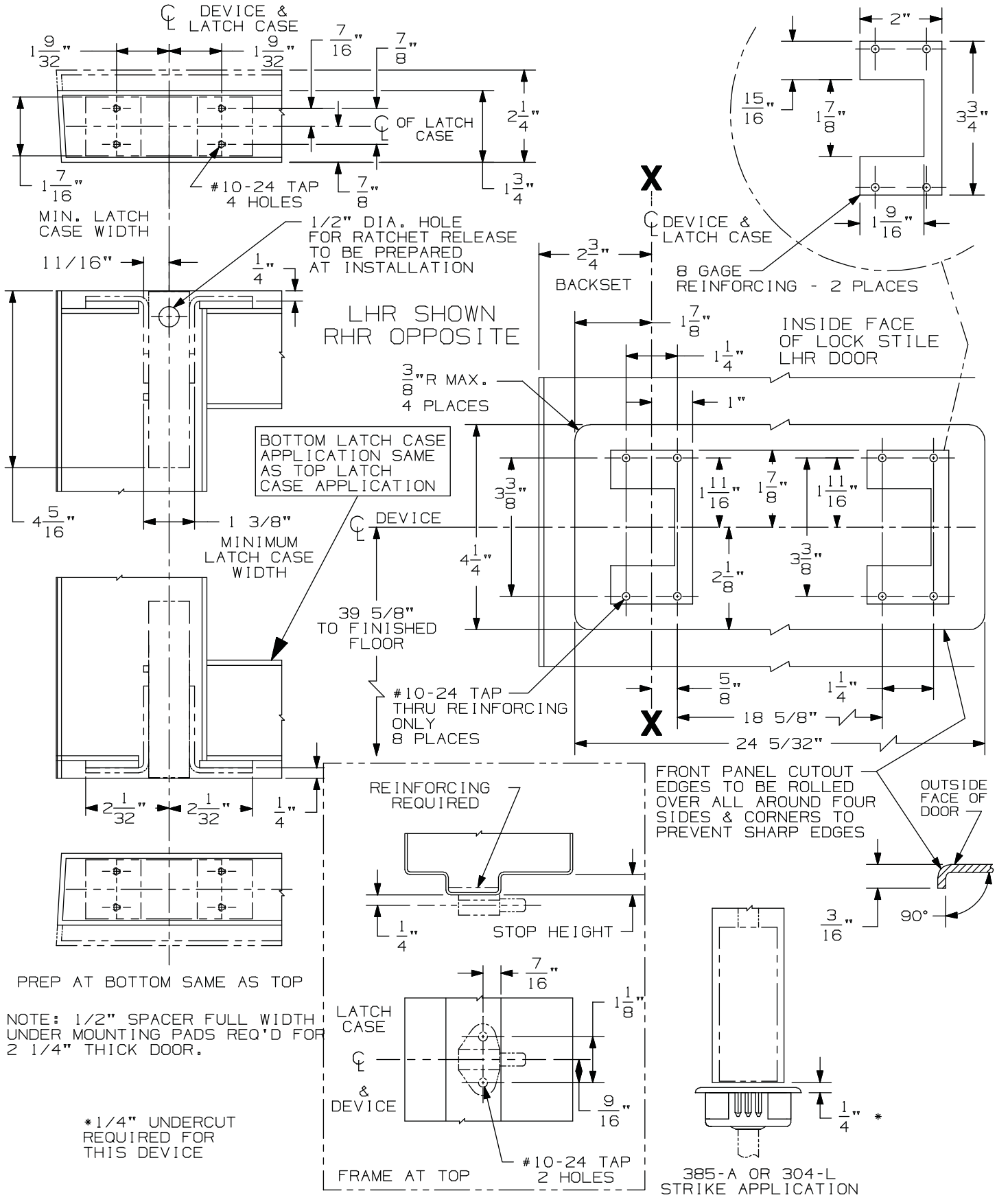

95/9547/47-F Concealed Vertical Rod Device on 2' 6" up to 2' 9 ¾" Wide Doors

VON DUPRIN®

NOTES: See Master Sheet #10001 For Suggested Reinforcing
For a door 2' 10" and larger see template # 10324

TEMPLATE NUMBER: 10375_c Sht 1

DATE: 05-22-13

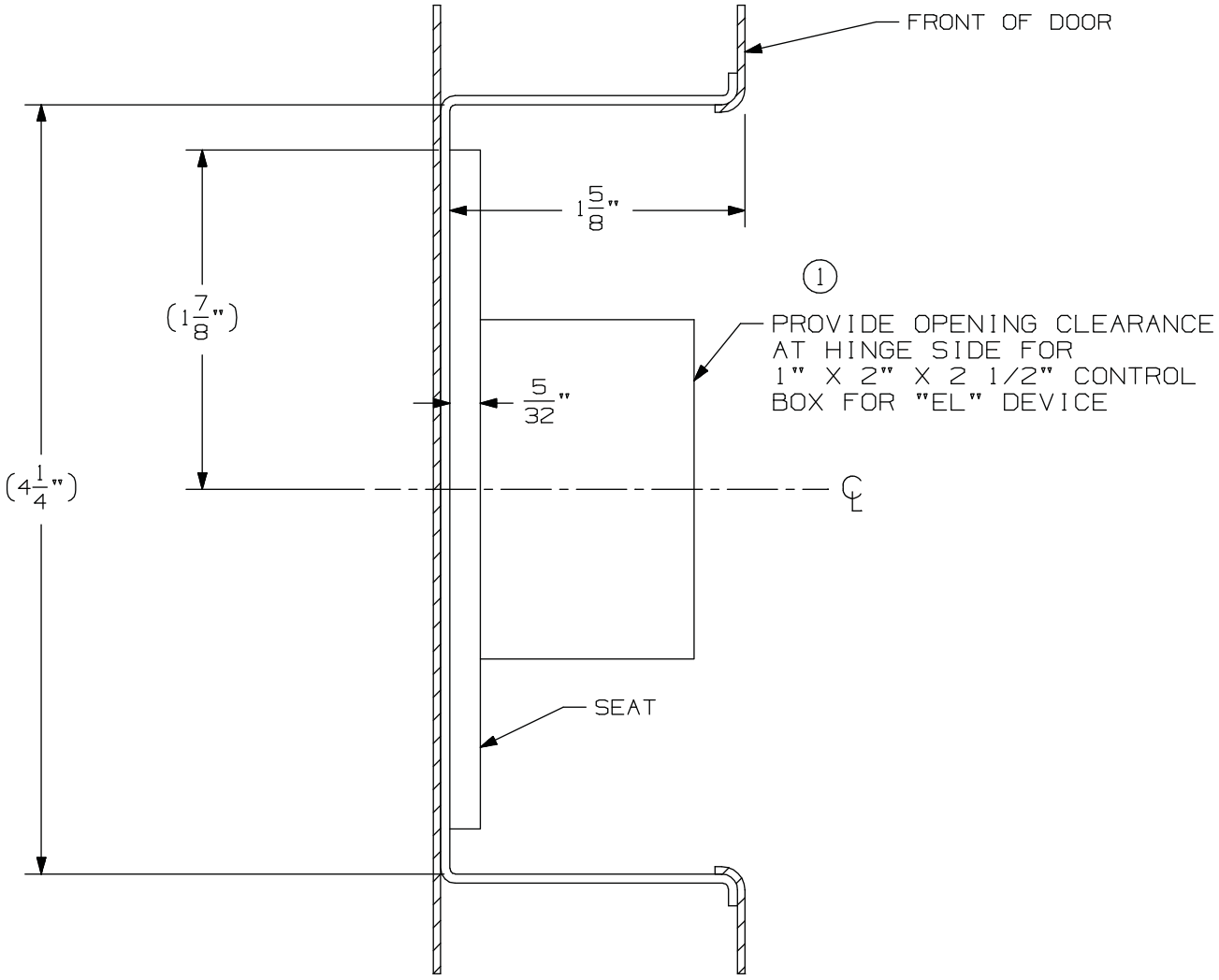

95/9547/47-F Concealed Vertical Rod Device on 2' 6" up to 2' 9 ¾" Wide Doors

VON DUPRIN®

NOTES: See Master Sheet #10001 For Suggested Reinforcing
For a door 2' 10" and larger see template # 10324

TEMPLATE NUMBER: 10375_c Sht 2

DATE: 05-22-13

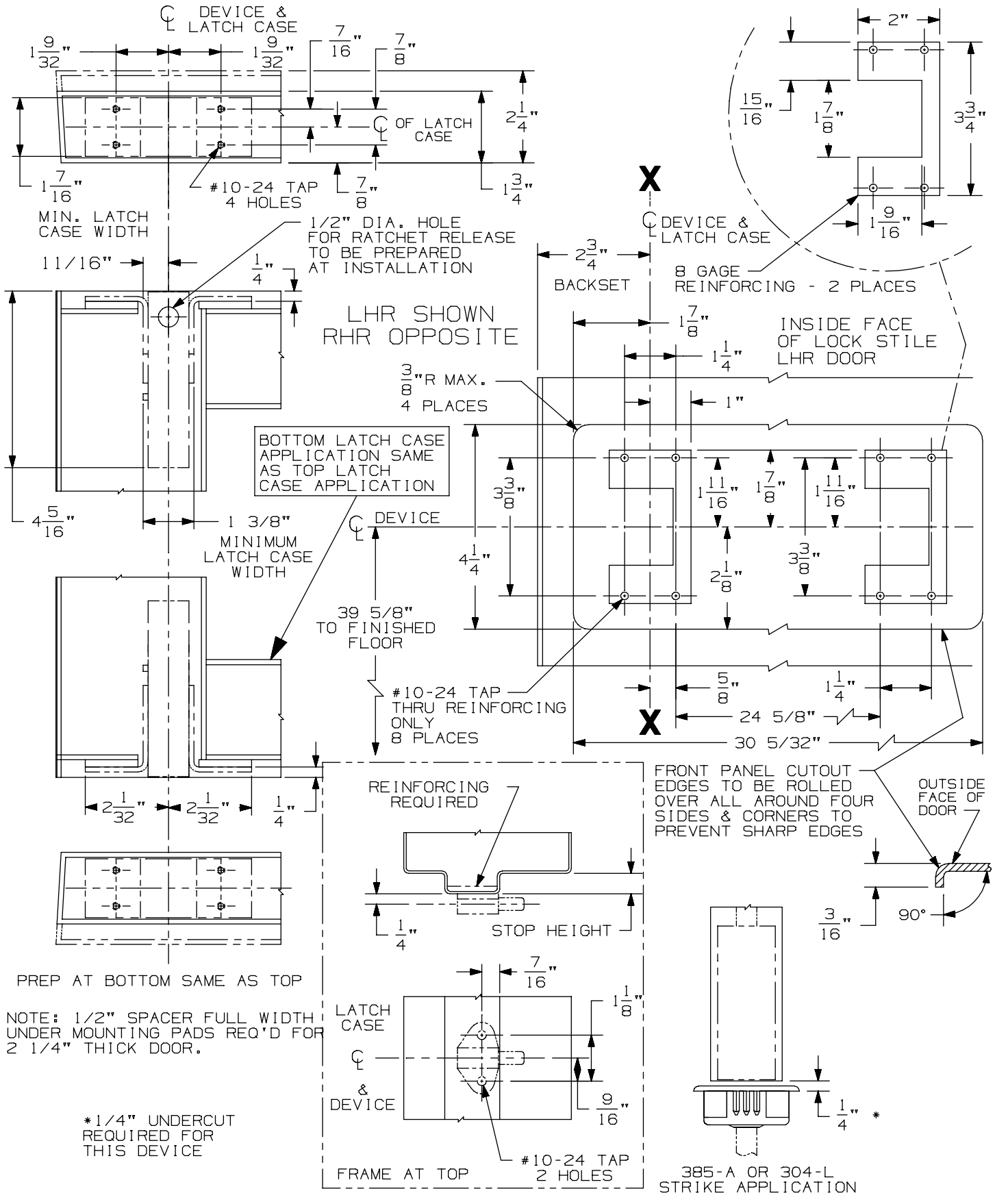

94/9547/47-F Concealed Vertical Rod Device on 2' 10" up to 4' 0" Wide Door

VON DUPRIN®

NOTES: For a door smaller than 2' 10" see template #10375

TEMPLATE NUMBER: 10324_a Sht1

DATE: 05-22-13

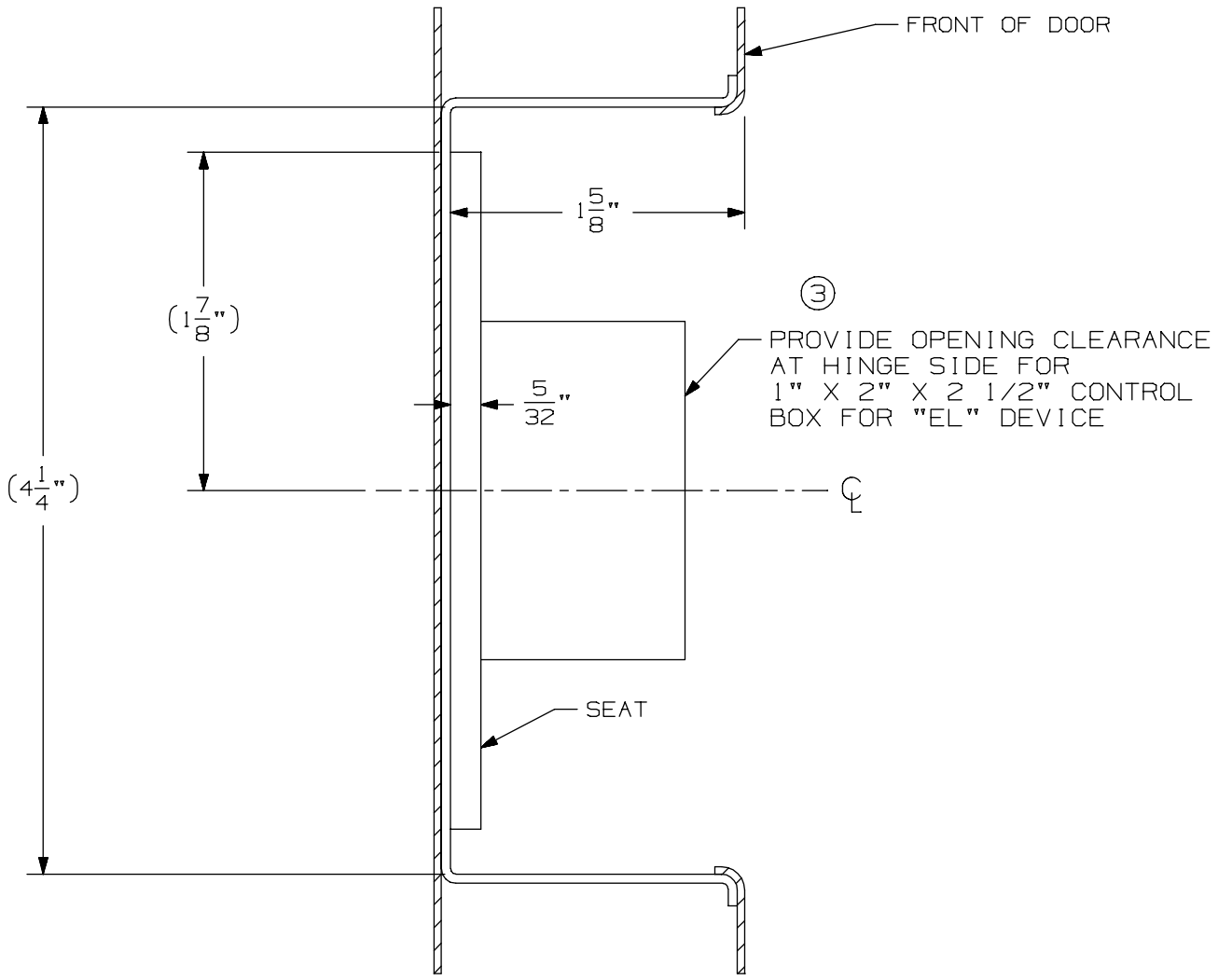

94/9547/47-F Concealed Vertical Rod Device on 2' 10" up to 4' 0" Wide Door

VON DUPRIN®

NOTES: For a door smaller than 2' 10" see template # 10375

TEMPLATE NUMBER: 10324_a Sht 2

DATE: 05-22-13

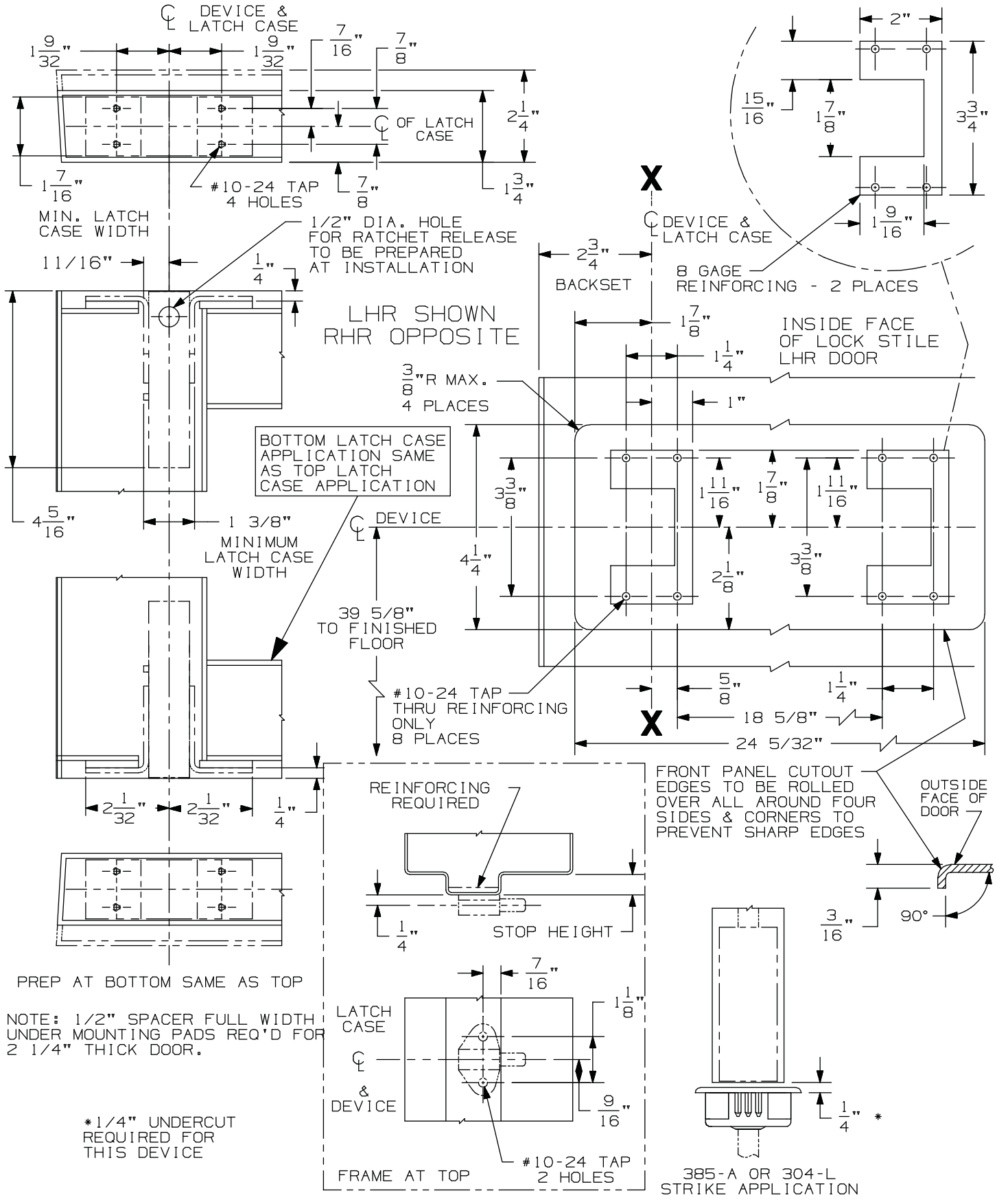

95/9547/47-F Concealed Vertical Rod Device on 2' 6" up to 2' 9 ¾" Wide Doors

VON DUPRIN®

NOTES: See Master Sheet #10001 For Suggested Reinforcing
For a door 2' 10" and larger see template # 10324

TEMPLATE NUMBER: 10375_c Sht 1

DATE: 05-22-13

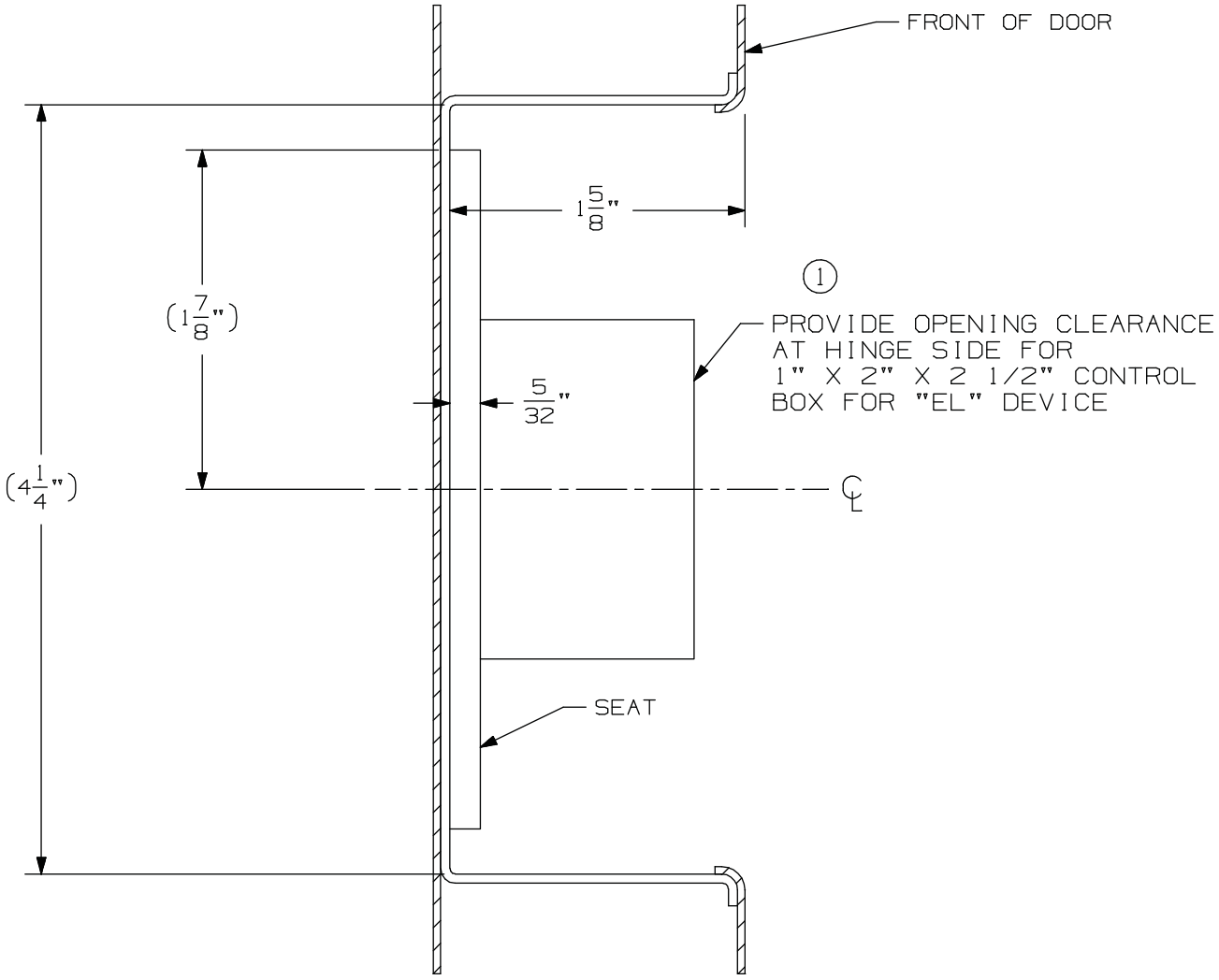

95/9547/47-F Concealed Vertical Rod Device on 2' 6" up to 2' 9 ¾" Wide Doors

VON DUPRIN®

NOTES: See Master Sheet #10001 For Suggested Reinforcing
For a door 2' 10" and larger see template # 10324

TEMPLATE NUMBER: 10375_c Sht 2

DATE: 05-22-13

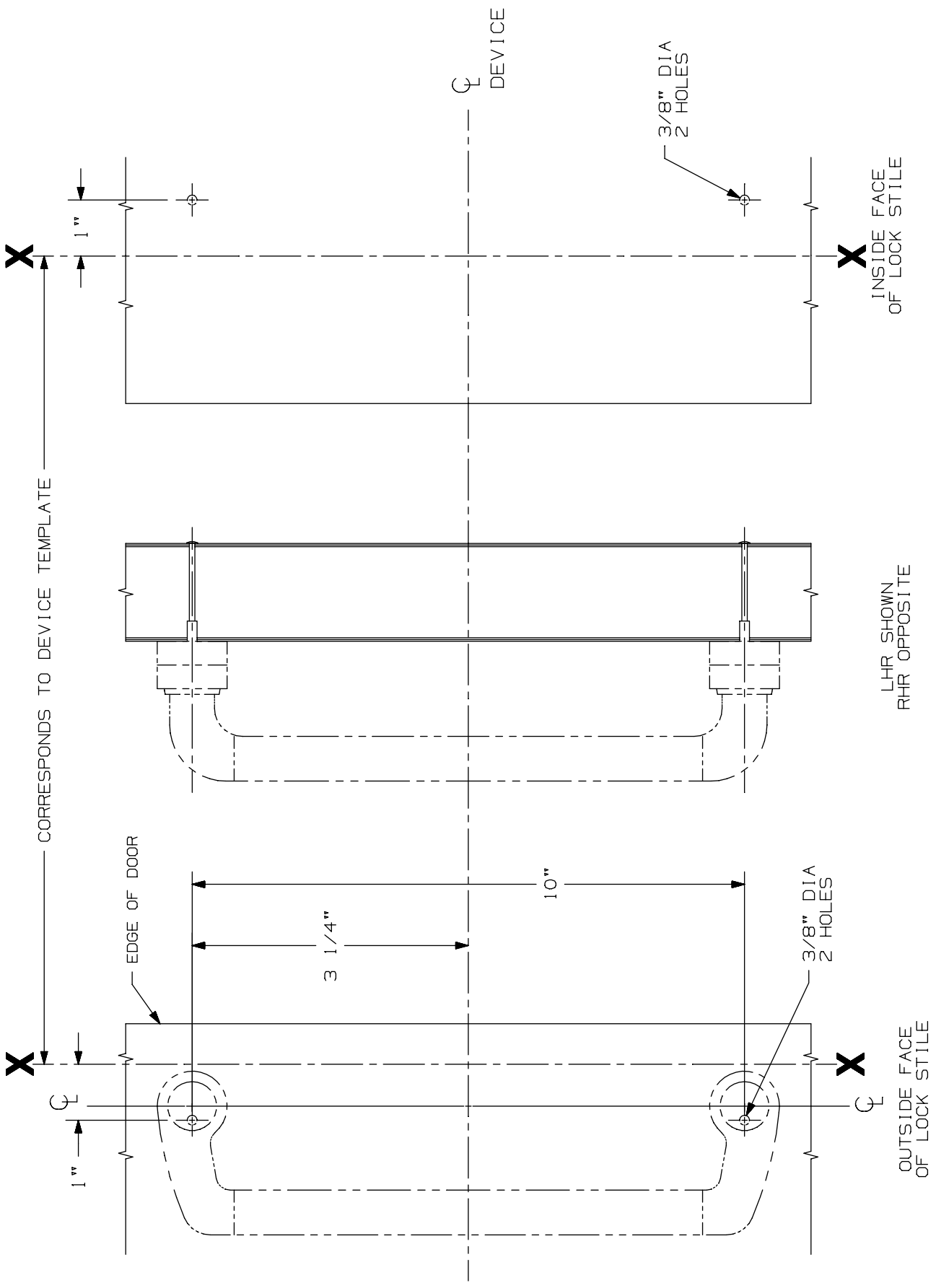

550 DT Trim for 94/9547 Vertical & 94/9575 Mort

VON DUPRIN®

NOTES: SEE MASTER SHEET #10001 FOR SUGGESTED REINFORCING

TEMPLATE NUMBER: 20031_a

DATE: 05-23-13

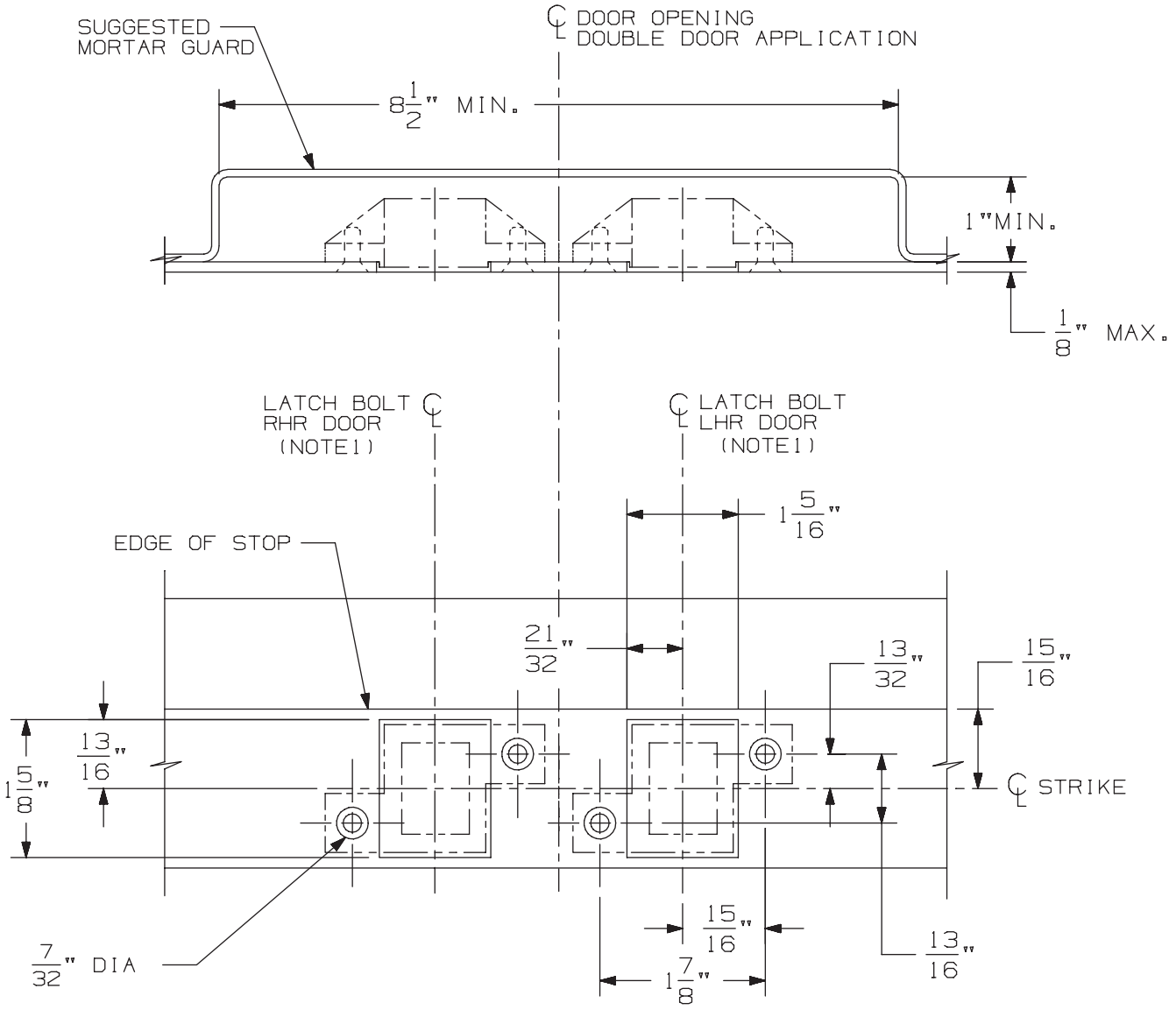

3/8" DIA X 82° C'SINK

IN FRAME
2 HOLES
EACH STRIKE

DOUBLE DOOR APPLICATION SHOWN.
FOR SINGLE DOOR APPLICATION USE
APPROPRIATE HANDING AS SHOWN.

DEVICE APPLICATION SCHEDULE
33/3547 & 33/3547-F SERIES DEVICE
98/99/47 & 98/99/47-F SERIES DEVICE
5547/5547 WDC SERIES
33/3547A & 33/3547A-F SERIES DEVICE
(9) 94/9547 SERIES DEVICE

NOTES: 1. SEE DEVICE TEMPLATE FOR LOCATION OF LATCH BOLT.

2. IF DEVICE IS TO BE MOUNTED ON WOOD DOORS, SEE WOOD DOOR TEMPLATE FOR LATCH BOLT LOCATION.

338 Strike for Hollow Metal Frame Preparation

VON DUPRIN®

NOTES: SEE MASTER SHEET #10001 FOR SUGGESTED REINFORCING

TEMPLATE NUMBER: 30038_a

DATE: 05-23-13

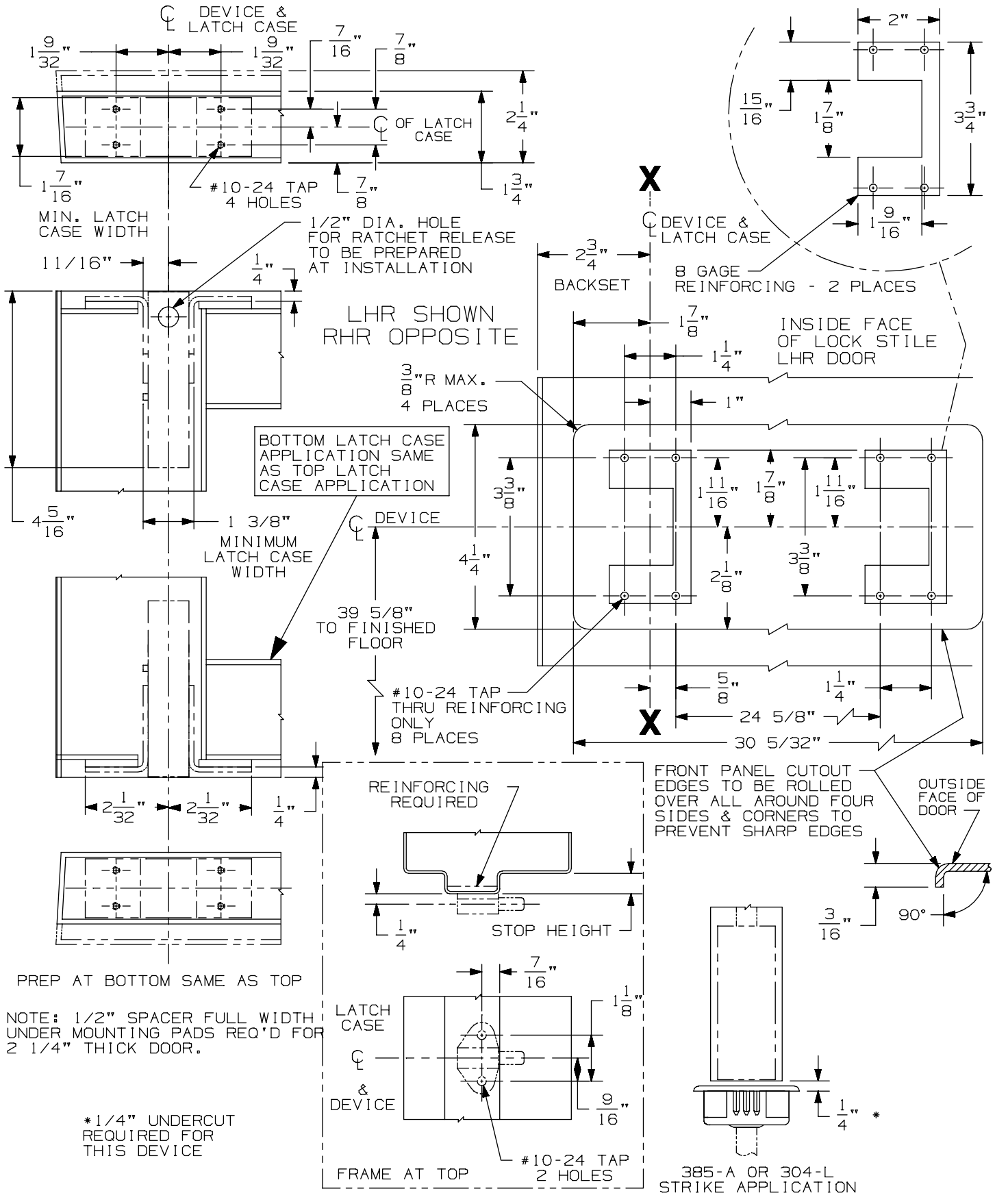

94/9547/47-F Concealed Vertical Rod Device on 2' 10" up to 4' 0" Wide Door

VON DUPRIN®

NOTES: For a door smaller than 2' 10" see template #10375

TEMPLATE NUMBER: 10324_a Sht1

DATE: 05-22-13

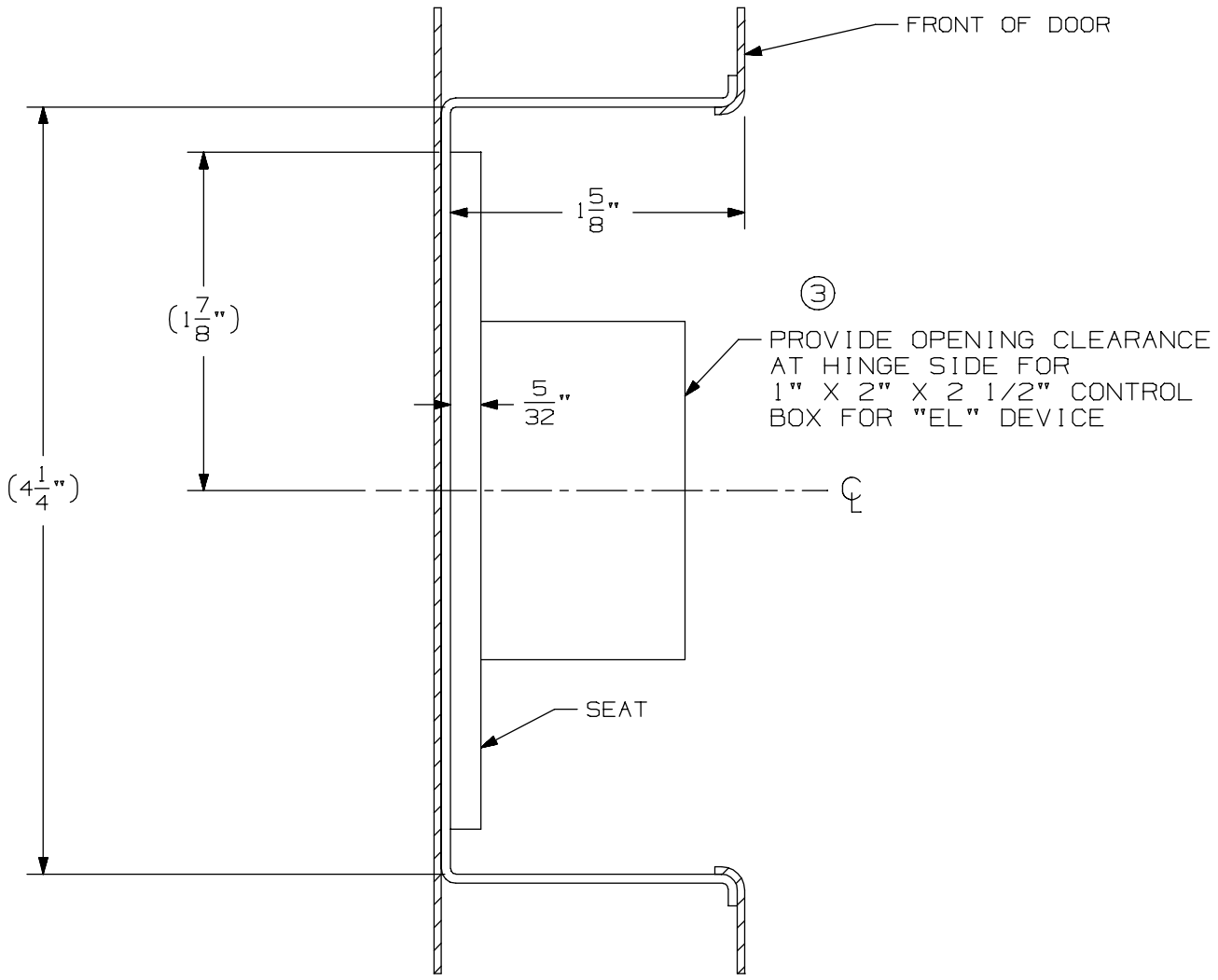

94/9547/47-F Concealed Vertical Rod Device on 2' 10" up to 4' 0" Wide Door

VON DUPRIN®

NOTES: For a door smaller than 2' 10" see template # 10375

TEMPLATE NUMBER: 10324_a Sht 2

DATE: 05-22-13

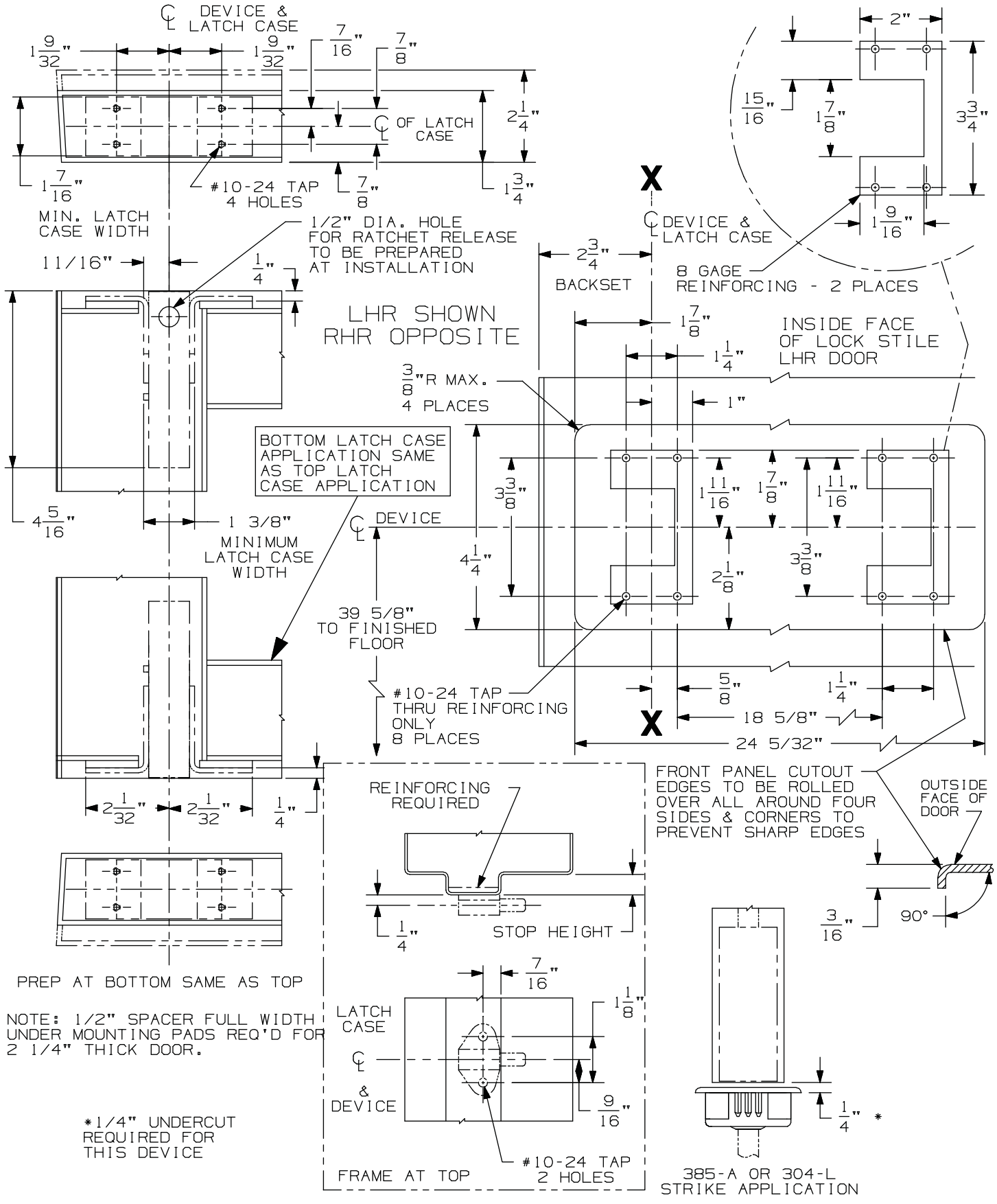

95/9547/47-F Concealed Vertical Rod Device on 2' 6" up to 2' 9 ¾" Wide Doors

VON DUPRIN®

NOTES: See Master Sheet #10001 For Suggested Reinforcing
For a door 2' 10" and larger see template # 10324

TEMPLATE NUMBER: 10375_c Sht 1

DATE: 05-22-13

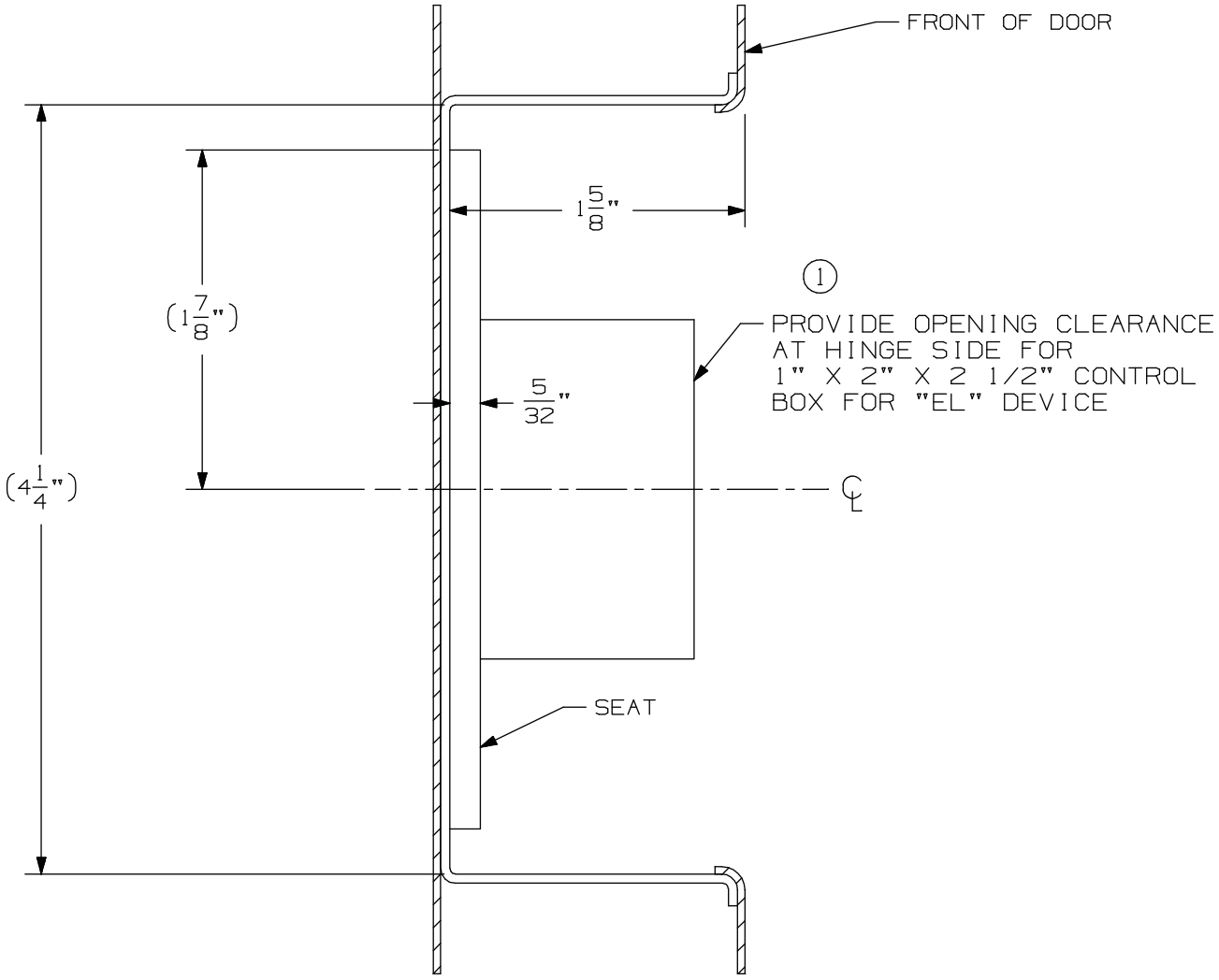

95/9547/47-F Concealed Vertical Rod Device on 2' 6" up to 2' 9 ¾" Wide Doors

VON DUPRIN®

NOTES: See Master Sheet #10001 For Suggested Reinforcing
For a door 2' 10" and larger see template # 10324

TEMPLATE NUMBER: 10375_c Sht 2

DATE: 05-22-13

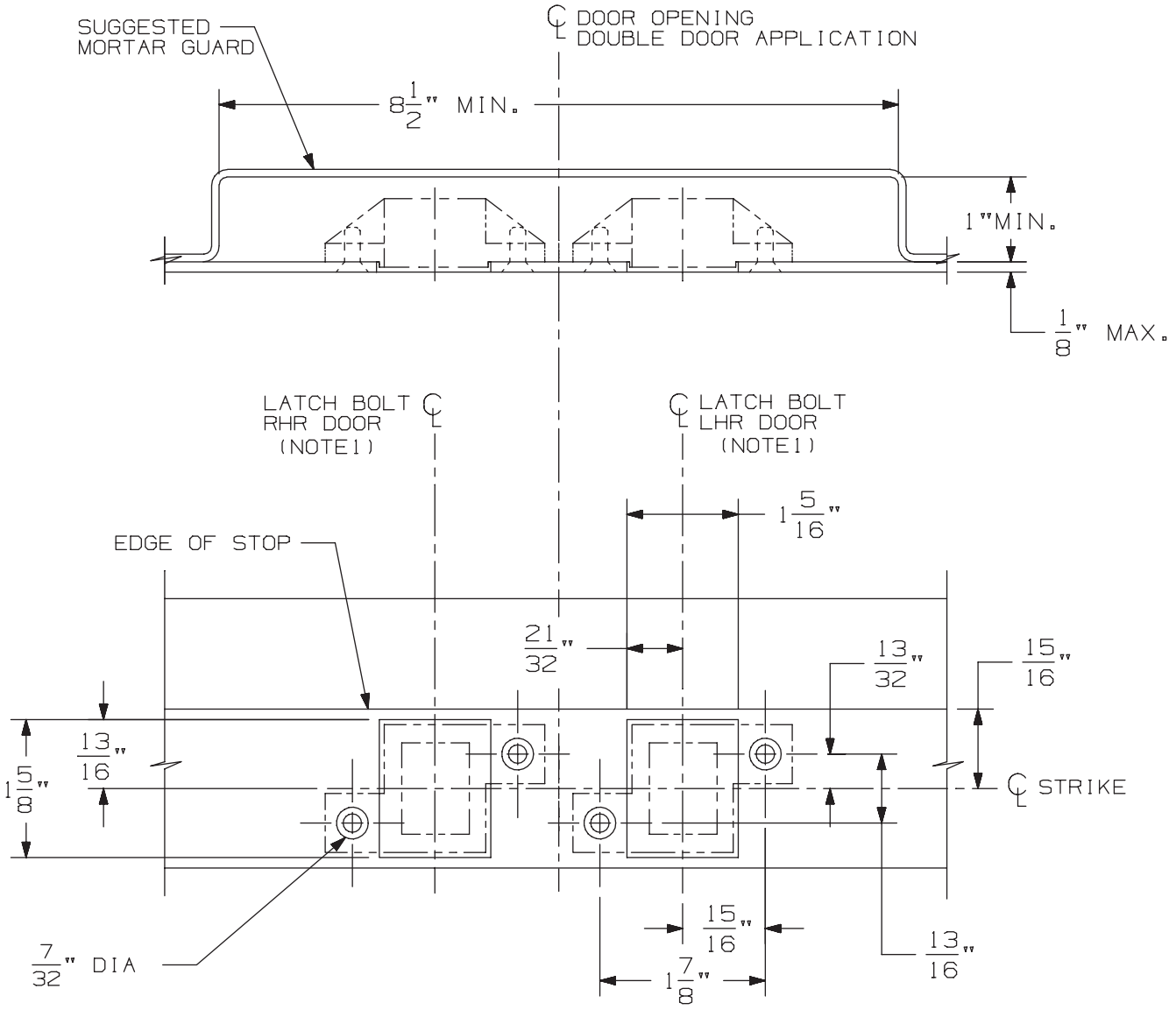

3/8" DIA X 82° C'SINK

IN FRAME
2 HOLES
EACH STRIKE

DOUBLE DOOR APPLICATION SHOWN.
FOR SINGLE DOOR APPLICATION USE
APPROPRIATE HANDING AS SHOWN.

DEVICE APPLICATION SCHEDULE
33/3547 & 33/3547-F SERIES DEVICE
98/99/47 & 98/99/47-F SERIES DEVICE
5547/5547 WDC SERIES
33/3547A & 33/3547A-F SERIES DEVICE
(9) 94/9547 SERIES DEVICE

NOTES: 1. SEE DEVICE TEMPLATE FOR LOCATION OF LATCH BOLT.

2. IF DEVICE IS TO BE MOUNTED ON WOOD DOORS, SEE WOOD DOOR TEMPLATE FOR LATCH BOLT LOCATION.

338 Strike for Hollow Metal Frame Preparation

VON DUPRIN®

NOTES: SEE MASTER SHEET #10001 FOR SUGGESTED REINFORCING

TEMPLATE NUMBER: 30038_a

DATE: 05-23-13

INPACT® - 94 / 95 Series Exit Devices - 9447-LBR/9547-LBR Concealed Vertical Rod (Standard, EL & LX)

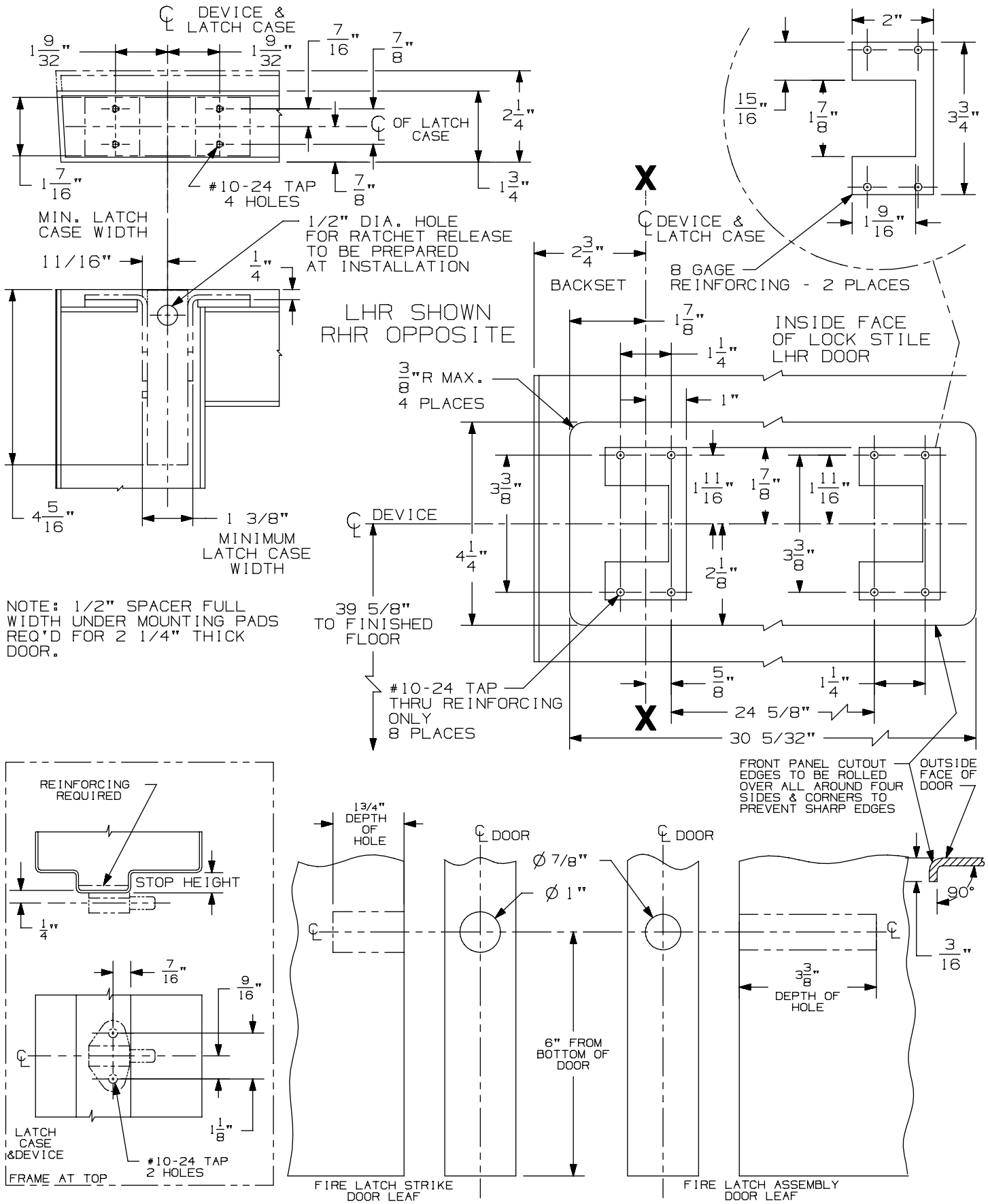

94/9547/47-F-LBR Concealed Vertical Rod Device on 2' 10" up to 4' 0" Wide Door

VON DUPRIN®

NOTES: For a door smaller than 2' 10" see template # 10326

TEMPLATE NUMBER: 10325_a Sht 1

DATE: 05-22-13

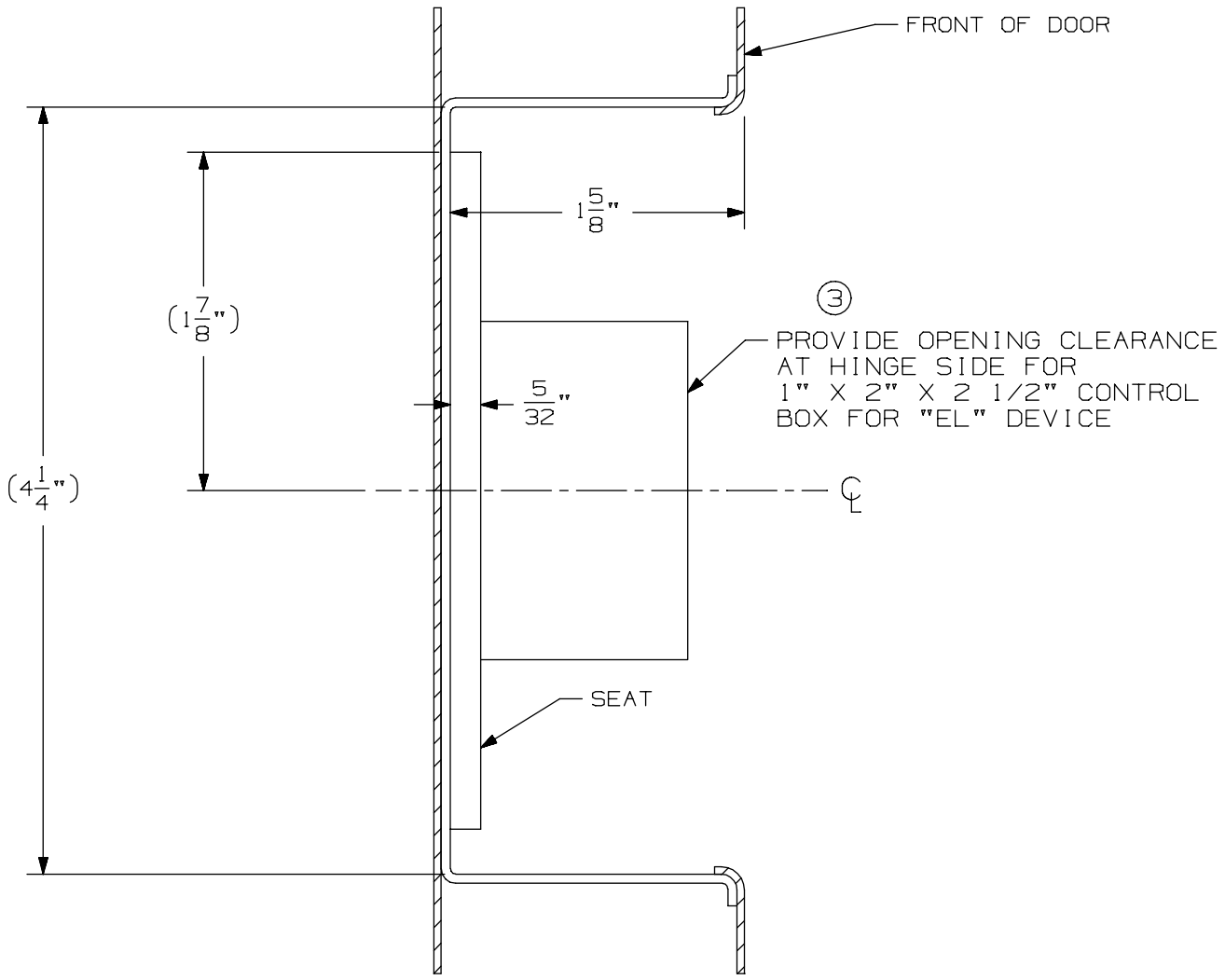

94/9547/47-F-LBR Concealed Vertical Rod Device on 2' 10" up to 4' 0" Wide Door

VON DUPRIN®

NOTES: For a door smaller than 2' 10" see template #10326

TEMPLATE NUMBER: 10325_a Sht 2

DATE: 05-22-13

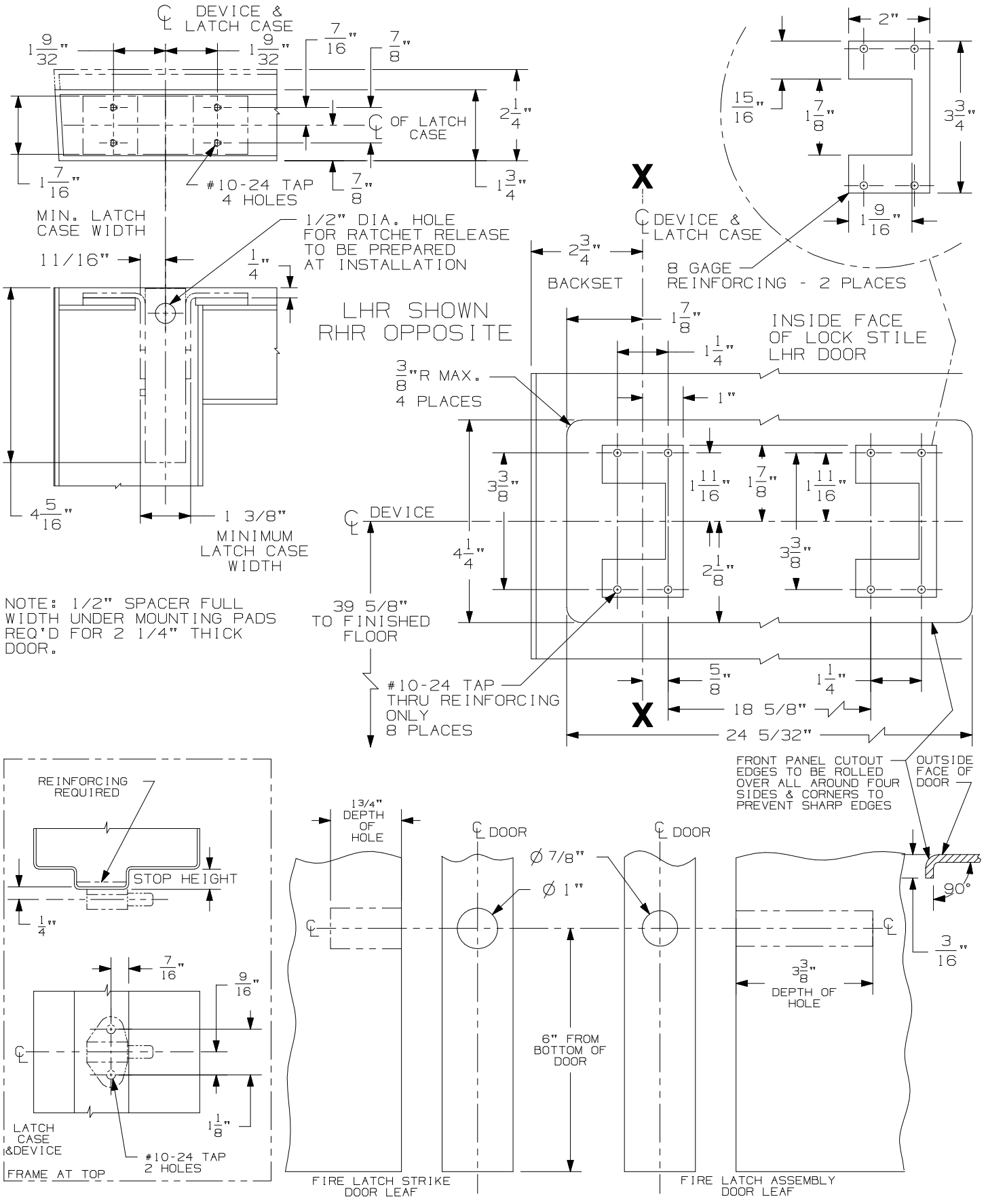

94/9547/47-F-LBR Concealed Vertical Rod Device on 2' 6" to 2' 9¾" Wide Doors

VON DUPRIN®

NOTES: For a door 2' 10" and larger see template 10325

TEMPLATE NUMBER: 10326_c Sht 1

DATE: 05-22-13

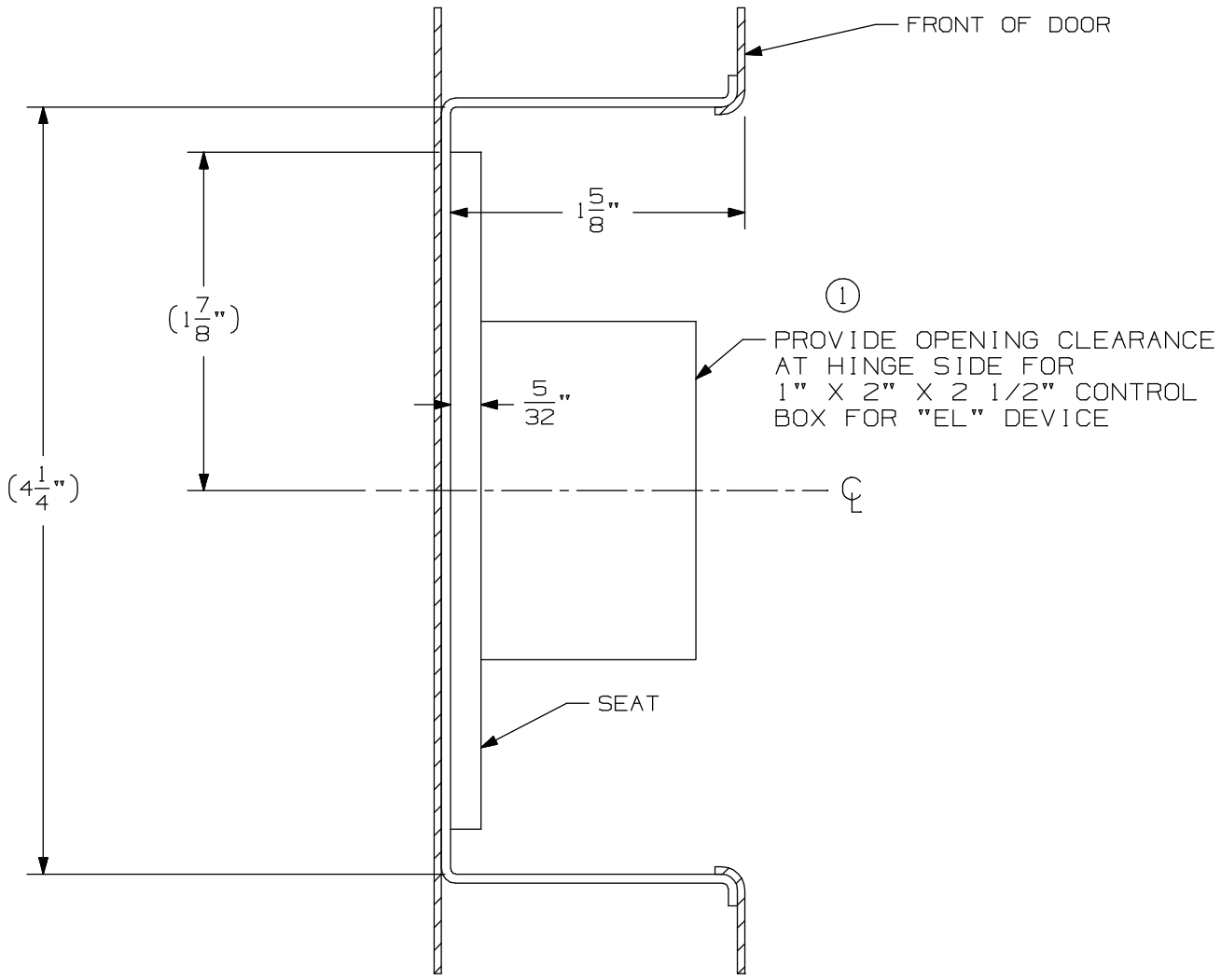

94/9547/47-F-LBR Concealed Vertical Rod Device on 2' 6" up to 2' 9¾" Wide Doors

VON DUPRIN®

NOTES: For a door 2' 10" and larger see template #10325

TEMPLATE NUMBER: 10326_c Sht 2

DATE: 05-22-13

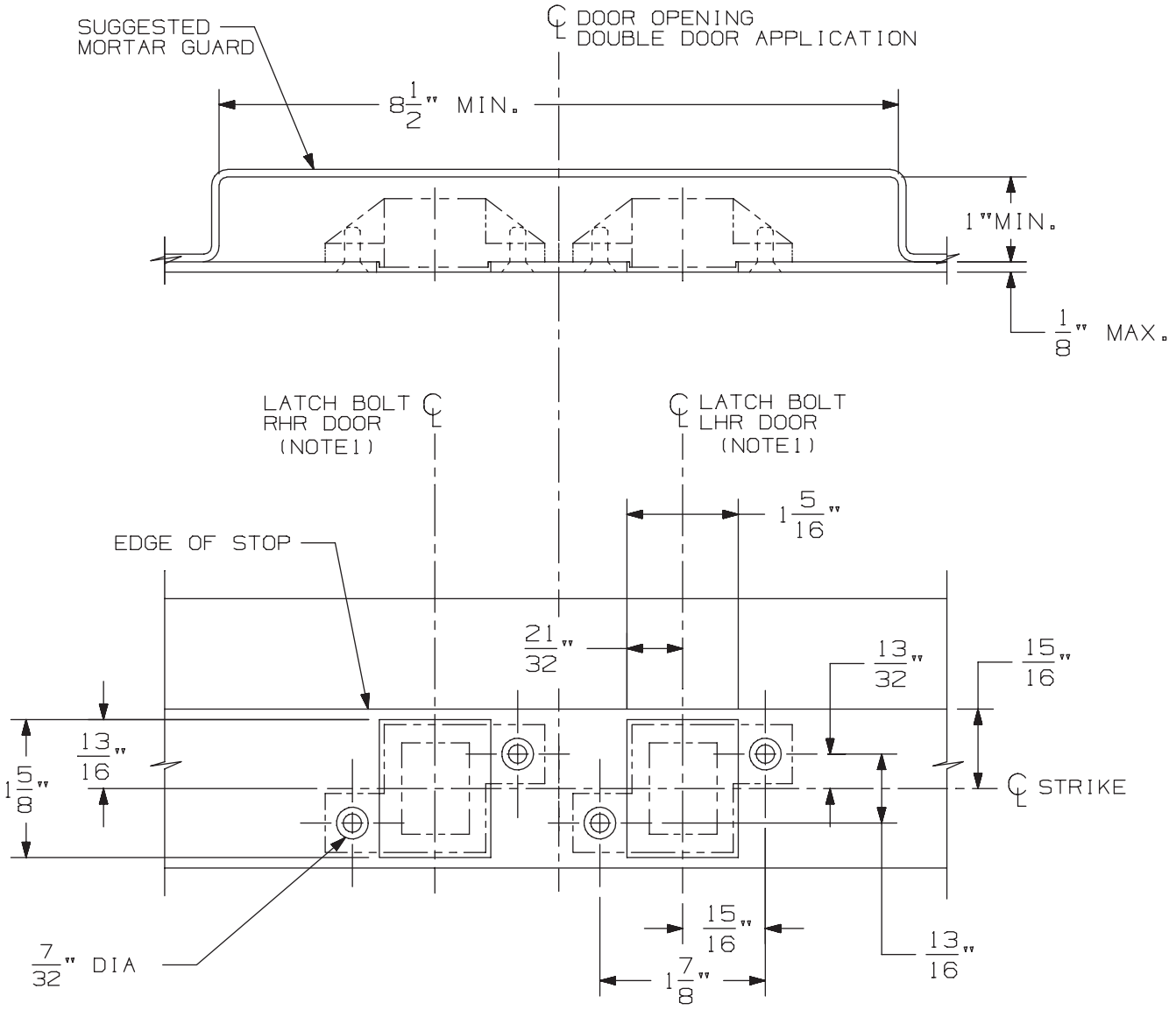

3/8" DIA X 82° C'SINK

IN FRAME
2 HOLES
EACH STRIKE

DOUBLE DOOR APPLICATION SHOWN.
FOR SINGLE DOOR APPLICATION USE
APPROPRIATE HANDING AS SHOWN.

DEVICE APPLICATION SCHEDULE
33/3547 & 33/3547-F SERIES DEVICE
98/99/47 & 98/99/47-F SERIES DEVICE
5547/5547 WDC SERIES
33/3547A & 33/3547A-F SERIES DEVICE
(9) 94/9547 SERIES DEVICE

NOTES: 1. SEE DEVICE TEMPLATE FOR LOCATION OF LATCH BOLT.

2. IF DEVICE IS TO BE MOUNTED ON WOOD DOORS, SEE WOOD DOOR TEMPLATE FOR LATCH BOLT LOCATION.

338 Strike for Hollow Metal Frame Preparation

VON DUPRIN®

NOTES: SEE MASTER SHEET #10001 FOR SUGGESTED REINFORCING

TEMPLATE NUMBER: 30038_a

DATE: 05-23-13

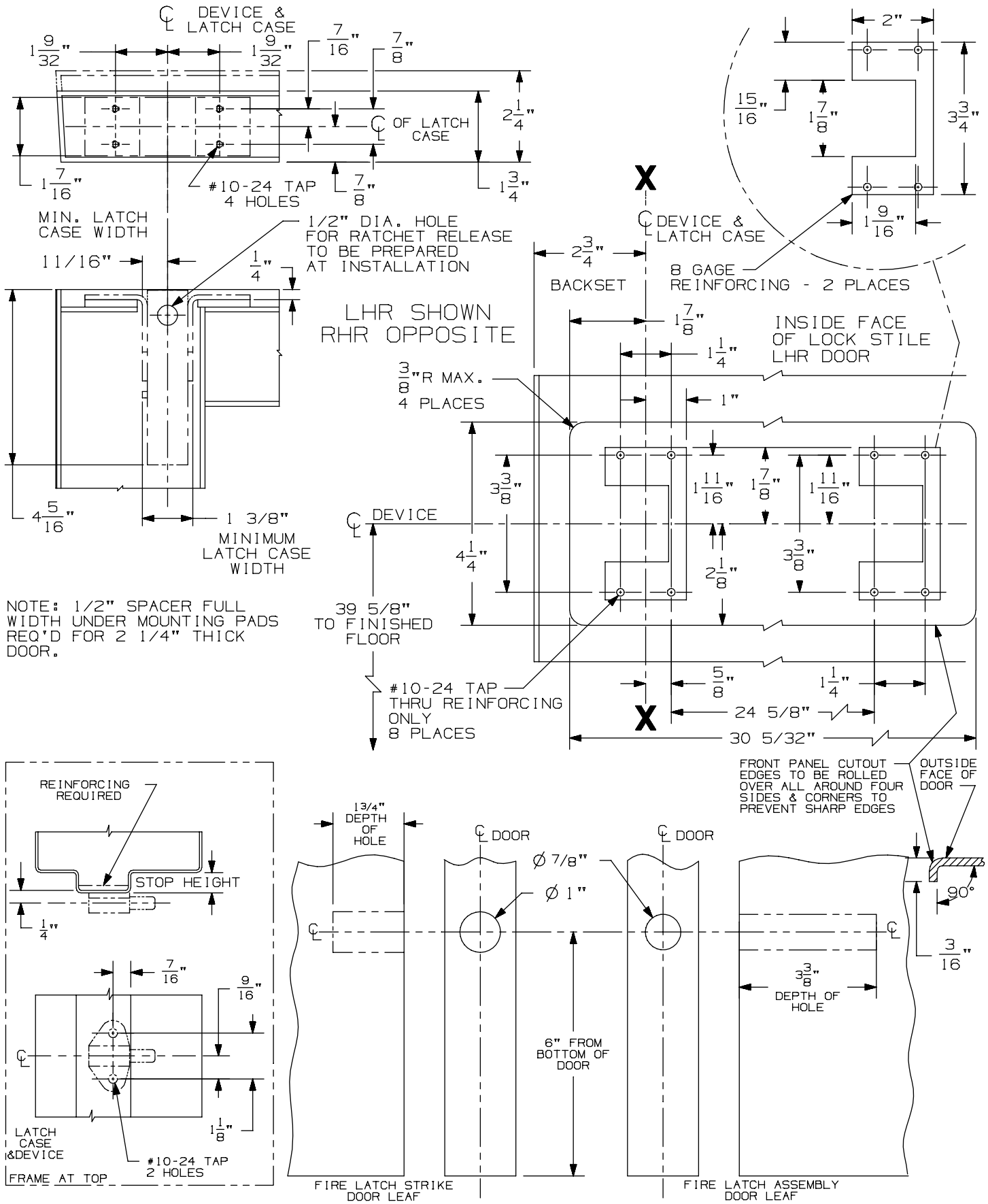

94/9547/47-F-LBR Concealed Vertical Rod Device on 2' 10" up to 4' 0" Wide Door

VON DUPRIN®

NOTES: For a door smaller than 2' 10" see template # 10326

TEMPLATE NUMBER: 10325_a Sht 1

DATE: 05-22-13

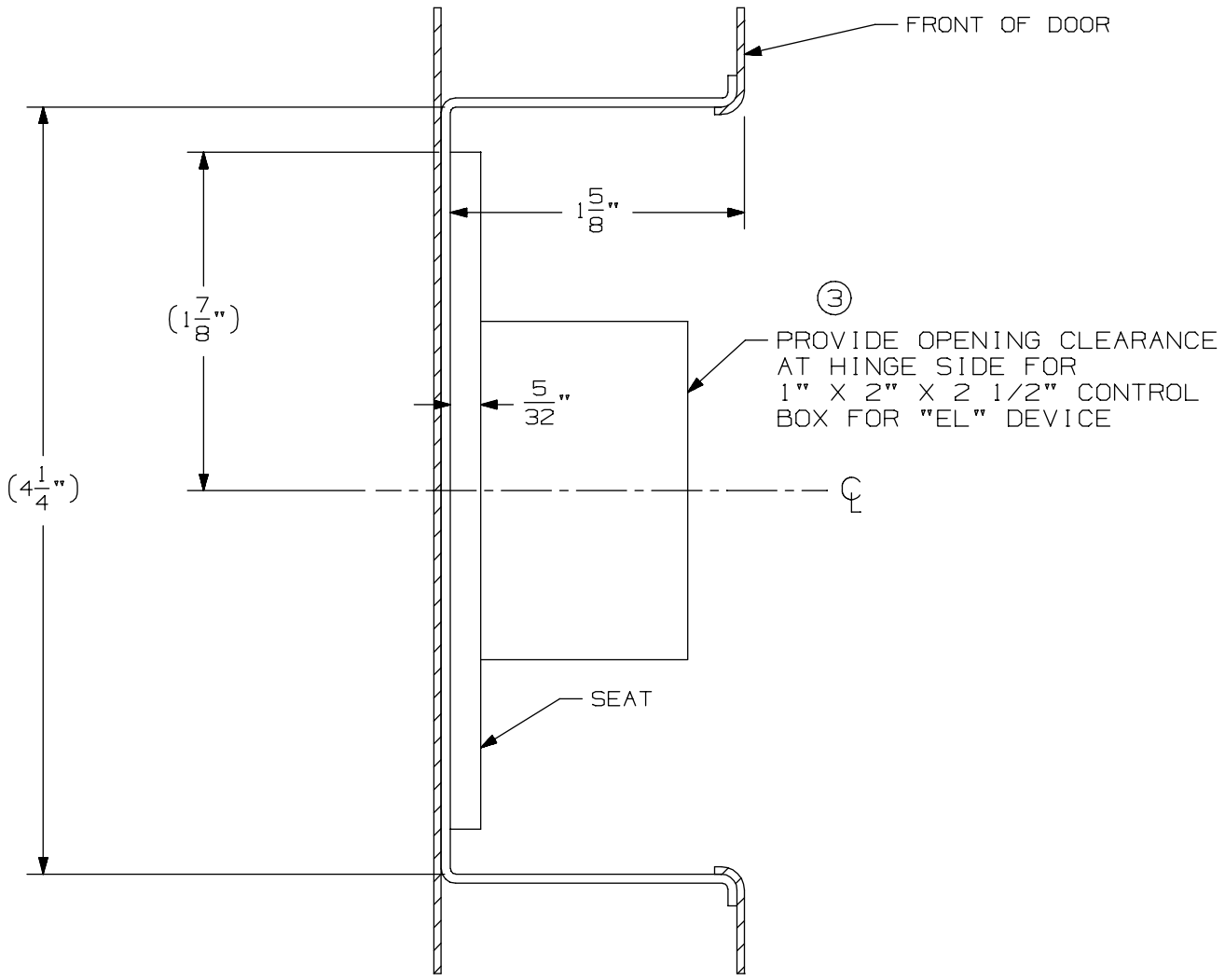

94/9547/47-F-LBR Concealed Vertical Rod Device on 2' 10" up to 4' 0" Wide Door

VON DUPRIN®

NOTES: For a door smaller than 2' 10" see template #10326

TEMPLATE NUMBER: 10325_a Sht 2

DATE: 05-22-13

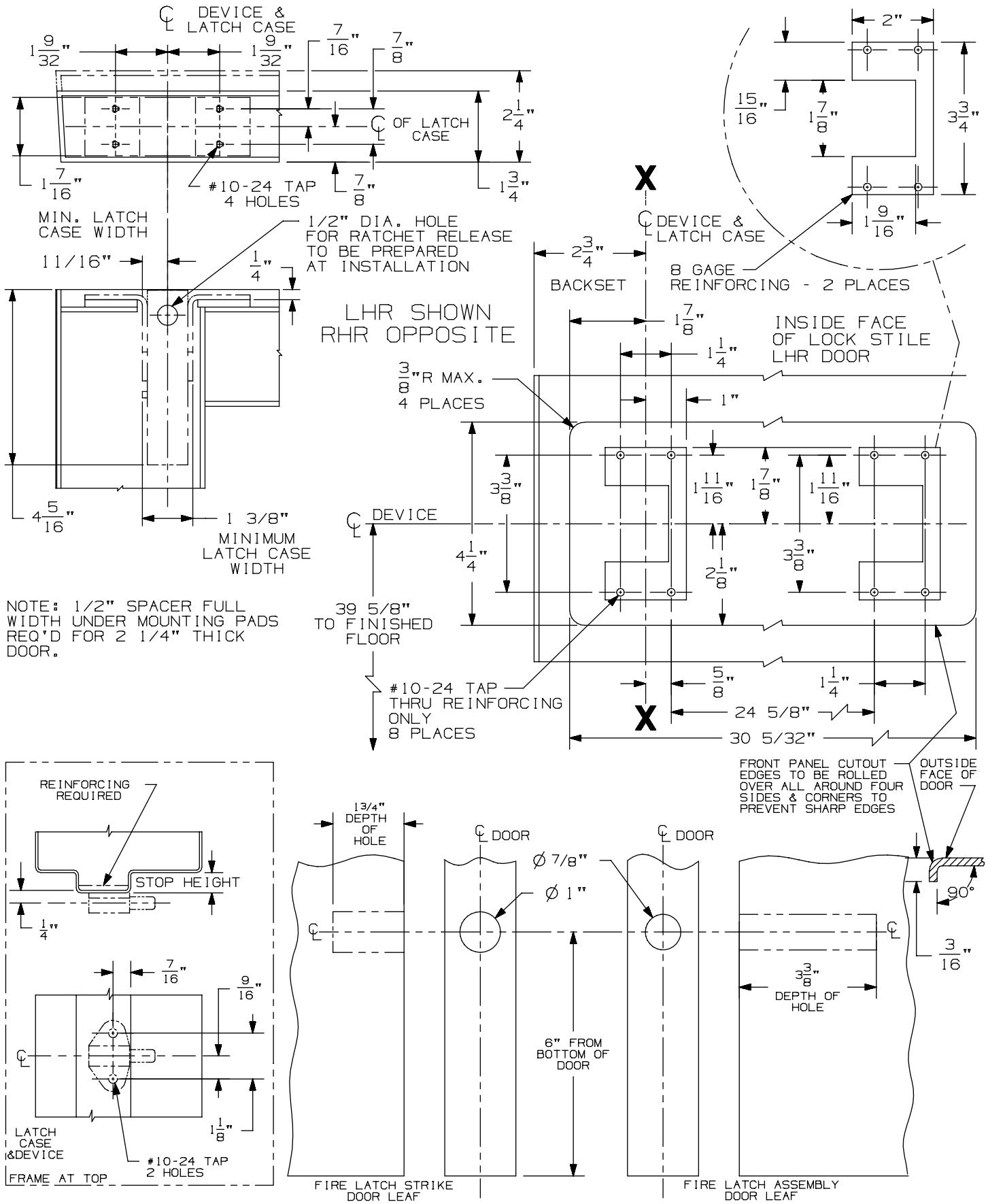

94/9547/47-F-LBR Concealed Vertical Rod Device on 2' 10" up to 4' 0" Wide Door

VON DUPRIN®

NOTES: For a door smaller than 2' 10" see template # 10326

TEMPLATE NUMBER: 10325_a Sht 1

DATE: 05-22-13

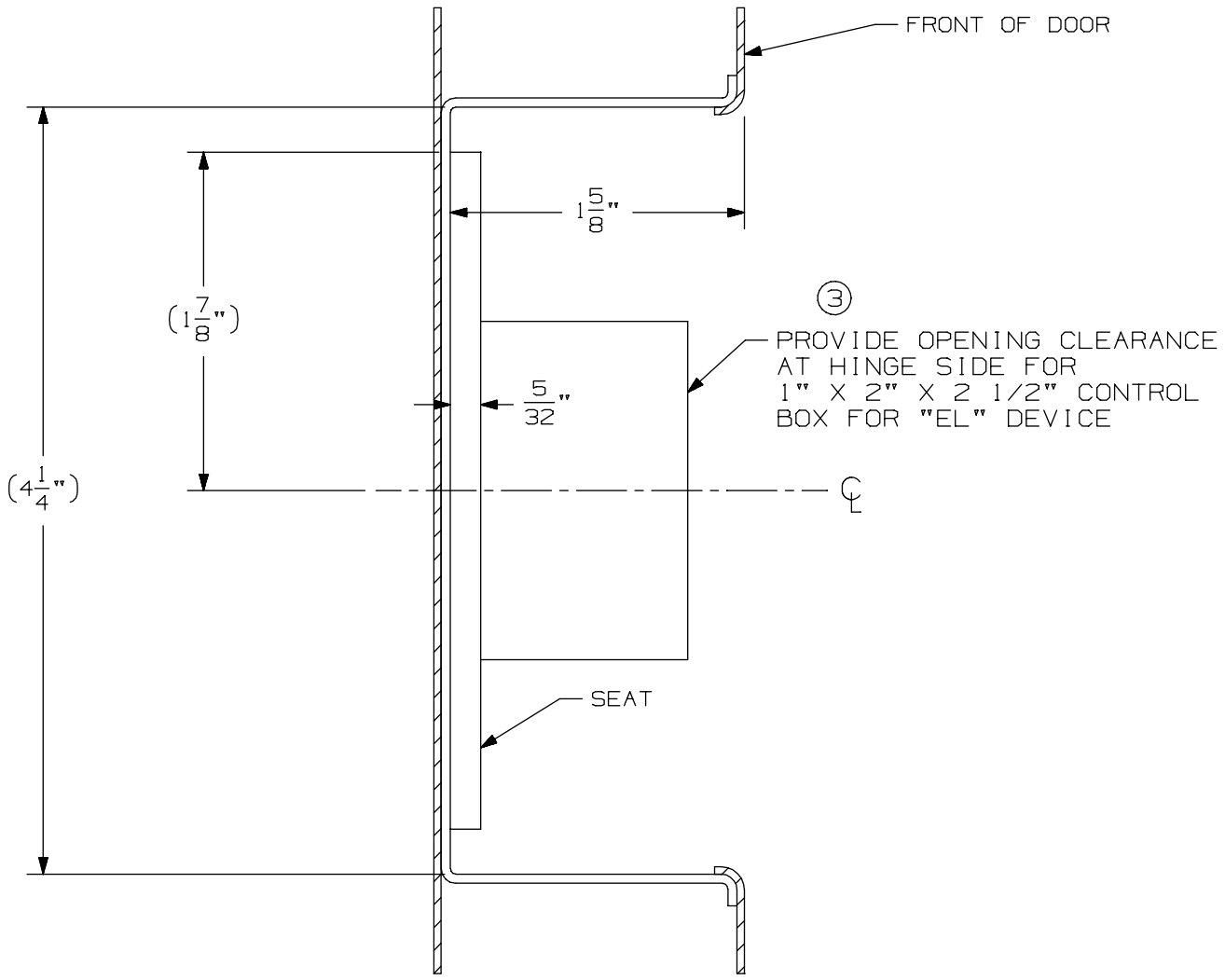

94/9547/47-F-LBR Concealed Vertical Rod Device on 2' 10" up to 4' 0" Wide Door

VON DUPRIN®

NOTES: For a door smaller than 2' 10" see template #10326

TEMPLATE NUMBER: 10325_a Sht 2

DATE: 05-22-13

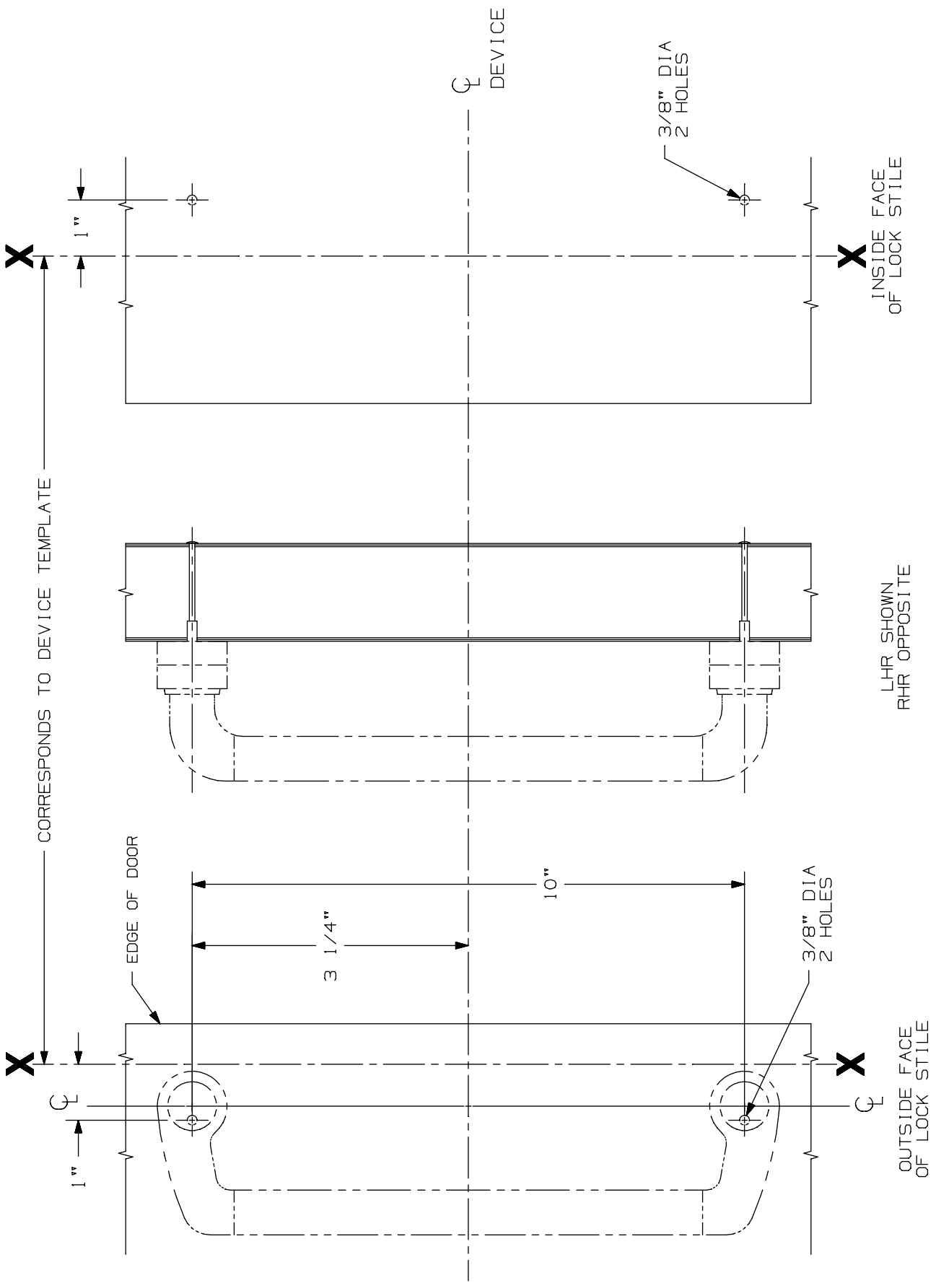

550 DT Trim for 94/9547 Vertical & 94/9575 Mort

VON DUPRIN®

NOTES: SEE MASTER SHEET #10001 FOR SUGGESTED REINFORCING

TEMPLATE NUMBER: 20031_a

DATE: 05-23-13

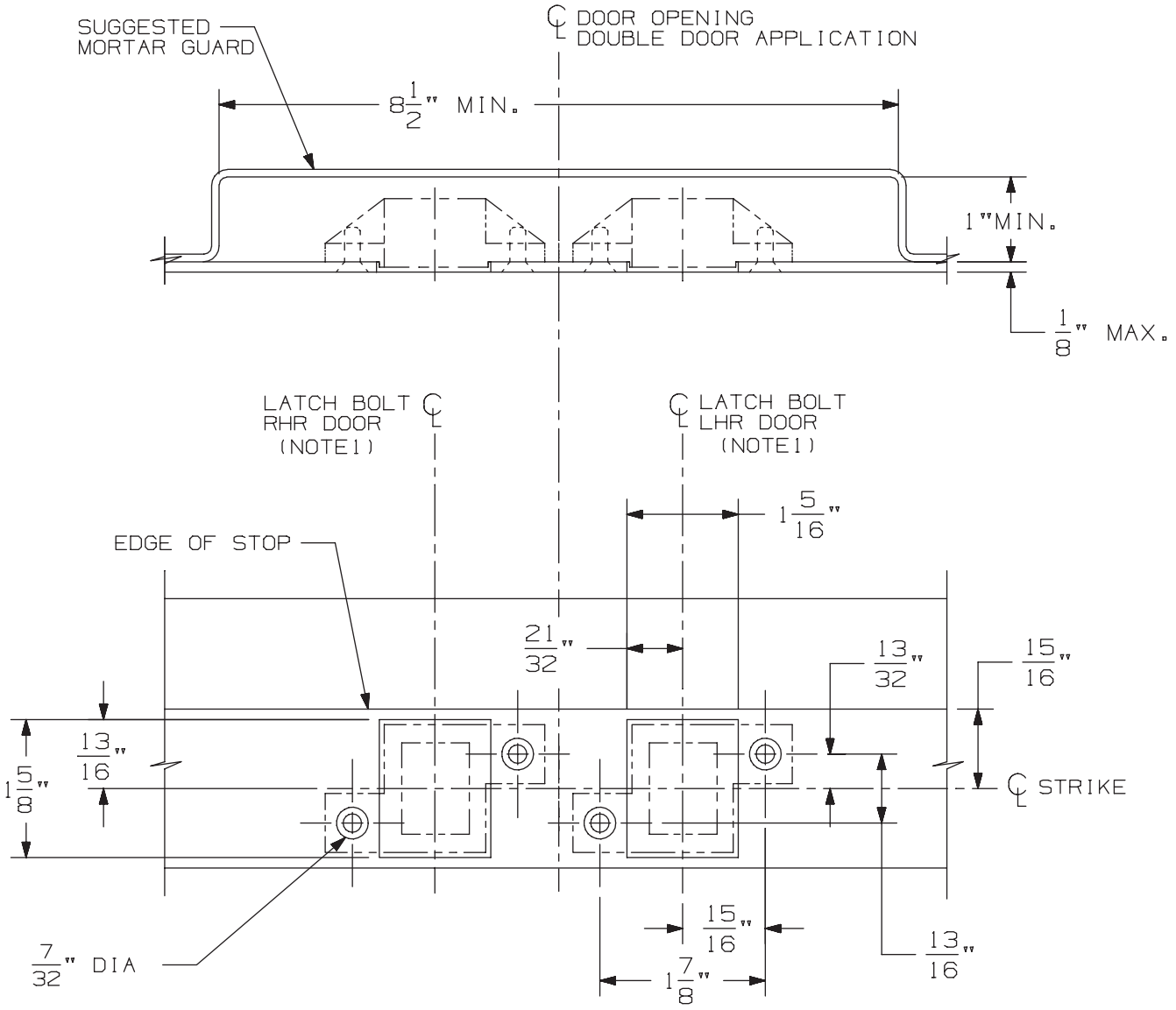

3/8" DIA X 82° C'SINK

IN FRAME
2 HOLES
EACH STRIKE

DOUBLE DOOR APPLICATION SHOWN.
FOR SINGLE DOOR APPLICATION USE
APPROPRIATE HANDING AS SHOWN.

DEVICE APPLICATION SCHEDULE
33/3547 & 33/3547-F SERIES DEVICE
98/99/47 & 98/99/47-F SERIES DEVICE
5547/5547 WDC SERIES
33/3547A & 33/3547A-F SERIES DEVICE
(9) 94/9547 SERIES DEVICE

NOTES: 1. SEE DEVICE TEMPLATE FOR LOCATION OF LATCH BOLT.

2. IF DEVICE IS TO BE MOUNTED ON WOOD DOORS, SEE WOOD DOOR TEMPLATE FOR LATCH BOLT LOCATION.

338 Strike for Hollow Metal Frame Preparation

VON DUPRIN®

NOTES: SEE MASTER SHEET #10001 FOR SUGGESTED REINFORCING

TEMPLATE NUMBER: 30038_a

DATE: 05-23-13

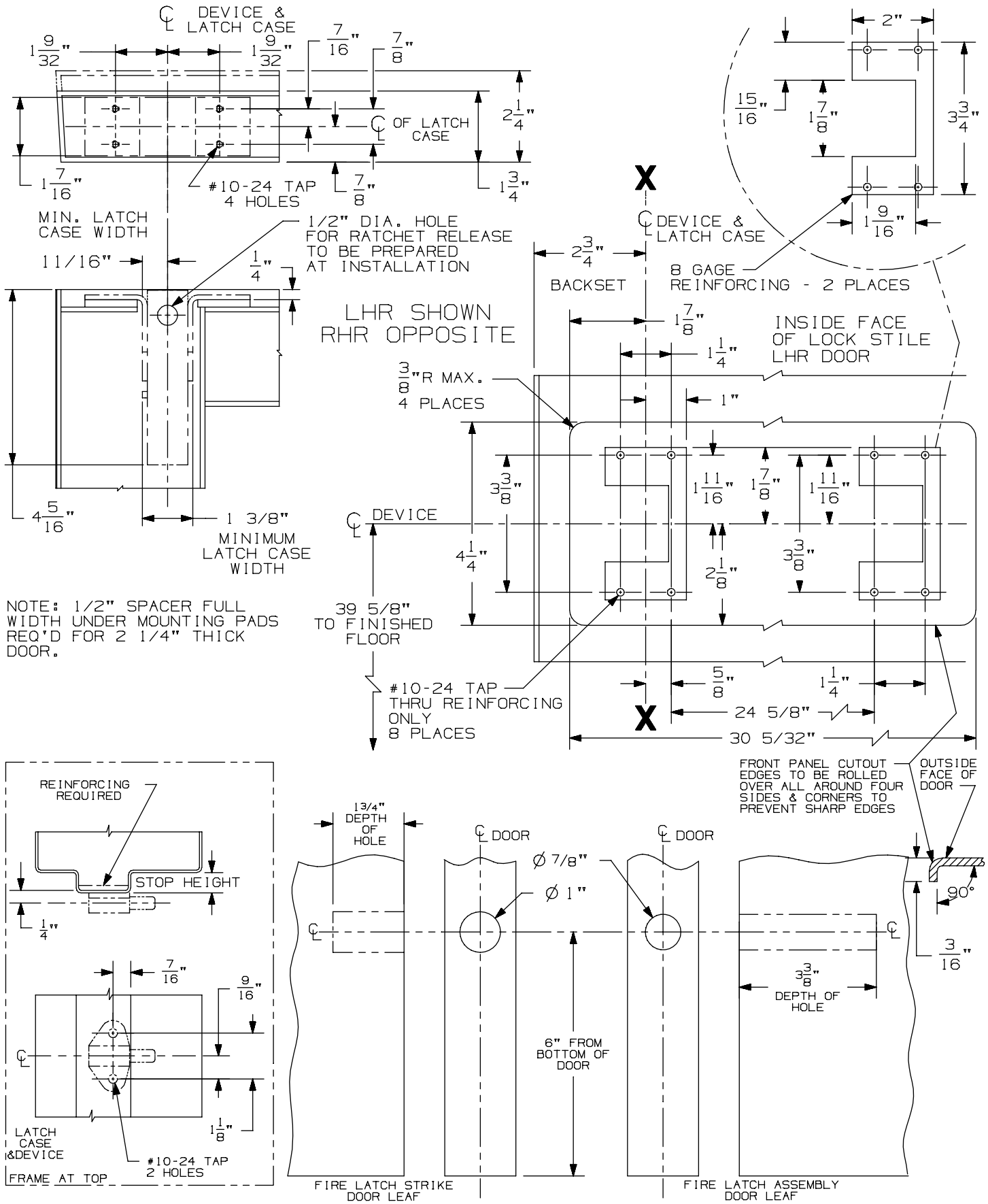

94/9547/47-F-LBR Concealed Vertical Rod Device on 2' 10" up to 4' 0" Wide Door

VON DUPRIN®

NOTES: For a door smaller than 2' 10" see template # 10326

TEMPLATE NUMBER: 10325_a Sht 1

DATE: 05-22-13

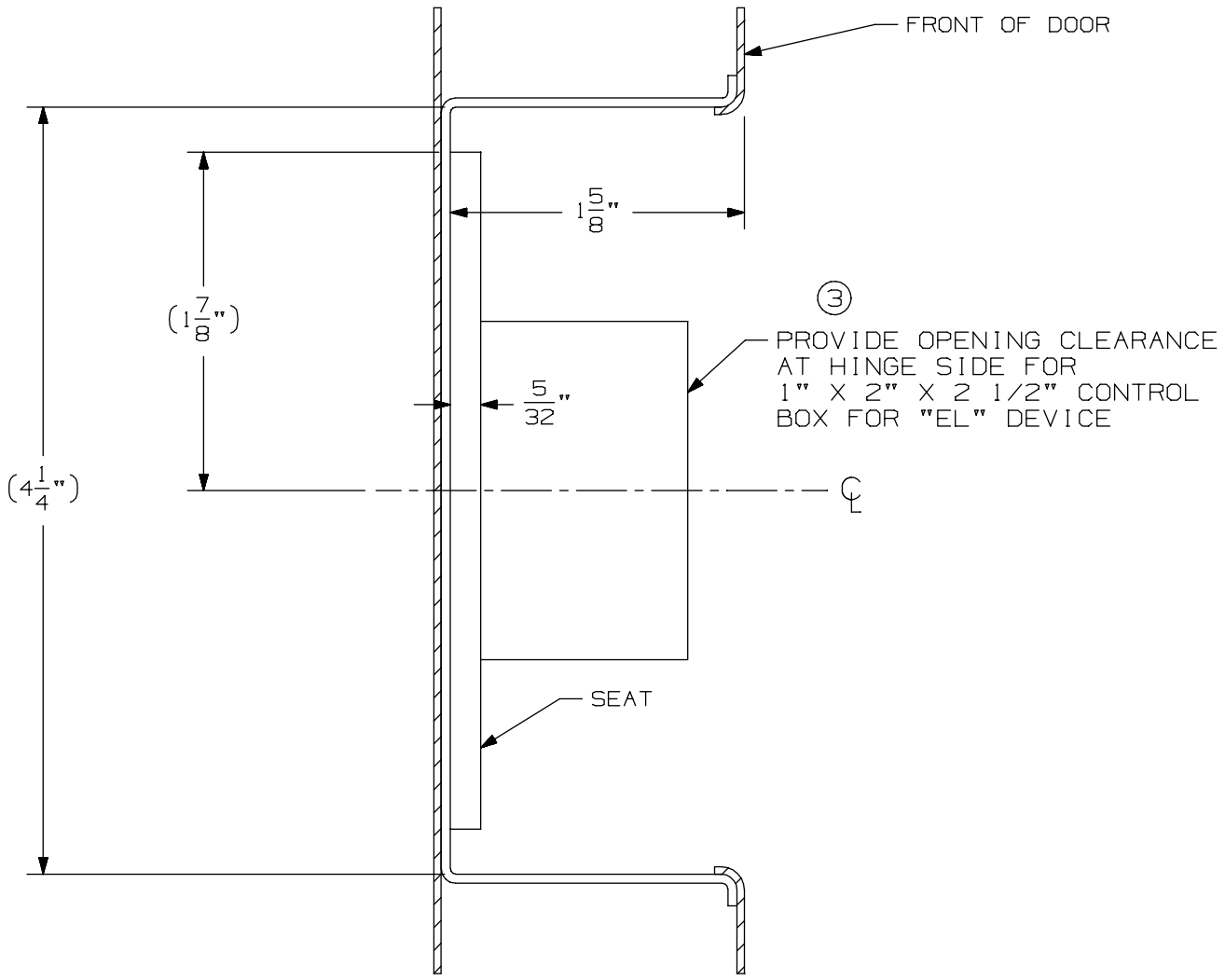

94/9547/47-F-LBR Concealed Vertical Rod Device on 2' 10" up to 4' 0" Wide Door

VON DUPRIN®

NOTES: For a door smaller than 2' 10" see template #10326

TEMPLATE NUMBER: 10325_a Sht 2

DATE: 05-22-13

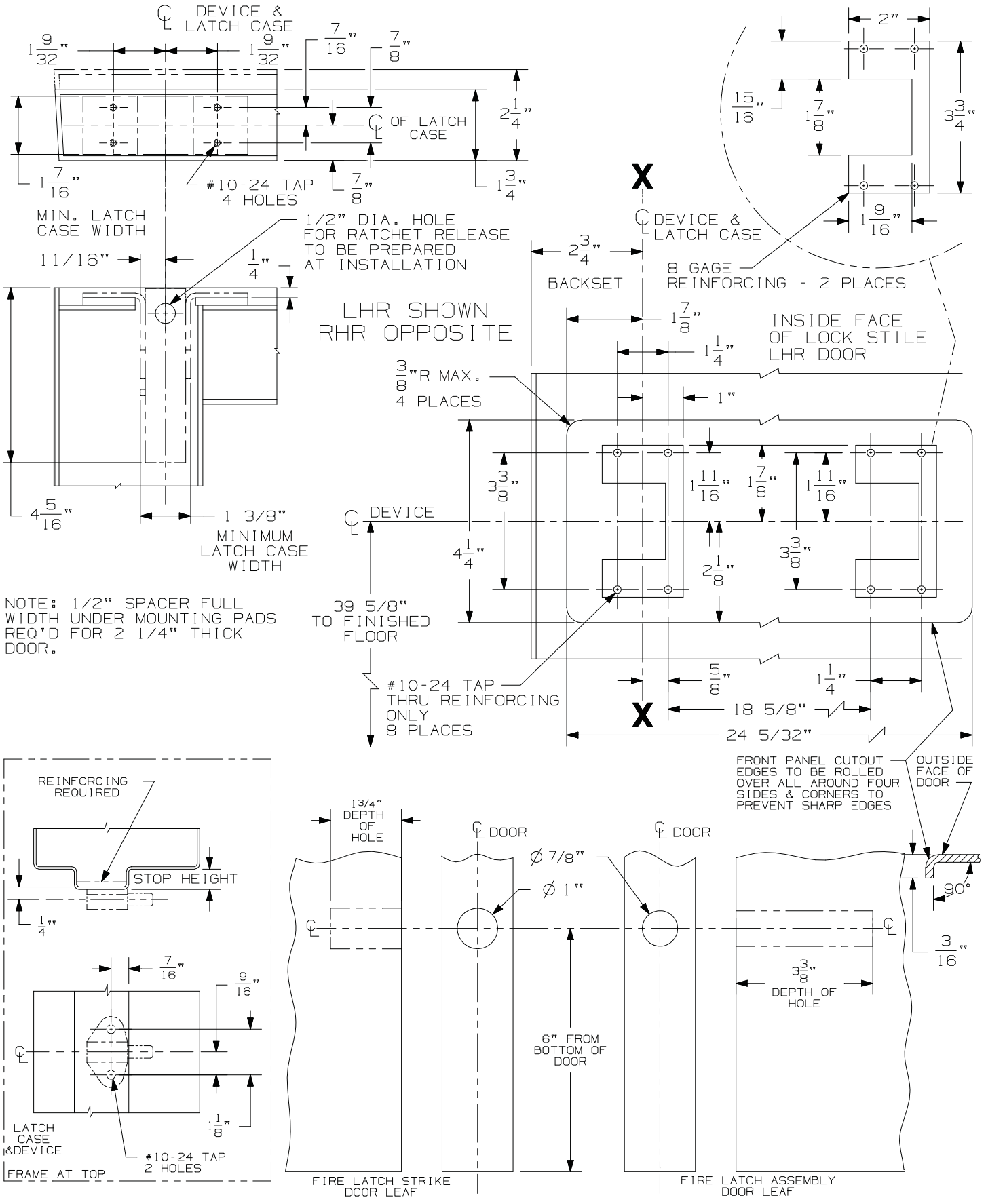

94/9547/47-F-LBR Concealed Vertical Rod Device on 2' 6" to 2' 9¾" Wide Doors

VON DUPRIN®

NOTES: For a door 2' 10" and larger see template 10325

TEMPLATE NUMBER: 10326_c Sht 1

DATE: 05-22-13

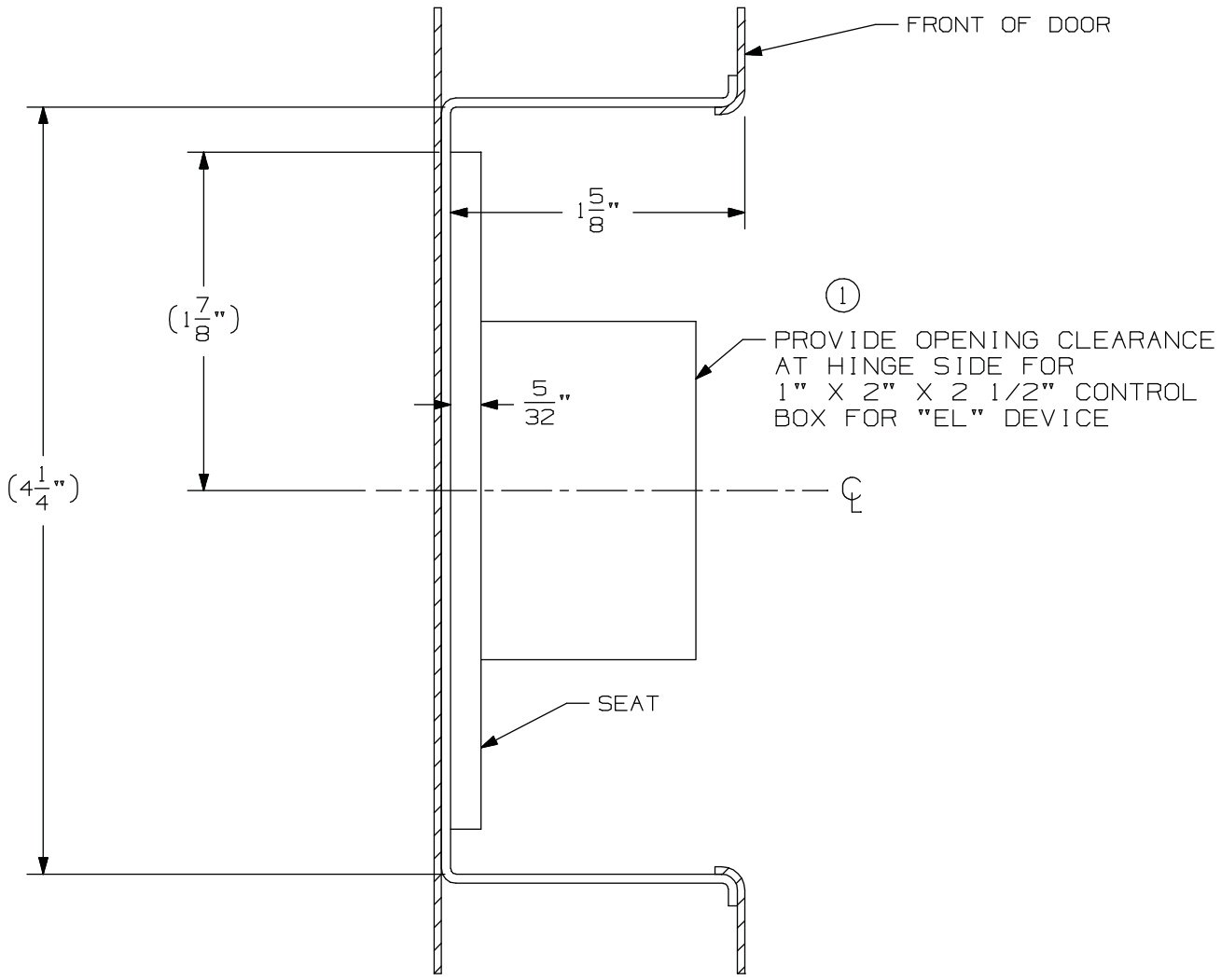

94/9547/47-F-LBR Concealed Vertical Rod Device on 2' 6" up to 2' 9¾" Wide Doors

VON DUPRIN®

NOTES: For a door 2' 10" and larger see template #10325

TEMPLATE NUMBER: 10326_c Sht 2

DATE: 05-22-13

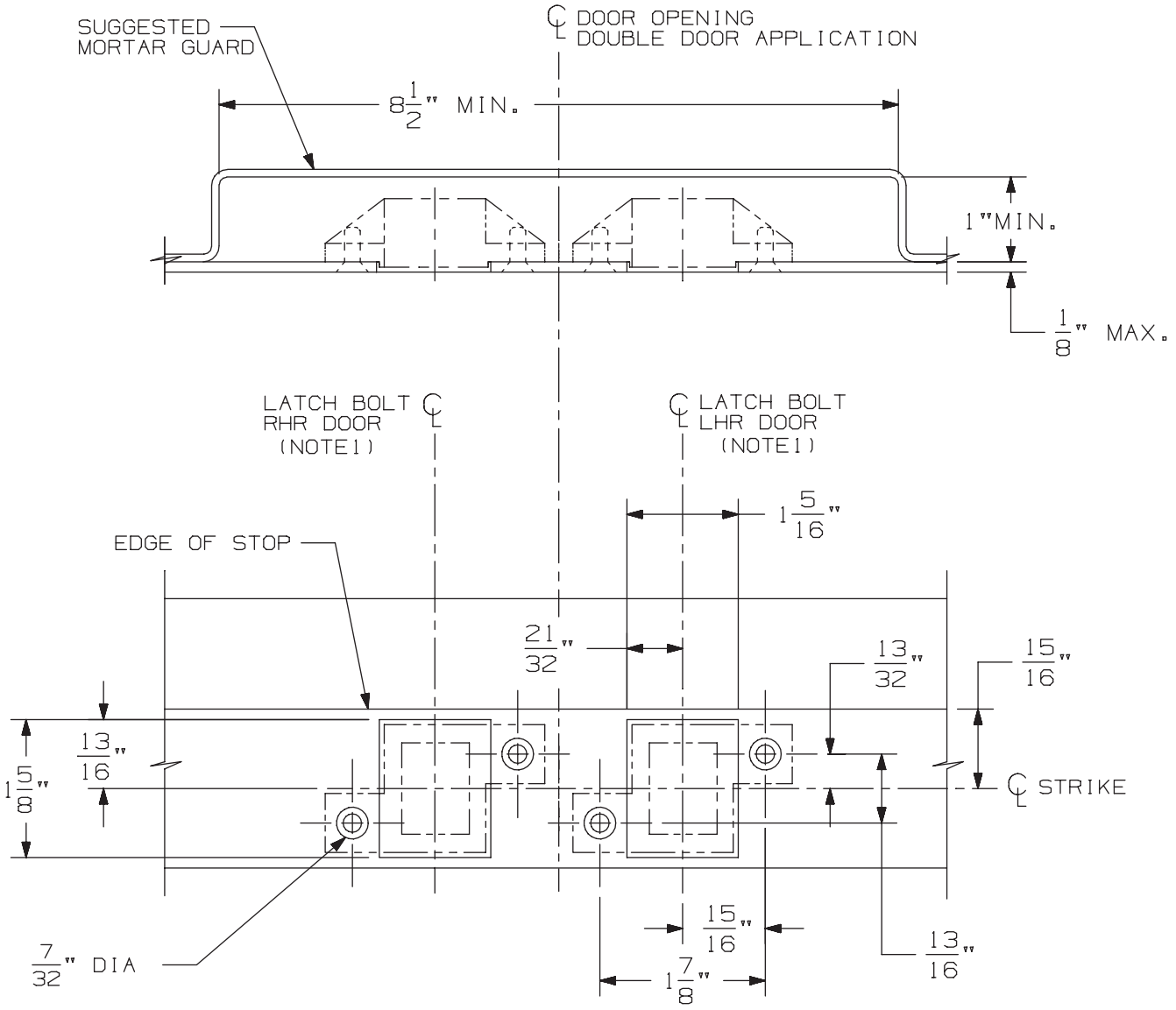

3/8" DIA X 82° C'SINK

IN FRAME
2 HOLES
EACH STRIKE

DOUBLE DOOR APPLICATION SHOWN.
FOR SINGLE DOOR APPLICATION USE
APPROPRIATE HANDING AS SHOWN.

DEVICE APPLICATION SCHEDULE
33/3547 & 33/3547-F SERIES DEVICE
98/99/47 & 98/99/47-F SERIES DEVICE
5547/5547 WDC SERIES
33/3547A & 33/3547A-F SERIES DEVICE
(9) 94/9547 SERIES DEVICE

NOTES: 1. SEE DEVICE TEMPLATE FOR LOCATION OF LATCH BOLT.

2. IF DEVICE IS TO BE MOUNTED ON WOOD DOORS, SEE WOOD DOOR TEMPLATE FOR LATCH BOLT LOCATION.

338 Strike for Hollow Metal Frame Preparation

VON DUPRIN®

NOTES: SEE MASTER SHEET #10001 FOR SUGGESTED REINFORCING

TEMPLATE NUMBER: 30038_a

DATE: 05-23-13

INPACT® - 94 / 95 Series Exit Devices

-

9447-F/9547-F Concealed Vertical Rod (Standard, EL & LX)

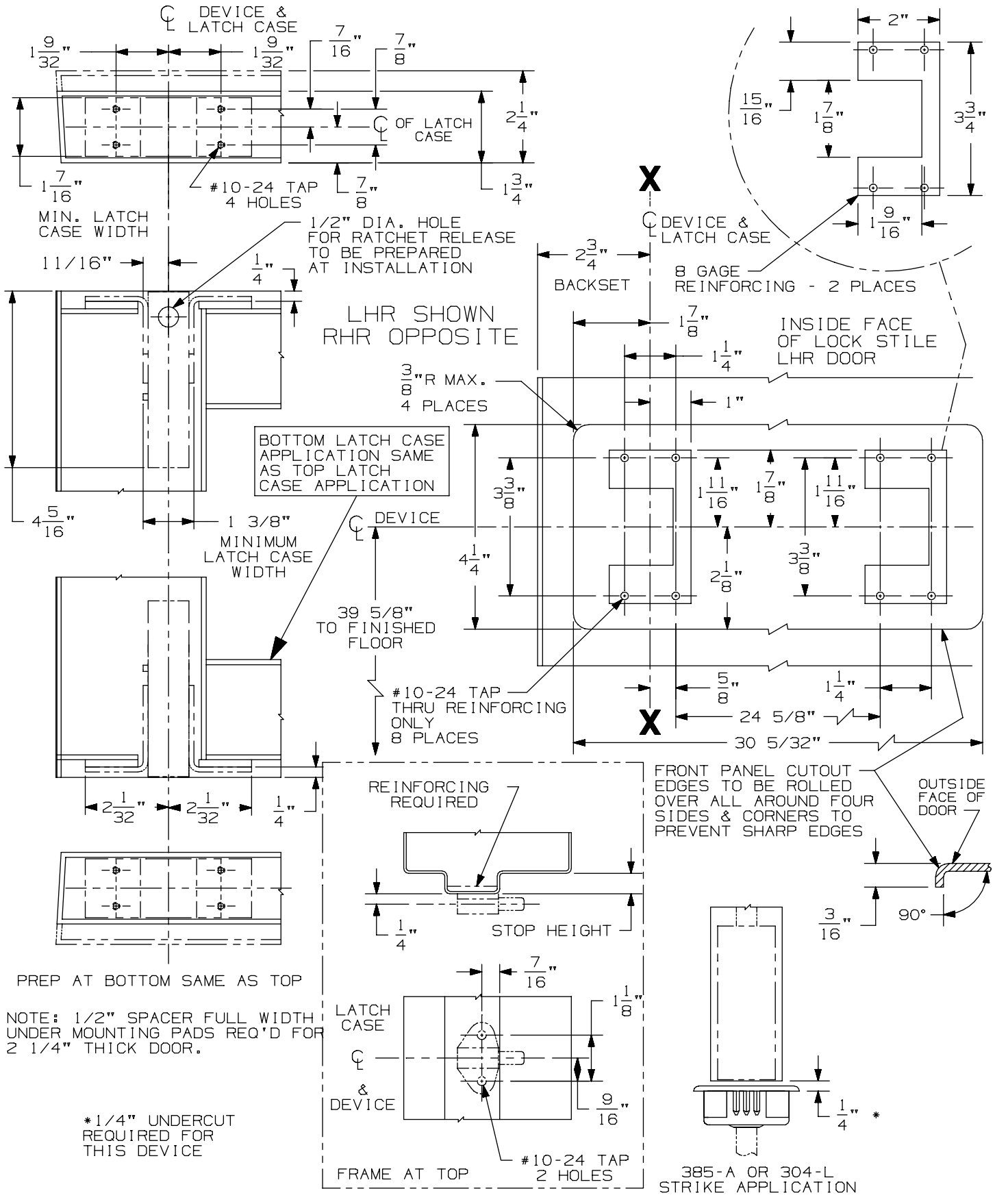

94/9547/47-F Concealed Vertical Rod Device on 2' 10" up to 4' 0" Wide Door

VON DUPRIN®

NOTES: For a door smaller than 2' 10" see template #10375

TEMPLATE NUMBER: 10324_a Sht1

DATE: 05-22-13

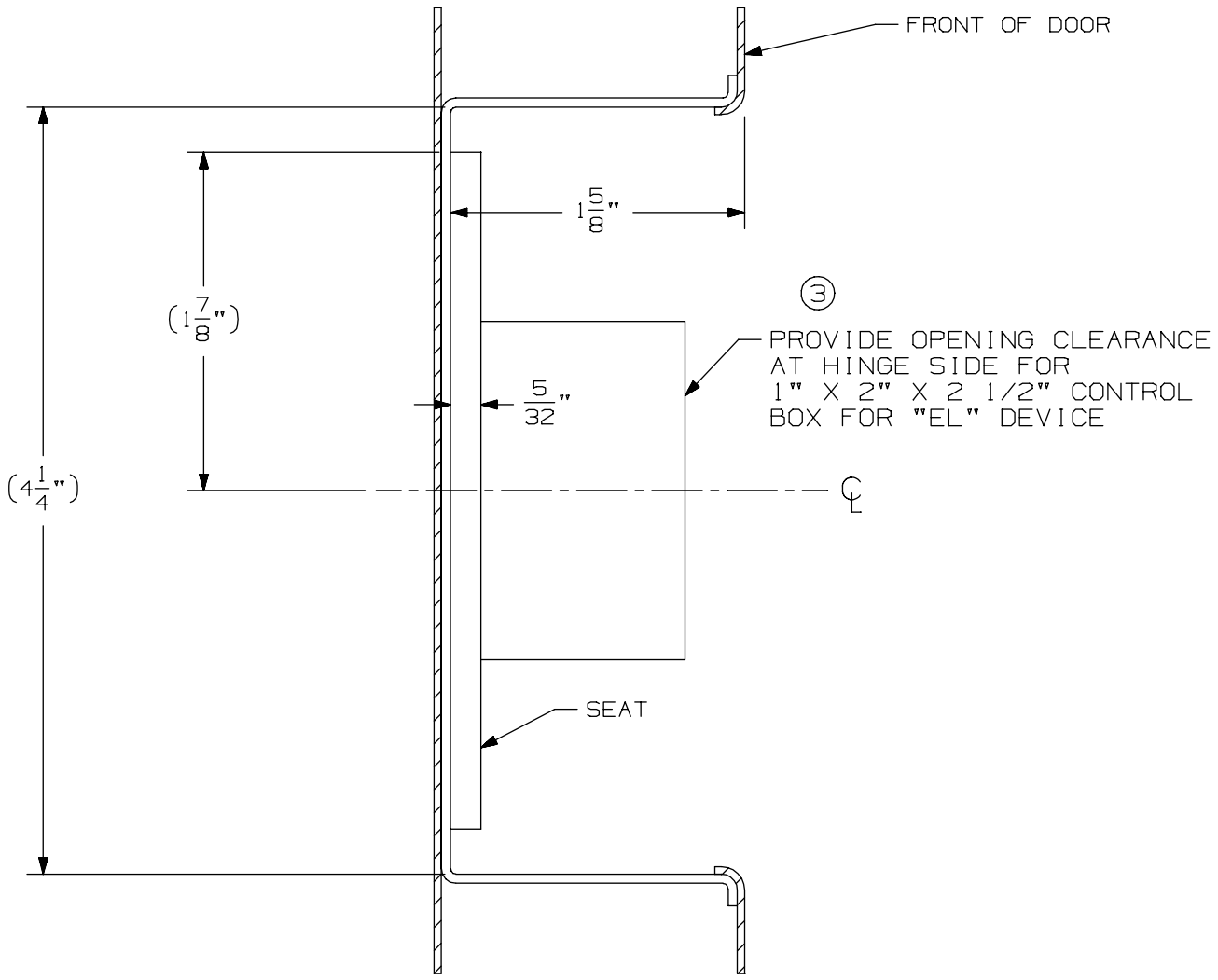

94/9547/47-F Concealed Vertical Rod Device on 2' 10" up to 4' 0" Wide Door

VON DUPRIN®

NOTES: For a door smaller than 2' 10" see template # 10375

TEMPLATE NUMBER: 10324_a Sht 2

DATE: 05-22-13

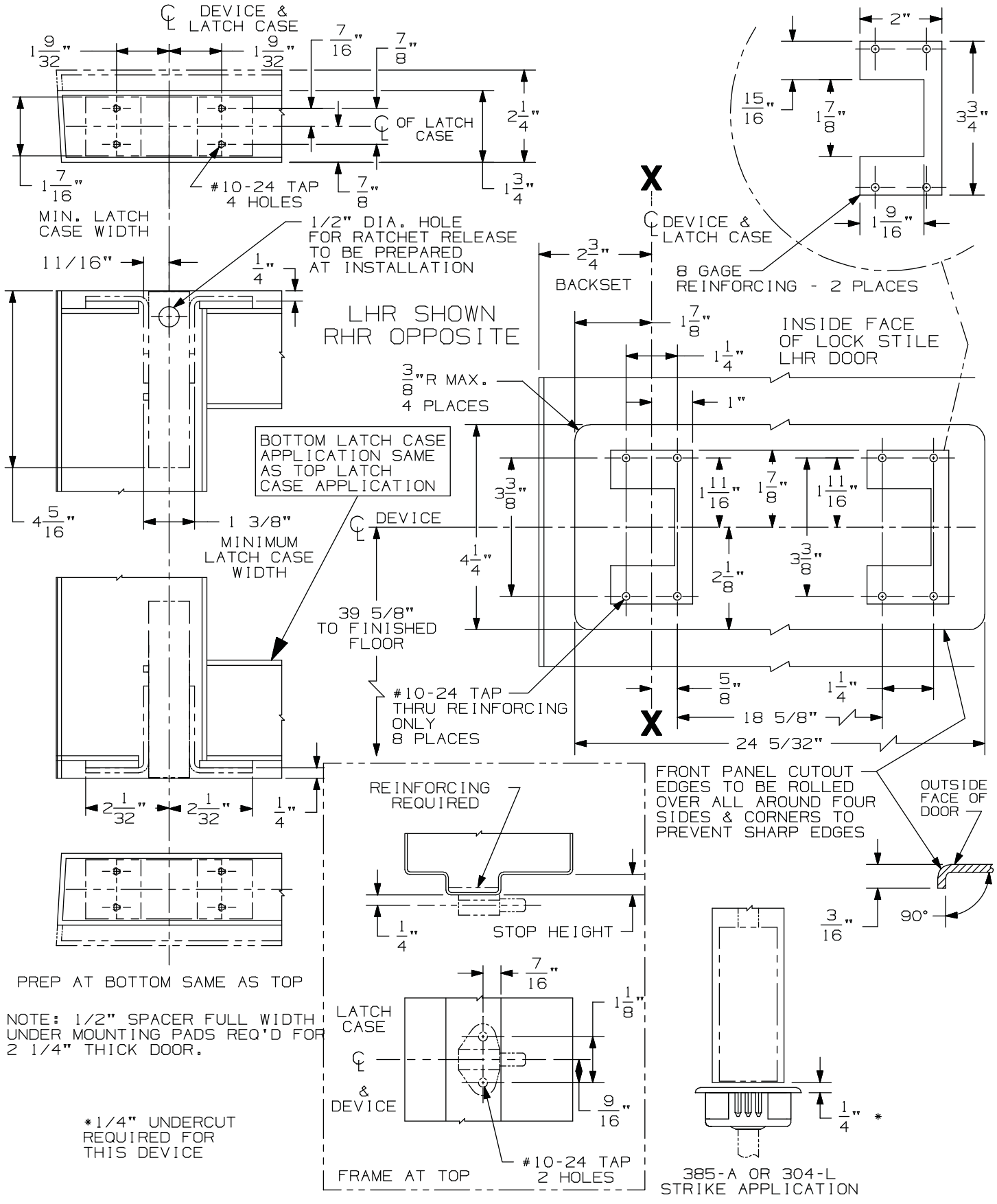

95/9547/47-F Concealed Vertical Rod Device on 2' 6" up to 2' 9 ¾" Wide Doors

VON DUPRIN®

NOTES: See Master Sheet #10001 For Suggested Reinforcing
For a door 2' 10" and larger see template # 10324

TEMPLATE NUMBER: 10375_c Sht 1

DATE: 05-22-13

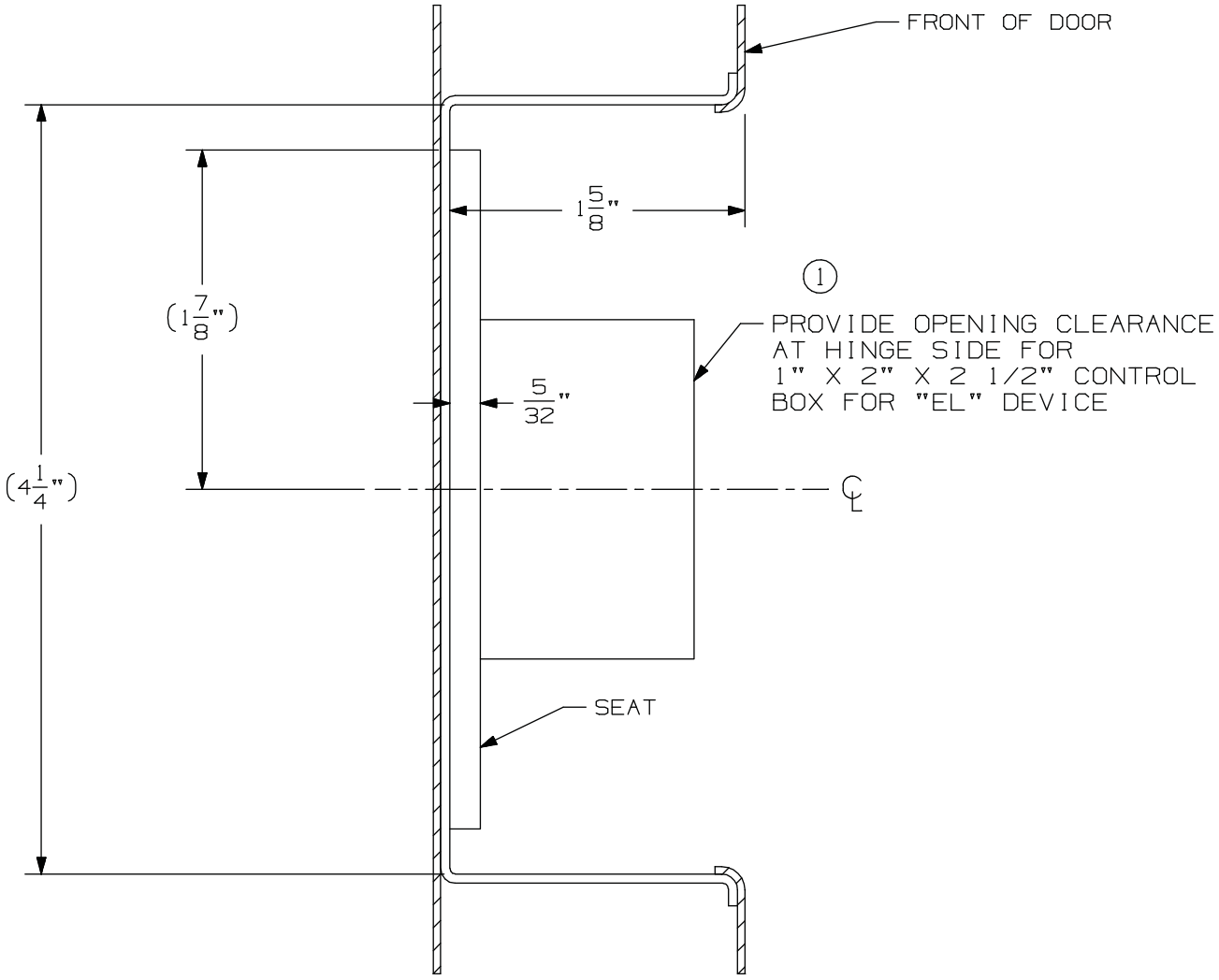

95/9547/47-F Concealed Vertical Rod Device on 2' 6" up to 2' 9 ¾" Wide Doors

VON DUPRIN®

NOTES: See Master Sheet #10001 For Suggested Reinforcing
For a door 2' 10" and larger see template # 10324

TEMPLATE NUMBER: 10375_c Sht 2

DATE: 05-22-13

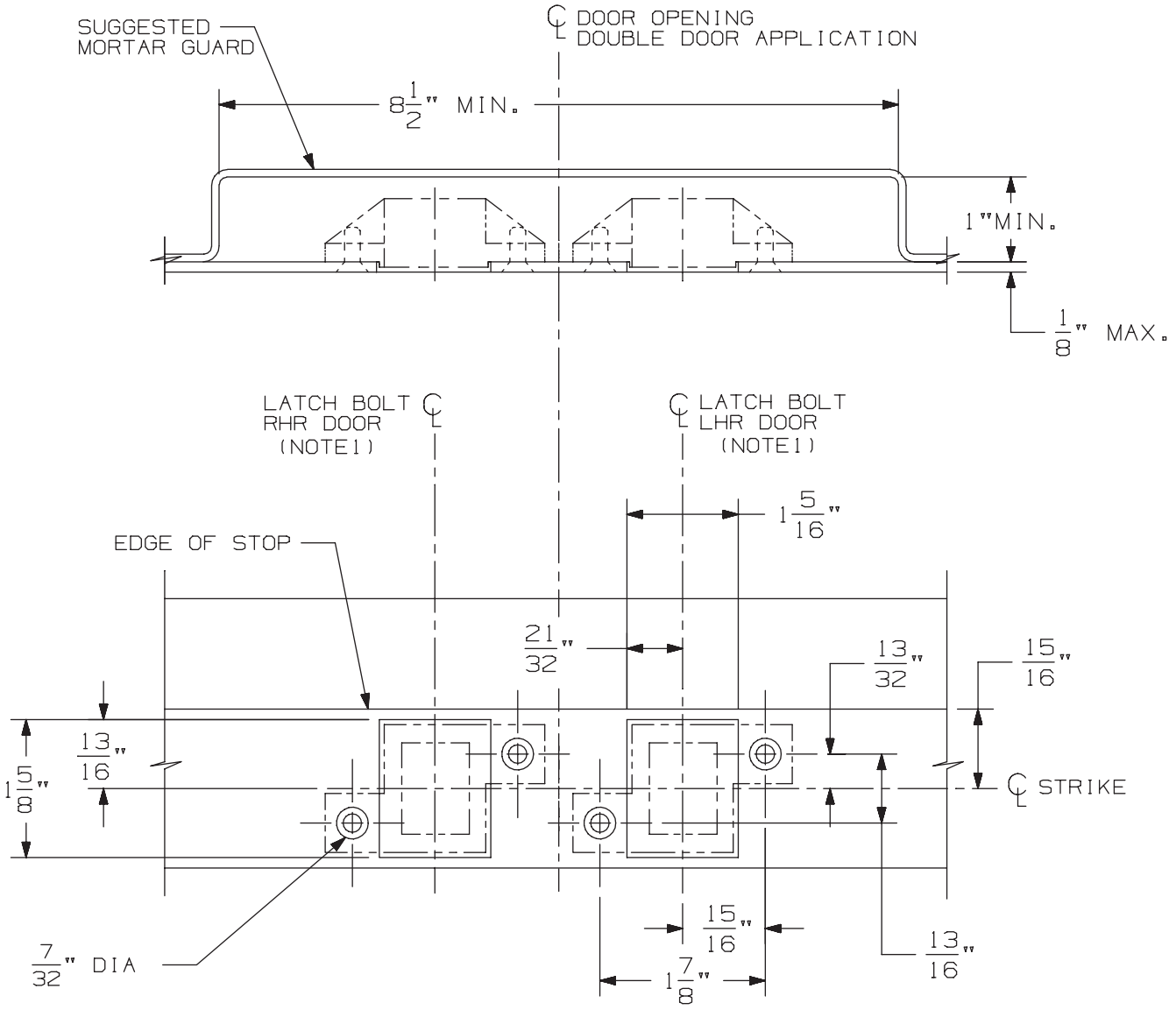

3/8" DIA X 82° C'SINK

IN FRAME
2 HOLES
EACH STRIKE

DOUBLE DOOR APPLICATION SHOWN.
FOR SINGLE DOOR APPLICATION USE
APPROPRIATE HANDING AS SHOWN.

DEVICE APPLICATION SCHEDULE
33/3547 & 33/3547-F SERIES DEVICE
98/99/47 & 98/99/47-F SERIES DEVICE
5547/5547 WDC SERIES
33/3547A & 33/3547A-F SERIES DEVICE
(9) 94/9547 SERIES DEVICE

NOTES: 1. SEE DEVICE TEMPLATE FOR LOCATION OF LATCH BOLT.

2. IF DEVICE IS TO BE MOUNTED ON WOOD DOORS, SEE WOOD DOOR TEMPLATE FOR LATCH BOLT LOCATION.

338 Strike for Hollow Metal Frame Preparation

VON DUPRIN®

NOTES: SEE MASTER SHEET #10001 FOR SUGGESTED REINFORCING

TEMPLATE NUMBER: 30038_a

DATE: 05-23-13

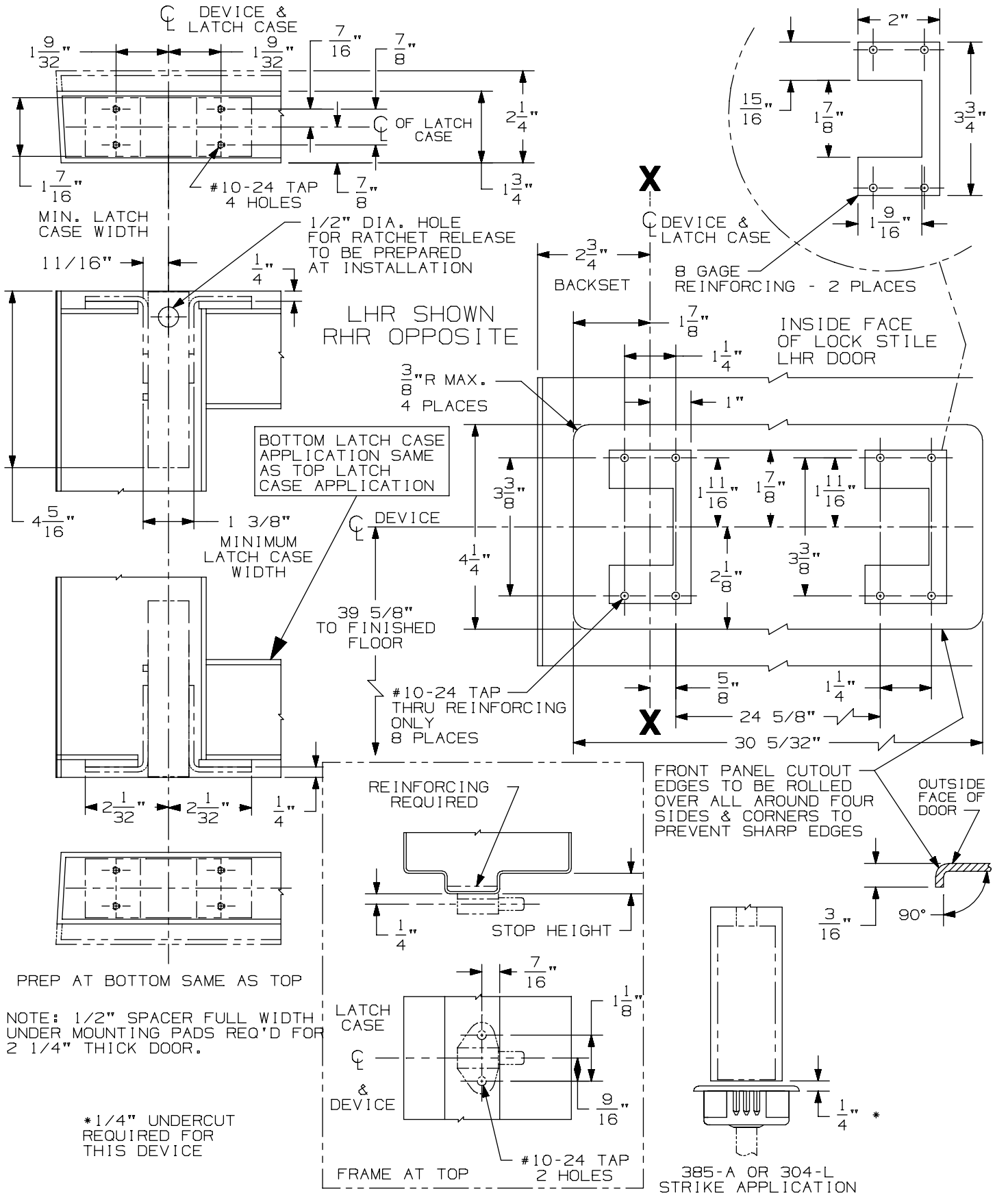

94/9547/47-F Concealed Vertical Rod Device on 2' 10" up to 4' 0" Wide Door

VON DUPRIN®

NOTES: For a door smaller than 2' 10" see template #10375

TEMPLATE NUMBER: 10324_a Sht1

DATE: 05-22-13

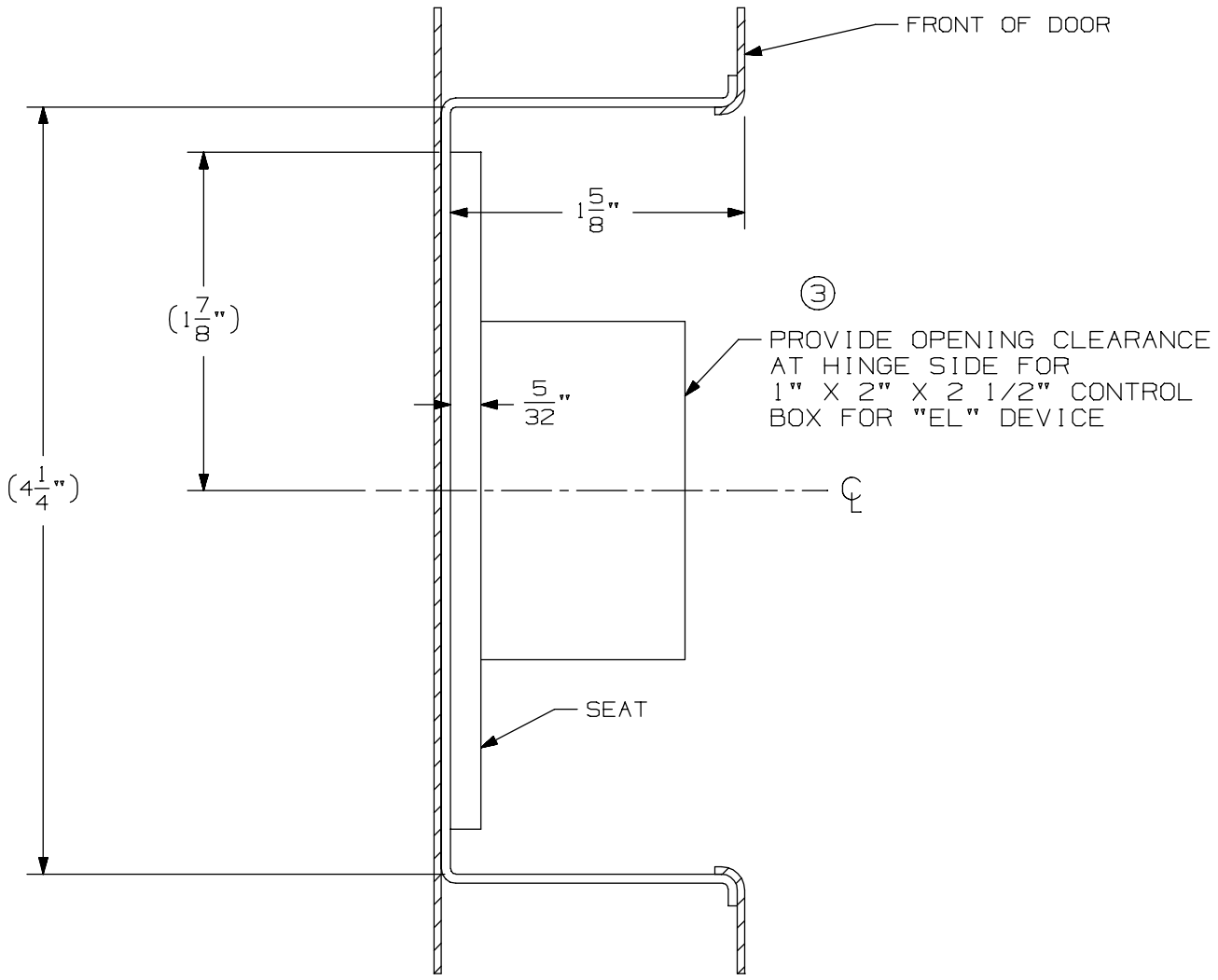

94/9547/47-F Concealed Vertical Rod Device on 2' 10" up to 4' 0" Wide Door

VON DUPRIN®

NOTES: For a door smaller than 2' 10" see template # 10375

TEMPLATE NUMBER: 10324_a Sht 2

DATE: 05-22-13

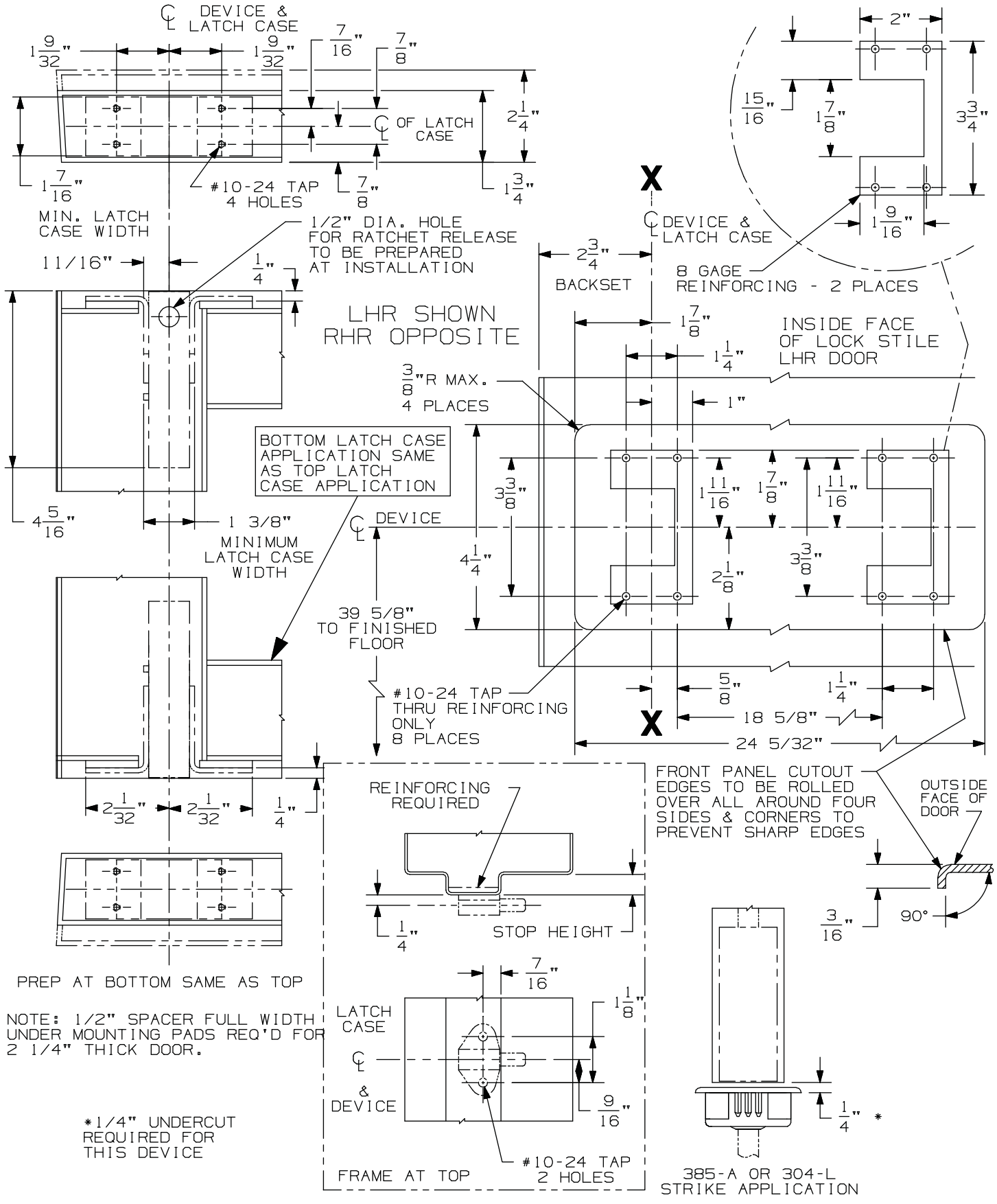

95/9547/47-F Concealed Vertical Rod Device on 2' 6" up to 2' 9 ¾" Wide Doors

VON DUPRIN®

NOTES: See Master Sheet #10001 For Suggested Reinforcing
For a door 2' 10" and larger see template # 10324

TEMPLATE NUMBER: 10375_c Sht 1

DATE: 05-22-13

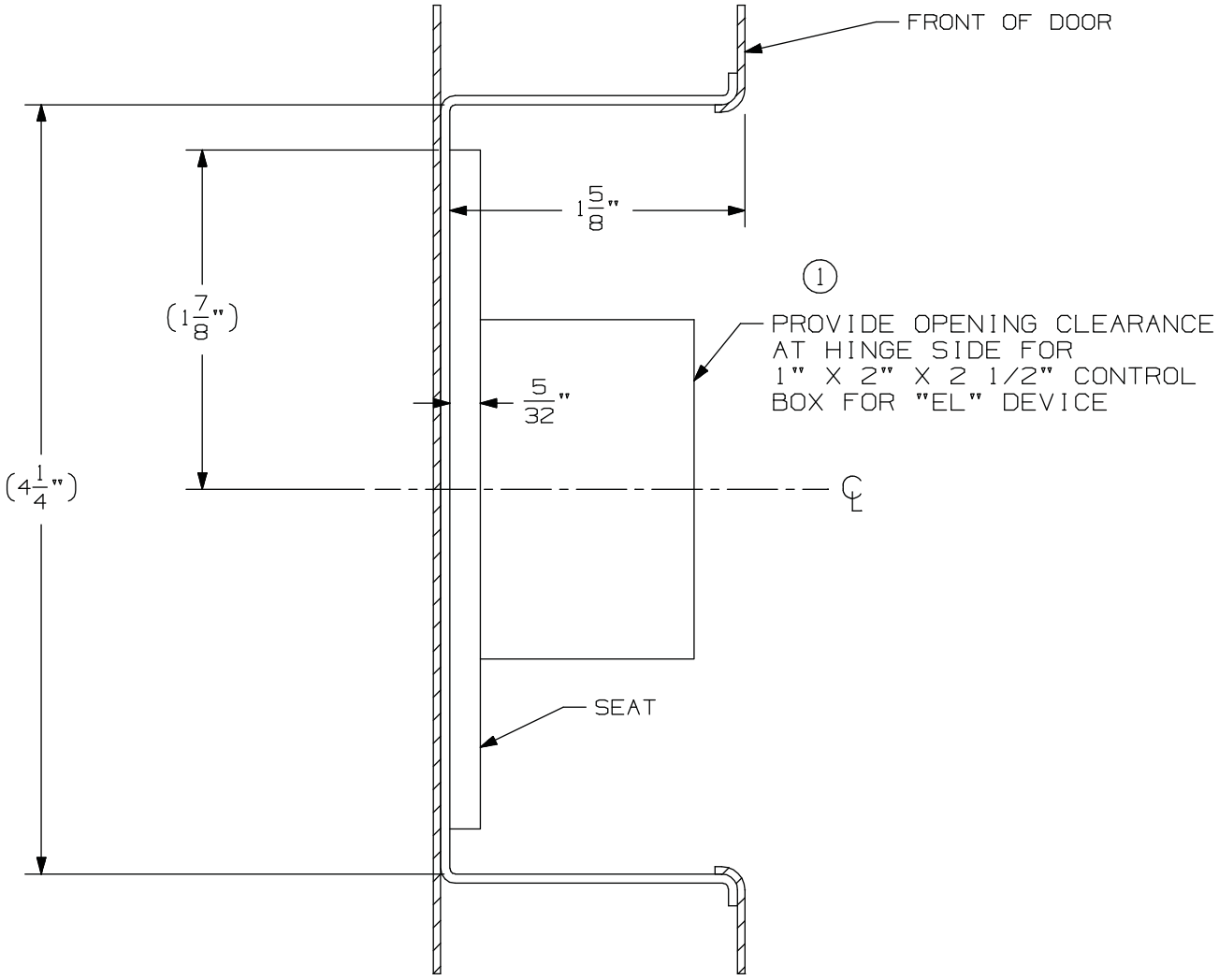

95/9547/47-F Concealed Vertical Rod Device on 2' 6" up to 2' 9 ¾" Wide Doors

VON DUPRIN®

NOTES: See Master Sheet #10001 For Suggested Reinforcing
For a door 2' 10" and larger see template # 10324

TEMPLATE NUMBER: 10375_c Sht 2

DATE: 05-22-13

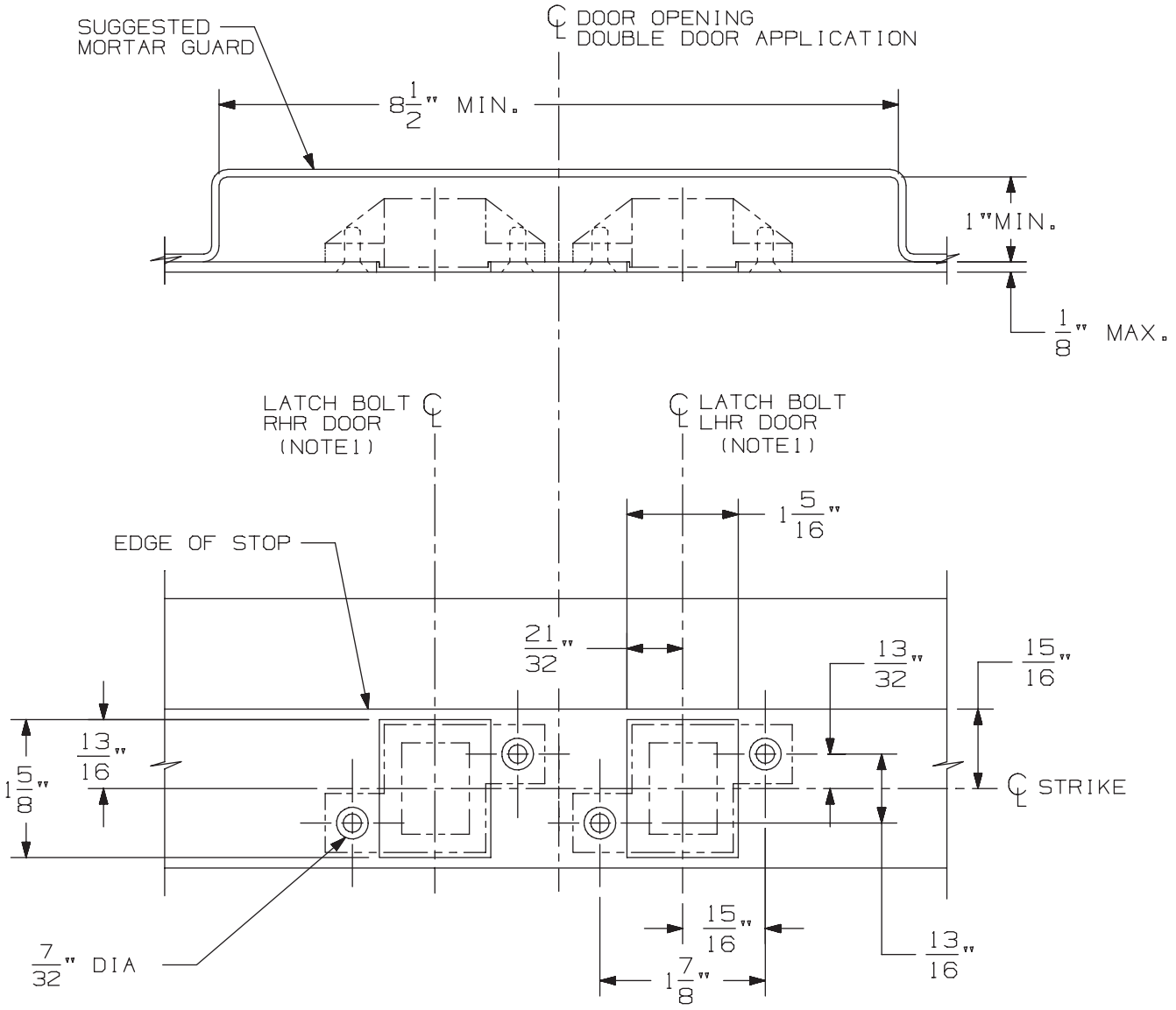

3/8" DIA X 82° C'SINK

IN FRAME
2 HOLES
EACH STRIKE

DOUBLE DOOR APPLICATION SHOWN.
FOR SINGLE DOOR APPLICATION USE
APPROPRIATE HANDING AS SHOWN.

DEVICE APPLICATION SCHEDULE
33/3547 & 33/3547-F SERIES DEVICE
98/99/47 & 98/99/47-F SERIES DEVICE
5547/5547 WDC SERIES
33/3547A & 33/3547A-F SERIES DEVICE
(9) 94/9547 SERIES DEVICE

NOTES: 1. SEE DEVICE TEMPLATE FOR LOCATION OF LATCH BOLT.

2. IF DEVICE IS TO BE MOUNTED ON WOOD DOORS, SEE WOOD DOOR TEMPLATE FOR LATCH BOLT LOCATION.

338 Strike for Hollow Metal Frame Preparation

VON DUPRIN®

NOTES: SEE MASTER SHEET #10001 FOR SUGGESTED REINFORCING

TEMPLATE NUMBER: 30038_a

DATE: 05-23-13

INPACT® - 94 / 95 Series Exit Devices - 9447-F-LBR /9547-F-LBR Concealed Vertical Rod (Standard, EL, LX and RX)

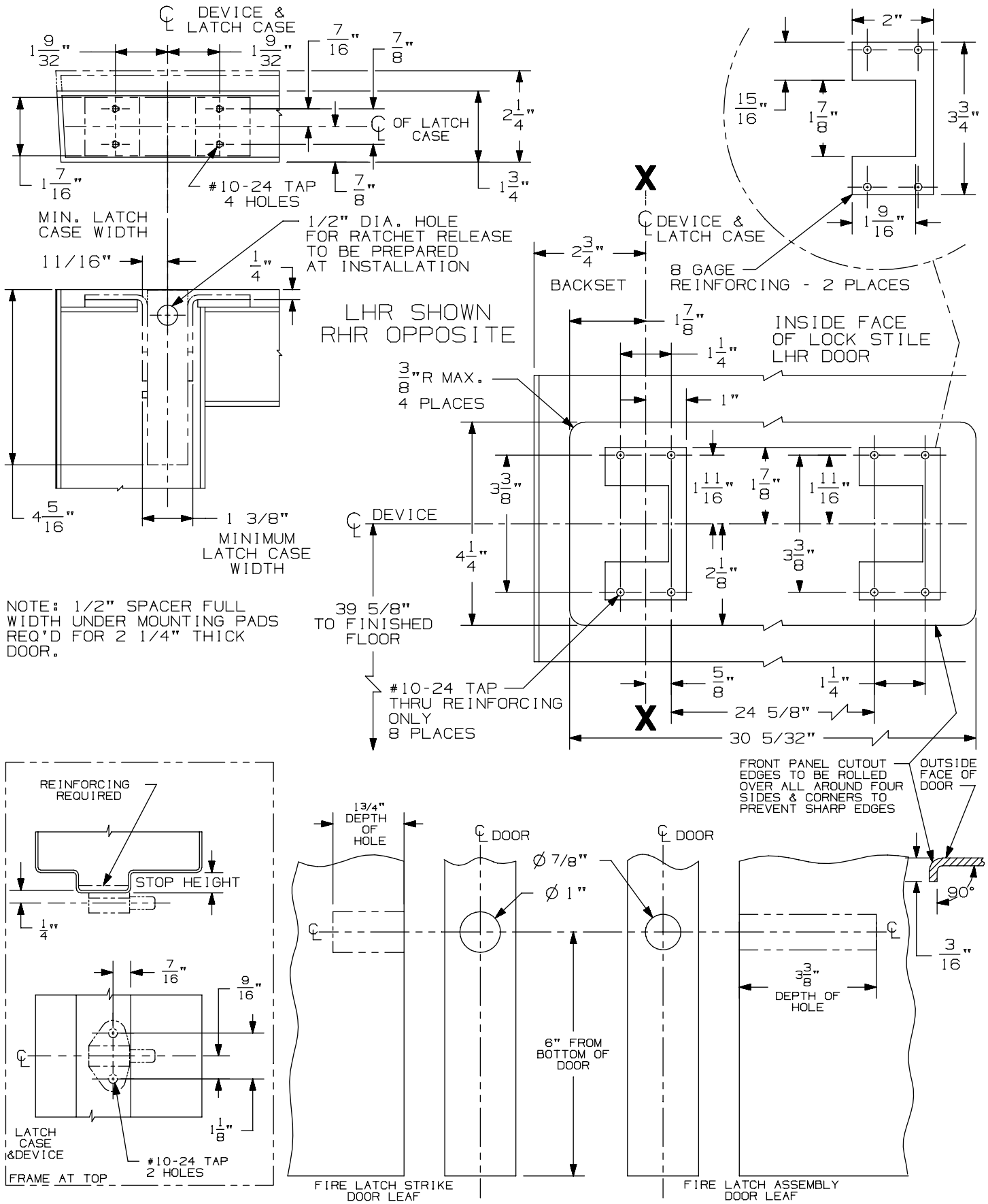

94/9547/47-F-LBR Concealed Vertical Rod Device on 2' 10" up to 4' 0" Wide Door

VON DUPRIN®

NOTES: For a door smaller than 2' 10" see template # 10326

TEMPLATE NUMBER: 10325_a Sht 1

DATE: 05-22-13

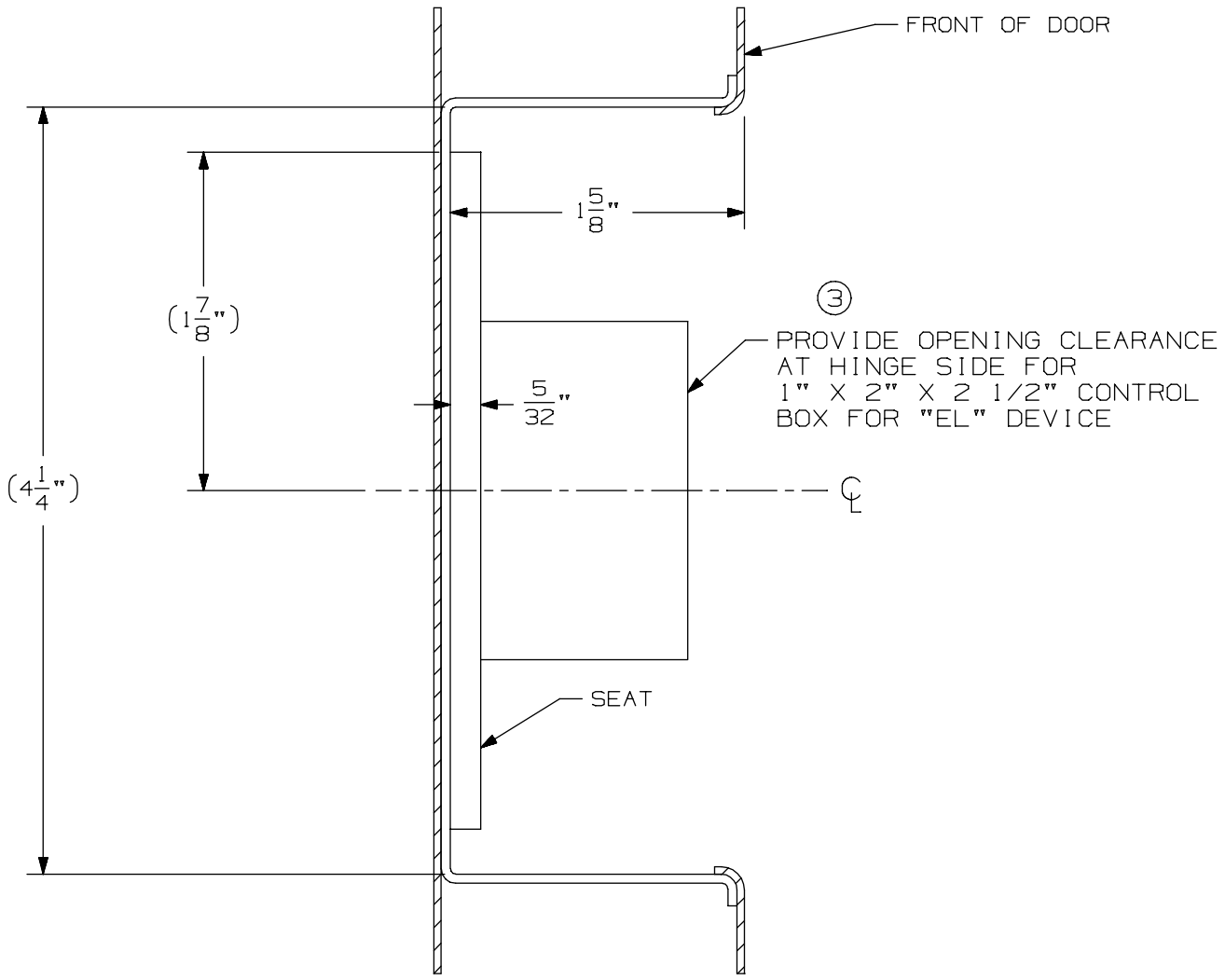

94/9547/47-F-LBR Concealed Vertical Rod Device on 2' 10" up to 4' 0" Wide Door

VON DUPRIN®

NOTES: For a door smaller than 2' 10" see template #10326

TEMPLATE NUMBER: 10325_a Sht 2

DATE: 05-22-13

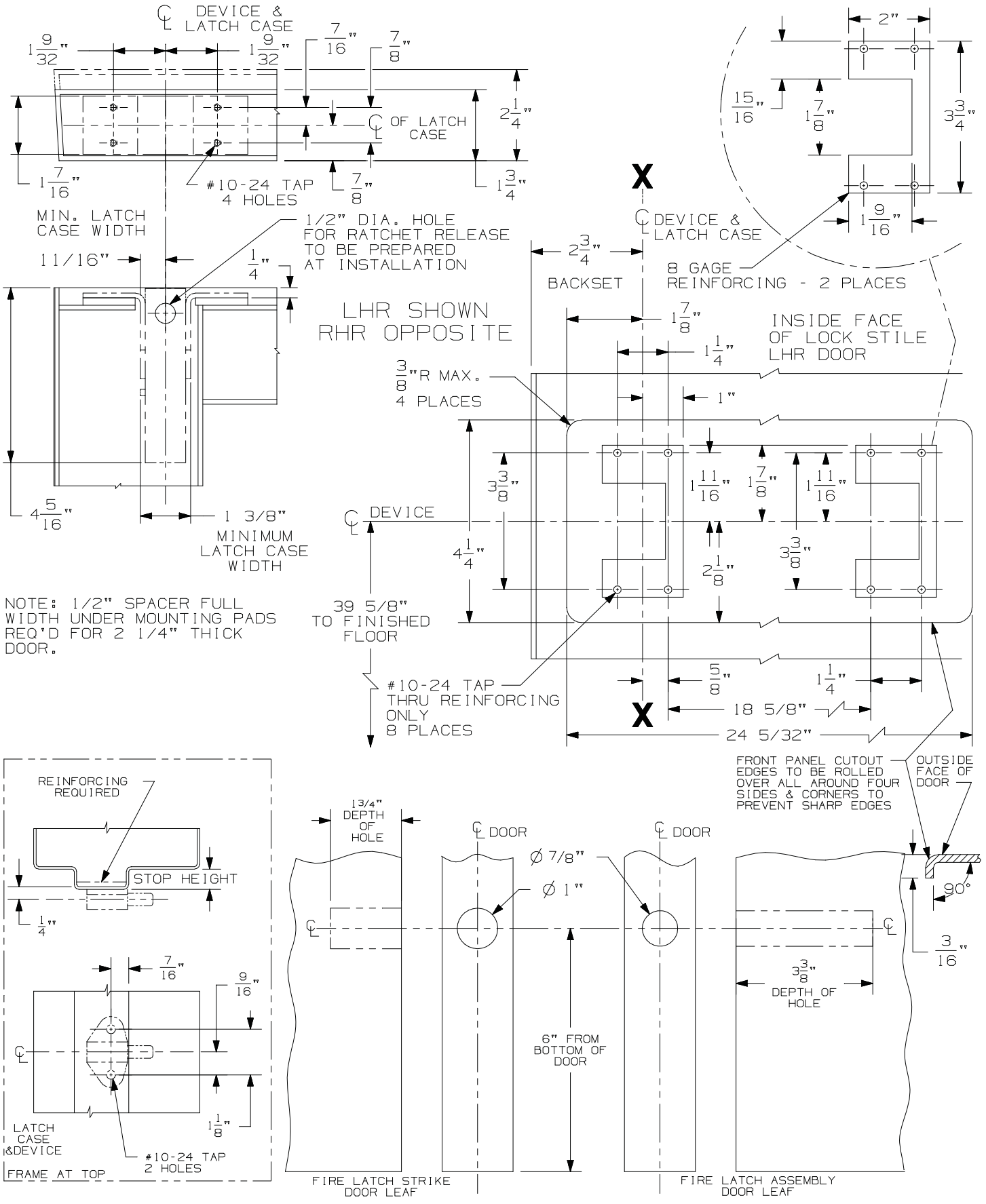

94/9547/47-F-LBR Concealed Vertical Rod Device on 2' 6" to 2' 9¾" Wide Doors

VON DUPRIN®

NOTES: For a door 2' 10" and larger see template 10325

TEMPLATE NUMBER: 10326_c Sht 1

DATE: 05-22-13

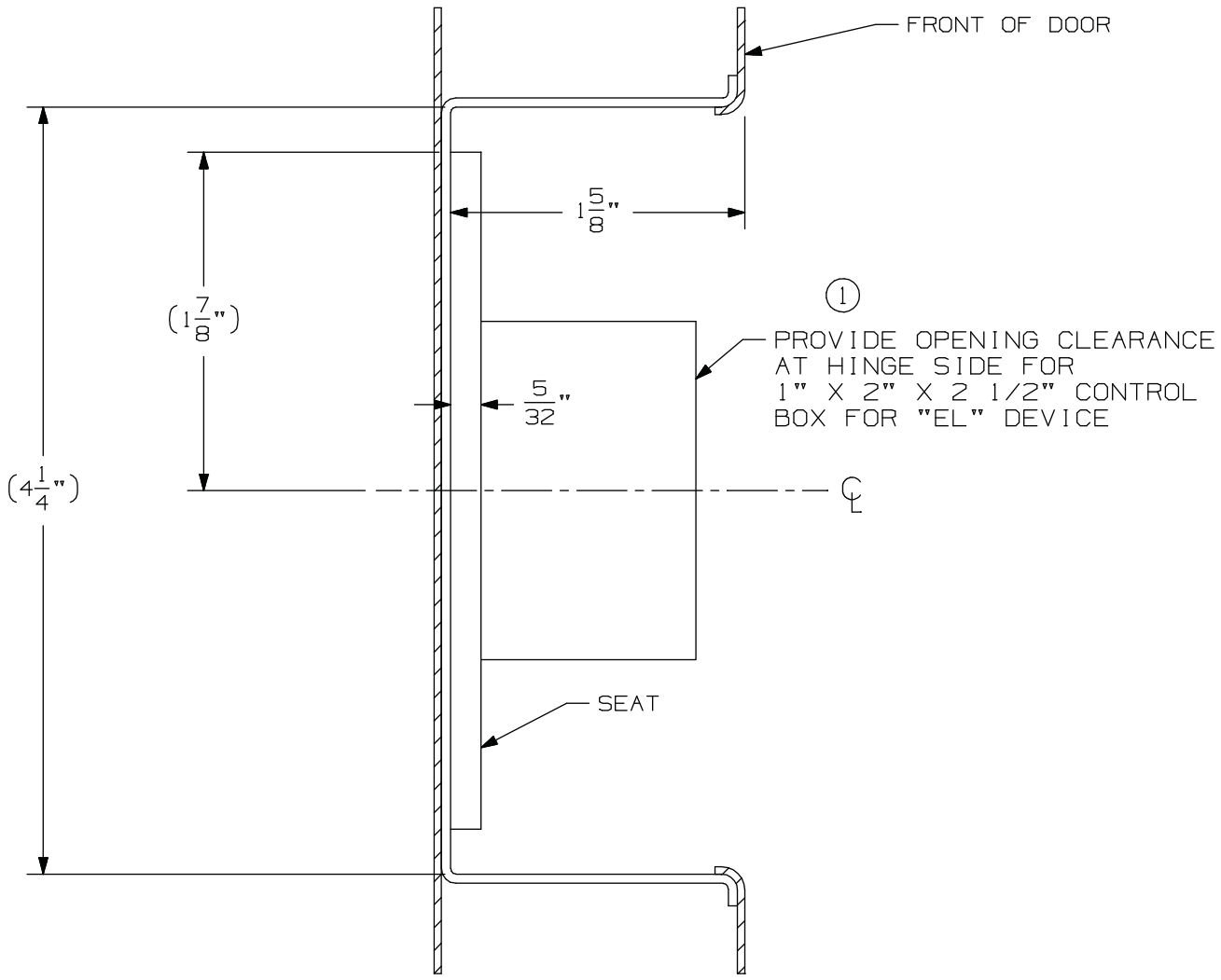

94/9547/47-F-LBR Concealed Vertical Rod Device on 2' 6" up to 2' 9¾" Wide Doors

VON DUPRIN®

NOTES: For a door 2' 10" and larger see template #10325

TEMPLATE NUMBER: 10326_c Sht 2

DATE: 05-22-13

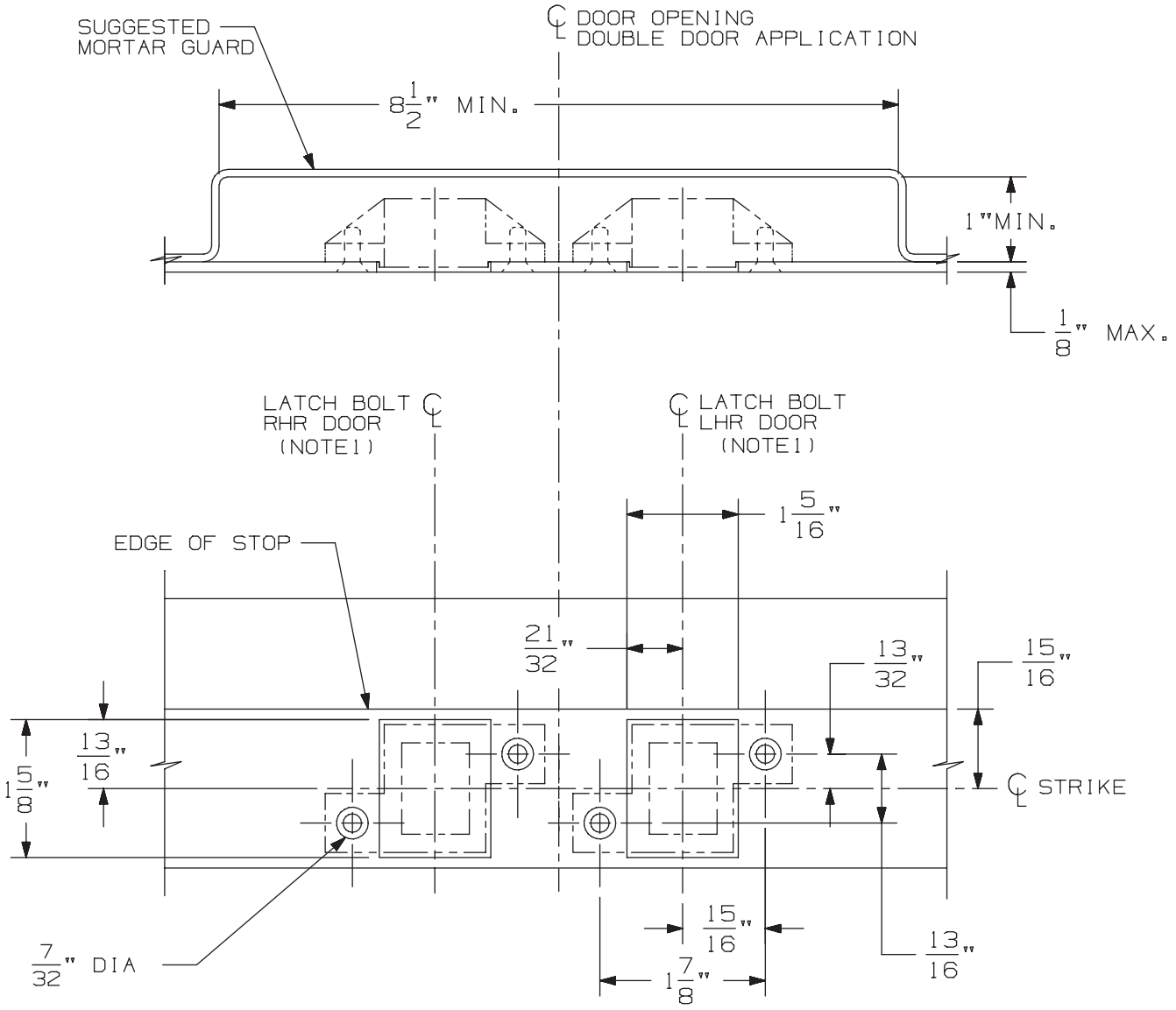

3/8" DIA X 82° C'SINK

IN FRAME
2 HOLES
EACH STRIKE

DOUBLE DOOR APPLICATION SHOWN.
FOR SINGLE DOOR APPLICATION USE
APPROPRIATE HANDING AS SHOWN.

DEVICE APPLICATION SCHEDULE
33/3547 & 33/3547-F SERIES DEVICE
98/99/47 & 98/99/47-F SERIES DEVICE
5547/5547 WDC SERIES
33/3547A & 33/3547A-F SERIES DEVICE
(9) 94/9547 SERIES DEVICE

NOTES: 1. SEE DEVICE TEMPLATE FOR LOCATION OF LATCH BOLT.

2. IF DEVICE IS TO BE MOUNTED ON WOOD DOORS, SEE WOOD DOOR TEMPLATE FOR LATCH BOLT LOCATION.

338 Strike for Hollow Metal Frame Preparation

VON DUPRIN®

NOTES: SEE MASTER SHEET #10001 FOR SUGGESTED REINFORCING

TEMPLATE NUMBER: 30038_a

DATE: 05-23-13

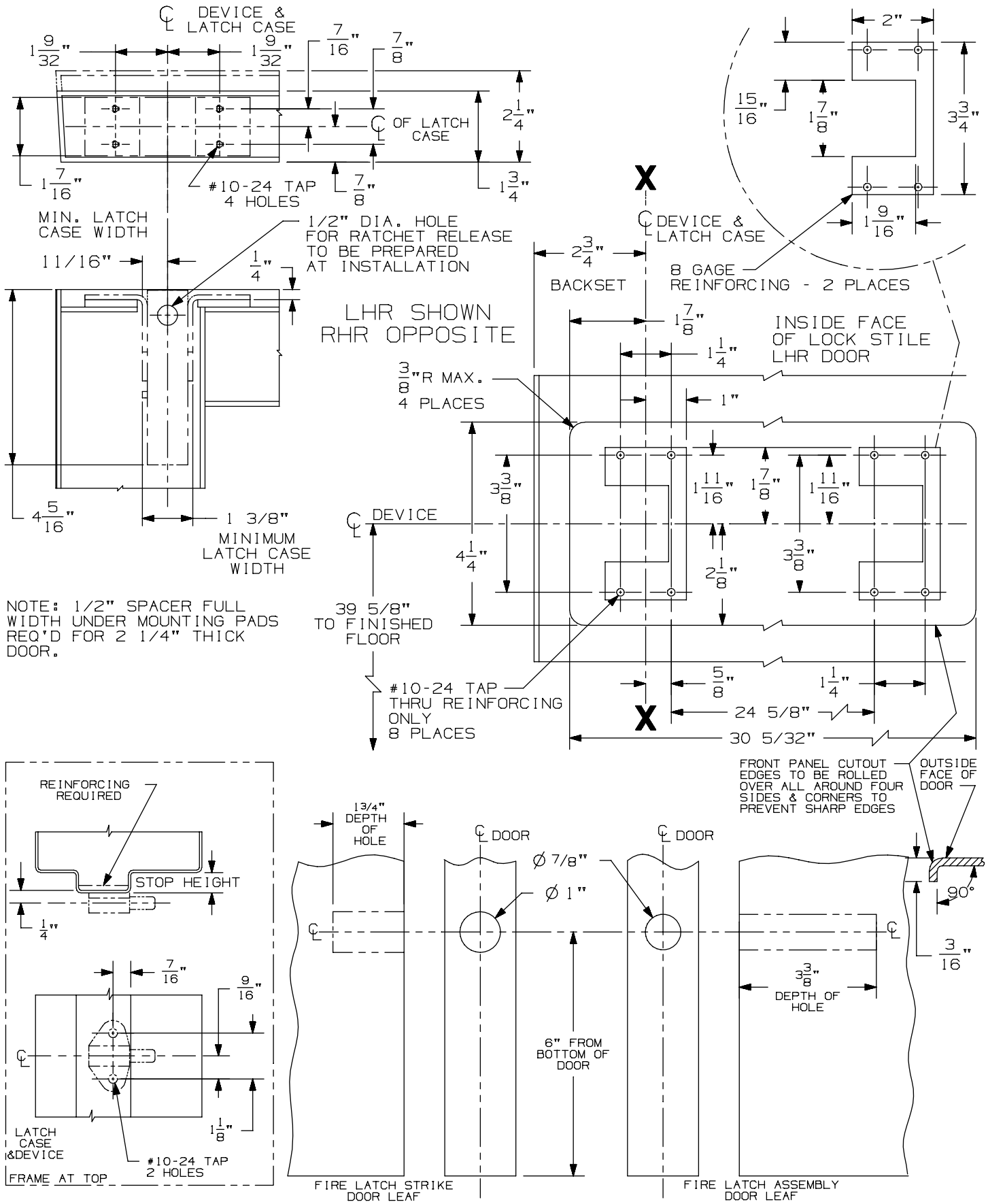

94/9547/47-F-LBR Concealed Vertical Rod Device on 2' 10" up to 4' 0" Wide Door

VON DUPRIN®

NOTES: For a door smaller than 2' 10" see template # 10326

TEMPLATE NUMBER: 10325_a Sht 1

DATE: 05-22-13

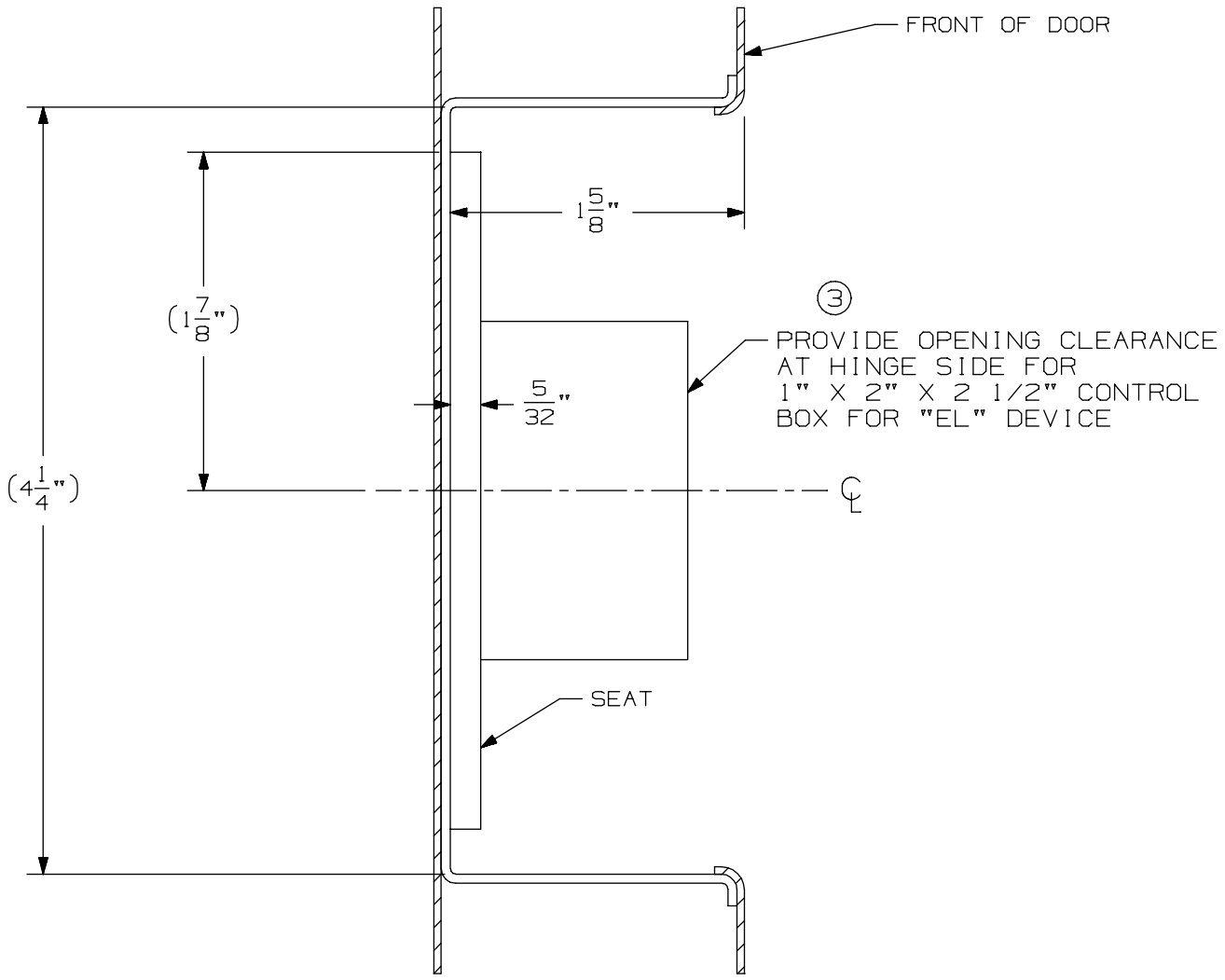

94/9547/47-F-LBR Concealed Vertical Rod Device on 2' 10" up to 4' 0" Wide Door

VON DUPRIN®

NOTES: For a door smaller than 2' 10" see template #10326

TEMPLATE NUMBER: 10325_a Sht 2

DATE: 05-22-13

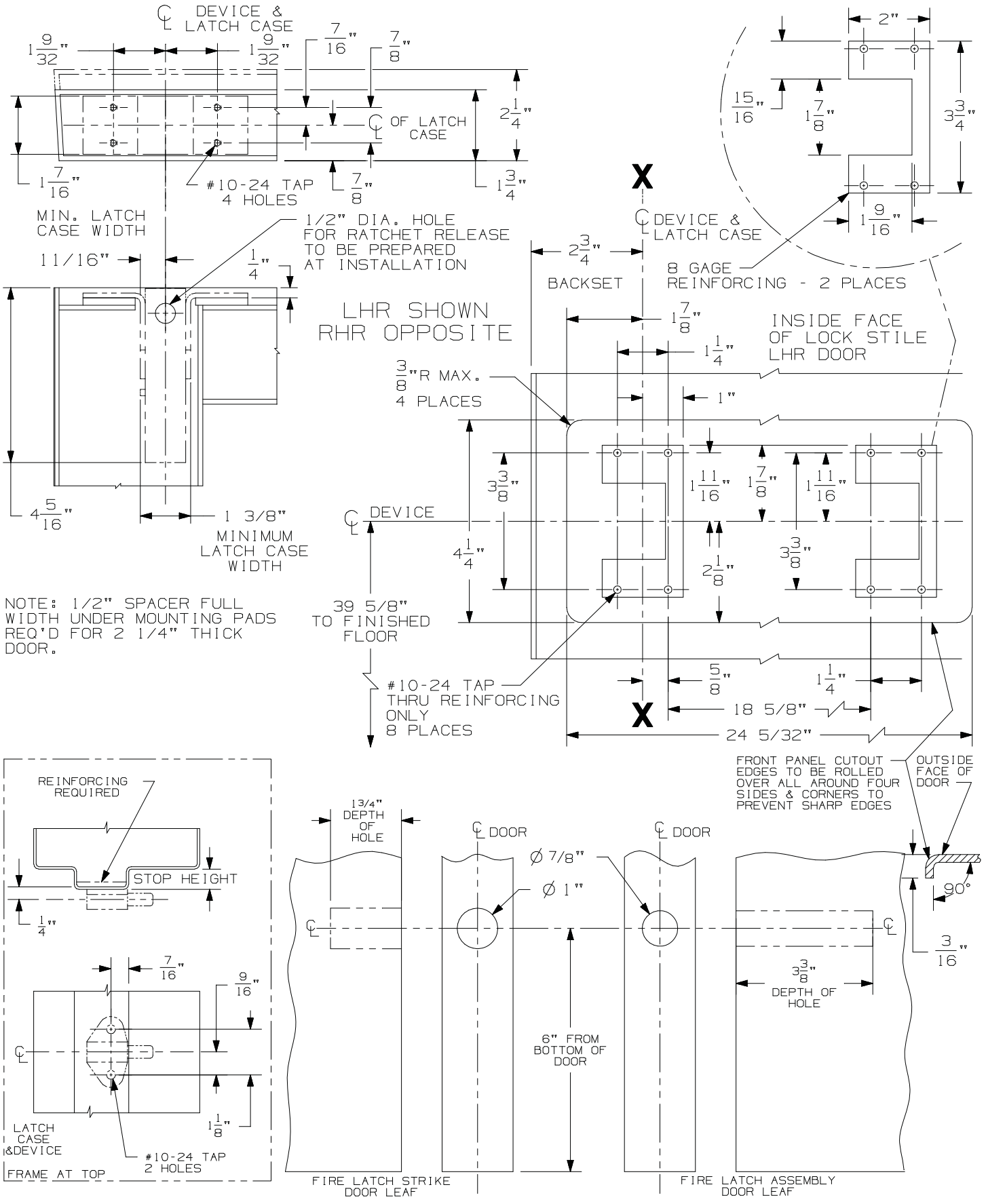

94/9547/47-F-LBR Concealed Vertical Rod Device on 2' 6" to 2' 9¾" Wide Doors

VON DUPRIN®

NOTES: For a door 2' 10" and larger see template 10325

TEMPLATE NUMBER: 10326_c Sht 1

DATE: 05-22-13

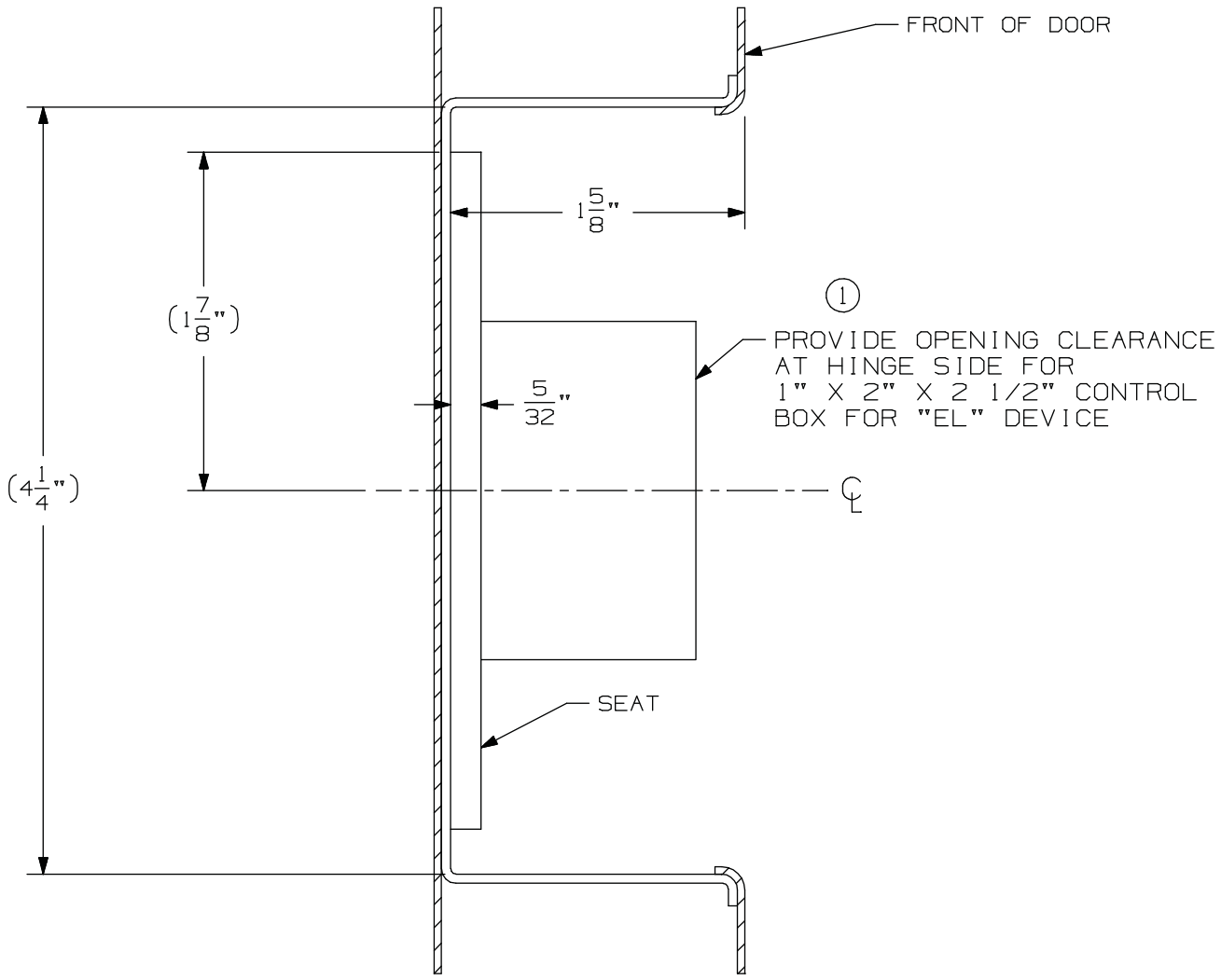

94/9547/47-F-LBR Concealed Vertical Rod Device on 2' 6" up to 2' 9¾" Wide Doors

VON DUPRIN®

NOTES: For a door 2' 10" and larger see template #10325

TEMPLATE NUMBER: 10326_c Sht 2

DATE: 05-22-13

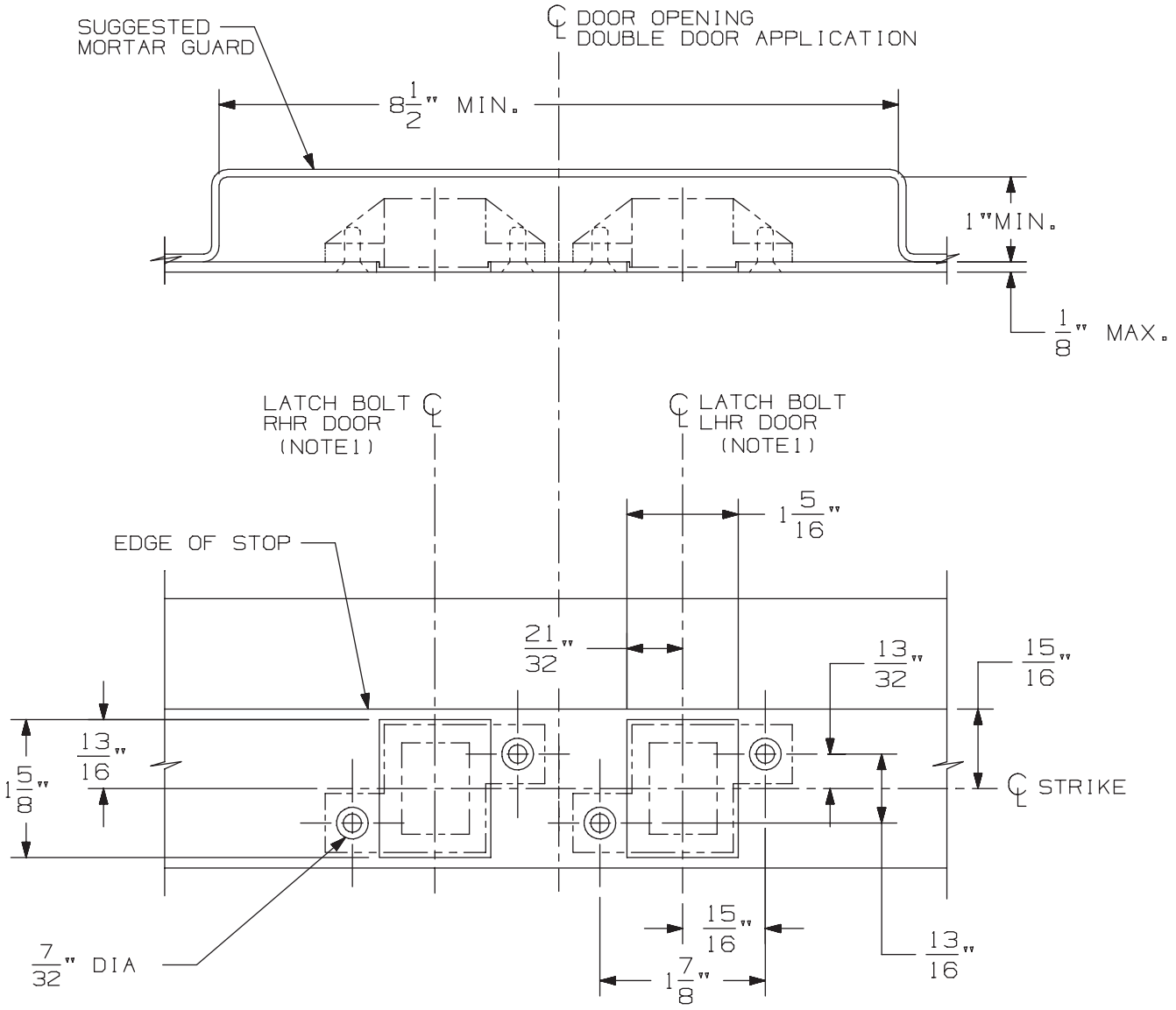

3/8" DIA X 82° C'SINK

IN FRAME
2 HOLES
EACH STRIKE

DOUBLE DOOR APPLICATION SHOWN.
FOR SINGLE DOOR APPLICATION USE
APPROPRIATE HANDING AS SHOWN.

DEVICE APPLICATION SCHEDULE
33/3547 & 33/3547-F SERIES DEVICE
98/99/47 & 98/99/47-F SERIES DEVICE
5547/5547 WDC SERIES
33/3547A & 33/3547A-F SERIES DEVICE
(9) 94/9547 SERIES DEVICE

NOTES: 1. SEE DEVICE TEMPLATE FOR LOCATION OF LATCH BOLT.

2. IF DEVICE IS TO BE MOUNTED ON WOOD DOORS, SEE WOOD DOOR TEMPLATE FOR LATCH BOLT LOCATION.

338 Strike for Hollow Metal Frame Preparation

VON DUPRIN®

NOTES: SEE MASTER SHEET #10001 FOR SUGGESTED REINFORCING

TEMPLATE NUMBER: 30038_a

DATE: 05-23-13

INPACT® - 94 / 95 Series Exit Devices - 9475/9575 Mortise (Standard, EL & SS)

9475/9575 & 9475-F/9575-F Series
Mortise Lock Devices

NOTES: SEE MASTER SHEET #10001 FOR SUGGESTED REINFORCING

TEMPLATE NUMBER: 10373_a

DATE: 05-22-13

VON DUPRIN®

NOTES:
1. WIRING TO LX LOCK GOES THROUGH DOOR NOT DEVICE.
2. FOR OUTSIDE TRIM PREPERATION, WHEN REQUIRED, SEE TRIM TEMPLATE.
3. SEE TEMPLATE #10372 AND #10374 FOR DEVICE PREP.

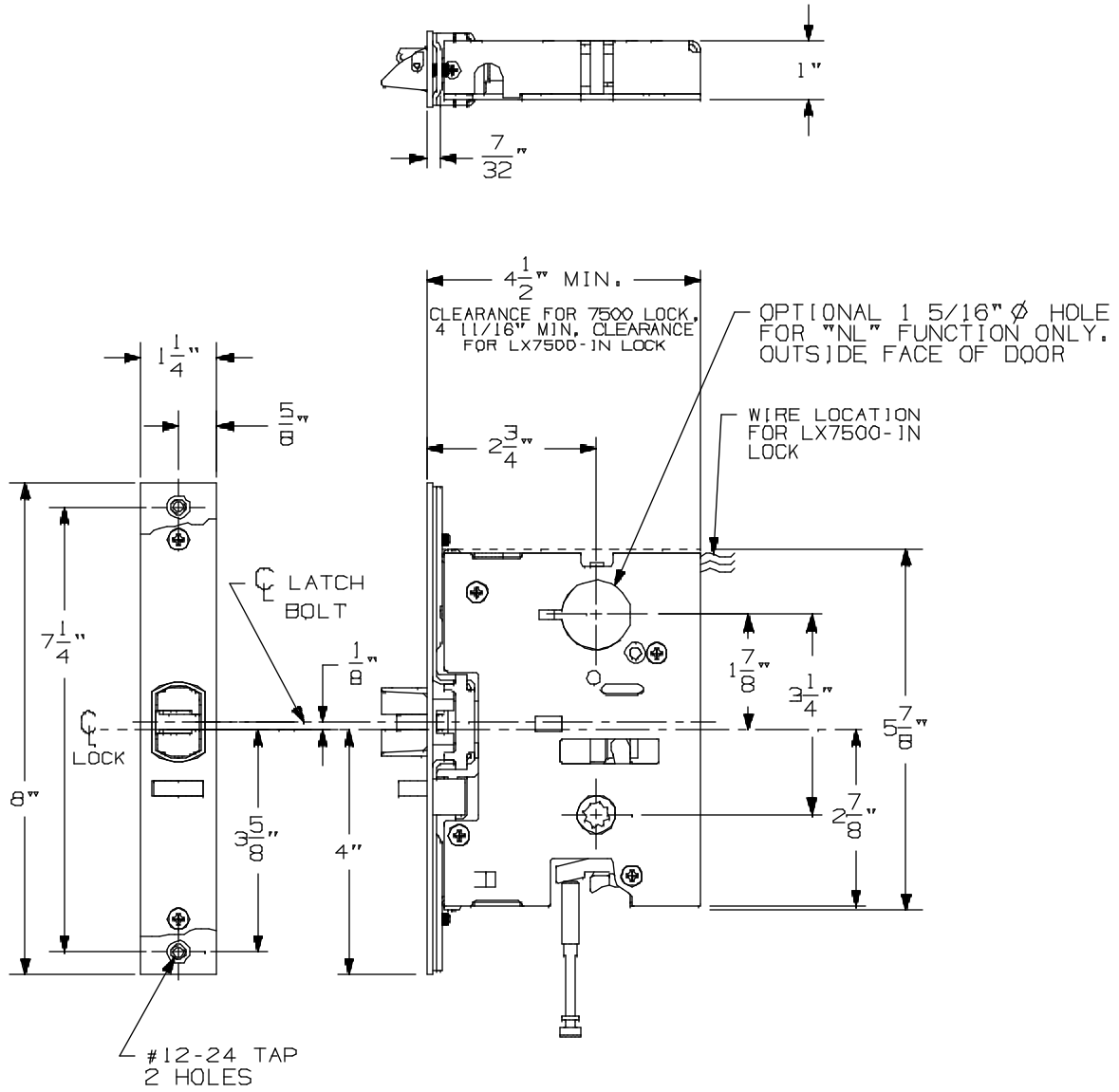

LHR APPLICATION SHOWN,
RHR APPLICATION OPPOSITE

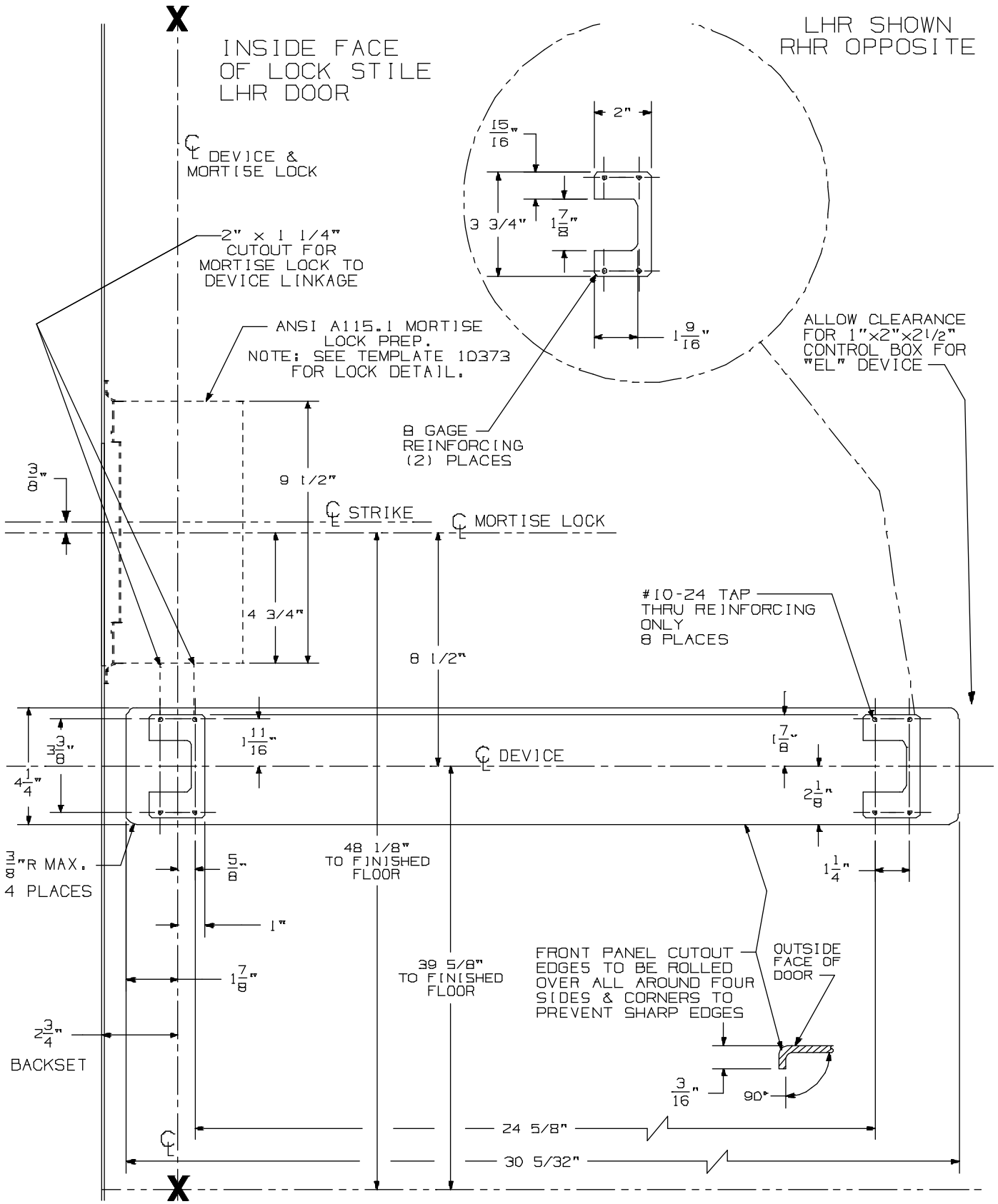

94/9575, 94/9575-F Mortise Device on 2' 10" up to 4' 0" Wide Door

VON DUPRIN®

NOTES: SEE MASTER SHEET #10001 FOR SUGGESTED REINFORCING
For a door smaller than 2' 10" see template #10374

TEMPLATE NUMBER: 10372_a Sht 1

DATE: 05-22-13

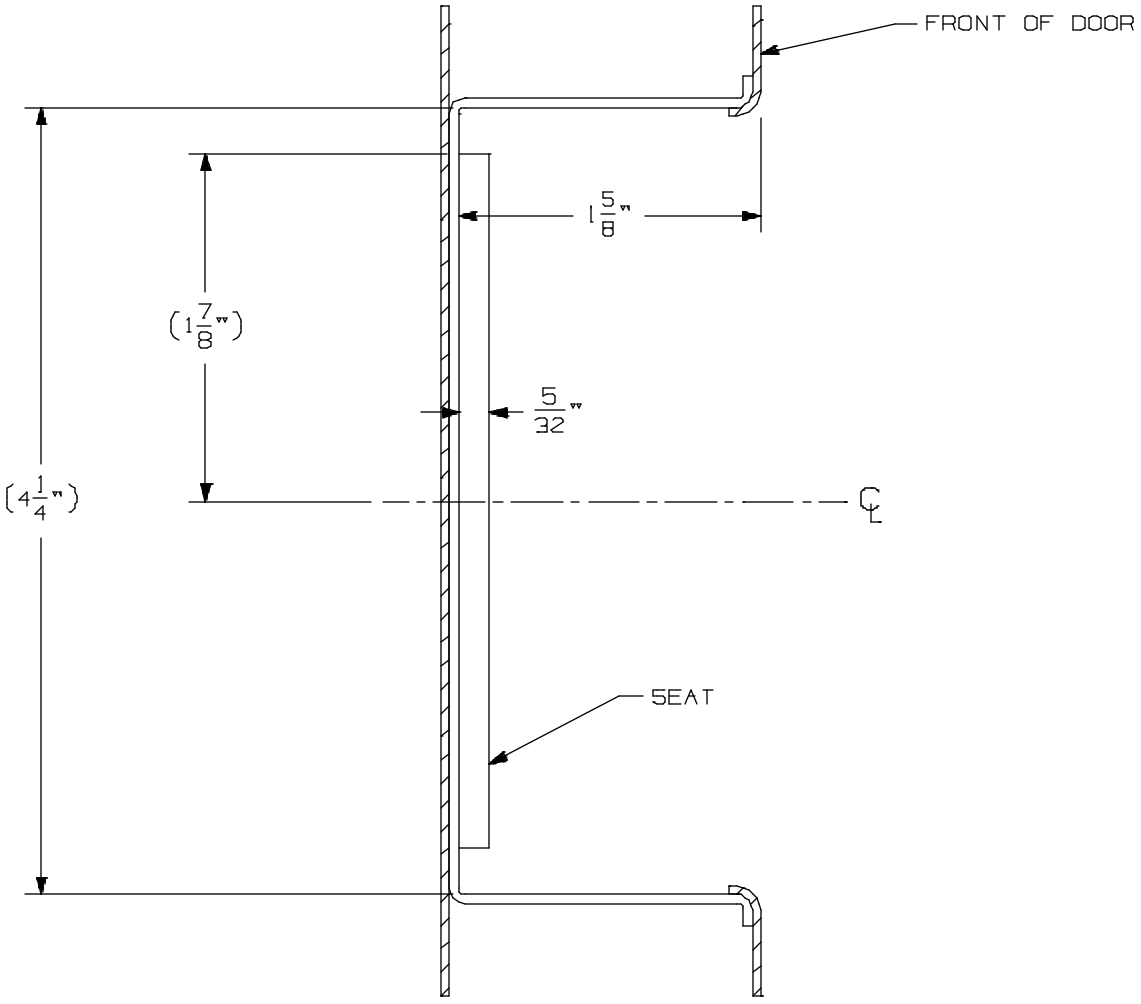

94/9575, 94/9575-F Mortise Device on 2’ 10” up to 4’ 0” Wide Door

VON DUPRIN®

NOTES: SEE MASTER SHEET #10001 FOR SUGGESTED REINFORCING
For a door smaller than 2’ 10” see template #10374

TEMPLATE NUMBER: 10372_a Sht 2

DATE: 05-22-13

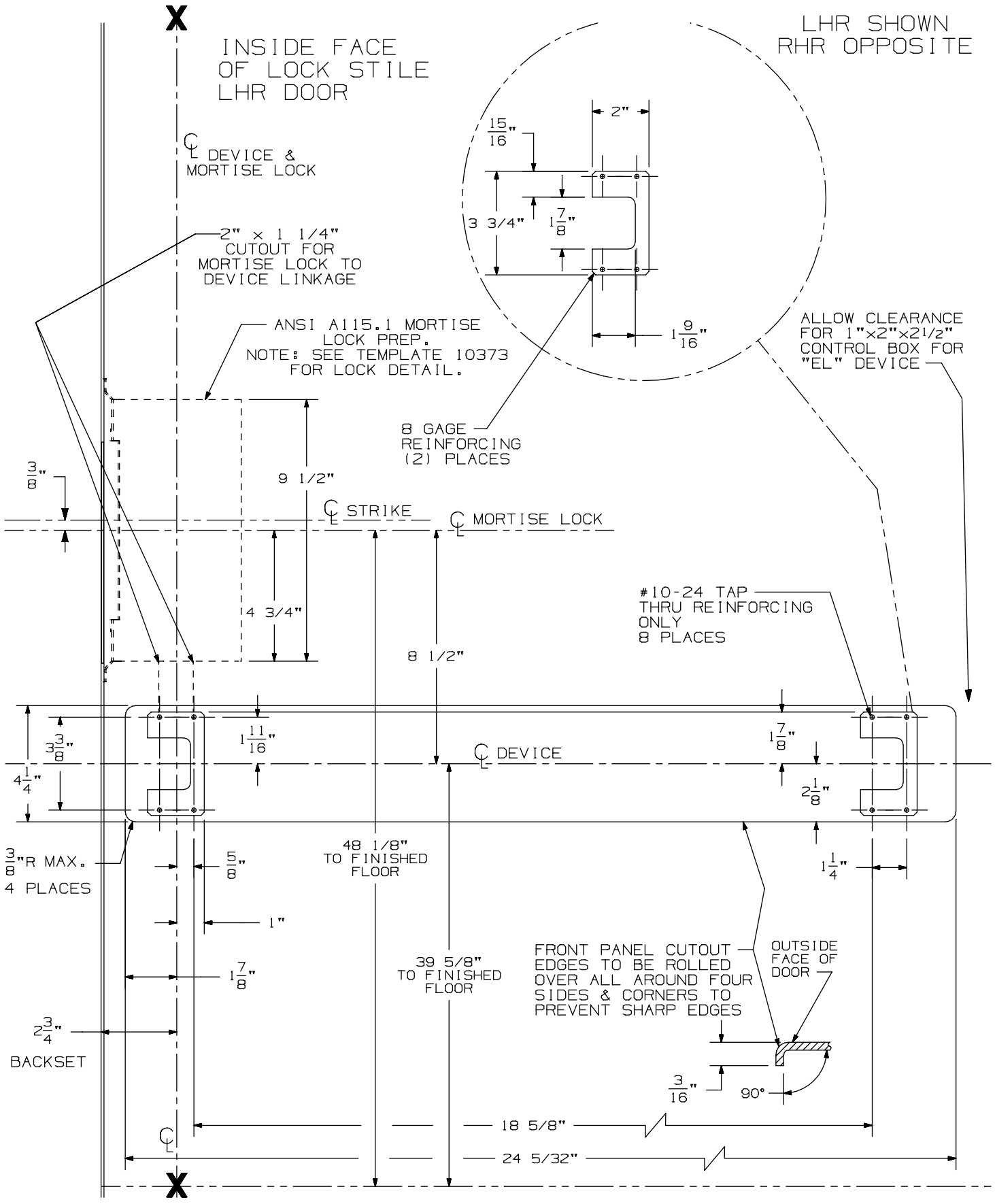

94/9575, 94/9575-F Mortise Device on 2' 6" up to 2' 10" Wide Door

VON DUPRIN®

NOTES: See Master Sheet #10001 For Suggested Reinforcing
For a door 2' 10" and larger see template # 10372

TEMPLATE NUMBER: 10374_a Sht 1

DATE: 05-22-13

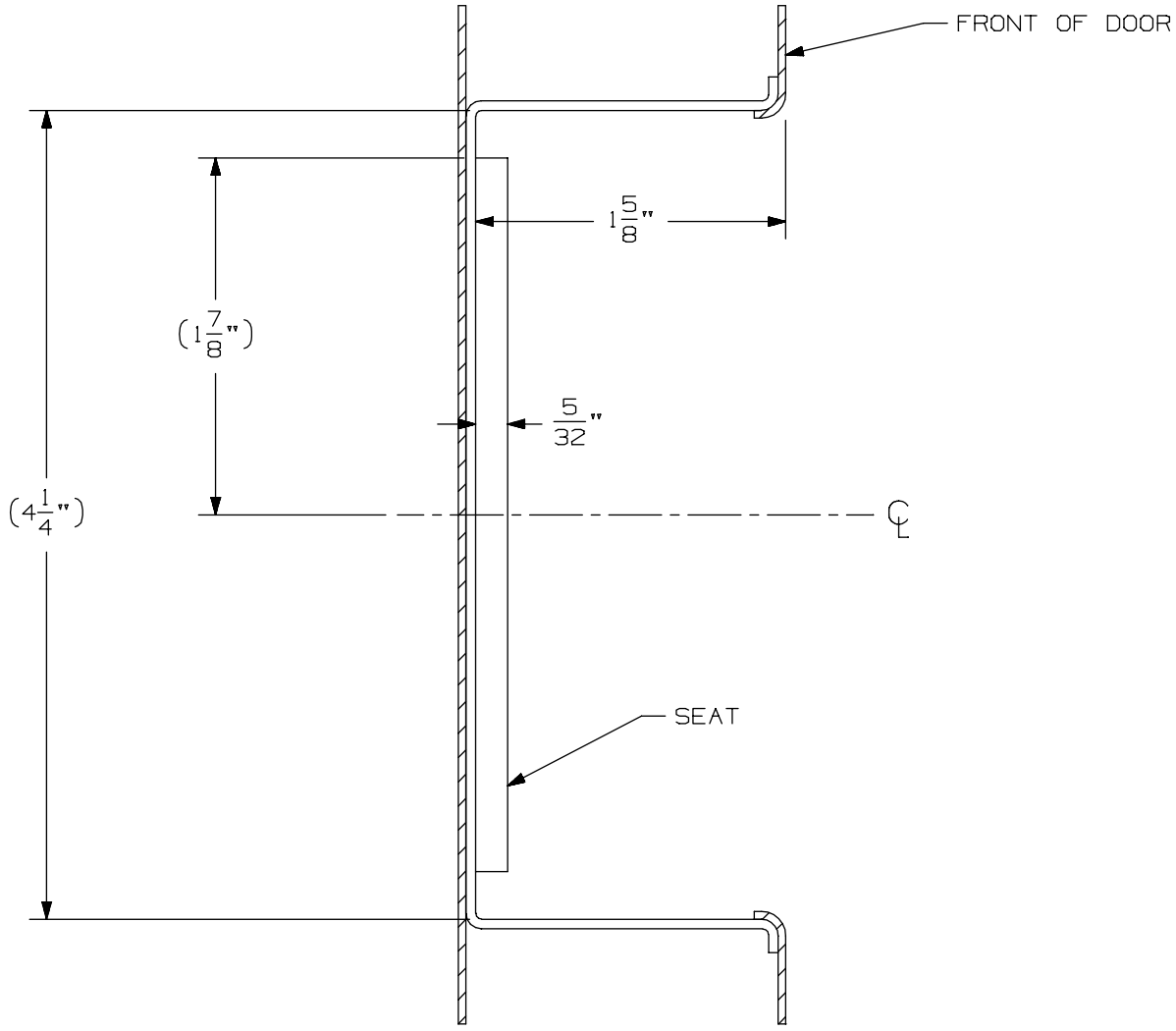

94/9575, 94/9575-F Mortise Device on 2' 6" up to 2' 10" Wide Door

VON DUPRIN®

NOTES: See Master Sheet #10001 For Suggested Reinforcing
For a door 2' 10" and larger see template # 10372

TEMPLATE NUMBER: 10374_a Sht 2

DATE: 05-22-13

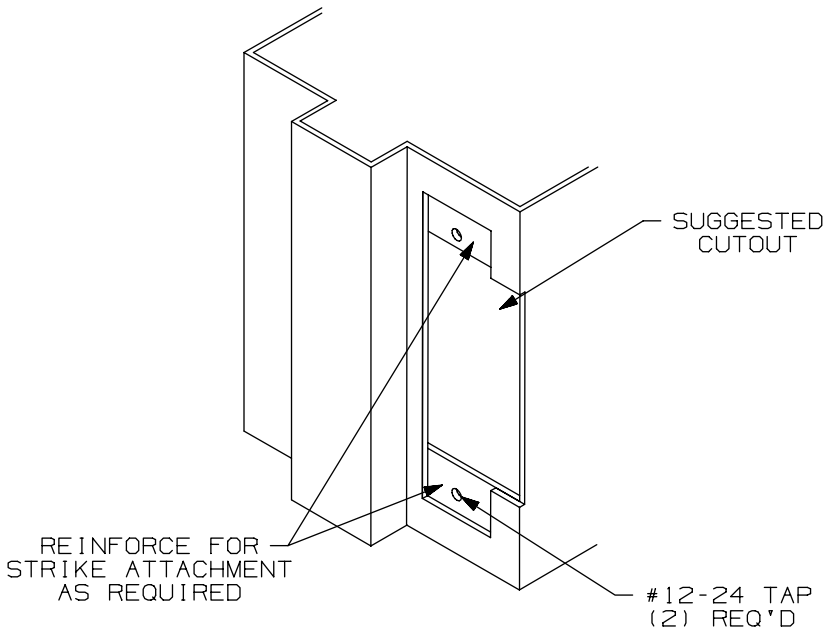

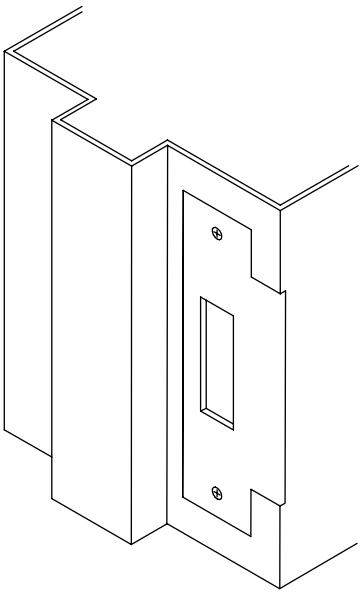

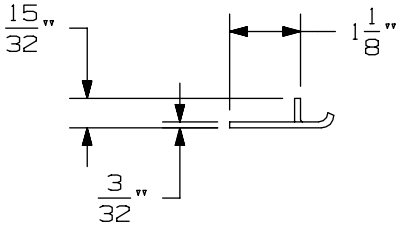

APPLICATION SCHEDULE	
DEVICE	DIM. "A"
9875 & 9875-F	11/16
9975 & 9975-F	11/16
8875 & 8875-F	1/2
5575 & 5575-F	1/2

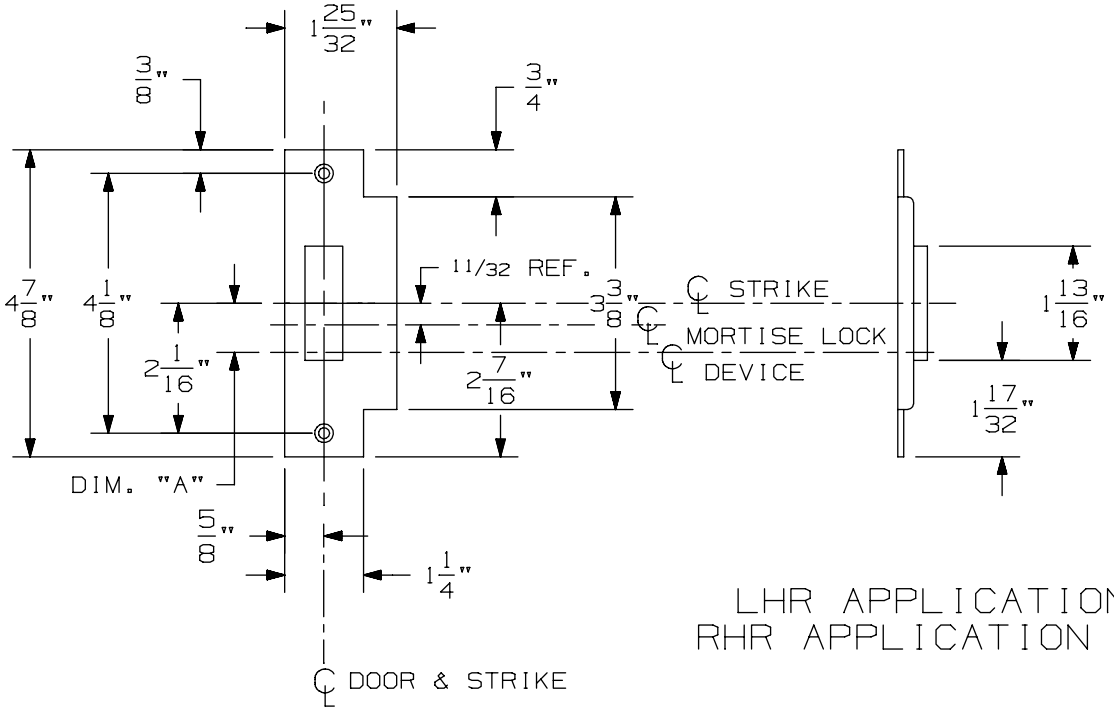

LHR APPLICATION SHOWN
RHR APPLICATION OPPOSITE

575 Mortise Strike (Single Door) for 7500 Mortise Lock

VON DUPRIN®

NOTES: SEE MASTER SHEET #10001 FOR SUGGESTED REINFORCING

TEMPLATE NUMBER: 30210_b

DATE: 07-22-13

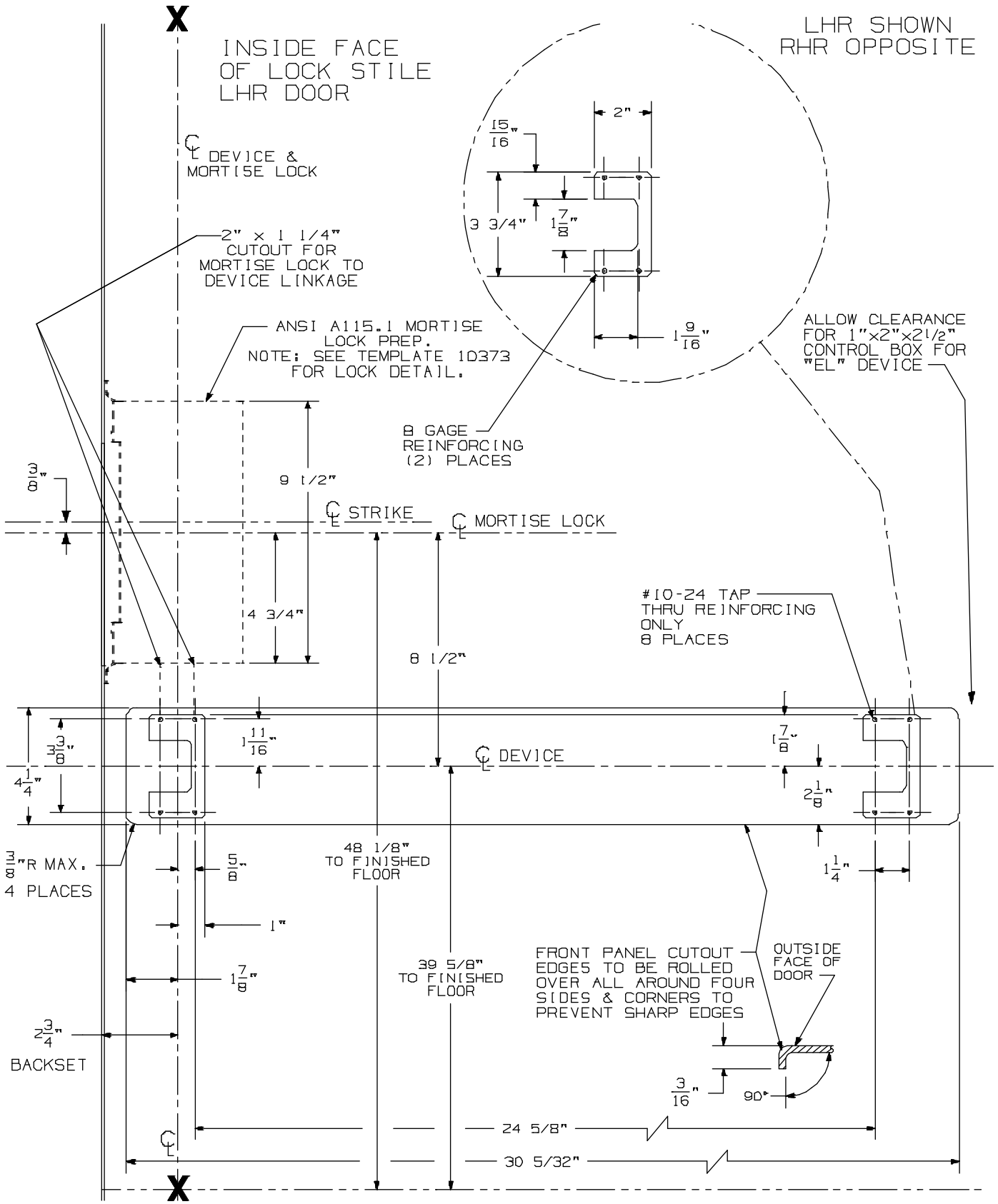

94/9575, 94/9575-F Mortise Device on 2' 10" up to 4' 0" Wide Door

VON DUPRIN®

NOTES: SEE MASTER SHEET #10001 FOR SUGGESTED REINFORCING
For a door smaller than 2' 10" see template #10374

TEMPLATE NUMBER: 10372_a Sht 1

DATE: 05-22-13

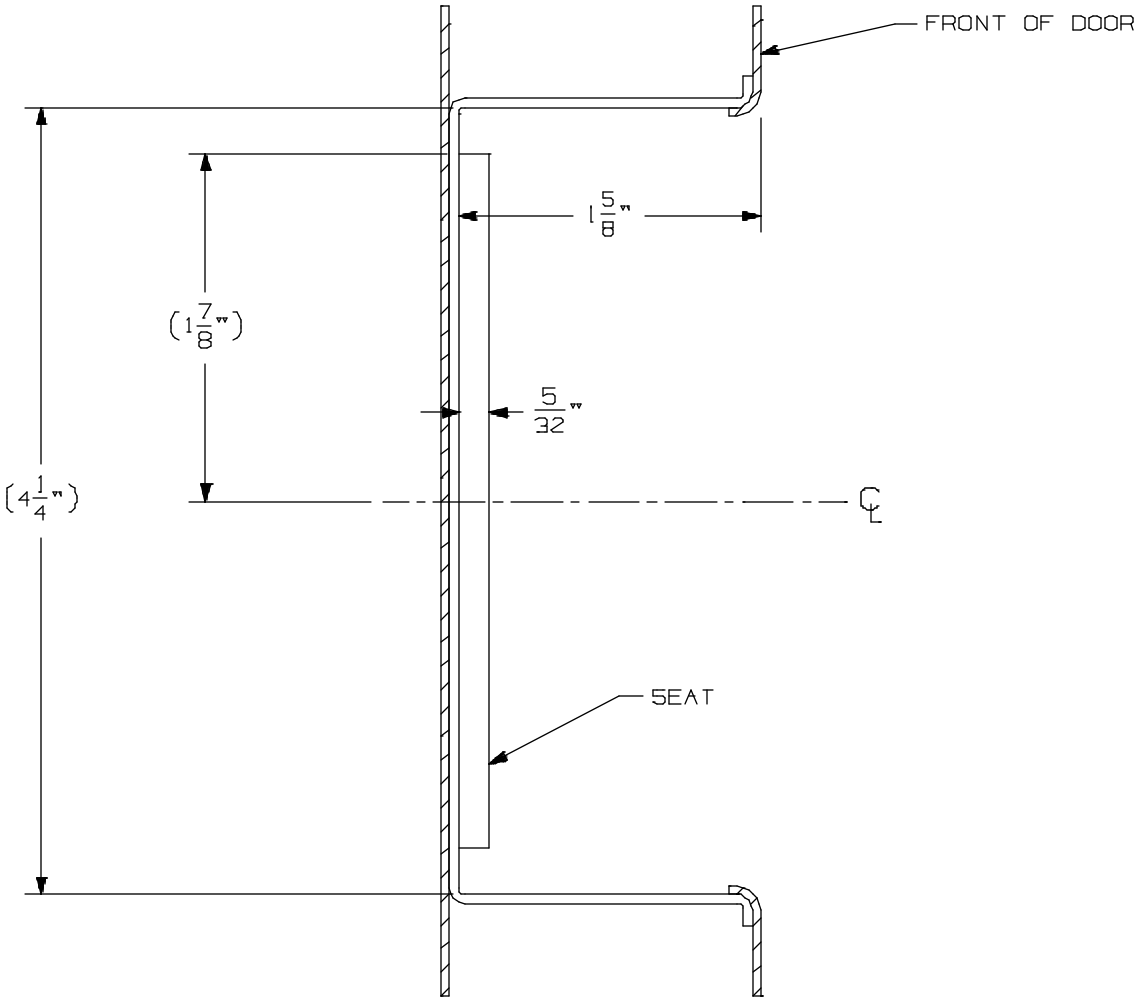

94/9575, 94/9575-F Mortise Device on 2’ 10” up to 4’ 0” Wide Door

VON DUPRIN®

NOTES: SEE MASTER SHEET #10001 FOR SUGGESTED REINFORCING
For a door smaller than 2’ 10” see template #10374

TEMPLATE NUMBER: 10372_a Sht 2

DATE: 05-22-13

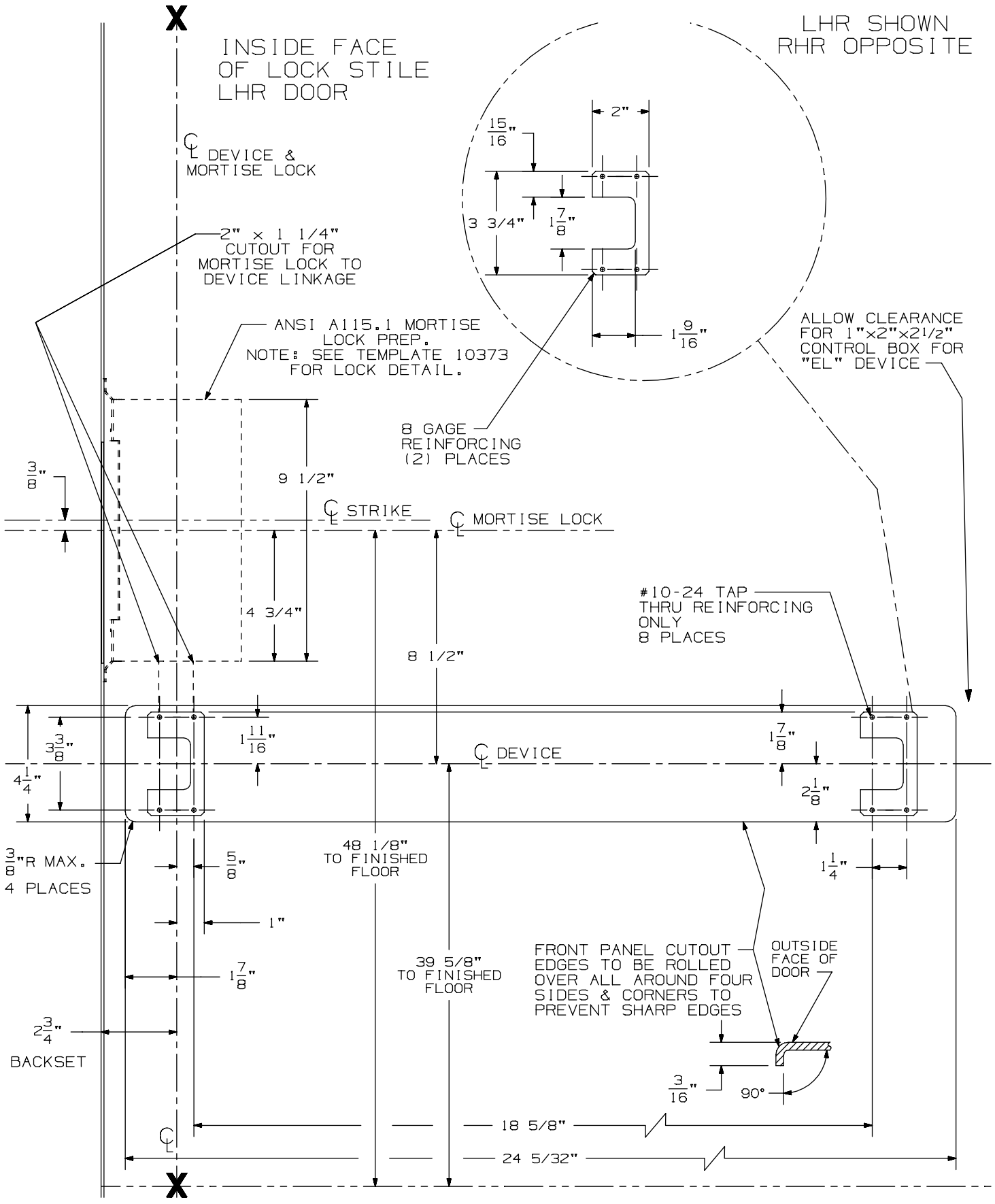

94/9575, 94/9575-F Mortise Device on 2' 6" up to 2' 10" Wide Door

VON DUPRIN®

NOTES: See Master Sheet #10001 For Suggested Reinforcing
For a door 2' 10" and larger see template # 10372

TEMPLATE NUMBER: 10374_a Sht 1

DATE: 05-22-13

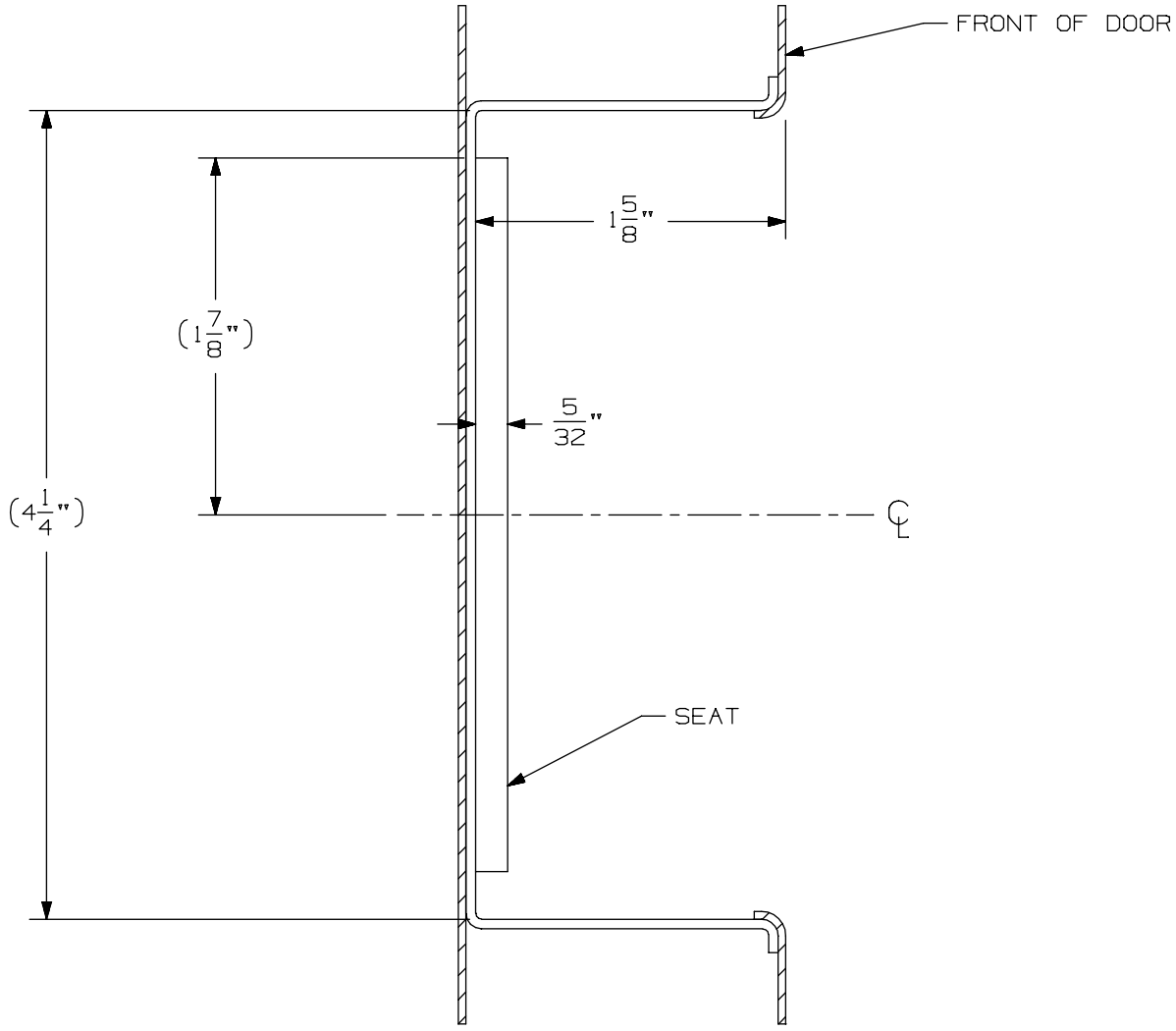

94/9575, 94/9575-F Mortise Device on 2' 6" up to 2' 10" Wide Door

VON DUPRIN®

NOTES: See Master Sheet #10001 For Suggested Reinforcing
For a door 2' 10" and larger see template # 10372

TEMPLATE NUMBER: 10374_a Sht 2

DATE: 05-22-13

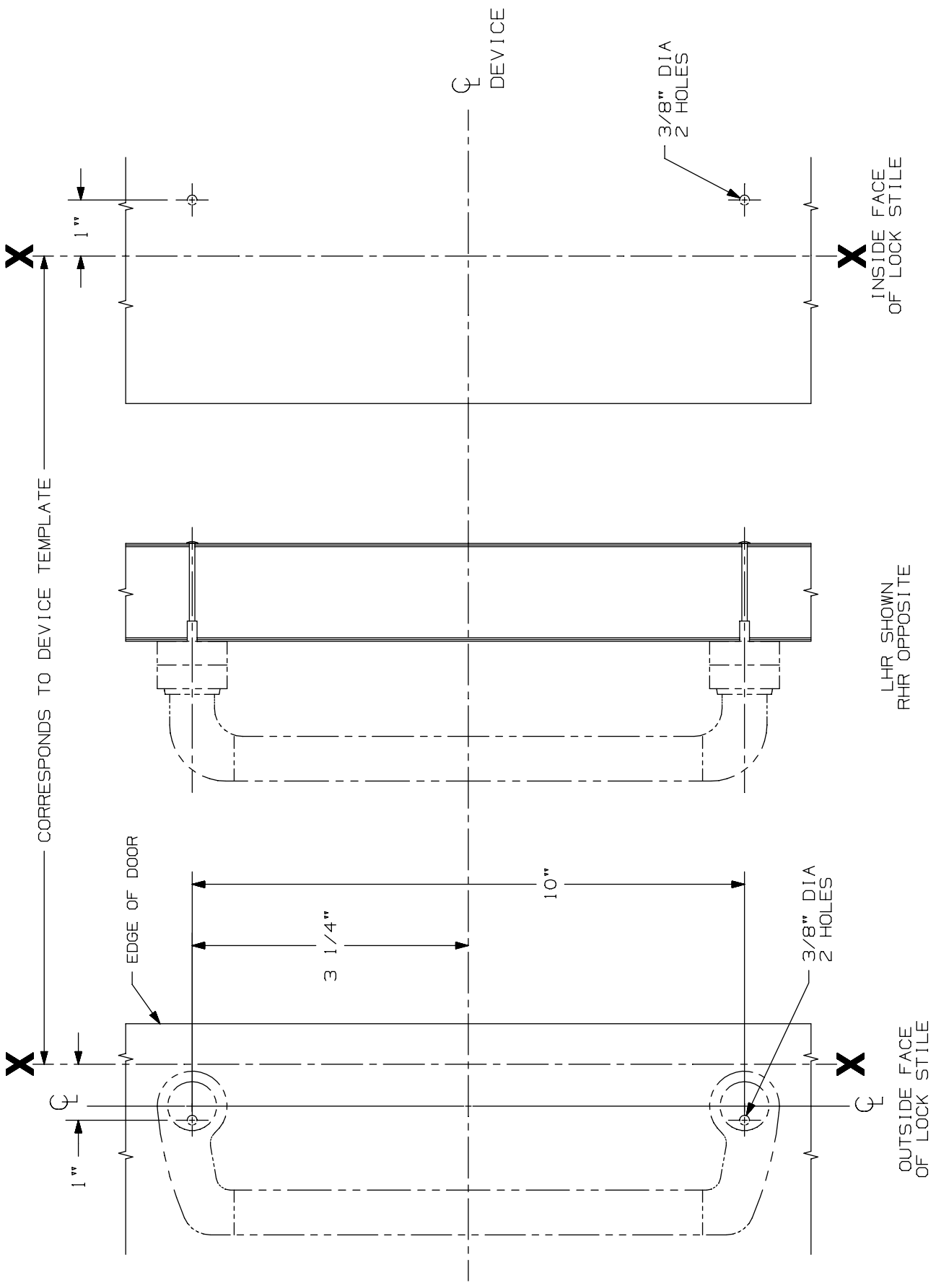

550 DT Trim for 94/9547 Vertical & 94/9575 Mort

VON DUPRIN®

NOTES: SEE MASTER SHEET #10001 FOR SUGGESTED REINFORCING

TEMPLATE NUMBER: 20031_a

DATE: 05-23-13

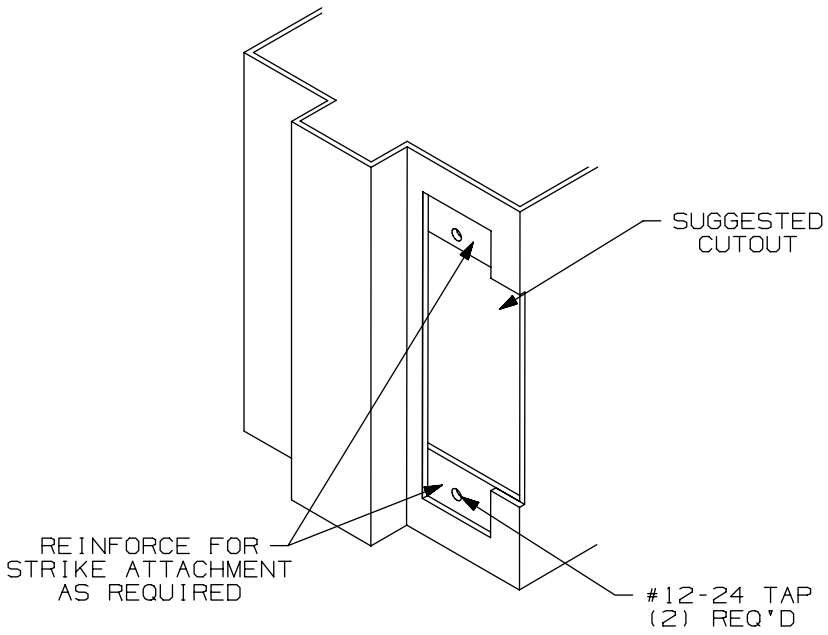

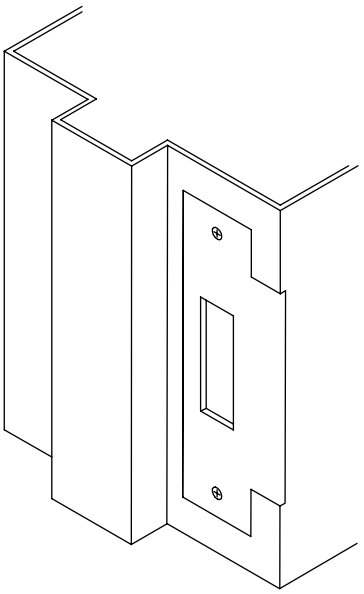

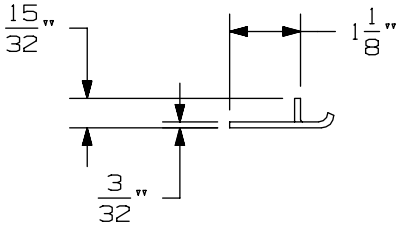

APPLICATION SCHEDULE	
DEVICE	DIM. "A"
9875 & 9875-F	11/16
9975 & 9975-F	11/16
8875 & 8875-F	1/2
5575 & 5575-F	1/2

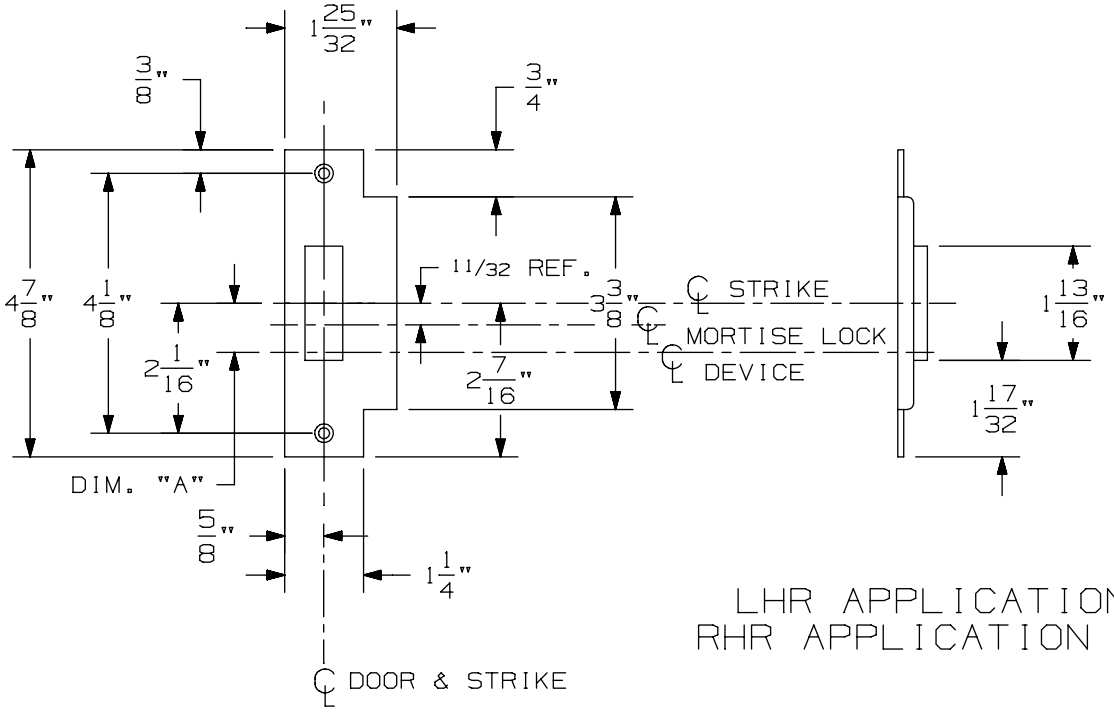

LHR APPLICATION SHOWN
RHR APPLICATION OPPOSITE

575 Mortise Strike (Single Door) for 7500 Mortise Lock

VON DUPRIN®

NOTES: SEE MASTER SHEET #10001 FOR SUGGESTED REINFORCING

TEMPLATE NUMBER: 30210_b

DATE: 07-22-13

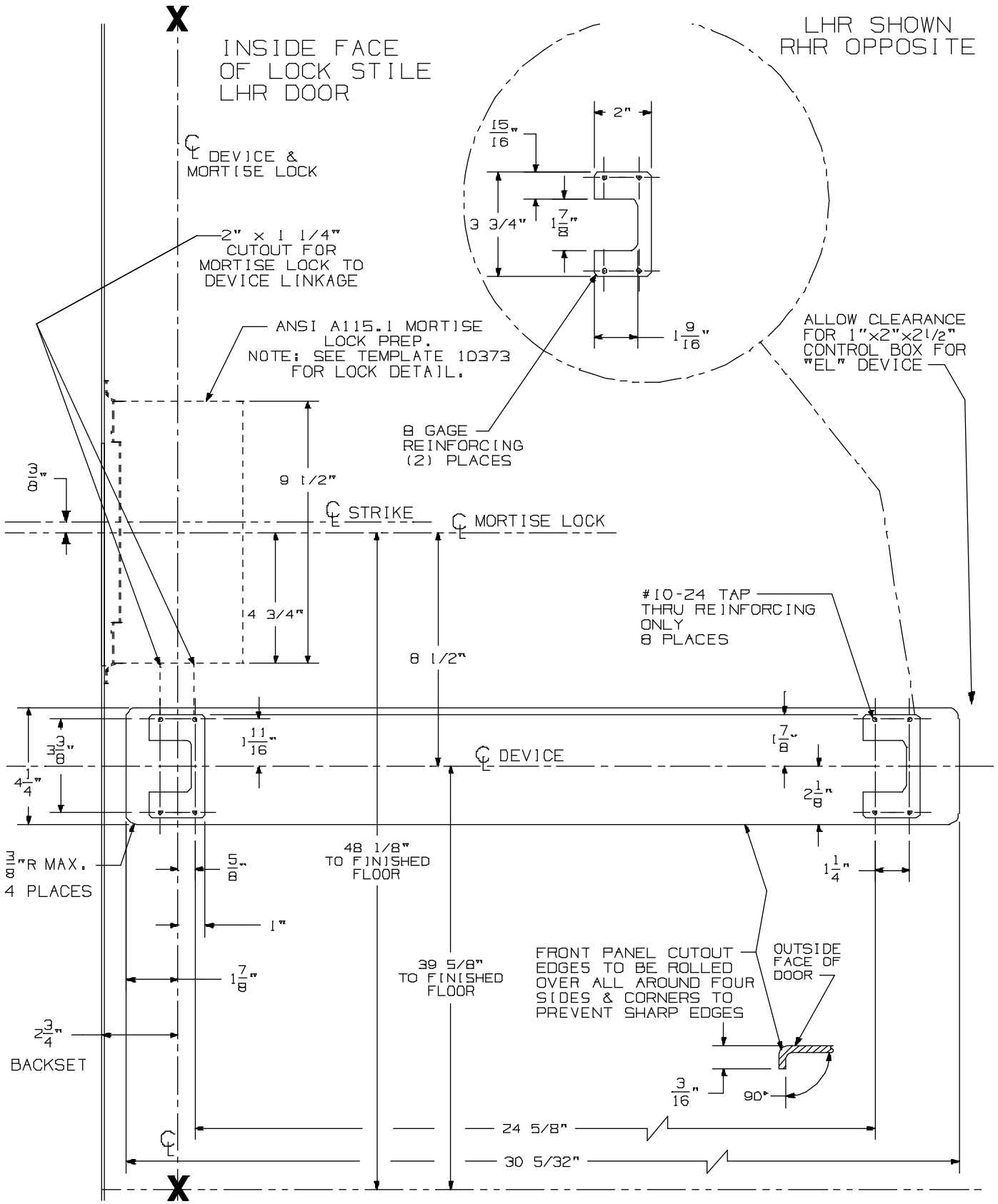

94/9575, 94/9575-F Mortise Device on 2' 10" up to 4' 0" Wide Door

VON DUPRIN®

NOTES: SEE MASTER SHEET #10001 FOR SUGGESTED REINFORCING
For a door smaller than 2' 10" see template #10374

TEMPLATE NUMBER: 10372_a Sht 1

DATE: 05-22-13

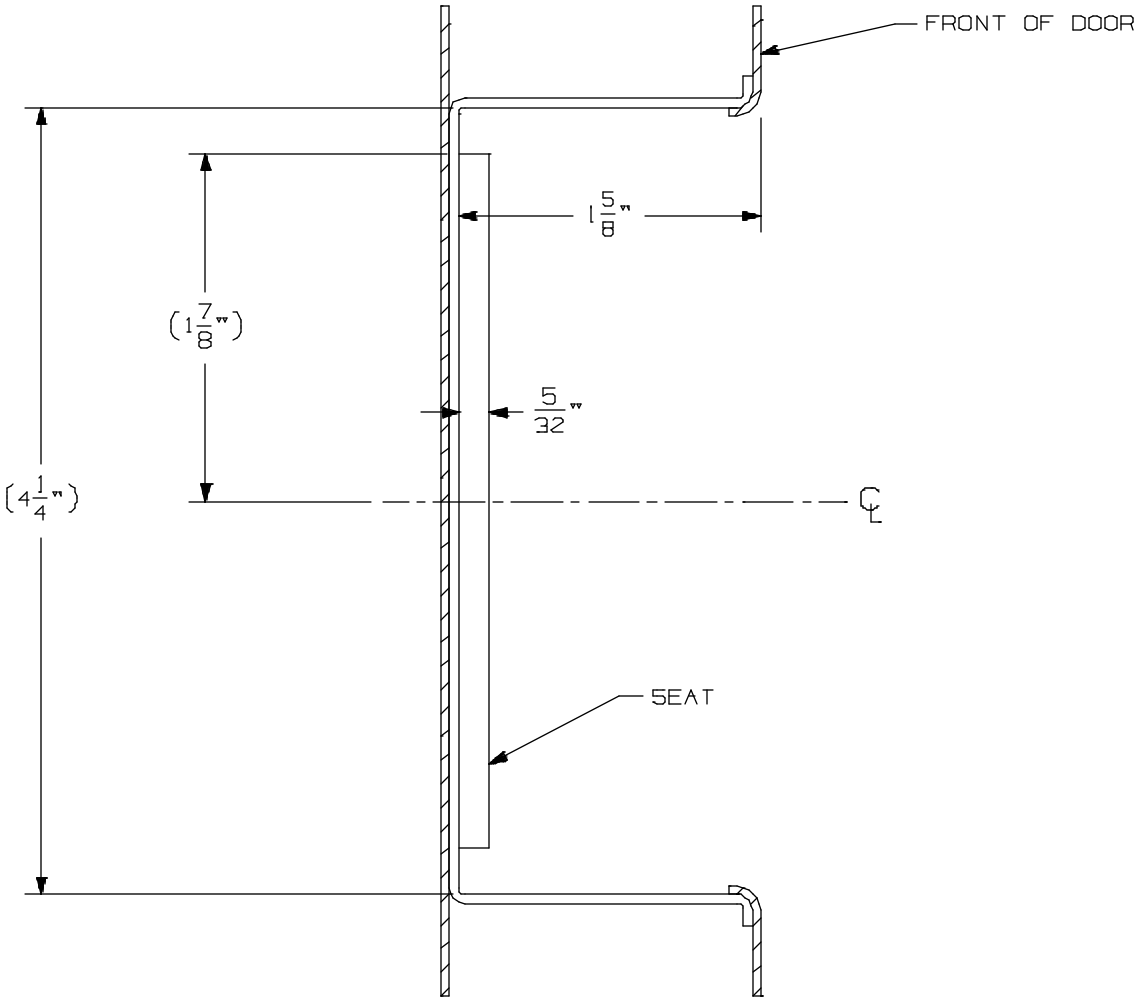

94/9575, 94/9575-F Mortise Device on 2’ 10” up to 4’ 0” Wide Door

VON DUPRIN®

NOTES: SEE MASTER SHEET #10001 FOR SUGGESTED REINFORCING
For a door smaller than 2’ 10” see template #10374

TEMPLATE NUMBER: 10372_a Sht 2

DATE: 05-22-13

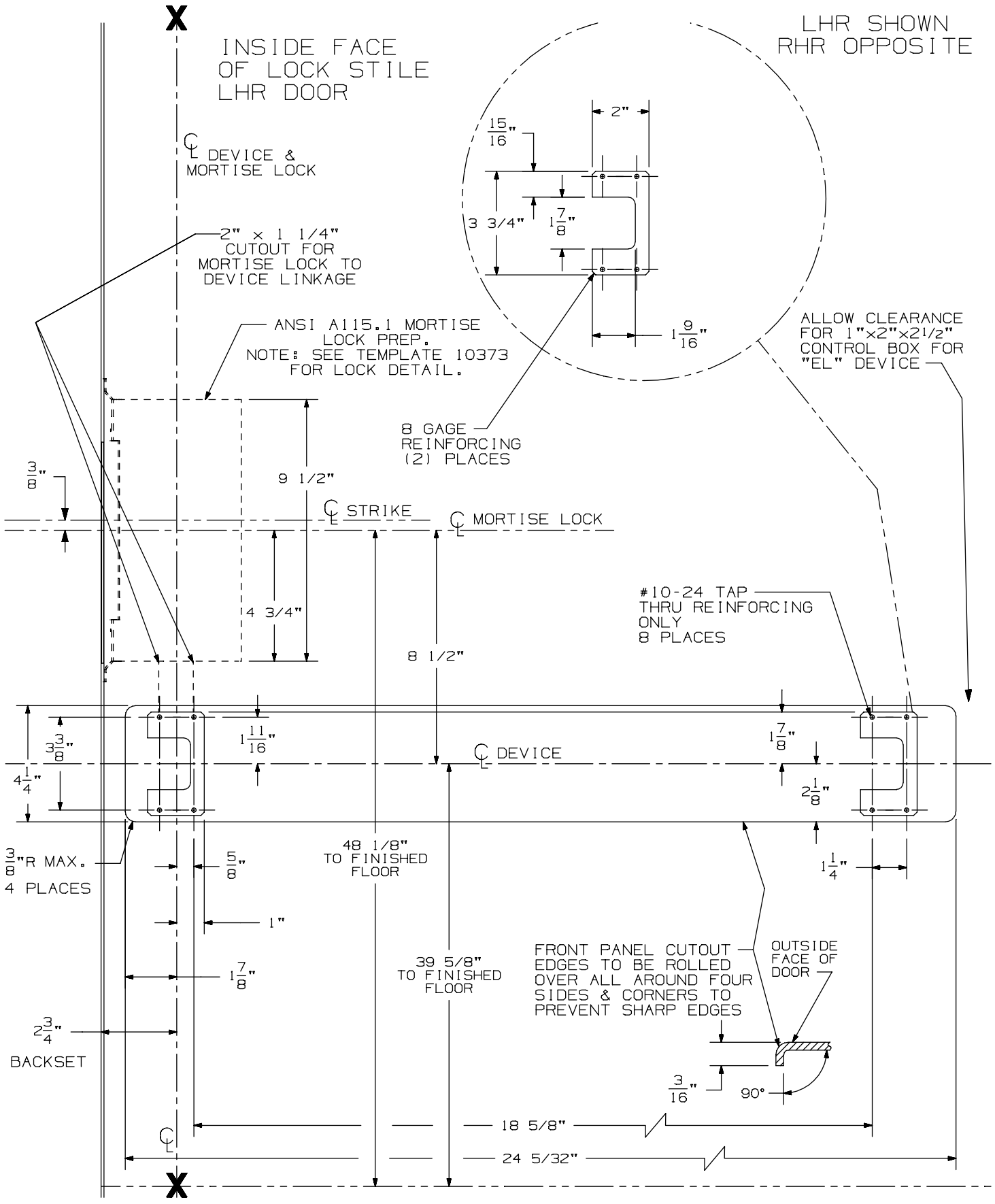

94/9575, 94/9575-F Mortise Device on 2' 6" up to 2' 10" Wide Door

VON DUPRIN®

NOTES: See Master Sheet #10001 For Suggested Reinforcing
For a door 2' 10" and larger see template # 10372

TEMPLATE NUMBER: 10374_a Sht 1

DATE: 05-22-13

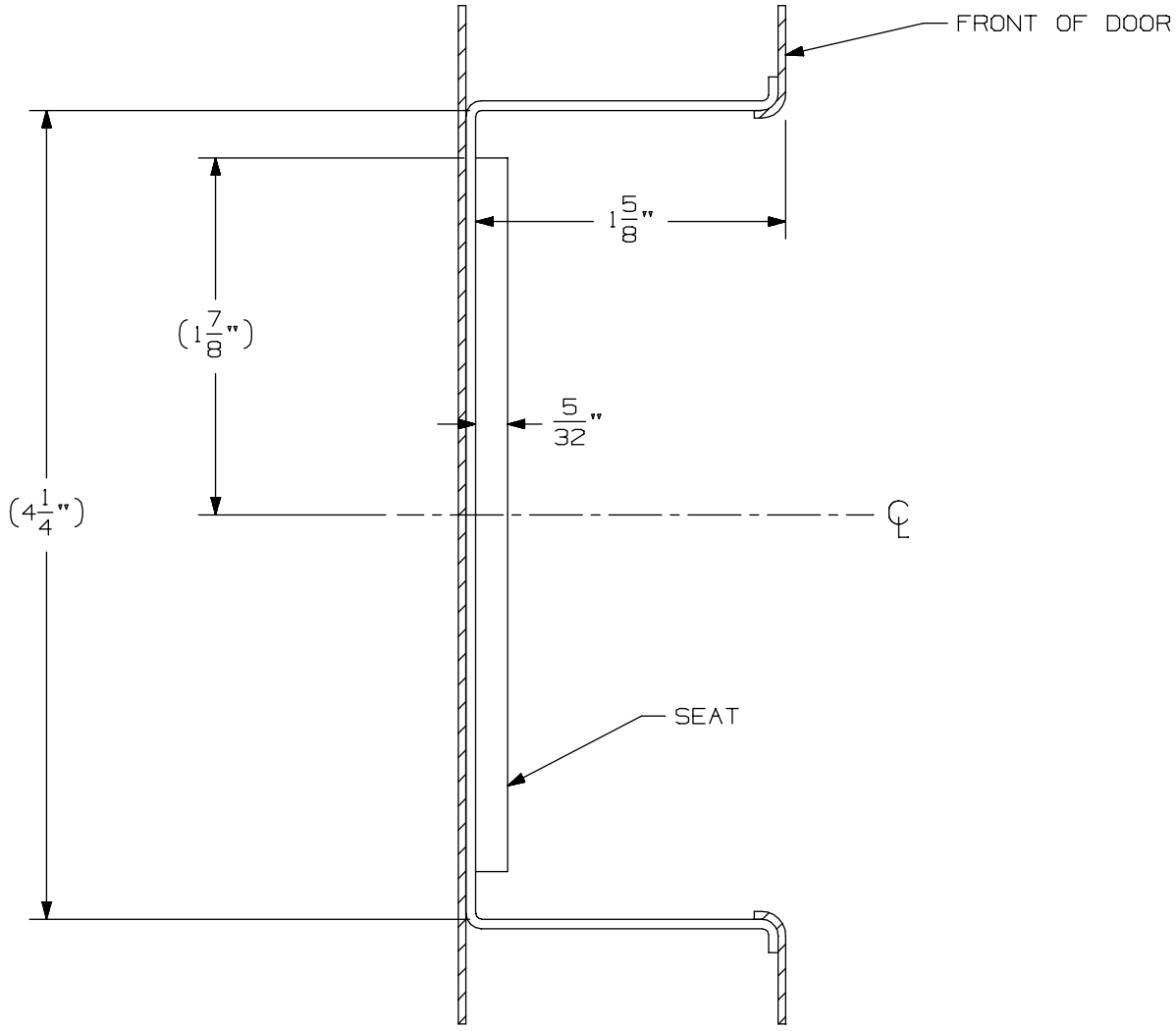

94/9575, 94/9575-F Mortise Device on 2' 6" up to 2' 10" Wide Door

VON DUPRIN®

NOTES: See Master Sheet #10001 For Suggested Reinforcing
For a door 2' 10" and larger see template # 10372

TEMPLATE NUMBER: 10374_a Sht 2

DATE: 05-22-13

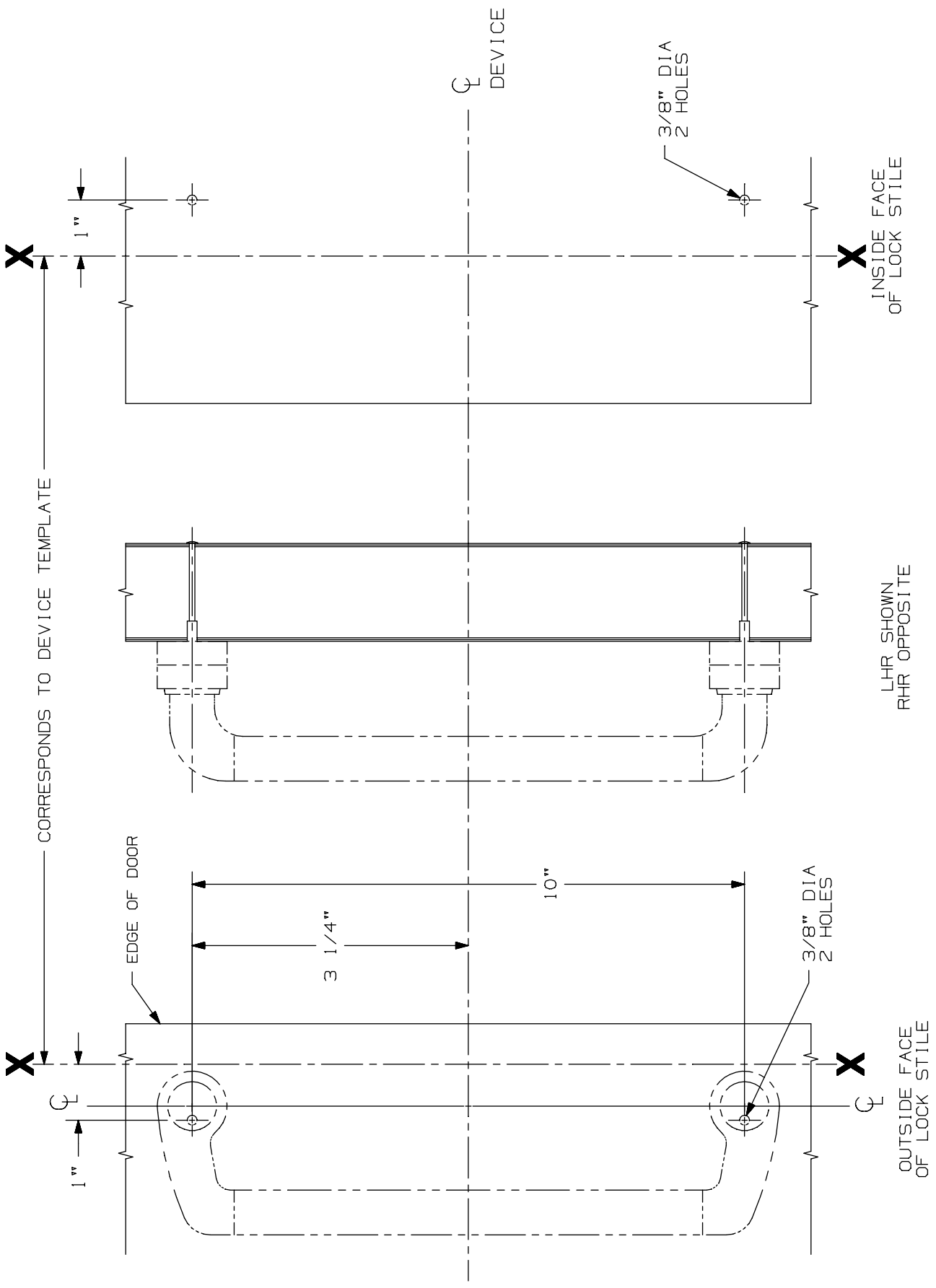

550 DT Trim for 94/9547 Vertical & 94/9575 Mort

VON DUPRIN®

NOTES: SEE MASTER SHEET #10001 FOR SUGGESTED REINFORCING

TEMPLATE NUMBER: 20031_a

DATE: 05-23-13

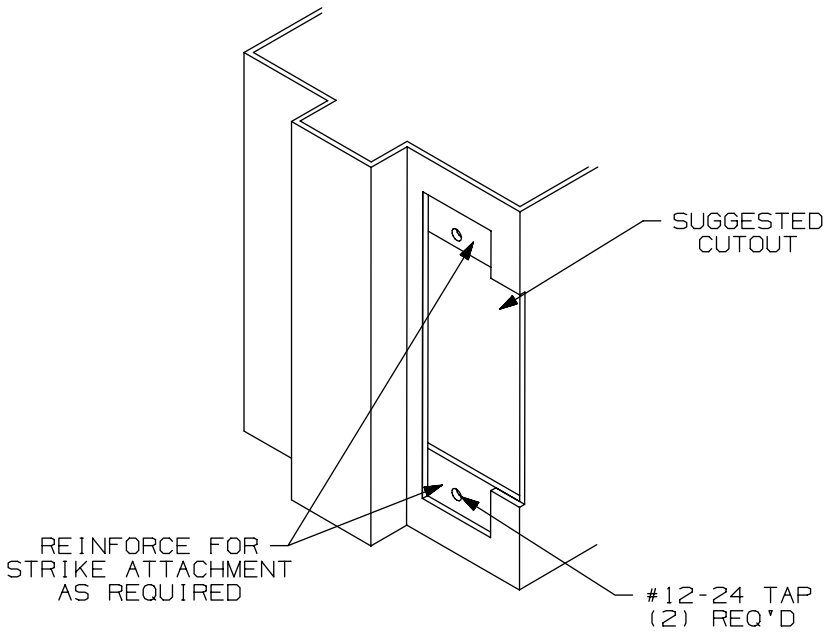

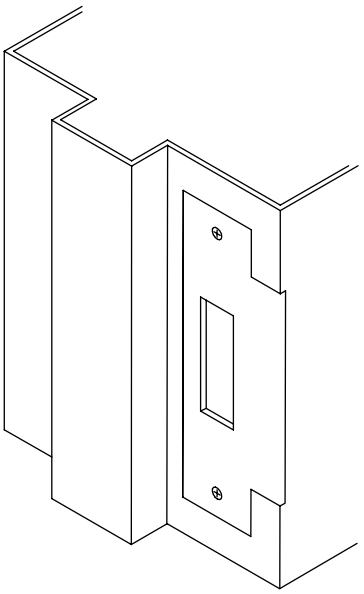

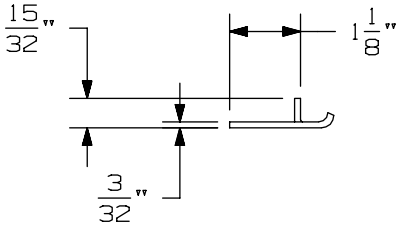

APPLICATION SCHEDULE	
DEVICE	DIM. "A"
9875 & 9875-F	11/16
9975 & 9975-F	11/16
8875 & 8875-F	1/2
5575 & 5575-F	1/2

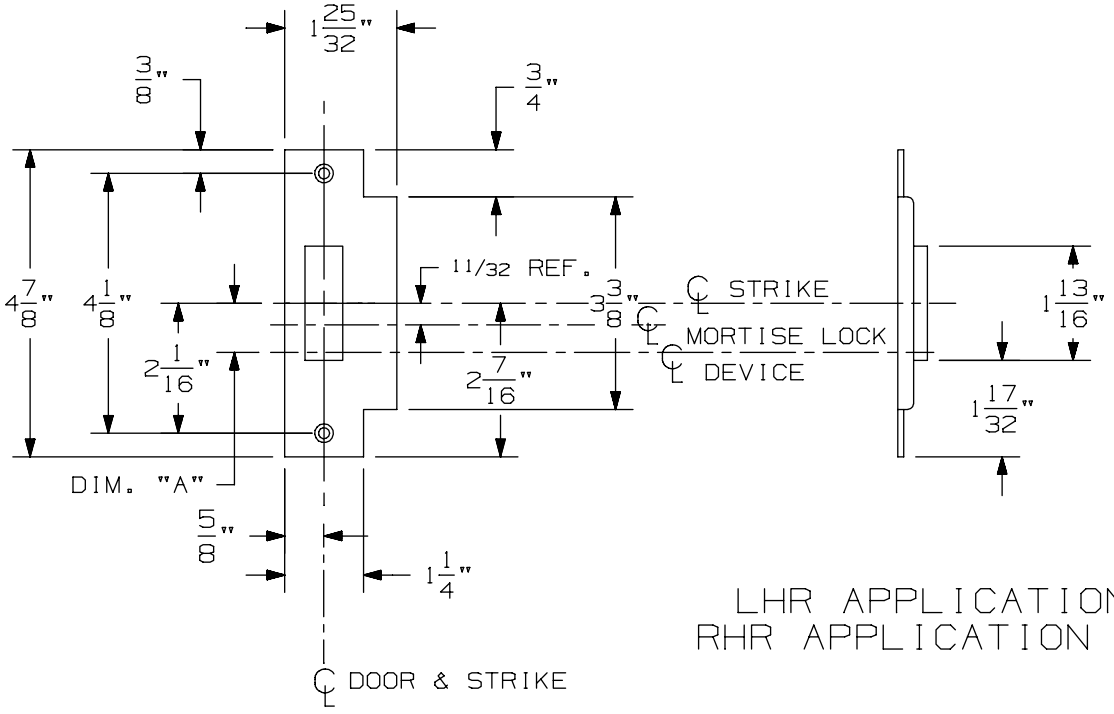

LHR APPLICATION SHOWN
RHR APPLICATION OPPOSITE

575 Mortise Strike (Single Door) for 7500 Mortise Lock

VON DUPRIN®

NOTES: SEE MASTER SHEET #10001 FOR SUGGESTED REINFORCING

TEMPLATE NUMBER: 30210_b

DATE: 07-22-13

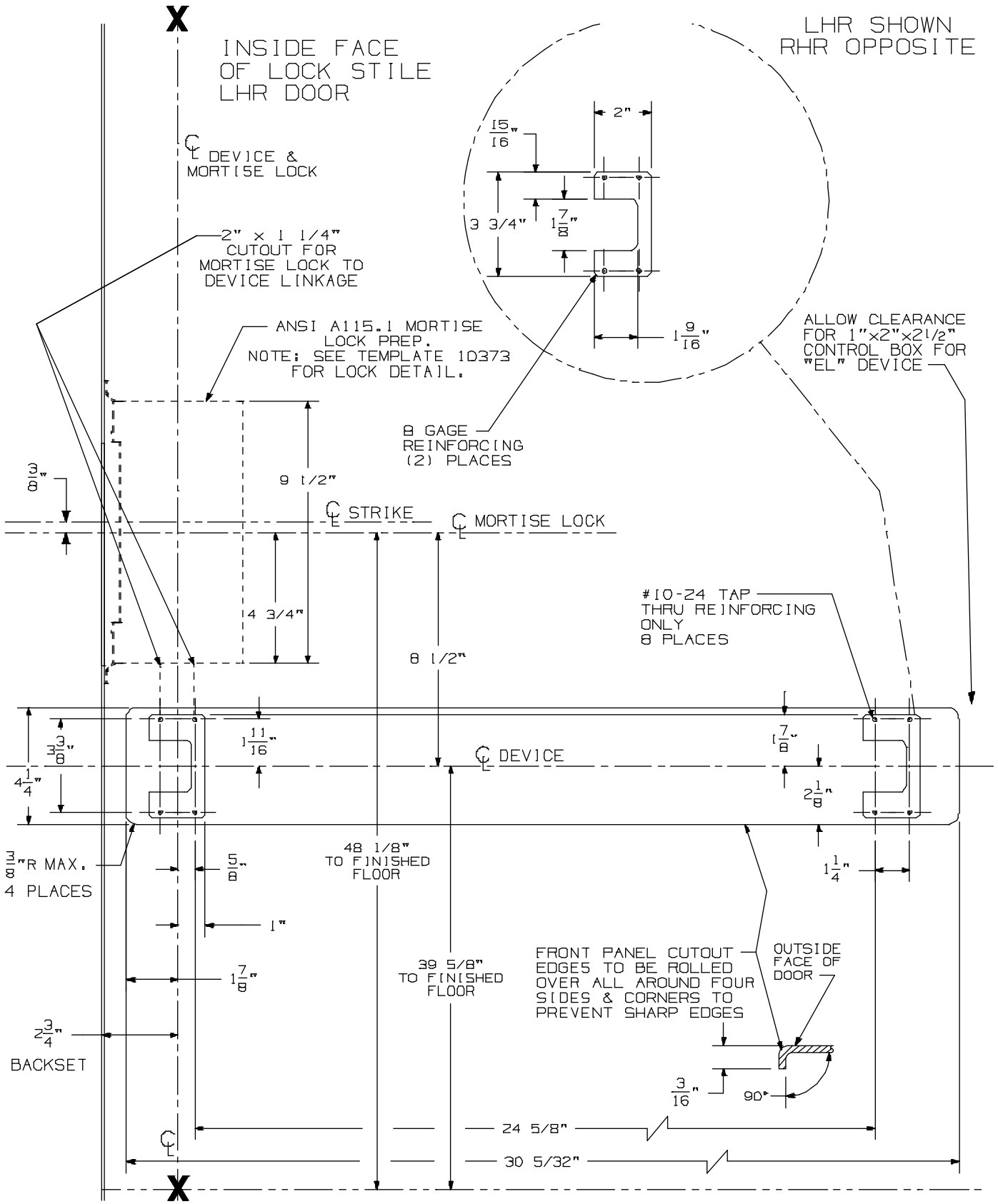

94/9575, 94/9575-F Mortise Device on 2' 10" up to 4' 0" Wide Door

VON DUPRIN®

NOTES: SEE MASTER SHEET #10001 FOR SUGGESTED REINFORCING
For a door smaller than 2' 10" see template #10374

TEMPLATE NUMBER: 10372_a Sht 1

DATE: 05-22-13

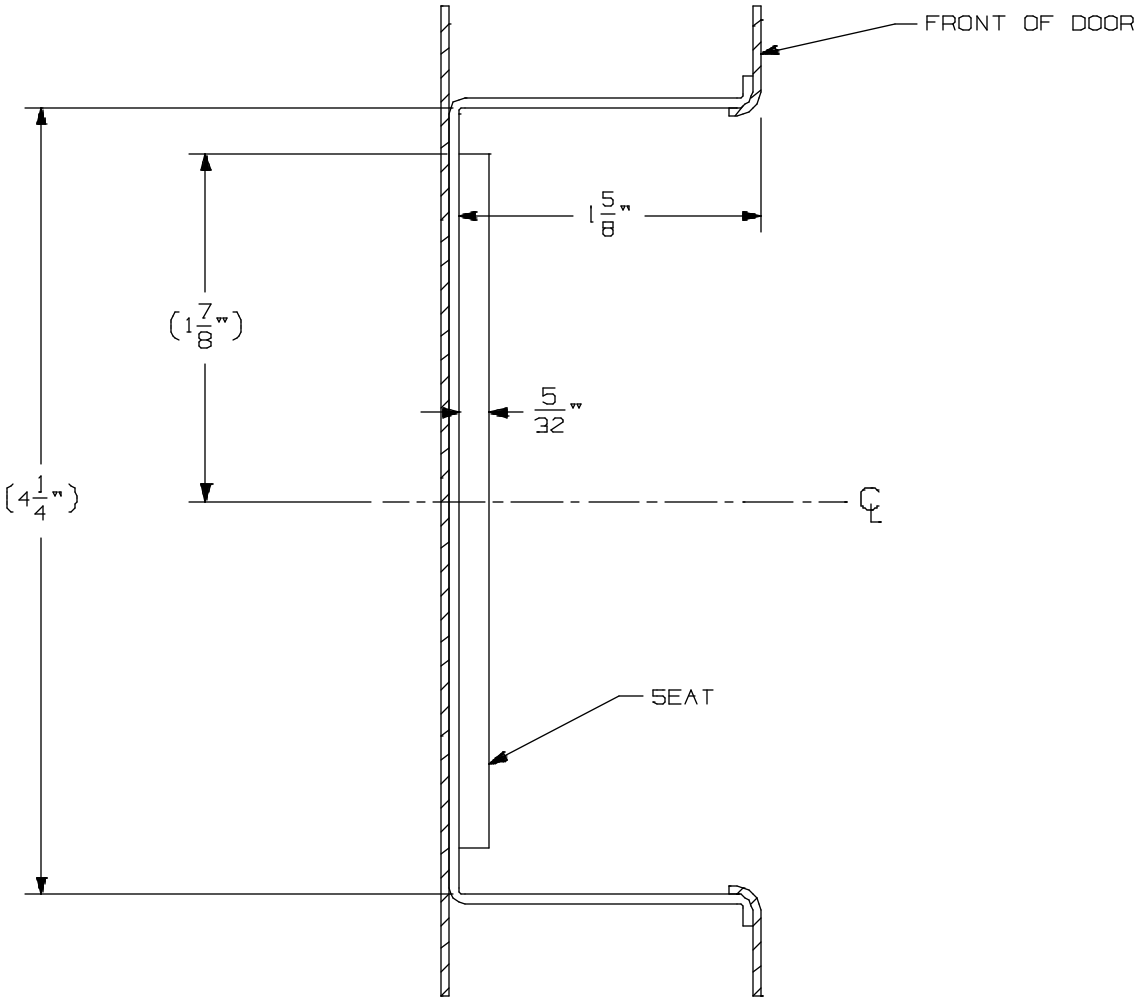

94/9575, 94/9575-F Mortise Device on 2’ 10” up to 4’ 0” Wide Door

VON DUPRIN®

NOTES: SEE MASTER SHEET #10001 FOR SUGGESTED REINFORCING
For a door smaller than 2’ 10” see template #10374

TEMPLATE NUMBER: 10372_a Sht 2

DATE: 05-22-13

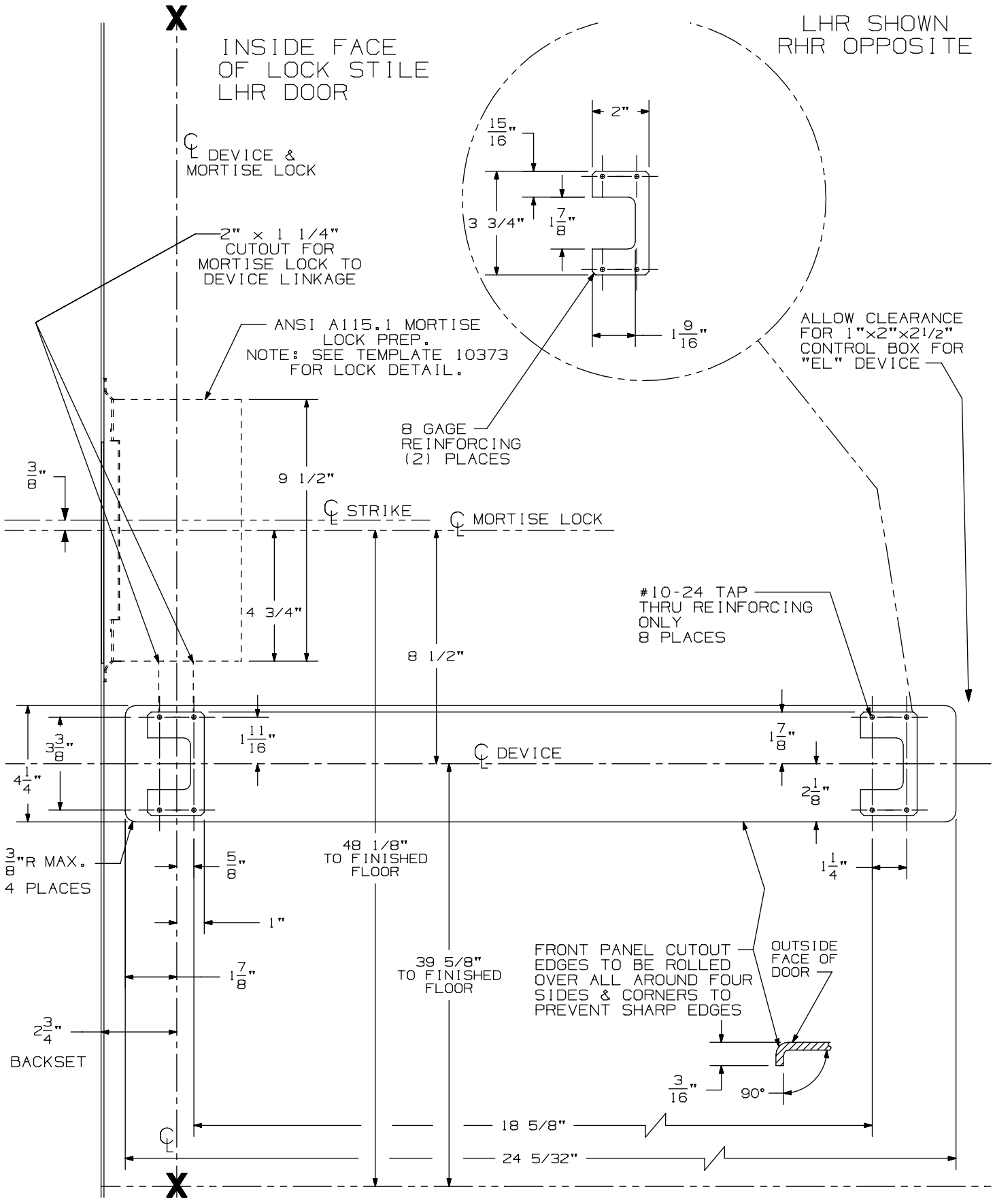

94/9575, 94/9575-F Mortise Device on 2' 6" up to 2' 10" Wide Door

VON DUPRIN®

NOTES: See Master Sheet #10001 For Suggested Reinforcing
For a door 2' 10" and larger see template # 10372

TEMPLATE NUMBER: 10374_a Sht 1

DATE: 05-22-13

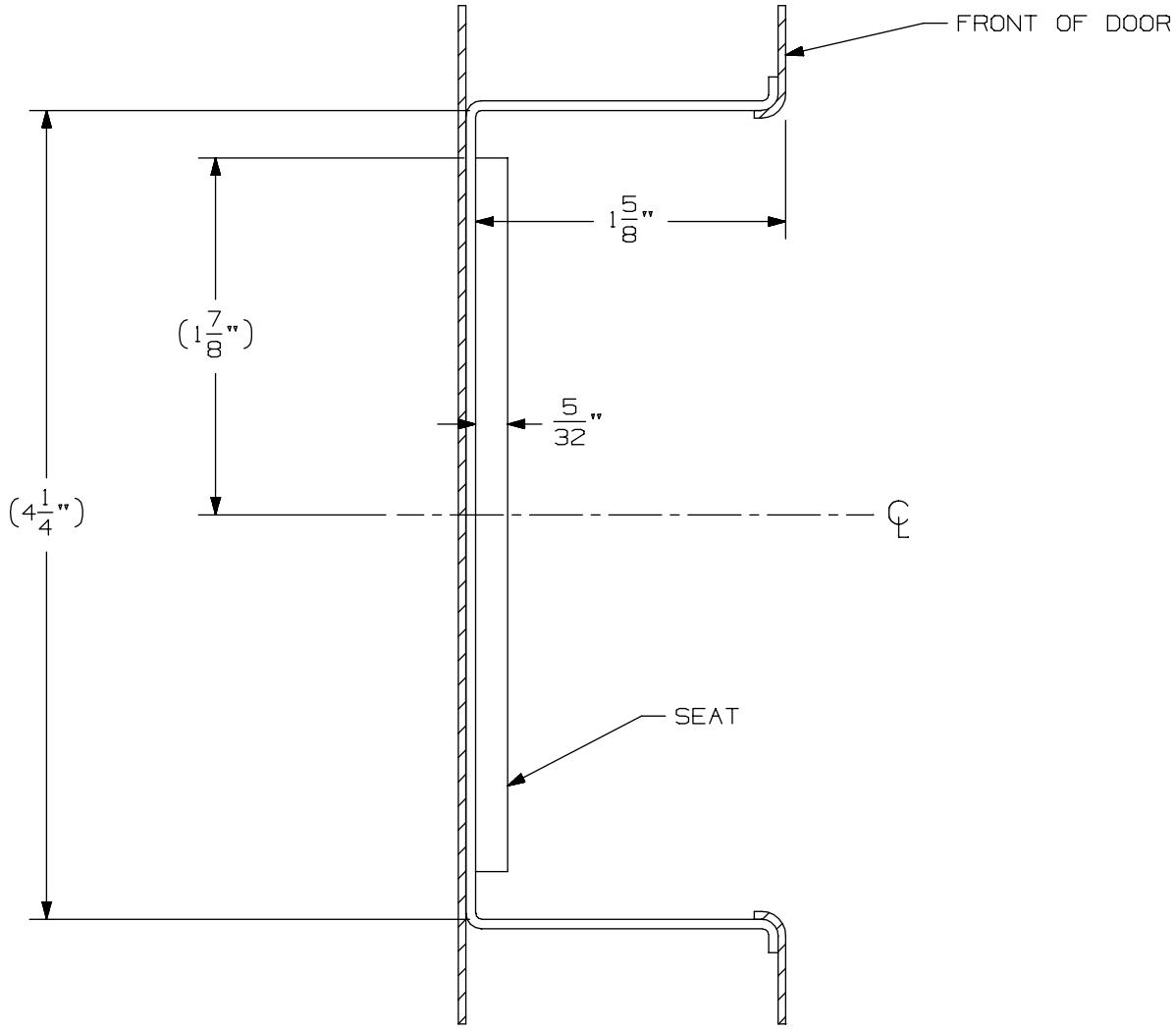

94/9575, 94/9575-F Mortise Device on 2' 6" up to 2' 10" Wide Door

VON DUPRIN®

NOTES: See Master Sheet #10001 For Suggested Reinforcing
For a door 2' 10" and larger see template # 10372

TEMPLATE NUMBER: 10374_a Sht 2

DATE: 05-22-13

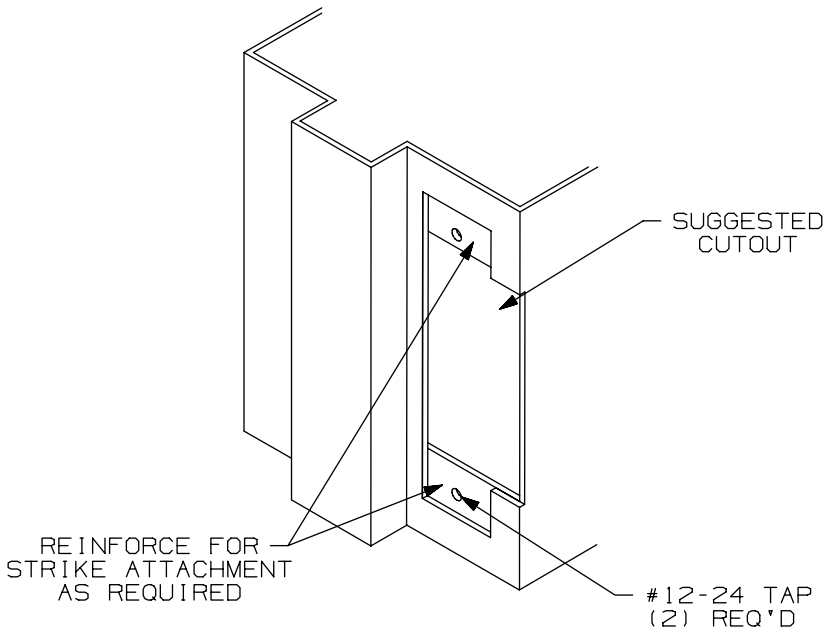

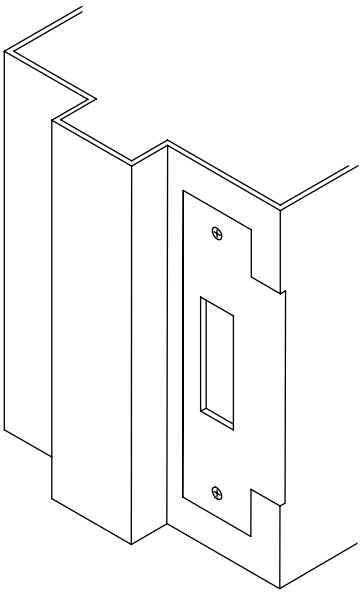

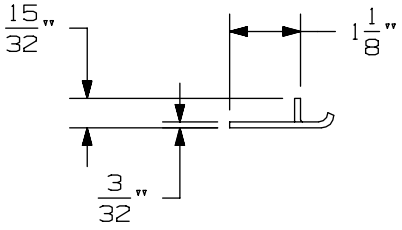

APPLICATION SCHEDULE	
DEVICE	DIM. "A"
9875 & 9875-F	11/16
9975 & 9975-F	11/16
8875 & 8875-F	1/2
5575 & 5575-F	1/2

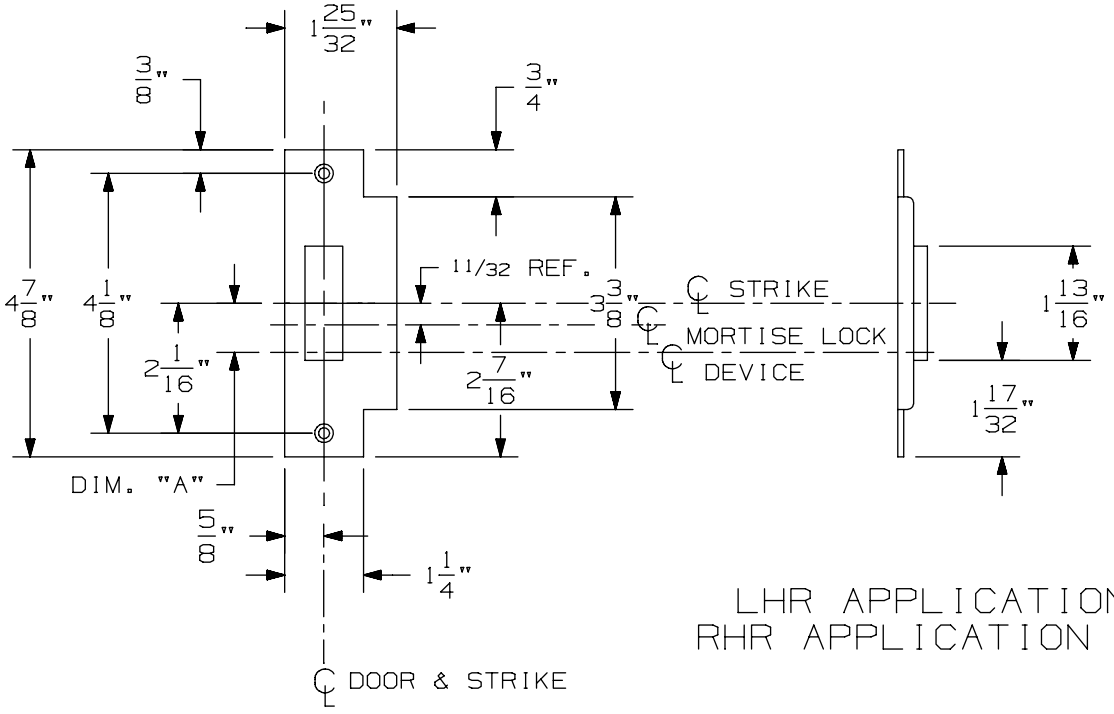

LHR APPLICATION SHOWN
RHR APPLICATION OPPOSITE

575 Mortise Strike (Single Door) for 7500 Mortise Lock

VON DUPRIN®

NOTES: SEE MASTER SHEET #10001 FOR SUGGESTED REINFORCING

TEMPLATE NUMBER: 30210_b

DATE: 07-22-13

INPACT® - 94 / 95 Series Exit Devices - 9475-F/9575-F Mortise (Standard, EL & SS)

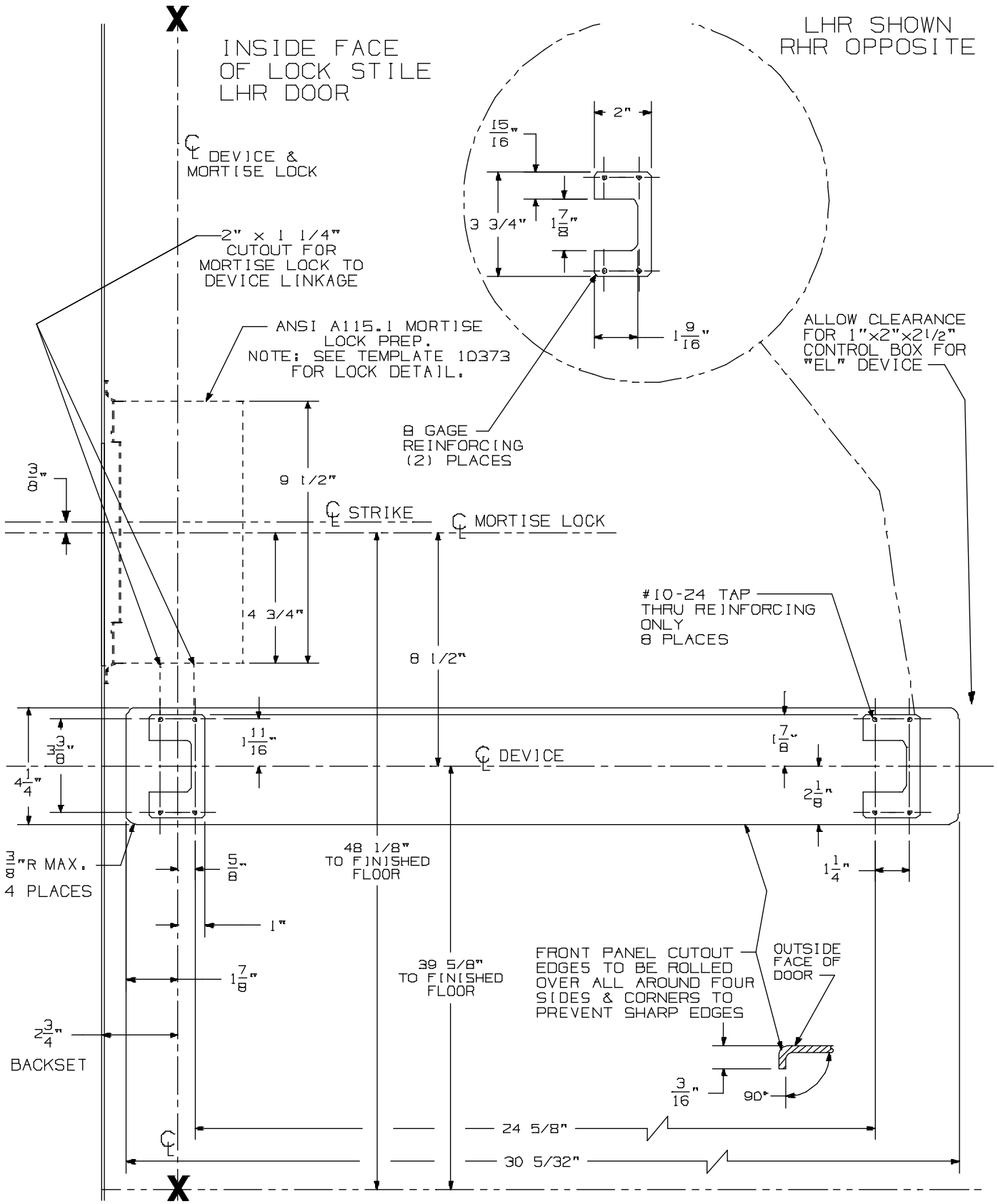

94/9575, 94/9575-F Mortise Device on 2' 10" up to 4' 0" Wide Door

VON DUPRIN®

NOTES: SEE MASTER SHEET #10001 FOR SUGGESTED REINFORCING
For a door smaller than 2' 10" see template #10374

TEMPLATE NUMBER: 10372_a Sht 1

DATE: 05-22-13

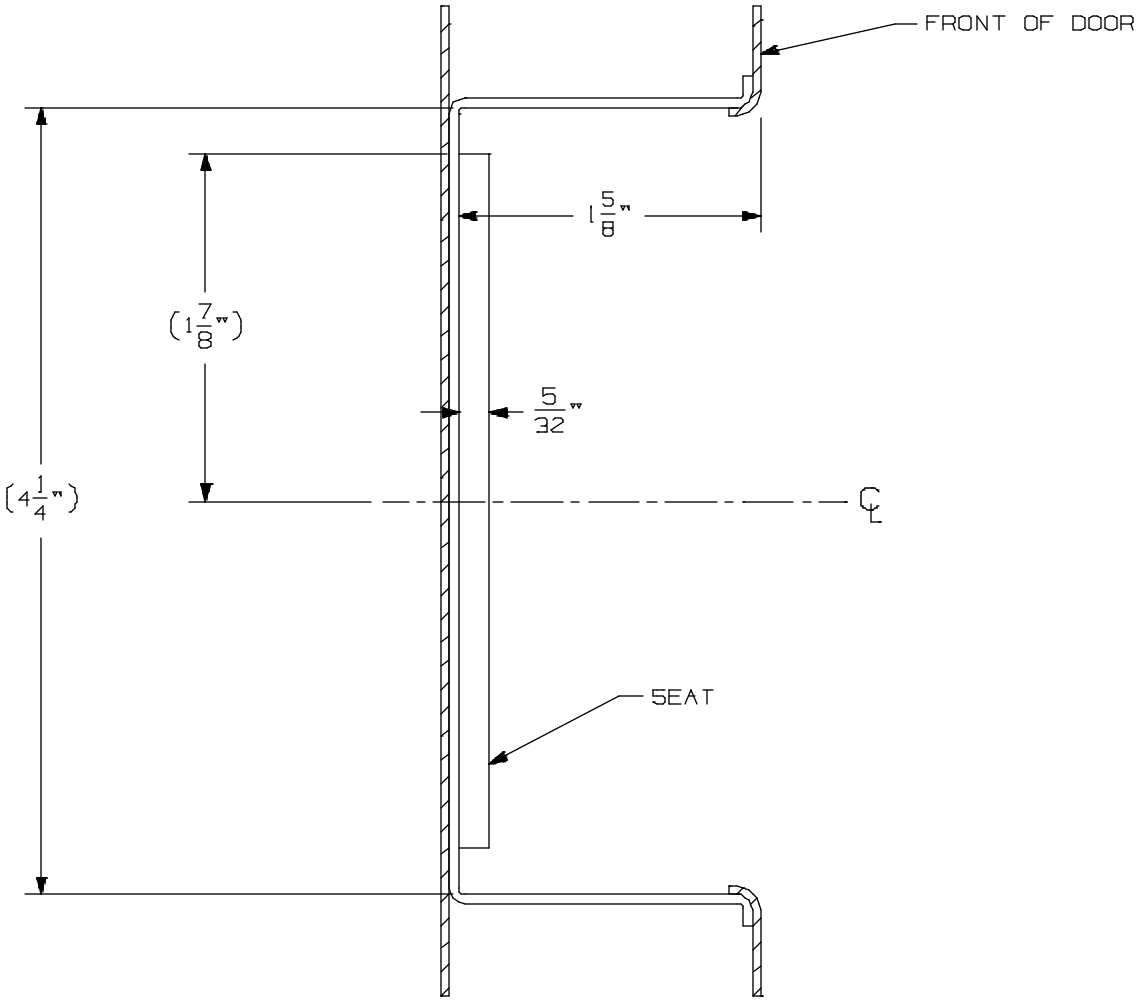

94/9575, 94/9575-F Mortise Device on 2’ 10” up to 4’ 0” Wide Door

VON DUPRIN®

NOTES: SEE MASTER SHEET #10001 FOR SUGGESTED REINFORCING
For a door smaller than 2’ 10” see template #10374

TEMPLATE NUMBER: 10372_a Sht 2

DATE: 05-22-13

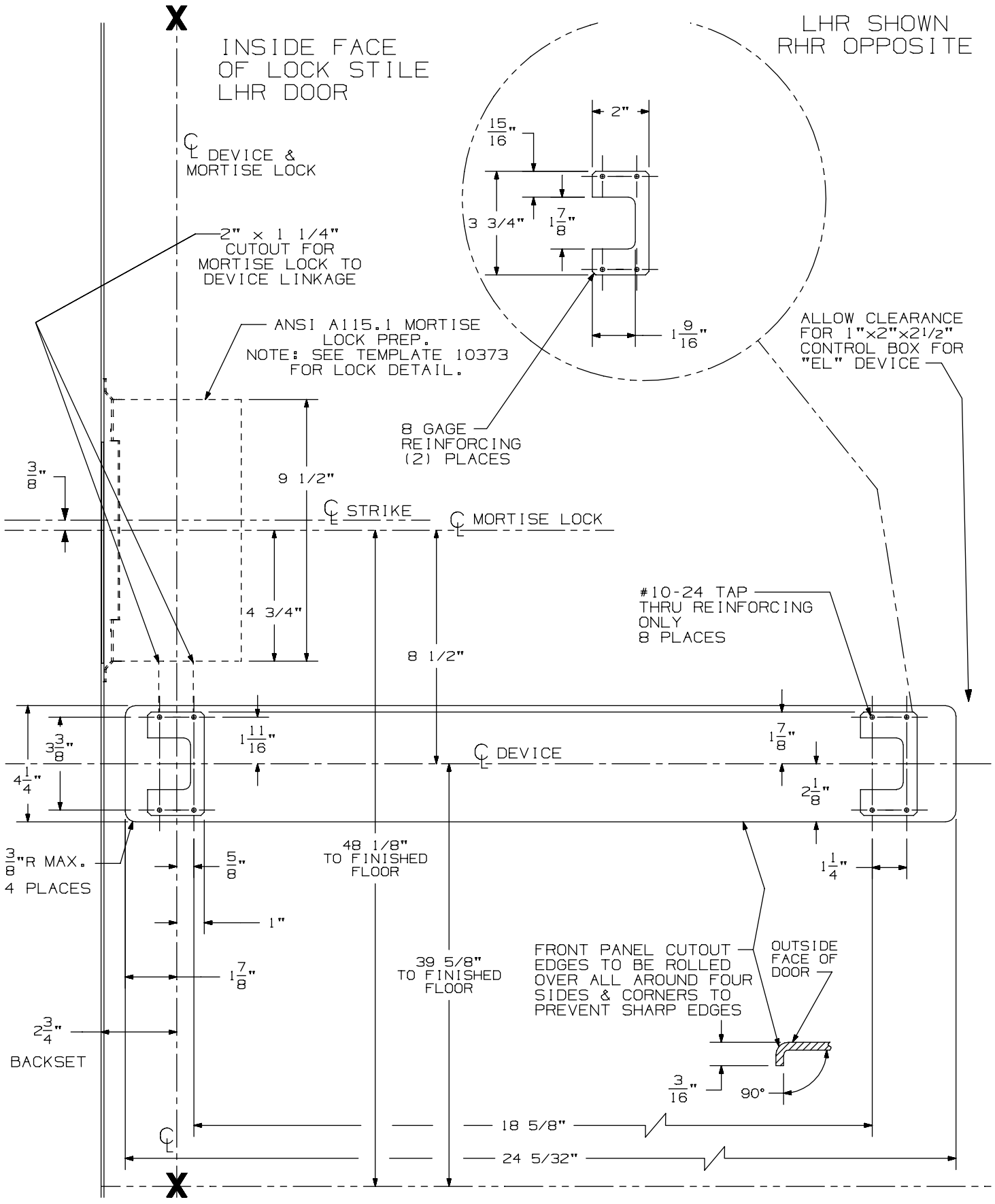

94/9575, 94/9575-F Mortise Device on 2' 6" up to 2' 10" Wide Door

VON DUPRIN®

NOTES: See Master Sheet #10001 For Suggested Reinforcing
For a door 2' 10" and larger see template # 10372

TEMPLATE NUMBER: 10374_a Sht 1

DATE: 05-22-13

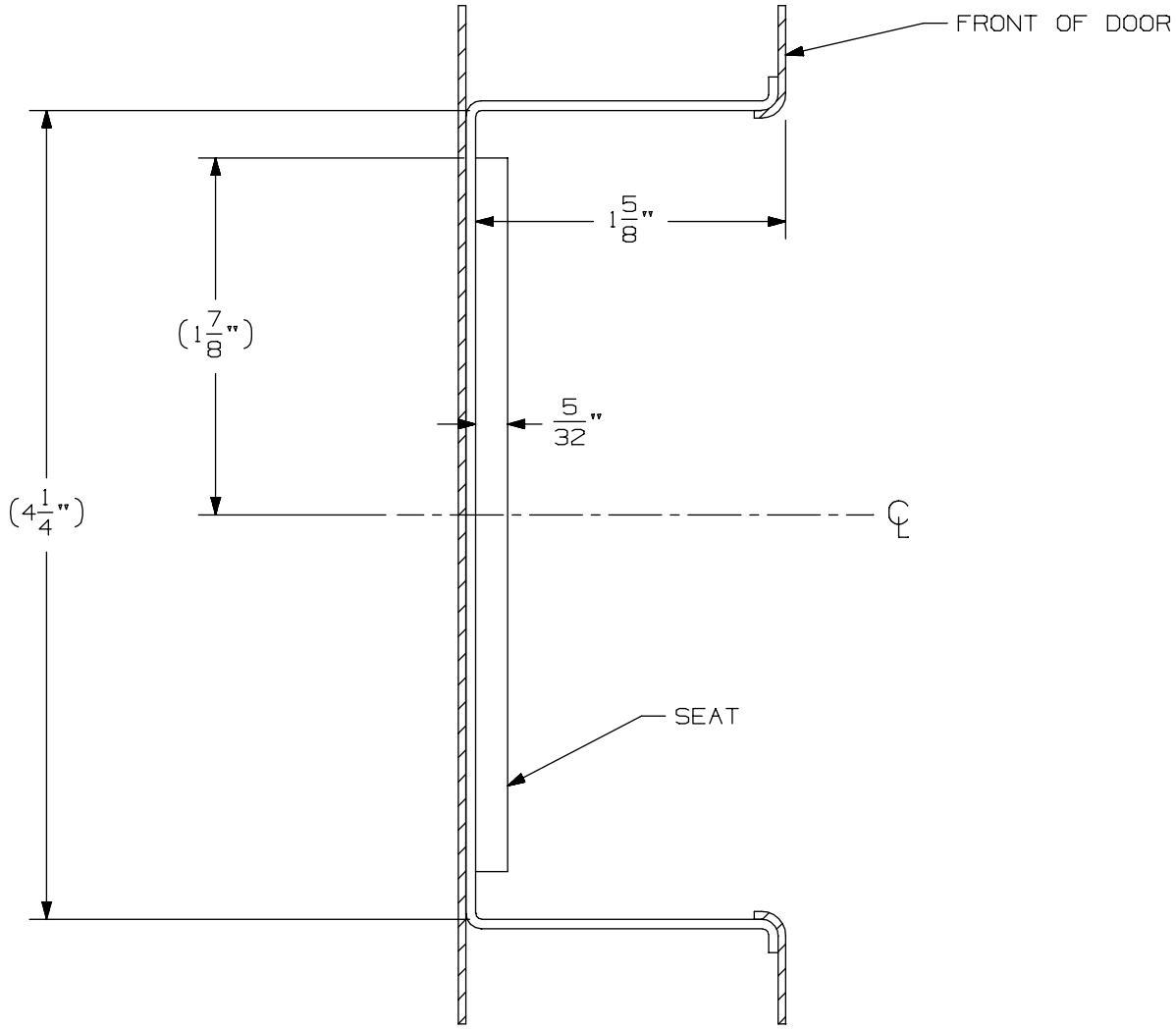

94/9575, 94/9575-F Mortise Device on 2' 6" up to 2' 10" Wide Door

VON DUPRIN®

NOTES: See Master Sheet #10001 For Suggested Reinforcing
For a door 2' 10" and larger see template # 10372

TEMPLATE NUMBER: 10374_a Sht 2

DATE: 05-22-13

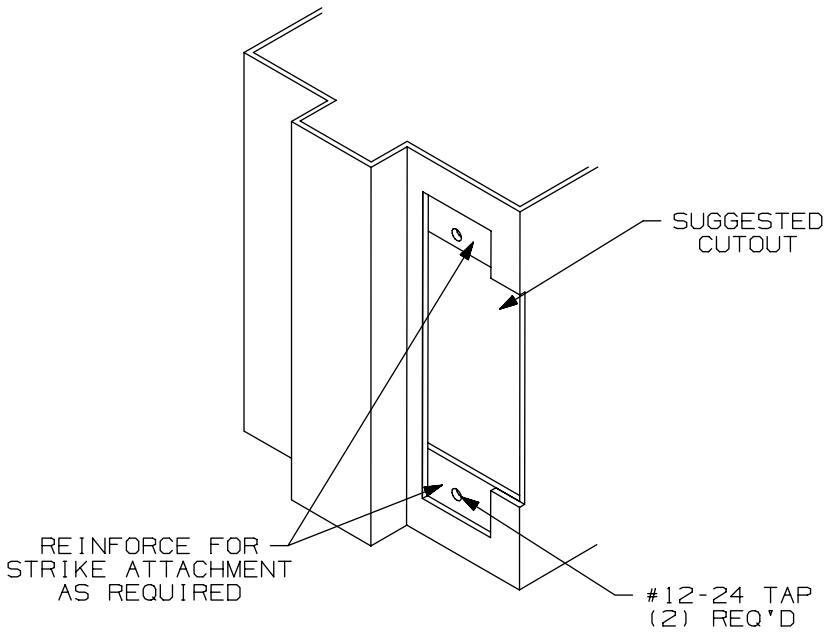

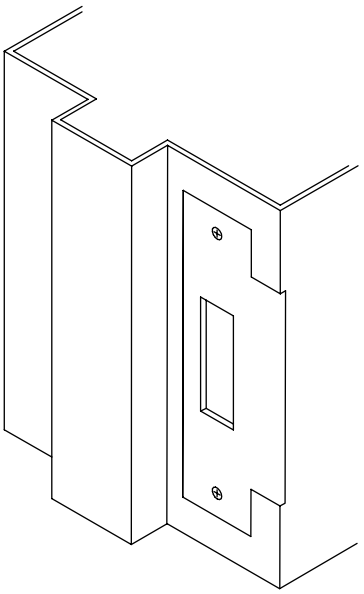

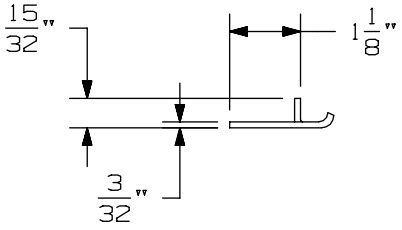

APPLICATION SCHEDULE	
DEVICE	DIM. "A"
9875 & 9875-F	11/16
9975 & 9975-F	11/16
8875 & 8875-F	1/2
5575 & 5575-F	1/2

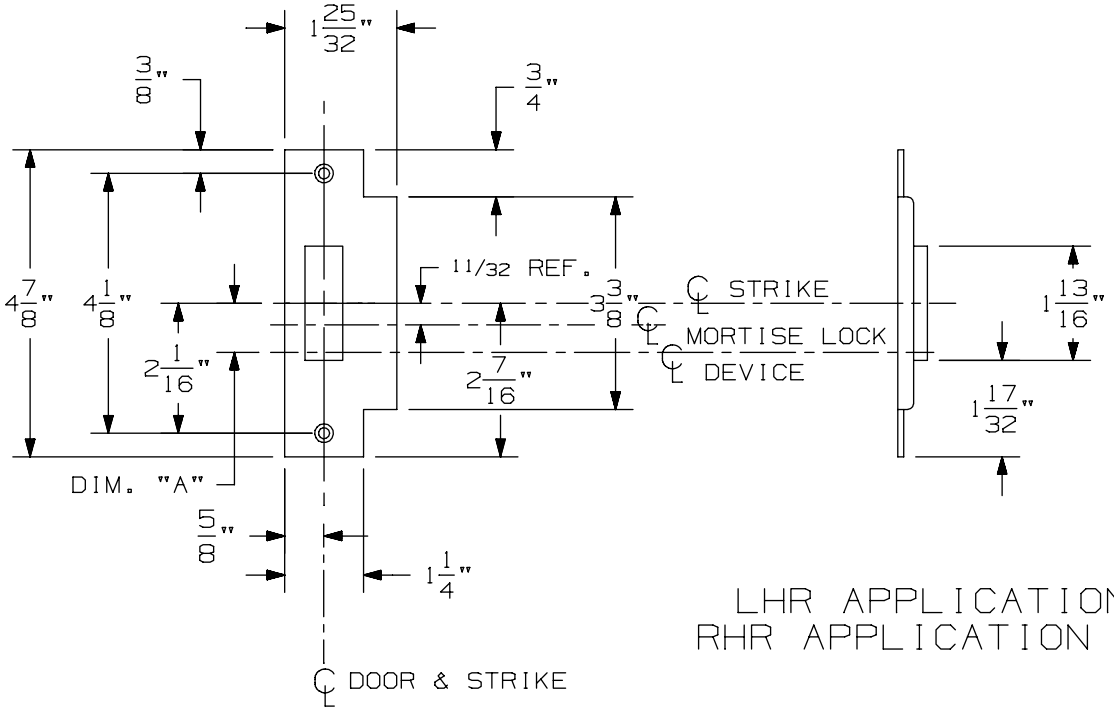

LHR APPLICATION SHOWN
RHR APPLICATION OPPOSITE

575 Mortise Strike (Single Door) for 7500 Mortise Lock

VON DUPRIN®

NOTES: SEE MASTER SHEET #10001 FOR SUGGESTED REINFORCING

TEMPLATE NUMBER: 30210_b

DATE: 07-22-13

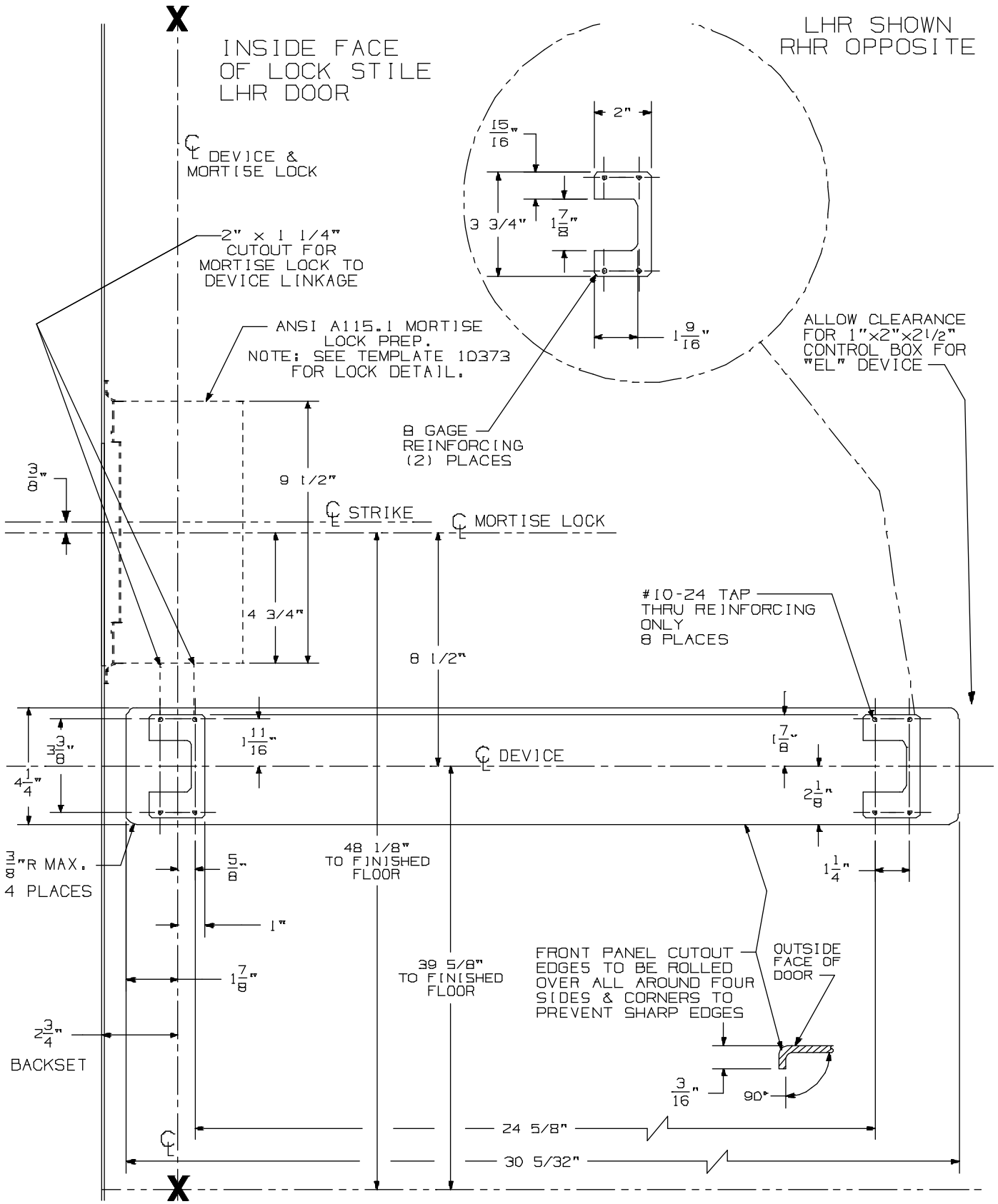

94/9575, 94/9575-F Mortise Device on 2' 10" up to 4' 0" Wide Door

VON DUPRIN®

NOTES: SEE MASTER SHEET #10001 FOR SUGGESTED REINFORCING
For a door smaller than 2' 10" see template #10374

TEMPLATE NUMBER: 10372_a Sht 1

DATE: 05-22-13

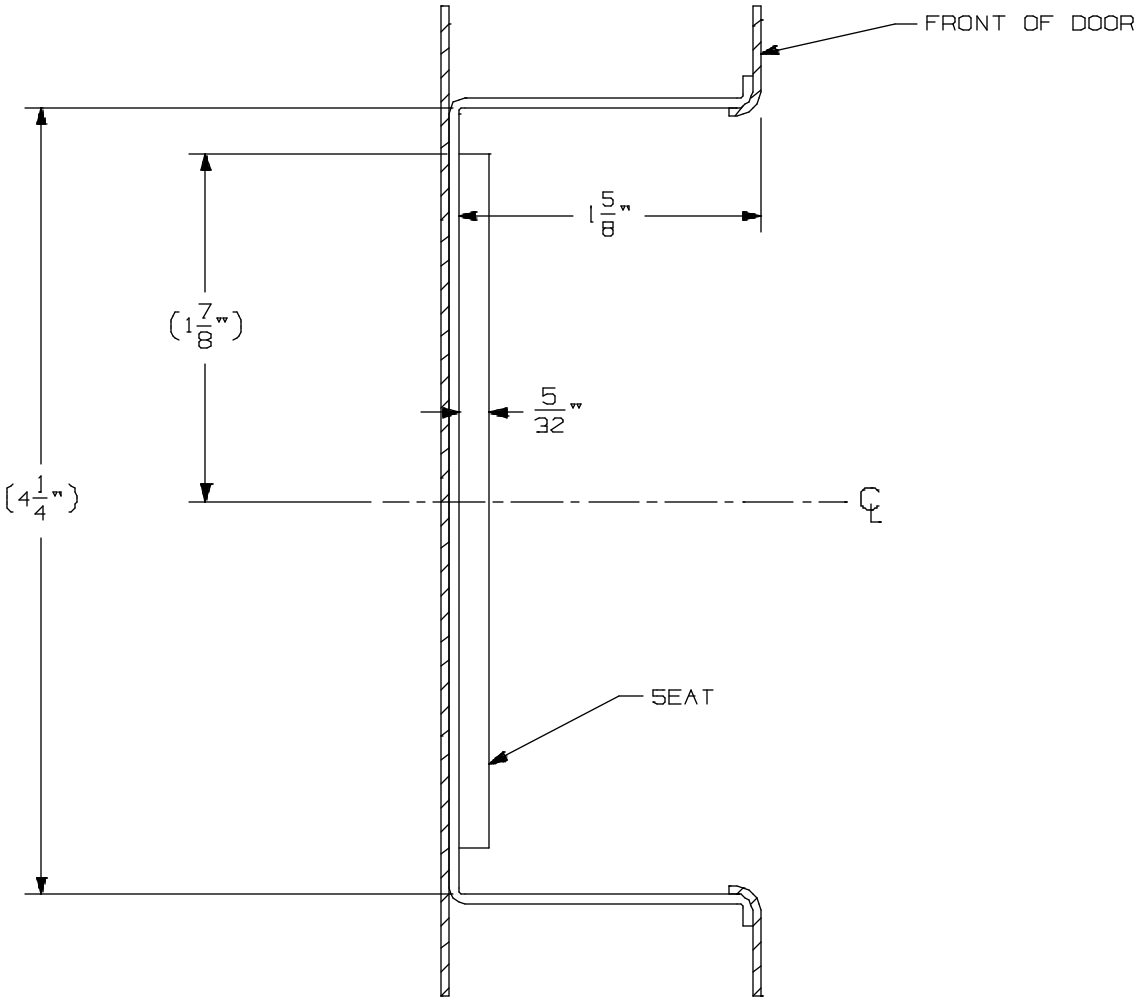

94/9575, 94/9575-F Mortise Device on 2’ 10” up to 4’ 0” Wide Door

VON DUPRIN®

NOTES: SEE MASTER SHEET #10001 FOR SUGGESTED REINFORCING
For a door smaller than 2’ 10” see template #10374

TEMPLATE NUMBER: 10372_a Sht 2

DATE: 05-22-13

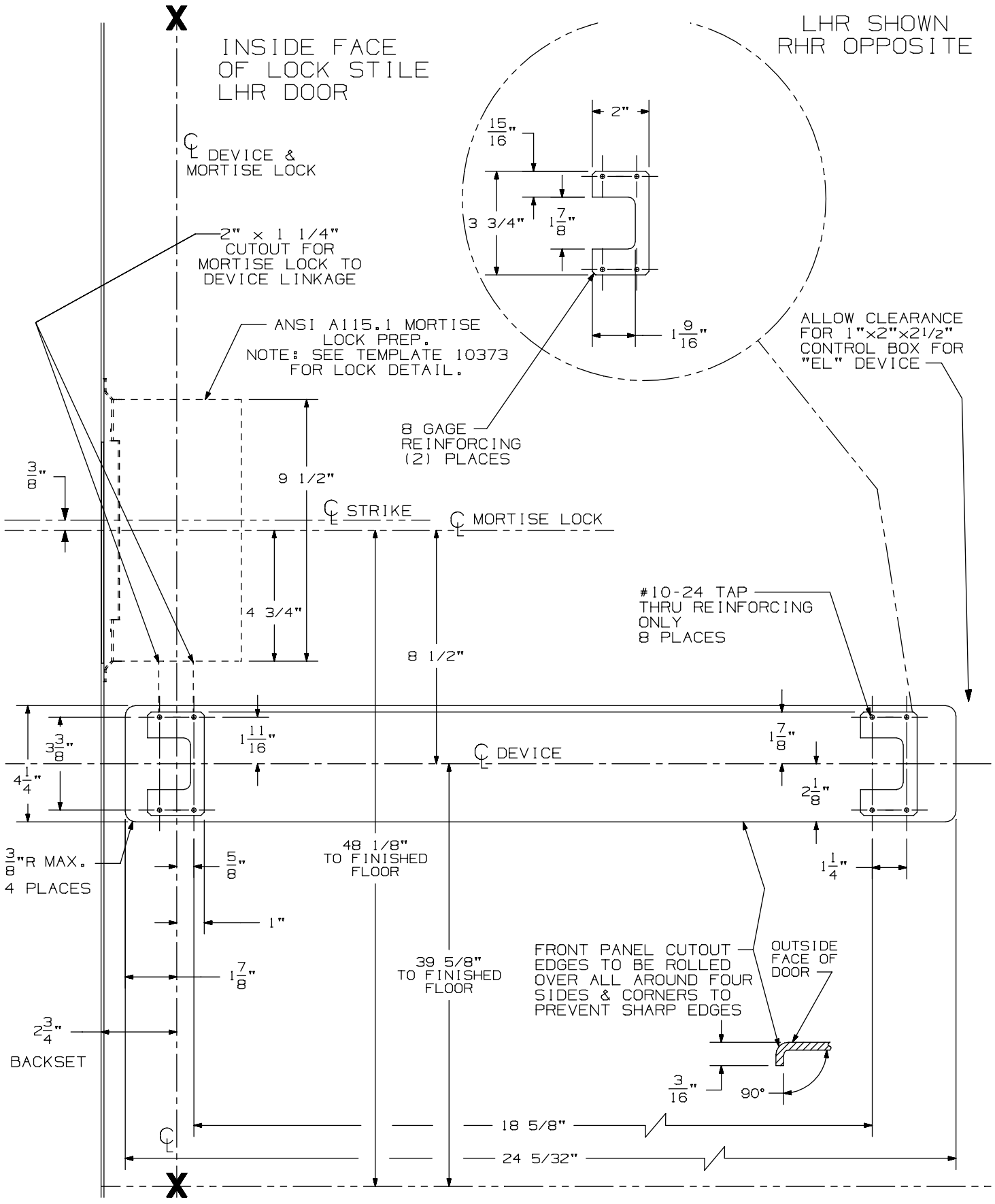

94/9575, 94/9575-F Mortise Device on 2' 6" up to 2' 10" Wide Door

VON DUPRIN®

NOTES: See Master Sheet #10001 For Suggested Reinforcing
For a door 2' 10" and larger see template # 10372

TEMPLATE NUMBER: 10374_a Sht 1

DATE: 05-22-13

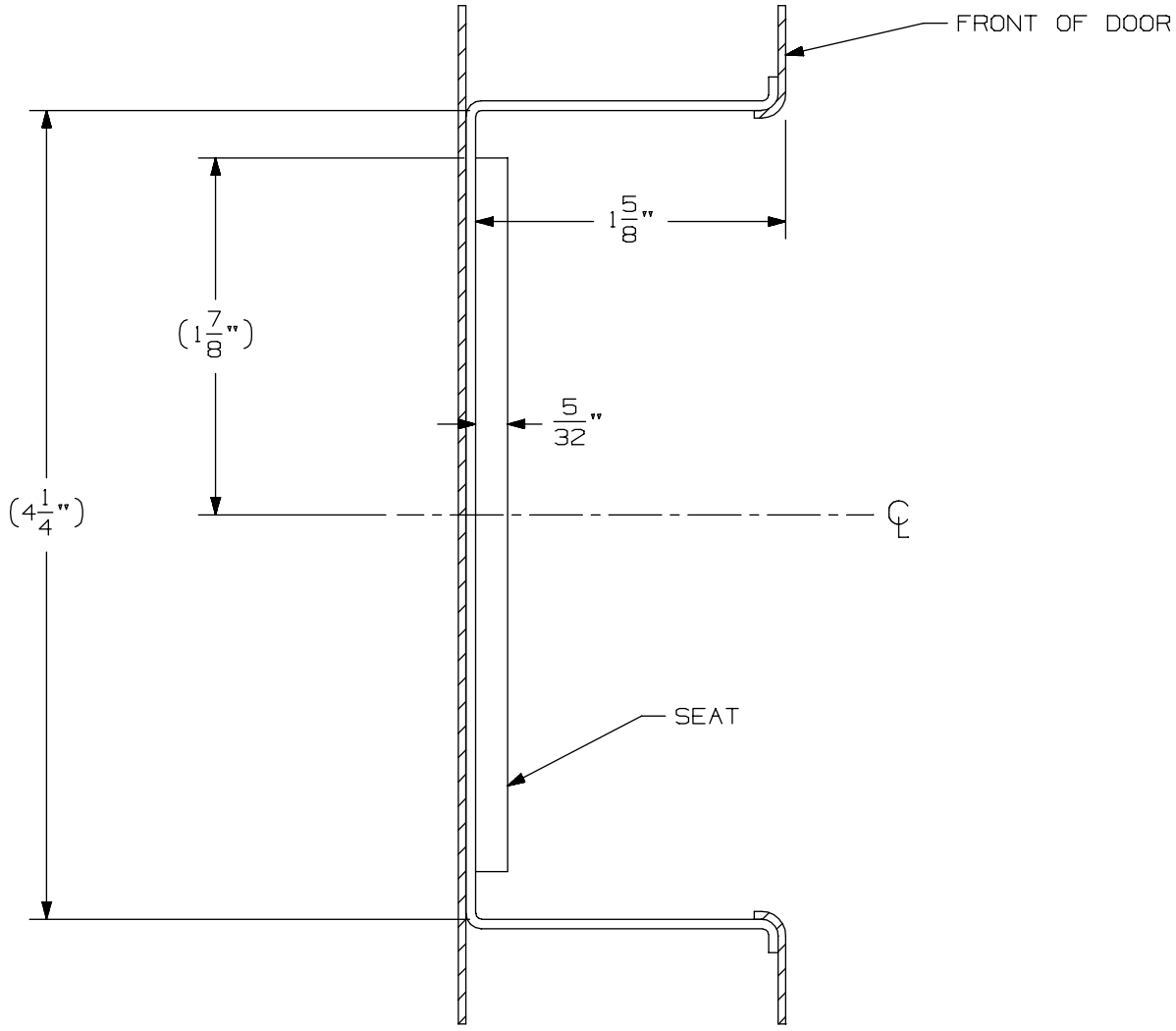

94/9575, 94/9575-F Mortise Device on 2' 6" up to 2' 10" Wide Door

VON DUPRIN®

NOTES: See Master Sheet #10001 For Suggested Reinforcing
For a door 2' 10" and larger see template # 10372

TEMPLATE NUMBER: 10374_a Sht 2

DATE: 05-22-13

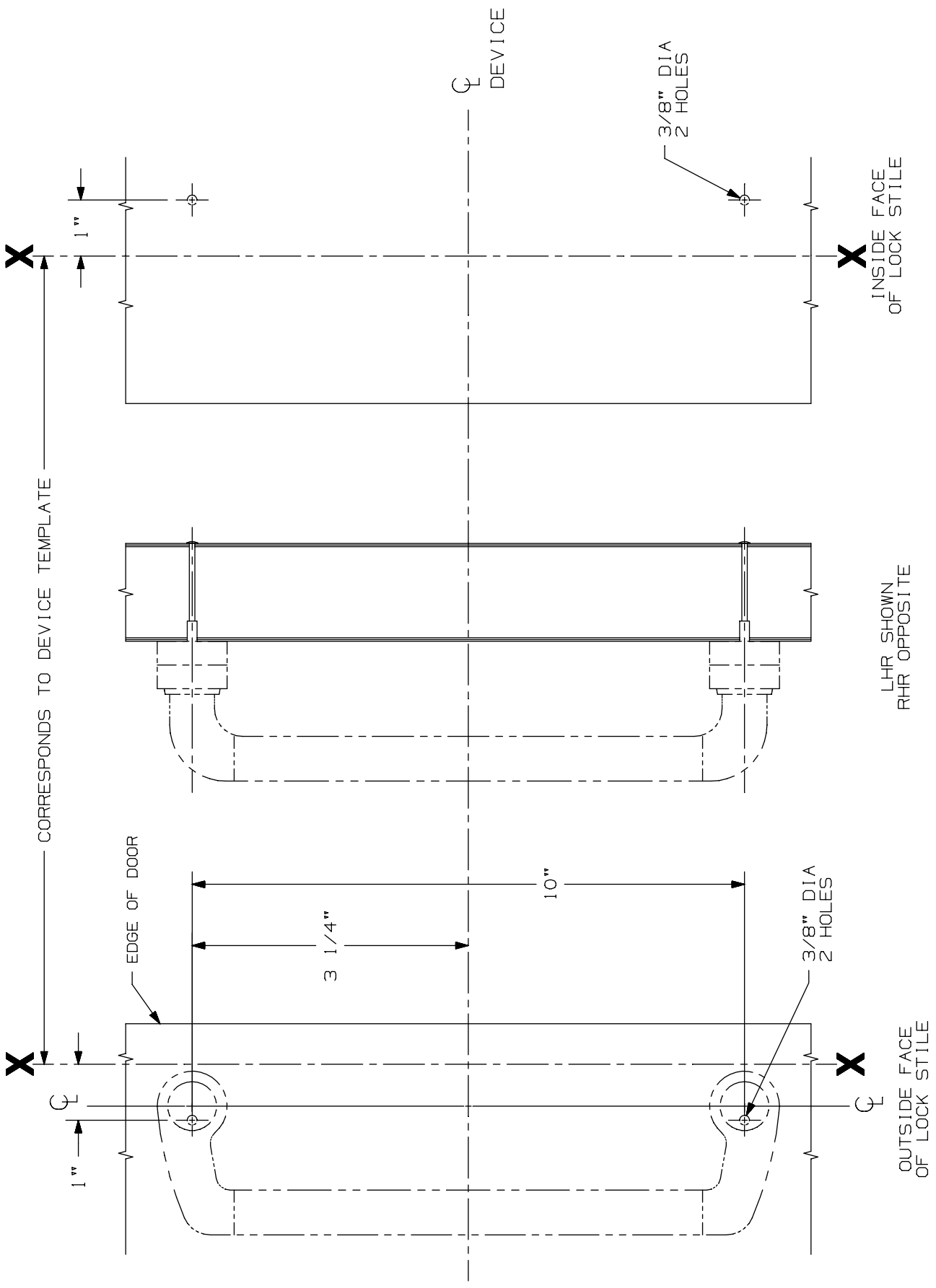

550 DT Trim for 94/9547 Vertical & 94/9575 Mort

VON DUPRIN®

NOTES: SEE MASTER SHEET #10001 FOR SUGGESTED REINFORCING

TEMPLATE NUMBER: 20031_a

DATE: 05-23-13

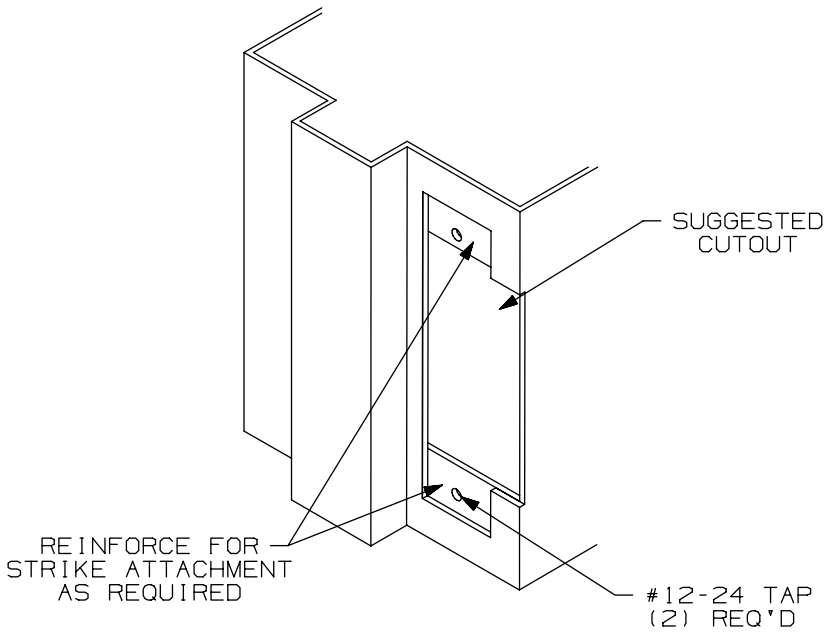

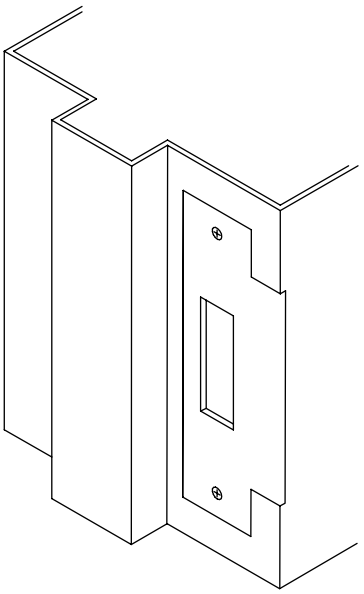

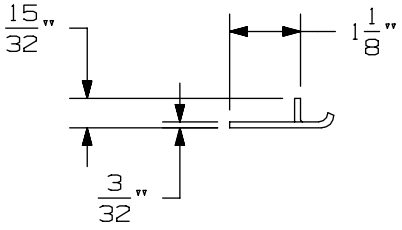

APPLICATION SCHEDULE	
DEVICE	DIM. "A"
9875 & 9875-F	11/16
9975 & 9975-F	11/16
8875 & 8875-F	1/2
5575 & 5575-F	1/2

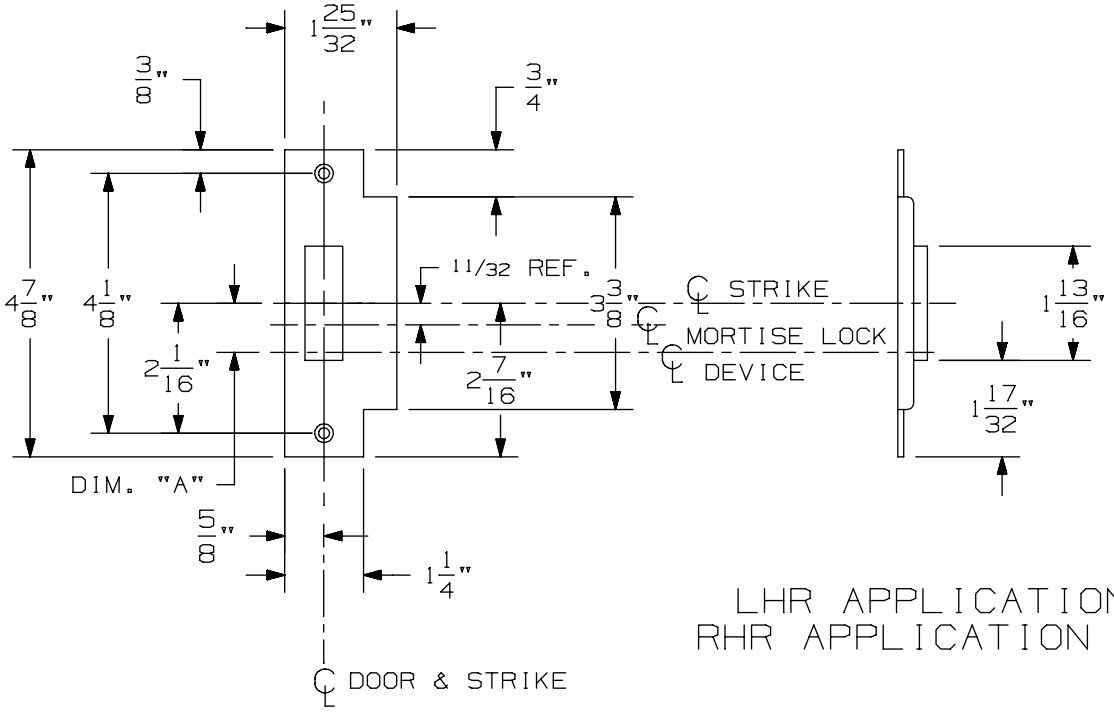

LHR APPLICATION SHOWN
RHR APPLICATION OPPOSITE

575 Mortise Strike (Single Door) for 7500 Mortise Lock

VON DUPRIN®

NOTES: SEE MASTER SHEET #10001 FOR SUGGESTED REINFORCING

TEMPLATE NUMBER: 30210_b

DATE: 07-22-13

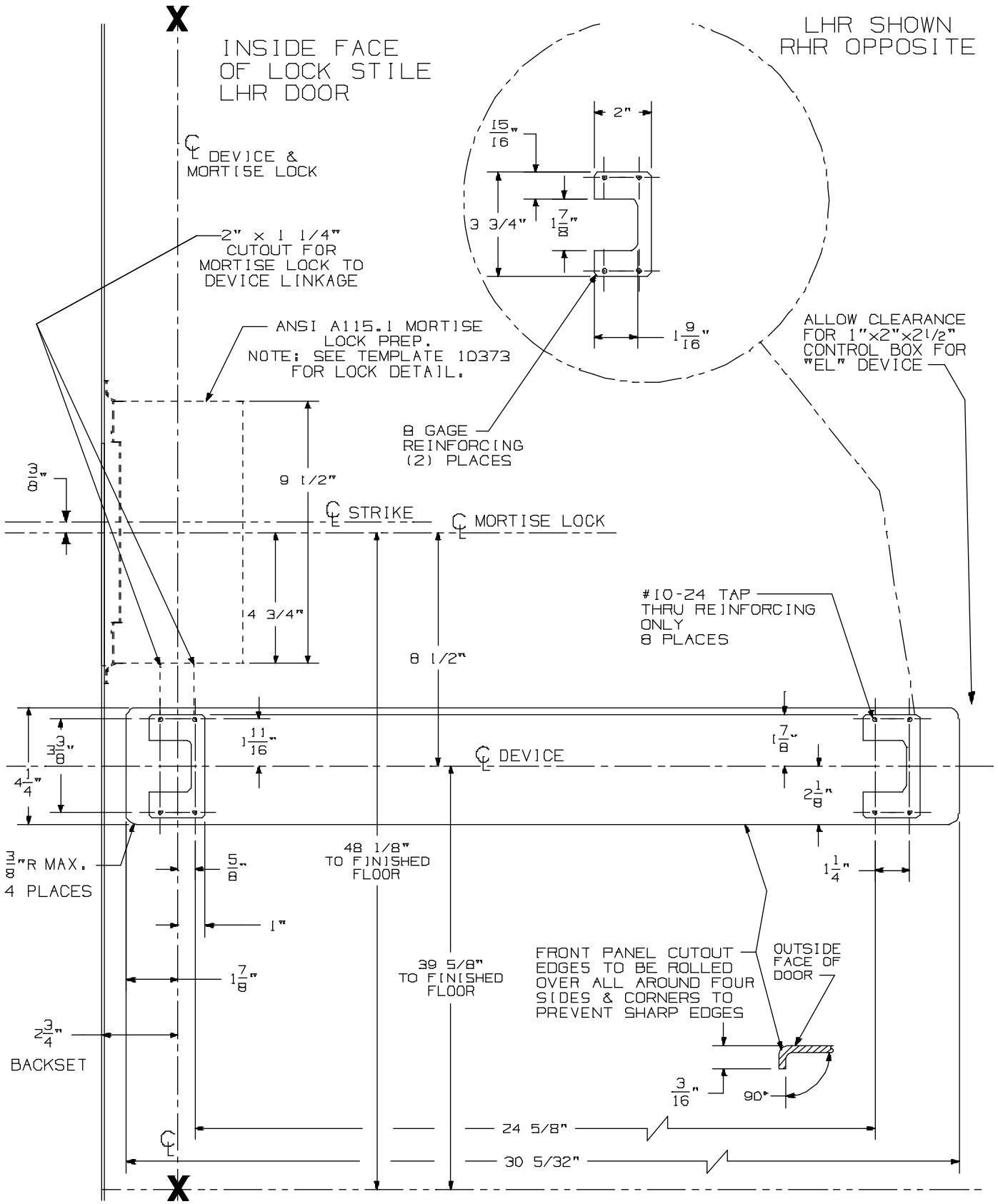

94/9575, 94/9575-F Mortise Device on 2' 10" up to 4' 0" Wide Door

VON DUPRIN®

NOTES: SEE MASTER SHEET #10001 FOR SUGGESTED REINFORCING
For a door smaller than 2' 10" see template #10374

TEMPLATE NUMBER: 10372_a Sht 1

DATE: 05-22-13

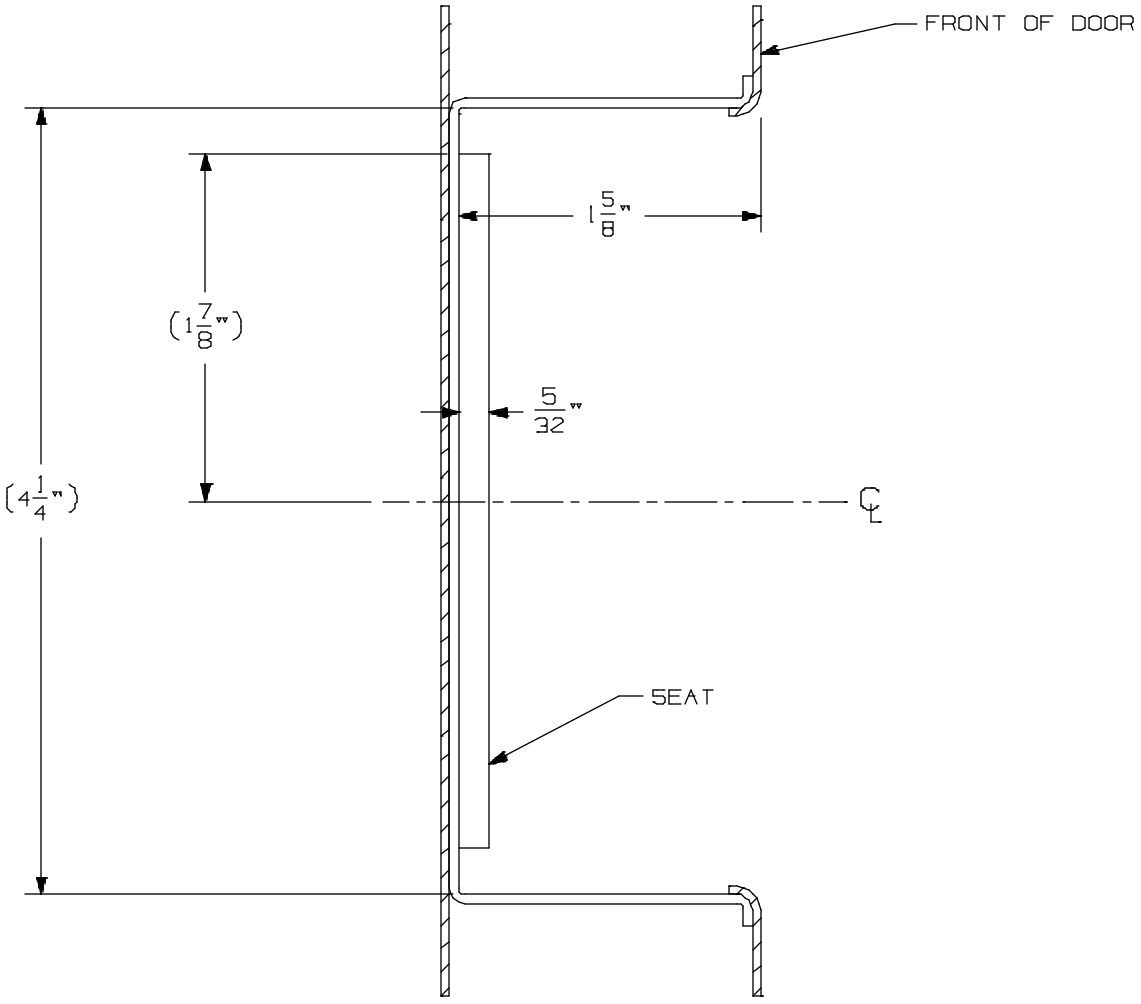

94/9575, 94/9575-F Mortise Device on 2’ 10” up to 4’ 0” Wide Door

VON DUPRIN®

NOTES: SEE MASTER SHEET #10001 FOR SUGGESTED REINFORCING
For a door smaller than 2’ 10” see template #10374

TEMPLATE NUMBER: 10372_a Sht 2

DATE: 05-22-13

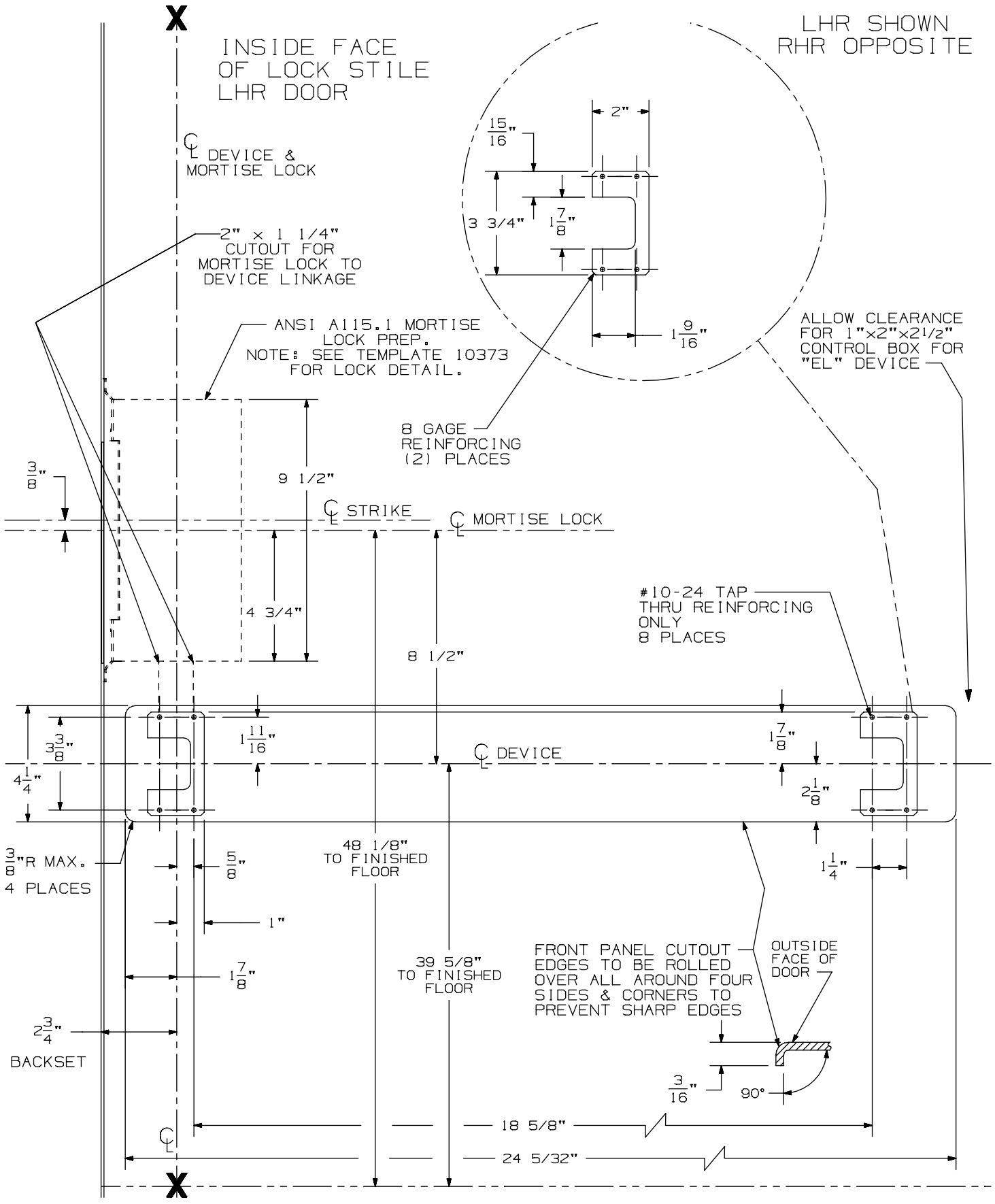

94/9575, 94/9575-F Mortise Device on 2' 6" up to 2' 10" Wide Door

VON DUPRIN®

NOTES: See Master Sheet #10001 For Suggested Reinforcing
For a door 2' 10" and larger see template # 10372

TEMPLATE NUMBER: 10374_a Sht 1

DATE: 05-22-13

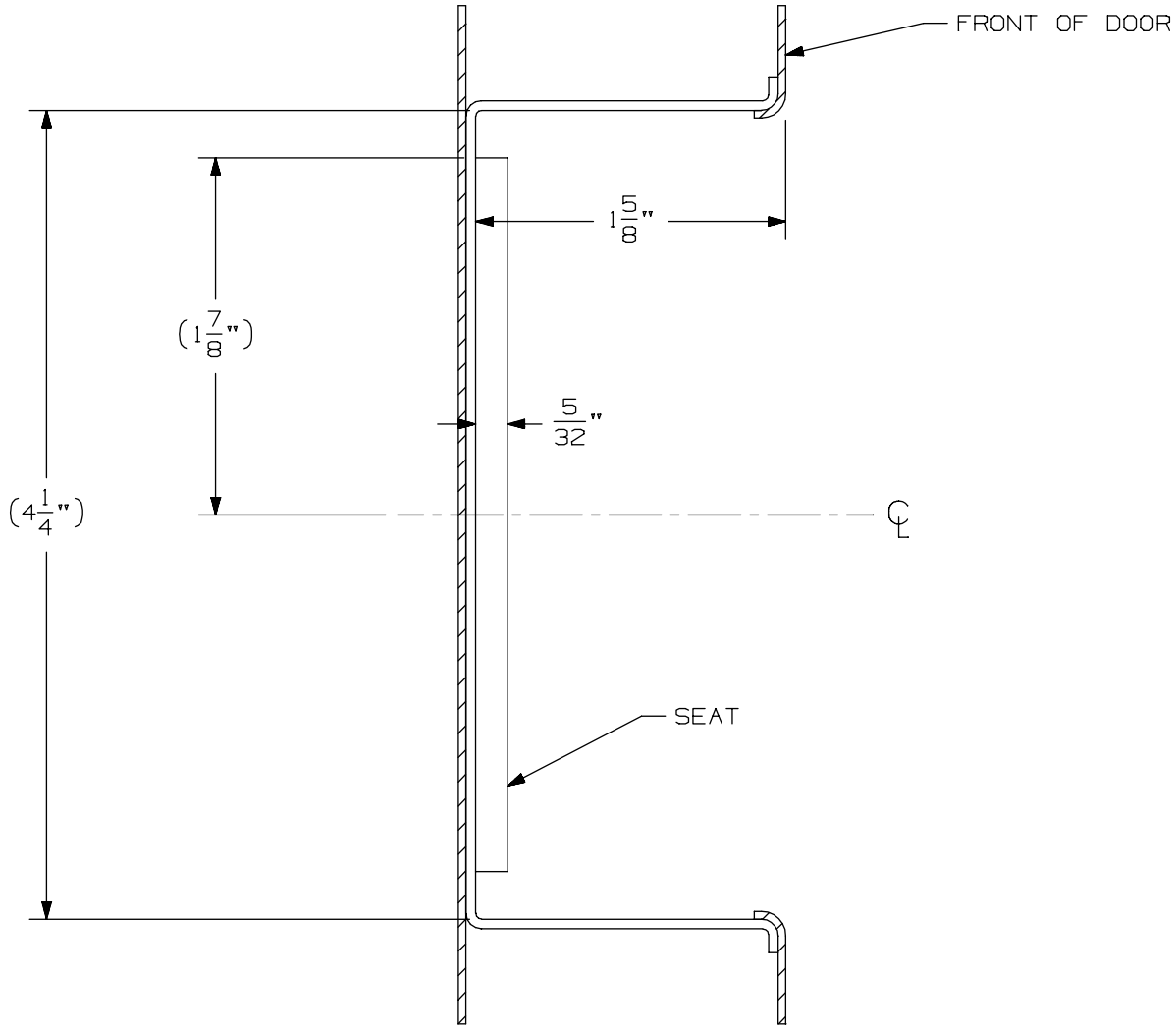

94/9575, 94/9575-F Mortise Device on 2' 6" up to 2' 10" Wide Door

VON DUPRIN®

NOTES: See Master Sheet #10001 For Suggested Reinforcing
For a door 2' 10" and larger see template # 10372

TEMPLATE NUMBER: 10374_a Sht 2

DATE: 05-22-13

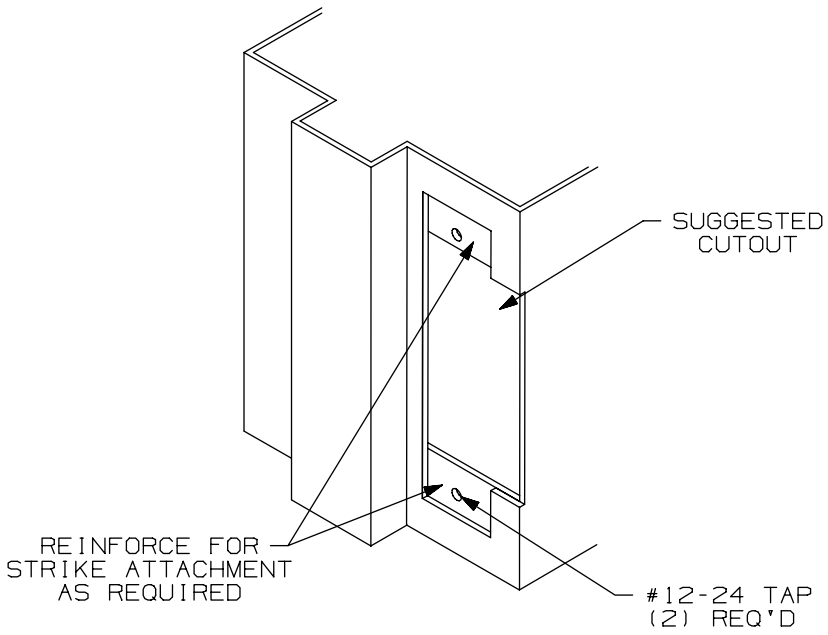

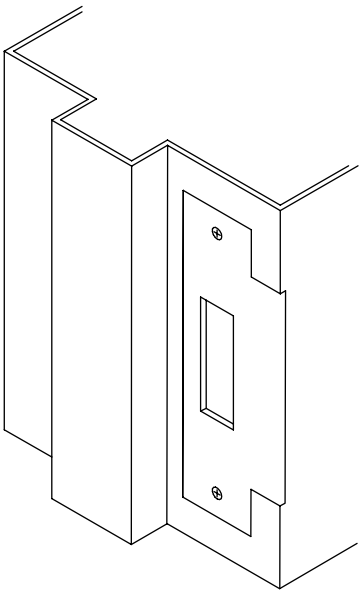

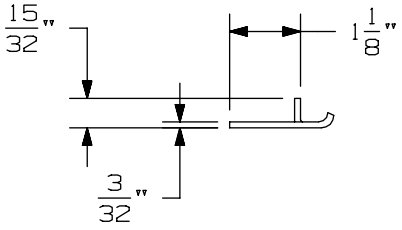

APPLICATION SCHEDULE	
DEVICE	DIM. "A"
9875 & 9875-F	11/16
9975 & 9975-F	11/16
8875 & 8875-F	1/2
5575 & 5575-F	1/2

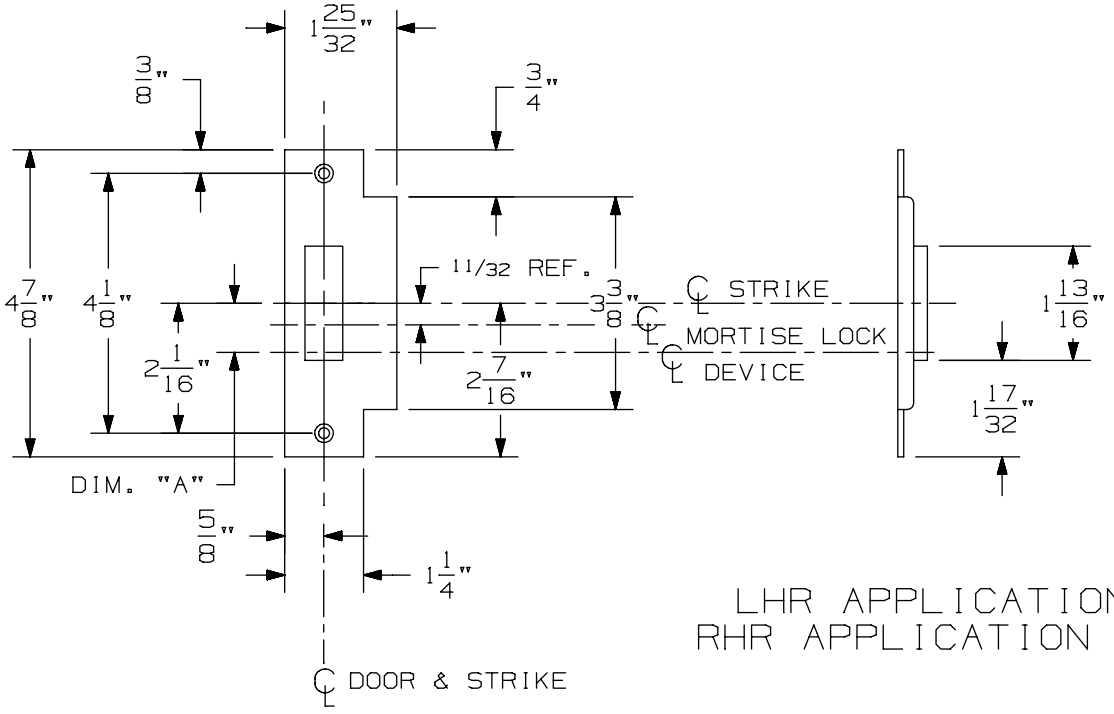

LHR APPLICATION SHOWN
RHR APPLICATION OPPOSITE

575 Mortise Strike (Single Door) for 7500 Mortise Lock

VON DUPRIN®

NOTES: SEE MASTER SHEET #10001 FOR SUGGESTED REINFORCING

TEMPLATE NUMBER: 30210_b

DATE: 07-22-13

98 / 99 Series Exit Devices

98 / 99 Series Exit Devices - 98/99 Rim (Standard, CD, EL, LX, RX & SS)

APPLICATION	PREPARATION
SURFACE APPLICATION	#10-24 TAP 4 PLACES
990 TRIM APPLICATION OR SEX BOLT APPLICATION (SEE NOTE 1)	1/4' DIA THIS SIDE 13/32" DIA OPPOSITE SIDE - 4 PLACES

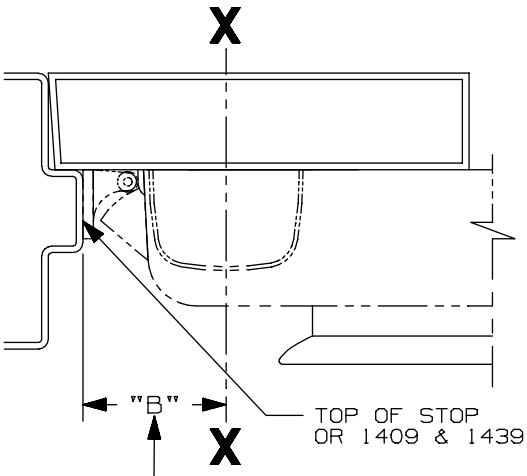

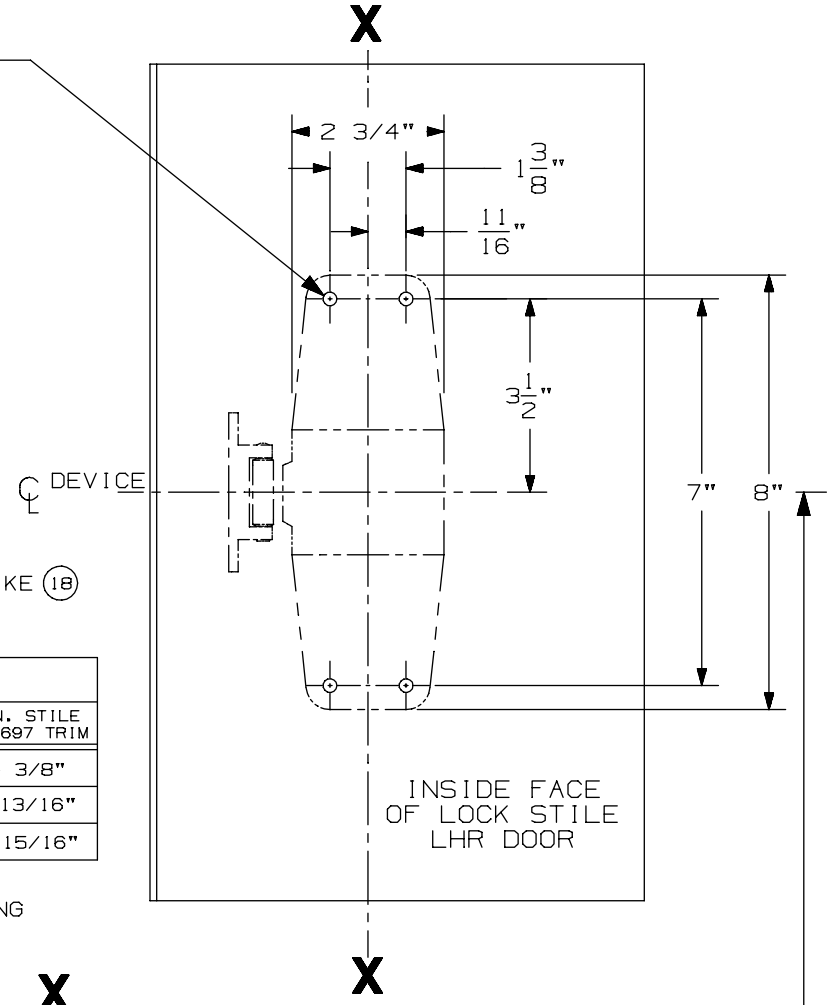

SINGLE DOOR INSTALLATION			
STRIKE	DIM. "B"	MIN. STILE 990/991/992 TRIM	MIN. STILE 696/697 TRIM
299 & 299-F	2 3/8"	4 1/2"	4 3/8"
(18) 1409 & 1439	1 9/16"	3 13/16"	3 13/16"
1606	1 15/16"	4 1/16"	3 15/16"

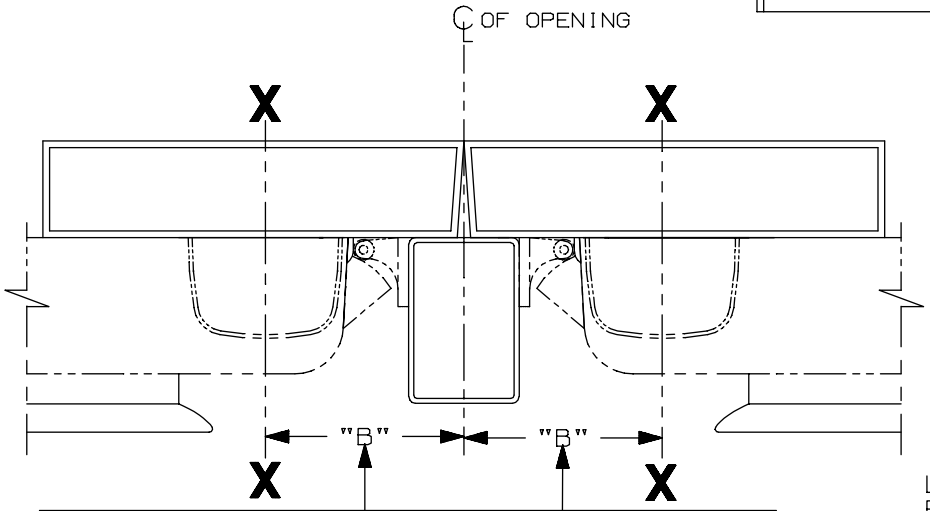

SINGLE DOOR OPENING
39 13/16" TO FINISHED FLOOR

DOUBLE DOOR OPENING
WITH VON DUPRIN MULLION
39 11/16"

DOUBLE DOOR INSTALLATION WITH VON DUPRIN MULLIONS				
MULLION	STRIKE	DIM. "B"	MIN. STILE 990/991/992 TRIM	MIN. STILE 696/697 TRIM
(18) 4954/9954	299/229-F	3 3/8"	4 7/8"	4 3/4"
9954	499-F	3 1/2"	5"	4 7/8"
5654	299	2 15/16"	4 3/8"	4 1/4"
5754	1408	2 1/8"	3 13/16"	3 13/16"
1654	1606	2 15/16"	4 3/8"	4 1/4"

LHR APPLICATION SHOWN
RHR APPLICATION OPPOSITE

NOTES:
1. THESE FOUR HOLES TO BE PREPARED FOR SURFACE APPLICATION WHEN USING 696/697 TRIM. DO NOT PREPARE FOR SEX BOLTS.
2. FOR STOCK HOLLOW METAL DOORS SEE TEMPLATE NO. 10307 FOR TYPE "161" CUTOUT AND 10313 FOR TYPE "86" CUTOUT.
3. GLASS BEAD KIT AVAILABLE WHEN REQUIRED.
4. FOR OUTSIDE TRIM PREPARATION, WHEN REQUIRED, SEE TRIM TEMPLATE.
5. 9954 W/299-F FOR HURRICANE APPLICATIONS (18) ONLY.

98/99 & 98-F/99-F EO, DT Rim Devices

VON DUPRIN®

NOTES: SEE MASTER SHEET #10001 FOR SUGGESTED REINFORCING

TEMPLATE NUMBER: 10300_a

DATE: 05-21-13

RIM APPLICATION

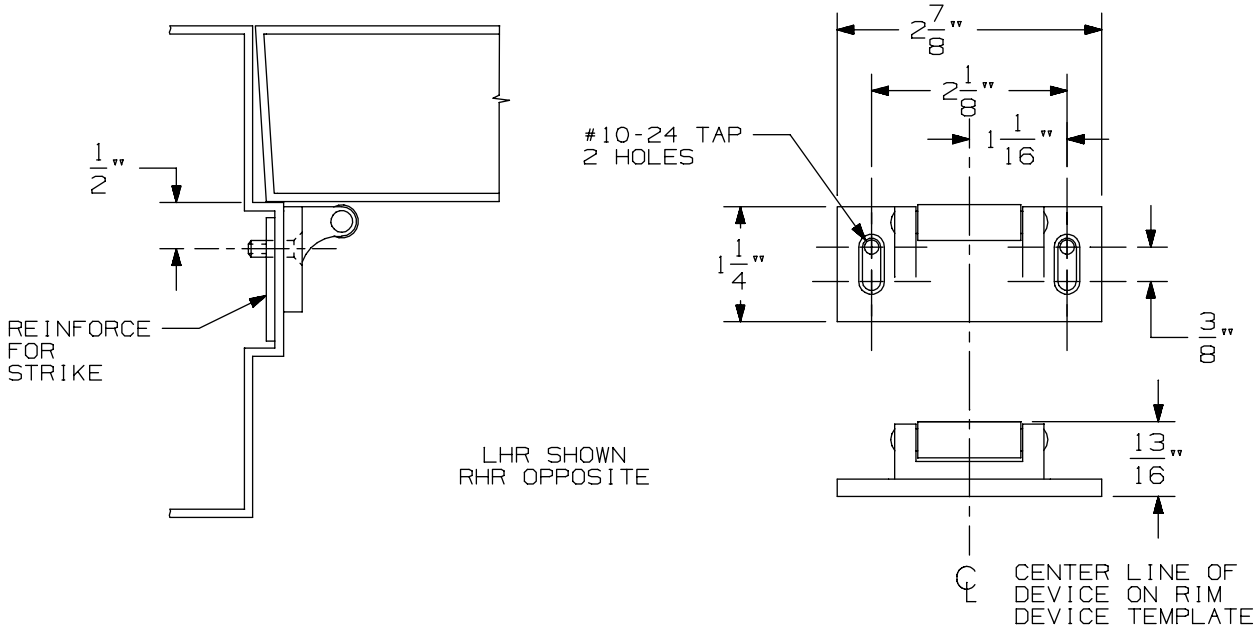

VERTICAL APPLICATION

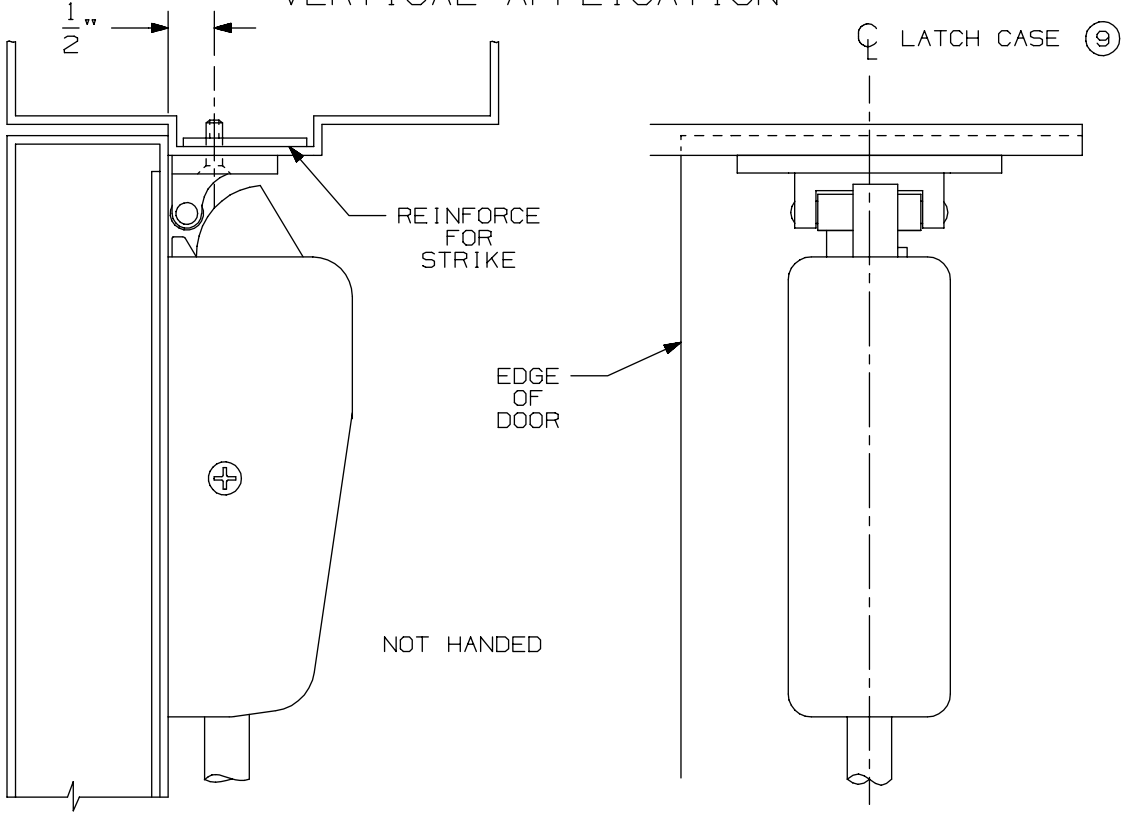

NOTE: LATCH CASE MOUNTING HOLES TO BE PREPARED AT INSTALLATION ON DOOR.

299 & 299F Strike

VON DUPRIN®

NOTES: SEE MASTER SHEET #10001 FOR SUGGESTED REINFORCING

TEMPLATE NUMBER: 30039_a

DATE: 05-23-13

APPLICATION	PREPARATION
SURFACE APPLICATION	#10-24 TAP 4 PLACES
990 TRIM APPLICATION OR SEX BOLT APPLICATION (SEE NOTE 1)	1/4' DIA THIS SIDE 13/32" DIA OPPOSITE SIDE - 4 PLACES

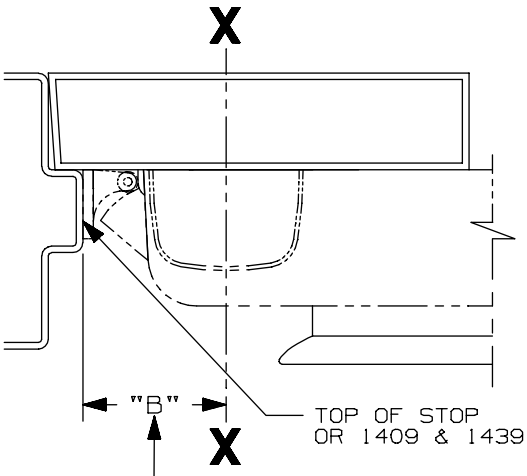

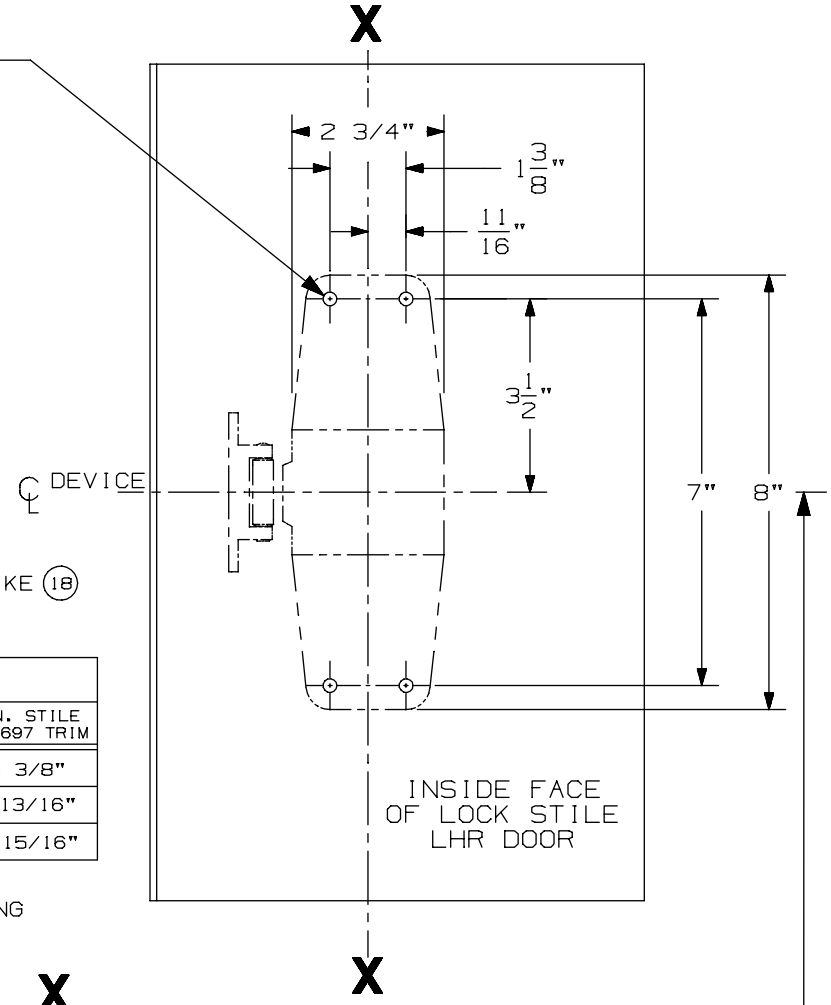

SINGLE DOOR INSTALLATION			
STRIKE	DIM. "B"	MIN. STILE 990/991/992 TRIM	MIN. STILE 696/697 TRIM
299 & 299-F	2 3/8"	4 1/2"	4 3/8"
(18) 1409 & 1439	1 9/16"	3 13/16"	3 13/16"
1606	1 15/16"	4 1/16"	3 15/16"

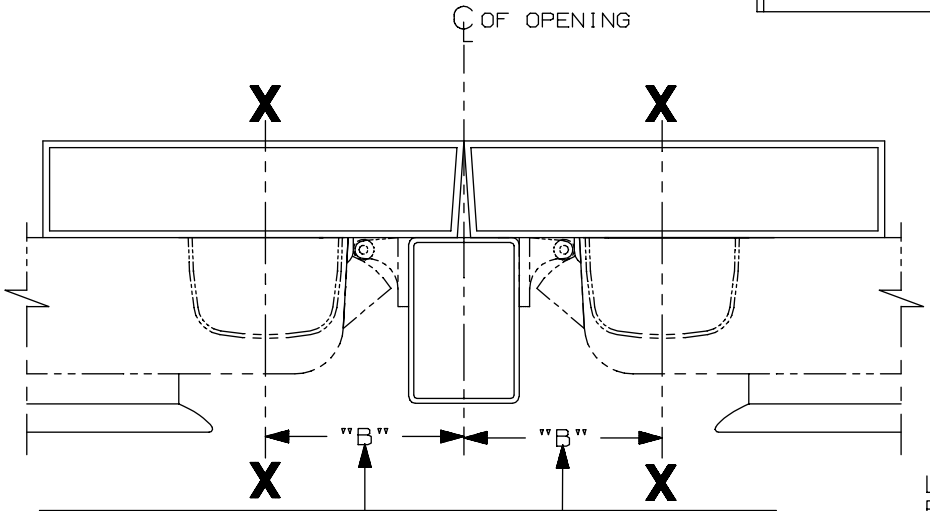

SINGLE DOOR OPENING
39 13/16" TO FINISHED FLOOR

DOUBLE DOOR OPENING
WITH VON DUPRIN MULLION
39 11/16"

DOUBLE DOOR INSTALLATION WITH VON DUPRIN MULLIONS				
MULLION	STRIKE	DIM. "B"	MIN. STILE 990/991/992 TRIM	MIN. STILE 696/697 TRIM
(18) 4954/9954	299/229-F	3 3/8"	4 7/8"	4 3/4"
9954	499-F	3 1/2"	5"	4 7/8"
5654	299	2 15/16"	4 3/8"	4 1/4"
5754	1408	2 1/8"	3 13/16"	3 13/16"
1654	1606	2 15/16"	4 3/8"	4 1/4"

LHR APPLICATION SHOWN
RHR APPLICATION OPPOSITE

NOTES:
1. THESE FOUR HOLES TO BE PREPARED FOR SURFACE APPLICATION WHEN USING 696/697 TRIM. DO NOT PREPARE FOR SEX BOLTS.
2. FOR STOCK HOLLOW METAL DOORS SEE TEMPLATE NO. 10307 FOR TYPE "161" CUTOUT AND 10313 FOR TYPE "86" CUTOUT.
3. GLASS BEAD KIT AVAILABLE WHEN REQUIRED.
4. FOR OUTSIDE TRIM PREPARATION, WHEN REQUIRED, SEE TRIM TEMPLATE.
5. 9954 W/299-F FOR HURRICANE APPLICATIONS (18) ONLY.

98/99 & 98-F/99-F EO, DT Rim Devices

VON DUPRIN®

NOTES: SEE MASTER SHEET #10001 FOR SUGGESTED REINFORCING

TEMPLATE NUMBER: 10300_a

DATE: 05-21-13

990 DT TRIM

NOTES: SEE MASTER SHEET #10001 FOR SUGGESTED REINFORCING

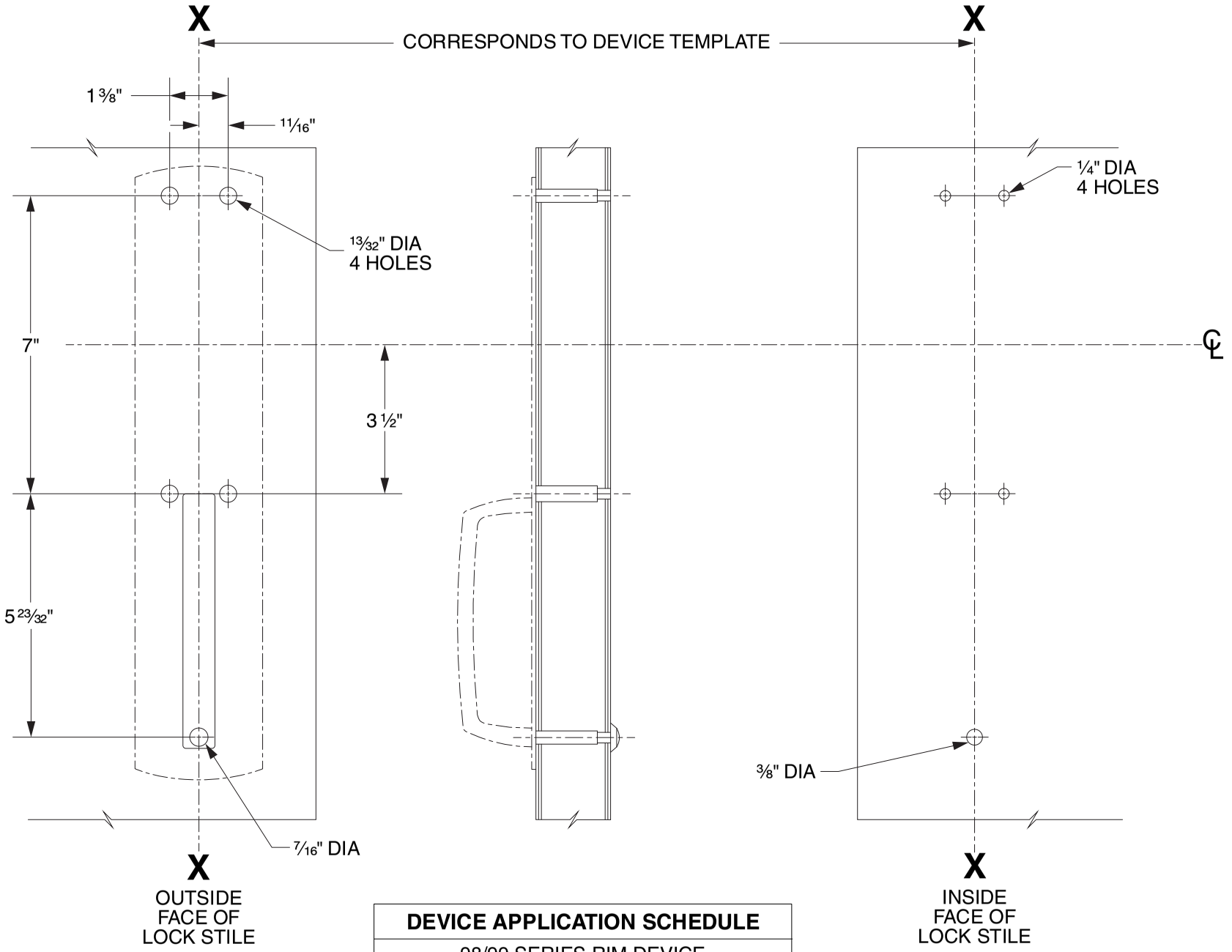

DEVICE APPLICATION SCHEDULE
98/99 SERIES RIM DEVICE
9827/9927 SERIES DEVICE
9847/9947 SERIES DEVICE
9849/9949 SERIES DEVICE
9875/9975 SERIES DEVICE

LHR SHOWN
RHR OPPOSITE

VON DUPRIN®

TEMPLATE NUMBER: 20268_C

DATE: 05-31-13

RIM APPLICATION

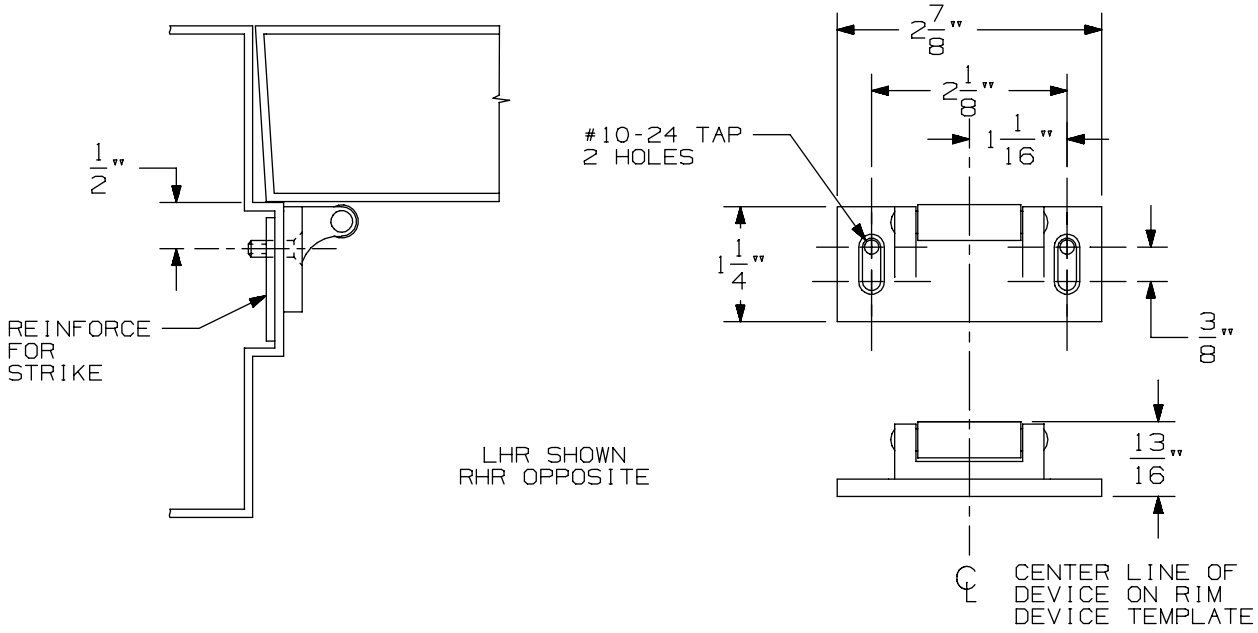

VERTICAL APPLICATION

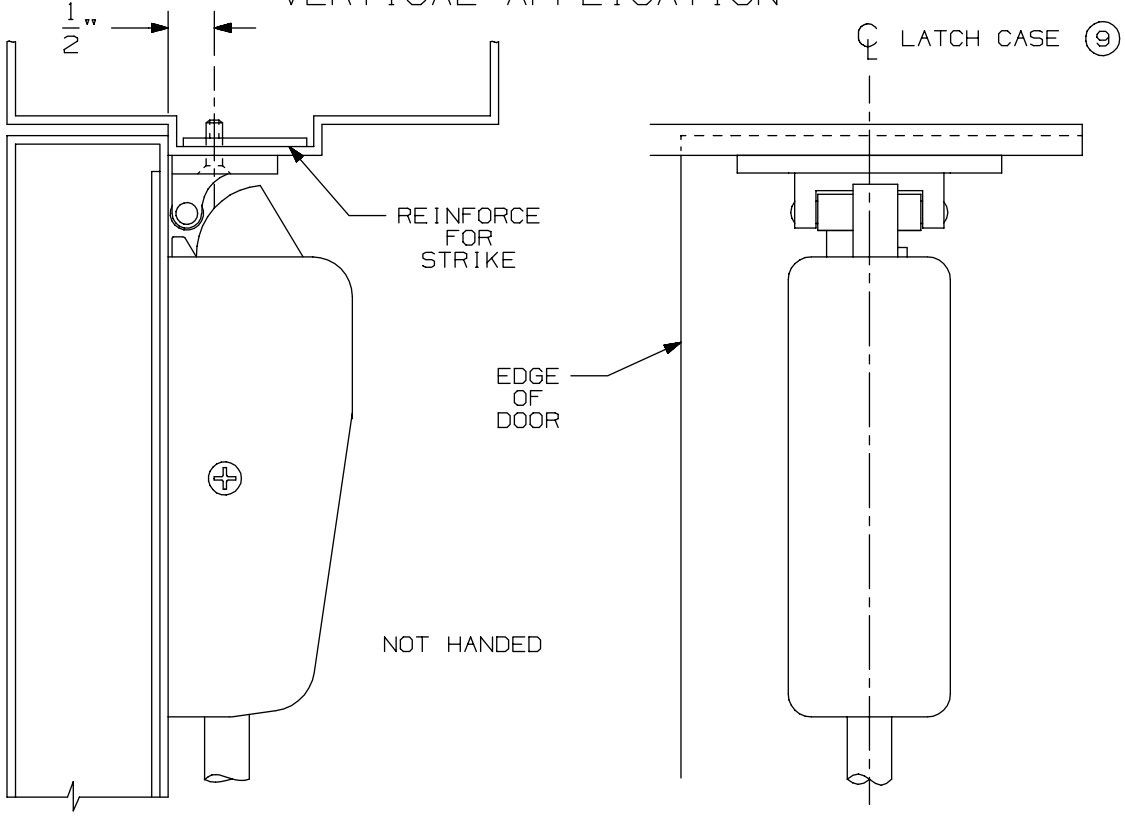

NOTE: LATCH CASE MOUNTING HOLES TO BE PREPARED AT INSTALLATION ON DOOR.

299 & 299F Strike

VON DUPRIN®

NOTES: SEE MASTER SHEET #10001 FOR SUGGESTED REINFORCING

TEMPLATE NUMBER: 30039_a

DATE: 05-23-13

APPLICATION	PREPARATION
SURFACE APPLICATION	#10-24 TAP 4 PLACES
990 TRIM APPLICATION OR SEX BOLT APPLICATION (SEE NOTE 1)	1/4" DIA THIS SIDE 13/32" DIA OPPOSITE SIDE - 4 PLACES

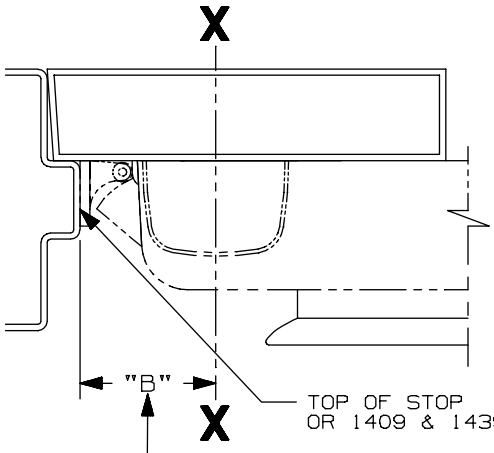

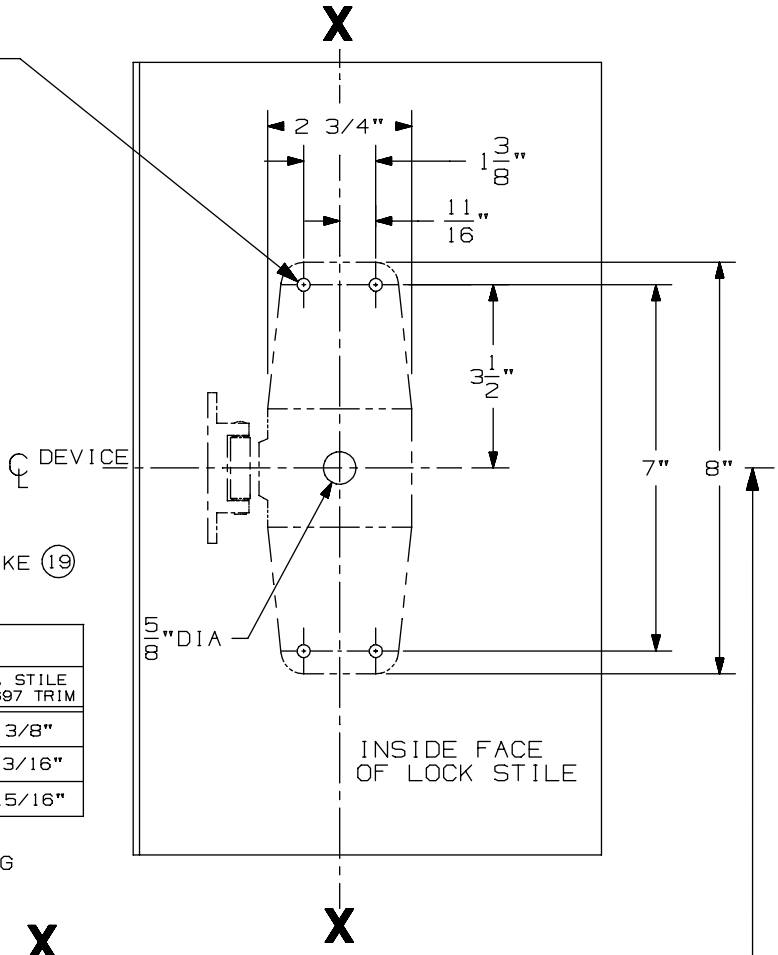

SINGLE DOOR INSTALLATION			
STRIKE	DIM. "B"	MIN. STILE 990/991/992 TRIM	MIN. STILE 696/697 TRIM
299 & 299-F	2 3/8"	4 1/2"	4 3/8"
(19) 1409 & 1439	1 9/16"	3 13/16"	3 13/16"
1606	1 15/16"	4 1/16"	3 15/16"

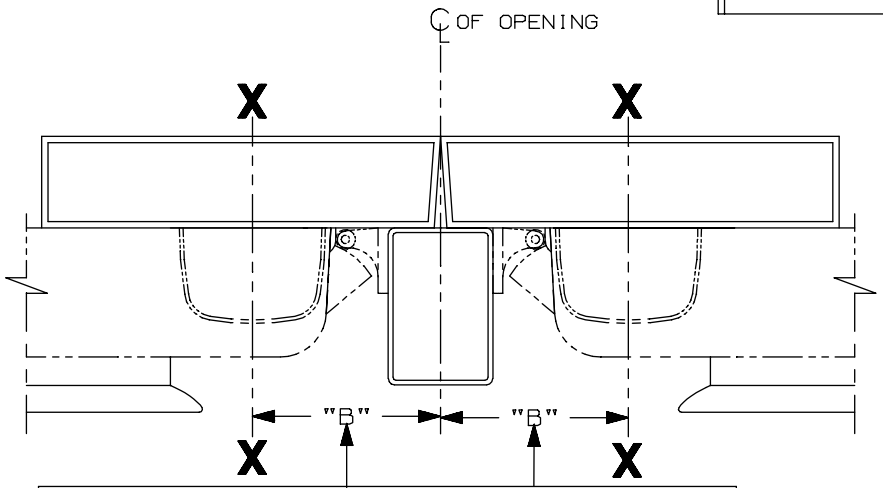

SINGLE DOOR OPENING
39 13/16" TO FINISHED FLOOR

DOUBLE DOOR OPENING
WITH VON DUPRIN MULLION
39 11/16"

LHR APPLICATION SHOWN,
RHR APPLICATION OPPOSITE

DOUBLE DOOR INSTALLATION WITH VON DUPRIN MULLIONS				
MULLION	STRIKE	DIM. "B"	MIN. STILE 990/991/992 TRIM	MIN. STILE 696/697 TRIM
(19) 4954/9954	299/299-F	3 3/8"	4 7/8"	4 3/4"
9954	499-F	3 1/2"	5"	4 7/8"
5654	299	2 15/16"	4 3/8"	4 1/4"
5754	1408	2 1/8"	3 13/16"	3 13/16"
1654	1606	2 15/16"	4 3/8"	4 1/4"

NOTES:
1. THESE FOUR HOLES TO BE PREPARED FOR SURFACE APPLICATION WHEN USING 696/697 TRIM. DO NOT PREPARE FOR SEX BOLTS.
2. FOR STOCK HOLLOW METAL DOORS SEE TEMPLATE NO. 10307 FOR TYPE "161" CUTOUT AND 10314 FOR TYPE "86" CUTOUT.
3. GLASS BEAD KIT AVAILABLE WHEN REQUIRED.
4. FOR OUTSIDE TRIM PREPARATION, WHEN REQUIRED, SEE TRIM TEMPLATE.
5. 9954 W/299-F FOR HURRICANE APPLICATIONS (19) ONLY

98/99 & 98-F/99-F NL Series Rim Device

VON DUPRIN®

NOTES: SEE MASTER SHEET #10001 FOR SUGGESTED REINFORCING

TEMPLATE NUMBER: 10301_a

DATE: 05-21-13

990 NL TRIM

NOTES: SEE MASTER SHEET #10001 FOR SUGGESTED REINFORCING

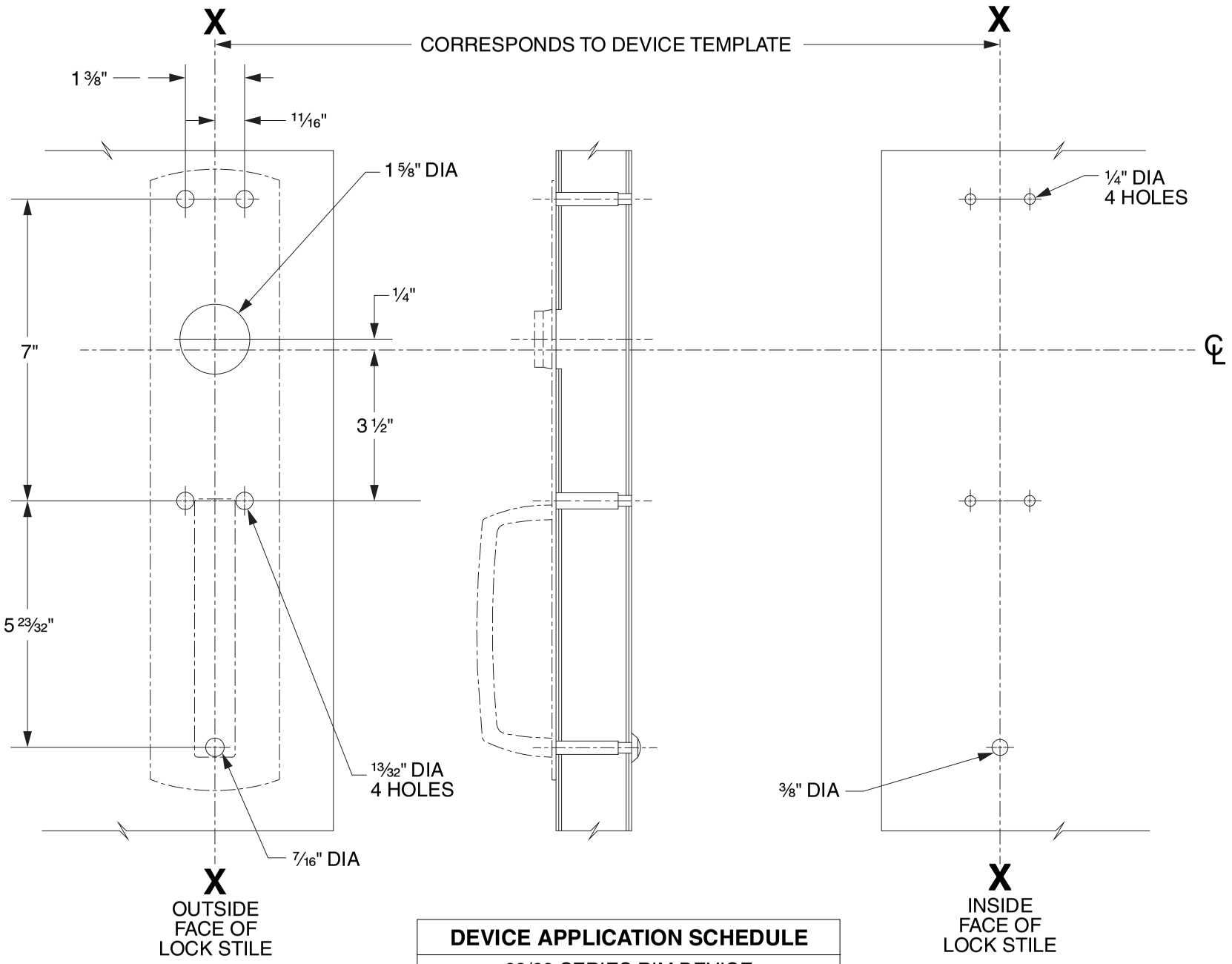

DEVICE APPLICATION SCHEDULE
98/99 SERIES RIM DEVICE
9827/9927 SERIES DEVICE
9847/9947 SERIES DEVICE
9849/9949 SERIES DEVICE

LHR SHOWN
RHR OPPOSITE

VON DUPRIN®

TEMPLATE NUMBER: 20267_C

DATE: 05-31-13

RIM APPLICATION

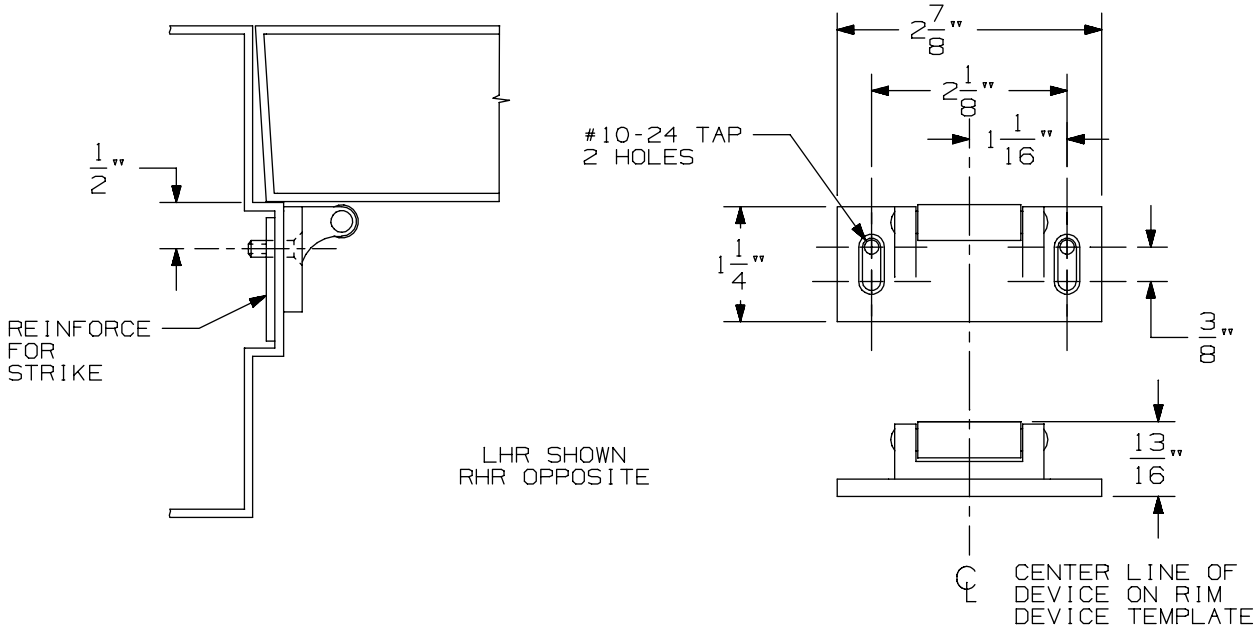

VERTICAL APPLICATION

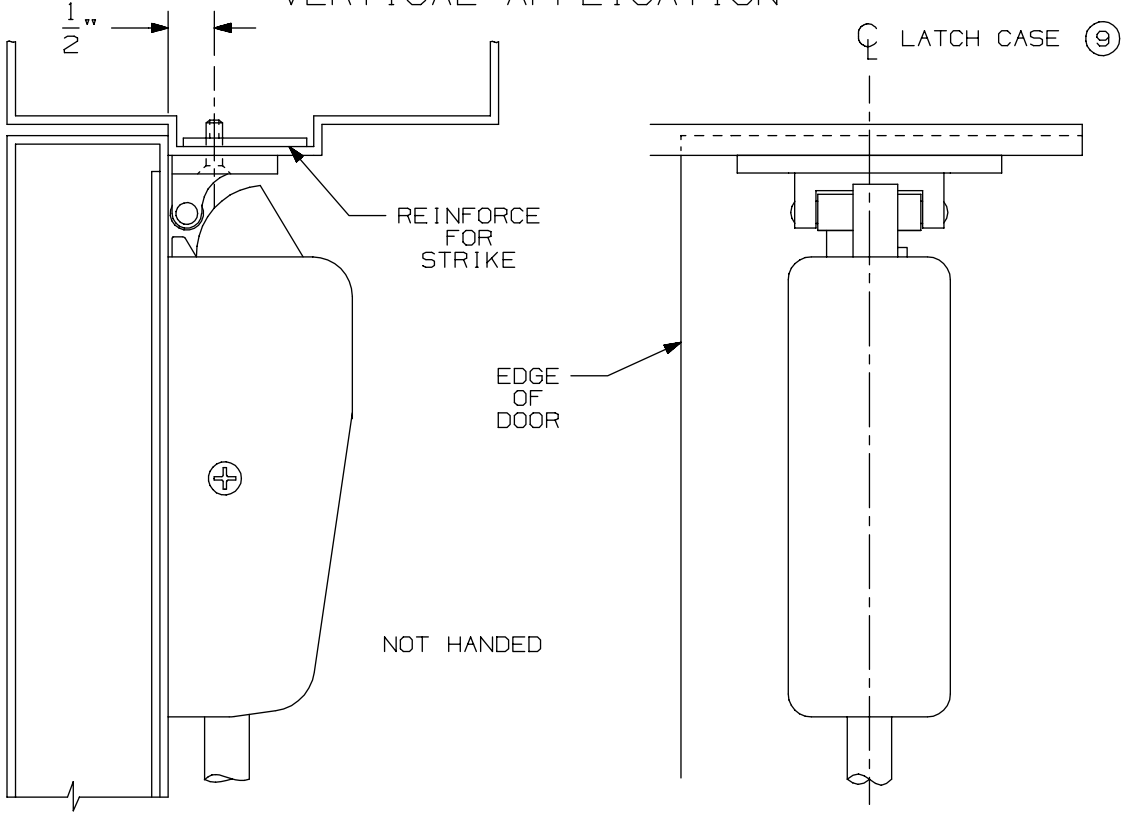

NOTE: LATCH CASE MOUNTING HOLES TO BE PREPARED AT INSTALLATION ON DOOR.

299 & 299F Strike

VON DUPRIN®

NOTES: SEE MASTER SHEET #10001 FOR SUGGESTED REINFORCING

TEMPLATE NUMBER: 30039_a

DATE: 05-23-13

APPLICATION	PREPARATION
SURFACE APPLICATION	#10-24 TAP 4 PLACES
990 TRIM APPLICATION OR SEX BOLT APPLICATION (SEE NOTE 1)	1/4" DIA THIS SIDE 13/32" DIA OPPOSITE SIDE - 4 PLACES

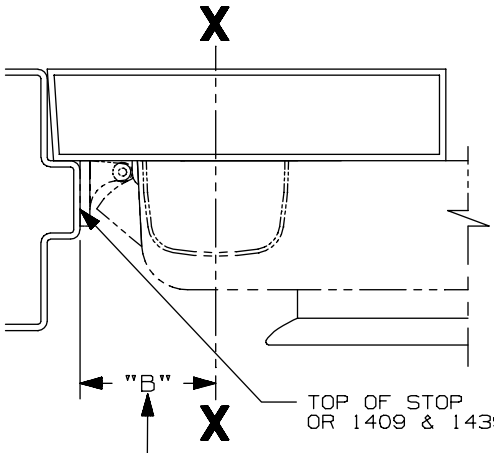

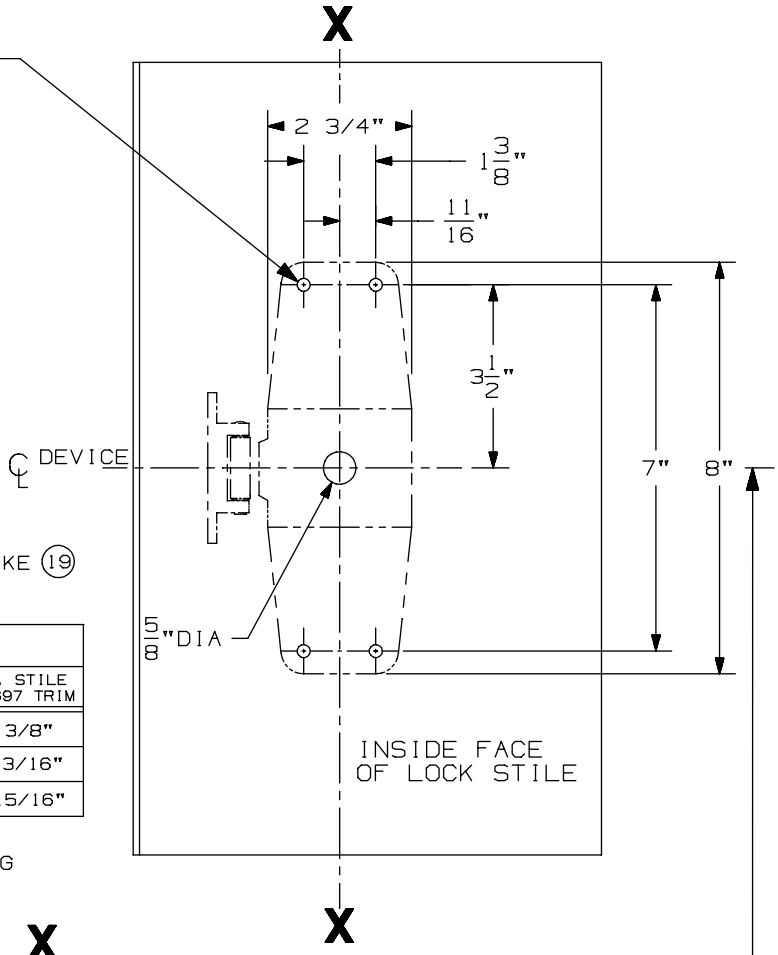

SINGLE DOOR INSTALLATION			
STRIKE	DIM. "B"	MIN. STILE 990/991/992 TRIM	MIN. STILE 696/697 TRIM
299 & 299-F	2 3/8"	4 1/2"	4 3/8"
(19) 1409 & 1439	1 9/16"	3 13/16"	3 13/16"
1606	1 15/16"	4 1/16"	3 15/16"

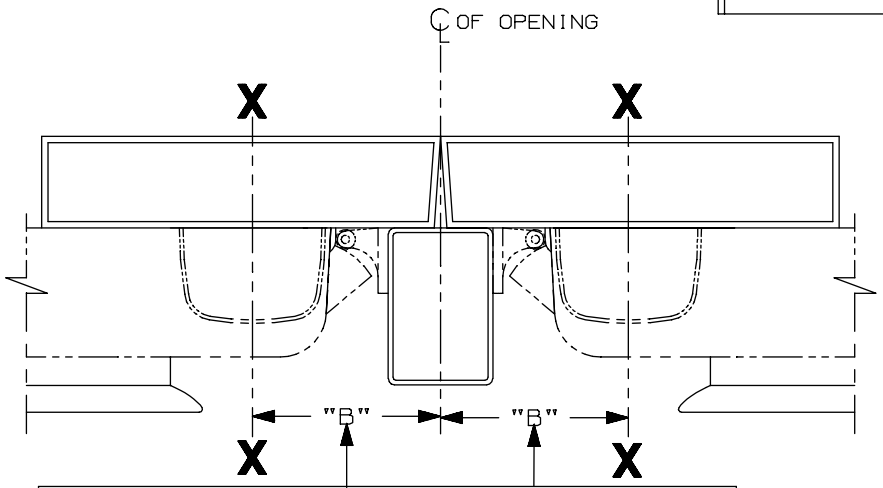

SINGLE DOOR OPENING
39 13/16" TO FINISHED FLOOR

DOUBLE DOOR OPENING
WITH VON DUPRIN MULLION
39 11/16"

LHR APPLICATION SHOWN,
RHR APPLICATION OPPOSITE

DOUBLE DOOR INSTALLATION WITH VON DUPRIN MULLIONS				
MULLION	STRIKE	DIM. "B"	MIN. STILE 990/991/992 TRIM	MIN. STILE 696/697 TRIM
(19) 4954/9954	299/299-F	3 3/8"	4 7/8"	4 3/4"
9954	499-F	3 1/2"	5"	4 7/8"
5654	299	2 15/16"	4 3/8"	4 1/4"
5754	1408	2 1/8"	3 13/16"	3 13/16"
1654	1606	2 15/16"	4 3/8"	4 1/4"

NOTES:
1. THESE FOUR HOLES TO BE PREPARED FOR SURFACE APPLICATION WHEN USING 696/697 TRIM. DO NOT PREPARE FOR SEX BOLTS.
2. FOR STOCK HOLLOW METAL DOORS SEE TEMPLATE NO. 10307 FOR TYPE "161" CUTOUT AND 10314 FOR TYPE "86" CUTOUT.
3. GLASS BEAD KIT AVAILABLE WHEN REQUIRED.
4. FOR OUTSIDE TRIM PREPARATION, WHEN REQUIRED, SEE TRIM TEMPLATE.
5. 9954 W/299-F FOR HURRICANE APPLICATIONS (19) ONLY

98/99 & 98-F/99-F NL Series Rim Device

VON DUPRIN®

NOTES: SEE MASTER SHEET #10001 FOR SUGGESTED REINFORCING

TEMPLATE NUMBER: 10301_a

DATE: 05-21-13

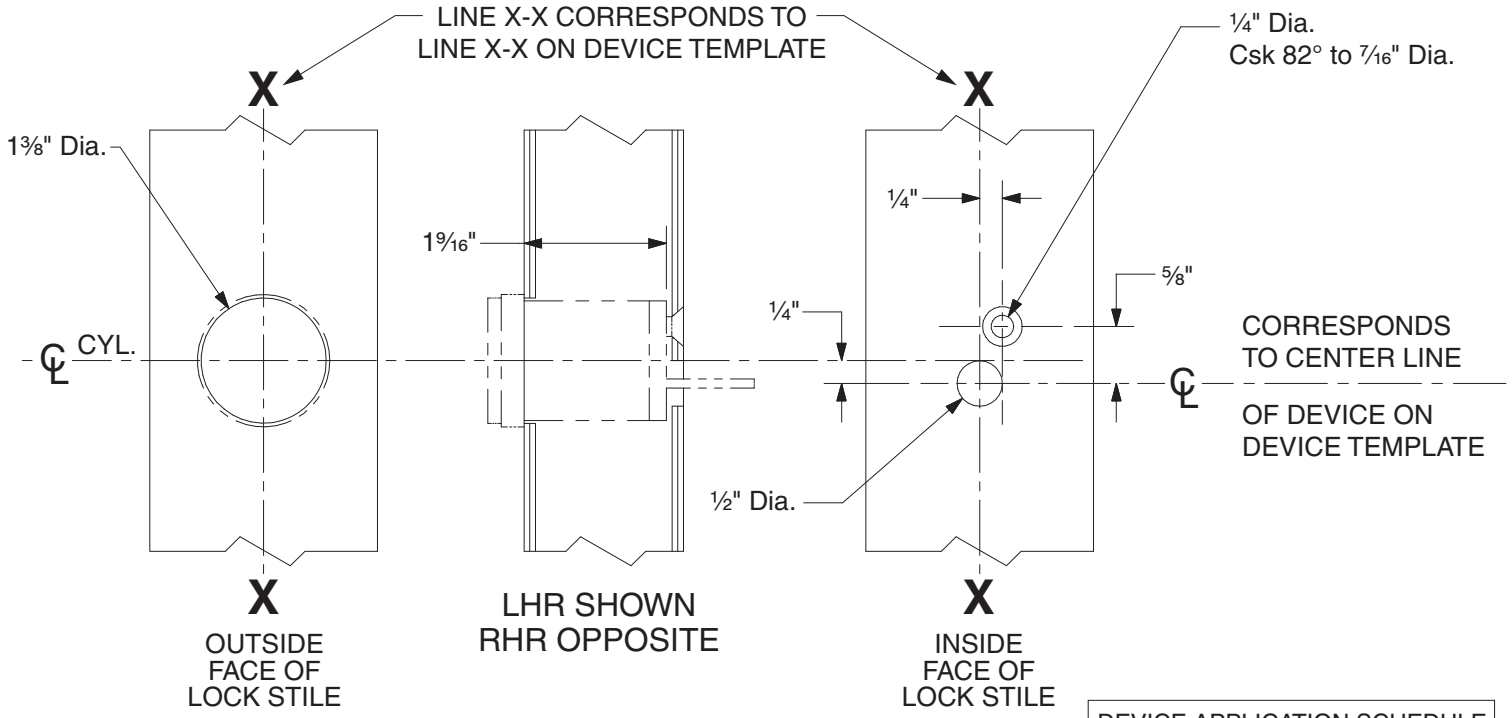

DEVICE APPLICATION SCHEDULE	
98 RIM SERIES	99 RIM SERIES
9827 SERIES	9927 SERIES
9847 SERIES	9947 SERIES
22 RIM SERIES	2227 SERIES

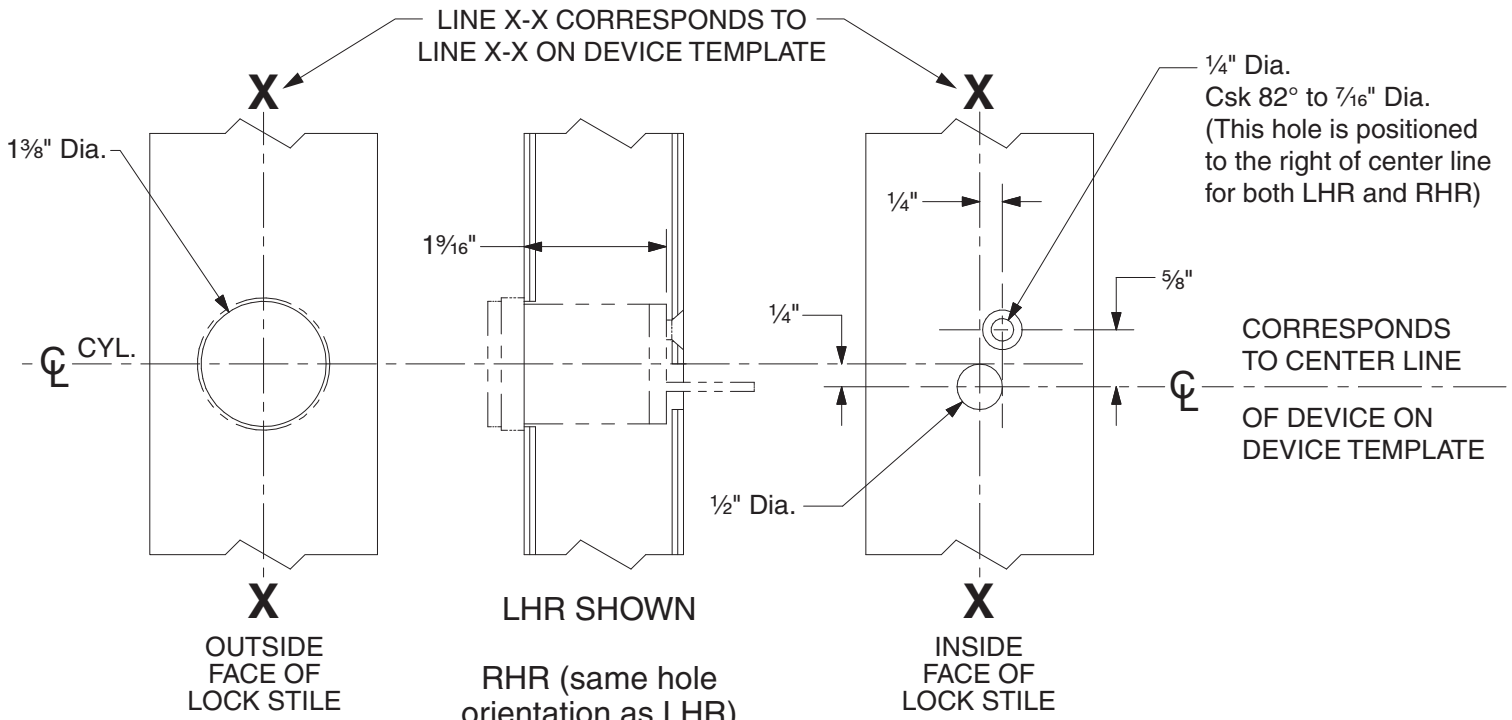

DEVICE APPLICATION SCHEDULE	
9849 SERIES	9949 SERIES

110NL Cylinder Preparation

VON DUPRIN®

NOTES: SEE MASTER SHEET #10001 FOR SUGGESTED REINFORCING

TEMPLATE NUMBER: 40022_c

DATE: 05-28-13

RIM APPLICATION

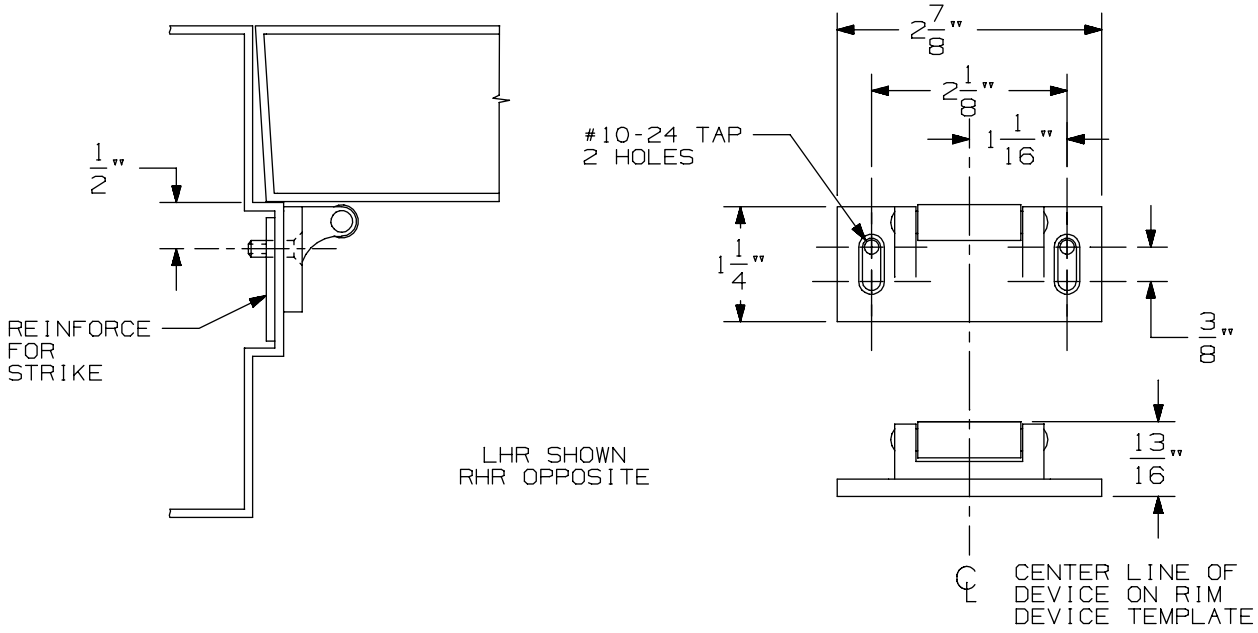

VERTICAL APPLICATION

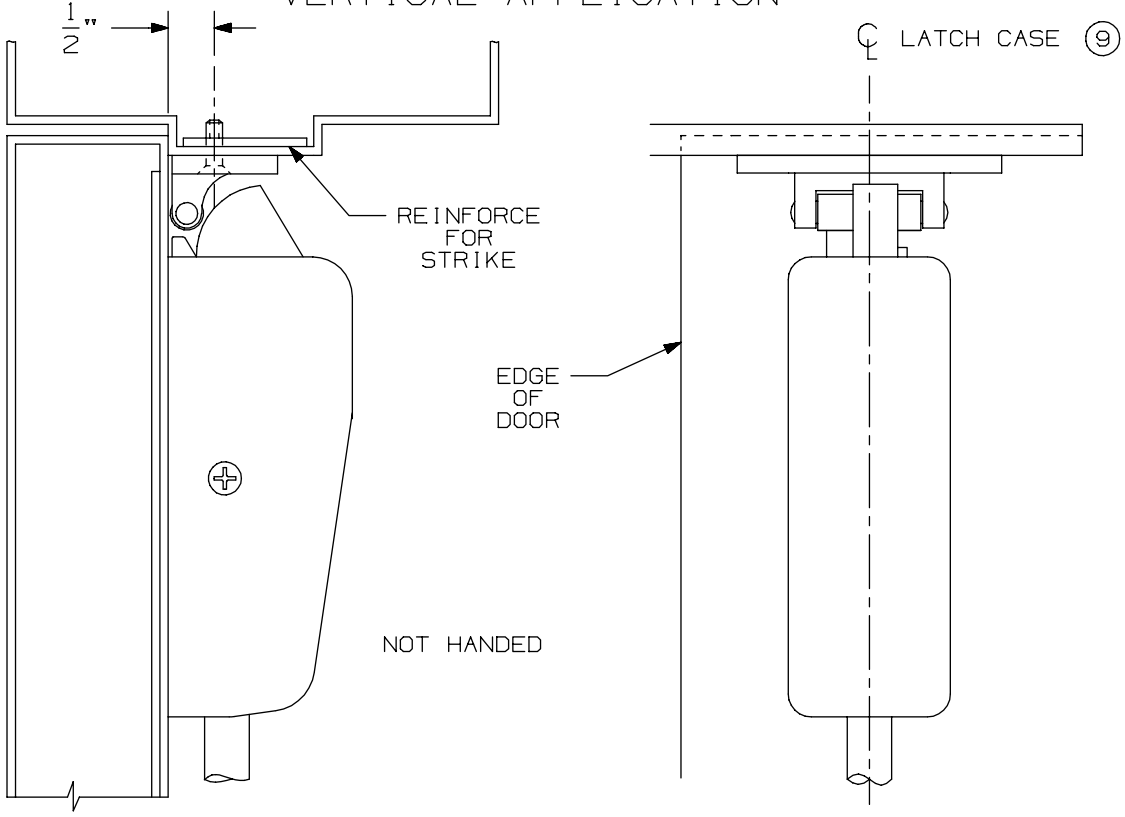

NOTE: LATCH CASE MOUNTING HOLES TO BE PREPARED AT INSTALLATION ON DOOR.

299 & 299F Strike

VON DUPRIN®

NOTES: SEE MASTER SHEET #10001 FOR SUGGESTED REINFORCING

TEMPLATE NUMBER: 30039_a

DATE: 05-23-13

APPLICATION	PREPARATION
SURFACE APPLICATION	#10-24 TAP 4 PLACES
990 TRIM APPLICATION OR SEX BOLT APPLICATION (SEE NOTE 1)	1/4" DIA THIS SIDE 13/32" DIA OPPOSITE SIDE - 4 PLACES

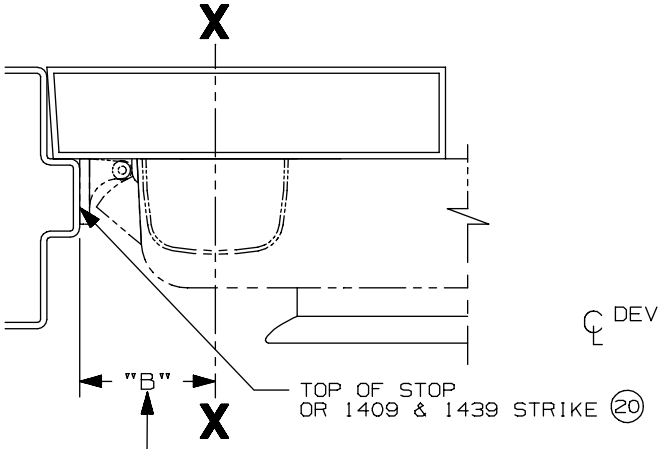

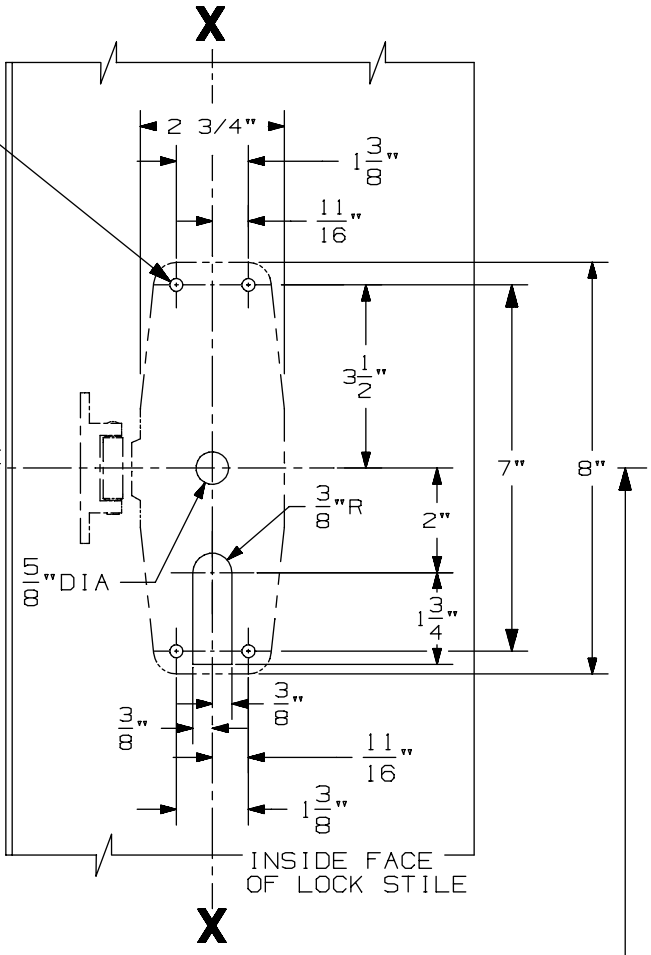

SINGLE DOOR INSTALLATION			
STRIKE	DIM. "B"	MIN. STILE 990/991/992 TRIM	MIN. STILE 696/697 TRIM
299 & 299-F	2 3/8"	4 1/2"	4 3/8"
(20) 1409 & 1439	1 9/16"	3 13/16"	3 13/16"
1606	1 15/16"	4 1/16"	3 15/16"

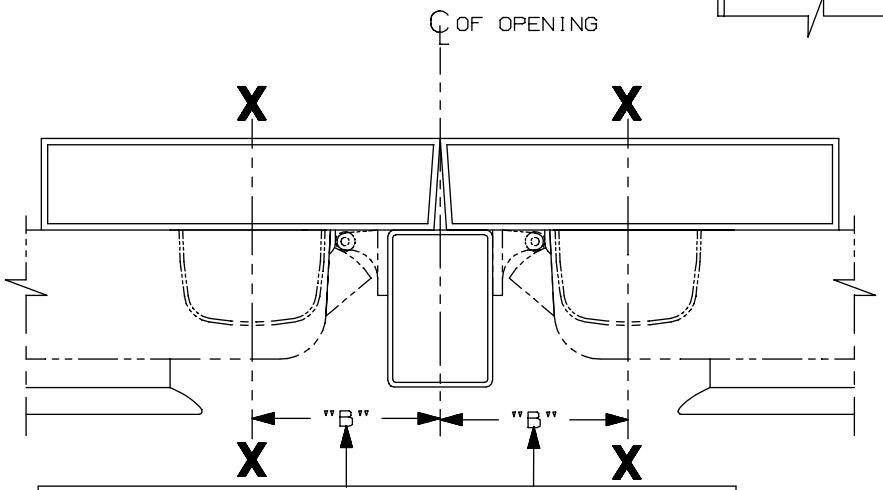

SINGLE DOOR OPENING
39 13/16" TO FINISHED FLOOR

DOUBLE DOOR OPENING
WITH VON DUPRIN MULLION
39 11/16"

LHR APPLICATION SHOWN
RHR APPLICATION OPPOSITE

DOUBLE DOOR INSTALLATION WITH VON DUPRIN MULLIONS				
MULLION	STRIKE	DIM. "B"	MIN. STILE 990/991/992 TRIM	MIN. STILE 696/697 TRIM
(20) 4954/9954	299/299-F	3 3/8"	4 7/8"	4 3/4"
9954	499-F	3 1/2"	5"	4 7/8"
5654	299	2 15/16"	4 3/8"	4 1/4"
5754	1408	2 1/8"	3 13/16"	3 13/16"
1654	1606	2 15/16"	4 3/8"	4 1/4"

NOTES:
1. THESE FOUR HOLES TO BE PREPARED FOR SURFACE APPLICATION WHEN USING 696/697 TRIM. DO NOT PREPARE FOR SEX BOLTS.
2. FOR STOCK HOLLOW METAL DOORS SEE TEMPLATE NO. 10309 FOR TYPE "161" CUTOUT AND 10315 FOR TYPE "86" CUTOUT.
3. GLASS BEAD KIT AVAILABLE WHEN REQUIRED.
4. FOR OUTSIDE TRIM PREPARATION, WHEN REQUIRED, SEE TRIM TEMPLATE.
5. 9954 W/299-F FOR HURRICANE APPLICATIONS (20) ONLY.

98/99 & 98-F/99-F TP, K, & L Series Rim Devices

VON DUPRIN®

NOTES: SEE MASTER SHEET #10001 FOR SUGGESTED REINFORCING

TEMPLATE NUMBER: 10302_a

DATE: 05-21-13

991 K & 992 L Trim

NOTES: SEE MASTER SHEET #10001 FOR SUGGESTED REINFORCING

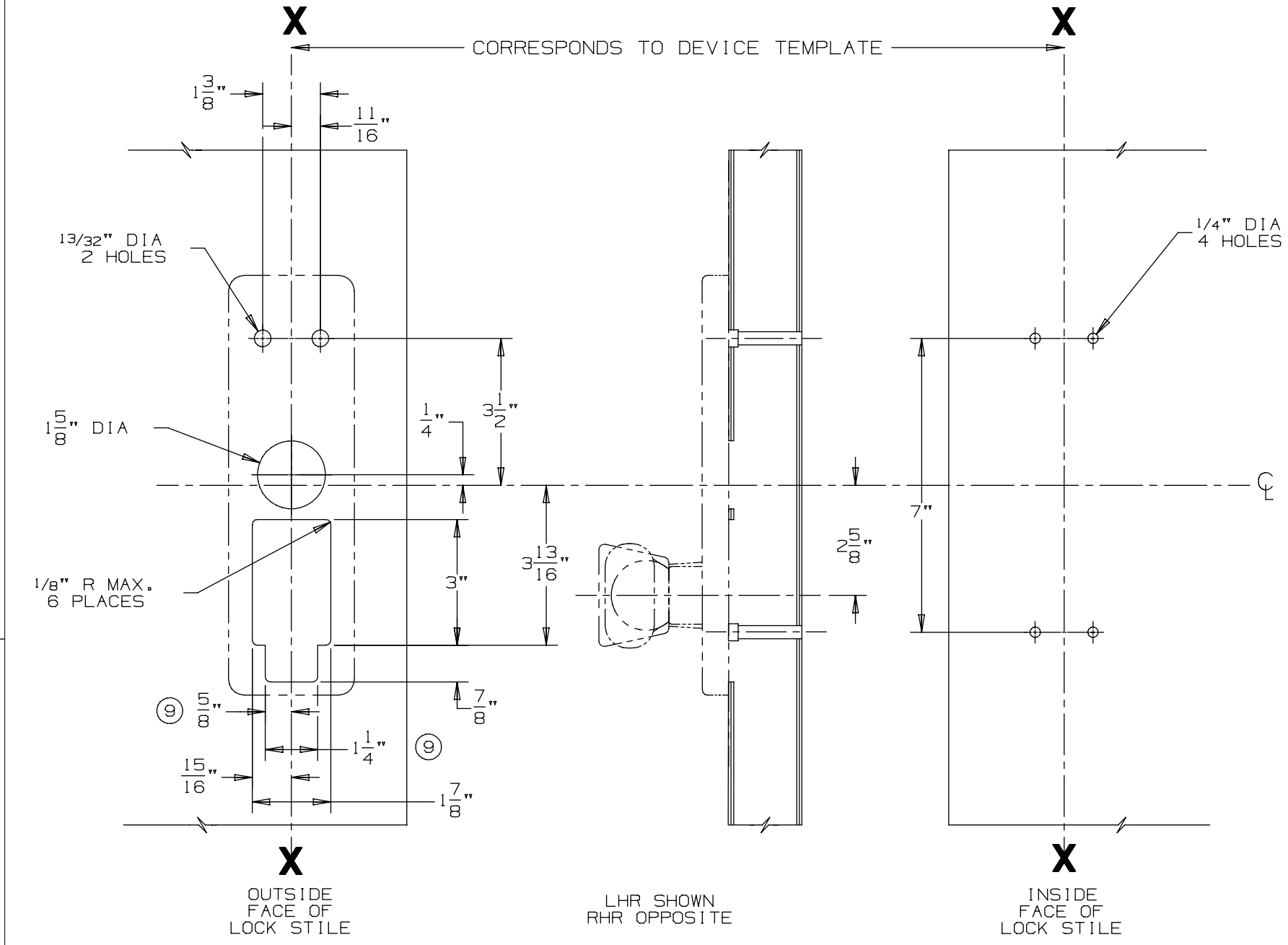

DEVICE APPLICATION SCHEDULE
98/99 SERIES RIM DEVICE
9827/9927 SERIES DEVICE
9847/9947 SERIES DEVICE

VON DUPRIN®

TEMPLATE NUMBER: 20272_a

DATE: 05-23-13

RIM APPLICATION

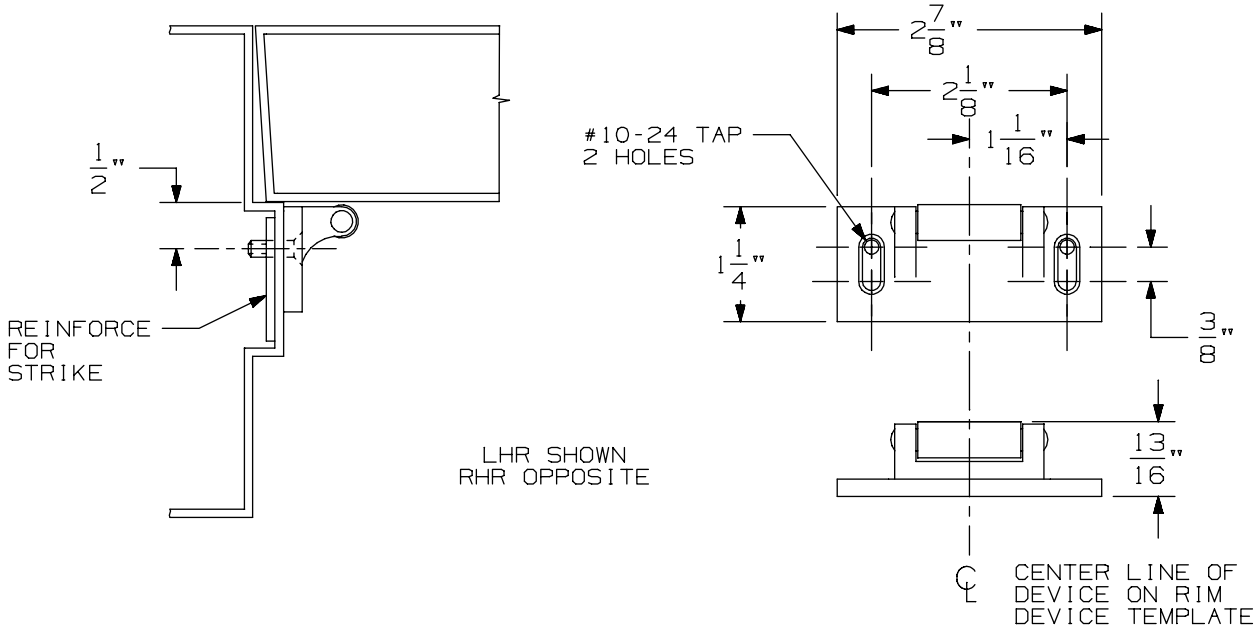

VERTICAL APPLICATION

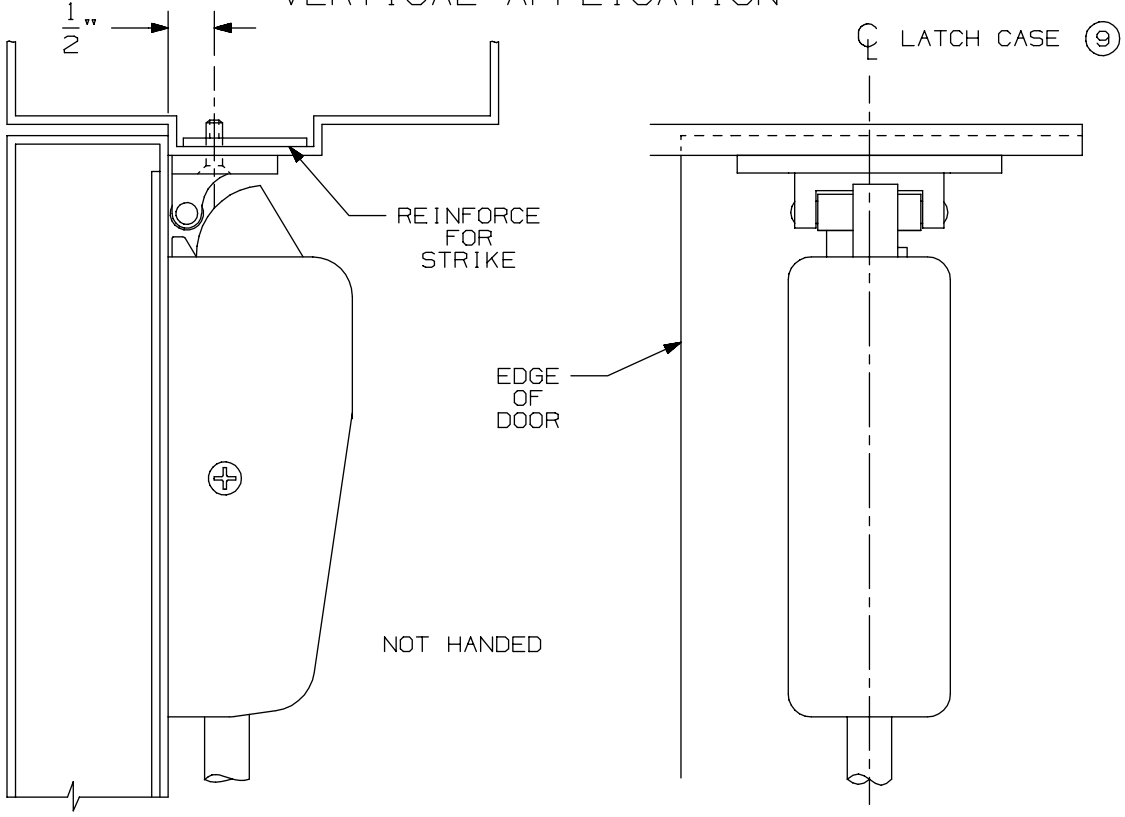

NOTE: LATCH CASE MOUNTING HOLES TO BE PREPARED AT INSTALLATION ON DOOR.

299 & 299F Strike

VON DUPRIN®

NOTES: SEE MASTER SHEET #10001 FOR SUGGESTED REINFORCING

TEMPLATE NUMBER: 30039_a

DATE: 05-23-13

APPLICATION	PREPARATION
SURFACE APPLICATION	#10-24 TAP 4 PLACES
990 TRIM APPLICATION OR SEX BOLT APPLICATION (SEE NOTE 1)	1/4' DIA THIS SIDE 13/32" DIA OPPOSITE SIDE - 4 PLACES

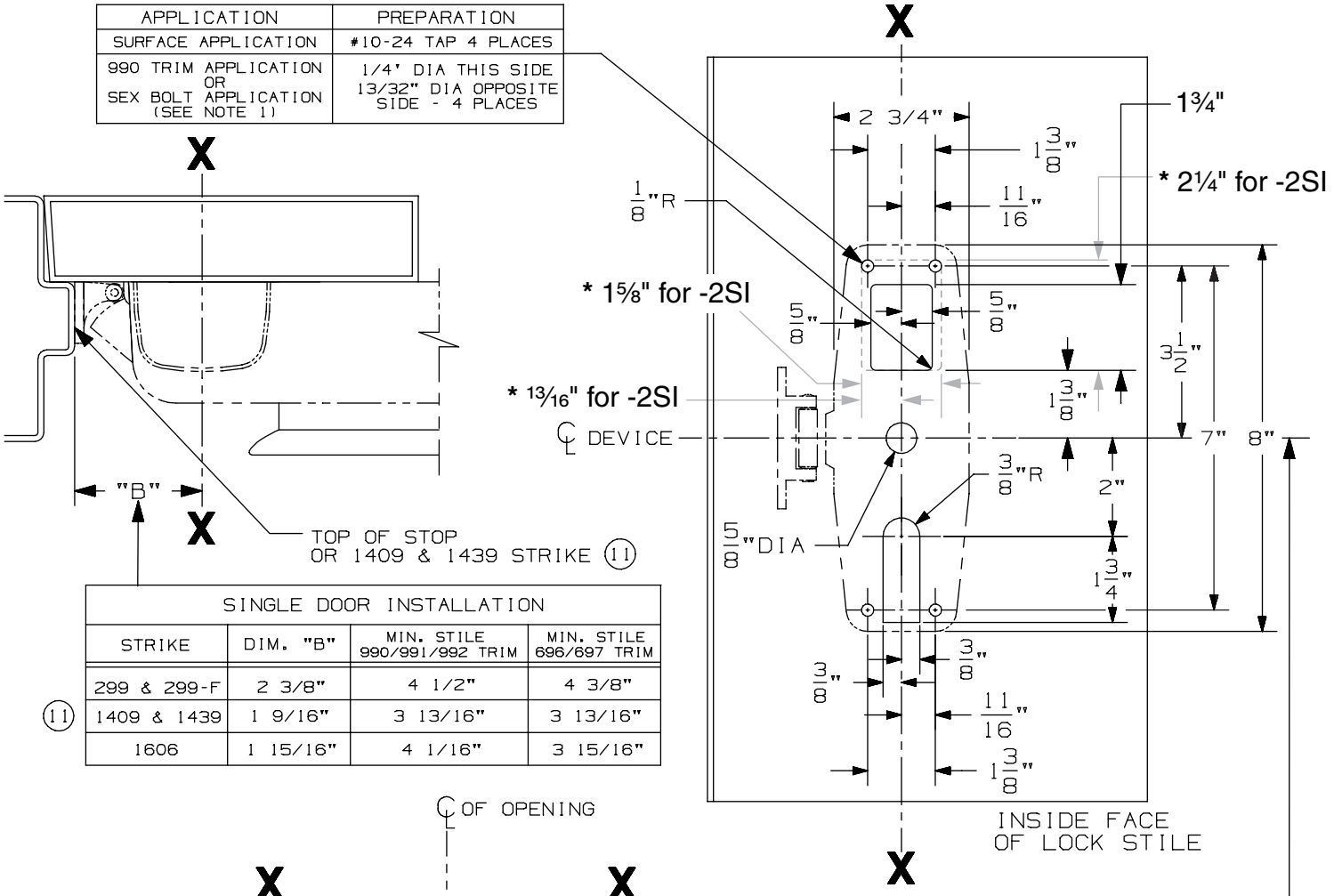

SINGLE DOOR INSTALLATION			
STRIKE	DIM. "B"	MIN. STILE 990/991/992 TRIM	MIN. STILE 696/697 TRIM
299 & 299-F	2 3/8"	4 1/2"	4 3/8"
(11) 1409 & 1439	1 9/16"	3 13/16"	3 13/16"
1606	1 15/16"	4 1/16"	3 15/16"

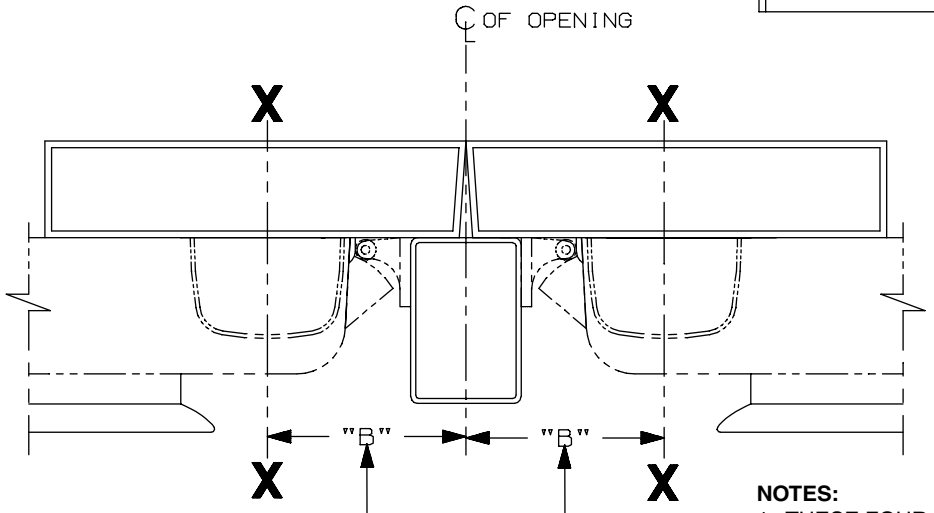

SINGLE DOOR OPENING
39 13/16" TO FINISHED FLOOR

DOUBLE DOOR OPENING
WITH VON DUPRIN MULLION
39 11/16"

LHR APLICATION SHOWN
RHR APPLICATION OPPOSITE

DOUBLE DOOR INSTALLATION WITH VON DUPRIN MULLIONS				
MULLION	STRIKE	DIM. "B"	MIN. STILE 990/991/992 TRIM	MIN. STILE 696/697 TRIM
(11) 4954/9954	299/299-F	3 3/8"	4 7/8"	4 3/4"
5654	299	2 15/16"	4 3/8"	4 1/4"
5754	1408	2 1/8"	3 13/16"	3 13/16"
1654	1606	2 15/16"	4 3/8"	4 1/4"

NOTES:

1. THESE FOUR HOLES TO BE PREPARED FOR SURFACE APPLICATION WHEN USING 696/697 TRIM. DO NOT PREPARE FOR SEX BOLTS.
2. FOR STOCK HOLLOW METAL DOORS, SEE TEMPLATE 10309 FOR TYPE "161" CUTOUT AND 10315 FOR TYPE "86" CUTOUT.
3. GLASS BEAD KIT AVAILABLE WHEN REQUIRED.
4. FOR OUTSIDE TRIM PREPARATION, WHEN REQUIRED, SEE TRIM TEMPLATE.
5. IT IS RECOMMENDED THE MOUNTING HOLES BE PREPARED IN THE FIELD.
6. 9954 W/299-F FOR HURRICANE APPLICATIONS (11) ONLY.
* 7. FOR THE -2SI MODEL, HEIGHT OF CUTOUT INCREASES TO 2¼" AND WIDTH INCREASES TO 1⅝".

98/99-2 & 98/99-F-2 TP, K, & L Series Double Cylinder Rim Device

VON DUPRIN®

NOTES: SEE MASTER SHEET #10001 FOR SUGGESTED REINFORCING

TEMPLATE NUMBER: 10322_c

DATE: 10-21-13

991 K & 992 L Trim

NOTES: SEE MASTER SHEET #10001 FOR SUGGESTED REINFORCING

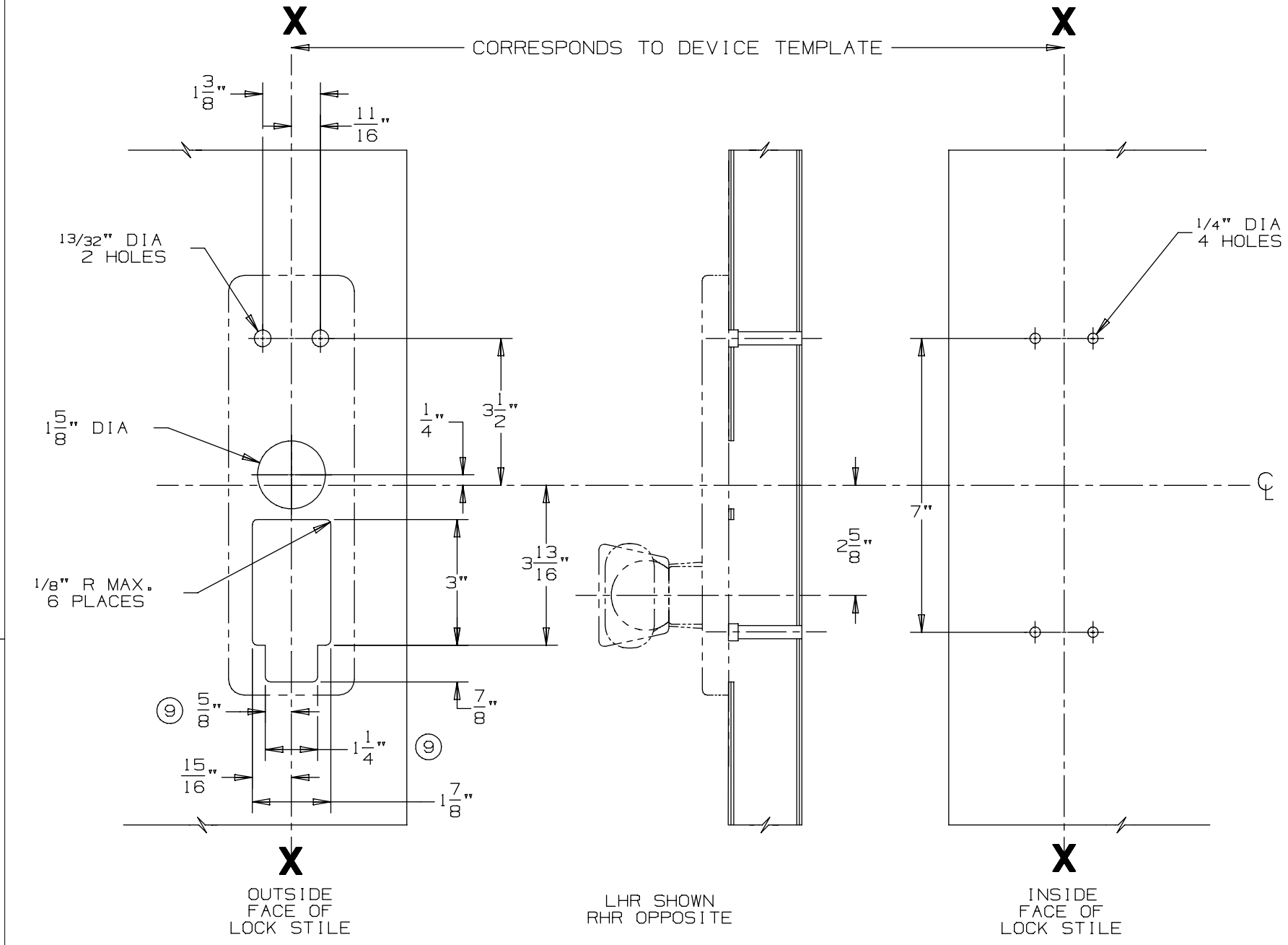

DEVICE APPLICATION SCHEDULE
98/99 SERIES RIM DEVICE
9827/9927 SERIES DEVICE
9847/9947 SERIES DEVICE

VON DUPRIN®

TEMPLATE NUMBER: 20272_a

DATE: 05-23-13

RIM APPLICATION

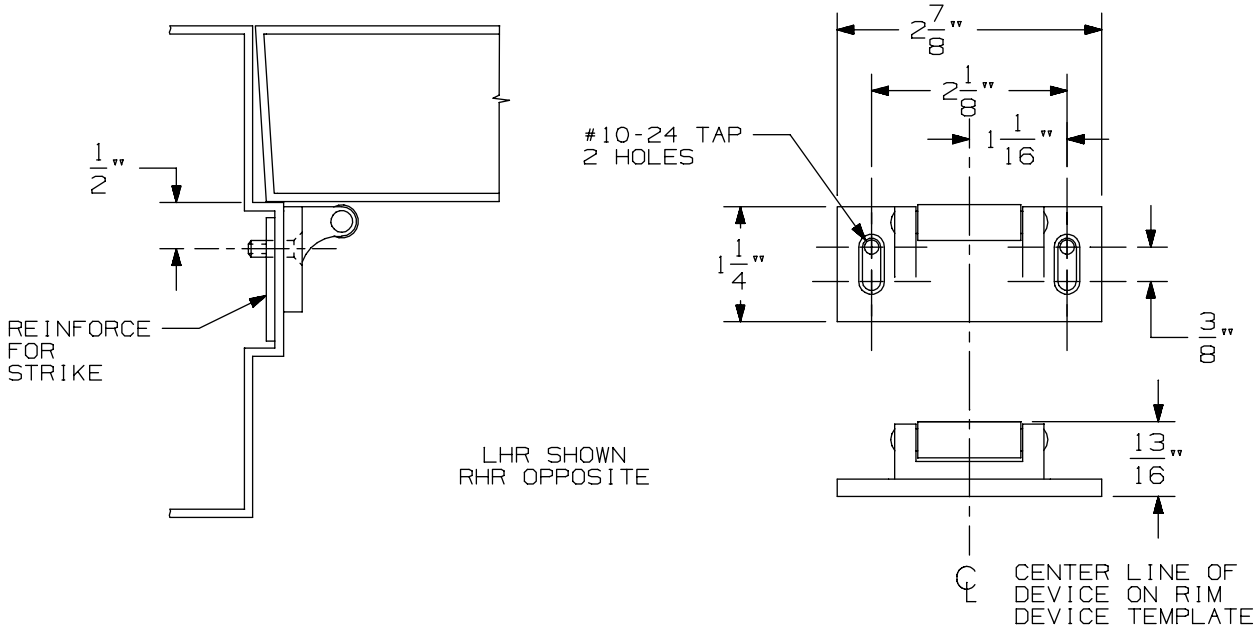

VERTICAL APPLICATION

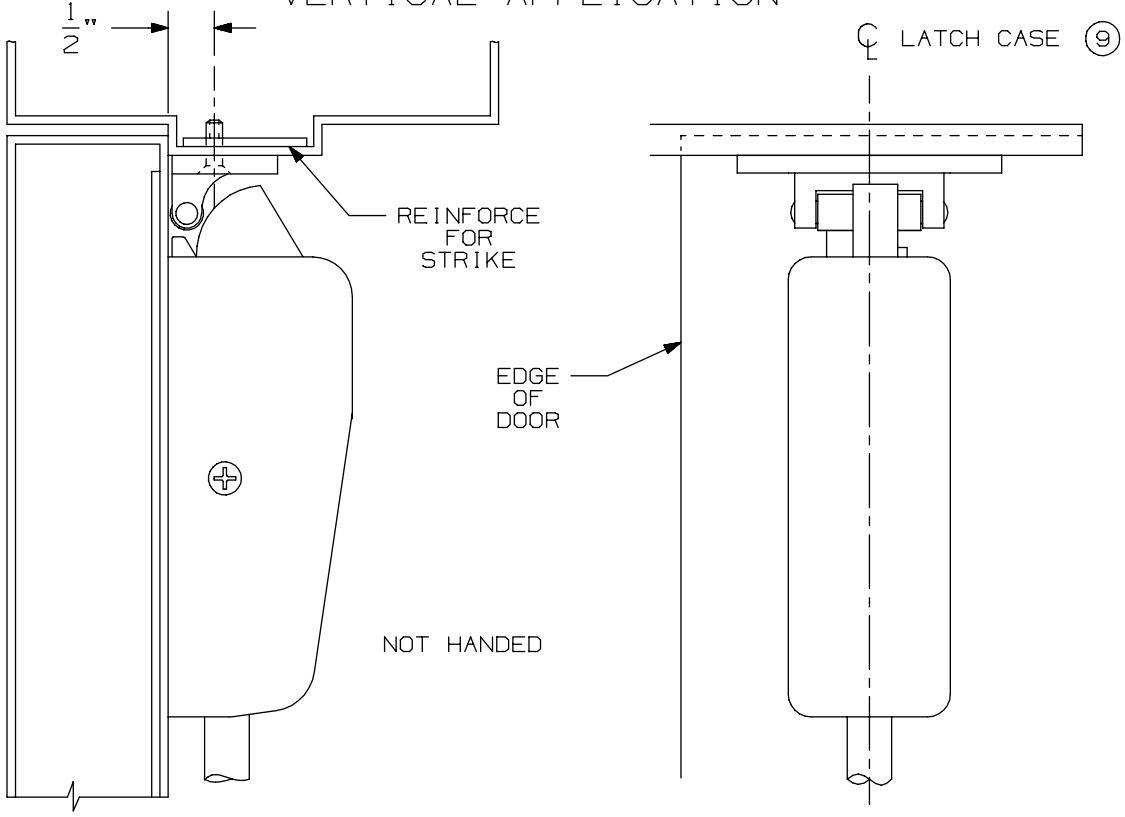

NOTE: LATCH CASE MOUNTING HOLES TO BE PREPARED AT INSTALLATION ON DOOR.

299 & 299F Strike

VON DUPRIN®

NOTES: SEE MASTER SHEET #10001 FOR SUGGESTED REINFORCING

TEMPLATE NUMBER: 30039_a

DATE: 05-23-13

APPLICATION	PREPARATION
SURFACE APPLICATION	#10-24 TAP 2 PLACES
990 TRIM APPLICATION OR SEX BOLT APPLICATION (SEE NOTE 1)	1/4" DIA THIS SIDE 13/32" DIA OPPOSITE SIDE - 2 PLACES

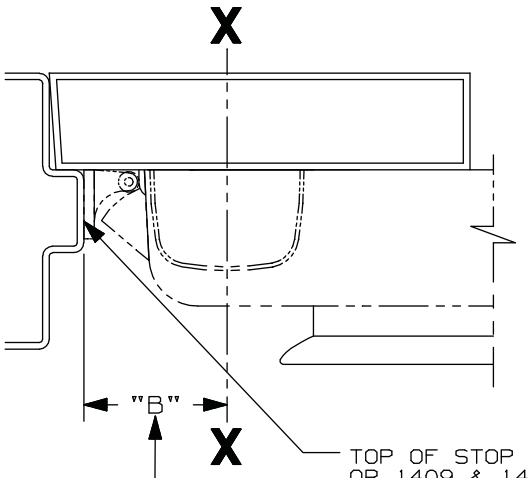

SINGLE DOOR INSTALLATION			
STRIKE	DIM. "B"	MIN. STILE 990/991/992 TRIM	MIN. STILE 696/697 TRIM
299 & 299-F	2 3/8"	4 1/2"	4 3/8"
(11) 1409 & 1439	1 9/16"	3 13/16"	3 13/16"
1606	1 15/16"	4 1/16"	3 15/16"

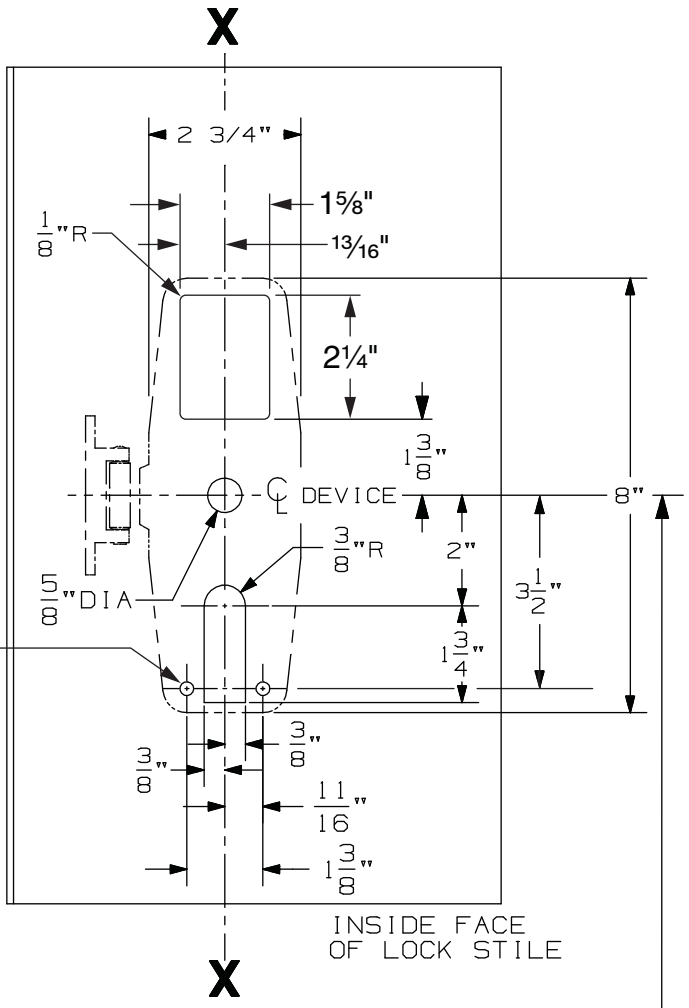

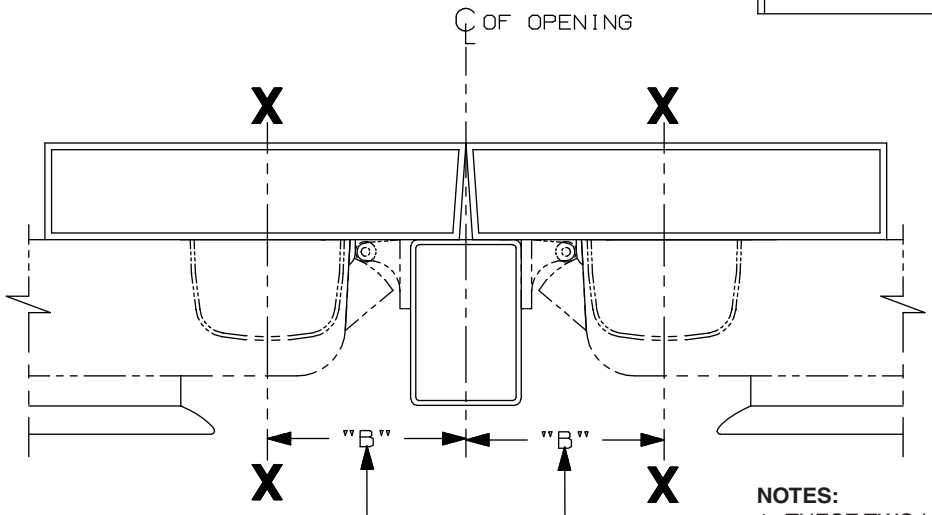

DOUBLE DOOR INSTALLATION WITH VON DUPRIN MULLIONS				
MULLION	STRIKE	DIM. "B"	MIN. STILE 990/991/992 TRIM	MIN. STILE 696/697 TRIM
(11) 4954/9954	299/299-F	3 3/8"	4 7/8"	4 3/4"
5654	299	2 15/16"	4 3/8"	4 1/4"
5754	1408	2 1/8"	3 13/16"	3 13/16"
1654	1606	2 15/16"	4 3/8"	4 1/4"

SINGLE DOOR OPENING
39 13/16" TO FINISHED FLOOR

DOUBLE DOOR OPENING
WITH VON DUPRIN MULLION
39 11/16"

LHR APPLICATION SHOWN
RHR APPLICATION OPPOSITE

NOTES:

1. THESE TWO HOLES TO BE PREPARED FOR SURFACE APPLICATION WHEN USING 696/697 TRIM. DO NOT PREPARE FOR SEX BOLTS.
2. FOR STOCK HOLLOW METAL DOORS, SEE TEMPLATE 10309 FOR TYPE "161" CUTOUT AND 10315 FOR TYPE "86" CUTOUT.
3. GLASS BEAD KIT AVAILABLE WHEN REQUIRED.
4. FOR OUTSIDE TRIM PREPARATION, WHEN REQUIRED, SEE TRIM TEMPLATE.
5. IT IS RECOMMENDED THE MOUNTING HOLES BE PREPARED IN THE FIELD.
6. 9954 W/299-F FOR HURRICANE APPLICATIONS (11) ONLY.

98/99-2SI & 98/99-F-2SI TP, K, & L Series Double Cylinder Rim Device

VON DUPRIN®

NOTES: SEE MASTER SHEET #10001 FOR SUGGESTED REINFORCING

TEMPLATE NUMBER: 24793986_a

DATE: 04-15-14

991 K & 992 L Trim

NOTES: SEE MASTER SHEET #10001 FOR SUGGESTED REINFORCING

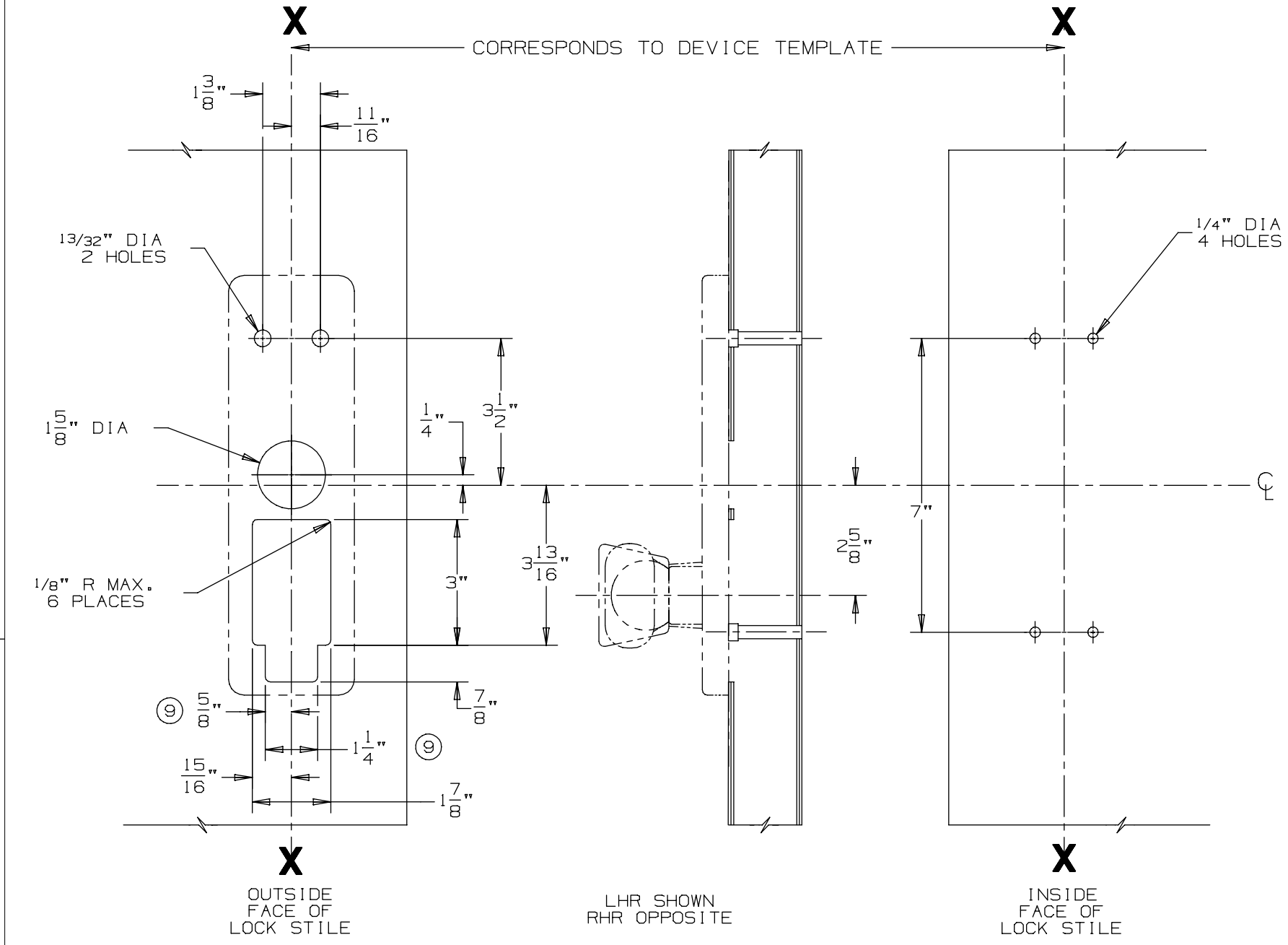

DEVICE APPLICATION SCHEDULE
98/99 SERIES RIM DEVICE
9827/9927 SERIES DEVICE
9847/9947 SERIES DEVICE

VON DUPRIN®

TEMPLATE NUMBER: 20272_a

DATE: 05-23-13

RIM APPLICATION

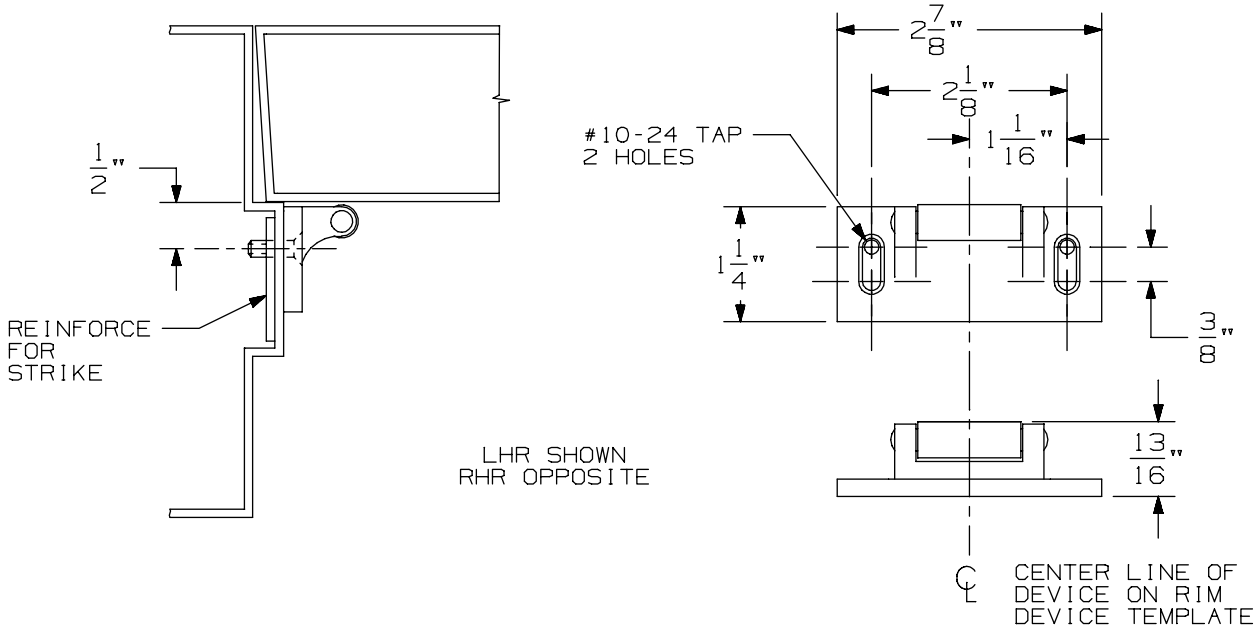

VERTICAL APPLICATION

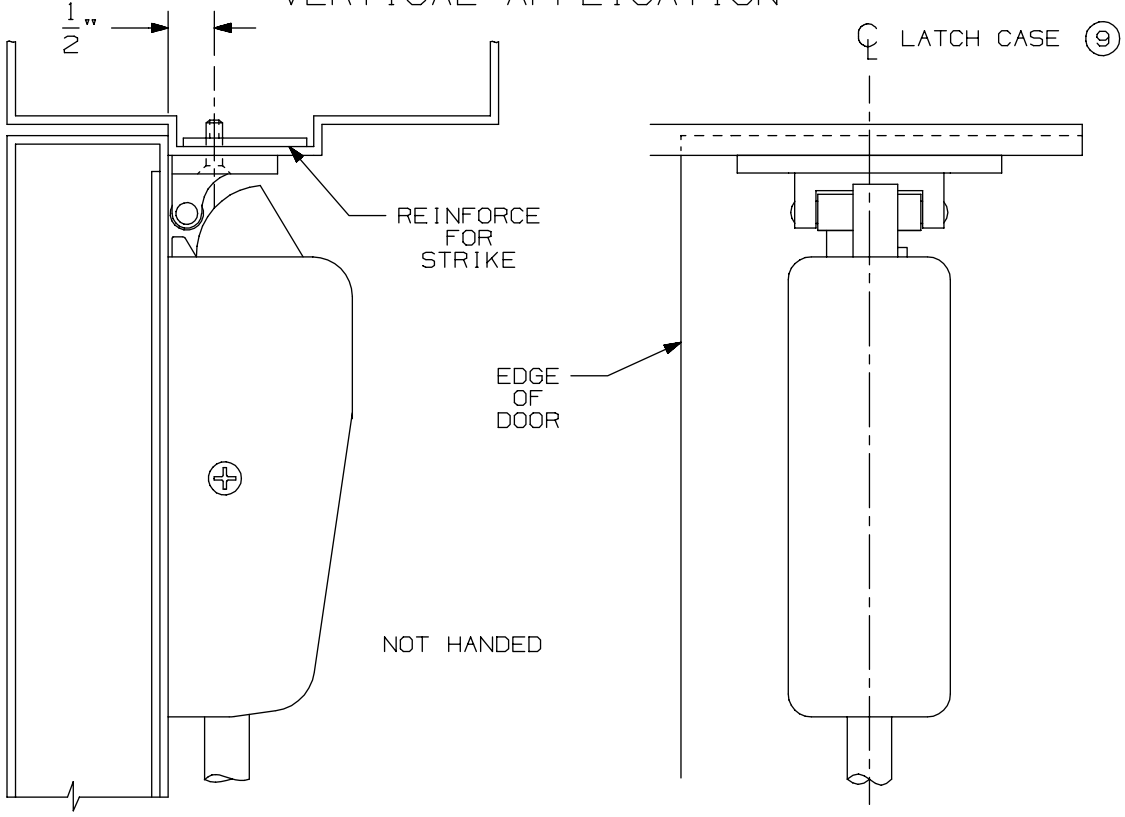

NOTE: LATCH CASE MOUNTING HOLES TO BE PREPARED AT INSTALLATION ON DOOR.

299 & 299F Strike

VON DUPRIN®

NOTES: SEE MASTER SHEET #10001 FOR SUGGESTED REINFORCING

TEMPLATE NUMBER: 30039_a

DATE: 05-23-13

APPLICATION	PREPARATION
SURFACE APPLICATION	#10-24 TAP 4 PLACES
990 TRIM APPLICATION OR SEX BOLT APPLICATION (SEE NOTE 1)	1/4" DIA THIS SIDE 13/32" DIA OPPOSITE SIDE - 4 PLACES

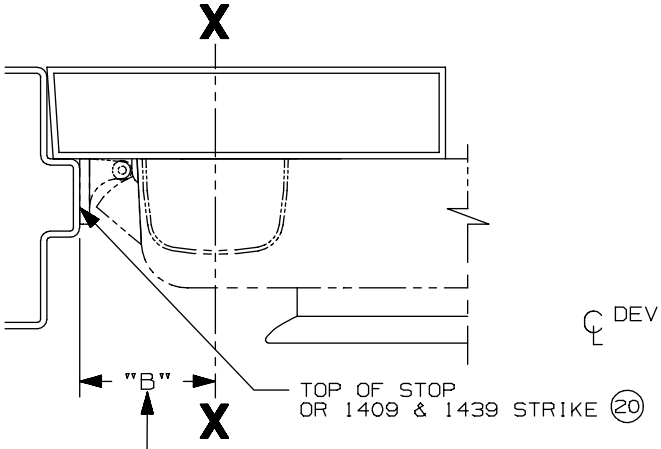

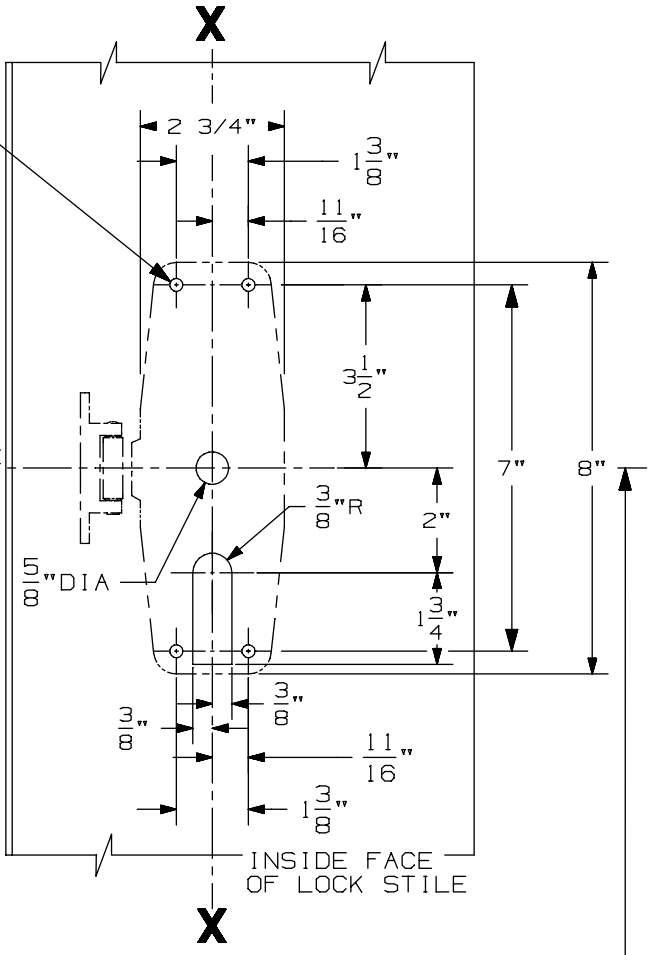

SINGLE DOOR INSTALLATION			
STRIKE	DIM. "B"	MIN. STILE 990/991/992 TRIM	MIN. STILE 696/697 TRIM
299 & 299-F	2 3/8"	4 1/2"	4 3/8"
(20) 1409 & 1439	1 9/16"	3 13/16"	3 13/16"
1606	1 15/16"	4 1/16"	3 15/16"

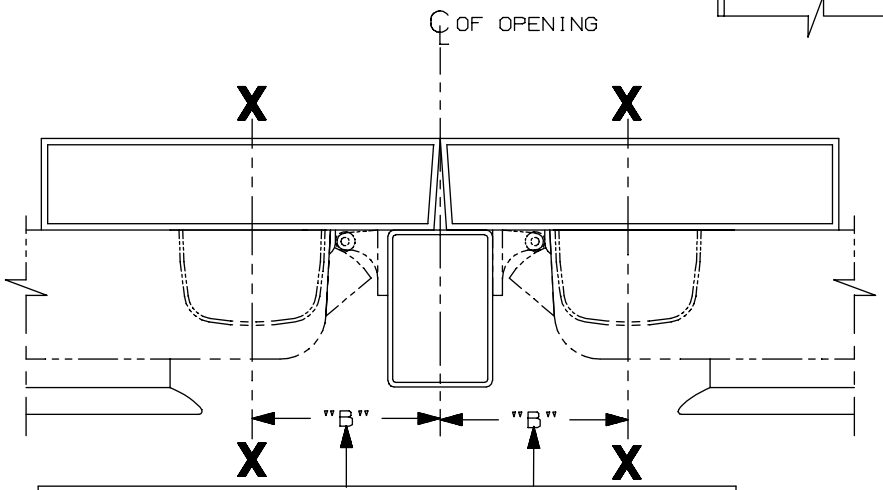

SINGLE DOOR OPENING
39 13/16" TO FINISHED FLOOR

DOUBLE DOOR OPENING
WITH VON DUPRIN MULLION
39 11/16"

LHR APPLICATION SHOWN
RHR APPLICATION OPPOSITE

DOUBLE DOOR INSTALLATION WITH VON DUPRIN MULLIONS				
MULLION	STRIKE	DIM. "B"	MIN. STILE 990/991/992 TRIM	MIN. STILE 696/697 TRIM
(20) 4954/9954	299/299-F	3 3/8"	4 7/8"	4 3/4"
9954	499-F	3 1/2"	5"	4 7/8"
5654	299	2 15/16"	4 3/8"	4 1/4"
5754	1408	2 1/8"	3 13/16"	3 13/16"
1654	1606	2 15/16"	4 3/8"	4 1/4"

NOTES:
1. THESE FOUR HOLES TO BE PREPARED FOR SURFACE APPLICATION WHEN USING 696/697 TRIM. DO NOT PREPARE FOR SEX BOLTS.
2. FOR STOCK HOLLOW METAL DOORS SEE TEMPLATE NO. 10309 FOR TYPE "161" CUTOUT AND 10315 FOR TYPE "86" CUTOUT.
3. GLASS BEAD KIT AVAILABLE WHEN REQUIRED.
4. FOR OUTSIDE TRIM PREPARATION, WHEN REQUIRED, SEE TRIM TEMPLATE.
5. 9954 W/299-F FOR HURRICANE APPLICATIONS (20) ONLY.

98/99 & 98-F/99-F TP, K, & L Series Rim Devices

VON DUPRIN®

NOTES: SEE MASTER SHEET #10001 FOR SUGGESTED REINFORCING

TEMPLATE NUMBER: 10302_a

DATE: 05-21-13

DEVICE APPLICATION SCHEDULE	
98 RIM SERIES	99 RIM SERIES
9827 SERIES	9927 SERIES
9847 SERIES	9947 SERIES
9849 SERIES	9949 SERIES

996L, E996L, 996L-BE, E996L-BE 996K, 996K-BE R/V SERIES
TRIM METAL DOOR APPLICATION

VON DUPRIN®

NOTES: SEE MASTER SHEET #10001 FOR SUGGESTED REINFORCING

TEMPLATE NUMBER: 20003_e

DATE: 10-30-14

RIM APPLICATION

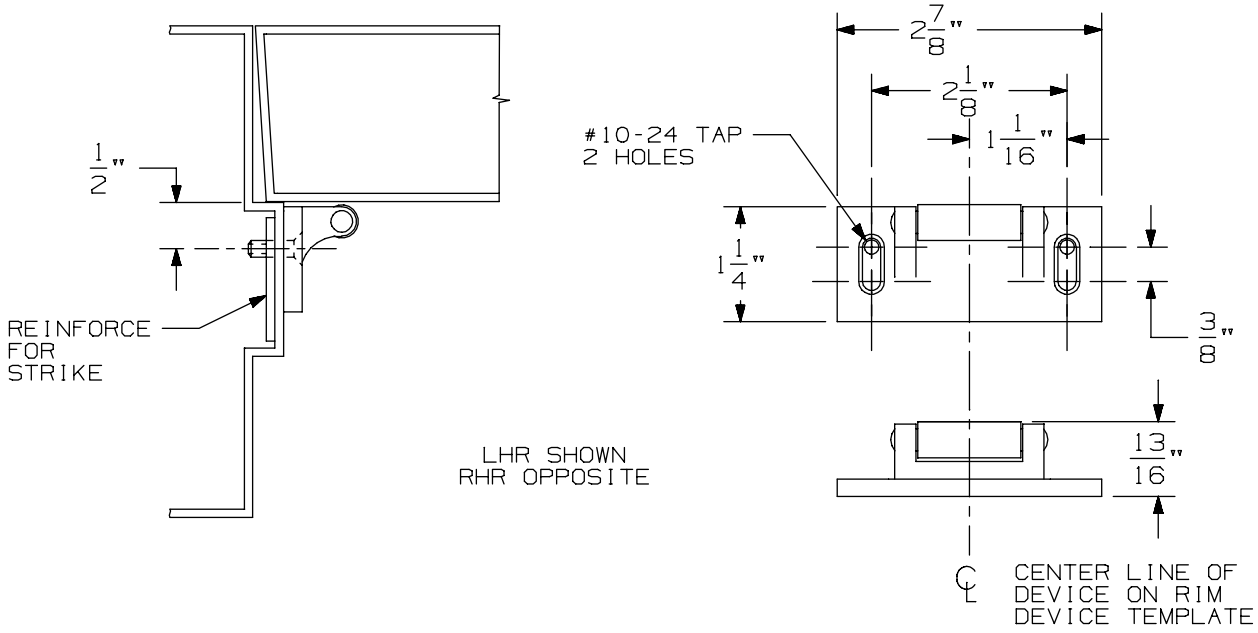

VERTICAL APPLICATION

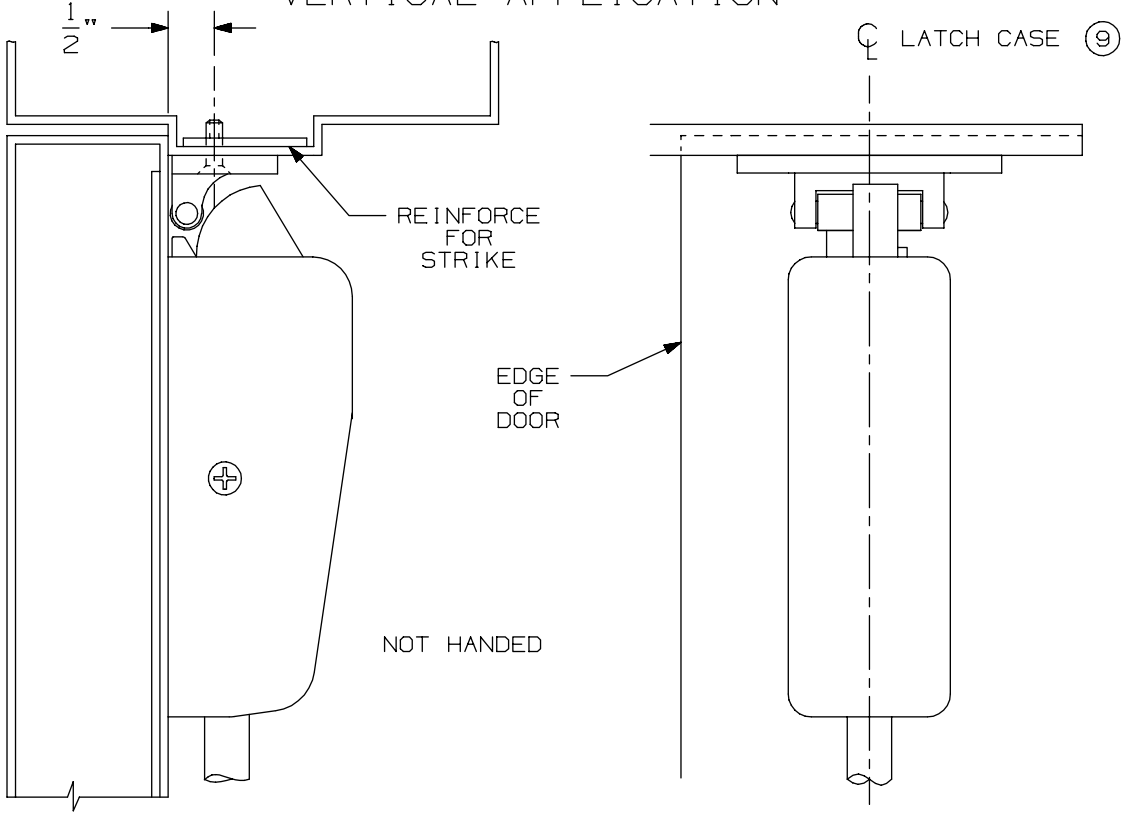

NOTE: LATCH CASE MOUNTING HOLES TO BE PREPARED AT INSTALLATION ON DOOR.

299 & 299F Strike

VON DUPRIN®

NOTES: SEE MASTER SHEET #10001 FOR SUGGESTED REINFORCING

TEMPLATE NUMBER: 30039_a

DATE: 05-23-13

APPLICATION	PREPARATION
SURFACE APPLICATION	#10-24 TAP 4 PLACES
990 TRIM APPLICATION OR SEX BOLT APPLICATION (SEE NOTE 1)	1/4' DIA THIS SIDE 13/32" DIA OPPOSITE SIDE - 4 PLACES

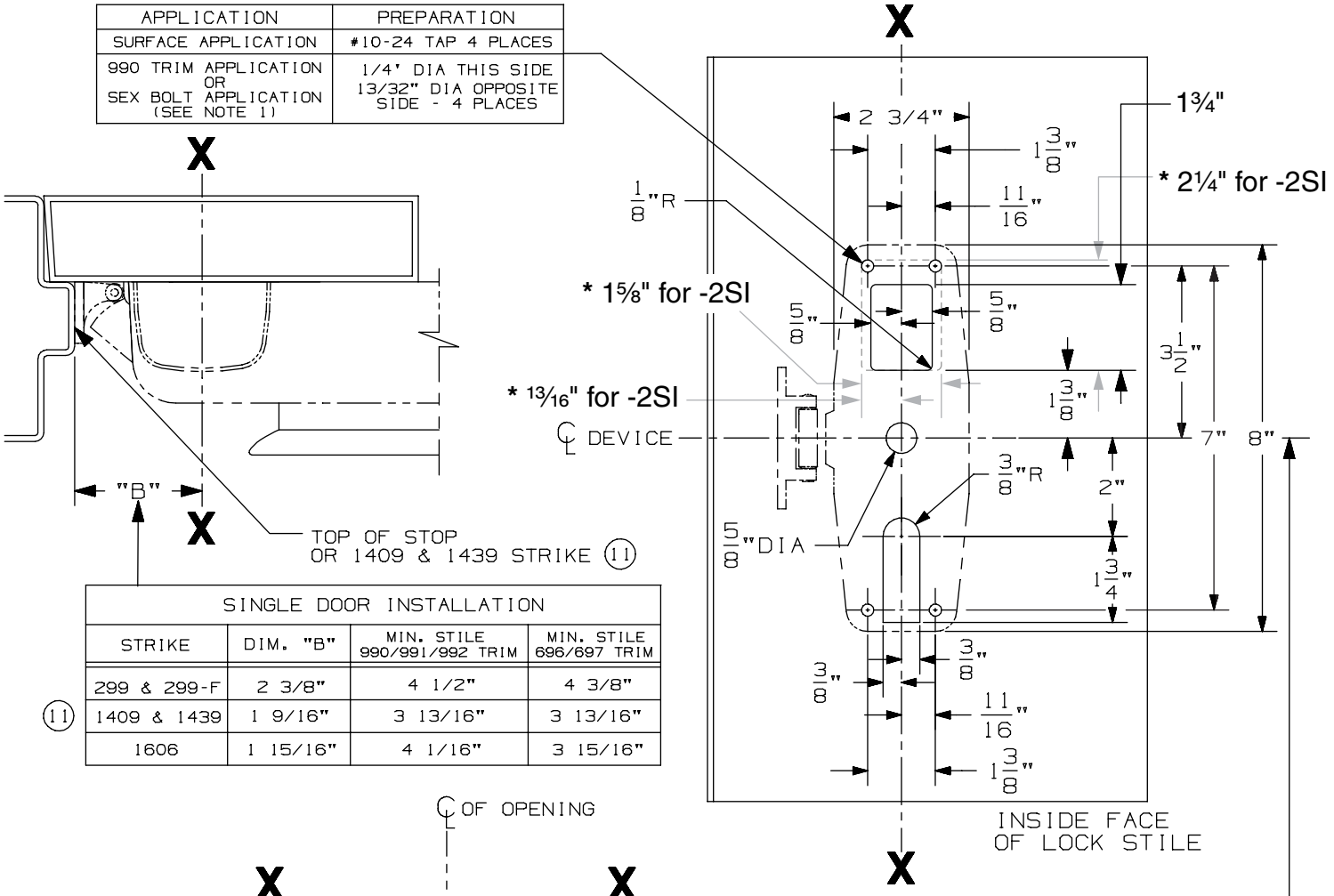

SINGLE DOOR INSTALLATION			
STRIKE	DIM. "B"	MIN. STILE 990/991/992 TRIM	MIN. STILE 696/697 TRIM
299 & 299-F	2 3/8"	4 1/2"	4 3/8"
(11) 1409 & 1439	1 9/16"	3 13/16"	3 13/16"
1606	1 15/16"	4 1/16"	3 15/16"

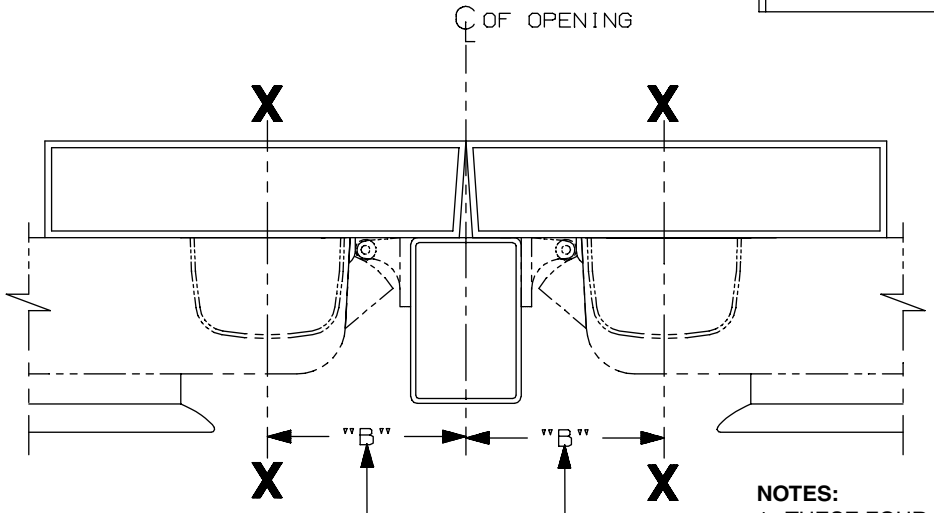

SINGLE DOOR OPENING
39 13/16" TO FINISHED FLOOR

DOUBLE DOOR OPENING
WITH VON DUPRIN MULLION
39 11/16"

LHR APLICATION SHOWN
RHR APPLICATION OPPOSITE

DOUBLE DOOR INSTALLATION WITH VON DUPRIN MULLIONS				
MULLION	STRIKE	DIM. "B"	MIN. STILE 990/991/992 TRIM	MIN. STILE 696/697 TRIM
(11) 4954/9954	299/299-F	3 3/8"	4 7/8"	4 3/4"
5654	299	2 15/16"	4 3/8"	4 1/4"
5754	1408	2 1/8"	3 13/16"	3 13/16"
1654	1606	2 15/16"	4 3/8"	4 1/4"

NOTES:

1. THESE FOUR HOLES TO BE PREPARED FOR SURFACE APPLICATION WHEN USING 696/697 TRIM. DO NOT PREPARE FOR SEX BOLTS.
2. FOR STOCK HOLLOW METAL DOORS, SEE TEMPLATE 10309 FOR TYPE "161" CUTOUT AND 10315 FOR TYPE "86" CUTOUT.
3. GLASS BEAD KIT AVAILABLE WHEN REQUIRED.
4. FOR OUTSIDE TRIM PREPARATION, WHEN REQUIRED, SEE TRIM TEMPLATE.
5. IT IS RECOMMENDED THE MOUNTING HOLES BE PREPARED IN THE FIELD.
6. 9954 W/299-F FOR HURRICANE APPLICATIONS (11) ONLY.
* 7. FOR THE -2SI MODEL, HEIGHT OF CUTOUT INCREASES TO 2¼" AND WIDTH INCREASES TO 1⅝".

98/99-2 & 98/99-F-2 TP, K, & L Series Double Cylinder Rim Device

VON DUPRIN®

NOTES: SEE MASTER SHEET #10001 FOR SUGGESTED REINFORCING

TEMPLATE NUMBER: 10322_c

DATE: 10-21-13

DEVICE APPLICATION SCHEDULE	
98 RIM SERIES	99 RIM SERIES
9827 SERIES	9927 SERIES
9847 SERIES	9947 SERIES
9849 SERIES	9949 SERIES

996L, E996L, 996L-BE, E996L-BE 996K, 996K-BE R/V SERIES
TRIM METAL DOOR APPLICATION

VON DUPRIN®

NOTES: SEE MASTER SHEET #10001 FOR SUGGESTED REINFORCING

TEMPLATE NUMBER: 20003_e

DATE: 10-30-14

RIM APPLICATION

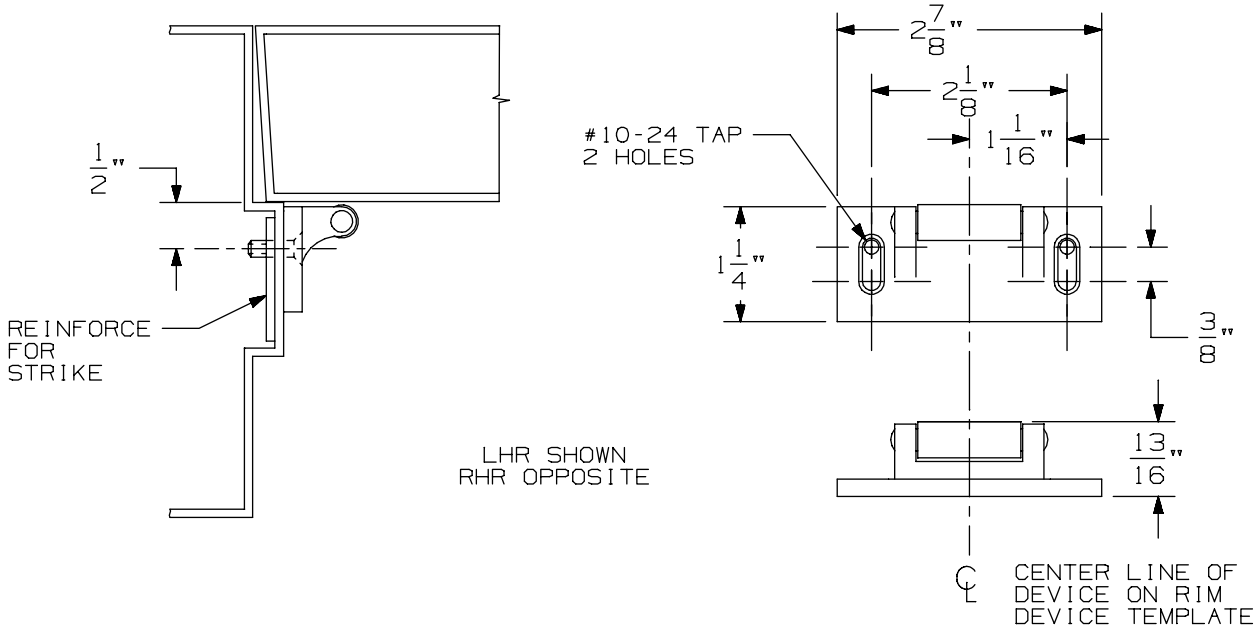

VERTICAL APPLICATION

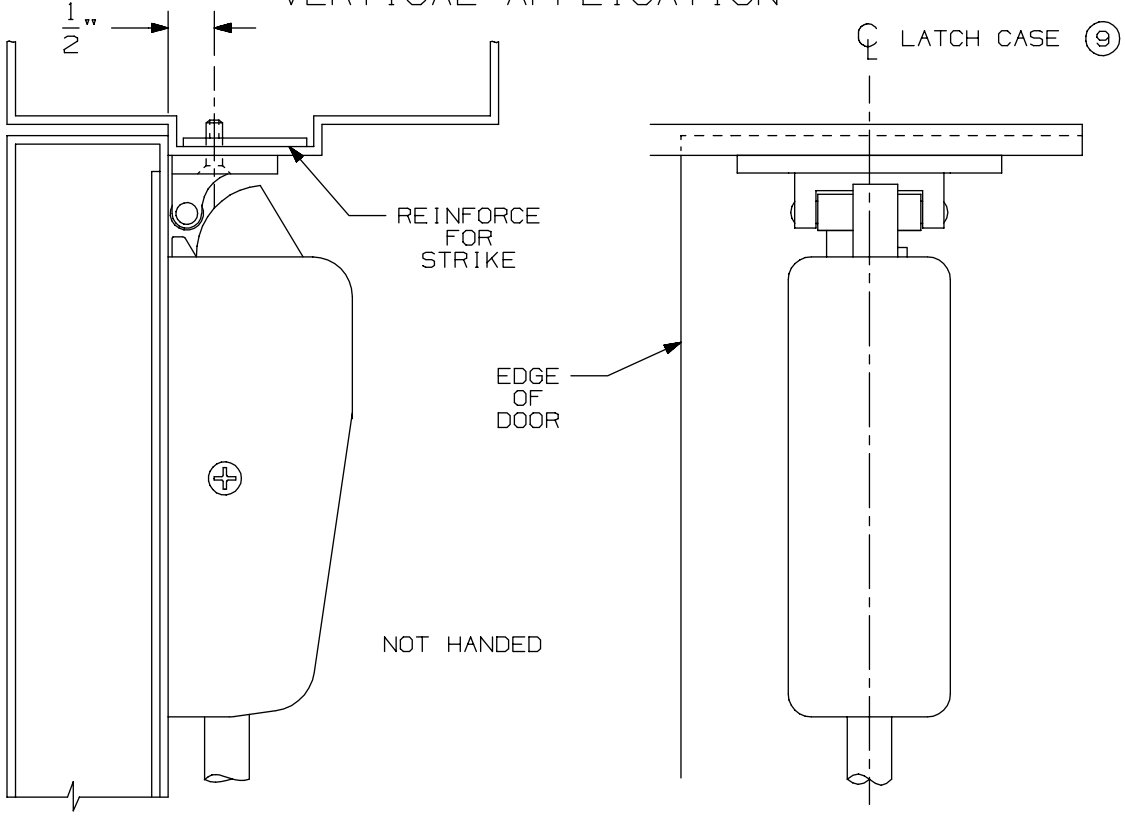

NOTE: LATCH CASE MOUNTING HOLES TO BE PREPARED AT INSTALLATION ON DOOR.

299 & 299F Strike

VON DUPRIN®

NOTES: SEE MASTER SHEET #10001 FOR SUGGESTED REINFORCING

TEMPLATE NUMBER: 30039_a

DATE: 05-23-13

APPLICATION	PREPARATION
SURFACE APPLICATION	#10-24 TAP 2 PLACES
990 TRIM APPLICATION OR SEX BOLT APPLICATION (SEE NOTE 1)	1/4" DIA THIS SIDE 13/32" DIA OPPOSITE SIDE - 2 PLACES

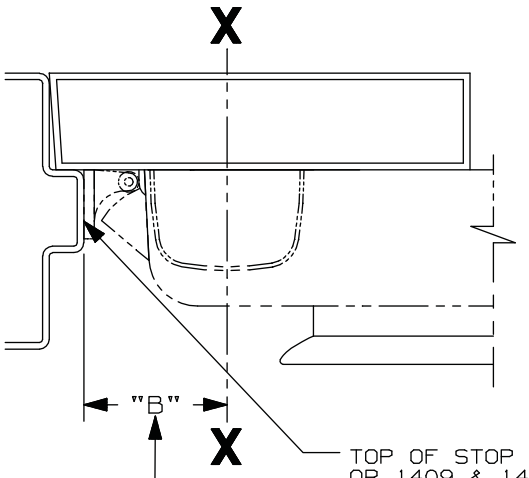

SINGLE DOOR INSTALLATION			
STRIKE	DIM. "B"	MIN. STILE 990/991/992 TRIM	MIN. STILE 696/697 TRIM
299 & 299-F	2 3/8"	4 1/2"	4 3/8"
(11) 1409 & 1439	1 9/16"	3 13/16"	3 13/16"
1606	1 15/16"	4 1/16"	3 15/16"

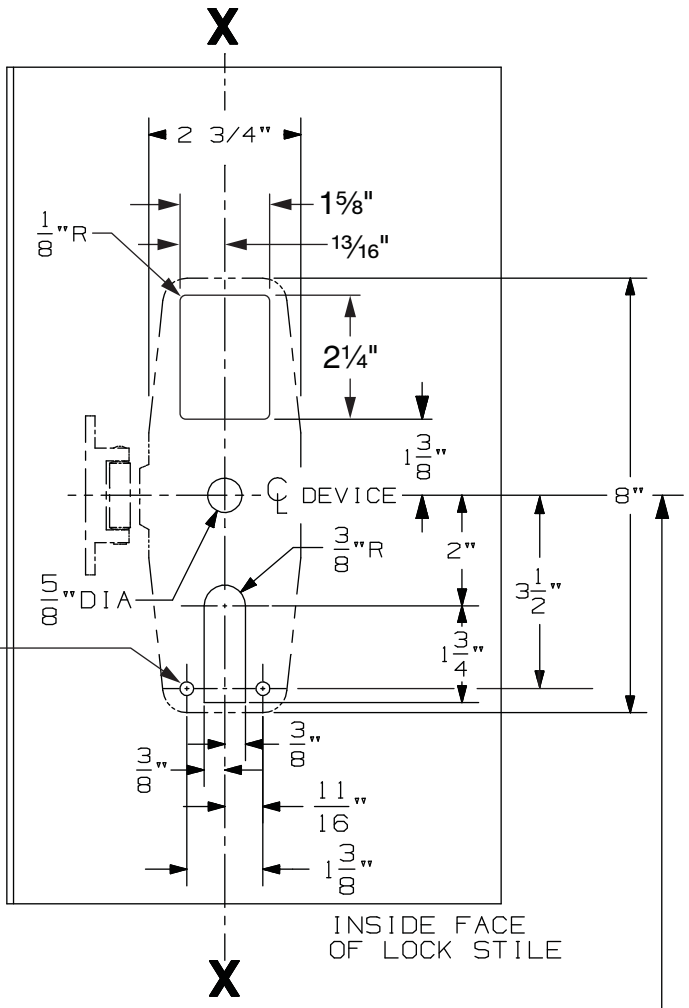

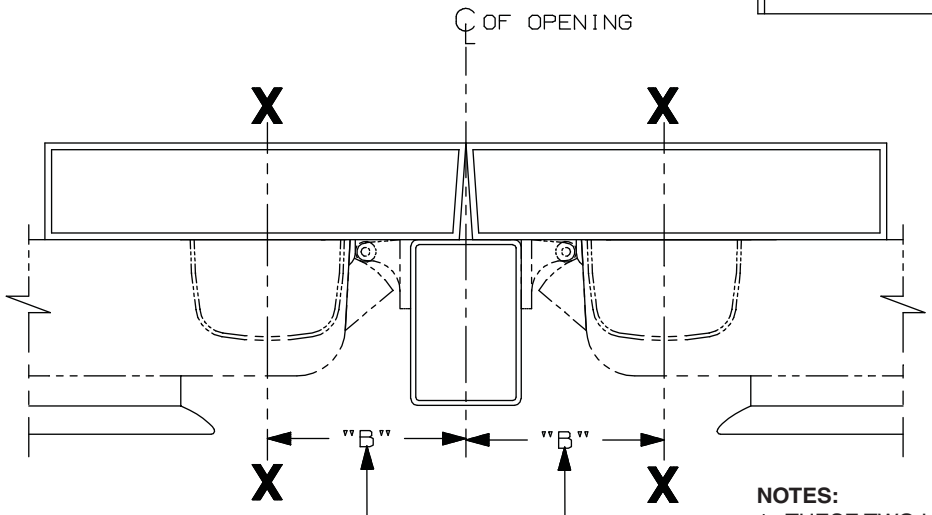

DOUBLE DOOR INSTALLATION WITH VON DUPRIN MULLIONS				
MULLION	STRIKE	DIM. "B"	MIN. STILE 990/991/992 TRIM	MIN. STILE 696/697 TRIM
(11) 4954/9954	299/299-F	3 3/8"	4 7/8"	4 3/4"
5654	299	2 15/16"	4 3/8"	4 1/4"
5754	1408	2 1/8"	3 13/16"	3 13/16"
1654	1606	2 15/16"	4 3/8"	4 1/4"

SINGLE DOOR OPENING
39 13/16" TO FINISHED FLOOR

DOUBLE DOOR OPENING
WITH VON DUPRIN MULLION
39 11/16"

LHR APPLICATION SHOWN
RHR APPLICATION OPPOSITE

NOTES:

1. THESE TWO HOLES TO BE PREPARED FOR SURFACE APPLICATION WHEN USING 696/697 TRIM. DO NOT PREPARE FOR SEX BOLTS.
2. FOR STOCK HOLLOW METAL DOORS, SEE TEMPLATE 10309 FOR TYPE "161" CUTOUT AND 10315 FOR TYPE "86" CUTOUT.
3. GLASS BEAD KIT AVAILABLE WHEN REQUIRED.
4. FOR OUTSIDE TRIM PREPARATION, WHEN REQUIRED, SEE TRIM TEMPLATE.
5. IT IS RECOMMENDED THE MOUNTING HOLES BE PREPARED IN THE FIELD.
6. 9954 W/299-F FOR HURRICANE APPLICATIONS (11) ONLY.

98/99-2SI & 98/99-F-2SI TP, K, & L Series Double Cylinder Rim Device

VON DUPRIN®

NOTES: SEE MASTER SHEET #10001 FOR SUGGESTED REINFORCING

TEMPLATE NUMBER: 24793986_a

DATE: 04-15-14

DEVICE APPLICATION SCHEDULE	
98 RIM SERIES	99 RIM SERIES
9827 SERIES	9927 SERIES
9847 SERIES	9947 SERIES
9849 SERIES	9949 SERIES

996L, E996L, 996L-BE, E996L-BE 996K, 996K-BE R/V SERIES
TRIM METAL DOOR APPLICATION

VON DUPRIN®

NOTES: SEE MASTER SHEET #10001 FOR SUGGESTED REINFORCING

TEMPLATE NUMBER: 20003_e

DATE: 10-30-14

RIM APPLICATION

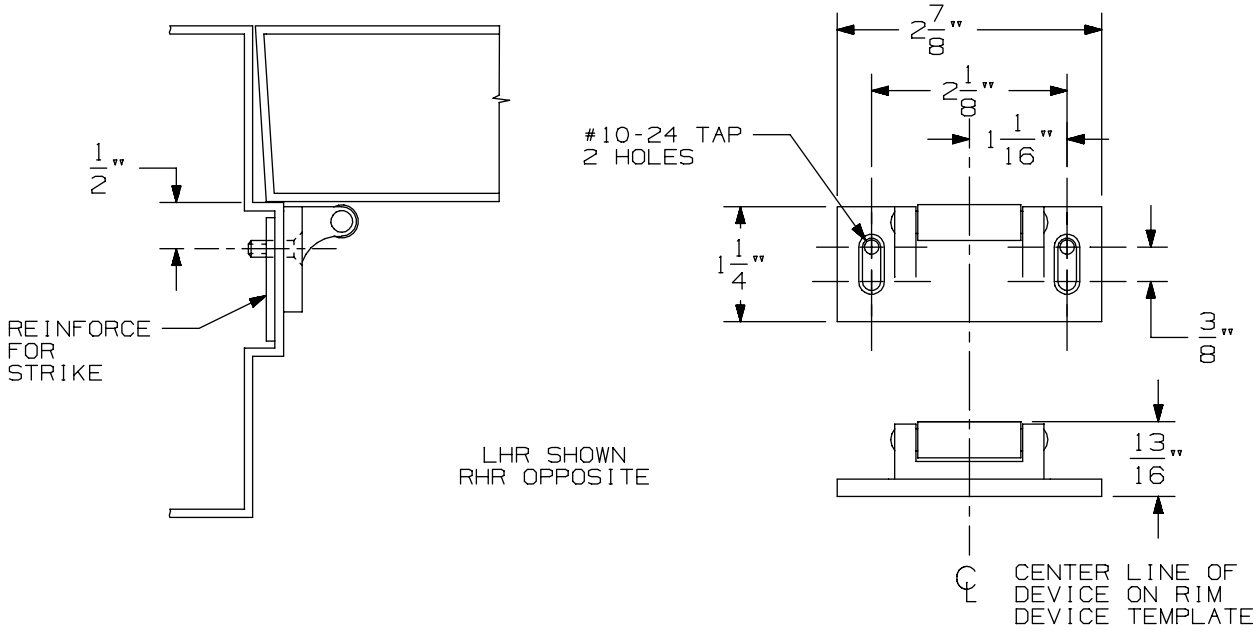

VERTICAL APPLICATION

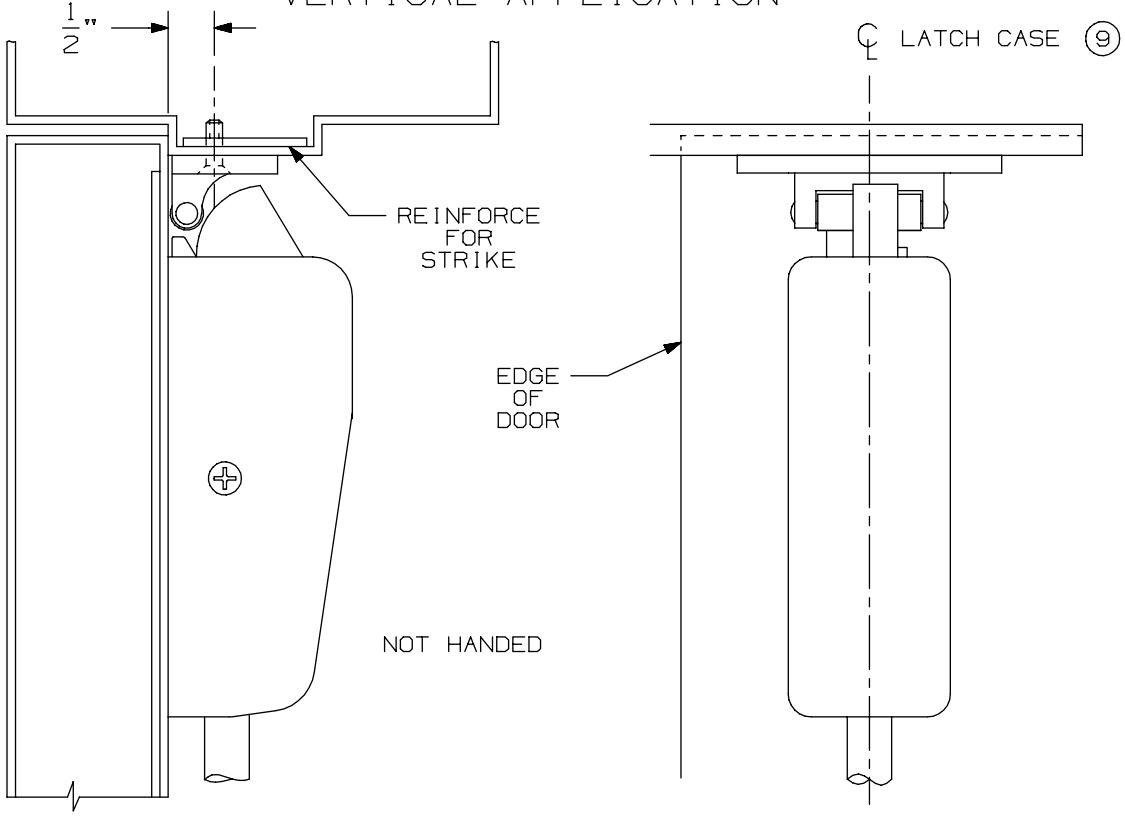

NOTE: LATCH CASE MOUNTING HOLES TO BE PREPARED AT INSTALLATION ON DOOR.

299 & 299F Strike

VON DUPRIN®

NOTES: SEE MASTER SHEET #10001 FOR SUGGESTED REINFORCING

TEMPLATE NUMBER: 30039_a

DATE: 05-23-13

APPLICATION	PREPARATION
SURFACE APPLICATION	#10-24 TAP 4 PLACES
990 TRIM APPLICATION OR SEX BOLT APPLICATION (SEE NOTE 1)	1/4" DIA THIS SIDE 13/32" DIA OPPOSITE SIDE - 4 PLACES

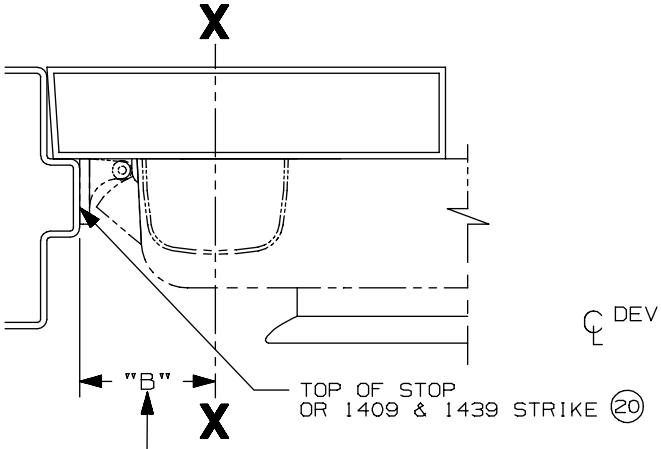

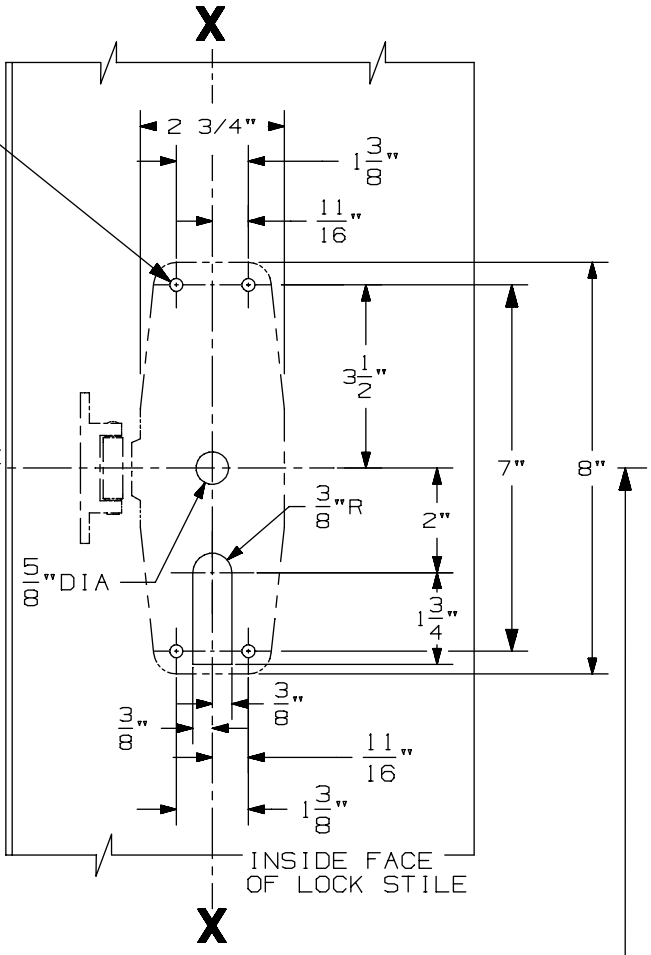

SINGLE DOOR INSTALLATION			
STRIKE	DIM. "B"	MIN. STILE 990/991/992 TRIM	MIN. STILE 696/697 TRIM
299 & 299-F	2 3/8"	4 1/2"	4 3/8"
(20) 1409 & 1439	1 9/16"	3 13/16"	3 13/16"
1606	1 15/16"	4 1/16"	3 15/16"

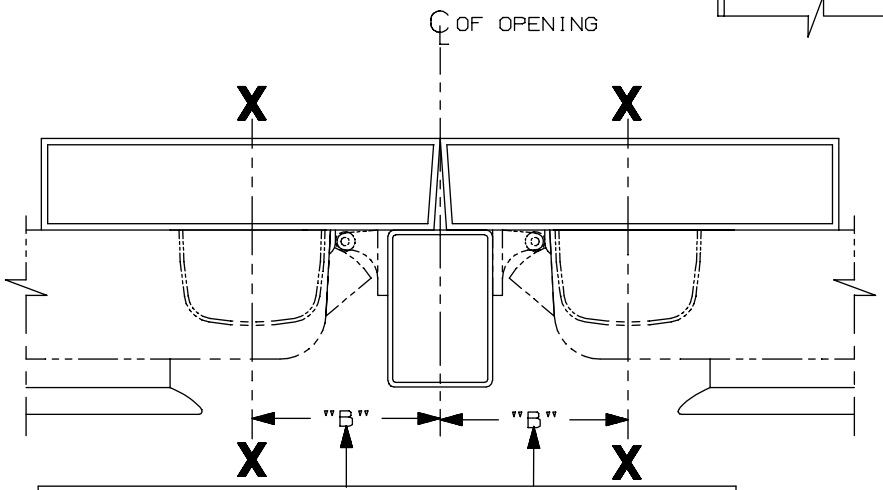

SINGLE DOOR OPENING
39 13/16" TO FINISHED FLOOR

DOUBLE DOOR OPENING
WITH VON DUPRIN MULLION
39 11/16"

LHR APPLICATION SHOWN
RHR APPLICATION OPPOSITE

DOUBLE DOOR INSTALLATION WITH VON DUPRIN MULLIONS				
MULLION	STRIKE	DIM. "B"	MIN. STILE 990/991/992 TRIM	MIN. STILE 696/697 TRIM
(20) 4954/9954	299/299-F	3 3/8"	4 7/8"	4 3/4"
9954	499-F	3 1/2"	5"	4 7/8"
5654	299	2 15/16"	4 3/8"	4 1/4"
5754	1408	2 1/8"	3 13/16"	3 13/16"
1654	1606	2 15/16"	4 3/8"	4 1/4"

NOTES:
1. THESE FOUR HOLES TO BE PREPARED FOR SURFACE APPLICATION WHEN USING 696/697 TRIM. DO NOT PREPARE FOR SEX BOLTS.
2. FOR STOCK HOLLOW METAL DOORS SEE TEMPLATE NO. 10309 FOR TYPE "161" CUTOUT AND 10315 FOR TYPE "86" CUTOUT.
3. GLASS BEAD KIT AVAILABLE WHEN REQUIRED.
4. FOR OUTSIDE TRIM PREPARATION, WHEN REQUIRED, SEE TRIM TEMPLATE.
5. 9954 W/299-F FOR HURRICANE APPLICATIONS (20) ONLY.

98/99 & 98-F/99-F TP, K, & L Series Rim Devices

VON DUPRIN®

NOTES: SEE MASTER SHEET #10001 FOR SUGGESTED REINFORCING

TEMPLATE NUMBER: 10302_a

DATE: 05-21-13

990 TP & 990 TP-BE TRIM

NOTES: SEE MASTER SHEET #10001 FOR SUGGESTED REINFORCING

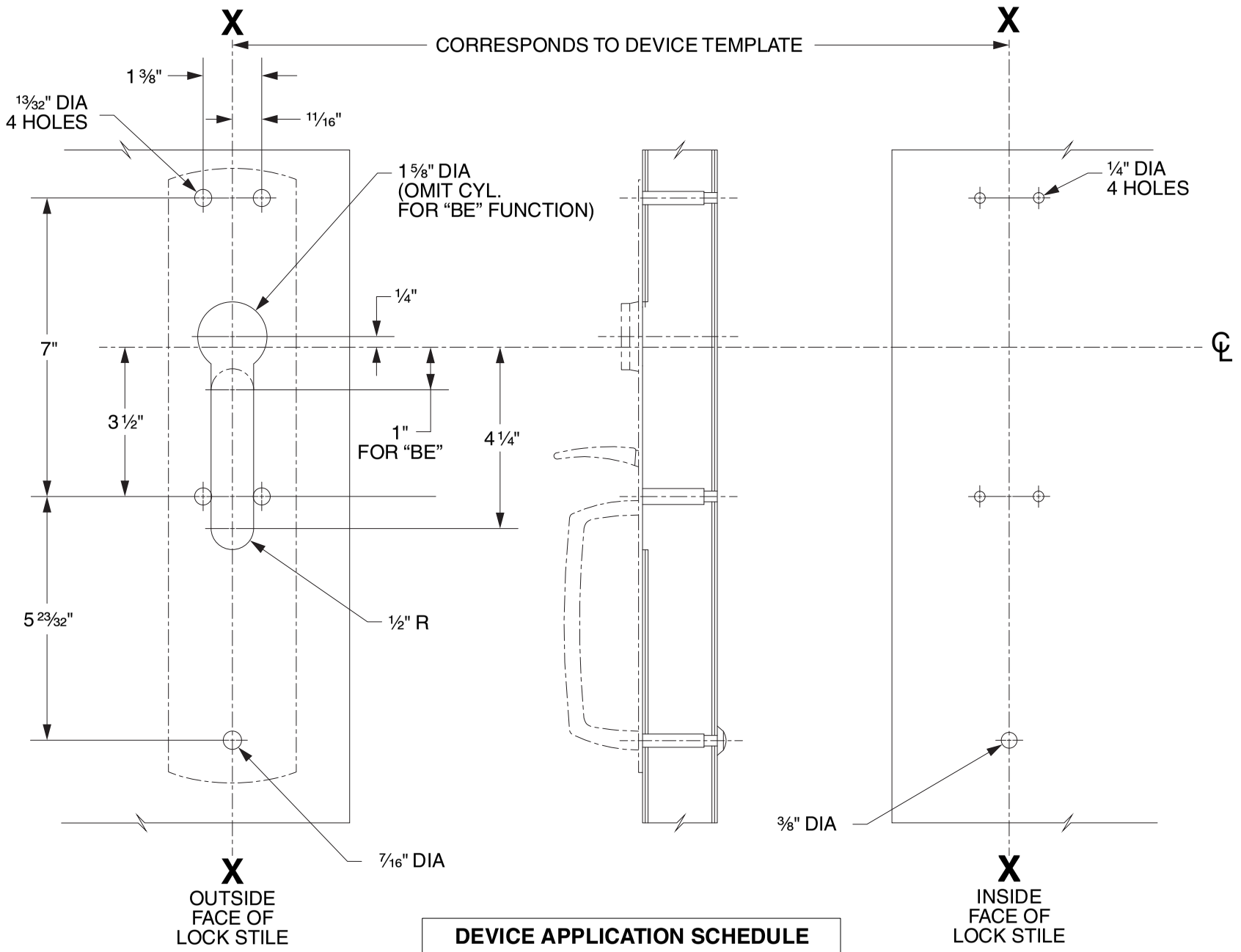

DEVICE APPLICATION SCHEDULE
98/99 SERIES RIM DEVICE
9827/9927 SERIES DEVICE
9847/9947 SERIES DEVICE
9849/9949 SERIES DEVICE

LHR SHOWN
RHR OPPOSITE

VON DUPRIN®

TEMPLATE NUMBER: 20265_C

DATE: 05-31-13

RIM APPLICATION

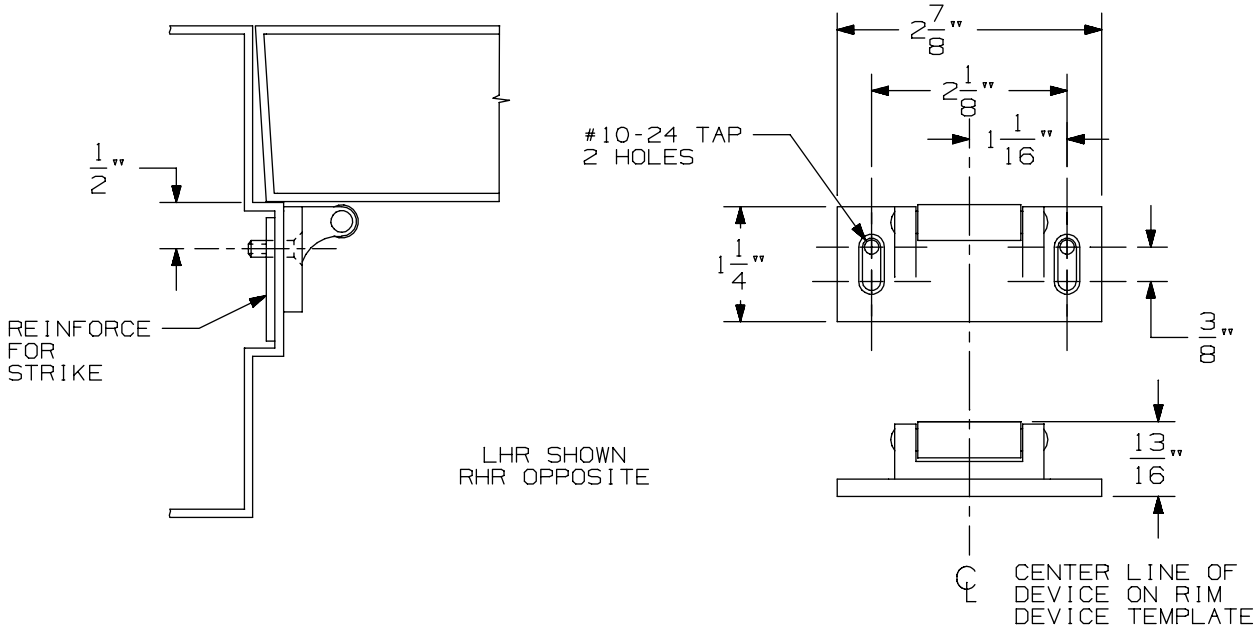

VERTICAL APPLICATION

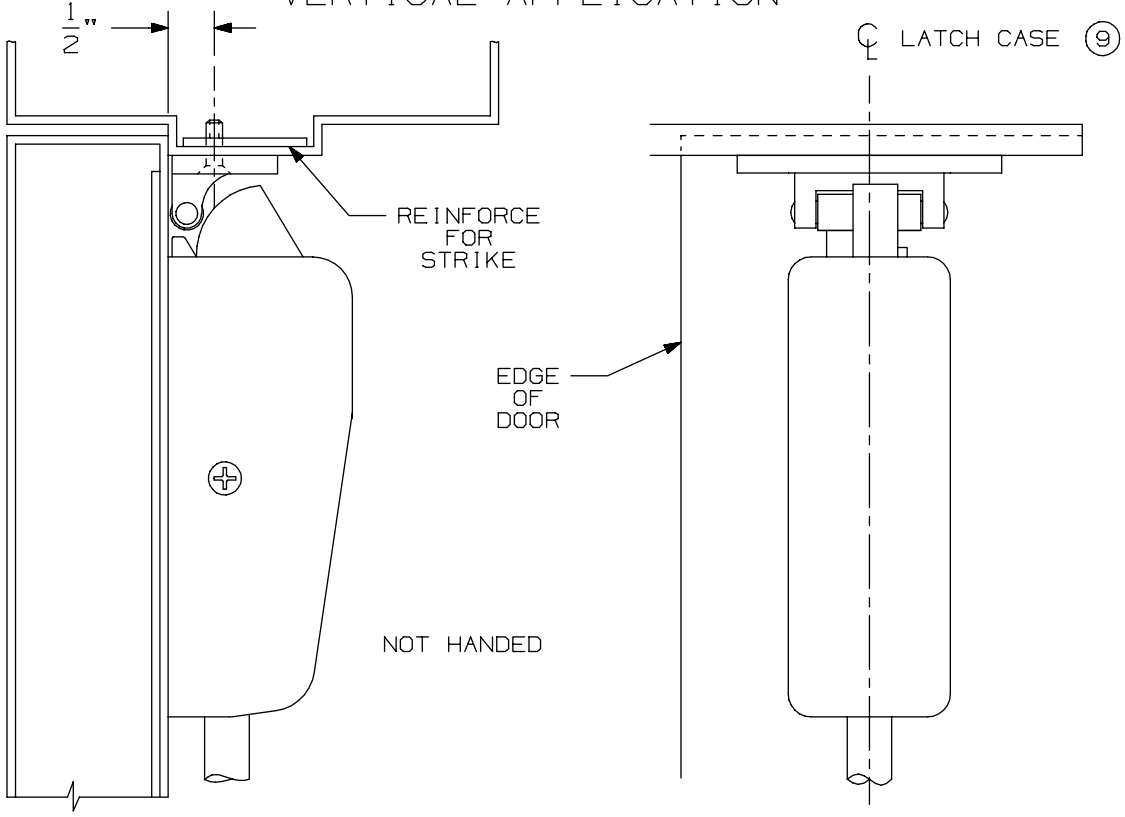

NOTE: LATCH CASE MOUNTING HOLES TO BE PREPARED AT INSTALLATION ON DOOR.

299 & 299F Strike

VON DUPRIN®

NOTES: SEE MASTER SHEET #10001 FOR SUGGESTED REINFORCING

TEMPLATE NUMBER: 30039_a

DATE: 05-23-13

APPLICATION	PREPARATION
SURFACE APPLICATION	#10-24 TAP 4 PLACES
990 TRIM APPLICATION OR SEX BOLT APPLICATION (SEE NOTE 1)	1/4' DIA THIS SIDE 13/32" DIA OPPOSITE SIDE - 4 PLACES

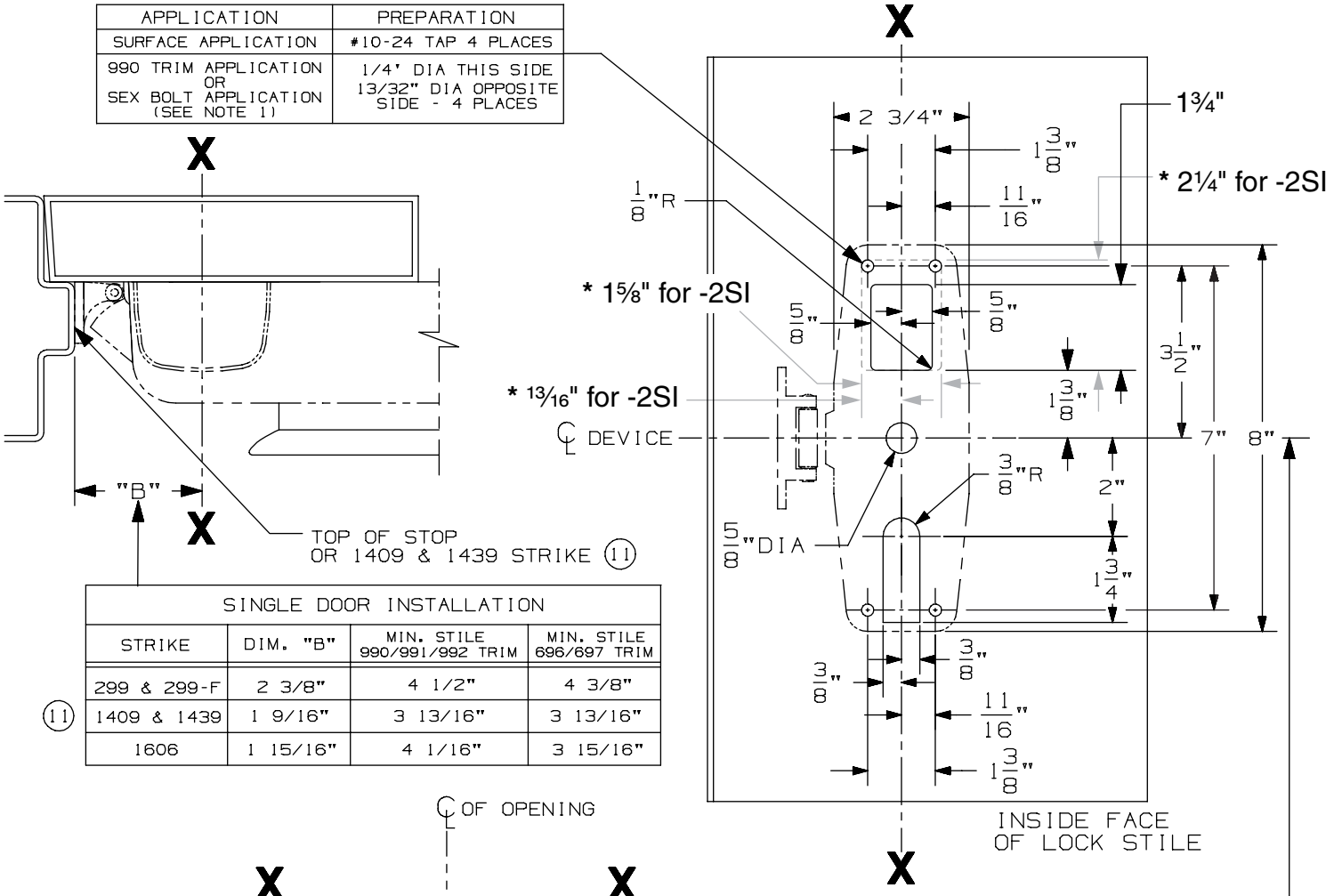

SINGLE DOOR INSTALLATION			
STRIKE	DIM. "B"	MIN. STILE 990/991/992 TRIM	MIN. STILE 696/697 TRIM
299 & 299-F	2 3/8"	4 1/2"	4 3/8"
(11) 1409 & 1439	1 9/16"	3 13/16"	3 13/16"
1606	1 15/16"	4 1/16"	3 15/16"

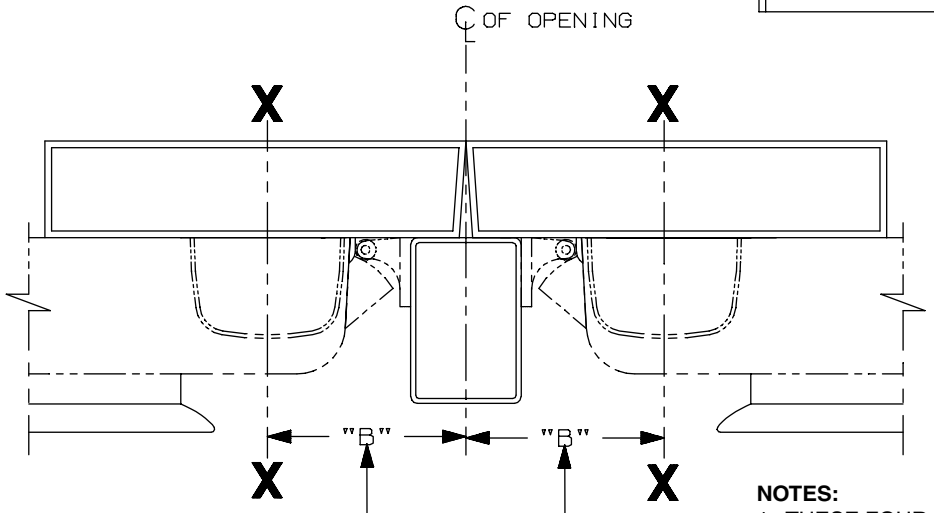

SINGLE DOOR OPENING
39 13/16" TO FINISHED FLOOR

DOUBLE DOOR OPENING
WITH VON DUPRIN MULLION
39 11/16"

LHR APLICATION SHOWN
RHR APPLICATION OPPOSITE

DOUBLE DOOR INSTALLATION WITH VON DUPRIN MULLIONS				
MULLION	STRIKE	DIM. "B"	MIN. STILE 990/991/992 TRIM	MIN. STILE 696/697 TRIM
(11) 4954/9954	299/299-F	3 3/8"	4 7/8"	4 3/4"
5654	299	2 15/16"	4 3/8"	4 1/4"
5754	1408	2 1/8"	3 13/16"	3 13/16"
1654	1606	2 15/16"	4 3/8"	4 1/4"

NOTES:

1. THESE FOUR HOLES TO BE PREPARED FOR SURFACE APPLICATION WHEN USING 696/697 TRIM. DO NOT PREPARE FOR SEX BOLTS.
2. FOR STOCK HOLLOW METAL DOORS, SEE TEMPLATE 10309 FOR TYPE "161" CUTOUT AND 10315 FOR TYPE "86" CUTOUT.
3. GLASS BEAD KIT AVAILABLE WHEN REQUIRED.
4. FOR OUTSIDE TRIM PREPARATION, WHEN REQUIRED, SEE TRIM TEMPLATE.
5. IT IS RECOMMENDED THE MOUNTING HOLES BE PREPARED IN THE FIELD.
6. 9954 W/299-F FOR HURRICANE APPLICATIONS (11) ONLY.
* 7. FOR THE -2SI MODEL, HEIGHT OF CUTOUT INCREASES TO 2¼" AND WIDTH INCREASES TO 1⅝".

98/99-2 & 98/99-F-2 TP, K, & L Series Double Cylinder Rim Device

VON DUPRIN®

NOTES: SEE MASTER SHEET #10001 FOR SUGGESTED REINFORCING

TEMPLATE NUMBER: 10322_c

DATE: 10-21-13

990 TP & 990 TP-BE TRIM

NOTES: SEE MASTER SHEET #10001 FOR SUGGESTED REINFORCING

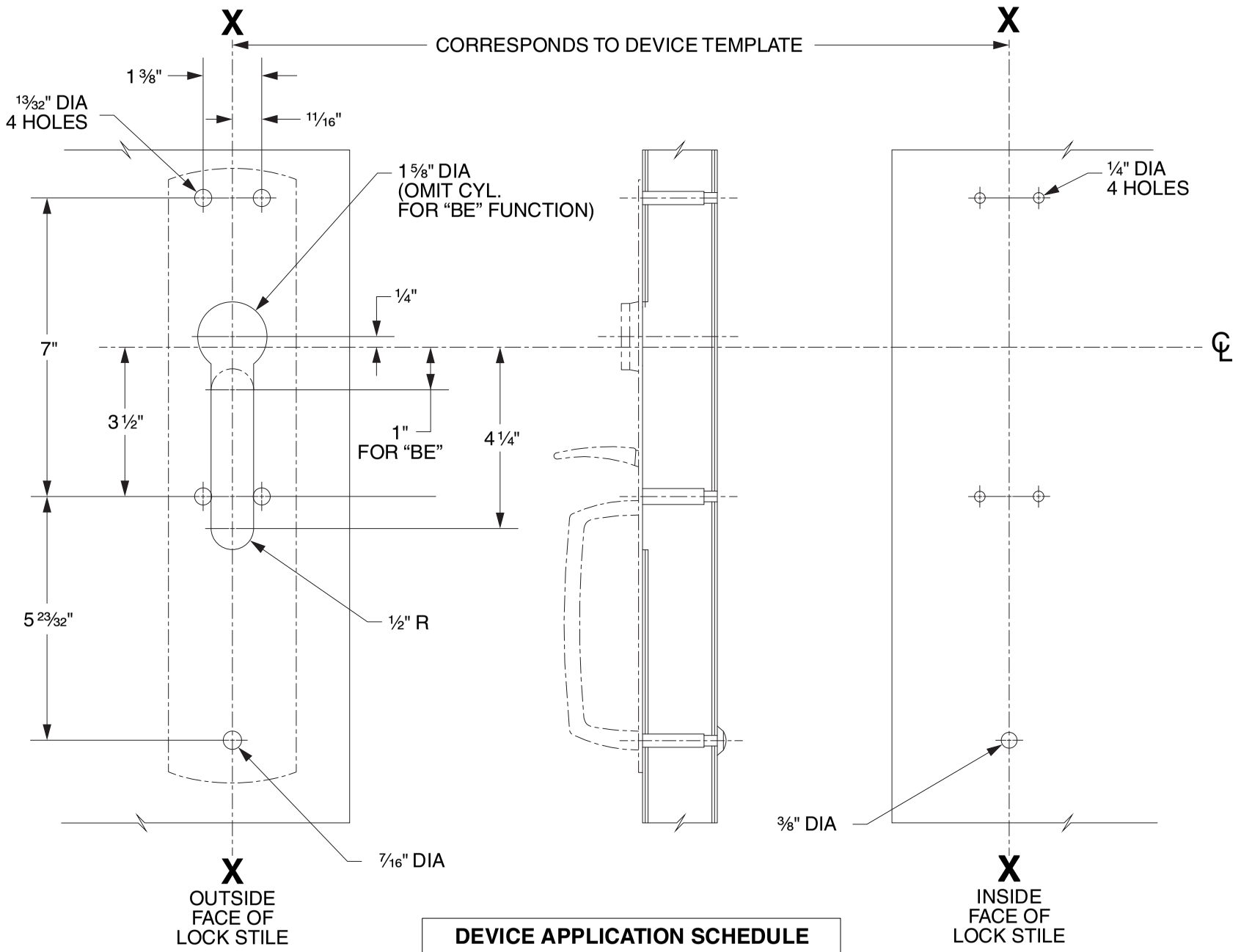

DEVICE APPLICATION SCHEDULE
98/99 SERIES RIM DEVICE
9827/9927 SERIES DEVICE
9847/9947 SERIES DEVICE
9849/9949 SERIES DEVICE

LHR SHOWN
RHR OPPOSITE

VON DUPRIN®

TEMPLATE NUMBER: 20265_C

DATE: 05-31-13

RIM APPLICATION

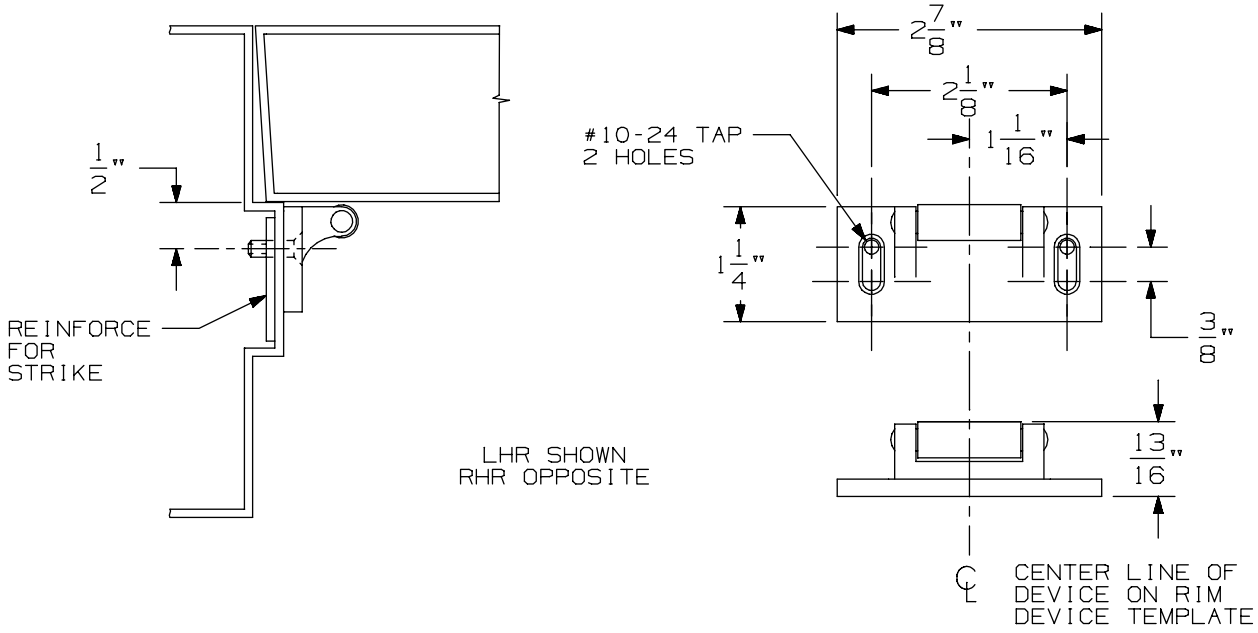

VERTICAL APPLICATION

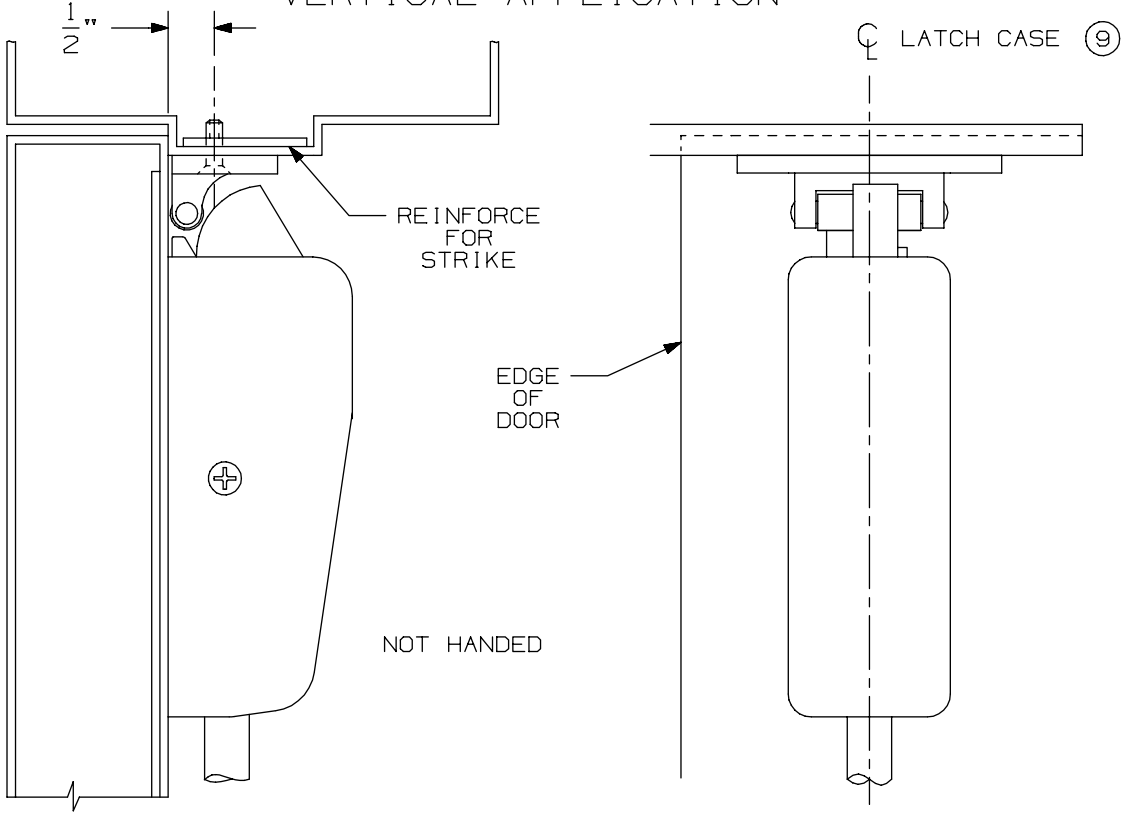

NOTE: LATCH CASE MOUNTING HOLES TO BE PREPARED AT INSTALLATION ON DOOR.

299 & 299F Strike

VON DUPRIN®

NOTES: SEE MASTER SHEET #10001 FOR SUGGESTED REINFORCING

TEMPLATE NUMBER: 30039_a

DATE: 05-23-13

APPLICATION	PREPARATION
SURFACE APPLICATION	#10-24 TAP 2 PLACES
990 TRIM APPLICATION OR SEX BOLT APPLICATION (SEE NOTE 1)	1/4" DIA THIS SIDE 13/32" DIA OPPOSITE SIDE - 2 PLACES

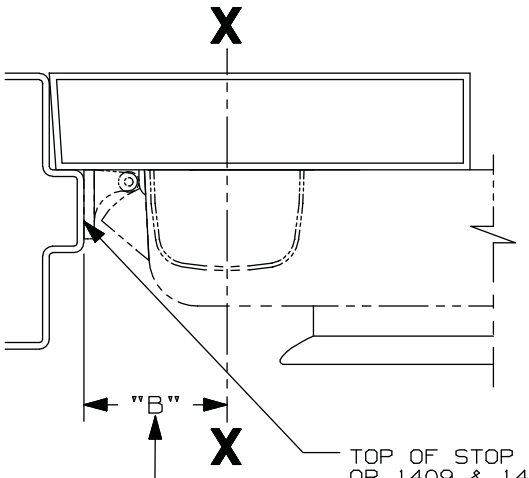

SINGLE DOOR INSTALLATION			
STRIKE	DIM. "B"	MIN. STILE 990/991/992 TRIM	MIN. STILE 696/697 TRIM
299 & 299-F	2 3/8"	4 1/2"	4 3/8"
(11) 1409 & 1439	1 9/16"	3 13/16"	3 13/16"
1606	1 15/16"	4 1/16"	3 15/16"

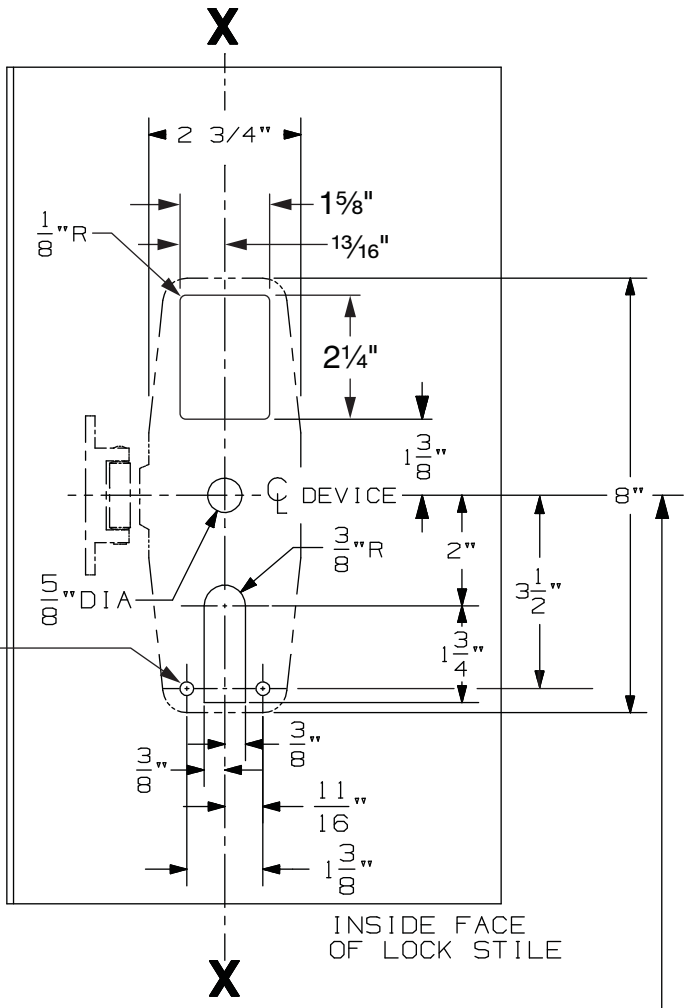

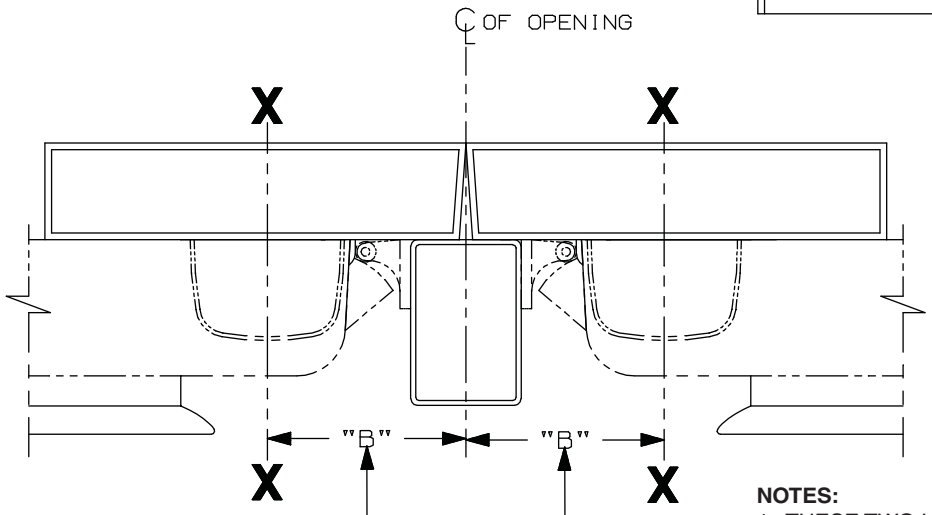

DOUBLE DOOR INSTALLATION WITH VON DUPRIN MULLIONS				
MULLION	STRIKE	DIM. "B"	MIN. STILE 990/991/992 TRIM	MIN. STILE 696/697 TRIM
(11) 4954/9954	299/299-F	3 3/8"	4 7/8"	4 3/4"
5654	299	2 15/16"	4 3/8"	4 1/4"
5754	1408	2 1/8"	3 13/16"	3 13/16"
1654	1606	2 15/16"	4 3/8"	4 1/4"

SINGLE DOOR OPENING
39 13/16" TO FINISHED FLOOR

DOUBLE DOOR OPENING
WITH VON DUPRIN MULLION
39 11/16"

LHR APPLICATION SHOWN
RHR APPLICATION OPPOSITE

NOTES:

1. THESE TWO HOLES TO BE PREPARED FOR SURFACE APPLICATION WHEN USING 696/697 TRIM. DO NOT PREPARE FOR SEX BOLTS.
2. FOR STOCK HOLLOW METAL DOORS, SEE TEMPLATE 10309 FOR TYPE "161" CUTOUT AND 10315 FOR TYPE "86" CUTOUT.
3. GLASS BEAD KIT AVAILABLE WHEN REQUIRED.
4. FOR OUTSIDE TRIM PREPARATION, WHEN REQUIRED, SEE TRIM TEMPLATE.
5. IT IS RECOMMENDED THE MOUNTING HOLES BE PREPARED IN THE FIELD.
6. 9954 W/299-F FOR HURRICANE APPLICATIONS (11) ONLY.

98/99-2SI & 98/99-F-2SI TP, K, & L Series Double Cylinder Rim Device

VON DUPRIN®

NOTES: SEE MASTER SHEET #10001 FOR SUGGESTED REINFORCING

TEMPLATE NUMBER: 24793986_a

DATE: 04-15-14

990 TP & 990 TP-BE TRIM

NOTES: SEE MASTER SHEET #10001 FOR SUGGESTED REINFORCING

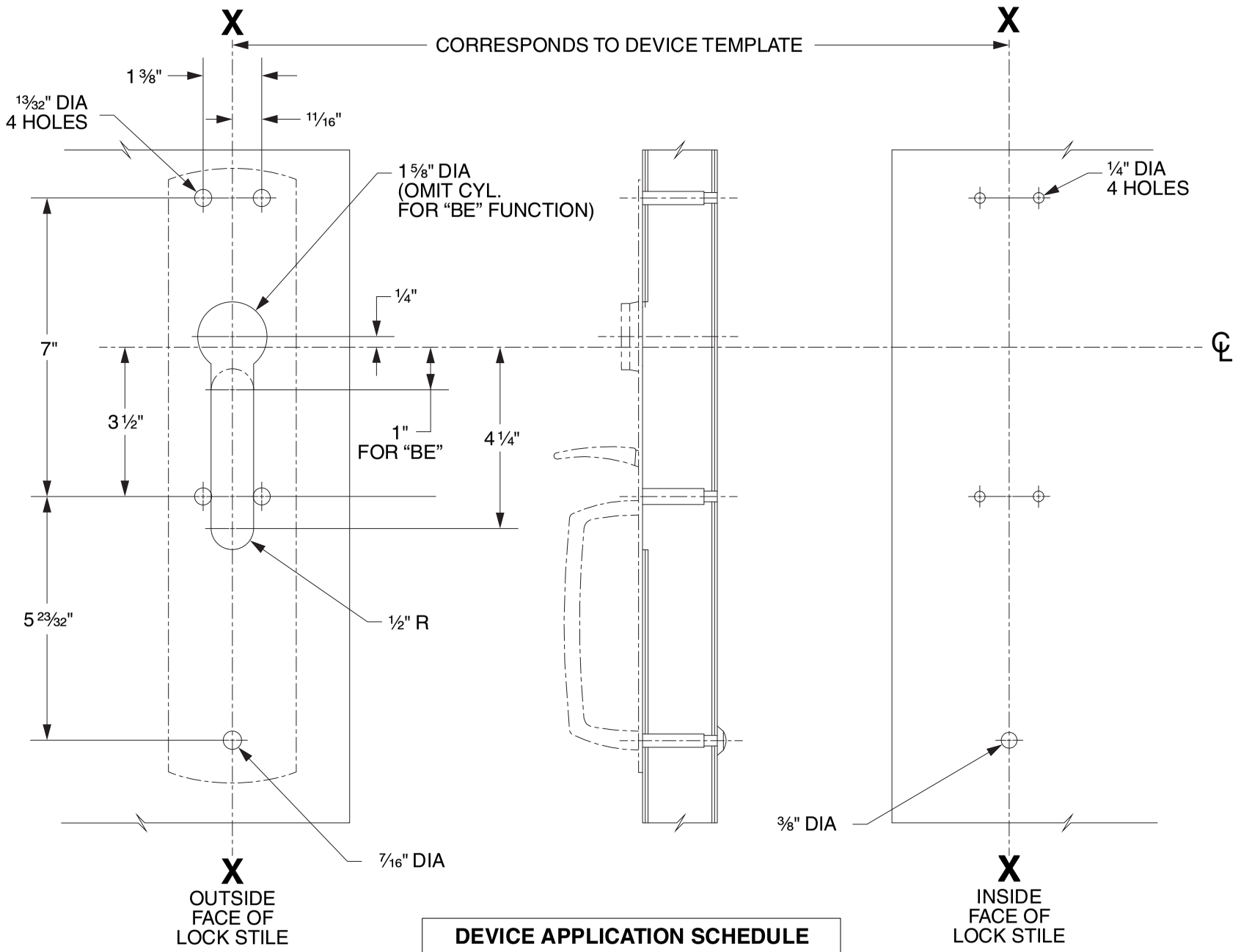

DEVICE APPLICATION SCHEDULE
98/99 SERIES RIM DEVICE
9827/9927 SERIES DEVICE
9847/9947 SERIES DEVICE
9849/9949 SERIES DEVICE

LHR SHOWN
RHR OPPOSITE

VON DUPRIN®

TEMPLATE NUMBER: 20265_C

DATE: 05-31-13

RIM APPLICATION

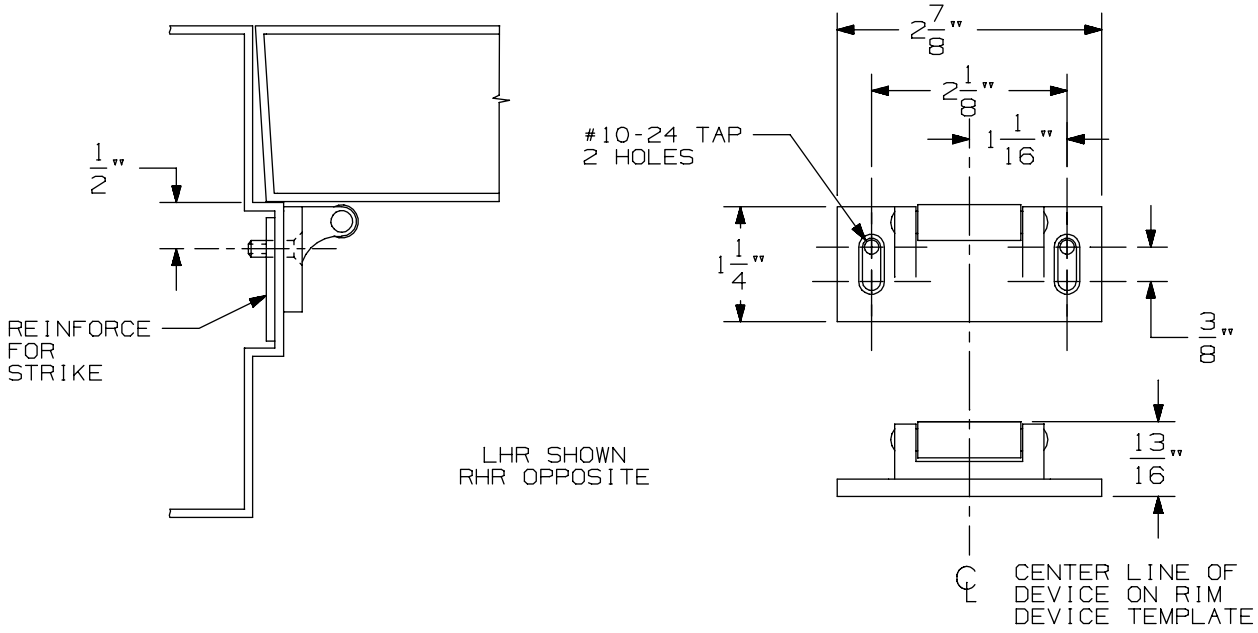

VERTICAL APPLICATION

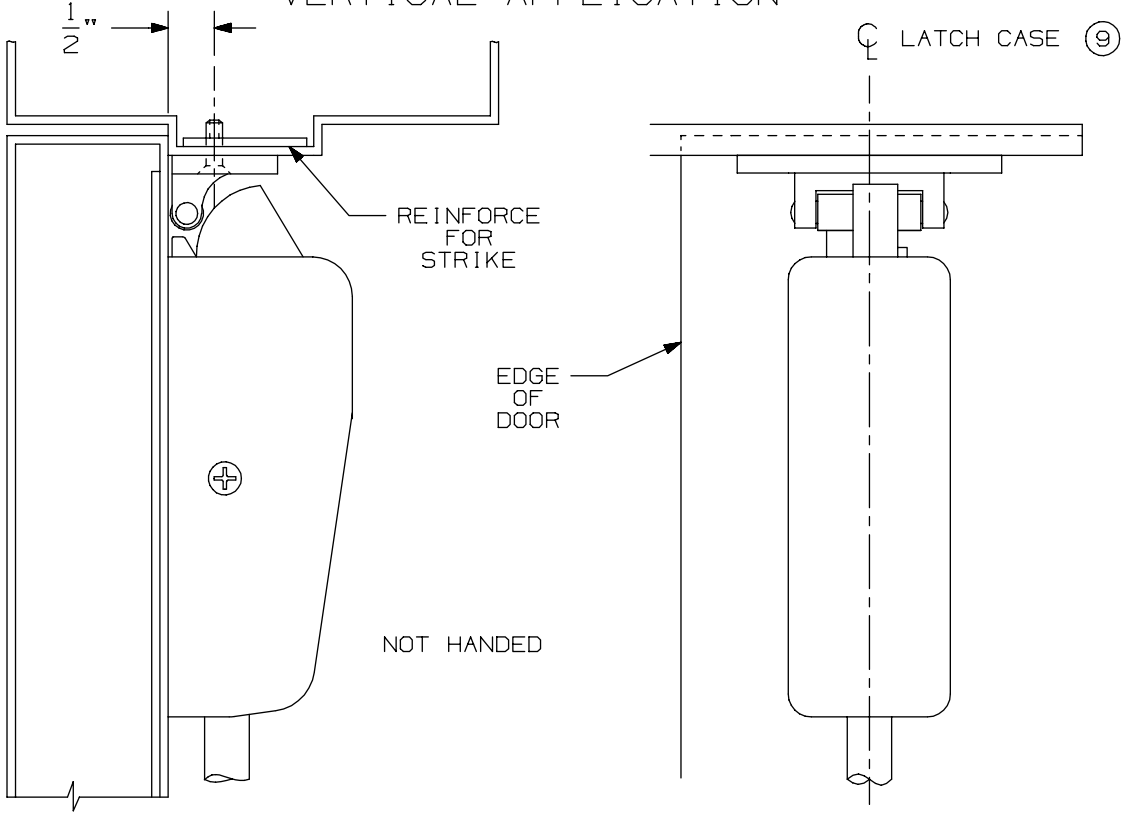

NOTE: LATCH CASE MOUNTING HOLES TO BE PREPARED AT INSTALLATION ON DOOR.

299 & 299F Strike

VON DUPRIN®

NOTES: SEE MASTER SHEET #10001 FOR SUGGESTED REINFORCING

TEMPLATE NUMBER: 30039_a

DATE: 05-23-13

98 / 99 Series Exit Devices - HS98/HS99 High Security Rim (Includes ELHS)

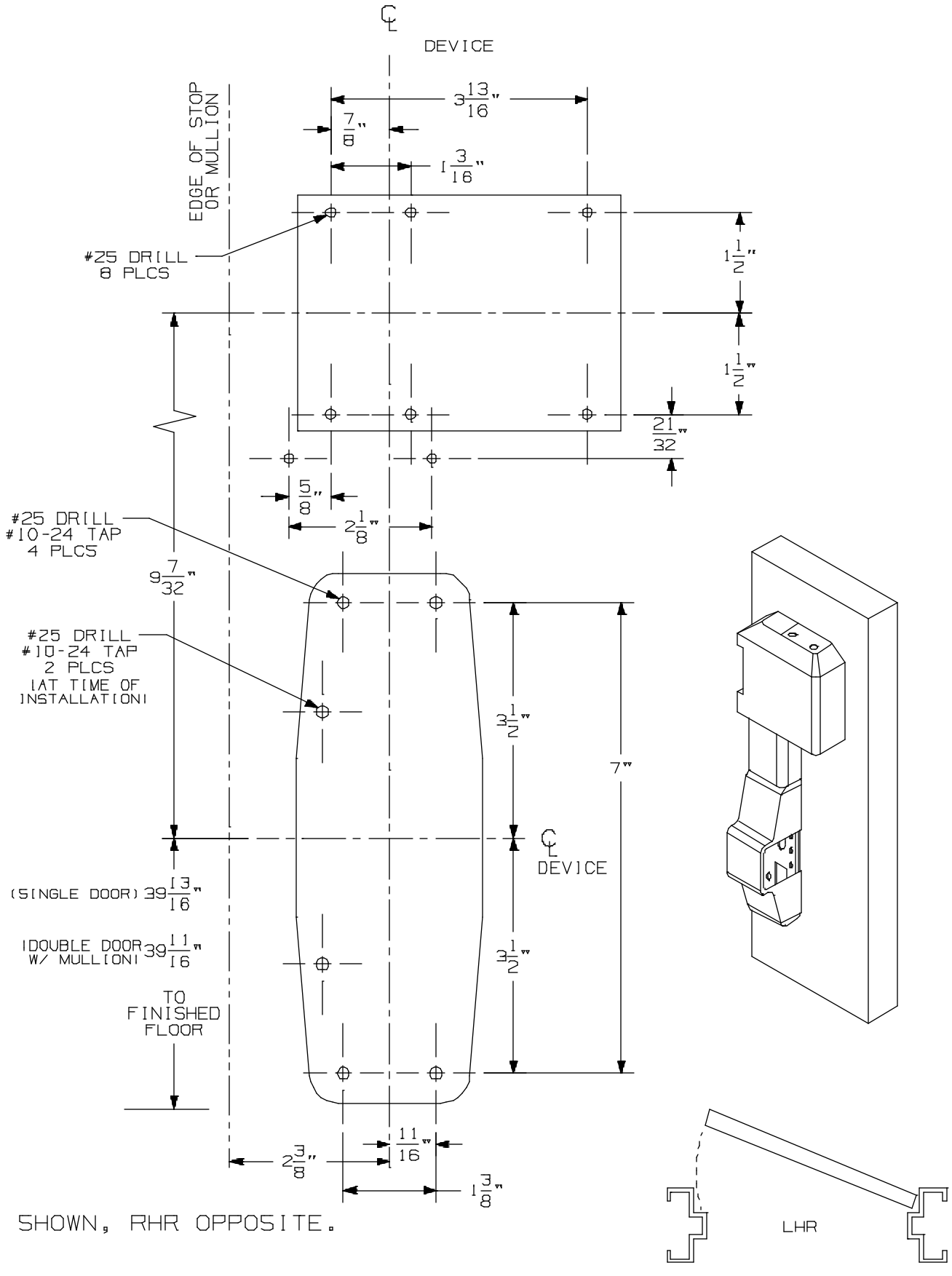

98/99HSEO, 98/99HSEO-F, 98/99ELHSEO, & 98/99ELHSEO-F Series Device Metal Door Applications

VON DUPRIN®

NOTES: SEE MASTER SHEET #10001 FOR SUGGESTED REINFORCING

TEMPLATE NUMBER: 10365_a

DATE: 05-22-13

RIM APPLICATION

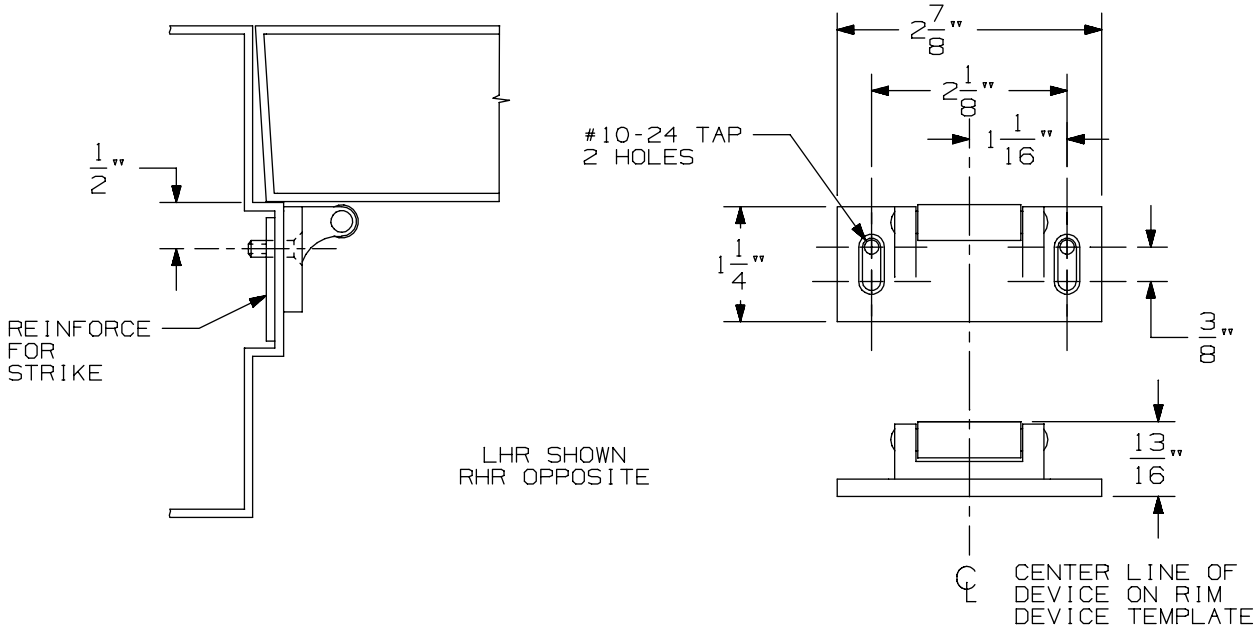

VERTICAL APPLICATION

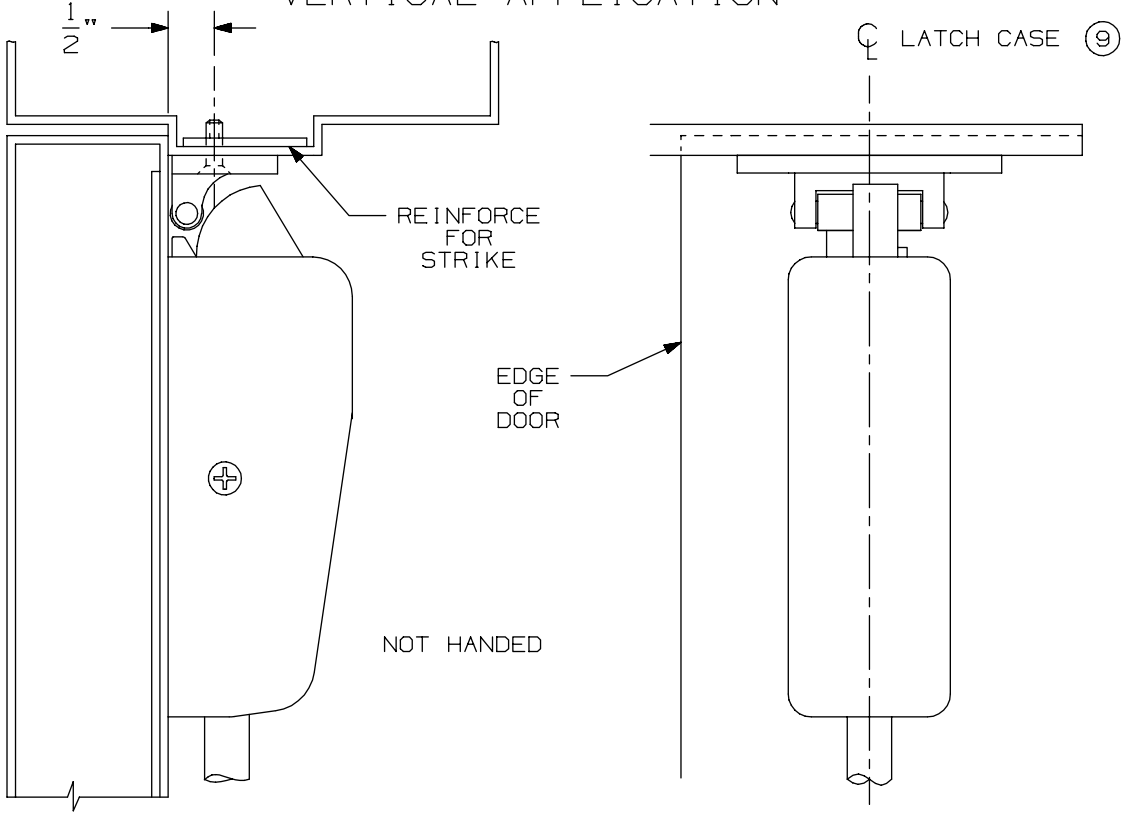

NOTE: LATCH CASE MOUNTING HOLES TO BE PREPARED AT INSTALLATION ON DOOR.

299 & 299F Strike

VON DUPRIN®

NOTES: SEE MASTER SHEET #10001 FOR SUGGESTED REINFORCING

TEMPLATE NUMBER: 30039_a

DATE: 05-23-13

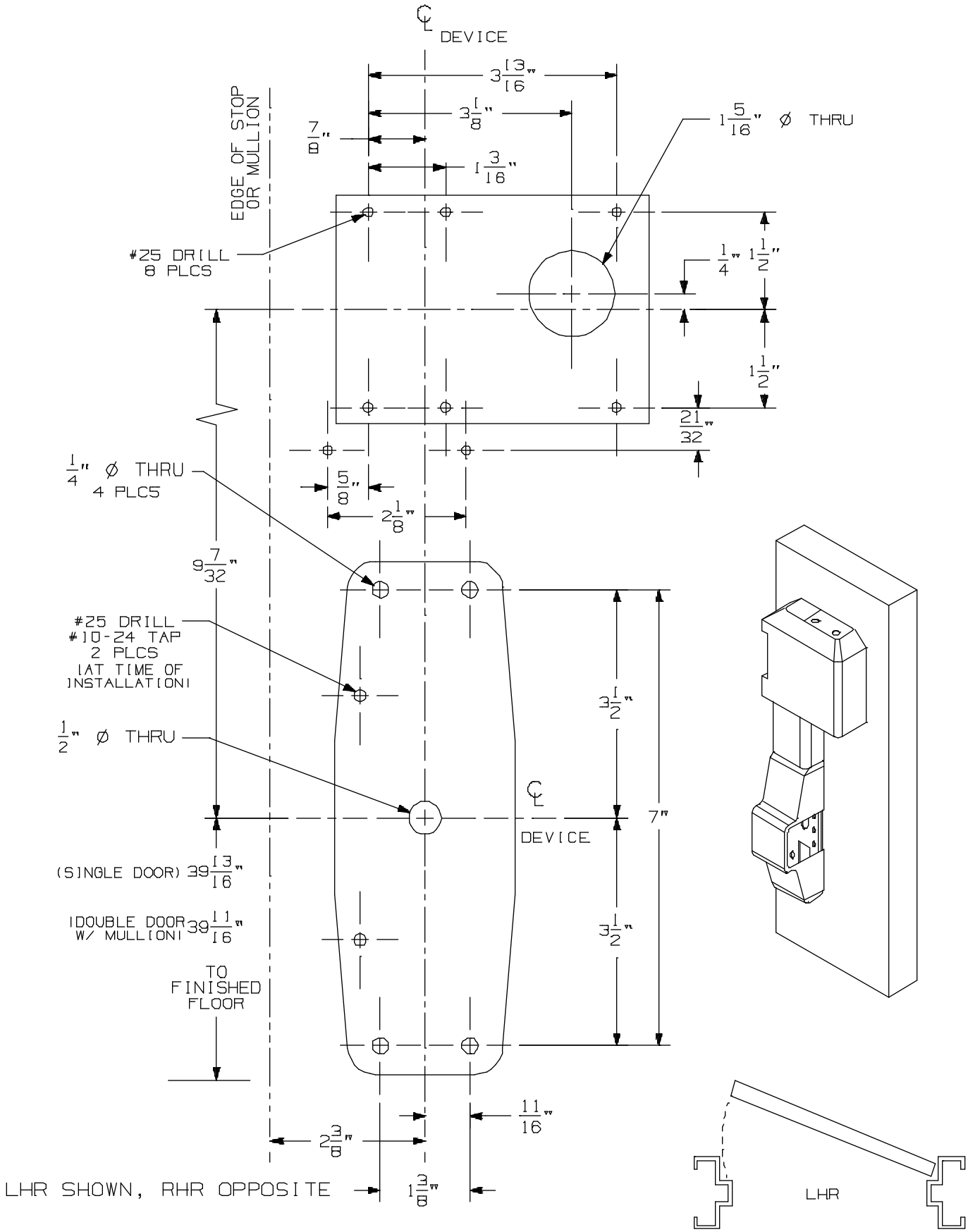

98/99HSNL, 98/99HSNL-F, 98/99 ELHSNL, & 98/99 ELHSNL-F Series Device Metal Door Applications

VON DUPRIN®

NOTES: SEE MASTER SHEET #10001 FOR SUGGESTED REINFORCING

TEMPLATE NUMBER: 10364_a

DATE: 05-22-13

990 NL TRIM

NOTES: SEE MASTER SHEET #10001 FOR SUGGESTED REINFORCING

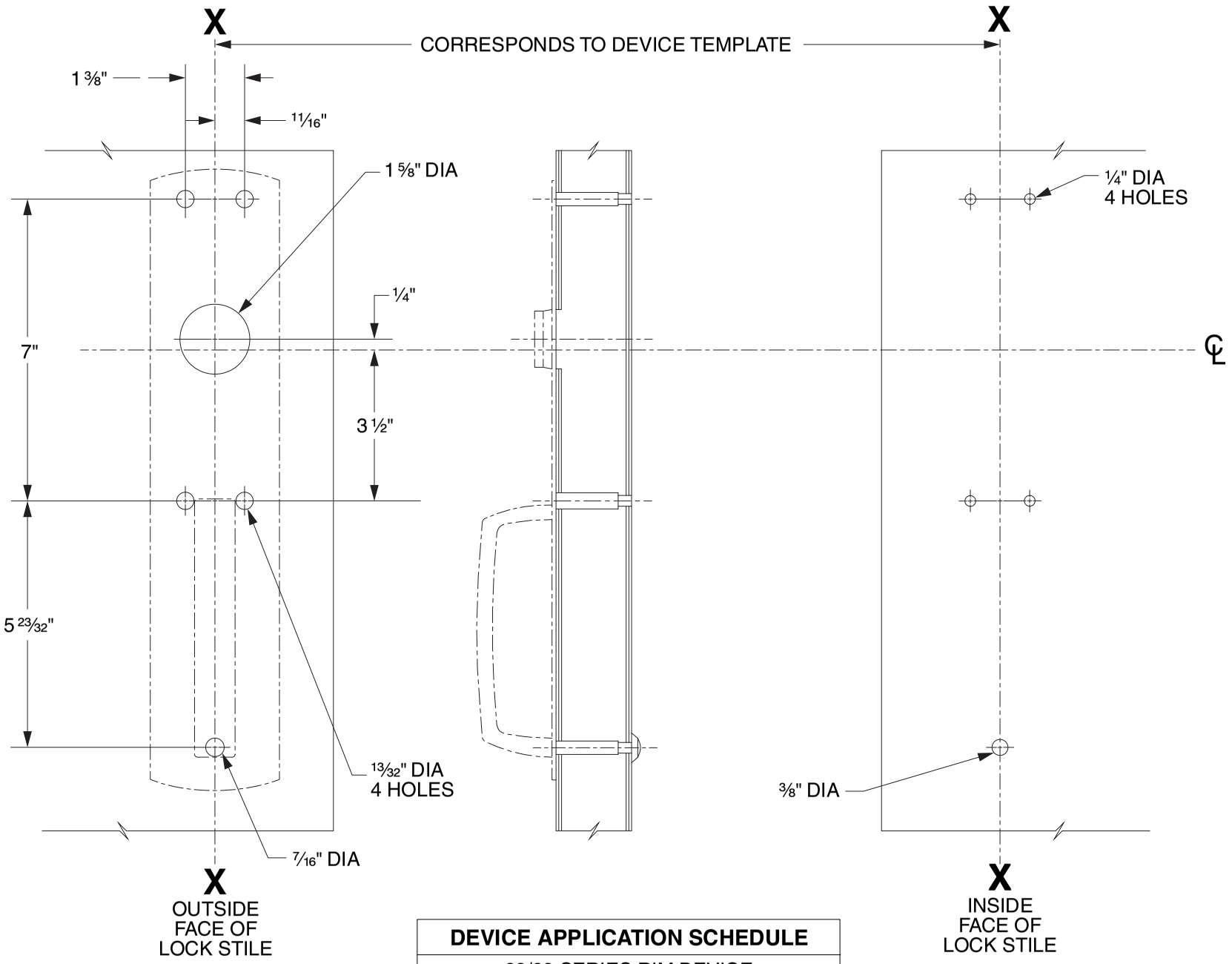

DEVICE APPLICATION SCHEDULE
98/99 SERIES RIM DEVICE
9827/9927 SERIES DEVICE
9847/9947 SERIES DEVICE
9849/9949 SERIES DEVICE

LHR SHOWN
RHR OPPOSITE

VON DUPRIN®

TEMPLATE NUMBER: 20267_C

DATE: 05-31-13

RIM APPLICATION

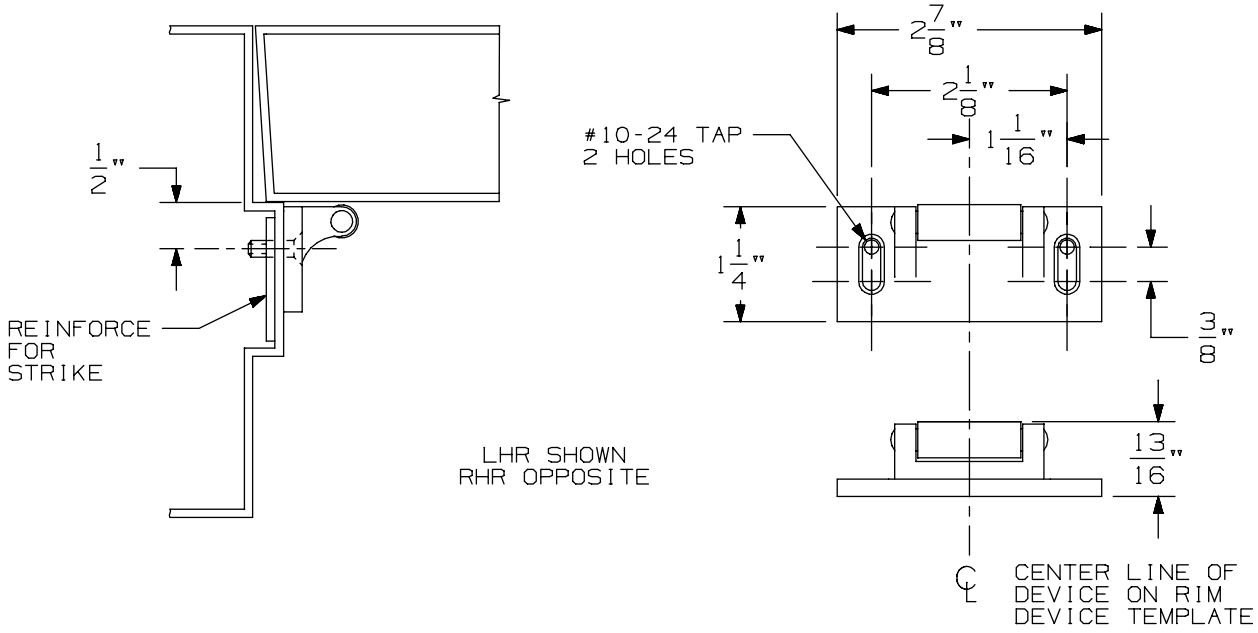

VERTICAL APPLICATION

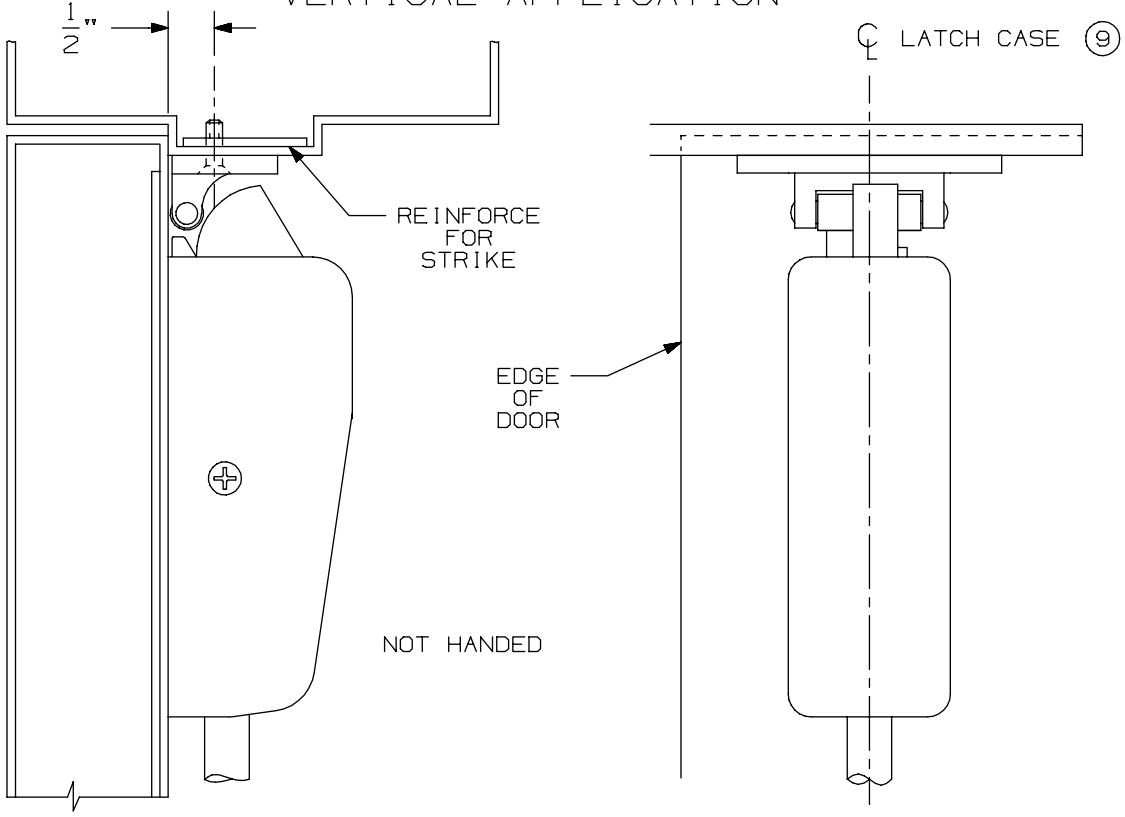

NOTE: LATCH CASE MOUNTING HOLES TO BE PREPARED AT INSTALLATION ON DOOR.

299 & 299F Strike

VON DUPRIN®

NOTES: SEE MASTER SHEET #10001 FOR SUGGESTED REINFORCING

TEMPLATE NUMBER: 30039_a

DATE: 05-23-13

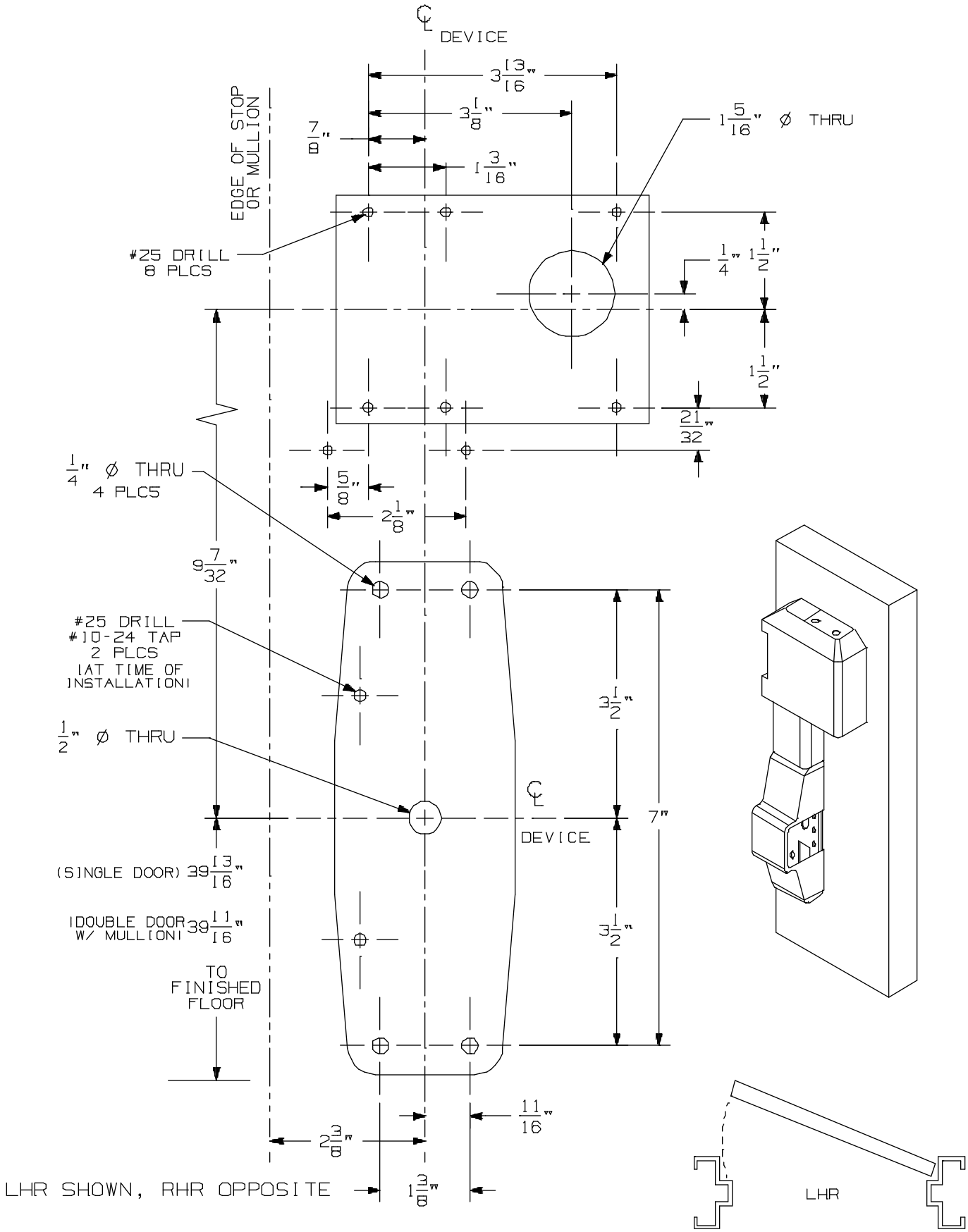

98/99HSNL, 98/99HSNL-F, 98/99 ELHSNL, & 98/99 ELHSNL-F Series Device Metal Door Applications

VON DUPRIN®

NOTES: SEE MASTER SHEET #10001 FOR SUGGESTED REINFORCING

TEMPLATE NUMBER: 10364_a

DATE: 05-22-13

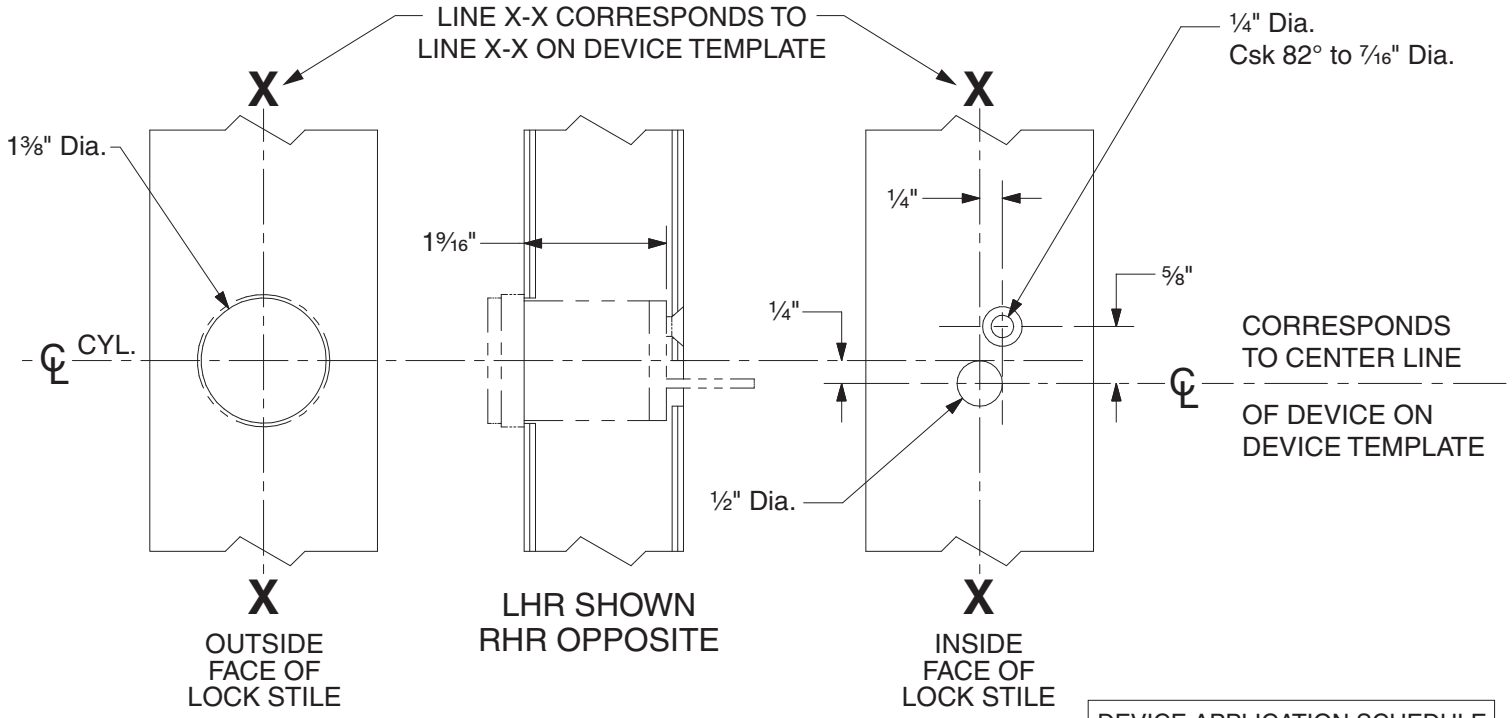

DEVICE APPLICATION SCHEDULE	
98 RIM SERIES	99 RIM SERIES
9827 SERIES	9927 SERIES
9847 SERIES	9947 SERIES
22 RIM SERIES	2227 SERIES

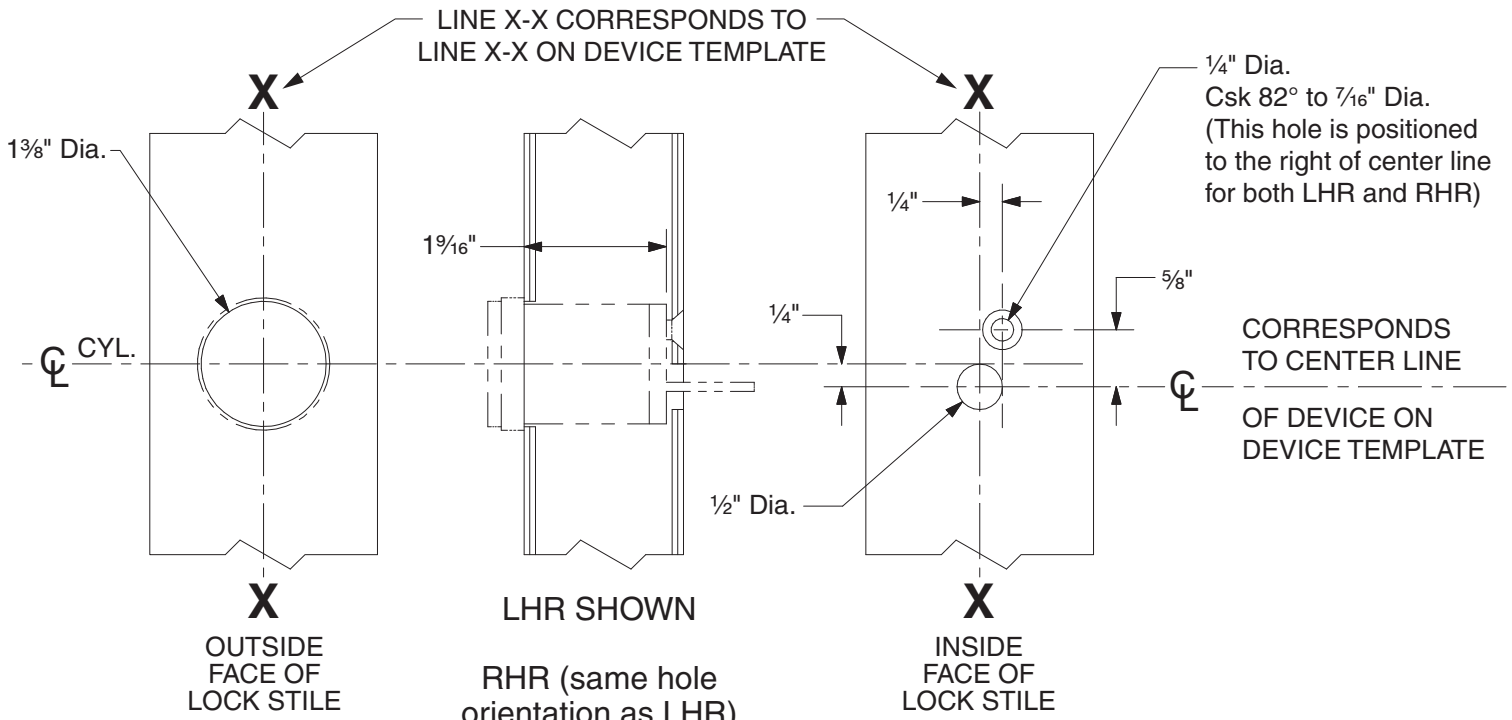

DEVICE APPLICATION SCHEDULE	
9849 SERIES	9949 SERIES

110NL Cylinder Preparation

VON DUPRIN®

NOTES: SEE MASTER SHEET #10001 FOR SUGGESTED REINFORCING

TEMPLATE NUMBER: 40022_c

DATE: 05-28-13

RIM APPLICATION

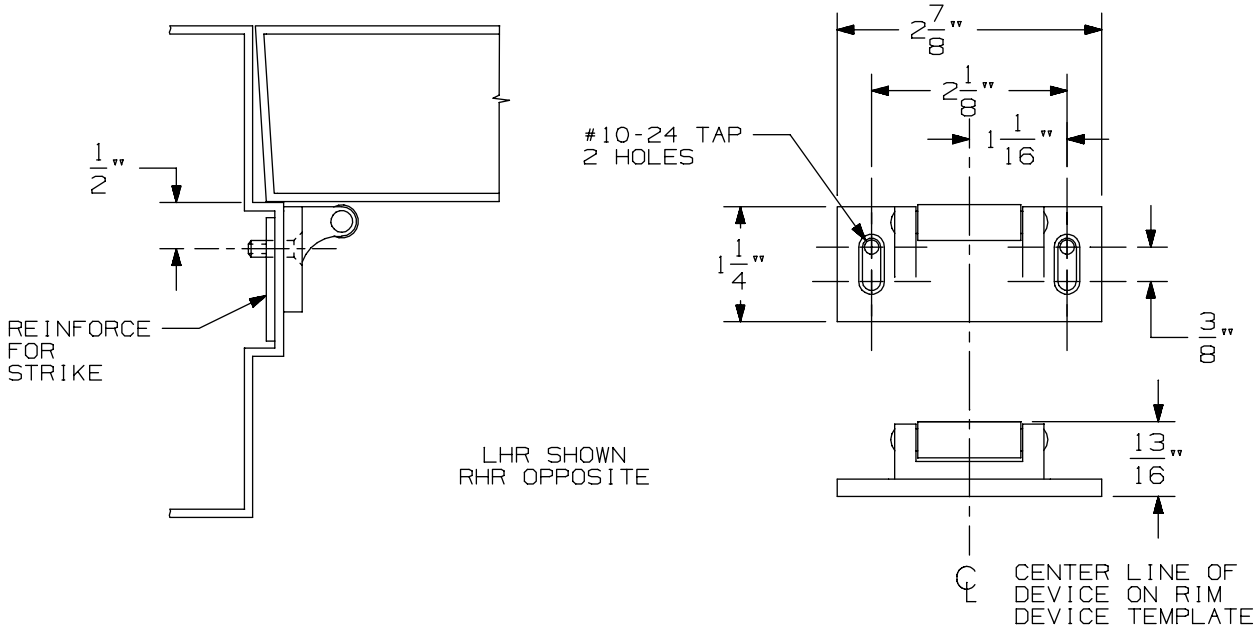

VERTICAL APPLICATION

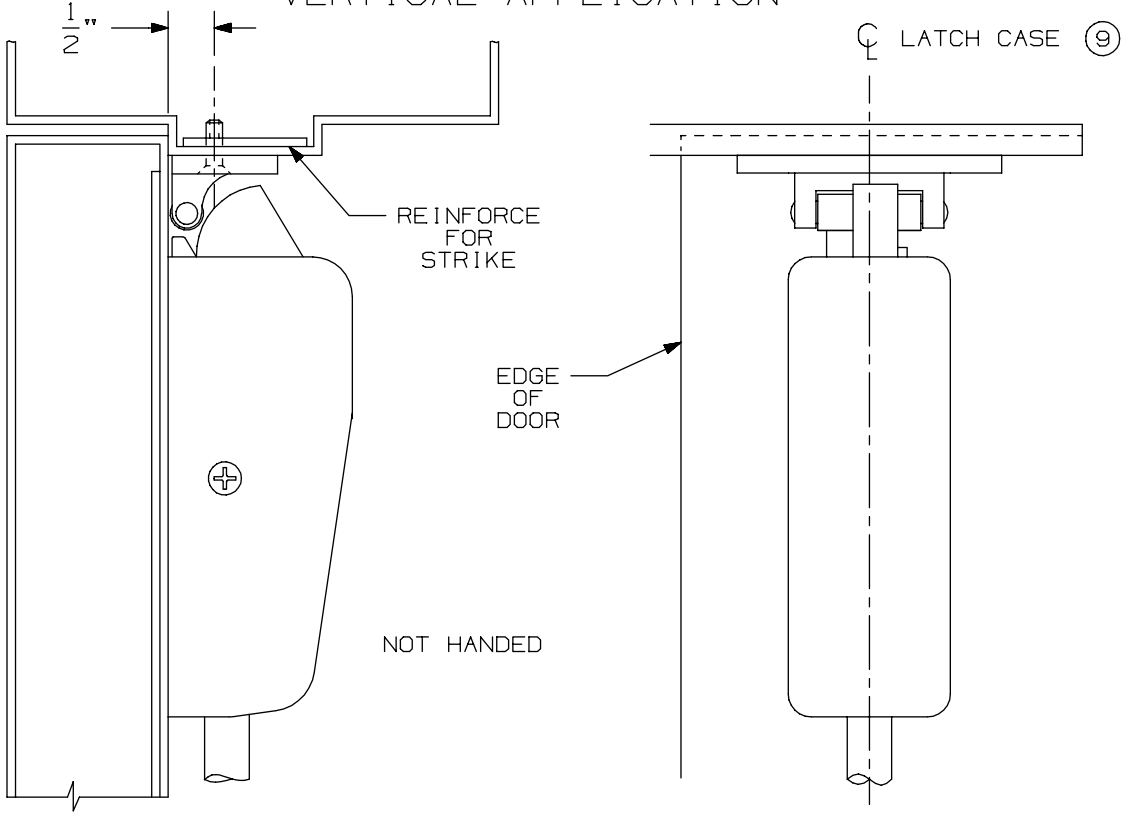

NOTE: LATCH CASE MOUNTING HOLES TO BE PREPARED AT INSTALLATION ON DOOR.

299 & 299F Strike

VON DUPRIN®

NOTES: SEE MASTER SHEET #10001 FOR SUGGESTED REINFORCING

TEMPLATE NUMBER: 30039_a

DATE: 05-23-13

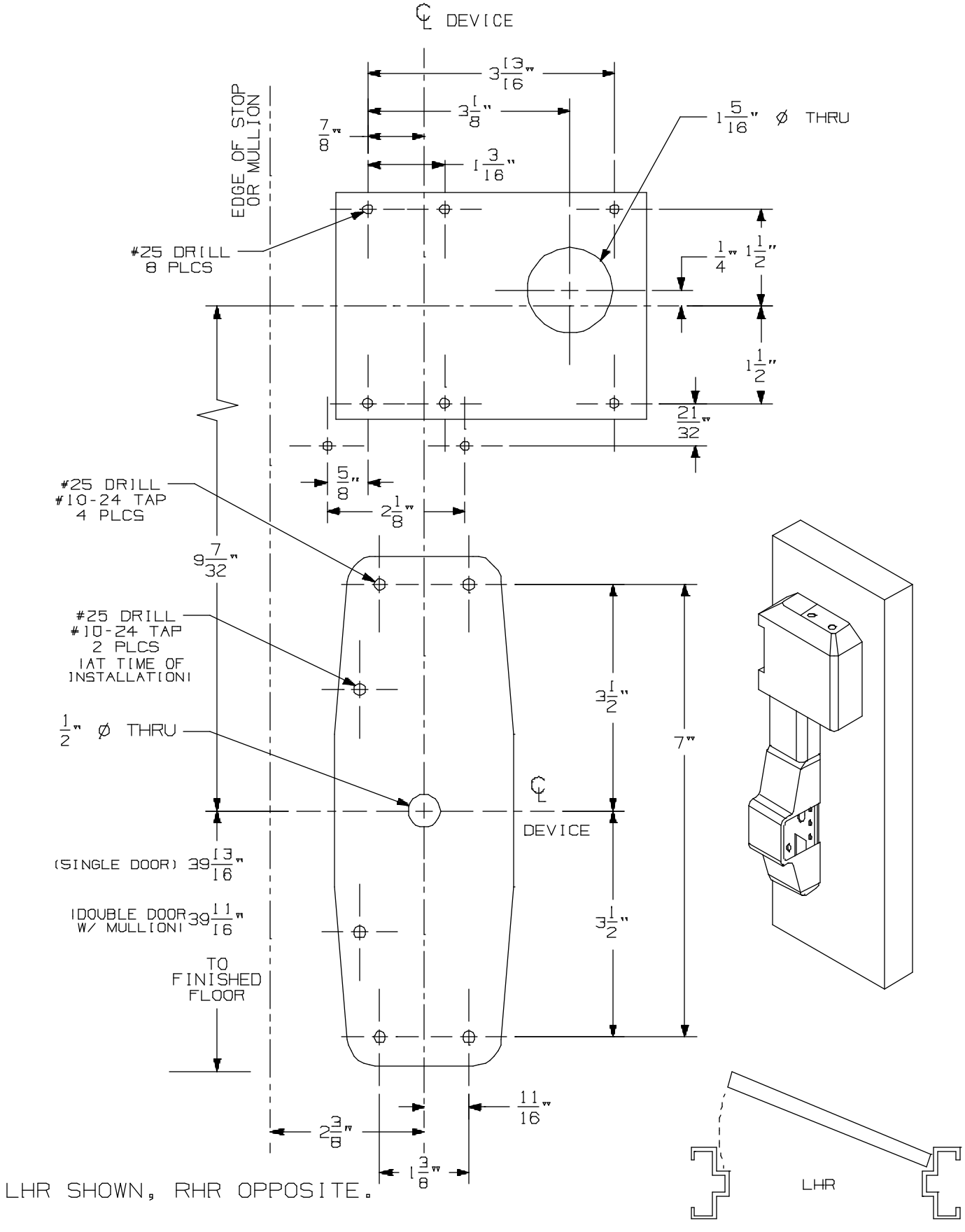

98/99HSNL, 98/99HSNL-F, 98/99ELHSNL, & 98/99ELHSNL-F Series Device for Simplex LP1000 Metal Door Application

VON DUPRIN®

NOTES: SEE MASTER SHEET #10001 FOR SUGGESTED REINFORCING

TEMPLATE NUMBER: 10367_a

DATE: 05-22-13

RIM APPLICATION

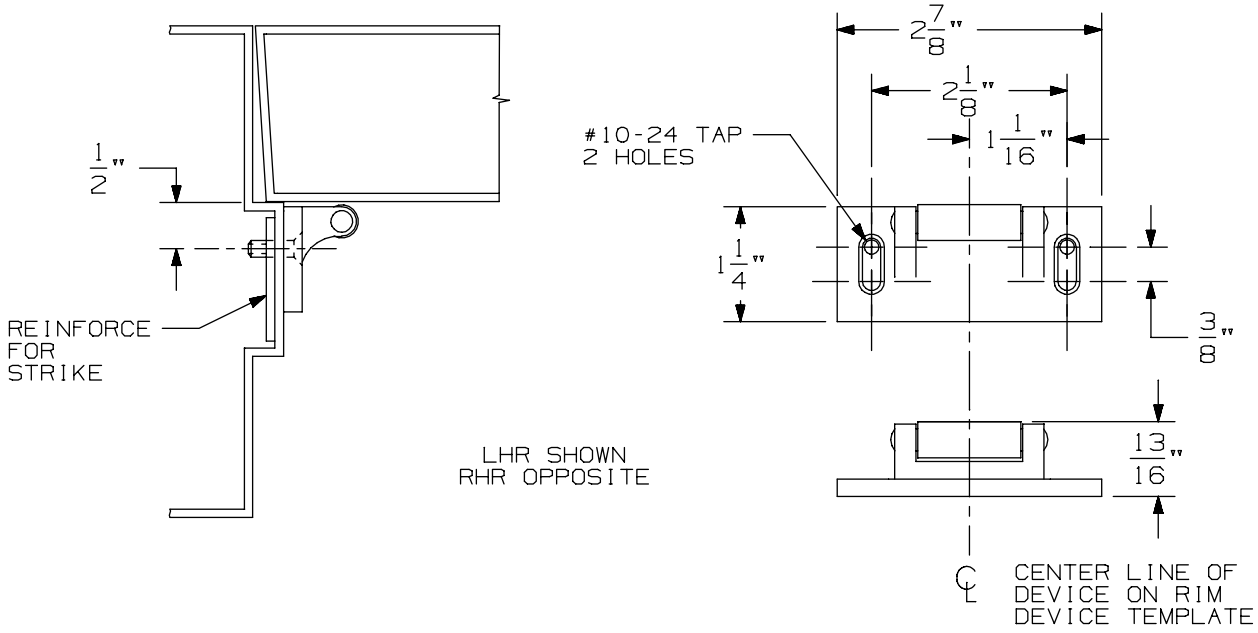

VERTICAL APPLICATION

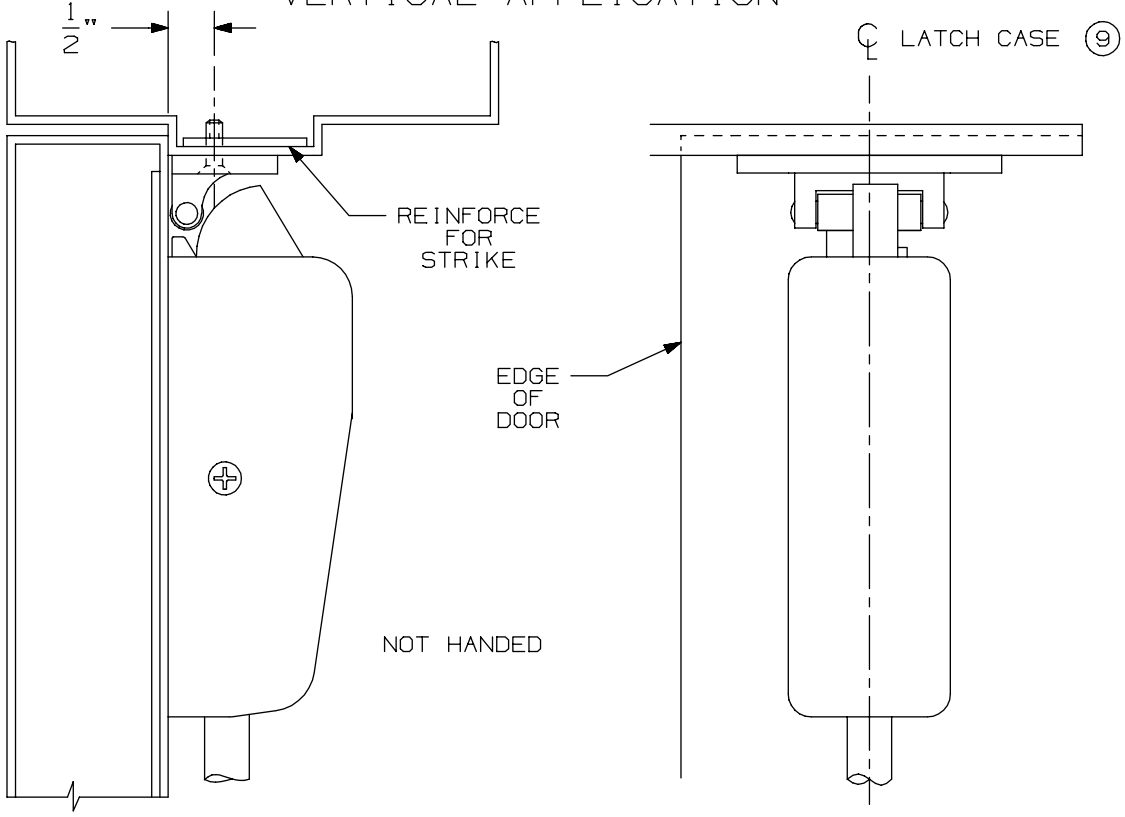

NOTE: LATCH CASE MOUNTING HOLES TO BE PREPARED AT INSTALLATION ON DOOR.

299 & 299F Strike

VON DUPRIN®

NOTES: SEE MASTER SHEET #10001 FOR SUGGESTED REINFORCING

TEMPLATE NUMBER: 30039_a

DATE: 05-23-13

98 / 99 Series Exit Devices - 98-F/99-F Rim Fire (Standard, EL, LX, RX & SS)

APPLICATION	PREPARATION
SURFACE APPLICATION	#10-24 TAP 4 PLACES
990 TRIM APPLICATION OR SEX BOLT APPLICATION (SEE NOTE 1)	1/4' DIA THIS SIDE 13/32" DIA OPPOSITE SIDE - 4 PLACES

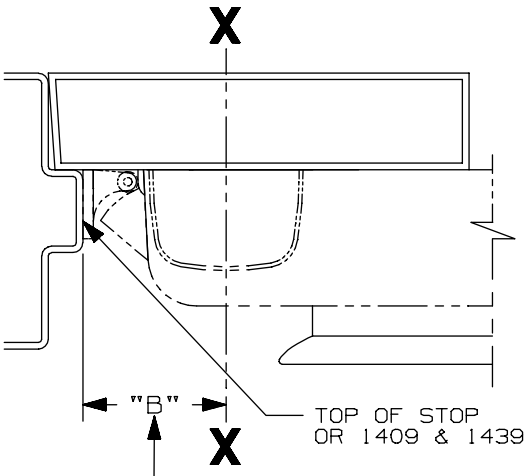

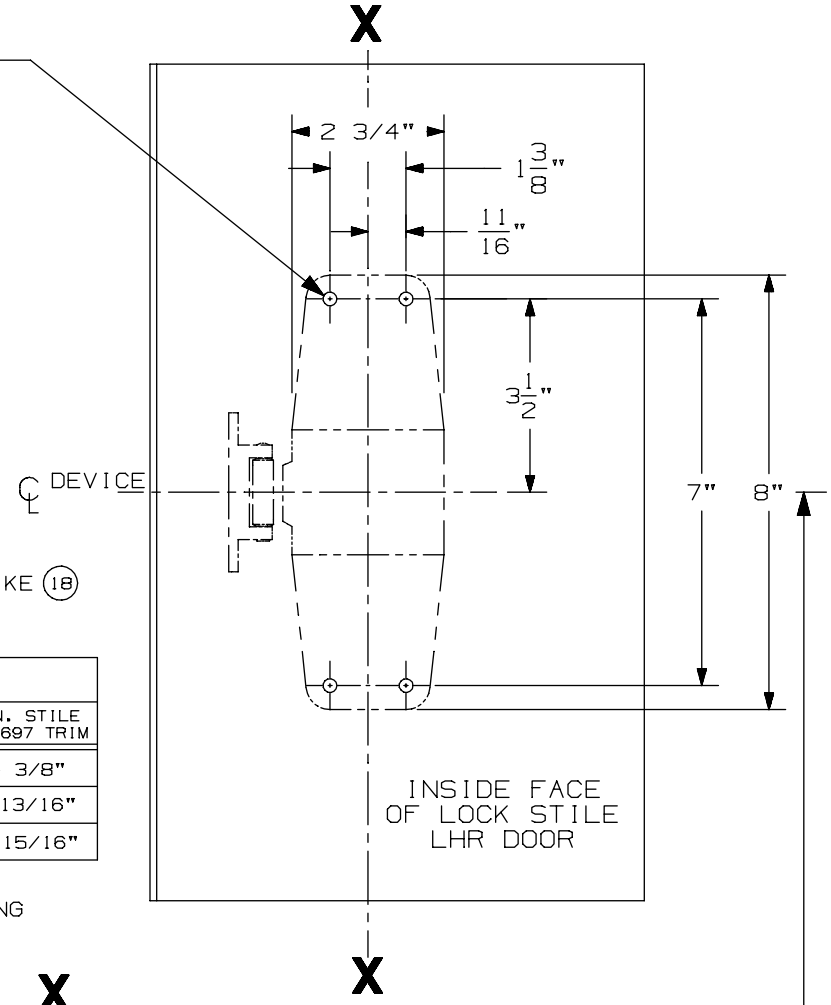

SINGLE DOOR INSTALLATION			
STRIKE	DIM. "B"	MIN. STILE 990/991/992 TRIM	MIN. STILE 696/697 TRIM
299 & 299-F	2 3/8"	4 1/2"	4 3/8"
(18) 1409 & 1439	1 9/16"	3 13/16"	3 13/16"
1606	1 15/16"	4 1/16"	3 15/16"

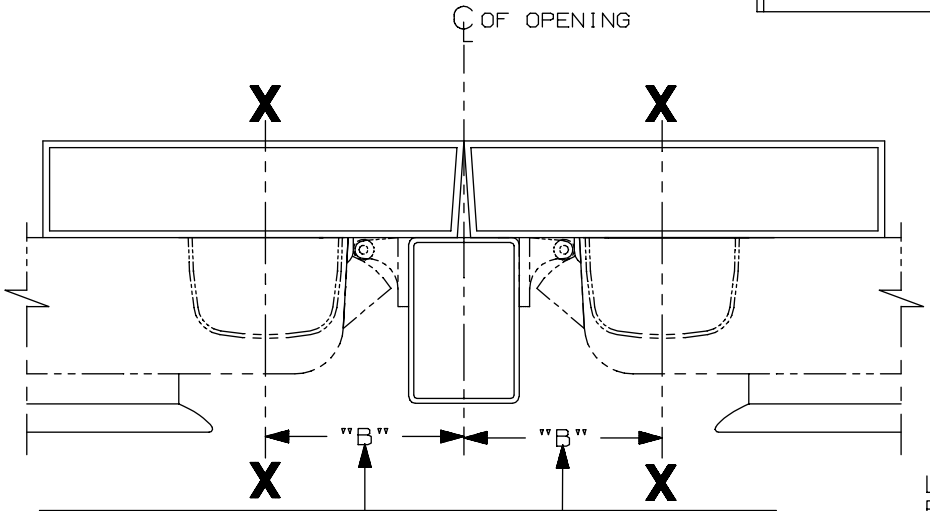

SINGLE DOOR OPENING
39 13/16" TO FINISHED FLOOR

DOUBLE DOOR OPENING
WITH VON DUPRIN MULLION
39 11/16"

DOUBLE DOOR INSTALLATION WITH VON DUPRIN MULLIONS				
MULLION	STRIKE	DIM. "B"	MIN. STILE 990/991/992 TRIM	MIN. STILE 696/697 TRIM
(18) 4954/9954	299/229-F	3 3/8"	4 7/8"	4 3/4"
9954	499-F	3 1/2"	5"	4 7/8"
5654	299	2 15/16"	4 3/8"	4 1/4"
5754	1408	2 1/8"	3 13/16"	3 13/16"
1654	1606	2 15/16"	4 3/8"	4 1/4"

LHR APPLICATION SHOWN
RHR APPLICATION OPPOSITE

NOTES:
1. THESE FOUR HOLES TO BE PREPARED FOR SURFACE APPLICATION WHEN USING 696/697 TRIM. DO NOT PREPARE FOR SEX BOLTS.
2. FOR STOCK HOLLOW METAL DOORS SEE TEMPLATE NO. 10307 FOR TYPE "161" CUTOUT AND 10313 FOR TYPE "86" CUTOUT.
3. GLASS BEAD KIT AVAILABLE WHEN REQUIRED.
4. FOR OUTSIDE TRIM PREPARATION, WHEN REQUIRED, SEE TRIM TEMPLATE.
5. 9954 W/299-F FOR HURRICANE APPLICATIONS (18) ONLY.

98/99 & 98-F/99-F EO, DT Rim Devices

VON DUPRIN®

NOTES: SEE MASTER SHEET #10001 FOR SUGGESTED REINFORCING

TEMPLATE NUMBER: 10300_a

DATE: 05-21-13

RIM APPLICATION

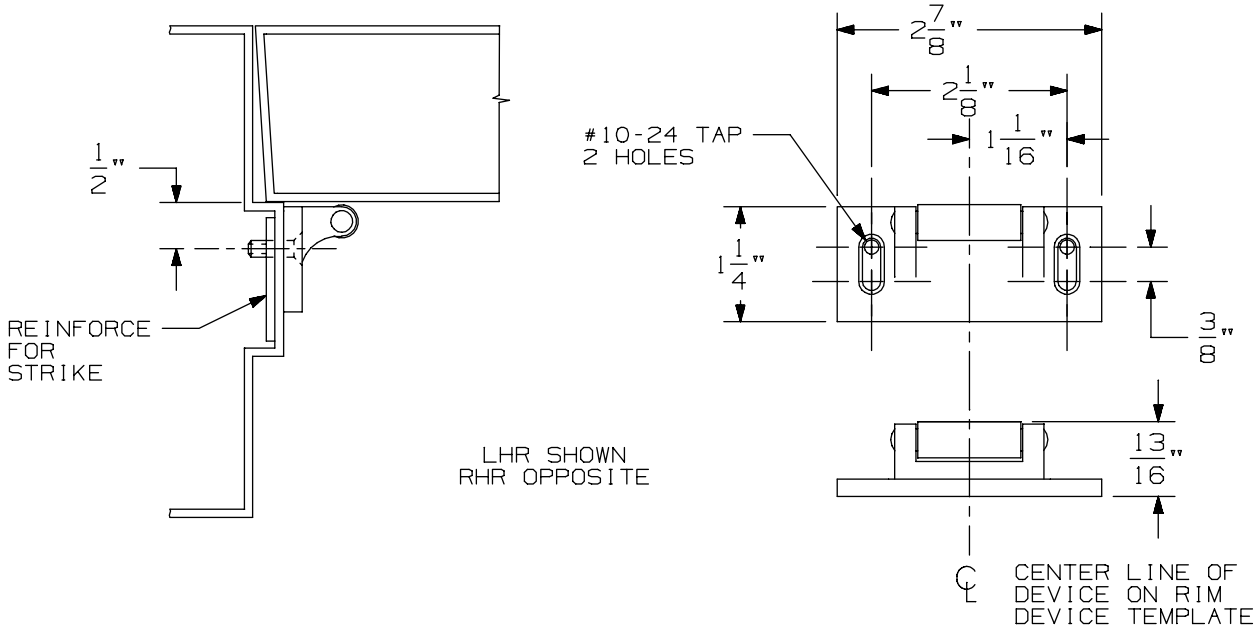

VERTICAL APPLICATION

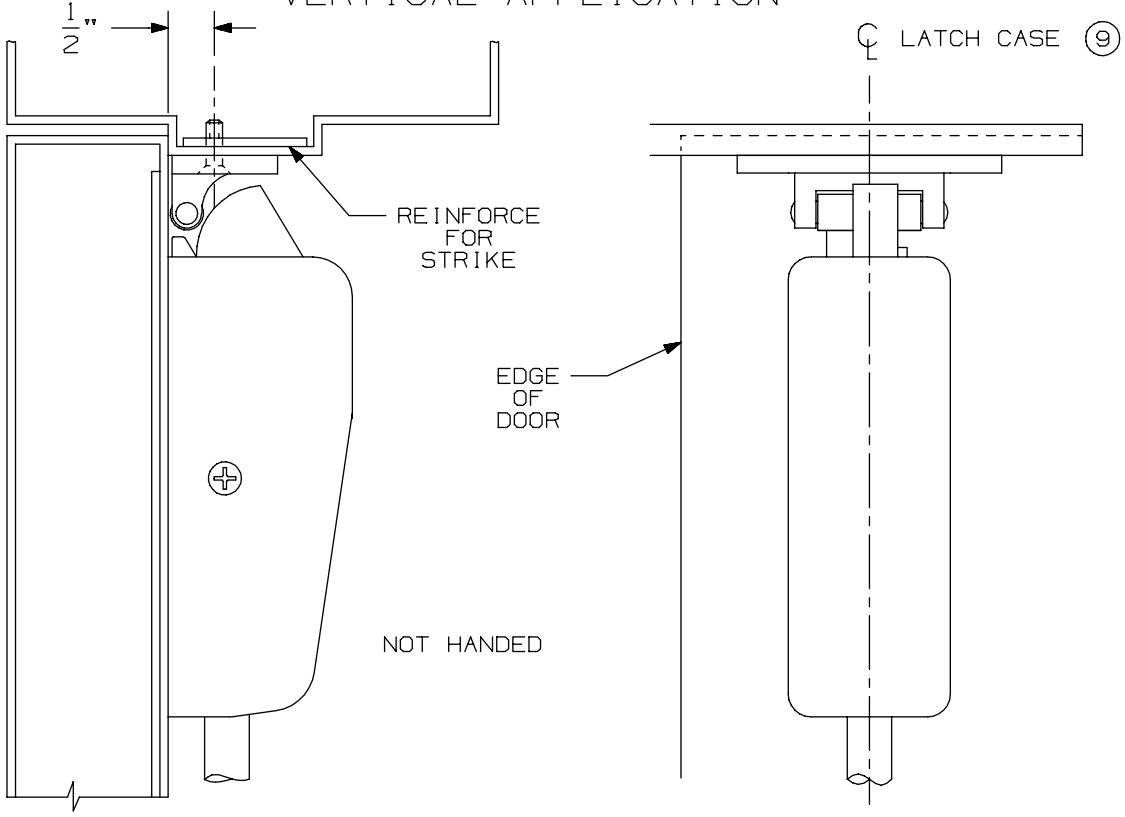

NOTE: LATCH CASE MOUNTING HOLES TO BE PREPARED AT INSTALLATION ON DOOR.

299 & 299F Strike

VON DUPRIN®

NOTES: SEE MASTER SHEET #10001 FOR SUGGESTED REINFORCING

TEMPLATE NUMBER: 30039_a

DATE: 05-23-13

APPLICATION	PREPARATION
SURFACE APPLICATION	#10-24 TAP 4 PLACES
990 TRIM APPLICATION OR SEX BOLT APPLICATION (SEE NOTE 1)	1/4" DIA THIS SIDE 13/32" DIA OPPOSITE SIDE - 4 PLACES

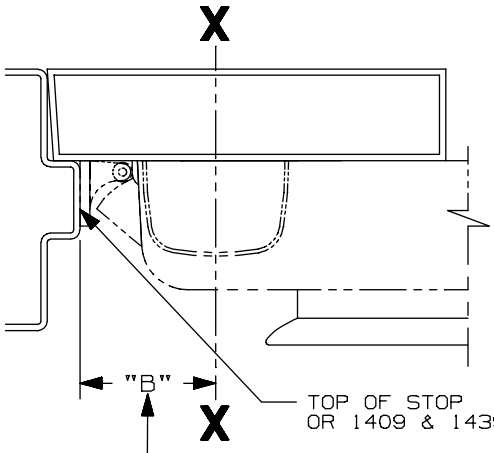

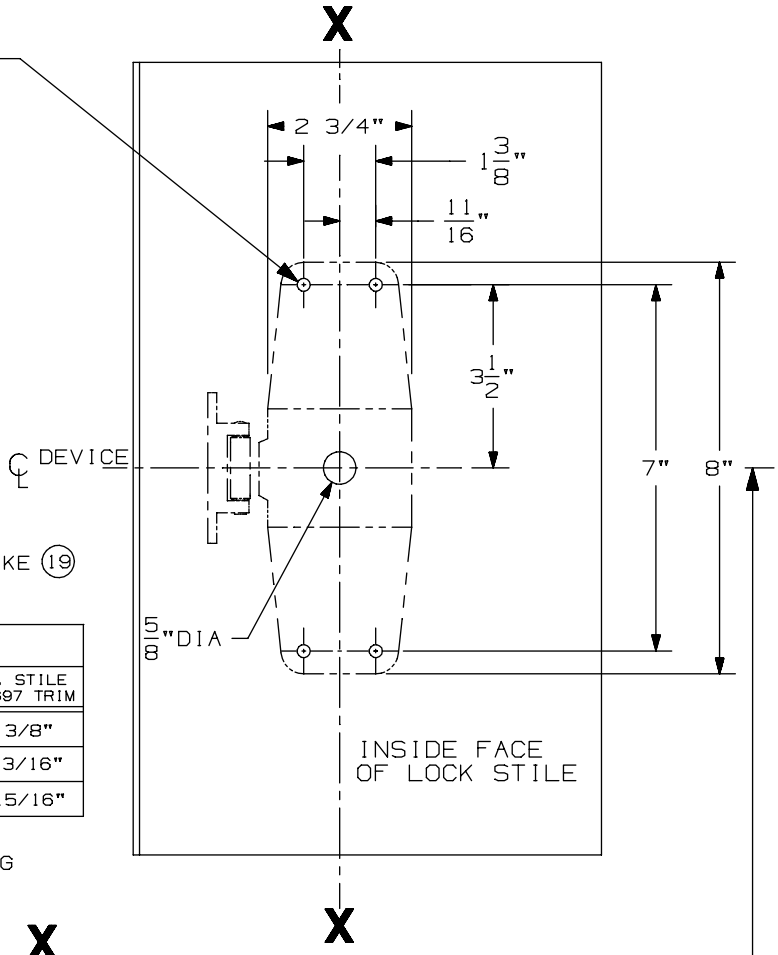

SINGLE DOOR INSTALLATION			
STRIKE	DIM. "B"	MIN. STILE 990/991/992 TRIM	MIN. STILE 696/697 TRIM
299 & 299-F	2 3/8"	4 1/2"	4 3/8"
(19) 1409 & 1439	1 9/16"	3 13/16"	3 13/16"
1606	1 15/16"	4 1/16"	3 15/16"

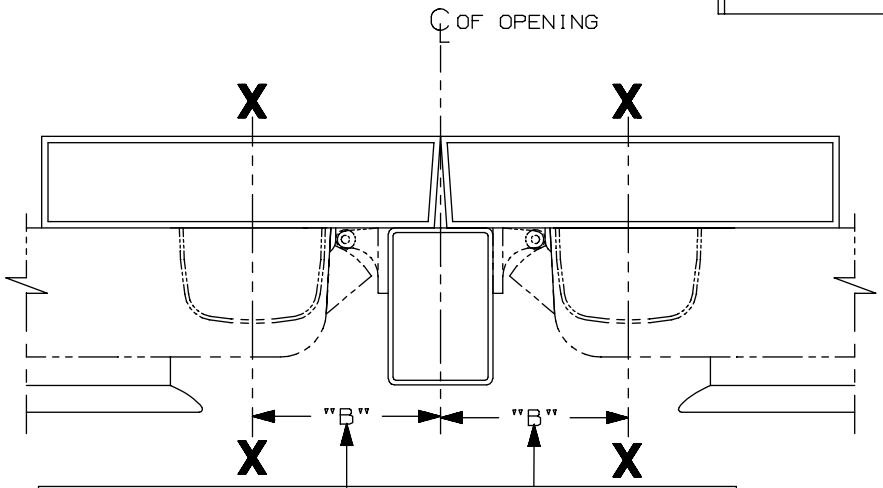

SINGLE DOOR OPENING
39 13/16" TO FINISHED FLOOR

DOUBLE DOOR OPENING
WITH VON DUPRIN MULLION
39 11/16"

LHR APPLICATION SHOWN,
RHR APPLICATION OPPOSITE

DOUBLE DOOR INSTALLATION WITH VON DUPRIN MULLIONS				
MULLION	STRIKE	DIM. "B"	MIN. STILE 990/991/992 TRIM	MIN. STILE 696/697 TRIM
(19) 4954/9954	299/299-F	3 3/8"	4 7/8"	4 3/4"
9954	499-F	3 1/2"	5"	4 7/8"
5654	299	2 15/16"	4 3/8"	4 1/4"
5754	1408	2 1/8"	3 13/16"	3 13/16"
1654	1606	2 15/16"	4 3/8"	4 1/4"

NOTES:
1. THESE FOUR HOLES TO BE PREPARED FOR SURFACE APPLICATION WHEN USING 696/697 TRIM. DO NOT PREPARE FOR SEX BOLTS.
2. FOR STOCK HOLLOW METAL DOORS SEE TEMPLATE NO. 10307 FOR TYPE "161" CUTOUT AND 10314 FOR TYPE "86" CUTOUT.
3. GLASS BEAD KIT AVAILABLE WHEN REQUIRED.
4. FOR OUTSIDE TRIM PREPARATION, WHEN REQUIRED, SEE TRIM TEMPLATE.
5. 9954 W/299-F FOR HURRICANE APPLICATIONS (19) ONLY

98/99 & 98-F/99-F NL Series Rim Device

VON DUPRIN®

NOTES: SEE MASTER SHEET #10001 FOR SUGGESTED REINFORCING

TEMPLATE NUMBER: 10301_a

DATE: 05-21-13

990 NL TRIM

NOTES: SEE MASTER SHEET #10001 FOR SUGGESTED REINFORCING

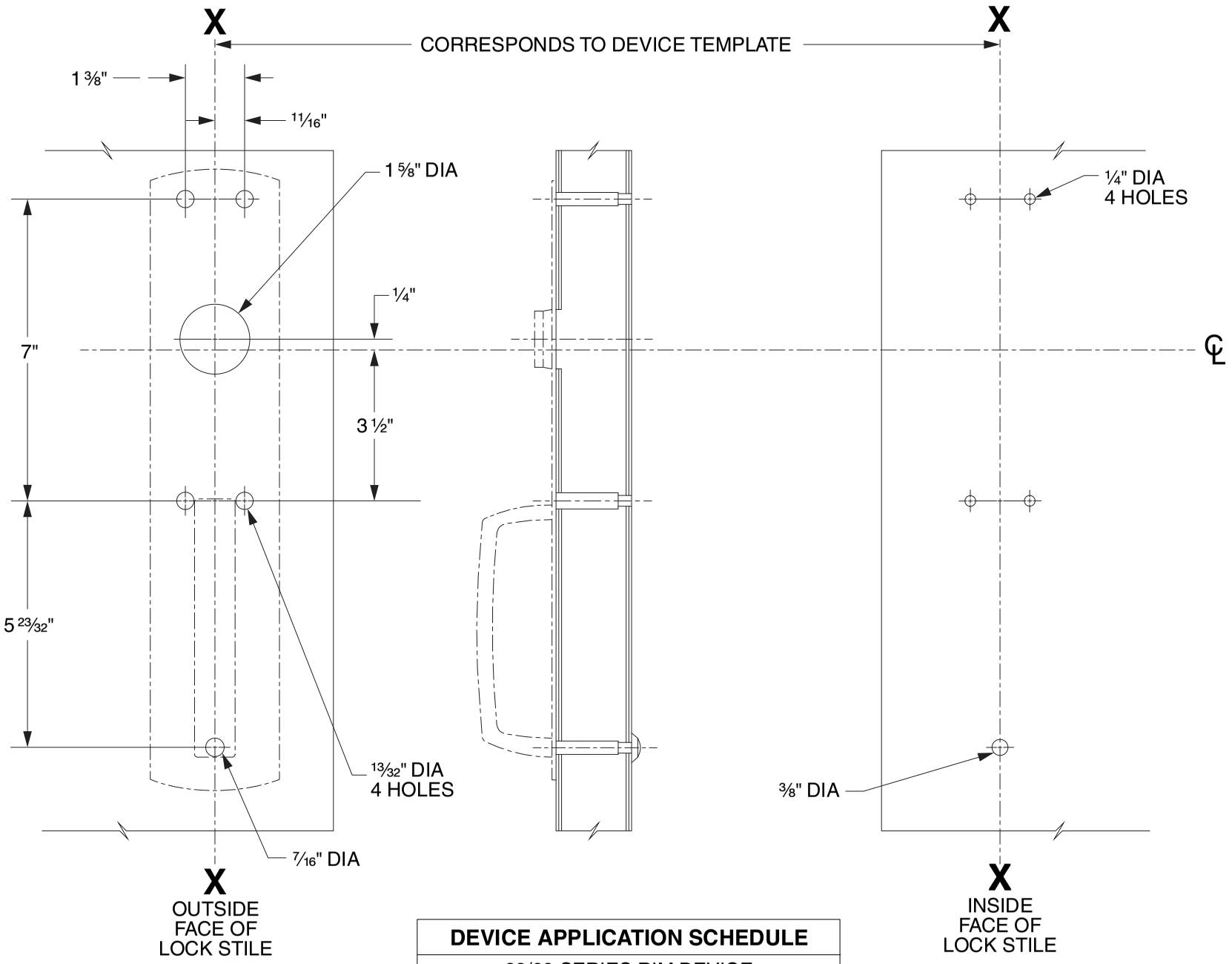

DEVICE APPLICATION SCHEDULE
98/99 SERIES RIM DEVICE
9827/9927 SERIES DEVICE
9847/9947 SERIES DEVICE
9849/9949 SERIES DEVICE

LHR SHOWN
RHR OPPOSITE

VON DUPRIN®

TEMPLATE NUMBER: 20267_C

DATE: 05-31-13

RIM APPLICATION

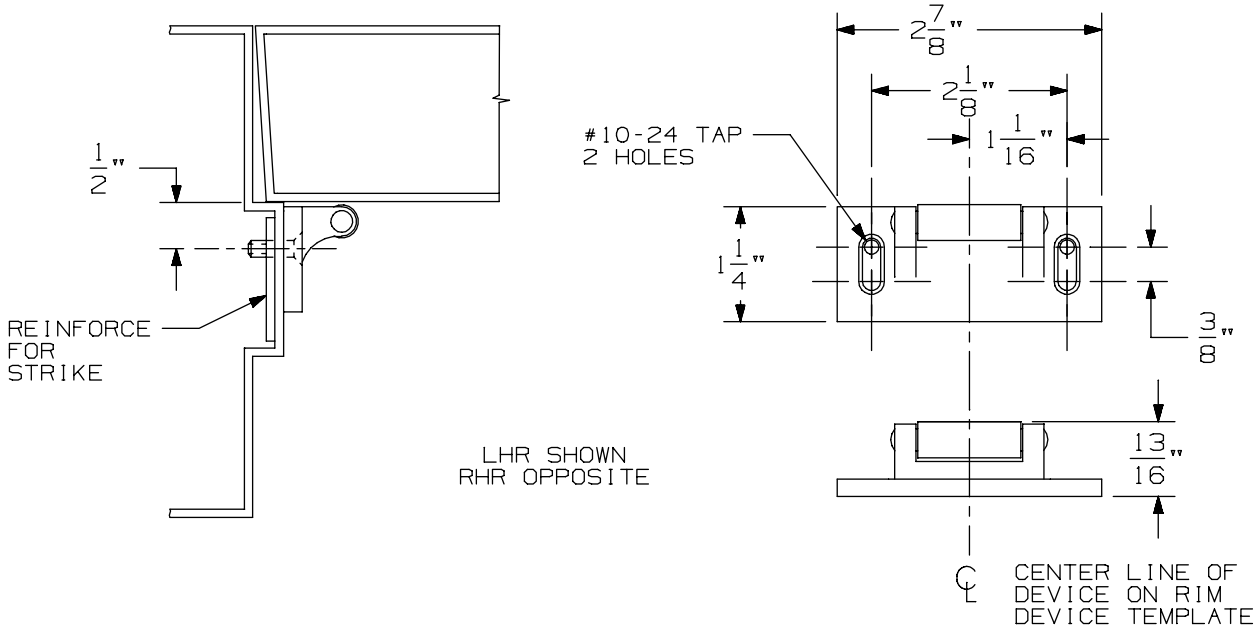

VERTICAL APPLICATION

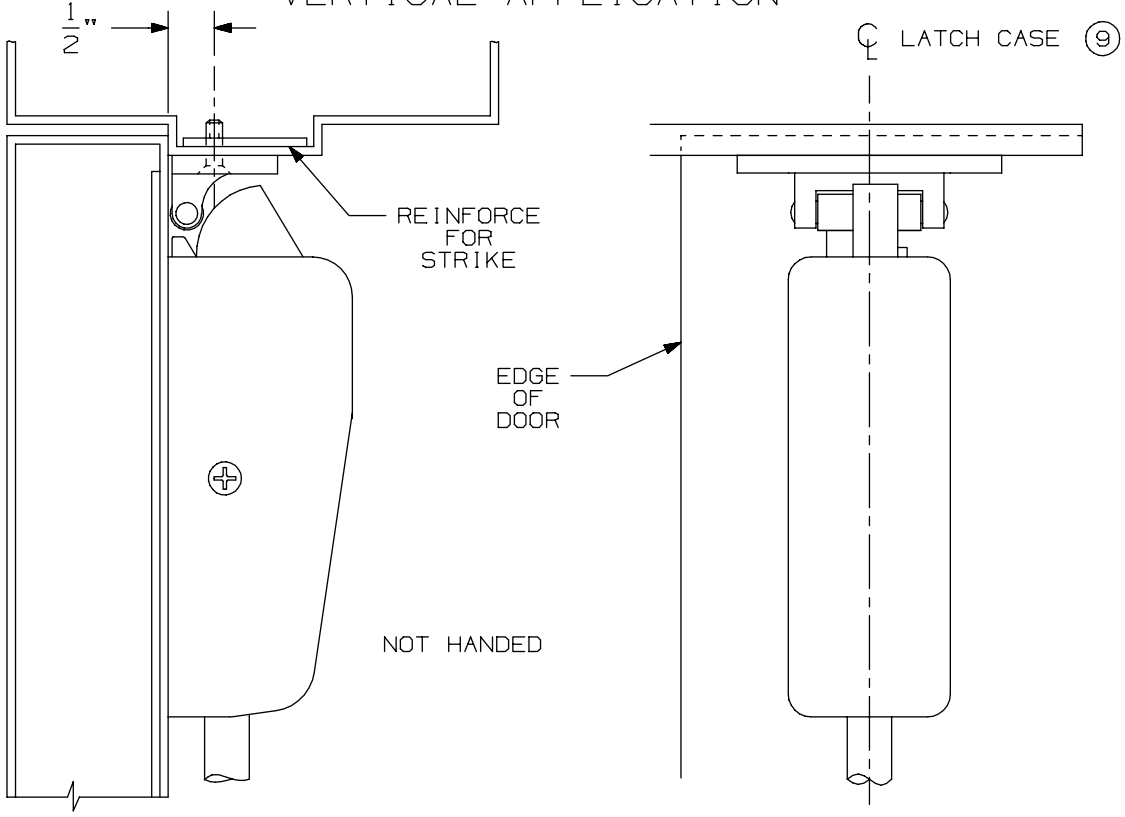

NOTE: LATCH CASE MOUNTING HOLES TO BE PREPARED AT INSTALLATION ON DOOR.

299 & 299F Strike

VON DUPRIN®

NOTES: SEE MASTER SHEET #10001 FOR SUGGESTED REINFORCING

TEMPLATE NUMBER: 30039_a

DATE: 05-23-13

APPLICATION	PREPARATION
SURFACE APPLICATION	#10-24 TAP 4 PLACES
990 TRIM APPLICATION OR SEX BOLT APPLICATION (SEE NOTE 1)	1/4" DIA THIS SIDE 13/32" DIA OPPOSITE SIDE - 4 PLACES

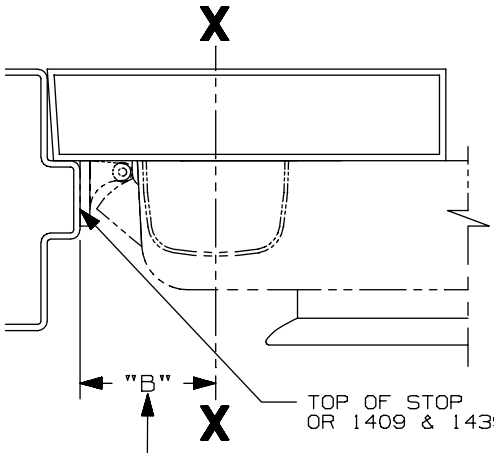

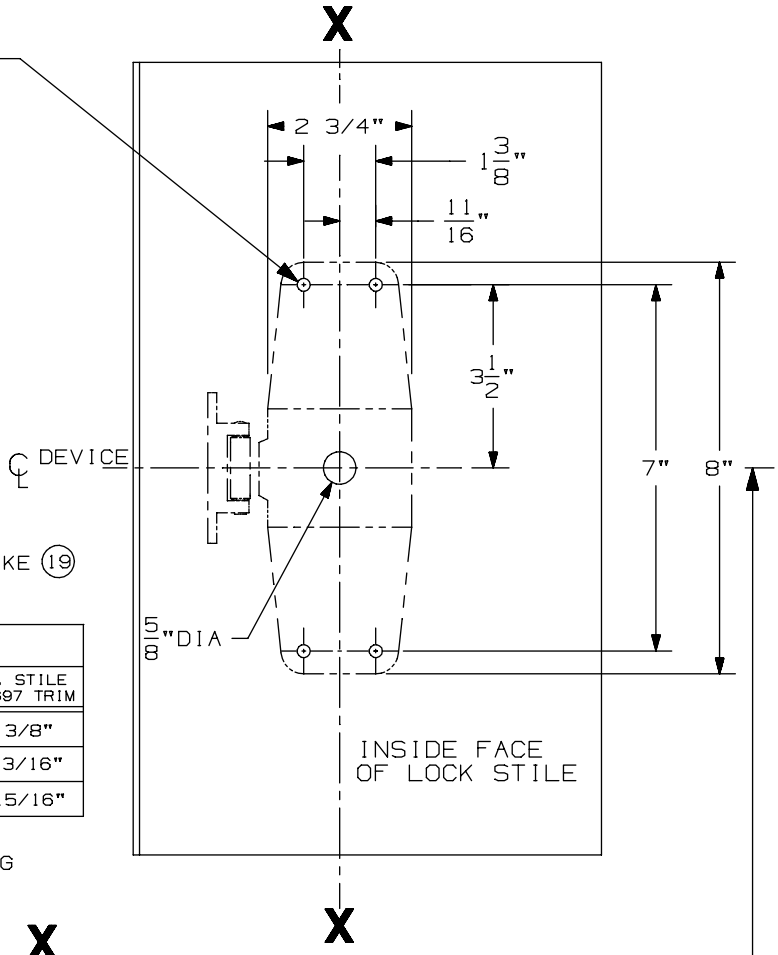

SINGLE DOOR INSTALLATION			
STRIKE	DIM. "B"	MIN. STILE 990/991/992 TRIM	MIN. STILE 696/697 TRIM
299 & 299-F	2 3/8"	4 1/2"	4 3/8"
(19) 1409 & 1439	1 9/16"	3 13/16"	3 13/16"
1606	1 15/16"	4 1/16"	3 15/16"

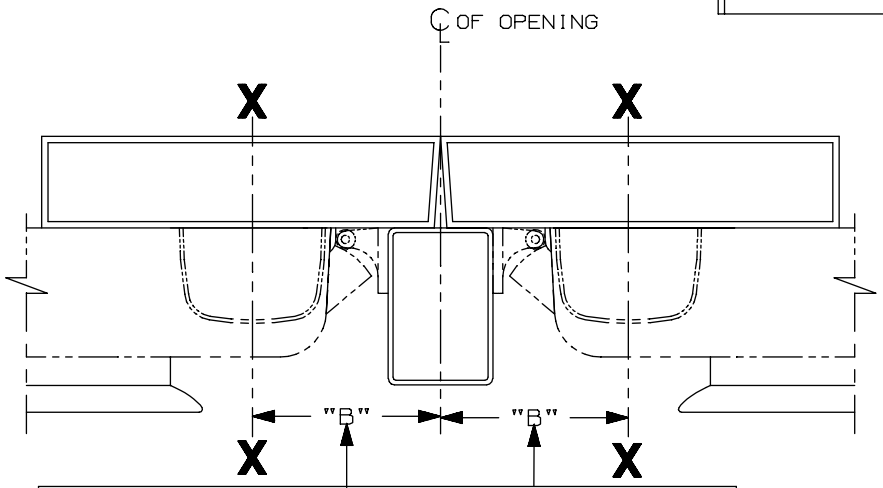

SINGLE DOOR OPENING
39 13/16" TO FINISHED FLOOR

DOUBLE DOOR OPENING
WITH VON DUPRIN MULLION
39 11/16"

LHR APPLICATION SHOWN,
RHR APPLICATION OPPOSITE

DOUBLE DOOR INSTALLATION WITH VON DUPRIN MULLIONS				
MULLION	STRIKE	DIM. "B"	MIN. STILE 990/991/992 TRIM	MIN. STILE 696/697 TRIM
(19) 4954/9954	299/299-F	3 3/8"	4 7/8"	4 3/4"
9954	499-F	3 1/2"	5"	4 7/8"
5654	299	2 15/16"	4 3/8"	4 1/4"
5754	1408	2 1/8"	3 13/16"	3 13/16"
1654	1606	2 15/16"	4 3/8"	4 1/4"

NOTES:
1. THESE FOUR HOLES TO BE PREPARED FOR SURFACE APPLICATION WHEN USING 696/697 TRIM. DO NOT PREPARE FOR SEX BOLTS.
2. FOR STOCK HOLLOW METAL DOORS SEE TEMPLATE NO. 10307 FOR TYPE "161" CUTOUT AND 10314 FOR TYPE "86" CUTOUT.
3. GLASS BEAD KIT AVAILABLE WHEN REQUIRED.
4. FOR OUTSIDE TRIM PREPARATION, WHEN REQUIRED, SEE TRIM TEMPLATE.
5. 9954 W/299-F FOR HURRICANE APPLICATIONS (19) ONLY

98/99 & 98-F/99-F NL Series Rim Device

VON DUPRIN®

NOTES: SEE MASTER SHEET #10001 FOR SUGGESTED REINFORCING

TEMPLATE NUMBER: 10301_a

DATE: 05-21-13

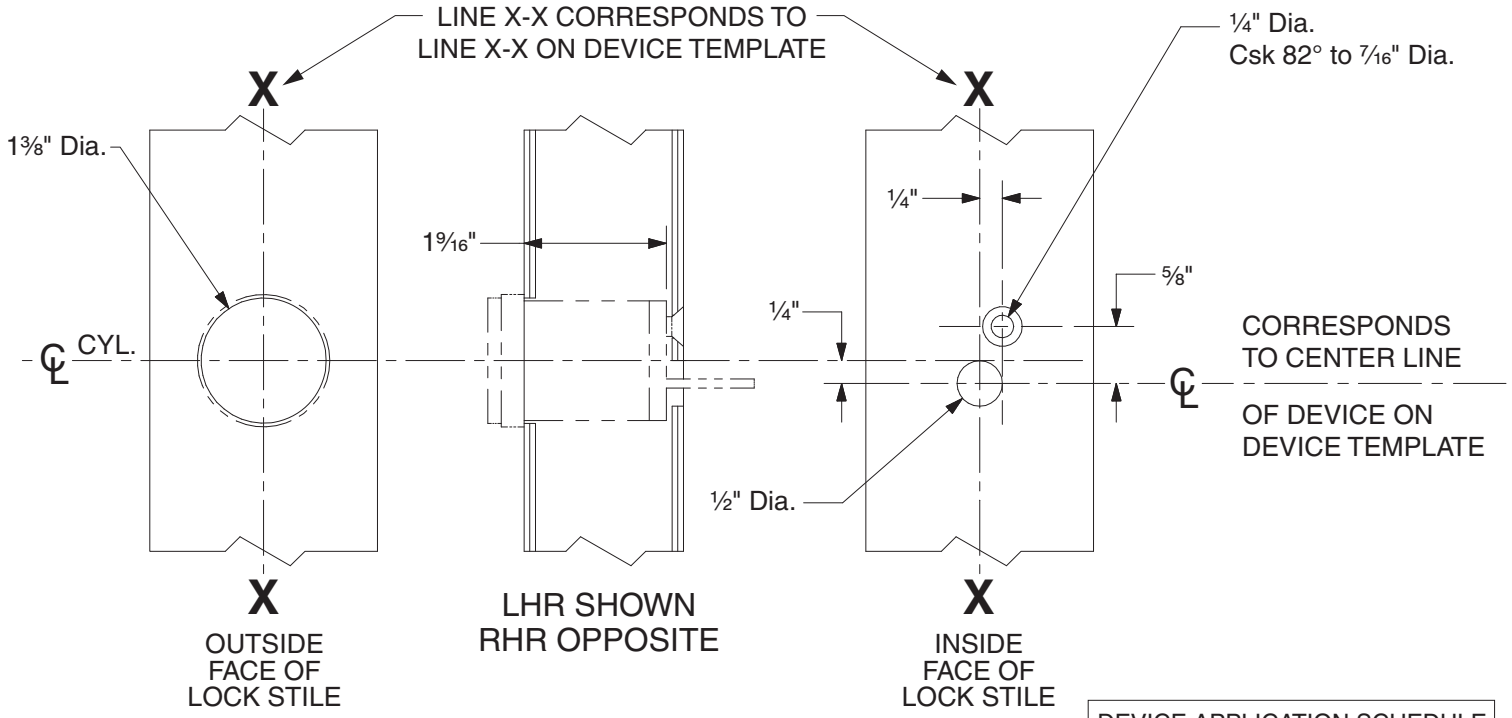

DEVICE APPLICATION SCHEDULE	
98 RIM SERIES	99 RIM SERIES
9827 SERIES	9927 SERIES
9847 SERIES	9947 SERIES
22 RIM SERIES	2227 SERIES

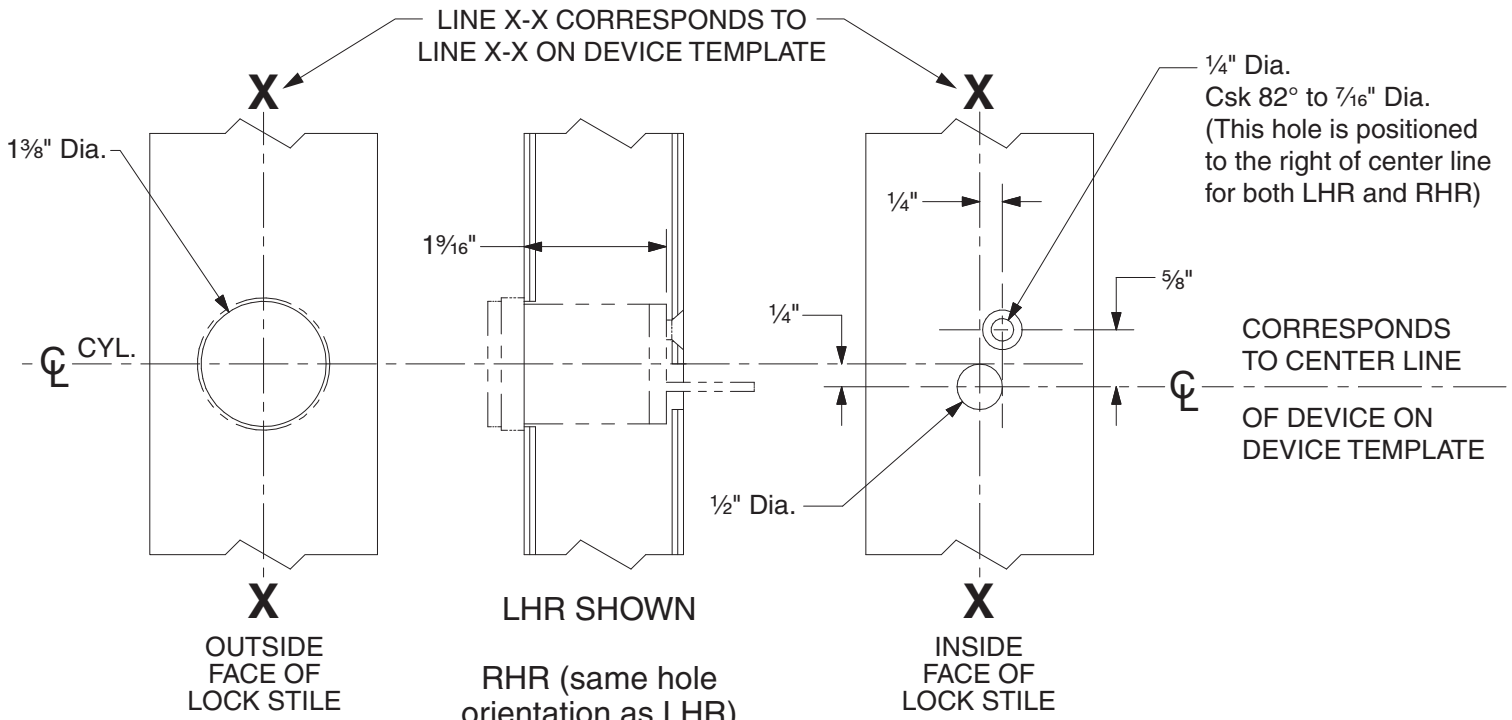

DEVICE APPLICATION SCHEDULE	
9849 SERIES	9949 SERIES

110NL Cylinder Preparation

VON DUPRIN®

NOTES: SEE MASTER SHEET #10001 FOR SUGGESTED REINFORCING

TEMPLATE NUMBER: 40022_c

DATE: 05-28-13

RIM APPLICATION

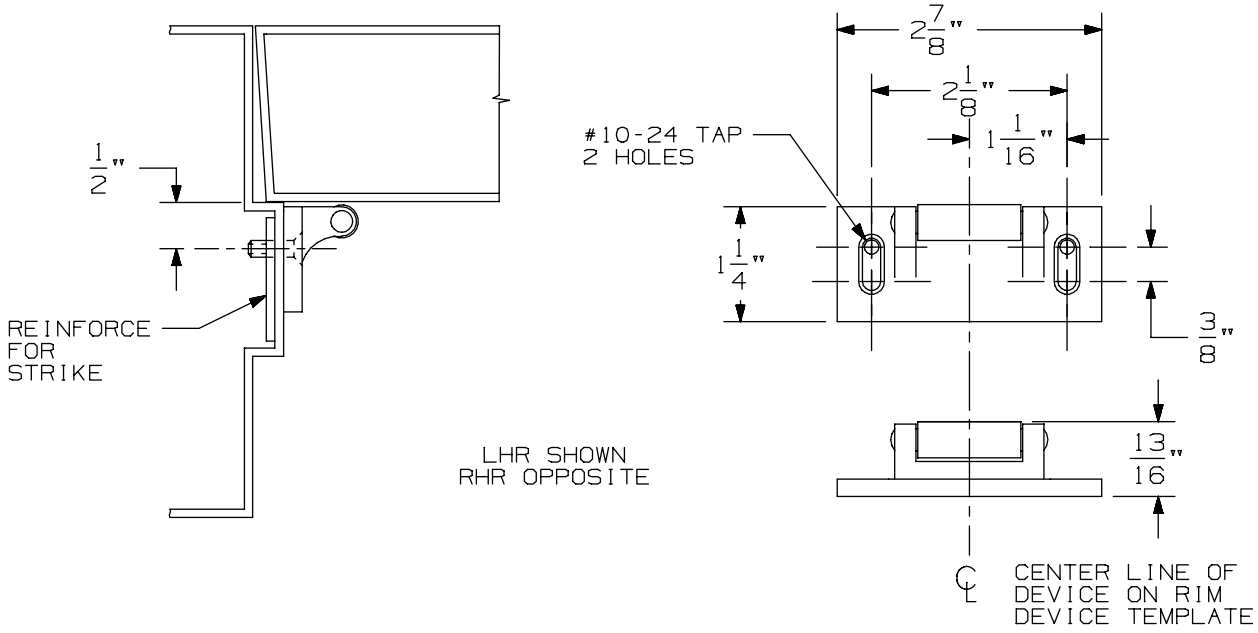

VERTICAL APPLICATION

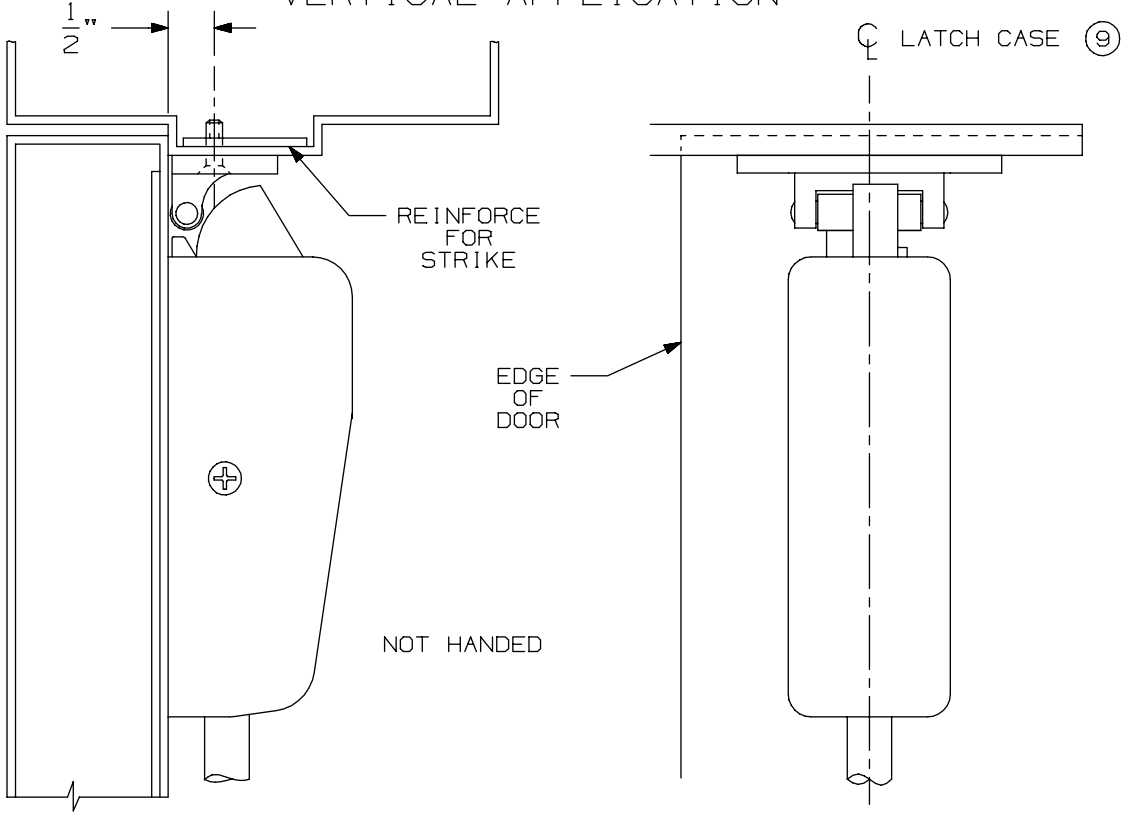

NOTE: LATCH CASE MOUNTING HOLES TO BE PREPARED AT INSTALLATION ON DOOR.

299 & 299F Strike

VON DUPRIN®

NOTES: SEE MASTER SHEET #10001 FOR SUGGESTED REINFORCING

TEMPLATE NUMBER: 30039_a

DATE: 05-23-13

APPLICATION	PREPARATION
SURFACE APPLICATION	#10-24 TAP 4 PLACES
990 TRIM APPLICATION OR SEX BOLT APPLICATION (SEE NOTE 1)	1/4" DIA THIS SIDE 13/32" DIA OPPOSITE SIDE - 4 PLACES

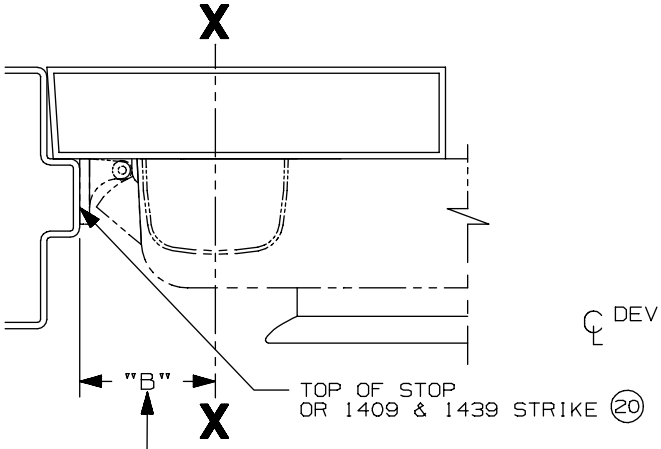

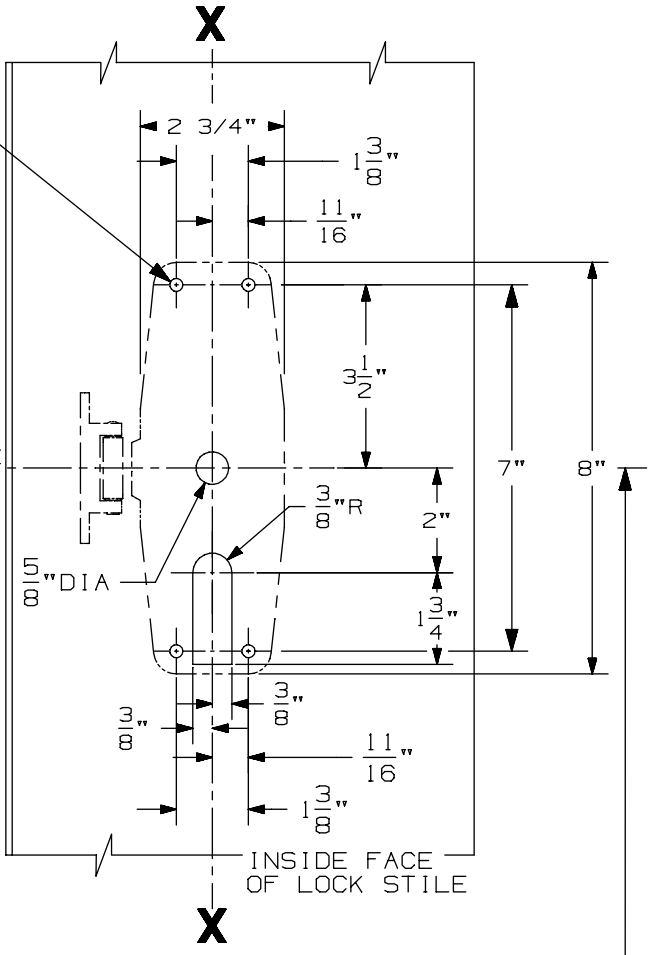

SINGLE DOOR INSTALLATION			
STRIKE	DIM. "B"	MIN. STILE 990/991/992 TRIM	MIN. STILE 696/697 TRIM
299 & 299-F	2 3/8"	4 1/2"	4 3/8"
(20) 1409 & 1439	1 9/16"	3 13/16"	3 13/16"
1606	1 15/16"	4 1/16"	3 15/16"

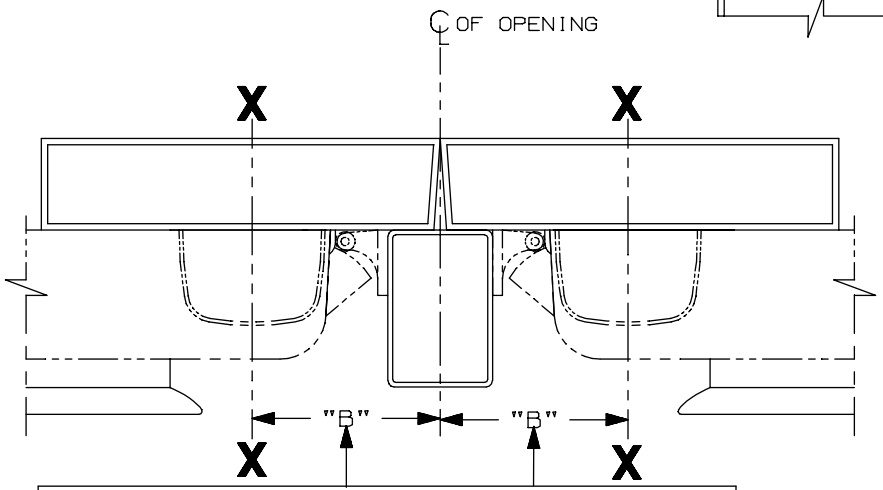

SINGLE DOOR OPENING
39 13/16" TO FINISHED FLOOR

DOUBLE DOOR OPENING
WITH VON DUPRIN MULLION
39 11/16"

LHR APPLICATION SHOWN
RHR APPLICATION OPPOSITE

DOUBLE DOOR INSTALLATION WITH VON DUPRIN MULLIONS				
MULLION	STRIKE	DIM. "B"	MIN. STILE 990/991/992 TRIM	MIN. STILE 696/697 TRIM
(20) 4954/9954	299/299-F	3 3/8"	4 7/8"	4 3/4"
9954	499-F	3 1/2"	5"	4 7/8"
5654	299	2 15/16"	4 3/8"	4 1/4"
5754	1408	2 1/8"	3 13/16"	3 13/16"
1654	1606	2 15/16"	4 3/8"	4 1/4"

NOTES:
1. THESE FOUR HOLES TO BE PREPARED FOR SURFACE APPLICATION WHEN USING 696/697 TRIM. DO NOT PREPARE FOR SEX BOLTS.
2. FOR STOCK HOLLOW METAL DOORS SEE TEMPLATE NO. 10309 FOR TYPE "161" CUTOUT AND 10315 FOR TYPE "86" CUTOUT.
3. GLASS BEAD KIT AVAILABLE WHEN REQUIRED.
4. FOR OUTSIDE TRIM PREPARATION, WHEN REQUIRED, SEE TRIM TEMPLATE.
5. 9954 W/299-F FOR HURRICANE APPLICATIONS (20) ONLY.

98/99 & 98-F/99-F TP, K, & L Series Rim Devices

VON DUPRIN®

NOTES: SEE MASTER SHEET #10001 FOR SUGGESTED REINFORCING

TEMPLATE NUMBER: 10302_a

DATE: 05-21-13

991 K & 992 L Trim

NOTES: SEE MASTER SHEET #10001 FOR SUGGESTED REINFORCING

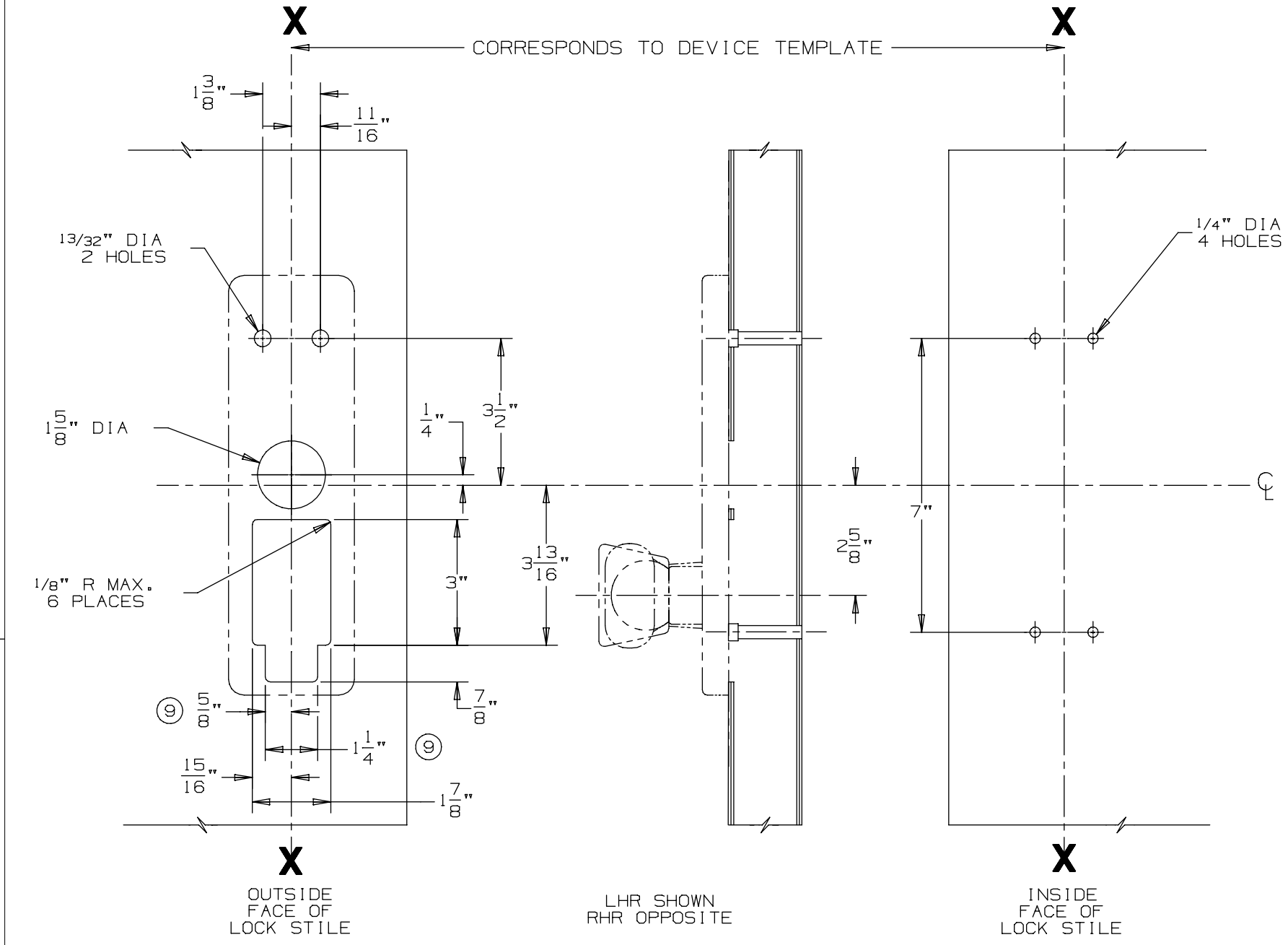

DEVICE APPLICATION SCHEDULE
98/99 SERIES RIM DEVICE
9827/9927 SERIES DEVICE
9847/9947 SERIES DEVICE

VON DUPRIN®

TEMPLATE NUMBER: 20272_a

DATE: 05-23-13

RIM APPLICATION

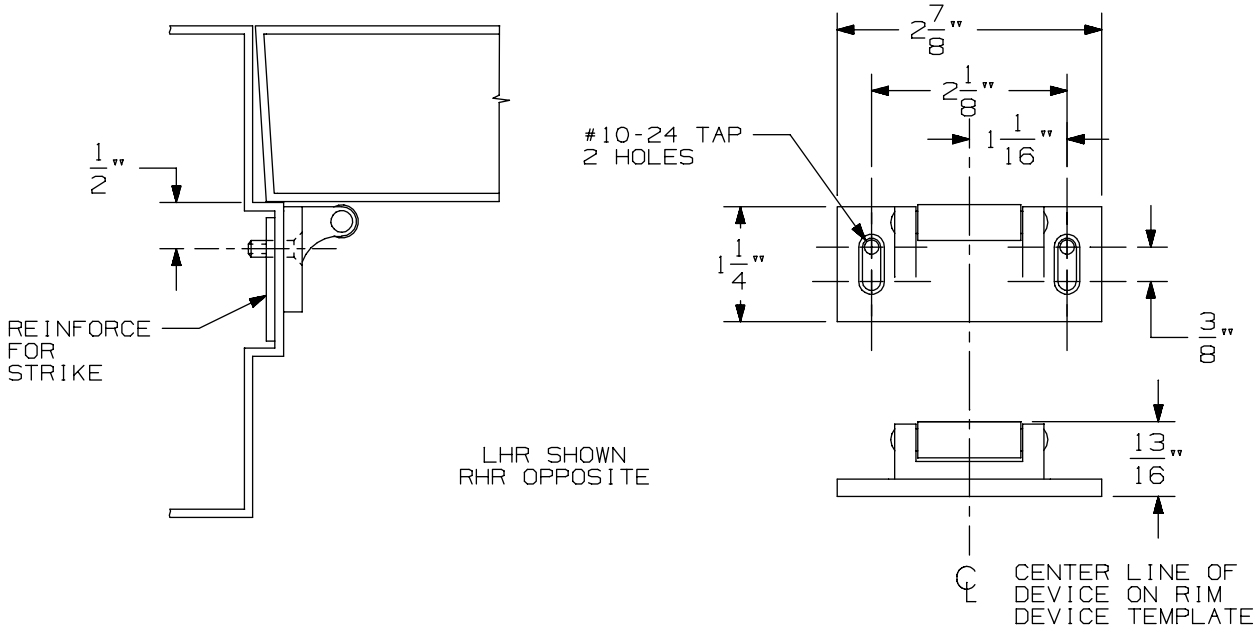

VERTICAL APPLICATION

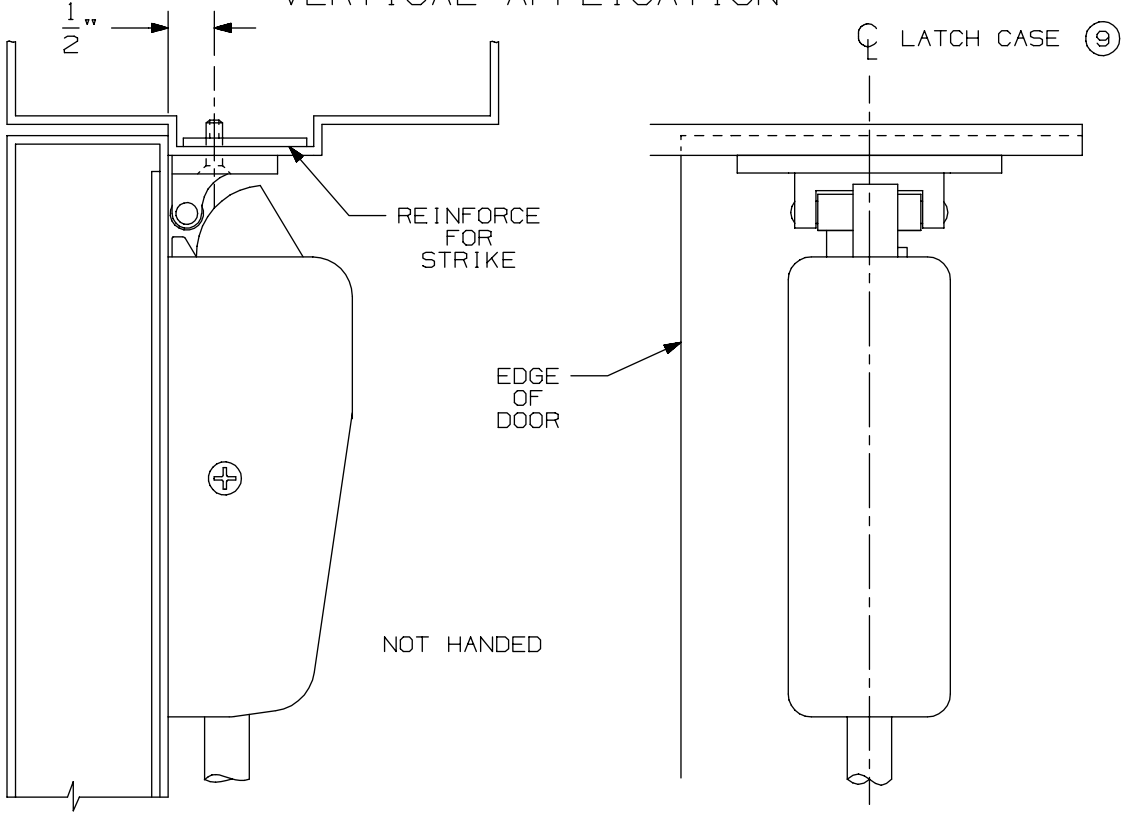

NOTE: LATCH CASE MOUNTING HOLES TO BE PREPARED AT INSTALLATION ON DOOR.

299 & 299F Strike

VON DUPRIN®

NOTES: SEE MASTER SHEET #10001 FOR SUGGESTED REINFORCING

TEMPLATE NUMBER: 30039_a

DATE: 05-23-13

APPLICATION	PREPARATION
SURFACE APPLICATION	#10-24 TAP 4 PLACES
990 TRIM APPLICATION OR SEX BOLT APPLICATION (SEE NOTE 1)	1/4' DIA THIS SIDE 13/32" DIA OPPOSITE SIDE - 4 PLACES

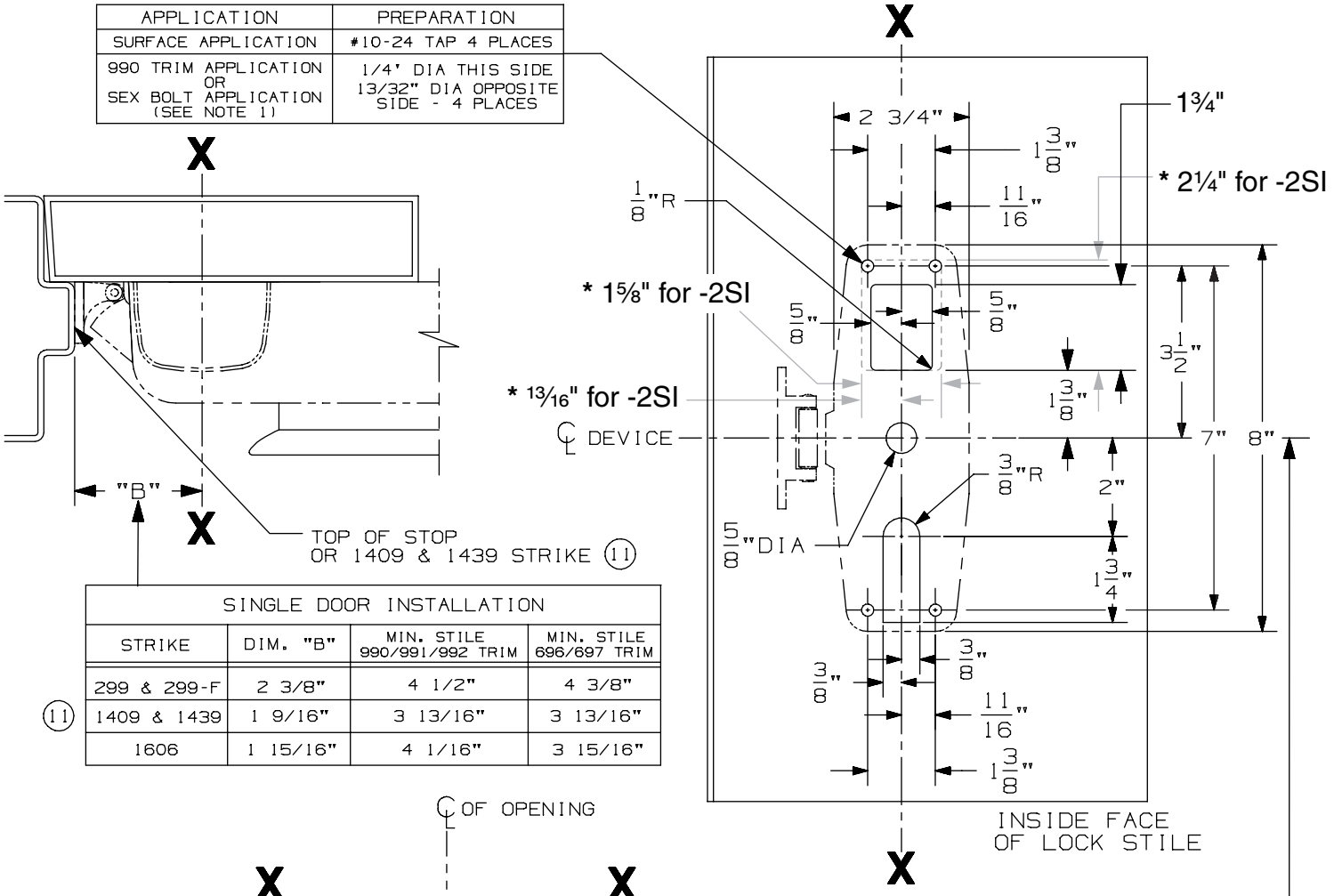

SINGLE DOOR INSTALLATION			
STRIKE	DIM. "B"	MIN. STILE 990/991/992 TRIM	MIN. STILE 696/697 TRIM
299 & 299-F	2 3/8"	4 1/2"	4 3/8"
(11) 1409 & 1439	1 9/16"	3 13/16"	3 13/16"
1606	1 15/16"	4 1/16"	3 15/16"

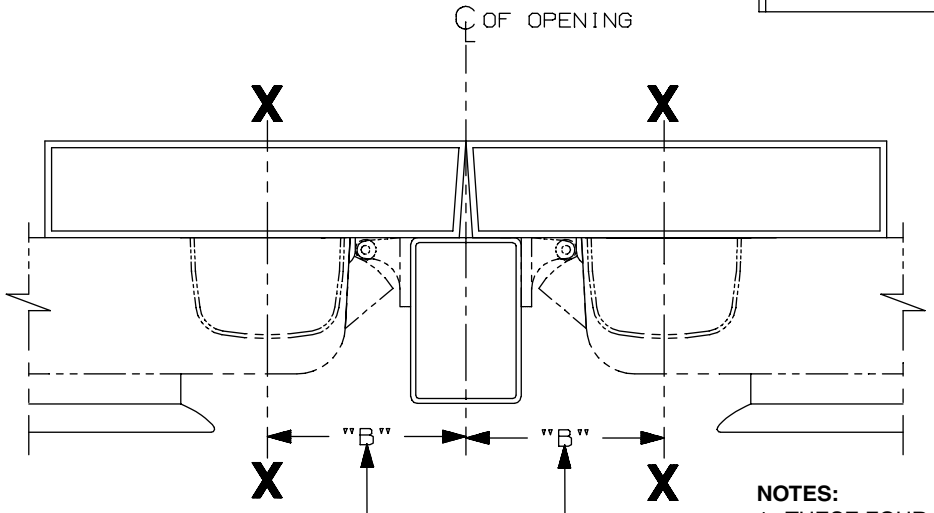

SINGLE DOOR OPENING
39 13/16" TO FINISHED FLOOR

DOUBLE DOOR OPENING
WITH VON DUPRIN MULLION
39 11/16"

LHR APLICATION SHOWN
RHR APPLICATION OPPOSITE

DOUBLE DOOR INSTALLATION WITH VON DUPRIN MULLIONS				
MULLION	STRIKE	DIM. "B"	MIN. STILE 990/991/992 TRIM	MIN. STILE 696/697 TRIM
(11) 4954/9954	299/299-F	3 3/8"	4 7/8"	4 3/4"
5654	299	2 15/16"	4 3/8"	4 1/4"
5754	1408	2 1/8"	3 13/16"	3 13/16"
1654	1606	2 15/16"	4 3/8"	4 1/4"

NOTES:

1. THESE FOUR HOLES TO BE PREPARED FOR SURFACE APPLICATION WHEN USING 696/697 TRIM. DO NOT PREPARE FOR SEX BOLTS.
2. FOR STOCK HOLLOW METAL DOORS, SEE TEMPLATE 10309 FOR TYPE "161" CUTOUT AND 10315 FOR TYPE "86" CUTOUT.
3. GLASS BEAD KIT AVAILABLE WHEN REQUIRED.
4. FOR OUTSIDE TRIM PREPARATION, WHEN REQUIRED, SEE TRIM TEMPLATE.
5. IT IS RECOMMENDED THE MOUNTING HOLES BE PREPARED IN THE FIELD.
6. 9954 W/299-F FOR HURRICANE APPLICATIONS (11) ONLY.
* 7. FOR THE -2SI MODEL, HEIGHT OF CUTOUT INCREASES TO 2¼" AND WIDTH INCREASES TO 1⅝".

98/99-2 & 98/99-F-2 TP, K, & L Series Double Cylinder Rim Device

VON DUPRIN®

NOTES: SEE MASTER SHEET #10001 FOR SUGGESTED REINFORCING

TEMPLATE NUMBER: 10322_c

DATE: 10-21-13

991 K & 992 L Trim

NOTES: SEE MASTER SHEET #10001 FOR SUGGESTED REINFORCING

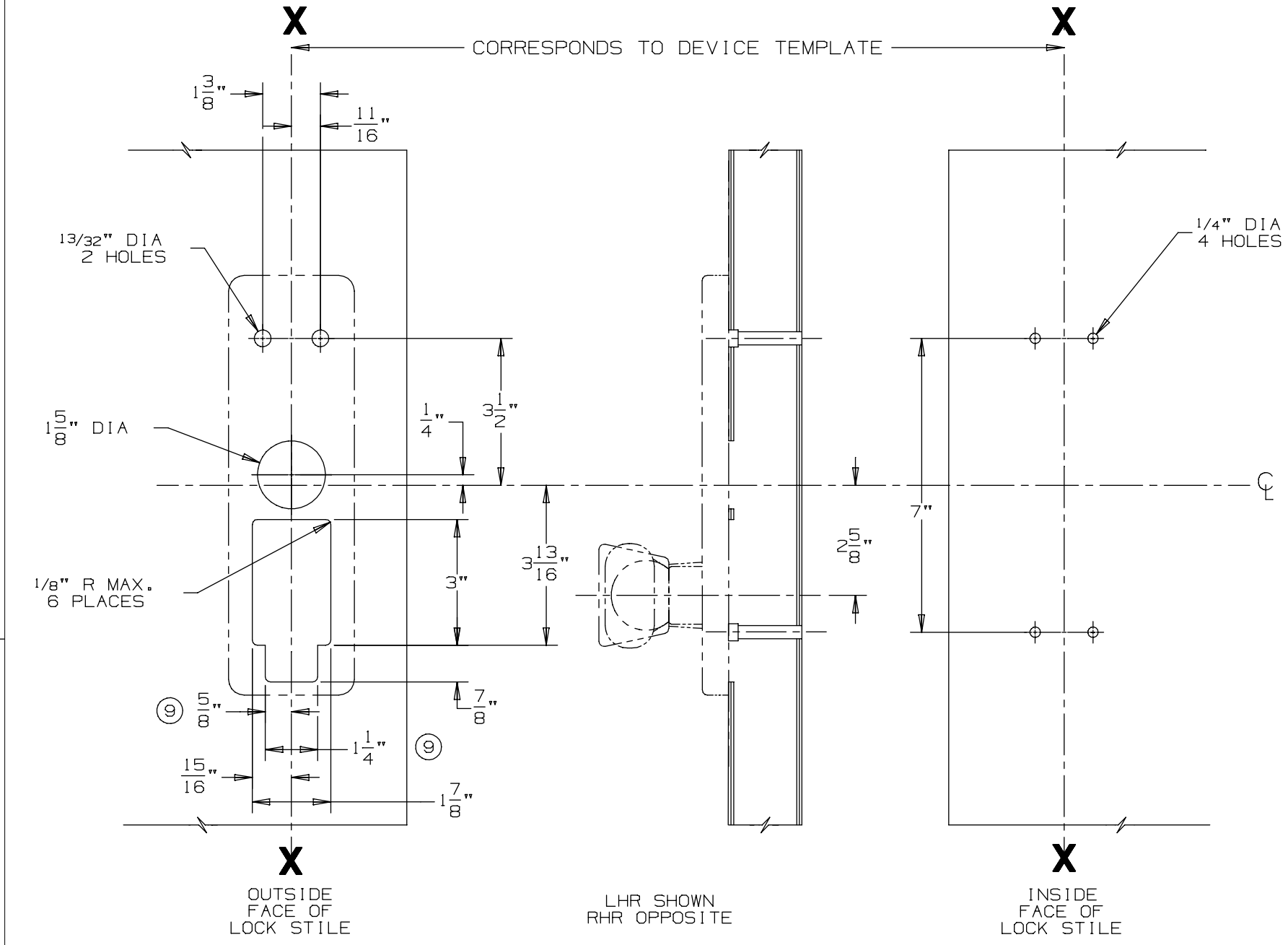

DEVICE APPLICATION SCHEDULE
98/99 SERIES RIM DEVICE
9827/9927 SERIES DEVICE
9847/9947 SERIES DEVICE

VON DUPRIN®

TEMPLATE NUMBER: 20272_a

DATE: 05-23-13

RIM APPLICATION

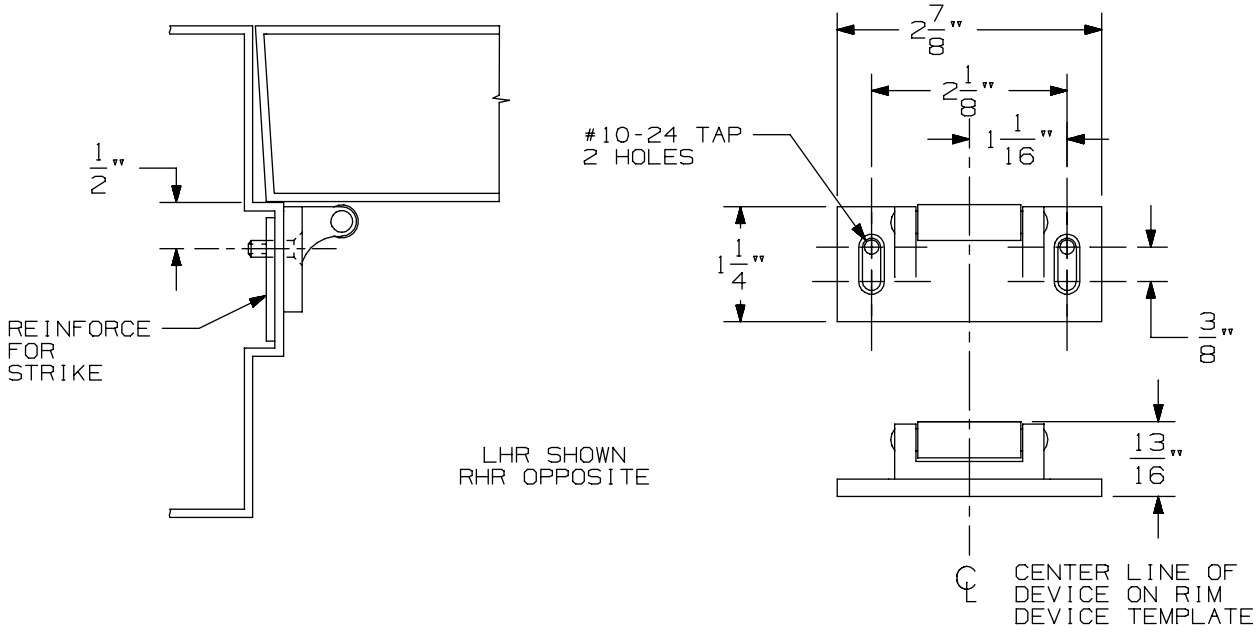

VERTICAL APPLICATION

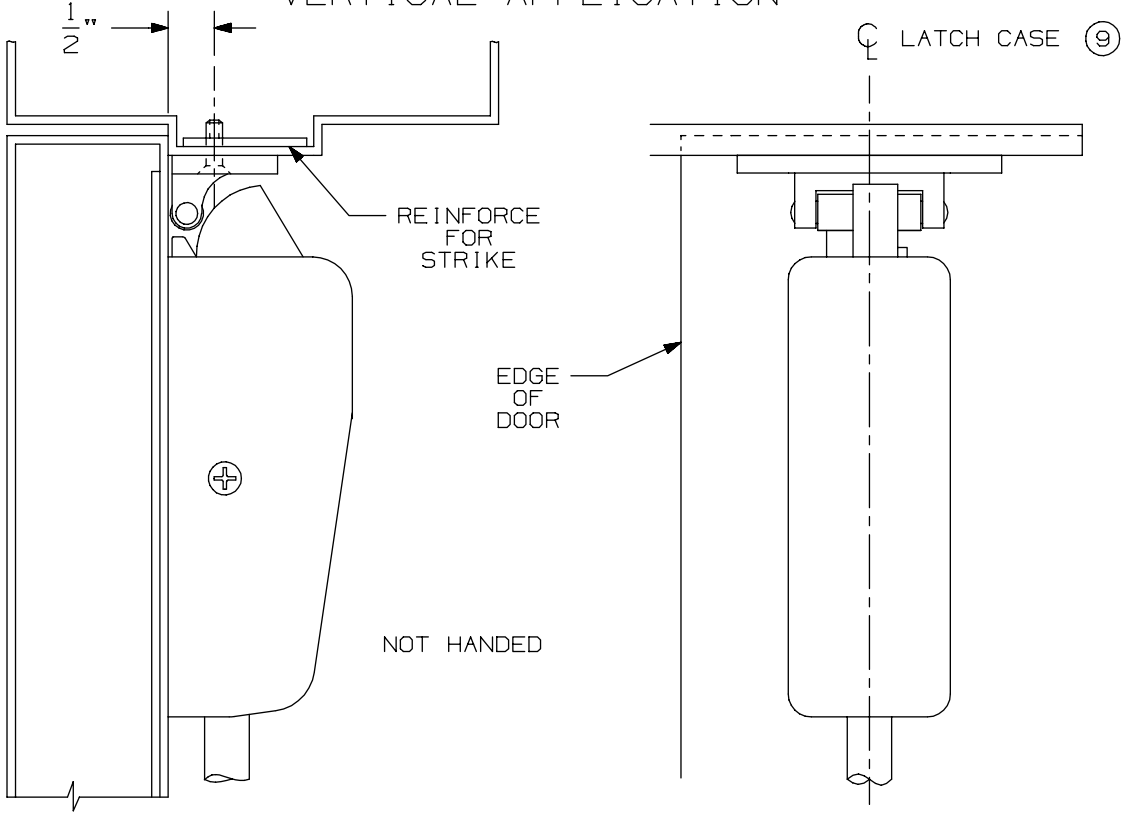

NOTE: LATCH CASE MOUNTING HOLES TO BE PREPARED AT INSTALLATION ON DOOR.

299 & 299F Strike

VON DUPRIN®

NOTES: SEE MASTER SHEET #10001 FOR SUGGESTED REINFORCING

TEMPLATE NUMBER: 30039_a

DATE: 05-23-13

APPLICATION	PREPARATION
SURFACE APPLICATION	#10-24 TAP 4 PLACES
990 TRIM APPLICATION OR SEX BOLT APPLICATION (SEE NOTE 1)	1/4" DIA THIS SIDE 13/32" DIA OPPOSITE SIDE - 4 PLACES

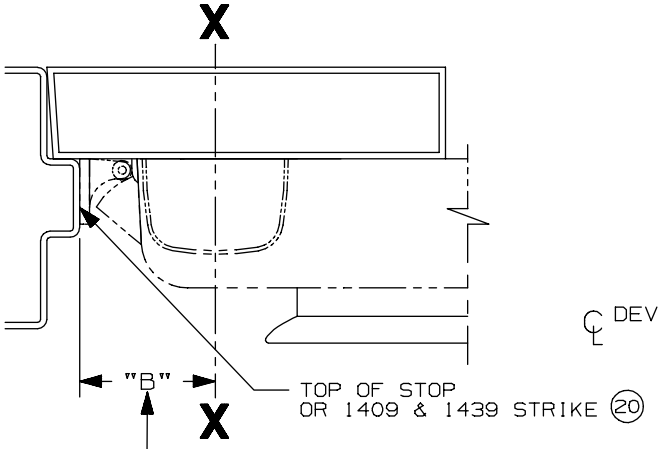

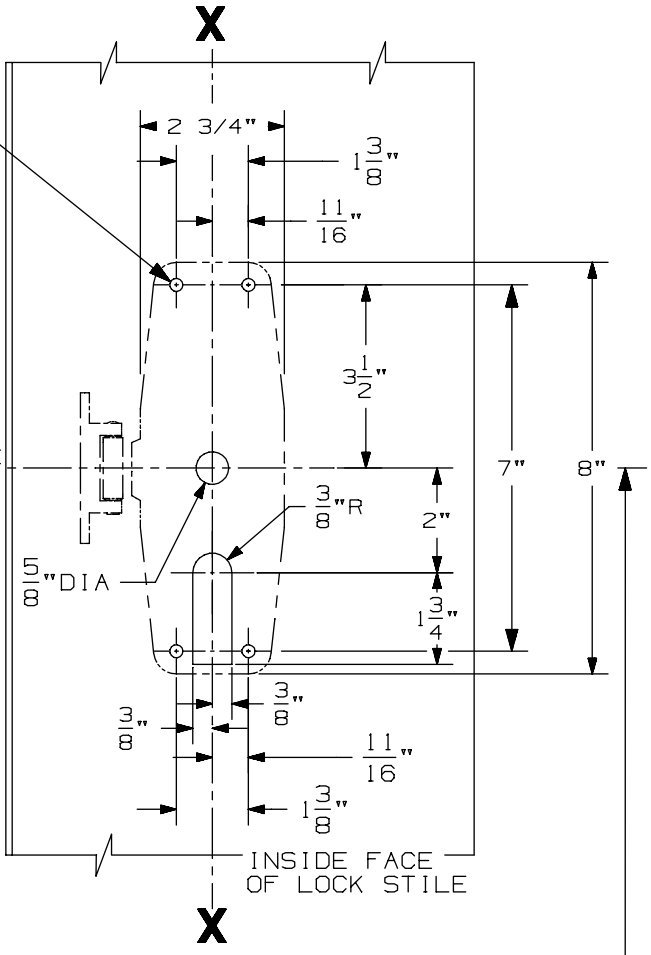

SINGLE DOOR INSTALLATION			
STRIKE	DIM. "B"	MIN. STILE 990/991/992 TRIM	MIN. STILE 696/697 TRIM
299 & 299-F	2 3/8"	4 1/2"	4 3/8"
(20) 1409 & 1439	1 9/16"	3 13/16"	3 13/16"
1606	1 15/16"	4 1/16"	3 15/16"

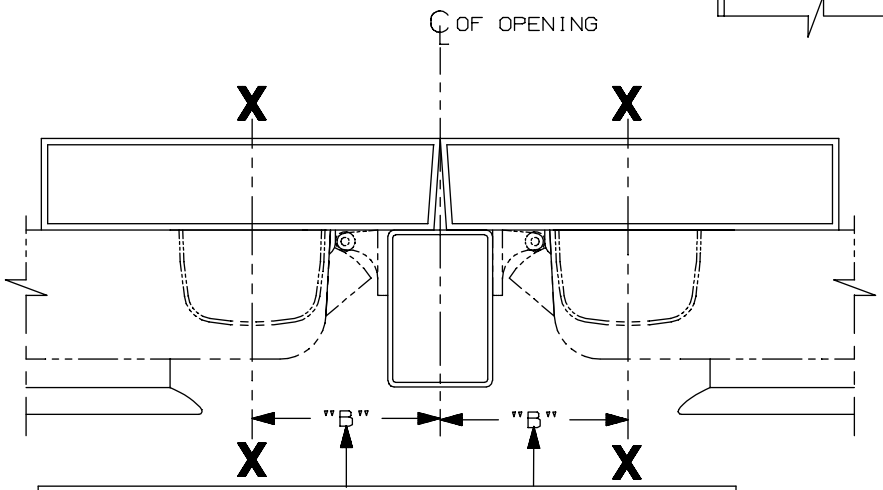

SINGLE DOOR OPENING
39 13/16" TO FINISHED FLOOR

DOUBLE DOOR OPENING
WITH VON DUPRIN MULLION
39 11/16"

LHR APPLICATION SHOWN
RHR APPLICATION OPPOSITE

DOUBLE DOOR INSTALLATION WITH VON DUPRIN MULLIONS				
MULLION	STRIKE	DIM. "B"	MIN. STILE 990/991/992 TRIM	MIN. STILE 696/697 TRIM
(20) 4954/9954	299/299-F	3 3/8"	4 7/8"	4 3/4"
9954	499-F	3 1/2"	5"	4 7/8"
5654	299	2 15/16"	4 3/8"	4 1/4"
5754	1408	2 1/8"	3 13/16"	3 13/16"
1654	1606	2 15/16"	4 3/8"	4 1/4"

NOTES:
1. THESE FOUR HOLES TO BE PREPARED FOR SURFACE APPLICATION WHEN USING 696/697 TRIM. DO NOT PREPARE FOR SEX BOLTS.
2. FOR STOCK HOLLOW METAL DOORS SEE TEMPLATE NO. 10309 FOR TYPE "161" CUTOUT AND 10315 FOR TYPE "86" CUTOUT.
3. GLASS BEAD KIT AVAILABLE WHEN REQUIRED.
4. FOR OUTSIDE TRIM PREPARATION, WHEN REQUIRED, SEE TRIM TEMPLATE.
5. 9954 W/299-F FOR HURRICANE APPLICATIONS (20) ONLY.

98/99 & 98-F/99-F TP, K, & L Series Rim Devices

VON DUPRIN®

NOTES: SEE MASTER SHEET #10001 FOR SUGGESTED REINFORCING

TEMPLATE NUMBER: 10302_a

DATE: 05-21-13

DEVICE APPLICATION SCHEDULE	
98 RIM SERIES	99 RIM SERIES
9827 SERIES	9927 SERIES
9847 SERIES	9947 SERIES
9849 SERIES	9949 SERIES

996L, E996L, 996L-BE, E996L-BE 996K, 996K-BE R/V SERIES
TRIM METAL DOOR APPLICATION

VON DUPRIN®

NOTES: SEE MASTER SHEET #10001 FOR SUGGESTED REINFORCING

TEMPLATE NUMBER: 20003_e

DATE: 10-30-14

RIM APPLICATION

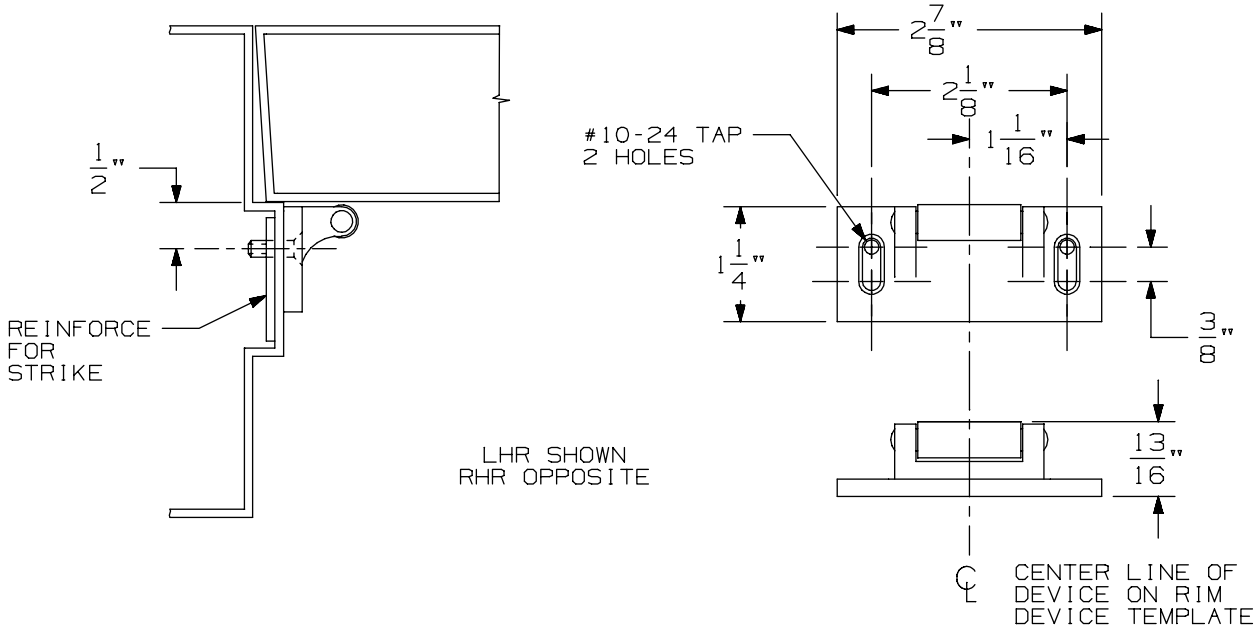

VERTICAL APPLICATION

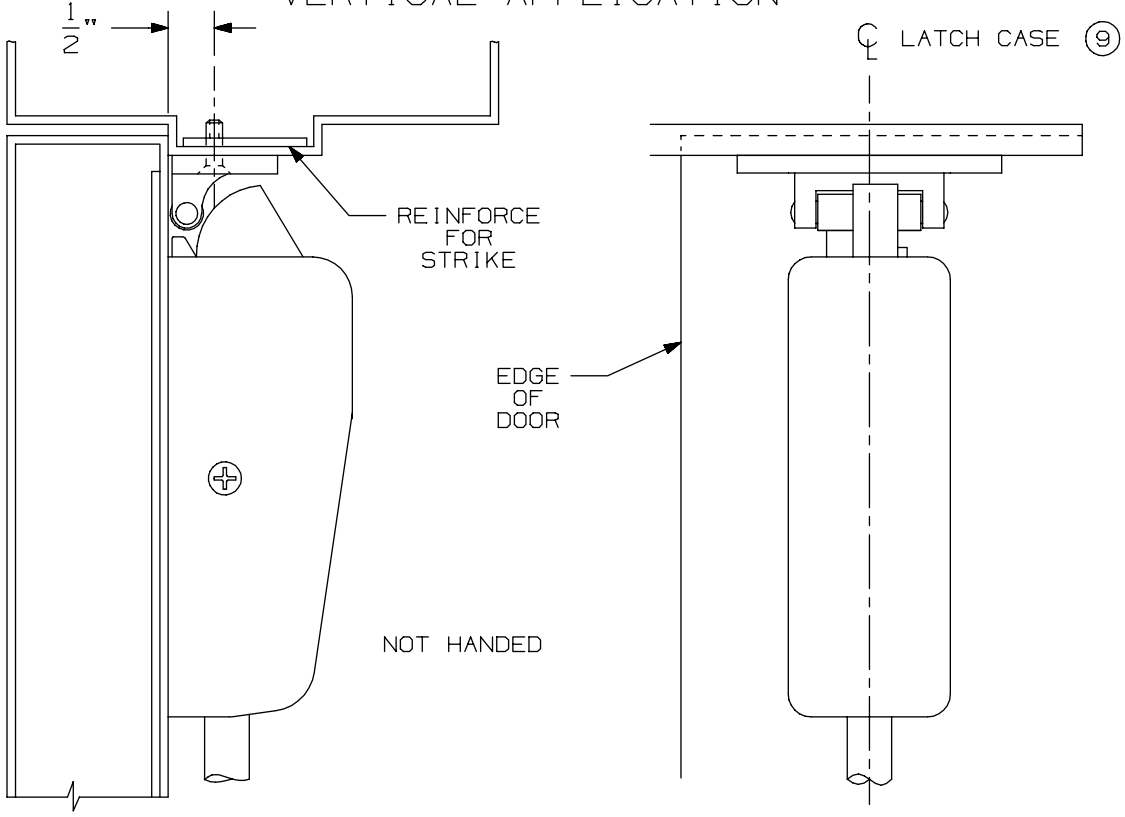

NOTE: LATCH CASE MOUNTING HOLES TO BE PREPARED AT INSTALLATION ON DOOR.

299 & 299F Strike

VON DUPRIN®

NOTES: SEE MASTER SHEET #10001 FOR SUGGESTED REINFORCING

TEMPLATE NUMBER: 30039_a

DATE: 05-23-13

APPLICATION	PREPARATION
SURFACE APPLICATION	#10-24 TAP 4 PLACES
990 TRIM APPLICATION OR SEX BOLT APPLICATION (SEE NOTE 1)	1/4' DIA THIS SIDE 13/32" DIA OPPOSITE SIDE - 4 PLACES

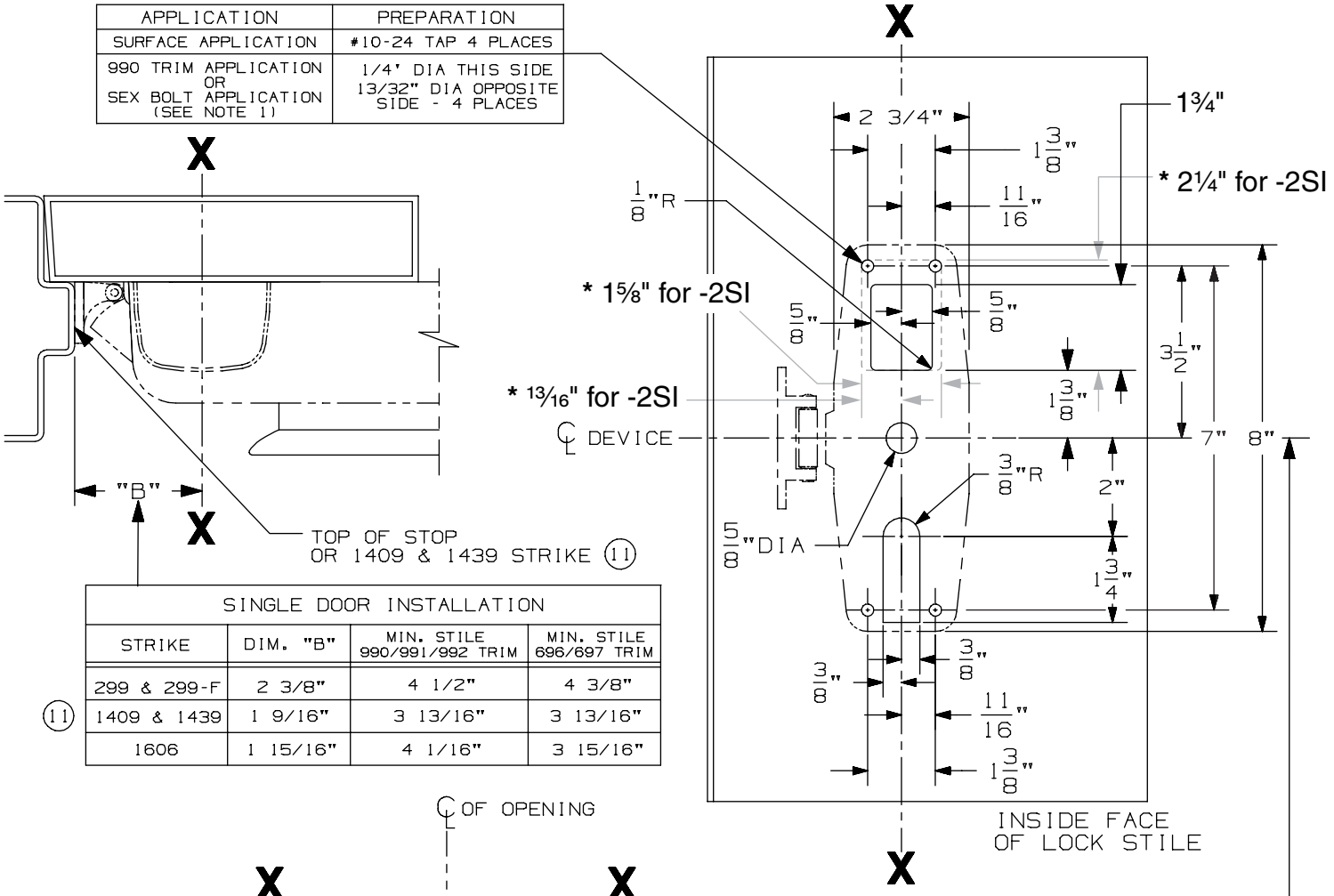

SINGLE DOOR INSTALLATION			
STRIKE	DIM. "B"	MIN. STILE 990/991/992 TRIM	MIN. STILE 696/697 TRIM
299 & 299-F	2 3/8"	4 1/2"	4 3/8"
(11) 1409 & 1439	1 9/16"	3 13/16"	3 13/16"
1606	1 15/16"	4 1/16"	3 15/16"

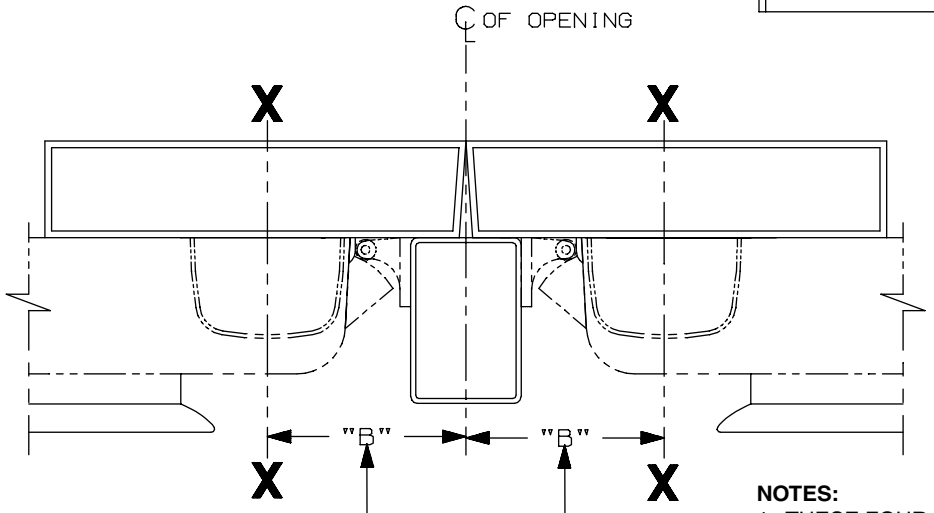

SINGLE DOOR OPENING
39 13/16" TO FINISHED FLOOR

DOUBLE DOOR OPENING
WITH VON DUPRIN MULLION
39 11/16"

LHR APLICATION SHOWN
RHR APPLICATION OPPOSITE

DOUBLE DOOR INSTALLATION WITH VON DUPRIN MULLIONS				
MULLION	STRIKE	DIM. "B"	MIN. STILE 990/991/992 TRIM	MIN. STILE 696/697 TRIM
(11) 4954/9954	299/299-F	3 3/8"	4 7/8"	4 3/4"
5654	299	2 15/16"	4 3/8"	4 1/4"
5754	1408	2 1/8"	3 13/16"	3 13/16"
1654	1606	2 15/16"	4 3/8"	4 1/4"

NOTES:

1. THESE FOUR HOLES TO BE PREPARED FOR SURFACE APPLICATION WHEN USING 696/697 TRIM. DO NOT PREPARE FOR SEX BOLTS.
2. FOR STOCK HOLLOW METAL DOORS, SEE TEMPLATE 10309 FOR TYPE "161" CUTOUT AND 10315 FOR TYPE "86" CUTOUT.
3. GLASS BEAD KIT AVAILABLE WHEN REQUIRED.
4. FOR OUTSIDE TRIM PREPARATION, WHEN REQUIRED, SEE TRIM TEMPLATE.
5. IT IS RECOMMENDED THE MOUNTING HOLES BE PREPARED IN THE FIELD.
6. 9954 W/299-F FOR HURRICANE APPLICATIONS (11) ONLY.
* 7. FOR THE -2SI MODEL, HEIGHT OF CUTOUT INCREASES TO 2¼" AND WIDTH INCREASES TO 1⅝".

98/99-2 & 98/99-F-2 TP, K, & L Series Double Cylinder Rim Device

VON DUPRIN®

NOTES: SEE MASTER SHEET #10001 FOR SUGGESTED REINFORCING

TEMPLATE NUMBER: 10322_c

DATE: 10-21-13

DEVICE APPLICATION SCHEDULE	
98 RIM SERIES	99 RIM SERIES
9827 SERIES	9927 SERIES
9847 SERIES	9947 SERIES
9849 SERIES	9949 SERIES

996L, E996L, 996L-BE, E996L-BE 996K, 996K-BE R/V SERIES
TRIM METAL DOOR APPLICATION

VON DUPRIN®

NOTES: SEE MASTER SHEET #10001 FOR SUGGESTED REINFORCING

TEMPLATE NUMBER: 20003_e

DATE: 10-30-14

RIM APPLICATION

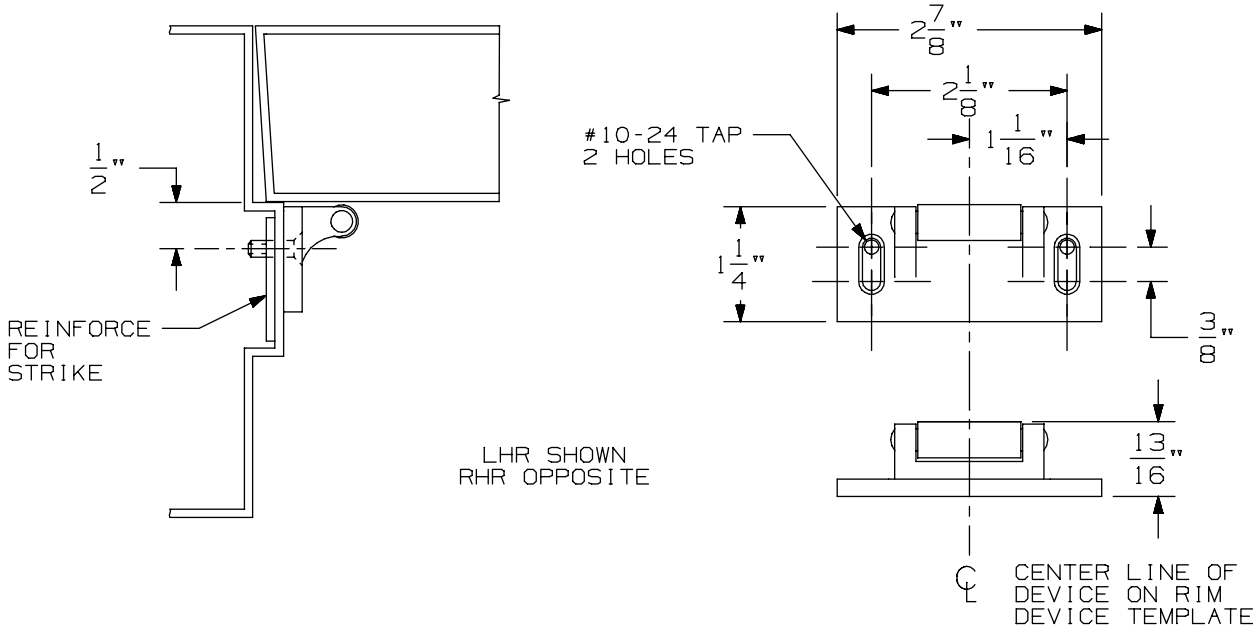

VERTICAL APPLICATION

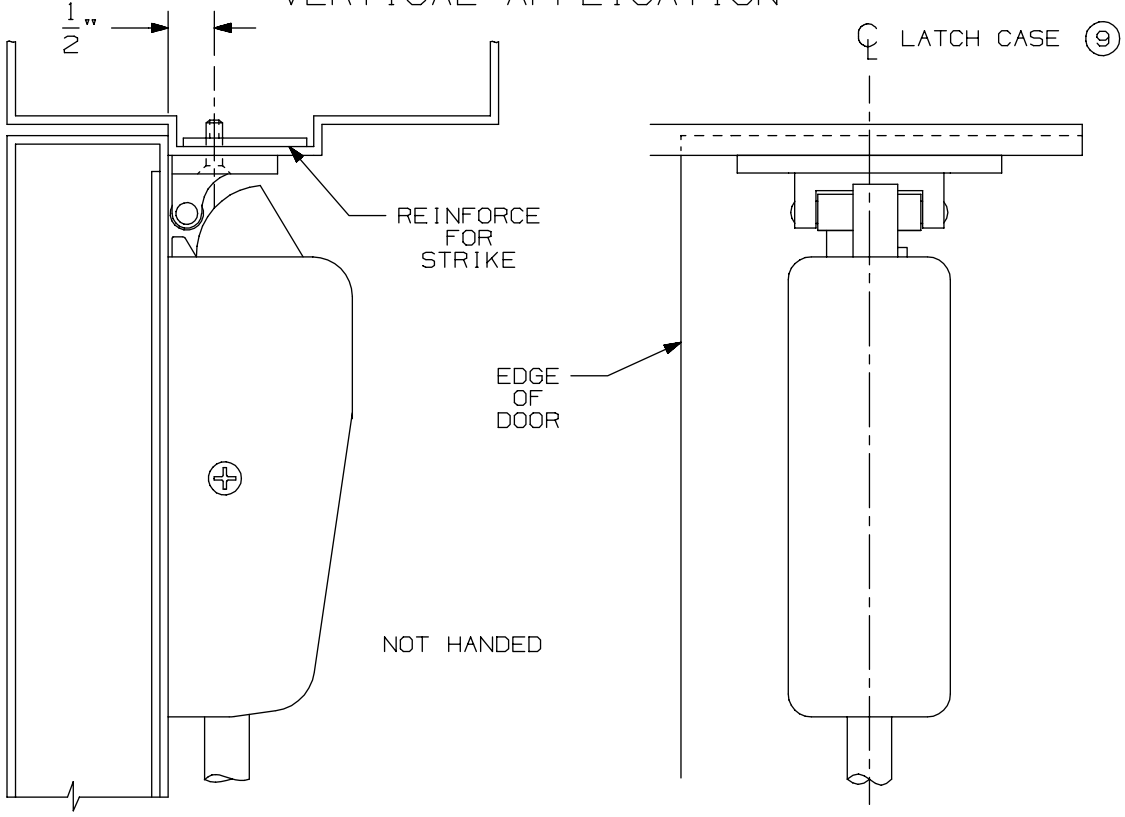

NOTE: LATCH CASE MOUNTING HOLES TO BE PREPARED AT INSTALLATION ON DOOR.

299 & 299F Strike

VON DUPRIN®

NOTES: SEE MASTER SHEET #10001 FOR SUGGESTED REINFORCING

TEMPLATE NUMBER: 30039_a

DATE: 05-23-13

APPLICATION	PREPARATION
SURFACE APPLICATION	#10-24 TAP 4 PLACES
990 TRIM APPLICATION OR SEX BOLT APPLICATION (SEE NOTE 1)	1/4" DIA THIS SIDE 13/32" DIA OPPOSITE SIDE - 4 PLACES

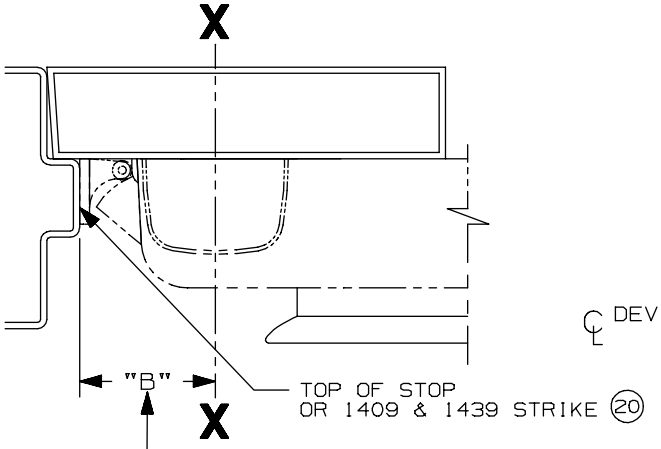

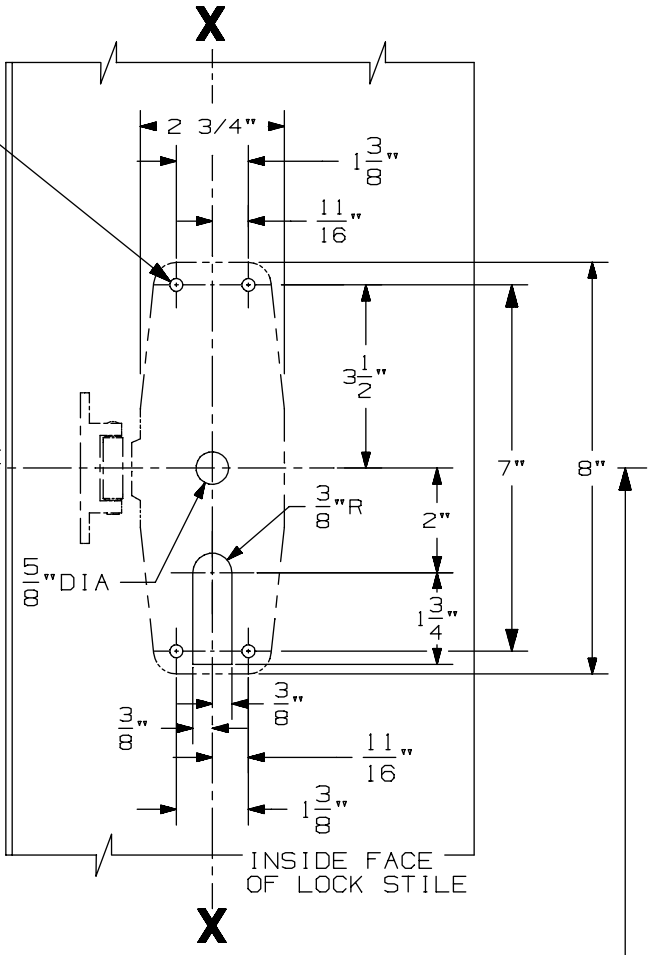

SINGLE DOOR INSTALLATION			
STRIKE	DIM. "B"	MIN. STILE 990/991/992 TRIM	MIN. STILE 696/697 TRIM
299 & 299-F	2 3/8"	4 1/2"	4 3/8"
(20) 1409 & 1439	1 9/16"	3 13/16"	3 13/16"
1606	1 15/16"	4 1/16"	3 15/16"

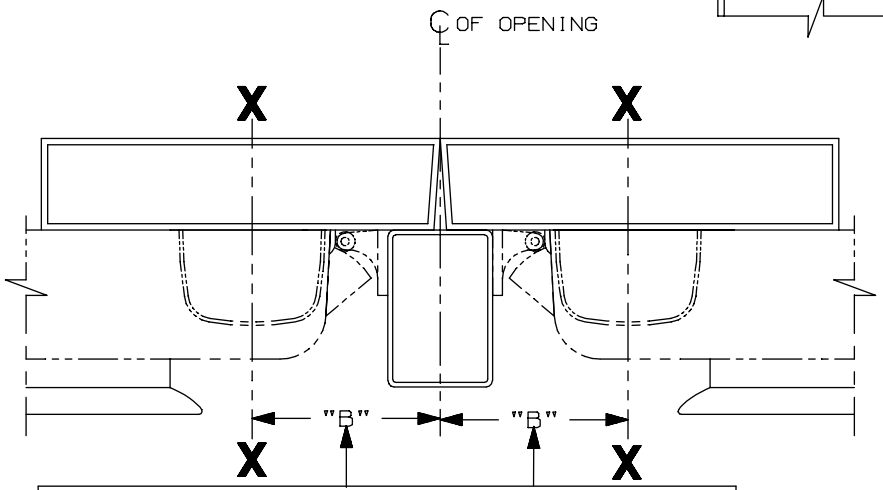

SINGLE DOOR OPENING
39 13/16" TO FINISHED FLOOR

DOUBLE DOOR OPENING
WITH VON DUPRIN MULLION
39 11/16"

LHR APPLICATION SHOWN
RHR APPLICATION OPPOSITE

DOUBLE DOOR INSTALLATION WITH VON DUPRIN MULLIONS				
MULLION	STRIKE	DIM. "B"	MIN. STILE 990/991/992 TRIM	MIN. STILE 696/697 TRIM
(20) 4954/9954	299/299-F	3 3/8"	4 7/8"	4 3/4"
9954	499-F	3 1/2"	5"	4 7/8"
5654	299	2 15/16"	4 3/8"	4 1/4"
5754	1408	2 1/8"	3 13/16"	3 13/16"
1654	1606	2 15/16"	4 3/8"	4 1/4"

NOTES:
1. THESE FOUR HOLES TO BE PREPARED FOR SURFACE APPLICATION WHEN USING 696/697 TRIM. DO NOT PREPARE FOR SEX BOLTS.
2. FOR STOCK HOLLOW METAL DOORS SEE TEMPLATE NO. 10309 FOR TYPE "161" CUTOUT AND 10315 FOR TYPE "86" CUTOUT.
3. GLASS BEAD KIT AVAILABLE WHEN REQUIRED.
4. FOR OUTSIDE TRIM PREPARATION, WHEN REQUIRED, SEE TRIM TEMPLATE.
5. 9954 W/299-F FOR HURRICANE APPLICATIONS (20) ONLY.

98/99 & 98-F/99-F TP, K, & L Series Rim Devices

VON DUPRIN®

NOTES: SEE MASTER SHEET #10001 FOR SUGGESTED REINFORCING

TEMPLATE NUMBER: 10302_a

DATE: 05-21-13

990 TP & 990 TP-BE TRIM

NOTES: SEE MASTER SHEET #10001 FOR SUGGESTED REINFORCING

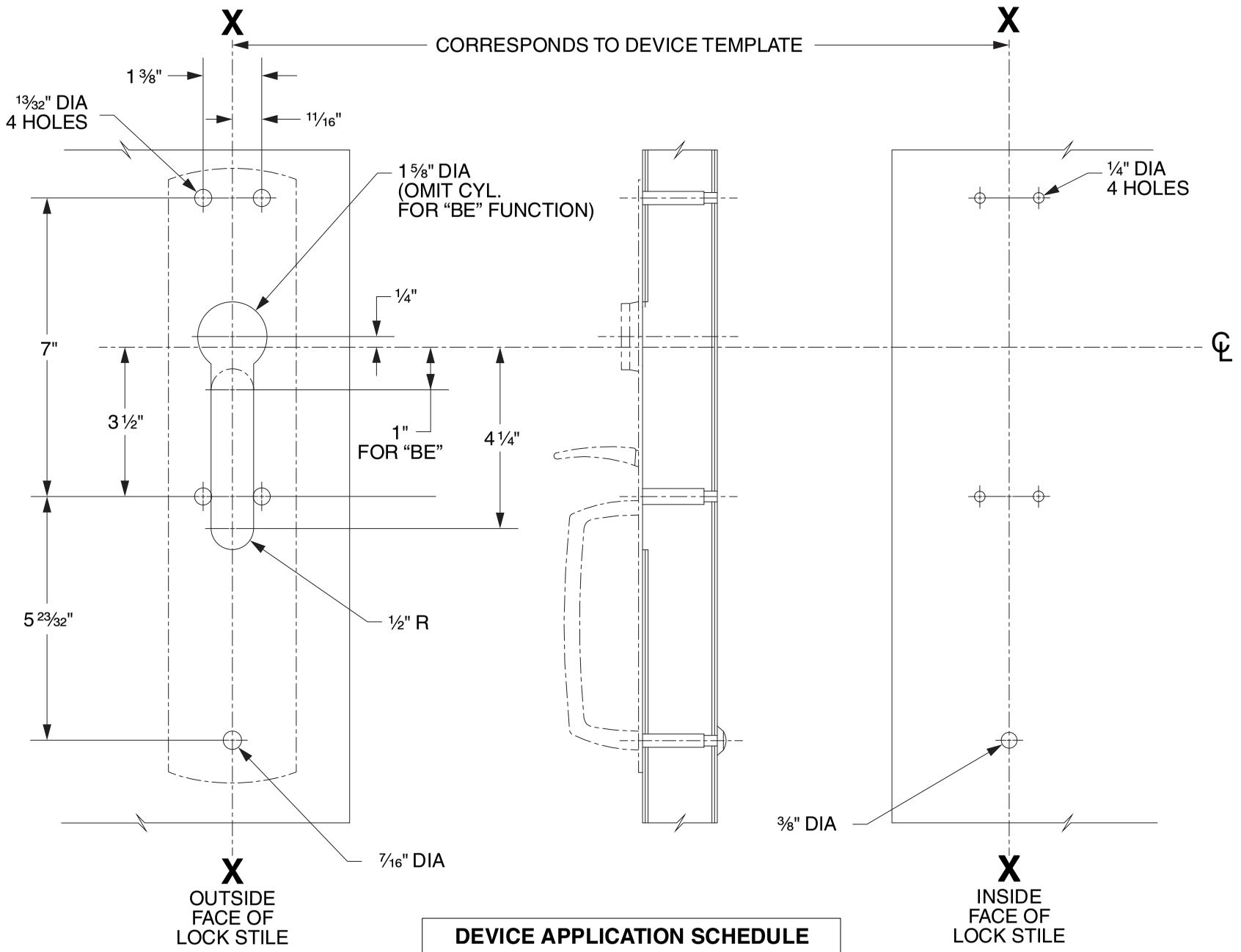

DEVICE APPLICATION SCHEDULE
98/99 SERIES RIM DEVICE
9827/9927 SERIES DEVICE
9847/9947 SERIES DEVICE
9849/9949 SERIES DEVICE

LHR SHOWN
RHR OPPOSITE

VON DUPRIN®

TEMPLATE NUMBER: 20265_C

DATE: 05-31-13

RIM APPLICATION

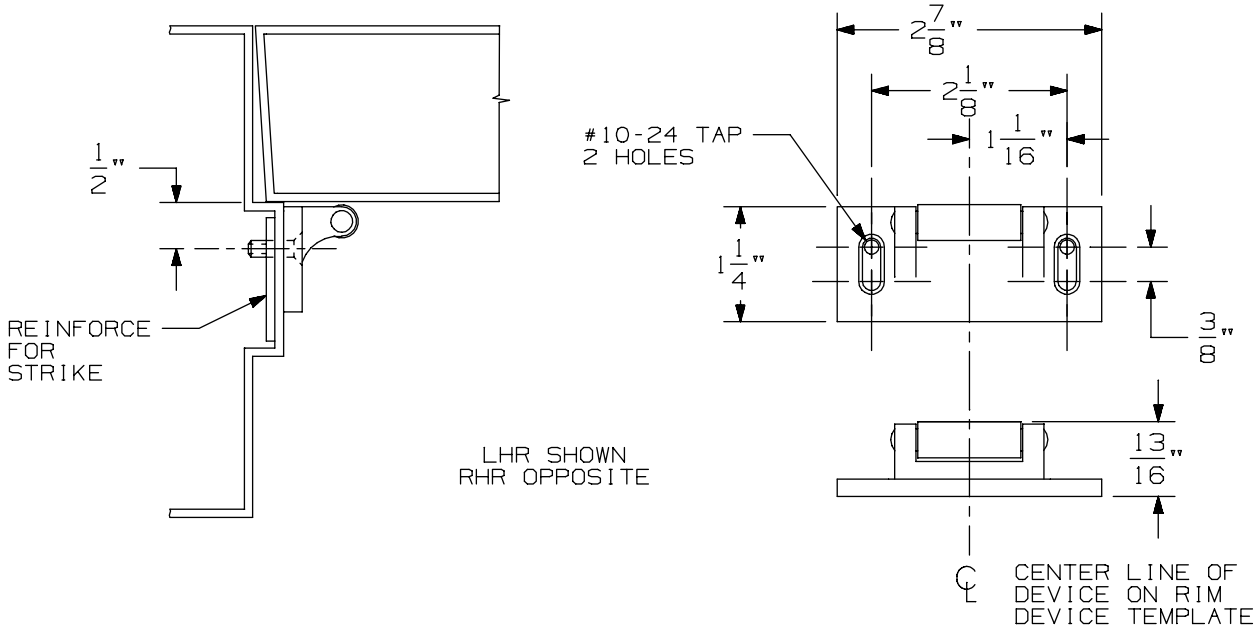

VERTICAL APPLICATION

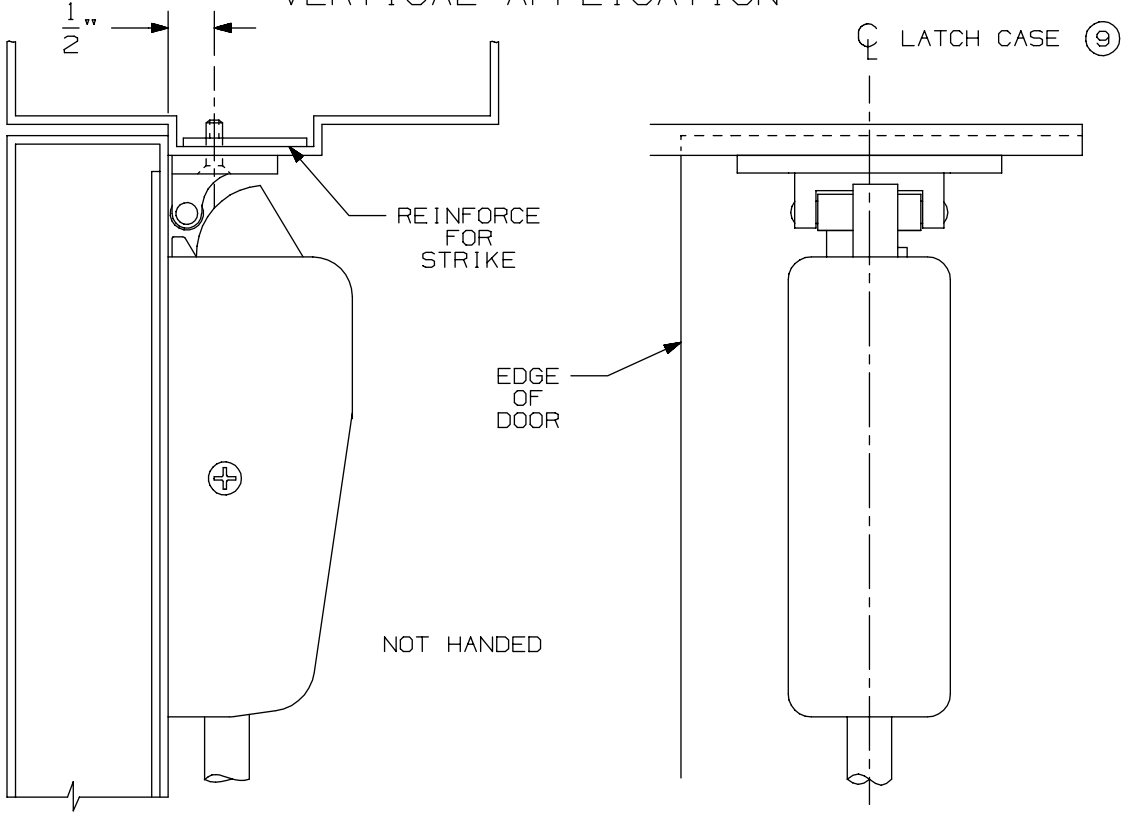

NOTE: LATCH CASE MOUNTING HOLES TO BE PREPARED AT INSTALLATION ON DOOR.

299 & 299F Strike

VON DUPRIN®

NOTES: SEE MASTER SHEET #10001 FOR SUGGESTED REINFORCING

TEMPLATE NUMBER: 30039_a

DATE: 05-23-13

APPLICATION	PREPARATION
SURFACE APPLICATION	#10-24 TAP 4 PLACES
990 TRIM APPLICATION OR SEX BOLT APPLICATION (SEE NOTE 1)	1/4' DIA THIS SIDE 13/32" DIA OPPOSITE SIDE - 4 PLACES

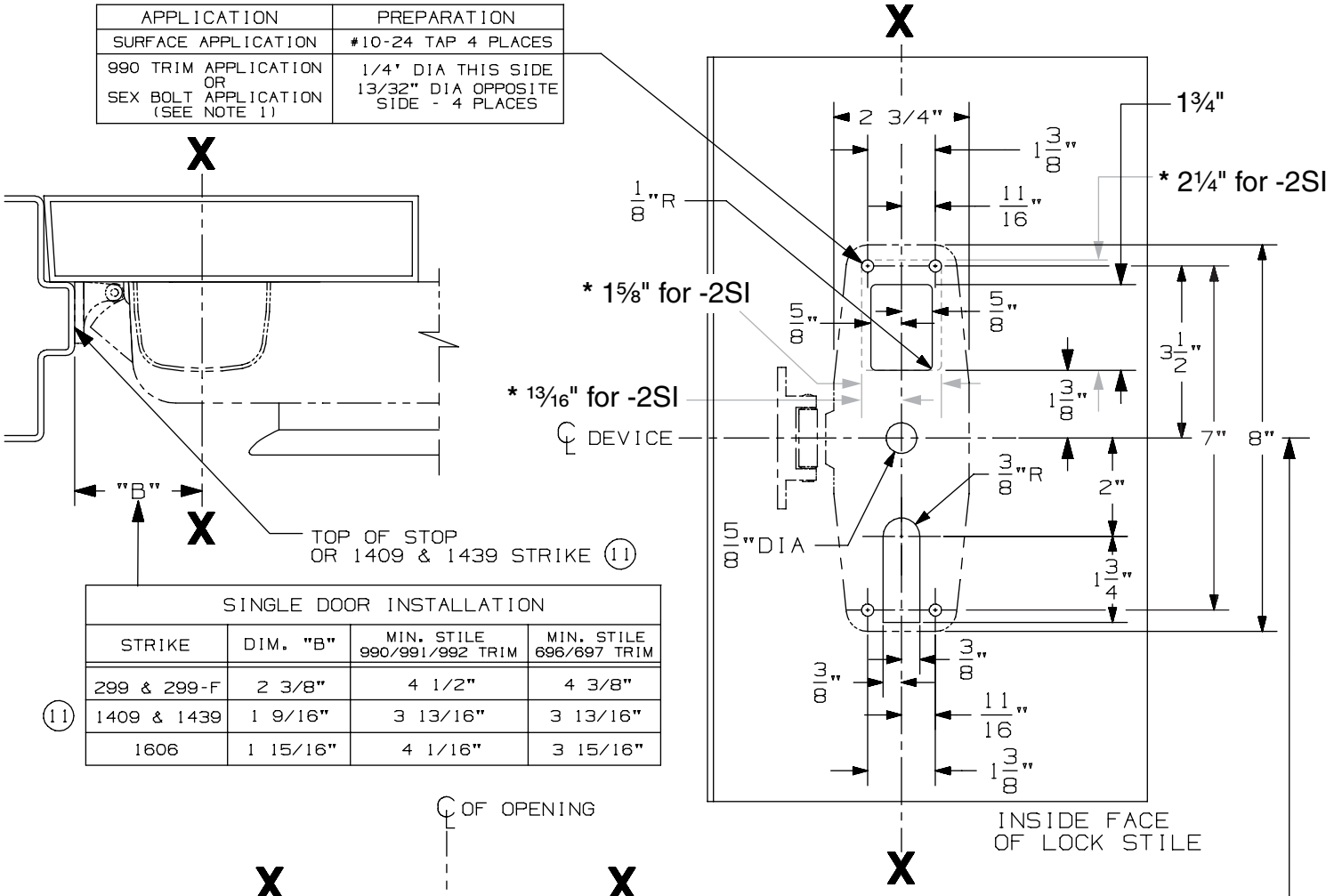

SINGLE DOOR INSTALLATION			
STRIKE	DIM. "B"	MIN. STILE 990/991/992 TRIM	MIN. STILE 696/697 TRIM
299 & 299-F	2 3/8"	4 1/2"	4 3/8"
(11) 1409 & 1439	1 9/16"	3 13/16"	3 13/16"
1606	1 15/16"	4 1/16"	3 15/16"

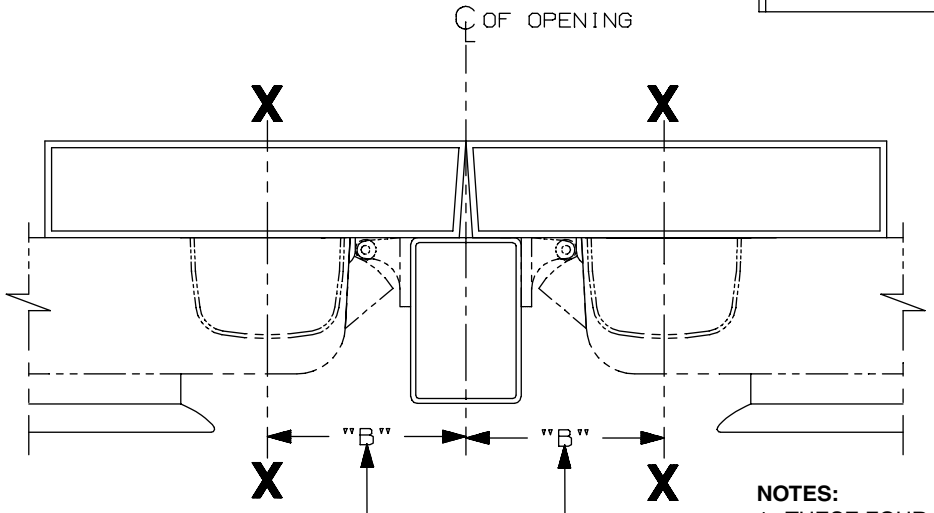

SINGLE DOOR OPENING
39 13/16" TO FINISHED FLOOR

DOUBLE DOOR OPENING
WITH VON DUPRIN MULLION
39 11/16"

LHR APLICATION SHOWN
RHR APPLICATION OPPOSITE

DOUBLE DOOR INSTALLATION WITH VON DUPRIN MULLIONS				
MULLION	STRIKE	DIM. "B"	MIN. STILE 990/991/992 TRIM	MIN. STILE 696/697 TRIM
(11) 4954/9954	299/299-F	3 3/8"	4 7/8"	4 3/4"
5654	299	2 15/16"	4 3/8"	4 1/4"
5754	1408	2 1/8"	3 13/16"	3 13/16"
1654	1606	2 15/16"	4 3/8"	4 1/4"

NOTES:

1. THESE FOUR HOLES TO BE PREPARED FOR SURFACE APPLICATION WHEN USING 696/697 TRIM. DO NOT PREPARE FOR SEX BOLTS.
2. FOR STOCK HOLLOW METAL DOORS, SEE TEMPLATE 10309 FOR TYPE "161" CUTOUT AND 10315 FOR TYPE "86" CUTOUT.
3. GLASS BEAD KIT AVAILABLE WHEN REQUIRED.
4. FOR OUTSIDE TRIM PREPARATION, WHEN REQUIRED, SEE TRIM TEMPLATE.
5. IT IS RECOMMENDED THE MOUNTING HOLES BE PREPARED IN THE FIELD.
6. 9954 W/299-F FOR HURRICANE APPLICATIONS (11) ONLY.
* 7. FOR THE -2SI MODEL, HEIGHT OF CUTOUT INCREASES TO 2¼" AND WIDTH INCREASES TO 1⅝".

98/99-2 & 98/99-F-2 TP, K, & L Series Double Cylinder Rim Device

VON DUPRIN®

NOTES: SEE MASTER SHEET #10001 FOR SUGGESTED REINFORCING

TEMPLATE NUMBER: 10322_c

DATE: 10-21-13

990 TP & 990 TP-BE TRIM

NOTES: SEE MASTER SHEET #10001 FOR SUGGESTED REINFORCING

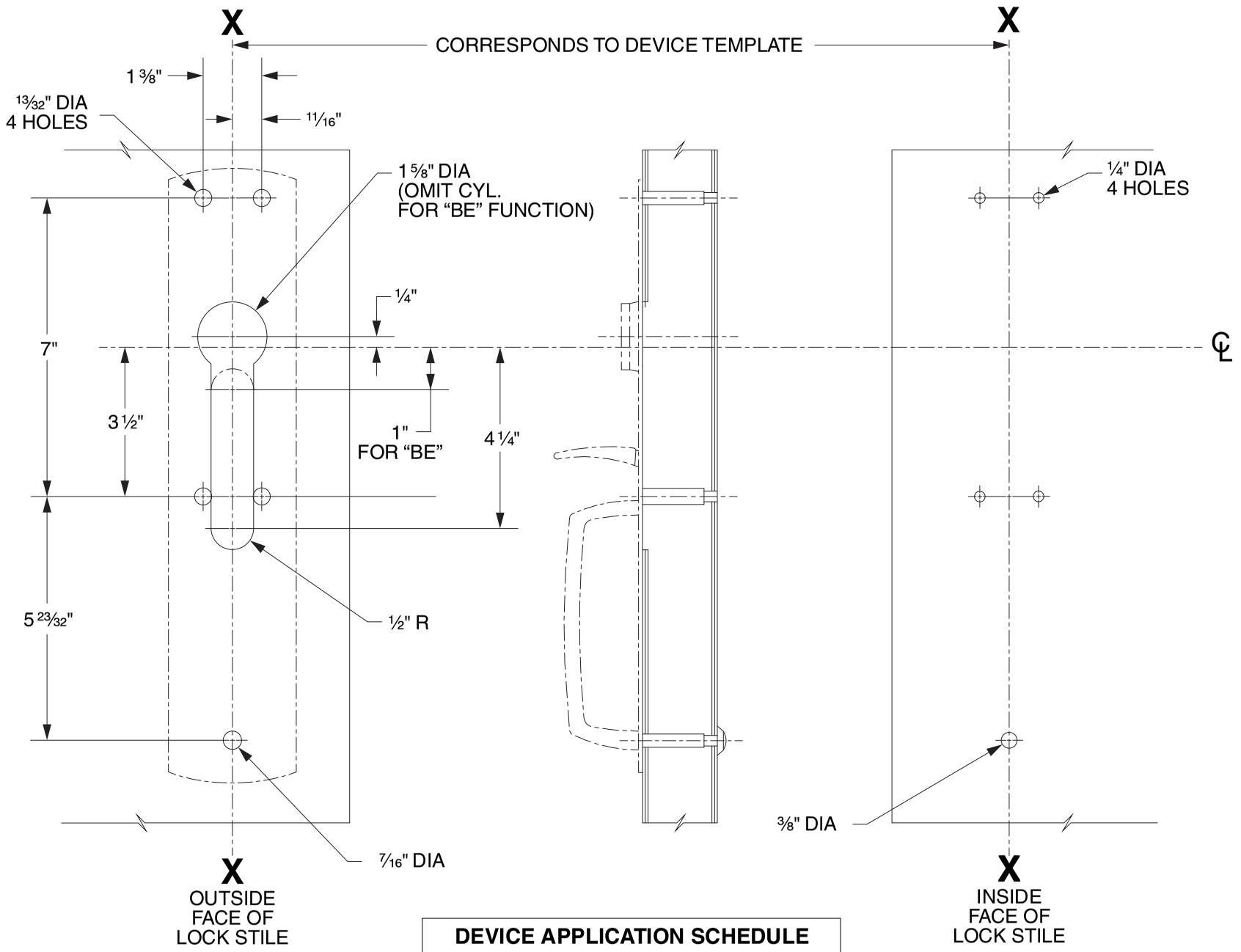

DEVICE APPLICATION SCHEDULE
98/99 SERIES RIM DEVICE
9827/9927 SERIES DEVICE
9847/9947 SERIES DEVICE
9849/9949 SERIES DEVICE

LHR SHOWN
RHR OPPOSITE

VON DUPRIN®

TEMPLATE NUMBER: 20265_C

DATE: 05-31-13

RIM APPLICATION

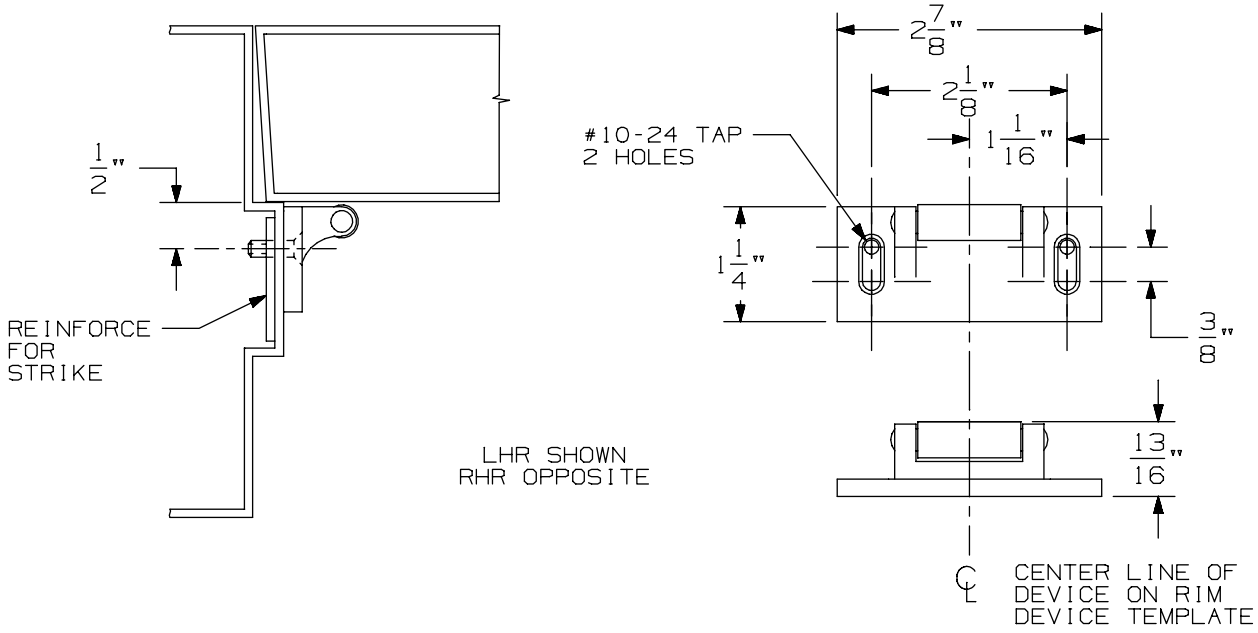

VERTICAL APPLICATION

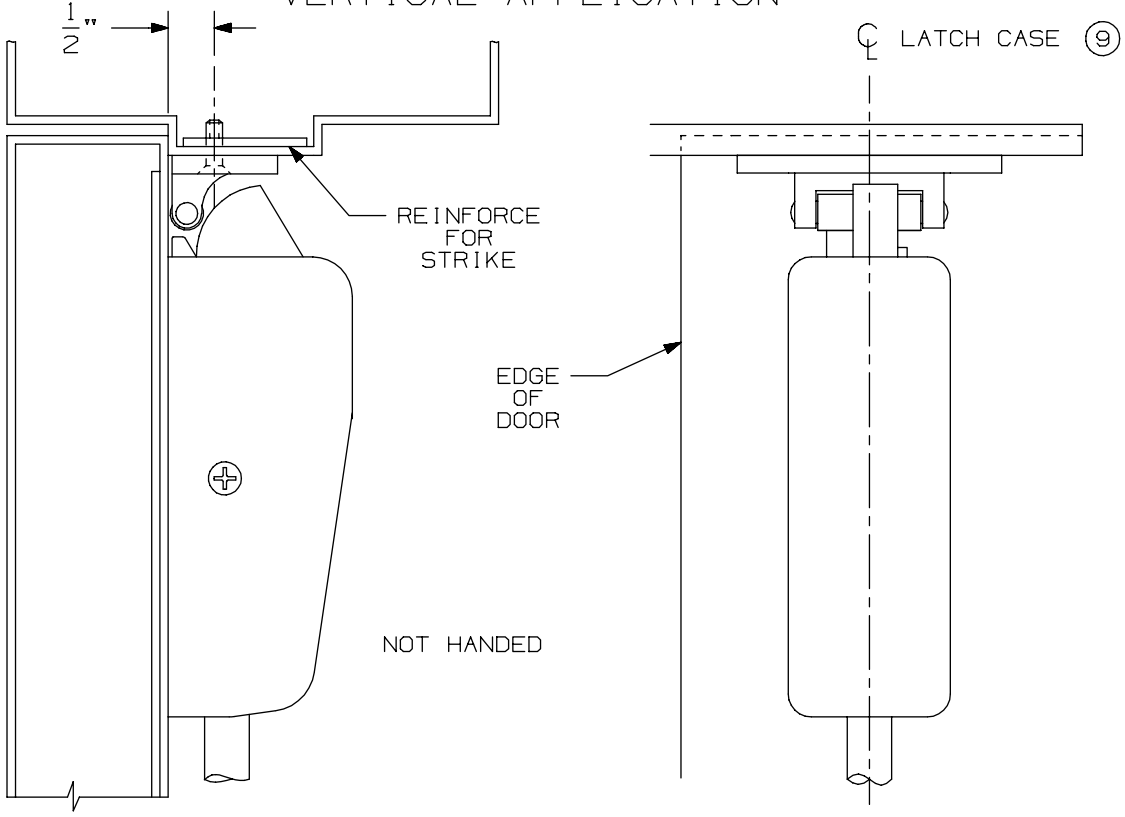

NOTE: LATCH CASE MOUNTING HOLES TO BE PREPARED AT INSTALLATION ON DOOR.

299 & 299F Strike

VON DUPRIN®

NOTES: SEE MASTER SHEET #10001 FOR SUGGESTED REINFORCING

TEMPLATE NUMBER: 30039_a

DATE: 05-23-13

98 / 99 Series Exit Devices - 9827/9927 Surface Vertical Rod (Standard, CD, EL, LX, RX & SS)

DEVICE APPLICATION SCHEDULE		
INSTALLATION	MIN. STILE	BACKSET
TWO VERT. ROD DEVICES	3 11/16"	2 3/16"
VER. ROD & MORTISE DEVICE	SEE TEMP. 10305	2 3/4"
SINGLE DOOR	3 11/16"	2 3/16"

APPLICATION	PREPARATION
SURFACE APPLICATION	#10-24 TAP-4 PLACES
990 TRIM APPLICATION SEX BOLT APPLICATION (SEE NOTE 1)	1/4" DIA. THIS SIDE 13/32" DIA. OPPOSITE SIDE - 4 PLACES

NOTES:

1. THESE FOUR HOLES TO BE PREPARED FOR SURFACE APPLICATION WHEN USING 696/697 TRIM. DO NOT PREPARE FOR SEX BOLTS.
2. FOR STOCK HOLLOW METAL DOORS SEE TEMPLATE NO. 10310.
3. LATCH CASE PREPARATION TO BE MADE AT INSTALLATION ON DOOR.
4. IT IS RECOMMENDED THE MOUNTING HOLES BE PREPARED IN THE FIELD.
5. FOR OUTSIDE TRIM PREPARATION, WHEN REQUIRED, SEE TRIM TEMPLATE.
6. GLASS BEAD KIT AVAILABLE WHEN REQUIRED.
7. LHR APPLICATION SHOWN, RHR APPLICATION OPPOSITE
8. BACKSET MAY VARY WHEN USED WITH COORDINATOR.

RECOMMENDED DOOR UNDERCUT IS 1/4" FROM FINISHED FLOOR (PANIC & FIRE) OR 1/8" FROM THRESHOLD (PANIC ONLY).

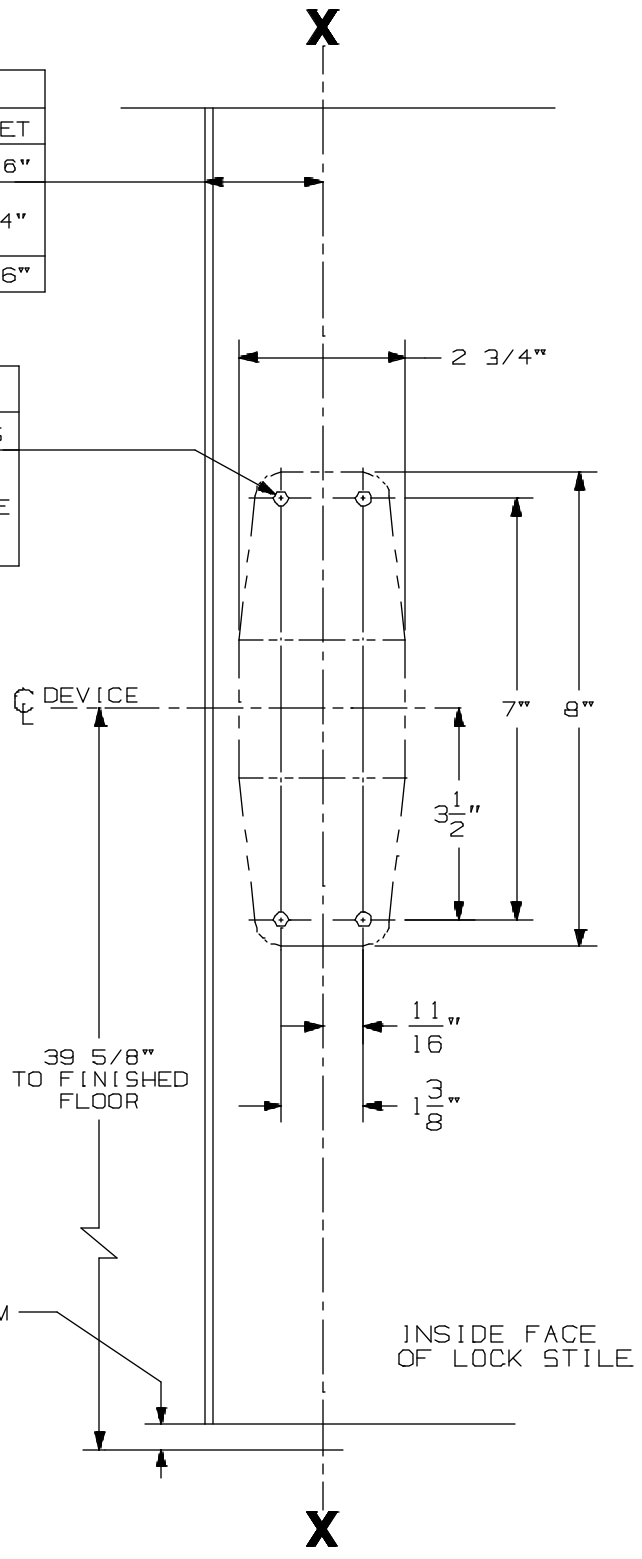

9827/9927 & 9827-F/9927-F EO & DT Series Vertical Rod Devices

VON DUPRIN®

NOTES: SEE MASTER SHEET #10001 FOR SUGGESTED REINFORCING

TEMPLATE NUMBER: 10303_a

DATE: 06-07-13

RIM APPLICATION

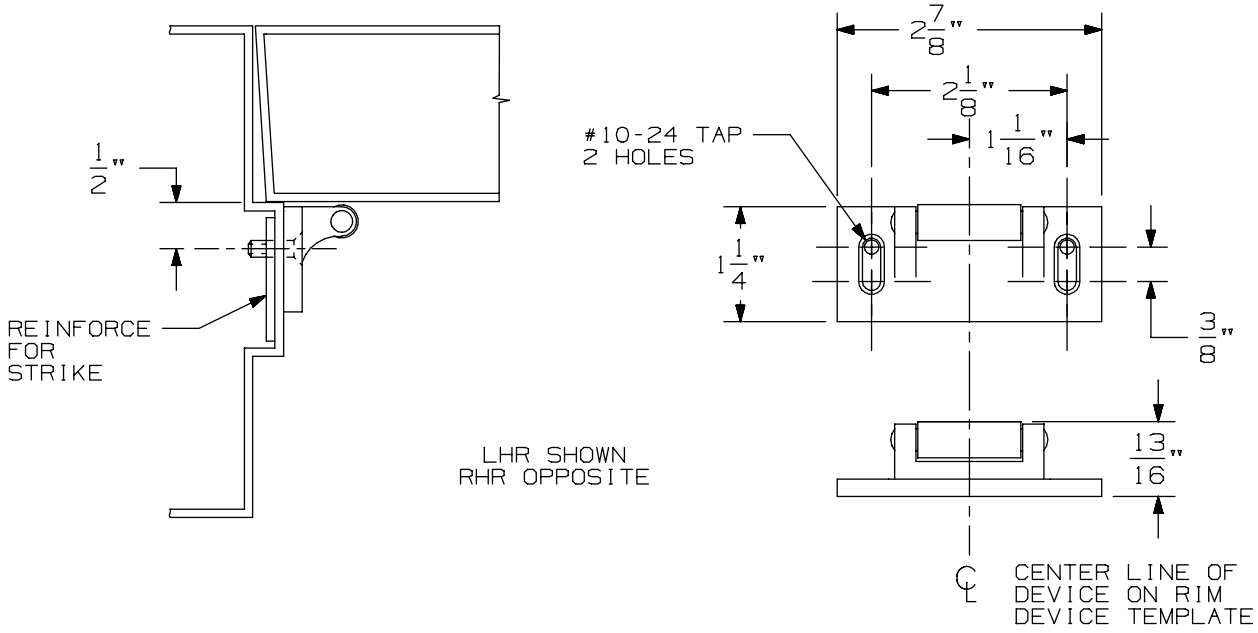

VERTICAL APPLICATION

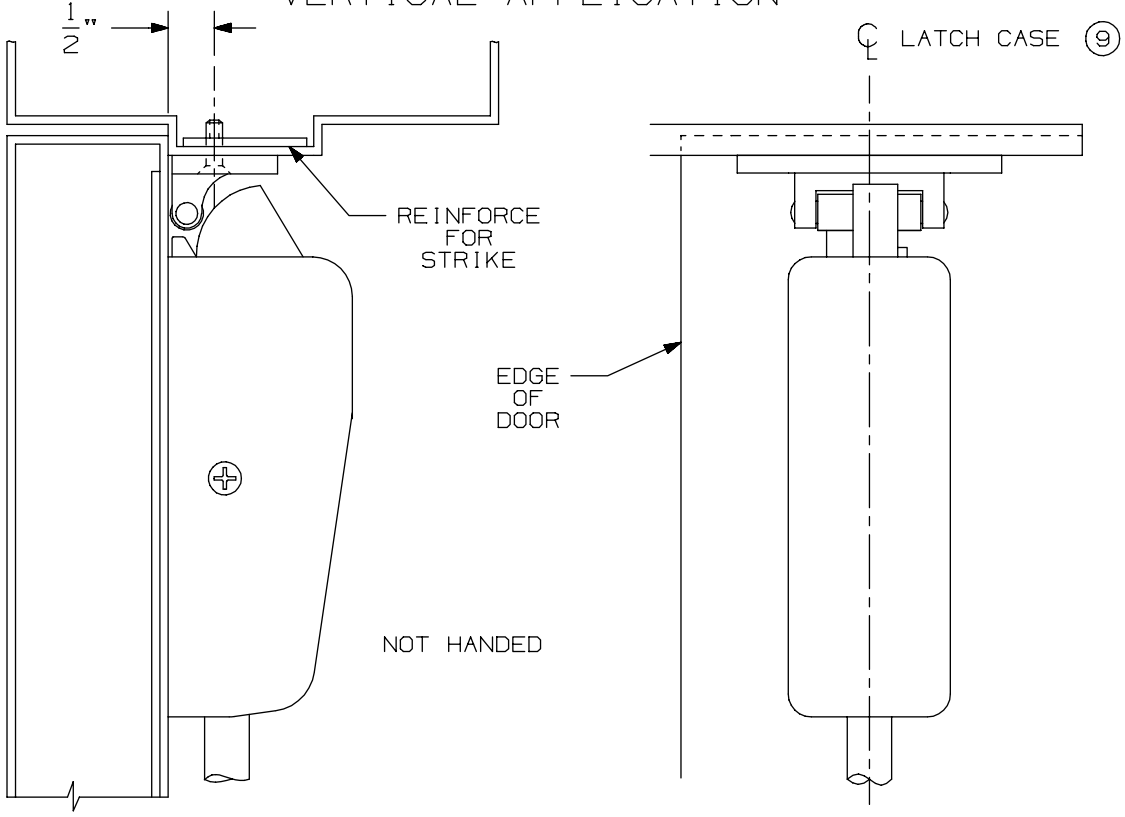

NOTE: LATCH CASE MOUNTING HOLES TO BE PREPARED AT INSTALLATION ON DOOR.

299 & 299F Strike

VON DUPRIN®

NOTES: SEE MASTER SHEET #10001 FOR SUGGESTED REINFORCING

TEMPLATE NUMBER: 30039_a

DATE: 05-23-13

DEVICE APPLICATION SCHEDULE		
INSTALLATION	MIN. STILE	BACKSET
TWO VERT. ROD DEVICES	3 11/16"	2 3/16"
VER. ROD & MORTISE DEVICE	SEE TEMP. 10305	2 3/4"
SINGLE DOOR	3 11/16"	2 3/16"

APPLICATION	PREPARATION
SURFACE APPLICATION	#10-24 TAP-4 PLACES
990 TRIM APPLICATION SEX BOLT APPLICATION (SEE NOTE 1)	1/4" DIA. THIS SIDE 13/32" DIA. OPPOSITE SIDE - 4 PLACES

NOTES:

1. THESE FOUR HOLES TO BE PREPARED FOR SURFACE APPLICATION WHEN USING 696/697 TRIM. DO NOT PREPARE FOR SEX BOLTS.
2. FOR STOCK HOLLOW METAL DOORS SEE TEMPLATE NO. 10310.
3. LATCH CASE PREPARATION TO BE MADE AT INSTALLATION ON DOOR.
4. IT IS RECOMMENDED THE MOUNTING HOLES BE PREPARED IN THE FIELD.
5. FOR OUTSIDE TRIM PREPARATION, WHEN REQUIRED, SEE TRIM TEMPLATE.
6. GLASS BEAD KIT AVAILABLE WHEN REQUIRED.
7. LHR APPLICATION SHOWN, RHR APPLICATION OPPOSITE
8. BACKSET MAY VARY WHEN USED WITH COORDINATOR.

RECOMMENDED DOOR UNDERCUT IS 1/4" FROM FINISHED FLOOR (PANIC & FIRE) OR 1/8" FROM THRESHOLD (PANIC ONLY).

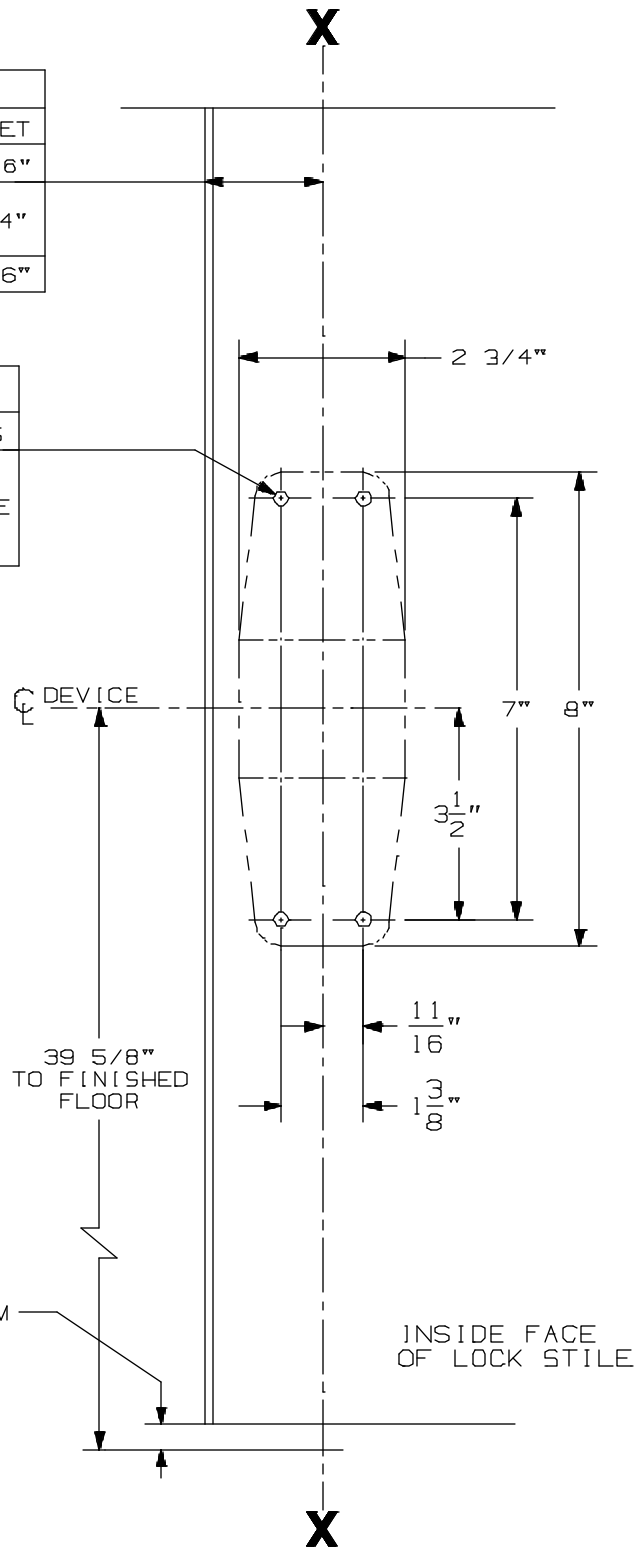

9827/9927 & 9827-F/9927-F EO & DT Series Vertical Rod Devices

VON DUPRIN®

NOTES: SEE MASTER SHEET #10001 FOR SUGGESTED REINFORCING

TEMPLATE NUMBER: 10303_a

DATE: 06-07-13

990 DT TRIM

NOTES: SEE MASTER SHEET #10001 FOR SUGGESTED REINFORCING

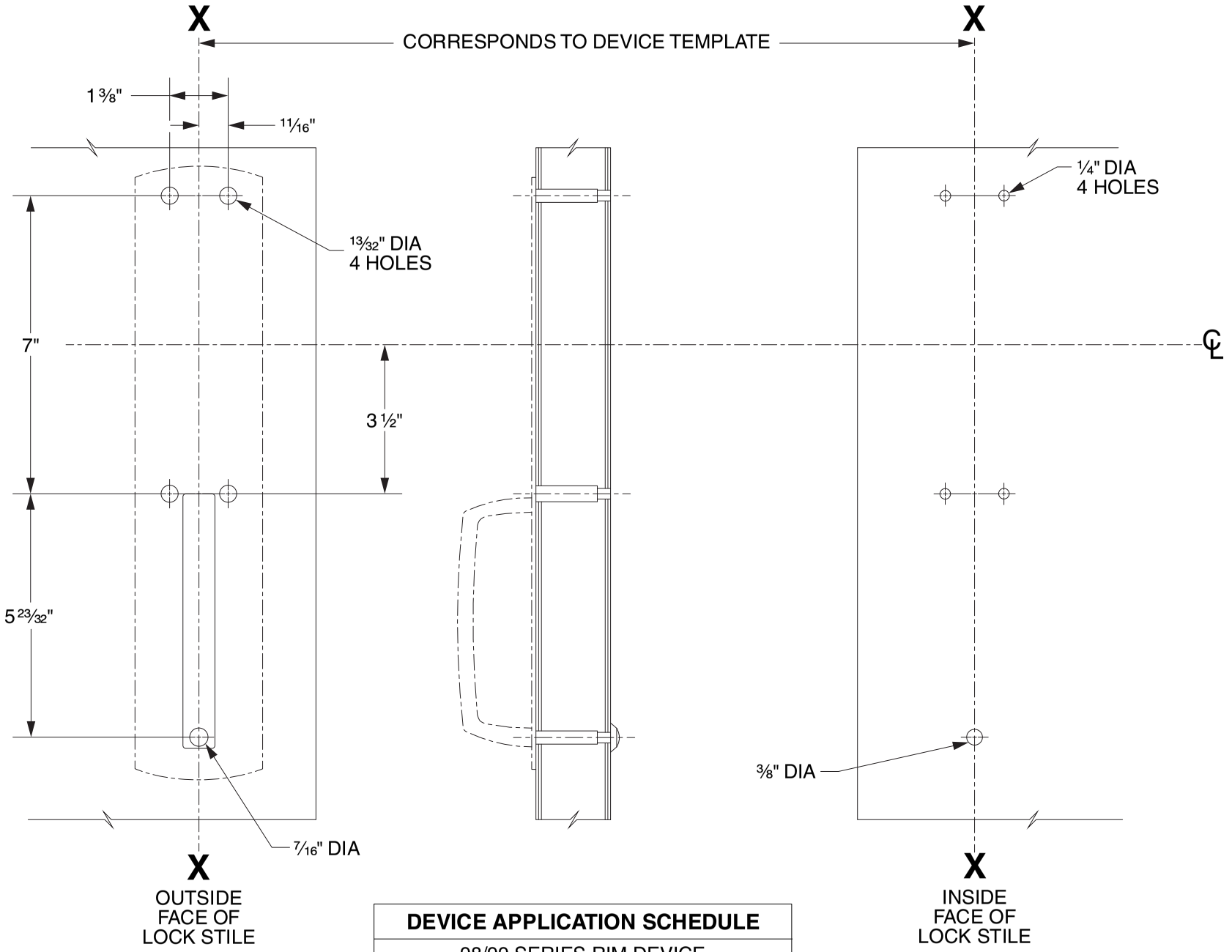

DEVICE APPLICATION SCHEDULE
98/99 SERIES RIM DEVICE
9827/9927 SERIES DEVICE
9847/9947 SERIES DEVICE
9849/9949 SERIES DEVICE
9875/9975 SERIES DEVICE

LHR SHOWN
RHR OPPOSITE

VON DUPRIN®

TEMPLATE NUMBER: 20268_C

DATE: 05-31-13

RIM APPLICATION

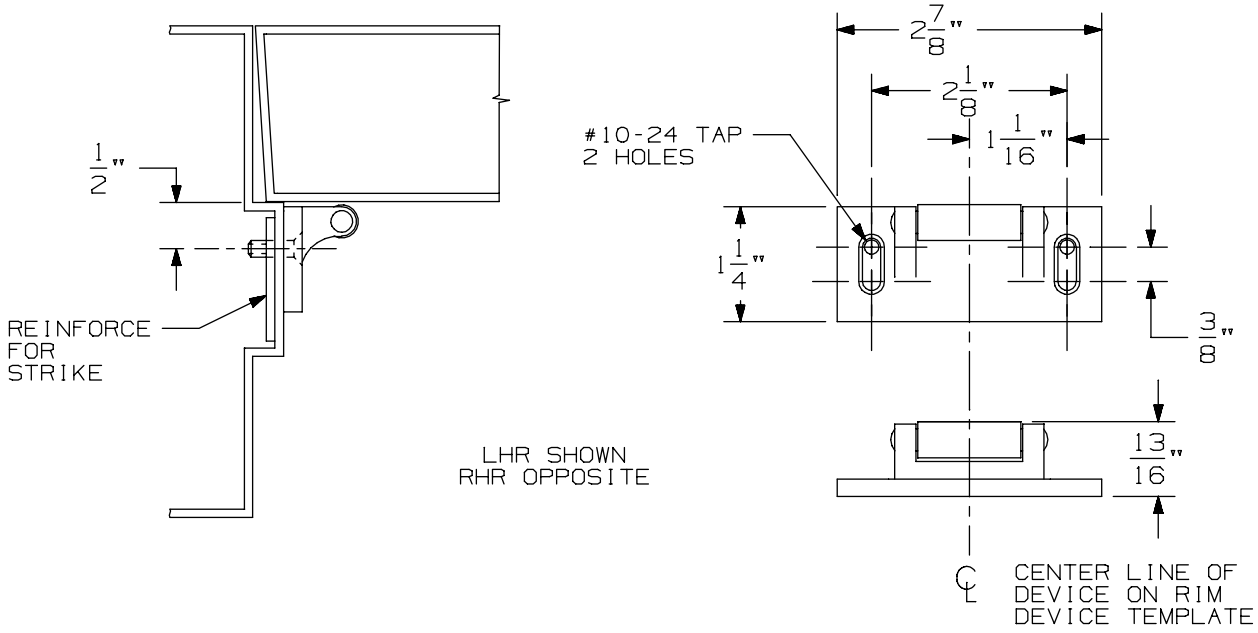

VERTICAL APPLICATION

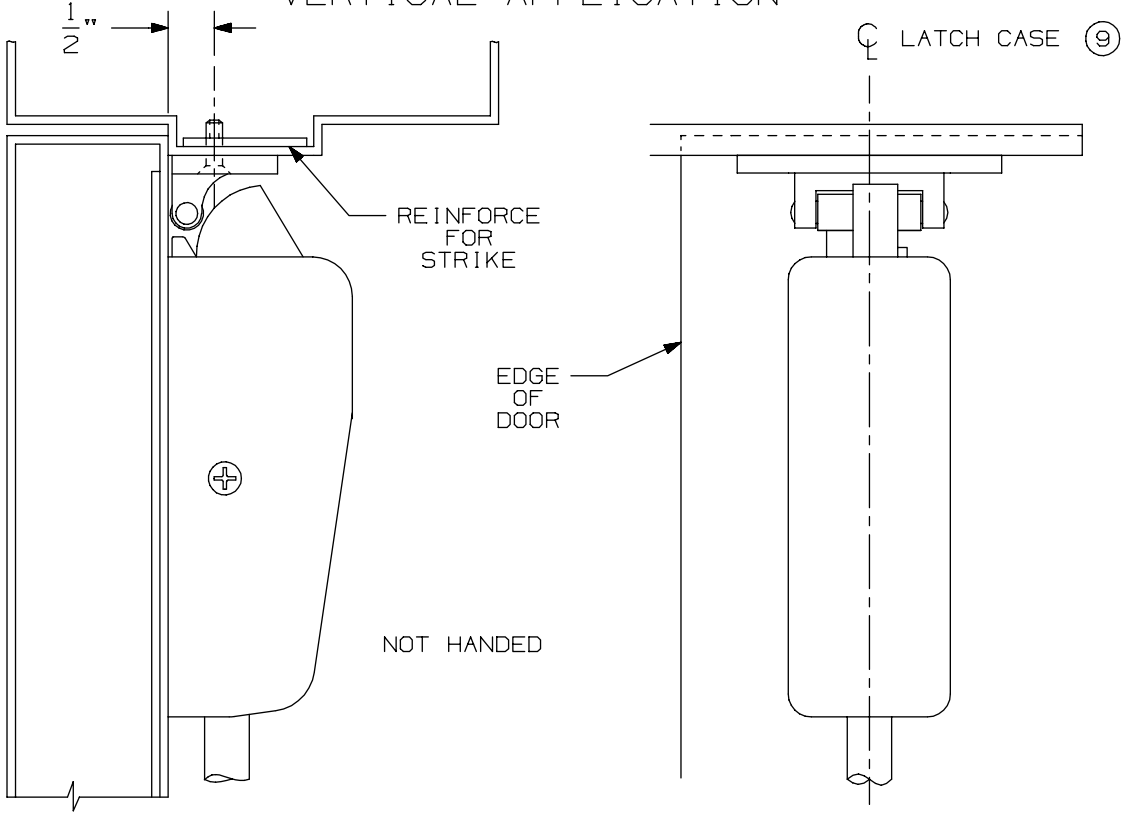

NOTE: LATCH CASE MOUNTING HOLES TO BE PREPARED AT INSTALLATION ON DOOR.

299 & 299F Strike

VON DUPRIN®

NOTES: SEE MASTER SHEET #10001 FOR SUGGESTED REINFORCING

TEMPLATE NUMBER: 30039_a

DATE: 05-23-13

DEVICE APPLICATION SCHEDULE		
INSTALLATION	MIN. STILE	BACKSET
TWO VERT. ROD DEVICES	3 11/16"	2 3/16"
VERT. ROD & MORTISE DEVICE	SEE TEMP. 10305	2 3/4"
SINGLE DOOR	3 11/16"	2 3/16"

APPLICATION	PREPARATION
990 TRIM APPLICATION SEX BOLT APPLICATION (SEE NOTE 1)	1/4" DIA. THIS SIDE 13/32" DIA. OPPOSITE SIDE - 4 PLACES

NOTES:

1. THESE FOUR HOLES TO BE PREPARED FOR SURFACE APPLICATION (#10-24 TAP) WHEN USING 696/697 TRIM. DO NOT PREPARE FOR SEX BOLTS.
2. FOR STOCK HOLLOW METAL DOORS SEE TEMPLATE NO. 10311.
3. LATCH CASE PREPARATION TO BE MADE AT INSTALLATION ON DOOR.
4. IT IS RECOMMENDED THE MOUNTING HOLES BE PREPARED IN THE FIELD.
5. FOR OUTSIDE TRIM PREPARATION, WHEN REQUIRED, SEE TRIM TEMPLATE.
6. GLASS BEAD KIT AVAILABLE WHEN REQUIRED.
7. LHR APPLICATION SHOWN, RHR APPLICATION OPPOSITE.
8. BACKSET MAY VARY WHEN USED WITH COORDINATOR.

RECOMMENDED DOOR UNDERCUT IS 1/4" FROM FINISHED FLOOR (PANIC & FIRE) OR 1/8" FROM THRESHOLD (PANIC ONLY).

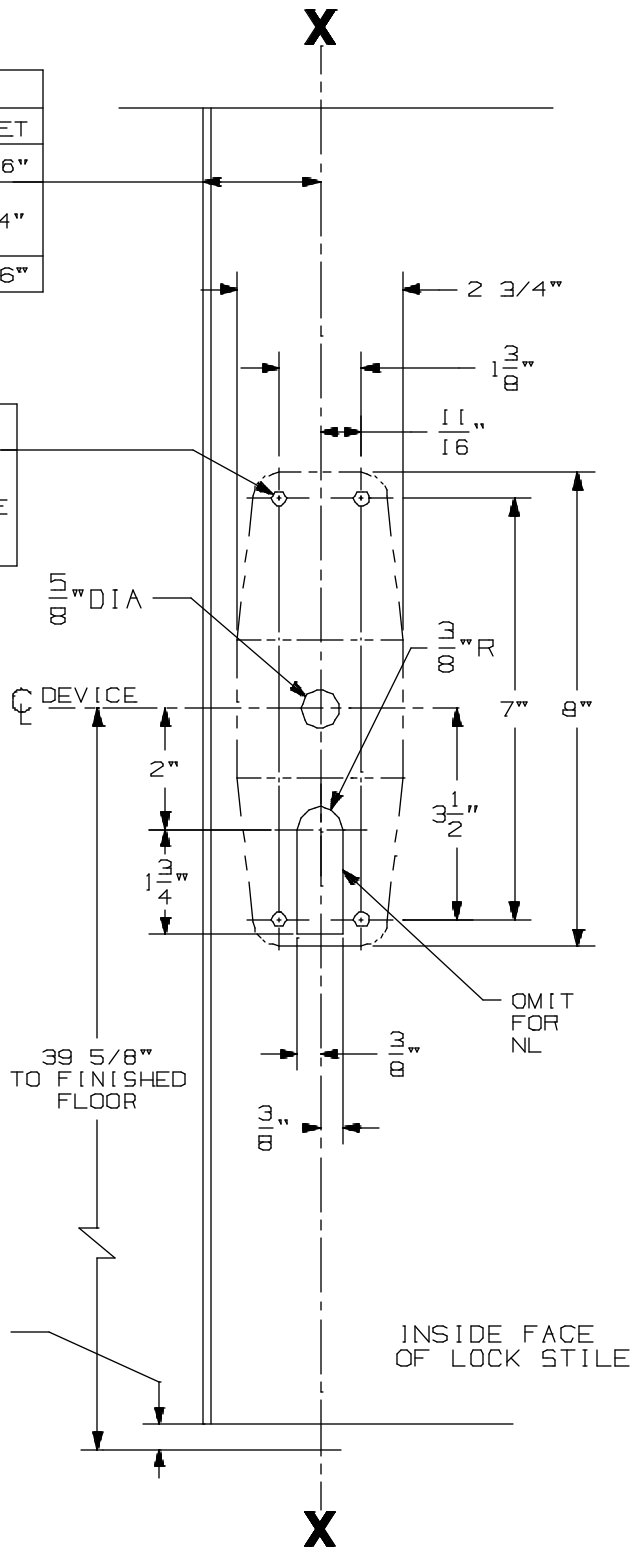

9827/9927 & 9827-F/9927-F NL, TP, K, & L Series Vertical Rod Devices

VON DUPRIN®

NOTES: SEE MASTER SHEET #10001 FOR SUGGESTED REINFORCING

TEMPLATE NUMBER: 10304_a

DATE: 05-21-13

990 NL TRIM

NOTES: SEE MASTER SHEET #10001 FOR SUGGESTED REINFORCING

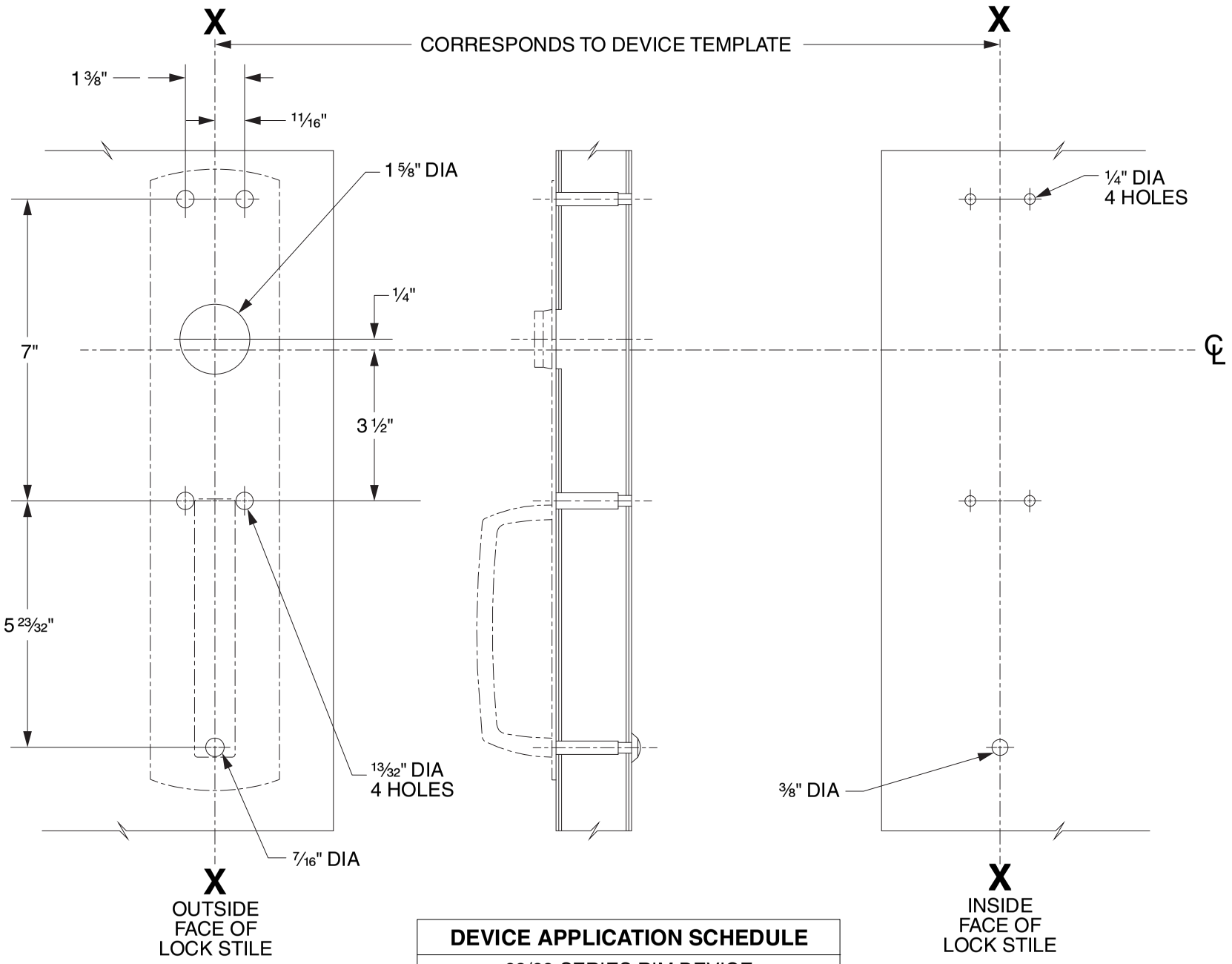

DEVICE APPLICATION SCHEDULE
98/99 SERIES RIM DEVICE
9827/9927 SERIES DEVICE
9847/9947 SERIES DEVICE
9849/9949 SERIES DEVICE

LHR SHOWN
RHR OPPOSITE

VON DUPRIN®

TEMPLATE NUMBER: 20267_C

DATE: 05-31-13

RIM APPLICATION

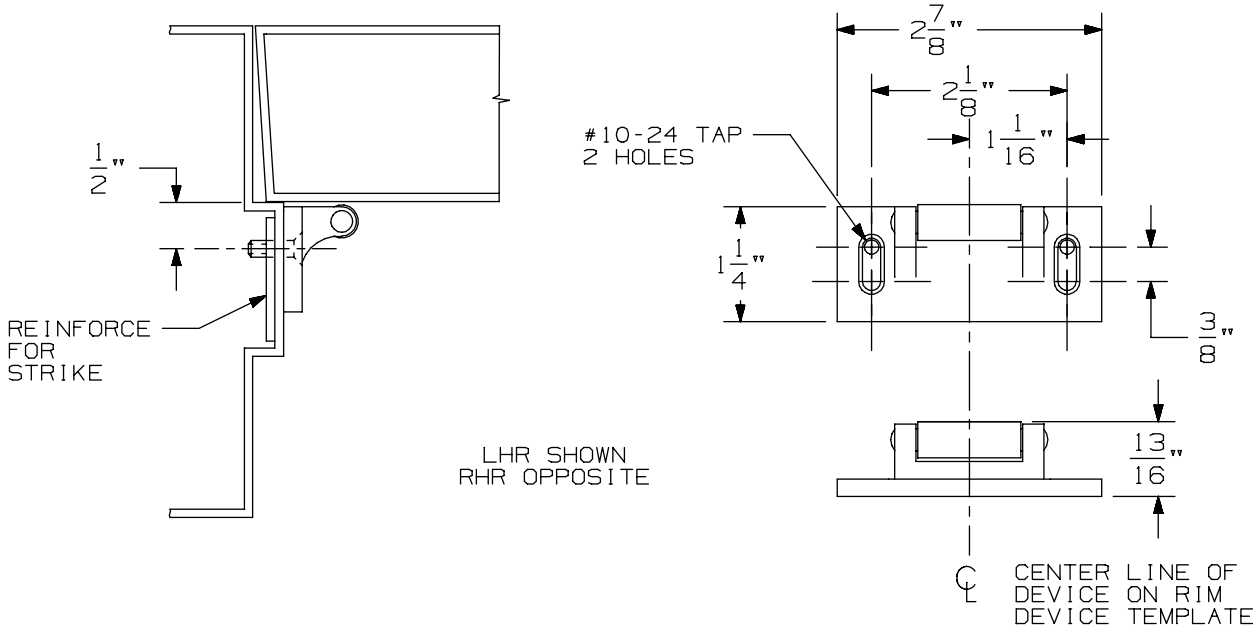

VERTICAL APPLICATION

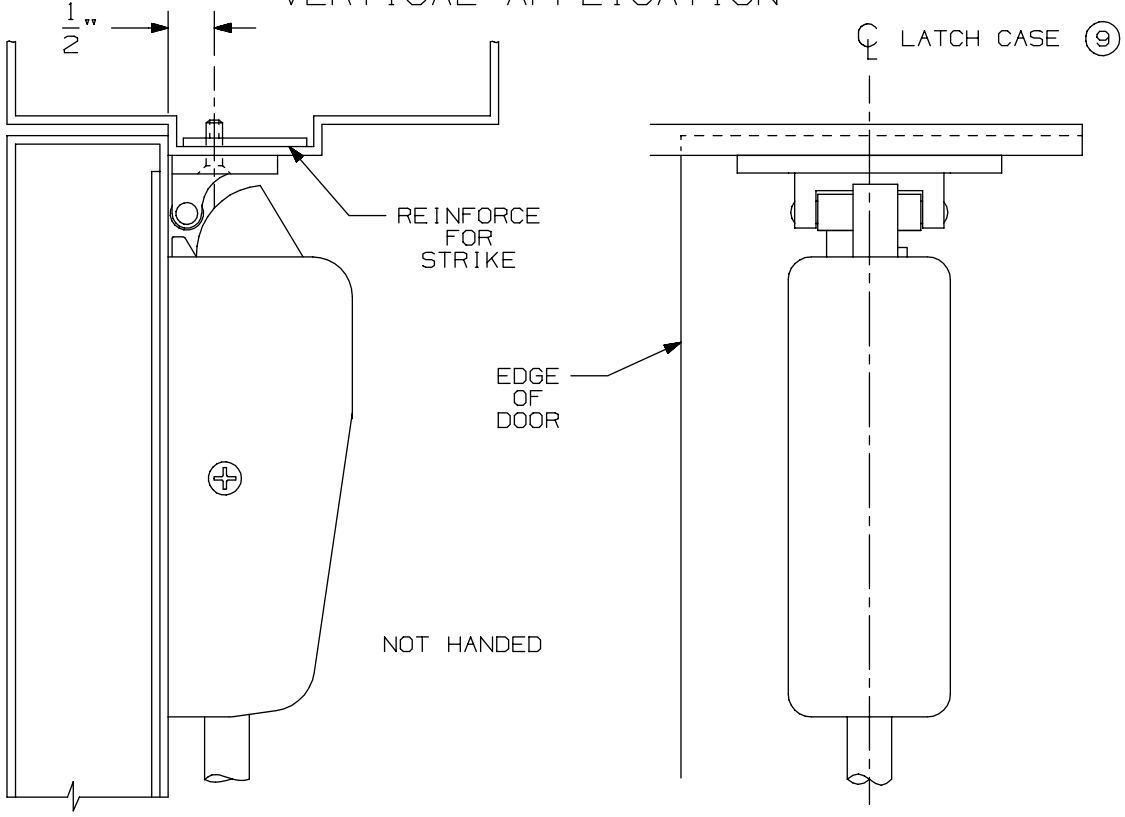

NOTE: LATCH CASE MOUNTING HOLES TO BE PREPARED AT INSTALLATION ON DOOR.

299 & 299F Strike

VON DUPRIN®

NOTES: SEE MASTER SHEET #10001 FOR SUGGESTED REINFORCING

TEMPLATE NUMBER: 30039_a

DATE: 05-23-13

DEVICE APPLICATION SCHEDULE		
INSTALLATION	MIN. STILE	BACKSET
TWO VERT. ROD DEVICES	3 11/16"	2 3/16"
VERT. ROD & MORTISE DEVICE	SEE TEMP. 10305	2 3/4"
SINGLE DOOR	3 11/16"	2 3/16"

APPLICATION	PREPARATION
990 TRIM APPLICATION SEX BOLT APPLICATION (SEE NOTE 1)	1/4" DIA. THIS SIDE 13/32" DIA. OPPOSITE SIDE - 4 PLACES

NOTES:

1. THESE FOUR HOLES TO BE PREPARED FOR SURFACE APPLICATION (#10-24 TAP) WHEN USING 696/697 TRIM. DO NOT PREPARE FOR SEX BOLTS.
2. FOR STOCK HOLLOW METAL DOORS SEE TEMPLATE NO. 10311.
3. LATCH CASE PREPARATION TO BE MADE AT INSTALLATION ON DOOR.
4. IT IS RECOMMENDED THE MOUNTING HOLES BE PREPARED IN THE FIELD.
5. FOR OUTSIDE TRIM PREPARATION, WHEN REQUIRED, SEE TRIM TEMPLATE.
6. GLASS BEAD KIT AVAILABLE WHEN REQUIRED.
7. LHR APPLICATION SHOWN, RHR APPLICATION OPPOSITE.
8. BACKSET MAY VARY WHEN USED WITH COORDINATOR.

RECOMMENDED DOOR UNDERCUT IS 1/4" FROM FINISHED FLOOR (PANIC & FIRE) OR 1/8" FROM THRESHOLD (PANIC ONLY).

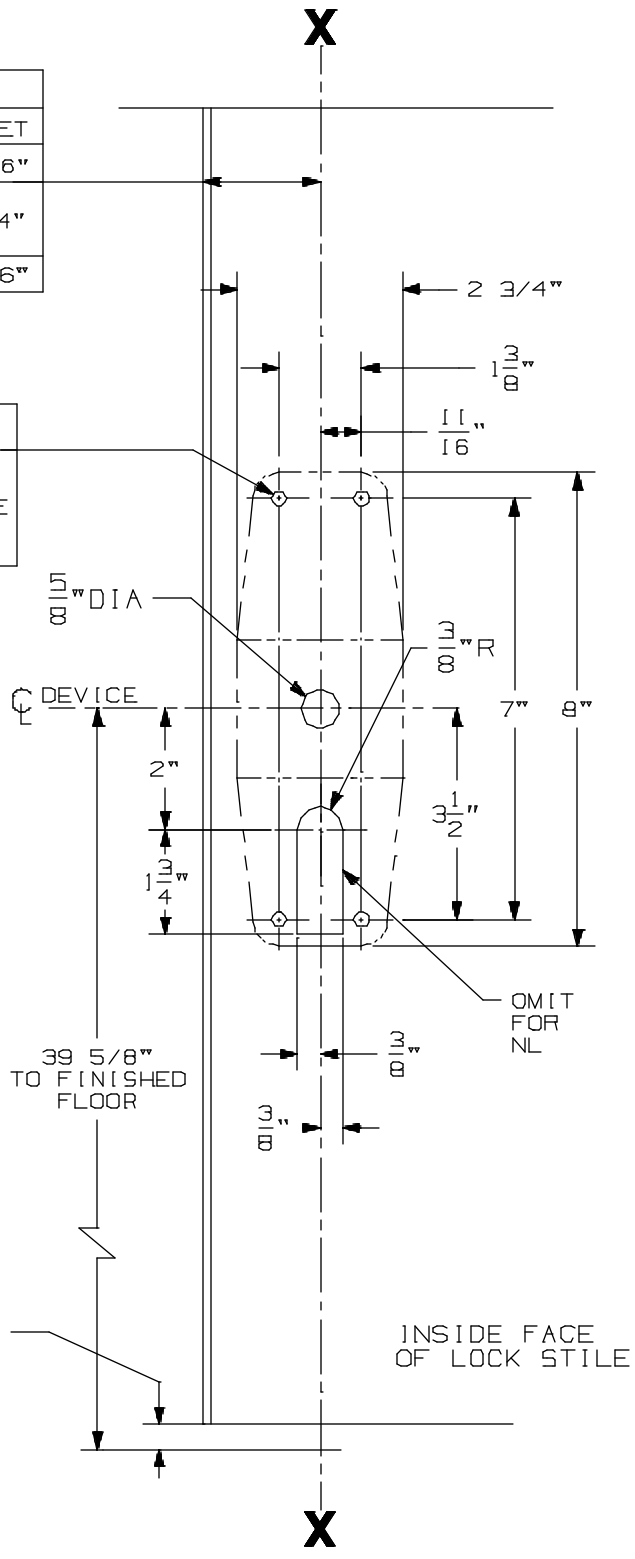

9827/9927 & 9827-F/9927-F NL, TP, K, & L Series Vertical Rod Devices

VON DUPRIN®

NOTES: SEE MASTER SHEET #10001 FOR SUGGESTED REINFORCING

TEMPLATE NUMBER: 10304_a

DATE: 05-21-13

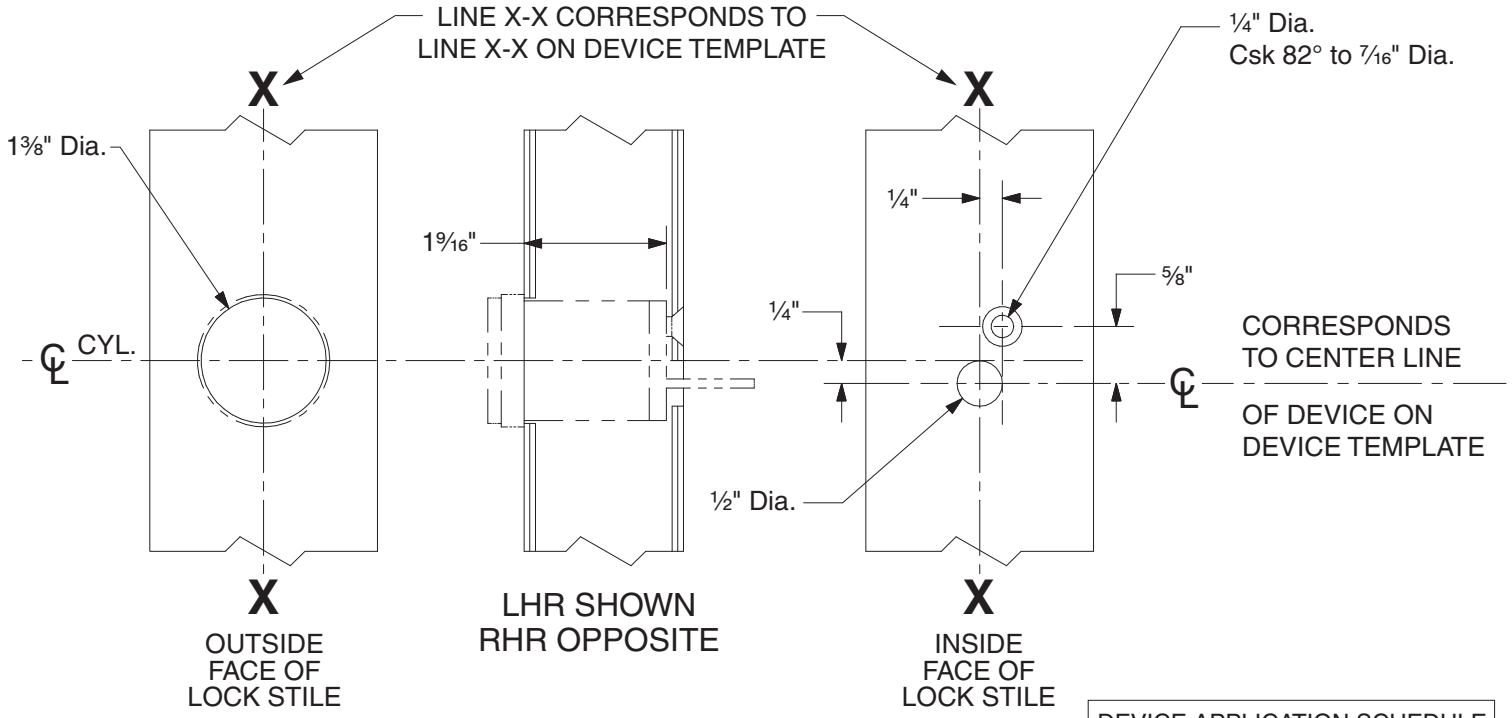

DEVICE APPLICATION SCHEDULE	
98 RIM SERIES	99 RIM SERIES
9827 SERIES	9927 SERIES
9847 SERIES	9947 SERIES
22 RIM SERIES	2227 SERIES

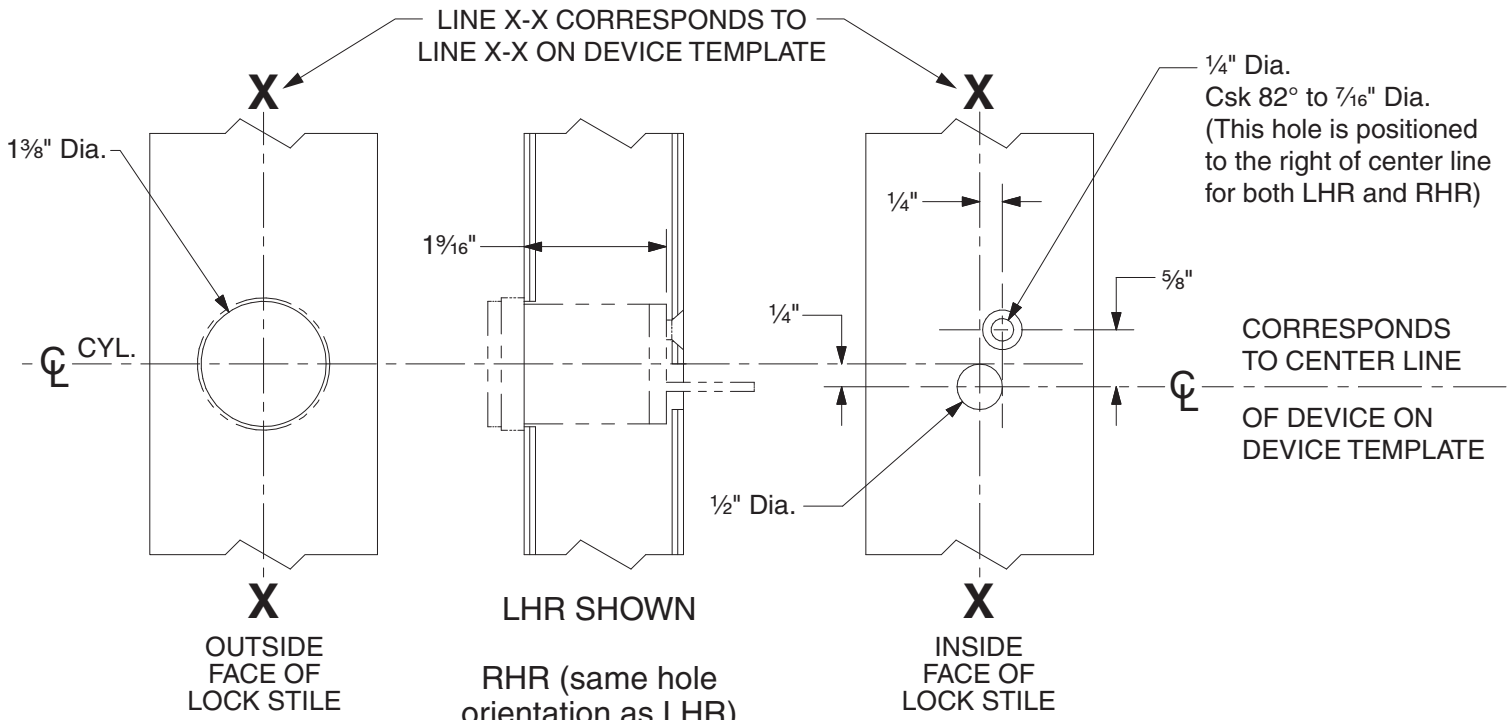

DEVICE APPLICATION SCHEDULE	
9849 SERIES	9949 SERIES

110NL Cylinder Preparation

VON DUPRIN®

NOTES: SEE MASTER SHEET #10001 FOR SUGGESTED REINFORCING

TEMPLATE NUMBER: 40022_c

DATE: 05-28-13

RIM APPLICATION

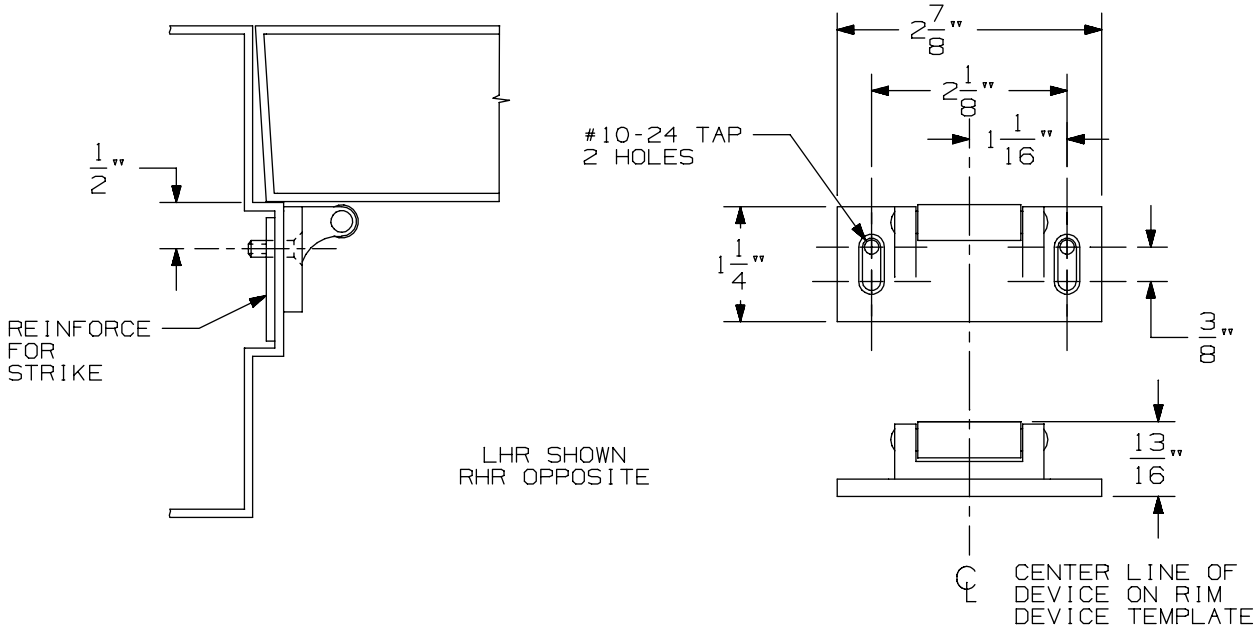

VERTICAL APPLICATION

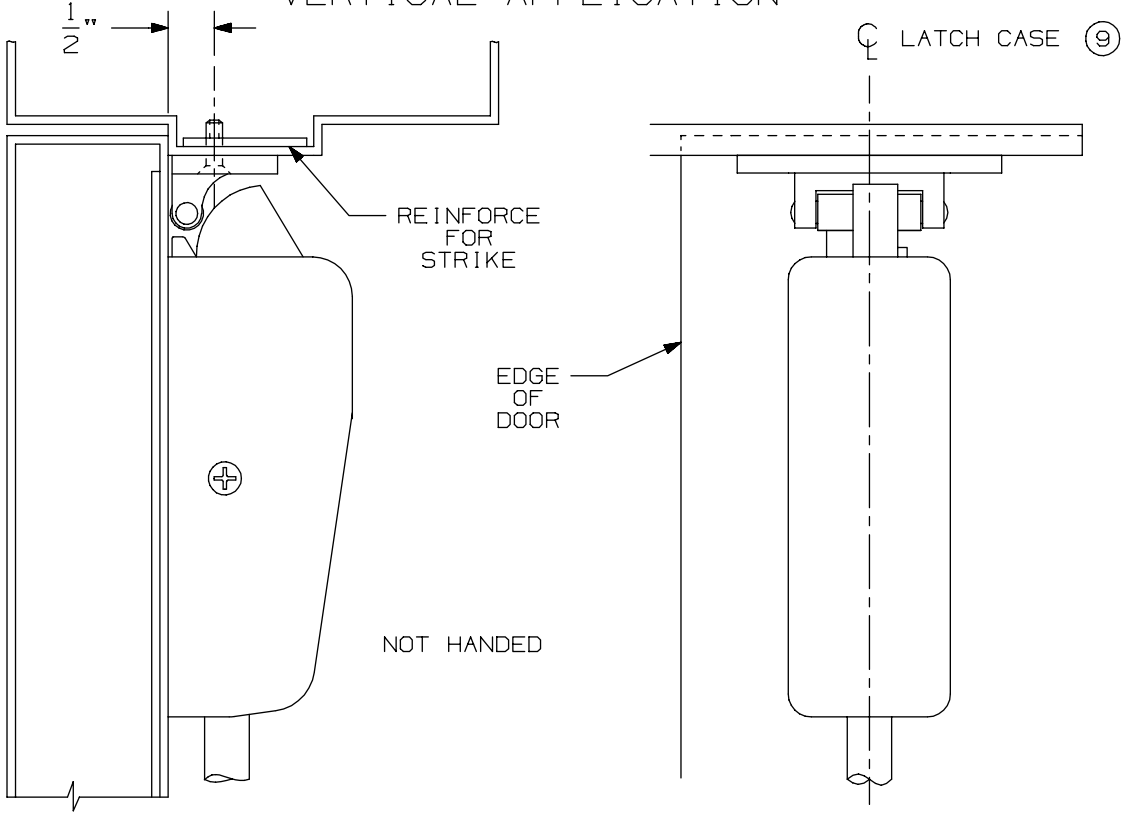

NOTE: LATCH CASE MOUNTING HOLES TO BE PREPARED AT INSTALLATION ON DOOR.

299 & 299F Strike

VON DUPRIN®

NOTES: SEE MASTER SHEET #10001 FOR SUGGESTED REINFORCING

TEMPLATE NUMBER: 30039_a

DATE: 05-23-13

DEVICE APPLICATION SCHEDULE		
INSTALLATION	MIN. STILE	BACKSET
TWO VERT. ROD DEVICES	3 11/16"	2 3/16"
VERT. ROD & MORTISE DEVICE	SEE TEMP. 10305	2 3/4"
SINGLE DOOR	3 11/16"	2 3/16"

APPLICATION	PREPARATION
990 TRIM APPLICATION SEX BOLT APPLICATION (SEE NOTE 1)	1/4" DIA. THIS SIDE 13/32" DIA. OPPOSITE SIDE - 4 PLACES

NOTES:

1. THESE FOUR HOLES TO BE PREPARED FOR SURFACE APPLICATION (#10-24 TAP) WHEN USING 696/697 TRIM. DO NOT PREPARE FOR SEX BOLTS.
2. FOR STOCK HOLLOW METAL DOORS SEE TEMPLATE NO. 10311.
3. LATCH CASE PREPARATION TO BE MADE AT INSTALLATION ON DOOR.
4. IT IS RECOMMENDED THE MOUNTING HOLES BE PREPARED IN THE FIELD.
5. FOR OUTSIDE TRIM PREPARATION, WHEN REQUIRED, SEE TRIM TEMPLATE.
6. GLASS BEAD KIT AVAILABLE WHEN REQUIRED.
7. LHR APPLICATION SHOWN, RHR APPLICATION OPPOSITE.
8. BACKSET MAY VARY WHEN USED WITH COORDINATOR.

RECOMMENDED DOOR UNDERCUT IS 1/4" FROM FINISHED FLOOR (PANIC & FIRE) OR 1/8" FROM THRESHOLD (PANIC ONLY).

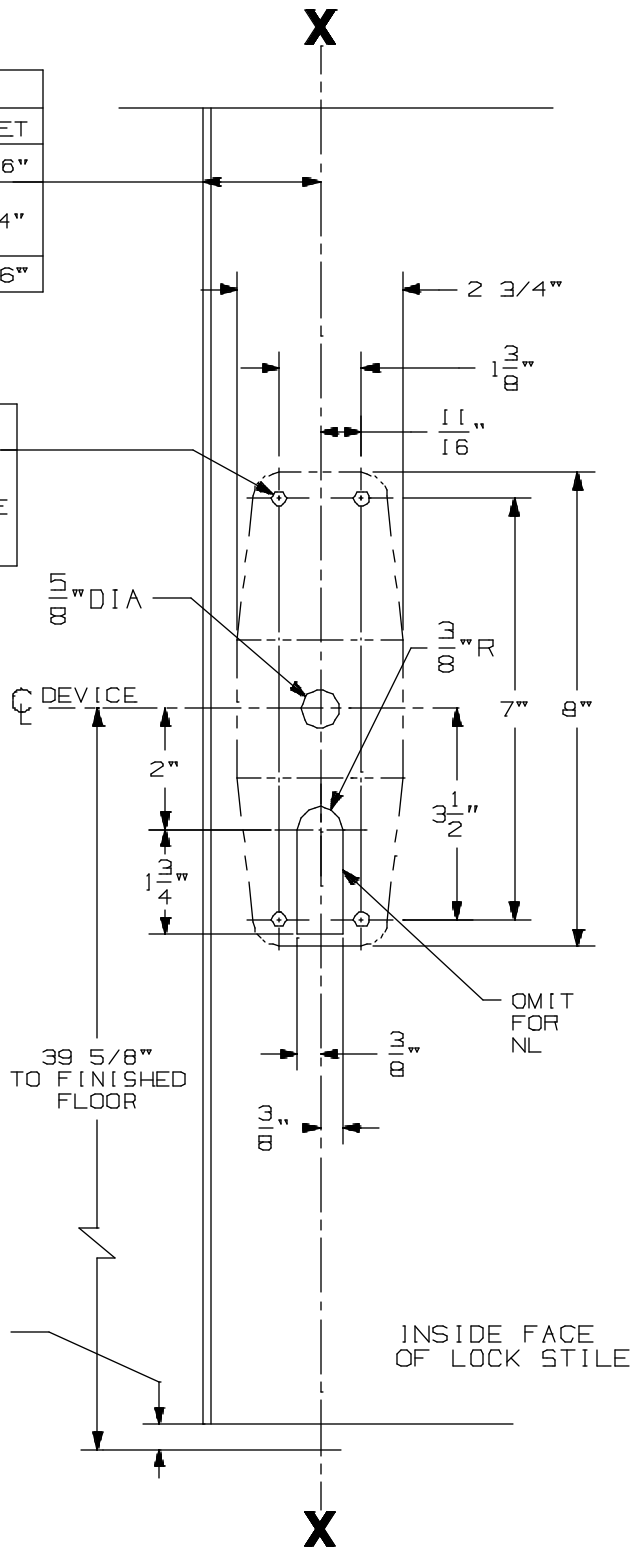

9827/9927 & 9827-F/9927-F NL, TP, K, & L Series Vertical Rod Devices

VON DUPRIN®

NOTES: SEE MASTER SHEET #10001 FOR SUGGESTED REINFORCING

TEMPLATE NUMBER: 10304_a

DATE: 05-21-13

991 K & 992 L Trim

NOTES: SEE MASTER SHEET #10001 FOR SUGGESTED REINFORCING

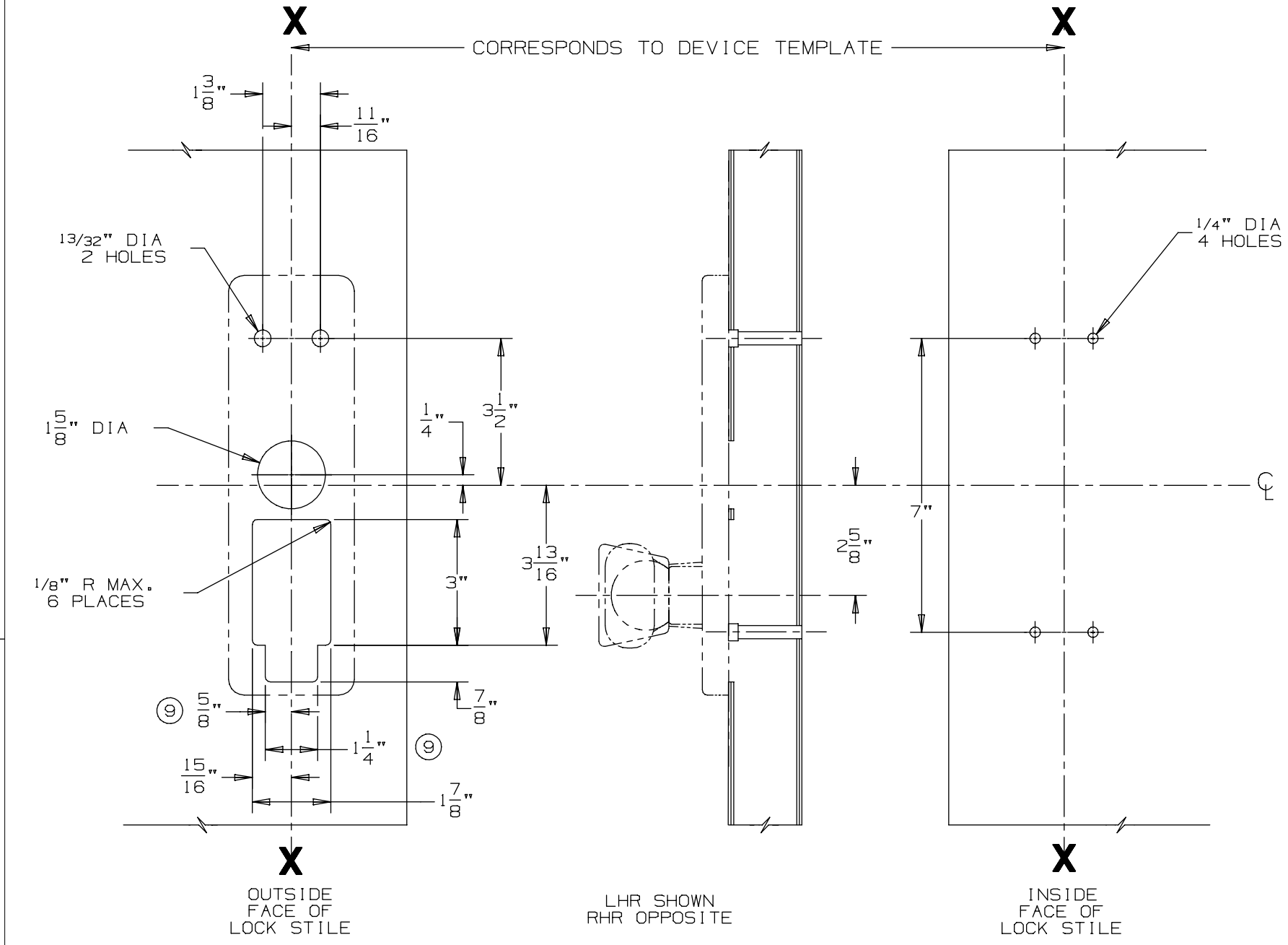

DEVICE APPLICATION SCHEDULE
98/99 SERIES RIM DEVICE
9827/9927 SERIES DEVICE
9847/9947 SERIES DEVICE

VON DUPRIN®

TEMPLATE NUMBER: 20272_a

DATE: 05-23-13

RIM APPLICATION

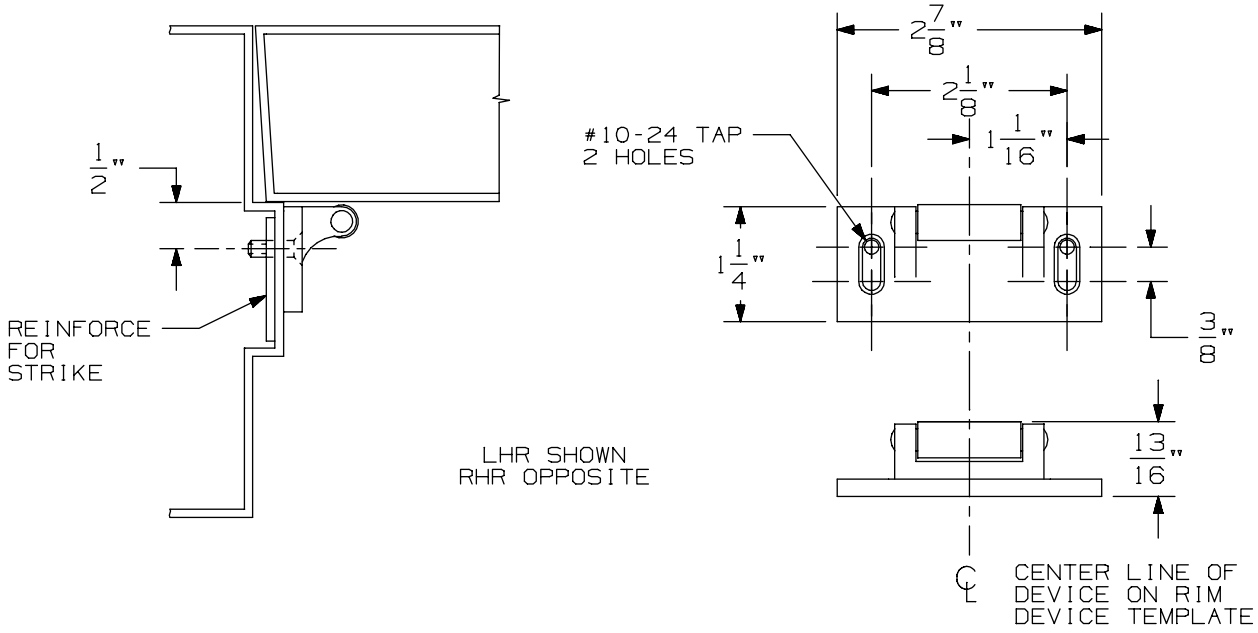

VERTICAL APPLICATION

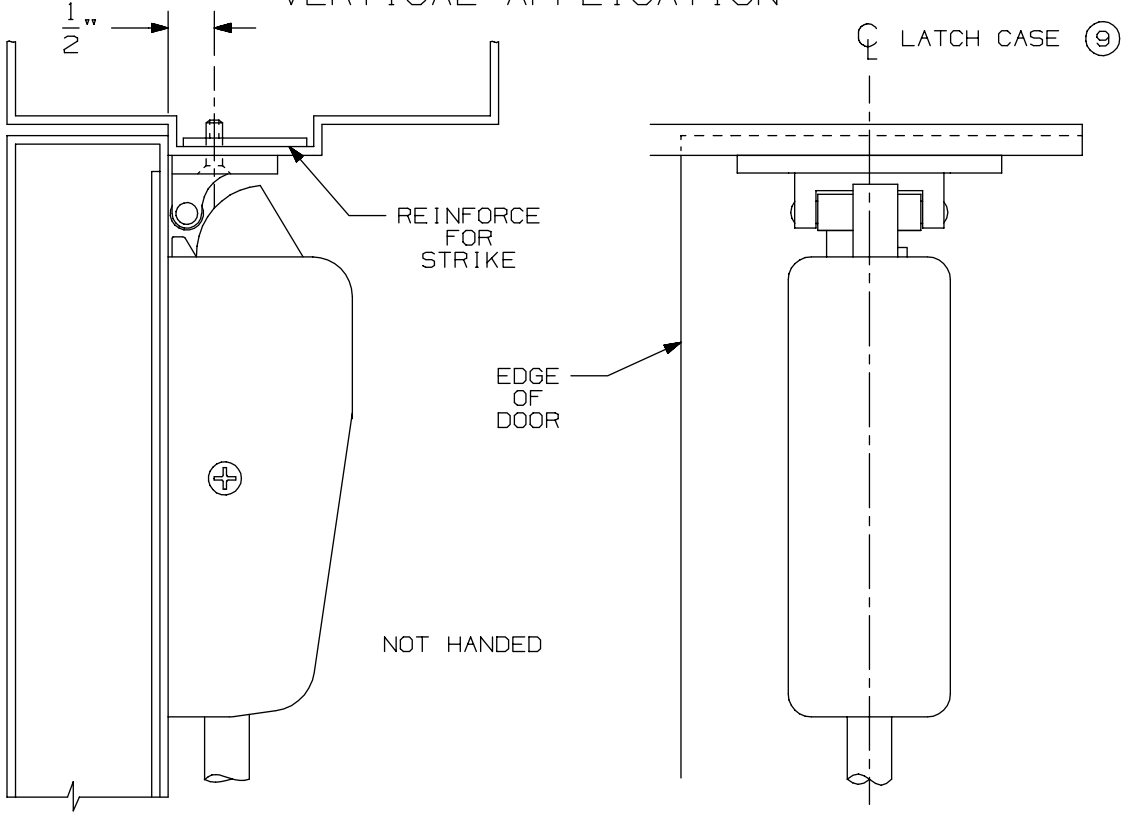

NOTE: LATCH CASE MOUNTING HOLES TO BE PREPARED AT INSTALLATION ON DOOR.

299 & 299F Strike

VON DUPRIN®

NOTES: SEE MASTER SHEET #10001 FOR SUGGESTED REINFORCING

TEMPLATE NUMBER: 30039_a

DATE: 05-23-13

DEVICE APPLICATION SCHEDULE		
INSTALLATION	MIN. STILE	BACKSET
TWO VERT. ROD DEVICES	3 11/16"	2 3/16"
VERT. ROD & MORTISE DEVICE	SEE TEMP. 10305	2 3/4"
SINGLE DOOR	3 11/16"	2 3/16"

APPLICATION	PREPARATION
990 TRIM APPLICATION SEX BOLT APPLICATION (SEE NOTE 1)	1/4" DIA. THIS SIDE 13/32" DIA. OPPOSITE SIDE - 4 PLACES

NOTES:

1. THESE FOUR HOLES TO BE PREPARED FOR SURFACE APPLICATION (#10-24 TAP) WHEN USING 696/697 TRIM. DO NOT PREPARE FOR SEX BOLTS.
2. FOR STOCK HOLLOW METAL DOORS SEE TEMPLATE NO. 10311.
3. LATCH CASE PREPARATION TO BE MADE AT INSTALLATION ON DOOR.
4. IT IS RECOMMENDED THE MOUNTING HOLES BE PREPARED IN THE FIELD.
5. FOR OUTSIDE TRIM PREPARATION, WHEN REQUIRED, SEE TRIM TEMPLATE.
6. GLASS BEAD KIT AVAILABLE WHEN REQUIRED.
7. LHR APPLICATION SHOWN, RHR APPLICATION OPPOSITE.
8. BACKSET MAY VARY WHEN USED WITH COORDINATOR.

RECOMMENDED DOOR UNDERCUT IS 1/4" FROM FINISHED FLOOR (PANIC & FIRE) OR 1/8" FROM THRESHOLD (PANIC ONLY).

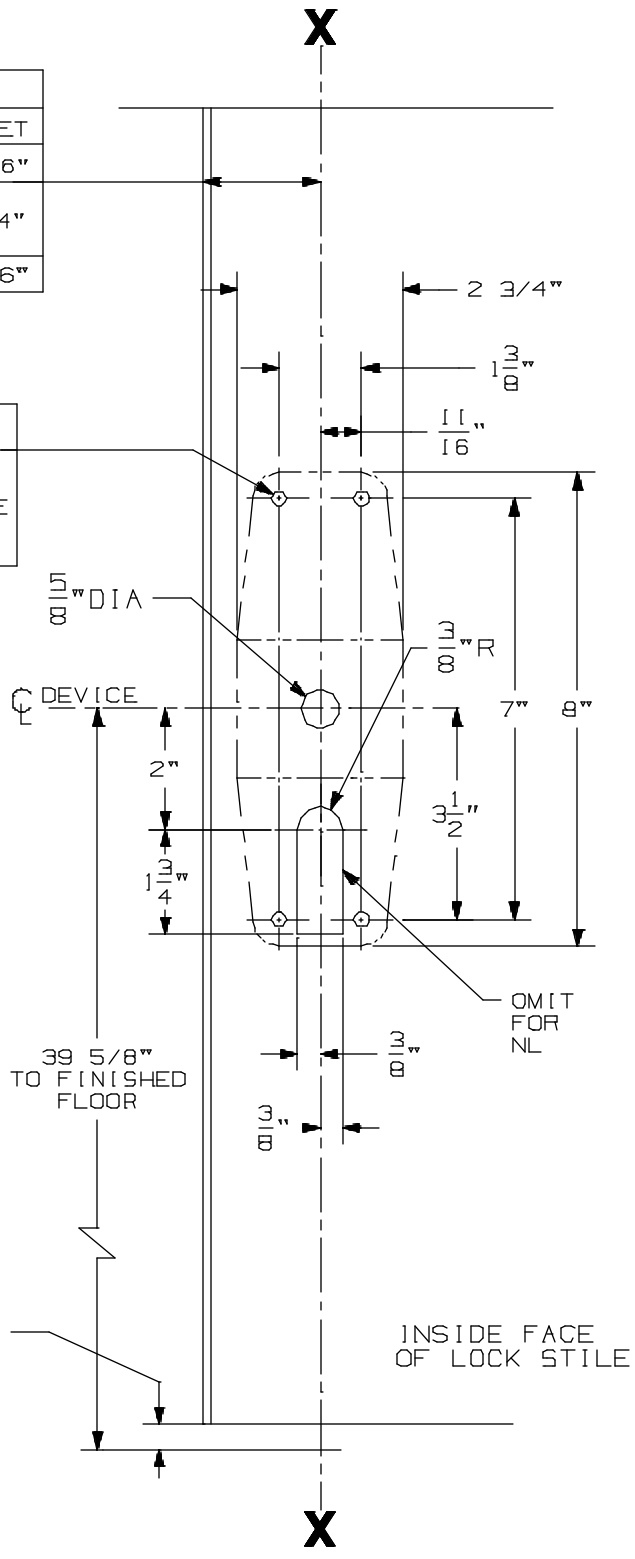

9827/9927 & 9827-F/9927-F NL, TP, K, & L Series Vertical Rod Devices

VON DUPRIN®

NOTES: SEE MASTER SHEET #10001 FOR SUGGESTED REINFORCING

TEMPLATE NUMBER: 10304_a

DATE: 05-21-13

DEVICE APPLICATION SCHEDULE	
98 RIM SERIES	99 RIM SERIES
9827 SERIES	9927 SERIES
9847 SERIES	9947 SERIES
9849 SERIES	9949 SERIES

996L, E996L, 996L-BE, E996L-BE 996K, 996K-BE R/V SERIES
TRIM METAL DOOR APPLICATION

VON DUPRIN®

NOTES: SEE MASTER SHEET #10001 FOR SUGGESTED REINFORCING

TEMPLATE NUMBER: 20003_e

DATE: 10-30-14

RIM APPLICATION

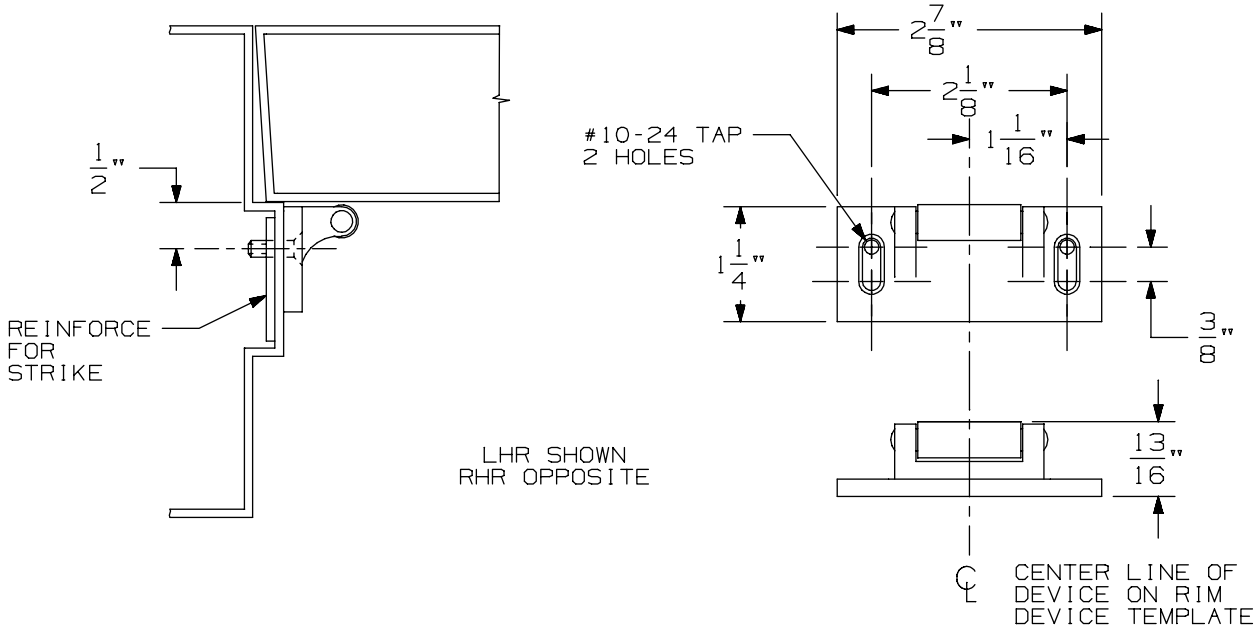

VERTICAL APPLICATION

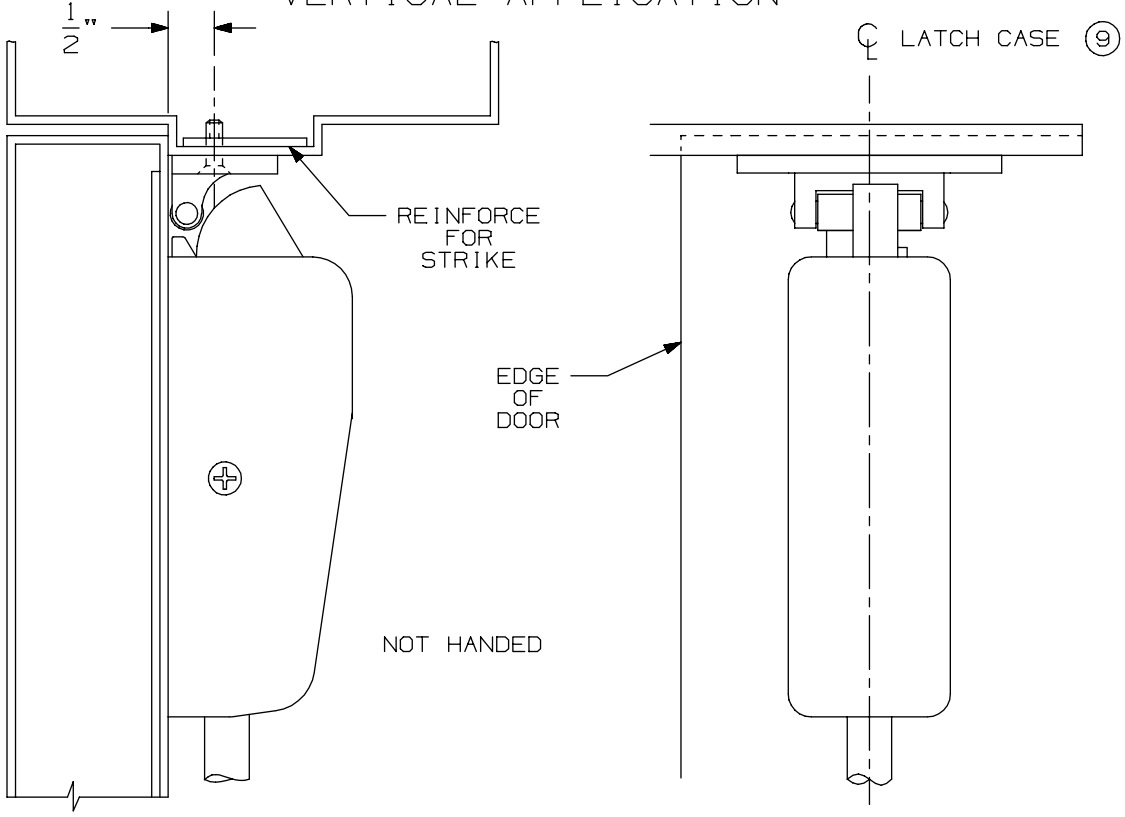

NOTE: LATCH CASE MOUNTING HOLES TO BE PREPARED AT INSTALLATION ON DOOR.

299 & 299F Strike

VON DUPRIN®

NOTES: SEE MASTER SHEET #10001 FOR SUGGESTED REINFORCING

TEMPLATE NUMBER: 30039_a

DATE: 05-23-13

DEVICE APPLICATION SCHEDULE		
INSTALLATION	MIN. STILE	BACKSET
TWO VERT. ROD DEVICES	3 11/16"	2 3/16"
VERT. ROD & MORTISE DEVICE	SEE TEMP. 10305	2 3/4"
SINGLE DOOR	3 11/16"	2 3/16"

APPLICATION	PREPARATION
990 TRIM APPLICATION SEX BOLT APPLICATION (SEE NOTE 1)	1/4" DIA. THIS SIDE 13/32" DIA. OPPOSITE SIDE - 4 PLACES

NOTES:

1. THESE FOUR HOLES TO BE PREPARED FOR SURFACE APPLICATION (#10-24 TAP) WHEN USING 696/697 TRIM. DO NOT PREPARE FOR SEX BOLTS.
2. FOR STOCK HOLLOW METAL DOORS SEE TEMPLATE NO. 10311.
3. LATCH CASE PREPARATION TO BE MADE AT INSTALLATION ON DOOR.
4. IT IS RECOMMENDED THE MOUNTING HOLES BE PREPARED IN THE FIELD.
5. FOR OUTSIDE TRIM PREPARATION, WHEN REQUIRED, SEE TRIM TEMPLATE.
6. GLASS BEAD KIT AVAILABLE WHEN REQUIRED.
7. LHR APPLICATION SHOWN, RHR APPLICATION OPPOSITE.
8. BACKSET MAY VARY WHEN USED WITH COORDINATOR.

RECOMMENDED DOOR UNDERCUT IS 1/4" FROM FINISHED FLOOR (PANIC & FIRE) OR 1/8" FROM THRESHOLD (PANIC ONLY).

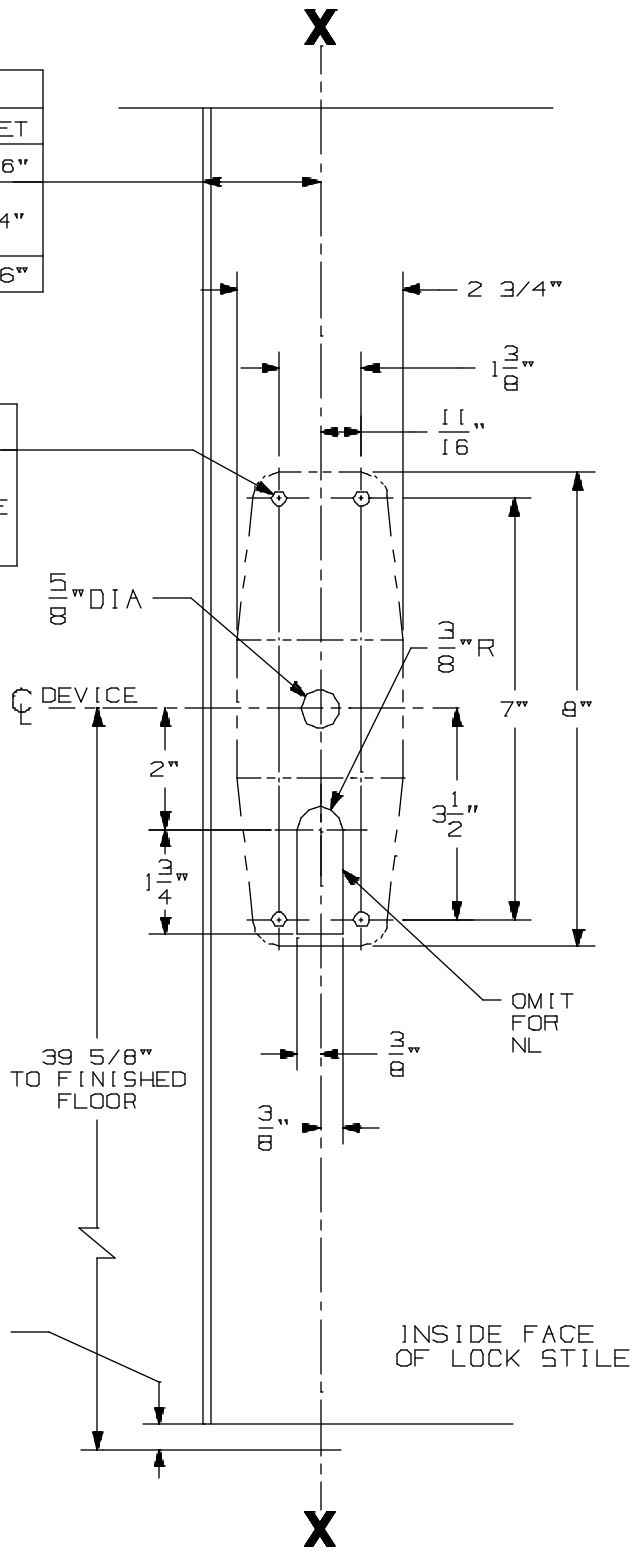

9827/9927 & 9827-F/9927-F NL, TP, K, & L Series Vertical Rod Devices

VON DUPRIN®

NOTES: SEE MASTER SHEET #10001 FOR SUGGESTED REINFORCING

TEMPLATE NUMBER: 10304_a

DATE: 05-21-13

990 TP & 990 TP-BE TRIM

NOTES: SEE MASTER SHEET #10001 FOR SUGGESTED REINFORCING

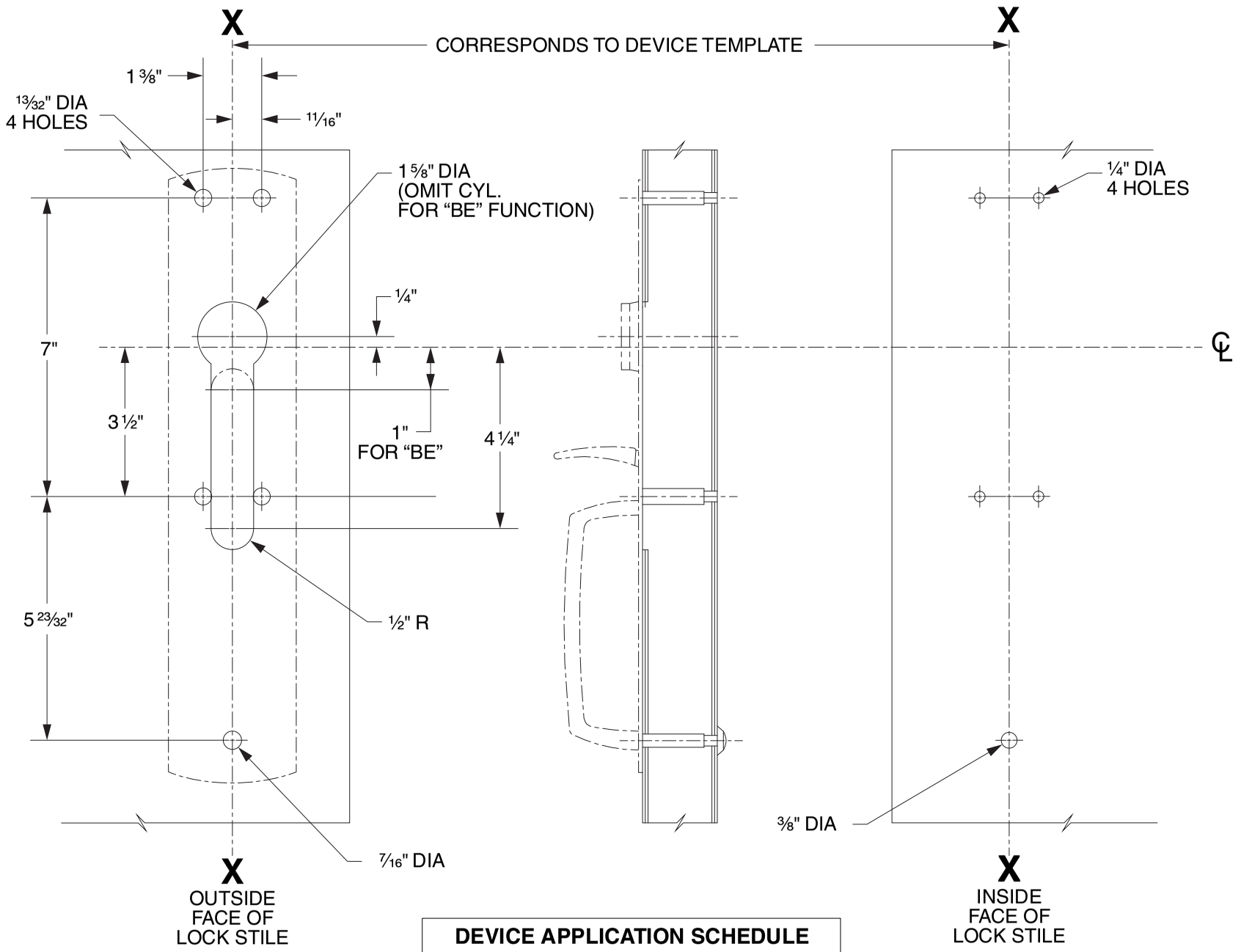

DEVICE APPLICATION SCHEDULE
98/99 SERIES RIM DEVICE
9827/9927 SERIES DEVICE
9847/9947 SERIES DEVICE
9849/9949 SERIES DEVICE

LHR SHOWN
RHR OPPOSITE

VON DUPRIN®

TEMPLATE NUMBER: 20265_C

DATE: 05-31-13

RIM APPLICATION

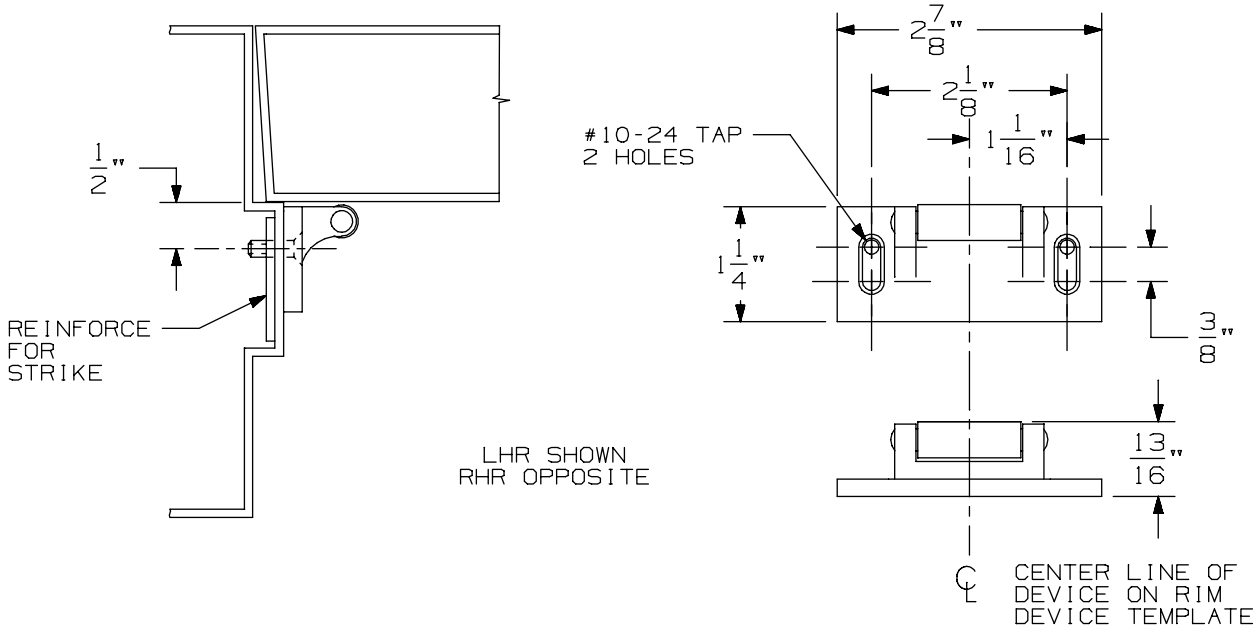

VERTICAL APPLICATION

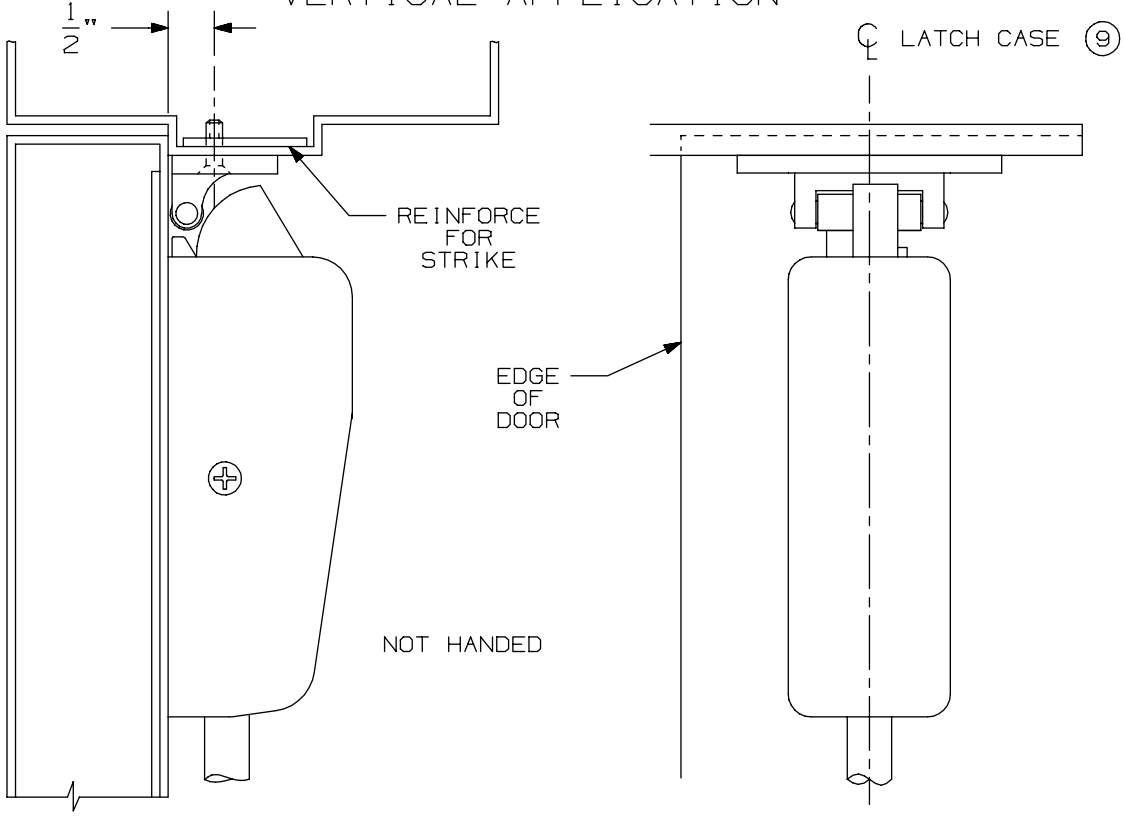

NOTE: LATCH CASE MOUNTING HOLES TO BE PREPARED AT INSTALLATION ON DOOR.

299 & 299F Strike

VON DUPRIN®

NOTES: SEE MASTER SHEET #10001 FOR SUGGESTED REINFORCING

TEMPLATE NUMBER: 30039_a

DATE: 05-23-13

DEVICE APPLICATION SCHEDULE		
INSTALLATION	MIN. STILE	BACKSET
TWO VERT. ROD DEVICES	3 11/16"	2 3/16"
VER. ROD & MORTISE DEVICE	SEE TEMP. 10305	2 3/4"
SINGLE DOOR	3 11/16"	2 3/16"

APPLICATION	PREPARATION
SURFACE APPLICATION	#10-24 TAP-4 PLACES
990 TRIM APPLICATION SEX BOLT APPLICATION (SEE NOTE 1)	1/4" DIA. THIS SIDE 13/32" DIA. OPPOSITE SIDE - 4 PLACES

NOTES:

1. THESE FOUR HOLES TO BE PREPARED FOR SURFACE APPLICATION WHEN USING 696/697 TRIM. DO NOT PREPARE FOR SEX BOLTS.
2. FOR STOCK HOLLOW METAL DOORS SEE TEMPLATE NO. 10310.
3. LATCH CASE PREPARATION TO BE MADE AT INSTALLATION ON DOOR.
4. IT IS RECOMMENDED THE MOUNTING HOLES BE PREPARED IN THE FIELD.
5. FOR OUTSIDE TRIM PREPARATION, WHEN REQUIRED, SEE TRIM TEMPLATE.
6. GLASS BEAD KIT AVAILABLE WHEN REQUIRED.
7. LHR APPLICATION SHOWN, RHR APPLICATION OPPOSITE
8. BACKSET MAY VARY WHEN USED WITH COORDINATOR.

RECOMMENDED DOOR UNDERCUT IS 1/4" FROM FINISHED FLOOR (PANIC & FIRE) OR 1/8" FROM THRESHOLD (PANIC ONLY).

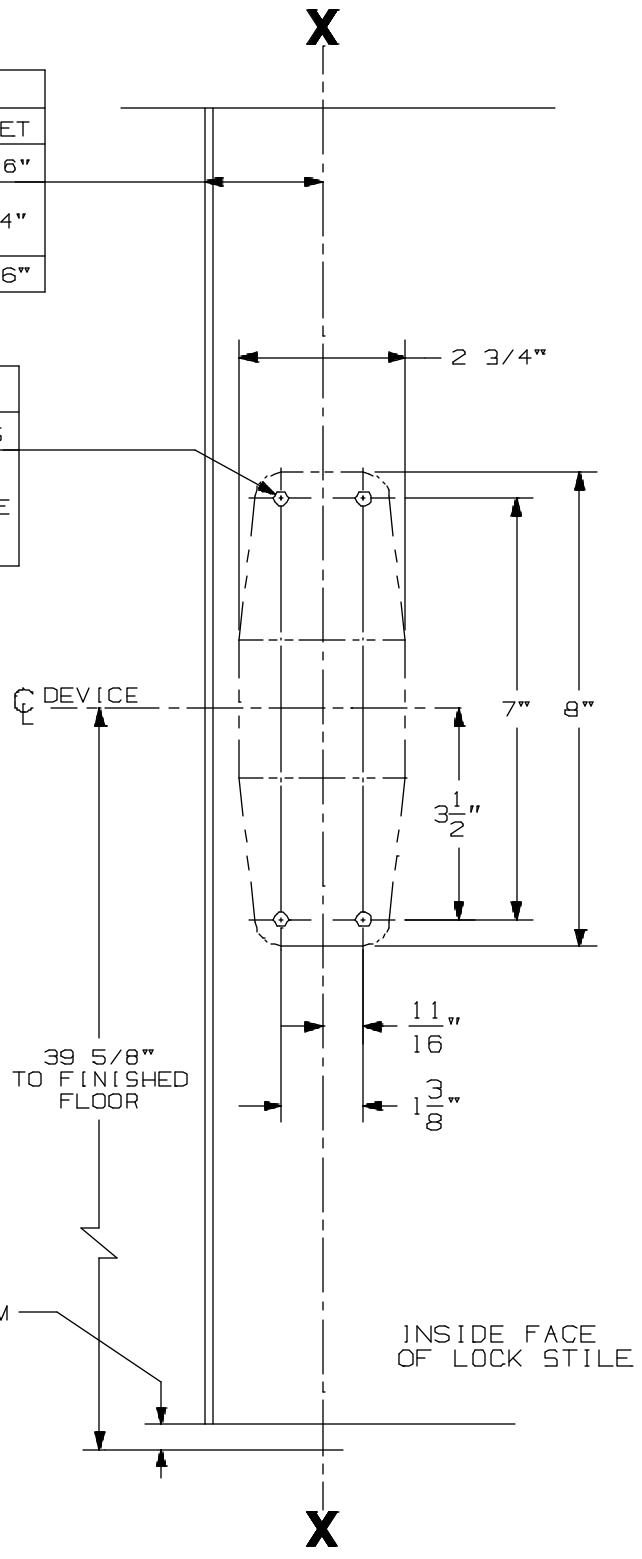

9827/9927 & 9827-F/9927-F EO & DT Series Vertical Rod Devices

VON DUPRIN®

NOTES: SEE MASTER SHEET #10001 FOR SUGGESTED REINFORCING

TEMPLATE NUMBER: 10303_a

DATE: 06-07-13

990 DT TRIM

NOTES: SEE MASTER SHEET #10001 FOR SUGGESTED REINFORCING

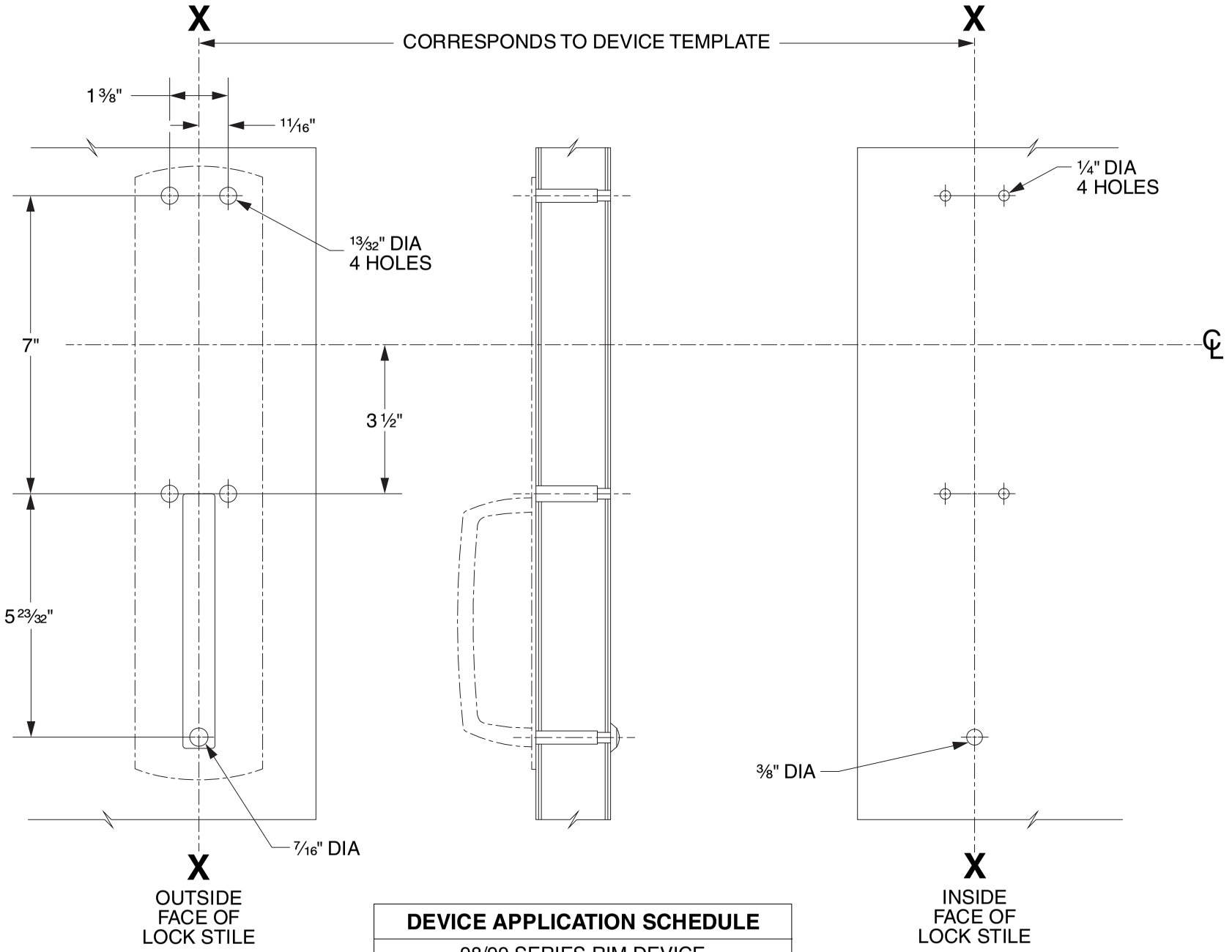

DEVICE APPLICATION SCHEDULE
98/99 SERIES RIM DEVICE
9827/9927 SERIES DEVICE
9847/9947 SERIES DEVICE
9849/9949 SERIES DEVICE
9875/9975 SERIES DEVICE

LHR SHOWN
RHR OPPOSITE

VON DUPRIN®

TEMPLATE NUMBER: 20268_C

DATE: 05-31-13

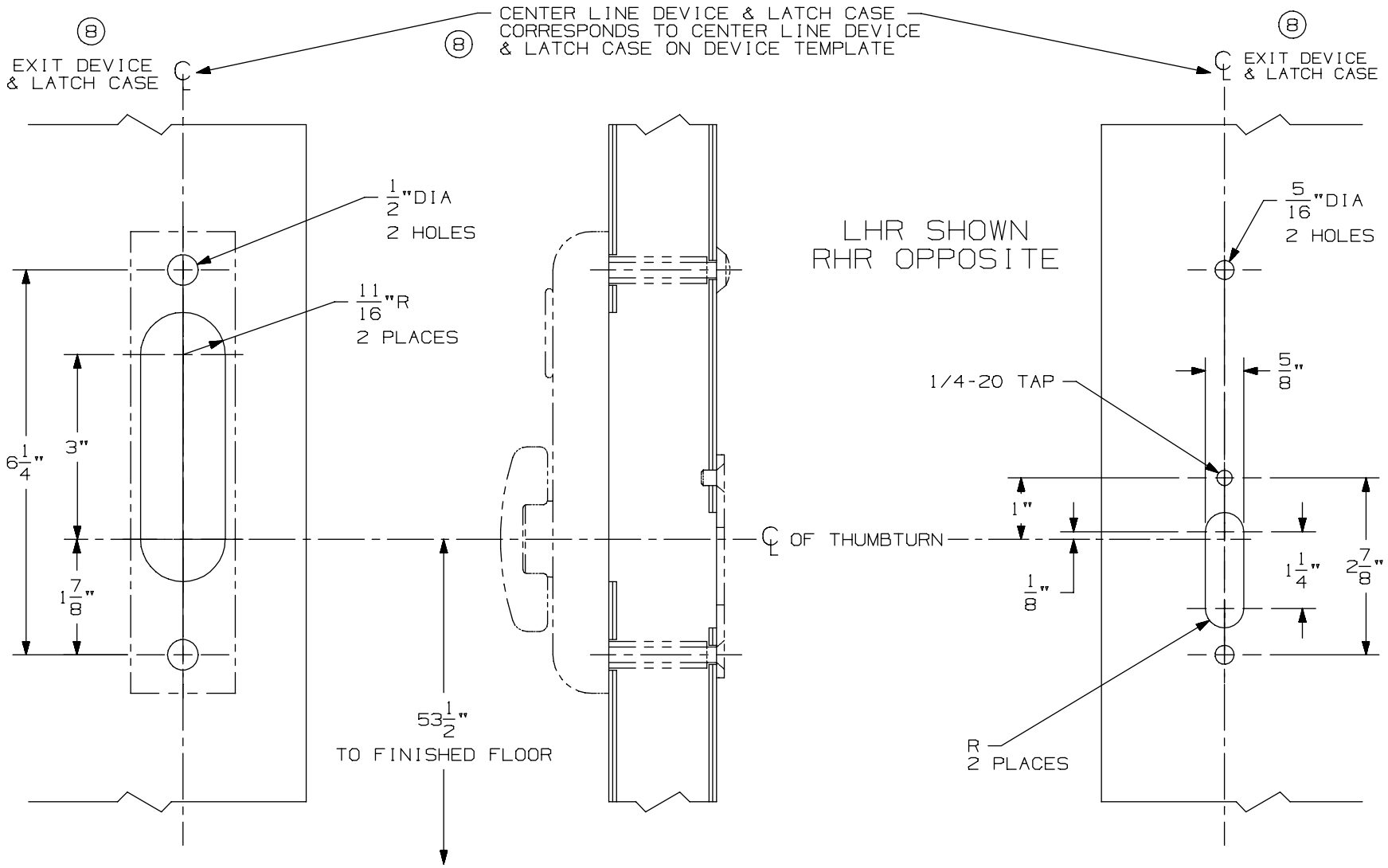

OUTSIDE
FACE OF
LOCK STILE

INSIDE
FACE OF
LOCK STILE

DEVICE APPLICATION SCHEDULE
2227 VERT. ROD DEVICE
2227-F VERT. ROD DEVICE
3327/3527 VERT. ROD DEVICE
8 3327A/3527A VERT. ROD DEVICE
8 3327A-F/3527A-F VERT. ROD DEVICE
9827/9927 VERT. ROD DEVICE
9827-F/9927-F VERT. ROD DEVICE

NOTES: SEE MASTER SHEET #10001 FOR SUGGESTED REINFORCING

374-T Control

VON DUPRIN®

TEMPLATE NUMBER: 40118_a

DATE: 05-28-13

RIM APPLICATION

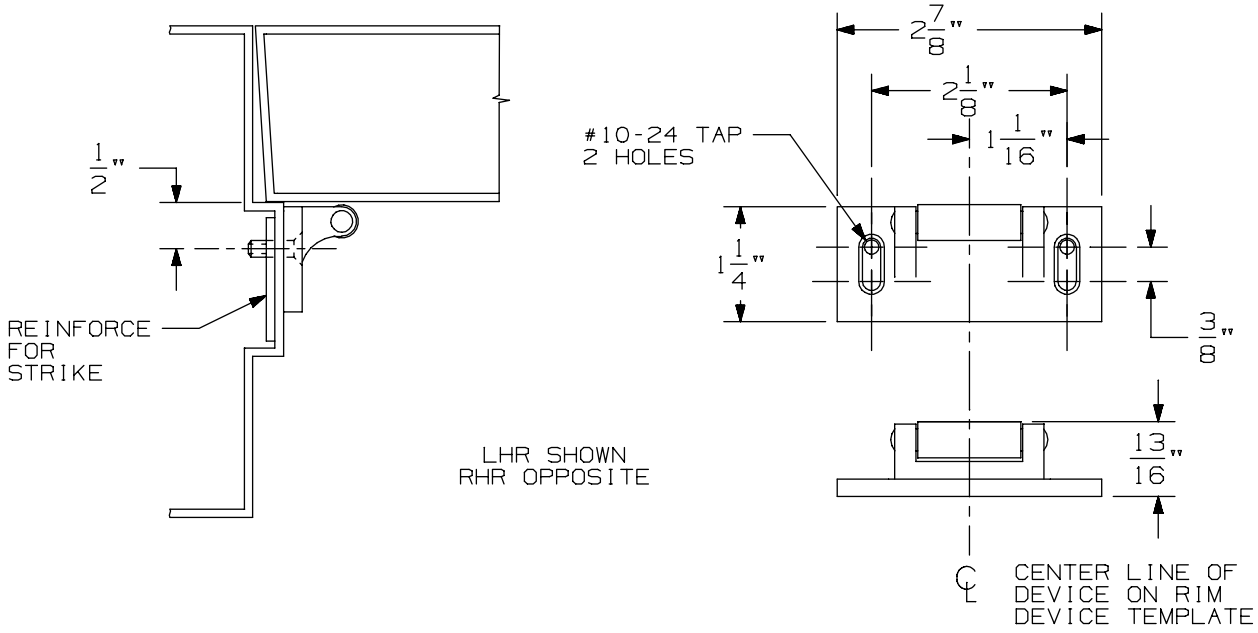

VERTICAL APPLICATION

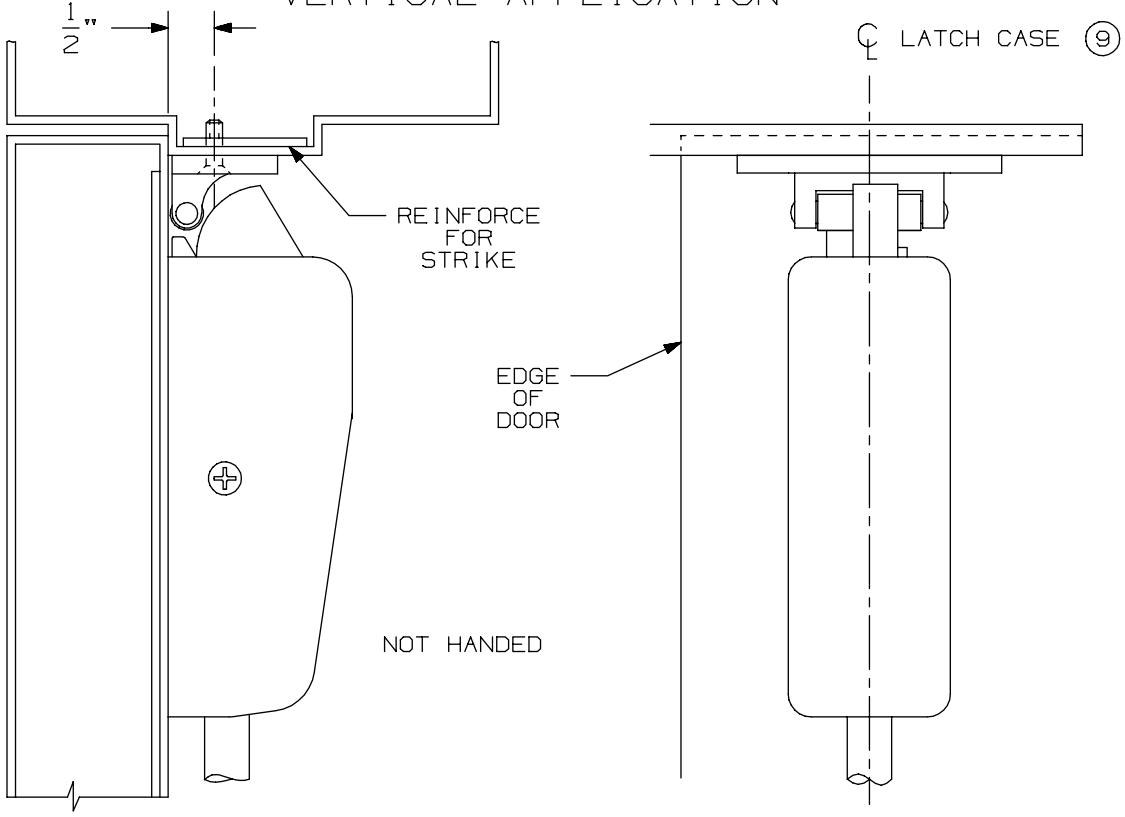

NOTE: LATCH CASE MOUNTING HOLES TO BE PREPARED AT INSTALLATION ON DOOR.

299 & 299F Strike

VON DUPRIN®

NOTES: SEE MASTER SHEET #10001 FOR SUGGESTED REINFORCING

TEMPLATE NUMBER: 30039_a

DATE: 05-23-13

98 / 99 Series Exit Devices - 9827-F/9927-F Surface Vertical Rod Fire (Standard, EL, LX, RX & SS)

DEVICE APPLICATION SCHEDULE		
INSTALLATION	MIN. STILE	BACKSET
TWO VERT. ROD DEVICES	3 11/16"	2 3/16"
VER. ROD & MORTISE DEVICE	SEE TEMP. 10305	2 3/4"
SINGLE DOOR	3 11/16"	2 3/16"

APPLICATION	PREPARATION
SURFACE APPLICATION	#10-24 TAP-4 PLACES
990 TRIM APPLICATION SEX BOLT APPLICATION (SEE NOTE 1)	1/4" DIA. THIS SIDE 13/32" DIA. OPPOSITE SIDE - 4 PLACES

NOTES:

1. THESE FOUR HOLES TO BE PREPARED FOR SURFACE APPLICATION WHEN USING 696/697 TRIM. DO NOT PREPARE FOR SEX BOLTS.
2. FOR STOCK HOLLOW METAL DOORS SEE TEMPLATE NO. 10310.
3. LATCH CASE PREPARATION TO BE MADE AT INSTALLATION ON DOOR.
4. IT IS RECOMMENDED THE MOUNTING HOLES BE PREPARED IN THE FIELD.
5. FOR OUTSIDE TRIM PREPARATION, WHEN REQUIRED, SEE TRIM TEMPLATE.
6. GLASS BEAD KIT AVAILABLE WHEN REQUIRED.
7. LHR APPLICATION SHOWN, RHR APPLICATION OPPOSITE
8. BACKSET MAY VARY WHEN USED WITH COORDINATOR.

RECOMMENDED DOOR UNDERCUT IS 1/4" FROM FINISHED FLOOR (PANIC & FIRE) OR 1/8" FROM THRESHOLD (PANIC ONLY).

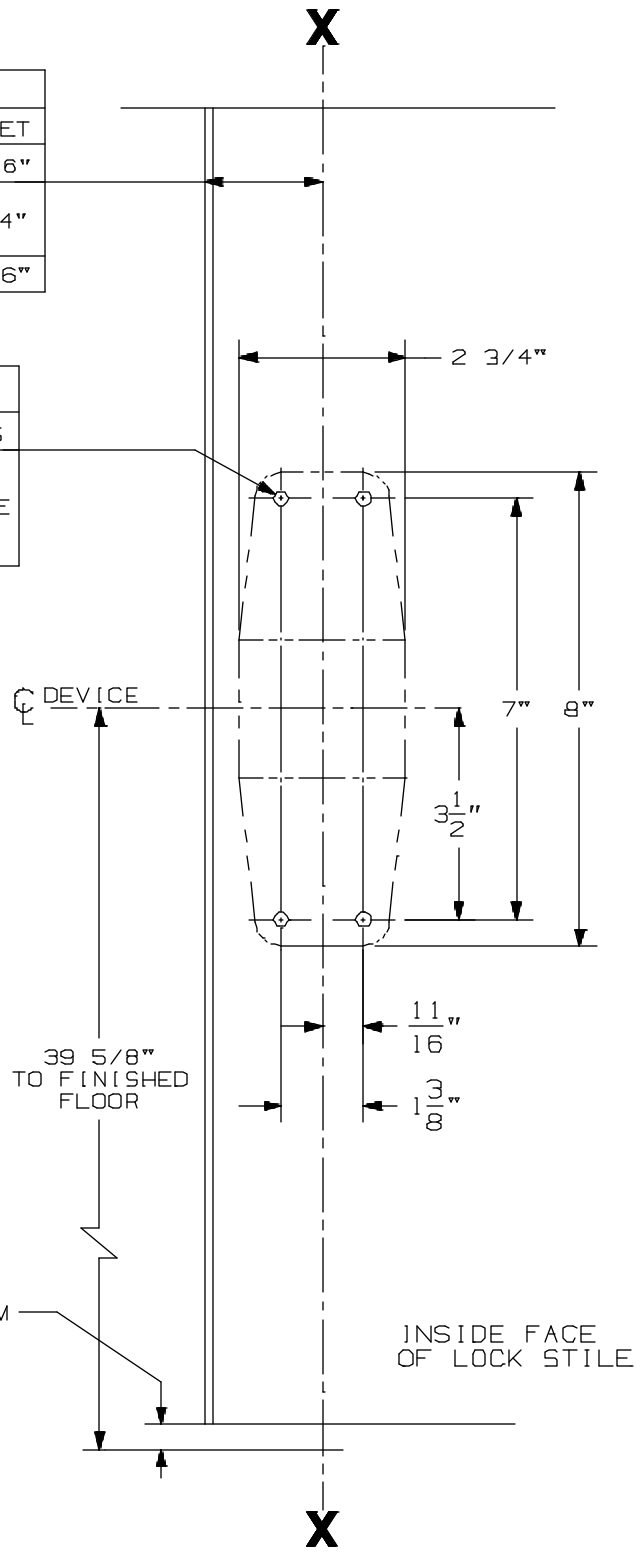

9827/9927 & 9827-F/9927-F EO & DT Series Vertical Rod Devices

VON DUPRIN®

NOTES: SEE MASTER SHEET #10001 FOR SUGGESTED REINFORCING

TEMPLATE NUMBER: 10303_a

DATE: 06-07-13

RIM APPLICATION

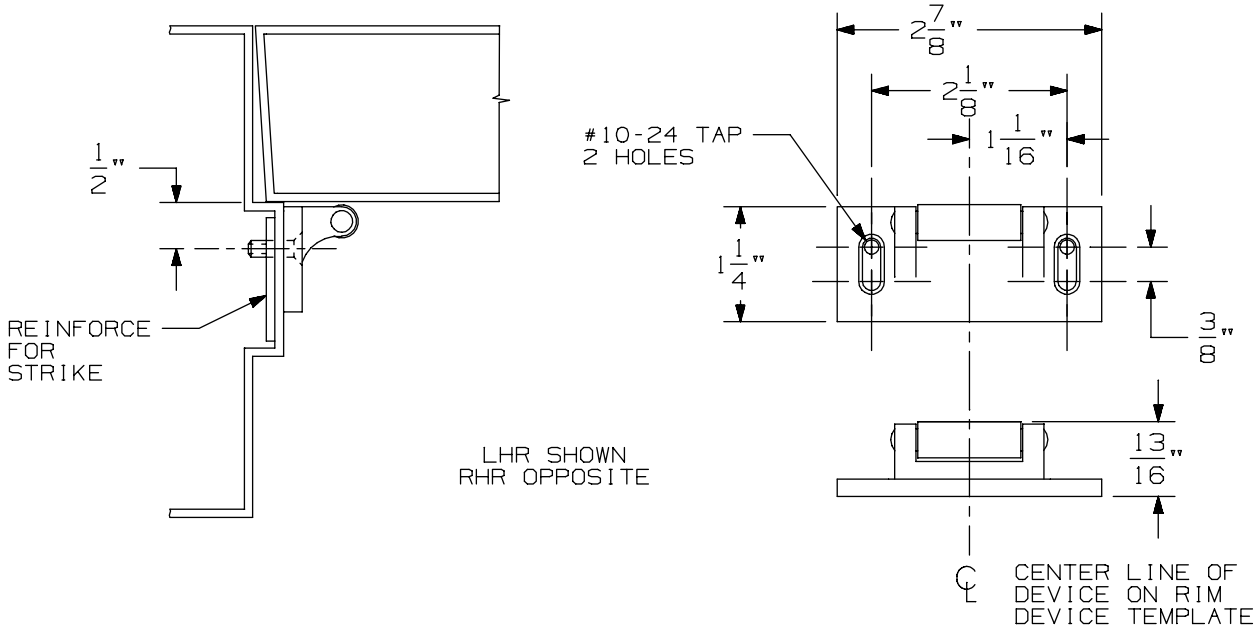

VERTICAL APPLICATION

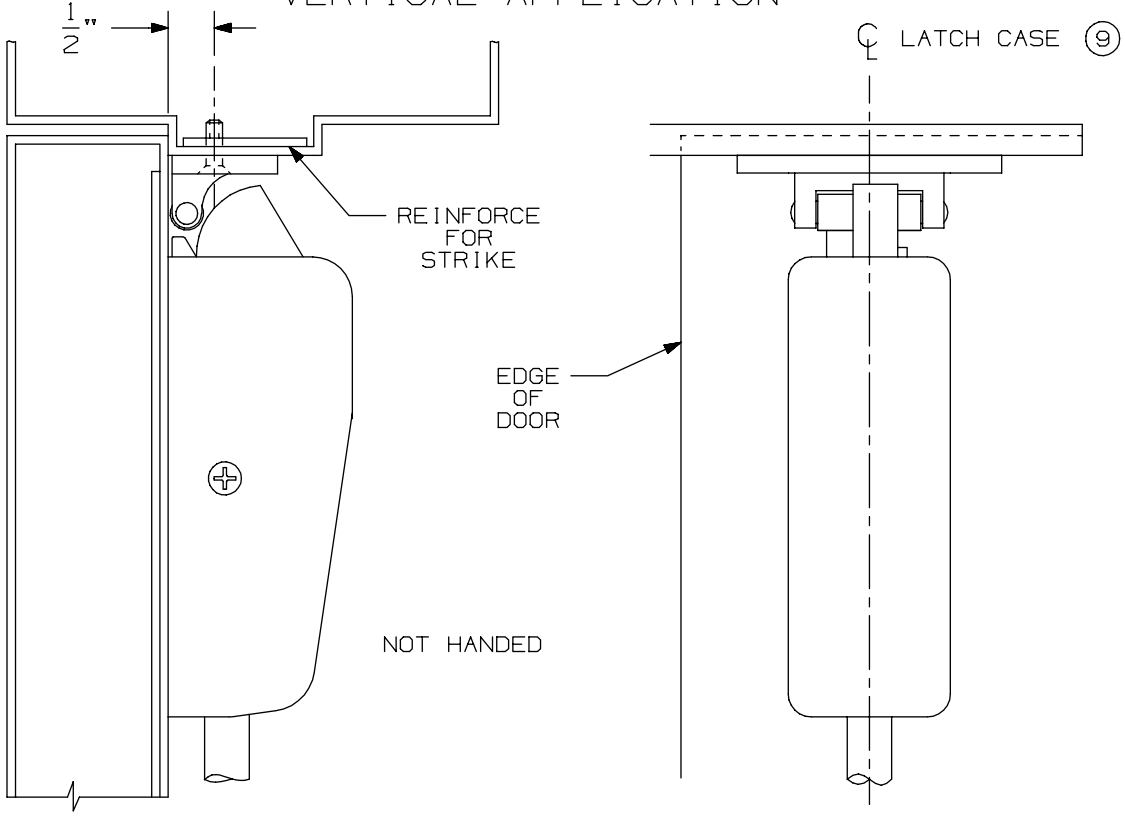

NOTE: LATCH CASE MOUNTING HOLES TO BE PREPARED AT INSTALLATION ON DOOR.

299 & 299F Strike

VON DUPRIN®

NOTES: SEE MASTER SHEET #10001 FOR SUGGESTED REINFORCING

TEMPLATE NUMBER: 30039_a

DATE: 05-23-13

DEVICE APPLICATION SCHEDULE		
INSTALLATION	MIN. STILE	BACKSET
TWO VERT. ROD DEVICES	3 11/16"	2 3/16"
VERT. ROD & MORTISE DEVICE	SEE TEMP. 10305	2 3/4"
SINGLE DOOR	3 11/16"	2 3/16"

APPLICATION	PREPARATION
990 TRIM APPLICATION SEX BOLT APPLICATION (SEE NOTE 1)	1/4" DIA. THIS SIDE 13/32" DIA. OPPOSITE SIDE - 4 PLACES

NOTES:

1. THESE FOUR HOLES TO BE PREPARED FOR SURFACE APPLICATION (#10-24 TAP) WHEN USING 696/697 TRIM. DO NOT PREPARE FOR SEX BOLTS.
2. FOR STOCK HOLLOW METAL DOORS SEE TEMPLATE NO. 10311.
3. LATCH CASE PREPARATION TO BE MADE AT INSTALLATION ON DOOR.
4. IT IS RECOMMENDED THE MOUNTING HOLES BE PREPARED IN THE FIELD.
5. FOR OUTSIDE TRIM PREPARATION, WHEN REQUIRED, SEE TRIM TEMPLATE.
6. GLASS BEAD KIT AVAILABLE WHEN REQUIRED.
7. LHR APPLICATION SHOWN, RHR APPLICATION OPPOSITE.
8. BACKSET MAY VARY WHEN USED WITH COORDINATOR.

RECOMMENDED DOOR UNDERCUT IS 1/4" FROM FINISHED FLOOR (PANIC & FIRE) OR 1/8" FROM THRESHOLD (PANIC ONLY).

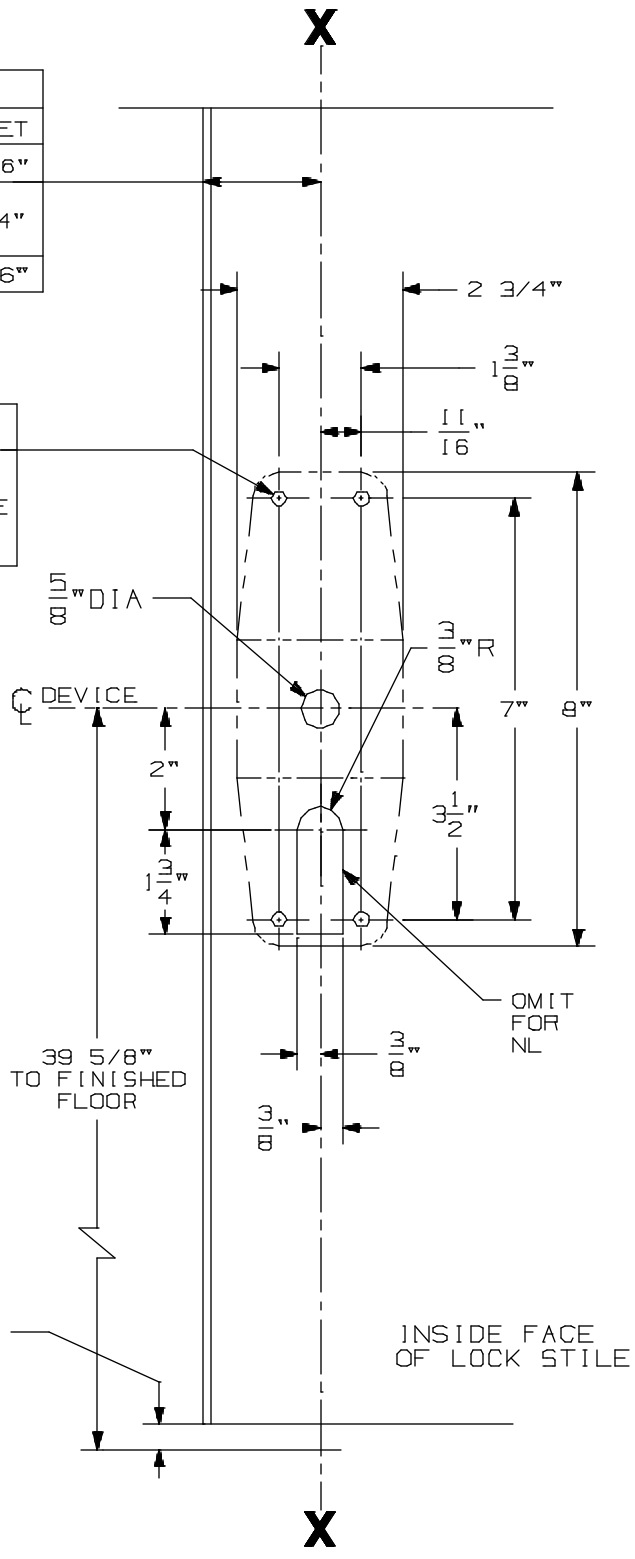

9827/9927 & 9827-F/9927-F NL, TP, K, & L Series Vertical Rod Devices

VON DUPRIN®

NOTES: SEE MASTER SHEET #10001 FOR SUGGESTED REINFORCING

TEMPLATE NUMBER: 10304_a

DATE: 05-21-13

990 NL TRIM

NOTES: SEE MASTER SHEET #10001 FOR SUGGESTED REINFORCING

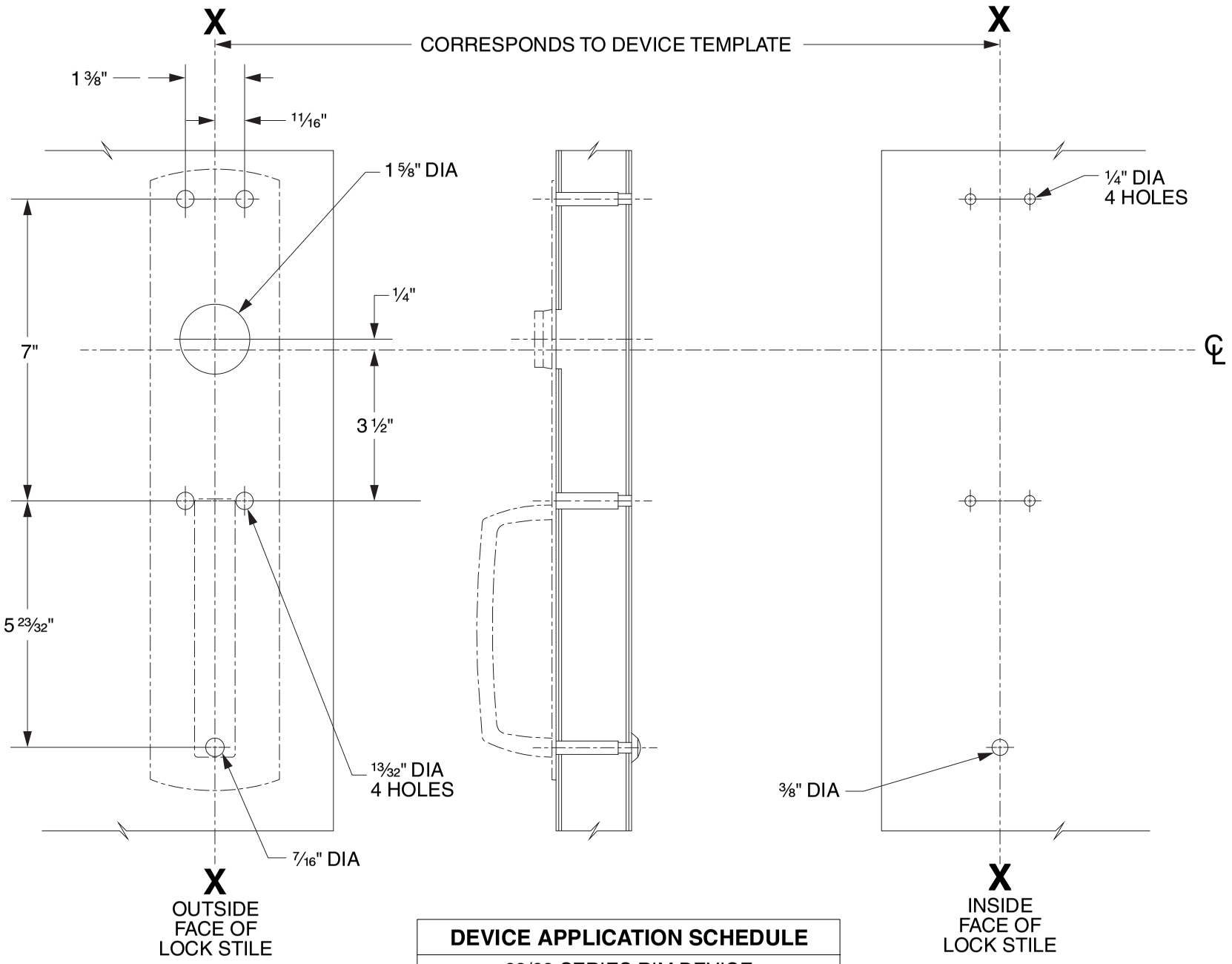

DEVICE APPLICATION SCHEDULE
98/99 SERIES RIM DEVICE
9827/9927 SERIES DEVICE
9847/9947 SERIES DEVICE
9849/9949 SERIES DEVICE

LHR SHOWN
RHR OPPOSITE

VON DUPRIN®

TEMPLATE NUMBER: 20267_C

DATE: 05-31-13

RIM APPLICATION

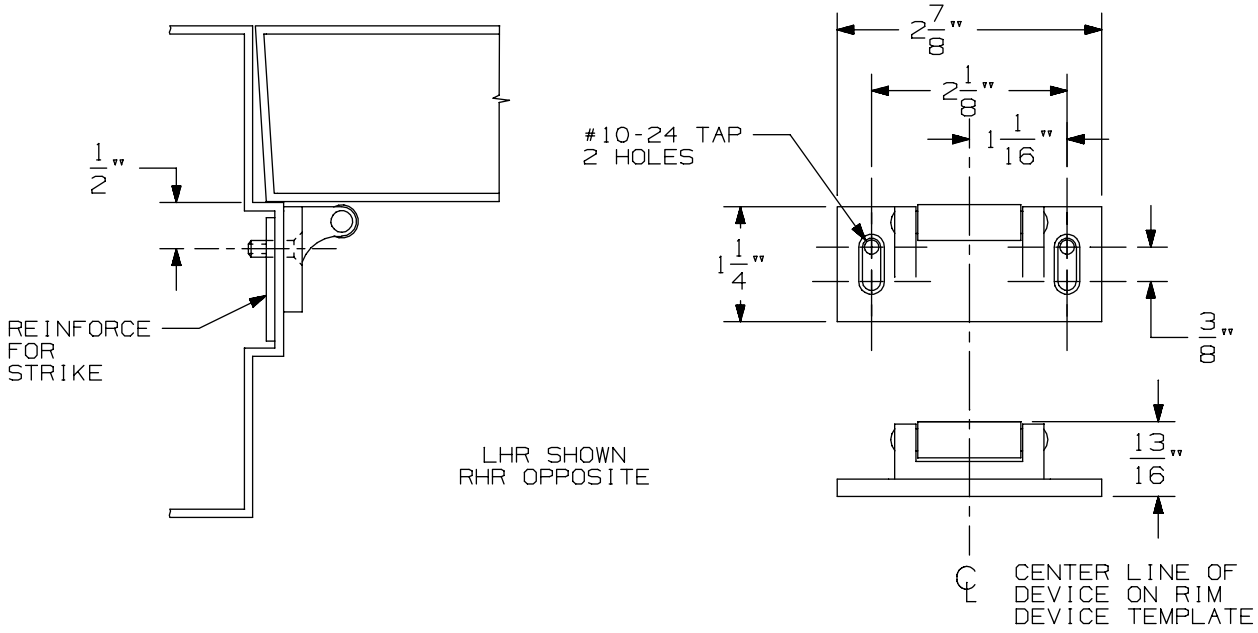

VERTICAL APPLICATION

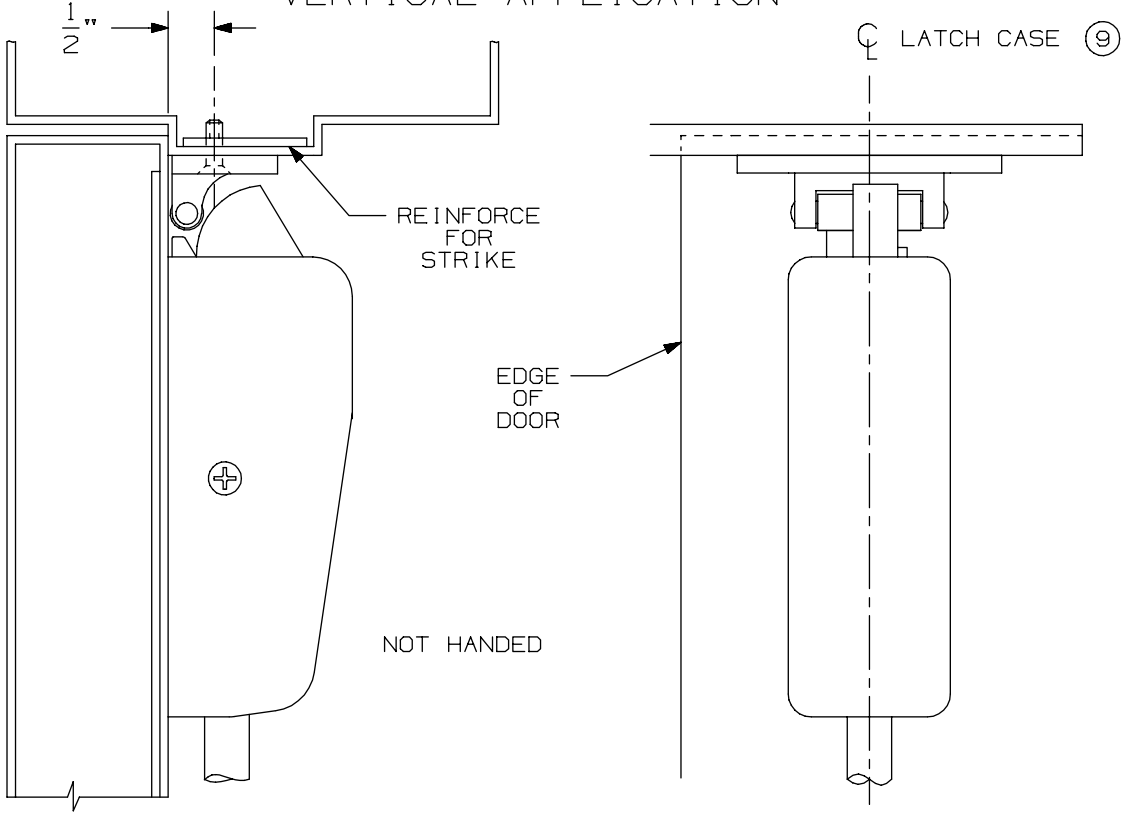

NOTE: LATCH CASE MOUNTING HOLES TO BE PREPARED AT INSTALLATION ON DOOR.

299 & 299F Strike

VON DUPRIN®

NOTES: SEE MASTER SHEET #10001 FOR SUGGESTED REINFORCING

TEMPLATE NUMBER: 30039_a

DATE: 05-23-13

DEVICE APPLICATION SCHEDULE		
INSTALLATION	MIN. STILE	BACKSET
TWO VERT. ROD DEVICES	3 11/16"	2 3/16"
VERT. ROD & MORTISE DEVICE	SEE TEMP. 10305	2 3/4"
SINGLE DOOR	3 11/16"	2 3/16"

APPLICATION	PREPARATION
990 TRIM APPLICATION SEX BOLT APPLICATION (SEE NOTE 1)	1/4" DIA. THIS SIDE 13/32" DIA. OPPOSITE SIDE - 4 PLACES

NOTES:

1. THESE FOUR HOLES TO BE PREPARED FOR SURFACE APPLICATION (#10-24 TAP) WHEN USING 696/697 TRIM. DO NOT PREPARE FOR SEX BOLTS.
2. FOR STOCK HOLLOW METAL DOORS SEE TEMPLATE NO. 10311.
3. LATCH CASE PREPARATION TO BE MADE AT INSTALLATION ON DOOR.
4. IT IS RECOMMENDED THE MOUNTING HOLES BE PREPARED IN THE FIELD.
5. FOR OUTSIDE TRIM PREPARATION, WHEN REQUIRED, SEE TRIM TEMPLATE.
6. GLASS BEAD KIT AVAILABLE WHEN REQUIRED.
7. LHR APPLICATION SHOWN, RHR APPLICATION OPPOSITE.
8. BACKSET MAY VARY WHEN USED WITH COORDINATOR.

RECOMMENDED DOOR UNDERCUT IS 1/4" FROM FINISHED FLOOR (PANIC & FIRE) OR 1/8" FROM THRESHOLD (PANIC ONLY).

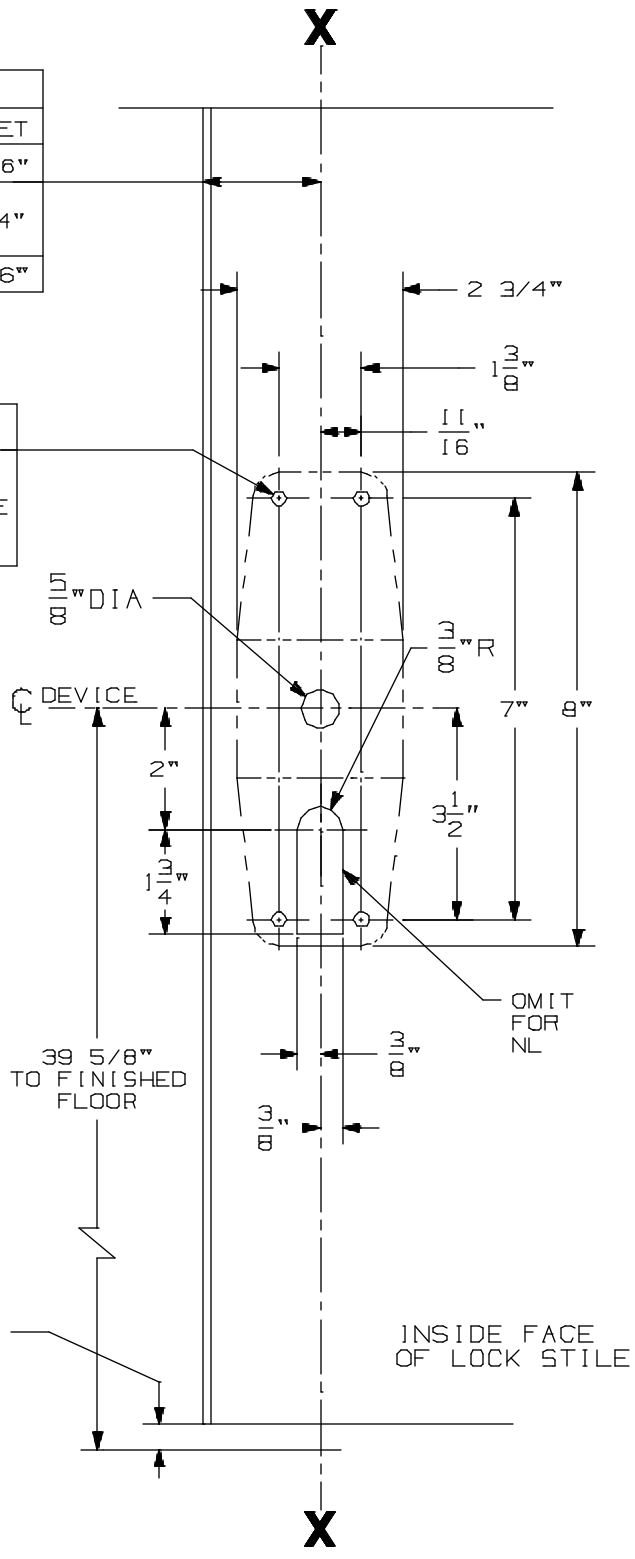

9827/9927 & 9827-F/9927-F NL, TP, K, & L Series Vertical Rod Devices

VON DUPRIN®

NOTES: SEE MASTER SHEET #10001 FOR SUGGESTED REINFORCING

TEMPLATE NUMBER: 10304_a

DATE: 05-21-13

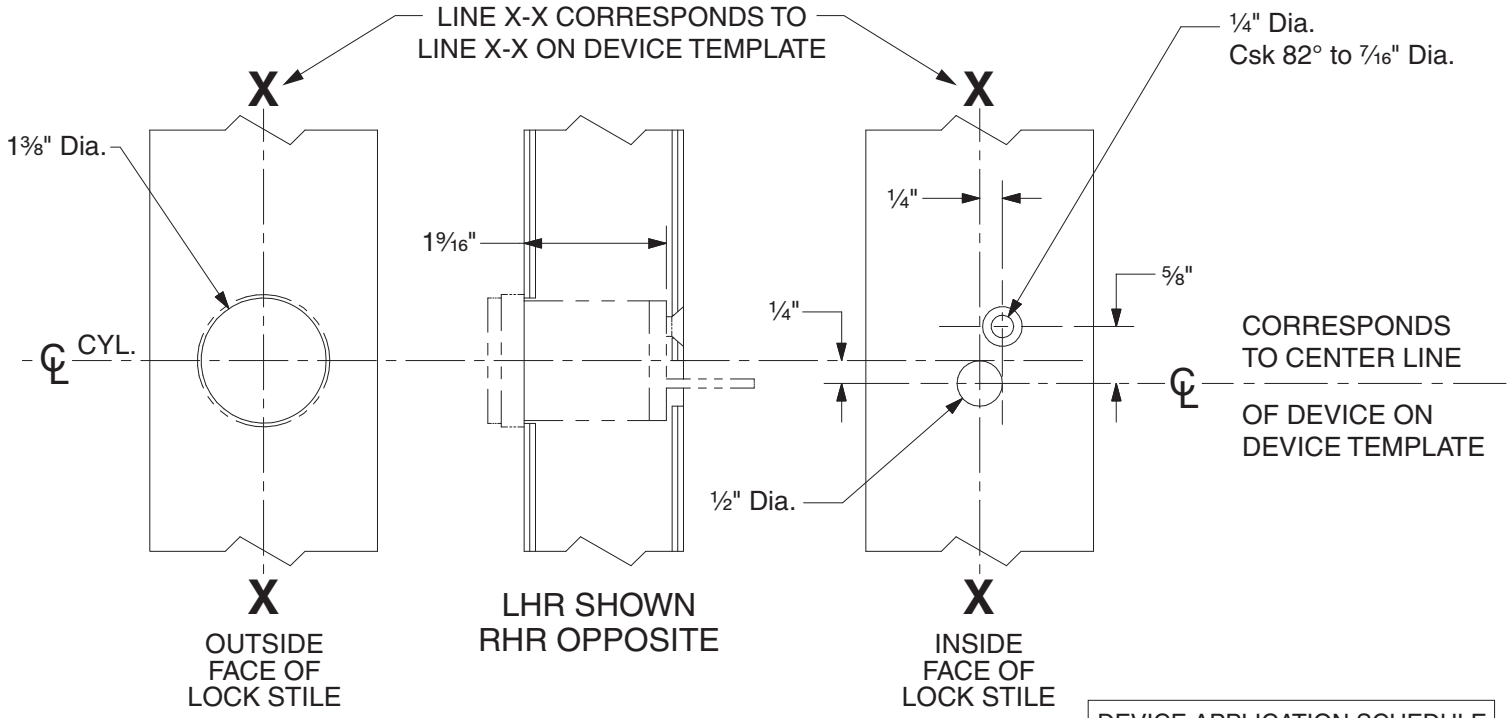

DEVICE APPLICATION SCHEDULE	
98 RIM SERIES	99 RIM SERIES
9827 SERIES	9927 SERIES
9847 SERIES	9947 SERIES
22 RIM SERIES	2227 SERIES

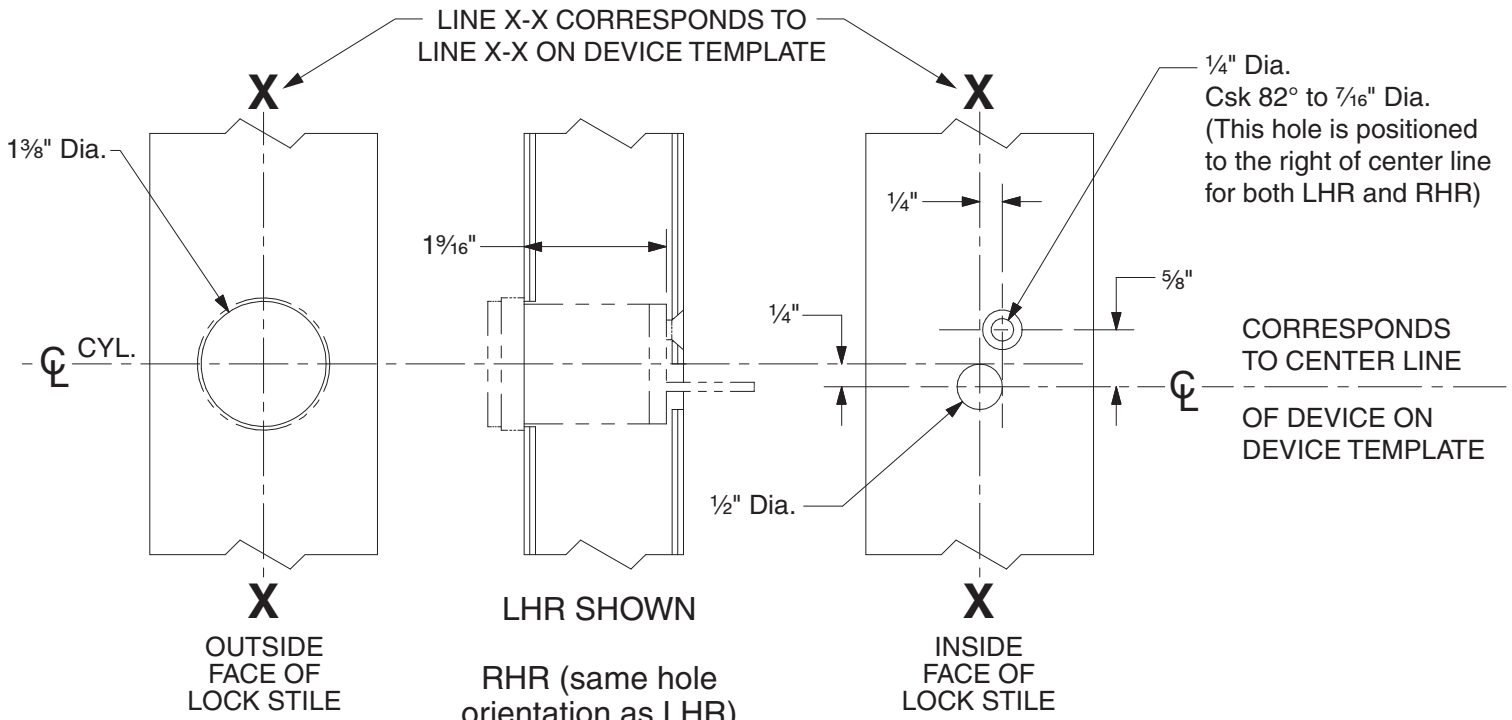

DEVICE APPLICATION SCHEDULE	
9849 SERIES	9949 SERIES

110NL Cylinder Preparation

VON DUPRIN®

NOTES: SEE MASTER SHEET #10001 FOR SUGGESTED REINFORCING

TEMPLATE NUMBER: 40022_c

DATE: 05-28-13

RIM APPLICATION

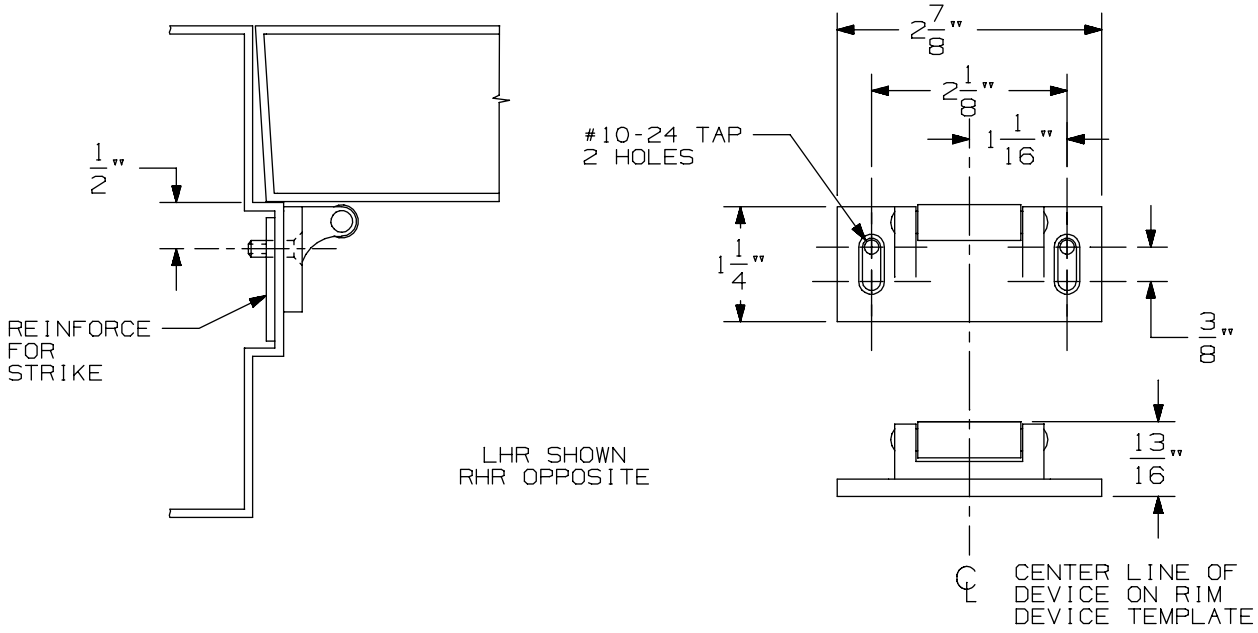

VERTICAL APPLICATION

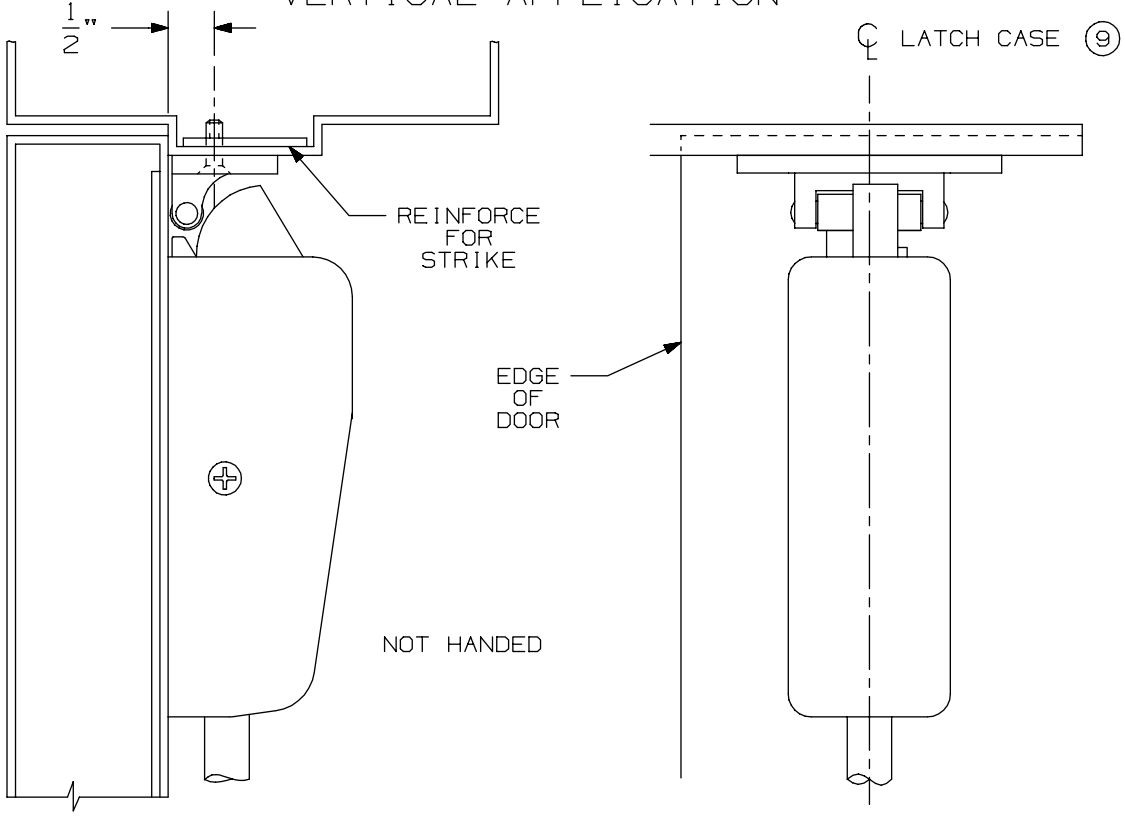

NOTE: LATCH CASE MOUNTING HOLES TO BE PREPARED AT INSTALLATION ON DOOR.

299 & 299F Strike

VON DUPRIN®

NOTES: SEE MASTER SHEET #10001 FOR SUGGESTED REINFORCING

TEMPLATE NUMBER: 30039_a

DATE: 05-23-13

DEVICE APPLICATION SCHEDULE		
INSTALLATION	MIN. STILE	BACKSET
TWO VERT. ROD DEVICES	3 11/16"	2 3/16"
VERT. ROD & MORTISE DEVICE	SEE TEMP. 10305	2 3/4"
SINGLE DOOR	3 11/16"	2 3/16"

APPLICATION	PREPARATION
990 TRIM APPLICATION SEX BOLT APPLICATION (SEE NOTE 1)	1/4" DIA. THIS SIDE 13/32" DIA. OPPOSITE SIDE - 4 PLACES

NOTES:

1. THESE FOUR HOLES TO BE PREPARED FOR SURFACE APPLICATION (#10-24 TAP) WHEN USING 696/697 TRIM. DO NOT PREPARE FOR SEX BOLTS.
2. FOR STOCK HOLLOW METAL DOORS SEE TEMPLATE NO. 10311.
3. LATCH CASE PREPARATION TO BE MADE AT INSTALLATION ON DOOR.
4. IT IS RECOMMENDED THE MOUNTING HOLES BE PREPARED IN THE FIELD.
5. FOR OUTSIDE TRIM PREPARATION, WHEN REQUIRED, SEE TRIM TEMPLATE.
6. GLASS BEAD KIT AVAILABLE WHEN REQUIRED.
7. LHR APPLICATION SHOWN, RHR APPLICATION OPPOSITE.
8. BACKSET MAY VARY WHEN USED WITH COORDINATOR.

RECOMMENDED DOOR UNDERCUT IS 1/4" FROM FINISHED FLOOR (PANIC & FIRE) OR 1/8" FROM THRESHOLD (PANIC ONLY).

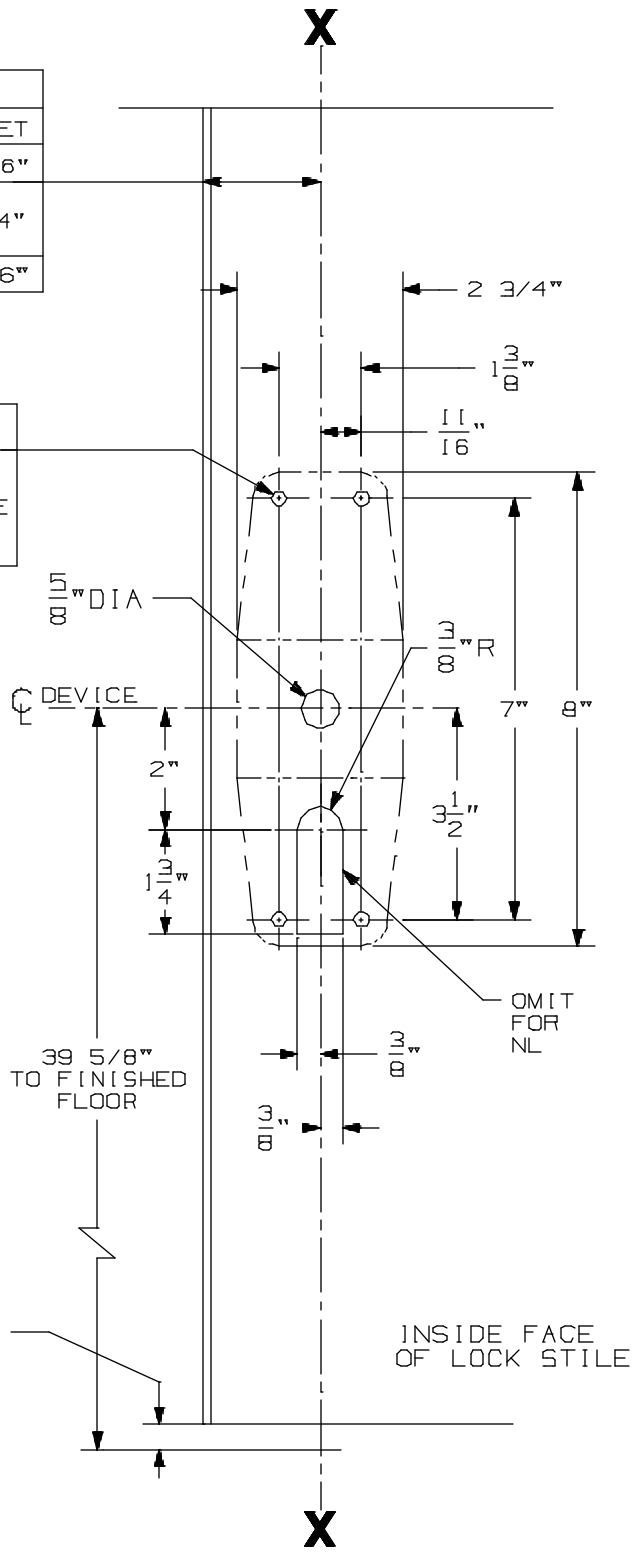

9827/9927 & 9827-F/9927-F NL, TP, K, & L Series Vertical Rod Devices

VON DUPRIN®

NOTES: SEE MASTER SHEET #10001 FOR SUGGESTED REINFORCING

TEMPLATE NUMBER: 10304_a

DATE: 05-21-13

991 K & 992 L Trim

NOTES: SEE MASTER SHEET #10001 FOR SUGGESTED REINFORCING

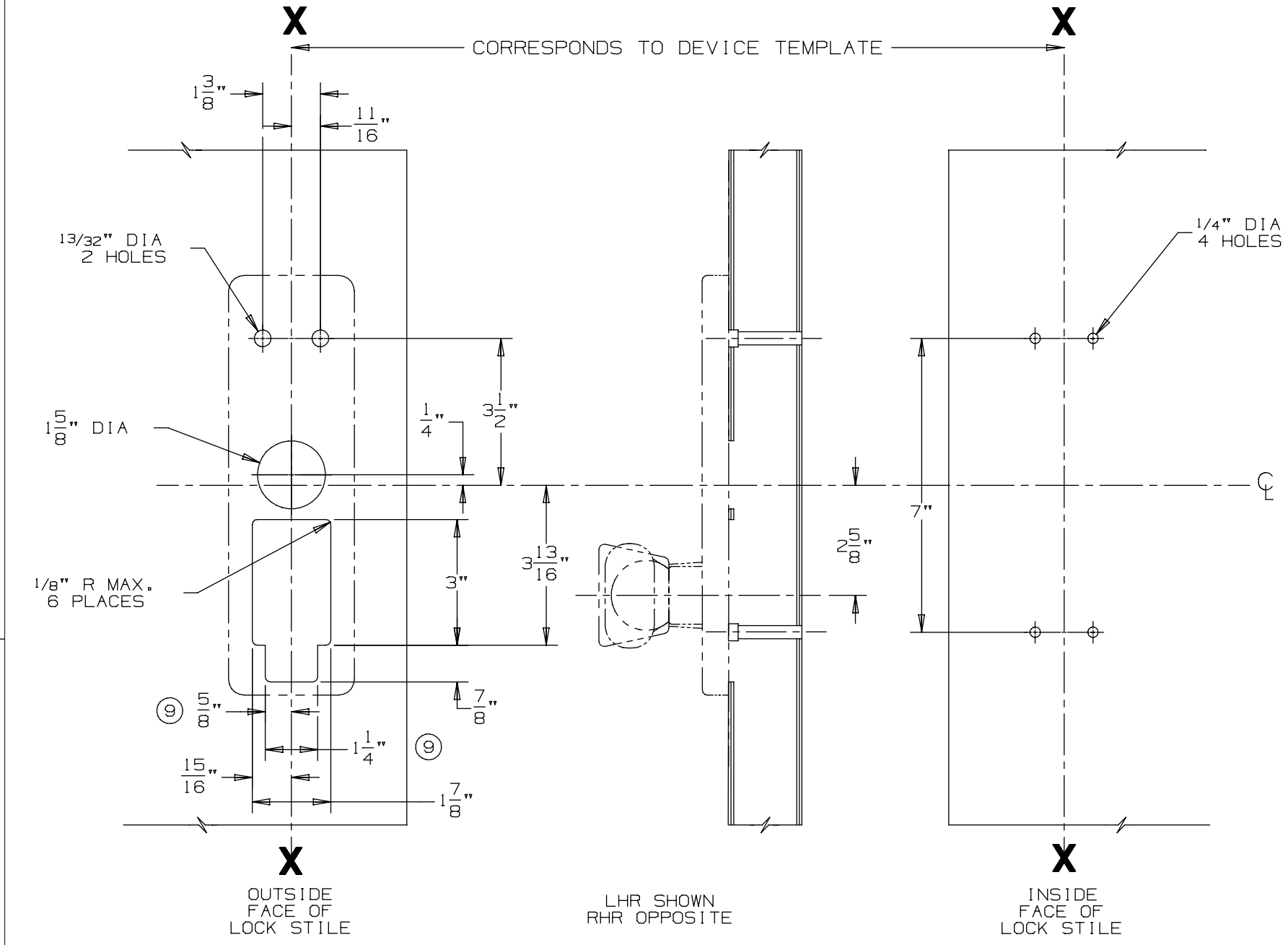

DEVICE APPLICATION SCHEDULE
98/99 SERIES RIM DEVICE
9827/9927 SERIES DEVICE
9847/9947 SERIES DEVICE

VON DUPRIN®

TEMPLATE NUMBER: 20272_a

DATE: 05-23-13

RIM APPLICATION

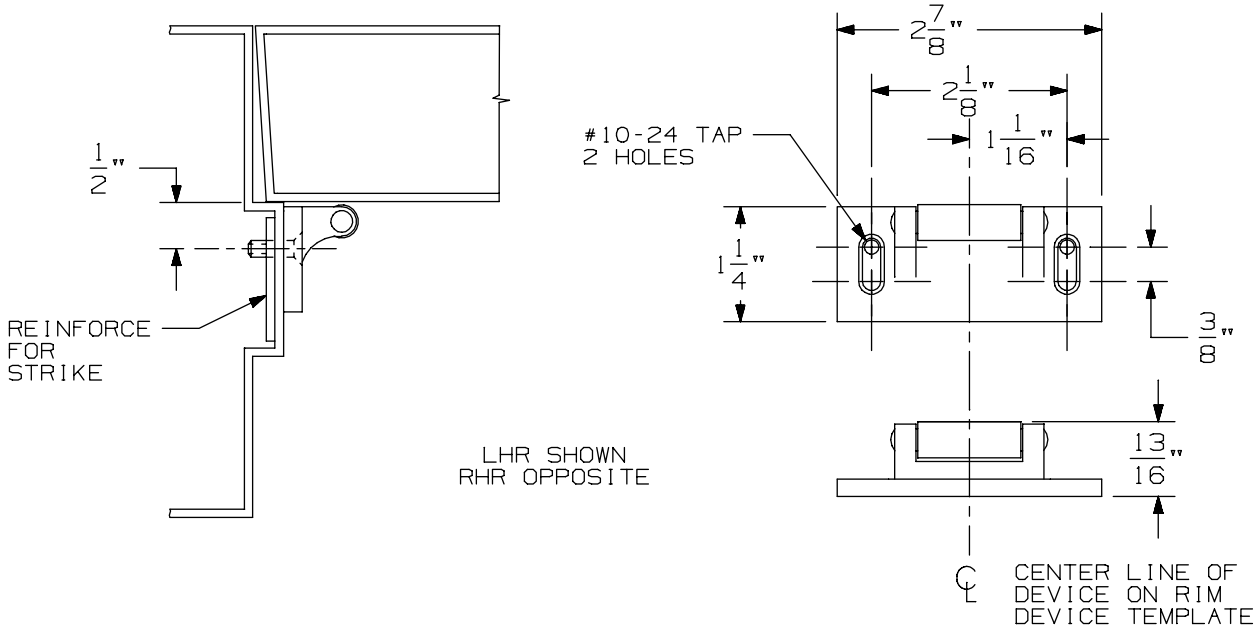

VERTICAL APPLICATION

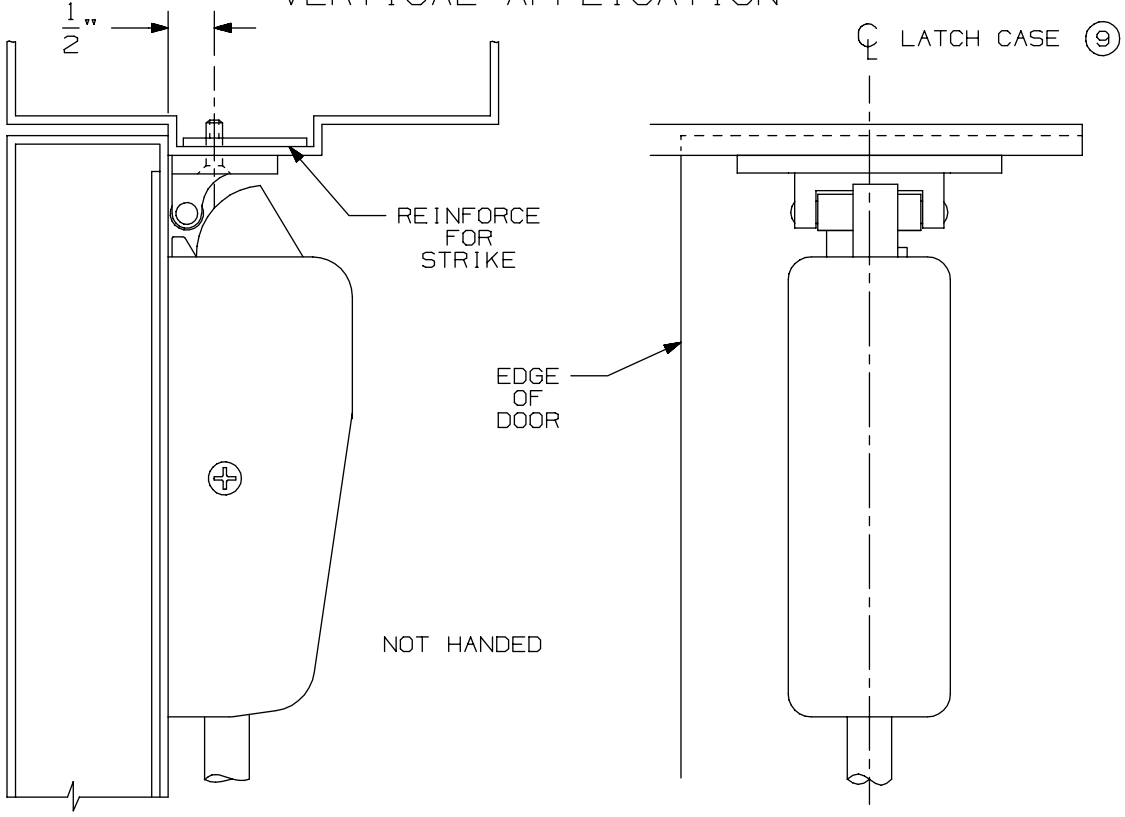

NOTE: LATCH CASE MOUNTING HOLES TO BE PREPARED AT INSTALLATION ON DOOR.

299 & 299F Strike

VON DUPRIN®

NOTES: SEE MASTER SHEET #10001 FOR SUGGESTED REINFORCING

TEMPLATE NUMBER: 30039_a

DATE: 05-23-13

DEVICE APPLICATION SCHEDULE		
INSTALLATION	MIN. STILE	BACKSET
TWO VERT. ROD DEVICES	3 11/16"	2 3/16"
VERT. ROD & MORTISE DEVICE	SEE TEMP. 10305	2 3/4"
SINGLE DOOR	3 11/16"	2 3/16"

APPLICATION	PREPARATION
990 TRIM APPLICATION SEX BOLT APPLICATION (SEE NOTE 1)	1/4" DIA. THIS SIDE 13/32" DIA. OPPOSITE SIDE - 4 PLACES

NOTES:

1. THESE FOUR HOLES TO BE PREPARED FOR SURFACE APPLICATION (#10-24 TAP) WHEN USING 696/697 TRIM. DO NOT PREPARE FOR SEX BOLTS.
2. FOR STOCK HOLLOW METAL DOORS SEE TEMPLATE NO. 10311.
3. LATCH CASE PREPARATION TO BE MADE AT INSTALLATION ON DOOR.
4. IT IS RECOMMENDED THE MOUNTING HOLES BE PREPARED IN THE FIELD.
5. FOR OUTSIDE TRIM PREPARATION, WHEN REQUIRED, SEE TRIM TEMPLATE.
6. GLASS BEAD KIT AVAILABLE WHEN REQUIRED.
7. LHR APPLICATION SHOWN, RHR APPLICATION OPPOSITE.
8. BACKSET MAY VARY WHEN USED WITH COORDINATOR.

RECOMMENDED DOOR UNDERCUT IS 1/4" FROM FINISHED FLOOR (PANIC & FIRE) OR 1/8" FROM THRESHOLD (PANIC ONLY).

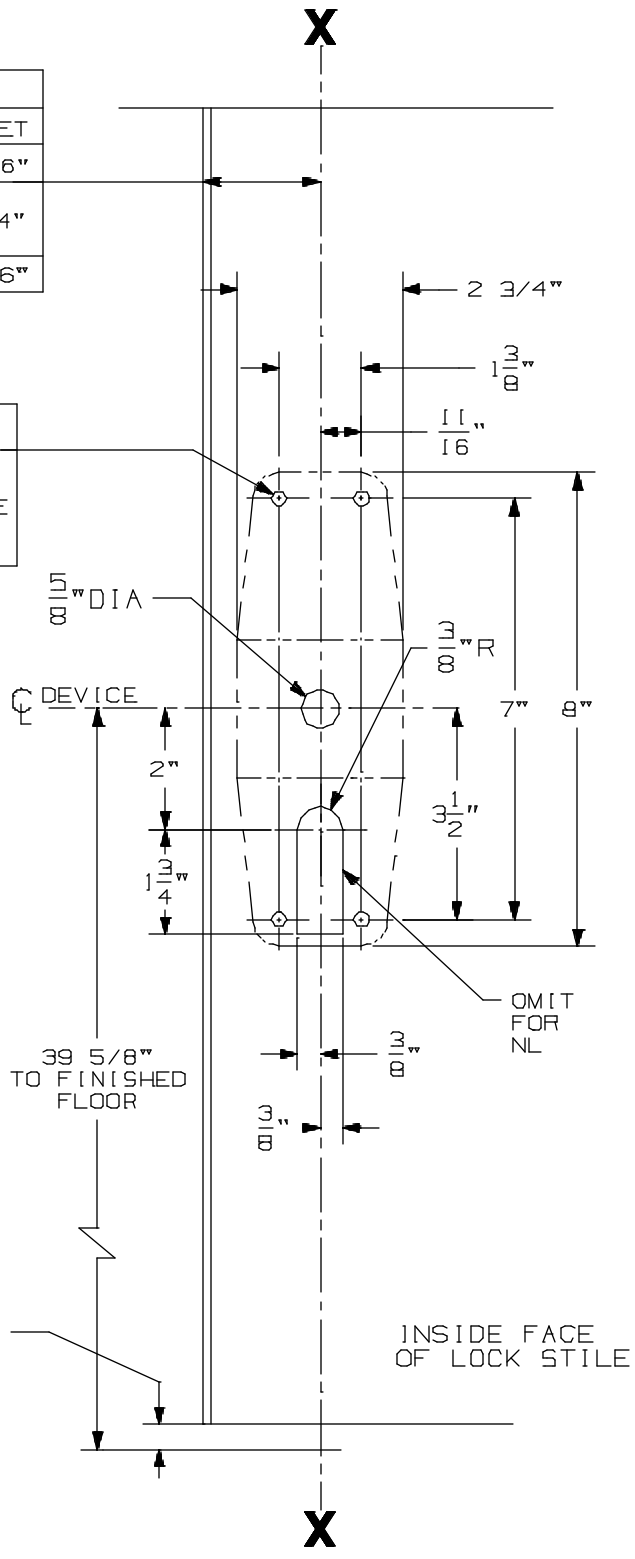

9827/9927 & 9827-F/9927-F NL, TP, K, & L Series Vertical Rod Devices

VON DUPRIN®

NOTES: SEE MASTER SHEET #10001 FOR SUGGESTED REINFORCING

TEMPLATE NUMBER: 10304_a

DATE: 05-21-13

DEVICE APPLICATION SCHEDULE	
98 RIM SERIES	99 RIM SERIES
9827 SERIES	9927 SERIES
9847 SERIES	9947 SERIES
9849 SERIES	9949 SERIES

996L, E996L, 996L-BE, E996L-BE 996K, 996K-BE R/V SERIES
TRIM METAL DOOR APPLICATION

VON DUPRIN®

NOTES: SEE MASTER SHEET #10001 FOR SUGGESTED REINFORCING

TEMPLATE NUMBER: 20003_e

DATE: 10-30-14

RIM APPLICATION

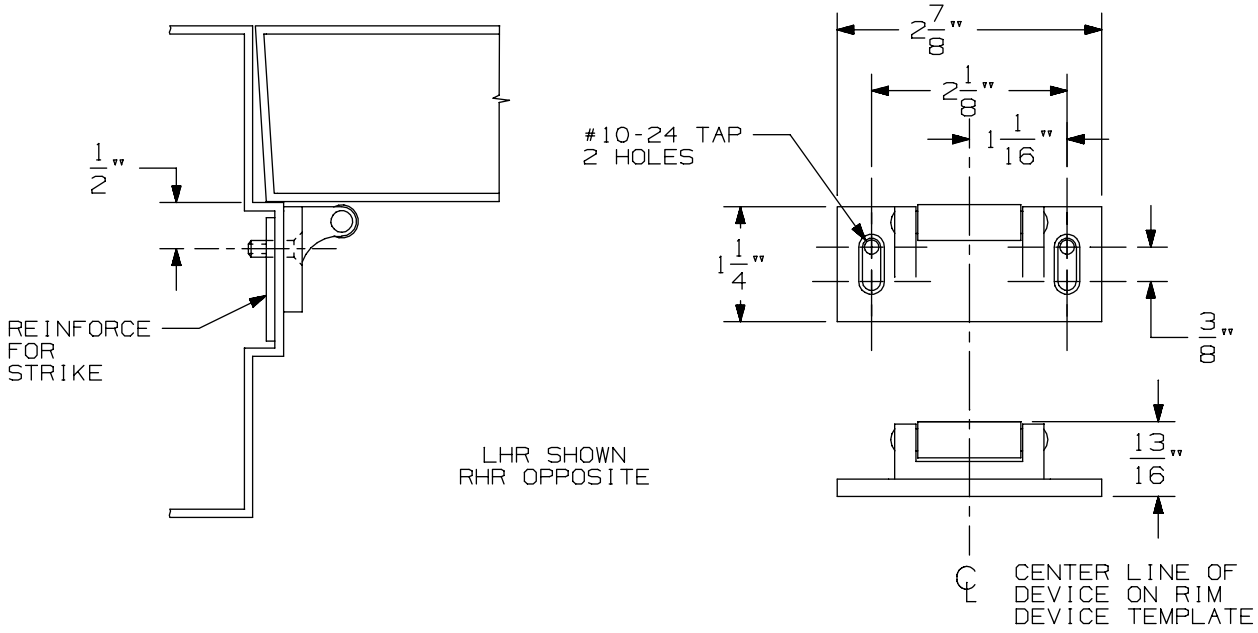

VERTICAL APPLICATION

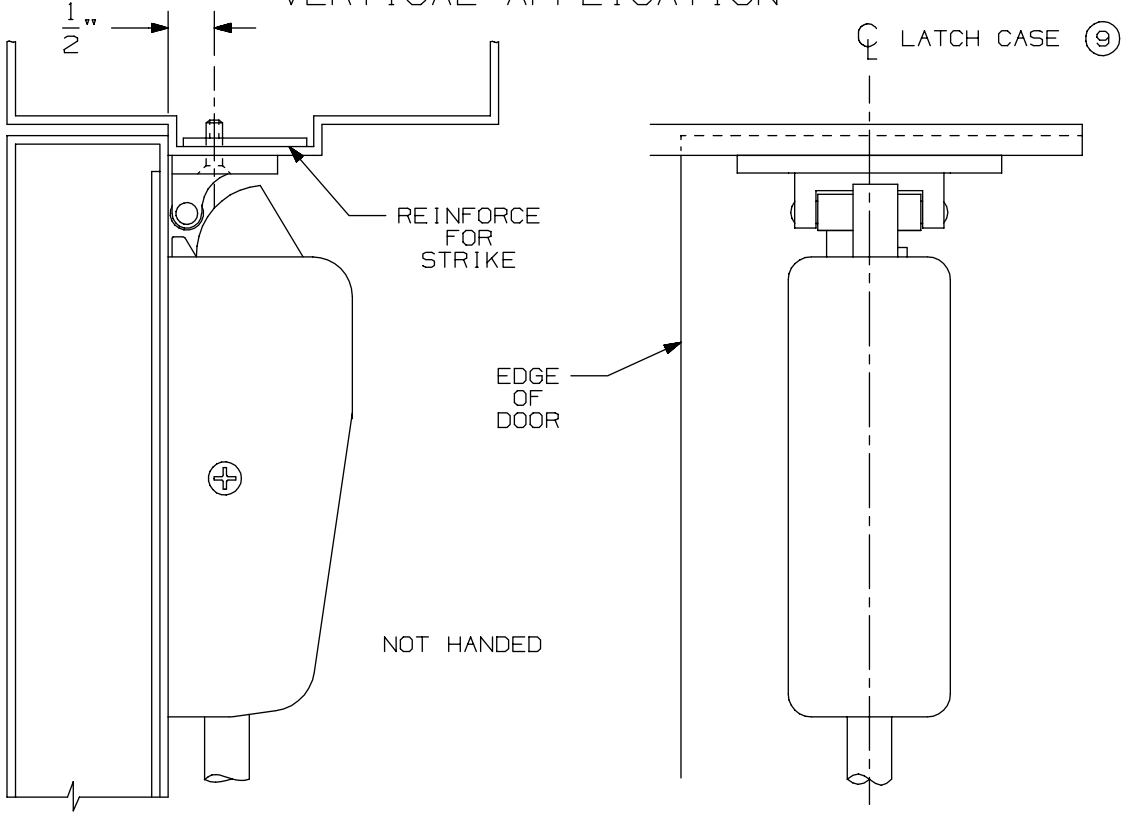

NOTE: LATCH CASE MOUNTING HOLES TO BE PREPARED AT INSTALLATION ON DOOR.

299 & 299F Strike

VON DUPRIN®

NOTES: SEE MASTER SHEET #10001 FOR SUGGESTED REINFORCING

TEMPLATE NUMBER: 30039_a

DATE: 05-23-13

DEVICE APPLICATION SCHEDULE		
INSTALLATION	MIN. STILE	BACKSET
TWO VERT. ROD DEVICES	3 11/16"	2 3/16"
VERT. ROD & MORTISE DEVICE	SEE TEMP. 10305	2 3/4"
SINGLE DOOR	3 11/16"	2 3/16"

APPLICATION	PREPARATION
990 TRIM APPLICATION SEX BOLT APPLICATION (SEE NOTE 1)	1/4" DIA. THIS SIDE 13/32" DIA. OPPOSITE SIDE - 4 PLACES

NOTES:

1. THESE FOUR HOLES TO BE PREPARED FOR SURFACE APPLICATION (#10-24 TAP) WHEN USING 696/697 TRIM. DO NOT PREPARE FOR SEX BOLTS.
2. FOR STOCK HOLLOW METAL DOORS SEE TEMPLATE NO. 10311.
3. LATCH CASE PREPARATION TO BE MADE AT INSTALLATION ON DOOR.
4. IT IS RECOMMENDED THE MOUNTING HOLES BE PREPARED IN THE FIELD.
5. FOR OUTSIDE TRIM PREPARATION, WHEN REQUIRED, SEE TRIM TEMPLATE.
6. GLASS BEAD KIT AVAILABLE WHEN REQUIRED.
7. LHR APPLICATION SHOWN, RHR APPLICATION OPPOSITE.
8. BACKSET MAY VARY WHEN USED WITH COORDINATOR.

RECOMMENDED DOOR UNDERCUT IS 1/4" FROM FINISHED FLOOR (PANIC & FIRE) OR 1/8" FROM THRESHOLD (PANIC ONLY).

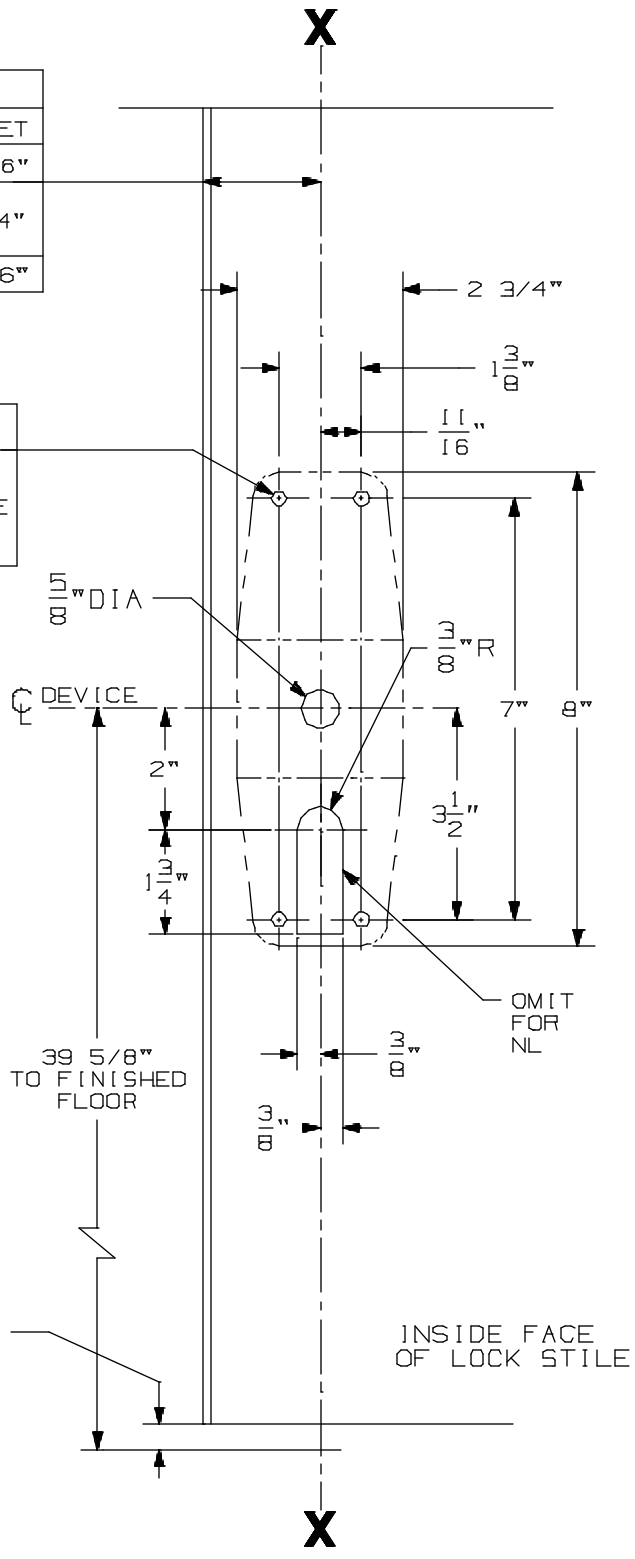

9827/9927 & 9827-F/9927-F NL, TP, K, & L Series Vertical Rod Devices

VON DUPRIN®

NOTES: SEE MASTER SHEET #10001 FOR SUGGESTED REINFORCING

TEMPLATE NUMBER: 10304_a

DATE: 05-21-13

990 TP & 990 TP-BE TRIM

NOTES: SEE MASTER SHEET #10001 FOR SUGGESTED REINFORCING

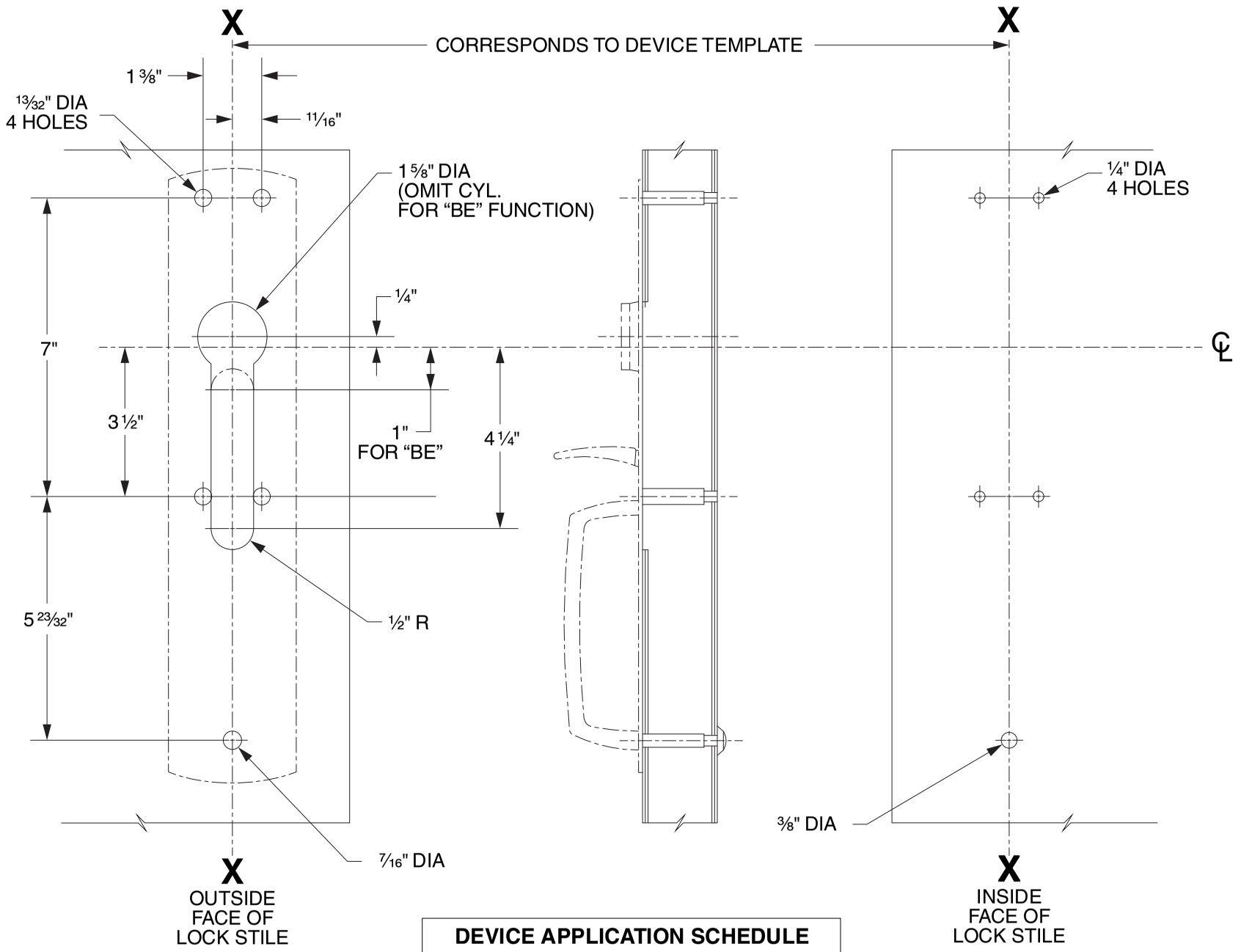

DEVICE APPLICATION SCHEDULE
98/99 SERIES RIM DEVICE
9827/9927 SERIES DEVICE
9847/9947 SERIES DEVICE
9849/9949 SERIES DEVICE

LHR SHOWN
RHR OPPOSITE

VON DUPRIN®

TEMPLATE NUMBER: 20265_C

DATE: 05-31-13

RIM APPLICATION

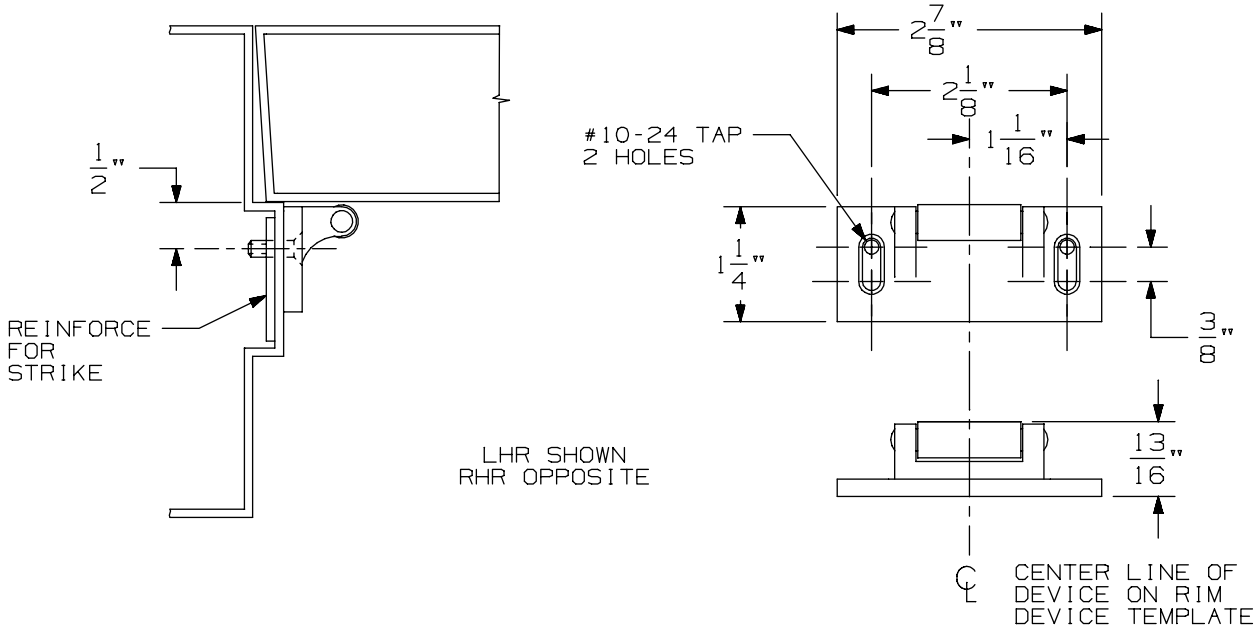

VERTICAL APPLICATION

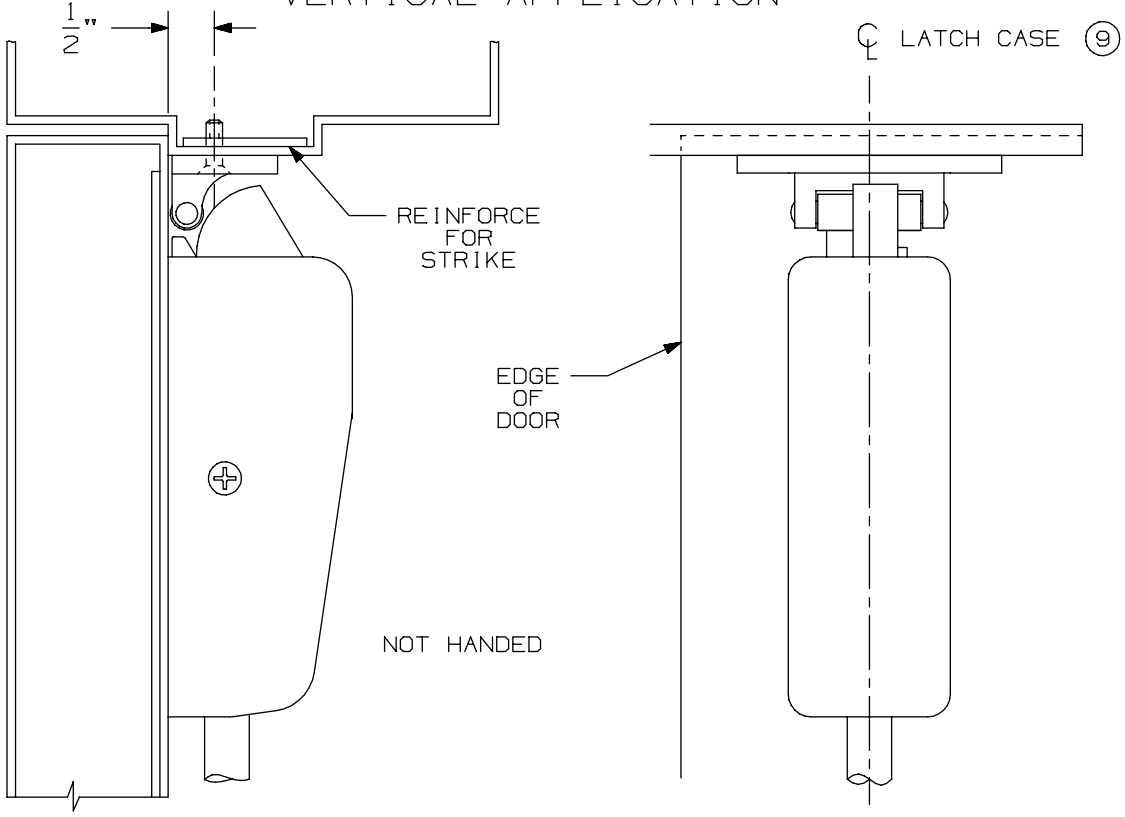

NOTE: LATCH CASE MOUNTING HOLES TO BE PREPARED AT INSTALLATION ON DOOR.

299 & 299F Strike

VON DUPRIN®

NOTES: SEE MASTER SHEET #10001 FOR SUGGESTED REINFORCING

TEMPLATE NUMBER: 30039_a

DATE: 05-23-13

DEVICE APPLICATION SCHEDULE		
INSTALLATION	MIN. STILE	BACKSET
TWO VERT. ROD DEVICES	3 11/16"	2 3/16"
VER. ROD & MORTISE DEVICE	SEE TEMP. 10305	2 3/4"
SINGLE DOOR	3 11/16"	2 3/16"

APPLICATION	PREPARATION
SURFACE APPLICATION	#10-24 TAP-4 PLACES
990 TRIM APPLICATION SEX BOLT APPLICATION (SEE NOTE 1)	1/4" DIA. THIS SIDE 13/32" DIA. OPPOSITE SIDE - 4 PLACES

NOTES:

1. THESE FOUR HOLES TO BE PREPARED FOR SURFACE APPLICATION WHEN USING 696/697 TRIM. DO NOT PREPARE FOR SEX BOLTS.
2. FOR STOCK HOLLOW METAL DOORS SEE TEMPLATE NO. 10310.
3. LATCH CASE PREPARATION TO BE MADE AT INSTALLATION ON DOOR.
4. IT IS RECOMMENDED THE MOUNTING HOLES BE PREPARED IN THE FIELD.
5. FOR OUTSIDE TRIM PREPARATION, WHEN REQUIRED, SEE TRIM TEMPLATE.
6. GLASS BEAD KIT AVAILABLE WHEN REQUIRED.
7. LHR APPLICATION SHOWN, RHR APPLICATION OPPOSITE
8. BACKSET MAY VARY WHEN USED WITH COORDINATOR.

RECOMMENDED DOOR UNDERCUT IS 1/4" FROM FINISHED FLOOR (PANIC & FIRE) OR 1/8" FROM THRESHOLD (PANIC ONLY).

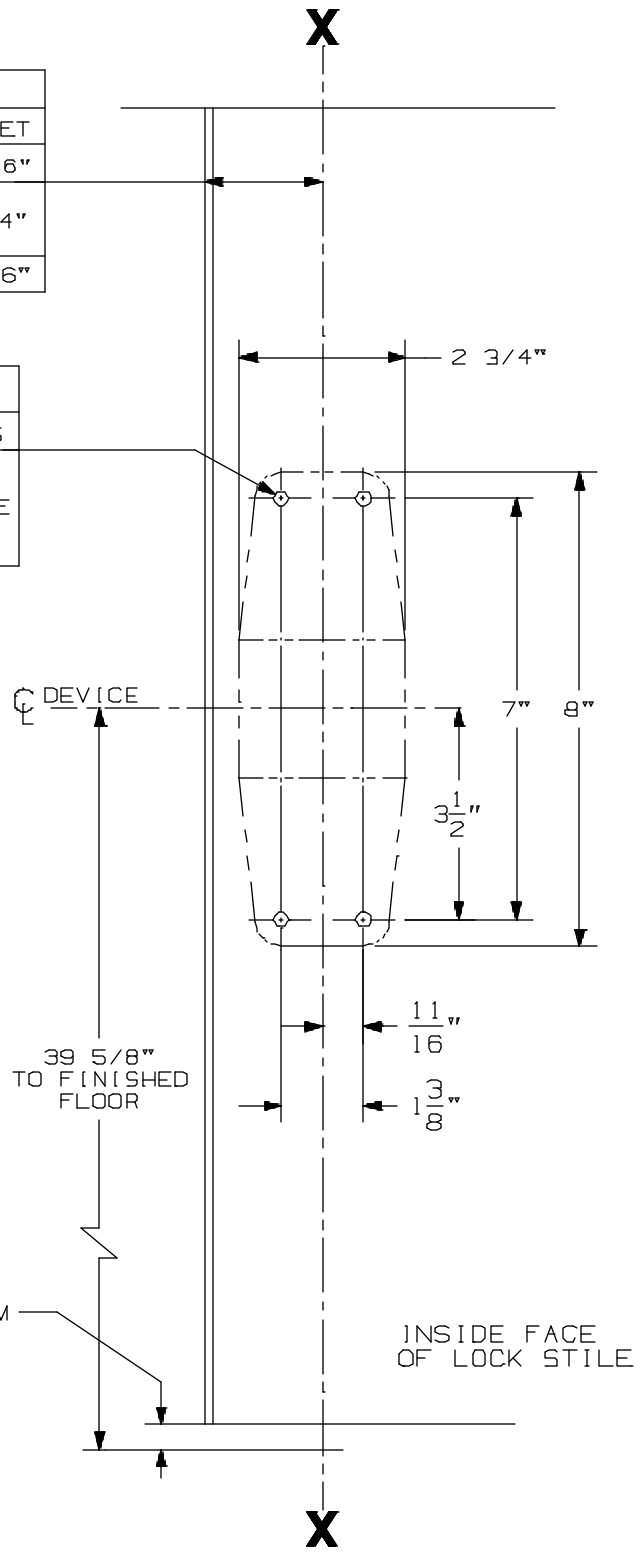

9827/9927 & 9827-F/9927-F EO & DT Series Vertical Rod Devices

VON DUPRIN®

NOTES: SEE MASTER SHEET #10001 FOR SUGGESTED REINFORCING

TEMPLATE NUMBER: 10303_a

DATE: 06-07-13

990 DT TRIM

NOTES: SEE MASTER SHEET #10001 FOR SUGGESTED REINFORCING

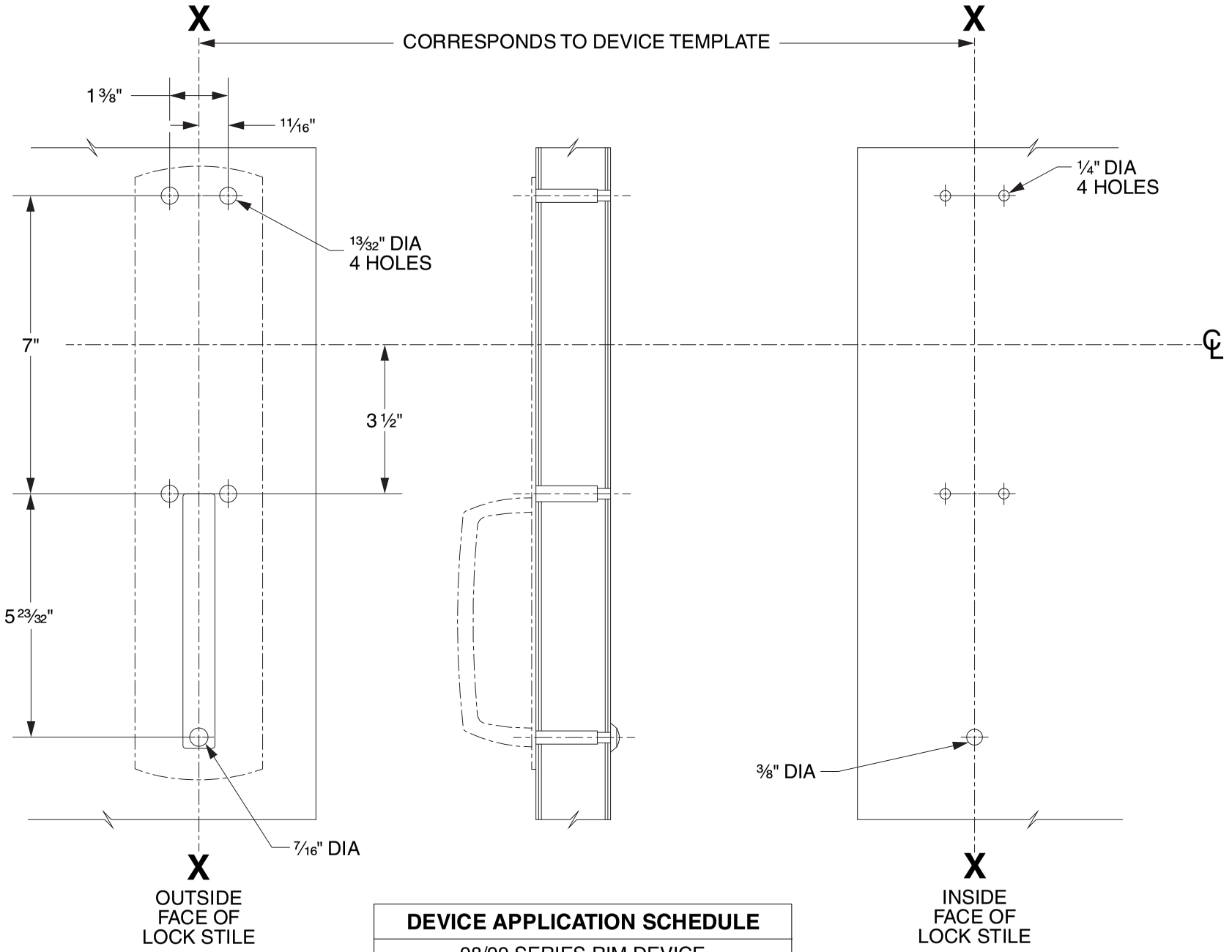

DEVICE APPLICATION SCHEDULE
98/99 SERIES RIM DEVICE
9827/9927 SERIES DEVICE
9847/9947 SERIES DEVICE
9849/9949 SERIES DEVICE
9875/9975 SERIES DEVICE

LHR SHOWN
RHR OPPOSITE

VON DUPRIN®

TEMPLATE NUMBER: 20268_C

DATE: 05-31-13

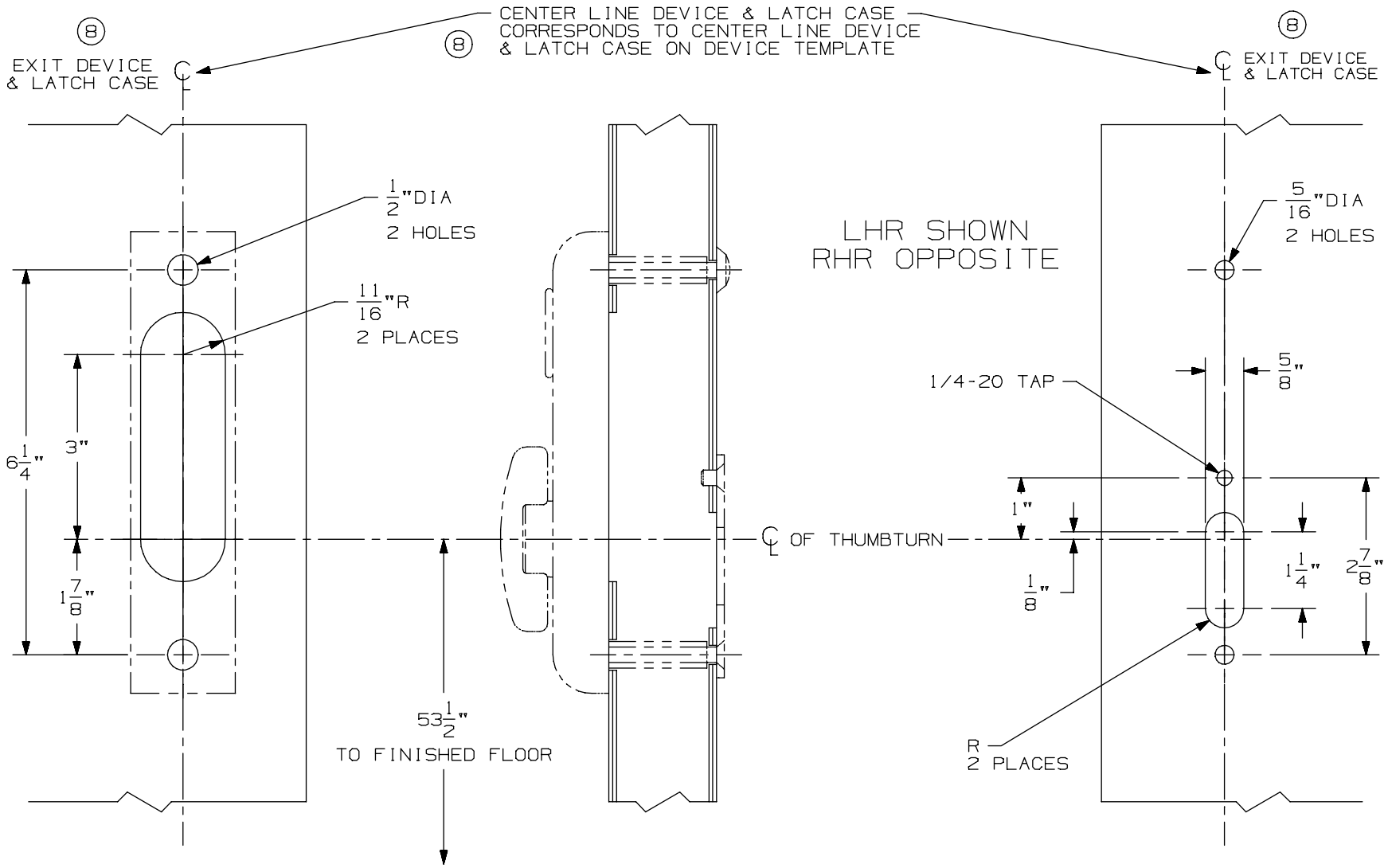

OUTSIDE
FACE OF
LOCK STILE

INSIDE
FACE OF
LOCK STILE

DEVICE APPLICATION SCHEDULE
2227 VERT. ROD DEVICE
2227-F VERT. ROD DEVICE
3327/3527 VERT. ROD DEVICE
8 3327A/3527A VERT. ROD DEVICE
8 3327A-F/3527A-F VERT. ROD DEVICE
9827/9927 VERT. ROD DEVICE
9827-F/9927-F VERT. ROD DEVICE

NOTES: SEE MASTER SHEET #10001 FOR SUGGESTED REINFORCING

374-T Control

VON DUPRIN®

TEMPLATE NUMBER: 40118_a

DATE: 05-28-13

RIM APPLICATION

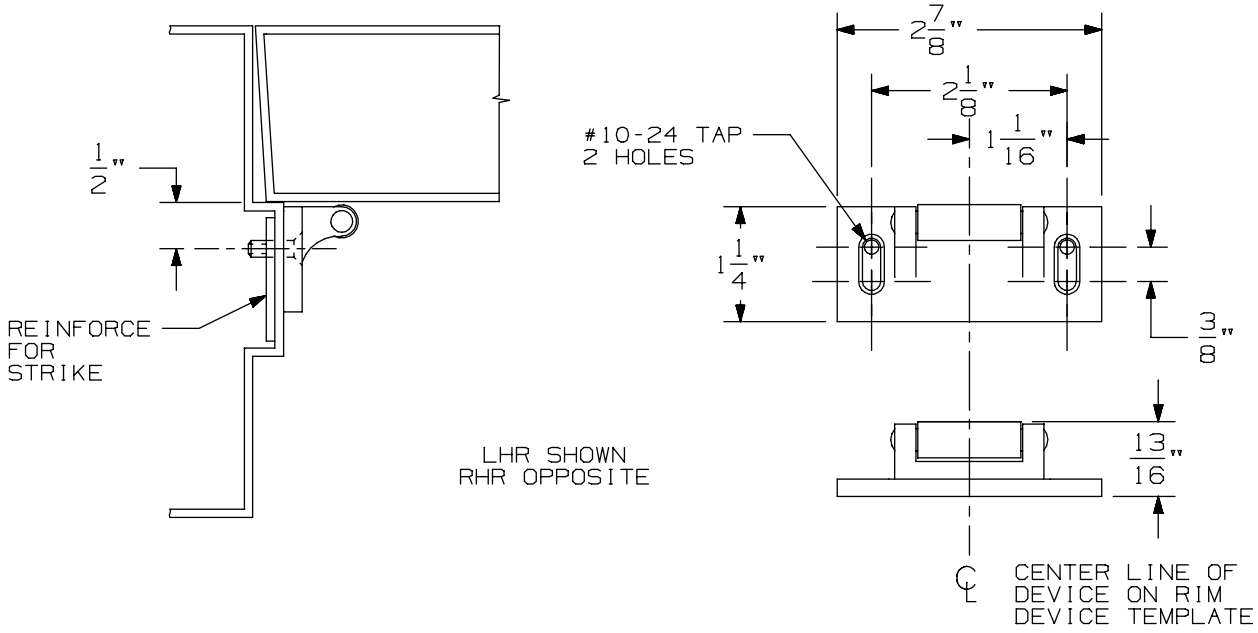

VERTICAL APPLICATION

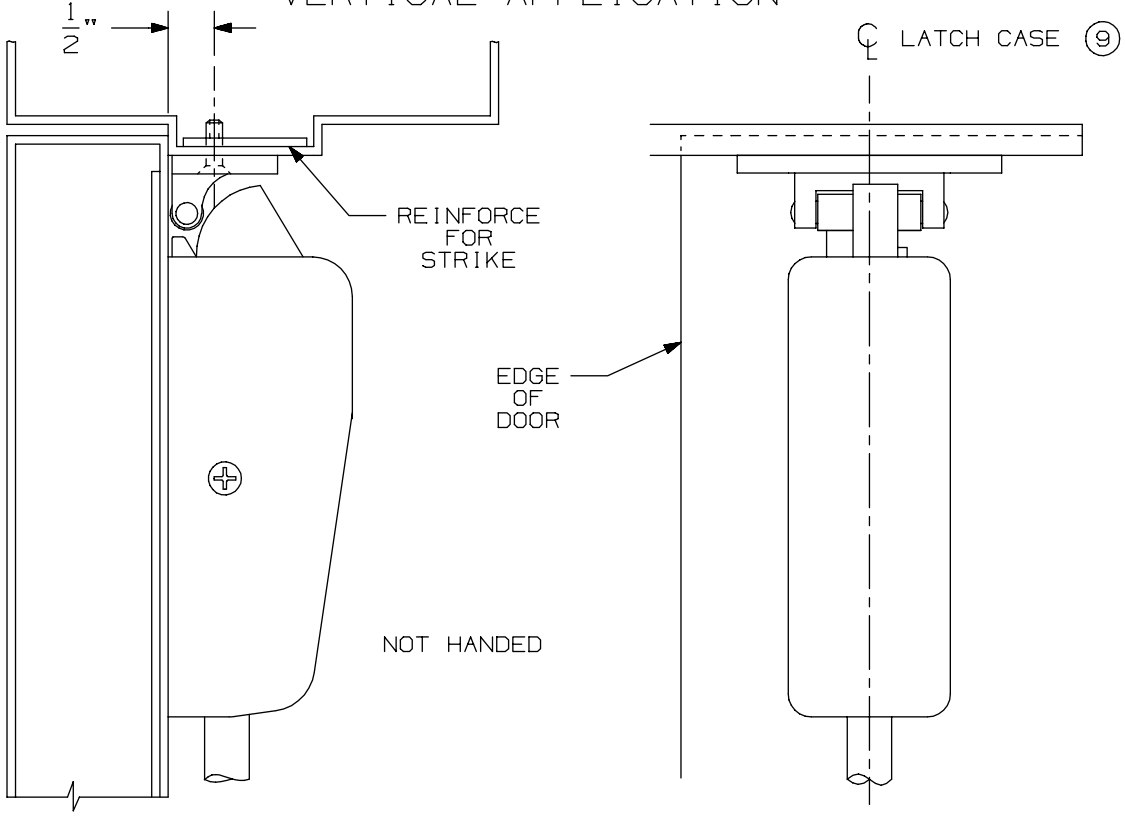

NOTE: LATCH CASE MOUNTING HOLES TO BE PREPARED AT INSTALLATION ON DOOR.

299 & 299F Strike

VON DUPRIN®

NOTES: SEE MASTER SHEET #10001 FOR SUGGESTED REINFORCING

TEMPLATE NUMBER: 30039_a

DATE: 05-23-13

98 / 99 Series Exit Devices - 9827-F-LBR/9927-F-LBR Surface Vertical Rod Fire (Standard, EL, LX, RX & SS)

DEVICE APPLICATION SCHEDULE		
INSTALLATION	MIN. STILE	BACKSET
TWO VERT. ROD DEVICES	3 11/16"	2 3/16"

APPLICATION	PREPARATION
SURFACE APPLICATION	#10-24 TAP - 4 PLACES
990 TRIM APPLICATION SEX BOLT APPLICATION (SEE NOTE 1)	1/4" DIA. THIS SIDE (3/32" DIA. OPPOSITE SIDE - 4 PLACES

NOTES:

1. THESE FOUR HOLES TO BE PREPARED FOR SURFACE APPLICATION (#10-24 TAP) WHEN USING 696/697 TRIM. DO NOT PREPARE FOR SEX BOLTS.
2. FOR STOCK HOLLOW METAL DOORS SEE TEMPLATE NO. 10310.
3. LATCH CASE PREPARATION TO BE MADE AT INSTALLATION ON DOOR.
4. IT IS RECOMMENDED THE MOUNTING HOLES BE PREPARED IN THE FIELD.
5. FOR OUTSIDE TRIM PREPARATION, WHEN REQUIRED, SEE TRIM TEMPLATE.
6. GLASS BEAD KIT AVAILABLE WHEN REQUIRED.
7. LHR APPLICATION SHOWN, RHR APPLICATION OPPOSITE.
8. THE FIRE LATCH PREP IS FOR FIRE DOORS ONLY.

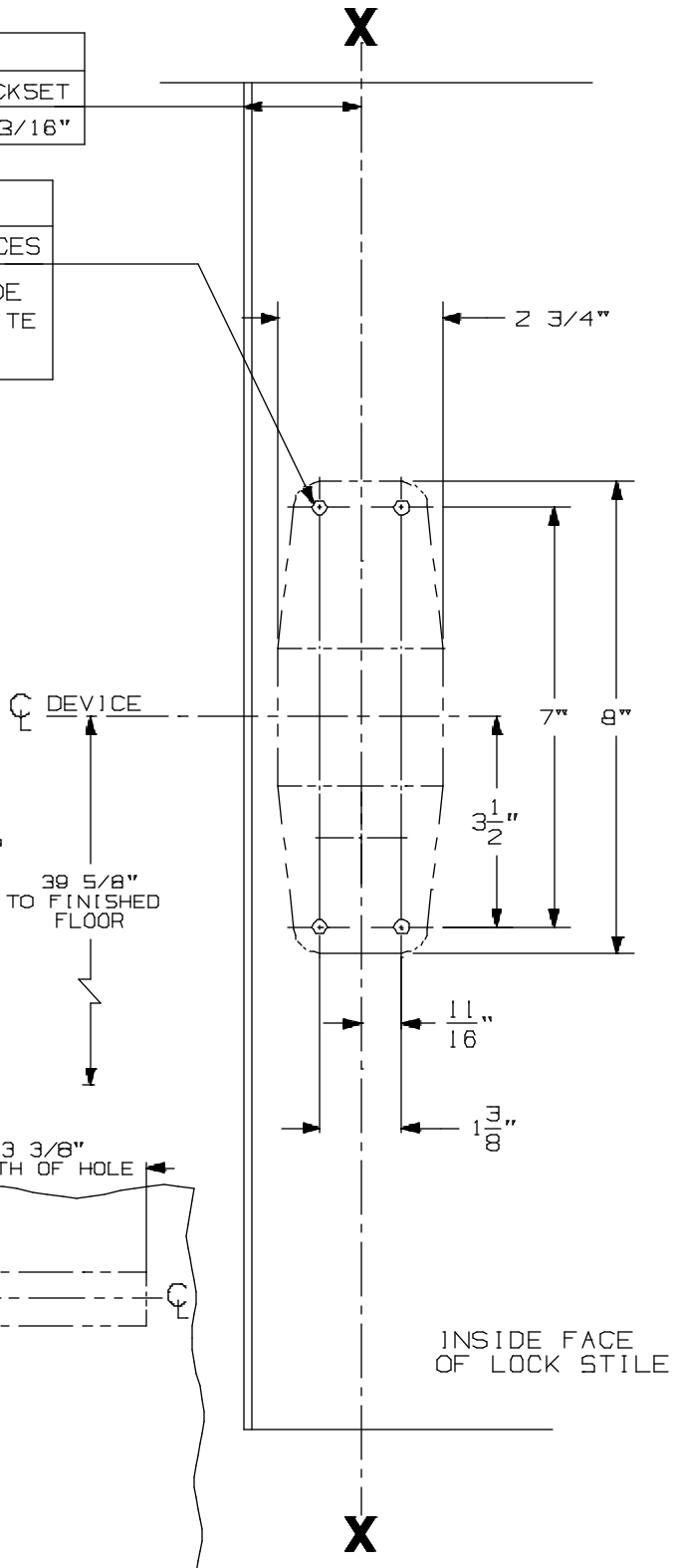

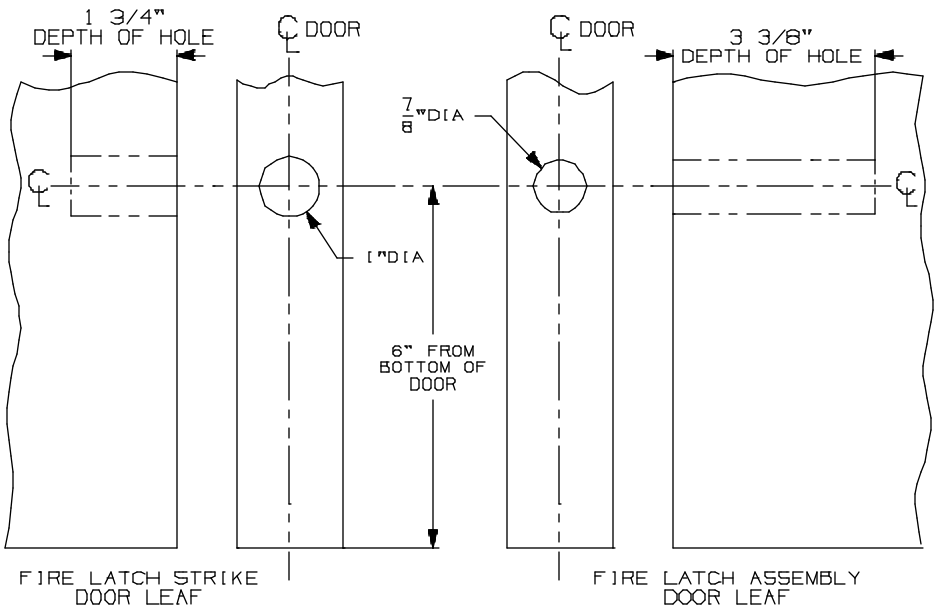

98/9927-F-LBR EO & DT Series Vertical Rod Devices

VON DUPRIN®

NOTES: SEE MASTER SHEET #10001 FOR SUGGESTED REINFORCING

TEMPLATE NUMBER: 10317_a

DATE: 05-21-13

RIM APPLICATION

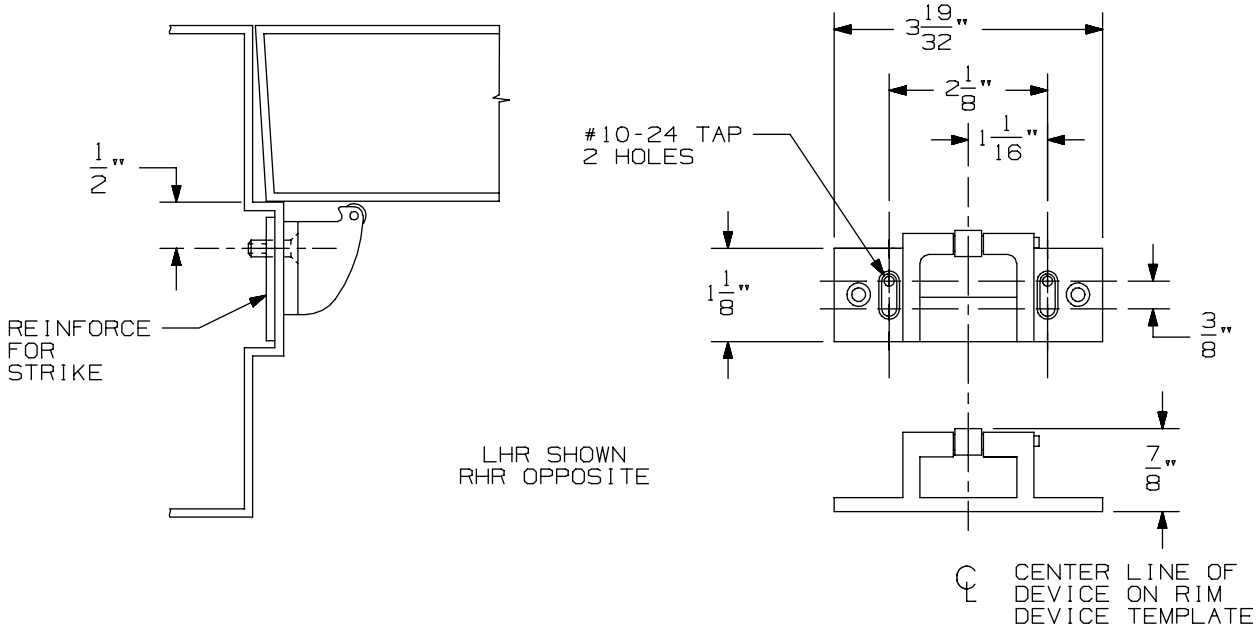

VERTICAL APPLICATION

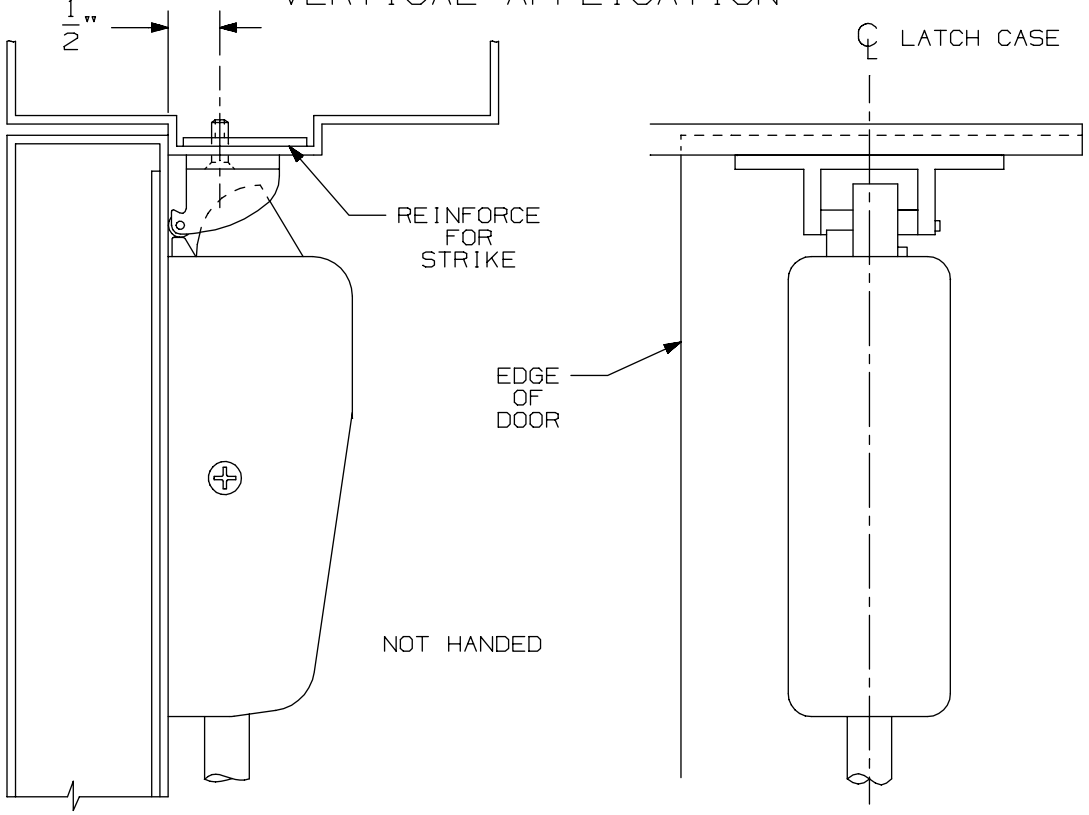

NOTE: LATCH CASE MOUNTING HOLES TO BE PREPARED AT INSTALLATION ON DOOR.

499-F Strike	VON DUPRIN®	
NOTES: SEE MASTER SHEET #10001 FOR SUGGESTED REINFORCING	TEMPLATE NUMBER: 30040_a	DATE: 05-23-13

DEVICE APPLICATION SCHEDULE		
INSTALLATION	MIN. STILE	BACKSET
TWO VERT. ROD DEVICES	3 11/16"	2 3/16"

APPLICATION	PREPARATION
990 TRIM APPLICATION SEX BOLT APPLICATION (SEE NOTE 1)	1/4" DIA. THIS SIDE 13/32" DIA. OPPOSITE SIDE - 4 PLACES

NOTES:

1. THESE FOUR HOLES TO BE PREPARED FOR SURFACE APPLICATION (#10-24 TAP) WHEN USING 696/697 TRIM. DO NOT PREPARE FOR SEX BOLTS.
2. FOR STOCK HOLLOW METAL DOORS SEE TEMPLATE NO. 10311.
3. LATCH CASE PREPARATION TO BE MADE AT INSTALLATION ON DOOR.
4. IT IS RECOMMENDED THE MOUNTING HOLES BE PREPARED IN THE FIELD.
5. FOR OUTSIDE TRIM PREPARATION, WHEN REQUIRED, SEE TRIM TEMPLATE.
6. GLASS BEAD KIT AVAILABLE WHEN REQUIRED.
7. LHR APPLICATION SHOWN, RHR APPLICATION OPPOSITE.
8. THE FIRE LATCH PREP IS FOR FIRE DOORS ONLY.

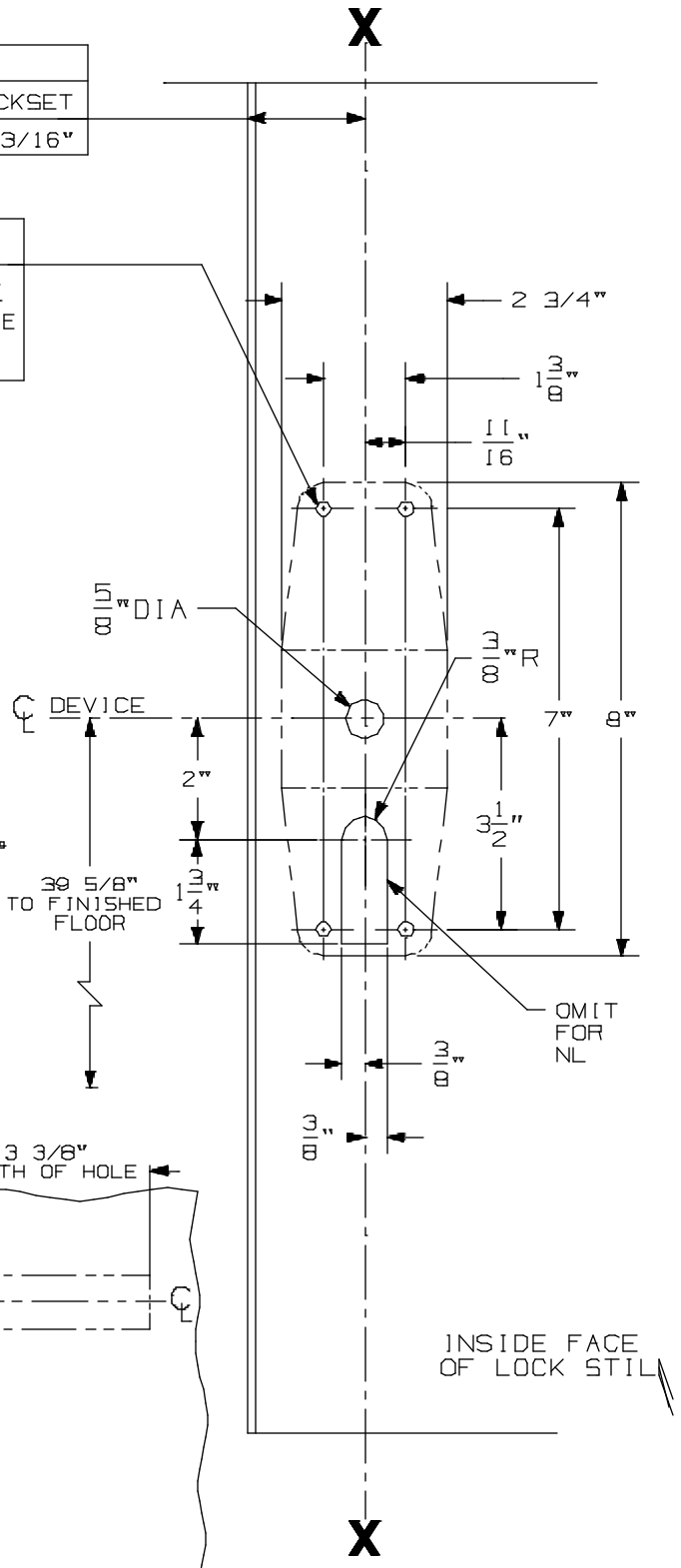

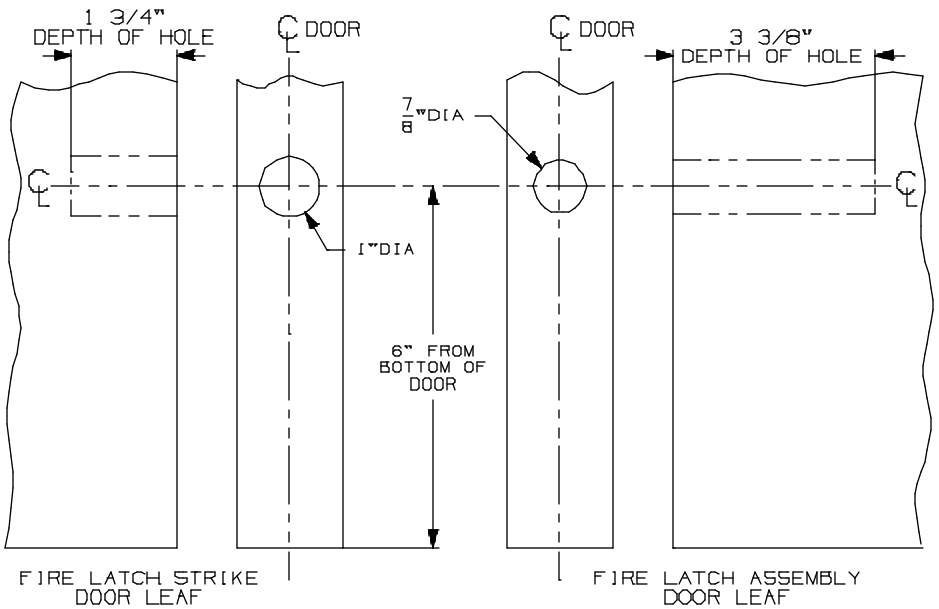

98/9927-F-LBR NL, TP, K, & L Series Vertical Rod Devices

VON DUPRIN®

NOTES: SEE MASTER SHEET #10001 FOR SUGGESTED REINFORCING

TEMPLATE NUMBER: 10318_a

DATE: 05-21-13

990 NL TRIM

NOTES: SEE MASTER SHEET #10001 FOR SUGGESTED REINFORCING

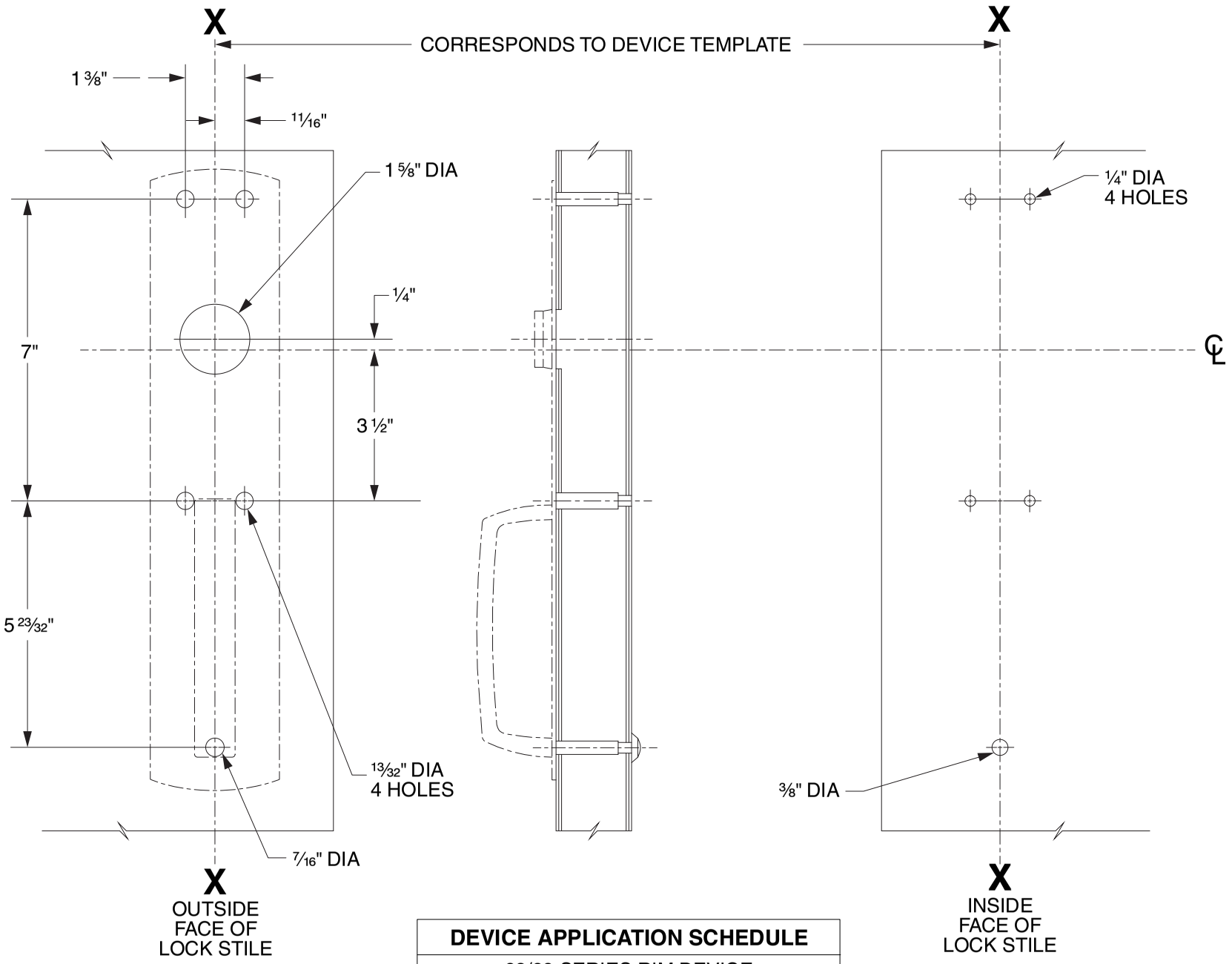

DEVICE APPLICATION SCHEDULE
98/99 SERIES RIM DEVICE
9827/9927 SERIES DEVICE
9847/9947 SERIES DEVICE
9849/9949 SERIES DEVICE

LHR SHOWN
RHR OPPOSITE

VON DUPRIN®

TEMPLATE NUMBER: 20267_C

DATE: 05-31-13

RIM APPLICATION

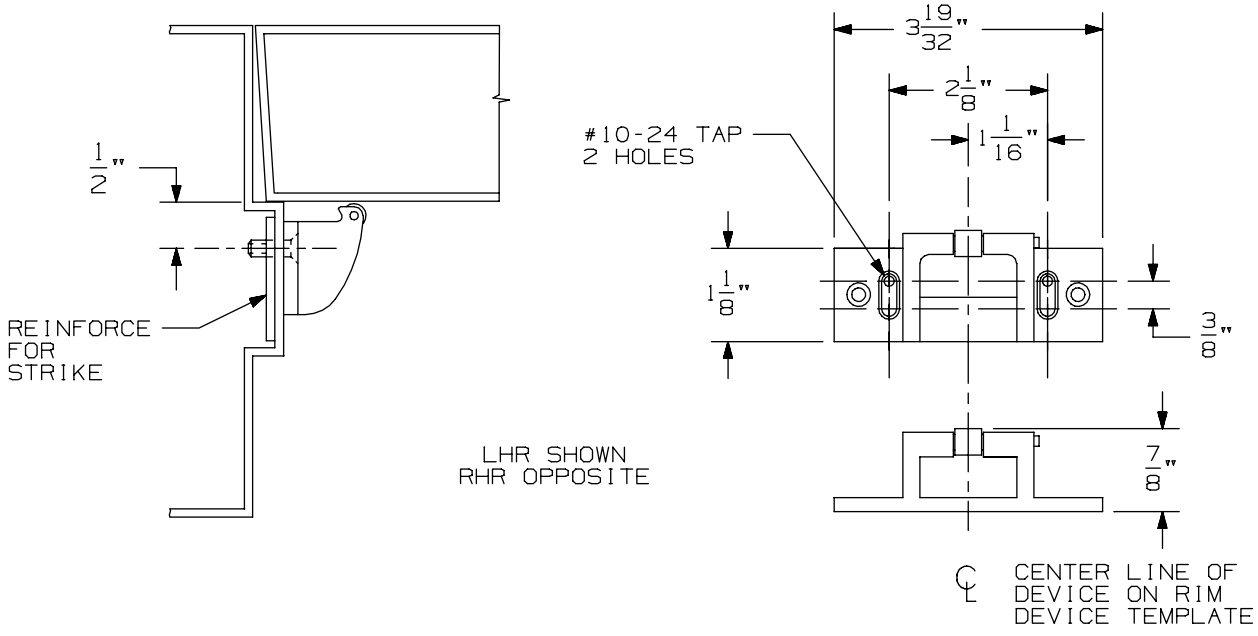

VERTICAL APPLICATION

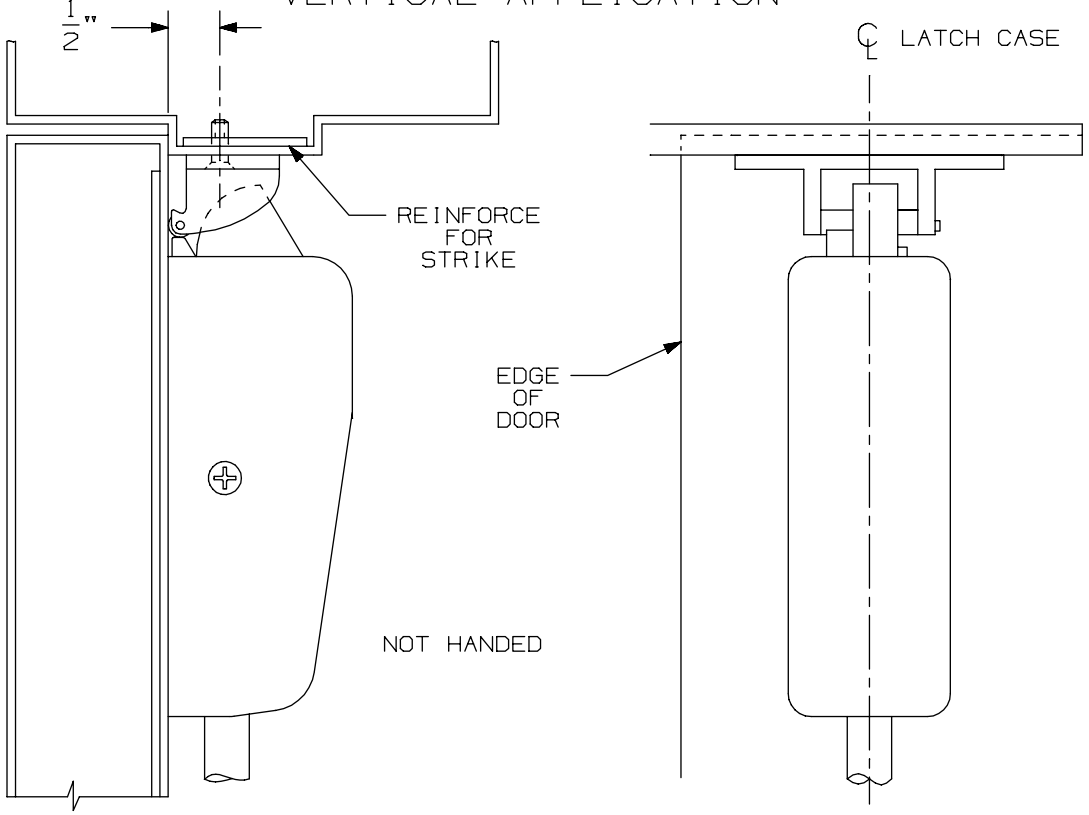

NOTE: LATCH CASE MOUNTING HOLES TO BE PREPARED AT INSTALLATION ON DOOR.

499-F Strike	VON DUPRIN®	
NOTES: SEE MASTER SHEET #10001 FOR SUGGESTED REINFORCING	TEMPLATE NUMBER: 30040_a	DATE: 05-23-13

DEVICE APPLICATION SCHEDULE		
INSTALLATION	MIN. STILE	BACKSET
TWO VERT. ROD DEVICES	3 11/16"	2 3/16"

APPLICATION	PREPARATION
990 TRIM APPLICATION SEX BOLT APPLICATION (SEE NOTE 1)	1/4" DIA. THIS SIDE 13/32" DIA. OPPOSITE SIDE - 4 PLACES

NOTES:

1. THESE FOUR HOLES TO BE PREPARED FOR SURFACE APPLICATION (#10-24 TAP) WHEN USING 696/697 TRIM. DO NOT PREPARE FOR SEX BOLTS.
2. FOR STOCK HOLLOW METAL DOORS SEE TEMPLATE NO. 10311.
3. LATCH CASE PREPARATION TO BE MADE AT INSTALLATION ON DOOR.
4. IT IS RECOMMENDED THE MOUNTING HOLES BE PREPARED IN THE FIELD.
5. FOR OUTSIDE TRIM PREPARATION, WHEN REQUIRED, SEE TRIM TEMPLATE.
6. GLASS BEAD KIT AVAILABLE WHEN REQUIRED.
7. LHR APPLICATION SHOWN, RHR APPLICATION OPPOSITE.
8. THE FIRE LATCH PREP IS FOR FIRE DOORS ONLY.

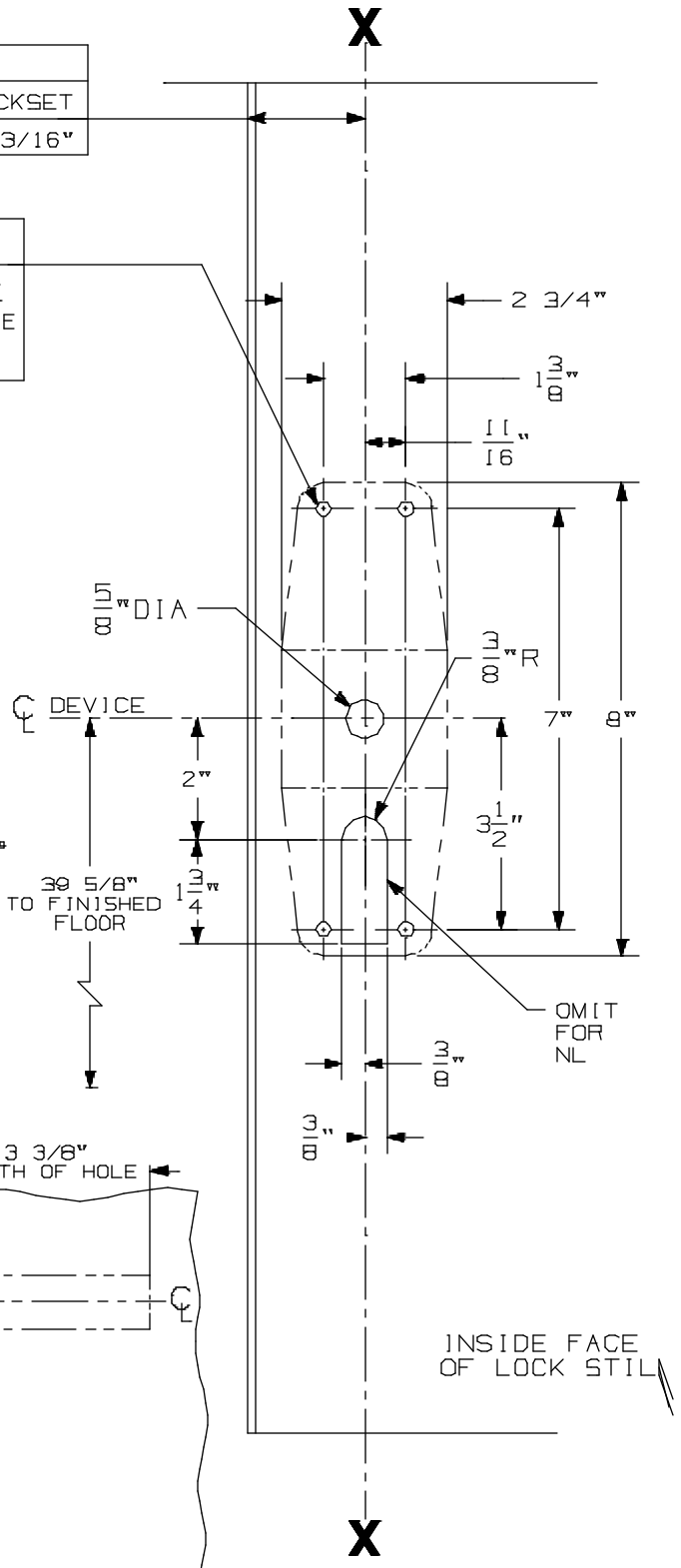

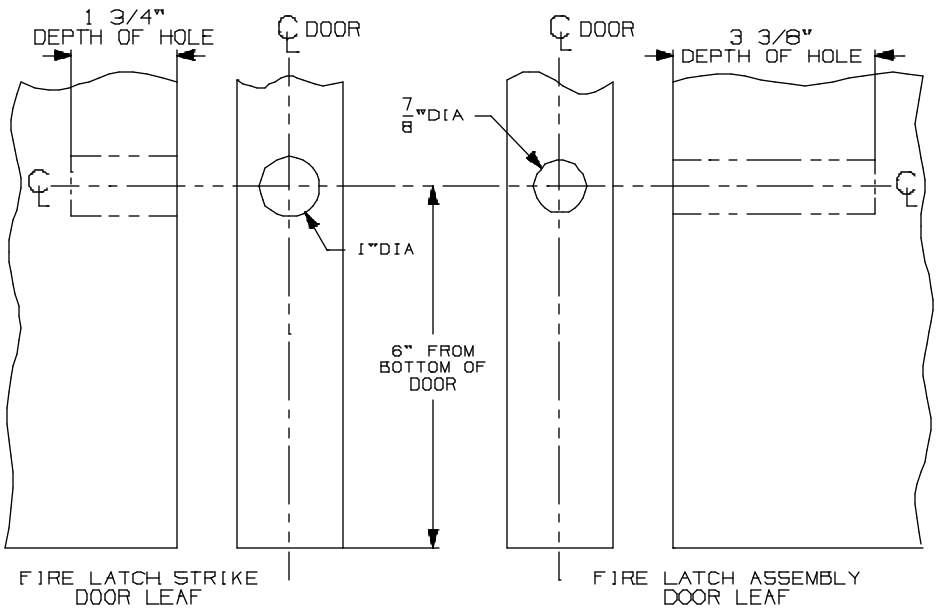

98/9927-F-LBR NL, TP, K, & L Series Vertical Rod Devices

VON DUPRIN®

NOTES: SEE MASTER SHEET #10001 FOR SUGGESTED REINFORCING

TEMPLATE NUMBER: 10318_a

DATE: 05-21-13

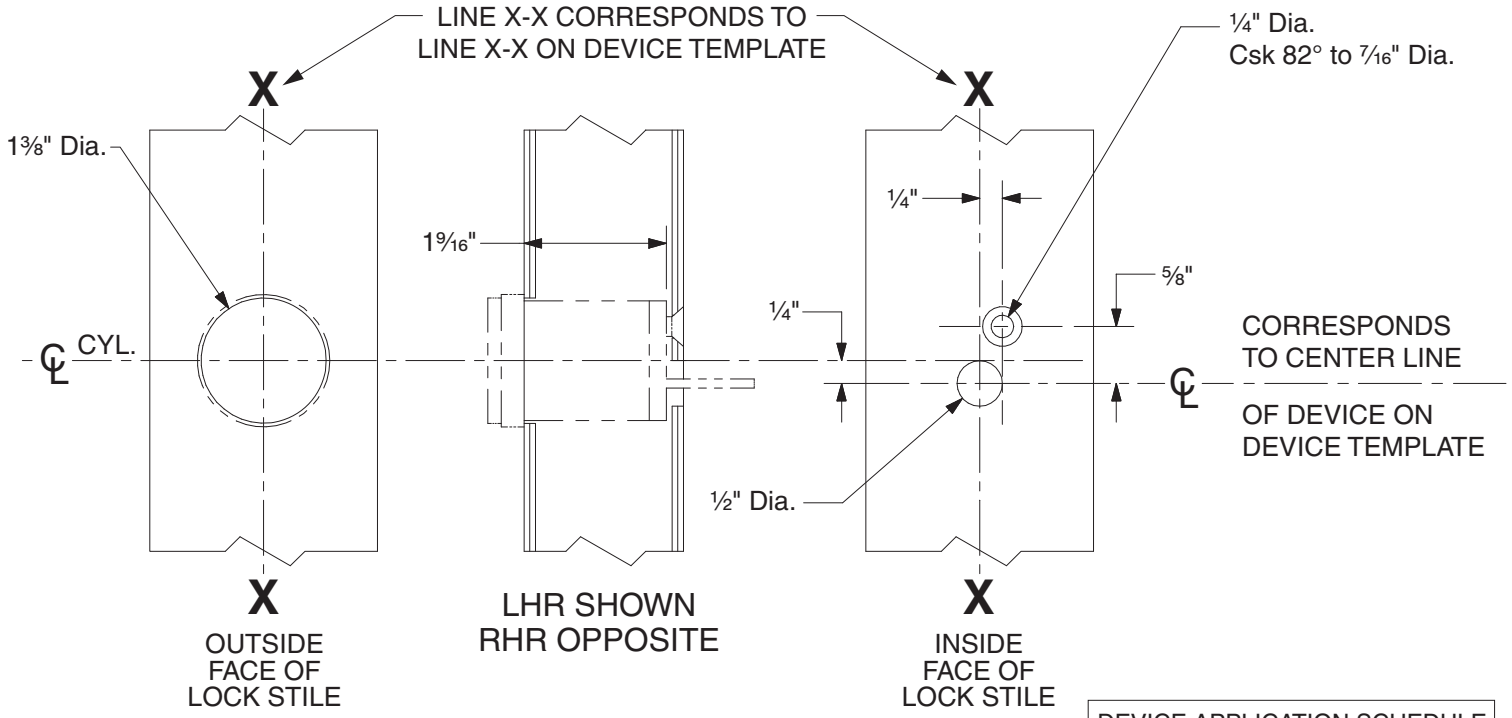

DEVICE APPLICATION SCHEDULE	
98 RIM SERIES	99 RIM SERIES
9827 SERIES	9927 SERIES
9847 SERIES	9947 SERIES
22 RIM SERIES	2227 SERIES

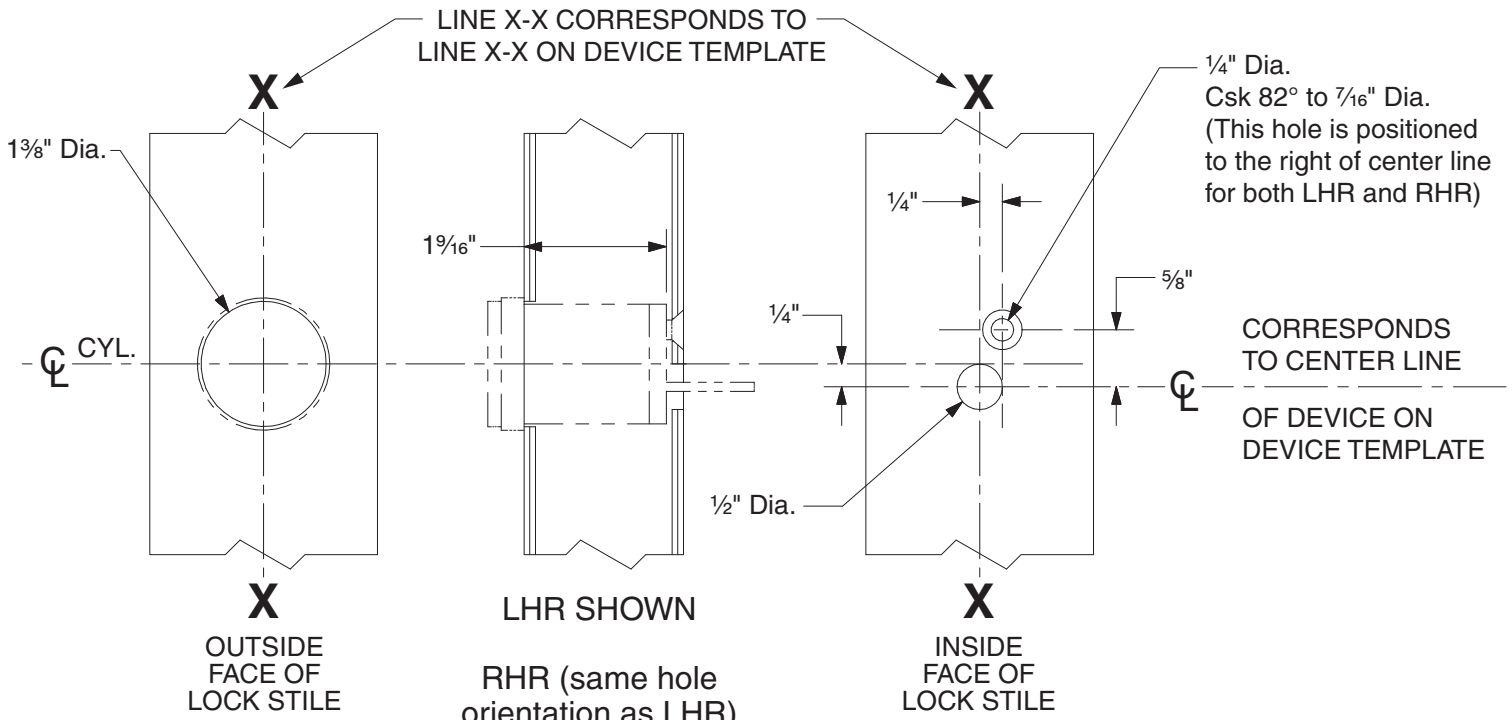

DEVICE APPLICATION SCHEDULE	
9849 SERIES	9949 SERIES

110NL Cylinder Preparation

VON DUPRIN®

NOTES: SEE MASTER SHEET #10001 FOR SUGGESTED REINFORCING

TEMPLATE NUMBER: 40022_c

DATE: 05-28-13

RIM APPLICATION

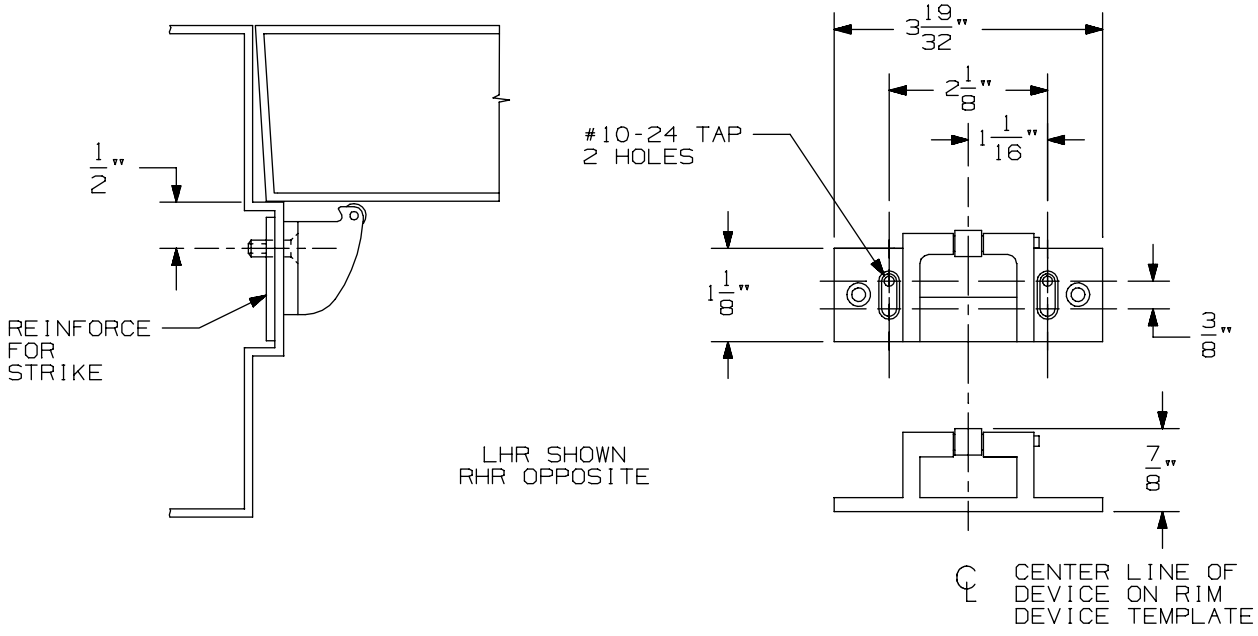

VERTICAL APPLICATION

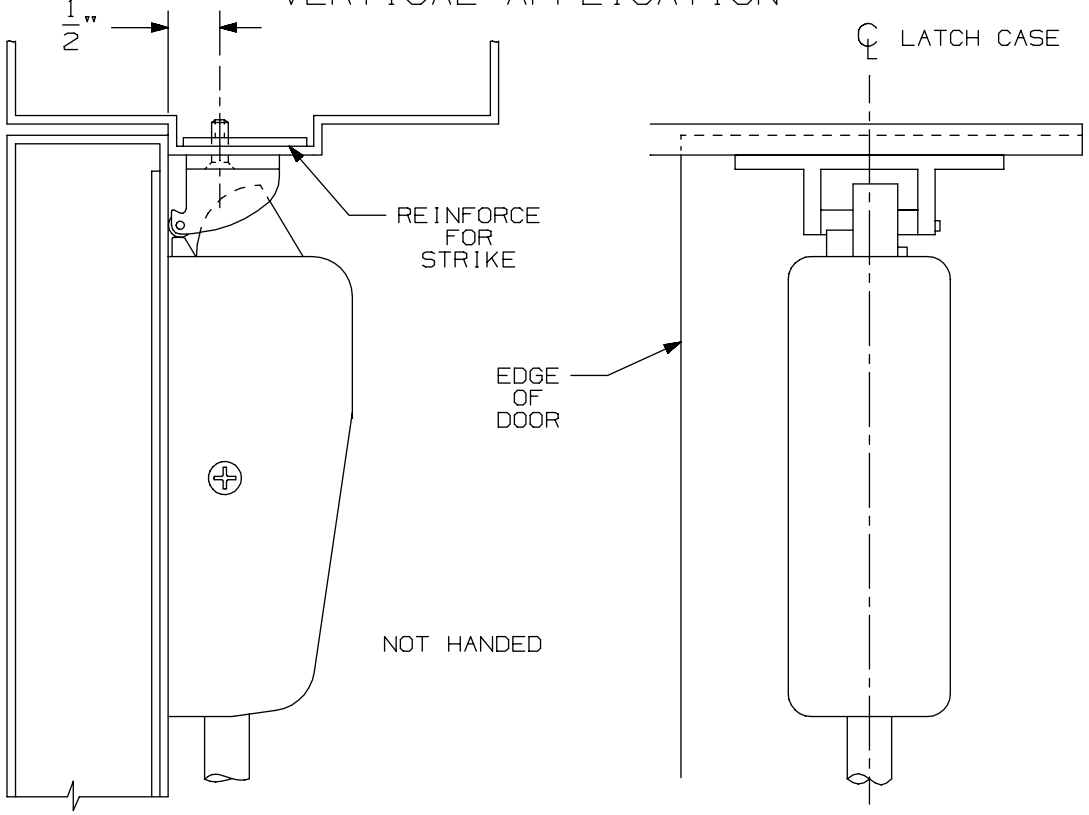

NOTE: LATCH CASE MOUNTING HOLES TO BE PREPARED AT INSTALLATION ON DOOR.

499-F Strike	VON DUPRIN®	
NOTES: SEE MASTER SHEET #10001 FOR SUGGESTED REINFORCING	TEMPLATE NUMBER: 30040_a	DATE: 05-23-13

DEVICE APPLICATION SCHEDULE		
INSTALLATION	MIN. STILE	BACKSET
TWO VERT. ROD DEVICES	3 11/16"	2 3/16"

APPLICATION	PREPARATION
990 TRIM APPLICATION SEX BOLT APPLICATION (SEE NOTE 1)	1/4" DIA. THIS SIDE 13/32" DIA. OPPOSITE SIDE - 4 PLACES

NOTES:

1. THESE FOUR HOLES TO BE PREPARED FOR SURFACE APPLICATION (#10-24 TAP) WHEN USING 696/697 TRIM. DO NOT PREPARE FOR SEX BOLTS.
2. FOR STOCK HOLLOW METAL DOORS SEE TEMPLATE NO. 10311.
3. LATCH CASE PREPARATION TO BE MADE AT INSTALLATION ON DOOR.
4. IT IS RECOMMENDED THE MOUNTING HOLES BE PREPARED IN THE FIELD.
5. FOR OUTSIDE TRIM PREPARATION, WHEN REQUIRED, SEE TRIM TEMPLATE.
6. GLASS BEAD KIT AVAILABLE WHEN REQUIRED.
7. LHR APPLICATION SHOWN, RHR APPLICATION OPPOSITE.
8. THE FIRE LATCH PREP IS FOR FIRE DOORS ONLY.

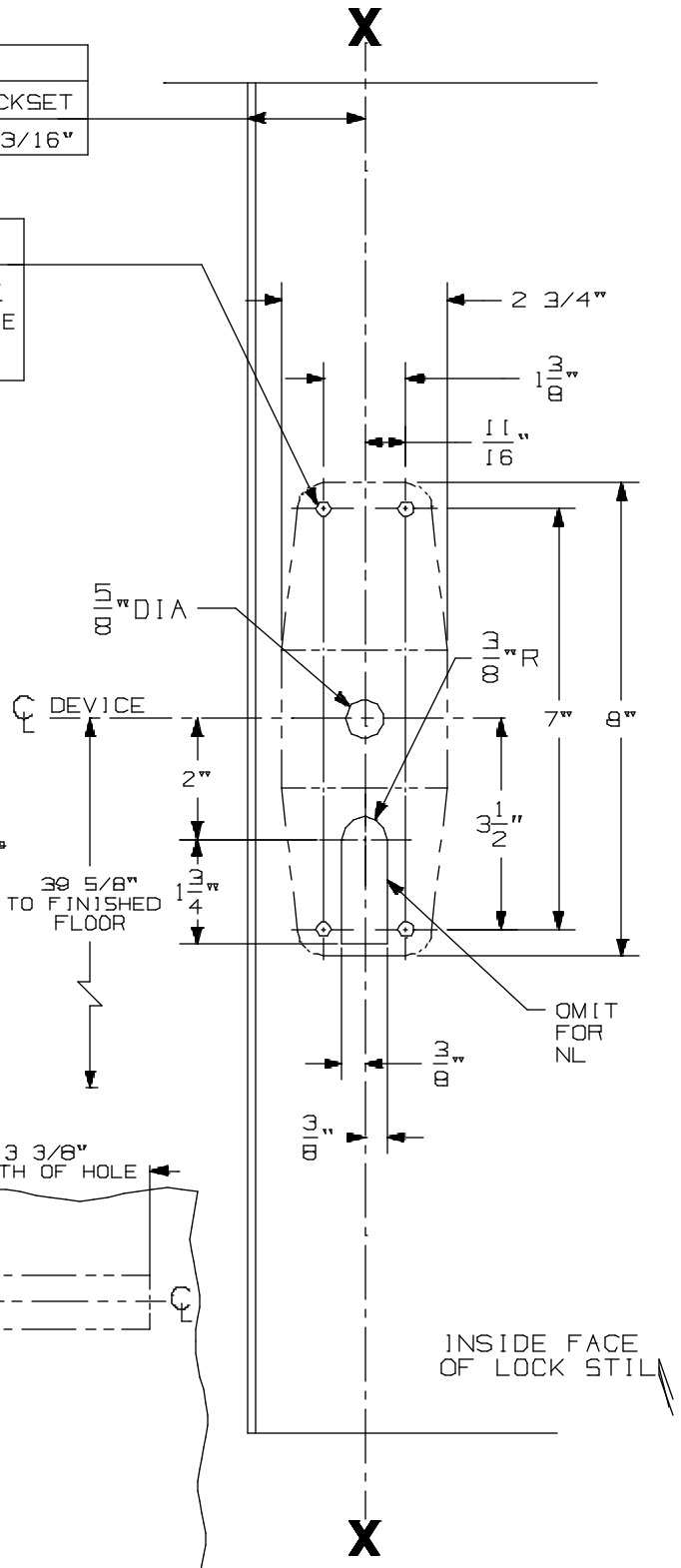

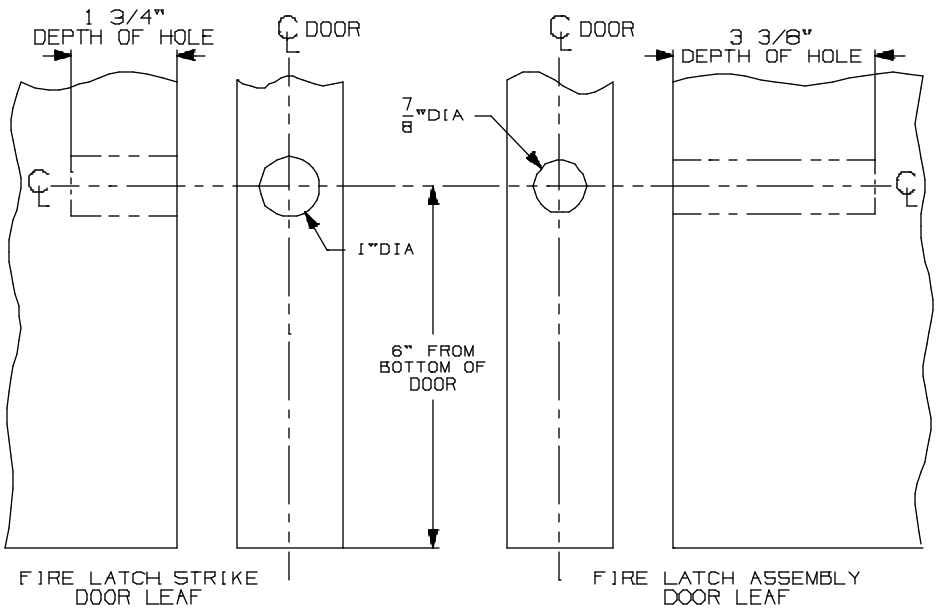

98/9927-F-LBR NL, TP, K, & L Series Vertical Rod Devices

VON DUPRIN®

NOTES: SEE MASTER SHEET #10001 FOR SUGGESTED REINFORCING

TEMPLATE NUMBER: 10318_a

DATE: 05-21-13

991 K & 992 L Trim

NOTES: SEE MASTER SHEET #10001 FOR SUGGESTED REINFORCING

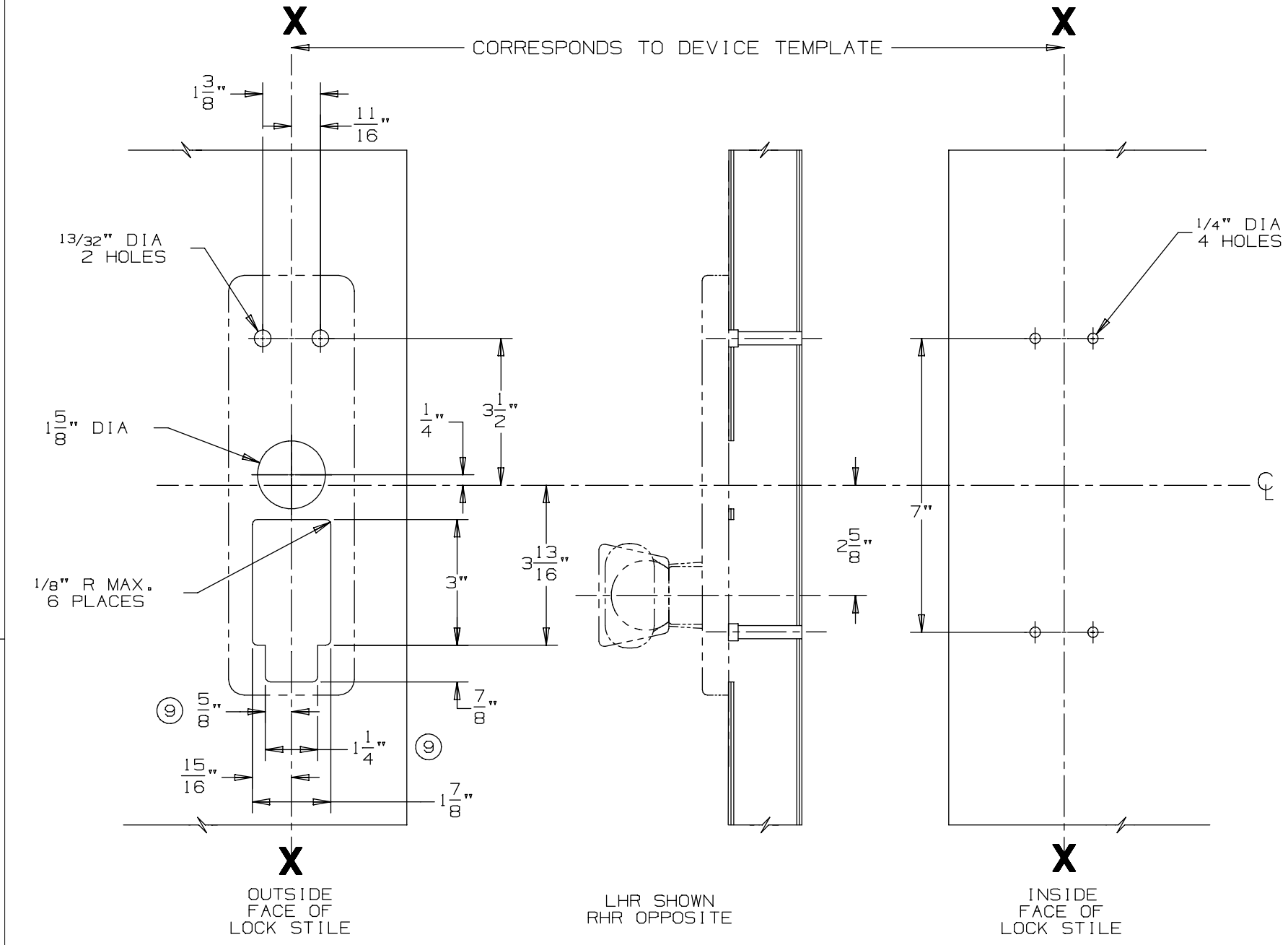

DEVICE APPLICATION SCHEDULE
98/99 SERIES RIM DEVICE
9827/9927 SERIES DEVICE
9847/9947 SERIES DEVICE

VON DUPRIN®

TEMPLATE NUMBER: 20272_a

DATE: 05-23-13

RIM APPLICATION

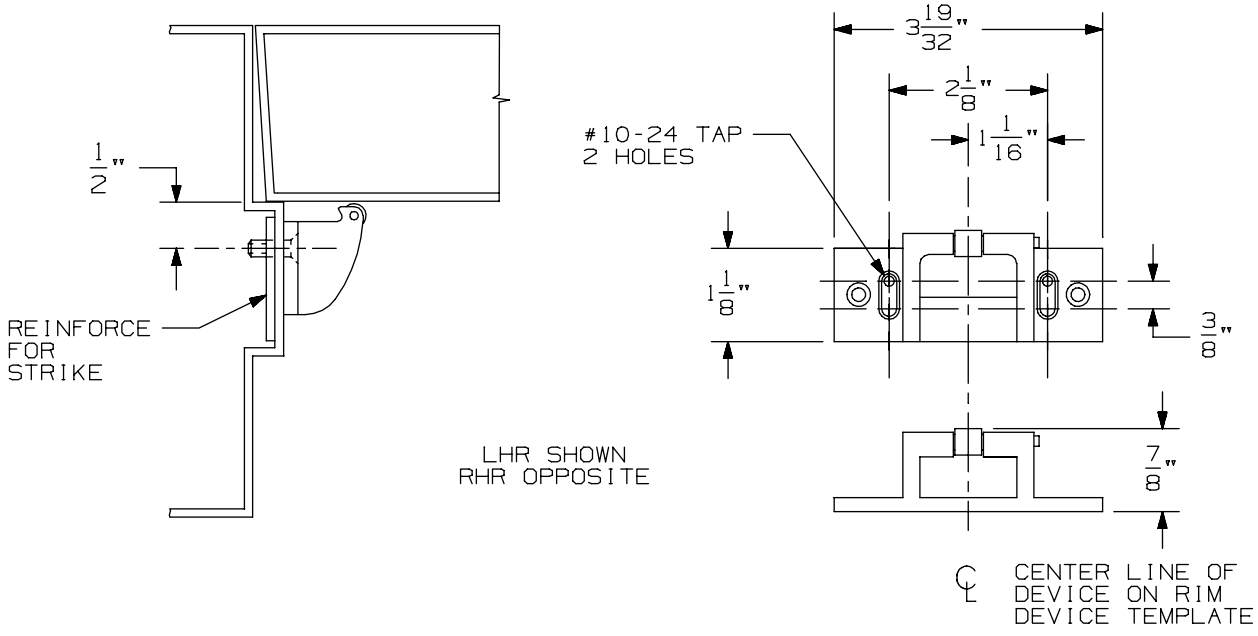

VERTICAL APPLICATION

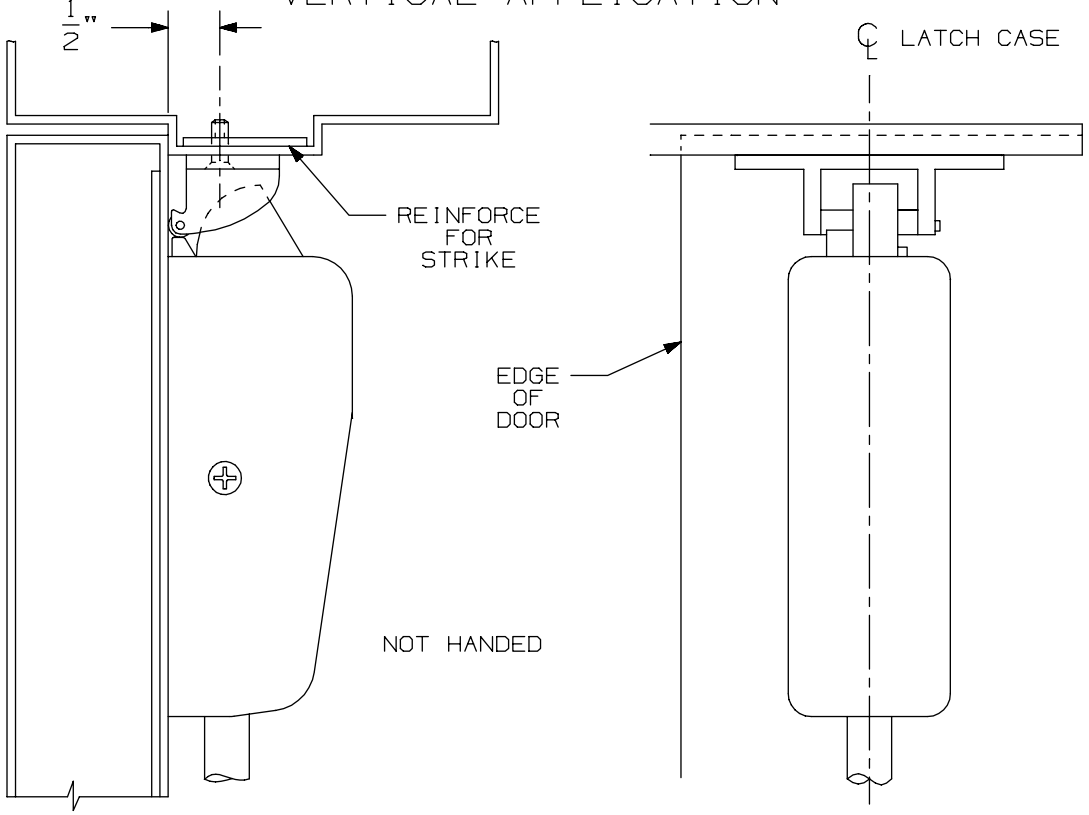

NOTE: LATCH CASE MOUNTING HOLES TO BE PREPARED AT INSTALLATION ON DOOR.

499-F Strike	VON DUPRIN®	
NOTES: SEE MASTER SHEET #10001 FOR SUGGESTED REINFORCING	TEMPLATE NUMBER: 30040_a	DATE: 05-23-13

DEVICE APPLICATION SCHEDULE		
INSTALLATION	MIN. STILE	BACKSET
TWO VERT. ROD DEVICES	3 11/16"	2 3/16"

APPLICATION	PREPARATION
990 TRIM APPLICATION SEX BOLT APPLICATION (SEE NOTE 1)	1/4" DIA. THIS SIDE 13/32" DIA. OPPOSITE SIDE - 4 PLACES

NOTES:

1. THESE FOUR HOLES TO BE PREPARED FOR SURFACE APPLICATION (#10-24 TAP) WHEN USING 696/697 TRIM. DO NOT PREPARE FOR SEX BOLTS.
2. FOR STOCK HOLLOW METAL DOORS SEE TEMPLATE NO. 10311.
3. LATCH CASE PREPARATION TO BE MADE AT INSTALLATION ON DOOR.
4. IT IS RECOMMENDED THE MOUNTING HOLES BE PREPARED IN THE FIELD.
5. FOR OUTSIDE TRIM PREPARATION, WHEN REQUIRED, SEE TRIM TEMPLATE.
6. GLASS BEAD KIT AVAILABLE WHEN REQUIRED.
7. LHR APPLICATION SHOWN, RHR APPLICATION OPPOSITE.
8. THE FIRE LATCH PREP IS FOR FIRE DOORS ONLY.

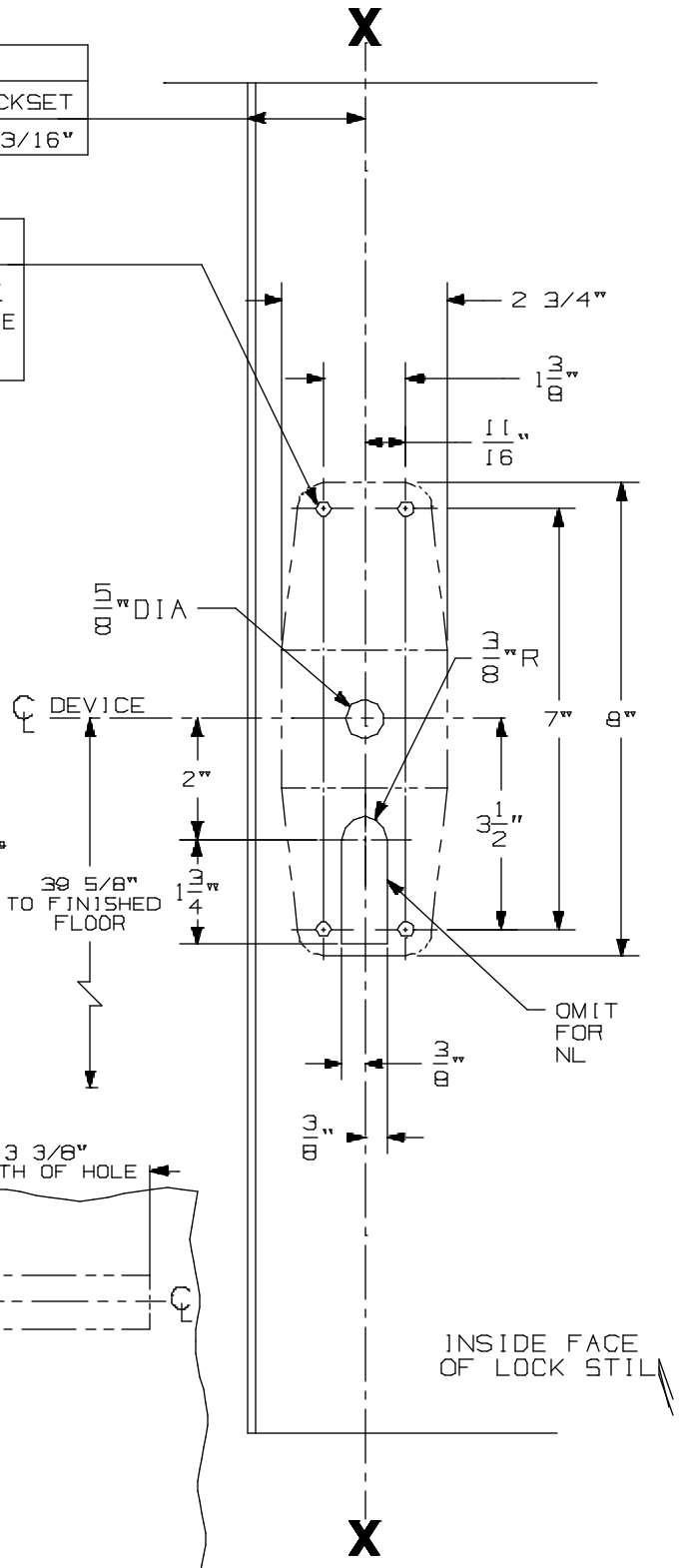

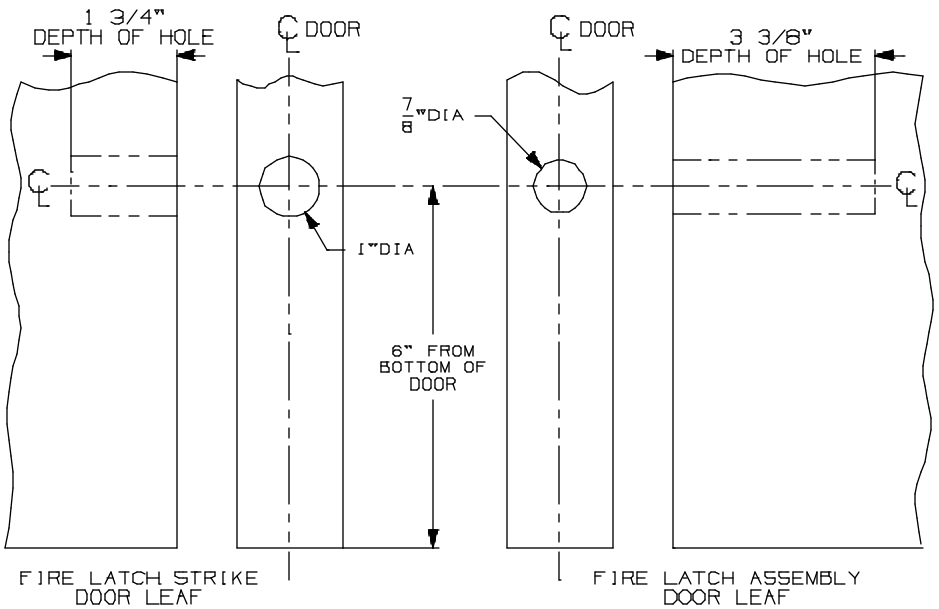

98/9927-F-LBR NL, TP, K, & L Series Vertical Rod Devices

VON DUPRIN®

NOTES: SEE MASTER SHEET #10001 FOR SUGGESTED REINFORCING

TEMPLATE NUMBER: 10318_a

DATE: 05-21-13

DEVICE APPLICATION SCHEDULE	
98 RIM SERIES	99 RIM SERIES
9827 SERIES	9927 SERIES
9847 SERIES	9947 SERIES
9849 SERIES	9949 SERIES

996L, E996L, 996L-BE, E996L-BE 996K, 996K-BE R/V SERIES
TRIM METAL DOOR APPLICATION

VON DUPRIN®

NOTES: SEE MASTER SHEET #10001 FOR SUGGESTED REINFORCING

TEMPLATE NUMBER: 20003_e

DATE: 10-30-14

RIM APPLICATION

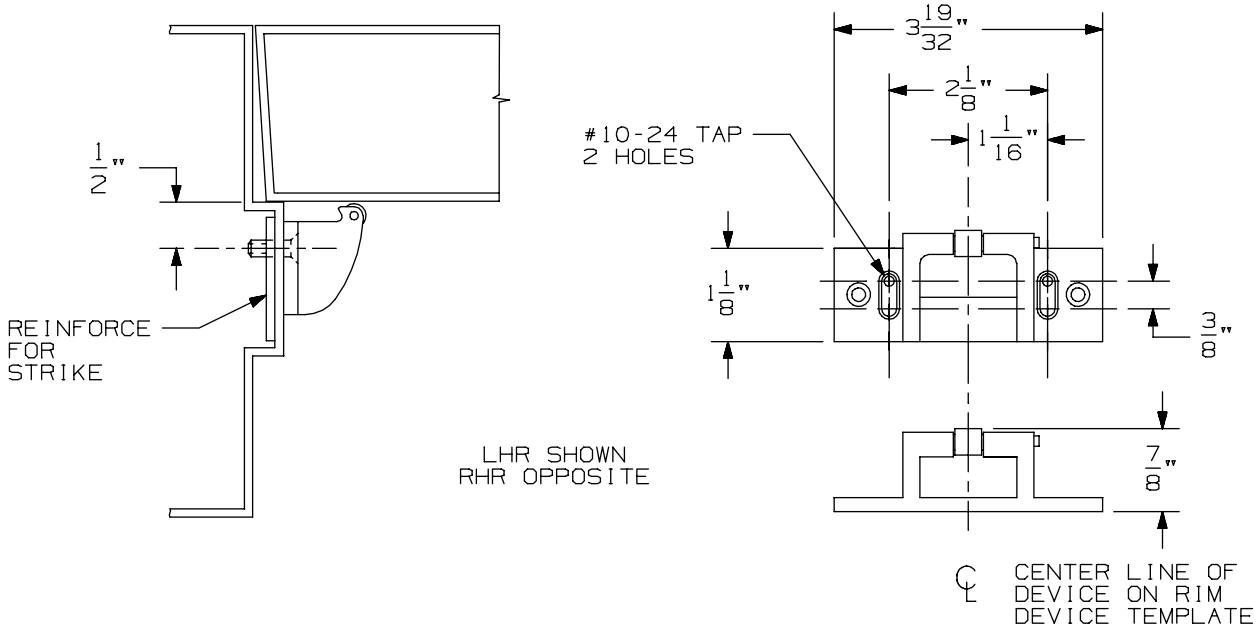

VERTICAL APPLICATION

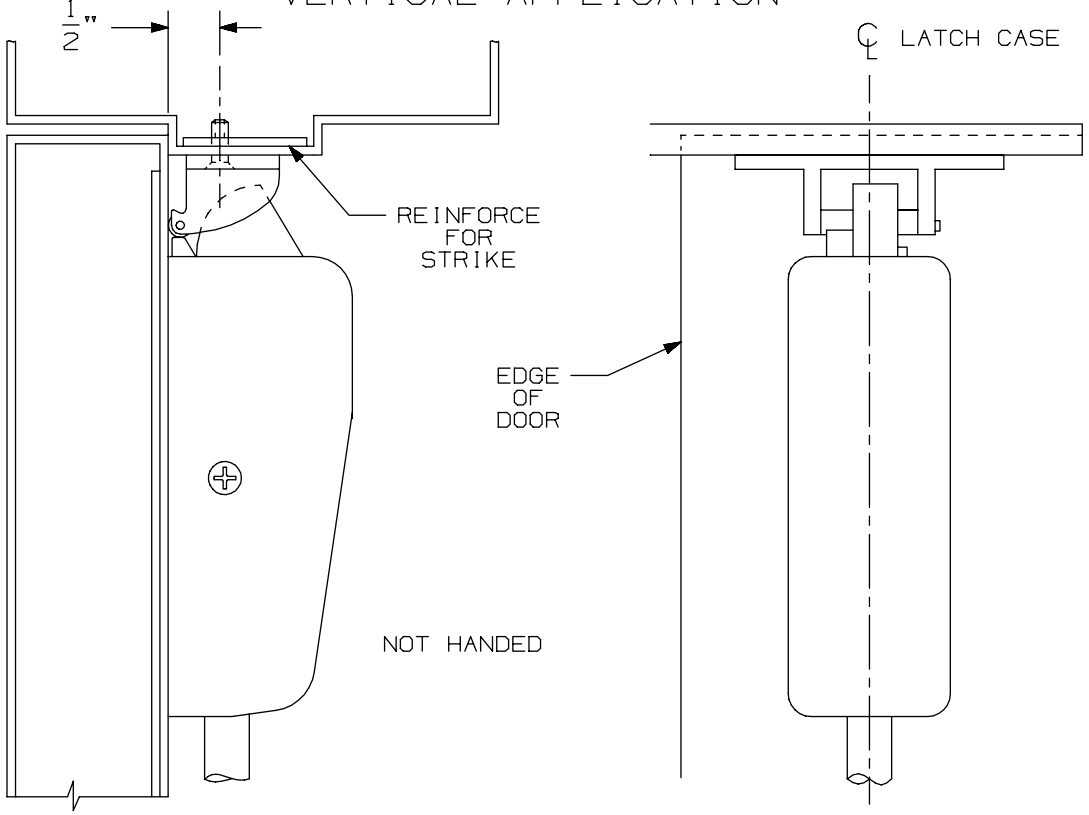

NOTE: LATCH CASE MOUNTING HOLES TO BE PREPARED AT INSTALLATION ON DOOR.

499-F Strike	VON DUPRIN®	
NOTES: SEE MASTER SHEET #10001 FOR SUGGESTED REINFORCING	TEMPLATE NUMBER: 30040_a	DATE: 05-23-13

DEVICE APPLICATION SCHEDULE		
INSTALLATION	MIN. STILE	BACKSET
TWO VERT. ROD DEVICES	3 11/16"	2 3/16"

APPLICATION	PREPARATION
990 TRIM APPLICATION SEX BOLT APPLICATION (SEE NOTE 1)	1/4" DIA. THIS SIDE 13/32" DIA. OPPOSITE SIDE - 4 PLACES

NOTES:

1. THESE FOUR HOLES TO BE PREPARED FOR SURFACE APPLICATION (#10-24 TAP) WHEN USING 696/697 TRIM. DO NOT PREPARE FOR SEX BOLTS.
2. FOR STOCK HOLLOW METAL DOORS SEE TEMPLATE NO. 10311.
3. LATCH CASE PREPARATION TO BE MADE AT INSTALLATION ON DOOR.
4. IT IS RECOMMENDED THE MOUNTING HOLES BE PREPARED IN THE FIELD.
5. FOR OUTSIDE TRIM PREPARATION, WHEN REQUIRED, SEE TRIM TEMPLATE.
6. GLASS BEAD KIT AVAILABLE WHEN REQUIRED.
7. LHR APPLICATION SHOWN, RHR APPLICATION OPPOSITE.
8. THE FIRE LATCH PREP IS FOR FIRE DOORS ONLY.

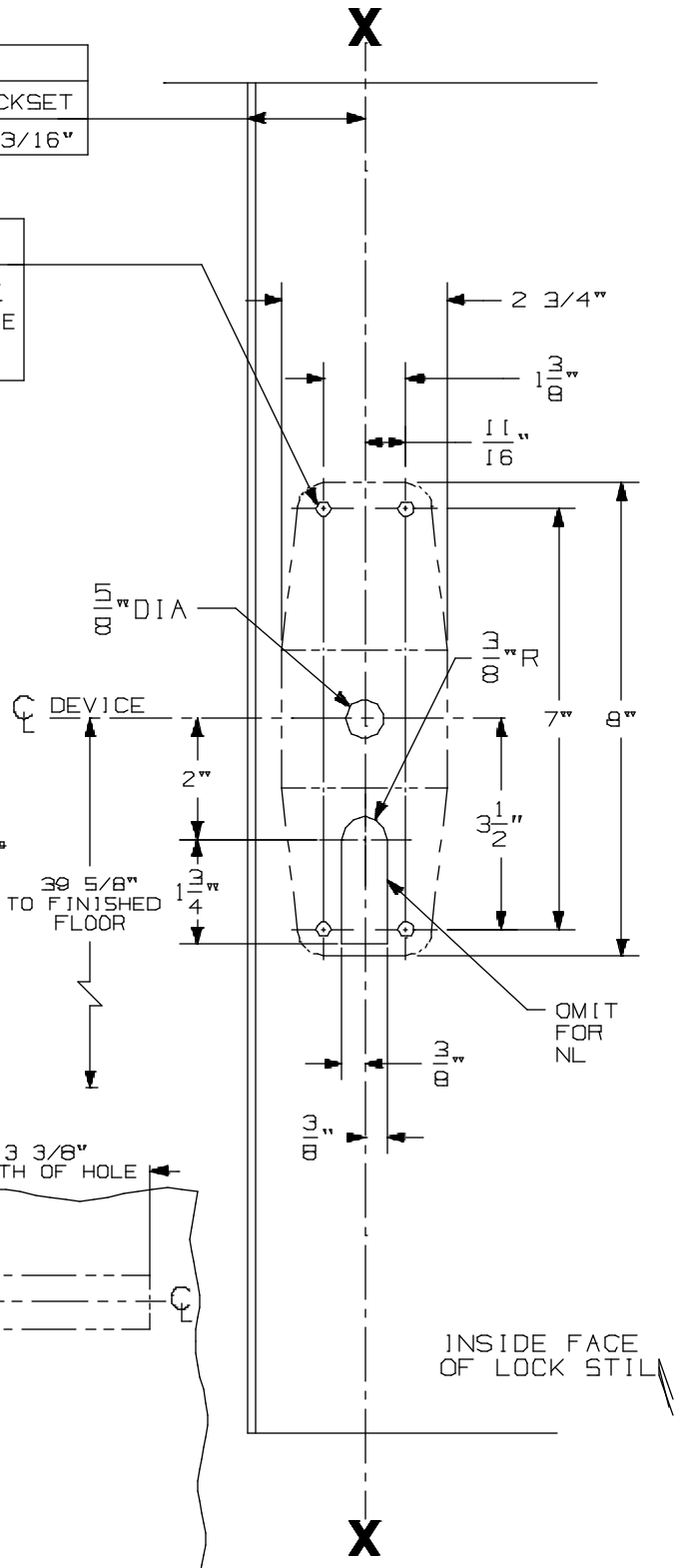

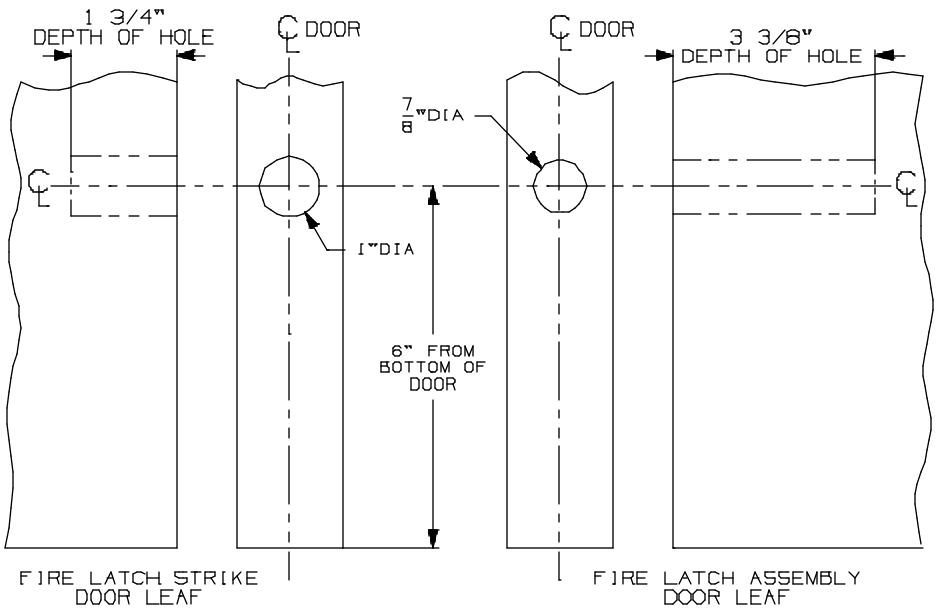

98/9927-F-LBR NL, TP, K, & L Series Vertical Rod Devices

VON DUPRIN®

NOTES: SEE MASTER SHEET #10001 FOR SUGGESTED REINFORCING

TEMPLATE NUMBER: 10318_a

DATE: 05-21-13

990 TP & 990 TP-BE TRIM

NOTES: SEE MASTER SHEET #10001 FOR SUGGESTED REINFORCING

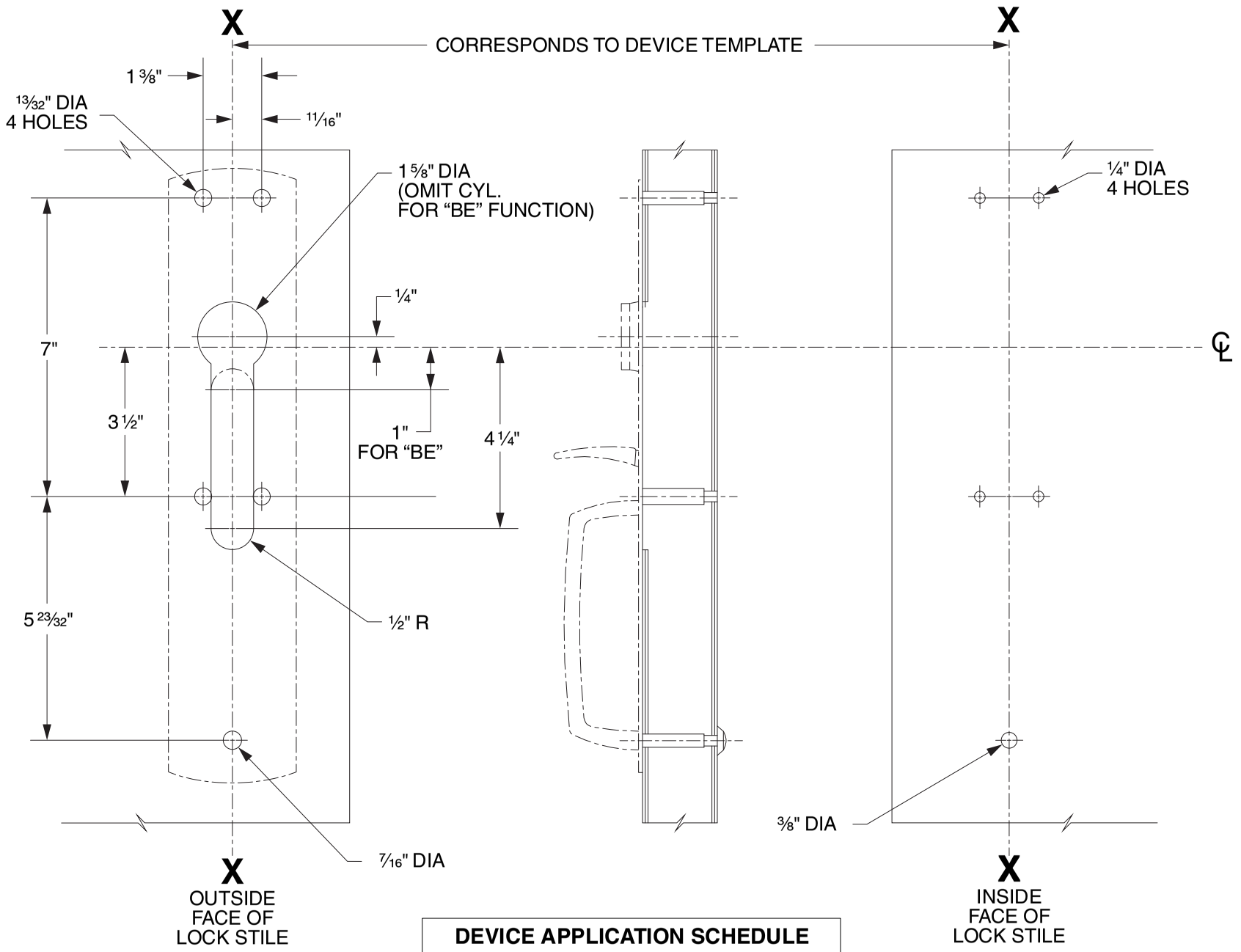

DEVICE APPLICATION SCHEDULE
98/99 SERIES RIM DEVICE
9827/9927 SERIES DEVICE
9847/9947 SERIES DEVICE
9849/9949 SERIES DEVICE

LHR SHOWN
RHR OPPOSITE

VON DUPRIN®

TEMPLATE NUMBER: 20265_C

DATE: 05-31-13

RIM APPLICATION

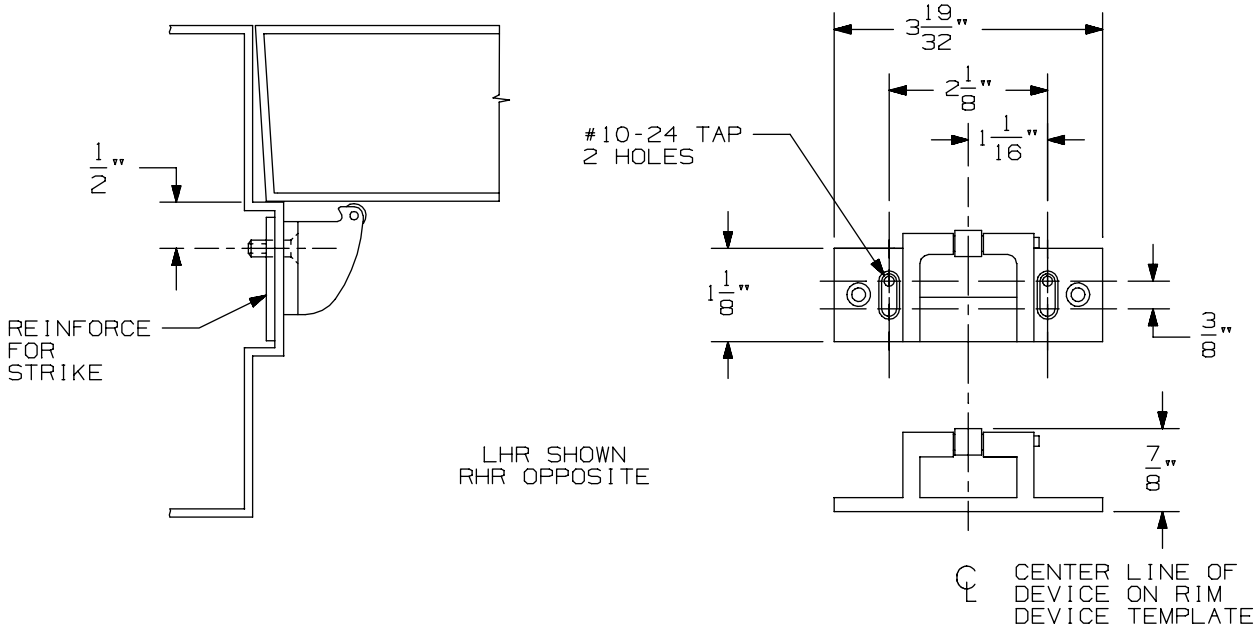

VERTICAL APPLICATION

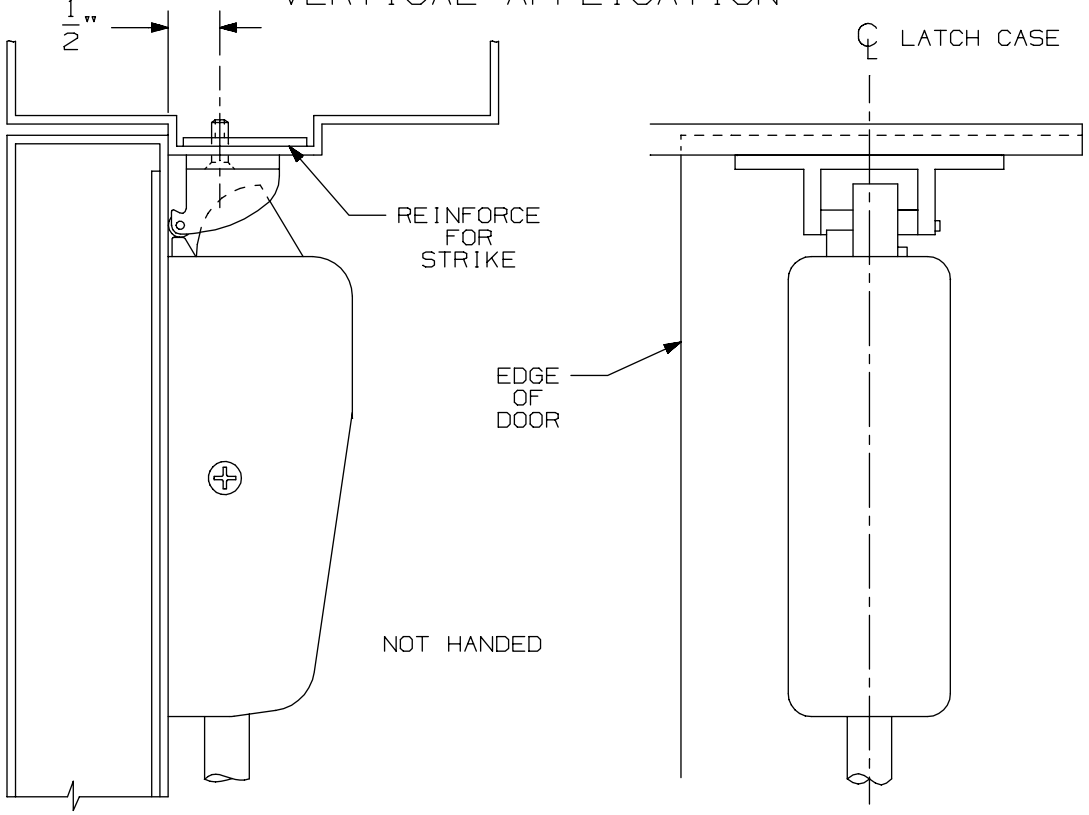

NOTE: LATCH CASE MOUNTING HOLES TO BE PREPARED AT INSTALLATION ON DOOR.

499-F Strike	VON DUPRIN®	
NOTES: SEE MASTER SHEET #10001 FOR SUGGESTED REINFORCING	TEMPLATE NUMBER: 30040_a	DATE: 05-23-13

DEVICE APPLICATION SCHEDULE		
INSTALLATION	MIN. STILE	BACKSET
TWO VERT. ROD DEVICES	3 11/16"	2 3/16"

APPLICATION	PREPARATION
SURFACE APPLICATION	#10-24 TAP - 4 PLACES
990 TRIM APPLICATION SEX BOLT APPLICATION (SEE NOTE 1)	1/4" DIA. THIS SIDE (3/32" DIA. OPPOSITE SIDE - 4 PLACES

NOTES:

1. THESE FOUR HOLES TO BE PREPARED FOR SURFACE APPLICATION (#10-24 TAP) WHEN USING 696/697 TRIM. DO NOT PREPARE FOR SEX BOLTS.
2. FOR STOCK HOLLOW METAL DOORS SEE TEMPLATE NO. 10310.
3. LATCH CASE PREPARATION TO BE MADE AT INSTALLATION ON DOOR.
4. IT IS RECOMMENDED THE MOUNTING HOLES BE PREPARED IN THE FIELD.
5. FOR OUTSIDE TRIM PREPARATION, WHEN REQUIRED, SEE TRIM TEMPLATE.
6. GLASS BEAD KIT AVAILABLE WHEN REQUIRED.
7. LHR APPLICATION SHOWN, RHR APPLICATION OPPOSITE.
8. THE FIRE LATCH PREP IS FOR FIRE DOORS ONLY.

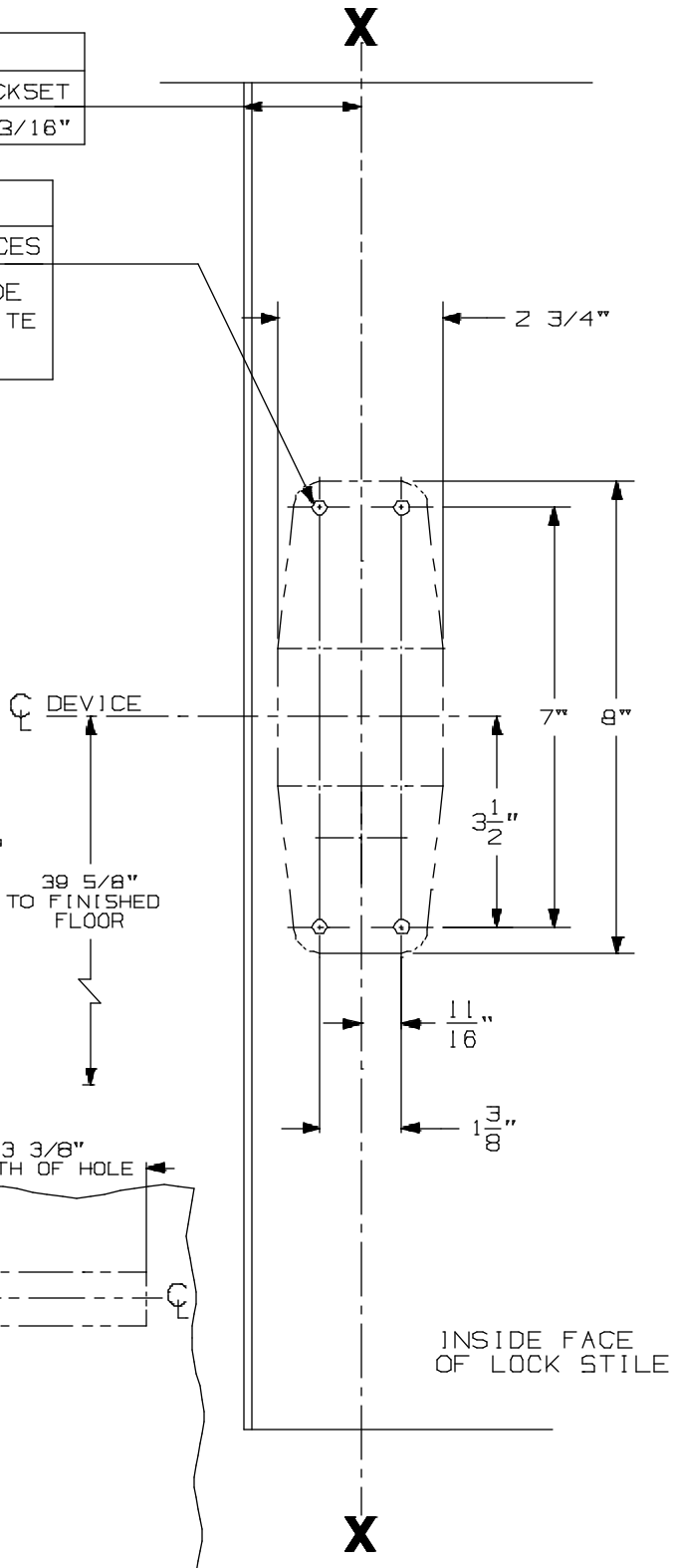

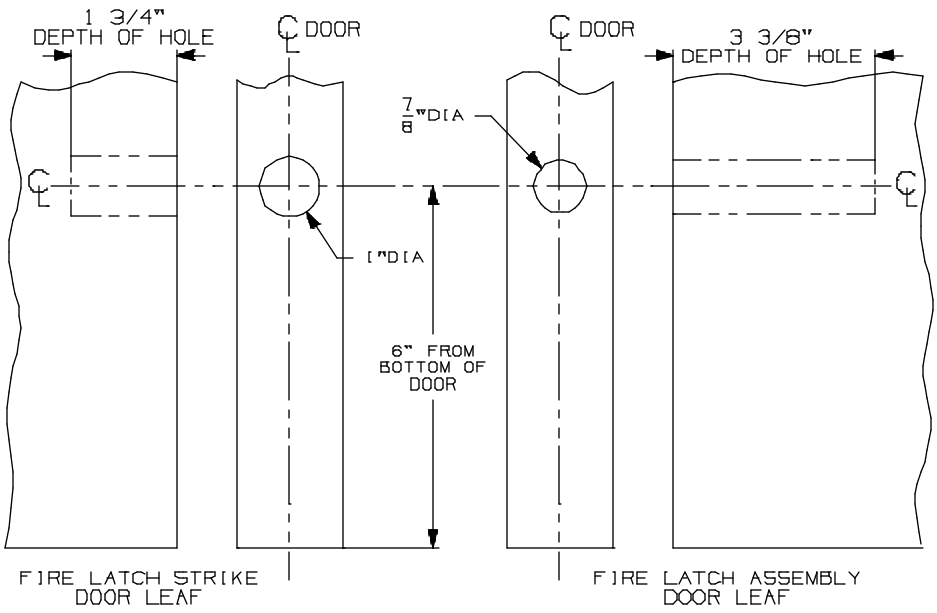

98/9927-F-LBR EO & DT Series Vertical Rod Devices

VON DUPRIN®

NOTES: SEE MASTER SHEET #10001 FOR SUGGESTED REINFORCING

TEMPLATE NUMBER: 10317_a

DATE: 05-21-13

990 DT TRIM

NOTES: SEE MASTER SHEET #10001 FOR SUGGESTED REINFORCING

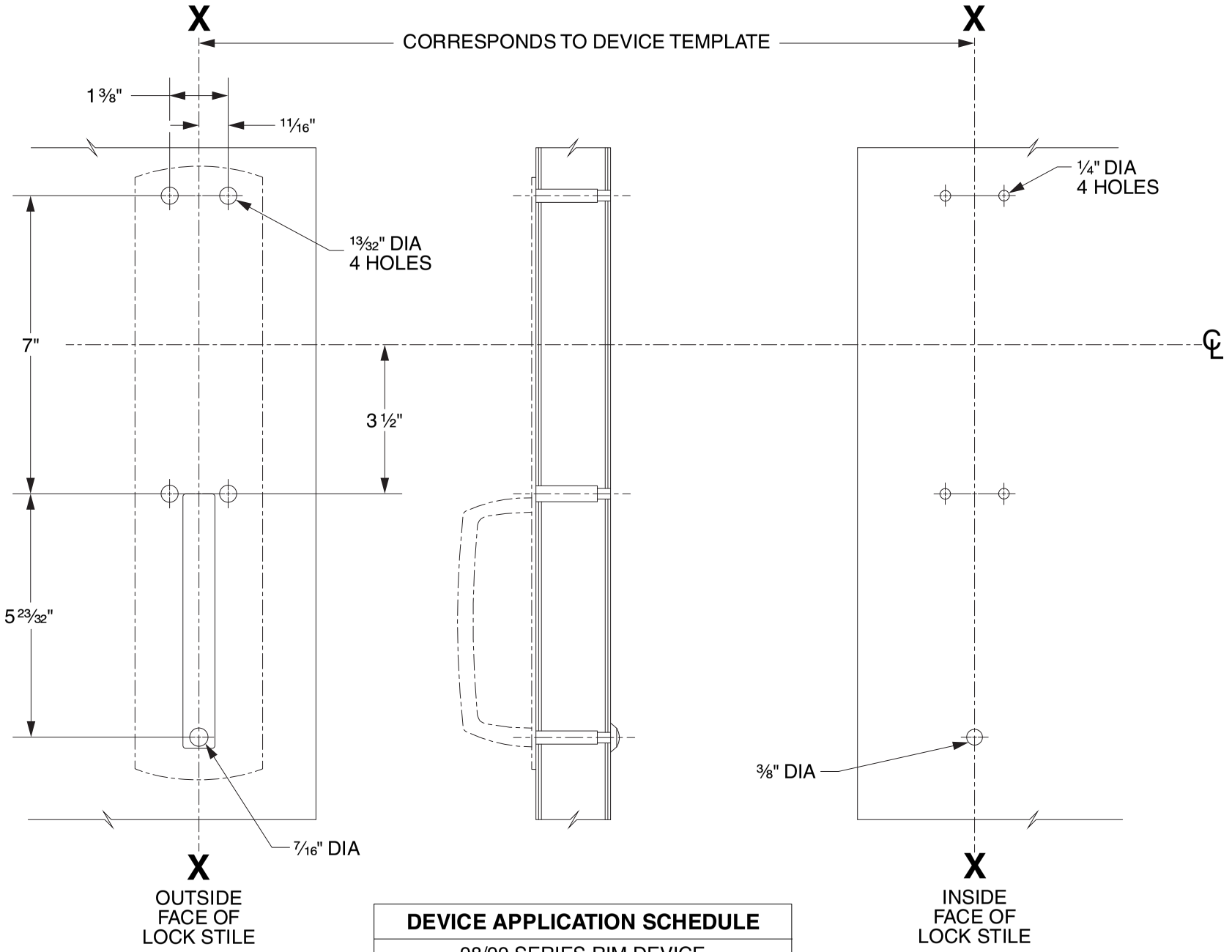

DEVICE APPLICATION SCHEDULE
98/99 SERIES RIM DEVICE
9827/9927 SERIES DEVICE
9847/9947 SERIES DEVICE
9849/9949 SERIES DEVICE
9875/9975 SERIES DEVICE

LHR SHOWN
RHR OPPOSITE

VON DUPRIN®

TEMPLATE NUMBER: 20268_C

DATE: 05-31-13

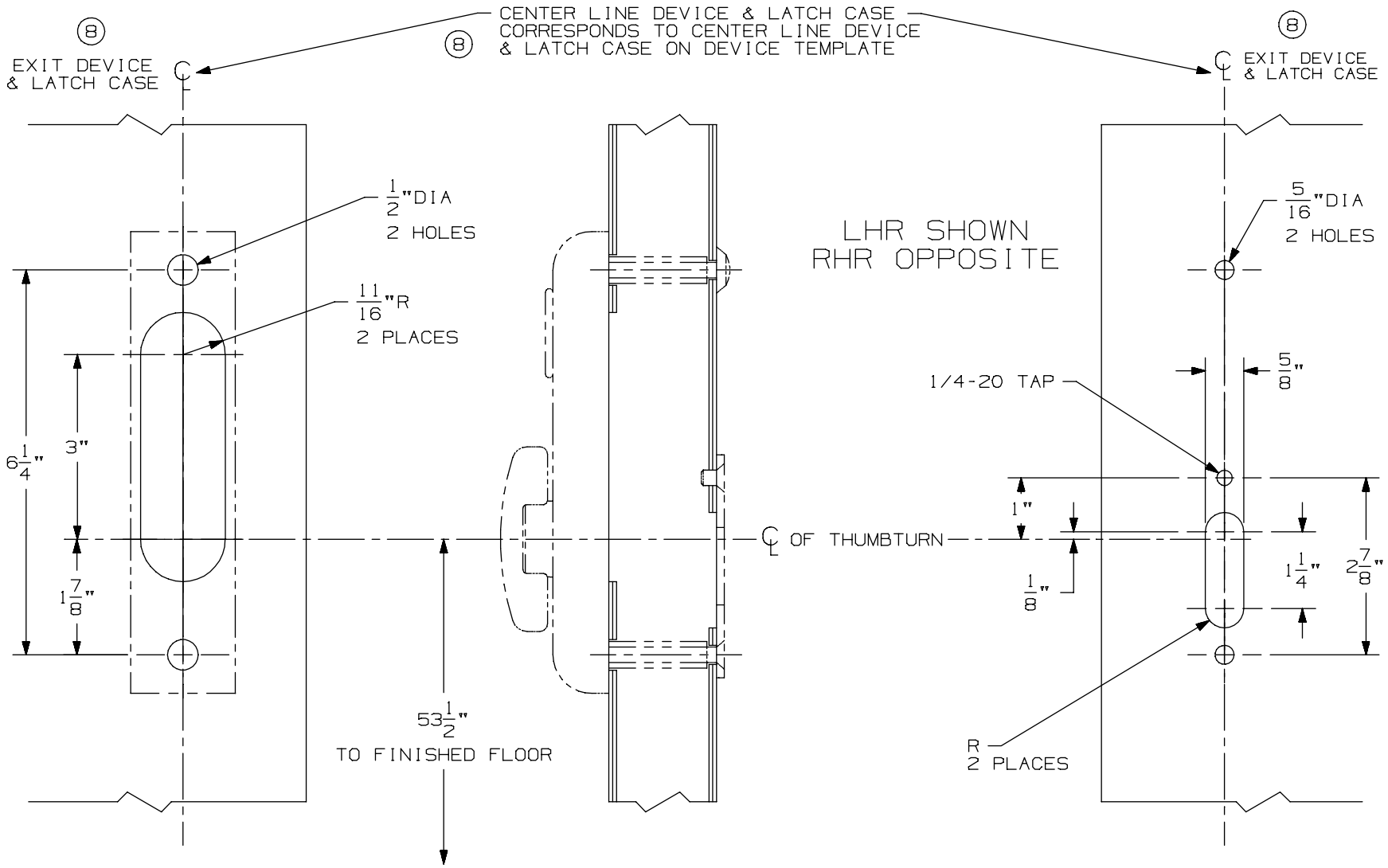

OUTSIDE
FACE OF
LOCK STILE

INSIDE
FACE OF
LOCK STILE

DEVICE APPLICATION SCHEDULE
2227 VERT. ROD DEVICE
2227-F VERT. ROD DEVICE
3327/3527 VERT. ROD DEVICE
8 3327A/3527A VERT. ROD DEVICE
8 3327A-F/3527A-F VERT. ROD DEVICE
9827/9927 VERT. ROD DEVICE
9827-F/9927-F VERT. ROD DEVICE

NOTES: SEE MASTER SHEET #10001 FOR SUGGESTED REINFORCING

374-T Control

VON DUPRIN®

TEMPLATE NUMBER: 40118_a

DATE: 05-28-13

RIM APPLICATION

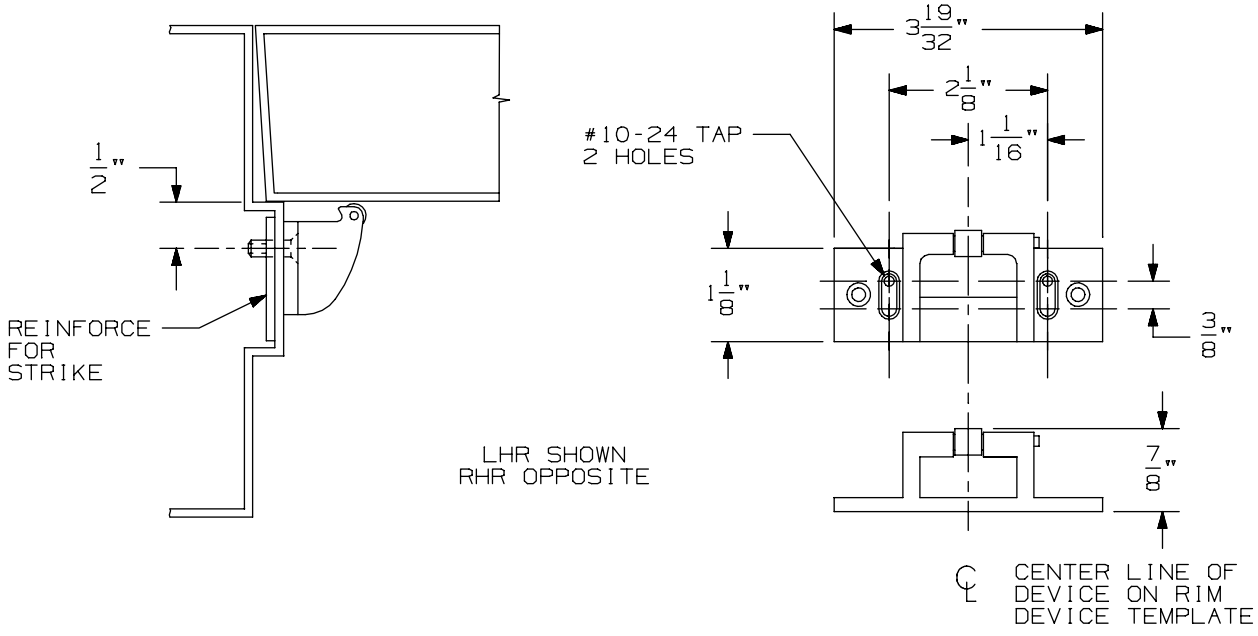

VERTICAL APPLICATION

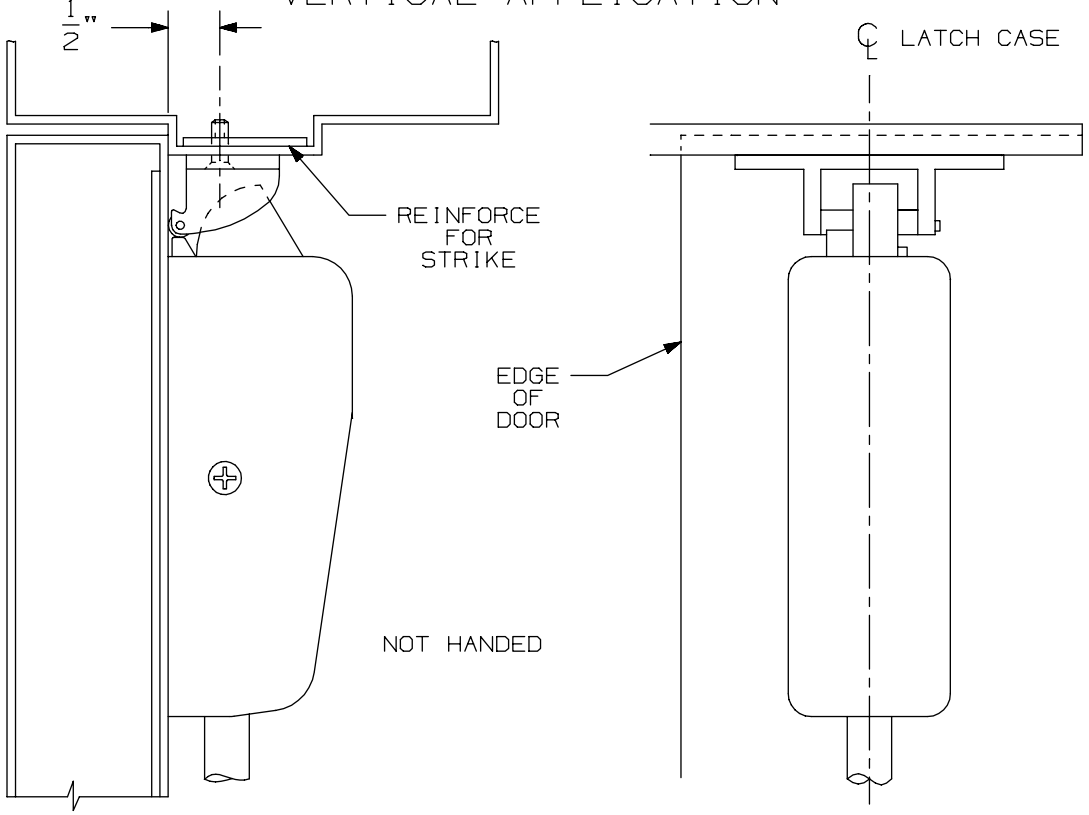

NOTE: LATCH CASE MOUNTING HOLES TO BE PREPARED AT INSTALLATION ON DOOR.

499-F Strike	VON DUPRIN®	
NOTES: SEE MASTER SHEET #10001 FOR SUGGESTED REINFORCING	TEMPLATE NUMBER: 30040_a	DATE: 05-23-13

98 / 99 Series Exit Devices - 9857/9957 Three Point Latch (Standard, CD, EL, LX, RX & SS)

APPLICATION	PREPARATION
SURFACE APPLICATION	#10-24 TAP 4 PLACES
990 TRIM APPLICATION OR SEX BOLT APPLICATION (SEE NOTE 1)	1/4' DIA THIS SIDE 13/32" DIA OPPOSITE SIDE - 4 PLACES

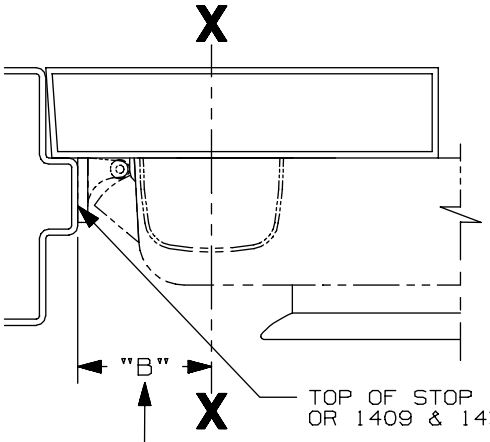

SINGLE DOOR INSTALLATION			
STRIKE	DIM. "B"	MIN. STILE 990/991/992 TRIM	MIN. STILE 696/697 TRIM
299 & 299-F	2 3/8"	4 1/2"	4 3/8"
(4) 1409 & 1439	1 9/16"	3 13/16"	3 13/16"
1606	1 15/16"	4 1/16"	3 15/16"

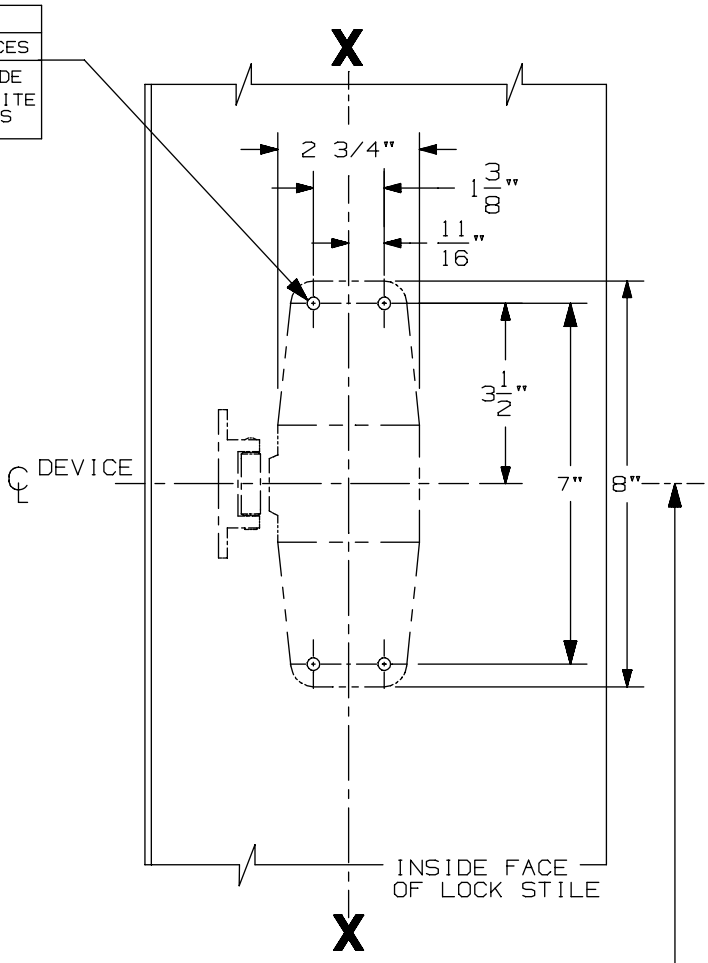

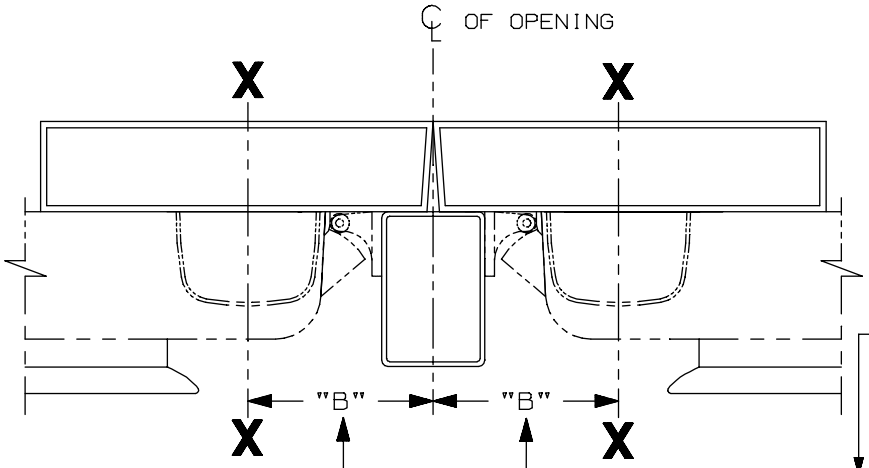

DOUBLE DOOR INSTALLATION WITH VON DUPRIN MULLIONS				
MULLION	STRIKE	DIM. "B"	MIN. STILE 990/991/992 TRIM	MIN. STILE 696/697 TRIM
(4) 4954/9954	299/299-F	3 3/8"	4 7/8"	4 3/4"
9954	499-F	3 1/2"	5"	4 7/8"
5654	299	2 15/16"	4 3/8"	4 1/4"
5754	1408	2 1/8"	3 13/16"	3 13/16"
1654	1606	2 15/16"	4 3/8"	4 1/4"

SINGLE DOOR OPENING
39 13/16" TO FINISHED FLOOR

DOUBLE DOOR OPENING
WITH VON DUPRIN MULLION
39 11/16"

NOTE:
REQUIRED DOOR UNDERCUT
IS 1/4" FROM FINISHED FLOOR
(PANIC & FIRE) OR 1/8" FROM
THRESHOLD (PANIC ONLY)

LHR APPLICATION SHOWN,
RHR APPLICATION OPPOSITE

NOTES:
1. THESE FOUR HOLES TO BE PREPARED FOR SURFACE APPLICATION WHEN USING 696/697 TRIM. DO NOT PREPARE FOR SEX BOLTS.
2. GLASS BEAD KIT AVAILABLE WHEN REQUIRED.
3. FOR OUTSIDE TRIM PREPARATION, WHEN REQUIRED, SEE TRIM TEMPLATE.
4. LATCH CASE PREPARATION TO BE MADE AT INSTALLATION ON DOOR.
5. IT IS RECOMMENDED THE MOUNTING HOLES BE PREPARED IN THE FIELD.
6. 9954 W/299-F FOR HURRICANE APPLICATIONS ONLY. (4)

98/9957/57-F EO, DT Series
3 Point Latching Device

VON DUPRIN®

NOTES: SEE MASTER SHEET #10001 FOR SUGGESTED REINFORCING

TEMPLATE NUMBER: 10341_a

DATE: 05-22-13

RIM APPLICATION

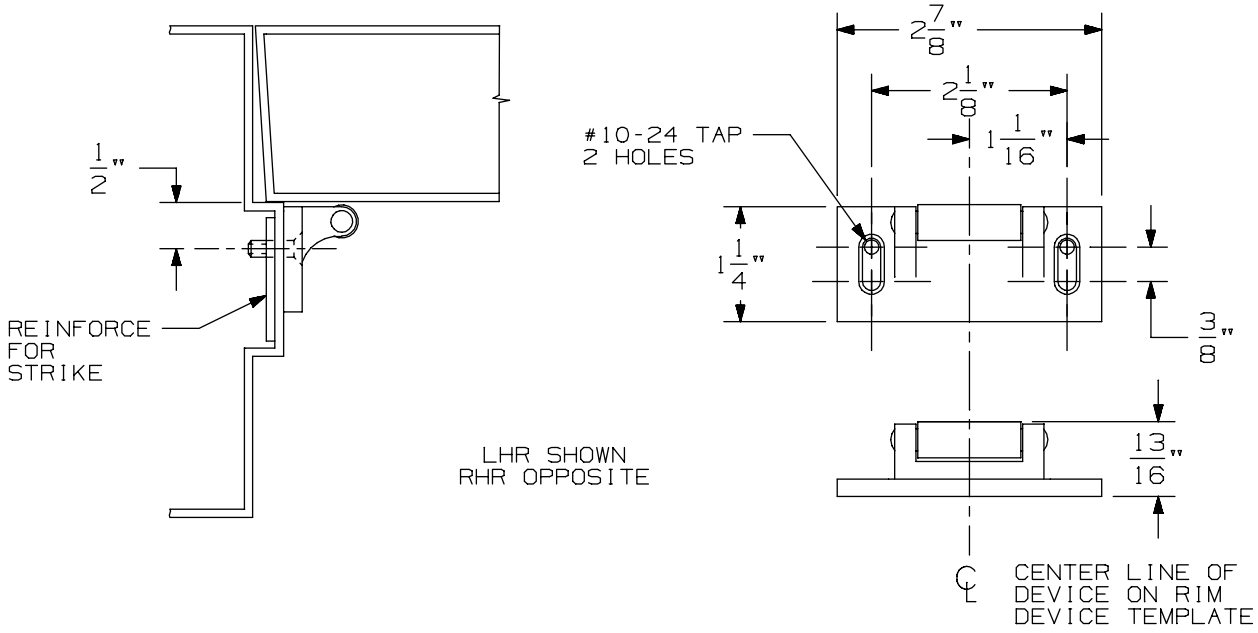

VERTICAL APPLICATION

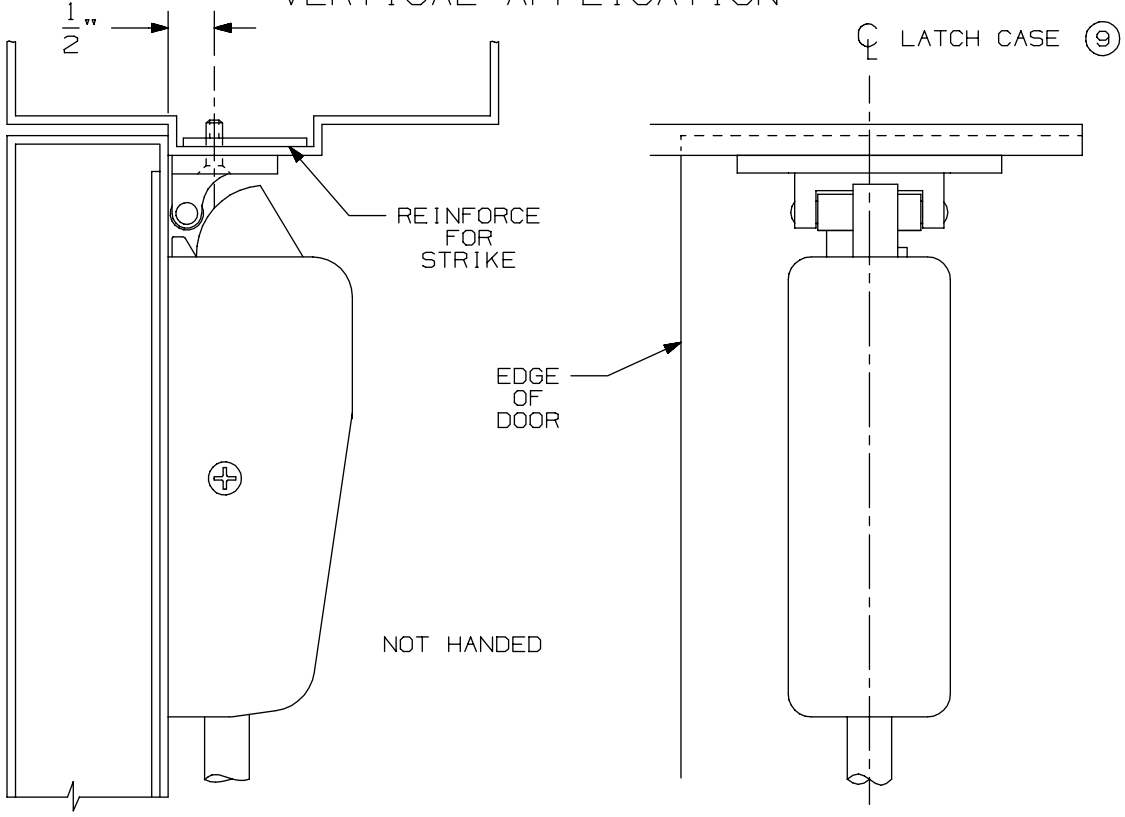

NOTE: LATCH CASE MOUNTING HOLES TO BE PREPARED AT INSTALLATION ON DOOR.

299 & 299F Strike

VON DUPRIN®

NOTES: SEE MASTER SHEET #10001 FOR SUGGESTED REINFORCING

TEMPLATE NUMBER: 30039_a

DATE: 05-23-13

APPLICATION	PREPARATION
SURFACE APPLICATION	#10-24 TAP 4 PLACES
990 TRIM APPLICATION OR SEX BOLT APPLICATION (SEE NOTE 1)	1/4' DIA THIS SIDE 13/32" DIA OPPOSITE SIDE - 4 PLACES

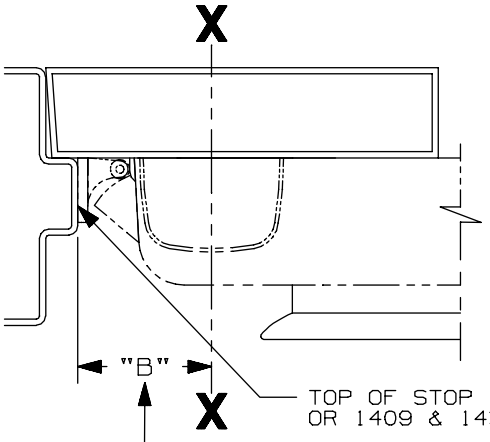

SINGLE DOOR INSTALLATION			
STRIKE	DIM. "B"	MIN. STILE 990/991/992 TRIM	MIN. STILE 696/697 TRIM
299 & 299-F	2 3/8"	4 1/2"	4 3/8"
(4) 1409 & 1439	1 9/16"	3 13/16"	3 13/16"
1606	1 15/16"	4 1/16"	3 15/16"

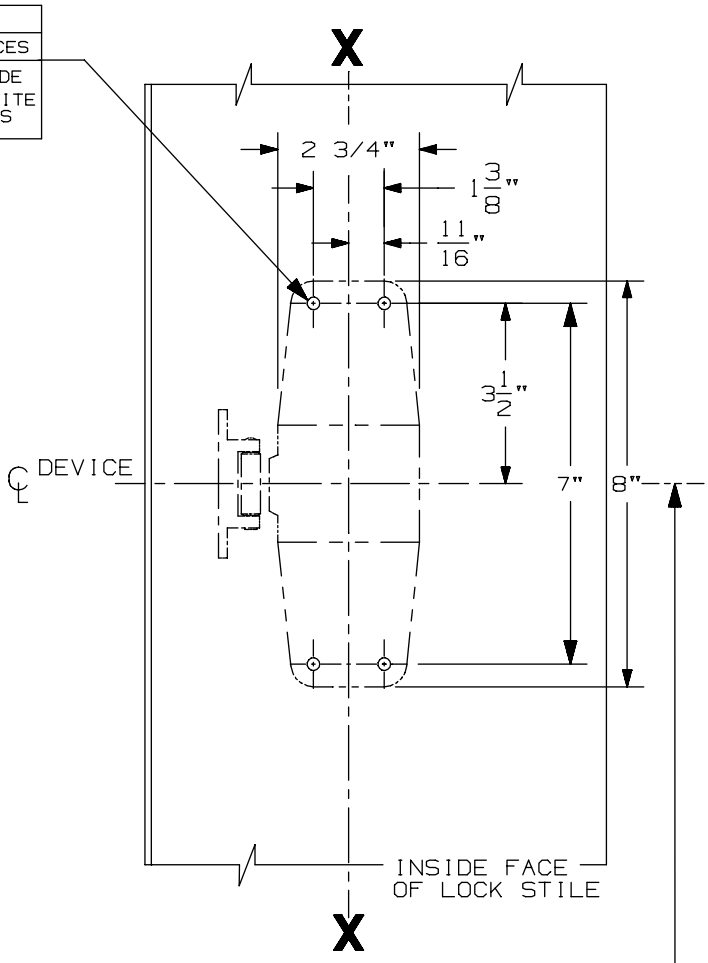

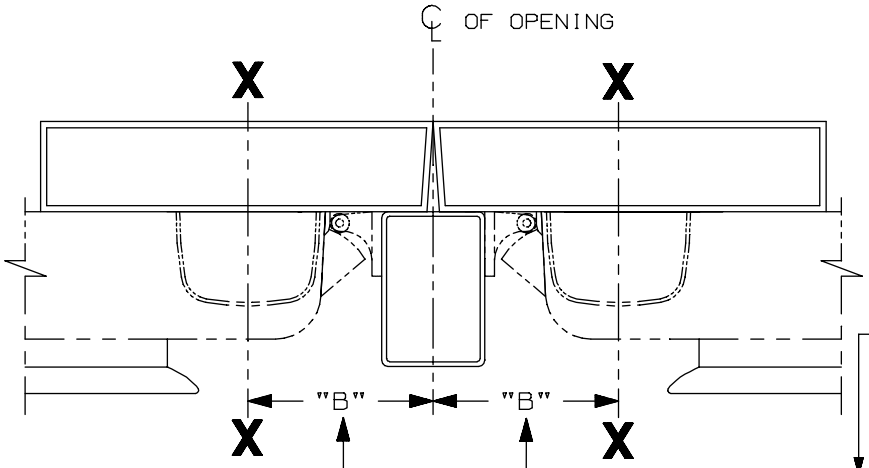

DOUBLE DOOR INSTALLATION WITH VON DUPRIN MULLIONS				
MULLION	STRIKE	DIM. "B"	MIN. STILE 990/991/992 TRIM	MIN. STILE 696/697 TRIM
(4) 4954/9954	299/299-F	3 3/8"	4 7/8"	4 3/4"
9954	499-F	3 1/2"	5"	4 7/8"
5654	299	2 15/16"	4 3/8"	4 1/4"
5754	1408	2 1/8"	3 13/16"	3 13/16"
1654	1606	2 15/16"	4 3/8"	4 1/4"

SINGLE DOOR OPENING
39 13/16" TO FINISHED FLOOR

DOUBLE DOOR OPENING
WITH VON DUPRIN MULLION
39 11/16"

NOTE:
REQUIRED DOOR UNDERCUT
IS 1/4" FROM FINISHED FLOOR
(PANIC & FIRE) OR 1/8" FROM
THRESHOLD (PANIC ONLY)

LHR APPLICATION SHOWN,
RHR APPLICATION OPPOSITE

NOTES:
1. THESE FOUR HOLES TO BE PREPARED FOR SURFACE APPLICATION WHEN USING 696/697 TRIM. DO NOT PREPARE FOR SEX BOLTS.
2. GLASS BEAD KIT AVAILABLE WHEN REQUIRED.
3. FOR OUTSIDE TRIM PREPARATION, WHEN REQUIRED, SEE TRIM TEMPLATE.
4. LATCH CASE PREPARATION TO BE MADE AT INSTALLATION ON DOOR.
5. IT IS RECOMMENDED THE MOUNTING HOLES BE PREPARED IN THE FIELD.
6. 9954 W/299-F FOR HURRICANE APPLICATIONS ONLY. (4)

98/9957/57-F EO, DT Series
3 Point Latching Device

VON DUPRIN®

NOTES: SEE MASTER SHEET #10001 FOR SUGGESTED REINFORCING

TEMPLATE NUMBER: 10341_a

DATE: 05-22-13

990 DT TRIM

NOTES: SEE MASTER SHEET #10001 FOR SUGGESTED REINFORCING

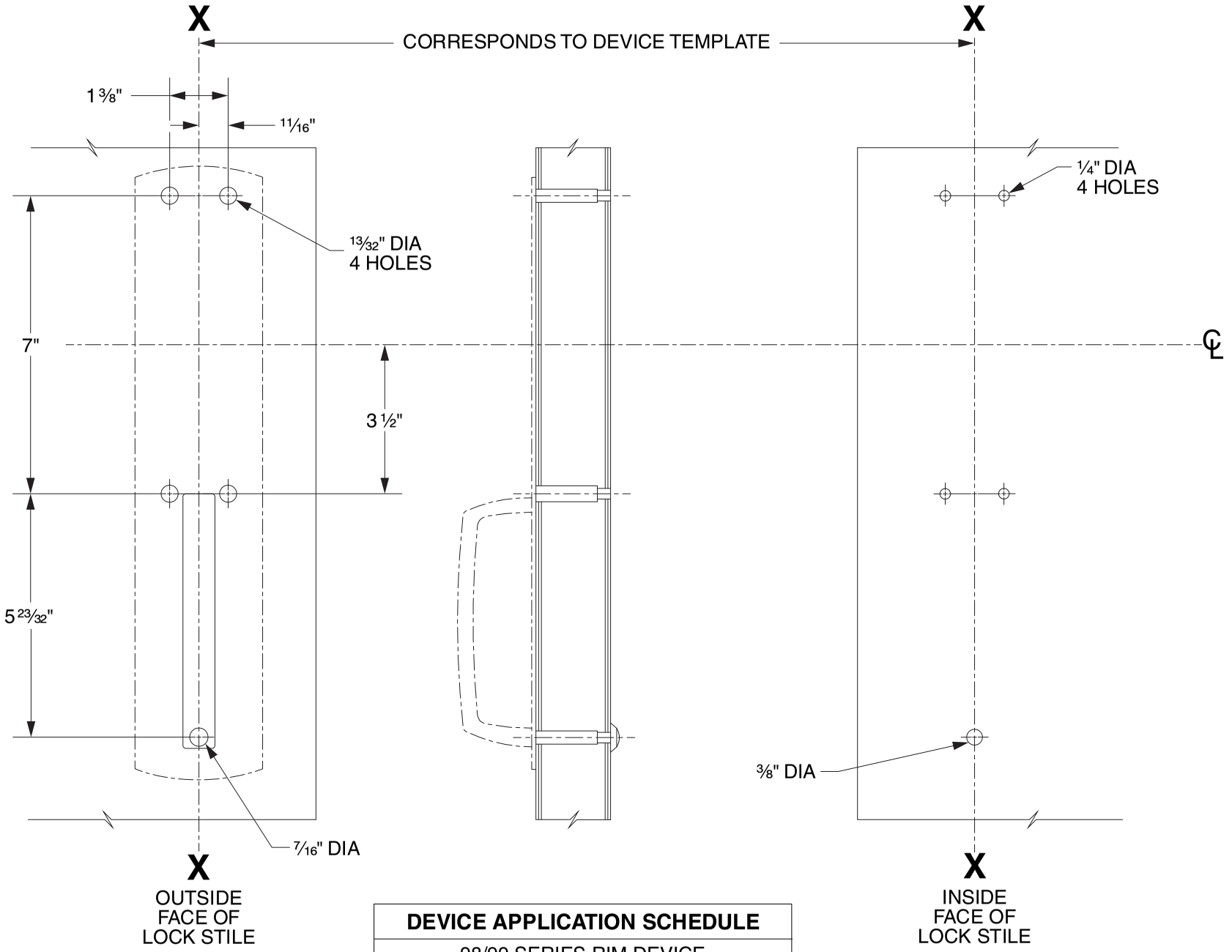

DEVICE APPLICATION SCHEDULE
98/99 SERIES RIM DEVICE
9827/9927 SERIES DEVICE
9847/9947 SERIES DEVICE
9849/9949 SERIES DEVICE
9875/9975 SERIES DEVICE

LHR SHOWN
RHR OPPOSITE

VON DUPRIN®

TEMPLATE NUMBER: 20268_C

DATE: 05-31-13

RIM APPLICATION

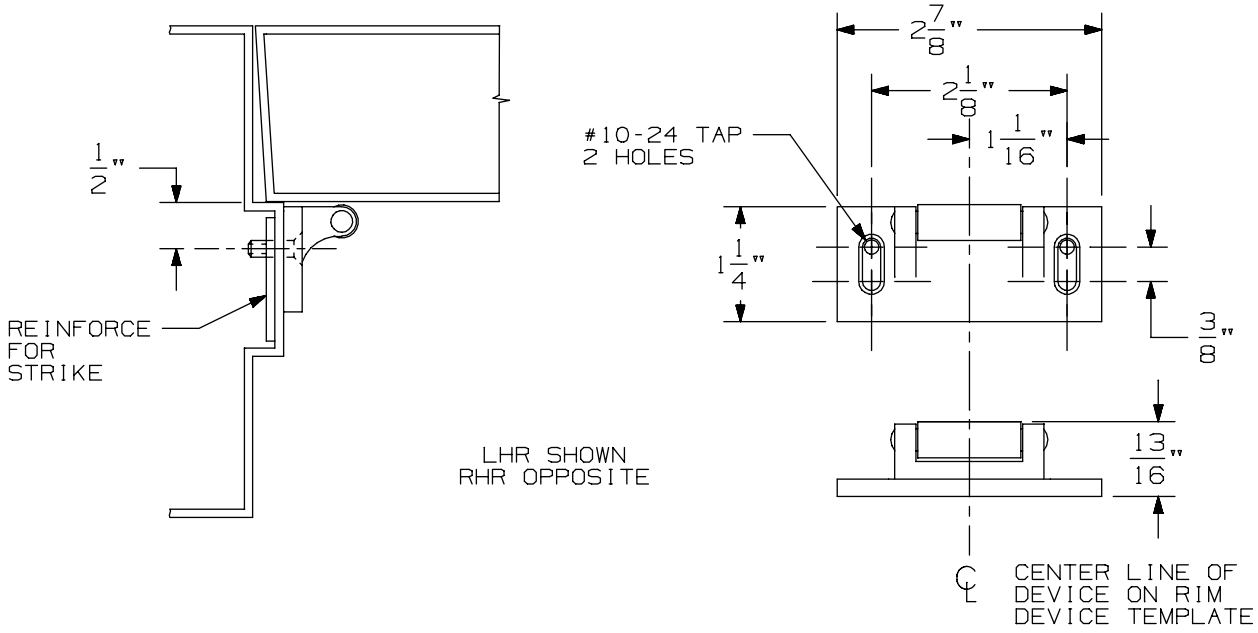

VERTICAL APPLICATION

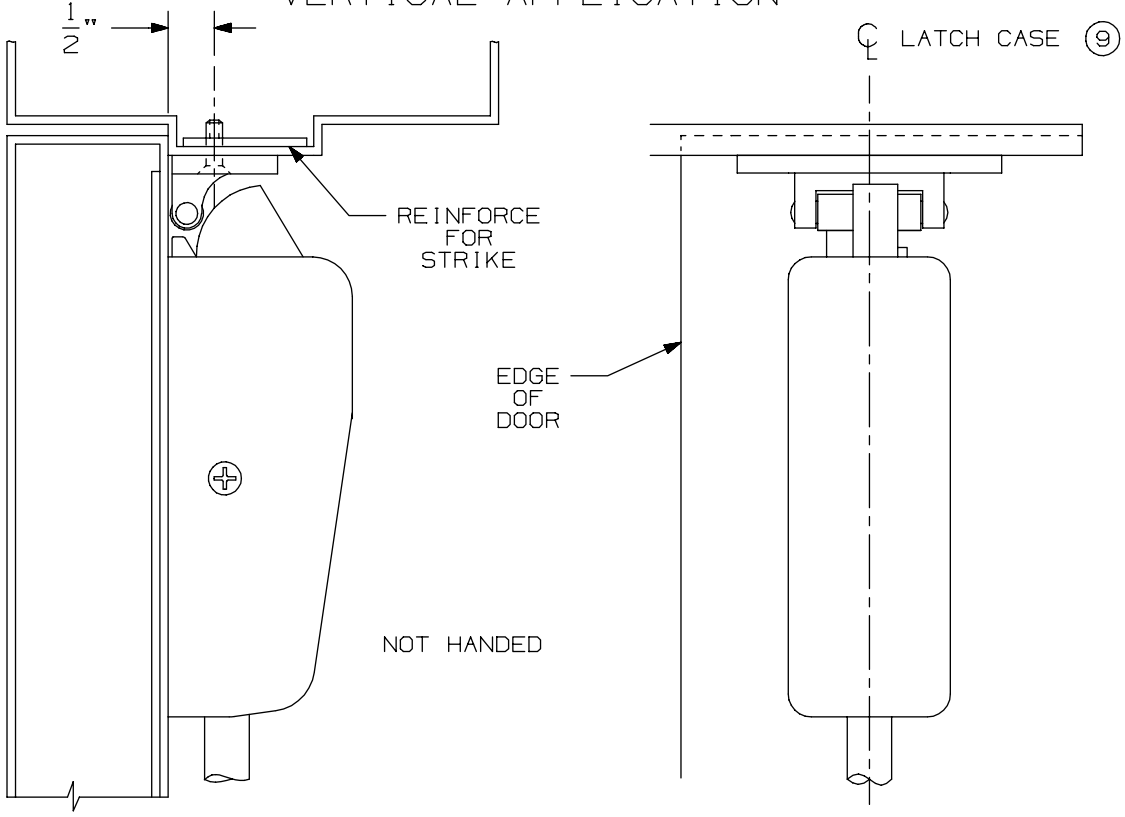

NOTE: LATCH CASE MOUNTING HOLES TO BE PREPARED AT INSTALLATION ON DOOR.

299 & 299F Strike

VON DUPRIN®

NOTES: SEE MASTER SHEET #10001 FOR SUGGESTED REINFORCING

TEMPLATE NUMBER: 30039_a

DATE: 05-23-13

APPLICATION	PREPARATION
SURFACE APPLICATION	#10-24 TAP 4 PLACES
990 TRIM APPLICATION OR SEX BOLT APPLICATION (SEE NOTE 1)	1/4' DIA THIS SIDE 13/32" DIA OPPOSITE SIDE - 4 PLACES

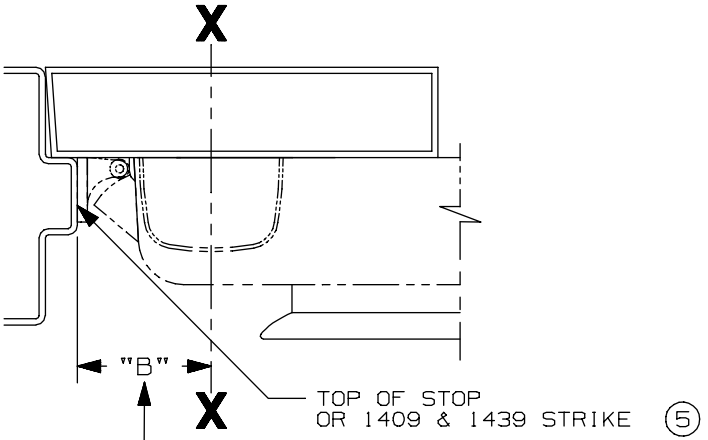

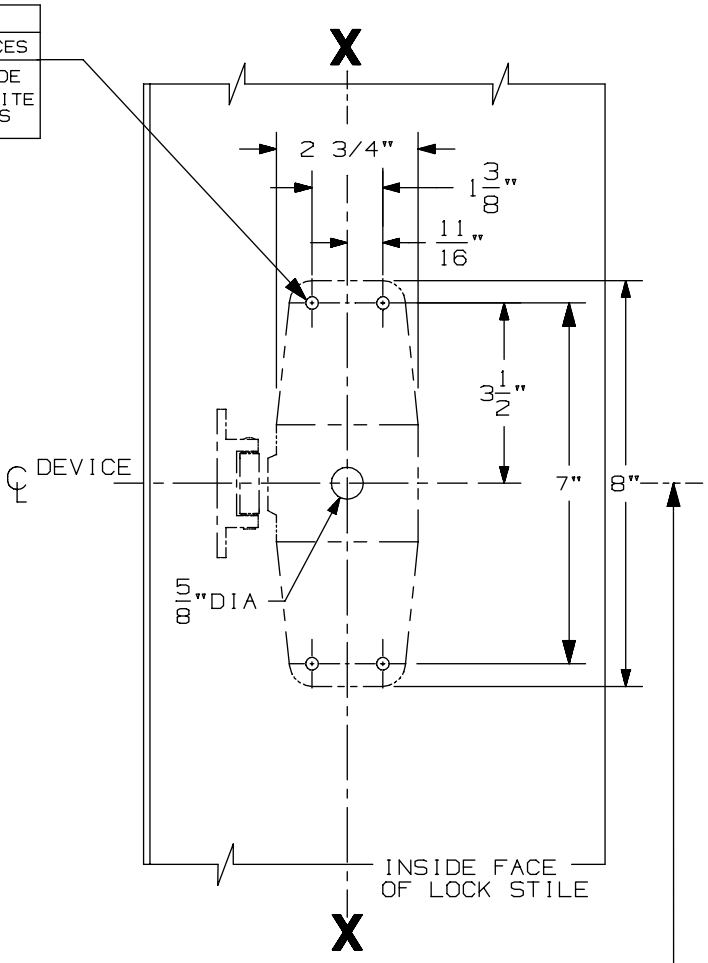

SINGLE DOOR INSTALLATION			
STRIKE	DIM. "B"	MIN. STILE 990/991/992 TRIM	MIN. STILE 696/697 TRIM
299 & 299-F	2 3/8"	4 1/2"	4 3/8"
5 1409 & 1439	1 9/16"	3 13/16"	3 13/16"
1606	1 15/16"	4 1/16"	3 15/16"

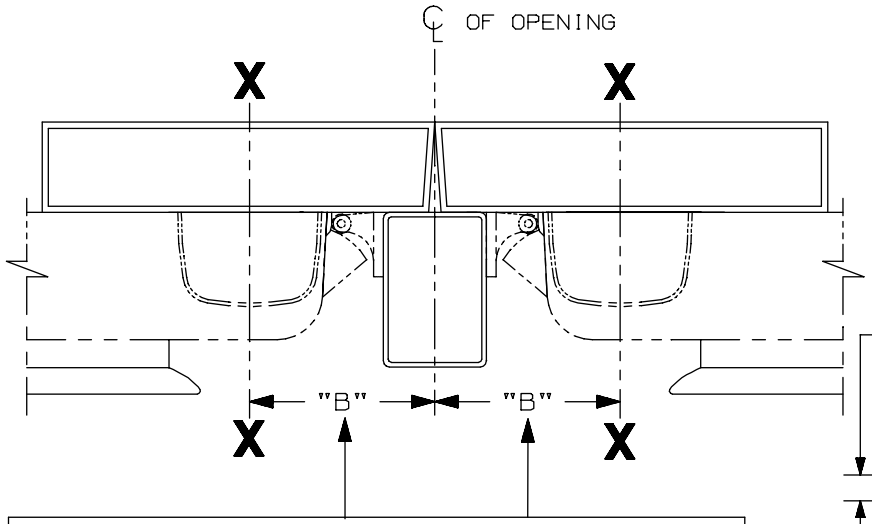

DOUBLE DOOR INSTALLATION WITH VON DUPRIN MULLIONS				
MULLION	STRIKE	DIM. "B"	MIN. STILE 990/991/992 TRIM	MIN. STILE 696/697 TRIM
4954	299	3 3/8"	4 7/8"	4 3/4"
9954	499-F	3 1/2"	5"	4 7/8"
5654	299	2 15/16"	4 3/8"	4 1/4"
5754	1408	2 1/8"	3 13/16"	3 13/16"
1654	1606	2 15/16"	4 3/8"	4 1/4"

SINGLE DOOR OPENING
39 13/16" TO FINISHED FLOOR

DOUBLE DOOR OPENING
WITH VON DUPRIN MULLION
39 11/16"

NOTE:
RECOMMENDED DOOR UNDERCUT IS 1/4" FROM FINISHED FLOOR (PANIC & FIRE) OR 1/8" FROM THRESHOLD (PANIC ONLY)

LHR APPLICATION SHOWN,
RHR APPLICATION OPPOSITE

NOTES:
1. THESE FOUR HOLES TO BE PREPARED FOR SURFACE APPLICATION WHEN USING 696/697 TRIM. DO NOT PREPARE FOR SEX BOLTS.
2. GLASS BEAD KIT AVAILABLE WHEN REQUIRED.
3. FOR OUTSIDE TRIM PREPARATION, WHEN REQUIRED, SEE TRIM TEMPLATE.
4. LATCH CASE PREPARATION TO BE MADE AT INSTALLATION ON DOOR.
5. IT IS RECOMMENDED THE MOUNTING HOLES BE PREPARED IN THE FIELD.

STD & CX9857/9957 & 9857-F/9957-F NL Series 3 Point Latching Device

VON DUPRIN®

NOTES: SEE MASTER SHEET #10001 FOR SUGGESTED REINFORCING

TEMPLATE NUMBER: 10361_a

DATE: 05-22-13

990 NL TRIM

NOTES: SEE MASTER SHEET #10001 FOR SUGGESTED REINFORCING

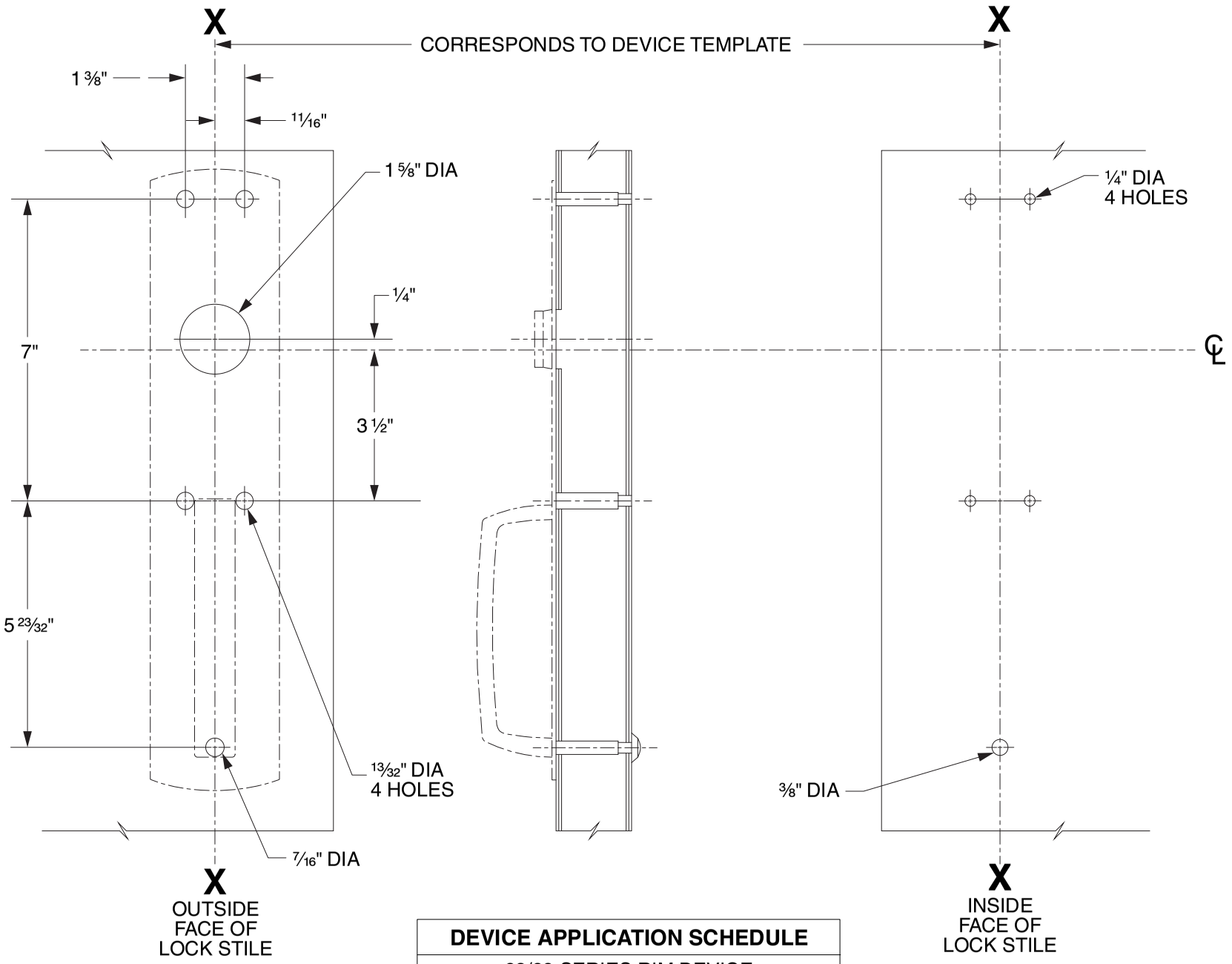

DEVICE APPLICATION SCHEDULE
98/99 SERIES RIM DEVICE
9827/9927 SERIES DEVICE
9847/9947 SERIES DEVICE
9849/9949 SERIES DEVICE

LHR SHOWN
RHR OPPOSITE

VON DUPRIN®

TEMPLATE NUMBER: 20267_C

DATE: 05-31-13

RIM APPLICATION

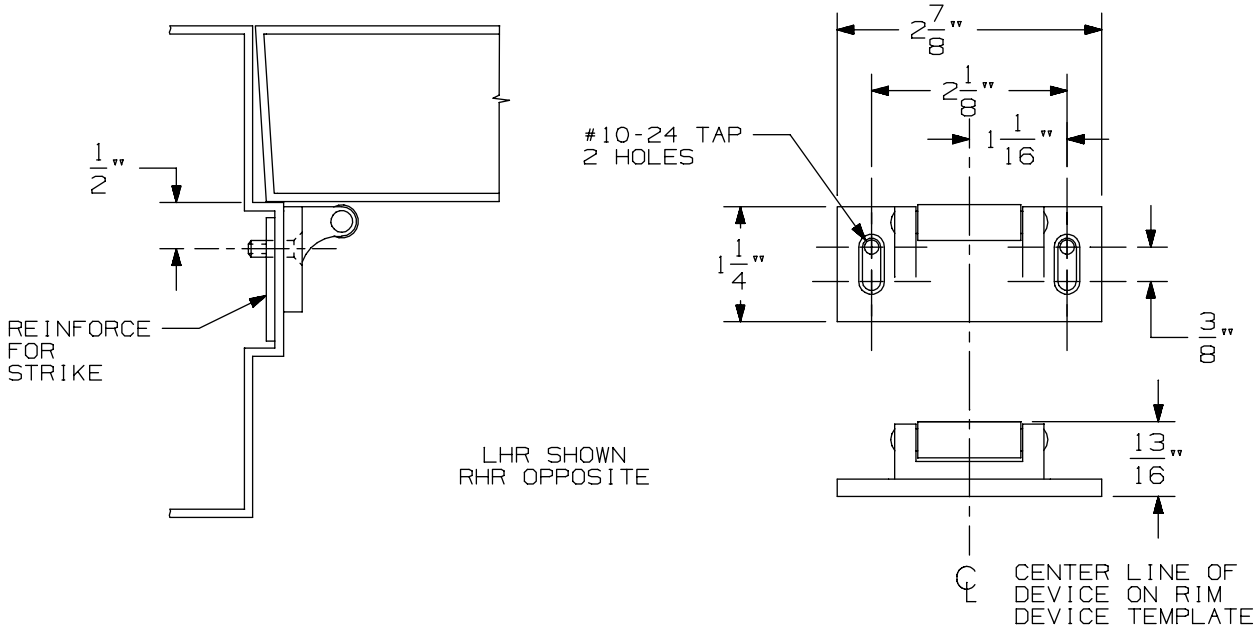

VERTICAL APPLICATION

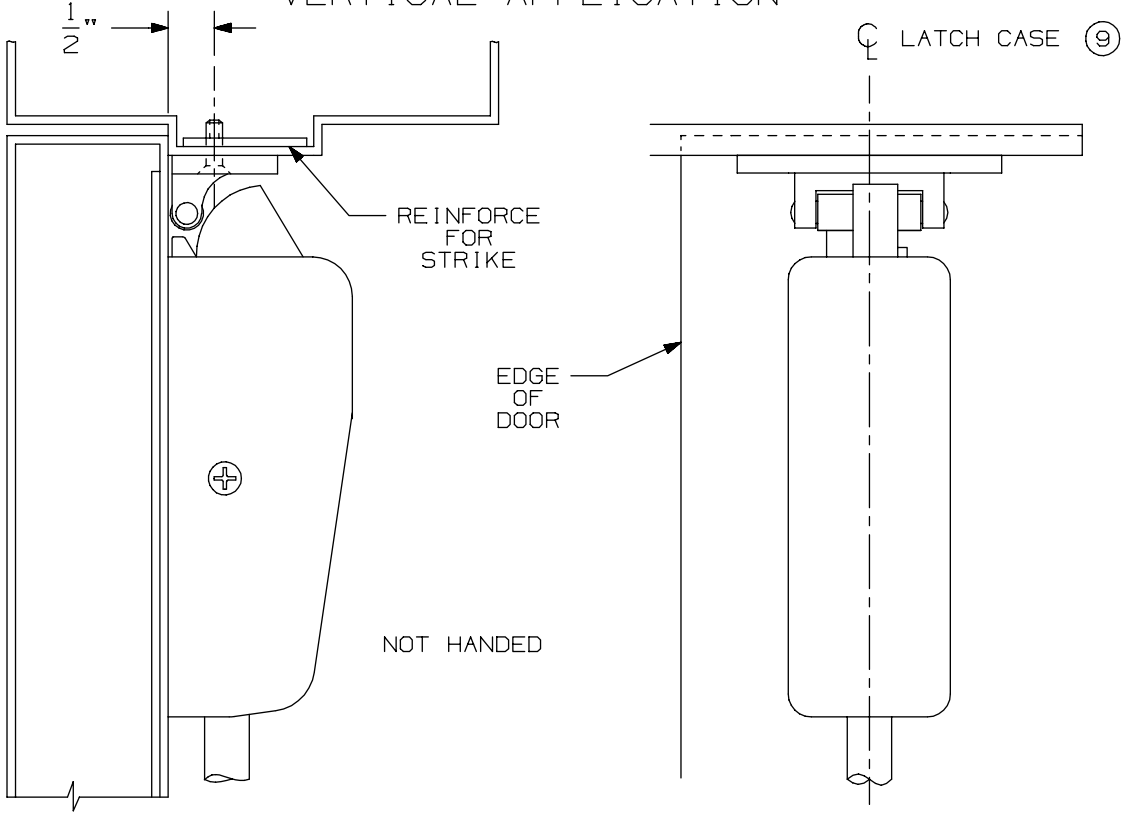

NOTE: LATCH CASE MOUNTING HOLES TO BE PREPARED AT INSTALLATION ON DOOR.

299 & 299F Strike

VON DUPRIN®

NOTES: SEE MASTER SHEET #10001 FOR SUGGESTED REINFORCING

TEMPLATE NUMBER: 30039_a

DATE: 05-23-13

APPLICATION	PREPARATION
SURFACE APPLICATION	#10-24 TAP 4 PLACES
990 TRIM APPLICATION OR SEX BOLT APPLICATION (SEE NOTE 1)	1/4' DIA THIS SIDE 13/32" DIA OPPOSITE SIDE - 4 PLACES

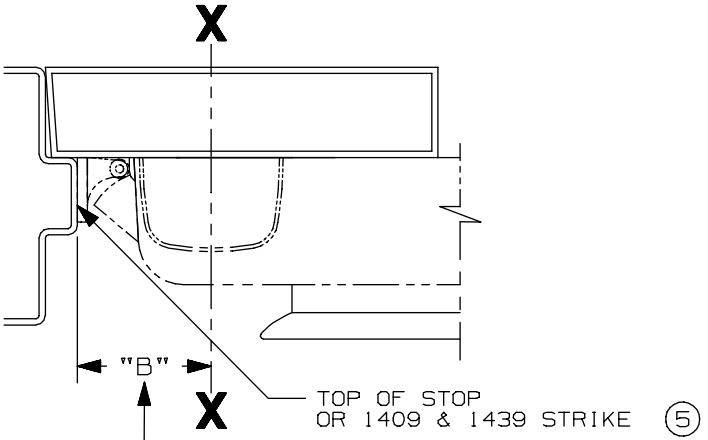

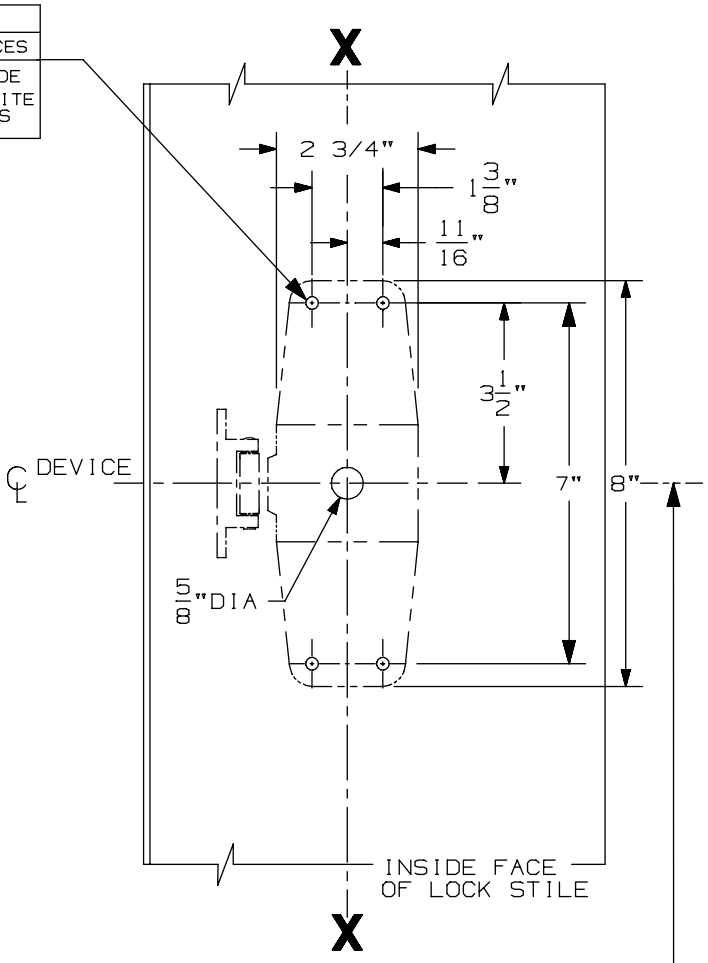

SINGLE DOOR INSTALLATION			
STRIKE	DIM. "B"	MIN. STILE 990/991/992 TRIM	MIN. STILE 696/697 TRIM
299 & 299-F	2 3/8"	4 1/2"	4 3/8"
5 1409 & 1439	1 9/16"	3 13/16"	3 13/16"
1606	1 15/16"	4 1/16"	3 15/16"

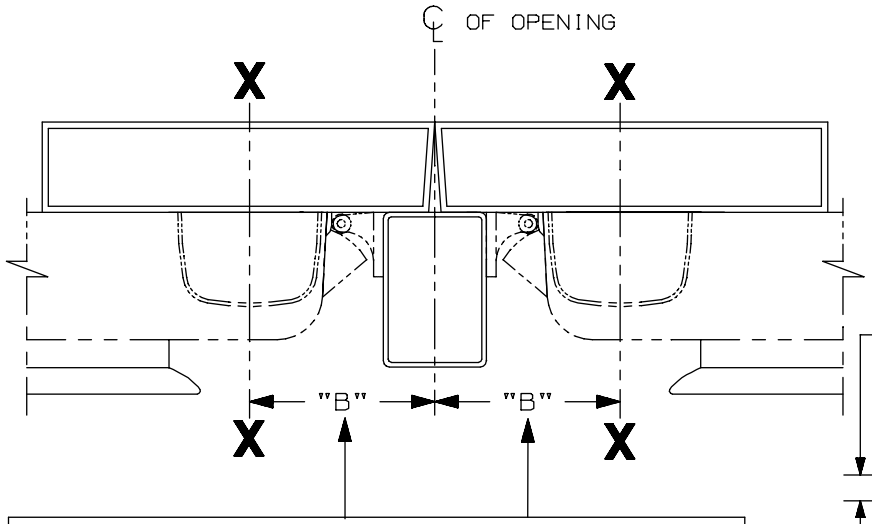

DOUBLE DOOR INSTALLATION WITH VON DUPRIN MULLIONS				
MULLION	STRIKE	DIM. "B"	MIN. STILE 990/991/992 TRIM	MIN. STILE 696/697 TRIM
4954	299	3 3/8"	4 7/8"	4 3/4"
9954	499-F	3 1/2"	5"	4 7/8"
5654	299	2 15/16"	4 3/8"	4 1/4"
5754	1408	2 1/8"	3 13/16"	3 13/16"
1654	1606	2 15/16"	4 3/8"	4 1/4"

SINGLE DOOR OPENING
39 13/16" TO FINISHED FLOOR

DOUBLE DOOR OPENING
WITH VON DUPRIN MULLION
39 11/16"

NOTE:
RECOMMENDED DOOR UNDERCUT IS 1/4" FROM FINISHED FLOOR (PANIC & FIRE) OR 1/8" FROM THRESHOLD (PANIC ONLY)

LHR APPLICATION SHOWN,
RHR APPLICATION OPPOSITE

NOTES:
1. THESE FOUR HOLES TO BE PREPARED FOR SURFACE APPLICATION WHEN USING 696/697 TRIM. DO NOT PREPARE FOR SEX BOLTS.
2. GLASS BEAD KIT AVAILABLE WHEN REQUIRED.
3. FOR OUTSIDE TRIM PREPARATION, WHEN REQUIRED, SEE TRIM TEMPLATE.
4. LATCH CASE PREPARATION TO BE MADE AT INSTALLATION ON DOOR.
5. IT IS RECOMMENDED THE MOUNTING HOLES BE PREPARED IN THE FIELD.

STD & CX9857/9957 & 9857-F/9957-F NL Series 3 Point Latching Device

VON DUPRIN®

NOTES: SEE MASTER SHEET #10001 FOR SUGGESTED REINFORCING

TEMPLATE NUMBER: 10361_a

DATE: 05-22-13

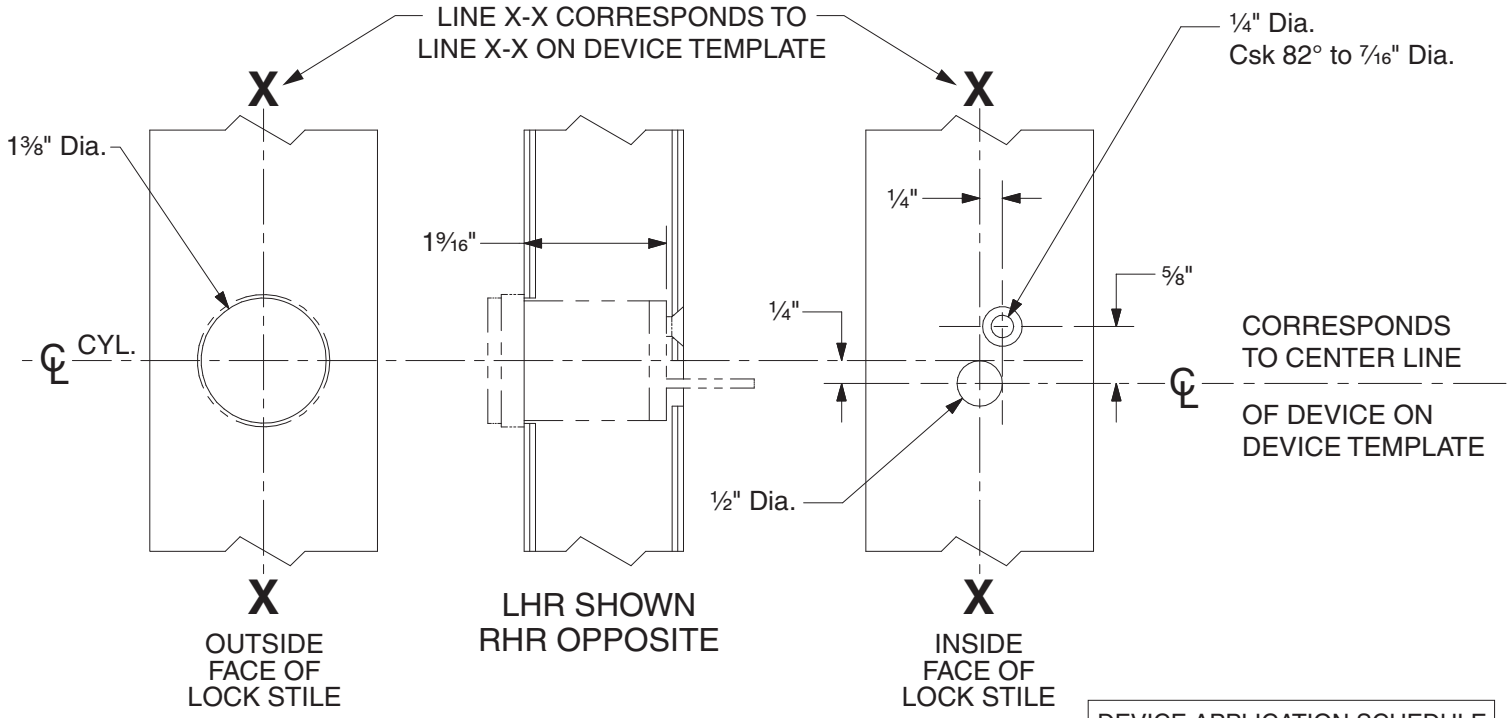

DEVICE APPLICATION SCHEDULE	
98 RIM SERIES	99 RIM SERIES
9827 SERIES	9927 SERIES
9847 SERIES	9947 SERIES
22 RIM SERIES	2227 SERIES

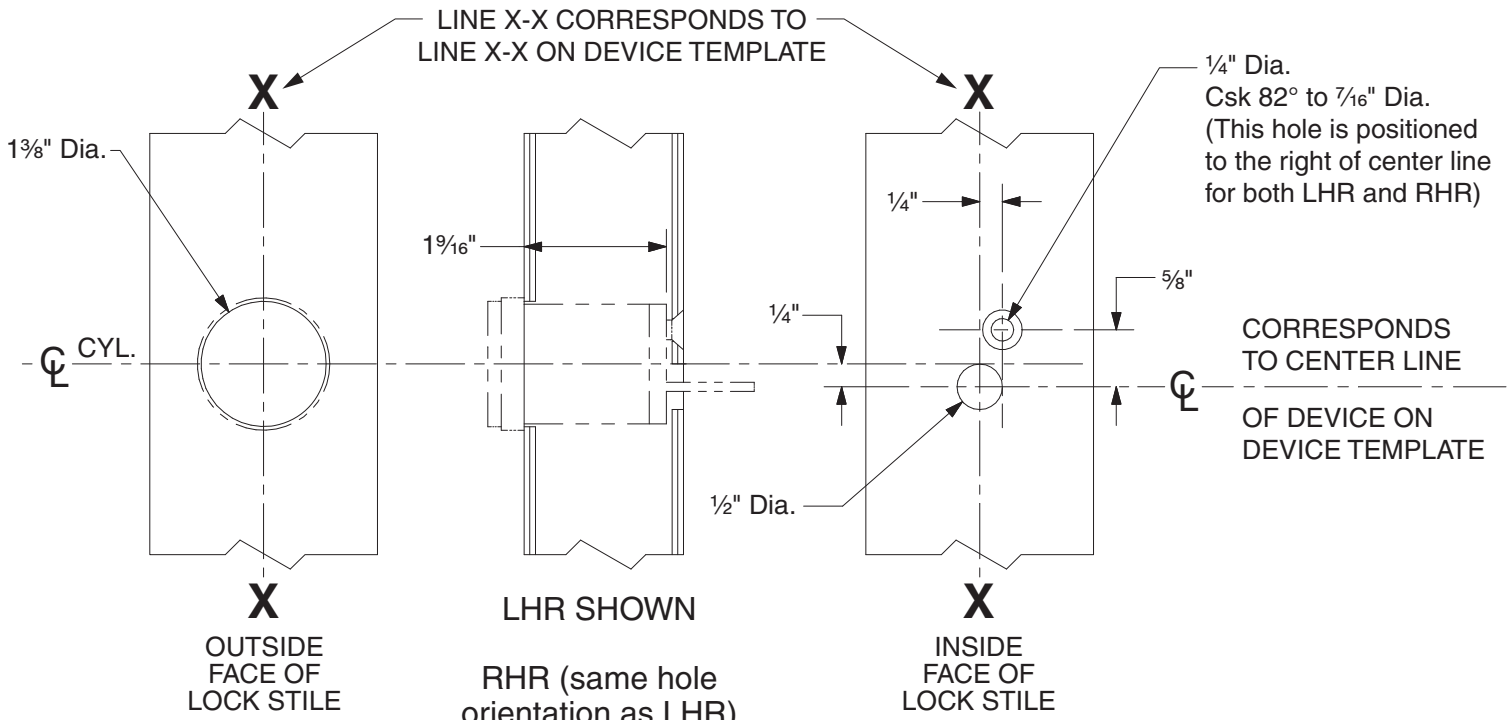

DEVICE APPLICATION SCHEDULE	
9849 SERIES	9949 SERIES

110NL Cylinder Preparation

VON DUPRIN®

NOTES: SEE MASTER SHEET #10001 FOR SUGGESTED REINFORCING

TEMPLATE NUMBER: 40022_c

DATE: 05-28-13

RIM APPLICATION

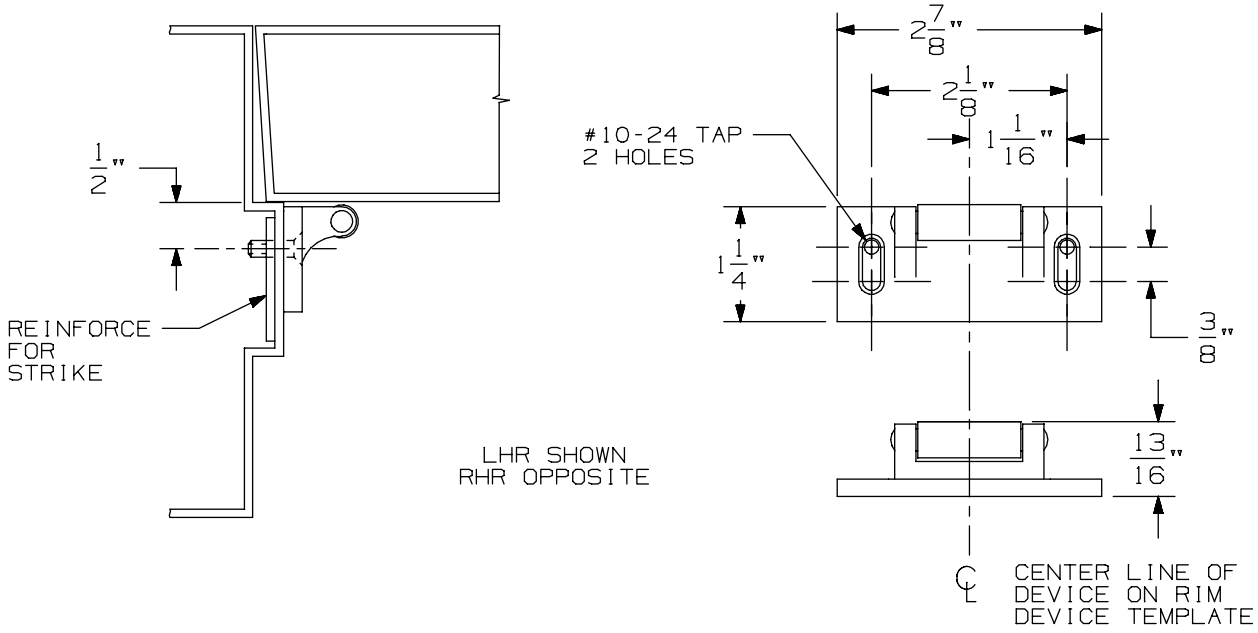

VERTICAL APPLICATION

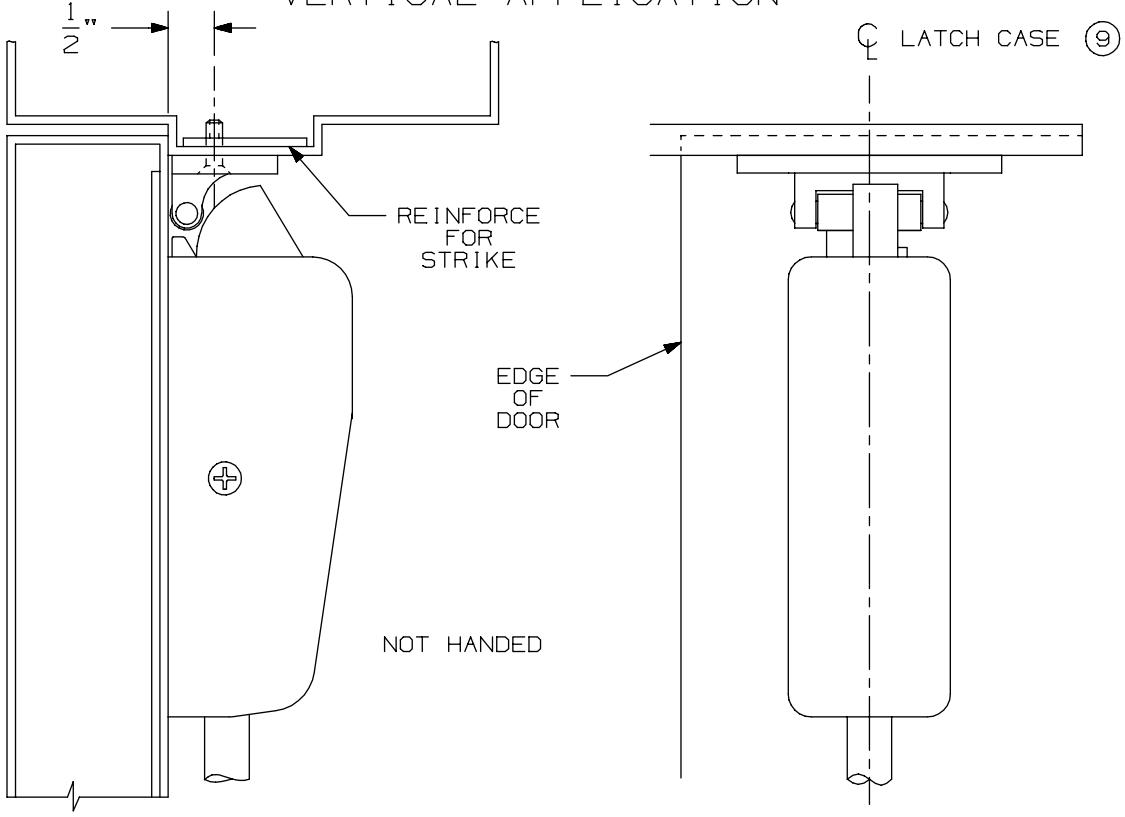

NOTE: LATCH CASE MOUNTING HOLES TO BE PREPARED AT INSTALLATION ON DOOR.

299 & 299F Strike

VON DUPRIN®

NOTES: SEE MASTER SHEET #10001 FOR SUGGESTED REINFORCING

TEMPLATE NUMBER: 30039_a

DATE: 05-23-13

APPLICATION	PREPARATION
SURFACE APPLICATION	#10-24 TAP 4 PLACES
990 TRIM APPLICATION OR SEX BOLT APPLICATION (SEE NOTE 1)	1/4' DIA THIS SIDE 13/32" DIA OPPOSITE SIDE - 4 PLACES

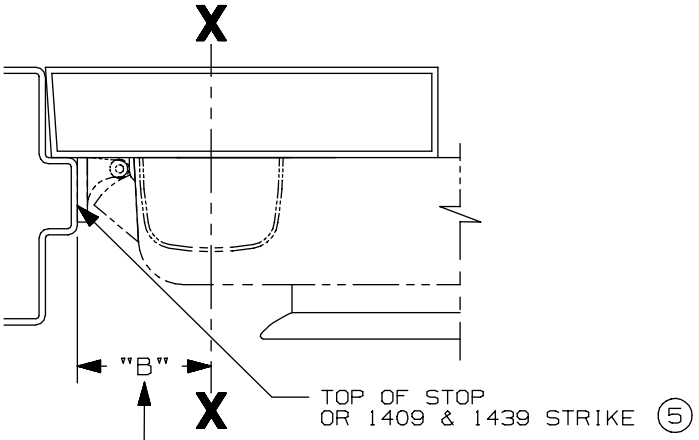

SINGLE DOOR INSTALLATION			
STRIKE	DIM. "B"	MIN. STILE 990/991/992 TRIM	MIN. STILE 696/697 TRIM
299 & 299-F	2 3/8"	4 1/2"	4 3/8"
(5) 1409 & 1439	1 9/16"	3 13/16"	3 13/16"
1606	1 15/16"	4 1/16"	3 15/16"

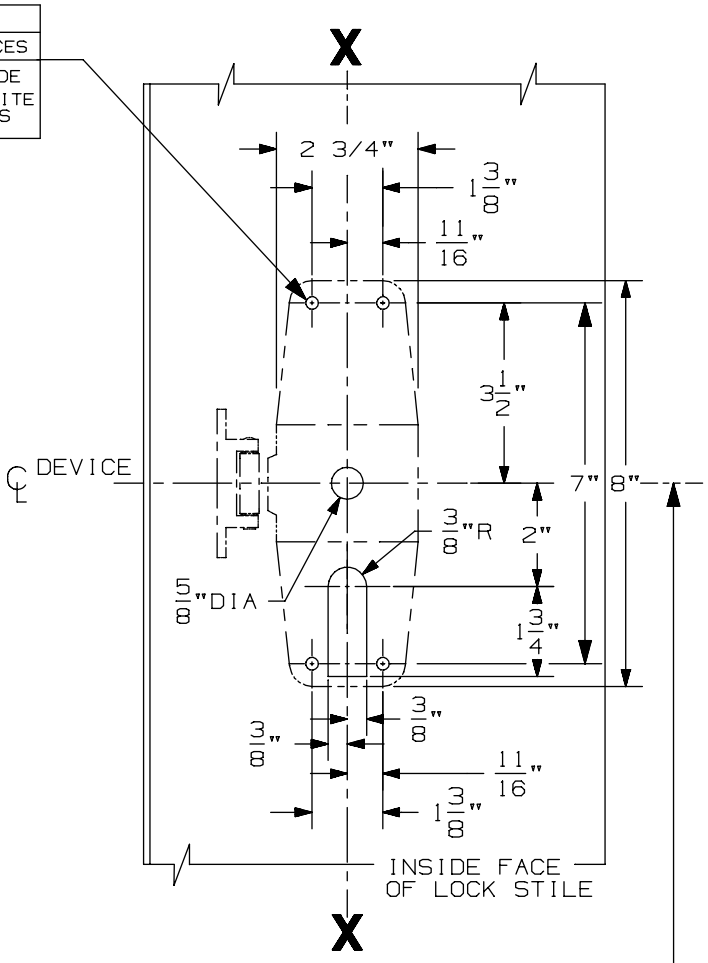

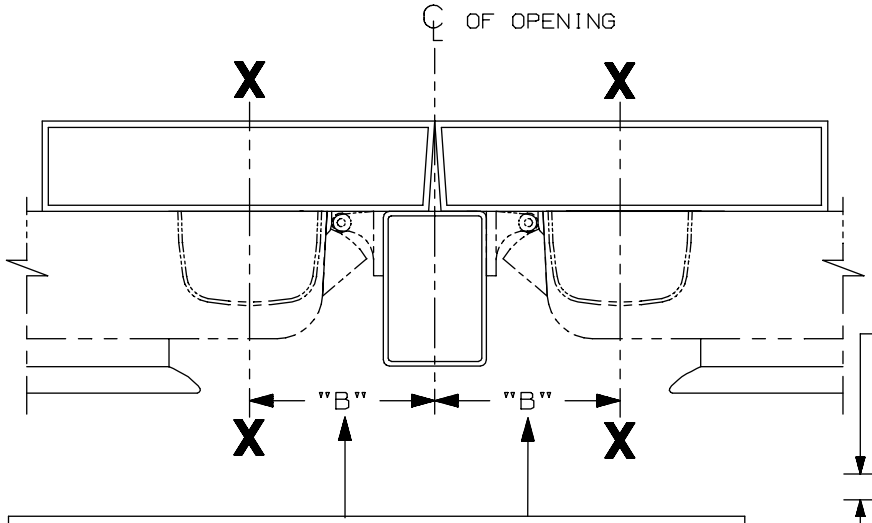

DOUBLE DOOR INSTALLATION WITH VON DUPRIN MULLIONS				
MULLION	STRIKE	DIM. "B"	MIN. STILE 990/991/992 TRIM	MIN. STILE 696/697 TRIM
4954	299	3 3/8"	4 7/8"	4 3/4"
9954	499-F	3 1/2"	5"	4 7/8"
5654	299	2 15/16"	4 3/8"	4 1/4"
5754	1408	2 1/8"	3 13/16"	3 13/16"
1654	1606	2 15/16"	4 3/8"	4 1/4"

SINGLE DOOR OPENING
39 13/16" TO FINISHED FLOOR

DOUBLE DOOR OPENING
WITH VON DUPRIN MULLION
39 11/16"

NOTE:
RECOMMENDED DOOR UNDERCUT IS 1/4" FROM FINISHED FLOOR (PANIC & FIRE) OR 1/8" FROM THRESHOLD (PANIC ONLY)

LHR APPLICATION SHOWN,
RHR APPLICATION OPPOSITE

NOTES:
1. THESE FOUR HOLES TO BE PREPARED FOR SURFACE APPLICATION WHEN USING 696/697 TRIM. DO NOT PREPARE FOR SEX BOLTS.
2. GLASS BEAD KIT AVAILABLE WHEN REQUIRED.
3. FOR OUTSIDE TRIM PREPARATION, WHEN REQUIRED, SEE TRIM TEMPLATE.
4. LATCH CASE PREPARATION TO BE MADE AT INSTALLATION ON DOOR.
5. IT IS RECOMMENDED THE MOUNTING HOLES BE PREPARED IN THE FIELD.

STD & CX9857/9957 & 9857-F/9957-F TP, K, & L Series 3 Point Latching Device

VON DUPRIN®

NOTES: SEE MASTER SHEET #10001 FOR SUGGESTED REINFORCING

TEMPLATE NUMBER: 10362_a

DATE: 05-22-13

991 K & 992 L Trim

NOTES: SEE MASTER SHEET #10001 FOR SUGGESTED REINFORCING

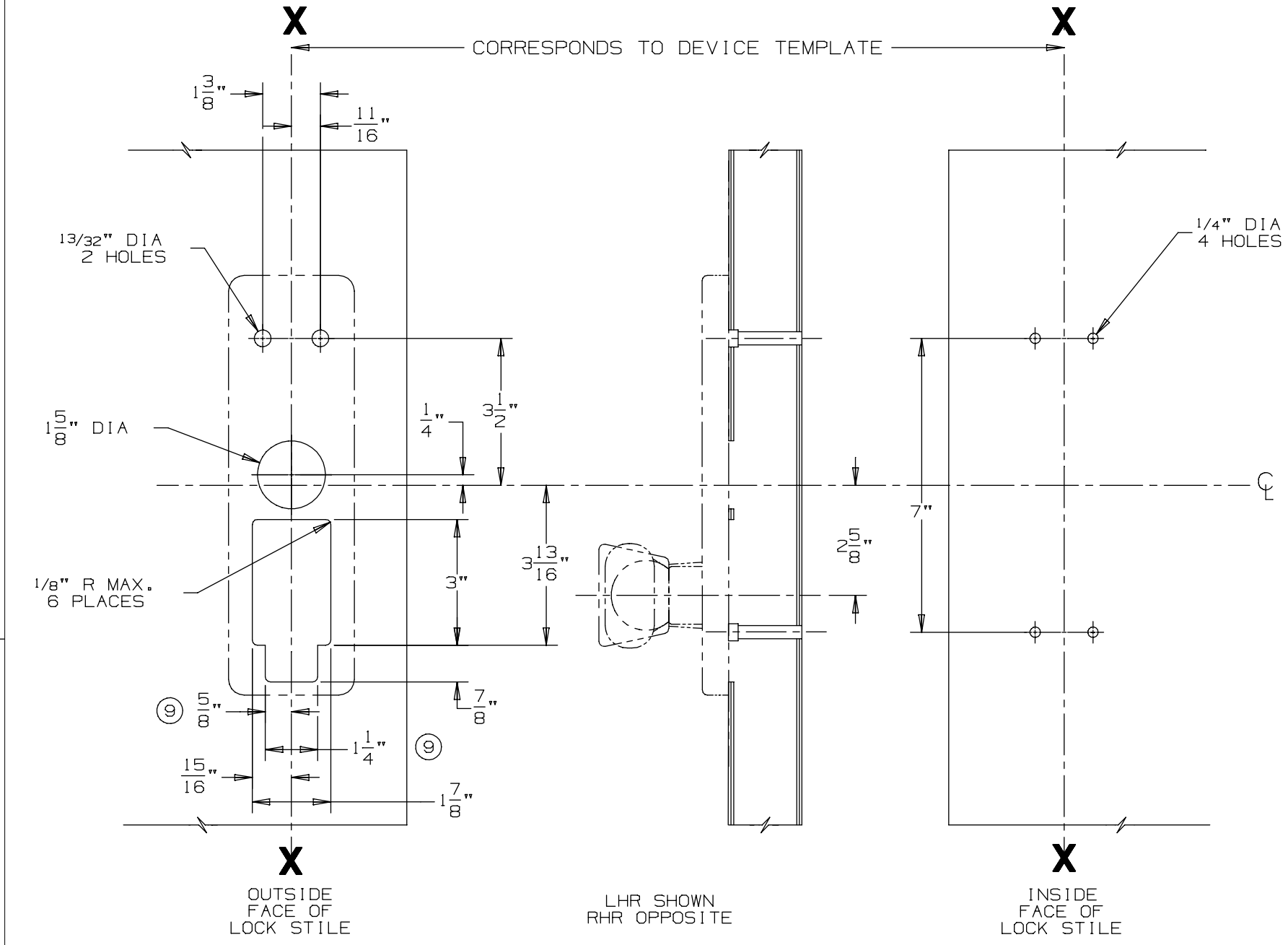

DEVICE APPLICATION SCHEDULE
98/99 SERIES RIM DEVICE
9827/9927 SERIES DEVICE
9847/9947 SERIES DEVICE

VON DUPRIN®

TEMPLATE NUMBER: 20272_a

DATE: 05-23-13

RIM APPLICATION

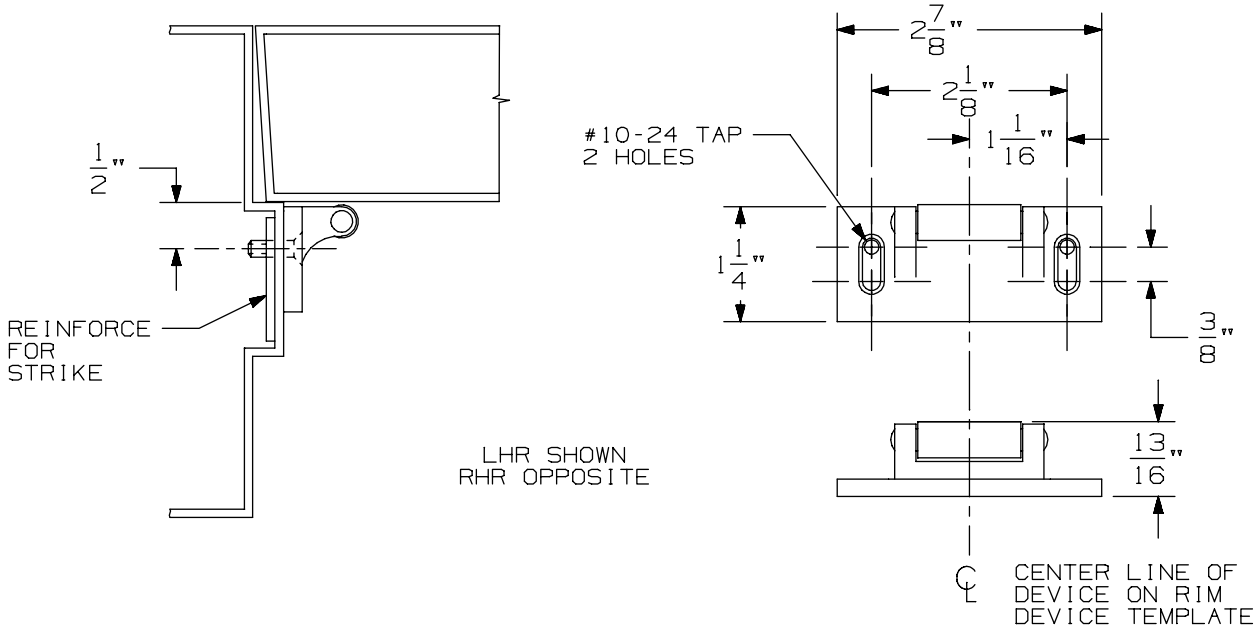

VERTICAL APPLICATION

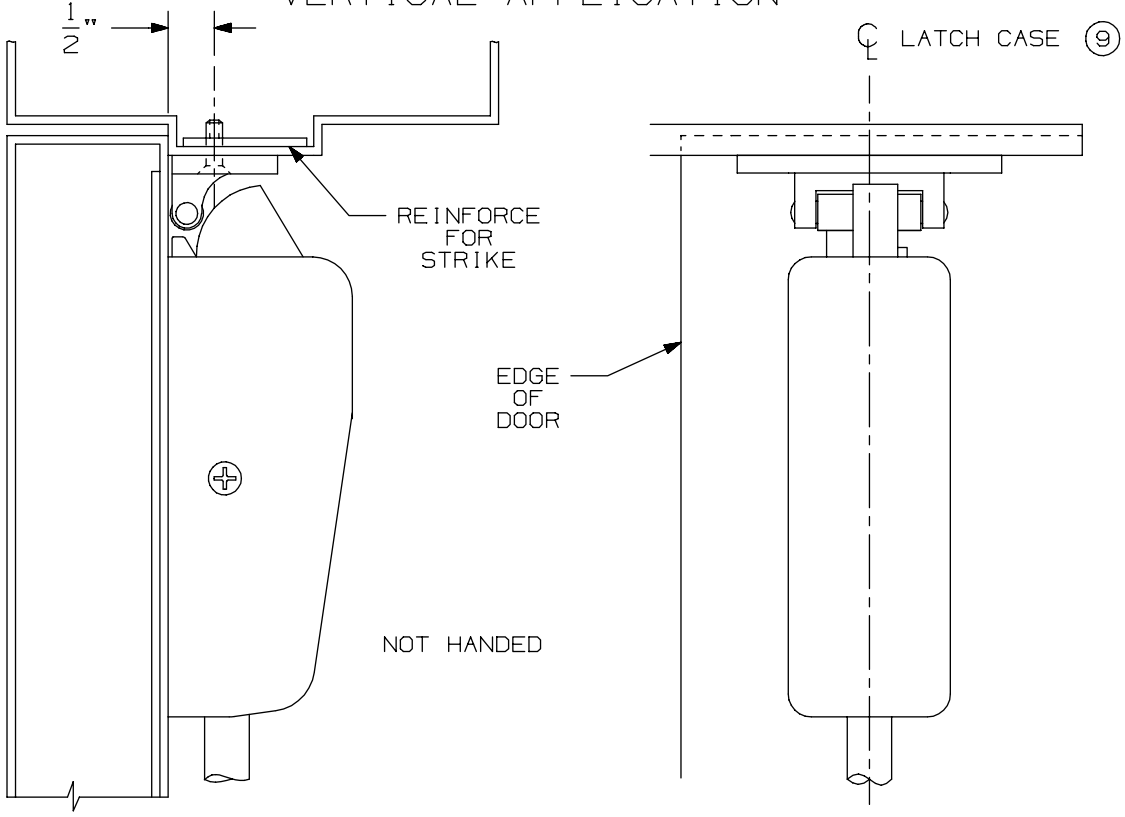

NOTE: LATCH CASE MOUNTING HOLES TO BE PREPARED AT INSTALLATION ON DOOR.

299 & 299F Strike

VON DUPRIN®

NOTES: SEE MASTER SHEET #10001 FOR SUGGESTED REINFORCING

TEMPLATE NUMBER: 30039_a

DATE: 05-23-13

APPLICATION	PREPARATION
SURFACE APPLICATION	#10-24 TAP 4 PLACES
990 TRIM APPLICATION OR SEX BOLT APPLICATION (SEE NOTE 1)	1/4' DIA THIS SIDE 13/32" DIA OPPOSITE SIDE - 4 PLACES

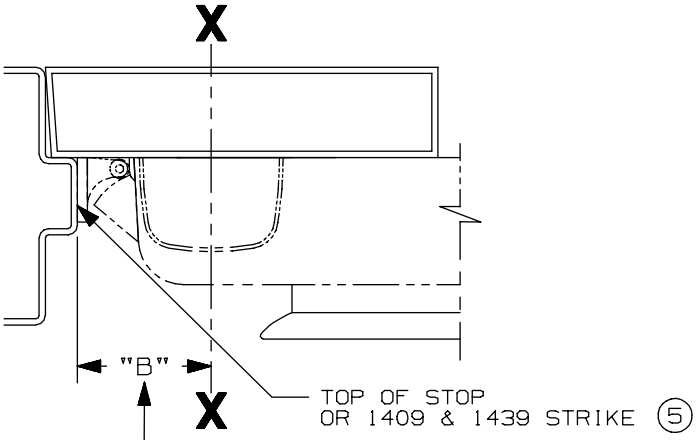

SINGLE DOOR INSTALLATION			
STRIKE	DIM. "B"	MIN. STILE 990/991/992 TRIM	MIN. STILE 696/697 TRIM
299 & 299-F	2 3/8"	4 1/2"	4 3/8"
(5) 1409 & 1439	1 9/16"	3 13/16"	3 13/16"
1606	1 15/16"	4 1/16"	3 15/16"

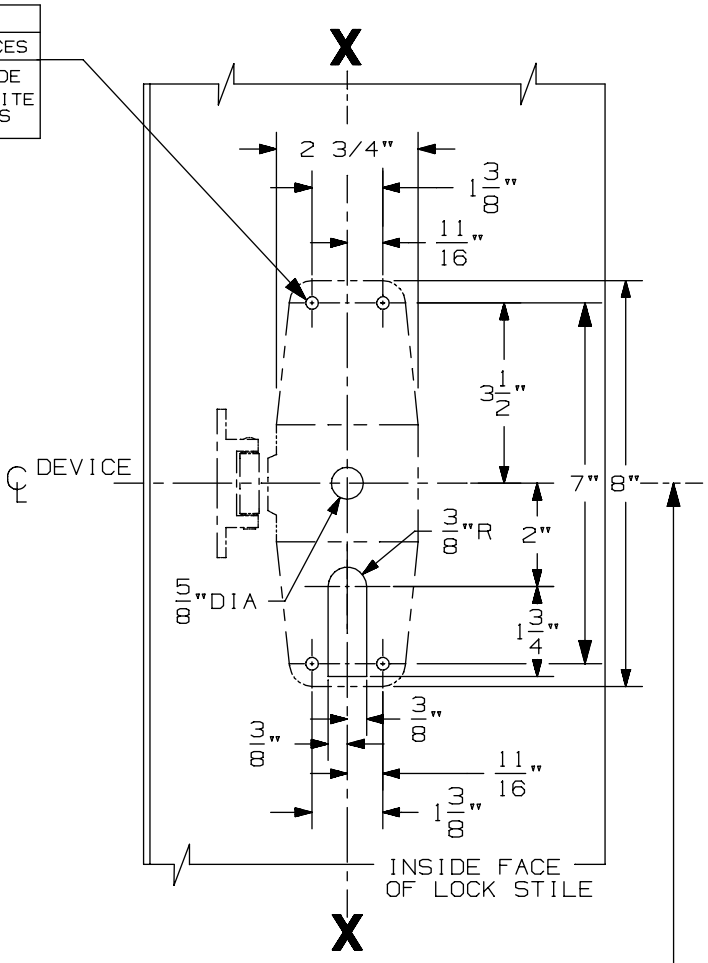

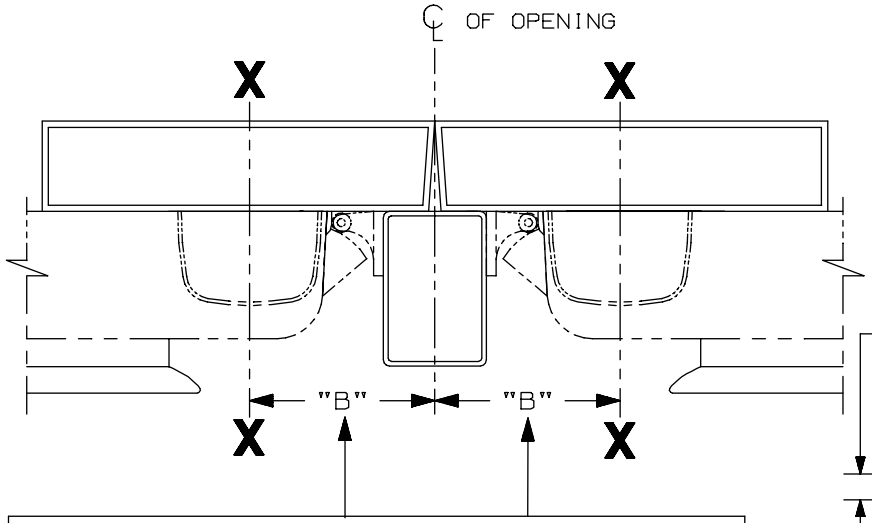

DOUBLE DOOR INSTALLATION WITH VON DUPRIN MULLIONS				
MULLION	STRIKE	DIM. "B"	MIN. STILE 990/991/992 TRIM	MIN. STILE 696/697 TRIM
4954	299	3 3/8"	4 7/8"	4 3/4"
9954	499-F	3 1/2"	5"	4 7/8"
5654	299	2 15/16"	4 3/8"	4 1/4"
5754	1408	2 1/8"	3 13/16"	3 13/16"
1654	1606	2 15/16"	4 3/8"	4 1/4"

SINGLE DOOR OPENING
39 13/16" TO FINISHED FLOOR

DOUBLE DOOR OPENING
WITH VON DUPRIN MULLION
39 11/16"

NOTE:
RECOMMENDED DOOR UNDERCUT IS 1/4" FROM FINISHED FLOOR (PANIC & FIRE) OR 1/8" FROM THRESHOLD (PANIC ONLY)

LHR APPLICATION SHOWN,
RHR APPLICATION OPPOSITE

NOTES:
1. THESE FOUR HOLES TO BE PREPARED FOR SURFACE APPLICATION WHEN USING 696/697 TRIM. DO NOT PREPARE FOR SEX BOLTS.
2. GLASS BEAD KIT AVAILABLE WHEN REQUIRED.
3. FOR OUTSIDE TRIM PREPARATION, WHEN REQUIRED, SEE TRIM TEMPLATE.
4. LATCH CASE PREPARATION TO BE MADE AT INSTALLATION ON DOOR.
5. IT IS RECOMMENDED THE MOUNTING HOLES BE PREPARED IN THE FIELD.

STD & CX9857/9957 & 9857-F/9957-F TP, K, & L Series 3 Point Latching Device

VON DUPRIN®

NOTES: SEE MASTER SHEET #10001 FOR SUGGESTED REINFORCING

TEMPLATE NUMBER: 10362_a

DATE: 05-22-13

DEVICE APPLICATION SCHEDULE	
98 RIM SERIES	99 RIM SERIES
9827 SERIES	9927 SERIES
9847 SERIES	9947 SERIES
9849 SERIES	9949 SERIES

996L, E996L, 996L-BE, E996L-BE 996K, 996K-BE R/V SERIES
TRIM METAL DOOR APPLICATION

VON DUPRIN®

NOTES: SEE MASTER SHEET #10001 FOR SUGGESTED REINFORCING

TEMPLATE NUMBER: 20003_e

DATE: 10-30-14

RIM APPLICATION

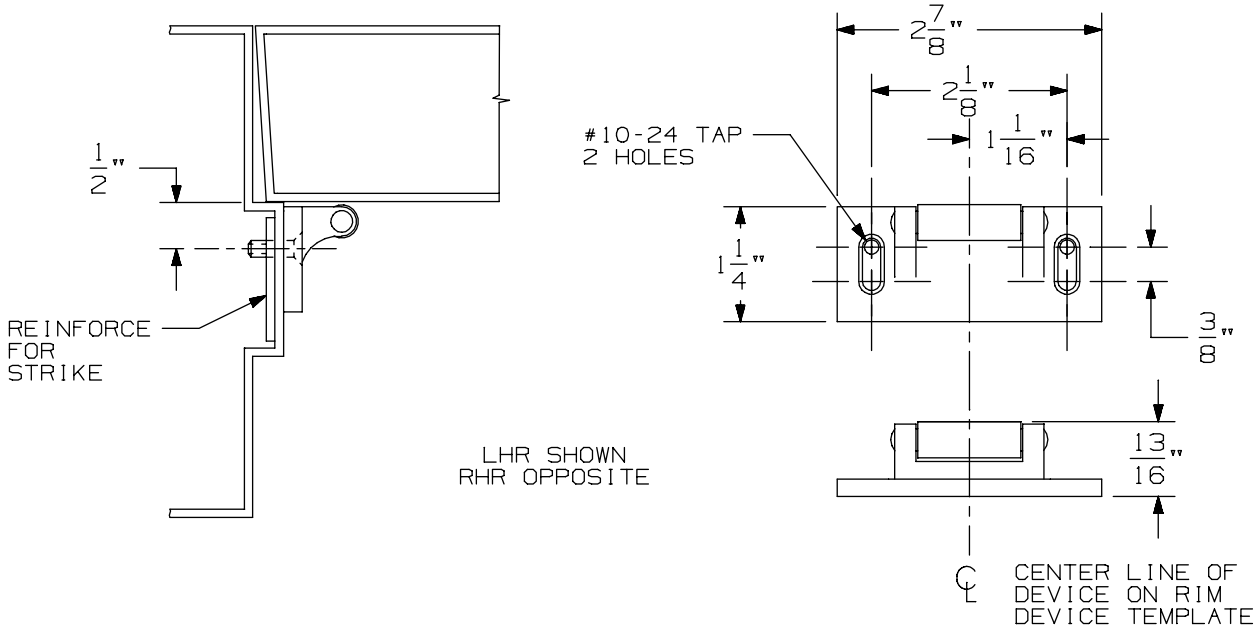

VERTICAL APPLICATION

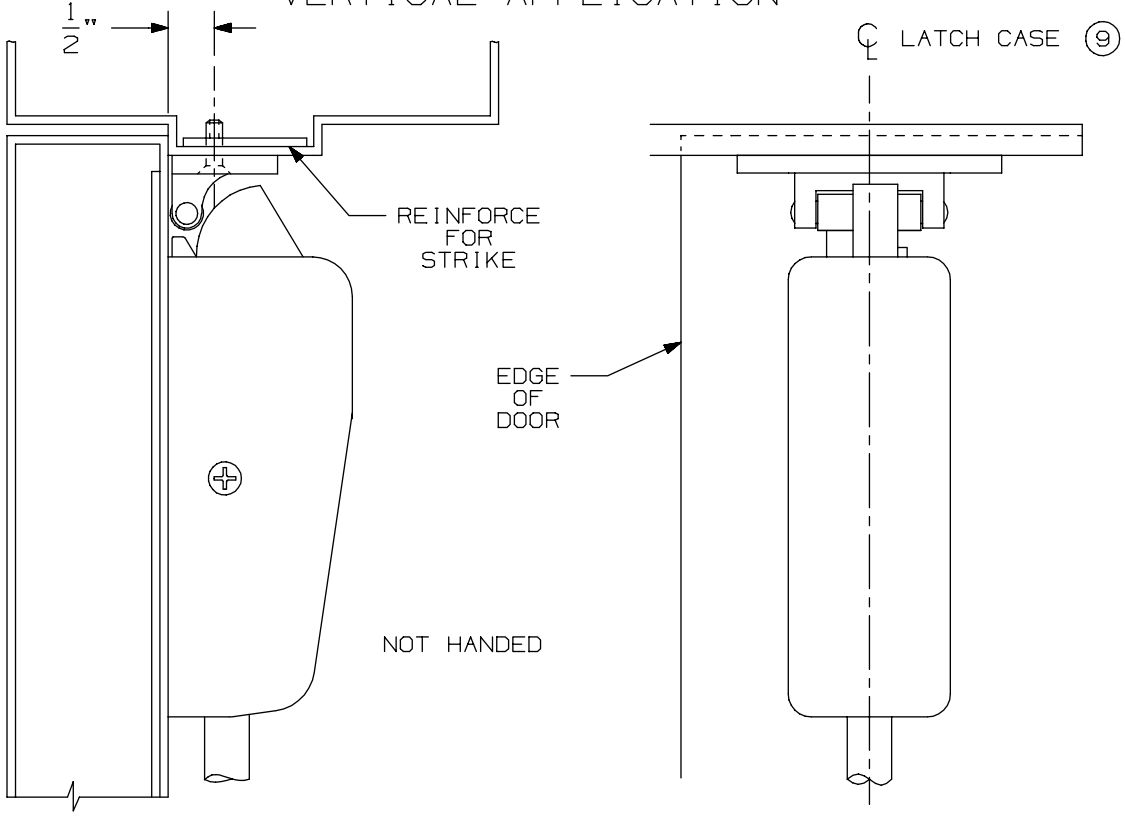

NOTE: LATCH CASE MOUNTING HOLES TO BE PREPARED AT INSTALLATION ON DOOR.

299 & 299F Strike

VON DUPRIN®

NOTES: SEE MASTER SHEET #10001 FOR SUGGESTED REINFORCING

TEMPLATE NUMBER: 30039_a

DATE: 05-23-13

APPLICATION	PREPARATION
SURFACE APPLICATION	#10-24 TAP 4 PLACES
990 TRIM APPLICATION OR SEX BOLT APPLICATION (SEE NOTE 1)	1/4' DIA THIS SIDE 13/32" DIA OPPOSITE SIDE - 4 PLACES

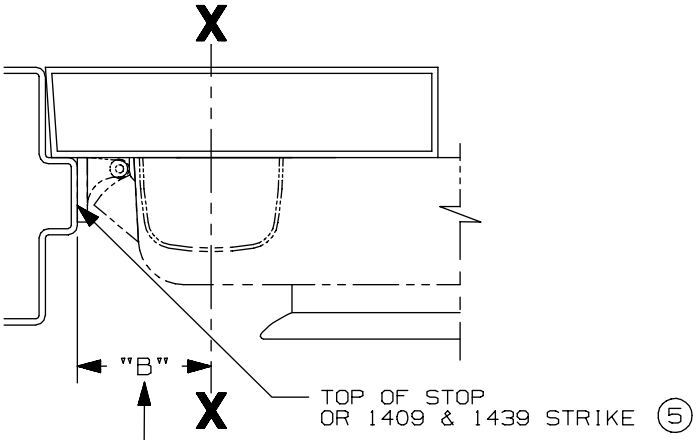

SINGLE DOOR INSTALLATION			
STRIKE	DIM. "B"	MIN. STILE 990/991/992 TRIM	MIN. STILE 696/697 TRIM
299 & 299-F	2 3/8"	4 1/2"	4 3/8"
(5) 1409 & 1439	1 9/16"	3 13/16"	3 13/16"
1606	1 15/16"	4 1/16"	3 15/16"

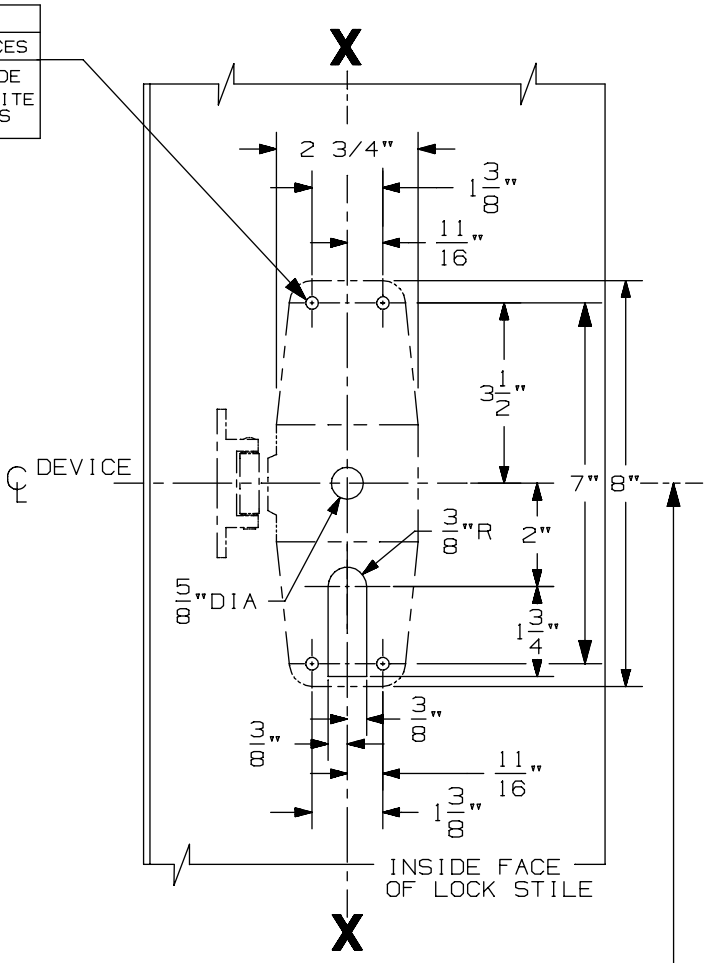

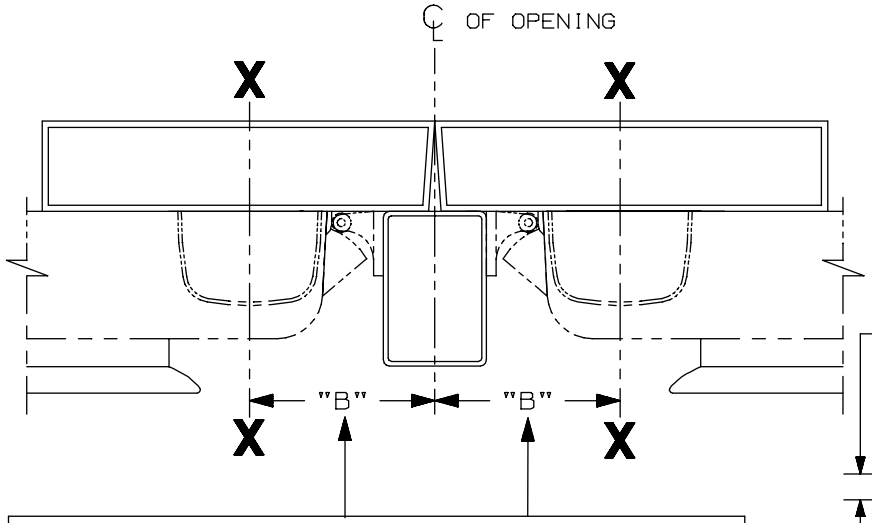

DOUBLE DOOR INSTALLATION WITH VON DUPRIN MULLIONS				
MULLION	STRIKE	DIM. "B"	MIN. STILE 990/991/992 TRIM	MIN. STILE 696/697 TRIM
4954	299	3 3/8"	4 7/8"	4 3/4"
9954	499-F	3 1/2"	5"	4 7/8"
5654	299	2 15/16"	4 3/8"	4 1/4"
5754	1408	2 1/8"	3 13/16"	3 13/16"
1654	1606	2 15/16"	4 3/8"	4 1/4"

SINGLE DOOR OPENING
39 13/16" TO FINISHED FLOOR

DOUBLE DOOR OPENING
WITH VON DUPRIN MULLION
39 11/16"

NOTE:
RECOMMENDED DOOR UNDERCUT IS 1/4" FROM FINISHED FLOOR (PANIC & FIRE) OR 1/8" FROM THRESHOLD (PANIC ONLY)

LHR APPLICATION SHOWN,
RHR APPLICATION OPPOSITE

NOTES:
1. THESE FOUR HOLES TO BE PREPARED FOR SURFACE APPLICATION WHEN USING 696/697 TRIM. DO NOT PREPARE FOR SEX BOLTS.
2. GLASS BEAD KIT AVAILABLE WHEN REQUIRED.
3. FOR OUTSIDE TRIM PREPARATION, WHEN REQUIRED, SEE TRIM TEMPLATE.
4. LATCH CASE PREPARATION TO BE MADE AT INSTALLATION ON DOOR.
5. IT IS RECOMMENDED THE MOUNTING HOLES BE PREPARED IN THE FIELD.

STD & CX9857/9957 & 9857-F/9957-F TP, K, & L Series 3 Point Latching Device

VON DUPRIN®

NOTES: SEE MASTER SHEET #10001 FOR SUGGESTED REINFORCING

TEMPLATE NUMBER: 10362_a

DATE: 05-22-13

990 TP & 990 TP-BE TRIM

NOTES: SEE MASTER SHEET #10001 FOR SUGGESTED REINFORCING

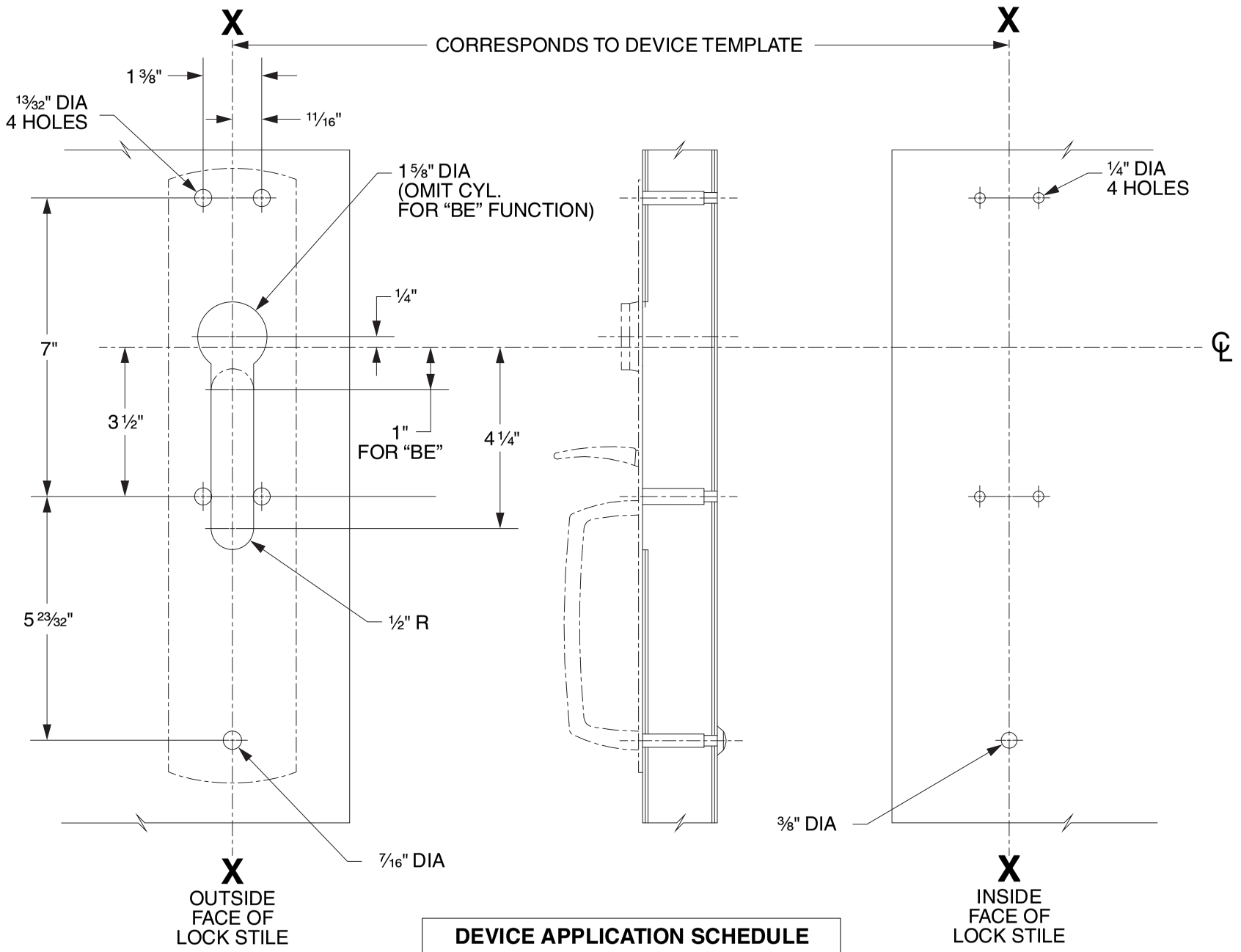

DEVICE APPLICATION SCHEDULE
98/99 SERIES RIM DEVICE
9827/9927 SERIES DEVICE
9847/9947 SERIES DEVICE
9849/9949 SERIES DEVICE

LHR SHOWN
RHR OPPOSITE

VON DUPRIN®

TEMPLATE NUMBER: 20265_C

DATE: 05-31-13

RIM APPLICATION

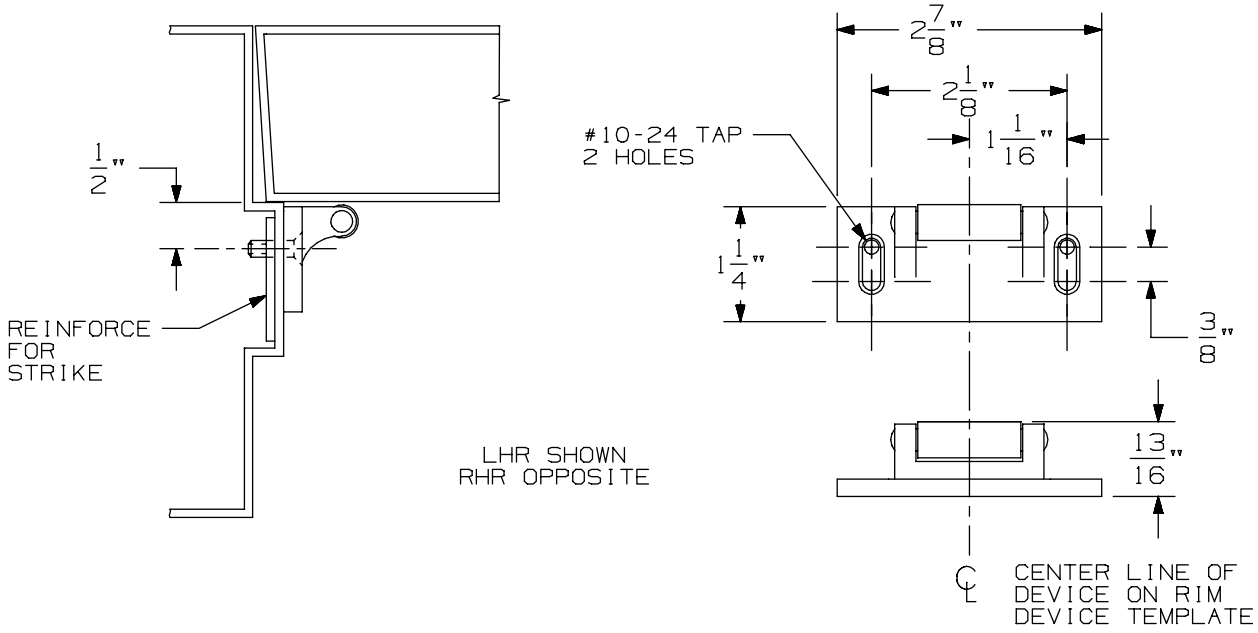

VERTICAL APPLICATION

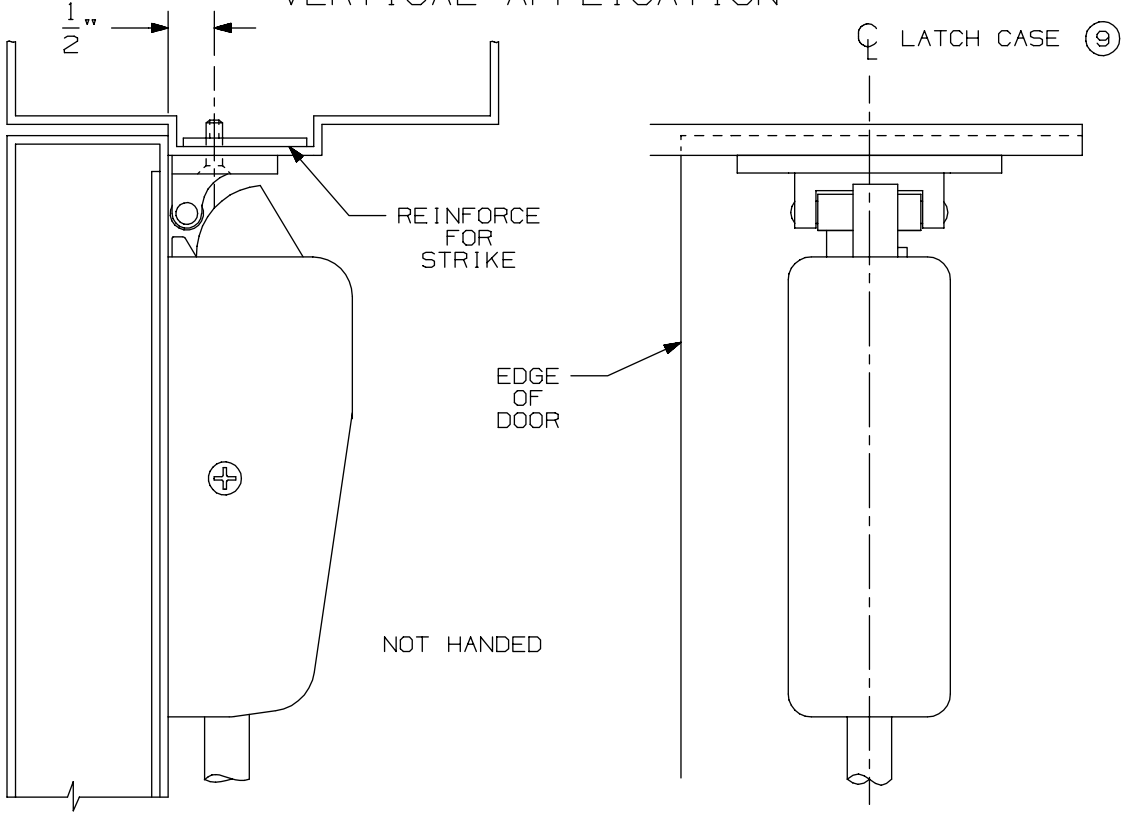

NOTE: LATCH CASE MOUNTING HOLES TO BE PREPARED AT INSTALLATION ON DOOR.

299 & 299F Strike

VON DUPRIN®

NOTES: SEE MASTER SHEET #10001 FOR SUGGESTED REINFORCING

TEMPLATE NUMBER: 30039_a

DATE: 05-23-13

98 / 99 Series Exit Devices - 9857-F/9957-F Three Point Latch (Standard, EL, LX, RX & SS)

APPLICATION	PREPARATION
SURFACE APPLICATION	#10-24 TAP 4 PLACES
990 TRIM APPLICATION OR SEX BOLT APPLICATION (SEE NOTE 1)	1/4' DIA THIS SIDE 13/32" DIA OPPOSITE SIDE - 4 PLACES

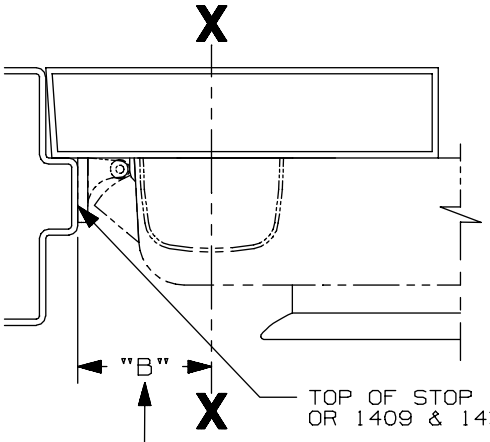

SINGLE DOOR INSTALLATION			
STRIKE	DIM. "B"	MIN. STILE 990/991/992 TRIM	MIN. STILE 696/697 TRIM
299 & 299-F	2 3/8"	4 1/2"	4 3/8"
(4) 1409 & 1439	1 9/16"	3 13/16"	3 13/16"
1606	1 15/16"	4 1/16"	3 15/16"

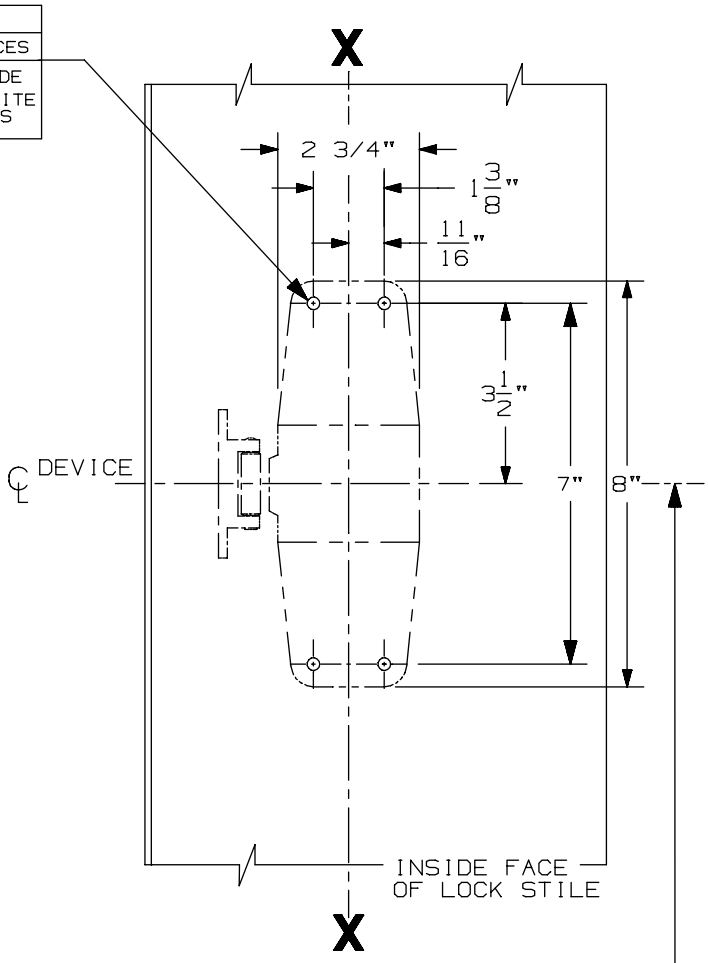

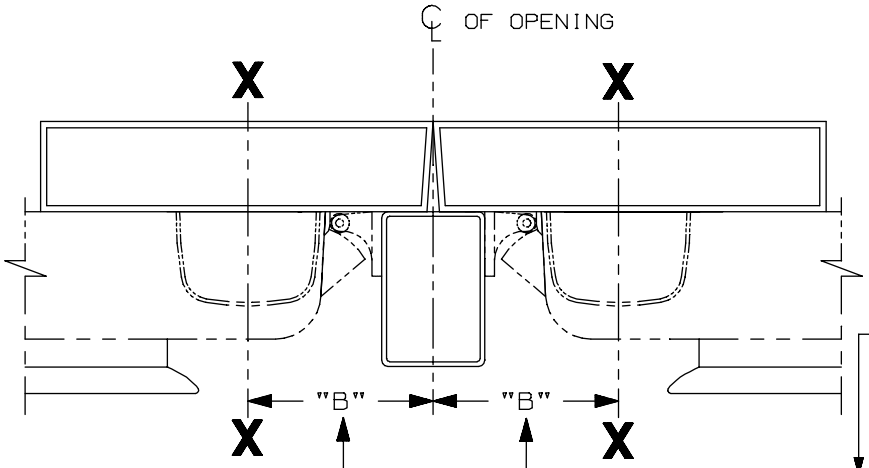

DOUBLE DOOR INSTALLATION WITH VON DUPRIN MULLIONS				
MULLION	STRIKE	DIM. "B"	MIN. STILE 990/991/992 TRIM	MIN. STILE 696/697 TRIM
(4) 4954/9954	299/299-F	3 3/8"	4 7/8"	4 3/4"
9954	499-F	3 1/2"	5"	4 7/8"
5654	299	2 15/16"	4 3/8"	4 1/4"
5754	1408	2 1/8"	3 13/16"	3 13/16"
1654	1606	2 15/16"	4 3/8"	4 1/4"

SINGLE DOOR OPENING
39 13/16" TO FINISHED FLOOR

DOUBLE DOOR OPENING
WITH VON DUPRIN MULLION
39 11/16"

NOTE:
REQUIRED DOOR UNDERCUT
IS 1/4" FROM FINISHED FLOOR
(PANIC & FIRE) OR 1/8" FROM
THRESHOLD (PANIC ONLY)

LHR APPLICATION SHOWN,
RHR APPLICATION OPPOSITE

NOTES:
1. THESE FOUR HOLES TO BE PREPARED FOR SURFACE APPLICATION WHEN USING 696/697 TRIM. DO NOT PREPARE FOR SEX BOLTS.
2. GLASS BEAD KIT AVAILABLE WHEN REQUIRED.
3. FOR OUTSIDE TRIM PREPARATION, WHEN REQUIRED, SEE TRIM TEMPLATE.
4. LATCH CASE PREPARATION TO BE MADE AT INSTALLATION ON DOOR.
5. IT IS RECOMMENDED THE MOUNTING HOLES BE PREPARED IN THE FIELD.
6. 9954 W/299-F FOR HURRICANE APPLICATIONS ONLY. (4)

98/9957/57-F EO, DT Series
3 Point Latching Device

VON DUPRIN®

NOTES: SEE MASTER SHEET #10001 FOR SUGGESTED REINFORCING

TEMPLATE NUMBER: 10341_a

DATE: 05-22-13

RIM APPLICATION

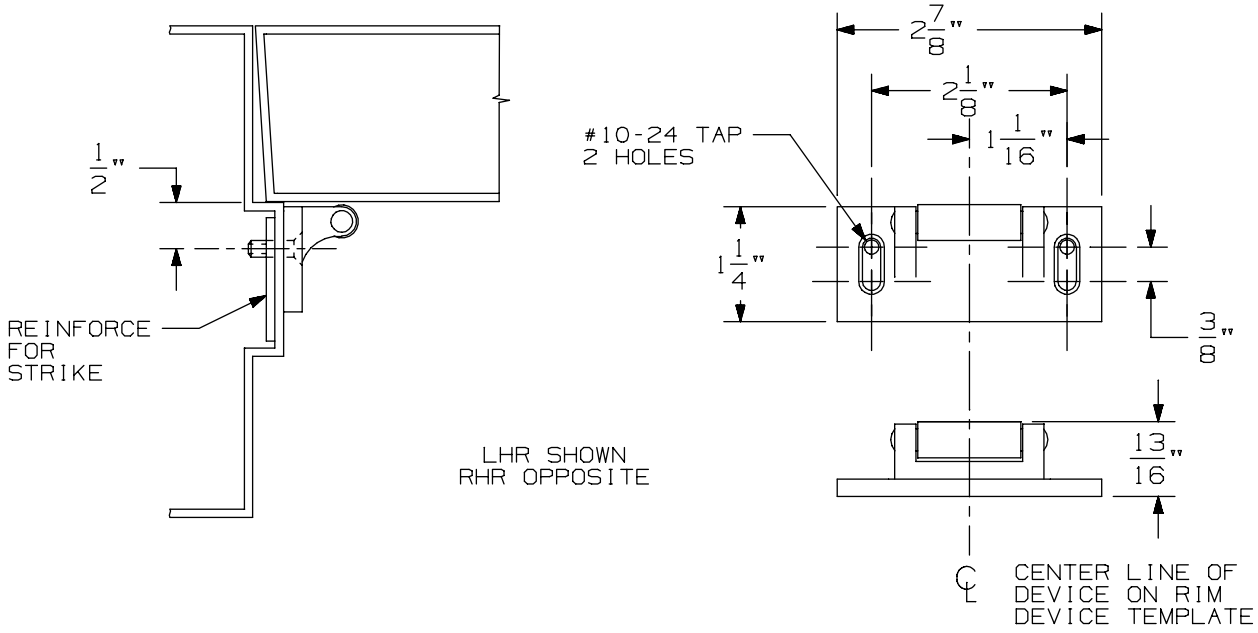

VERTICAL APPLICATION

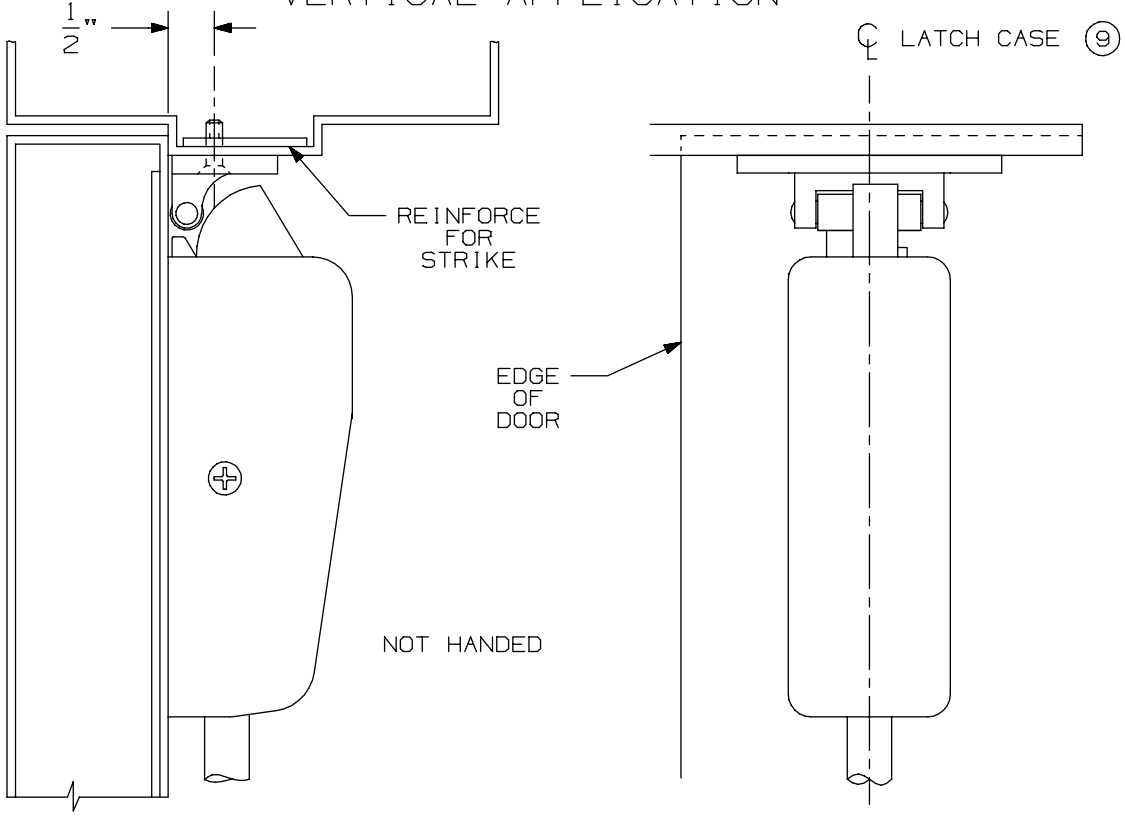

NOTE: LATCH CASE MOUNTING HOLES TO BE PREPARED AT INSTALLATION ON DOOR.

299 & 299F Strike

VON DUPRIN®

NOTES: SEE MASTER SHEET #10001 FOR SUGGESTED REINFORCING

TEMPLATE NUMBER: 30039_a

DATE: 05-23-13

APPLICATION	PREPARATION
SURFACE APPLICATION	#10-24 TAP 4 PLACES
990 TRIM APPLICATION OR SEX BOLT APPLICATION (SEE NOTE 1)	1/4' DIA THIS SIDE 13/32" DIA OPPOSITE SIDE - 4 PLACES

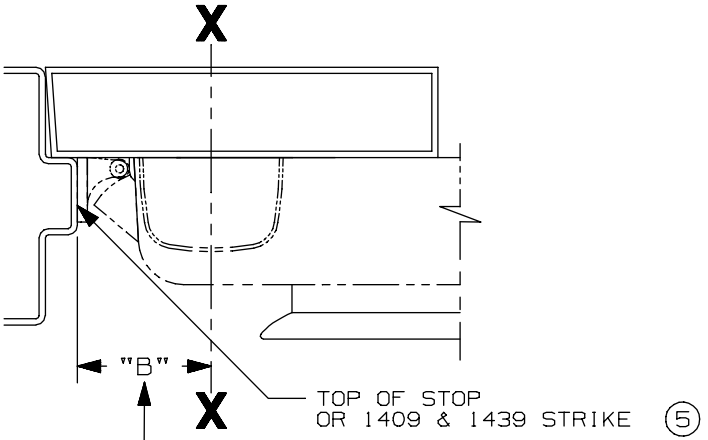

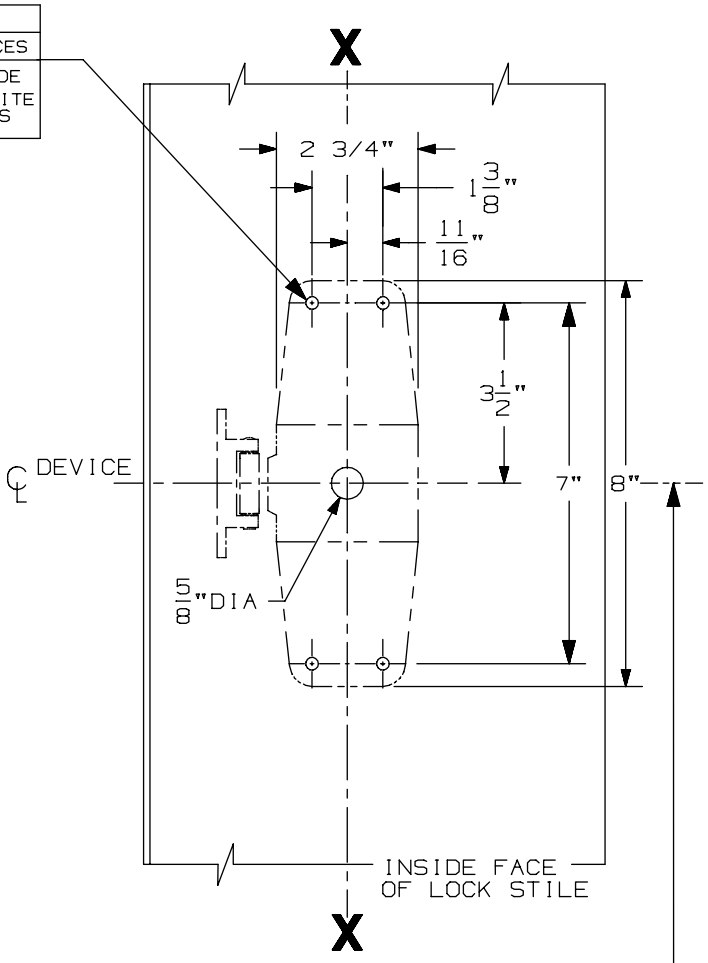

SINGLE DOOR INSTALLATION			
STRIKE	DIM. "B"	MIN. STILE 990/991/992 TRIM	MIN. STILE 696/697 TRIM
299 & 299-F	2 3/8"	4 1/2"	4 3/8"
5 1409 & 1439	1 9/16"	3 13/16"	3 13/16"
1606	1 15/16"	4 1/16"	3 15/16"

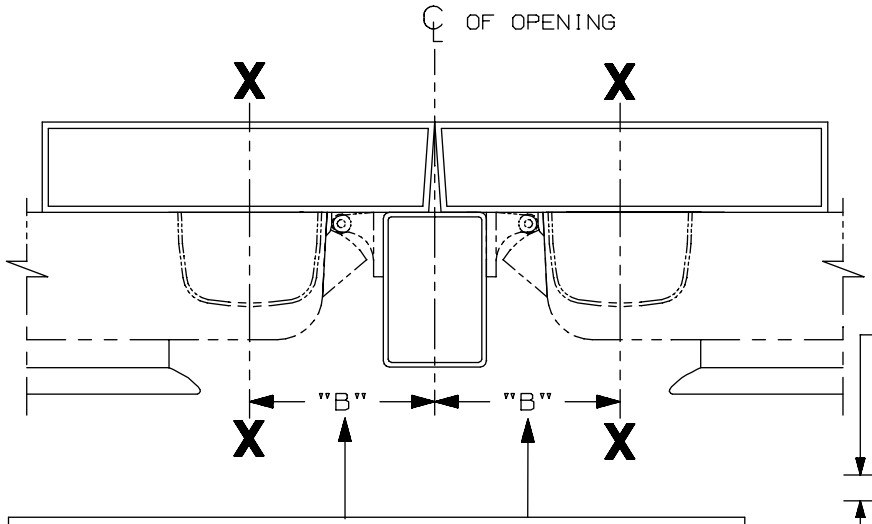

DOUBLE DOOR INSTALLATION WITH VON DUPRIN MULLIONS				
MULLION	STRIKE	DIM. "B"	MIN. STILE 990/991/992 TRIM	MIN. STILE 696/697 TRIM
4954	299	3 3/8"	4 7/8"	4 3/4"
9954	499-F	3 1/2"	5"	4 7/8"
5654	299	2 15/16"	4 3/8"	4 1/4"
5754	1408	2 1/8"	3 13/16"	3 13/16"
1654	1606	2 15/16"	4 3/8"	4 1/4"

SINGLE DOOR OPENING
39 13/16" TO FINISHED FLOOR

DOUBLE DOOR OPENING
WITH VON DUPRIN MULLION
39 11/16"

NOTE:
RECOMMENDED DOOR UNDERCUT IS 1/4" FROM FINISHED FLOOR (PANIC & FIRE) OR 1/8" FROM THRESHOLD (PANIC ONLY)

LHR APPLICATION SHOWN,
RHR APPLICATION OPPOSITE

NOTES:
1. THESE FOUR HOLES TO BE PREPARED FOR SURFACE APPLICATION WHEN USING 696/697 TRIM. DO NOT PREPARE FOR SEX BOLTS.
2. GLASS BEAD KIT AVAILABLE WHEN REQUIRED.
3. FOR OUTSIDE TRIM PREPARATION, WHEN REQUIRED, SEE TRIM TEMPLATE.
4. LATCH CASE PREPARATION TO BE MADE AT INSTALLATION ON DOOR.
5. IT IS RECOMMENDED THE MOUNTING HOLES BE PREPARED IN THE FIELD.

STD & CX9857/9957 & 9857-F/9957-F NL Series 3 Point Latching Device

VON DUPRIN®

NOTES: SEE MASTER SHEET #10001 FOR SUGGESTED REINFORCING

TEMPLATE NUMBER: 10361_a

DATE: 05-22-13

990 NL TRIM

NOTES: SEE MASTER SHEET #10001 FOR SUGGESTED REINFORCING

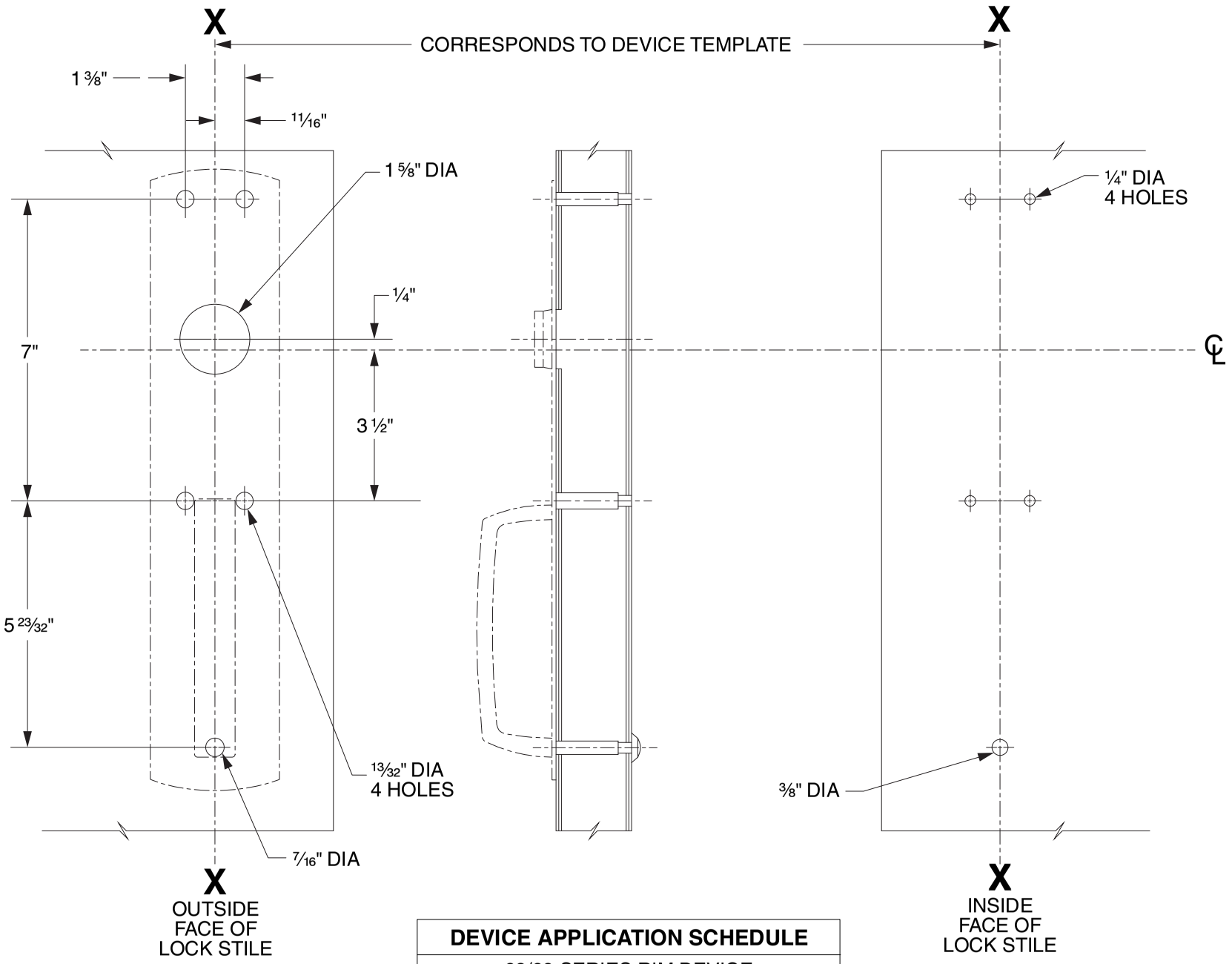

DEVICE APPLICATION SCHEDULE
98/99 SERIES RIM DEVICE
9827/9927 SERIES DEVICE
9847/9947 SERIES DEVICE
9849/9949 SERIES DEVICE

LHR SHOWN
RHR OPPOSITE

VON DUPRIN®

TEMPLATE NUMBER: 20267_C

DATE: 05-31-13

RIM APPLICATION

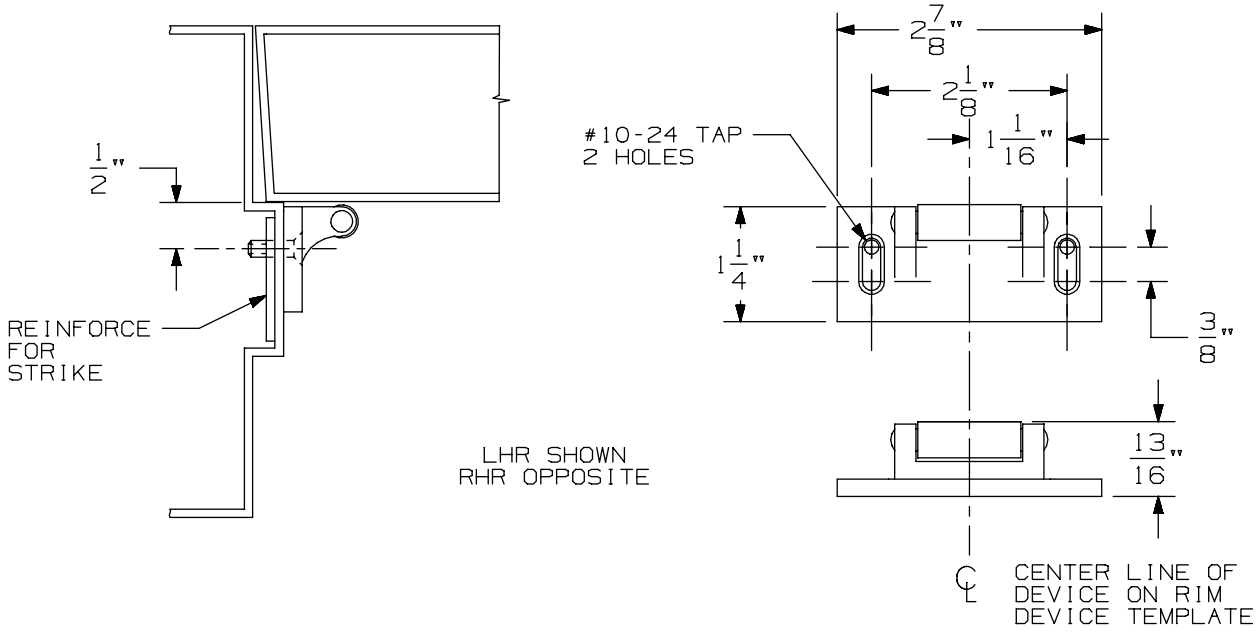

VERTICAL APPLICATION

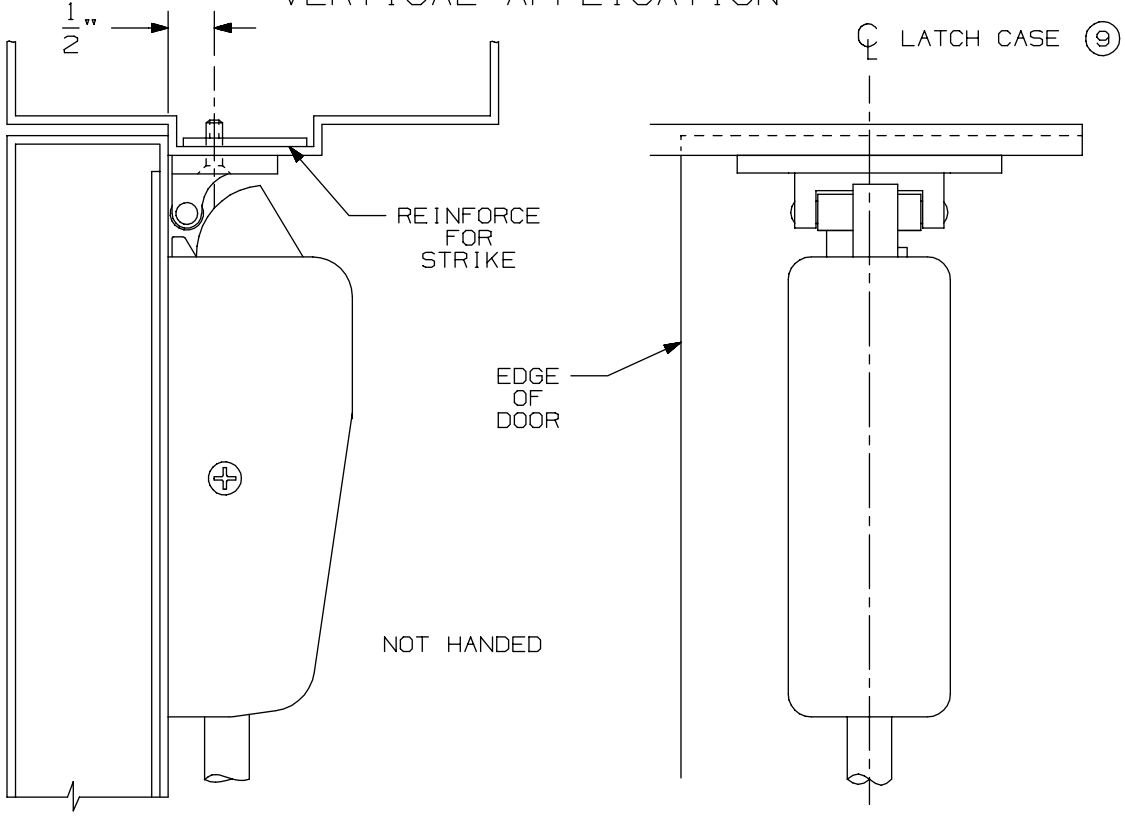

NOTE: LATCH CASE MOUNTING HOLES TO BE PREPARED AT INSTALLATION ON DOOR.

299 & 299F Strike

VON DUPRIN®

NOTES: SEE MASTER SHEET #10001 FOR SUGGESTED REINFORCING

TEMPLATE NUMBER: 30039_a

DATE: 05-23-13

APPLICATION	PREPARATION
SURFACE APPLICATION	#10-24 TAP 4 PLACES
990 TRIM APPLICATION OR SEX BOLT APPLICATION (SEE NOTE 1)	1/4' DIA THIS SIDE 13/32" DIA OPPOSITE SIDE - 4 PLACES

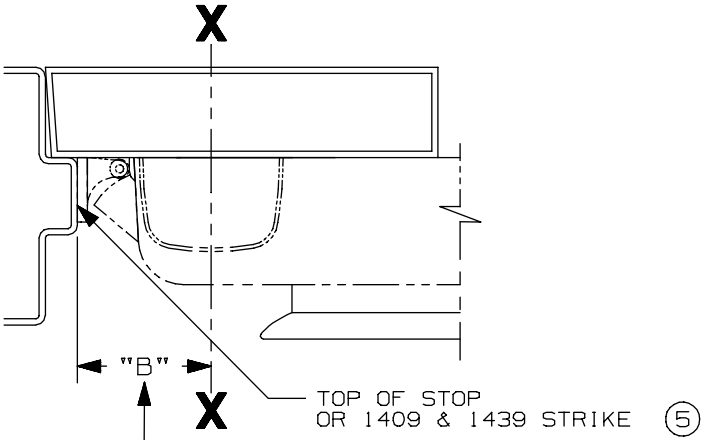

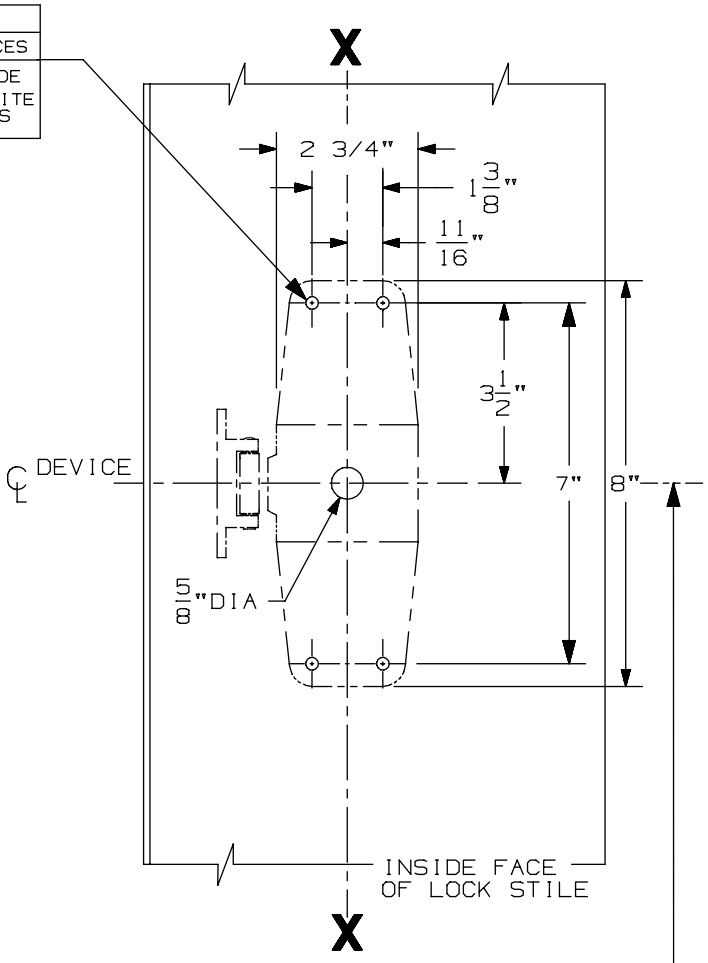

SINGLE DOOR INSTALLATION			
STRIKE	DIM. "B"	MIN. STILE 990/991/992 TRIM	MIN. STILE 696/697 TRIM
299 & 299-F	2 3/8"	4 1/2"	4 3/8"
5 1409 & 1439	1 9/16"	3 13/16"	3 13/16"
1606	1 15/16"	4 1/16"	3 15/16"

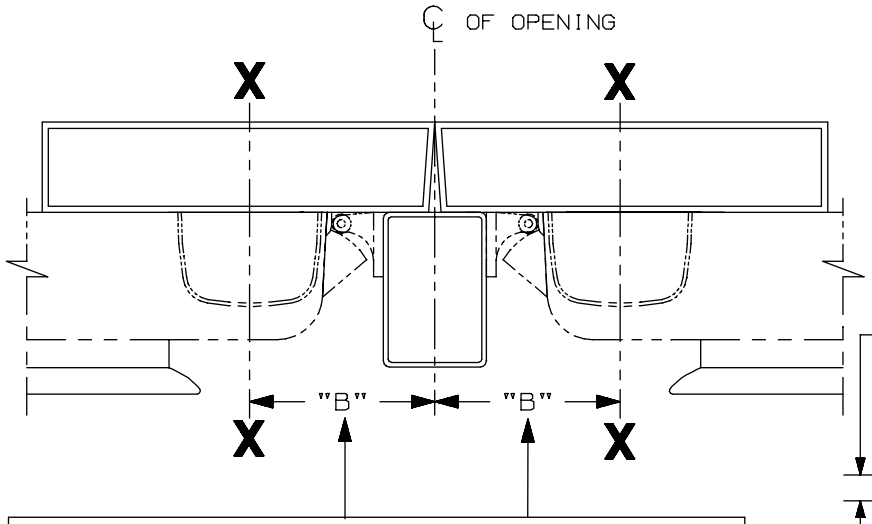

DOUBLE DOOR INSTALLATION WITH VON DUPRIN MULLIONS				
MULLION	STRIKE	DIM. "B"	MIN. STILE 990/991/992 TRIM	MIN. STILE 696/697 TRIM
4954	299	3 3/8"	4 7/8"	4 3/4"
9954	499-F	3 1/2"	5"	4 7/8"
5654	299	2 15/16"	4 3/8"	4 1/4"
5754	1408	2 1/8"	3 13/16"	3 13/16"
1654	1606	2 15/16"	4 3/8"	4 1/4"

SINGLE DOOR OPENING
39 13/16" TO FINISHED FLOOR

DOUBLE DOOR OPENING
WITH VON DUPRIN MULLION
39 11/16"

NOTE:
RECOMMENDED DOOR UNDERCUT IS 1/4" FROM FINISHED FLOOR (PANIC & FIRE) OR 1/8" FROM THRESHOLD (PANIC ONLY)

LHR APPLICATION SHOWN,
RHR APPLICATION OPPOSITE

NOTES:
1. THESE FOUR HOLES TO BE PREPARED FOR SURFACE APPLICATION WHEN USING 696/697 TRIM. DO NOT PREPARE FOR SEX BOLTS.
2. GLASS BEAD KIT AVAILABLE WHEN REQUIRED.
3. FOR OUTSIDE TRIM PREPARATION, WHEN REQUIRED, SEE TRIM TEMPLATE.
4. LATCH CASE PREPARATION TO BE MADE AT INSTALLATION ON DOOR.
5. IT IS RECOMMENDED THE MOUNTING HOLES BE PREPARED IN THE FIELD.

STD & CX9857/9957 & 9857-F/9957-F NL Series 3 Point Latching Device

VON DUPRIN®

NOTES: SEE MASTER SHEET #10001 FOR SUGGESTED REINFORCING

TEMPLATE NUMBER: 10361_a

DATE: 05-22-13

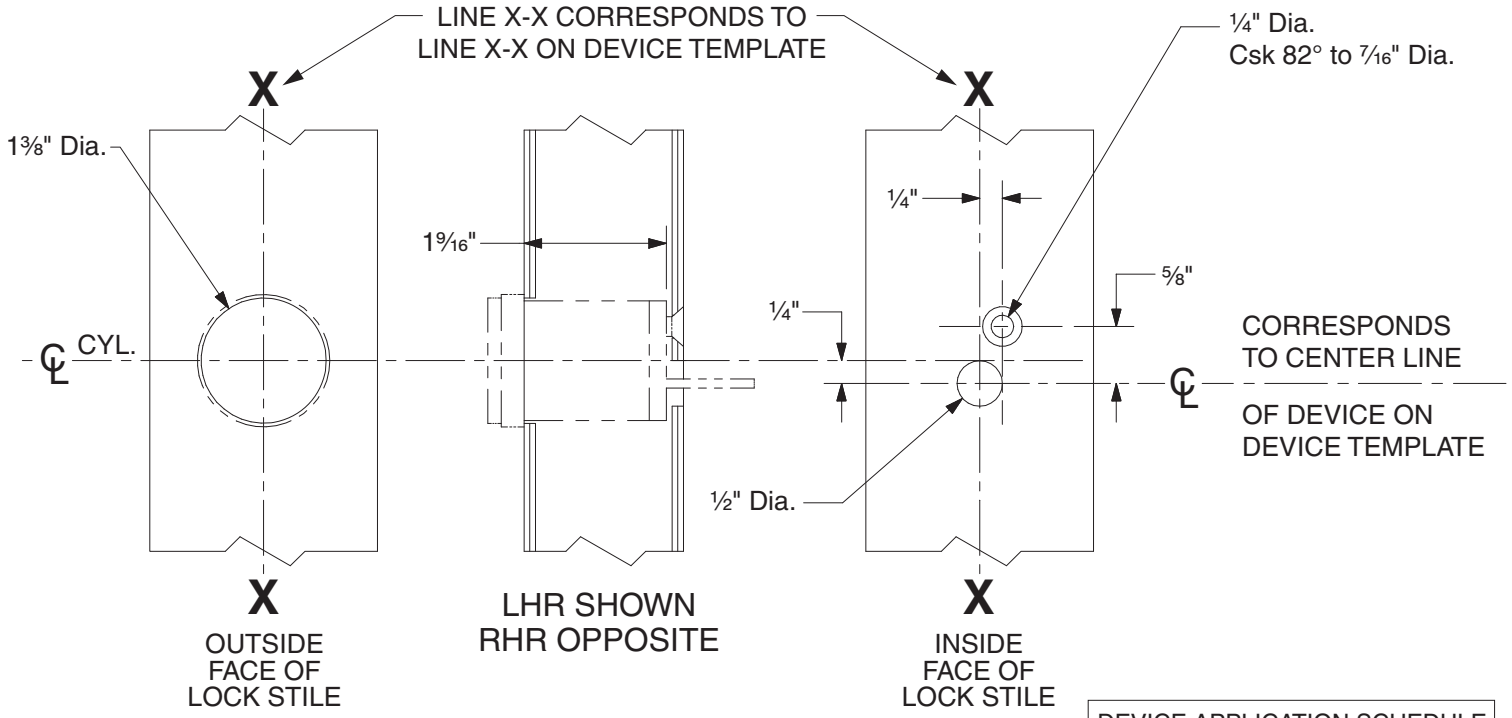

DEVICE APPLICATION SCHEDULE	
98 RIM SERIES	99 RIM SERIES
9827 SERIES	9927 SERIES
9847 SERIES	9947 SERIES
22 RIM SERIES	2227 SERIES

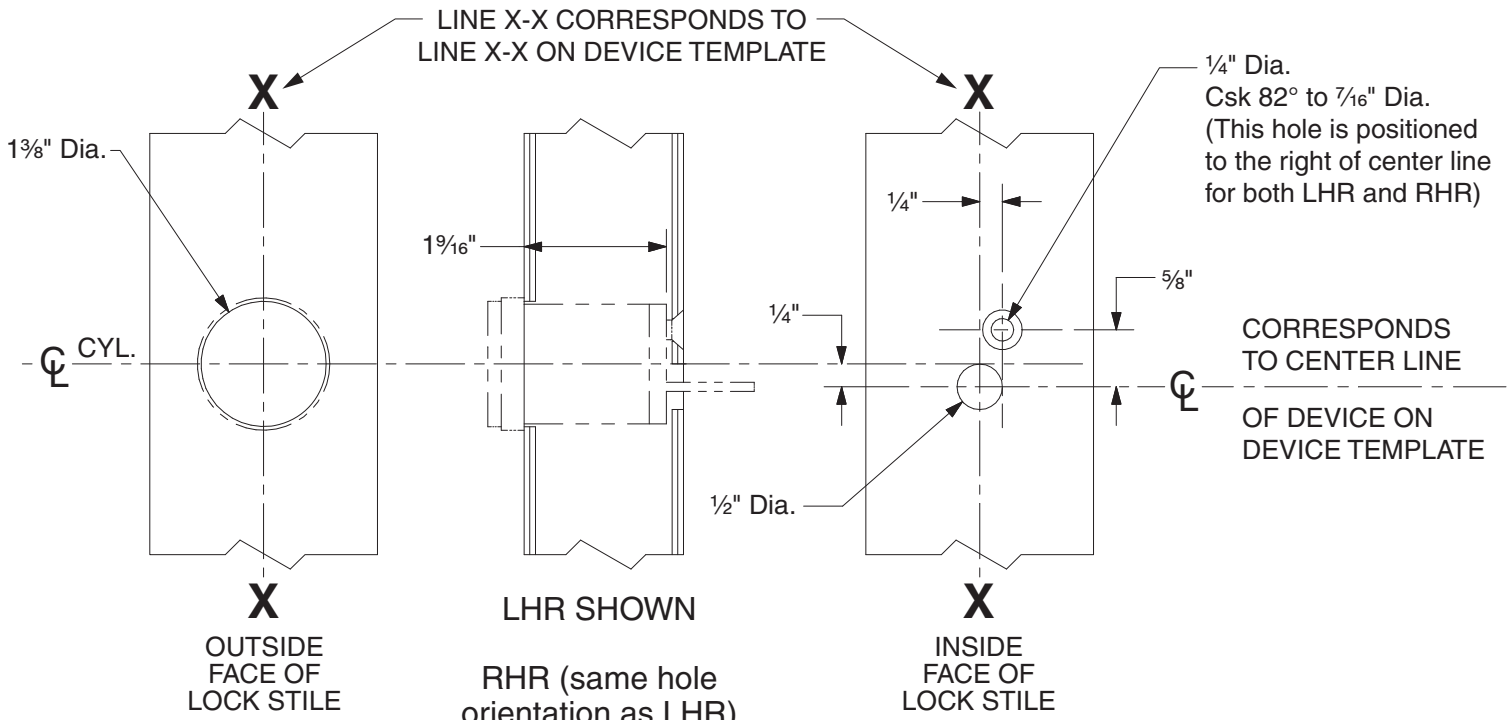

DEVICE APPLICATION SCHEDULE	
9849 SERIES	9949 SERIES

110NL Cylinder Preparation

VON DUPRIN®

NOTES: SEE MASTER SHEET #10001 FOR SUGGESTED REINFORCING

TEMPLATE NUMBER: 40022_c

DATE: 05-28-13

RIM APPLICATION

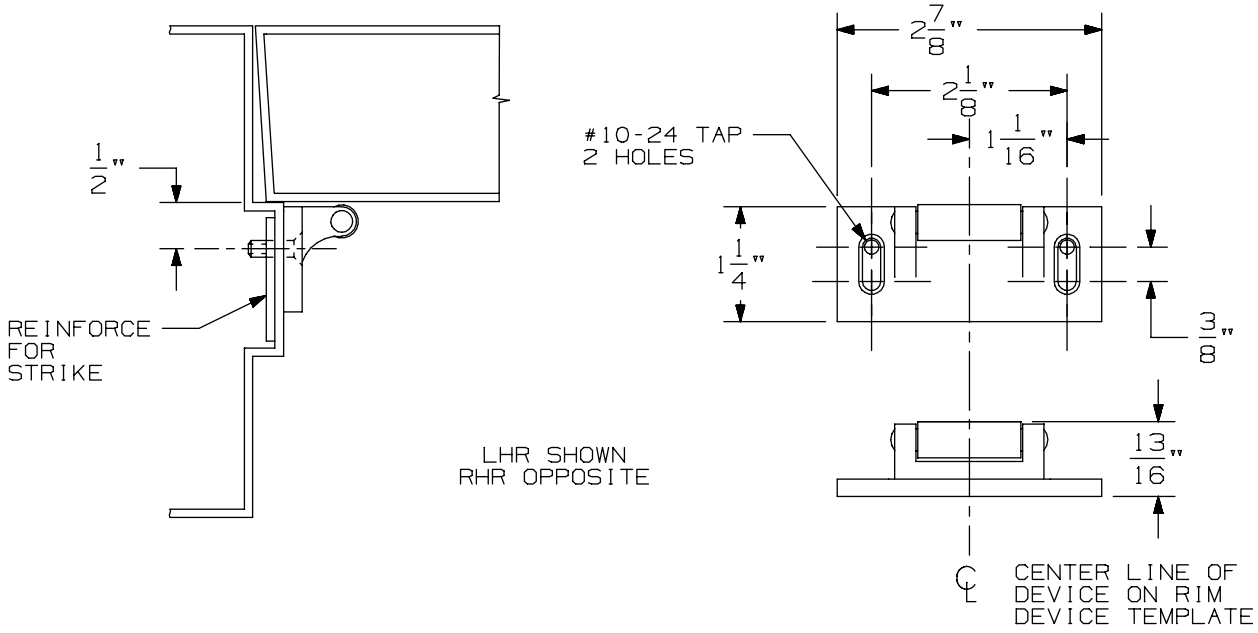

VERTICAL APPLICATION

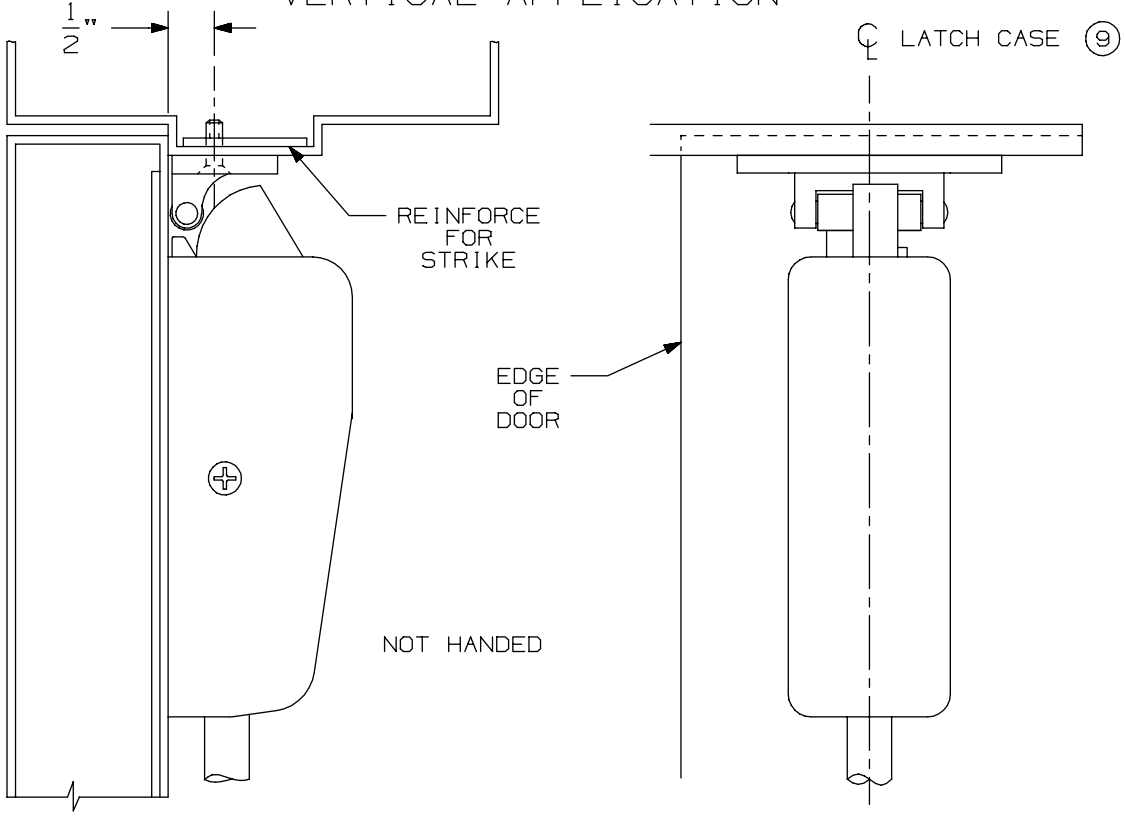

NOTE: LATCH CASE MOUNTING HOLES TO BE PREPARED AT INSTALLATION ON DOOR.

299 & 299F Strike

VON DUPRIN®

NOTES: SEE MASTER SHEET #10001 FOR SUGGESTED REINFORCING

TEMPLATE NUMBER: 30039_a

DATE: 05-23-13

APPLICATION	PREPARATION
SURFACE APPLICATION	#10-24 TAP 4 PLACES
990 TRIM APPLICATION OR SEX BOLT APPLICATION (SEE NOTE 1)	1/4' DIA THIS SIDE 13/32" DIA OPPOSITE SIDE - 4 PLACES

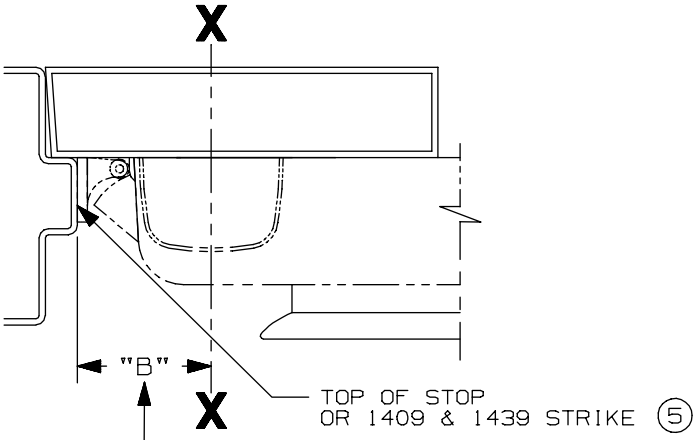

SINGLE DOOR INSTALLATION			
STRIKE	DIM. "B"	MIN. STILE 990/991/992 TRIM	MIN. STILE 696/697 TRIM
299 & 299-F	2 3/8"	4 1/2"	4 3/8"
(5) 1409 & 1439	1 9/16"	3 13/16"	3 13/16"
1606	1 15/16"	4 1/16"	3 15/16"

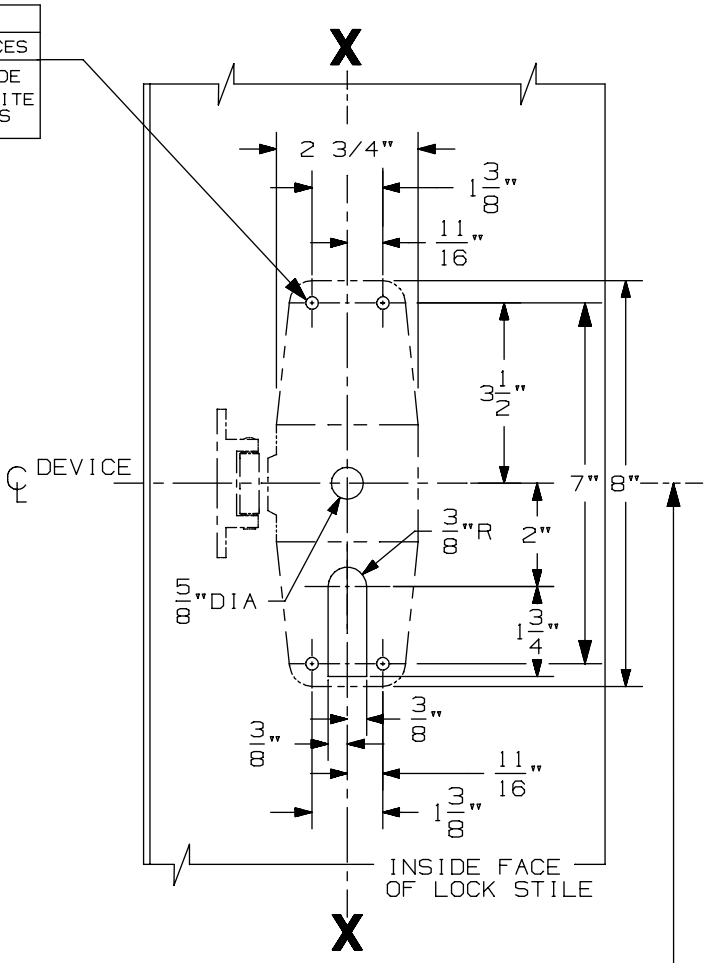

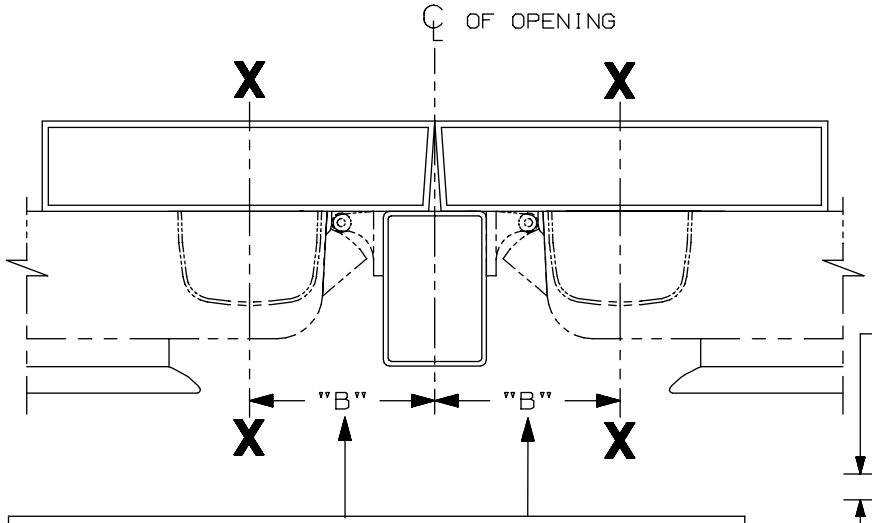

DOUBLE DOOR INSTALLATION WITH VON DUPRIN MULLIONS				
MULLION	STRIKE	DIM. "B"	MIN. STILE 990/991/992 TRIM	MIN. STILE 696/697 TRIM
4954	299	3 3/8"	4 7/8"	4 3/4"
9954	499-F	3 1/2"	5"	4 7/8"
5654	299	2 15/16"	4 3/8"	4 1/4"
5754	1408	2 1/8"	3 13/16"	3 13/16"
1654	1606	2 15/16"	4 3/8"	4 1/4"

SINGLE DOOR OPENING
39 13/16" TO FINISHED FLOOR

DOUBLE DOOR OPENING
WITH VON DUPRIN MULLION
39 11/16"

NOTE:
RECOMMENDED DOOR UNDERCUT IS 1/4" FROM FINISHED FLOOR (PANIC & FIRE) OR 1/8" FROM THRESHOLD (PANIC ONLY)

LHR APPLICATION SHOWN,
RHR APPLICATION OPPOSITE

NOTES:
1. THESE FOUR HOLES TO BE PREPARED FOR SURFACE APPLICATION WHEN USING 696/697 TRIM. DO NOT PREPARE FOR SEX BOLTS.
2. GLASS BEAD KIT AVAILABLE WHEN REQUIRED.
3. FOR OUTSIDE TRIM PREPARATION, WHEN REQUIRED, SEE TRIM TEMPLATE.
4. LATCH CASE PREPARATION TO BE MADE AT INSTALLATION ON DOOR.
5. IT IS RECOMMENDED THE MOUNTING HOLES BE PREPARED IN THE FIELD.

STD & CX9857/9957 & 9857-F/9957-F TP, K, & L Series 3 Point Latching Device

VON DUPRIN®

NOTES: SEE MASTER SHEET #10001 FOR SUGGESTED REINFORCING

TEMPLATE NUMBER: 10362_a

DATE: 05-22-13

991 K & 992 L Trim

NOTES: SEE MASTER SHEET #10001 FOR SUGGESTED REINFORCING

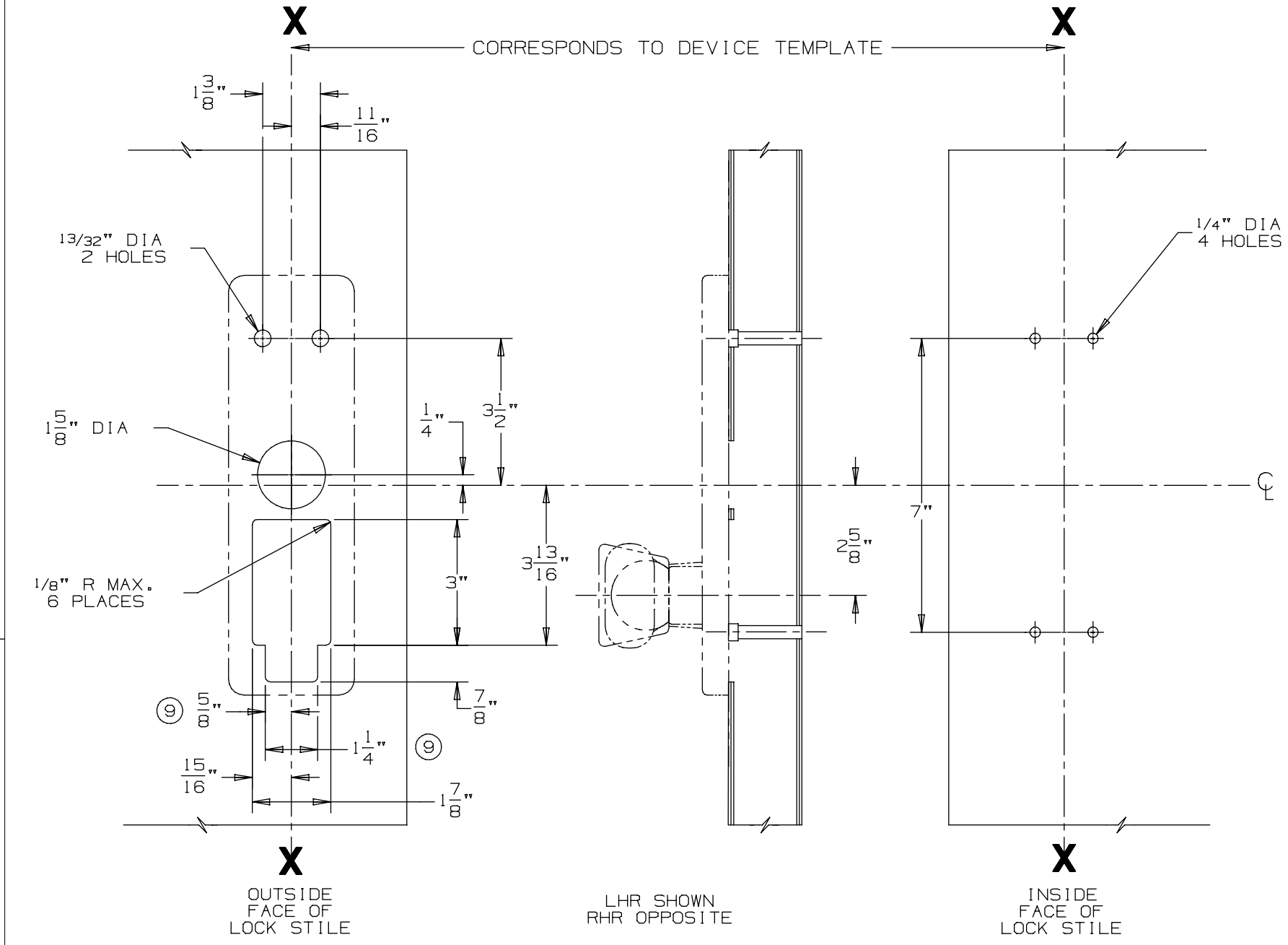

DEVICE APPLICATION SCHEDULE
98/99 SERIES RIM DEVICE
9827/9927 SERIES DEVICE
9847/9947 SERIES DEVICE

VON DUPRIN®

TEMPLATE NUMBER: 20272_a

DATE: 05-23-13

RIM APPLICATION

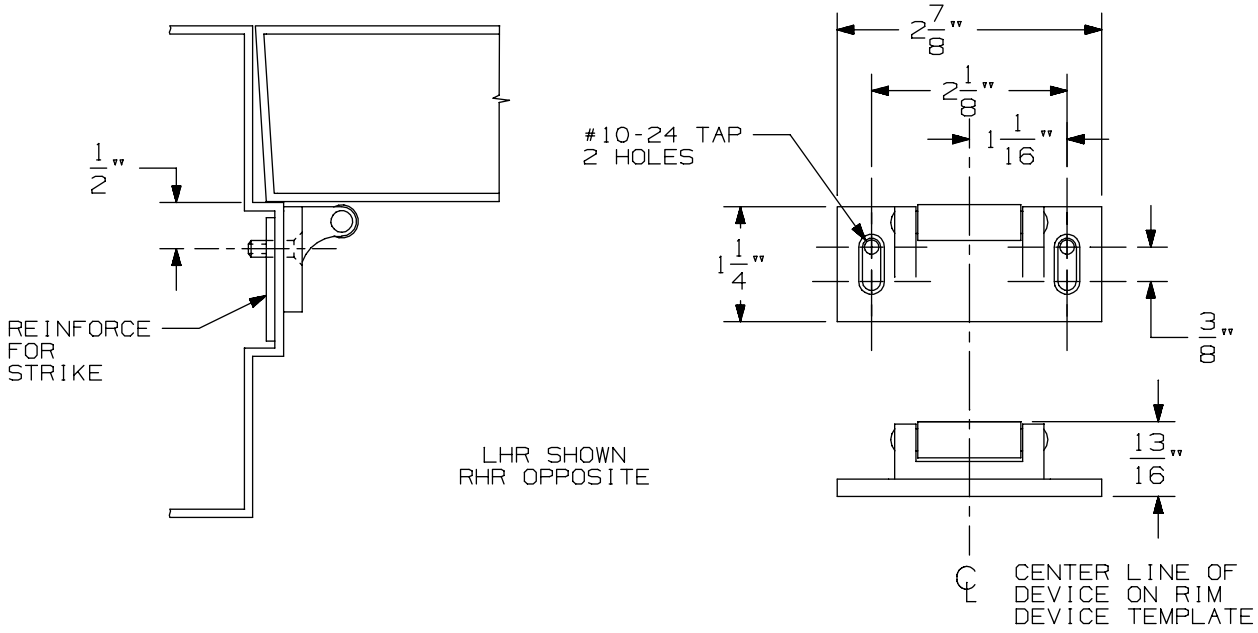

VERTICAL APPLICATION

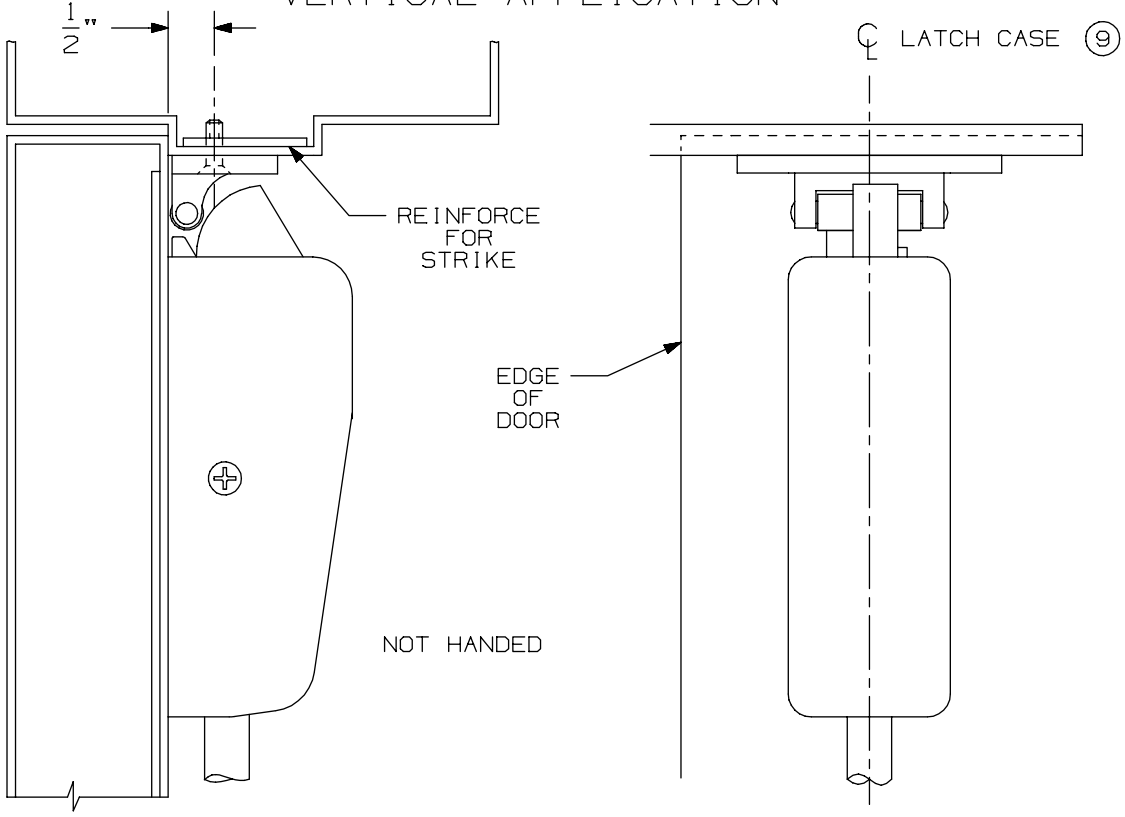

NOTE: LATCH CASE MOUNTING HOLES TO BE PREPARED AT INSTALLATION ON DOOR.

299 & 299F Strike

VON DUPRIN®

NOTES: SEE MASTER SHEET #10001 FOR SUGGESTED REINFORCING

TEMPLATE NUMBER: 30039_a

DATE: 05-23-13

APPLICATION	PREPARATION
SURFACE APPLICATION	#10-24 TAP 4 PLACES
990 TRIM APPLICATION OR SEX BOLT APPLICATION (SEE NOTE 1)	1/4' DIA THIS SIDE 13/32" DIA OPPOSITE SIDE - 4 PLACES

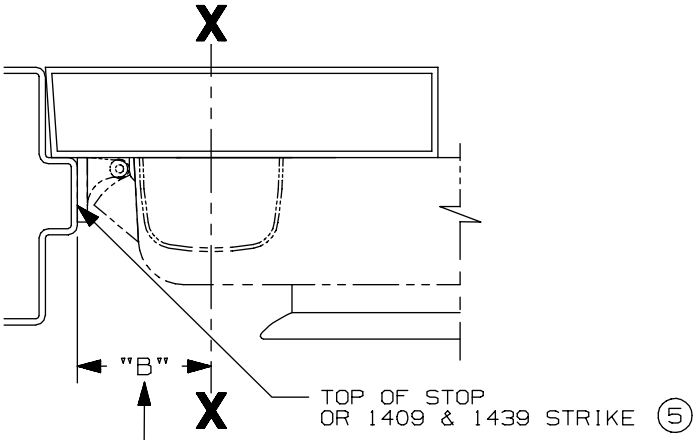

SINGLE DOOR INSTALLATION			
STRIKE	DIM. "B"	MIN. STILE 990/991/992 TRIM	MIN. STILE 696/697 TRIM
299 & 299-F	2 3/8"	4 1/2"	4 3/8"
(5) 1409 & 1439	1 9/16"	3 13/16"	3 13/16"
1606	1 15/16"	4 1/16"	3 15/16"

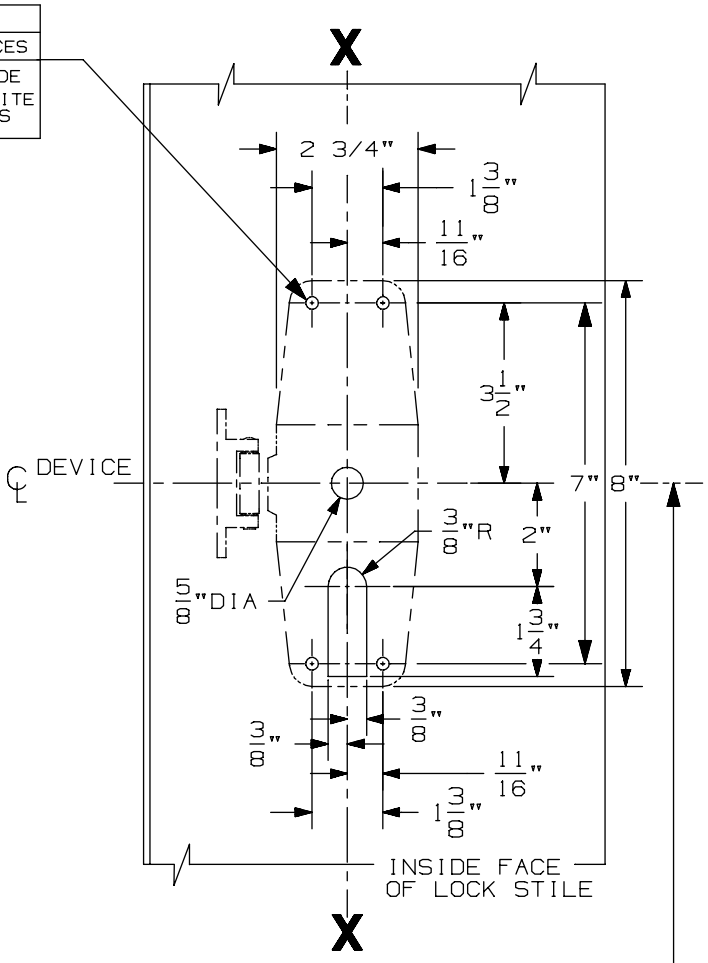

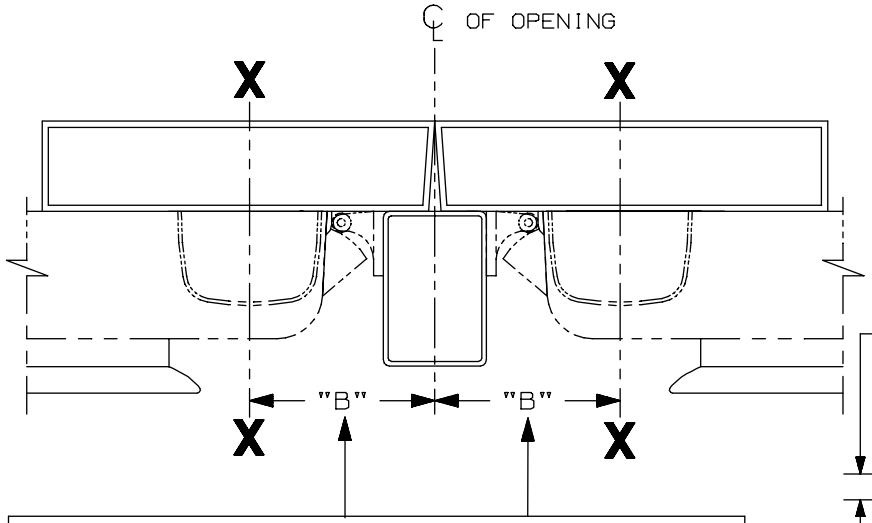

DOUBLE DOOR INSTALLATION WITH VON DUPRIN MULLIONS				
MULLION	STRIKE	DIM. "B"	MIN. STILE 990/991/992 TRIM	MIN. STILE 696/697 TRIM
4954	299	3 3/8"	4 7/8"	4 3/4"
9954	499-F	3 1/2"	5"	4 7/8"
5654	299	2 15/16"	4 3/8"	4 1/4"
5754	1408	2 1/8"	3 13/16"	3 13/16"
1654	1606	2 15/16"	4 3/8"	4 1/4"

SINGLE DOOR OPENING
39 13/16" TO FINISHED FLOOR

DOUBLE DOOR OPENING
WITH VON DUPRIN MULLION
39 11/16"

NOTE:
RECOMMENDED DOOR UNDERCUT IS 1/4" FROM FINISHED FLOOR (PANIC & FIRE) OR 1/8" FROM THRESHOLD (PANIC ONLY)

LHR APPLICATION SHOWN,
RHR APPLICATION OPPOSITE

NOTES:
1. THESE FOUR HOLES TO BE PREPARED FOR SURFACE APPLICATION WHEN USING 696/697 TRIM. DO NOT PREPARE FOR SEX BOLTS.
2. GLASS BEAD KIT AVAILABLE WHEN REQUIRED.
3. FOR OUTSIDE TRIM PREPARATION, WHEN REQUIRED, SEE TRIM TEMPLATE.
4. LATCH CASE PREPARATION TO BE MADE AT INSTALLATION ON DOOR.
5. IT IS RECOMMENDED THE MOUNTING HOLES BE PREPARED IN THE FIELD.

STD & CX9857/9957 & 9857-F/9957-F TP, K, & L Series 3 Point Latching Device

VON DUPRIN®

NOTES: SEE MASTER SHEET #10001 FOR SUGGESTED REINFORCING

TEMPLATE NUMBER: 10362_a

DATE: 05-22-13

DEVICE APPLICATION SCHEDULE	
98 RIM SERIES	99 RIM SERIES
9827 SERIES	9927 SERIES
9847 SERIES	9947 SERIES
9849 SERIES	9949 SERIES

996L, E996L, 996L-BE, E996L-BE 996K, 996K-BE R/V SERIES
TRIM METAL DOOR APPLICATION

VON DUPRIN®

NOTES: SEE MASTER SHEET #10001 FOR SUGGESTED REINFORCING

TEMPLATE NUMBER: 20003_e

DATE: 10-30-14

RIM APPLICATION

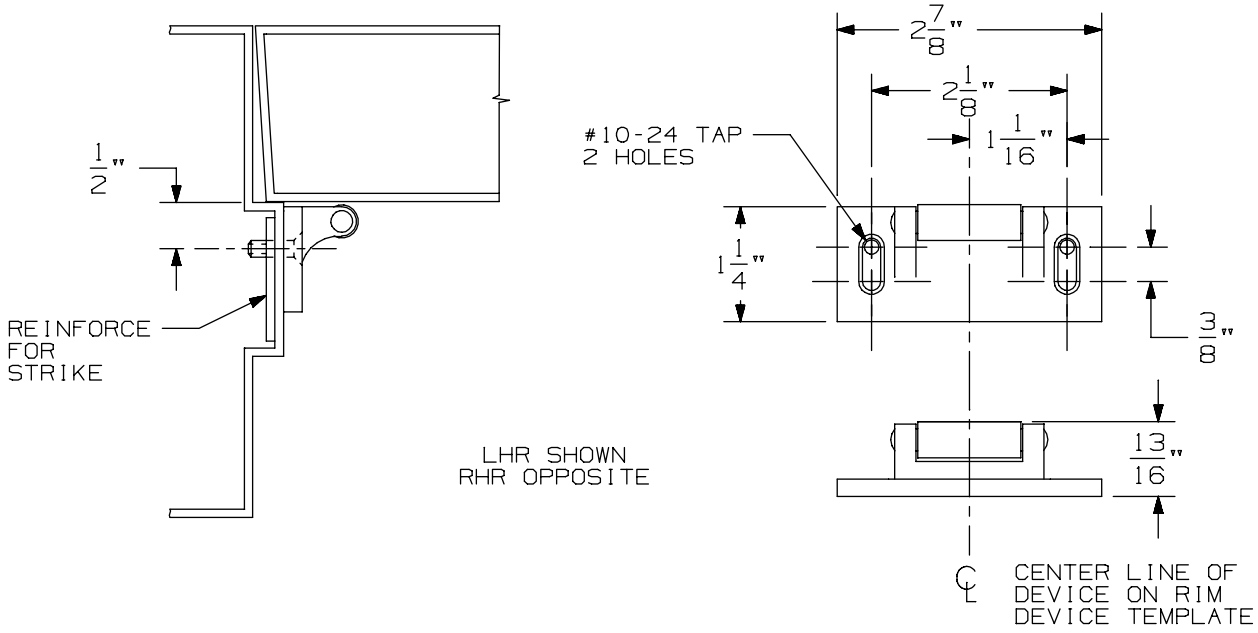

VERTICAL APPLICATION

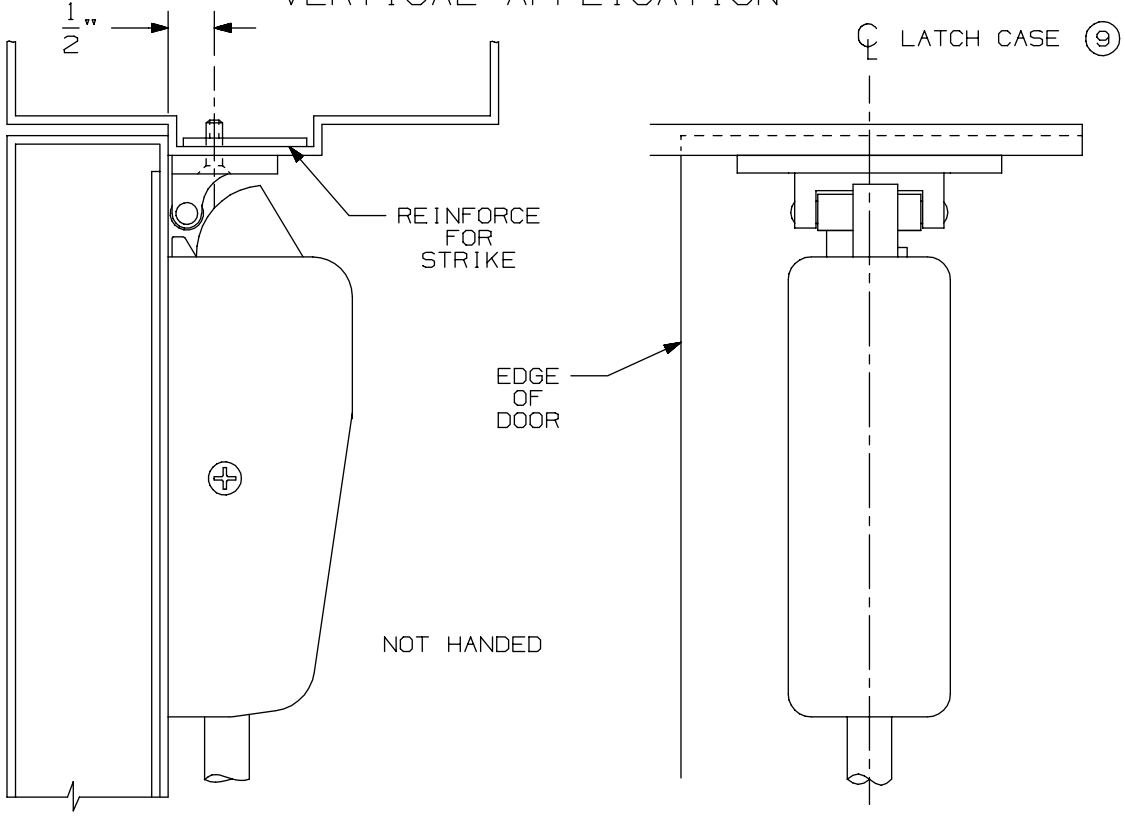

NOTE: LATCH CASE MOUNTING HOLES TO BE PREPARED AT INSTALLATION ON DOOR.

299 & 299F Strike

VON DUPRIN®

NOTES: SEE MASTER SHEET #10001 FOR SUGGESTED REINFORCING

TEMPLATE NUMBER: 30039_a

DATE: 05-23-13

APPLICATION	PREPARATION
SURFACE APPLICATION	#10-24 TAP 4 PLACES
990 TRIM APPLICATION OR SEX BOLT APPLICATION (SEE NOTE 1)	1/4' DIA THIS SIDE 13/32" DIA OPPOSITE SIDE - 4 PLACES

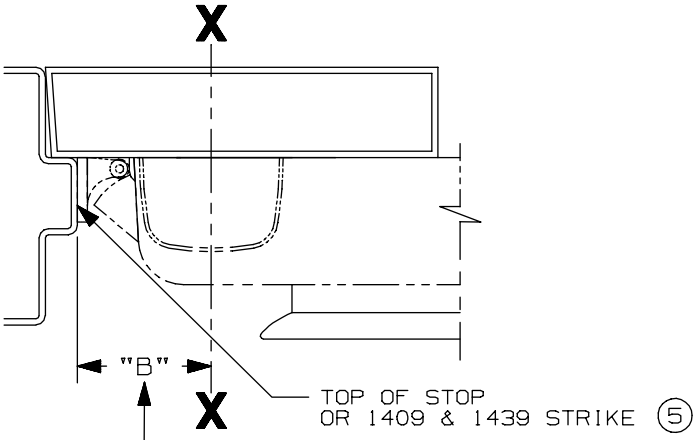

SINGLE DOOR INSTALLATION			
STRIKE	DIM. "B"	MIN. STILE 990/991/992 TRIM	MIN. STILE 696/697 TRIM
299 & 299-F	2 3/8"	4 1/2"	4 3/8"
(5) 1409 & 1439	1 9/16"	3 13/16"	3 13/16"
1606	1 15/16"	4 1/16"	3 15/16"

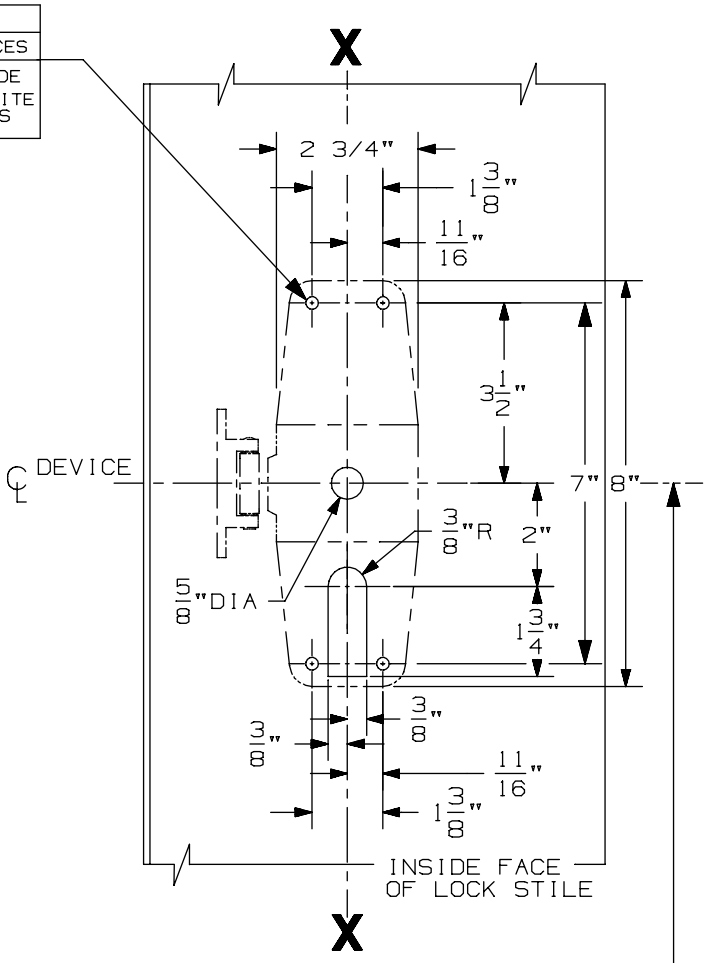

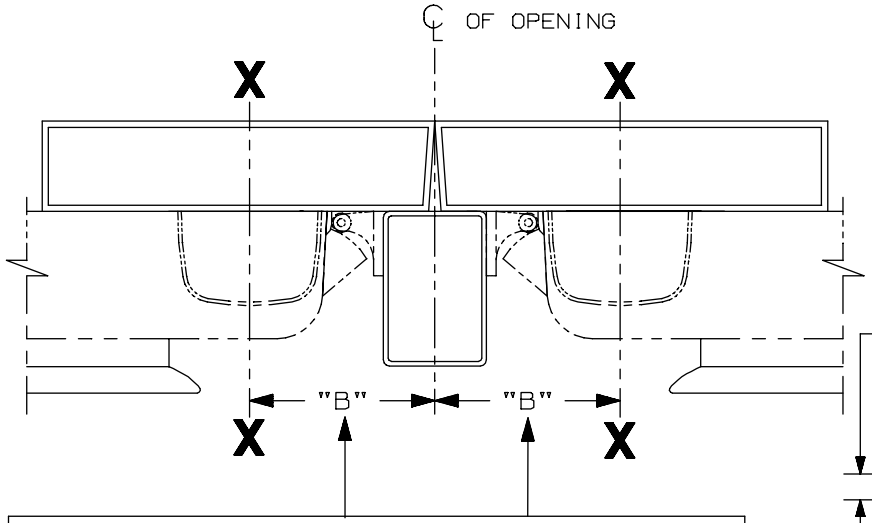

DOUBLE DOOR INSTALLATION WITH VON DUPRIN MULLIONS				
MULLION	STRIKE	DIM. "B"	MIN. STILE 990/991/992 TRIM	MIN. STILE 696/697 TRIM
4954	299	3 3/8"	4 7/8"	4 3/4"
9954	499-F	3 1/2"	5"	4 7/8"
5654	299	2 15/16"	4 3/8"	4 1/4"
5754	1408	2 1/8"	3 13/16"	3 13/16"
1654	1606	2 15/16"	4 3/8"	4 1/4"

SINGLE DOOR OPENING
39 13/16" TO FINISHED FLOOR

DOUBLE DOOR OPENING
WITH VON DUPRIN MULLION
39 11/16"

NOTE:
RECOMMENDED DOOR UNDERCUT IS 1/4" FROM FINISHED FLOOR (PANIC & FIRE) OR 1/8" FROM THRESHOLD (PANIC ONLY)

LHR APPLICATION SHOWN,
RHR APPLICATION OPPOSITE

NOTES:
1. THESE FOUR HOLES TO BE PREPARED FOR SURFACE APPLICATION WHEN USING 696/697 TRIM. DO NOT PREPARE FOR SEX BOLTS.
2. GLASS BEAD KIT AVAILABLE WHEN REQUIRED.
3. FOR OUTSIDE TRIM PREPARATION, WHEN REQUIRED, SEE TRIM TEMPLATE.
4. LATCH CASE PREPARATION TO BE MADE AT INSTALLATION ON DOOR.
5. IT IS RECOMMENDED THE MOUNTING HOLES BE PREPARED IN THE FIELD.

STD & CX9857/9957 & 9857-F/9957-F TP, K, & L Series 3 Point Latching Device

VON DUPRIN®

NOTES: SEE MASTER SHEET #10001 FOR SUGGESTED REINFORCING

TEMPLATE NUMBER: 10362_a

DATE: 05-22-13

990 TP & 990 TP-BE TRIM

NOTES: SEE MASTER SHEET #10001 FOR SUGGESTED REINFORCING

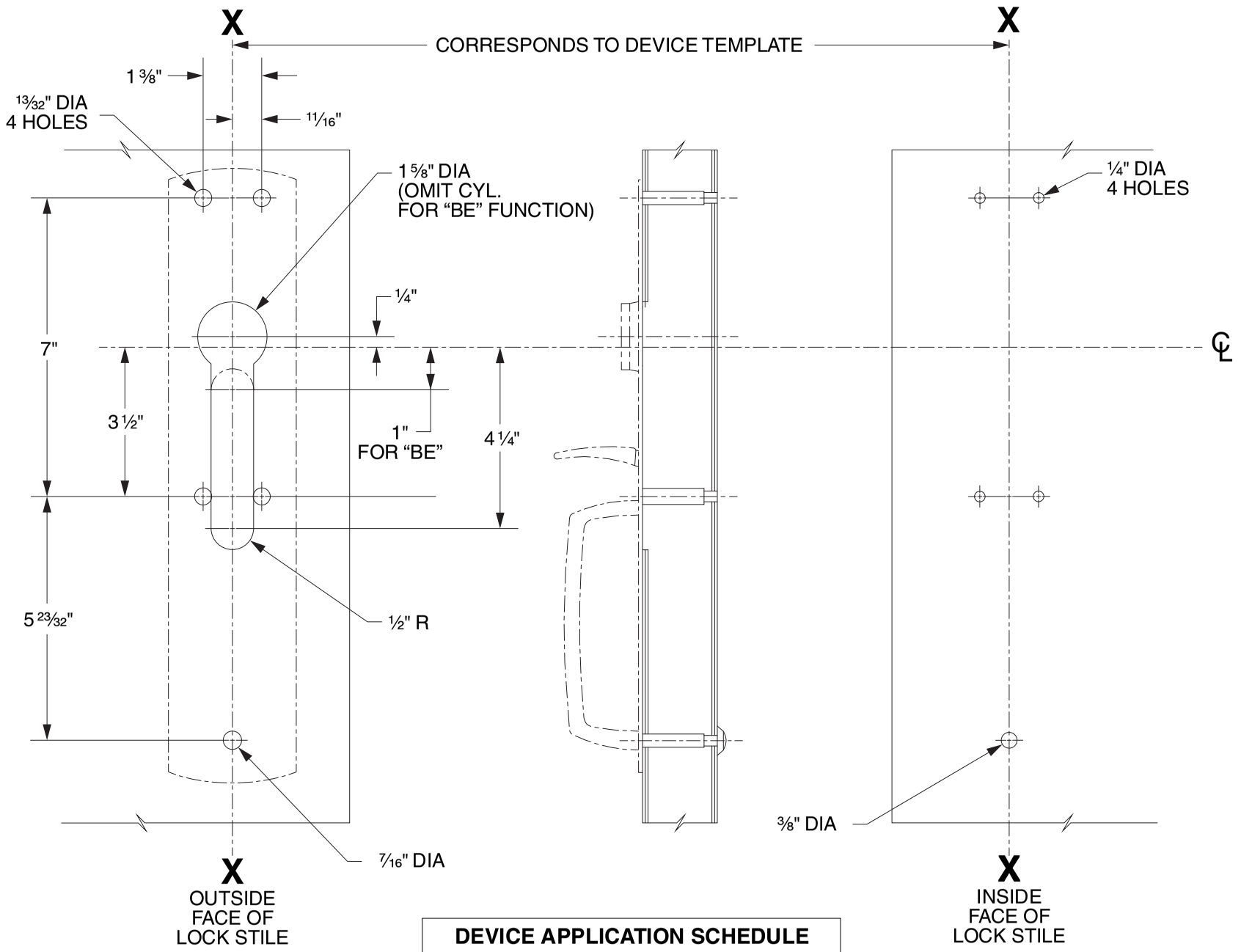

DEVICE APPLICATION SCHEDULE
98/99 SERIES RIM DEVICE
9827/9927 SERIES DEVICE
9847/9947 SERIES DEVICE
9849/9949 SERIES DEVICE

LHR SHOWN
RHR OPPOSITE

VON DUPRIN®

TEMPLATE NUMBER: 20265_C

DATE: 05-31-13

RIM APPLICATION

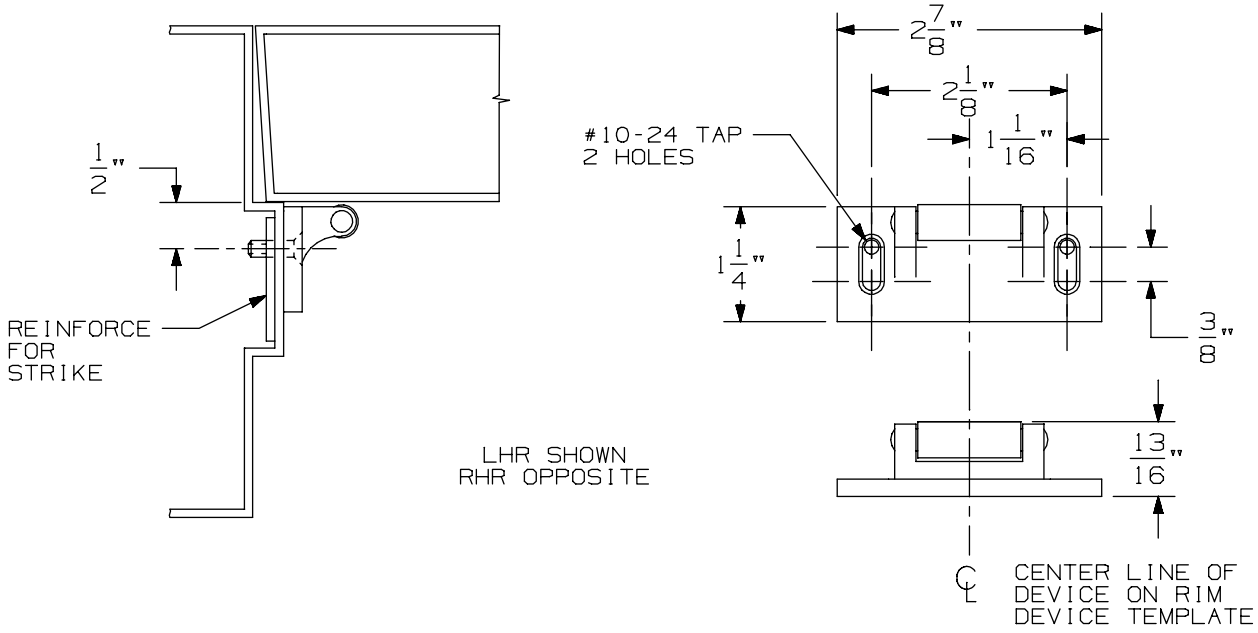

VERTICAL APPLICATION

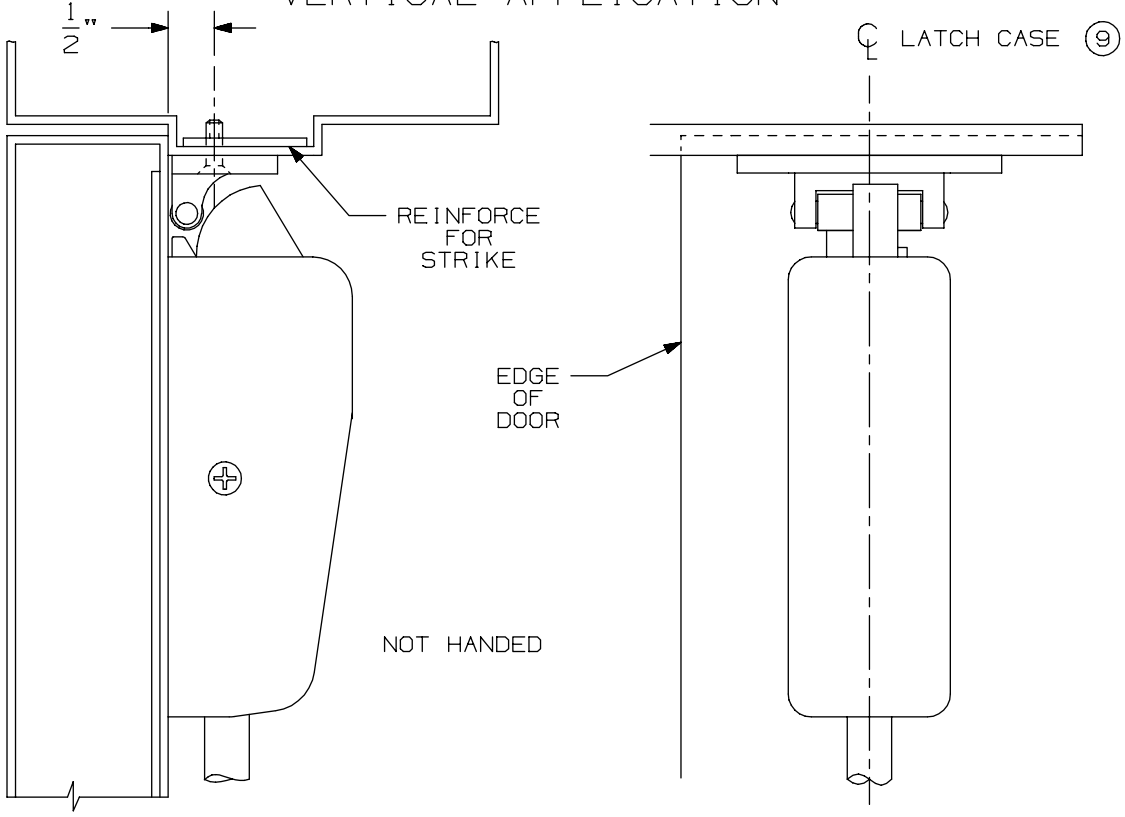

NOTE: LATCH CASE MOUNTING HOLES TO BE PREPARED AT INSTALLATION ON DOOR.

299 & 299F Strike

VON DUPRIN®

NOTES: SEE MASTER SHEET #10001 FOR SUGGESTED REINFORCING

TEMPLATE NUMBER: 30039_a

DATE: 05-23-13

98 / 99 Series Exit Devices - 9847/ 9947/ 9848/ 9948 Concealed Vertical Rod (Standard, CD, EL, LX, RX & SS)

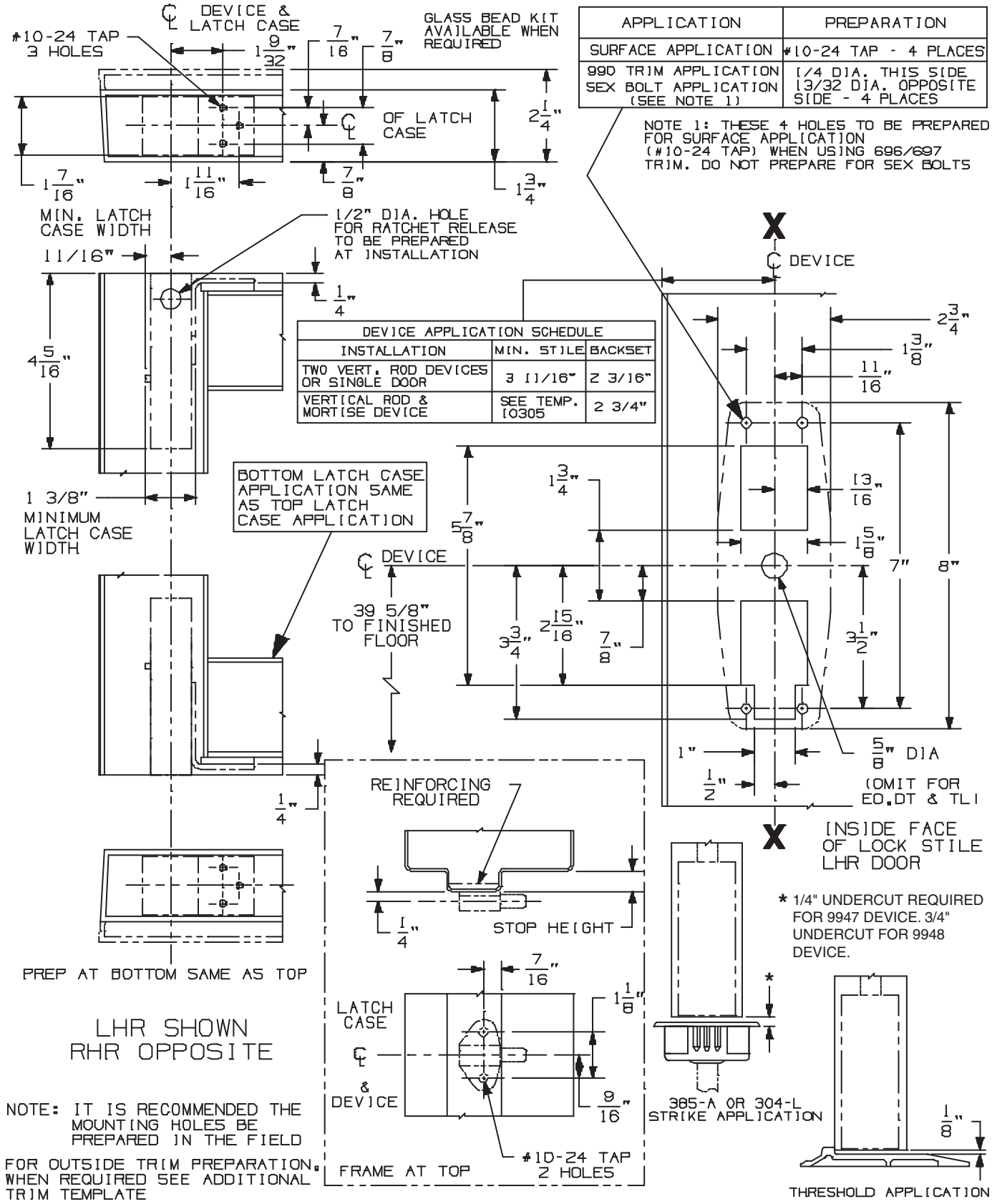

APPLICATION	PREPARATION
SURFACE APPLICATION	#10-24 TAP - 4 PLACES
990 TRIM APPLICATION SEX BOLT APPLICATION (SEE NOTE 1)	1/4 DIA. THIS SIDE 13/32 DIA. OPPOSITE SIDE - 4 PLACES

NOTE 1: THESE 4 HOLES TO BE PREPARED FOR SURFACE APPLICATION (#10-24 TAP) WHEN USING 696/697 TRIM. DO NOT PREPARE FOR SEX BOLTS

DEVICE APPLICATION SCHEDULE		
INSTALLATION	MIN. STILE	BACKSET
TWO VERT. ROD DEVICES OR SINGLE DOOR	3 11/16"	2 3/16"
VERTICAL ROD & MORTISE DEVICE	SEE TEMP. 10305	2 3/4"

98/9947 & 98/9948 Series Concealed Vertical Rod Device

VON DUPRIN®

NOTES: SEE MASTER SHEET #10001 FOR SUGGESTED REINFORCING

TEMPLATE NUMBER: 10320_c

DATE: 05-21-13

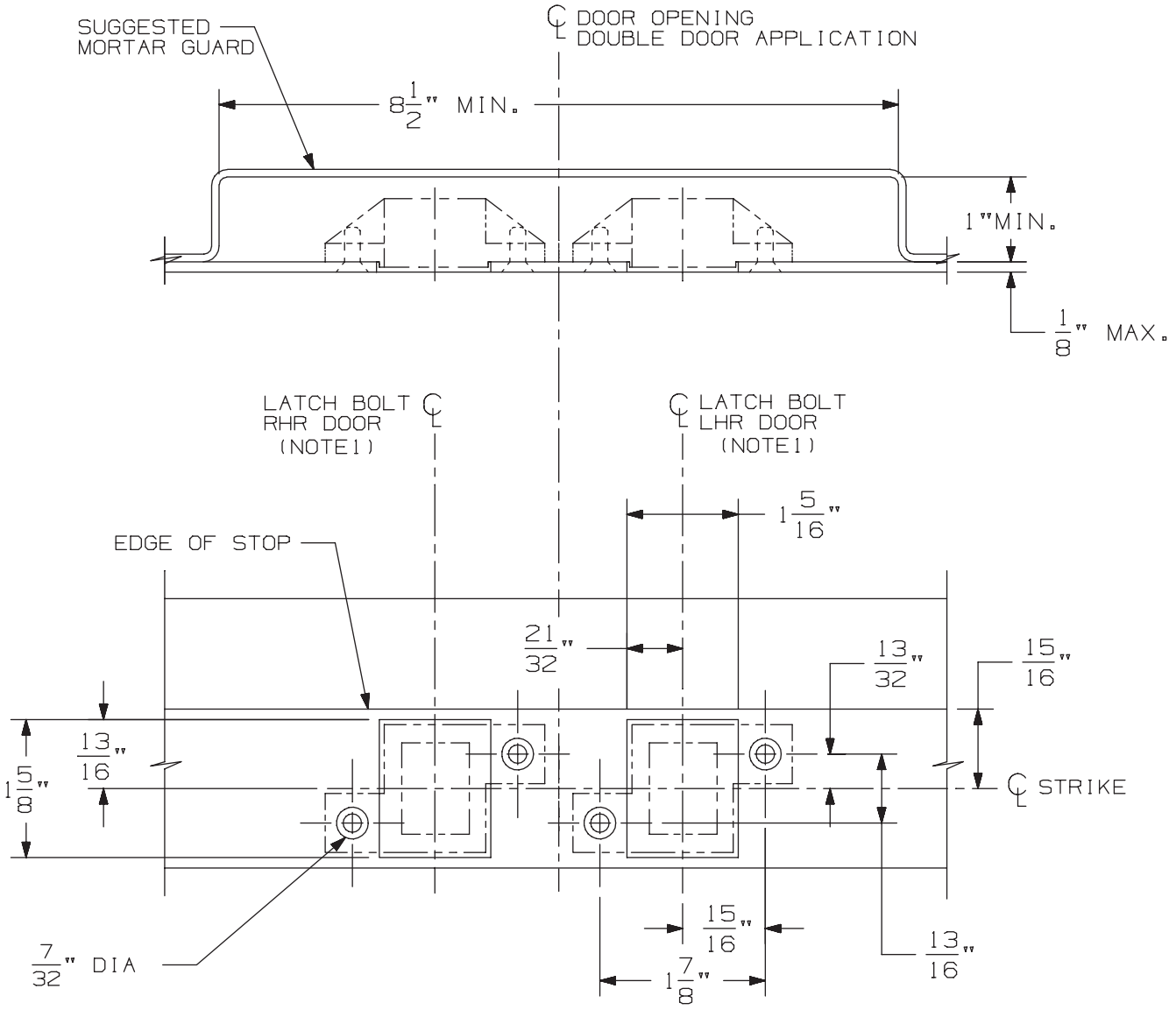

3/8" DIA X 82° C'SINK

IN FRAME
2 HOLES
EACH STRIKE

DOUBLE DOOR APPLICATION SHOWN.
FOR SINGLE DOOR APPLICATION USE
APPROPRIATE HANDING AS SHOWN.

DEVICE APPLICATION SCHEDULE
33/3547 & 33/3547-F SERIES DEVICE
98/99/47 & 98/99/47-F SERIES DEVICE
5547/5547 WDC SERIES
33/3547A & 33/3547A-F SERIES DEVICE
(9) 94/9547 SERIES DEVICE

NOTES: 1. SEE DEVICE TEMPLATE FOR LOCATION OF LATCH BOLT.

2. IF DEVICE IS TO BE MOUNTED ON WOOD DOORS, SEE WOOD DOOR TEMPLATE FOR LATCH BOLT LOCATION.

338 Strike for Hollow Metal Frame Preparation

VON DUPRIN®

NOTES: SEE MASTER SHEET #10001 FOR SUGGESTED REINFORCING

TEMPLATE NUMBER: 30038_a

DATE: 05-23-13

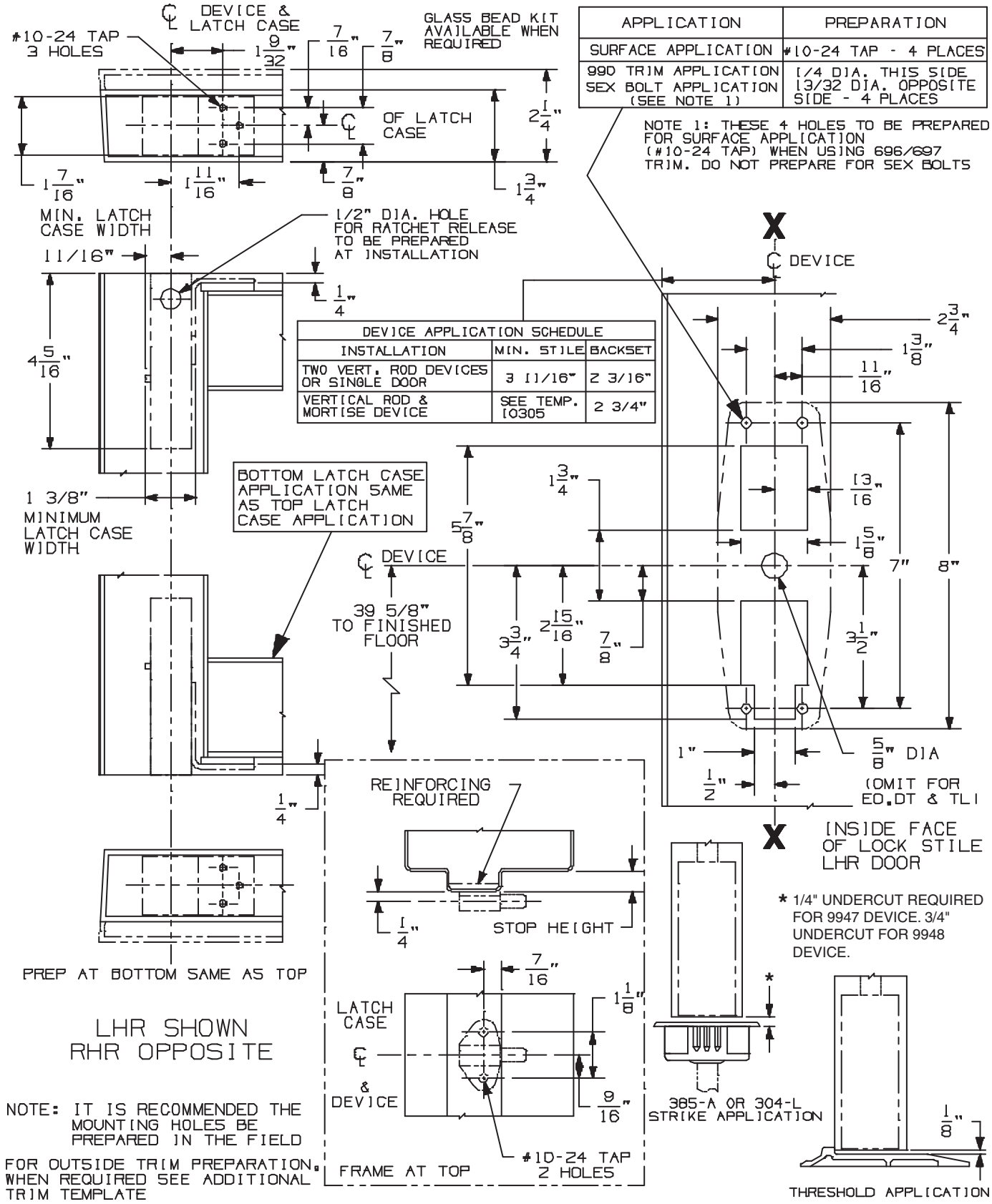

APPLICATION	PREPARATION
SURFACE APPLICATION	#10-24 TAP - 4 PLACES
990 TRIM APPLICATION SEX BOLT APPLICATION (SEE NOTE 1)	1/4 DIA. THIS SIDE 13/32 DIA. OPPOSITE SIDE - 4 PLACES

NOTE 1: THESE 4 HOLES TO BE PREPARED FOR SURFACE APPLICATION (#10-24 TAP) WHEN USING 696/697 TRIM. DO NOT PREPARE FOR SEX BOLTS

DEVICE APPLICATION SCHEDULE		
INSTALLATION	MIN. STILE	BACKSET
TWO VERT. ROD DEVICES OR SINGLE DOOR	3 11/16"	2 3/16"
VERTICAL ROD & MORTISE DEVICE	SEE TEMP. 10305	2 3/4"

98/9947 & 98/9948 Series Concealed Vertical Rod Device

VON DUPRIN®

NOTES: SEE MASTER SHEET #10001 FOR SUGGESTED REINFORCING

TEMPLATE NUMBER: 10320_c

DATE: 05-21-13

990 DT TRIM

NOTES: SEE MASTER SHEET #10001 FOR SUGGESTED REINFORCING

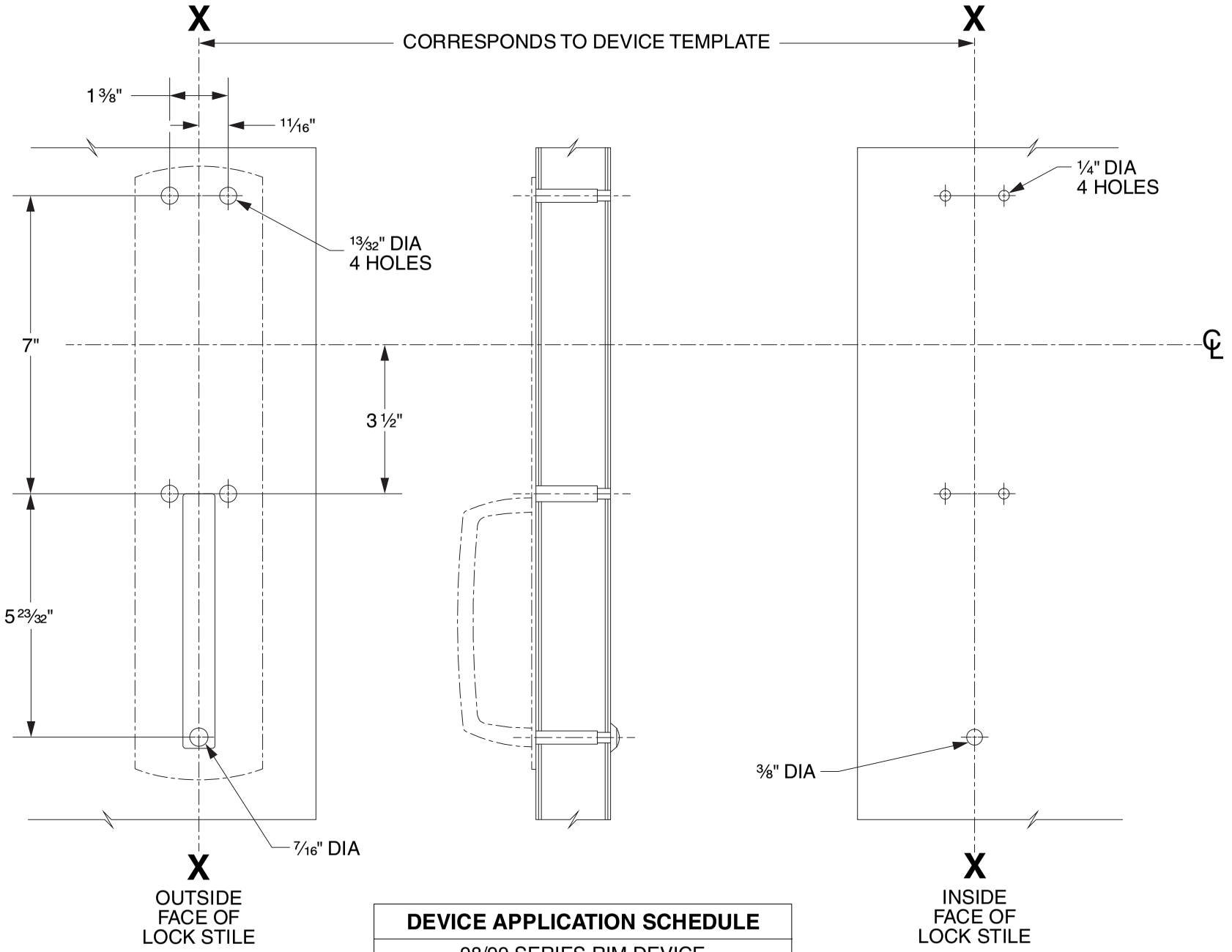

DEVICE APPLICATION SCHEDULE
98/99 SERIES RIM DEVICE
9827/9927 SERIES DEVICE
9847/9947 SERIES DEVICE
9849/9949 SERIES DEVICE
9875/9975 SERIES DEVICE

LHR SHOWN
RHR OPPOSITE

VON DUPRIN®

TEMPLATE NUMBER: 20268_C

DATE: 05-31-13

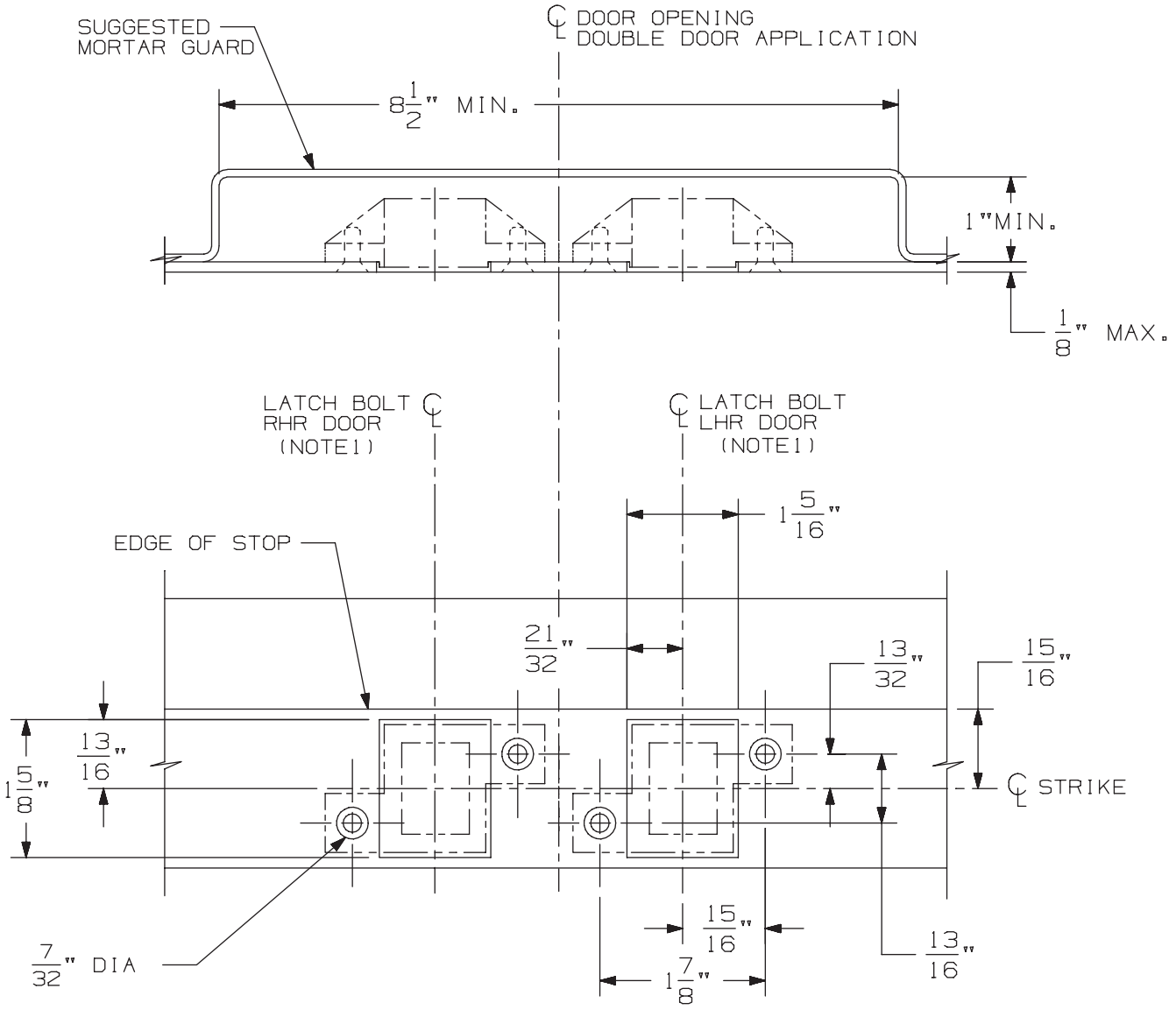

3/8" DIA X 82° C'SINK

IN FRAME
2 HOLES
EACH STRIKE

DOUBLE DOOR APPLICATION SHOWN.
FOR SINGLE DOOR APPLICATION USE
APPROPRIATE HANDING AS SHOWN.

DEVICE APPLICATION SCHEDULE
33/3547 & 33/3547-F SERIES DEVICE
98/99/47 & 98/99/47-F SERIES DEVICE
5547/5547 WDC SERIES
33/3547A & 33/3547A-F SERIES DEVICE
(9) 94/9547 SERIES DEVICE

NOTES: 1. SEE DEVICE TEMPLATE FOR LOCATION OF LATCH BOLT.

2. IF DEVICE IS TO BE MOUNTED ON WOOD DOORS, SEE WOOD DOOR TEMPLATE FOR LATCH BOLT LOCATION.

338 Strike for Hollow Metal Frame Preparation

VON DUPRIN®

NOTES: SEE MASTER SHEET #10001 FOR SUGGESTED REINFORCING

TEMPLATE NUMBER: 30038_a

DATE: 05-23-13

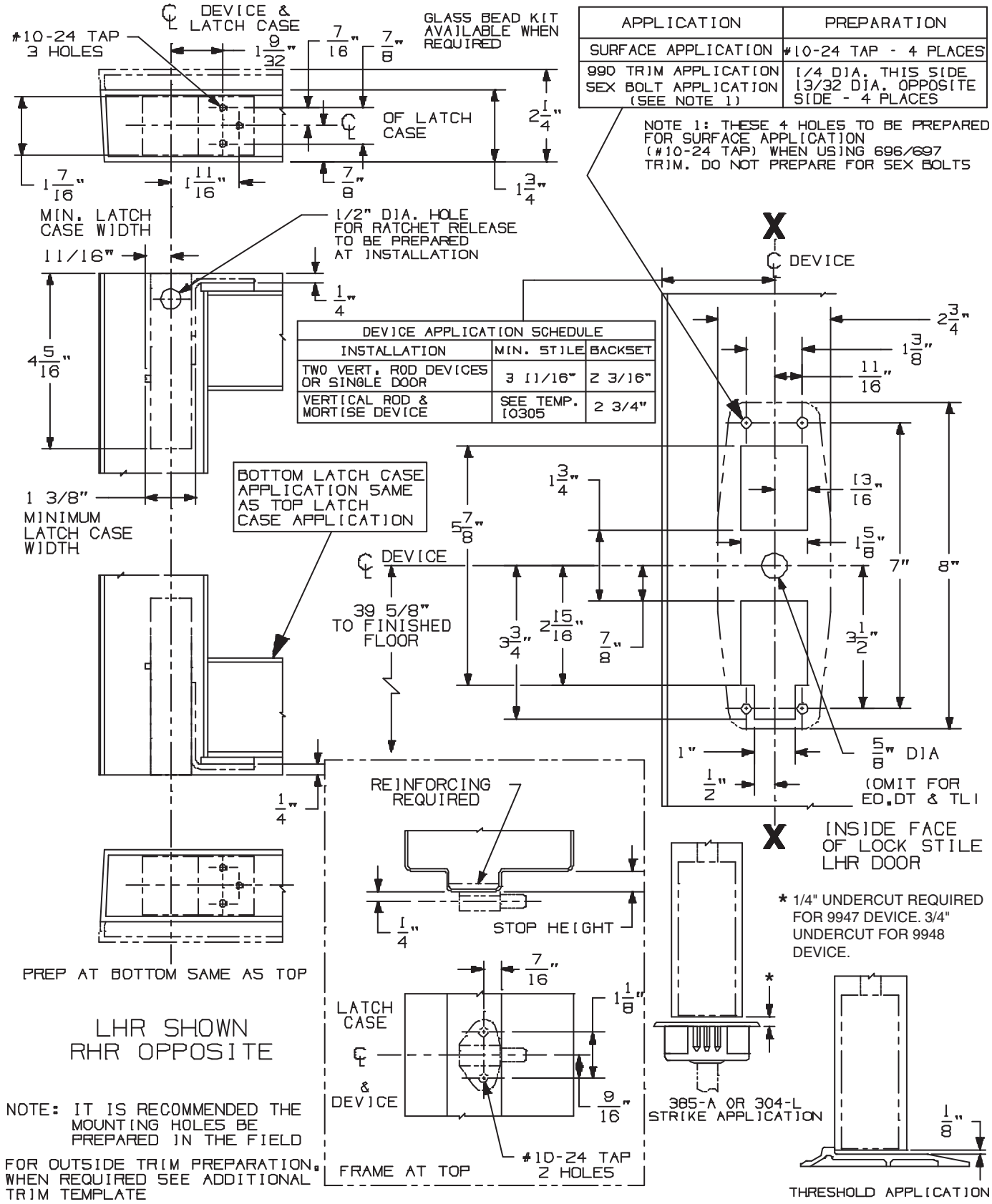

APPLICATION	PREPARATION
SURFACE APPLICATION	#10-24 TAP - 4 PLACES
990 TRIM APPLICATION SEX BOLT APPLICATION (SEE NOTE 1)	1/4 DIA. THIS SIDE 13/32 DIA. OPPOSITE SIDE - 4 PLACES

NOTE 1: THESE 4 HOLES TO BE PREPARED FOR SURFACE APPLICATION (#10-24 TAP) WHEN USING 696/697 TRIM. DO NOT PREPARE FOR SEX BOLTS

DEVICE APPLICATION SCHEDULE		
INSTALLATION	MIN. STILE	BACKSET
TWO VERT. ROD DEVICES OR SINGLE DOOR	3 11/16"	2 3/16"
VERTICAL ROD & MORTISE DEVICE	SEE TEMP. 10305	2 3/4"

98/9947 & 98/9948 Series Concealed Vertical Rod Device

VON DUPRIN®

NOTES: SEE MASTER SHEET #10001 FOR SUGGESTED REINFORCING

TEMPLATE NUMBER: 10320_c

DATE: 05-21-13

990 NL TRIM

NOTES: SEE MASTER SHEET #10001 FOR SUGGESTED REINFORCING

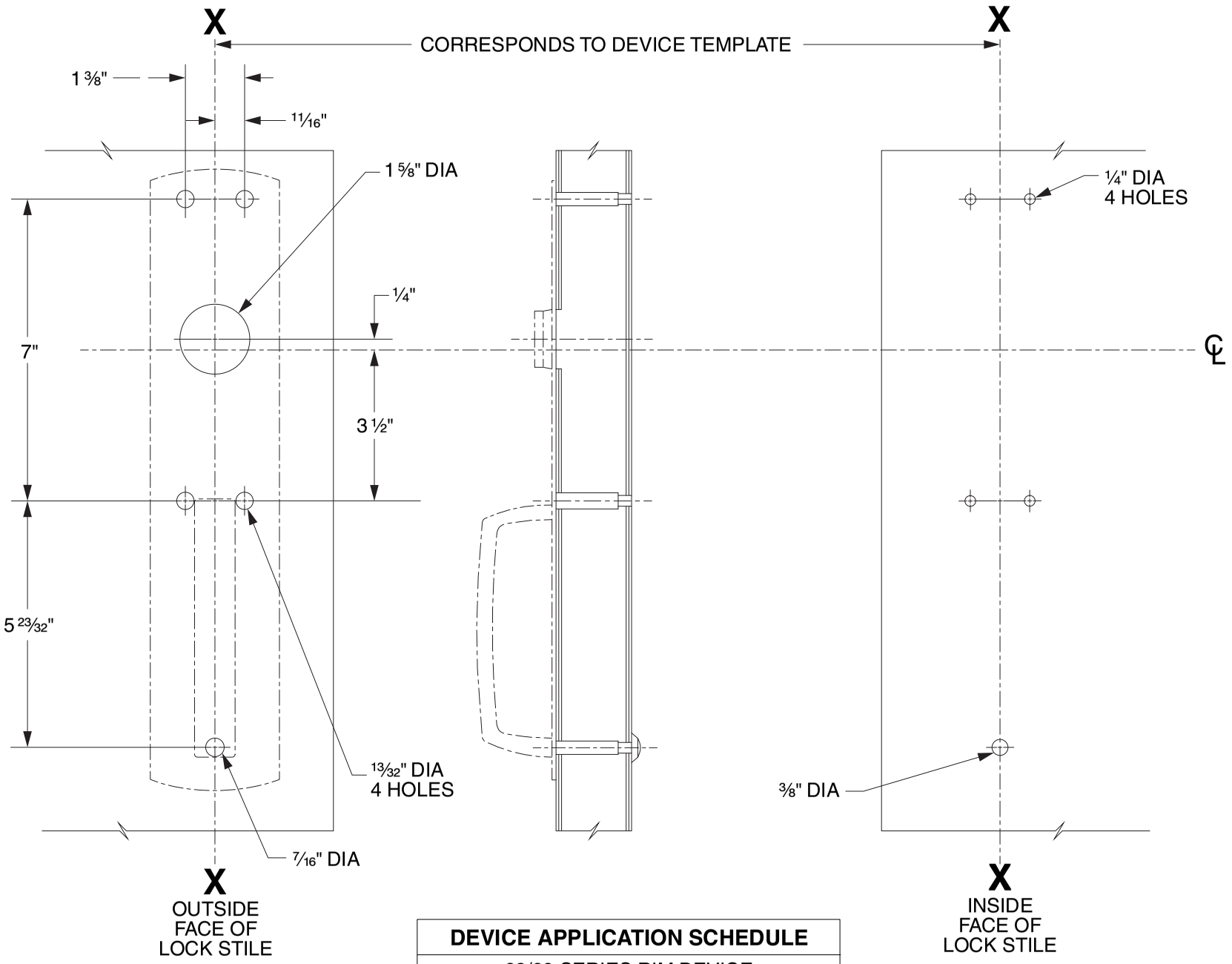

DEVICE APPLICATION SCHEDULE
98/99 SERIES RIM DEVICE
9827/9927 SERIES DEVICE
9847/9947 SERIES DEVICE
9849/9949 SERIES DEVICE

LHR SHOWN
RHR OPPOSITE

VON DUPRIN®

TEMPLATE NUMBER: 20267_C

DATE: 05-31-13

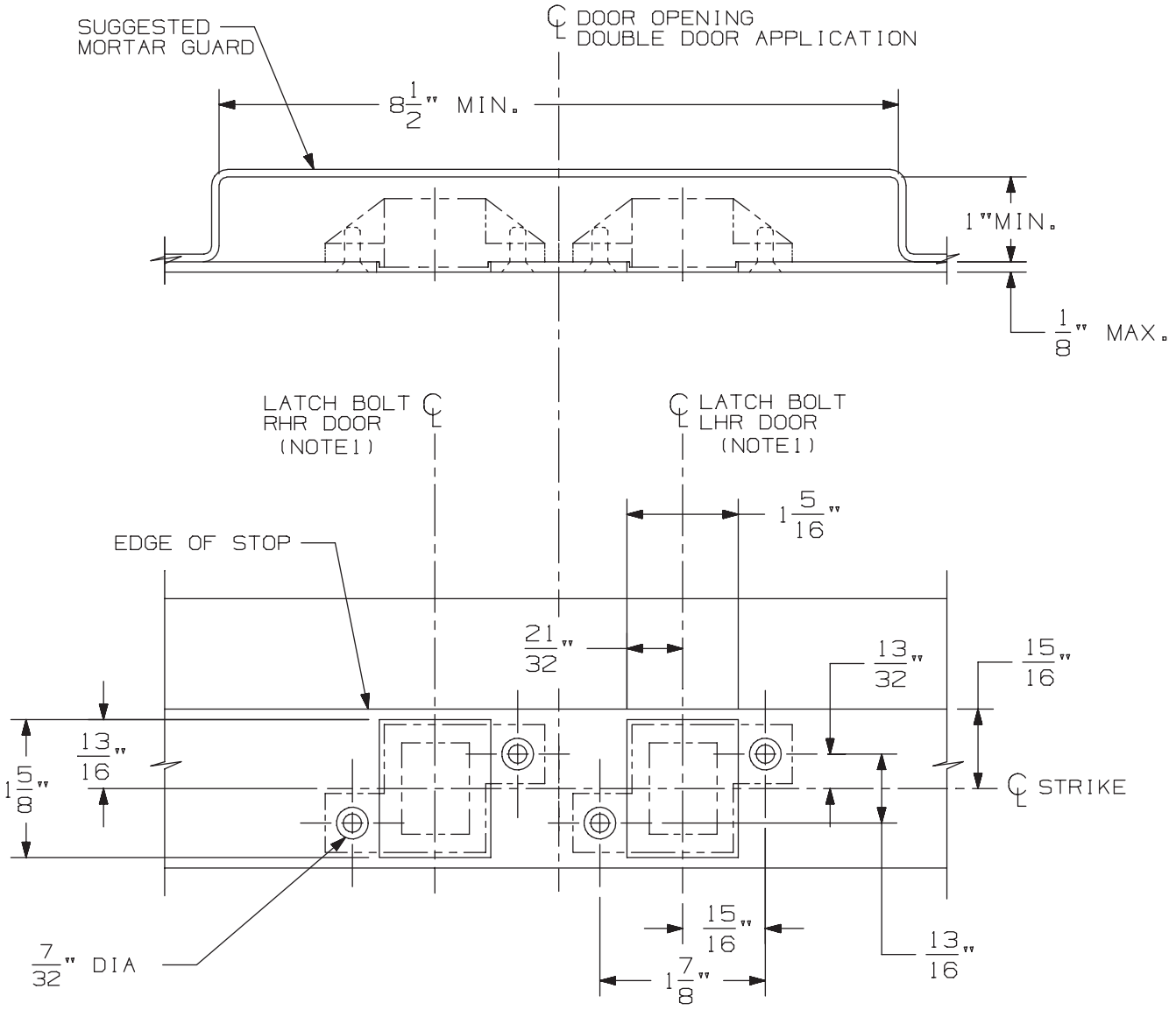

3/8" DIA X 82° C'SINK

IN FRAME
2 HOLES
EACH STRIKE

DOUBLE DOOR APPLICATION SHOWN.
FOR SINGLE DOOR APPLICATION USE
APPROPRIATE HANDING AS SHOWN.

DEVICE APPLICATION SCHEDULE
33/3547 & 33/3547-F SERIES DEVICE
98/99/47 & 98/99/47-F SERIES DEVICE
5547/5547 WDC SERIES
33/3547A & 33/3547A-F SERIES DEVICE
(9) 94/9547 SERIES DEVICE

NOTES: 1. SEE DEVICE TEMPLATE FOR LOCATION OF LATCH BOLT.

2. IF DEVICE IS TO BE MOUNTED ON WOOD DOORS, SEE WOOD DOOR TEMPLATE FOR LATCH BOLT LOCATION.

338 Strike for Hollow Metal Frame Preparation

VON DUPRIN®

NOTES: SEE MASTER SHEET #10001 FOR SUGGESTED REINFORCING

TEMPLATE NUMBER: 30038_a

DATE: 05-23-13

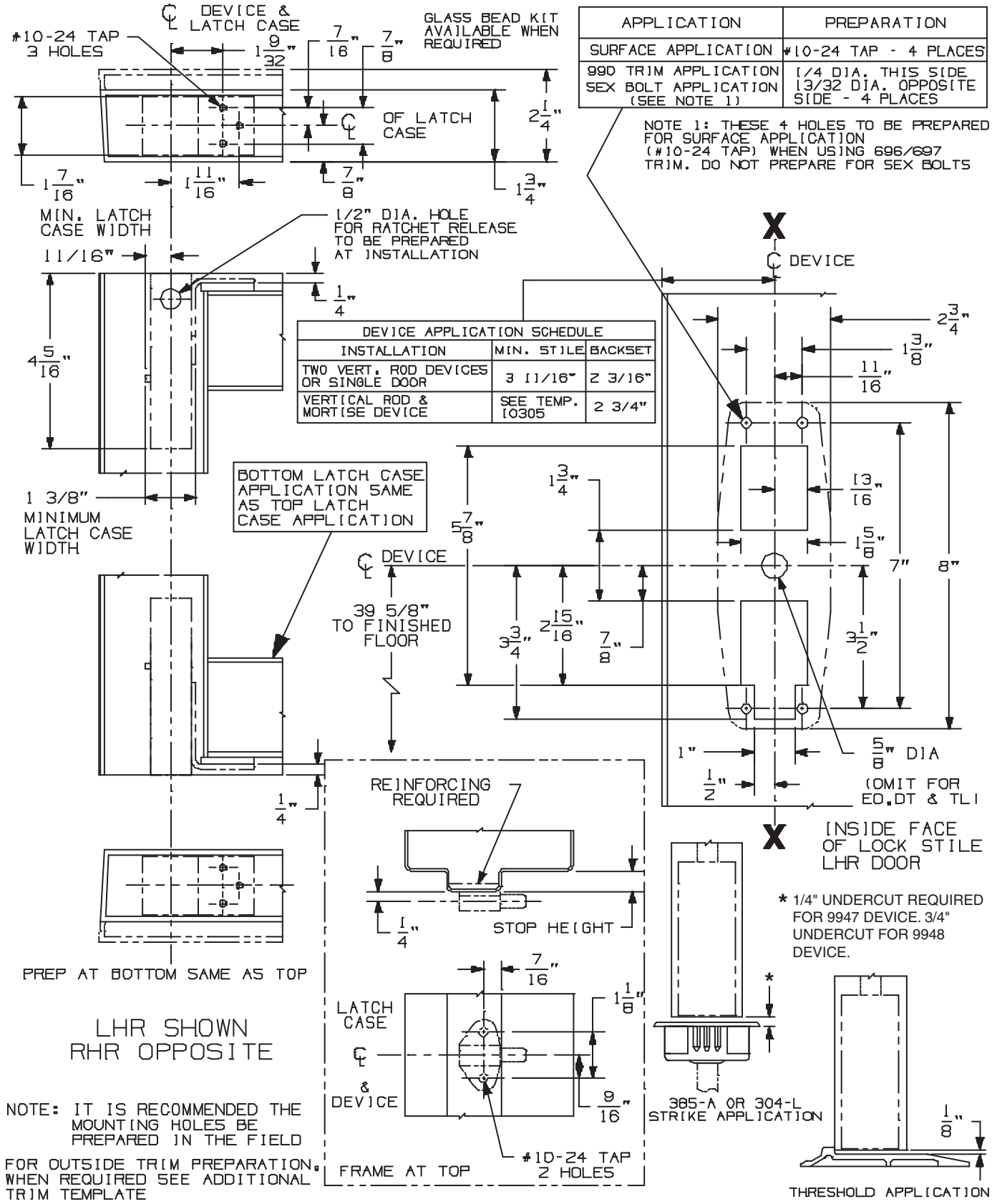

APPLICATION	PREPARATION
SURFACE APPLICATION	#10-24 TAP - 4 PLACES
990 TRIM APPLICATION SEX BOLT APPLICATION (SEE NOTE 1)	1/4 DIA. THIS SIDE 13/32 DIA. OPPOSITE SIDE - 4 PLACES

NOTE 1: THESE 4 HOLES TO BE PREPARED FOR SURFACE APPLICATION (#10-24 TAP) WHEN USING 696/697 TRIM. DO NOT PREPARE FOR SEX BOLTS

DEVICE APPLICATION SCHEDULE		
INSTALLATION	MIN. STILE	BACKSET
TWO VERT. ROD DEVICES OR SINGLE DOOR	3 11/16"	2 3/16"
VERTICAL ROD & MORTISE DEVICE	SEE TEMP. 10305	2 3/4"

98/9947 & 98/9948 Series Concealed Vertical Rod Device

VON DUPRIN®

NOTES: SEE MASTER SHEET #10001 FOR SUGGESTED REINFORCING

TEMPLATE NUMBER: 10320_c

DATE: 05-21-13

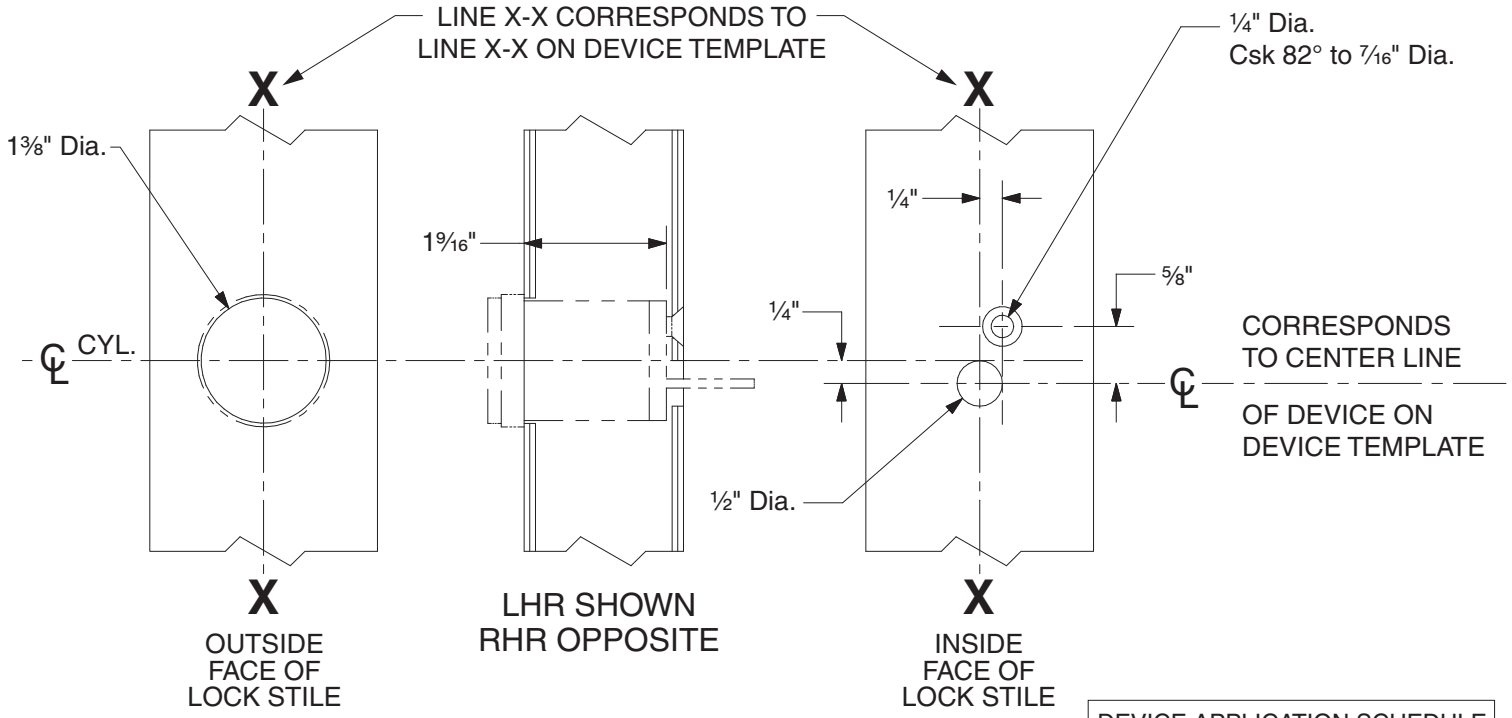

DEVICE APPLICATION SCHEDULE	
98 RIM SERIES	99 RIM SERIES
9827 SERIES	9927 SERIES
9847 SERIES	9947 SERIES
22 RIM SERIES	2227 SERIES

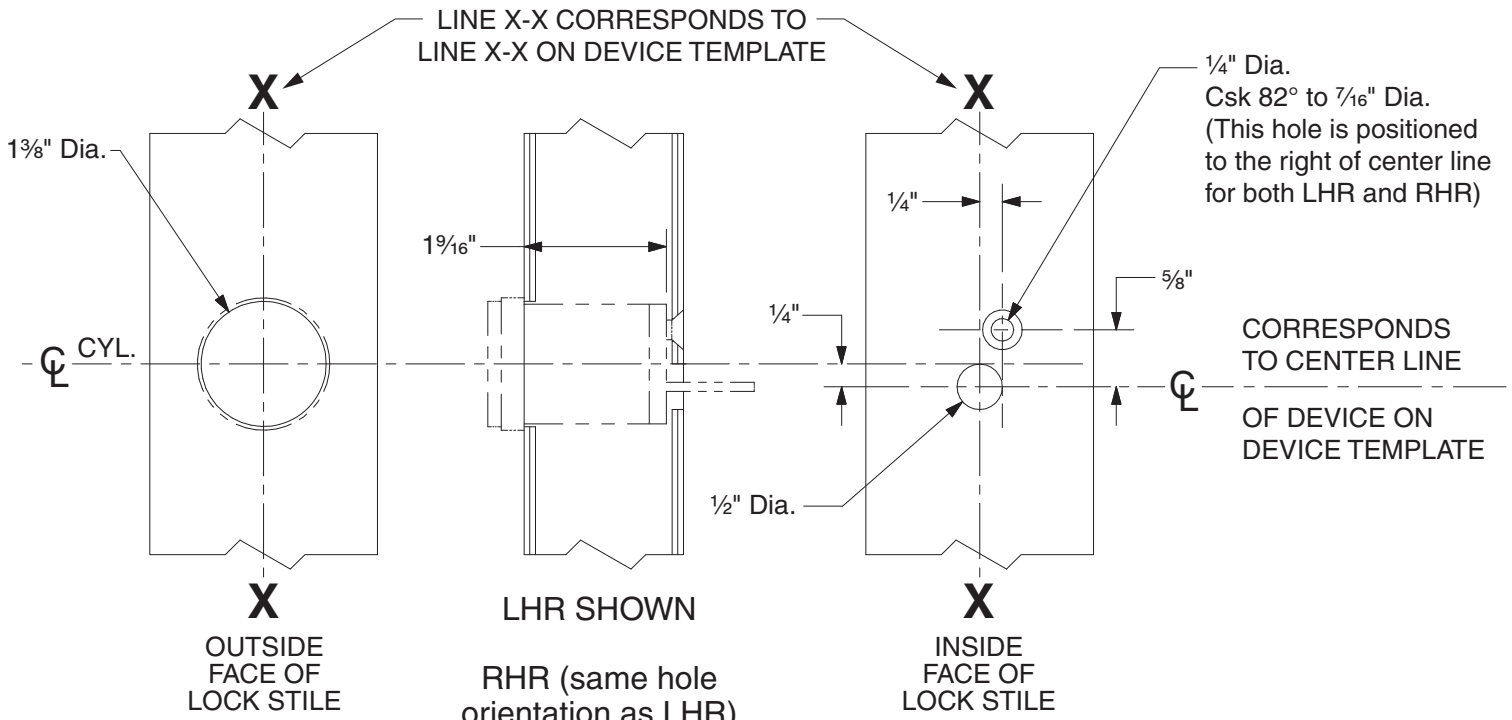

DEVICE APPLICATION SCHEDULE	
9849 SERIES	9949 SERIES

110NL Cylinder Preparation

VON DUPRIN®

NOTES: SEE MASTER SHEET #10001 FOR SUGGESTED REINFORCING

TEMPLATE NUMBER: 40022_c

DATE: 05-28-13

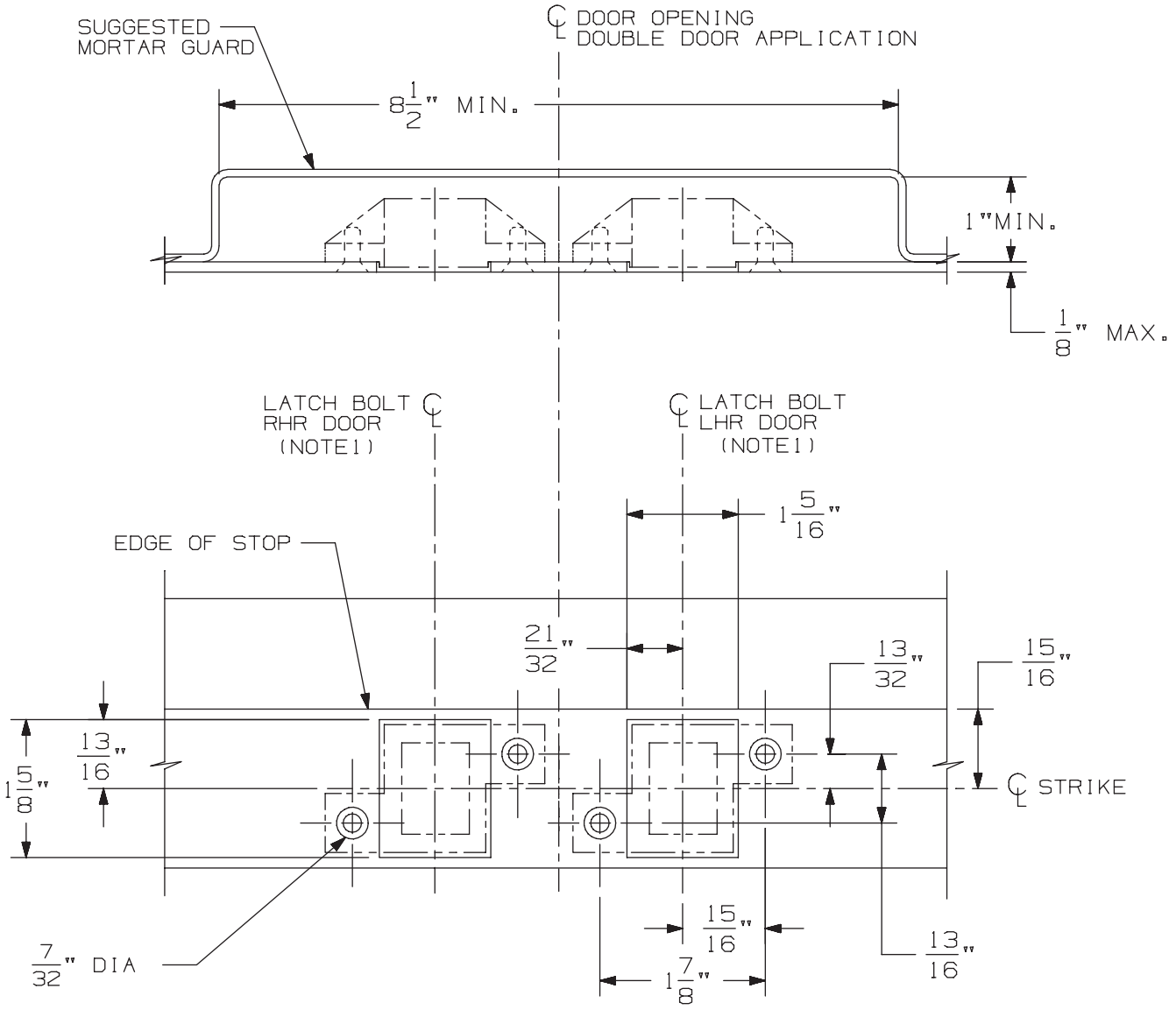

3/8" DIA X 82° C'SINK

IN FRAME
2 HOLES
EACH STRIKE

DOUBLE DOOR APPLICATION SHOWN.
FOR SINGLE DOOR APPLICATION USE
APPROPRIATE HANDING AS SHOWN.

DEVICE APPLICATION SCHEDULE
33/3547 & 33/3547-F SERIES DEVICE
98/99/47 & 98/99/47-F SERIES DEVICE
5547/5547 WDC SERIES
33/3547A & 33/3547A-F SERIES DEVICE
(9) 94/9547 SERIES DEVICE

NOTES: 1. SEE DEVICE TEMPLATE FOR LOCATION OF LATCH BOLT.

2. IF DEVICE IS TO BE MOUNTED ON WOOD DOORS, SEE WOOD DOOR TEMPLATE FOR LATCH BOLT LOCATION.

338 Strike for Hollow Metal Frame Preparation

VON DUPRIN®

NOTES: SEE MASTER SHEET #10001 FOR SUGGESTED REINFORCING

TEMPLATE NUMBER: 30038_a

DATE: 05-23-13

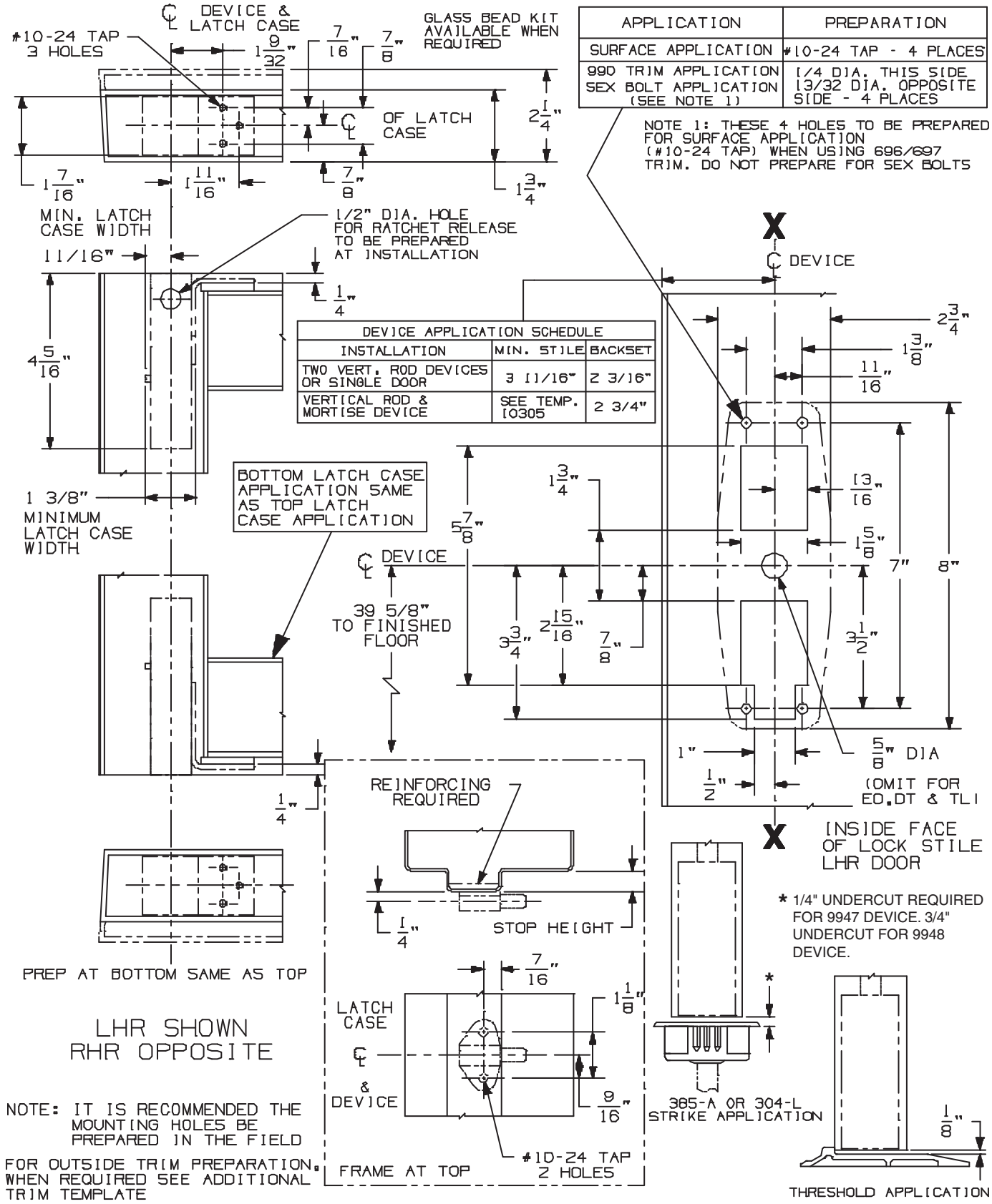

APPLICATION	PREPARATION
SURFACE APPLICATION	#10-24 TAP - 4 PLACES
990 TRIM APPLICATION SEX BOLT APPLICATION (SEE NOTE 1)	1/4 DIA. THIS SIDE 13/32 DIA. OPPOSITE SIDE - 4 PLACES

NOTE 1: THESE 4 HOLES TO BE PREPARED FOR SURFACE APPLICATION (#10-24 TAP) WHEN USING 696/697 TRIM. DO NOT PREPARE FOR SEX BOLTS

DEVICE APPLICATION SCHEDULE		
INSTALLATION	MIN. STILE	BACKSET
TWO VERT. ROD DEVICES OR SINGLE DOOR	3 11/16"	2 3/16"
VERTICAL ROD & MORTISE DEVICE	SEE TEMP. 10305	2 3/4"

98/9947 & 98/9948 Series Concealed Vertical Rod Device

VON DUPRIN®

NOTES: SEE MASTER SHEET #10001 FOR SUGGESTED REINFORCING

TEMPLATE NUMBER: 10320_c

DATE: 05-21-13

991 K & 992 L Trim

NOTES: SEE MASTER SHEET #10001 FOR SUGGESTED REINFORCING

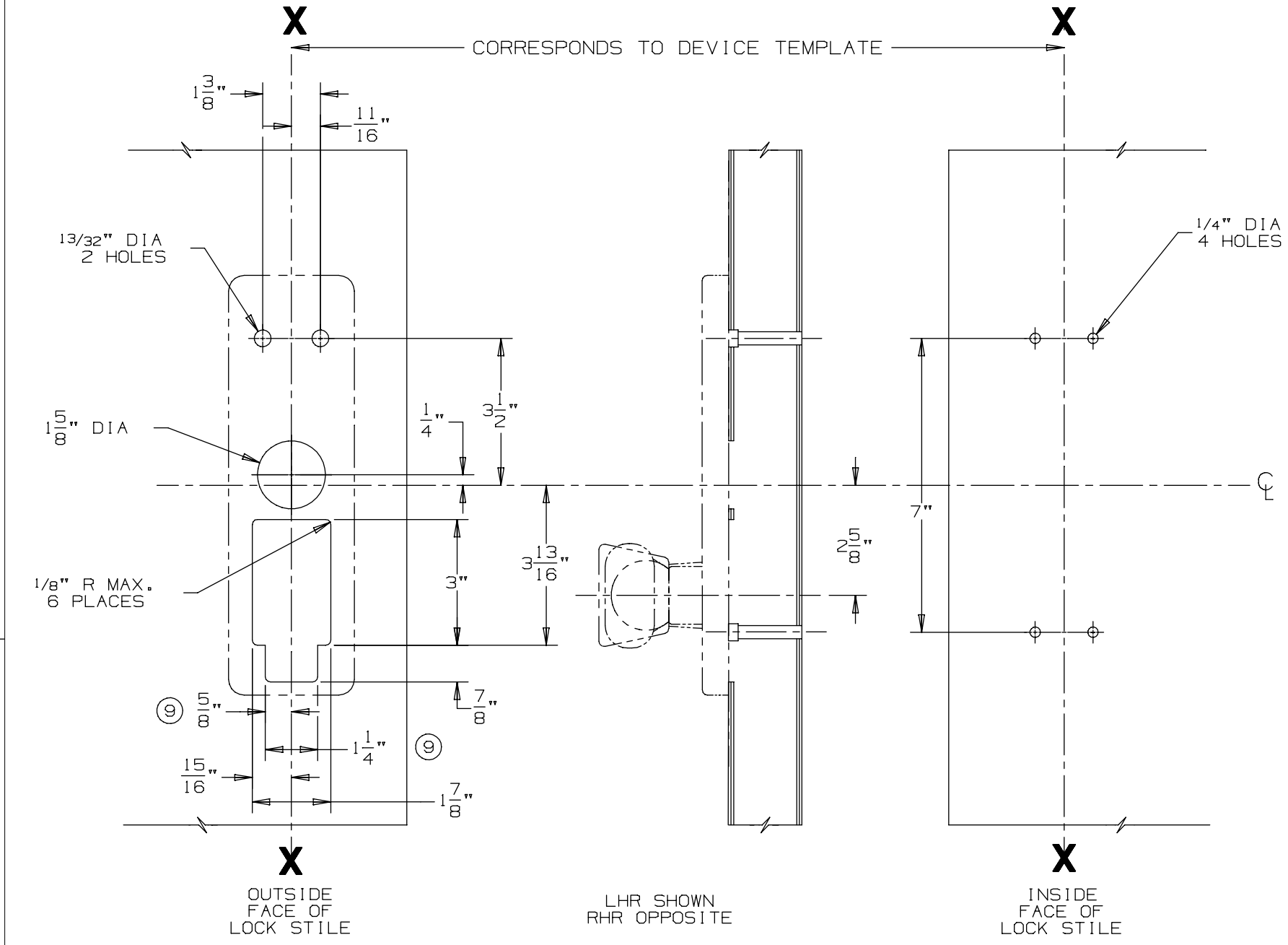

DEVICE APPLICATION SCHEDULE
98/99 SERIES RIM DEVICE
9827/9927 SERIES DEVICE
9847/9947 SERIES DEVICE

VON DUPRIN®

TEMPLATE NUMBER: 20272_a

DATE: 05-23-13

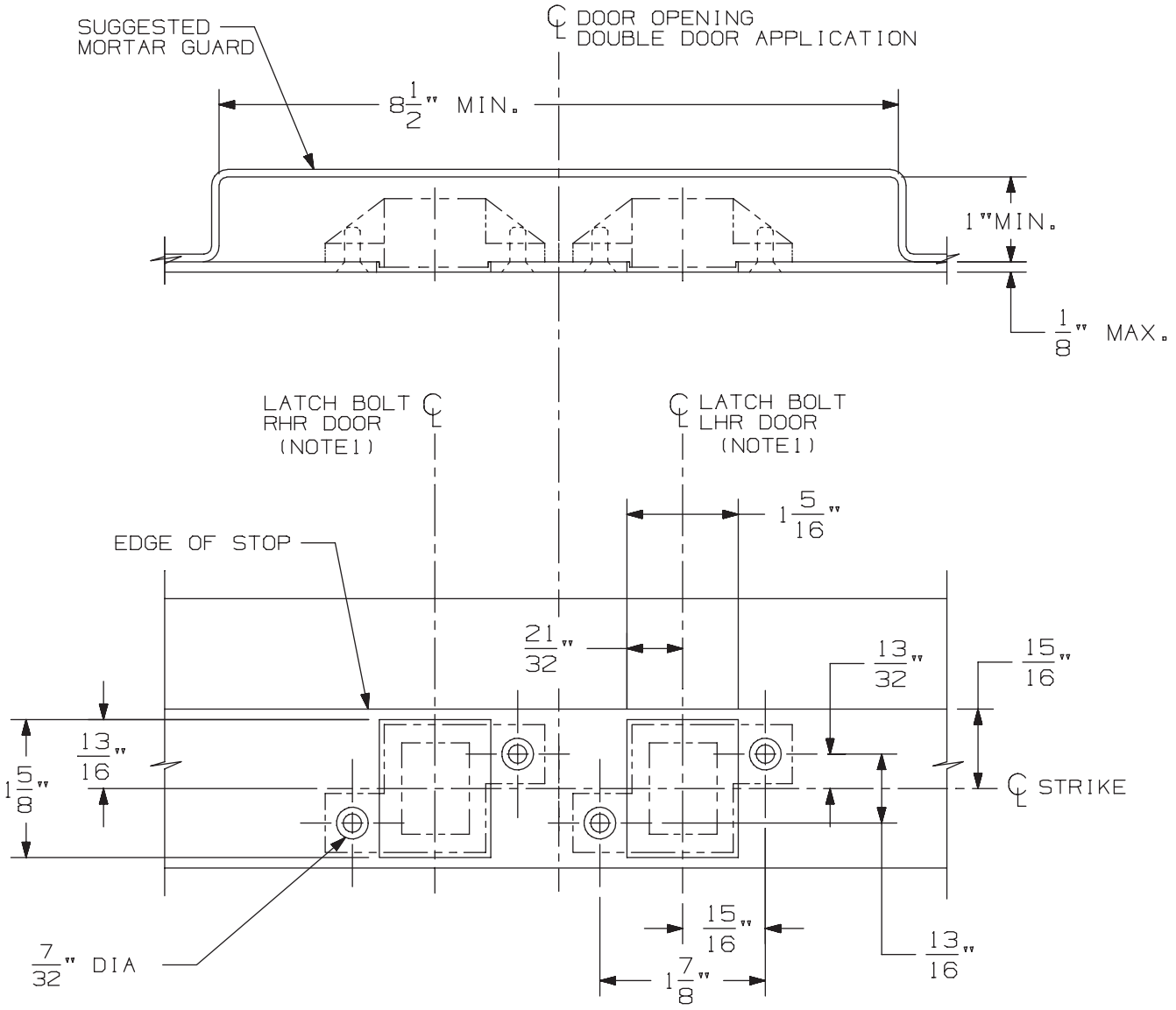

3/8" DIA X 82° C'SINK

IN FRAME
2 HOLES
EACH STRIKE

DOUBLE DOOR APPLICATION SHOWN.
FOR SINGLE DOOR APPLICATION USE
APPROPRIATE HANDING AS SHOWN.

DEVICE APPLICATION SCHEDULE
33/3547 & 33/3547-F SERIES DEVICE
98/99/47 & 98/99/47-F SERIES DEVICE
5547/5547 WDC SERIES
33/3547A & 33/3547A-F SERIES DEVICE
(9) 94/9547 SERIES DEVICE

NOTES: 1. SEE DEVICE TEMPLATE FOR LOCATION OF LATCH BOLT.

2. IF DEVICE IS TO BE MOUNTED ON WOOD DOORS, SEE WOOD DOOR TEMPLATE FOR LATCH BOLT LOCATION.

338 Strike for Hollow Metal Frame Preparation

VON DUPRIN®

NOTES: SEE MASTER SHEET #10001 FOR SUGGESTED REINFORCING

TEMPLATE NUMBER: 30038_a

DATE: 05-23-13

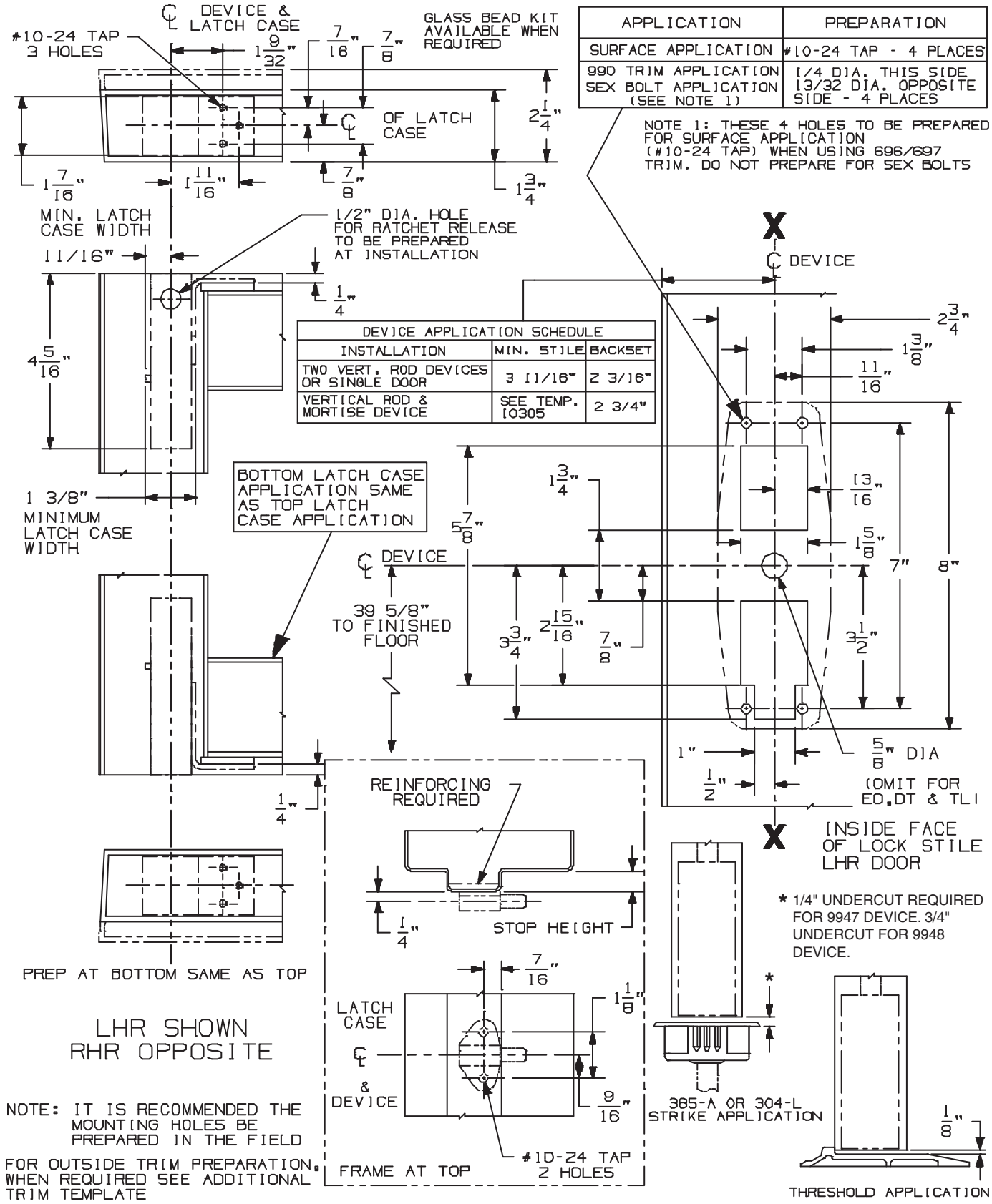

APPLICATION	PREPARATION
SURFACE APPLICATION	#10-24 TAP - 4 PLACES
990 TRIM APPLICATION SEX BOLT APPLICATION (SEE NOTE 1)	1/4 DIA. THIS SIDE 13/32 DIA. OPPOSITE SIDE - 4 PLACES

NOTE 1: THESE 4 HOLES TO BE PREPARED FOR SURFACE APPLICATION (#10-24 TAP) WHEN USING 696/697 TRIM. DO NOT PREPARE FOR SEX BOLTS

DEVICE APPLICATION SCHEDULE		
INSTALLATION	MIN. STILE	BACKSET
TWO VERT. ROD DEVICES OR SINGLE DOOR	3 11/16"	2 3/16"
VERTICAL ROD & MORTISE DEVICE	SEE TEMP. 10305	2 3/4"

98/9947 & 98/9948 Series Concealed Vertical Rod Device

VON DUPRIN®

NOTES: SEE MASTER SHEET #10001 FOR SUGGESTED REINFORCING

TEMPLATE NUMBER: 10320_c

DATE: 05-21-13

DEVICE APPLICATION SCHEDULE	
98 RIM SERIES	99 RIM SERIES
9827 SERIES	9927 SERIES
9847 SERIES	9947 SERIES
9849 SERIES	9949 SERIES

996L, E996L, 996L-BE, E996L-BE 996K, 996K-BE R/V SERIES
TRIM METAL DOOR APPLICATION

VON DUPRIN®

NOTES: SEE MASTER SHEET #10001 FOR SUGGESTED REINFORCING

TEMPLATE NUMBER: 20003_e

DATE: 10-30-14

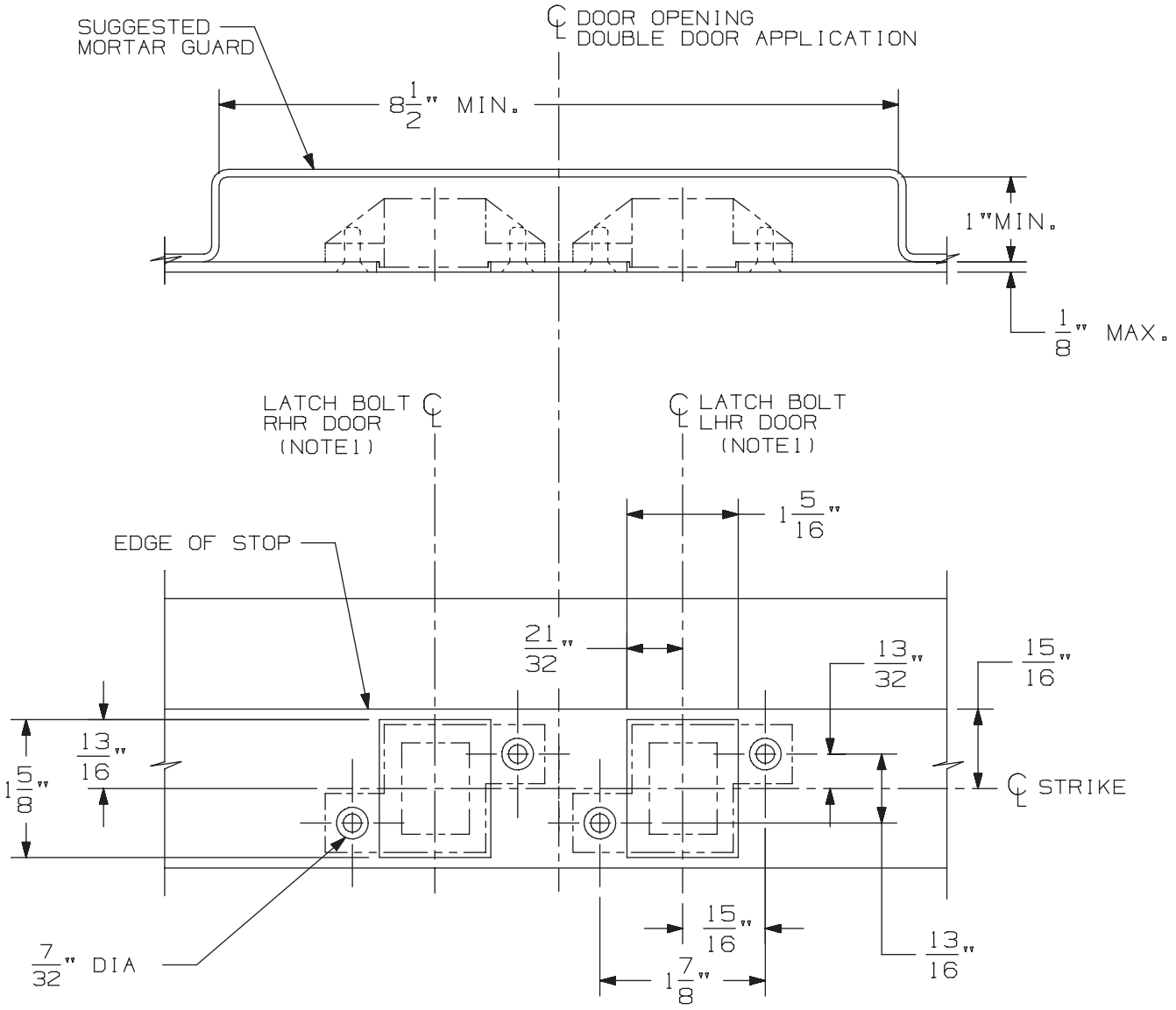

3/8" DIA X 82° C'SINK

IN FRAME
2 HOLES
EACH STRIKE

DOUBLE DOOR APPLICATION SHOWN.
FOR SINGLE DOOR APPLICATION USE
APPROPRIATE HANDING AS SHOWN.

DEVICE APPLICATION SCHEDULE
33/3547 & 33/3547-F SERIES DEVICE
98/99/47 & 98/99/47-F SERIES DEVICE
5547/5547 WDC SERIES
33/3547A & 33/3547A-F SERIES DEVICE
(9) 94/9547 SERIES DEVICE

NOTES: 1. SEE DEVICE TEMPLATE FOR LOCATION OF LATCH BOLT.

2. IF DEVICE IS TO BE MOUNTED ON WOOD DOORS, SEE WOOD DOOR TEMPLATE FOR LATCH BOLT LOCATION.

338 Strike for Hollow Metal Frame Preparation

VON DUPRIN®

NOTES: SEE MASTER SHEET #10001 FOR SUGGESTED REINFORCING

TEMPLATE NUMBER: 30038_a

DATE: 05-23-13

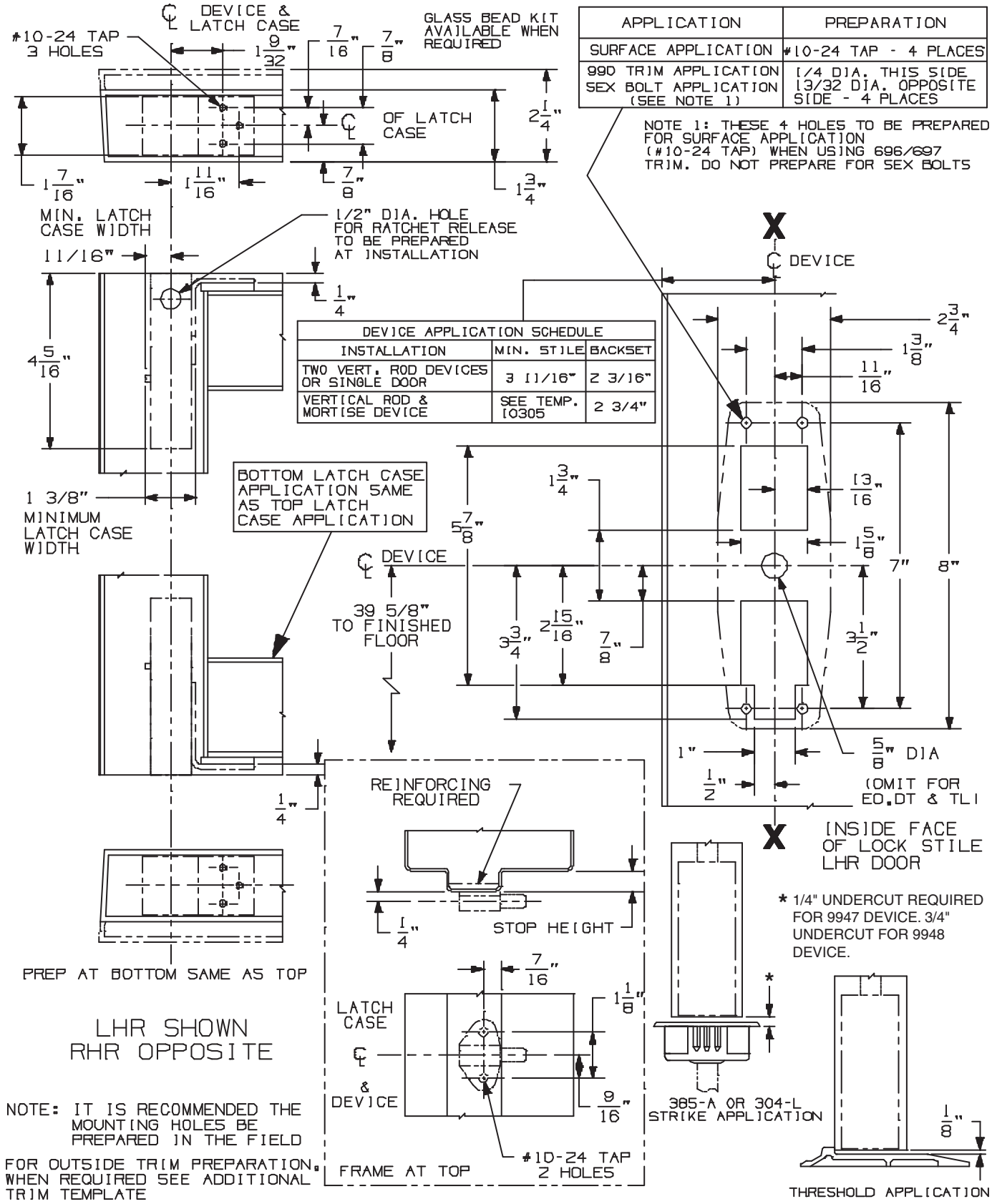

APPLICATION	PREPARATION
SURFACE APPLICATION	#10-24 TAP - 4 PLACES
990 TRIM APPLICATION SEX BOLT APPLICATION (SEE NOTE 1)	1/4 DIA. THIS SIDE 13/32 DIA. OPPOSITE SIDE - 4 PLACES

NOTE 1: THESE 4 HOLES TO BE PREPARED FOR SURFACE APPLICATION (#10-24 TAP) WHEN USING 696/697 TRIM. DO NOT PREPARE FOR SEX BOLTS

DEVICE APPLICATION SCHEDULE		
INSTALLATION	MIN. STILE	BACKSET
TWO VERT. ROD DEVICES OR SINGLE DOOR	3 11/16"	2 3/16"
VERTICAL ROD & MORTISE DEVICE	SEE TEMP. 10305	2 3/4"

98/9947 & 98/9948 Series Concealed Vertical Rod Device

VON DUPRIN®

NOTES: SEE MASTER SHEET #10001 FOR SUGGESTED REINFORCING

TEMPLATE NUMBER: 10320_c

DATE: 05-21-13

990 TP & 990 TP-BE TRIM

NOTES: SEE MASTER SHEET #10001 FOR SUGGESTED REINFORCING

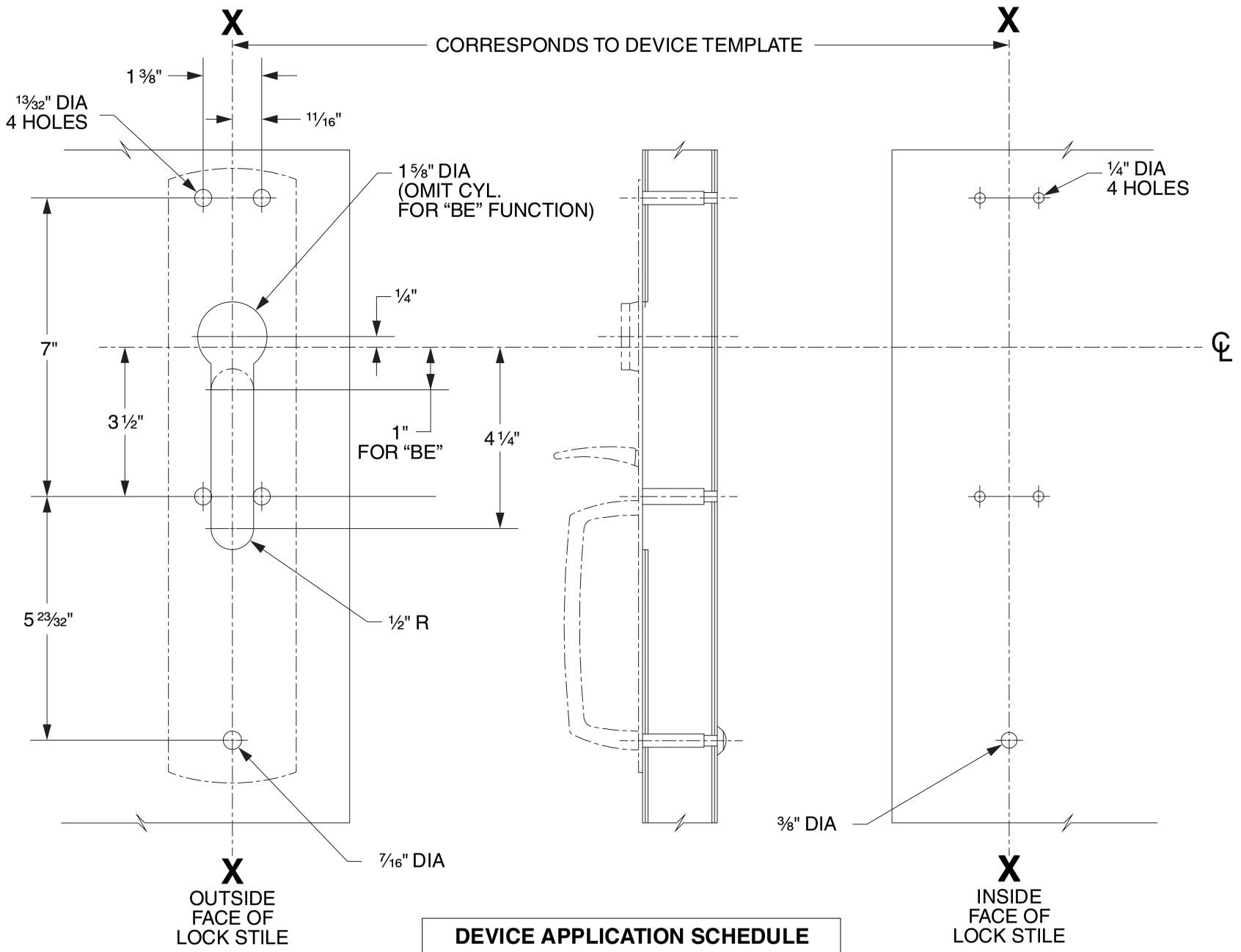

DEVICE APPLICATION SCHEDULE
98/99 SERIES RIM DEVICE
9827/9927 SERIES DEVICE
9847/9947 SERIES DEVICE
9849/9949 SERIES DEVICE

LHR SHOWN
RHR OPPOSITE

VON DUPRIN®

TEMPLATE NUMBER: 20265_C

DATE: 05-31-13

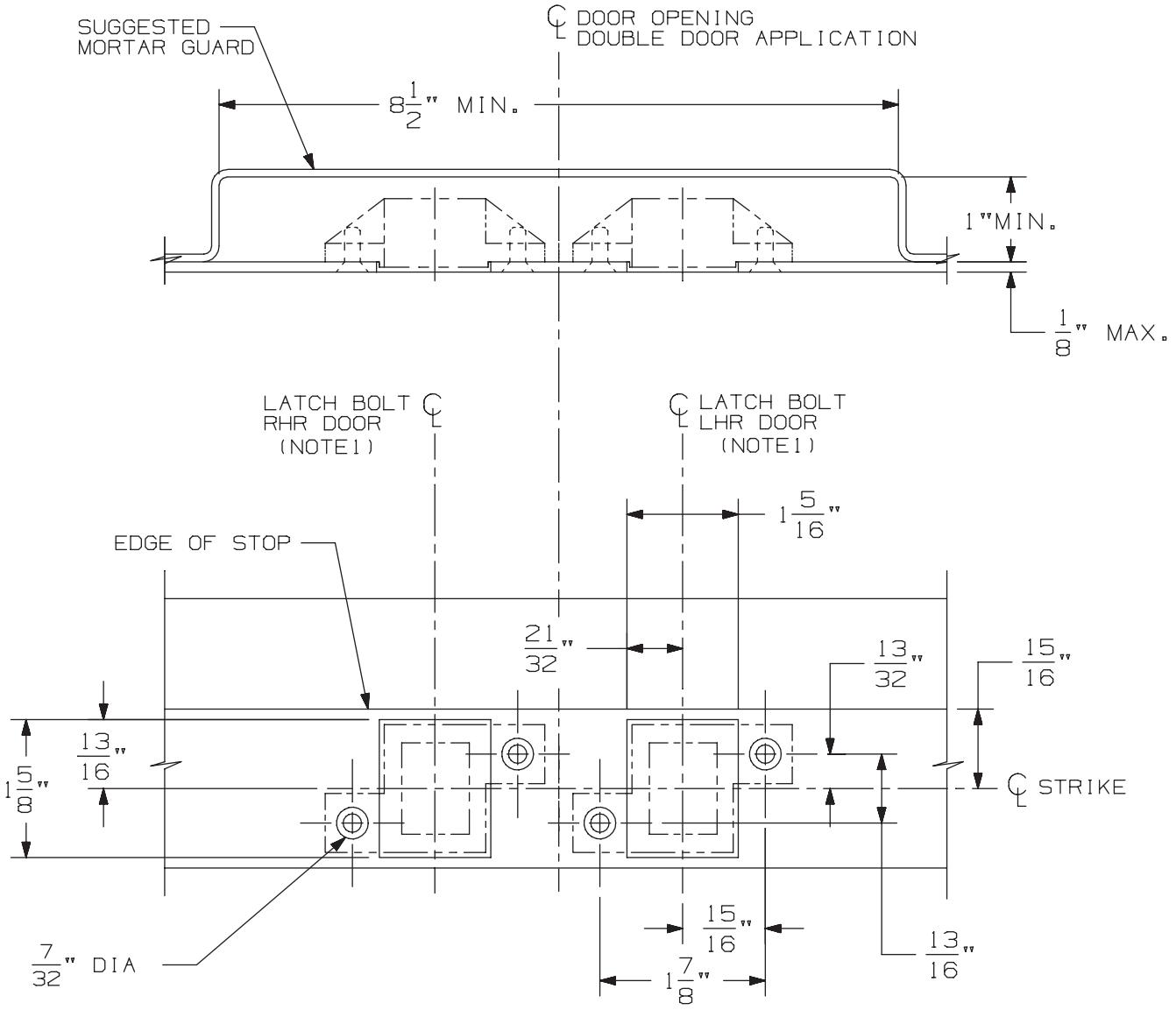

3/8" DIA X 82° C'SINK

IN FRAME
2 HOLES
EACH STRIKE

DOUBLE DOOR APPLICATION SHOWN.
FOR SINGLE DOOR APPLICATION USE
APPROPRIATE HANDING AS SHOWN.

DEVICE APPLICATION SCHEDULE
33/3547 & 33/3547-F SERIES DEVICE
98/99/47 & 98/99/47-F SERIES DEVICE
5547/5547 WDC SERIES
33/3547A & 33/3547A-F SERIES DEVICE
(9) 94/9547 SERIES DEVICE

NOTES: 1. SEE DEVICE TEMPLATE FOR LOCATION OF LATCH BOLT.

2. IF DEVICE IS TO BE MOUNTED ON WOOD DOORS, SEE WOOD DOOR TEMPLATE FOR LATCH BOLT LOCATION.

338 Strike for Hollow Metal Frame Preparation

VON DUPRIN®

NOTES: SEE MASTER SHEET #10001 FOR SUGGESTED REINFORCING

TEMPLATE NUMBER: 30038_a

DATE: 05-23-13

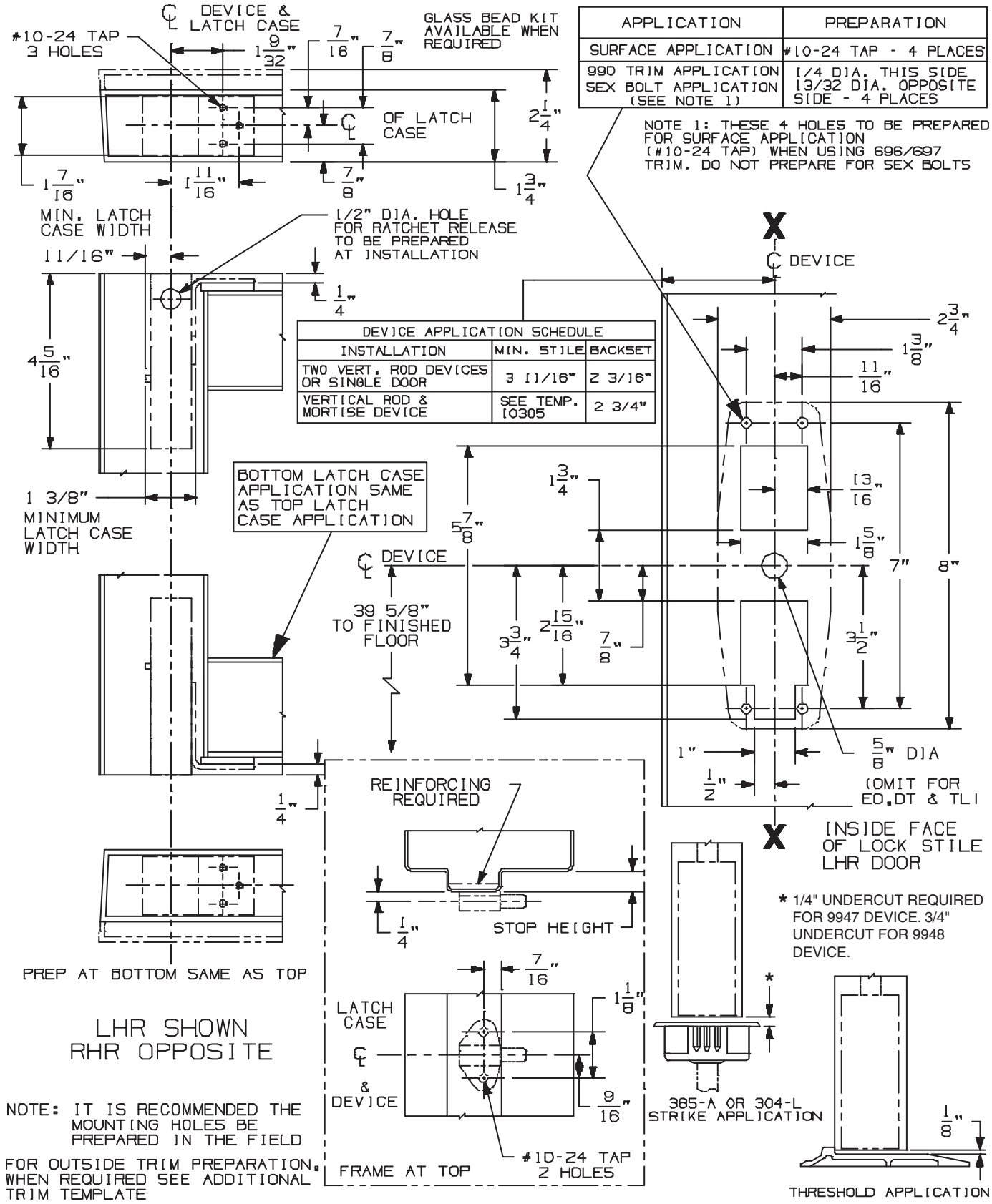

APPLICATION	PREPARATION
SURFACE APPLICATION	#10-24 TAP - 4 PLACES
990 TRIM APPLICATION SEX BOLT APPLICATION (SEE NOTE 1)	1/4 DIA. THIS SIDE 13/32 DIA. OPPOSITE SIDE - 4 PLACES

NOTE 1: THESE 4 HOLES TO BE PREPARED FOR SURFACE APPLICATION (#10-24 TAP) WHEN USING 696/697 TRIM. DO NOT PREPARE FOR SEX BOLTS

DEVICE APPLICATION SCHEDULE		
INSTALLATION	MIN. STILE	BACKSET
TWO VERT. ROD DEVICES OR SINGLE DOOR	3 11/16"	2 3/16"
VERTICAL ROD & MORTISE DEVICE	SEE TEMP. 10305	2 3/4"

98/9947 & 98/9948 Series Concealed Vertical Rod Device

VON DUPRIN®

NOTES: SEE MASTER SHEET #10001 FOR SUGGESTED REINFORCING

TEMPLATE NUMBER: 10320_c

DATE: 05-21-13

990 DT TRIM

NOTES: SEE MASTER SHEET #10001 FOR SUGGESTED REINFORCING

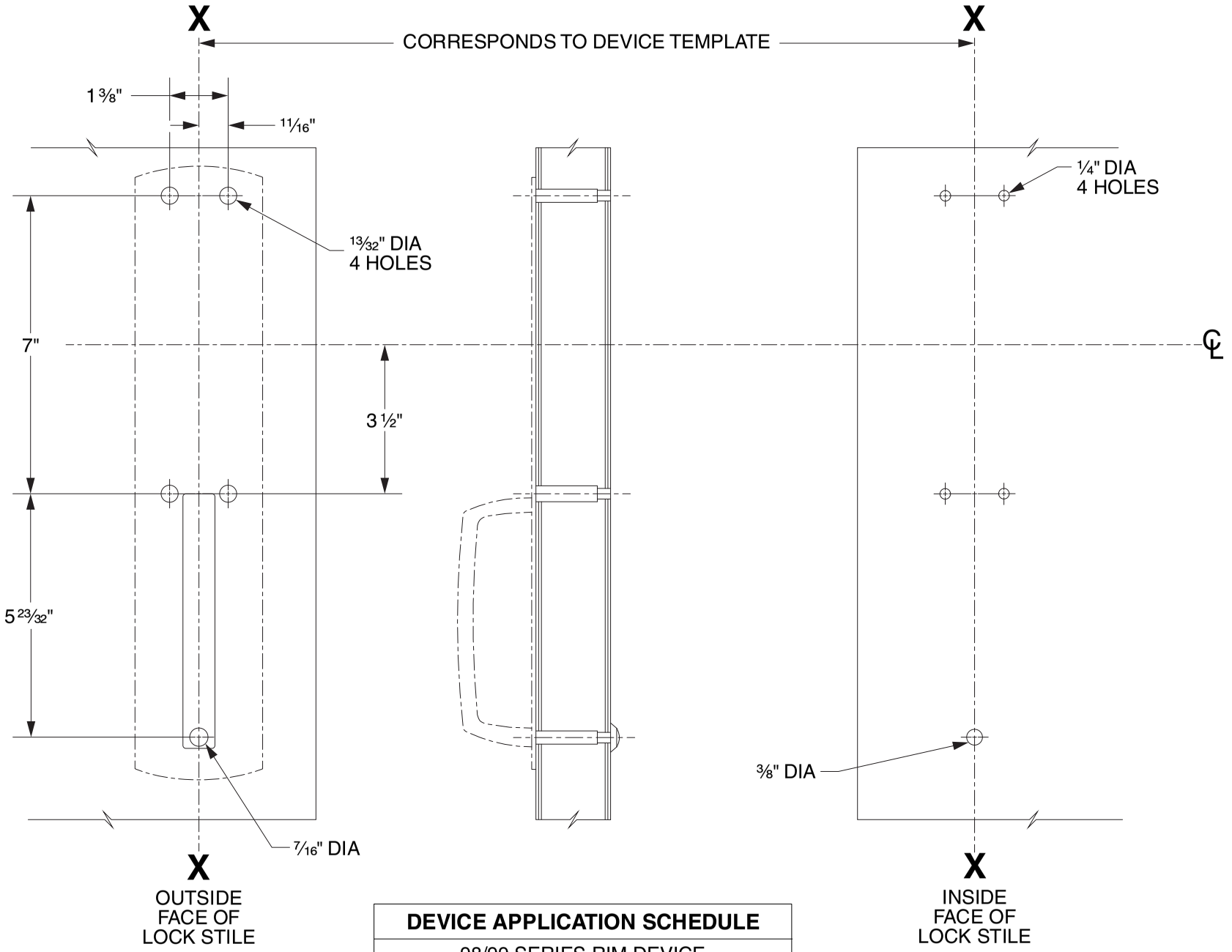

DEVICE APPLICATION SCHEDULE
98/99 SERIES RIM DEVICE
9827/9927 SERIES DEVICE
9847/9947 SERIES DEVICE
9849/9949 SERIES DEVICE
9875/9975 SERIES DEVICE

LHR SHOWN
RHR OPPOSITE

VON DUPRIN®

TEMPLATE NUMBER: 20268_C

DATE: 05-31-13

376-T Control

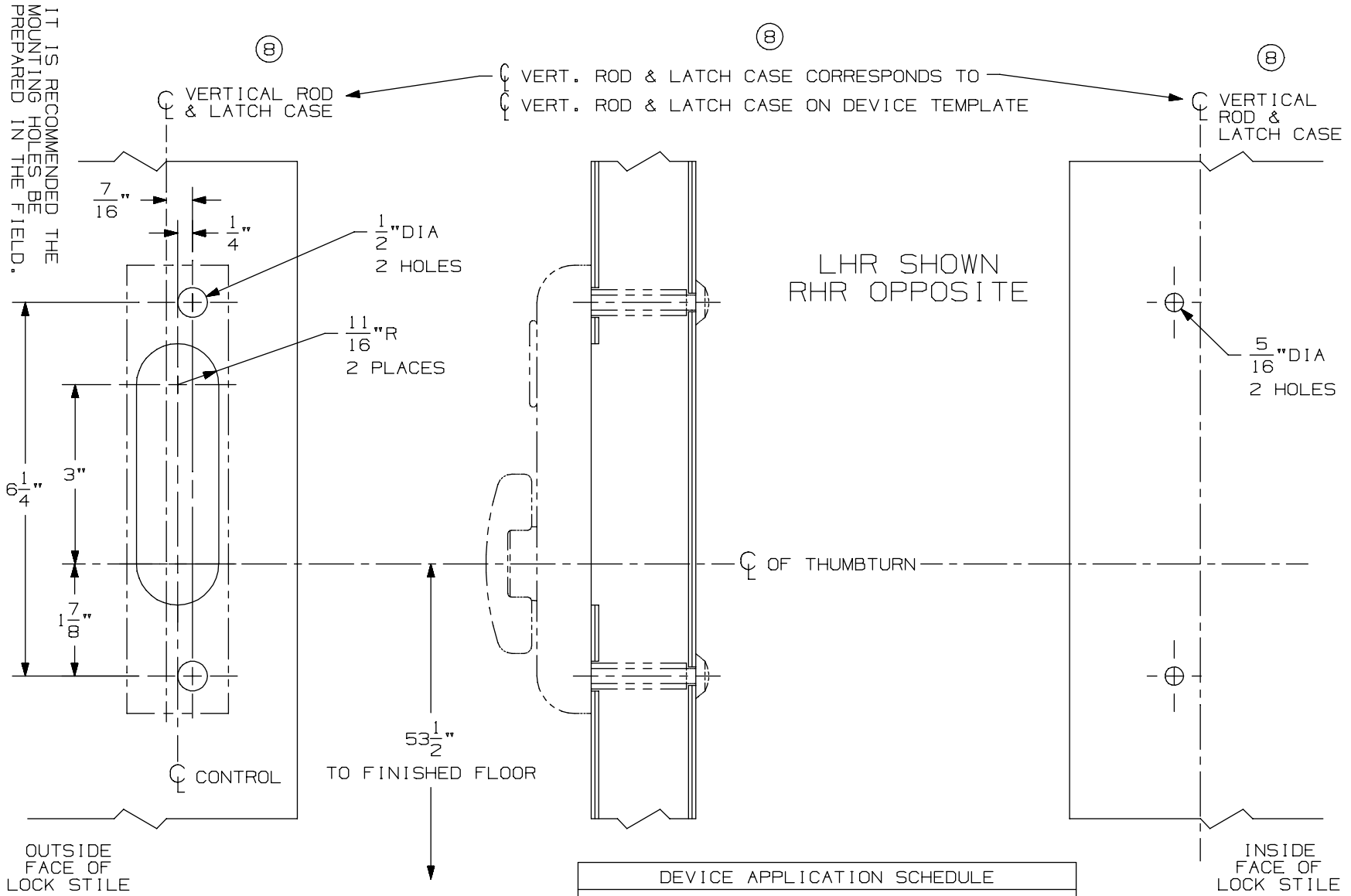

DEVICE APPLICATION SCHEDULE
5547/5547-F VERT. ROD DEVICE
8847-F VERT. ROD DEVICE
* 3347/3547 VERT. ROD DEVICE
3347-F/3547-F VERT. ROD DEVICE
⑧ * 3347A/3547A VERT. ROD DEVICE
⑧ 3347A-F/3547A-F VERT. ROD DEVICE
9847/9947 VERT. ROD DEVICE
9847-F/9947-F VERTICAL ROD DEVICE

⑧ * NOT TO BE USED WITH 1 1/16" LATCH CASE BACKSET ON BULLNOSE EDGE DOORS WITH WEATHERSTRIP CHANNEL.

NOTES: SEE MASTER SHEET #10001 FOR SUGGESTED REINFORCING

TEMPLATE NUMBER: 40114_a

DATE: 05-28-13

VON DUPRIN®

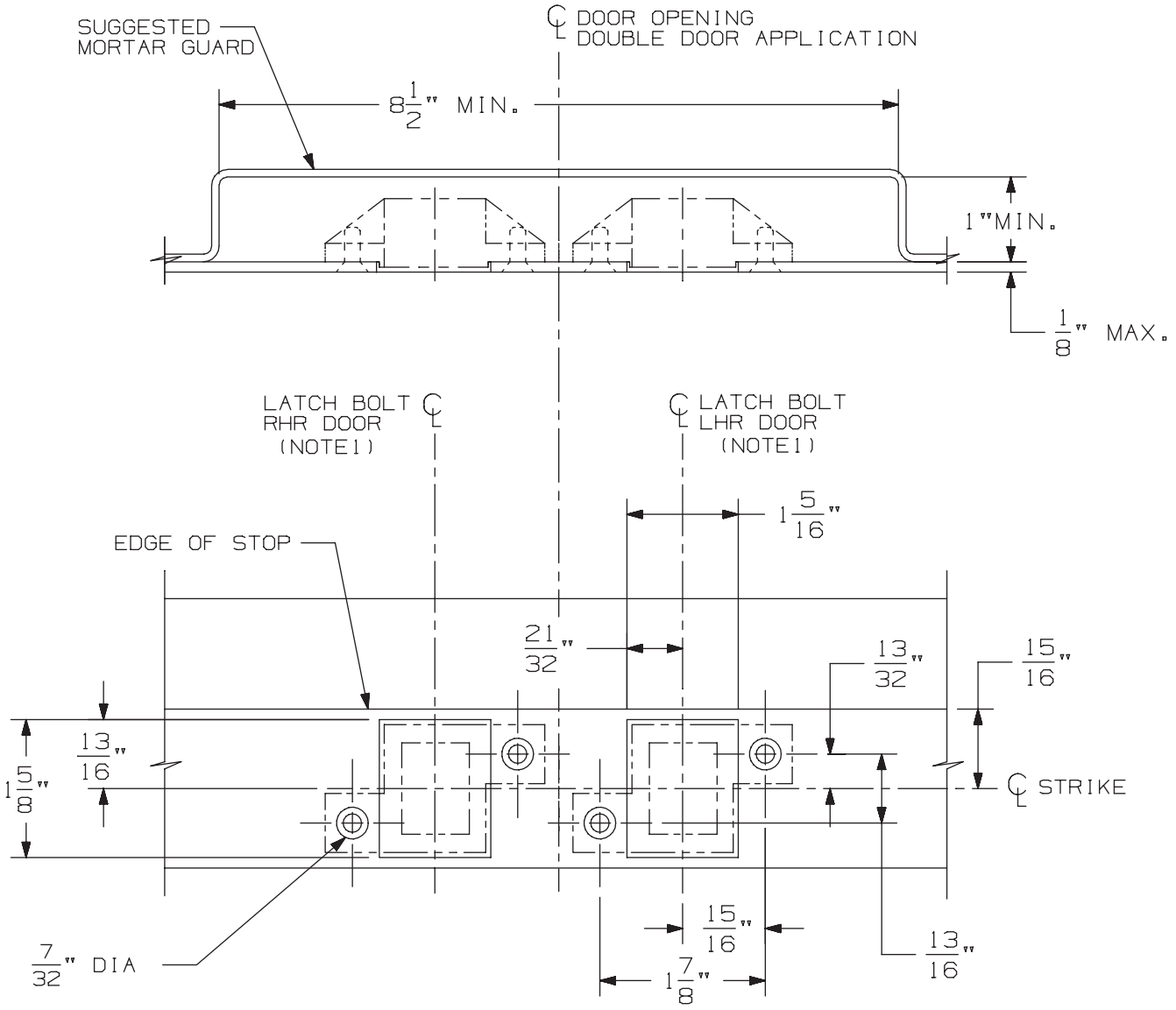

3/8" DIA X 82° C'SINK

IN FRAME
2 HOLES
EACH STRIKE

DOUBLE DOOR APPLICATION SHOWN.
FOR SINGLE DOOR APPLICATION USE
APPROPRIATE HANDING AS SHOWN.

DEVICE APPLICATION SCHEDULE
33/3547 & 33/3547-F SERIES DEVICE
98/99/47 & 98/99/47-F SERIES DEVICE
5547/5547 WDC SERIES
33/3547A & 33/3547A-F SERIES DEVICE
(9) 94/9547 SERIES DEVICE

NOTES: 1. SEE DEVICE TEMPLATE FOR LOCATION OF LATCH BOLT.

2. IF DEVICE IS TO BE MOUNTED ON WOOD DOORS, SEE WOOD DOOR TEMPLATE FOR LATCH BOLT LOCATION.

338 Strike for Hollow Metal Frame Preparation

VON DUPRIN®

NOTES: SEE MASTER SHEET #10001 FOR SUGGESTED REINFORCING

TEMPLATE NUMBER: 30038_a

DATE: 05-23-13

98 / 99 Series Exit Devices - 9847-F/ 9947-F/ 9848-F/9948-F Concealed Vertical Rod Fire (Standard, EL, LX, RX and SS)

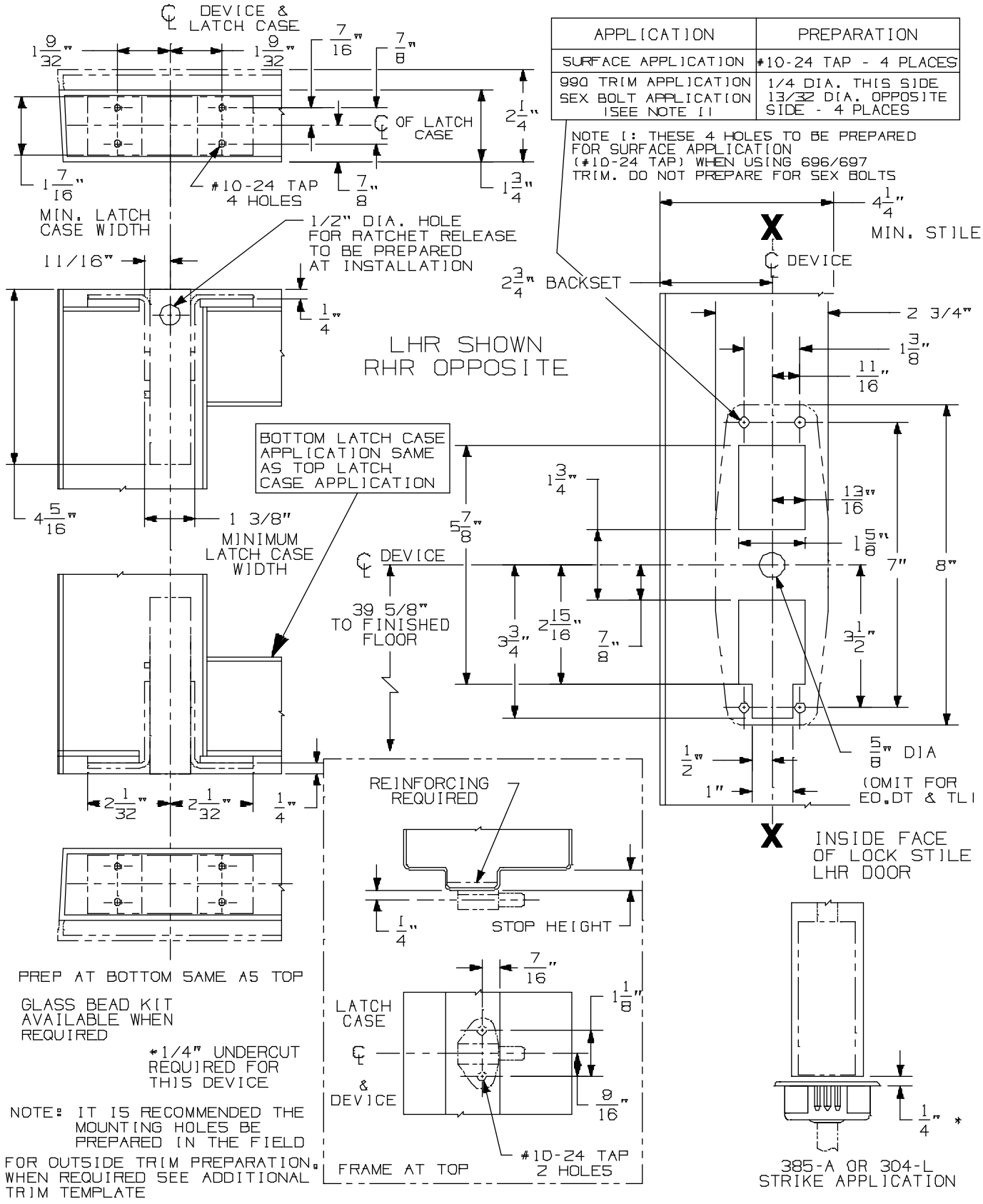

APPLICATION	PREPARATION
SURFACE APPLICATION	#10-24 TAP - 4 PLACES
990 TRIM APPLICATION SEX BOLT APPLICATION (SEE NOTE 1)	1/4 DIA. THIS SIDE 13/32 DIA. OPPOSITE SIDE - 4 PLACES

98/9947-F & 98/9948-F Series Concealed Vertical Rod Device

VON DUPRIN®

NOTES: SEE MASTER SHEET #10001 FOR SUGGESTED REINFORCING

TEMPLATE NUMBER: 10319_a

DATE: 05-21-13

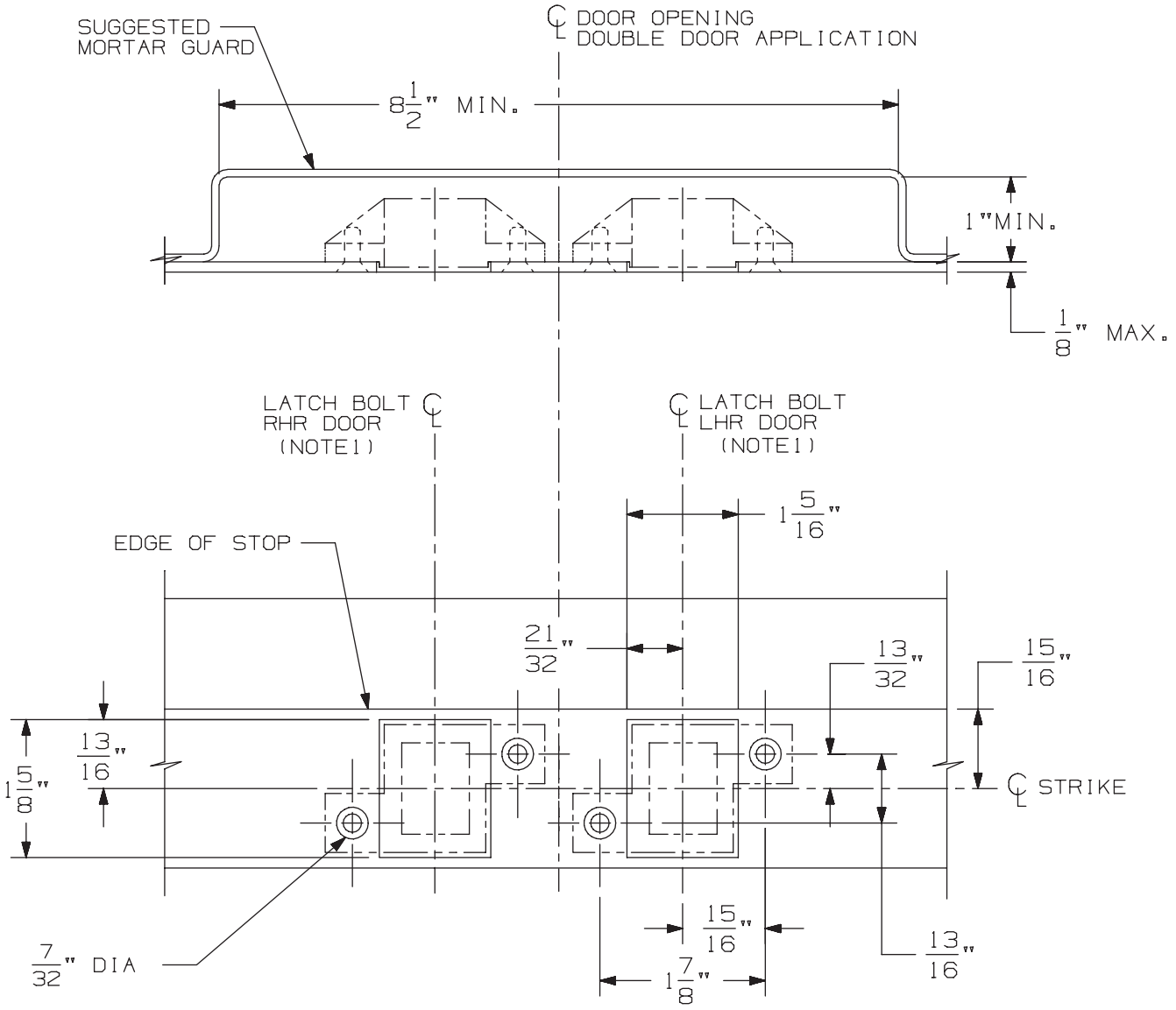

3/8" DIA X 82° C'SINK

IN FRAME
2 HOLES
EACH STRIKE

DOUBLE DOOR APPLICATION SHOWN.
FOR SINGLE DOOR APPLICATION USE
APPROPRIATE HANDING AS SHOWN.

DEVICE APPLICATION SCHEDULE
33/3547 & 33/3547-F SERIES DEVICE
98/99/47 & 98/99/47-F SERIES DEVICE
5547/5547 WDC SERIES
33/3547A & 33/3547A-F SERIES DEVICE
(9) 94/9547 SERIES DEVICE

NOTES: 1. SEE DEVICE TEMPLATE FOR LOCATION OF LATCH BOLT.

2. IF DEVICE IS TO BE MOUNTED ON WOOD DOORS, SEE WOOD DOOR TEMPLATE FOR LATCH BOLT LOCATION.

338 Strike for Hollow Metal Frame Preparation

VON DUPRIN®

NOTES: SEE MASTER SHEET #10001 FOR SUGGESTED REINFORCING

TEMPLATE NUMBER: 30038_a

DATE: 05-23-13

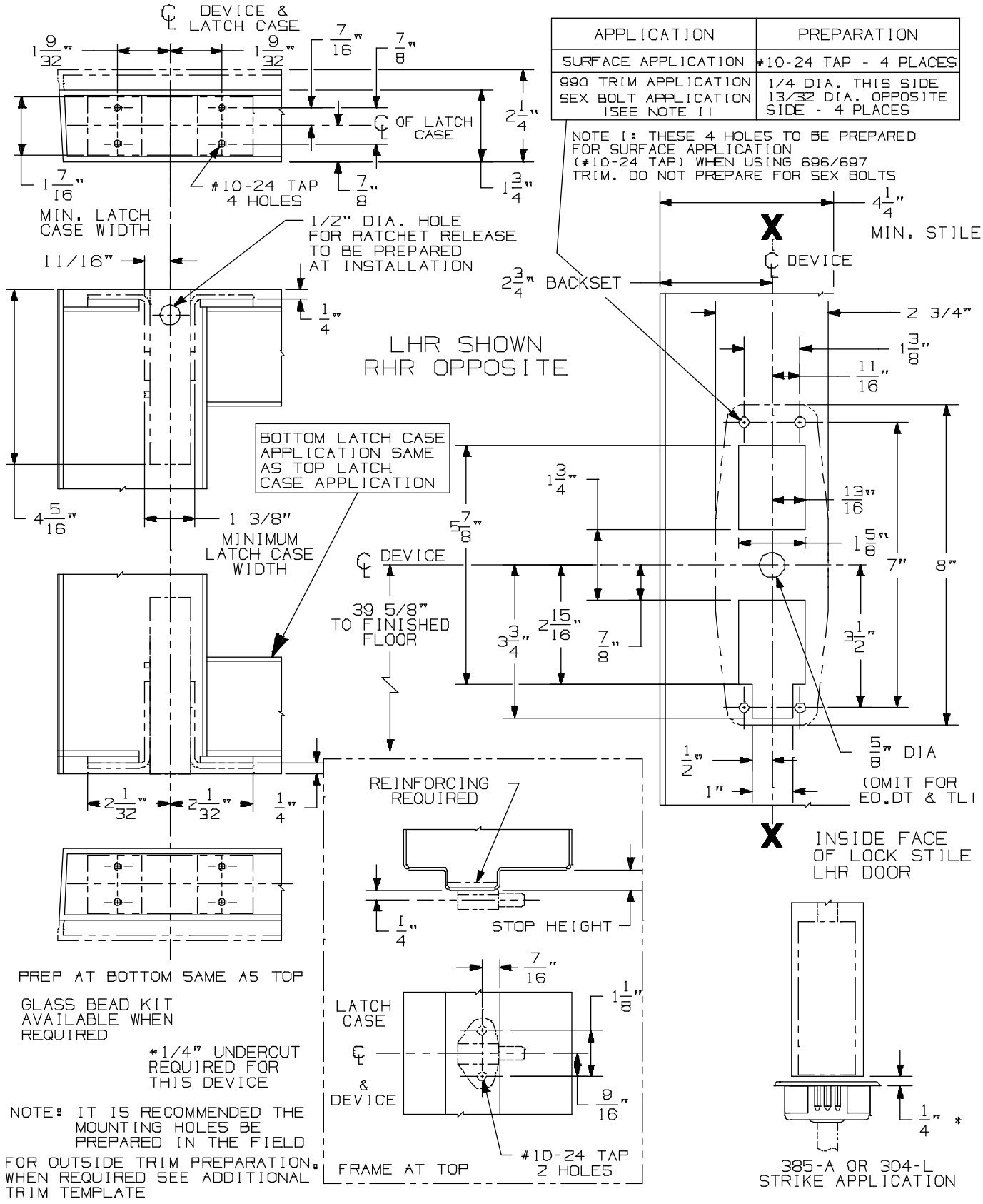

APPLICATION	PREPARATION
SURFACE APPLICATION	#10-24 TAP - 4 PLACES
990 TRIM APPLICATION SEX BOLT APPLICATION (SEE NOTE 1)	1/4 DIA. THIS SIDE 13/32 DIA. OPPOSITE SIDE - 4 PLACES

98/9947-F & 98/9948-F Series Concealed Vertical Rod Device

VON DUPRIN®

NOTES: SEE MASTER SHEET #10001 FOR SUGGESTED REINFORCING

TEMPLATE NUMBER: 10319_a

DATE: 05-21-13

990 NL TRIM

NOTES: SEE MASTER SHEET #10001 FOR SUGGESTED REINFORCING

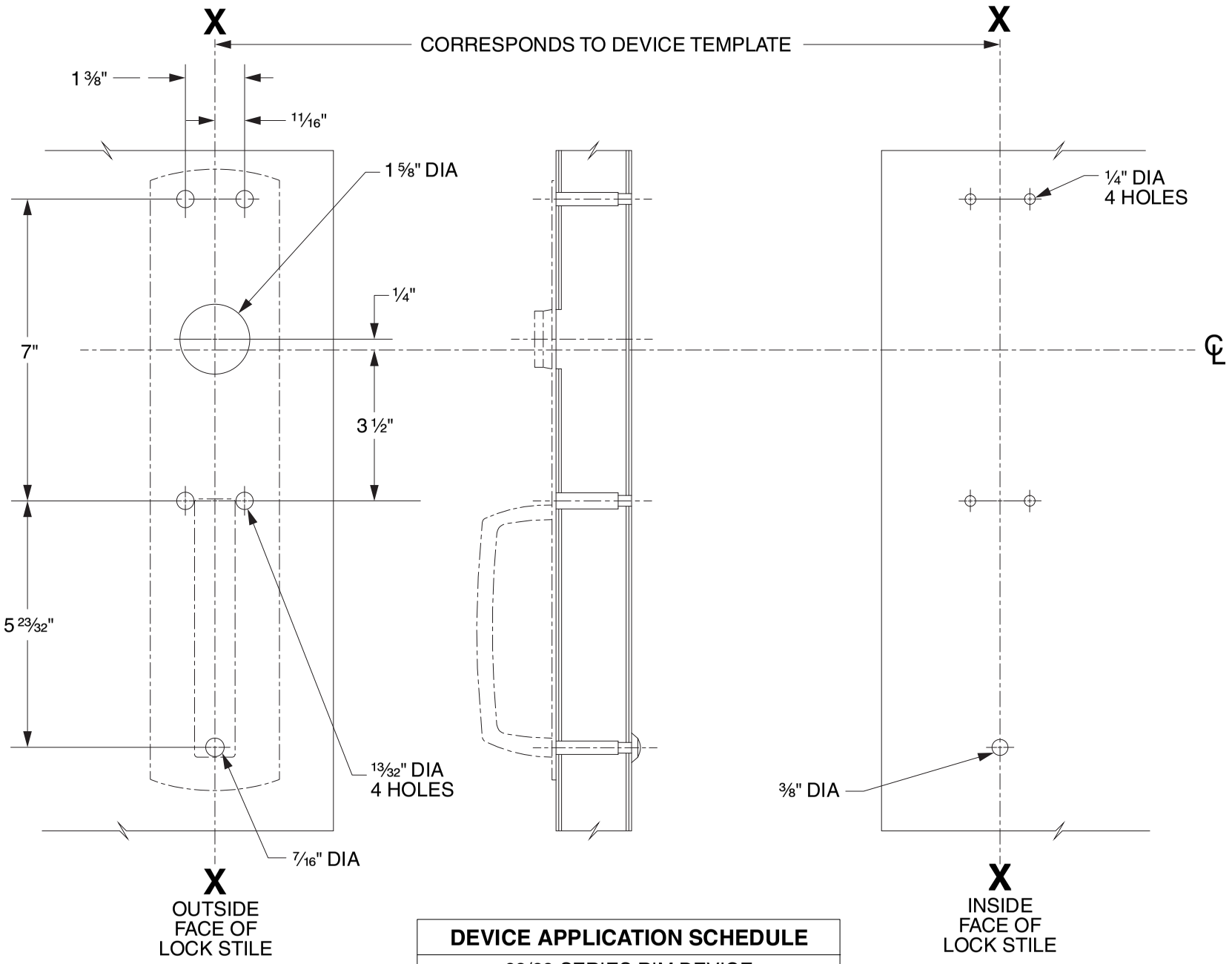

DEVICE APPLICATION SCHEDULE
98/99 SERIES RIM DEVICE
9827/9927 SERIES DEVICE
9847/9947 SERIES DEVICE
9849/9949 SERIES DEVICE

LHR SHOWN
RHR OPPOSITE

VON DUPRIN®

TEMPLATE NUMBER: 20267_C

DATE: 05-31-13

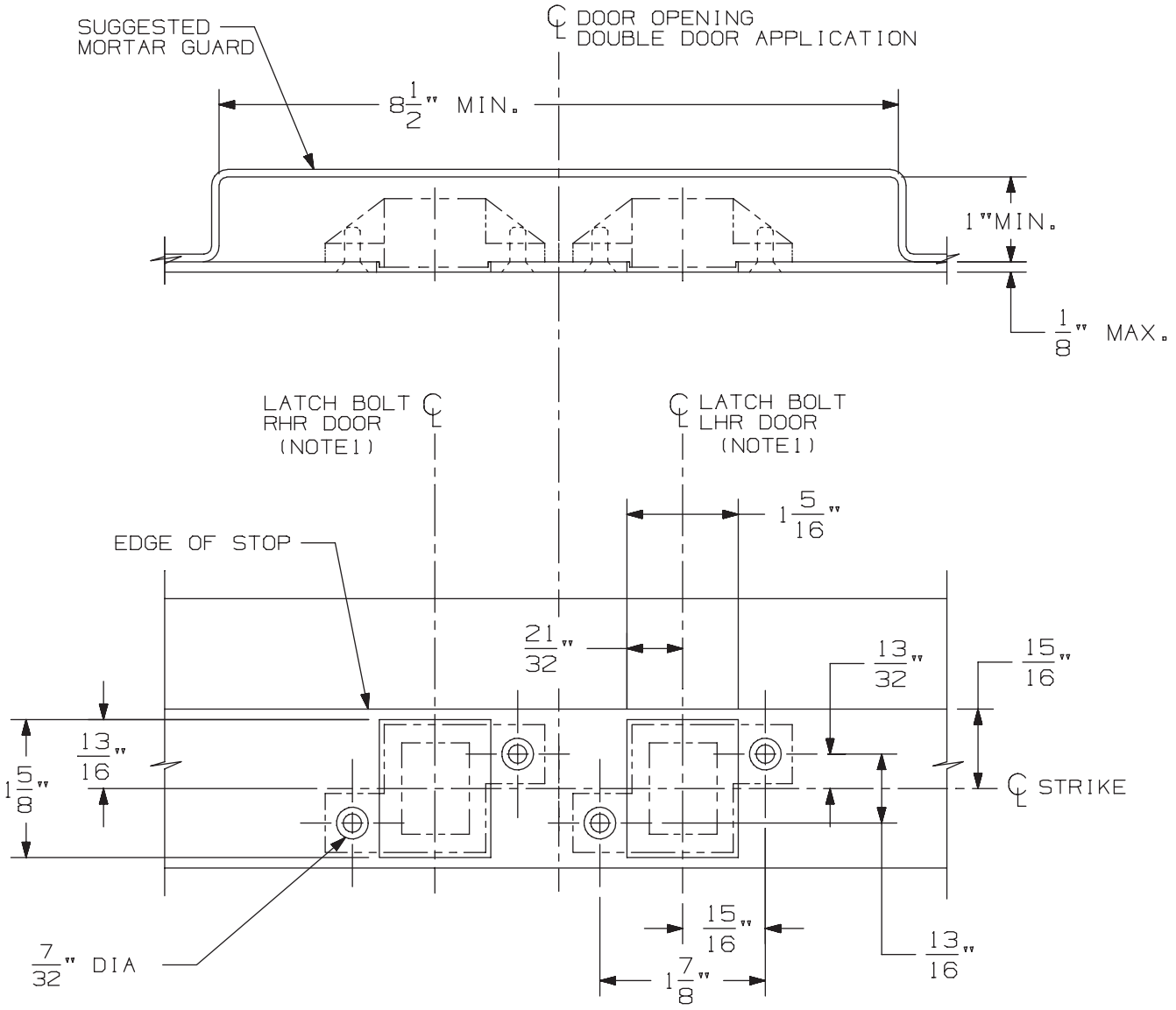

3/8" DIA X 82° C'SINK

IN FRAME
2 HOLES
EACH STRIKE

DOUBLE DOOR APPLICATION SHOWN.
FOR SINGLE DOOR APPLICATION USE
APPROPRIATE HANDING AS SHOWN.

DEVICE APPLICATION SCHEDULE
33/3547 & 33/3547-F SERIES DEVICE
98/99/47 & 98/99/47-F SERIES DEVICE
5547/5547 WDC SERIES
33/3547A & 33/3547A-F SERIES DEVICE
(9) 94/9547 SERIES DEVICE

NOTES: 1. SEE DEVICE TEMPLATE FOR LOCATION OF LATCH BOLT.

2. IF DEVICE IS TO BE MOUNTED ON WOOD DOORS, SEE WOOD DOOR TEMPLATE FOR LATCH BOLT LOCATION.

338 Strike for Hollow Metal Frame Preparation

VON DUPRIN®

NOTES: SEE MASTER SHEET #10001 FOR SUGGESTED REINFORCING

TEMPLATE NUMBER: 30038_a

DATE: 05-23-13

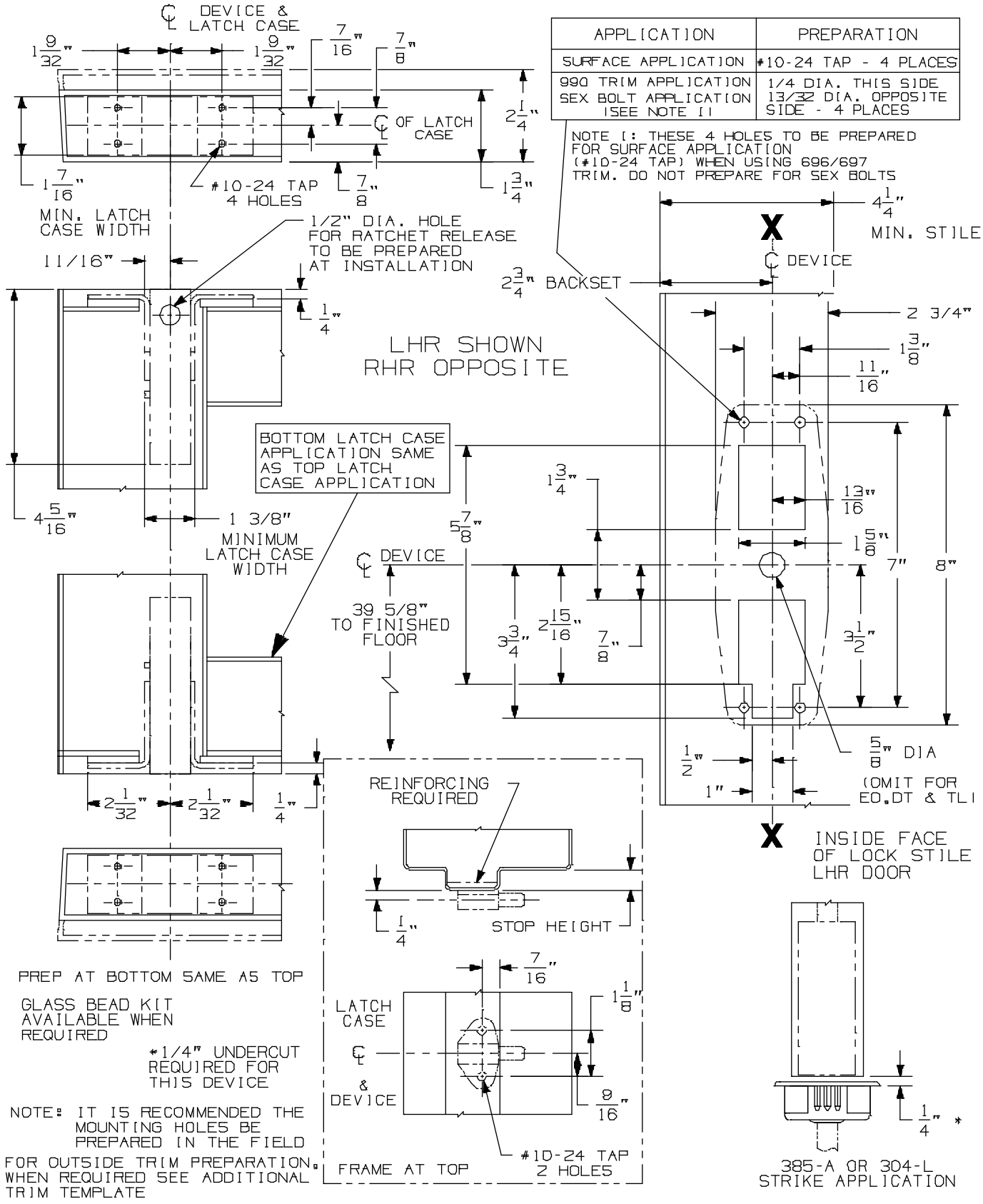

APPLICATION	PREPARATION
SURFACE APPLICATION	#10-24 TAP - 4 PLACES
990 TRIM APPLICATION SEX BOLT APPLICATION (SEE NOTE 1)	1/4 DIA. THIS SIDE 13/32 DIA. OPPOSITE SIDE - 4 PLACES

98/9947-F & 98/9948-F Series Concealed Vertical Rod Device

VON DUPRIN®

NOTES: SEE MASTER SHEET #10001 FOR SUGGESTED REINFORCING

TEMPLATE NUMBER: 10319_a

DATE: 05-21-13

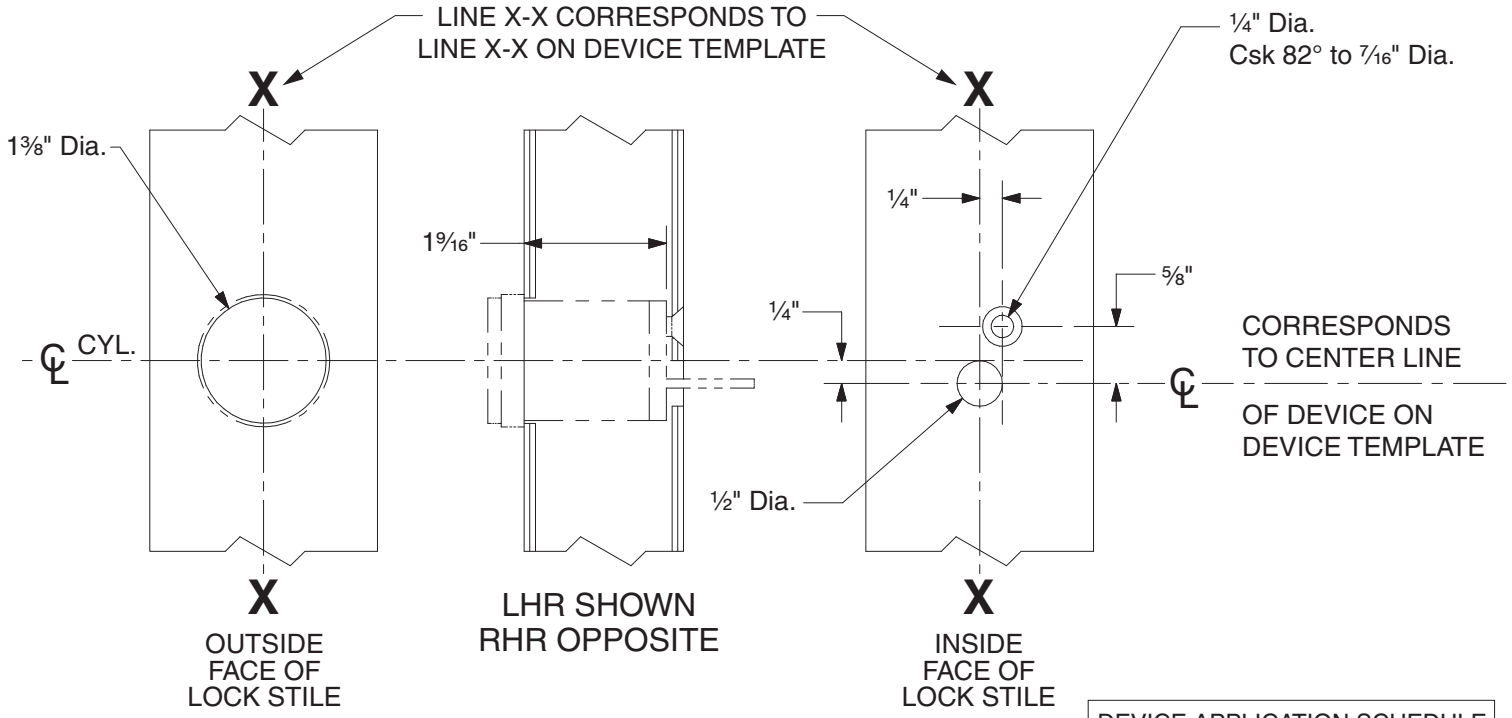

DEVICE APPLICATION SCHEDULE	
98 RIM SERIES	99 RIM SERIES
9827 SERIES	9927 SERIES
9847 SERIES	9947 SERIES
22 RIM SERIES	2227 SERIES

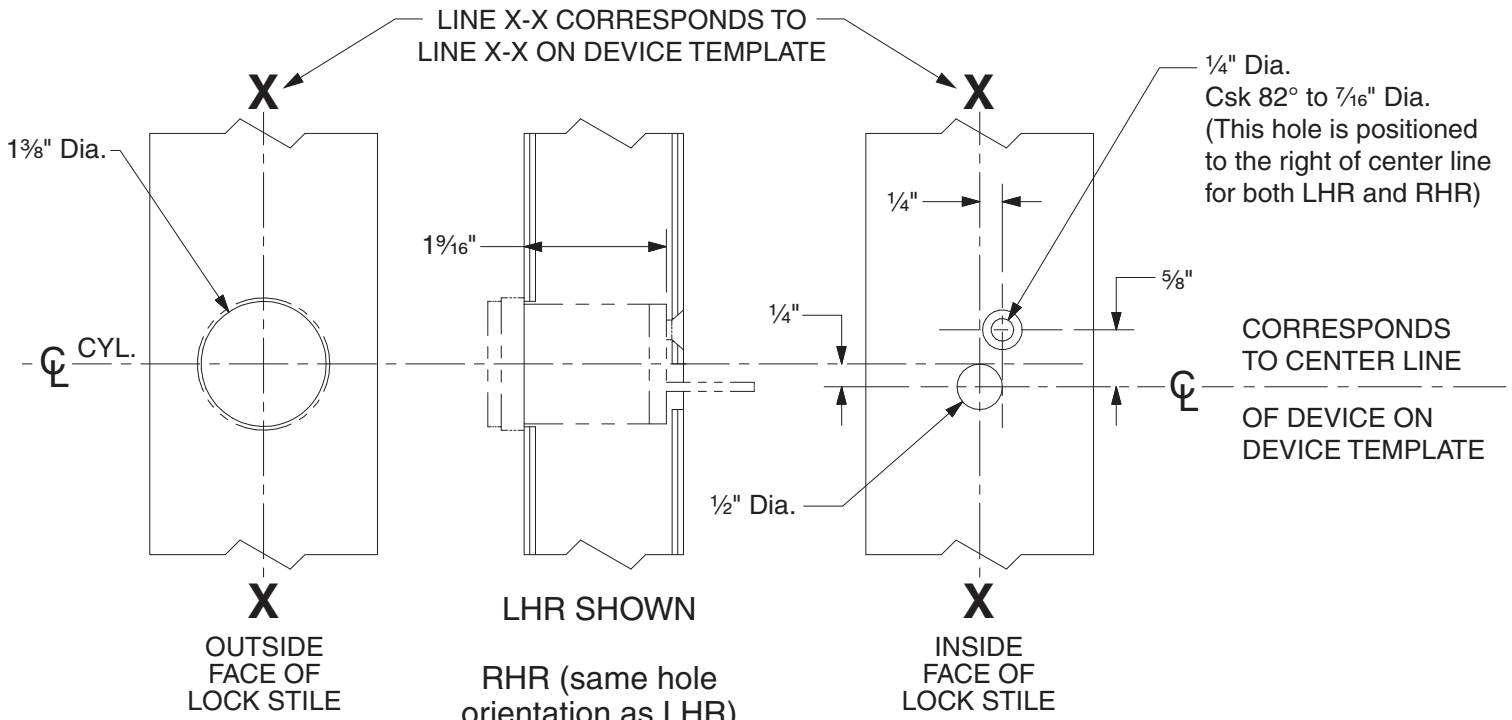

DEVICE APPLICATION SCHEDULE	
9849 SERIES	9949 SERIES

110NL Cylinder Preparation

VON DUPRIN®

NOTES: SEE MASTER SHEET #10001 FOR SUGGESTED REINFORCING

TEMPLATE NUMBER: 40022_c

DATE: 05-28-13

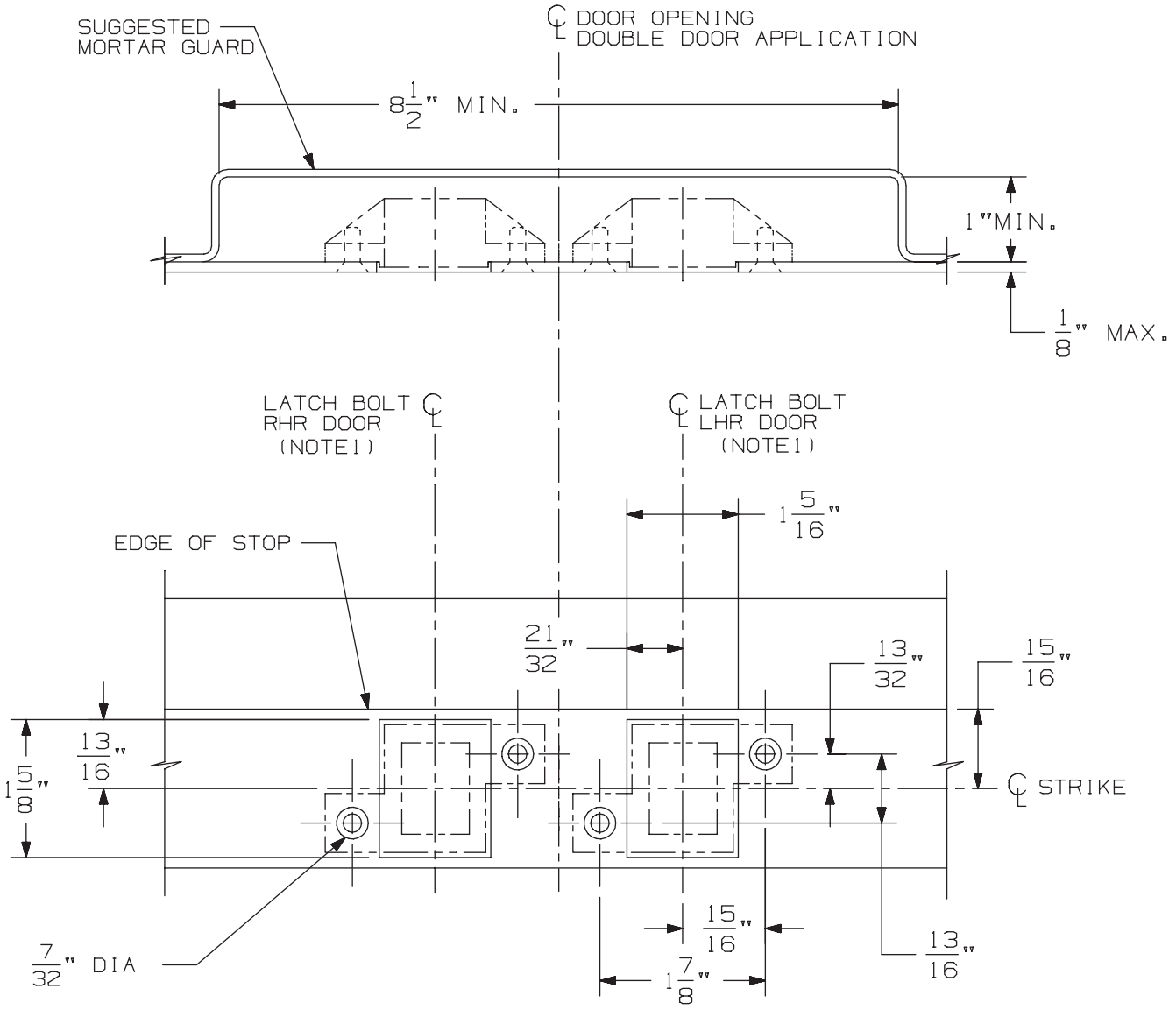

3/8" DIA X 82° C'SINK

IN FRAME
2 HOLES
EACH STRIKE

DOUBLE DOOR APPLICATION SHOWN.
FOR SINGLE DOOR APPLICATION USE
APPROPRIATE HANDING AS SHOWN.

DEVICE APPLICATION SCHEDULE
33/3547 & 33/3547-F SERIES DEVICE
98/99/47 & 98/99/47-F SERIES DEVICE
5547/5547 WDC SERIES
33/3547A & 33/3547A-F SERIES DEVICE
(9) 94/9547 SERIES DEVICE

NOTES: 1. SEE DEVICE TEMPLATE FOR LOCATION OF LATCH BOLT.

2. IF DEVICE IS TO BE MOUNTED ON WOOD DOORS, SEE WOOD DOOR TEMPLATE FOR LATCH BOLT LOCATION.

338 Strike for Hollow Metal Frame Preparation

VON DUPRIN®

NOTES: SEE MASTER SHEET #10001 FOR SUGGESTED REINFORCING

TEMPLATE NUMBER: 30038_a

DATE: 05-23-13

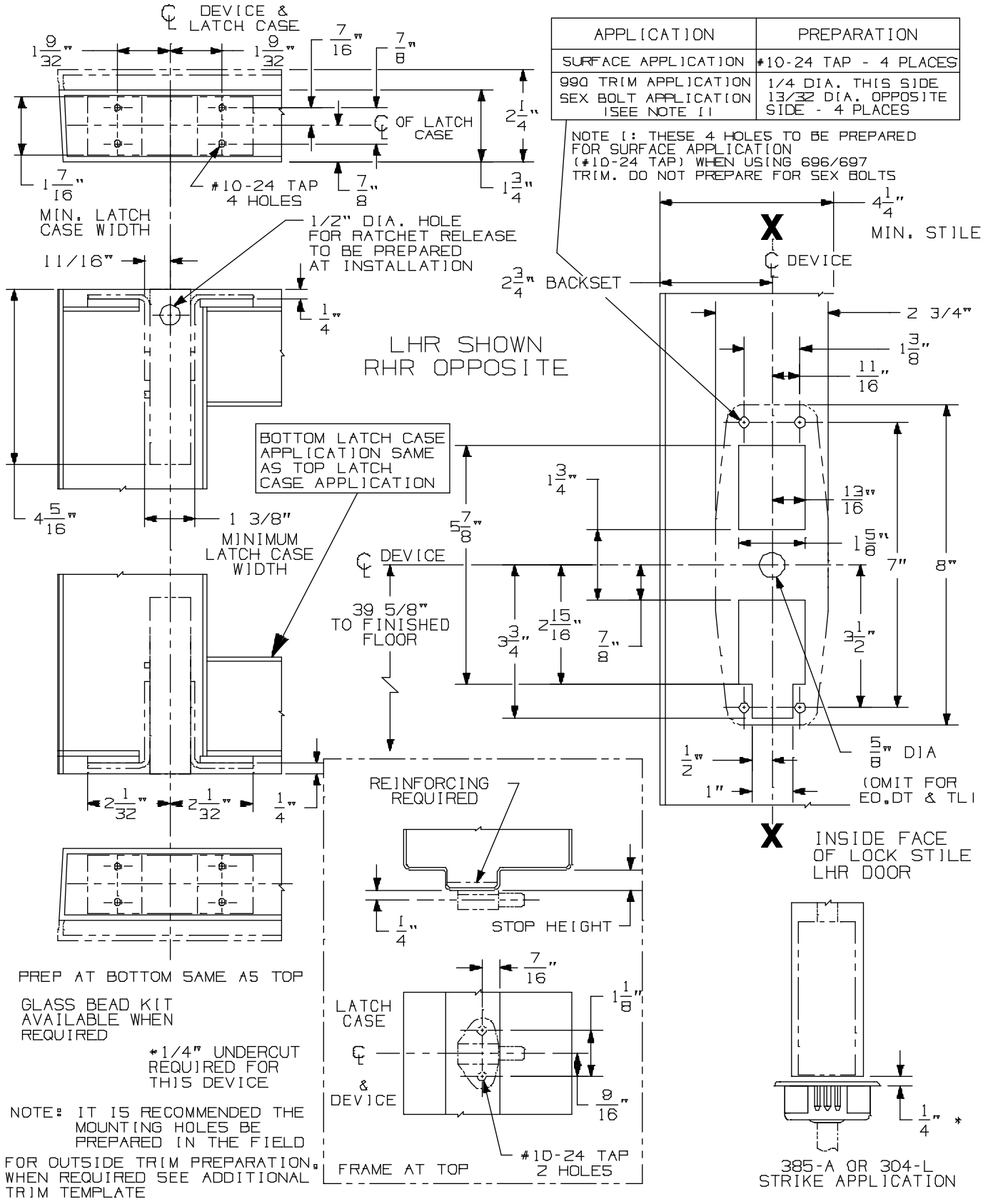

APPLICATION	PREPARATION
SURFACE APPLICATION	#10-24 TAP - 4 PLACES
990 TRIM APPLICATION SEX BOLT APPLICATION (SEE NOTE 1)	1/4 DIA. THIS SIDE 13/32 DIA. OPPOSITE SIDE - 4 PLACES

98/9947-F & 98/9948-F Series Concealed Vertical Rod Device

VON DUPRIN®

NOTES: SEE MASTER SHEET #10001 FOR SUGGESTED REINFORCING

TEMPLATE NUMBER: 10319_a

DATE: 05-21-13

991 K & 992 L Trim

NOTES: SEE MASTER SHEET #10001 FOR SUGGESTED REINFORCING

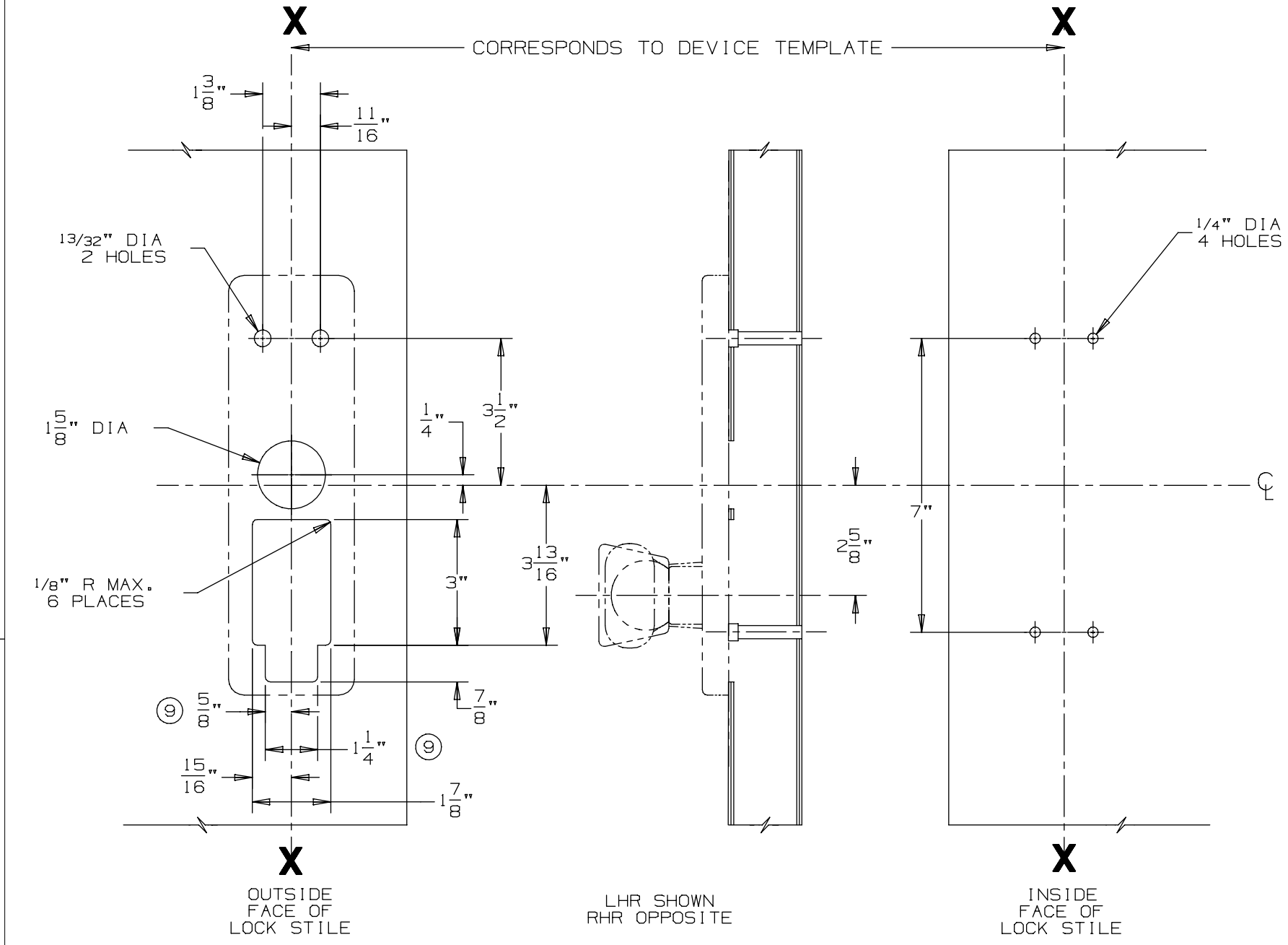

DEVICE APPLICATION SCHEDULE
98/99 SERIES RIM DEVICE
9827/9927 SERIES DEVICE
9847/9947 SERIES DEVICE

VON DUPRIN®

TEMPLATE NUMBER: 20272_a

DATE: 05-23-13

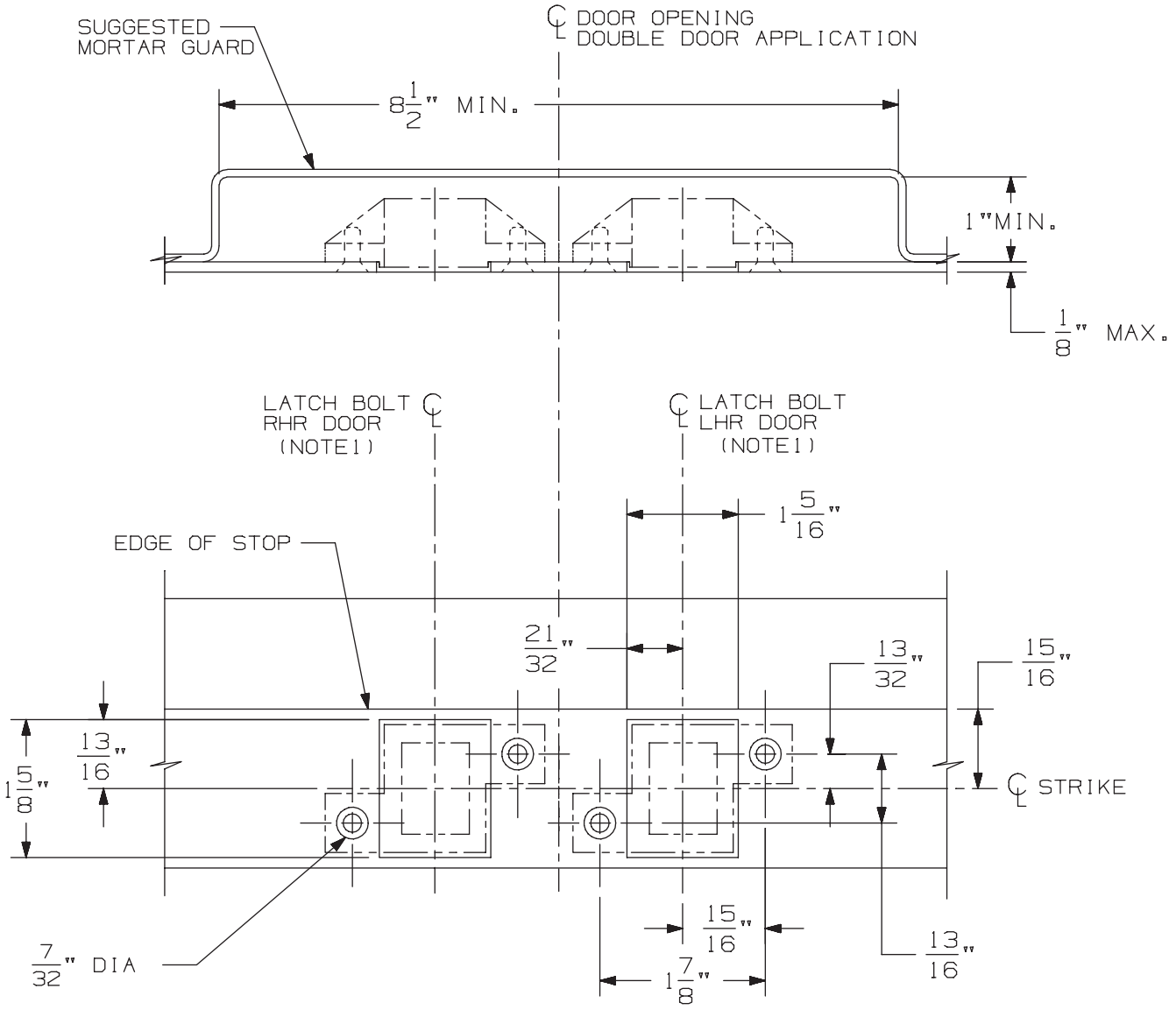

3/8" DIA X 82° C'SINK

IN FRAME
2 HOLES
EACH STRIKE

DOUBLE DOOR APPLICATION SHOWN.
FOR SINGLE DOOR APPLICATION USE
APPROPRIATE HANDING AS SHOWN.

DEVICE APPLICATION SCHEDULE
33/3547 & 33/3547-F SERIES DEVICE
98/99/47 & 98/99/47-F SERIES DEVICE
5547/5547 WDC SERIES
33/3547A & 33/3547A-F SERIES DEVICE
(9) 94/9547 SERIES DEVICE

NOTES: 1. SEE DEVICE TEMPLATE FOR LOCATION OF LATCH BOLT.

2. IF DEVICE IS TO BE MOUNTED ON WOOD DOORS, SEE WOOD DOOR TEMPLATE FOR LATCH BOLT LOCATION.

338 Strike for Hollow Metal Frame Preparation

VON DUPRIN®

NOTES: SEE MASTER SHEET #10001 FOR SUGGESTED REINFORCING

TEMPLATE NUMBER: 30038_a

DATE: 05-23-13

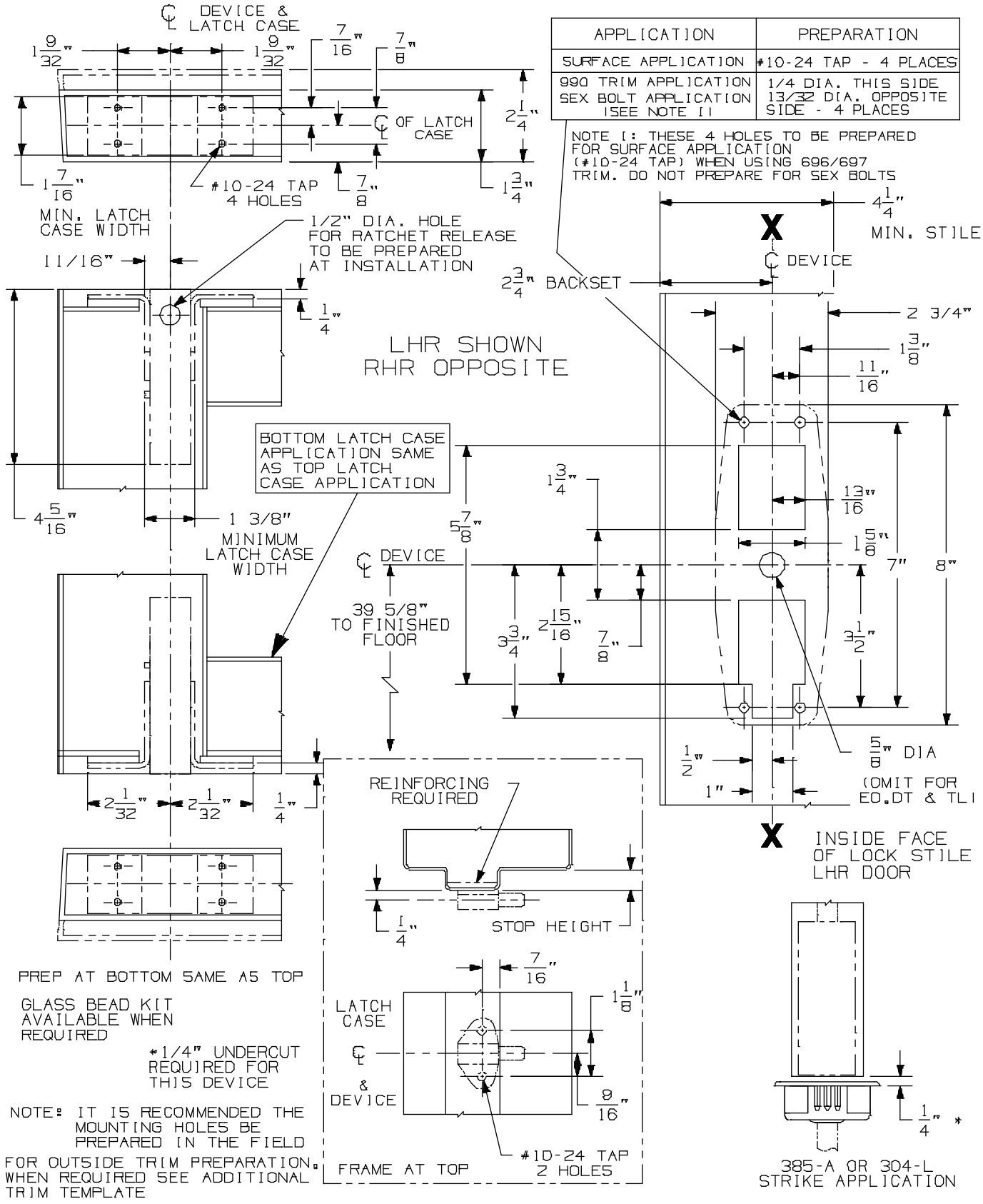

APPLICATION	PREPARATION
SURFACE APPLICATION	#10-24 TAP - 4 PLACES
990 TRIM APPLICATION SEX BOLT APPLICATION (SEE NOTE 1)	1/4 DIA. THIS SIDE 13/32 DIA. OPPOSITE SIDE - 4 PLACES

98/9947-F & 98/9948-F Series Concealed Vertical Rod Device

VON DUPRIN®

NOTES: SEE MASTER SHEET #10001 FOR SUGGESTED REINFORCING

TEMPLATE NUMBER: 10319_a

DATE: 05-21-13

DEVICE APPLICATION SCHEDULE	
98 RIM SERIES	99 RIM SERIES
9827 SERIES	9927 SERIES
9847 SERIES	9947 SERIES
9849 SERIES	9949 SERIES

996L, E996L, 996L-BE, E996L-BE 996K, 996K-BE R/V SERIES
TRIM METAL DOOR APPLICATION

VON DUPRIN®

NOTES: SEE MASTER SHEET #10001 FOR SUGGESTED REINFORCING

TEMPLATE NUMBER: 20003_e

DATE: 10-30-14

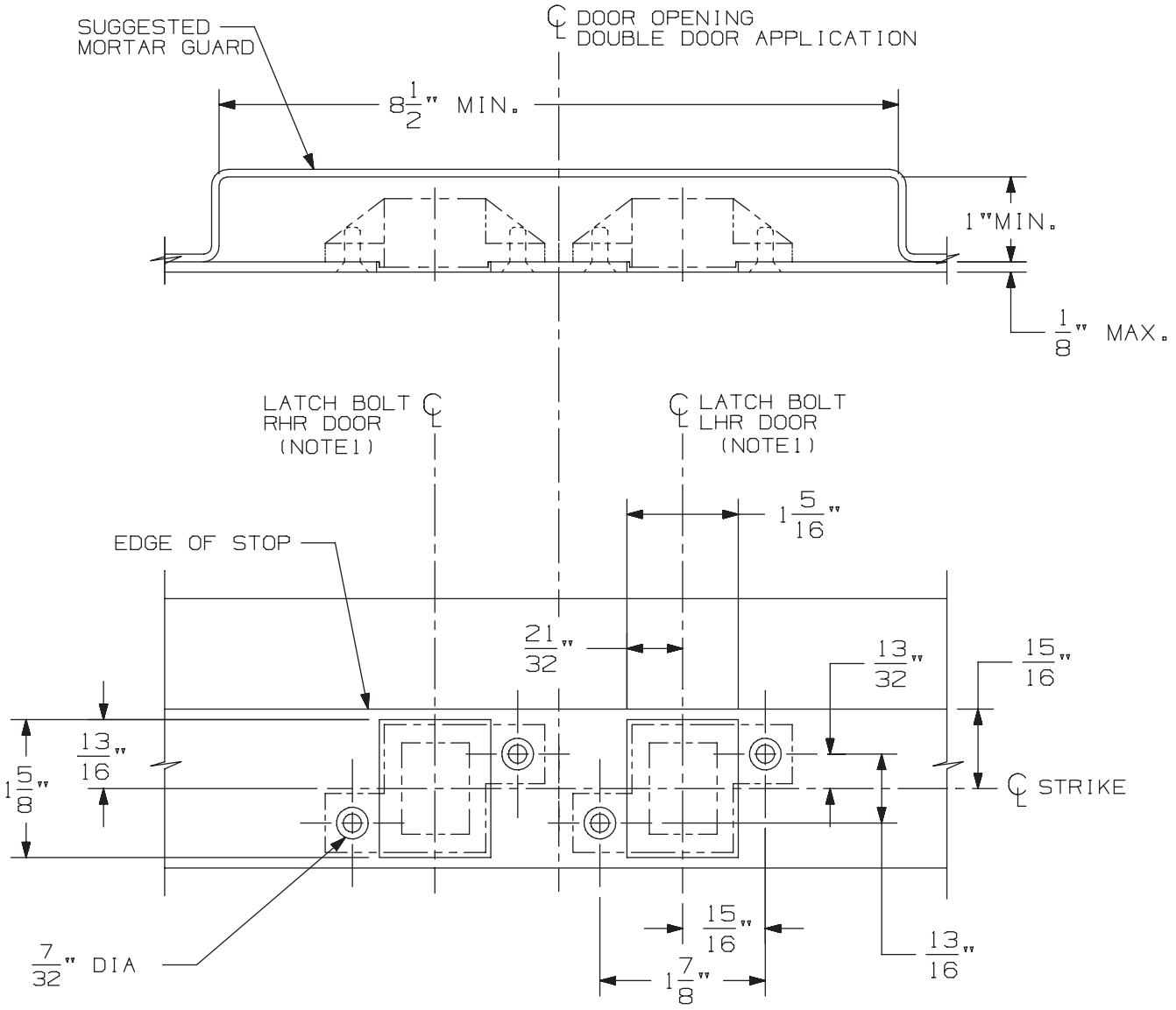

3/8" DIA X 82° C'SINK

IN FRAME
2 HOLES
EACH STRIKE

DOUBLE DOOR APPLICATION SHOWN.
FOR SINGLE DOOR APPLICATION USE
APPROPRIATE HANDING AS SHOWN.

DEVICE APPLICATION SCHEDULE
33/3547 & 33/3547-F SERIES DEVICE
98/99/47 & 98/99/47-F SERIES DEVICE
5547/5547 WDC SERIES
33/3547A & 33/3547A-F SERIES DEVICE
(9) 94/9547 SERIES DEVICE

NOTES: 1. SEE DEVICE TEMPLATE FOR LOCATION OF LATCH BOLT.

2. IF DEVICE IS TO BE MOUNTED ON WOOD DOORS, SEE WOOD DOOR TEMPLATE FOR LATCH BOLT LOCATION.

338 Strike for Hollow Metal Frame Preparation

VON DUPRIN®

NOTES: SEE MASTER SHEET #10001 FOR SUGGESTED REINFORCING

TEMPLATE NUMBER: 30038_a

DATE: 05-23-13

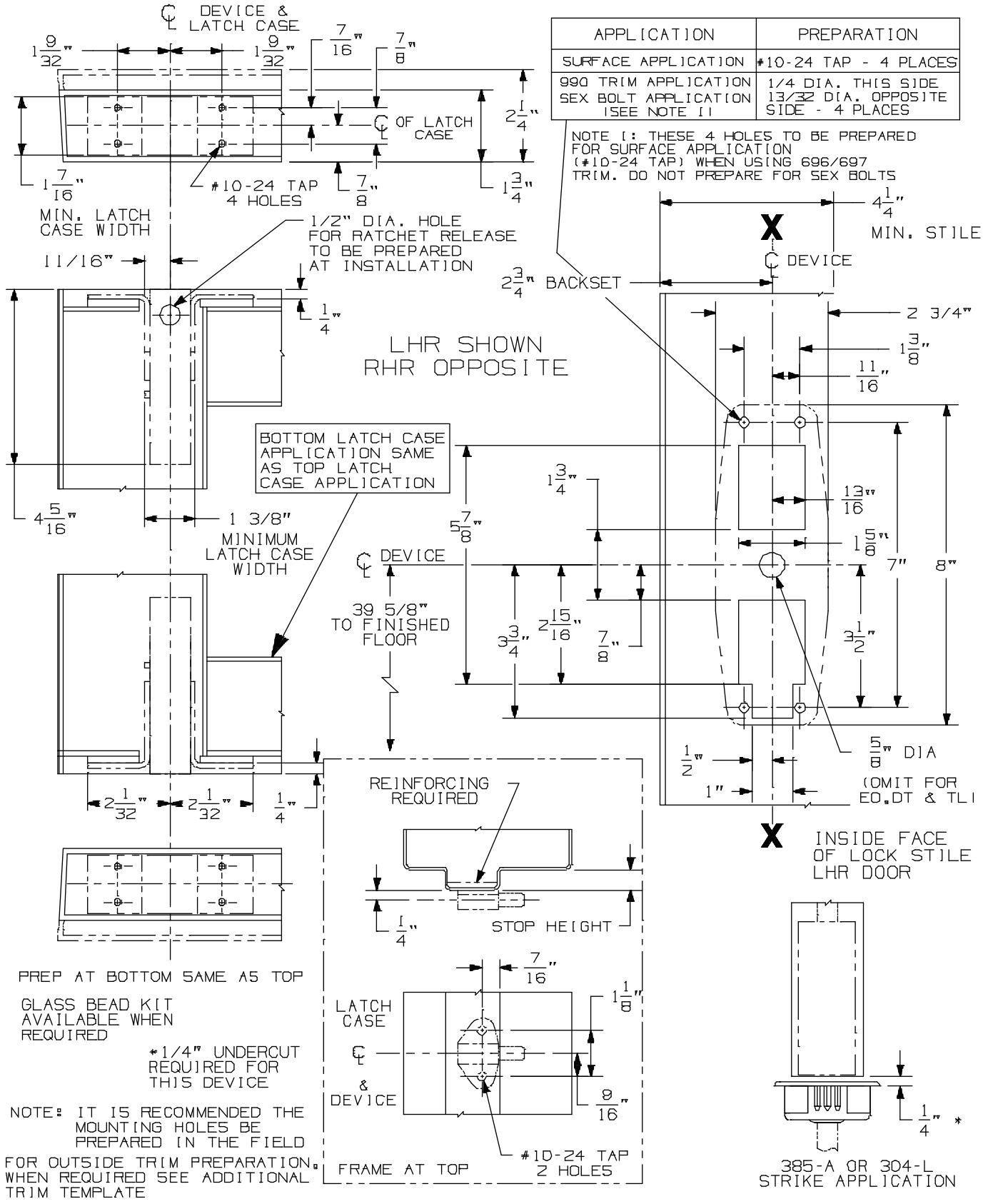

APPLICATION	PREPARATION
SURFACE APPLICATION	#10-24 TAP - 4 PLACES
990 TRIM APPLICATION SEX BOLT APPLICATION (SEE NOTE 1)	1/4 DIA. THIS SIDE 13/32 DIA. OPPOSITE SIDE - 4 PLACES

98/9947-F & 98/9948-F Series Concealed Vertical Rod Device

VON DUPRIN®

NOTES: SEE MASTER SHEET #10001 FOR SUGGESTED REINFORCING

TEMPLATE NUMBER: 10319_a

DATE: 05-21-13

990 TP & 990 TP-BE TRIM

NOTES: SEE MASTER SHEET #10001 FOR SUGGESTED REINFORCING

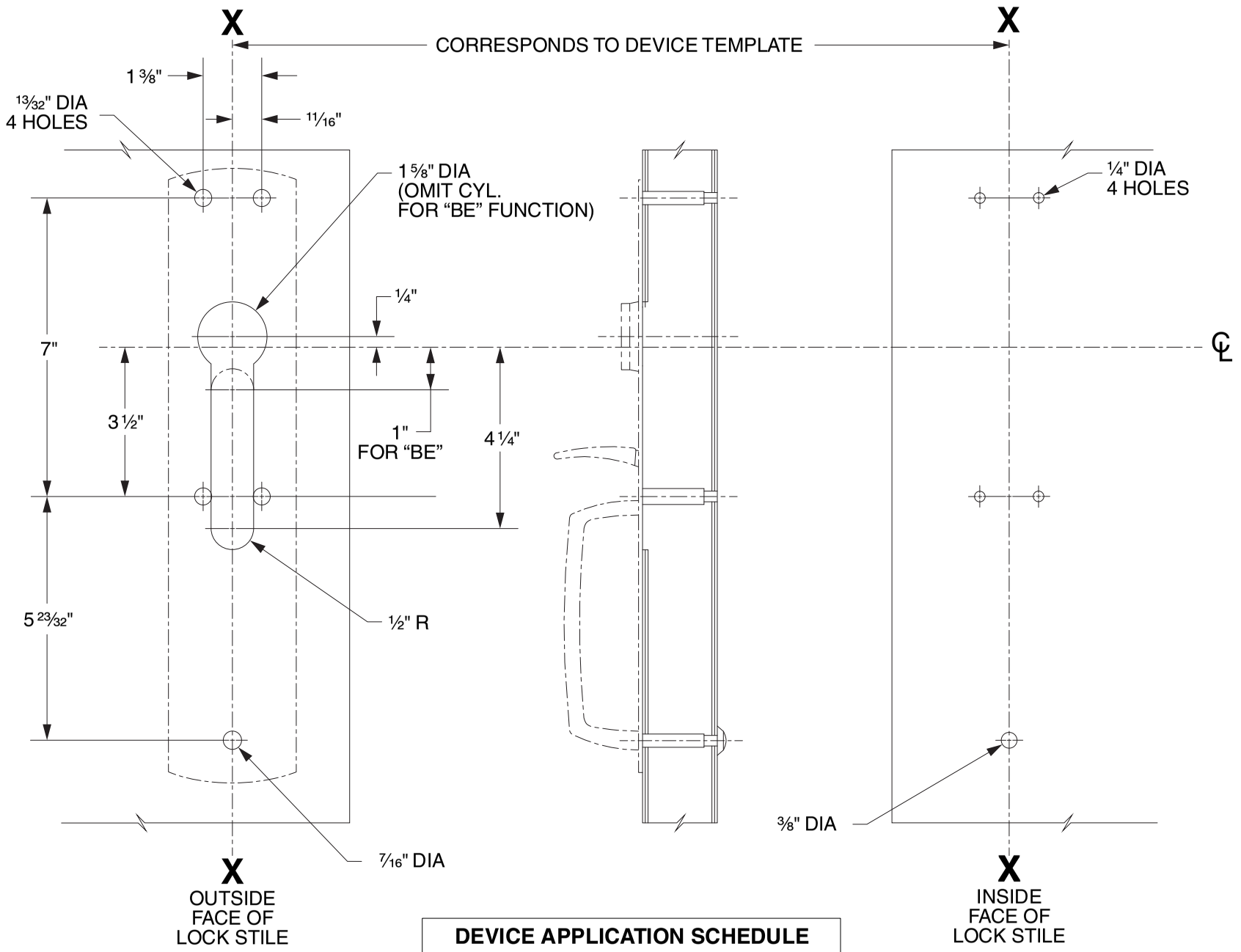

DEVICE APPLICATION SCHEDULE
98/99 SERIES RIM DEVICE
9827/9927 SERIES DEVICE
9847/9947 SERIES DEVICE
9849/9949 SERIES DEVICE

LHR SHOWN
RHR OPPOSITE

VON DUPRIN®

TEMPLATE NUMBER: 20265_C

DATE: 05-31-13

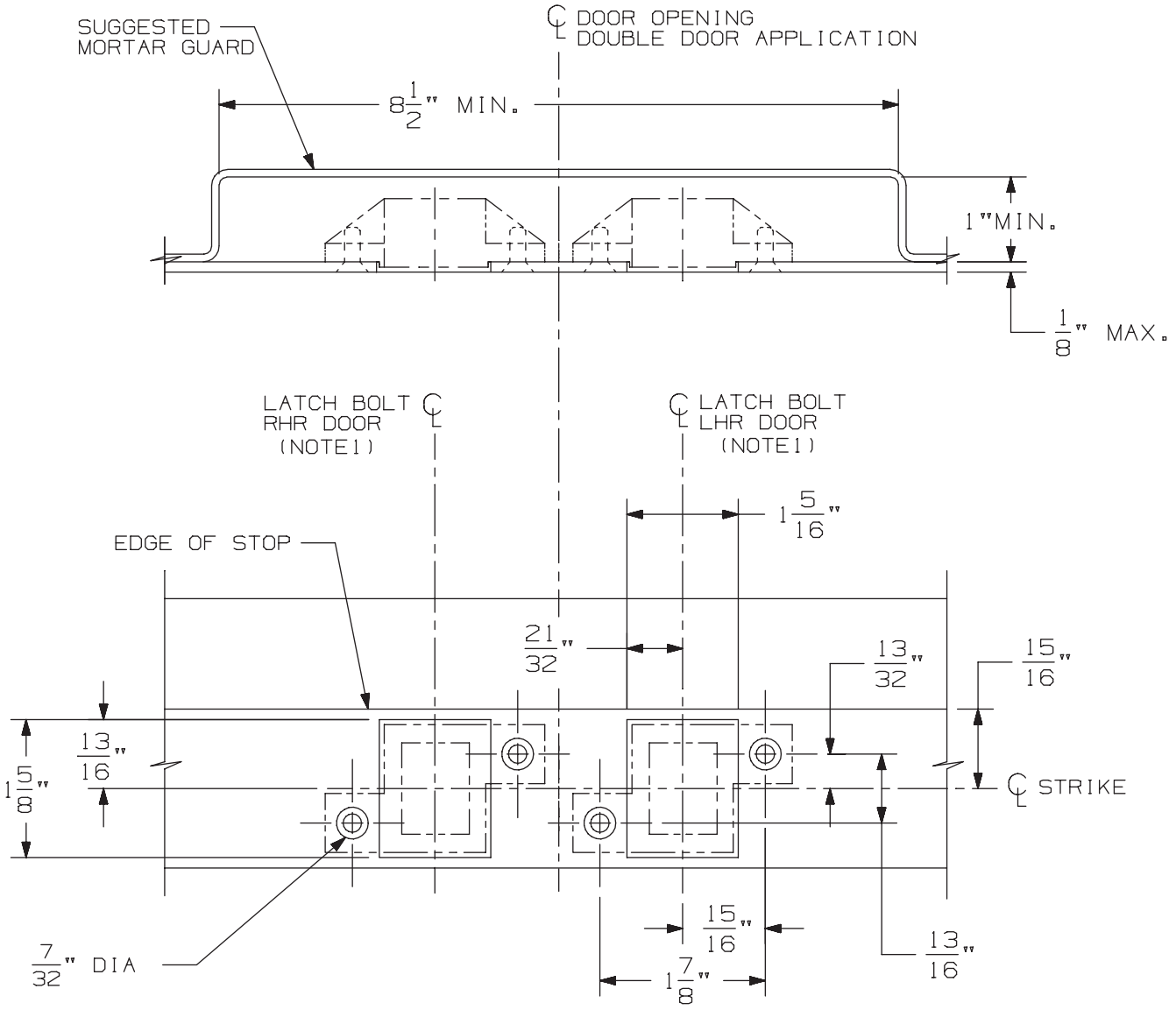

3/8" DIA X 82° C'SINK

IN FRAME
2 HOLES
EACH STRIKE

DOUBLE DOOR APPLICATION SHOWN.
FOR SINGLE DOOR APPLICATION USE
APPROPRIATE HANDING AS SHOWN.

DEVICE APPLICATION SCHEDULE
33/3547 & 33/3547-F SERIES DEVICE
98/99/47 & 98/99/47-F SERIES DEVICE
5547/5547 WDC SERIES
33/3547A & 33/3547A-F SERIES DEVICE
(9) 94/9547 SERIES DEVICE

NOTES: 1. SEE DEVICE TEMPLATE FOR LOCATION OF LATCH BOLT.

2. IF DEVICE IS TO BE MOUNTED ON WOOD DOORS, SEE WOOD DOOR TEMPLATE FOR LATCH BOLT LOCATION.

338 Strike for Hollow Metal Frame Preparation

VON DUPRIN®

NOTES: SEE MASTER SHEET #10001 FOR SUGGESTED REINFORCING

TEMPLATE NUMBER: 30038_a

DATE: 05-23-13

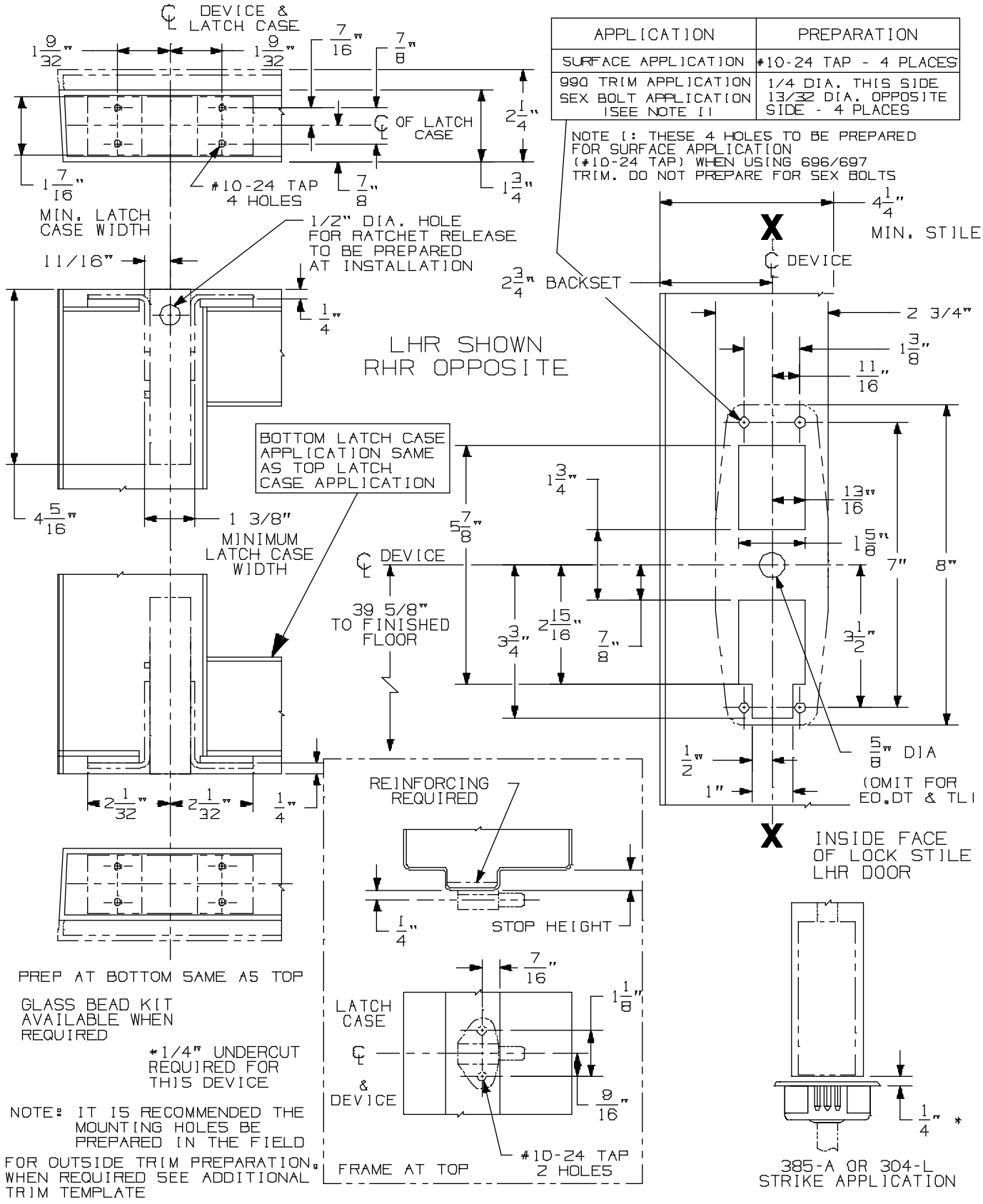

APPLICATION	PREPARATION
SURFACE APPLICATION	#10-24 TAP - 4 PLACES
990 TRIM APPLICATION SEX BOLT APPLICATION (SEE NOTE 1)	1/4 DIA. THIS SIDE 13/32 DIA. OPPOSITE SIDE - 4 PLACES

98/9947-F & 98/9948-F Series Concealed Vertical Rod Device

VON DUPRIN®

NOTES: SEE MASTER SHEET #10001 FOR SUGGESTED REINFORCING

TEMPLATE NUMBER: 10319_a

DATE: 05-21-13

990 DT TRIM

NOTES: SEE MASTER SHEET #10001 FOR SUGGESTED REINFORCING

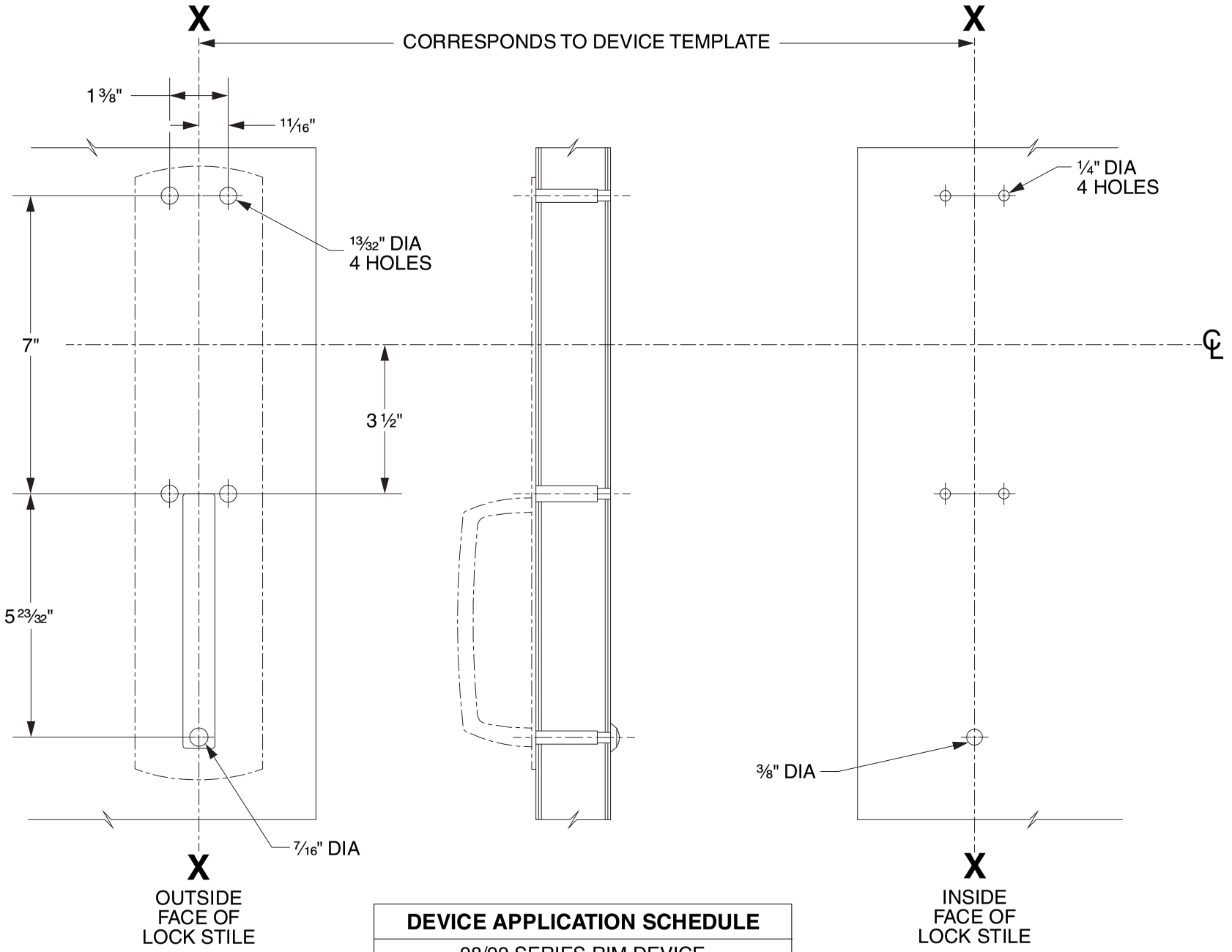

DEVICE APPLICATION SCHEDULE
98/99 SERIES RIM DEVICE
9827/9927 SERIES DEVICE
9847/9947 SERIES DEVICE
9849/9949 SERIES DEVICE
9875/9975 SERIES DEVICE

LHR SHOWN
RHR OPPOSITE

VON DUPRIN®

TEMPLATE NUMBER: 20268_C

DATE: 05-31-13

376-T Control

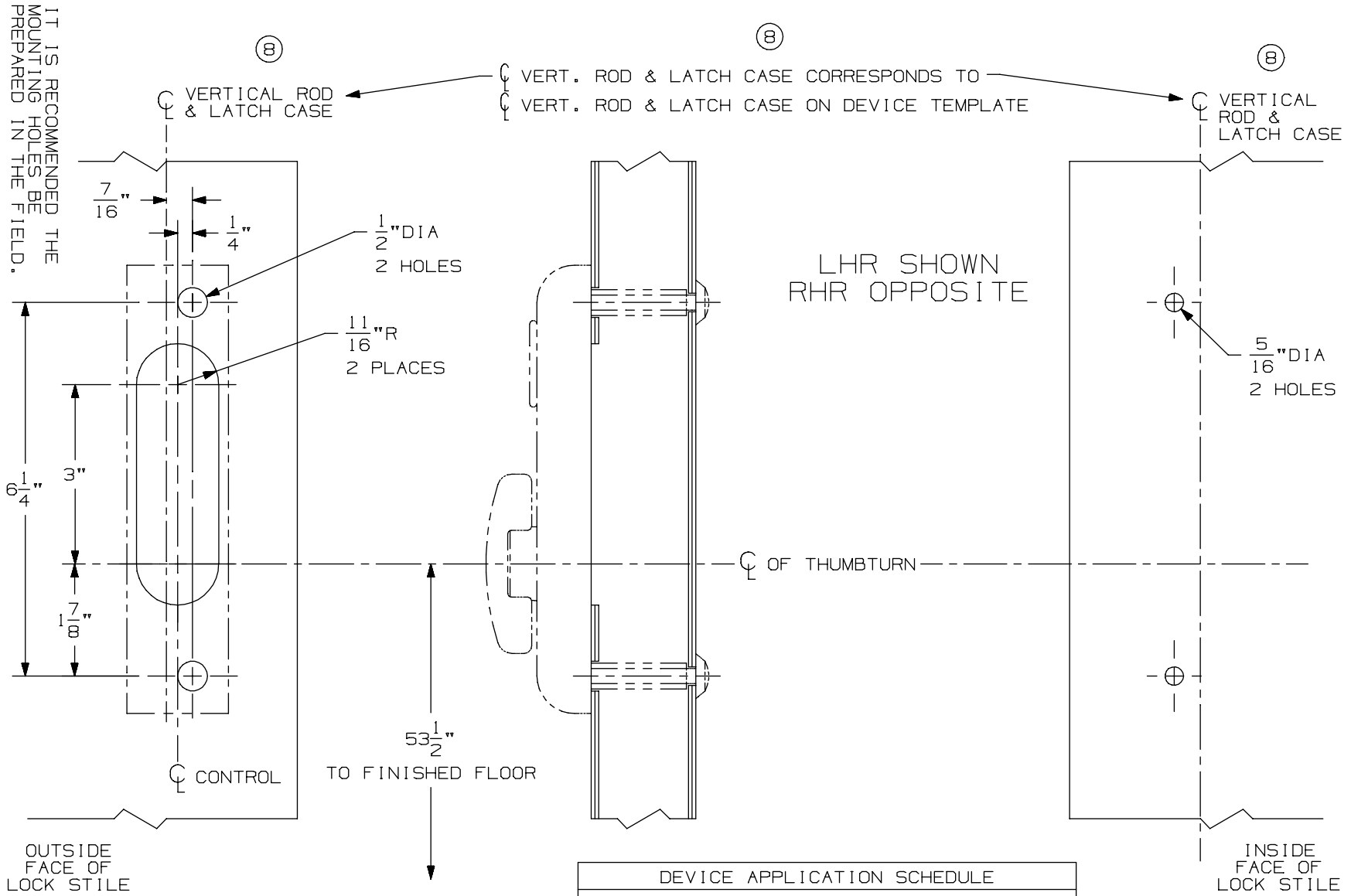

DEVICE APPLICATION SCHEDULE
5547/5547-F VERT. ROD DEVICE
8847-F VERT. ROD DEVICE
* 3347/3547 VERT. ROD DEVICE
3347-F/3547-F VERT. ROD DEVICE
⑧ * 3347A/3547A VERT. ROD DEVICE
⑧ 3347A-F/3547A-F VERT. ROD DEVICE
9847/9947 VERT. ROD DEVICE
9847-F/9947-F VERTICAL ROD DEVICE

⑧ * NOT TO BE USED WITH 1 1/16" LATCH CASE BACKSET ON BULLNOSE EDGE DOORS WITH WEATHERSTRIP CHANNEL.

NOTES: SEE MASTER SHEET #10001 FOR SUGGESTED REINFORCING

TEMPLATE NUMBER: 40114_a

DATE: 05-28-13

VON DUPRIN®

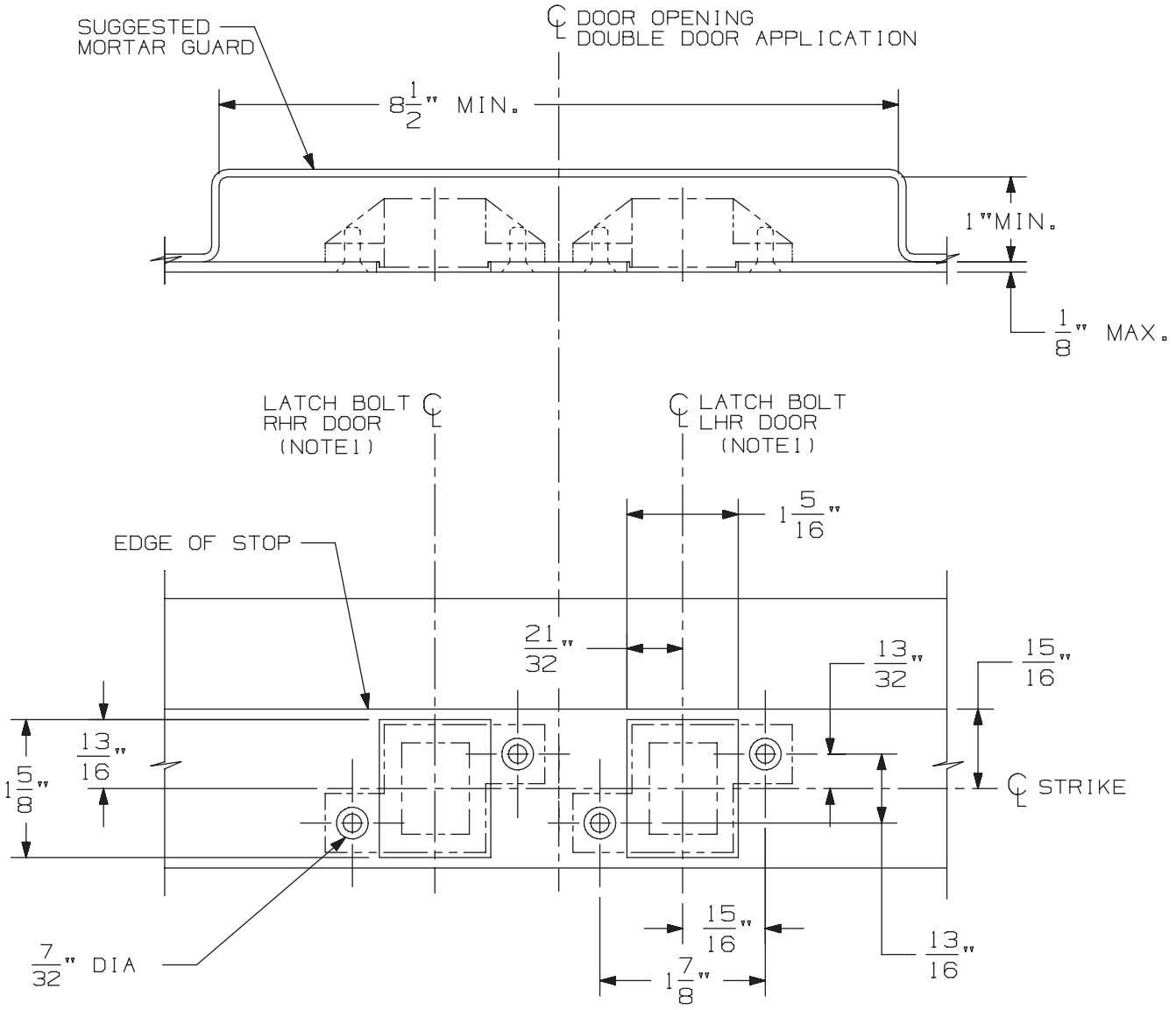

3/8" DIA X 82° C'SINK

IN FRAME
2 HOLES
EACH STRIKE

DOUBLE DOOR APPLICATION SHOWN.
FOR SINGLE DOOR APPLICATION USE
APPROPRIATE HANDING AS SHOWN.

DEVICE APPLICATION SCHEDULE
33/3547 & 33/3547-F SERIES DEVICE
98/99/47 & 98/99/47-F SERIES DEVICE
5547/5547 WDC SERIES
33/3547A & 33/3547A-F SERIES DEVICE
(9) 94/9547 SERIES DEVICE

NOTES: 1. SEE DEVICE TEMPLATE FOR LOCATION OF LATCH BOLT.

2. IF DEVICE IS TO BE MOUNTED ON WOOD DOORS, SEE WOOD DOOR TEMPLATE FOR LATCH BOLT LOCATION.

338 Strike for Hollow Metal Frame Preparation

VON DUPRIN®

NOTES: SEE MASTER SHEET #10001 FOR SUGGESTED REINFORCING

TEMPLATE NUMBER: 30038_a

DATE: 05-23-13

98 / 99 Series Exit Devices - 9847-F-LBR/ 9947-F-LBR Concealed Vertical Rod Fire (Standard, EL, LX, RX & SS)

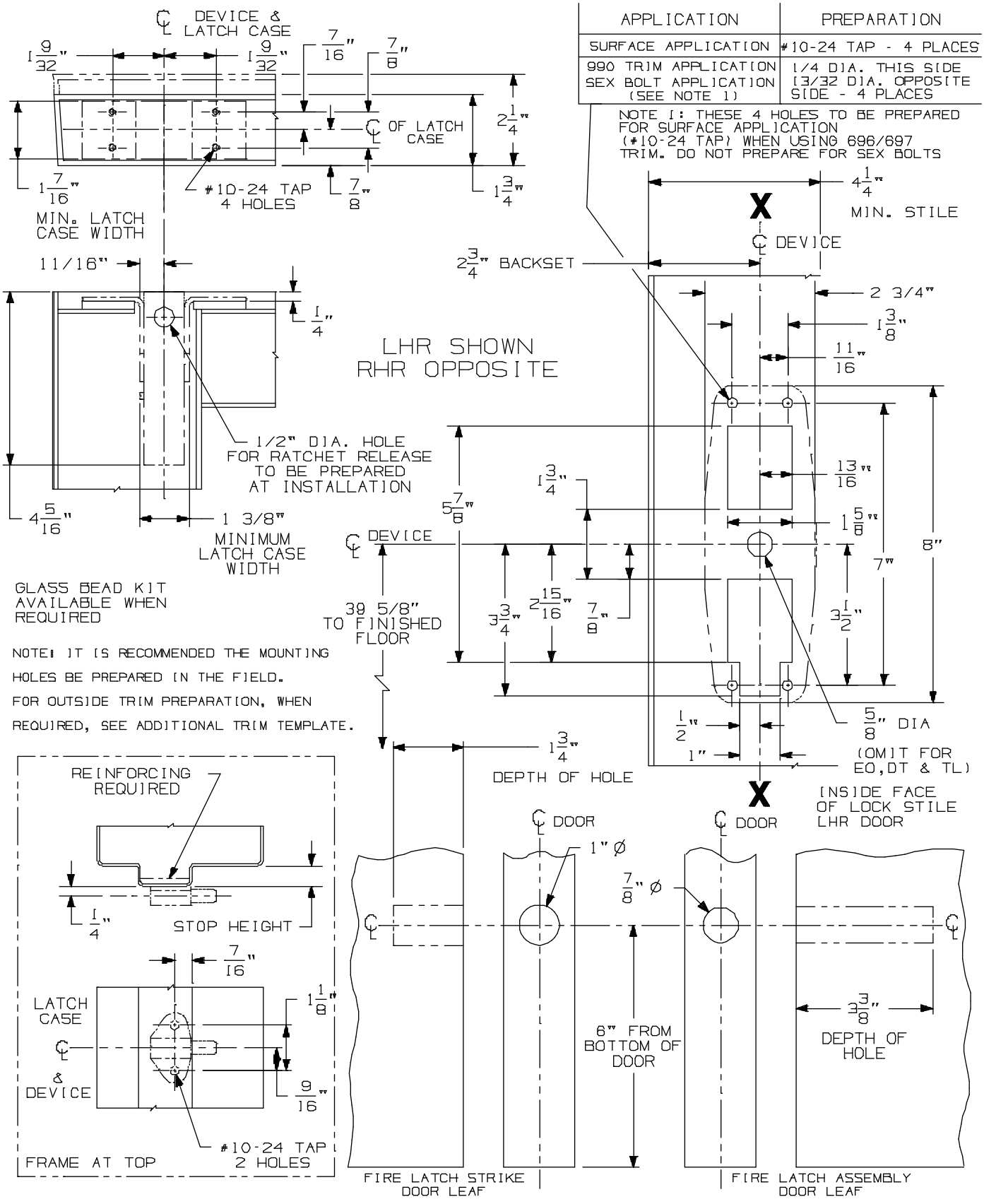

98/9947-F-LBR Series
Concealed Vertical Rod Device

VON DUPRIN®

NOTES: SEE MASTER SHEET #10001 FOR SUGGESTED REINFORCING

TEMPLATE NUMBER: 10323_a

DATE: 05-21-13

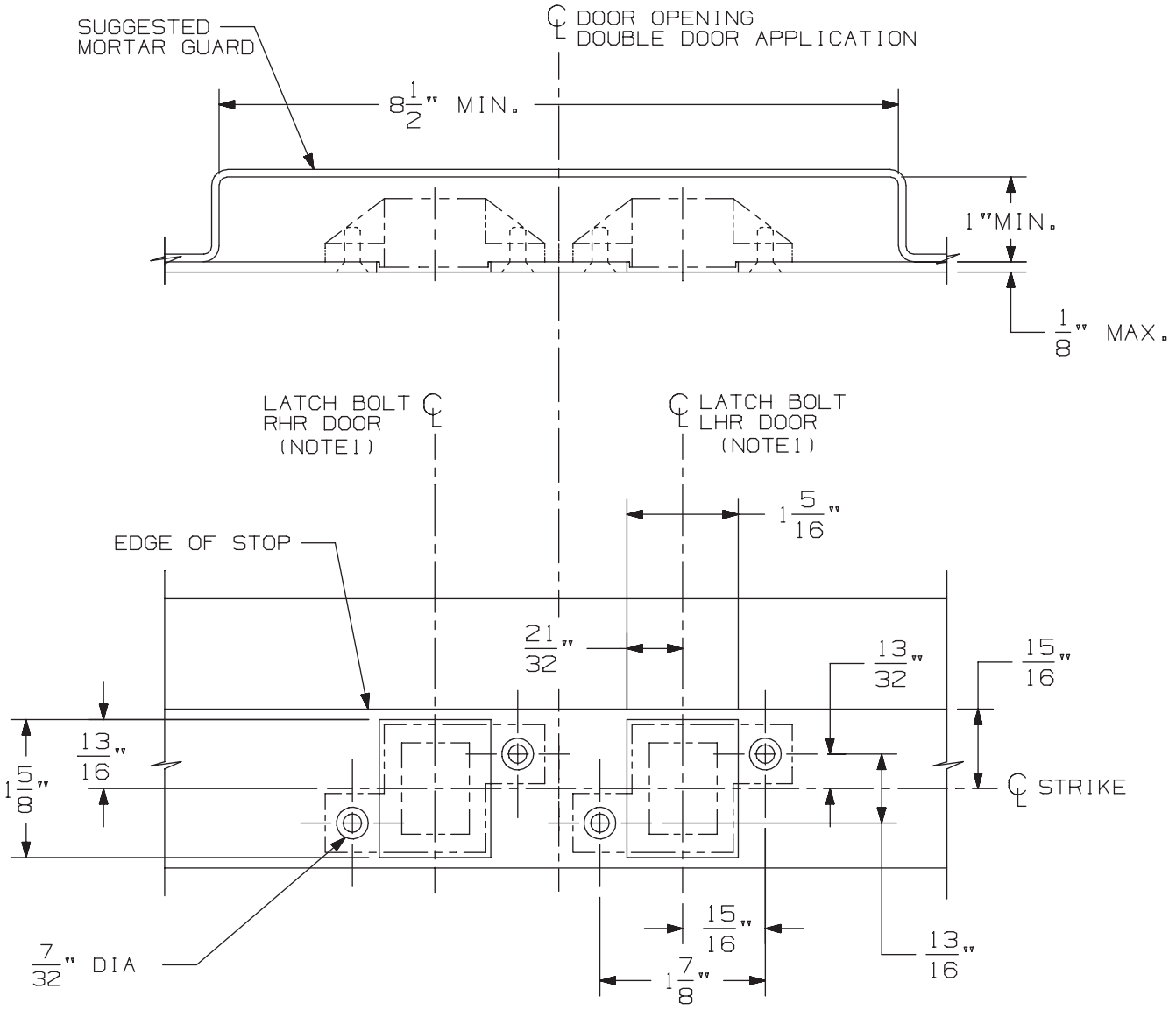

3/8" DIA X 82° C'SINK

IN FRAME
2 HOLES
EACH STRIKE

DOUBLE DOOR APPLICATION SHOWN.
FOR SINGLE DOOR APPLICATION USE
APPROPRIATE HANDING AS SHOWN.

DEVICE APPLICATION SCHEDULE
33/3547 & 33/3547-F SERIES DEVICE
98/99/47 & 98/99/47-F SERIES DEVICE
5547/5547 WDC SERIES
33/3547A & 33/3547A-F SERIES DEVICE
(9) 94/9547 SERIES DEVICE

NOTES: 1. SEE DEVICE TEMPLATE FOR LOCATION OF LATCH BOLT.

2. IF DEVICE IS TO BE MOUNTED ON WOOD DOORS, SEE WOOD DOOR TEMPLATE FOR LATCH BOLT LOCATION.

338 Strike for Hollow Metal Frame Preparation

VON DUPRIN®

NOTES: SEE MASTER SHEET #10001 FOR SUGGESTED REINFORCING

TEMPLATE NUMBER: 30038_a

DATE: 05-23-13

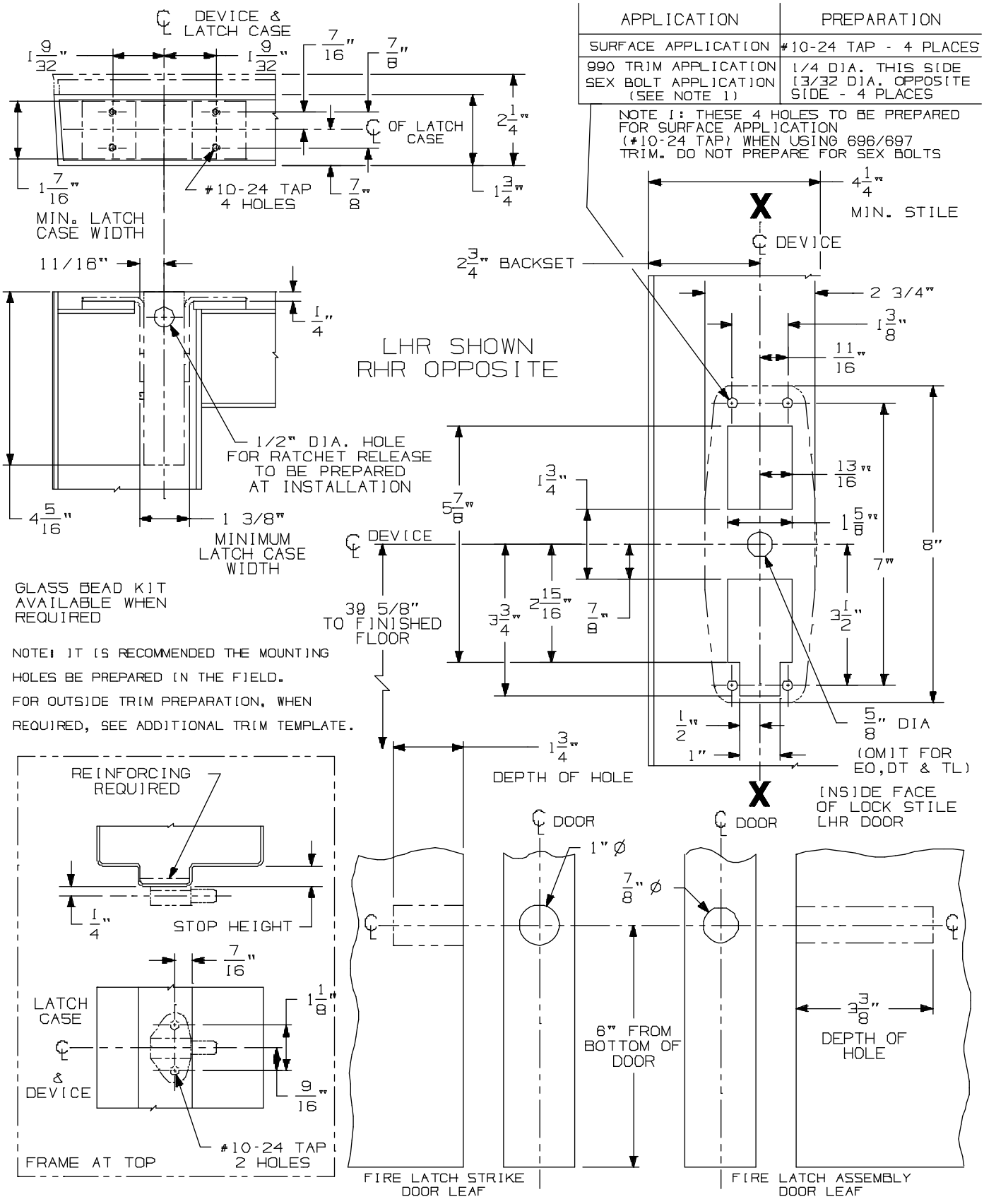

98/9947-F-LBR Series
Concealed Vertical Rod Device

VON DUPRIN®

NOTES: SEE MASTER SHEET #10001 FOR SUGGESTED REINFORCING

TEMPLATE NUMBER: 10323_a

DATE: 05-21-13

990 NL TRIM

NOTES: SEE MASTER SHEET #10001 FOR SUGGESTED REINFORCING

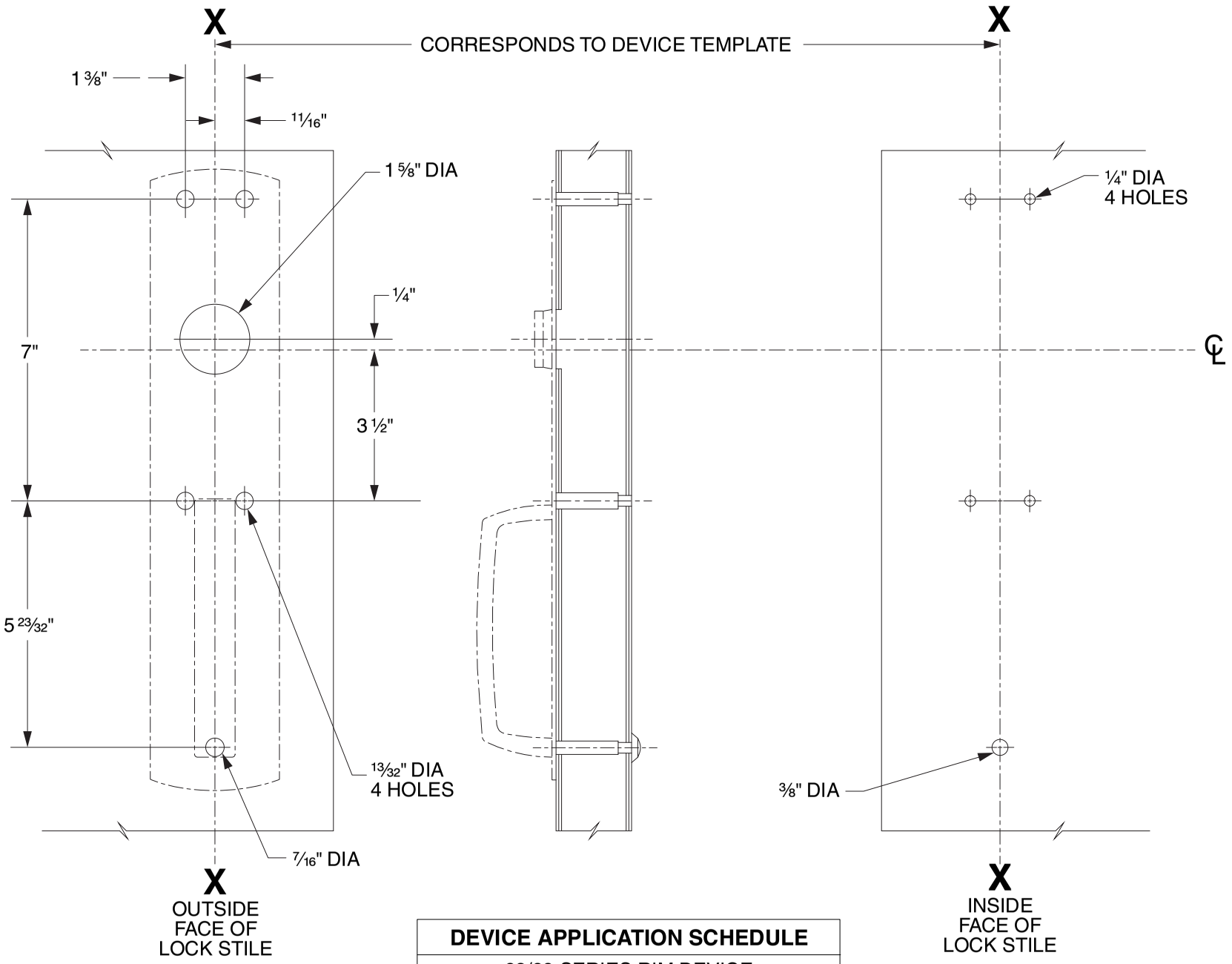

DEVICE APPLICATION SCHEDULE
98/99 SERIES RIM DEVICE
9827/9927 SERIES DEVICE
9847/9947 SERIES DEVICE
9849/9949 SERIES DEVICE

LHR SHOWN
RHR OPPOSITE

VON DUPRIN®

TEMPLATE NUMBER: 20267_C

DATE: 05-31-13

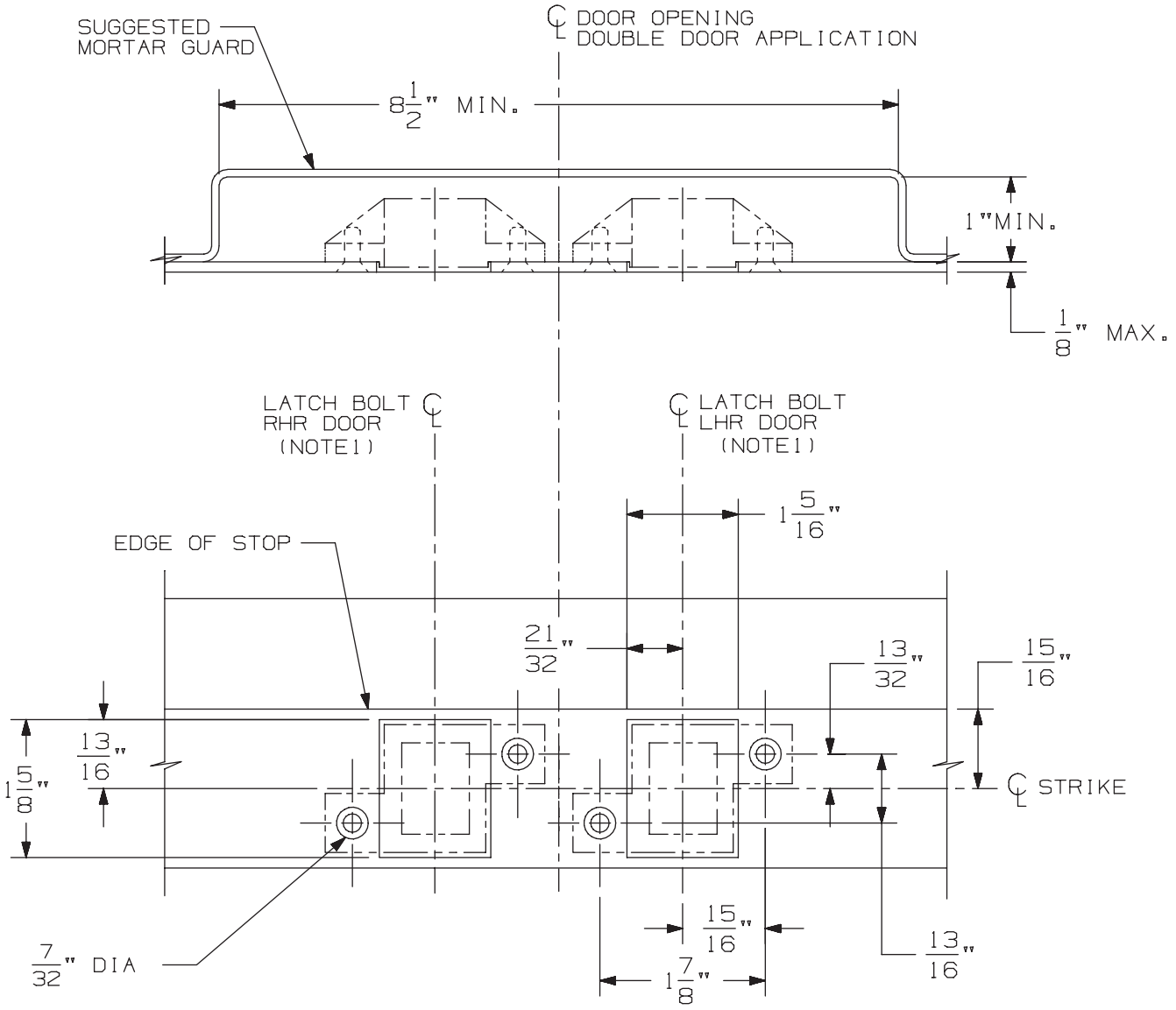

3/8" DIA X 82° C'SINK

IN FRAME
2 HOLES
EACH STRIKE

DOUBLE DOOR APPLICATION SHOWN.
FOR SINGLE DOOR APPLICATION USE
APPROPRIATE HANDING AS SHOWN.

DEVICE APPLICATION SCHEDULE
33/3547 & 33/3547-F SERIES DEVICE
98/99/47 & 98/99/47-F SERIES DEVICE
5547/5547 WDC SERIES
33/3547A & 33/3547A-F SERIES DEVICE
(9) 94/9547 SERIES DEVICE

NOTES: 1. SEE DEVICE TEMPLATE FOR LOCATION OF LATCH BOLT.

2. IF DEVICE IS TO BE MOUNTED ON WOOD DOORS, SEE WOOD DOOR TEMPLATE FOR LATCH BOLT LOCATION.

338 Strike for Hollow Metal Frame Preparation

VON DUPRIN®

NOTES: SEE MASTER SHEET #10001 FOR SUGGESTED REINFORCING

TEMPLATE NUMBER: 30038_a

DATE: 05-23-13

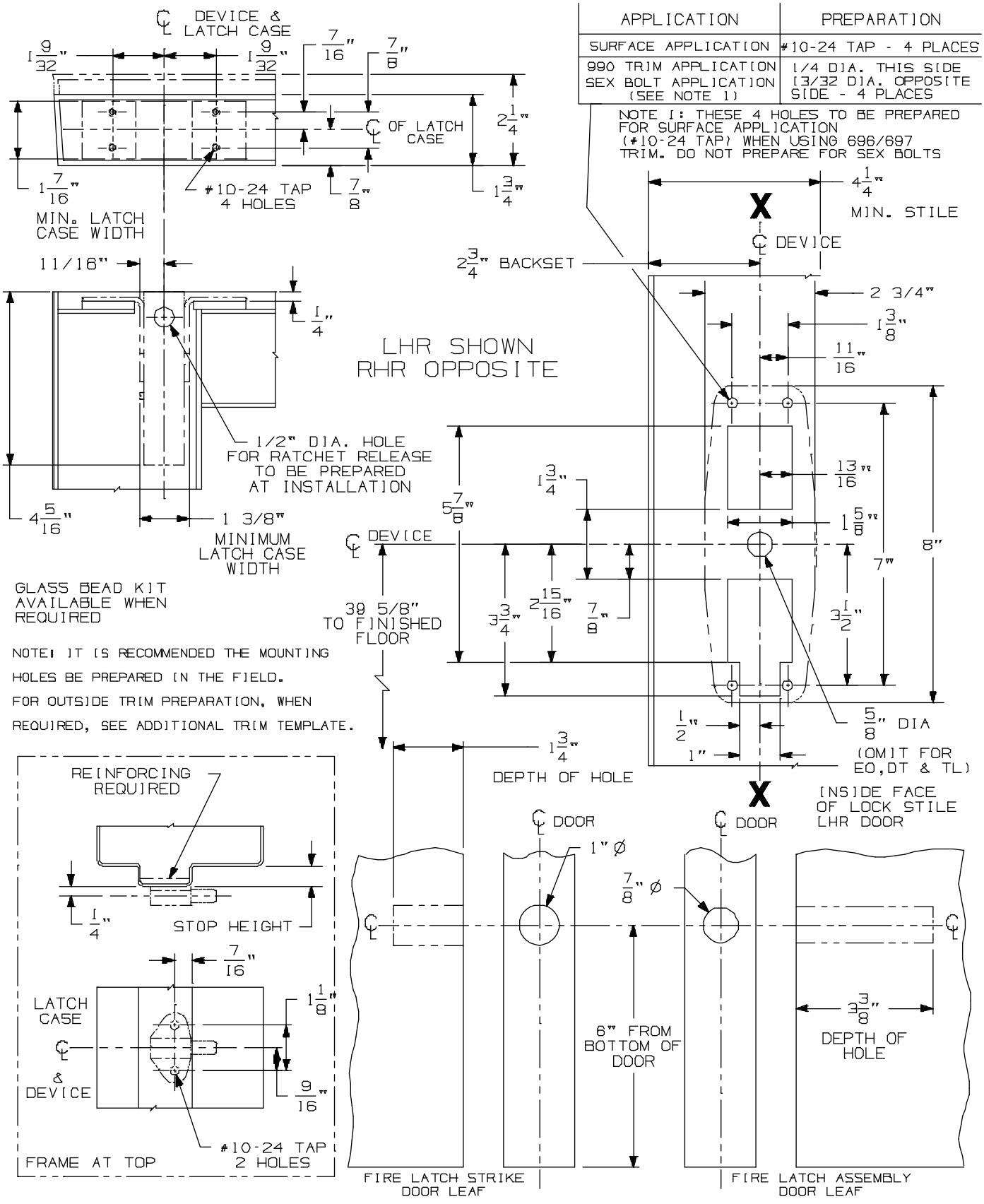

98/9947-F-LBR Series
Concealed Vertical Rod Device

VON DUPRIN®

NOTES: SEE MASTER SHEET #10001 FOR SUGGESTED REINFORCING

TEMPLATE NUMBER: 10323_a

DATE: 05-21-13

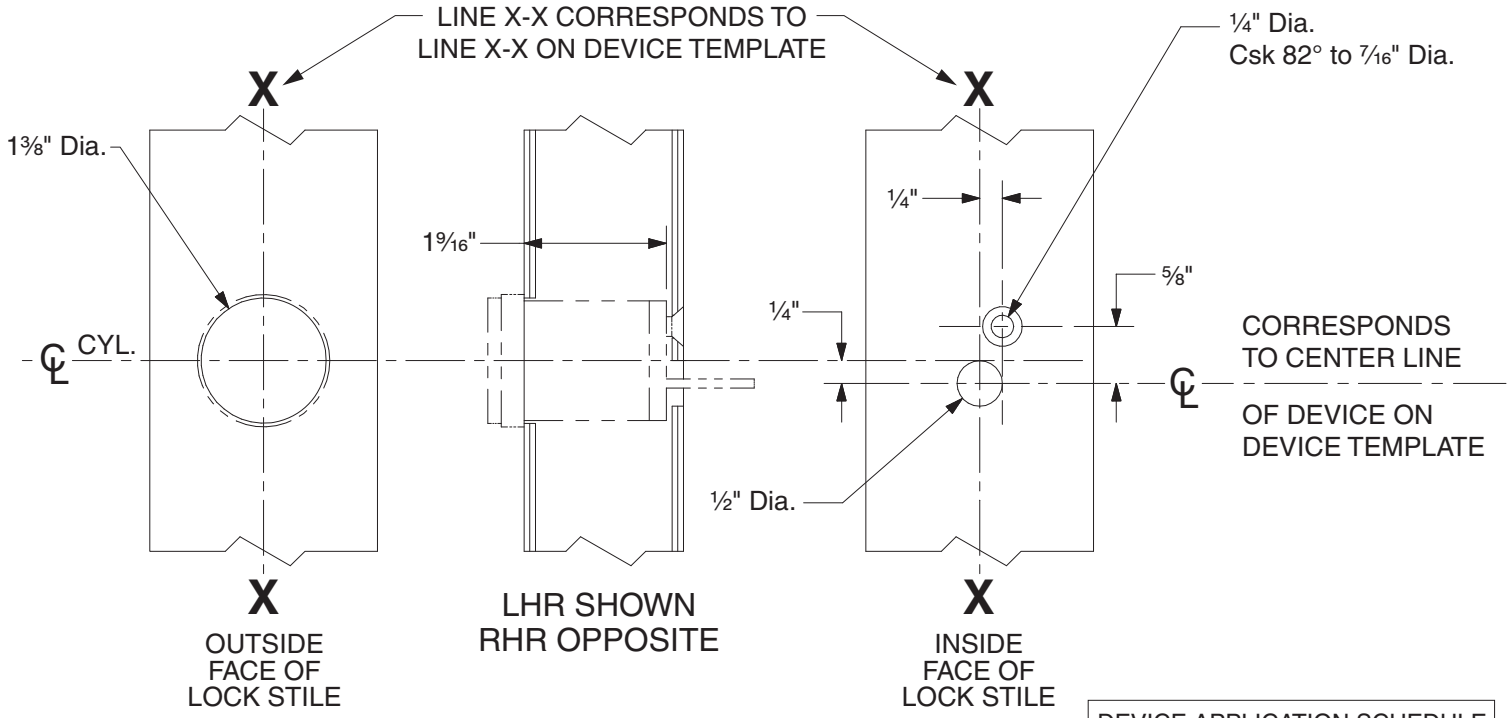

DEVICE APPLICATION SCHEDULE	
98 RIM SERIES	99 RIM SERIES
9827 SERIES	9927 SERIES
9847 SERIES	9947 SERIES
22 RIM SERIES	2227 SERIES

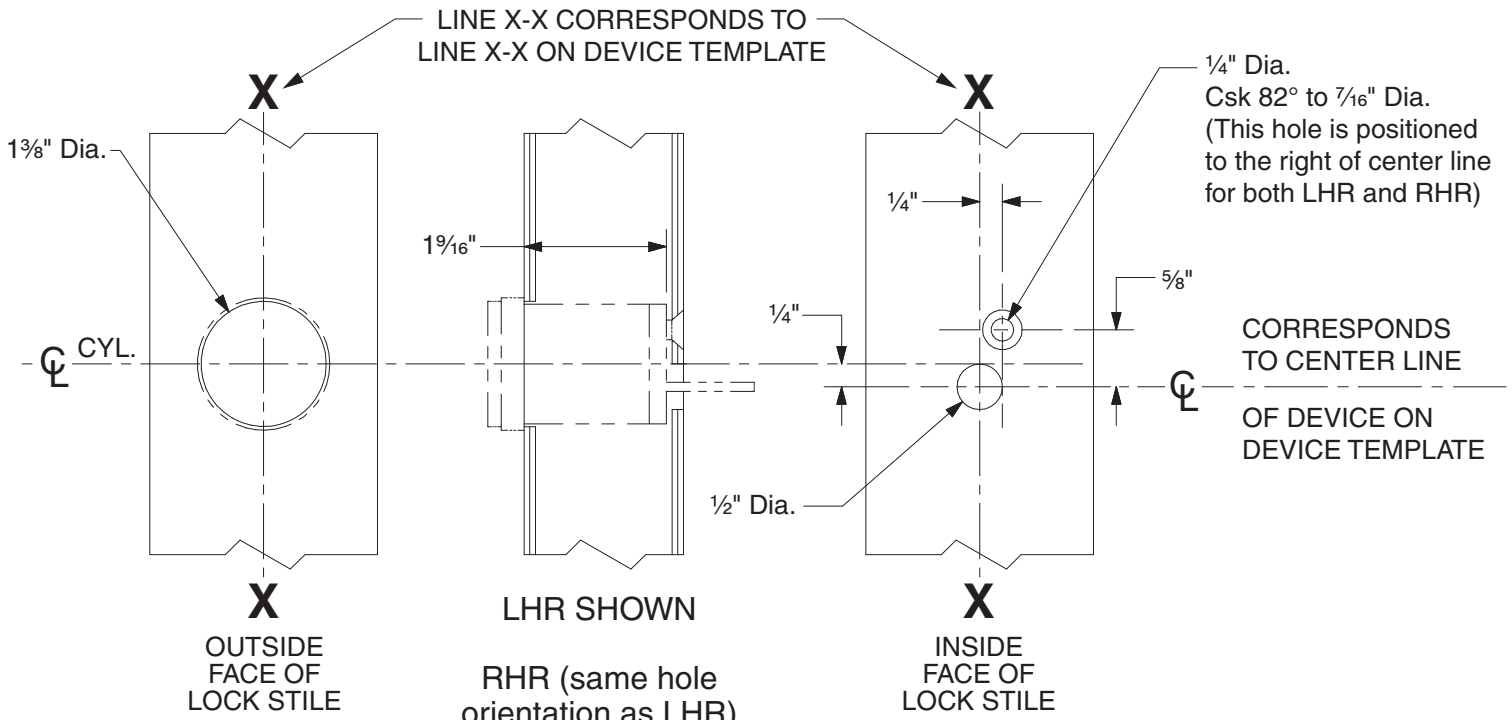

DEVICE APPLICATION SCHEDULE	
9849 SERIES	9949 SERIES

110NL Cylinder Preparation

VON DUPRIN®

NOTES: SEE MASTER SHEET #10001 FOR SUGGESTED REINFORCING

TEMPLATE NUMBER: 40022_c

DATE: 05-28-13

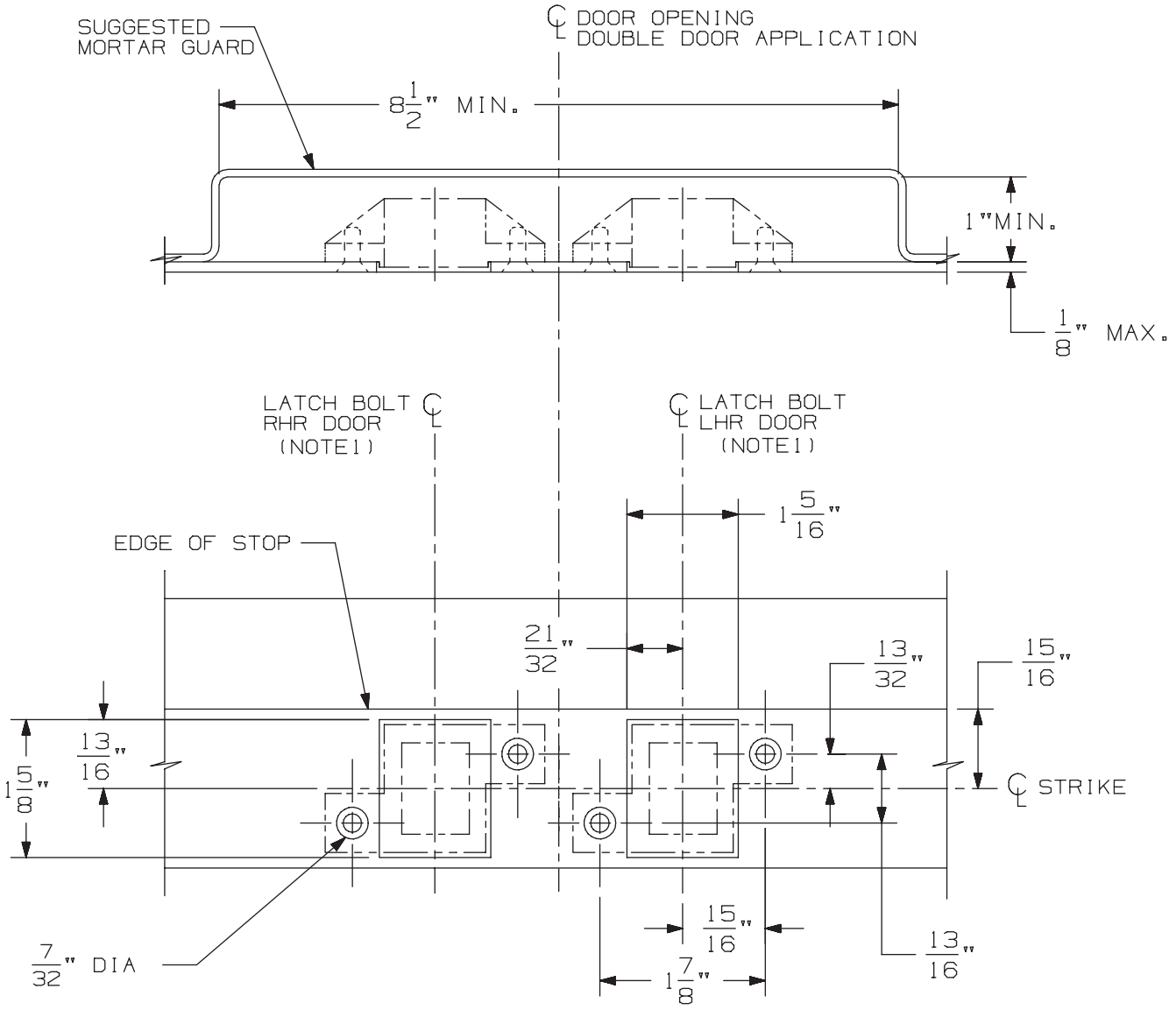

3/8" DIA X 82° C'SINK

IN FRAME
2 HOLES
EACH STRIKE

DOUBLE DOOR APPLICATION SHOWN.
FOR SINGLE DOOR APPLICATION USE
APPROPRIATE HANDING AS SHOWN.

DEVICE APPLICATION SCHEDULE
33/3547 & 33/3547-F SERIES DEVICE
98/99/47 & 98/99/47-F SERIES DEVICE
5547/5547 WDC SERIES
33/3547A & 33/3547A-F SERIES DEVICE
(9) 94/9547 SERIES DEVICE

NOTES: 1. SEE DEVICE TEMPLATE FOR LOCATION OF LATCH BOLT.

2. IF DEVICE IS TO BE MOUNTED ON WOOD DOORS, SEE WOOD DOOR TEMPLATE FOR LATCH BOLT LOCATION.

338 Strike for Hollow Metal Frame Preparation

VON DUPRIN®

NOTES: SEE MASTER SHEET #10001 FOR SUGGESTED REINFORCING

TEMPLATE NUMBER: 30038_a

DATE: 05-23-13

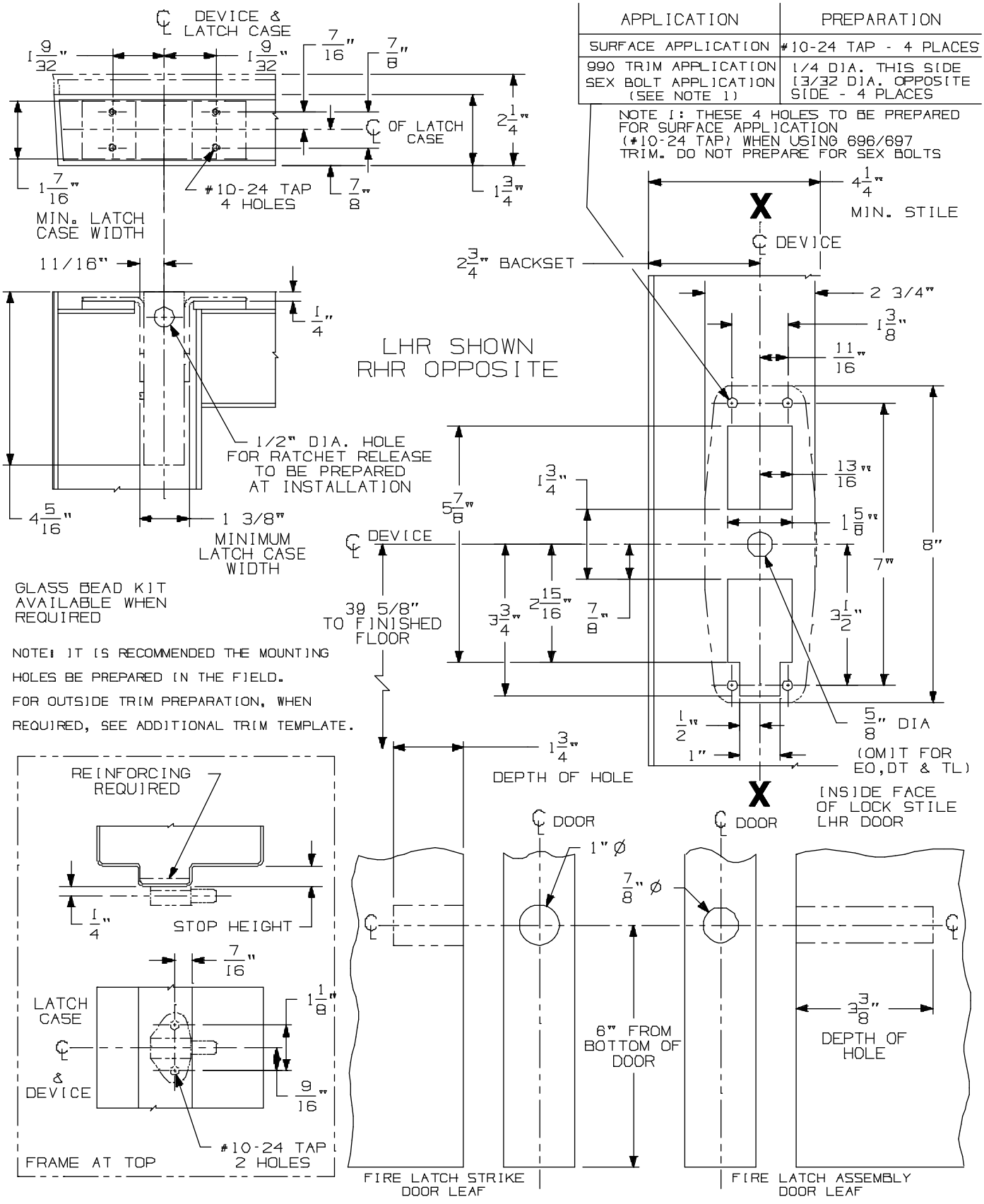

98/9947-F-LBR Series
Concealed Vertical Rod Device

VON DUPRIN®

NOTES: SEE MASTER SHEET #10001 FOR SUGGESTED REINFORCING

TEMPLATE NUMBER: 10323_a

DATE: 05-21-13

991 K & 992 L Trim

NOTES: SEE MASTER SHEET #10001 FOR SUGGESTED REINFORCING

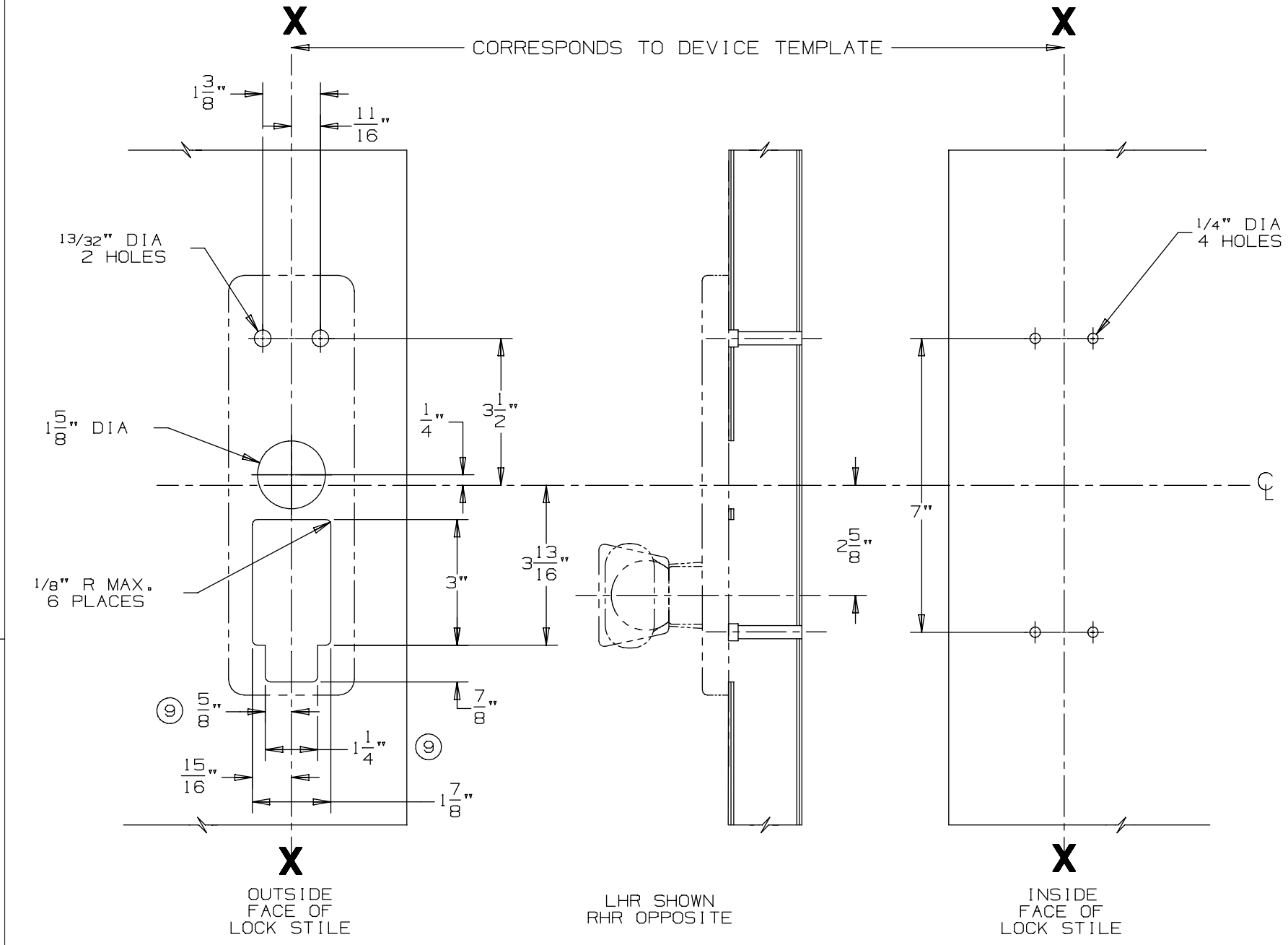

DEVICE APPLICATION SCHEDULE
98/99 SERIES RIM DEVICE
9827/9927 SERIES DEVICE
9847/9947 SERIES DEVICE

VON DUPRIN®

TEMPLATE NUMBER: 20272_a

DATE: 05-23-13

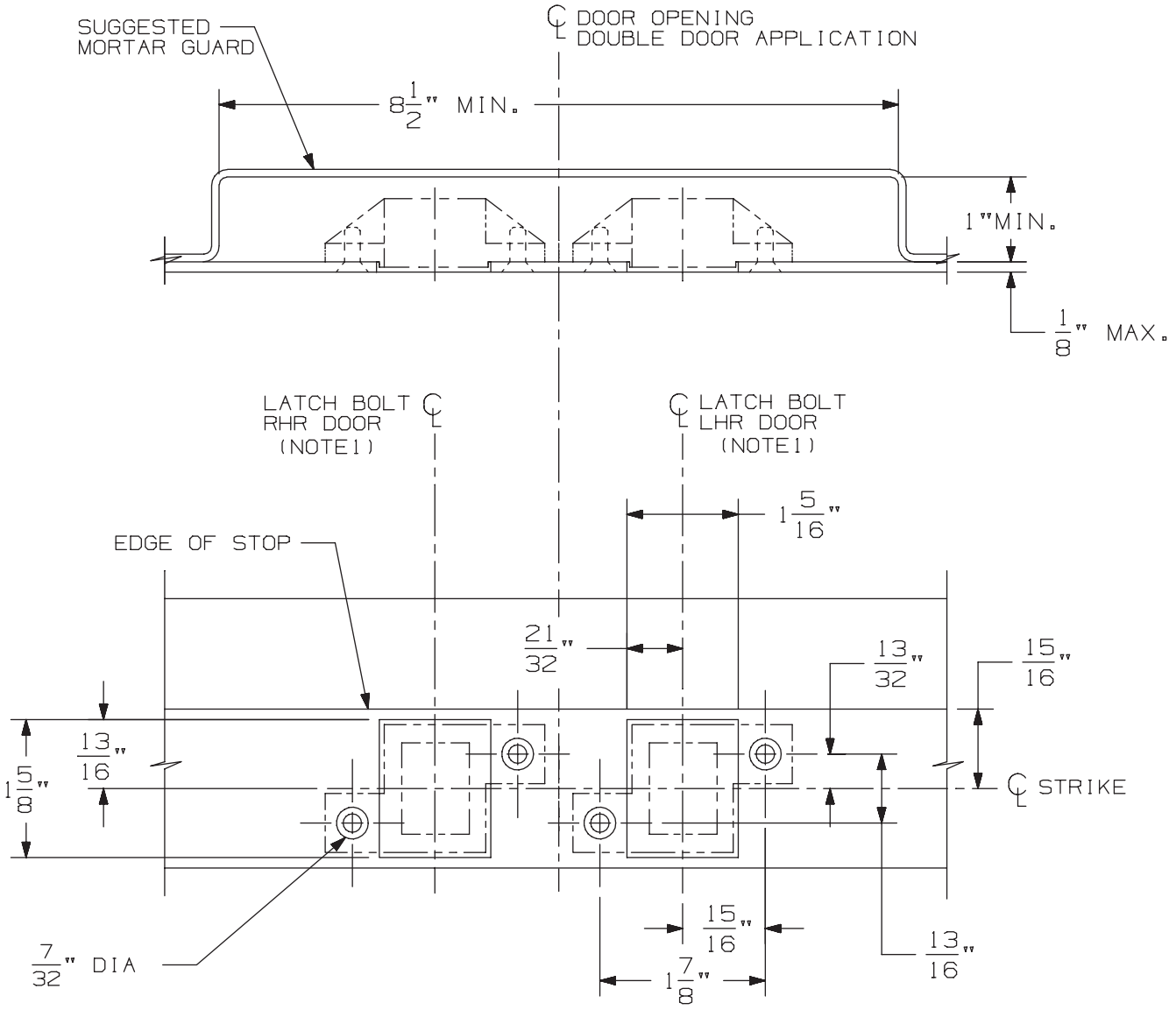

3/8" DIA X 82° C'SINK

IN FRAME
2 HOLES
EACH STRIKE

DOUBLE DOOR APPLICATION SHOWN.
FOR SINGLE DOOR APPLICATION USE
APPROPRIATE HANDING AS SHOWN.

DEVICE APPLICATION SCHEDULE
33/3547 & 33/3547-F SERIES DEVICE
98/99/47 & 98/99/47-F SERIES DEVICE
5547/5547 WDC SERIES
33/3547A & 33/3547A-F SERIES DEVICE
(9) 94/9547 SERIES DEVICE

NOTES: 1. SEE DEVICE TEMPLATE FOR LOCATION OF LATCH BOLT.

2. IF DEVICE IS TO BE MOUNTED ON WOOD DOORS, SEE WOOD DOOR TEMPLATE FOR LATCH BOLT LOCATION.

338 Strike for Hollow Metal Frame Preparation

VON DUPRIN®

NOTES: SEE MASTER SHEET #10001 FOR SUGGESTED REINFORCING

TEMPLATE NUMBER: 30038_a

DATE: 05-23-13

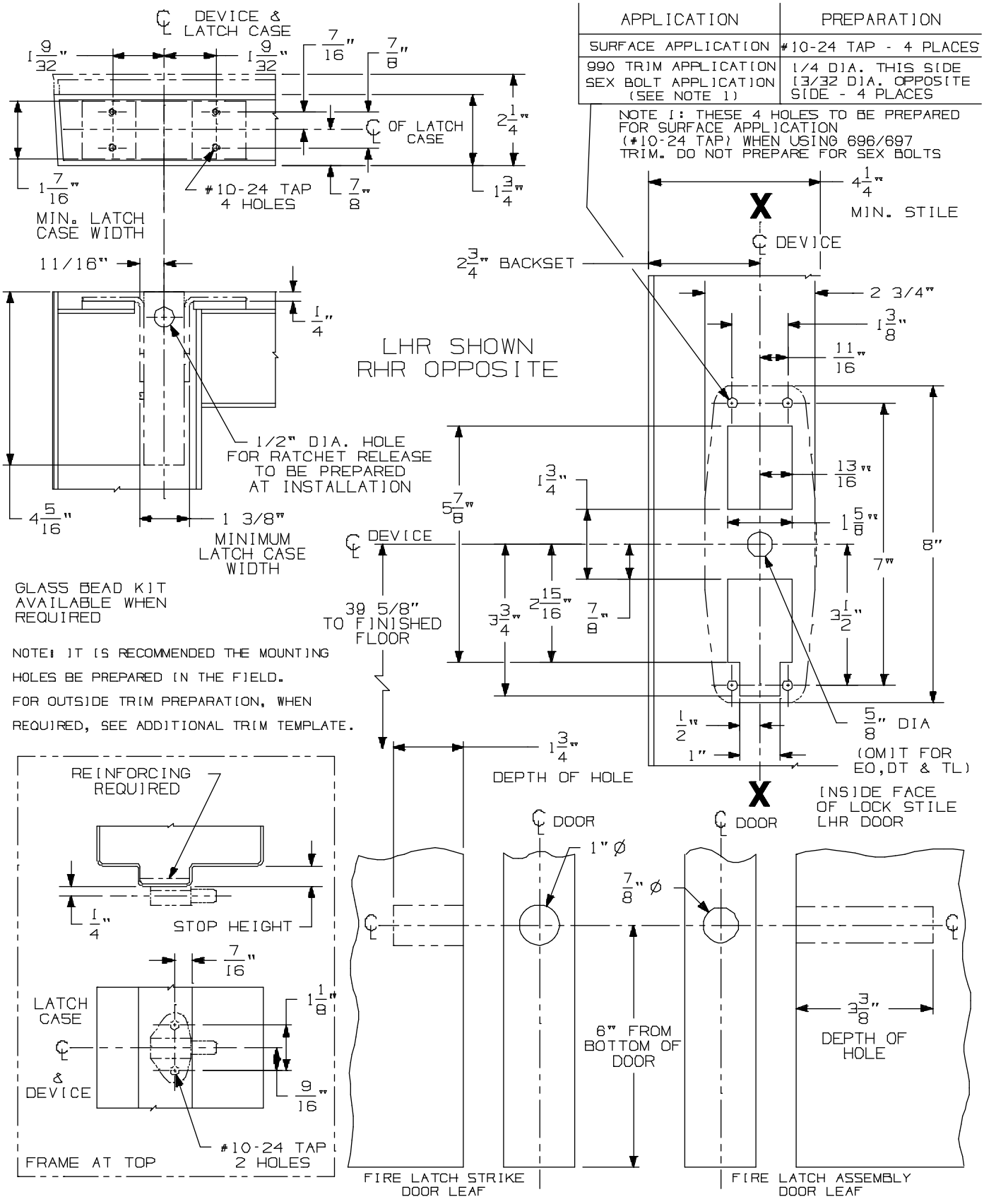

98/9947-F-LBR Series
Concealed Vertical Rod Device

VON DUPRIN®

NOTES: SEE MASTER SHEET #10001 FOR SUGGESTED REINFORCING

TEMPLATE NUMBER: 10323_a

DATE: 05-21-13

DEVICE APPLICATION SCHEDULE	
98 RIM SERIES	99 RIM SERIES
9827 SERIES	9927 SERIES
9847 SERIES	9947 SERIES
9849 SERIES	9949 SERIES

996L, E996L, 996L-BE, E996L-BE 996K, 996K-BE R/V SERIES
TRIM METAL DOOR APPLICATION

VON DUPRIN®

NOTES: SEE MASTER SHEET #10001 FOR SUGGESTED REINFORCING

TEMPLATE NUMBER: 20003_e

DATE: 10-30-14

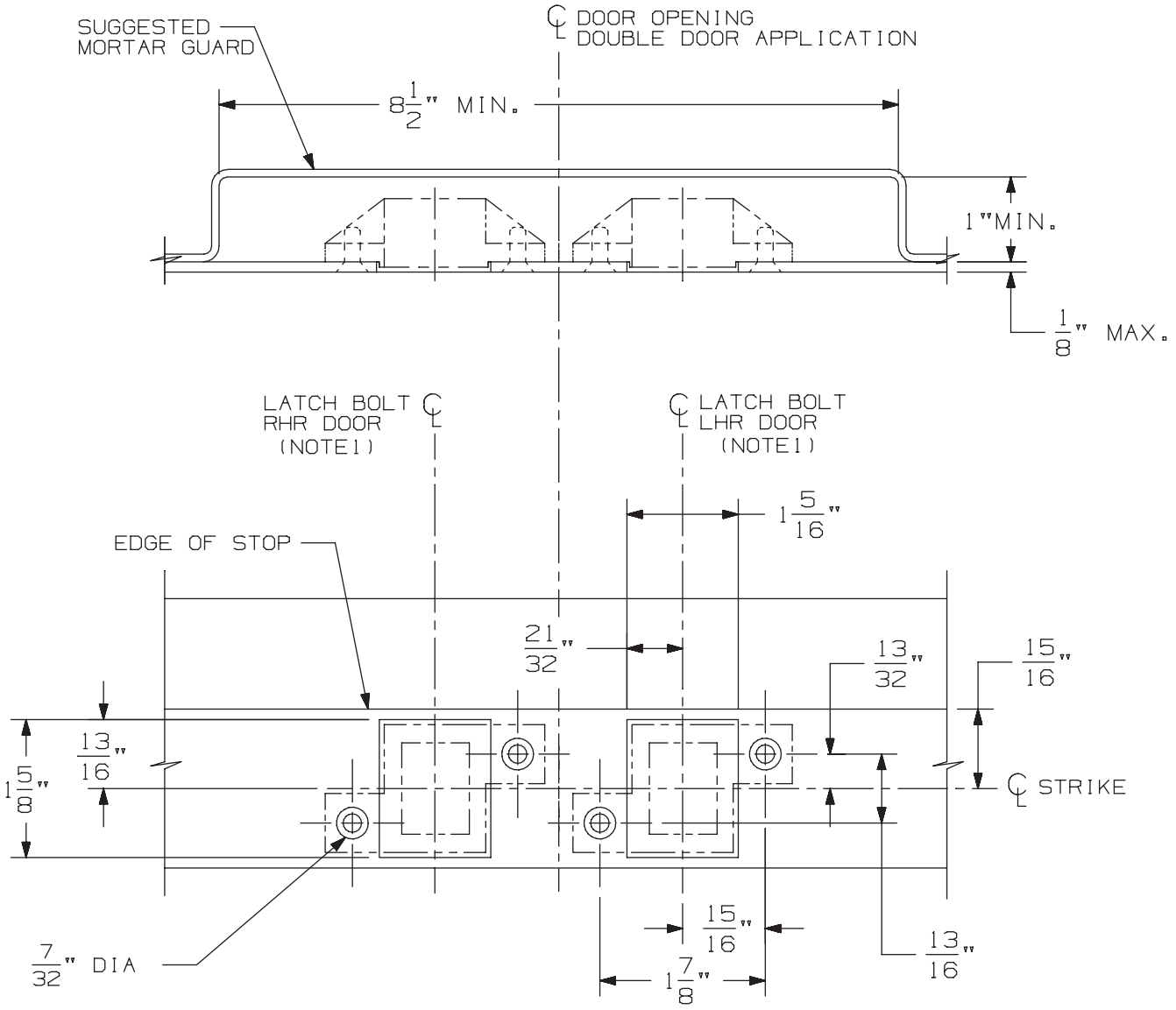

3/8" DIA X 82° C'SINK

IN FRAME
2 HOLES
EACH STRIKE

DOUBLE DOOR APPLICATION SHOWN.
FOR SINGLE DOOR APPLICATION USE
APPROPRIATE HANDING AS SHOWN.

DEVICE APPLICATION SCHEDULE
33/3547 & 33/3547-F SERIES DEVICE
98/99/47 & 98/99/47-F SERIES DEVICE
5547/5547 WDC SERIES
33/3547A & 33/3547A-F SERIES DEVICE
(9) 94/9547 SERIES DEVICE

NOTES: 1. SEE DEVICE TEMPLATE FOR LOCATION OF LATCH BOLT.

2. IF DEVICE IS TO BE MOUNTED ON WOOD DOORS, SEE WOOD DOOR TEMPLATE FOR LATCH BOLT LOCATION.

338 Strike for Hollow Metal Frame Preparation

VON DUPRIN®

NOTES: SEE MASTER SHEET #10001 FOR SUGGESTED REINFORCING

TEMPLATE NUMBER: 30038_a

DATE: 05-23-13

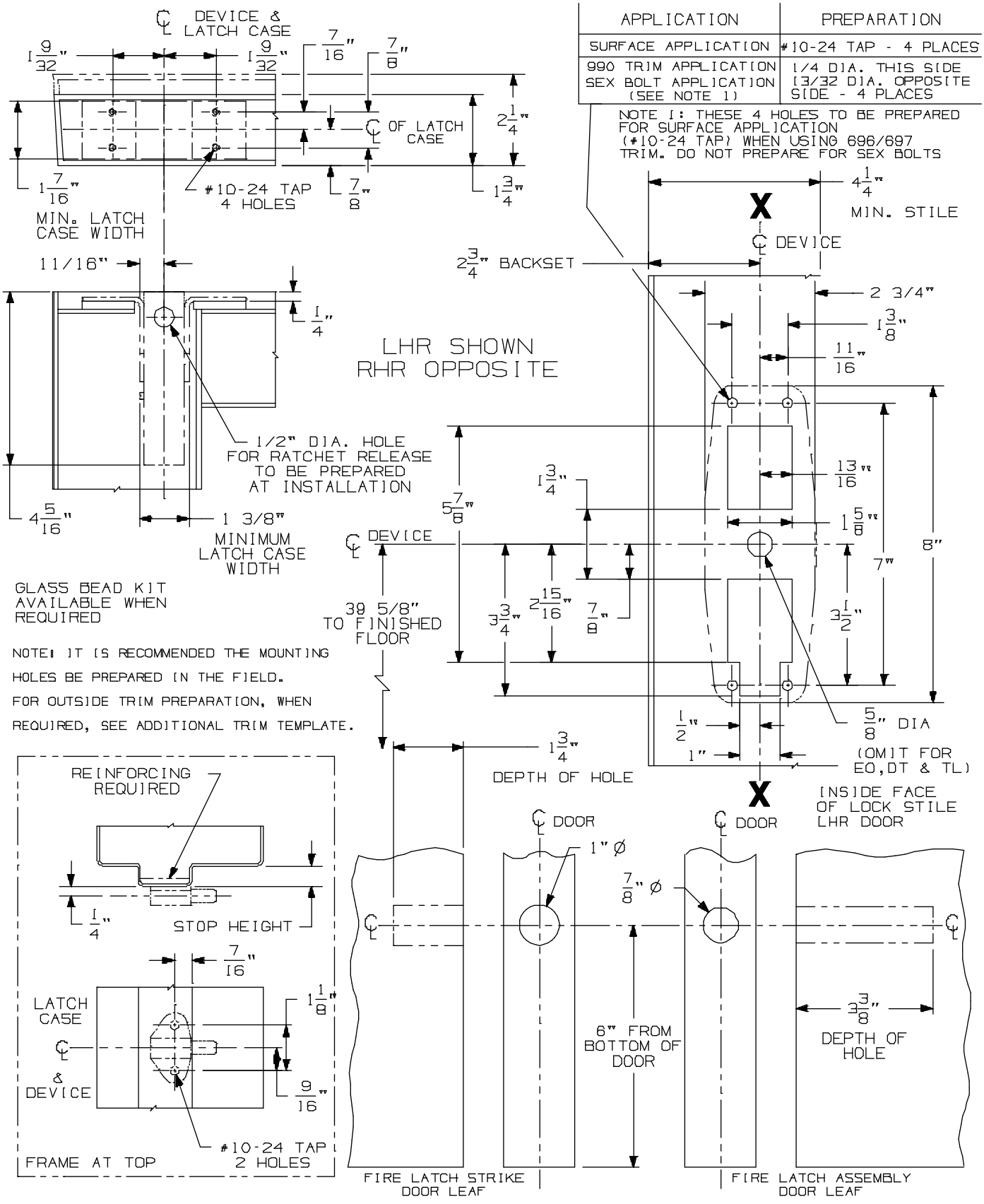

98/9947-F-LBR Series
Concealed Vertical Rod Device

VON DUPRIN®

NOTES: SEE MASTER SHEET #10001 FOR SUGGESTED REINFORCING

TEMPLATE NUMBER: 10323_a

DATE: 05-21-13

990 TP & 990 TP-BE TRIM

NOTES: SEE MASTER SHEET #10001 FOR SUGGESTED REINFORCING

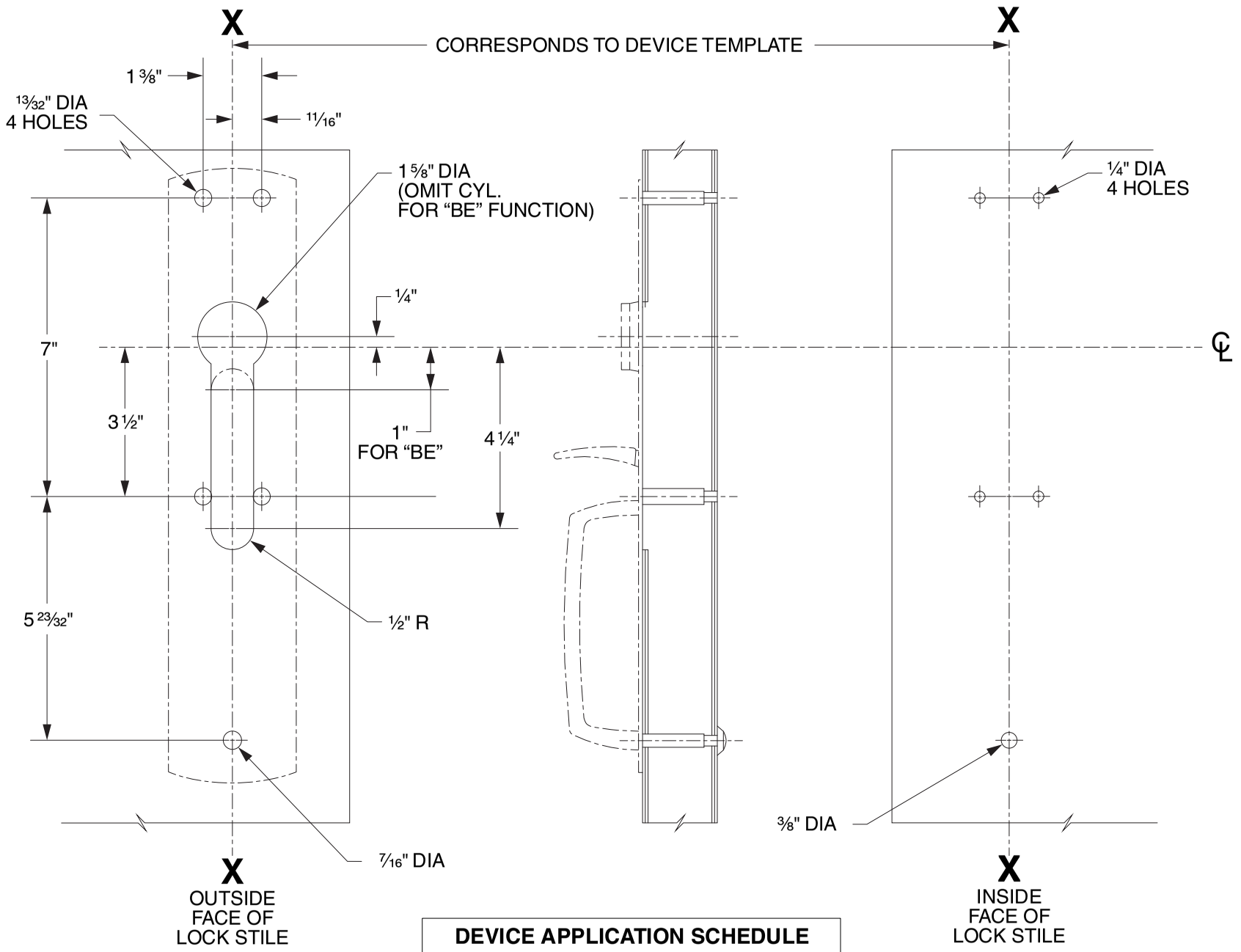

DEVICE APPLICATION SCHEDULE
98/99 SERIES RIM DEVICE
9827/9927 SERIES DEVICE
9847/9947 SERIES DEVICE
9849/9949 SERIES DEVICE

LHR SHOWN
RHR OPPOSITE

VON DUPRIN®

TEMPLATE NUMBER: 20265_C

DATE: 05-31-13

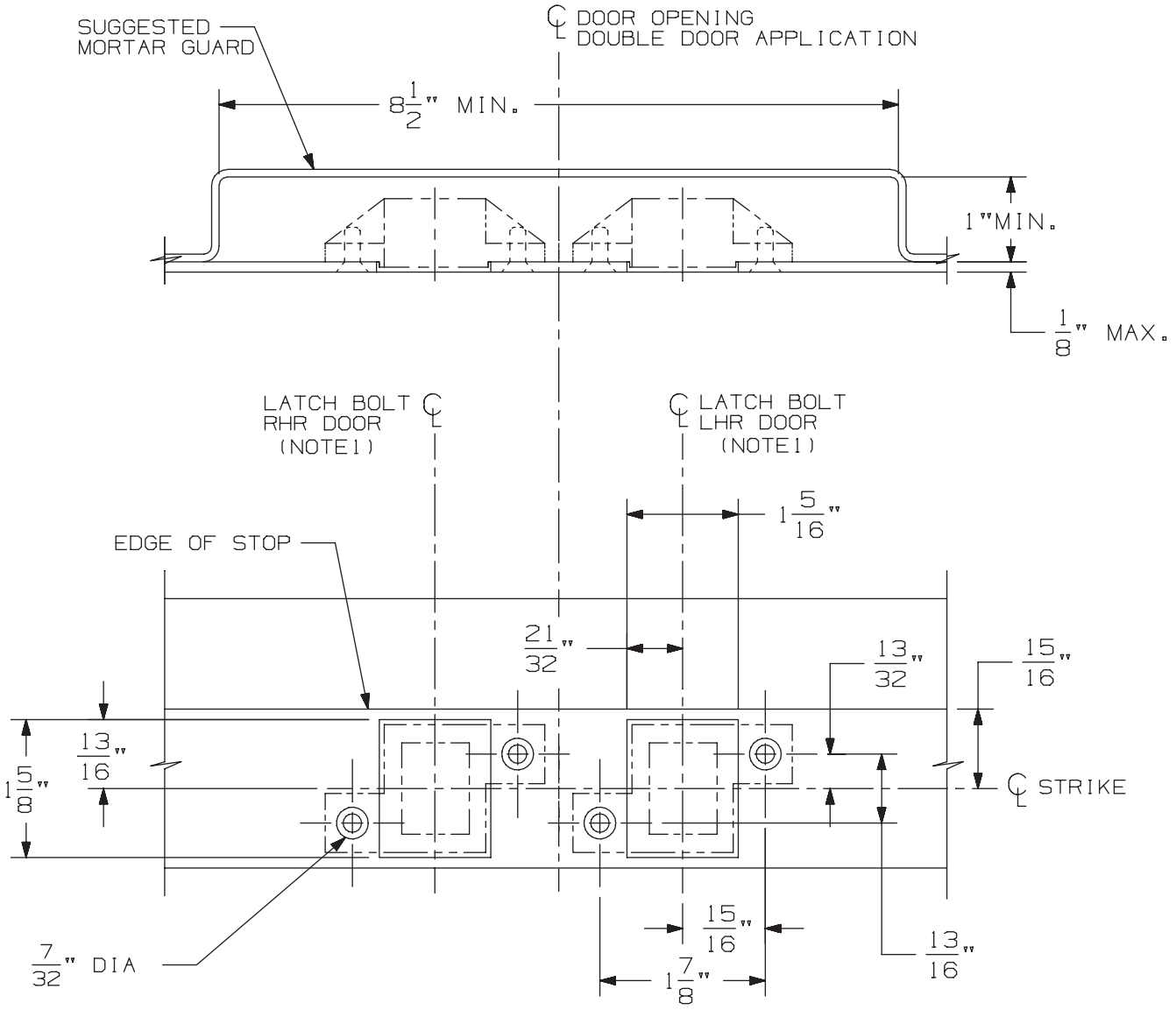

3/8" DIA X 82° C'SINK

IN FRAME
2 HOLES
EACH STRIKE

DOUBLE DOOR APPLICATION SHOWN.
FOR SINGLE DOOR APPLICATION USE
APPROPRIATE HANDING AS SHOWN.

DEVICE APPLICATION SCHEDULE
33/3547 & 33/3547-F SERIES DEVICE
98/99/47 & 98/99/47-F SERIES DEVICE
5547/5547 WDC SERIES
33/3547A & 33/3547A-F SERIES DEVICE
(9) 94/9547 SERIES DEVICE

NOTES: 1. SEE DEVICE TEMPLATE FOR LOCATION OF LATCH BOLT.

2. IF DEVICE IS TO BE MOUNTED ON WOOD DOORS, SEE WOOD DOOR TEMPLATE FOR LATCH BOLT LOCATION.

338 Strike for Hollow Metal Frame Preparation

VON DUPRIN®

NOTES: SEE MASTER SHEET #10001 FOR SUGGESTED REINFORCING

TEMPLATE NUMBER: 30038_a

DATE: 05-23-13

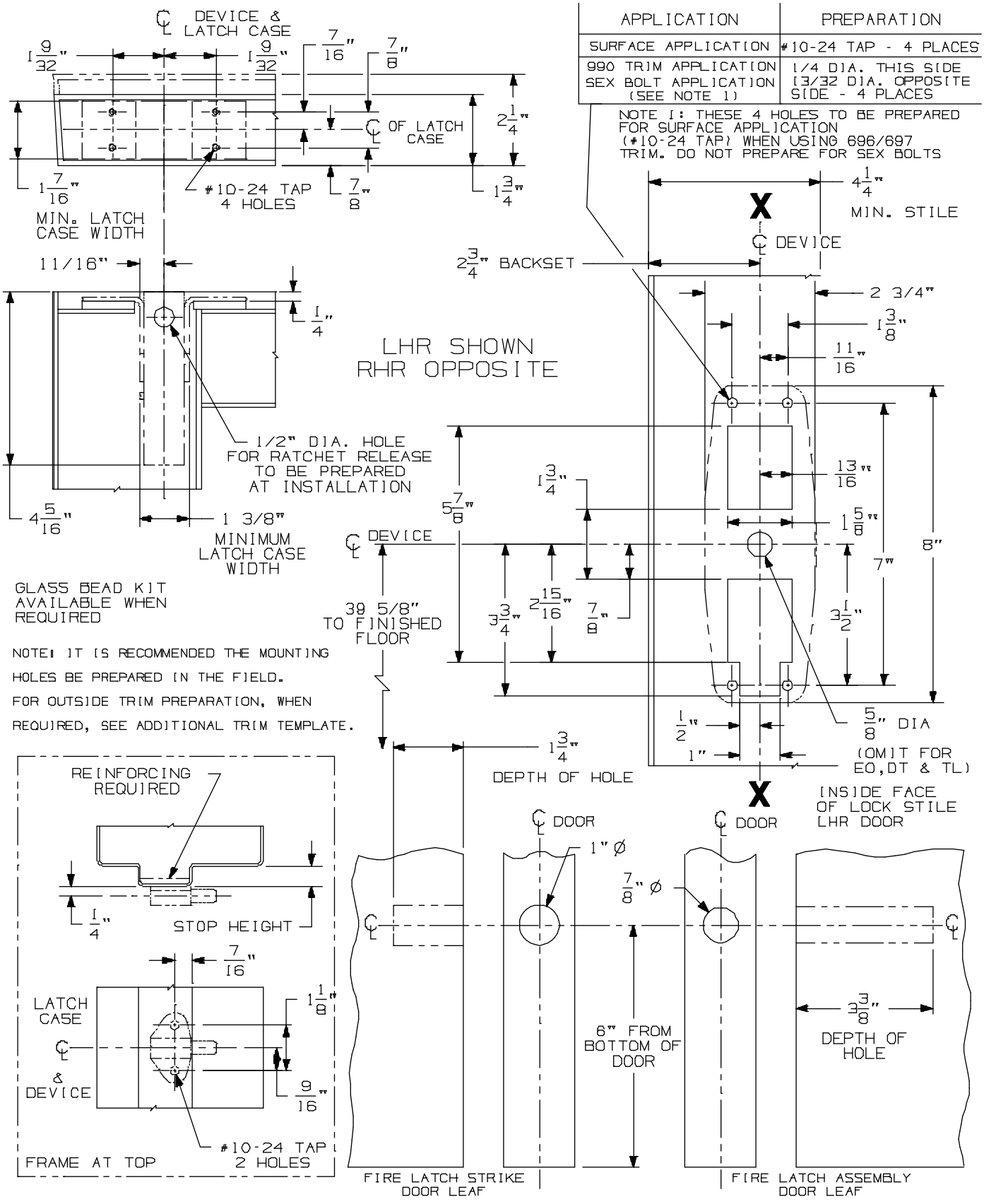

98/9947-F-LBR Series
Concealed Vertical Rod Device

VON DUPRIN®

NOTES: SEE MASTER SHEET #10001 FOR SUGGESTED REINFORCING

TEMPLATE NUMBER: 10323_a

DATE: 05-21-13

990 DT TRIM

NOTES: SEE MASTER SHEET #10001 FOR SUGGESTED REINFORCING

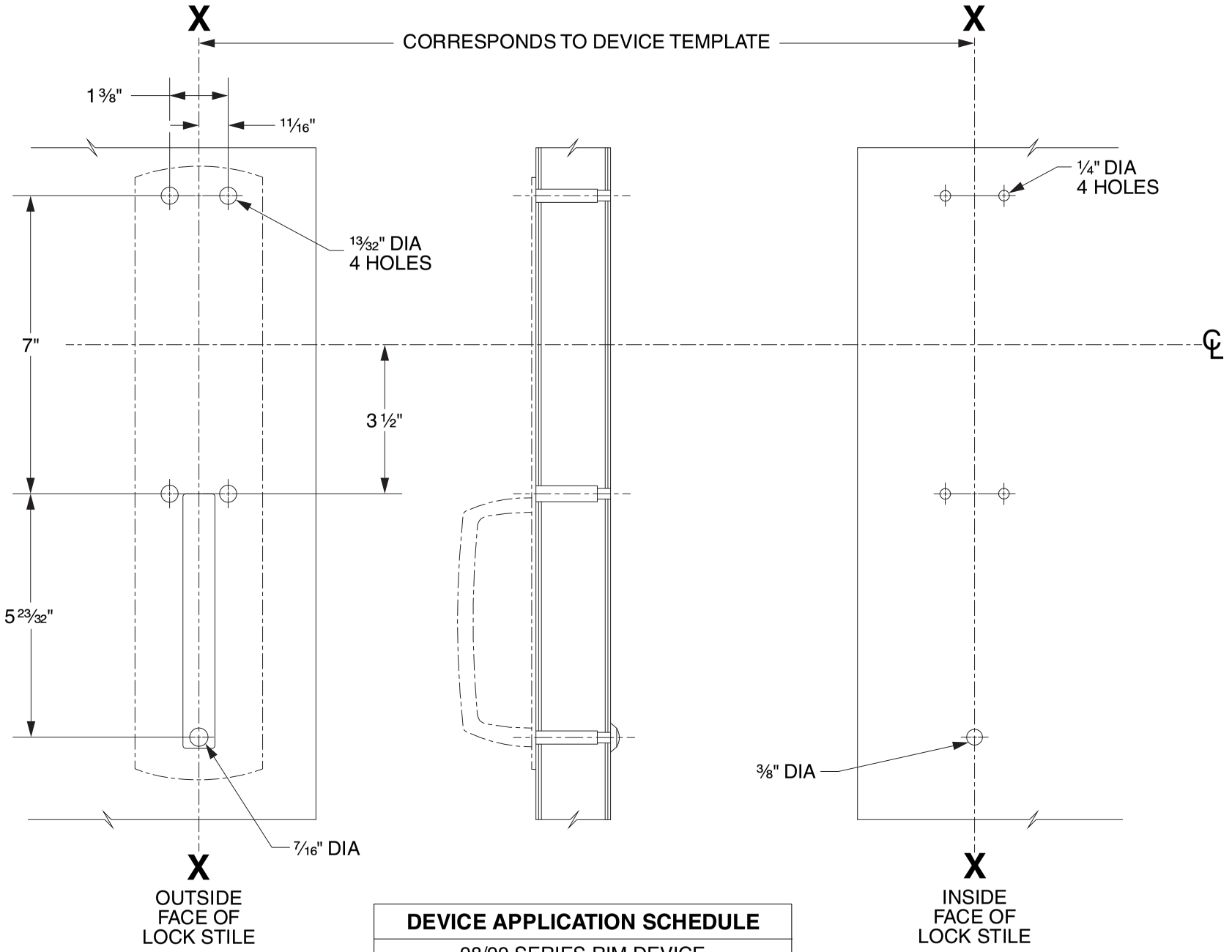

DEVICE APPLICATION SCHEDULE
98/99 SERIES RIM DEVICE
9827/9927 SERIES DEVICE
9847/9947 SERIES DEVICE
9849/9949 SERIES DEVICE
9875/9975 SERIES DEVICE

LHR SHOWN
RHR OPPOSITE

VON DUPRIN®

TEMPLATE NUMBER: 20268_C

DATE: 05-31-13

376-T Control

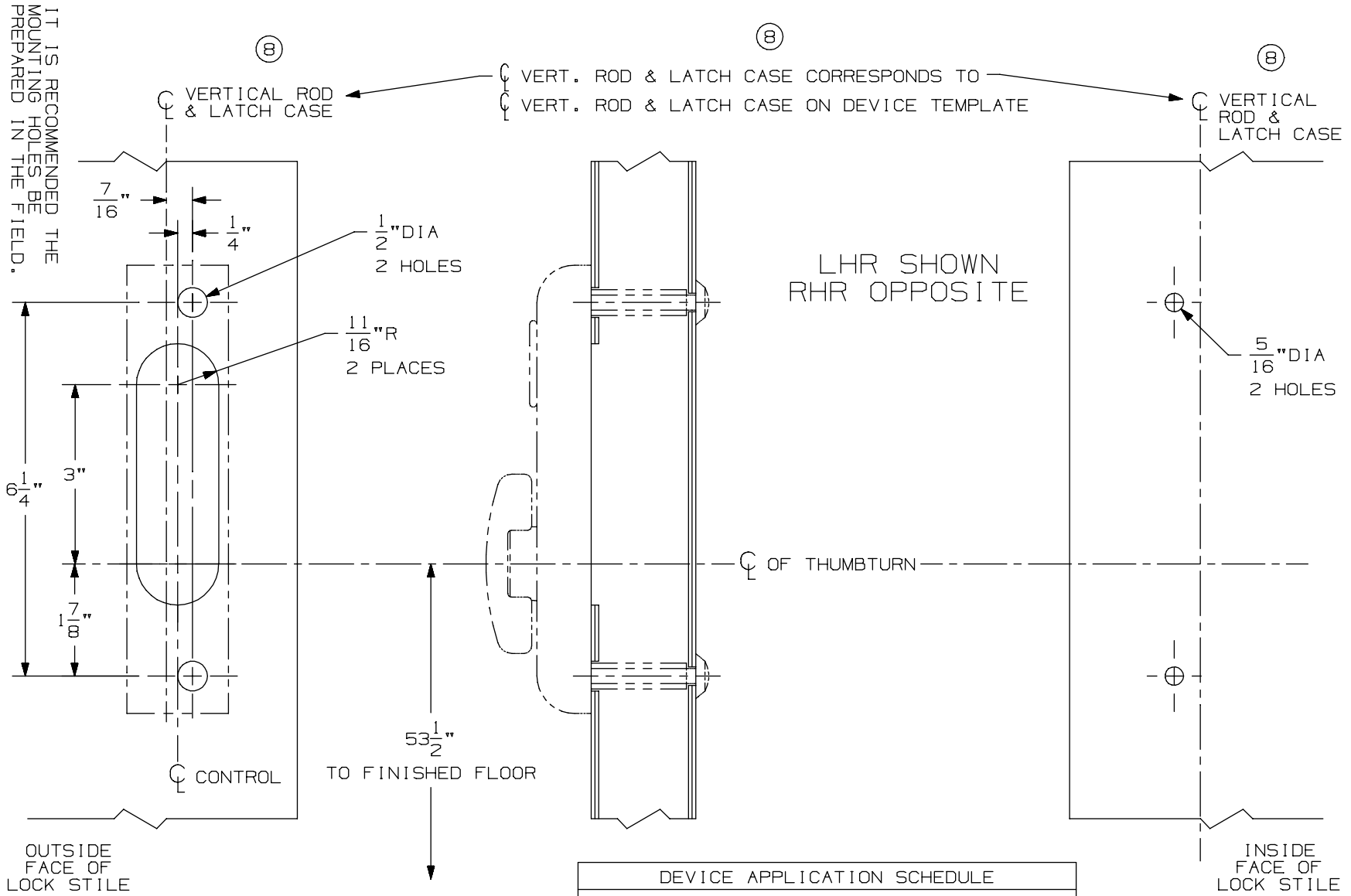

DEVICE APPLICATION SCHEDULE
5547/5547-F VERT. ROD DEVICE
8847-F VERT. ROD DEVICE
* 3347/3547 VERT. ROD DEVICE
3347-F/3547-F VERT. ROD DEVICE
⑧ * 3347A/3547A VERT. ROD DEVICE
⑧ 3347A-F/3547A-F VERT. ROD DEVICE
9847/9947 VERT. ROD DEVICE
9847-F/9947-F VERTICAL ROD DEVICE

⑧ * NOT TO BE USED WITH 1 1/16" LATCH CASE BACKSET ON BULLNOSE EDGE DOORS WITH WEATHERSTRIP CHANNEL.

NOTES: SEE MASTER SHEET #10001 FOR SUGGESTED REINFORCING

TEMPLATE NUMBER: 40114_a

DATE: 05-28-13

VON DUPRIN®

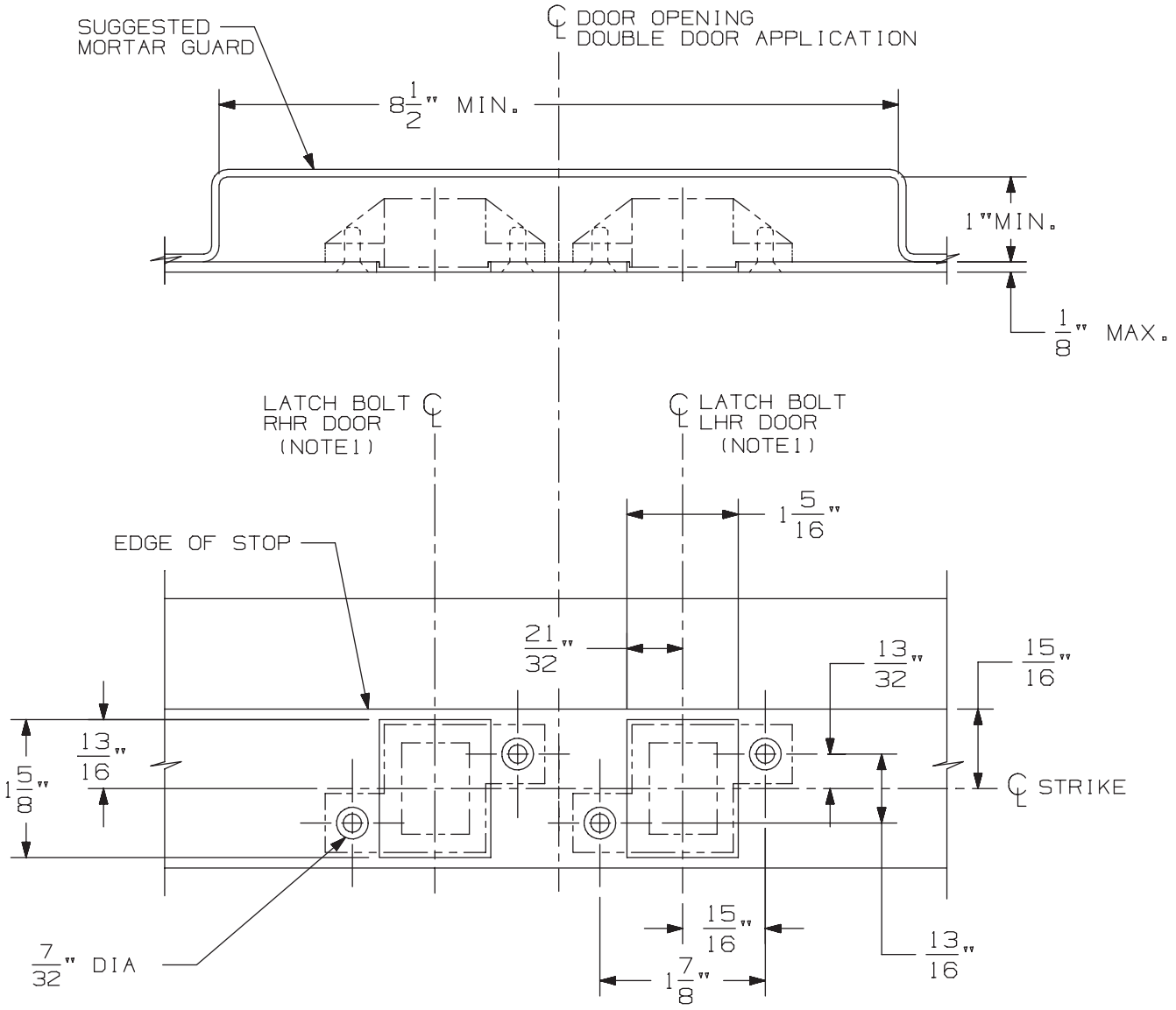

3/8" DIA X 82° C'SINK

IN FRAME
2 HOLES
EACH STRIKE

DOUBLE DOOR APPLICATION SHOWN.
FOR SINGLE DOOR APPLICATION USE
APPROPRIATE HANDING AS SHOWN.

DEVICE APPLICATION SCHEDULE
33/3547 & 33/3547-F SERIES DEVICE
98/99/47 & 98/99/47-F SERIES DEVICE
5547/5547 WDC SERIES
33/3547A & 33/3547A-F SERIES DEVICE
(9) 94/9547 SERIES DEVICE

NOTES: 1. SEE DEVICE TEMPLATE FOR LOCATION OF LATCH BOLT.

2. IF DEVICE IS TO BE MOUNTED ON WOOD DOORS, SEE WOOD DOOR TEMPLATE FOR LATCH BOLT LOCATION.

338 Strike for Hollow Metal Frame Preparation

VON DUPRIN®

NOTES: SEE MASTER SHEET #10001 FOR SUGGESTED REINFORCING

TEMPLATE NUMBER: 30038_a

DATE: 05-23-13

98 / 99 Series Exit Devices - 9849/9949 Concealed Vertical Cable (Standard, CD, EL, LX, RX and SS)

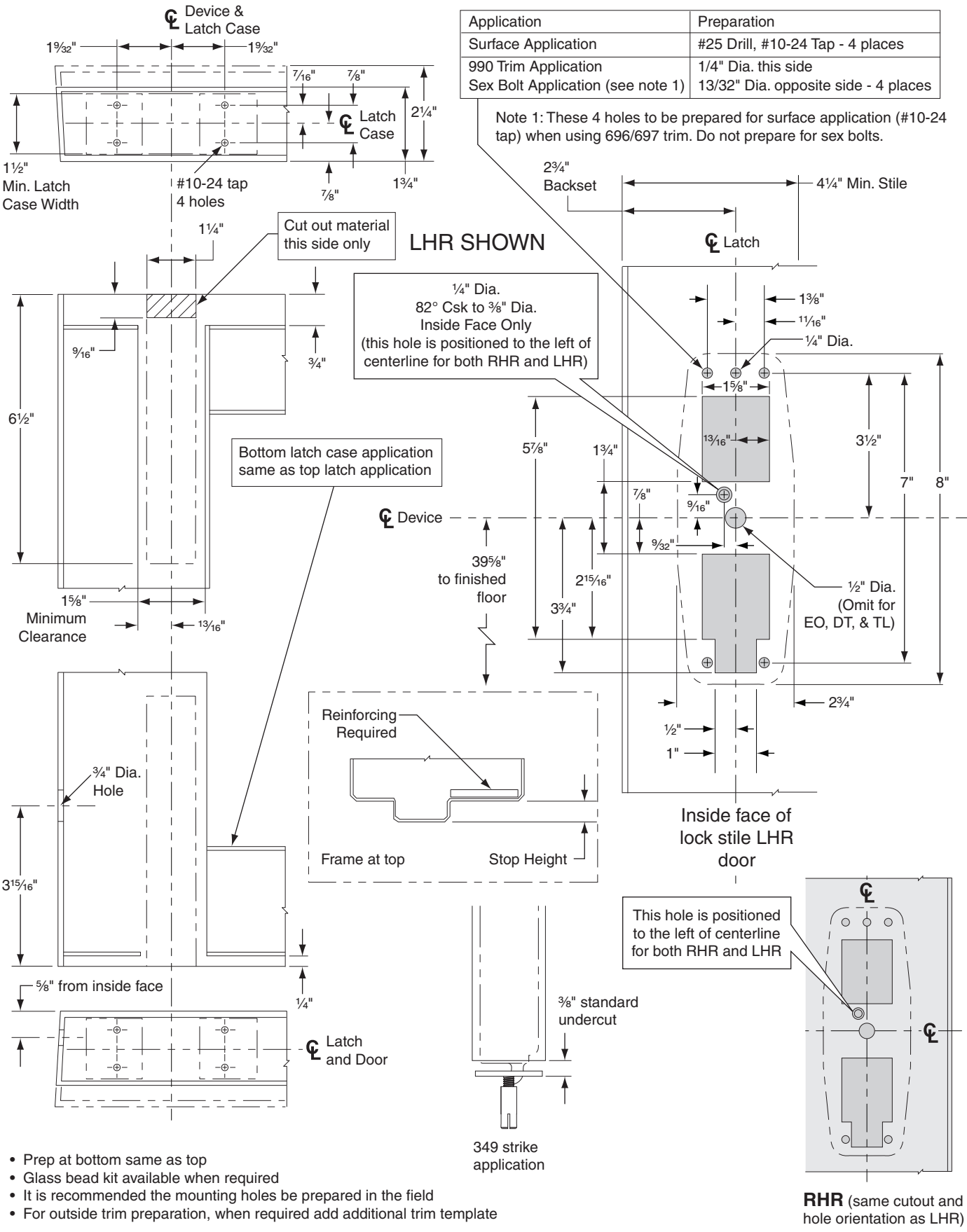

Application	Preparation
Surface Application	#25 Drill, #10-24 Tap - 4 places
990 Trim Application Sex Bolt Application (see note 1)	1/4" Dia. this side 13/32" Dia. opposite side - 4 places

Note 1: These 4 holes to be prepared for surface application (#10-24 tap) when using 696/697 trim. Do not prepare for sex bolts.

- Prep at bottom same as top
- Glass bead kit available when required
- It is recommended the mounting holes be prepared in the field
- For outside trim preparation, when required add additional trim template

RHR (same cutout and hole orientation as LHR)

98/9949-F HOLLOW METAL DOOR FIRE APPLICATION
98/9949 HOLLOW METAL DOOR PANIC APPLICATION
CONCEALED VERTICAL DEVICE

VON DUPRIN®

NOTE: SEE MASTER SHEET NO. 10001 FOR SUGGESTED REINFORCING

TEMPLATE NUMBER: 23964406_d

DATE: 9-21-16

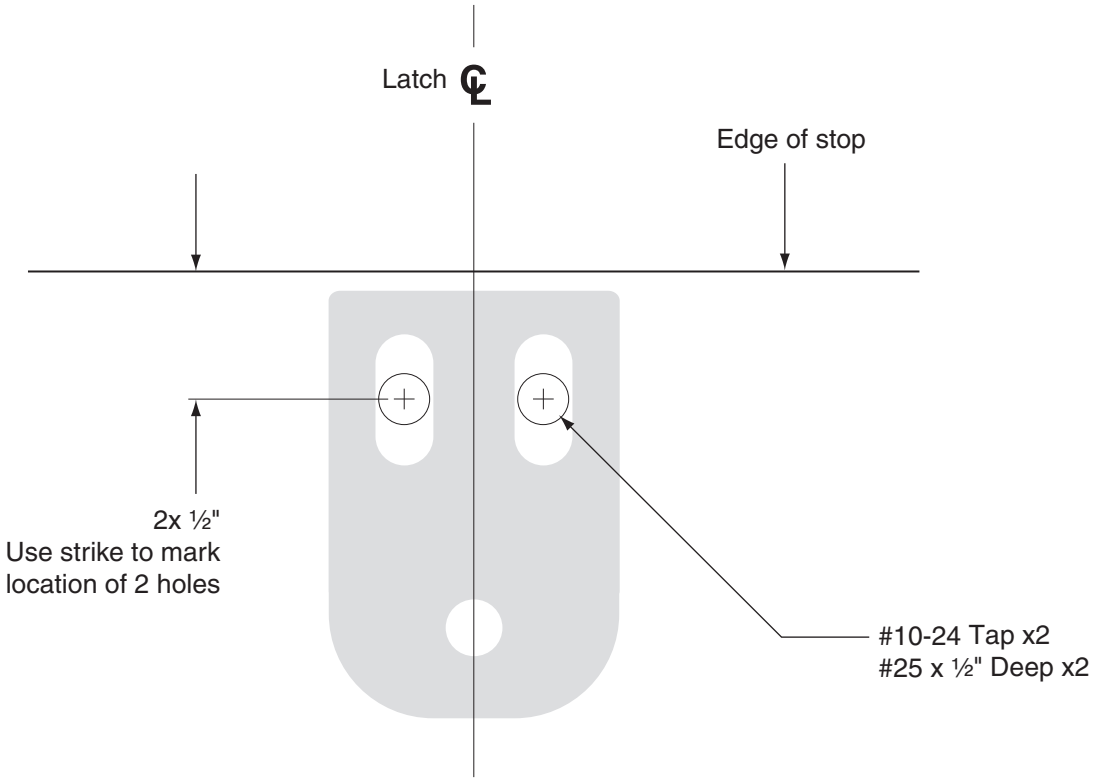

DEVICE APPLICATION SCHEDULE
33/3549A & 33/3549A-F SERIES DEVICE
98/9949 & 98/9949-F SERIES DEVICE
98/9949WDC & 98/9949WDC-F SERIES DEVICE

249 STRIKE
FOR HOLLOW METAL FRAME PREPARATION

VON DUPRIN®

NOTE: SEE MASTER SHEET NO. 10001 FOR SUGGESTED REINFORCING

TEMPLATE NUMBER: 24101511_b

DATE: 9-21-16

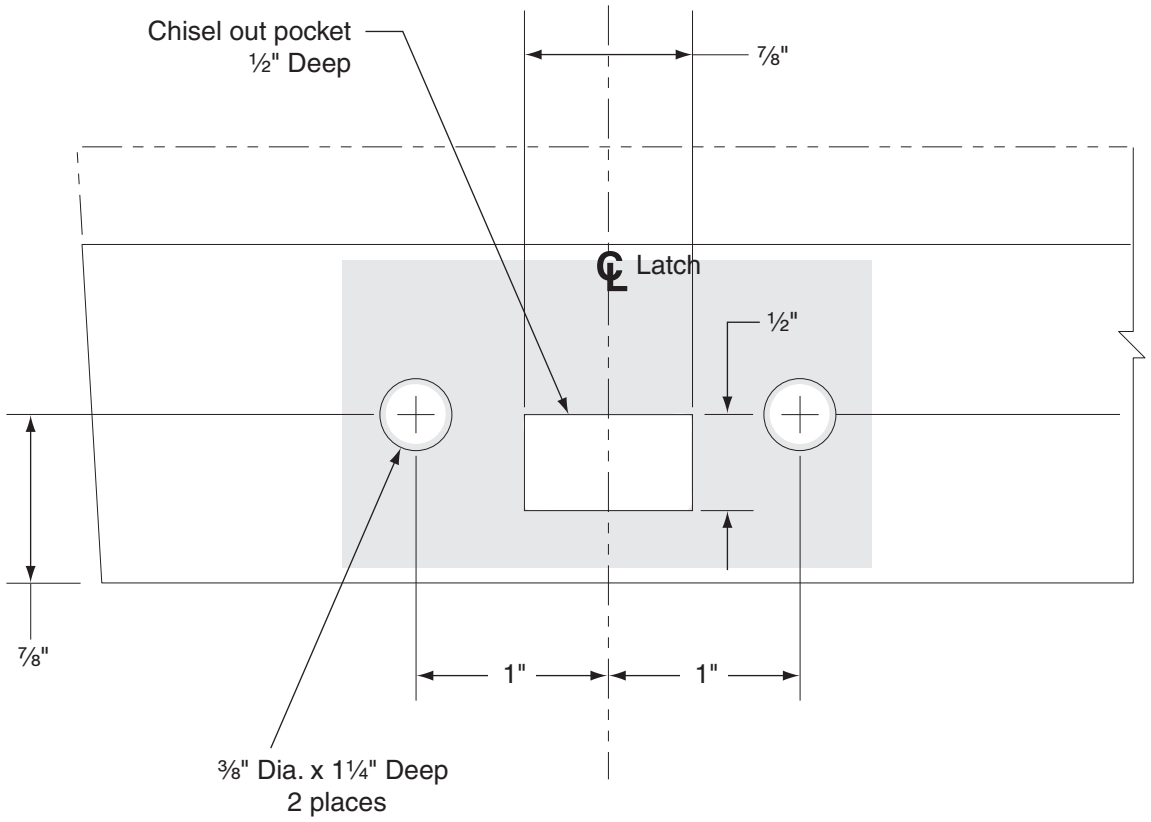

Clear holes of debris, then drop in anchors (slotted end first)

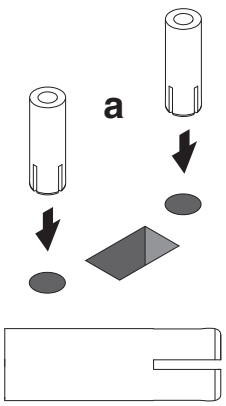

Secure the anchors using a hammer and punch

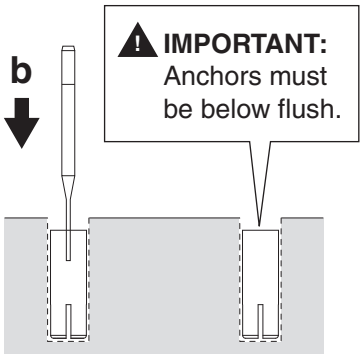

Install strike plate and secure with 2 screws

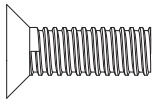

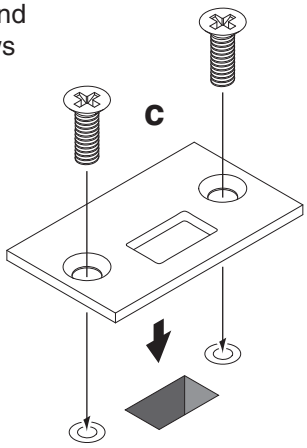

DEVICE APPLICATION SCHEDULE
33/3549A & 33/3549A-F SERIES DEVICE
98/9949 & 98/9949-F SERIES DEVICE
98/9949WDC & 98/9949WDC-F SERIES DEVICE

349 STRIKE

VON DUPRIN®

TEMPLATE NUMBER: 24101529_c

DATE: 9-21-16

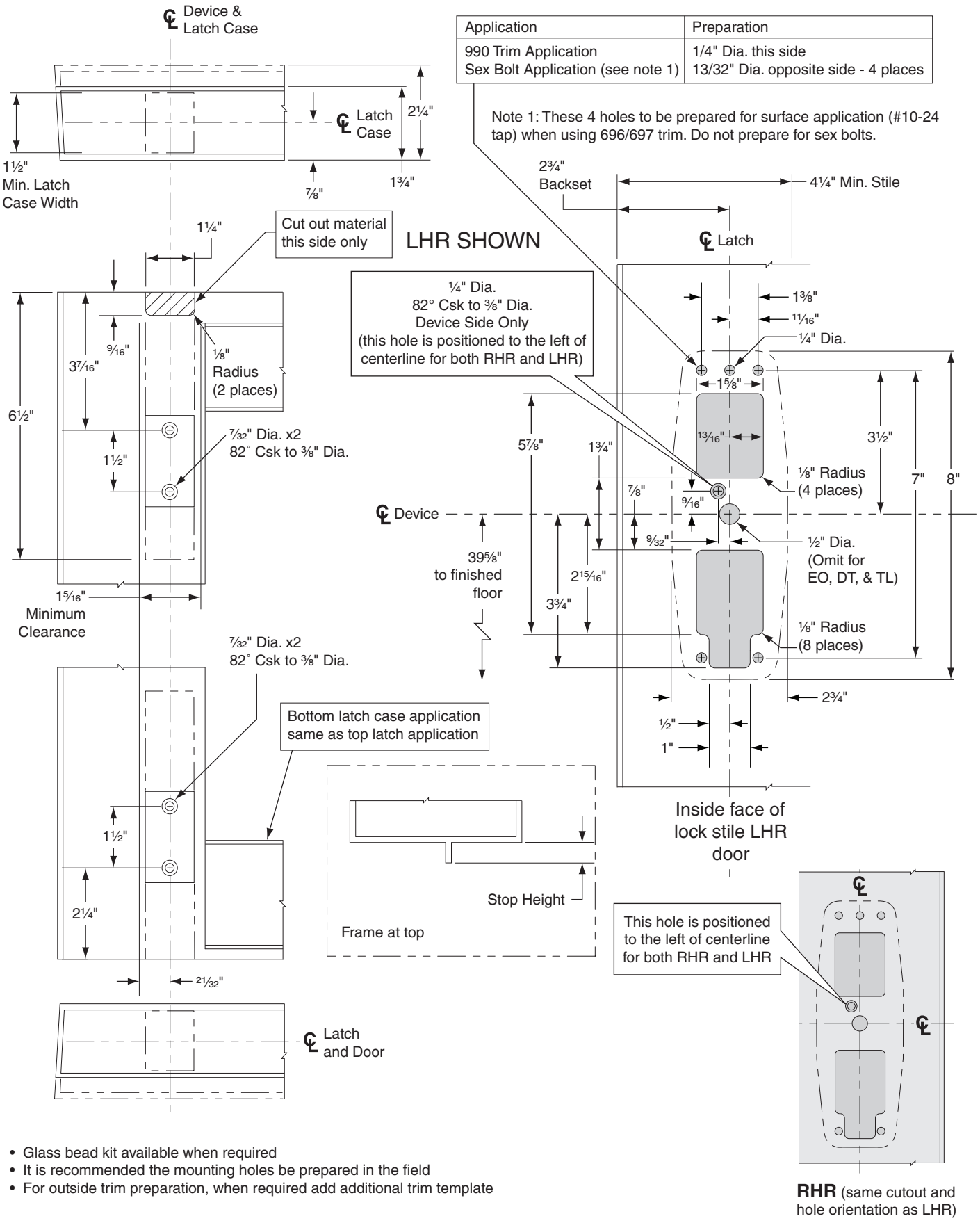

Application	Preparation
990 Trim Application Sex Bolt Application (see note 1)	1/4" Dia. this side 13/32" Dia. opposite side - 4 places

Note 1: These 4 holes to be prepared for surface application (#10-24 tap) when using 696/697 trim. Do not prepare for sex bolts.

- Glass bead kit available when required
- It is recommended the mounting holes be prepared in the field
- For outside trim preparation, when required add additional trim template

RHR (same cutout and hole orientation as LHR)

98/9949 ALUMINUM DOOR PANIC APPLICATION
CONCEALED VERTICAL DEVICE

VON DUPRIN®

TEMPLATE NUMBER: 24074247_d

DATE: 9-21-16

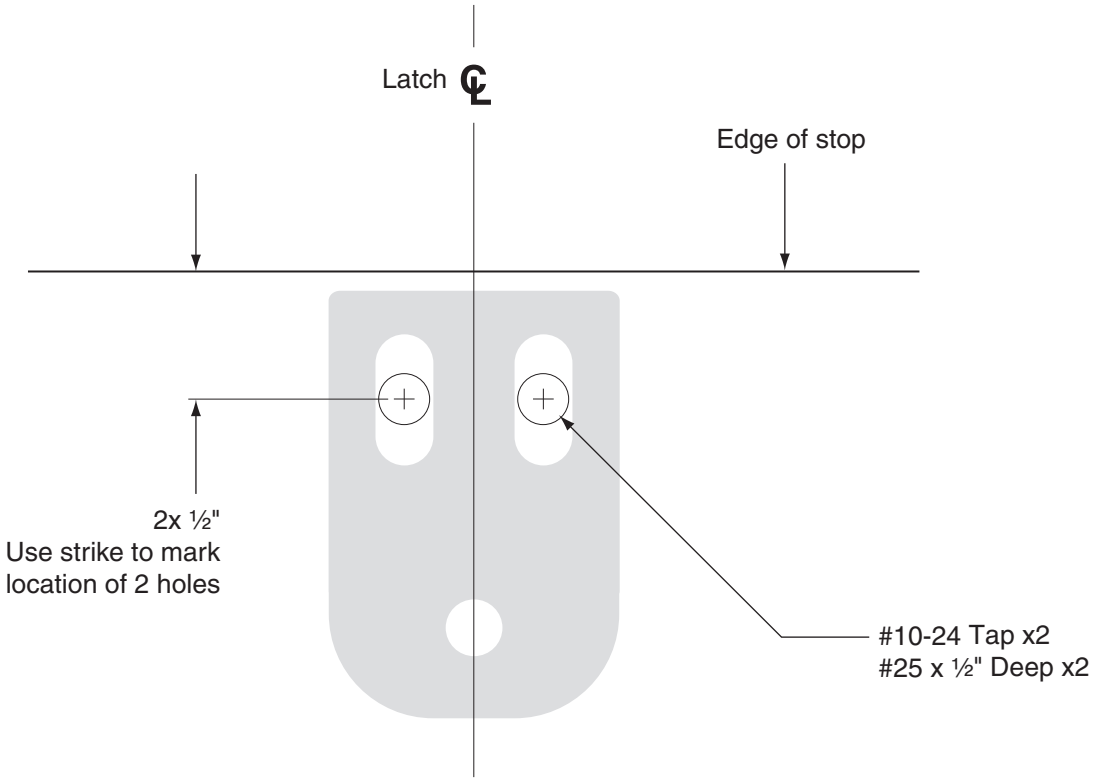

DEVICE APPLICATION SCHEDULE
33/3549A & 33/3549A-F SERIES DEVICE
98/9949 & 98/9949-F SERIES DEVICE
98/9949WDC & 98/9949WDC-F SERIES DEVICE

249 STRIKE
FOR HOLLOW METAL FRAME PREPARATION

VON DUPRIN®

NOTE: SEE MASTER SHEET NO. 10001 FOR SUGGESTED REINFORCING

TEMPLATE NUMBER: 24101511_b

DATE: 9-21-16

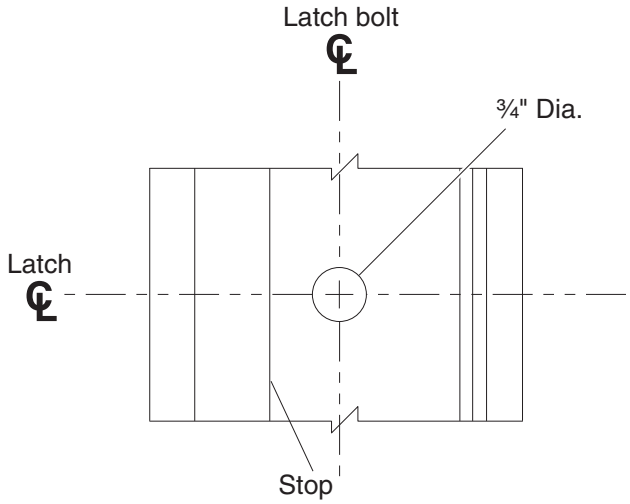

a. After closing door with bottom latch installed, mark the location the bottom latch bolt is contacting the threshold.

b. Drill a ¾" diameter hole in the threshold.

DEVICE APPLICATION SCHEDULE
33/3549A & 33/3549A-F SERIES DEVICE

THRESHOLD PREPARATION FOR ALUMINUM DOOR

VON DUPRIN®

TEMPLATE NUMBER: 24143075_b

DATE: 9-21-16

98 / 99 Series Exit Devices - 9849-F/9949-F Concealed Vertical Cable Fire (Standard, CD, EL, LX, RX and SS)

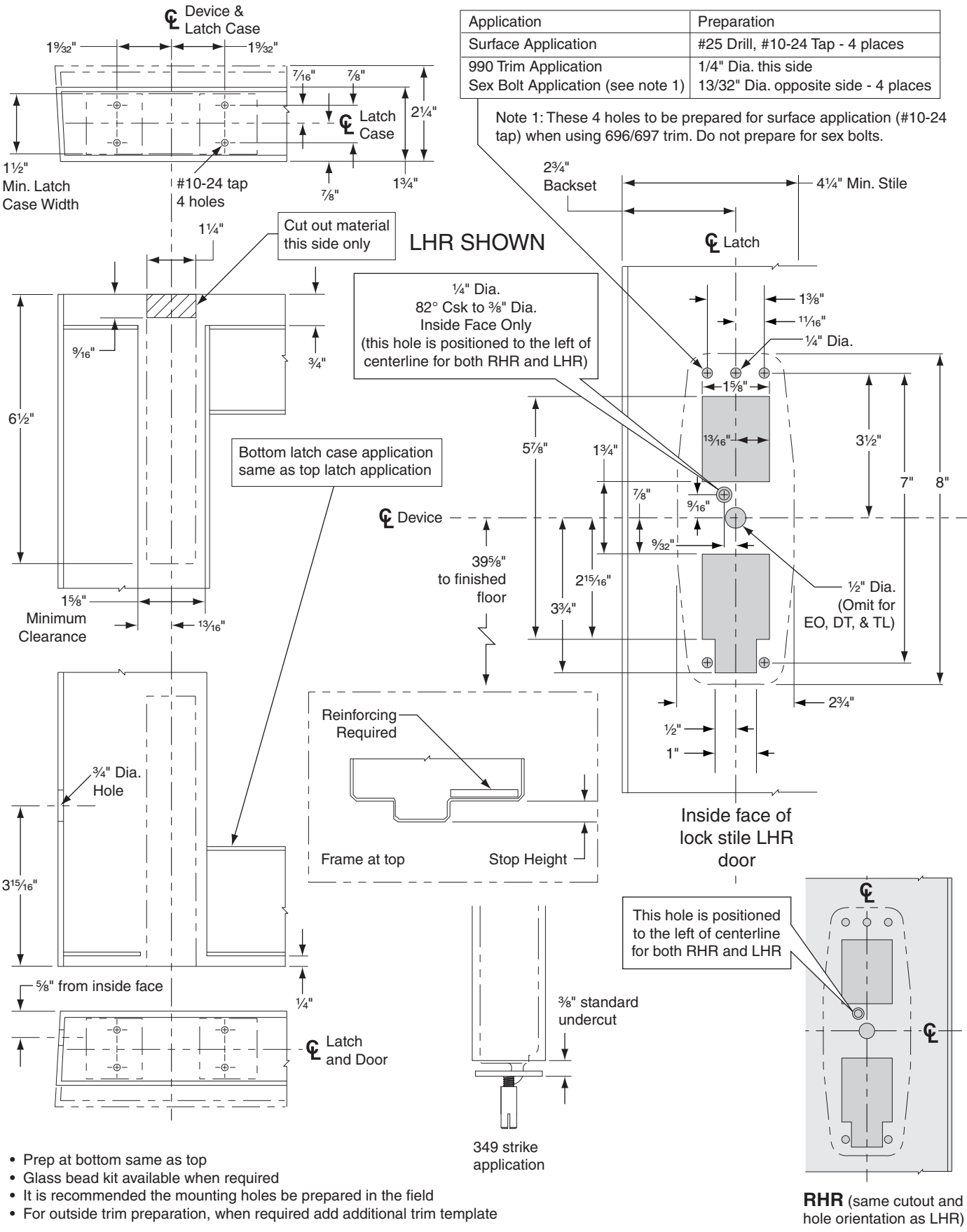

Application	Preparation
Surface Application	#25 Drill, #10-24 Tap - 4 places
990 Trim Application Sex Bolt Application (see note 1)	1/4" Dia. this side 13/32" Dia. opposite side - 4 places

Note 1: These 4 holes to be prepared for surface application (#10-24 tap) when using 696/697 trim. Do not prepare for sex bolts.

- Prep at bottom same as top
- Glass bead kit available when required
- It is recommended the mounting holes be prepared in the field
- For outside trim preparation, when required add additional trim template

RHR (same cutout and hole orientation as LHR)

98/9949-F HOLLOW METAL DOOR FIRE APPLICATION
98/9949 HOLLOW METAL DOOR PANIC APPLICATION
CONCEALED VERTICAL DEVICE

VON DUPRIN®

NOTE: SEE MASTER SHEET NO. 10001 FOR SUGGESTED REINFORCING

TEMPLATE NUMBER: 23964406_d

DATE: 9-21-16

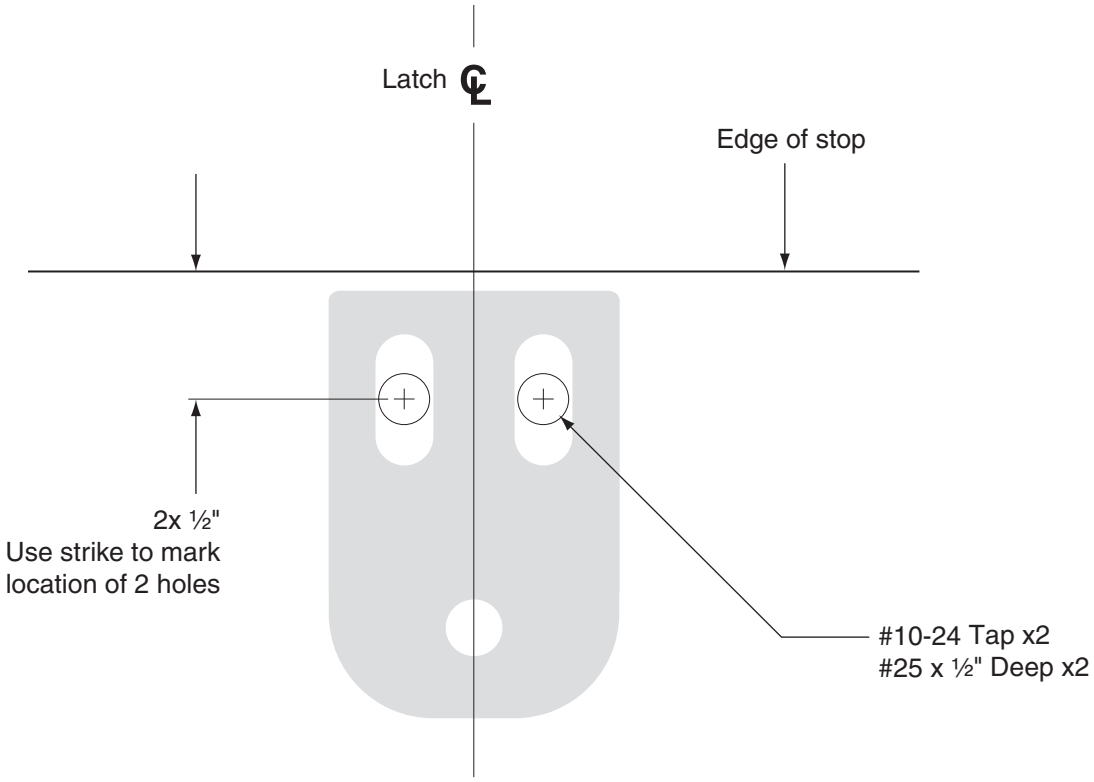

DEVICE APPLICATION SCHEDULE
33/3549A & 33/3549A-F SERIES DEVICE
98/9949 & 98/9949-F SERIES DEVICE
98/9949WDC & 98/9949WDC-F SERIES DEVICE

249 STRIKE
FOR HOLLOW METAL FRAME PREPARATION

VON DUPRIN®

NOTE: SEE MASTER SHEET NO. 10001 FOR SUGGESTED REINFORCING

TEMPLATE NUMBER: 24101511_b

DATE: 9-21-16

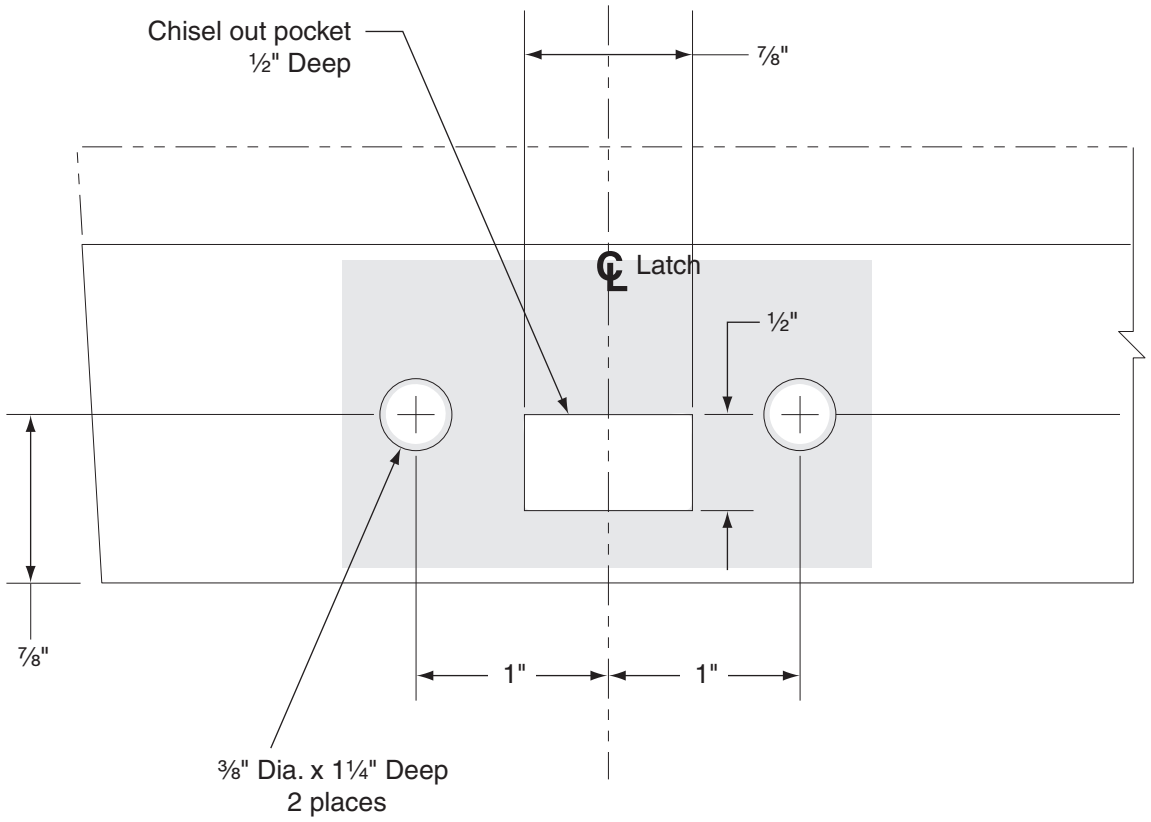

Clear holes of debris, then drop in anchors (slotted end first)

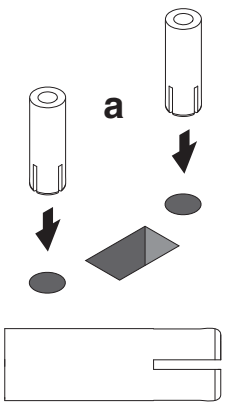

Secure the anchors using a hammer and punch

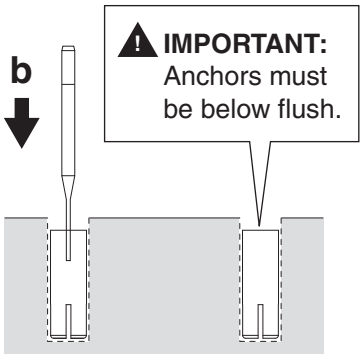

Install strike plate and secure with 2 screws

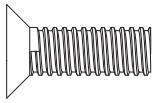

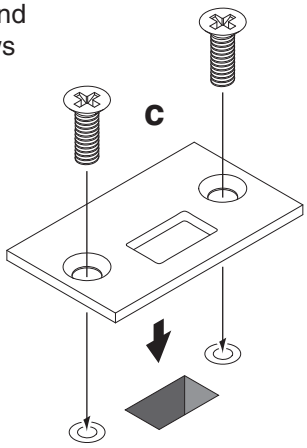

DEVICE APPLICATION SCHEDULE
33/3549A & 33/3549A-F SERIES DEVICE
98/9949 & 98/9949-F SERIES DEVICE
98/9949WDC & 98/9949WDC-F SERIES DEVICE

349 STRIKE

VON DUPRIN®

TEMPLATE NUMBER: 24101529_c

DATE: 9-21-16

98 / 99 Series Exit Devices - 9849-F-LBL/ 9949-F-LBL Concealed Vertical Cable Fire (Standard, CD, EL, LX, RX and SS)

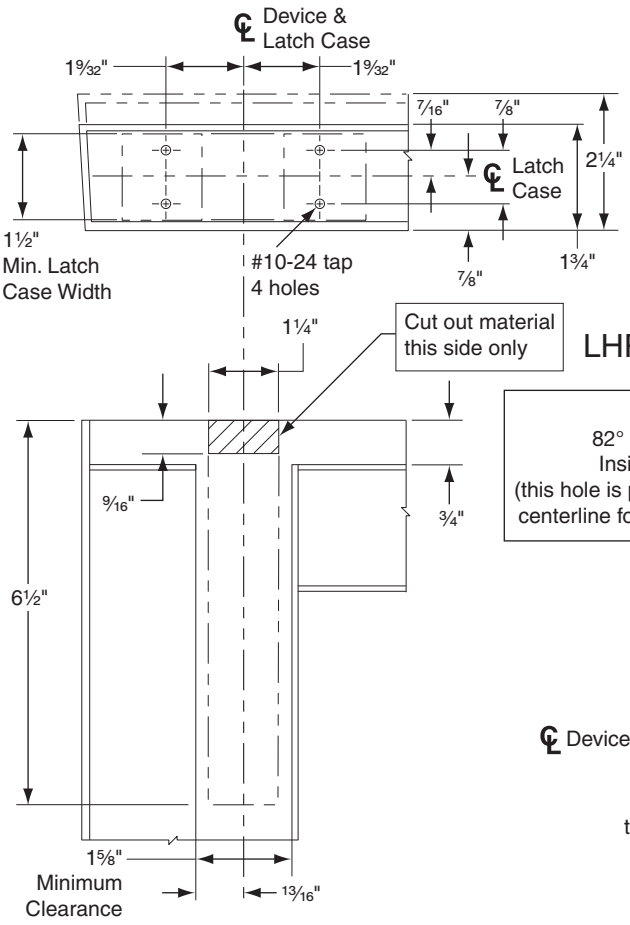

Application	Preparation
Surface Application	#25 Drill, #10-24 Tap - 4 places
990 Trim Application Sex Bolt Application (see note 1)	1/4" Dia. this side 13/32" Dia. opposite side - 4 places

Note 1: These 4 holes to be prepared for surface application (#10-24 tap) when using 696/697 trim. Do not prepare for sex bolts.

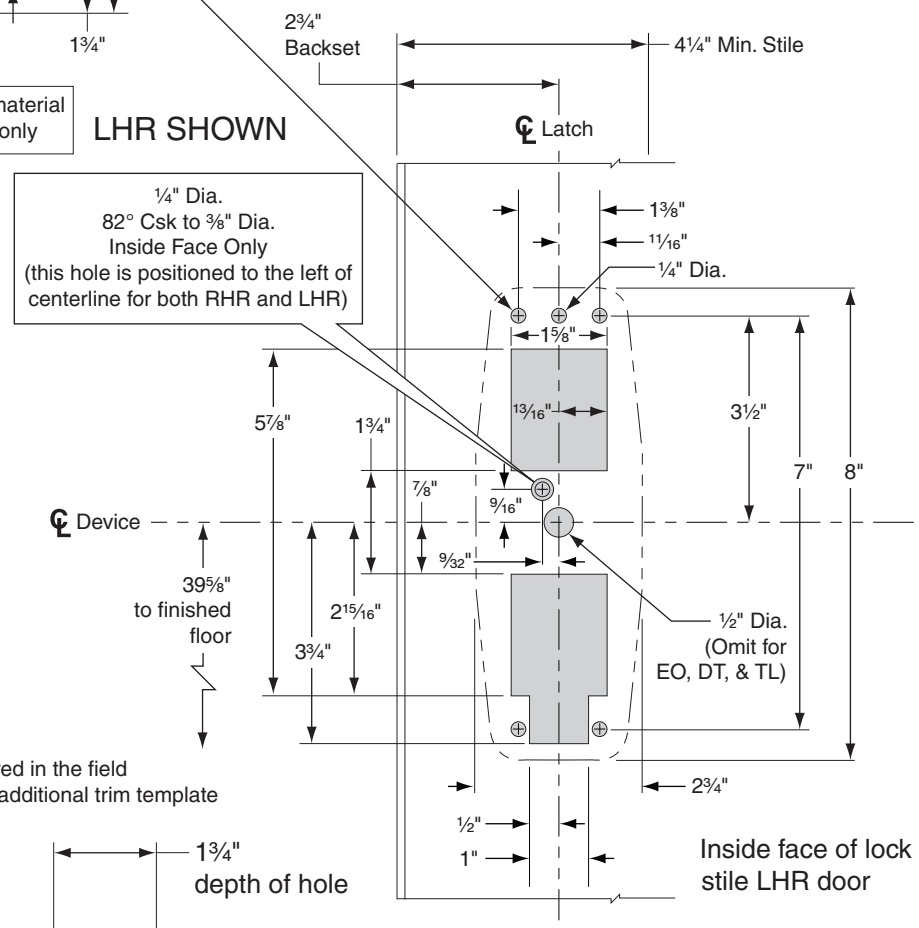

- Glass bead kit available when required
- It is recommended the mounting holes be prepared in the field
- For outside trim preparation, when required add additional trim template

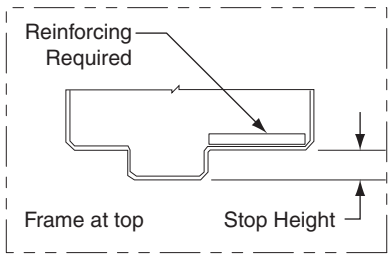

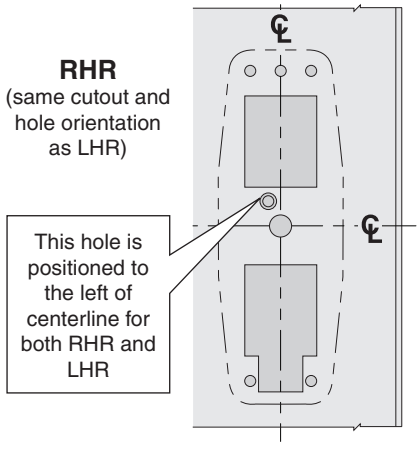

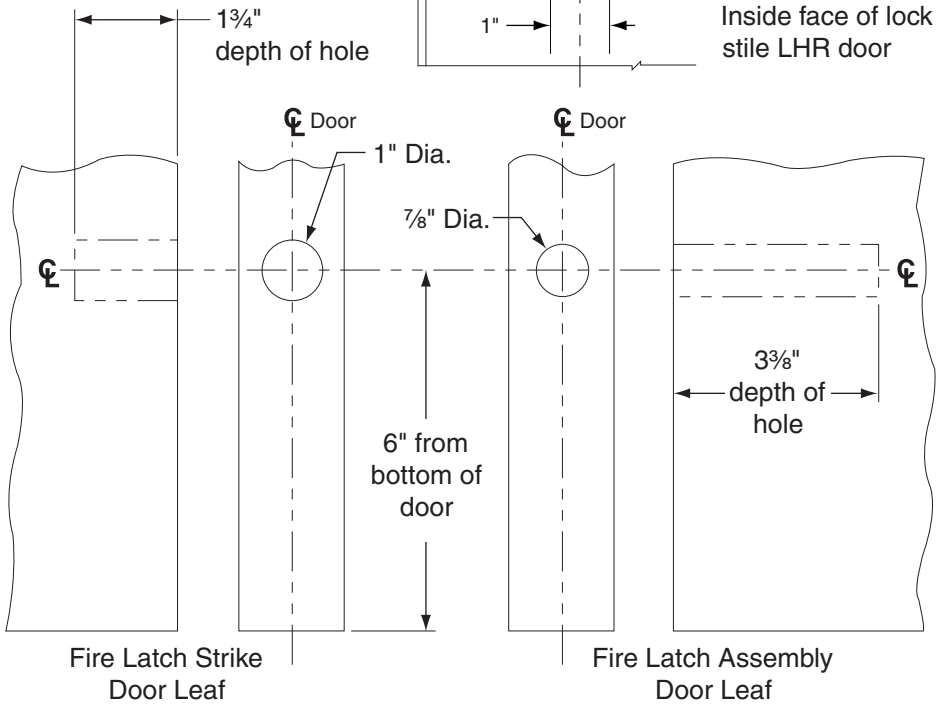

98/9949-F-LBL SERIES
CONCEALED VERTICAL DEVICE

VON DUPRIN®

NOTE: SEE MASTER SHEET NO. 10001 FOR SUGGESTED REINFORCING

TEMPLATE NUMBER: 24176703_c

DATE: 9-21-16

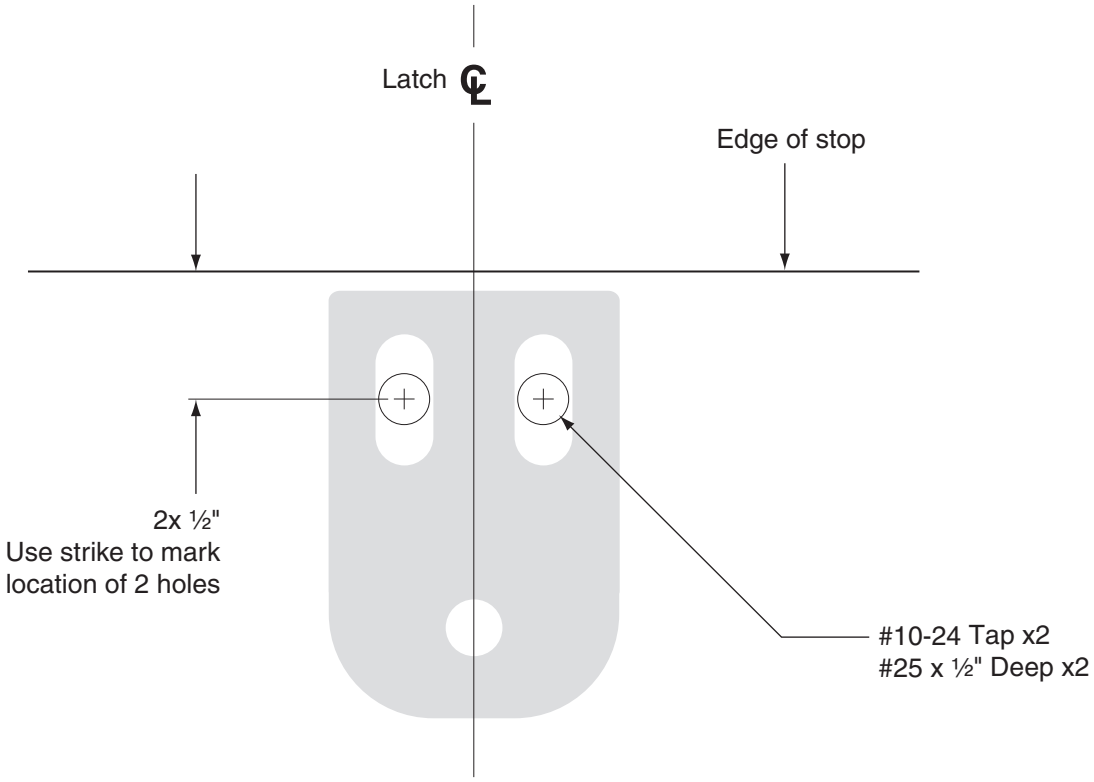

DEVICE APPLICATION SCHEDULE
33/3549A & 33/3549A-F SERIES DEVICE
98/9949 & 98/9949-F SERIES DEVICE
98/9949WDC & 98/9949WDC-F SERIES DEVICE

249 STRIKE
FOR HOLLOW METAL FRAME PREPARATION

VON DUPRIN®

NOTE: SEE MASTER SHEET NO. 10001 FOR SUGGESTED REINFORCING

TEMPLATE NUMBER: 24101511_b

DATE: 9-21-16

98 / 99 Series Exit Devices - 9875/9975 Mortise (Standard, CD, EL, LX, RX & SS)

9875/9975 & 9875-F/9975-F Series Mortise Lock Devices

NOTES: SEE MASTER SHEET #10001 FOR SUGGESTED REINFORCING

TEMPLATE NUMBER: 10305_a

DATE: 05-21-13

VON DUPRIN®

NOTES:
1. THESE FOUR HOLES TO BE PREPARED FOR SURFACE APPLICATION WHEN USING 696/697 TRIM. DO NOT PREPARE FOR SEX BOLTS.
2. FOR STOCK HOLLOW METAL DOORS SEE TEMPLATE NUMBER 10312 FOR TYPE '86' CUTOUT.
3. GLASS BEAD KIT AVAILABLE WHEN REQUIRED.
4. WIRING TO SS7500 & E7500 LOCKS GO THROUGH DOOR NOT DEVICE.
5. FOR OUTSIDE TRIM PREPARATION, WHEN REQUIRED, SEE TRIM TEMPLATE.
15 6. THE SS7500 LOCK MUST BE USED FOR LX98/9975 SERIES DEVICE APPLICATIONS.

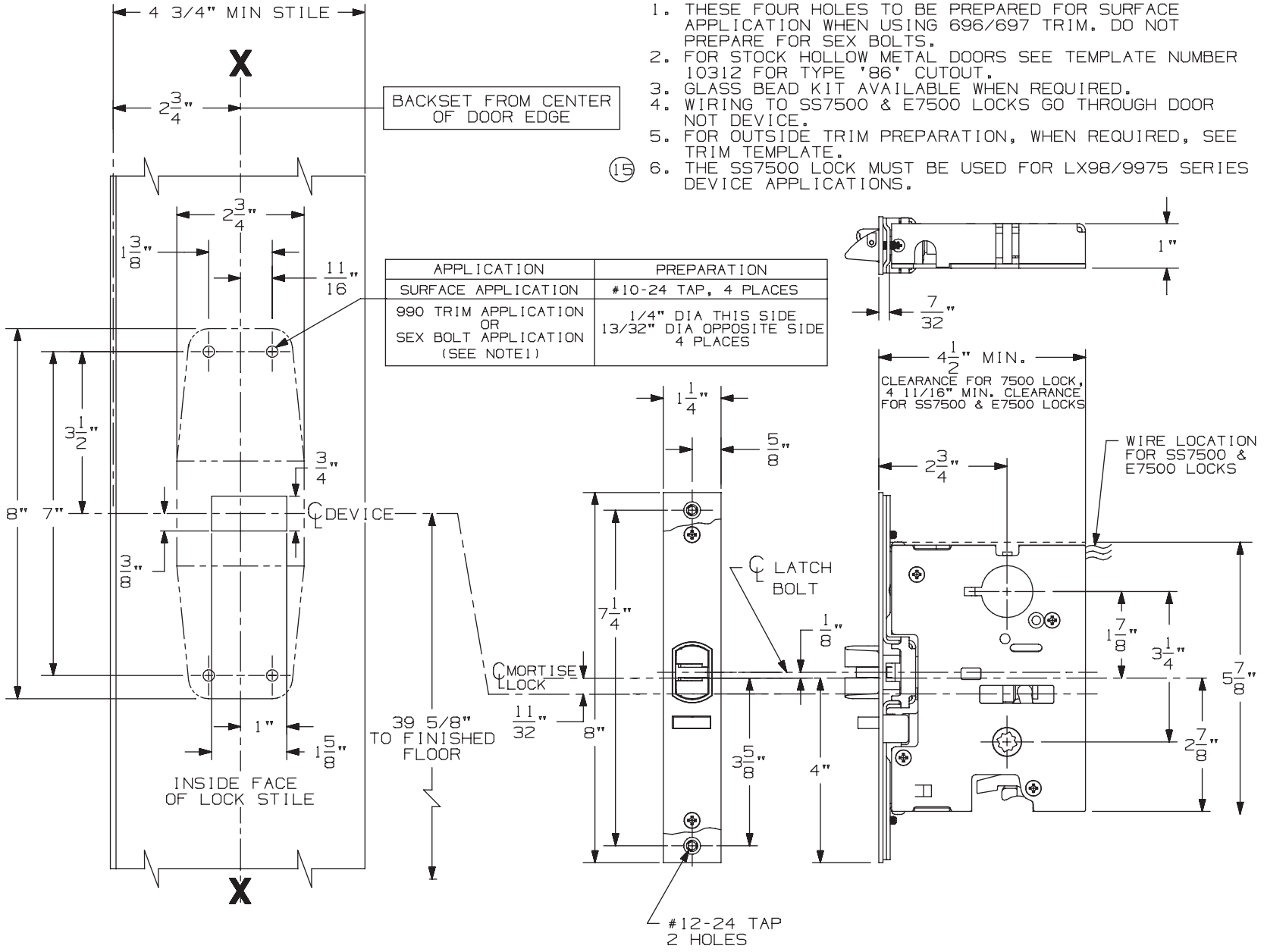

APPLICATION	PREPARATION
SURFACE APPLICATION	#10-24 TAP, 4 PLACES
990 TRIM APPLICATION OR SEX BOLT APPLICATION (SEE NOTE1)	1/4" DIA THIS SIDE 13/32" DIA OPPOSITE SIDE 4 PLACES

LHR APPLICATION SHOWN, RHR APPLICATION OPPOSITE

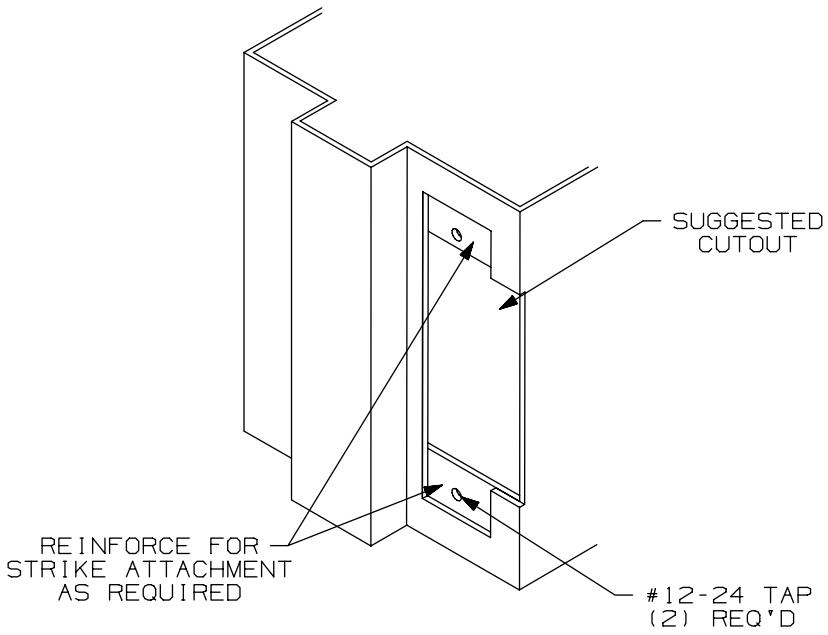

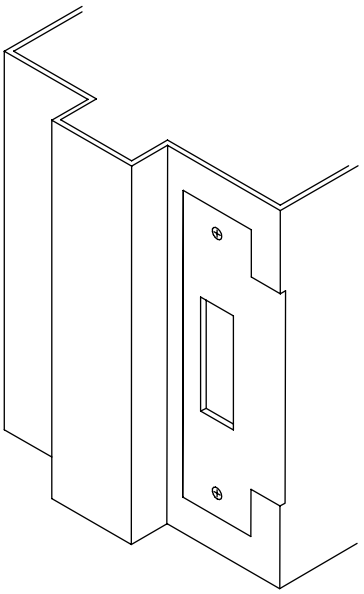

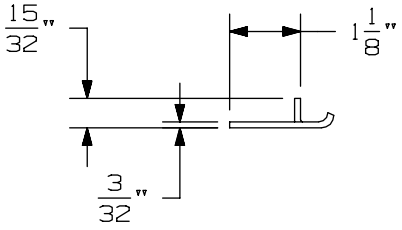

APPLICATION SCHEDULE	
DEVICE	DIM. "A"
9875 & 9875-F	11/16
9975 & 9975-F	11/16
8875 & 8875-F	1/2
5575 & 5575-F	1/2

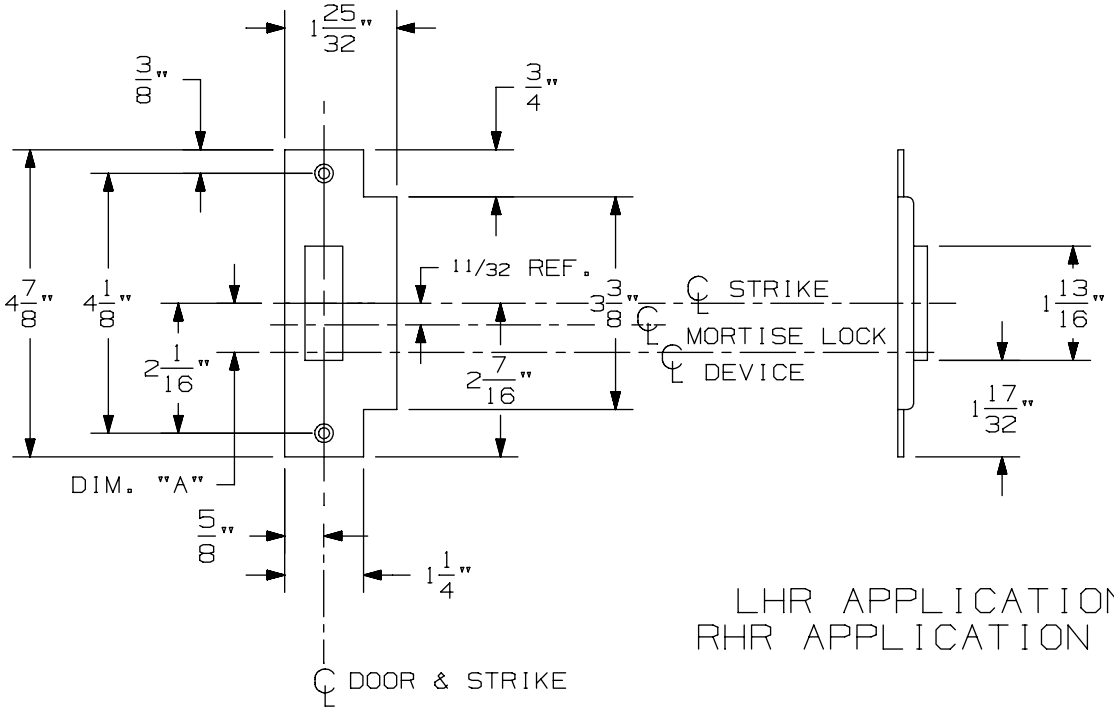

LHR APPLICATION SHOWN
RHR APPLICATION OPPOSITE

575 Mortise Strike (Single Door) for 7500 Mortise Lock

VON DUPRIN®

NOTES: SEE MASTER SHEET #10001 FOR SUGGESTED REINFORCING

TEMPLATE NUMBER: 30210_b

DATE: 07-22-13

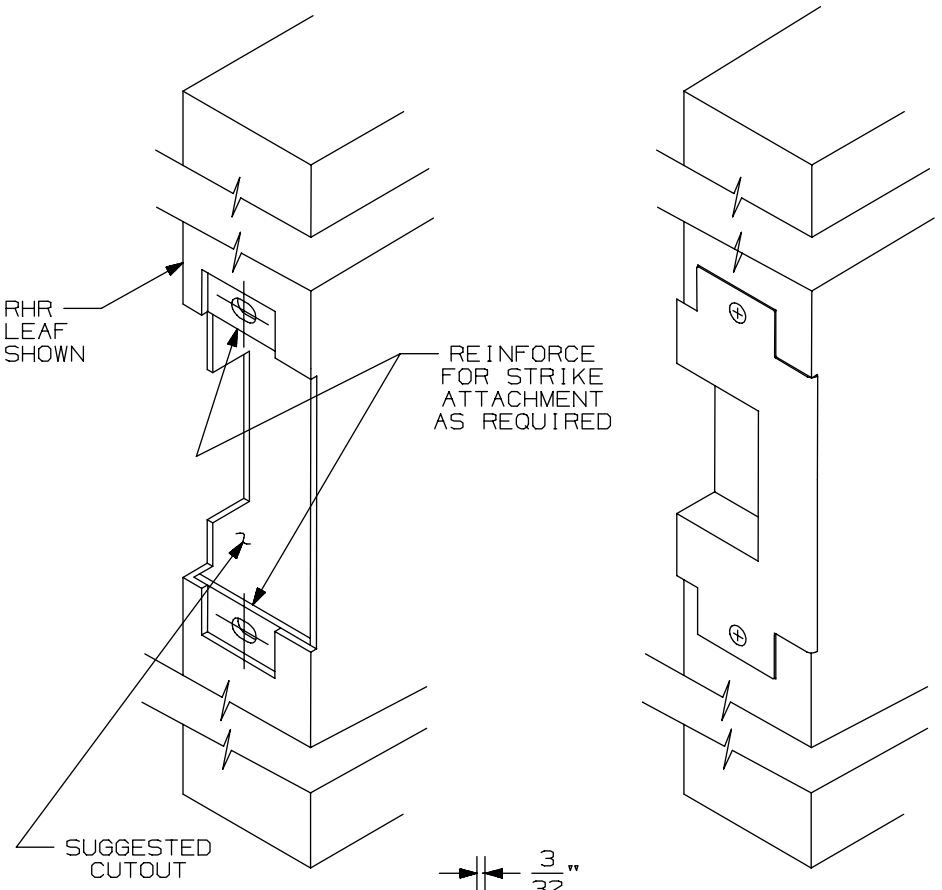

APPLICATION SCHEDULE	
DEVICE	DIM."A"
9875 & 9875-F	11/16
9975 & 9975-F	11/16
8875 & 8875-F	1/2
5575 & 5575-F	1/2

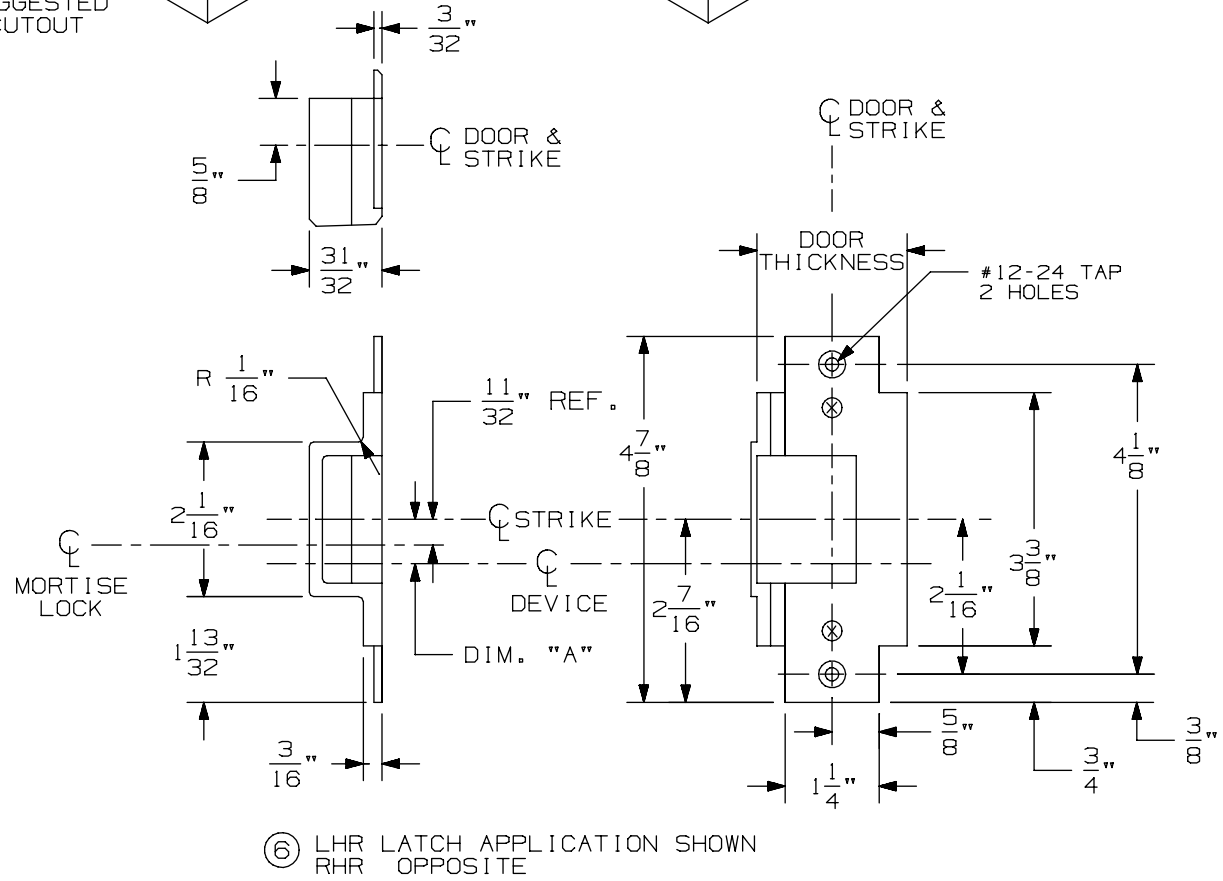

⑥ LHR LATCH APPLICATION SHOWN
RHR OPPOSITE

576A & 576B Mortise Strike for 7500 Mortise Lock

VON DUPRIN®

NOTES: SEE MASTER SHEET #10001 FOR SUGGESTED REINFORCING

TEMPLATE NUMBER: 30211_a

DATE: 05-28-13

9875/9975 & 9875-F/9975-F Series Mortise Lock Devices

NOTES: SEE MASTER SHEET #10001 FOR SUGGESTED REINFORCING

TEMPLATE NUMBER: 10305_a

DATE: 05-21-13

VON DUPRIN®

NOTES:
1. THESE FOUR HOLES TO BE PREPARED FOR SURFACE APPLICATION WHEN USING 696/697 TRIM. DO NOT PREPARE FOR SEX BOLTS.
2. FOR STOCK HOLLOW METAL DOORS SEE TEMPLATE NUMBER 10312 FOR TYPE '86' CUTOUT.
3. GLASS BEAD KIT AVAILABLE WHEN REQUIRED.
4. WIRING TO SS7500 & E7500 LOCKS GO THROUGH DOOR NOT DEVICE.
5. FOR OUTSIDE TRIM PREPARATION, WHEN REQUIRED, SEE TRIM TEMPLATE.
(15) 6. THE SS7500 LOCK MUST BE USED FOR LX98/9975 SERIES DEVICE APPLICATIONS.

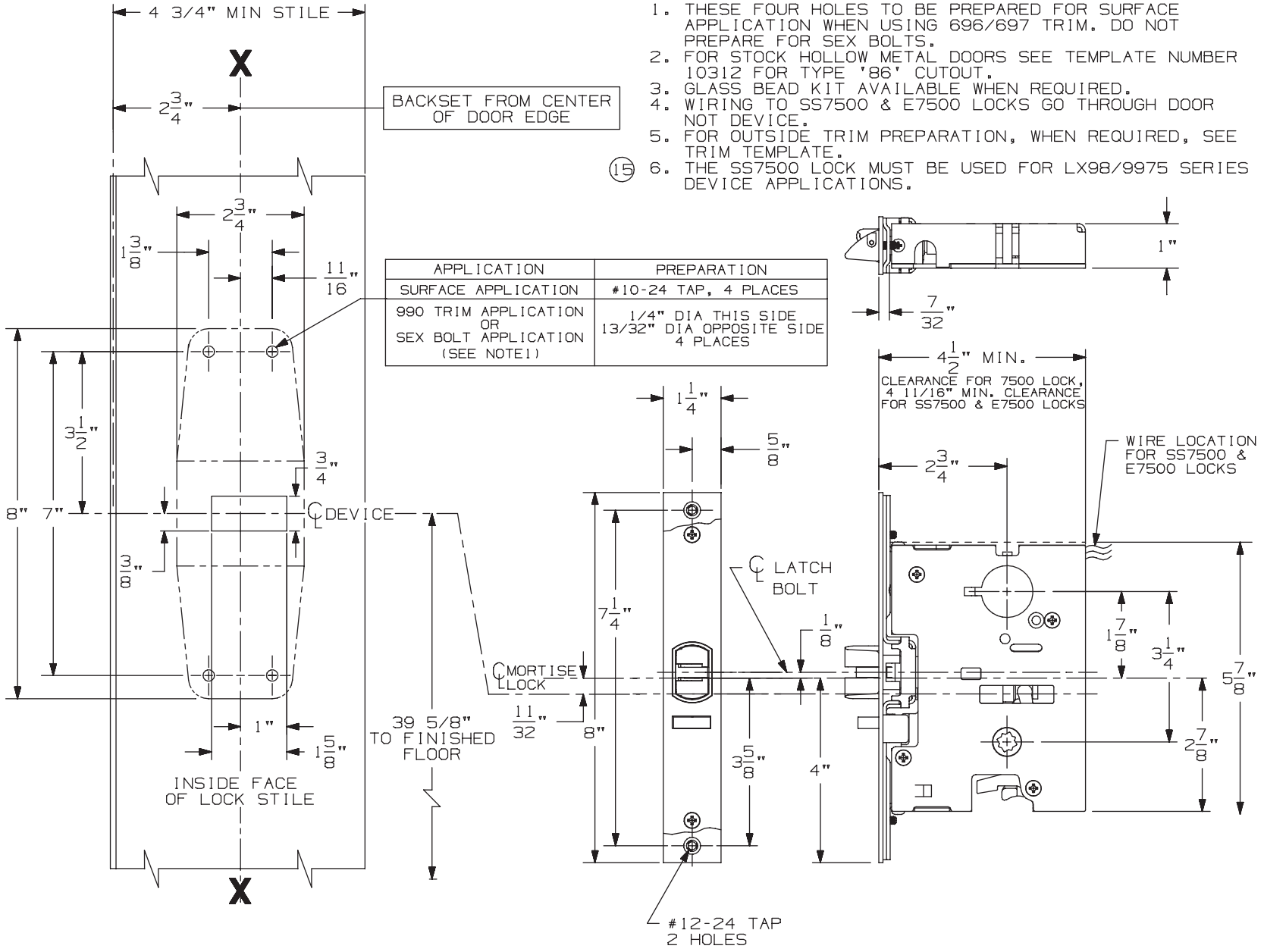

APPLICATION	PREPARATION
SURFACE APPLICATION	#10-24 TAP, 4 PLACES
990 TRIM APPLICATION OR SEX BOLT APPLICATION (SEE NOTE1)	1/4" DIA THIS SIDE 13/32" DIA OPPOSITE SIDE 4 PLACES

LHR APPLICATION SHOWN, RHR APPLICATION OPPOSITE

990 DT TRIM

NOTES: SEE MASTER SHEET #10001 FOR SUGGESTED REINFORCING

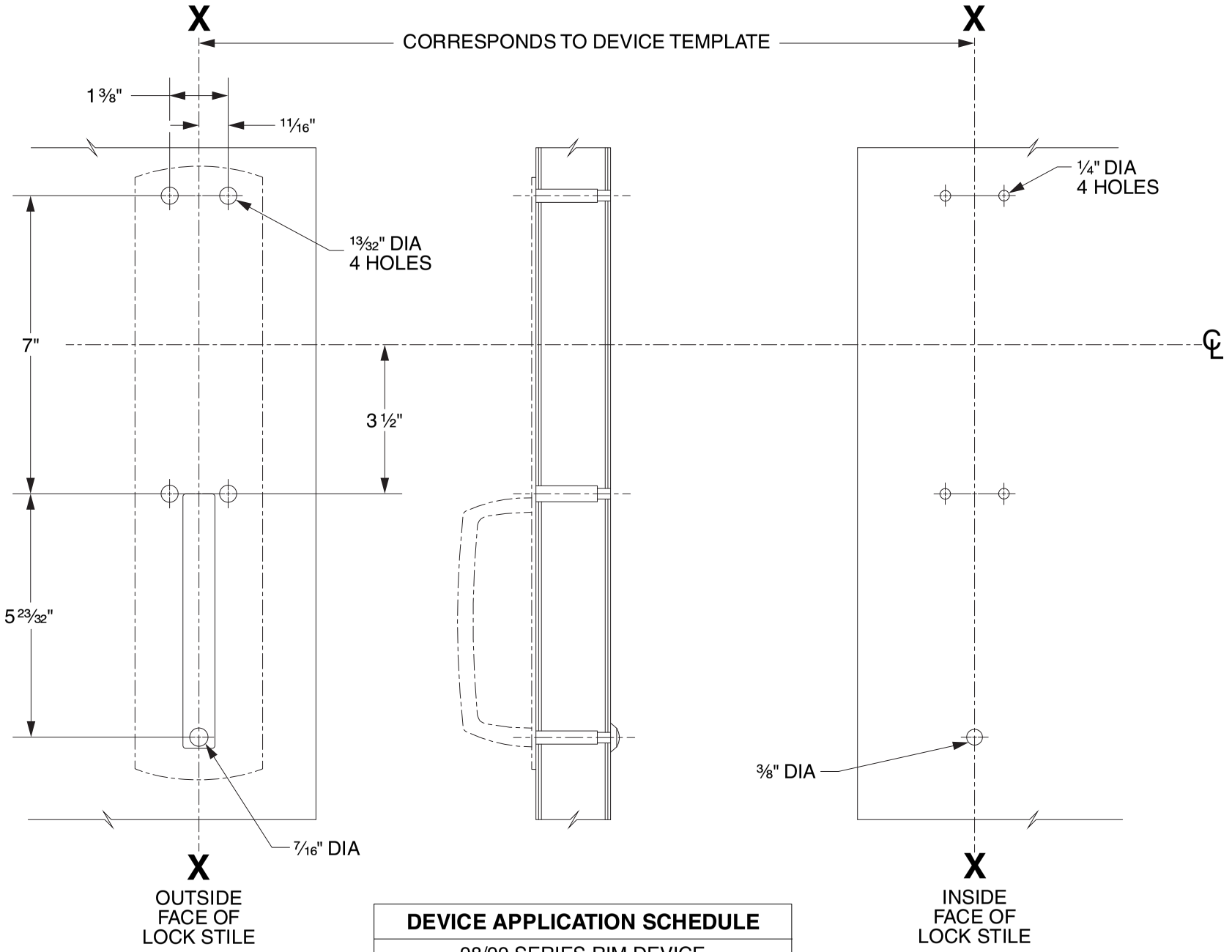

DEVICE APPLICATION SCHEDULE
98/99 SERIES RIM DEVICE
9827/9927 SERIES DEVICE
9847/9947 SERIES DEVICE
9849/9949 SERIES DEVICE
9875/9975 SERIES DEVICE

LHR SHOWN
RHR OPPOSITE

VON DUPRIN®

TEMPLATE NUMBER: 20268_C

DATE: 05-31-13

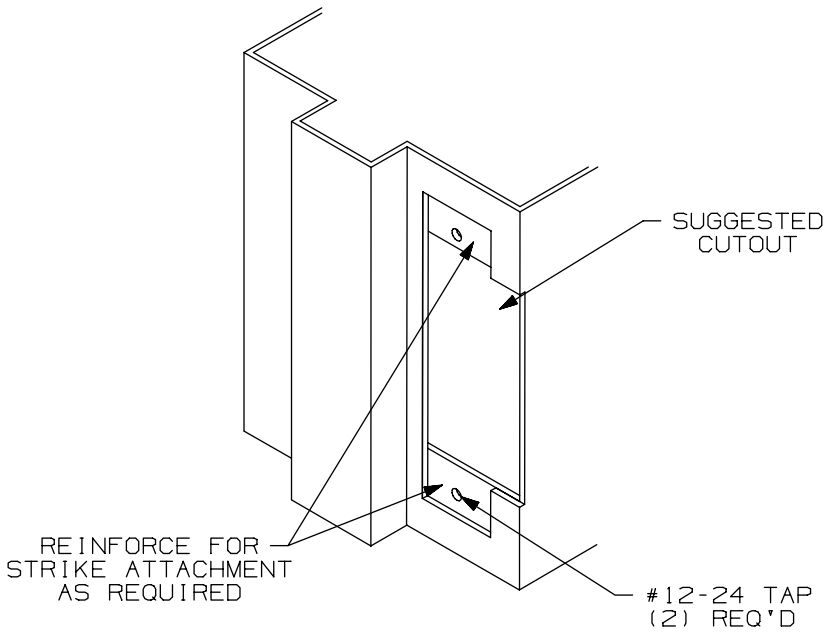

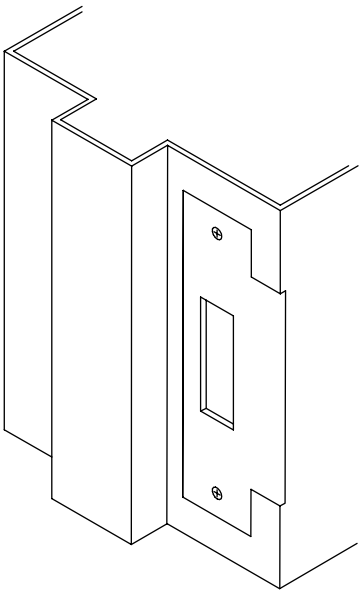

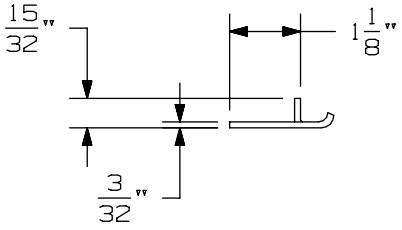

APPLICATION SCHEDULE	
DEVICE	DIM. "A"
9875 & 9875-F	11/16
9975 & 9975-F	11/16
8875 & 8875-F	1/2
5575 & 5575-F	1/2

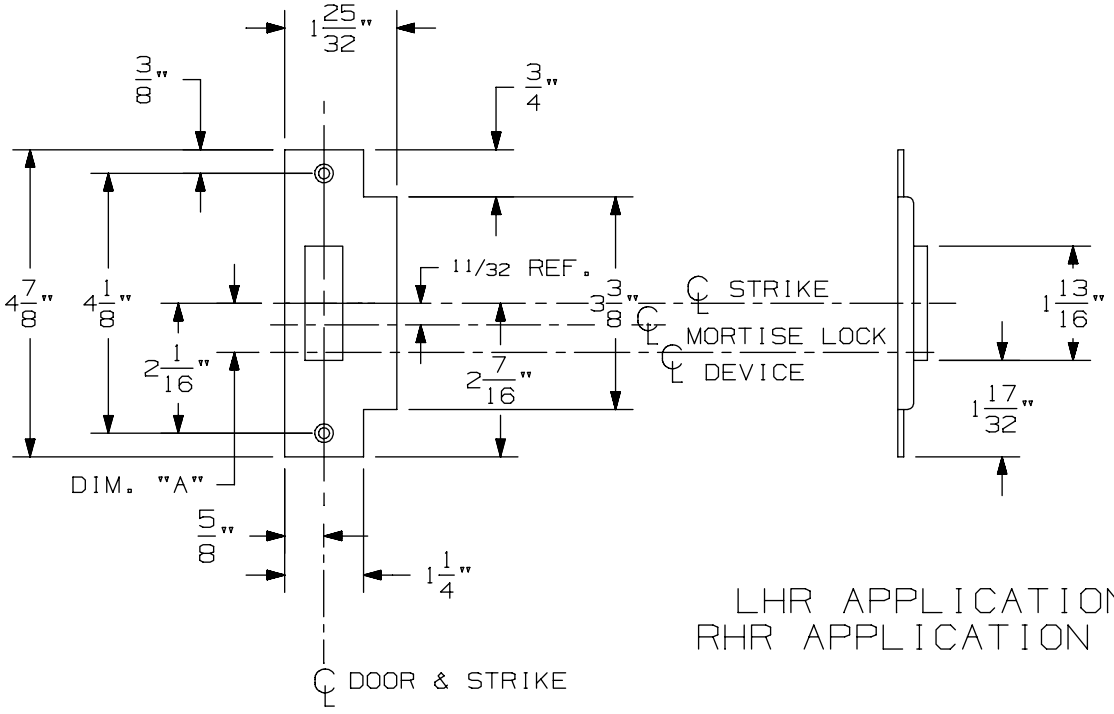

LHR APPLICATION SHOWN
RHR APPLICATION OPPOSITE

575 Mortise Strike (Single Door) for 7500 Mortise Lock

VON DUPRIN®

NOTES: SEE MASTER SHEET #10001 FOR SUGGESTED REINFORCING

TEMPLATE NUMBER: 30210_b

DATE: 07-22-13

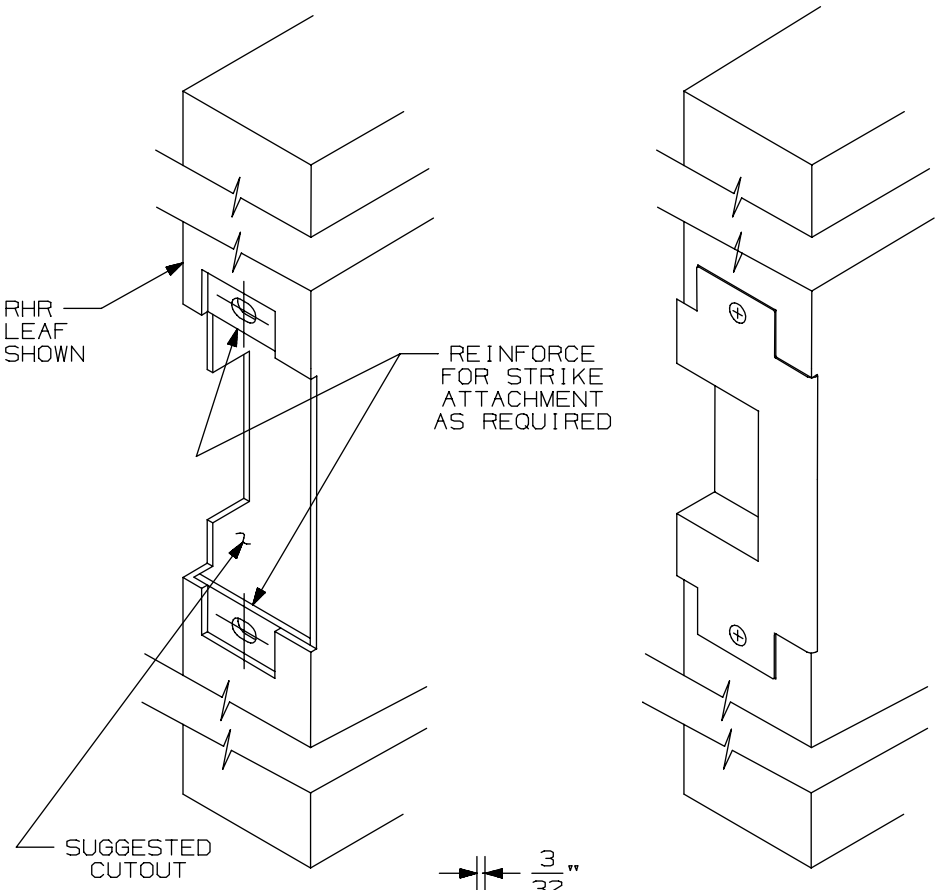

APPLICATION SCHEDULE	
DEVICE	DIM."A"
9875 & 9875-F	11/16
9975 & 9975-F	11/16
8875 & 8875-F	1/2
5575 & 5575-F	1/2

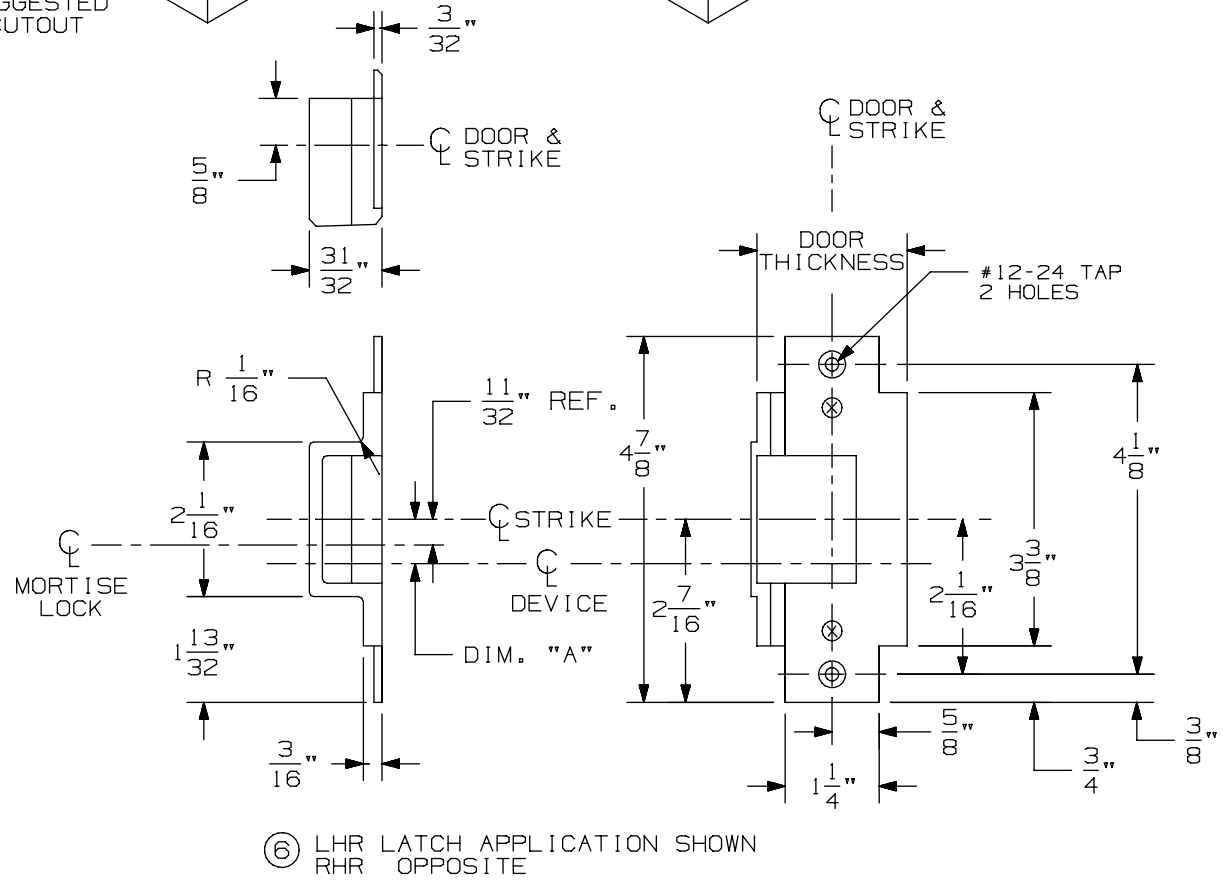

⑥ LHR LATCH APPLICATION SHOWN
RHR OPPOSITE

576A & 576B Mortise Strike for 7500 Mortise Lock

VON DUPRIN®

NOTES: SEE MASTER SHEET #10001 FOR SUGGESTED REINFORCING

TEMPLATE NUMBER: 30211_a

DATE: 05-28-13

9875/9975 & 9875-F/9975-F Series Mortise Lock Devices

NOTES: SEE MASTER SHEET #10001 FOR SUGGESTED REINFORCING

TEMPLATE NUMBER: 10305_a

DATE: 05-21-13

VON DUPRIN®

NOTES:
1. THESE FOUR HOLES TO BE PREPARED FOR SURFACE APPLICATION WHEN USING 696/697 TRIM. DO NOT PREPARE FOR SEX BOLTS.
2. FOR STOCK HOLLOW METAL DOORS SEE TEMPLATE NUMBER 10312 FOR TYPE '86' CUTOUT.
3. GLASS BEAD KIT AVAILABLE WHEN REQUIRED.
4. WIRING TO SS7500 & E7500 LOCKS GO THROUGH DOOR NOT DEVICE.
5. FOR OUTSIDE TRIM PREPARATION, WHEN REQUIRED, SEE TRIM TEMPLATE.
15 6. THE SS7500 LOCK MUST BE USED FOR LX98/9975 SERIES DEVICE APPLICATIONS.

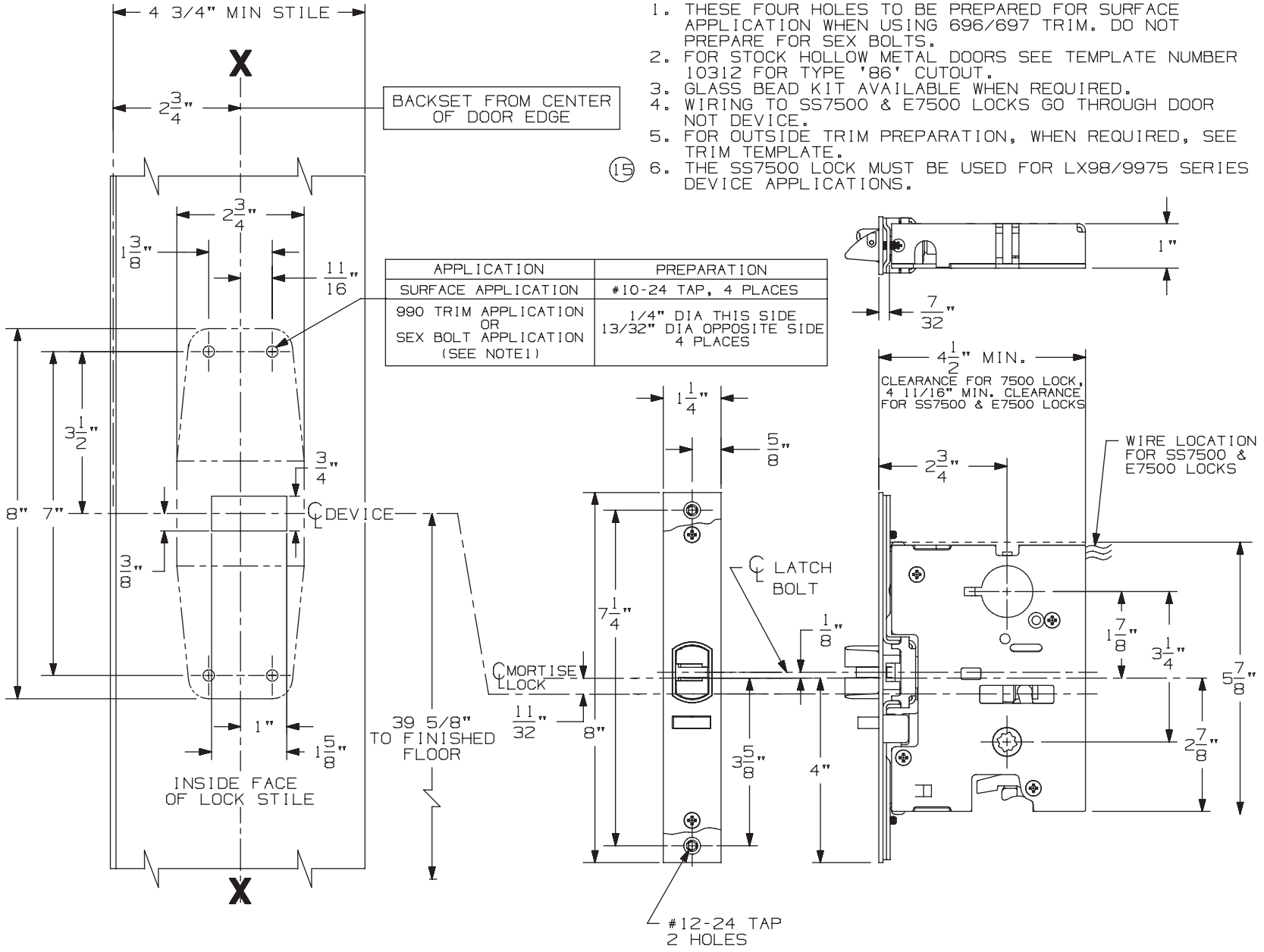

APPLICATION	PREPARATION
SURFACE APPLICATION	#10-24 TAP, 4 PLACES
990 TRIM APPLICATION OR SEX BOLT APPLICATION (SEE NOTE1)	1/4" DIA THIS SIDE 13/32" DIA OPPOSITE SIDE 4 PLACES

LHR APPLICATION SHOWN, RHR APPLICATION OPPOSITE

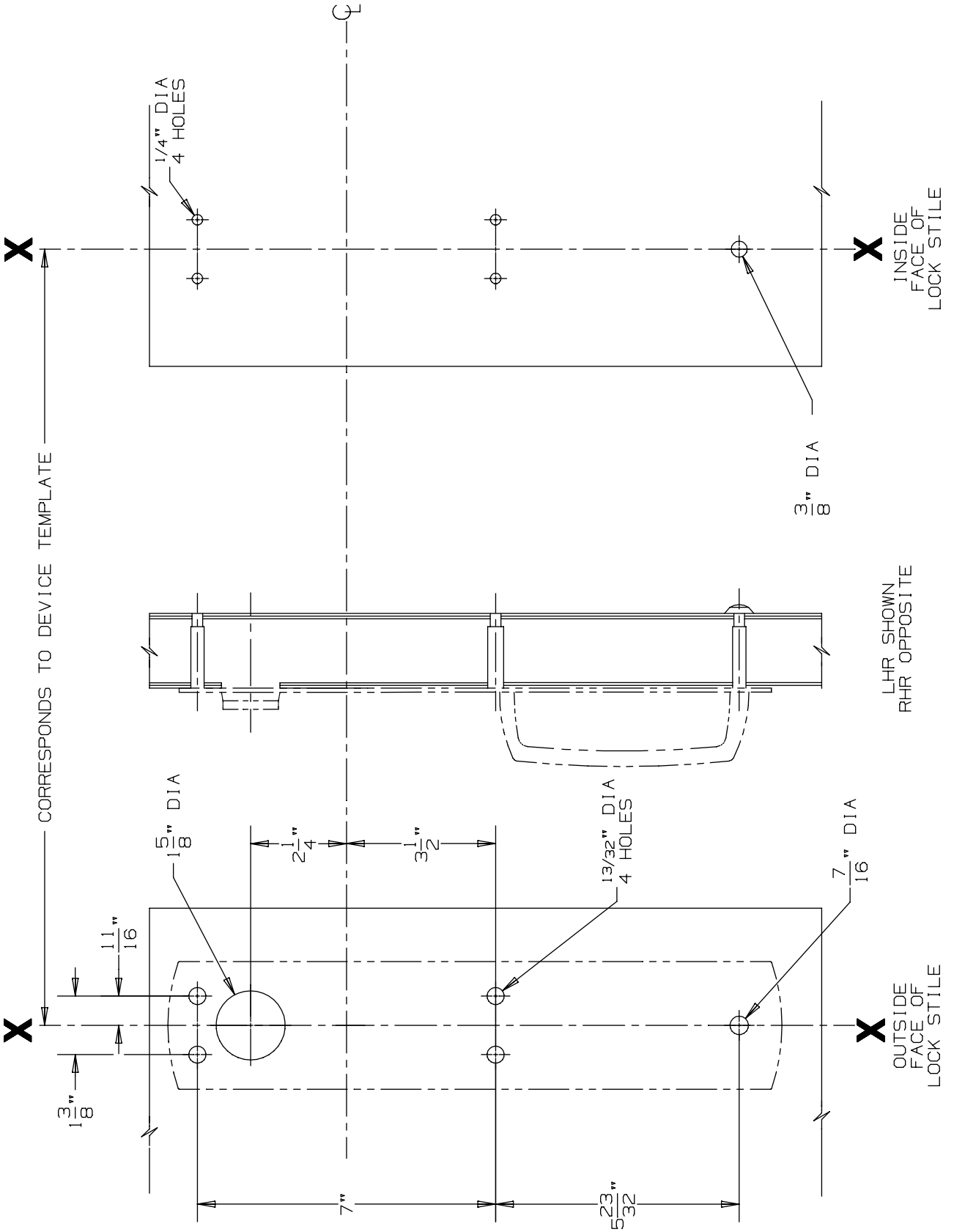

DEVICE APPLICATION SCHEDULE
9875/9975 SERIES DEVICE

990 NL Trim

VON DUPRIN®

NOTES: SEE MASTER SHEET #10001 FOR SUGGESTED REINFORCING

TEMPLATE NUMBER: 20271_a

DATE: 05-23-13

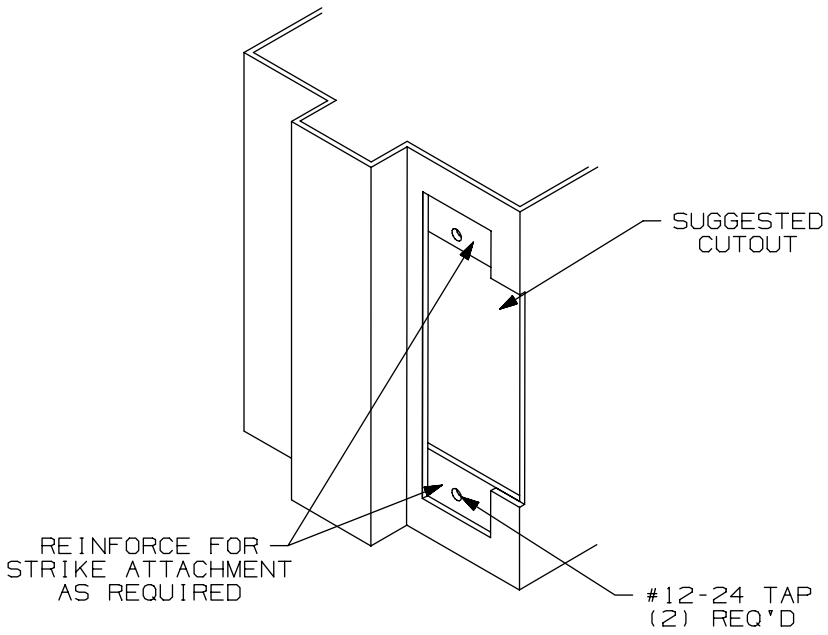

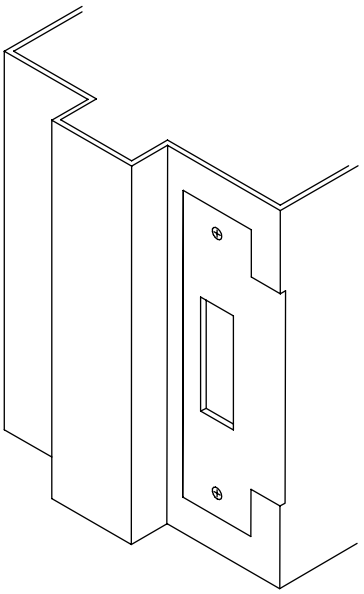

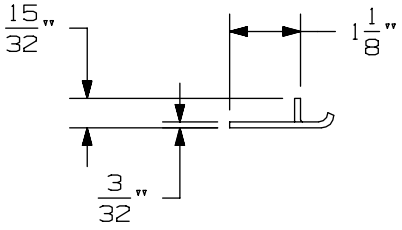

APPLICATION SCHEDULE	
DEVICE	DIM. "A"
9875 & 9875-F	11/16
9975 & 9975-F	11/16
8875 & 8875-F	1/2
5575 & 5575-F	1/2

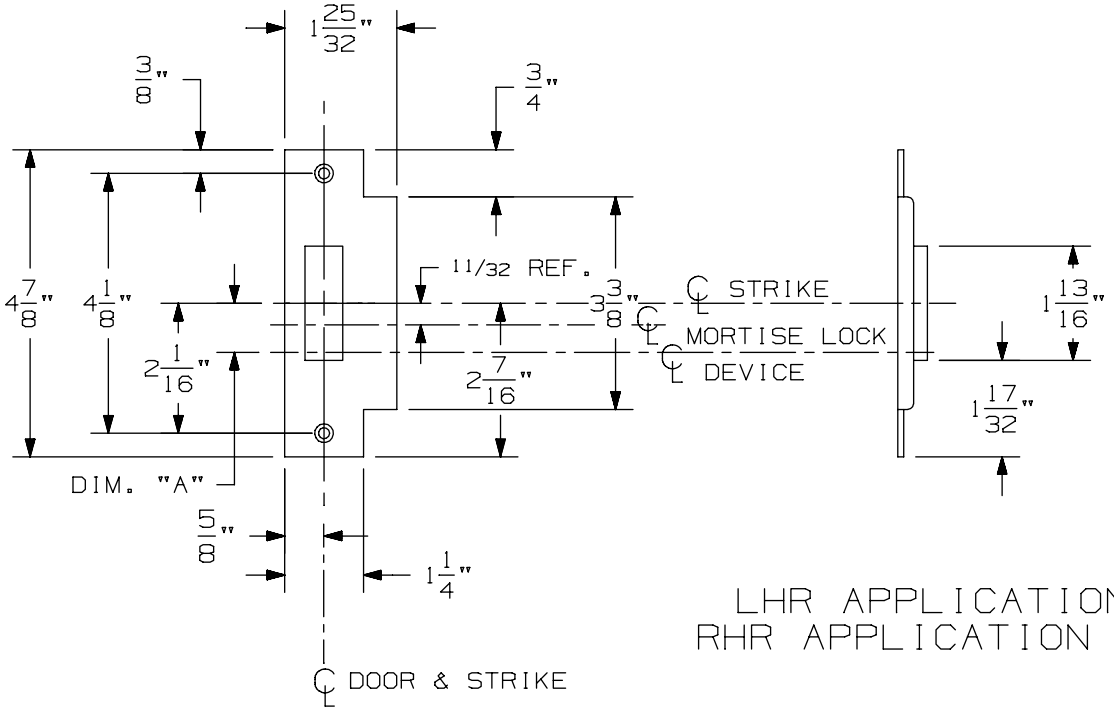

LHR APPLICATION SHOWN
RHR APPLICATION OPPOSITE

575 Mortise Strike (Single Door) for 7500 Mortise Lock

VON DUPRIN®

NOTES: SEE MASTER SHEET #10001 FOR SUGGESTED REINFORCING

TEMPLATE NUMBER: 30210_b

DATE: 07-22-13

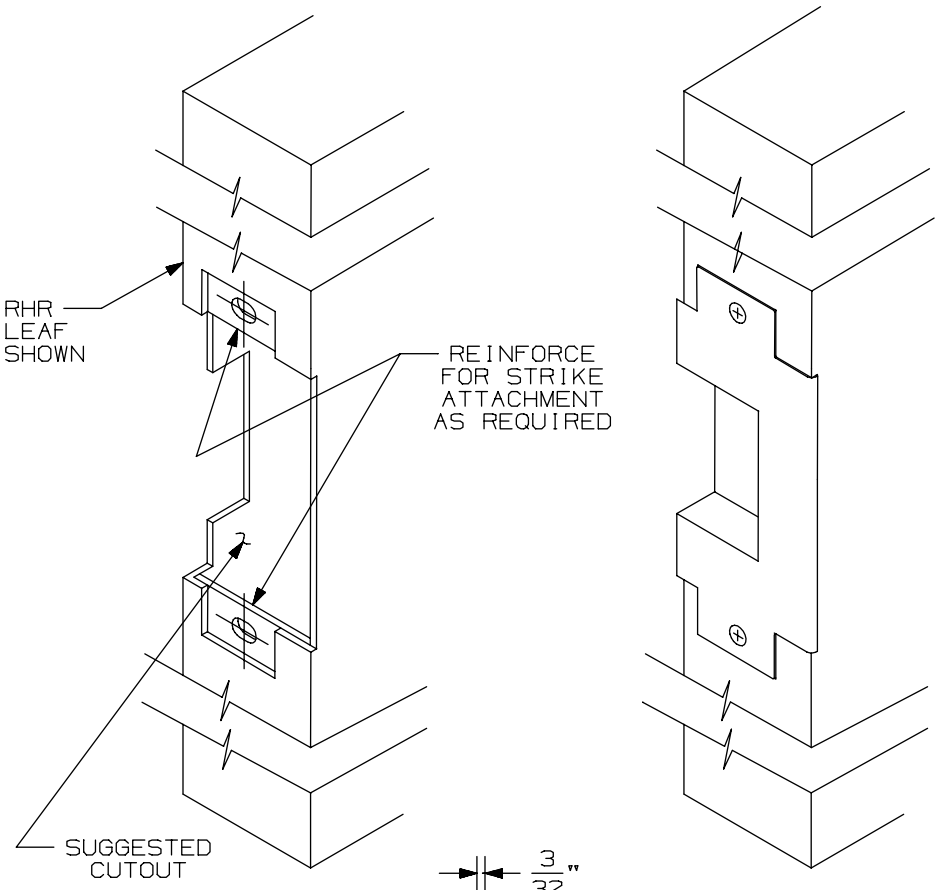

APPLICATION SCHEDULE	
DEVICE	DIM."A"
9875 & 9875-F	11/16
9975 & 9975-F	11/16
8875 & 8875-F	1/2
5575 & 5575-F	1/2

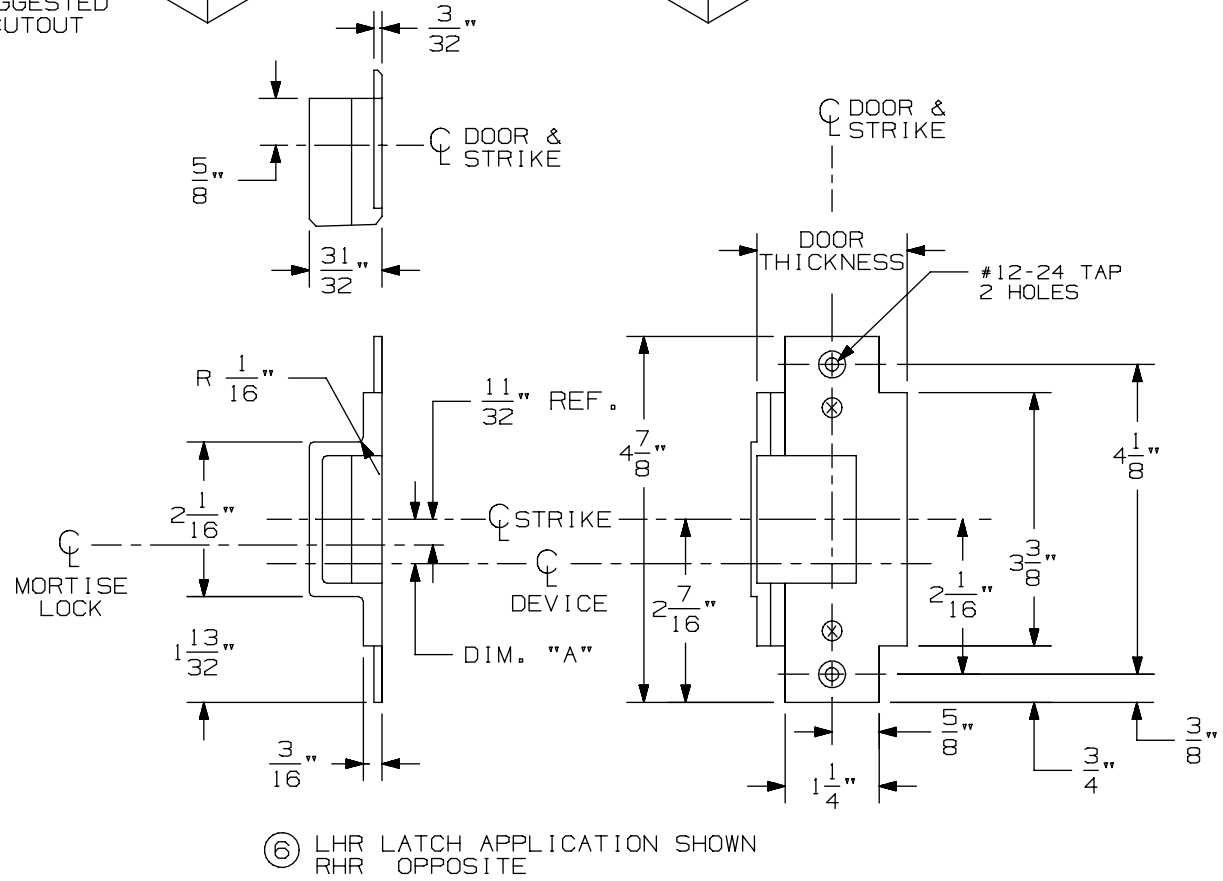

⑥ LHR LATCH APPLICATION SHOWN
RHR OPPOSITE

576A & 576B Mortise Strike for 7500 Mortise Lock

VON DUPRIN®

NOTES: SEE MASTER SHEET #10001 FOR SUGGESTED REINFORCING

TEMPLATE NUMBER: 30211_a

DATE: 05-28-13

9875/9975 & 9875-F/9975-F Series Mortise Lock Devices

NOTES: SEE MASTER SHEET #10001 FOR SUGGESTED REINFORCING

TEMPLATE NUMBER: 10305_a

DATE: 05-21-13

VON DUPRIN®

NOTES:
1. THESE FOUR HOLES TO BE PREPARED FOR SURFACE APPLICATION WHEN USING 696/697 TRIM. DO NOT PREPARE FOR SEX BOLTS.
2. FOR STOCK HOLLOW METAL DOORS SEE TEMPLATE NUMBER 10312 FOR TYPE '86' CUTOUT.
3. GLASS BEAD KIT AVAILABLE WHEN REQUIRED.
4. WIRING TO SS7500 & E7500 LOCKS GO THROUGH DOOR NOT DEVICE.
5. FOR OUTSIDE TRIM PREPARATION, WHEN REQUIRED, SEE TRIM TEMPLATE.
(15) 6. THE SS7500 LOCK MUST BE USED FOR LX98/9975 SERIES DEVICE APPLICATIONS.

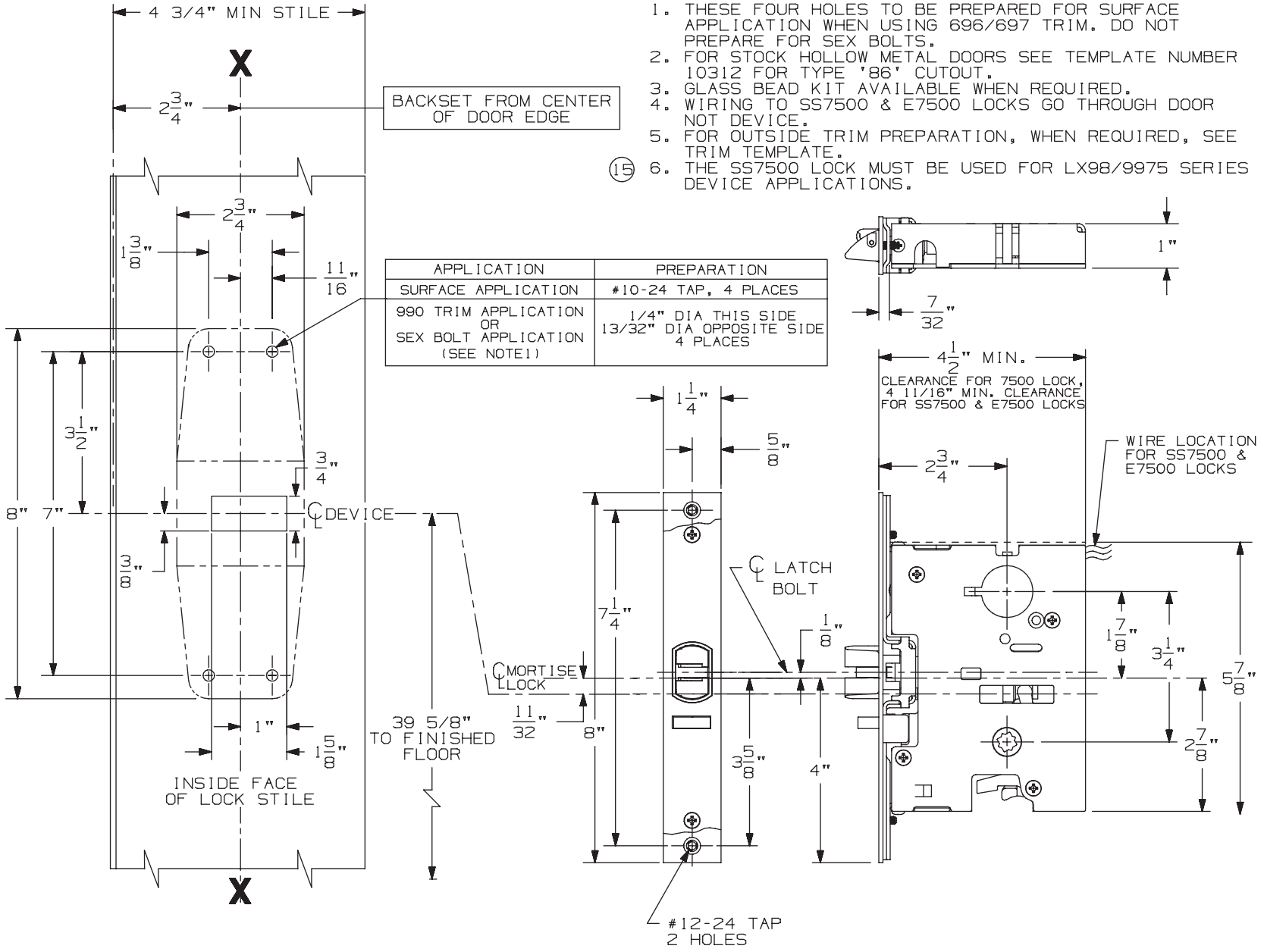

APPLICATION	PREPARATION
SURFACE APPLICATION	#10-24 TAP, 4 PLACES
990 TRIM APPLICATION OR SEX BOLT APPLICATION (SEE NOTE1)	1/4" DIA THIS SIDE 13/32" DIA OPPOSITE SIDE 4 PLACES

LHR APPLICATION SHOWN, RHR APPLICATION OPPOSITE

991 K & 992 L Trim for Mortise Device

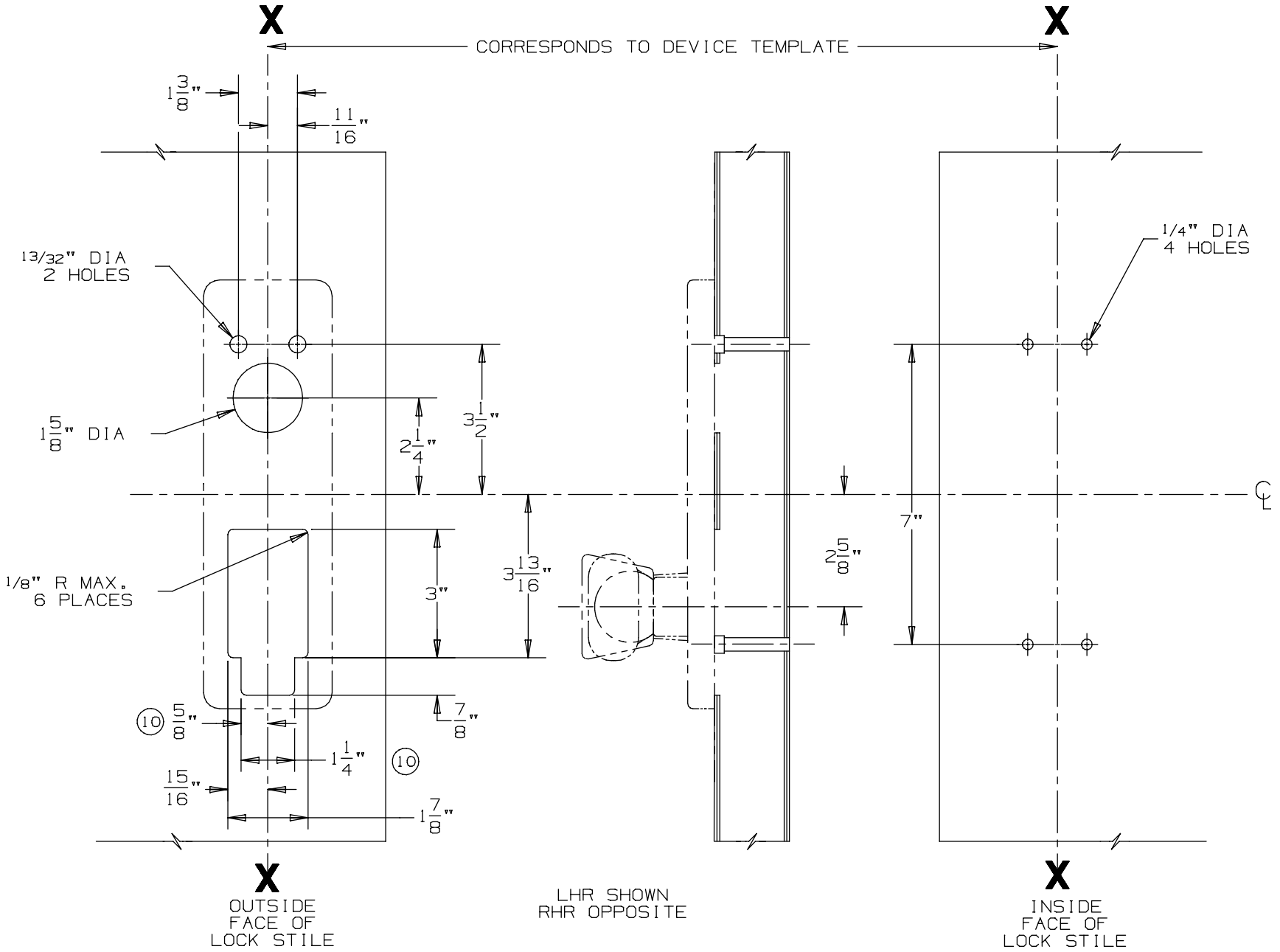

DEVICE APPLICATION SCHEDULE
9875/9975 SERIES DEVICE

NOTES: SEE MASTER SHEET #10001 FOR SUGGESTED REINFORCING

TEMPLATE NUMBER: 20280_a

DATE: 05-23-13

VON DUPRIN®

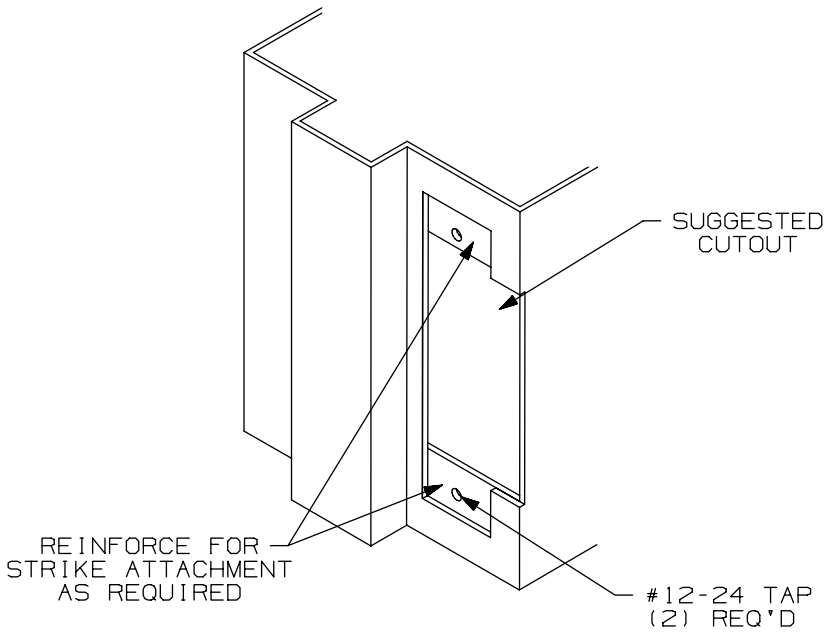

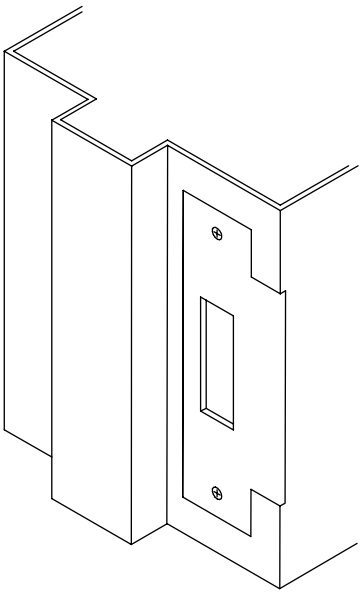

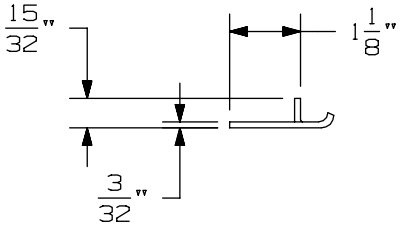

APPLICATION SCHEDULE	
DEVICE	DIM. "A"
9875 & 9875-F	11/16
9975 & 9975-F	11/16
8875 & 8875-F	1/2
5575 & 5575-F	1/2

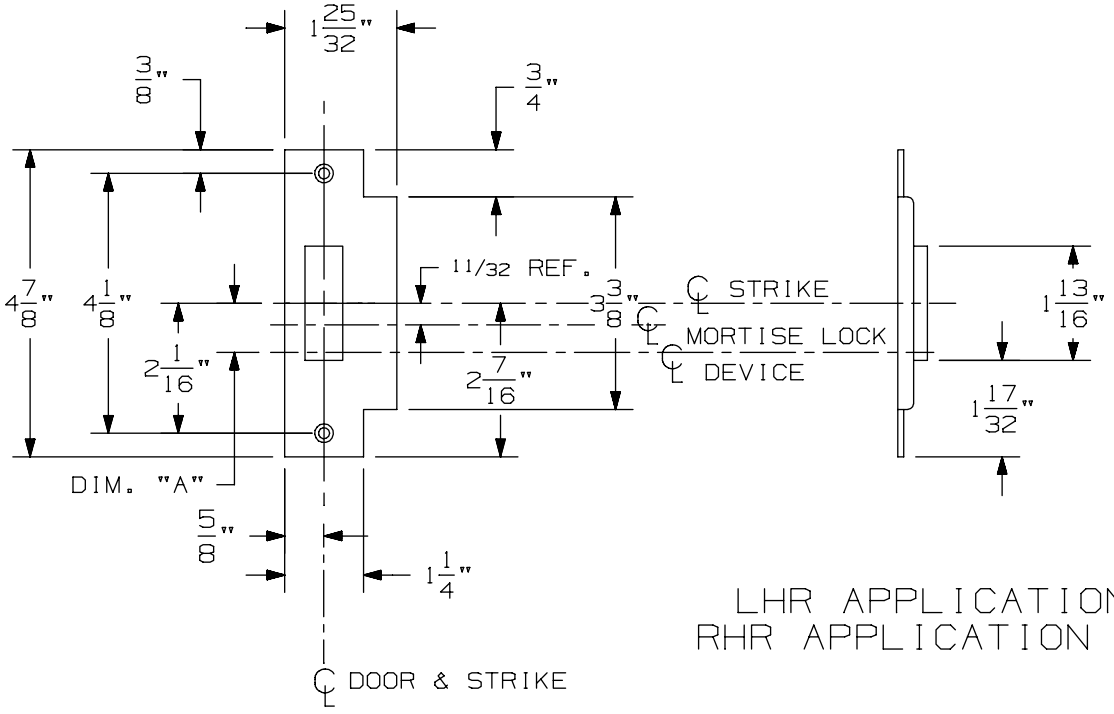

LHR APPLICATION SHOWN
RHR APPLICATION OPPOSITE

575 Mortise Strike (Single Door) for 7500 Mortise Lock

VON DUPRIN®

NOTES: SEE MASTER SHEET #10001 FOR SUGGESTED REINFORCING

TEMPLATE NUMBER: 30210_b

DATE: 07-22-13

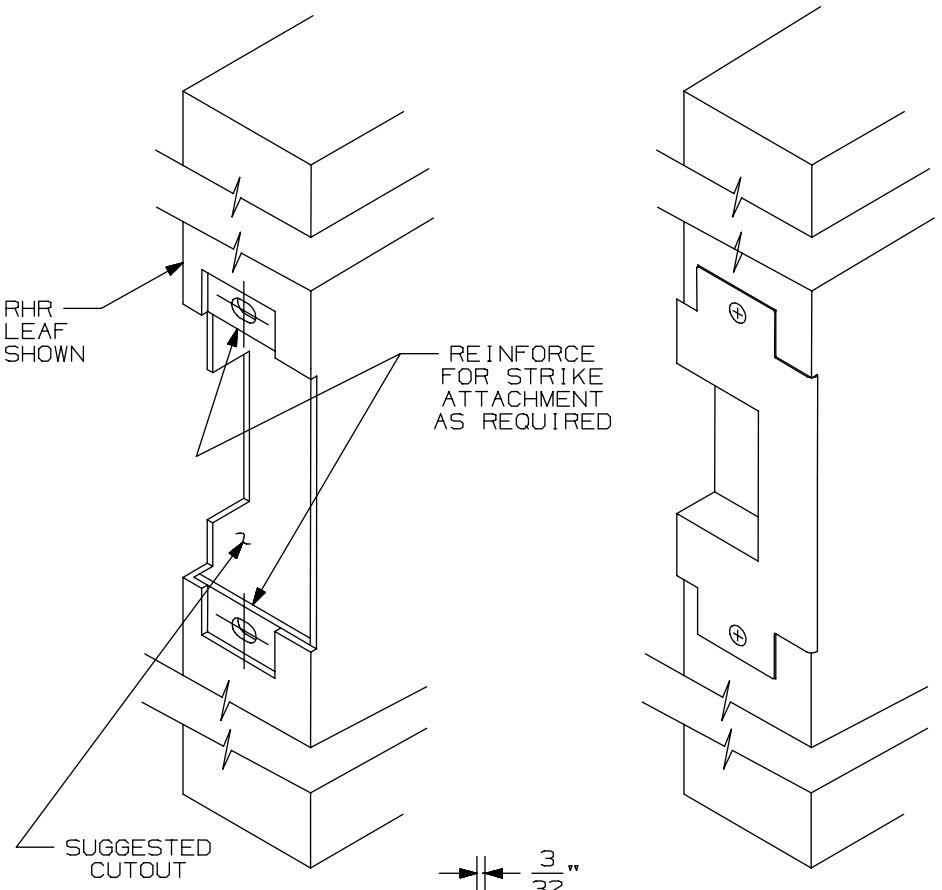

APPLICATION SCHEDULE	
DEVICE	DIM."A"
9875 & 9875-F	11/16
9975 & 9975-F	11/16
8875 & 8875-F	1/2
5575 & 5575-F	1/2

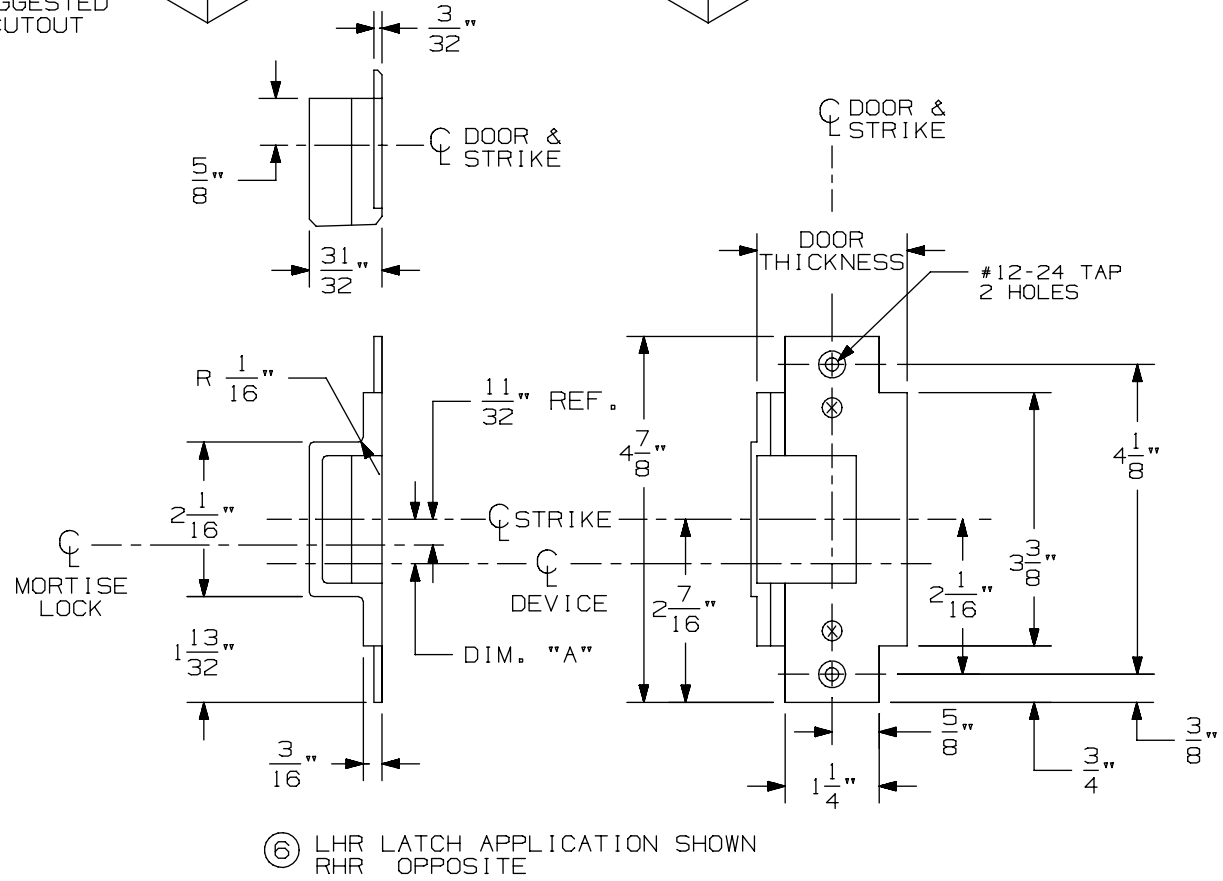

⑥ LHR LATCH APPLICATION SHOWN
RHR OPPOSITE

576A & 576B Mortise Strike for 7500 Mortise Lock

VON DUPRIN®

NOTES: SEE MASTER SHEET #10001 FOR SUGGESTED REINFORCING

TEMPLATE NUMBER: 30211_a

DATE: 05-28-13

9875/9975 & 9875-F/9975-F Series Mortise Lock Devices

NOTES: SEE MASTER SHEET #10001 FOR SUGGESTED REINFORCING

TEMPLATE NUMBER: 10305_a

DATE: 05-21-13

VON DUPRIN®

NOTES:
1. THESE FOUR HOLES TO BE PREPARED FOR SURFACE APPLICATION WHEN USING 696/697 TRIM. DO NOT PREPARE FOR SEX BOLTS.
2. FOR STOCK HOLLOW METAL DOORS SEE TEMPLATE NUMBER 10312 FOR TYPE '86' CUTOUT.
3. GLASS BEAD KIT AVAILABLE WHEN REQUIRED.
4. WIRING TO SS7500 & E7500 LOCKS GO THROUGH DOOR NOT DEVICE.
5. FOR OUTSIDE TRIM PREPARATION, WHEN REQUIRED, SEE TRIM TEMPLATE.
(15) 6. THE SS7500 LOCK MUST BE USED FOR LX98/9975 SERIES DEVICE APPLICATIONS.

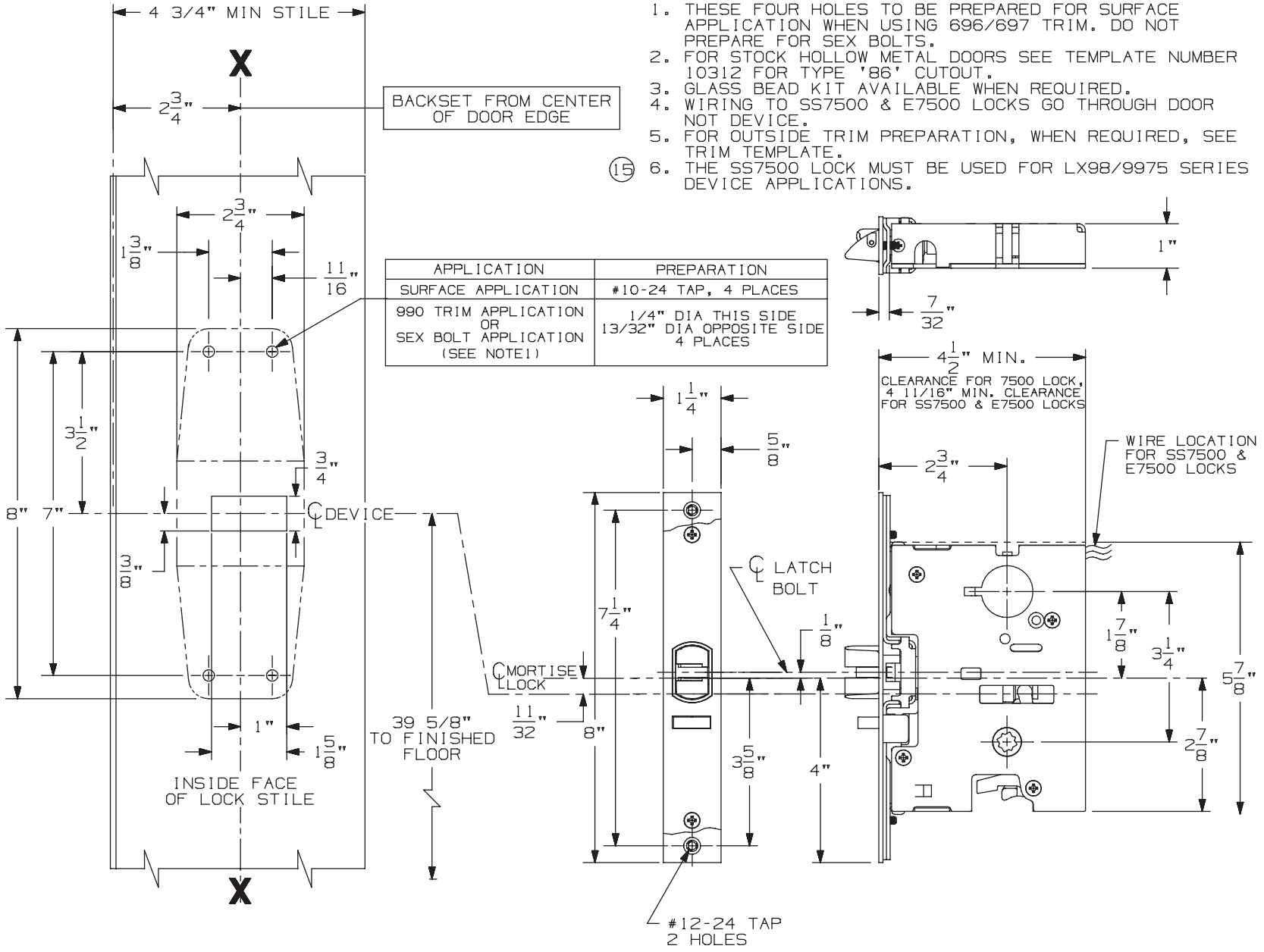

APPLICATION	PREPARATION
SURFACE APPLICATION	#10-24 TAP, 4 PLACES
990 TRIM APPLICATION OR SEX BOLT APPLICATION (SEE NOTE1)	1/4" DIA THIS SIDE 13/32" DIA OPPOSITE SIDE 4 PLACES

LHR APPLICATION SHOWN, RHR APPLICATION OPPOSITE

991 K & 992 L Trim for Mortise Device

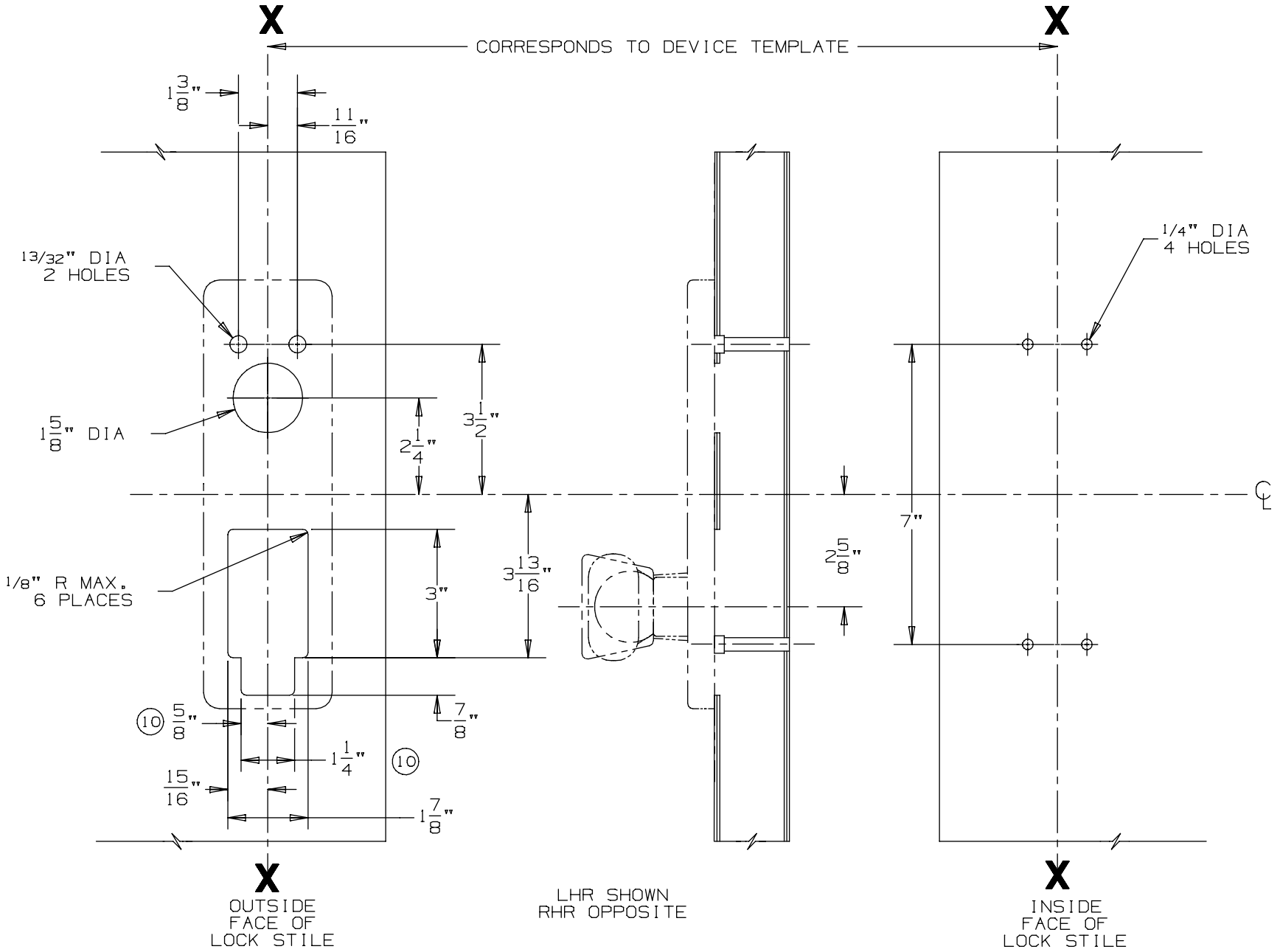

DEVICE APPLICATION SCHEDULE
9875/9975 SERIES DEVICE

NOTES: SEE MASTER SHEET #10001 FOR SUGGESTED REINFORCING

TEMPLATE NUMBER: 20280_a

DATE: 05-23-13

VON DUPRIN®

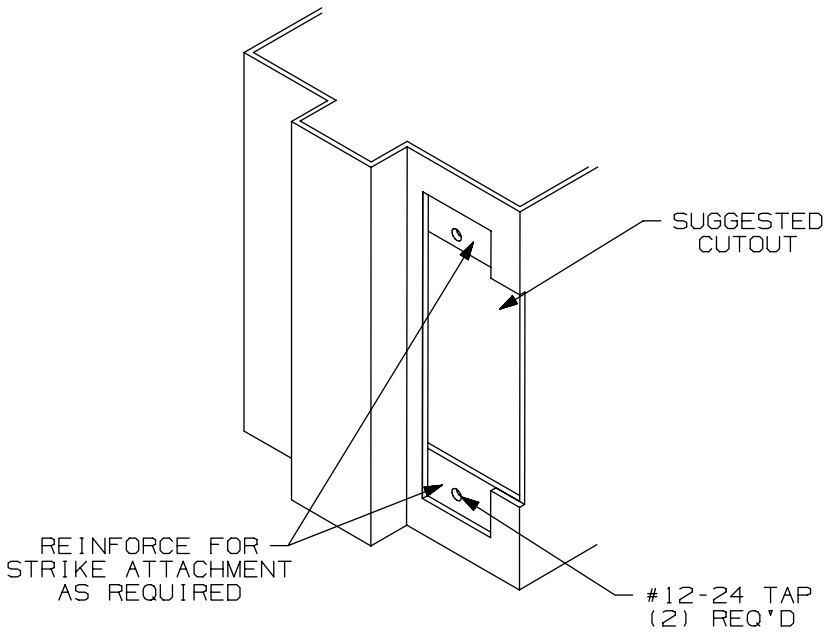

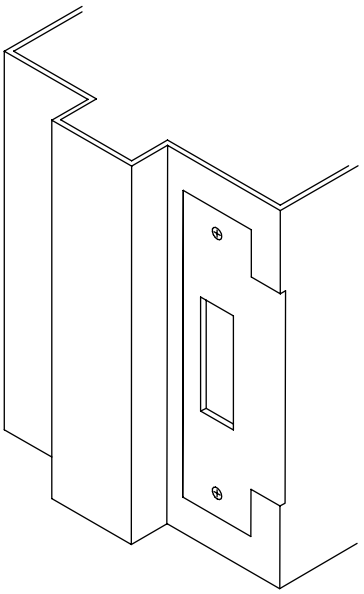

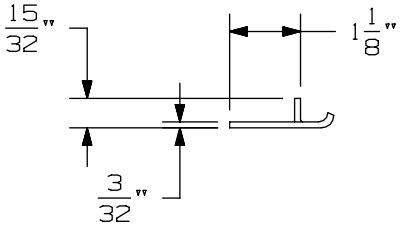

APPLICATION SCHEDULE	
DEVICE	DIM. "A"
9875 & 9875-F	11/16
9975 & 9975-F	11/16
8875 & 8875-F	1/2
5575 & 5575-F	1/2

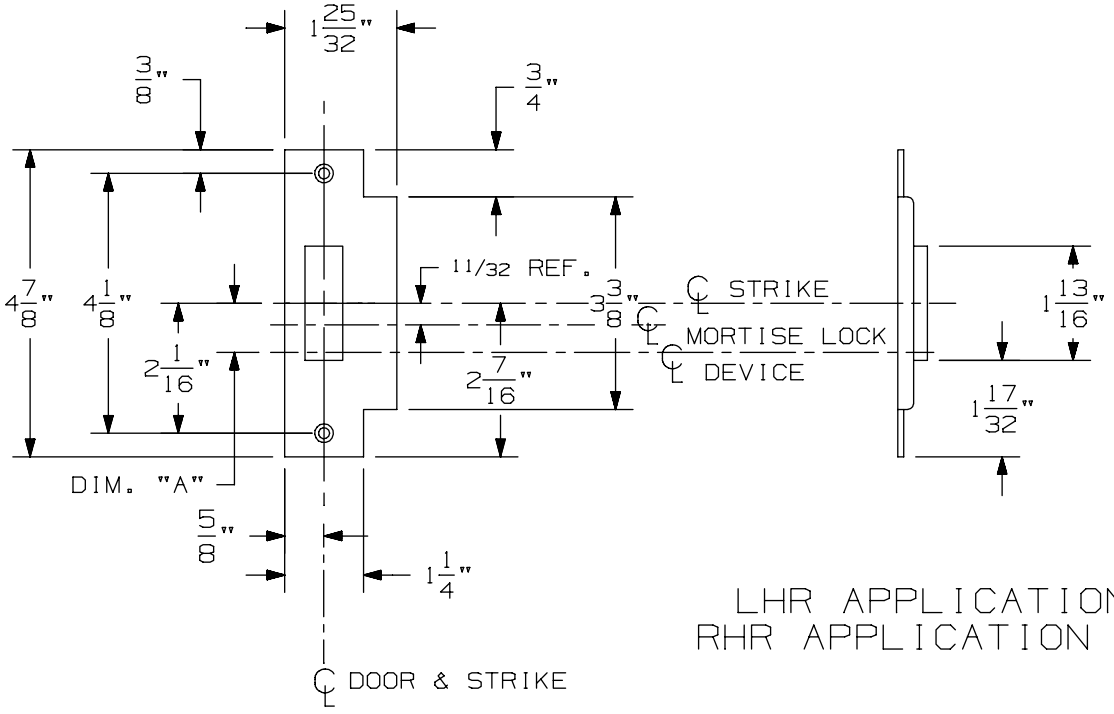

LHR APPLICATION SHOWN
RHR APPLICATION OPPOSITE

575 Mortise Strike (Single Door) for 7500 Mortise Lock

VON DUPRIN®

NOTES: SEE MASTER SHEET #10001 FOR SUGGESTED REINFORCING

TEMPLATE NUMBER: 30210_b

DATE: 07-22-13

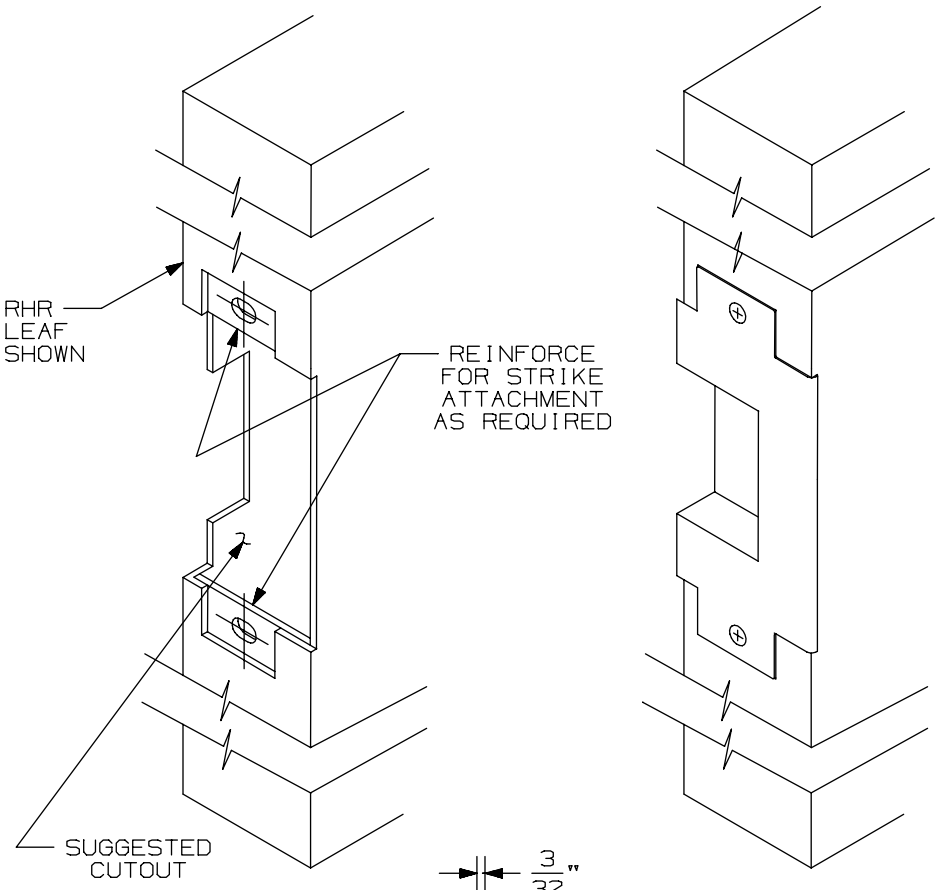

APPLICATION SCHEDULE	
DEVICE	DIM."A"
9875 & 9875-F	11/16
9975 & 9975-F	11/16
8875 & 8875-F	1/2
5575 & 5575-F	1/2

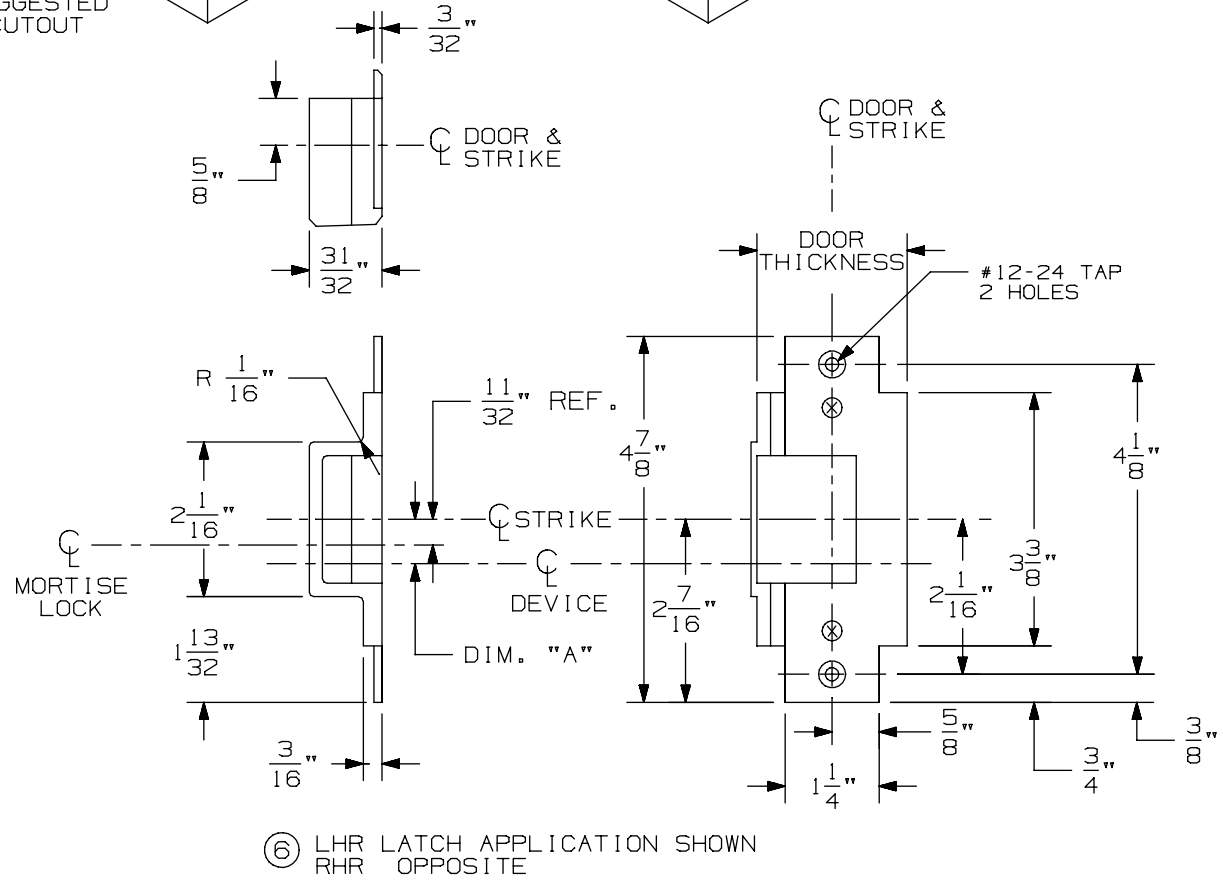

⑥ LHR LATCH APPLICATION SHOWN
RHR OPPOSITE

576A & 576B Mortise Strike for 7500 Mortise Lock

VON DUPRIN®

NOTES: SEE MASTER SHEET #10001 FOR SUGGESTED REINFORCING

TEMPLATE NUMBER: 30211_a

DATE: 05-28-13

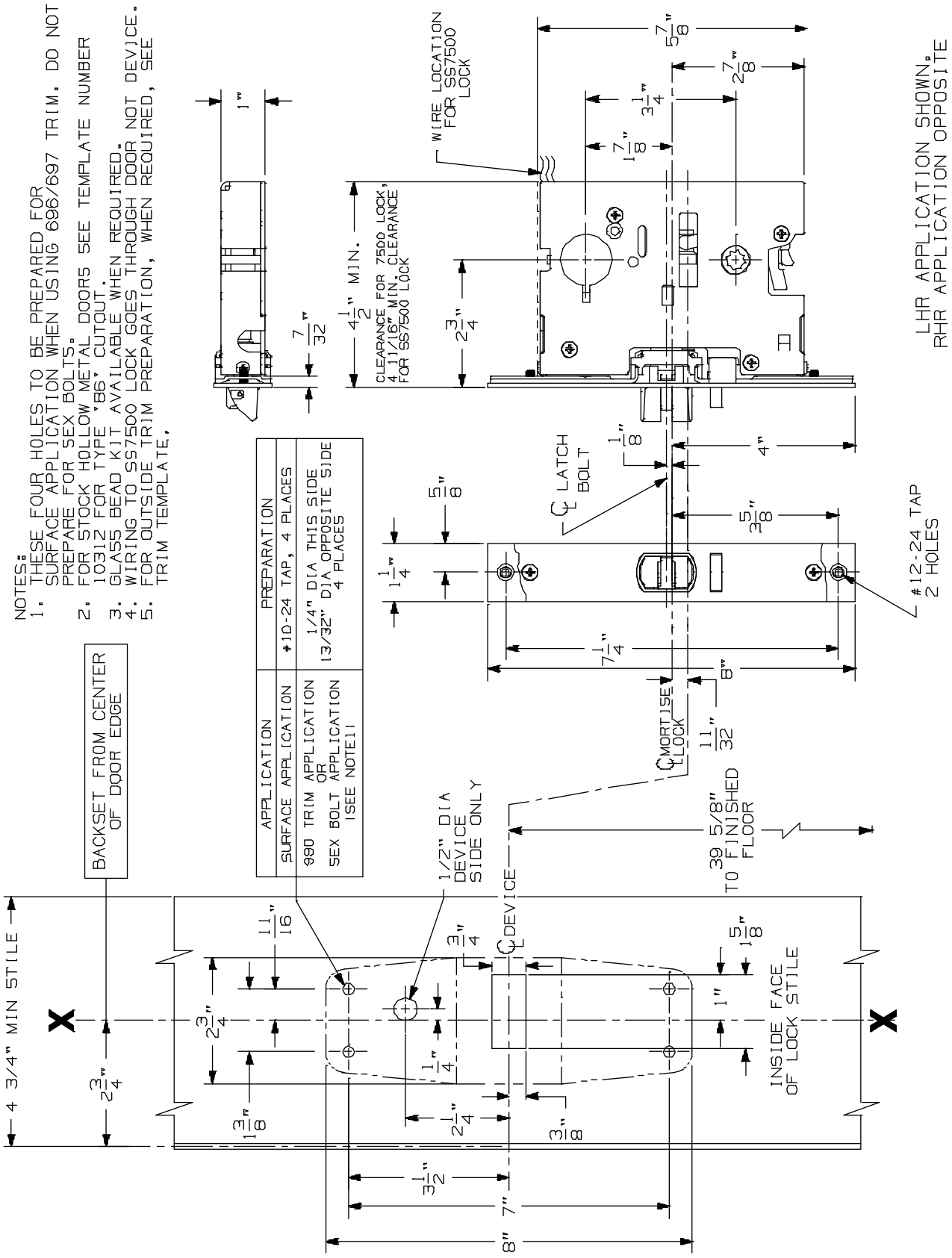

98/9975-2 Series Mortise Lock Devices

VON DUPRIN®

NOTES: SEE MASTER SHEET #10001 FOR SUGGESTED REINFORCING

TEMPLATE NUMBER: 10368_a

DATE: 05-22-13

991 K & 992 L Trim for Mortise Device

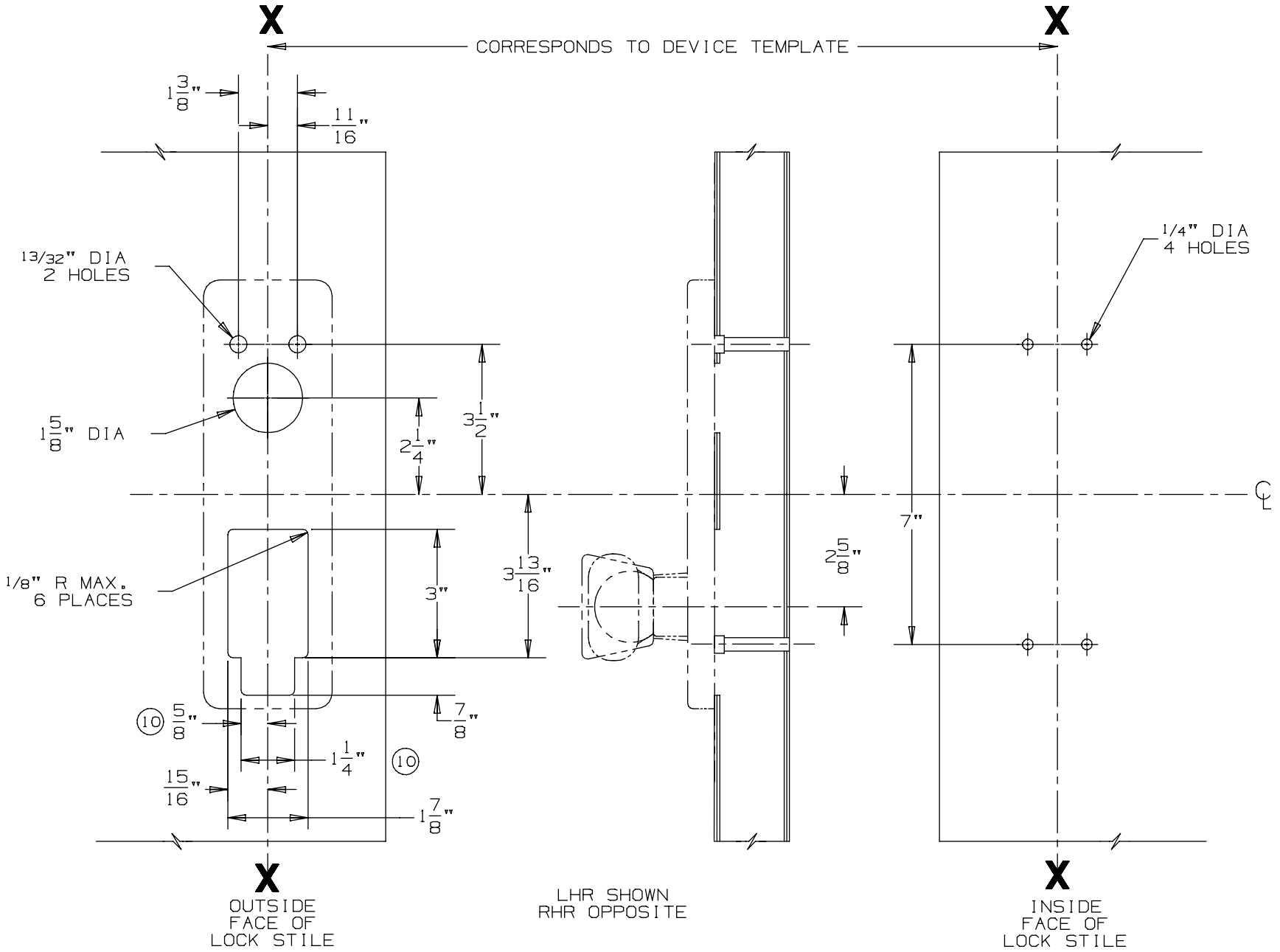

DEVICE APPLICATION SCHEDULE
9875/9975 SERIES DEVICE

NOTES: SEE MASTER SHEET #10001 FOR SUGGESTED REINFORCING

TEMPLATE NUMBER: 20280_a

DATE: 05-23-13

VON DUPRIN®

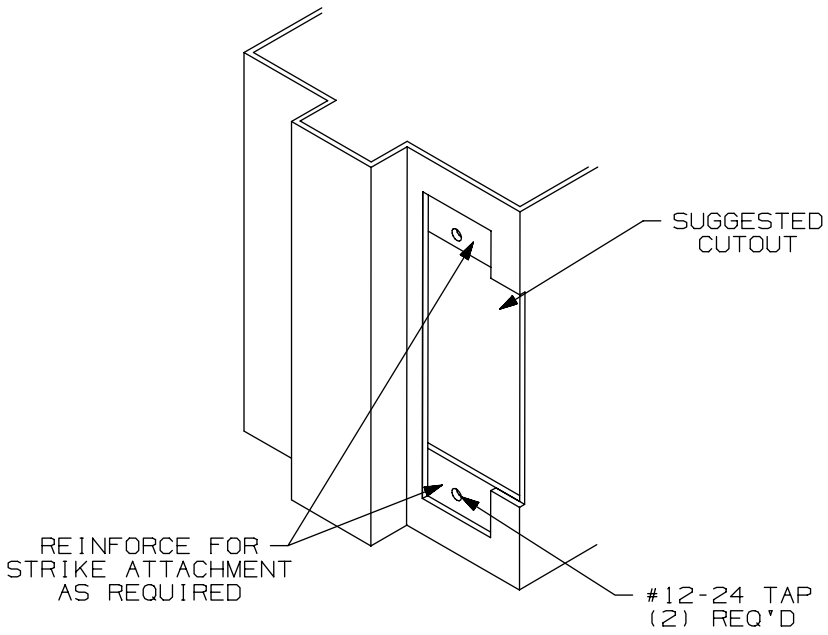

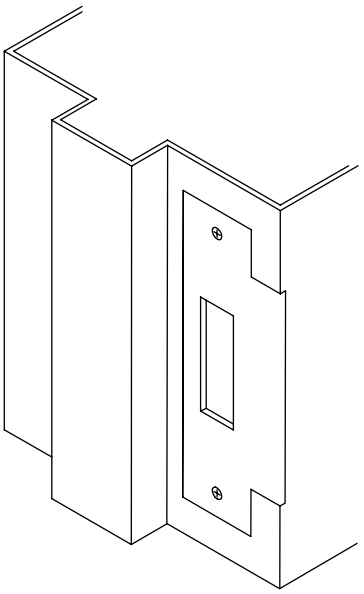

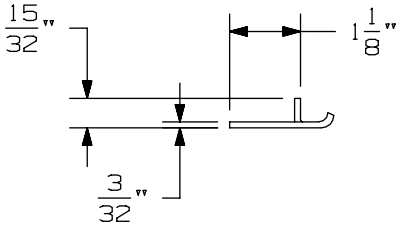

APPLICATION SCHEDULE	
DEVICE	DIM. "A"
9875 & 9875-F	11/16
9975 & 9975-F	11/16
8875 & 8875-F	1/2
5575 & 5575-F	1/2

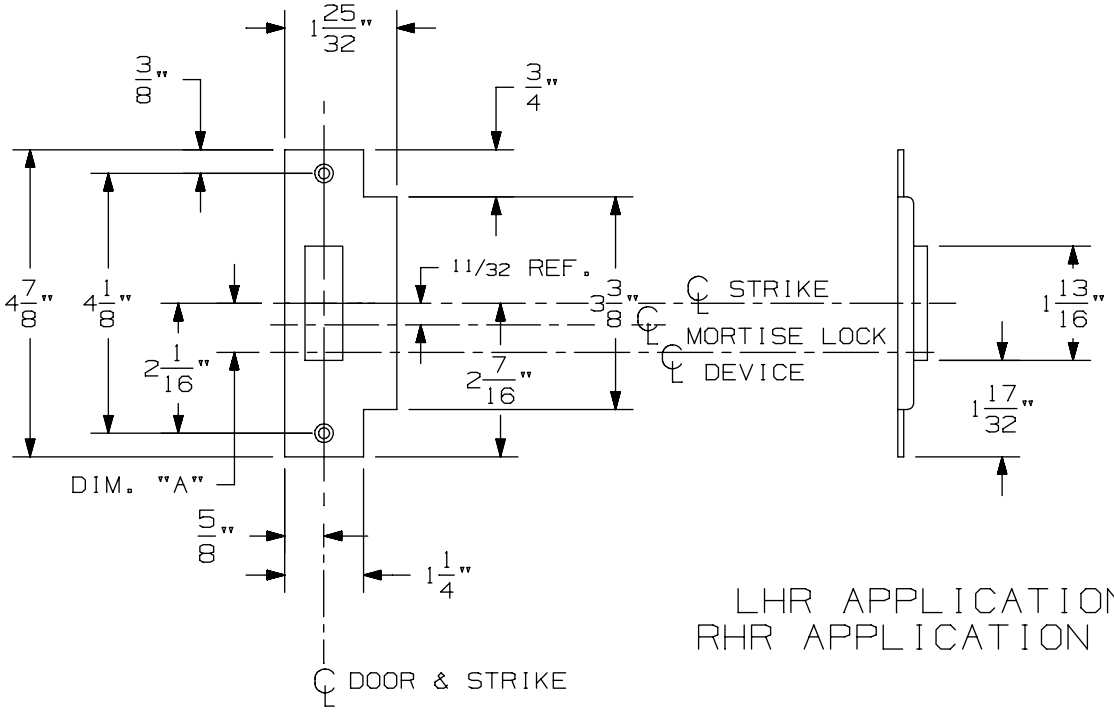

LHR APPLICATION SHOWN
RHR APPLICATION OPPOSITE

575 Mortise Strike (Single Door) for 7500 Mortise Lock

VON DUPRIN®

NOTES: SEE MASTER SHEET #10001 FOR SUGGESTED REINFORCING

TEMPLATE NUMBER: 30210_b

DATE: 07-22-13

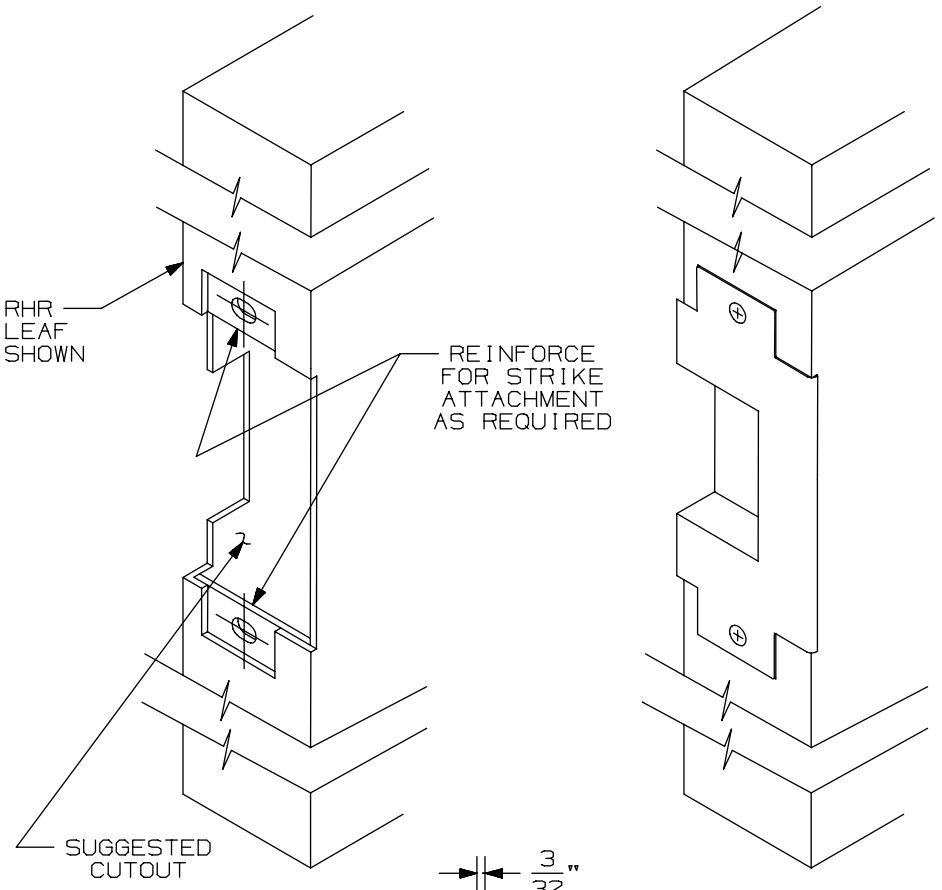

APPLICATION SCHEDULE	
DEVICE	DIM."A"
9875 & 9875-F	11/16
9975 & 9975-F	11/16
8875 & 8875-F	1/2
5575 & 5575-F	1/2

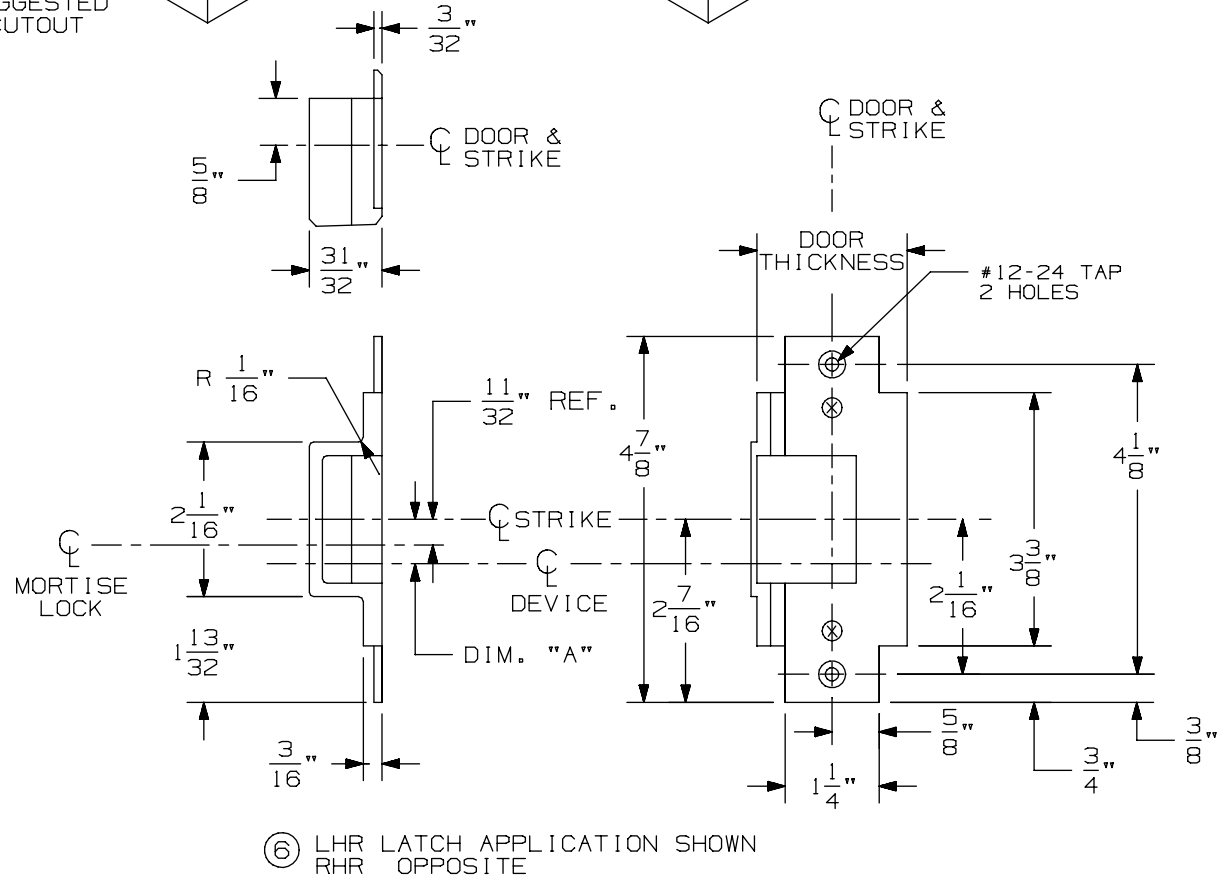

⑥ LHR LATCH APPLICATION SHOWN
RHR OPPOSITE

576A & 576B Mortise Strike for 7500 Mortise Lock

VON DUPRIN®

NOTES: SEE MASTER SHEET #10001 FOR SUGGESTED REINFORCING

TEMPLATE NUMBER: 30211_a

DATE: 05-28-13

9875/9975 & 9875-F/9975-F Series Mortise Lock Devices

NOTES: SEE MASTER SHEET #10001 FOR SUGGESTED REINFORCING

TEMPLATE NUMBER: 10305_a

DATE: 05-21-13

VON DUPRIN®

NOTES:
1. THESE FOUR HOLES TO BE PREPARED FOR SURFACE APPLICATION WHEN USING 696/697 TRIM. DO NOT PREPARE FOR SEX BOLTS.
2. FOR STOCK HOLLOW METAL DOORS SEE TEMPLATE NUMBER 10312 FOR TYPE '86' CUTOUT.
3. GLASS BEAD KIT AVAILABLE WHEN REQUIRED.
4. WIRING TO SS7500 & E7500 LOCKS GO THROUGH DOOR NOT DEVICE.
5. FOR OUTSIDE TRIM PREPARATION, WHEN REQUIRED, SEE TRIM TEMPLATE.
15 6. THE SS7500 LOCK MUST BE USED FOR LX98/9975 SERIES DEVICE APPLICATIONS.

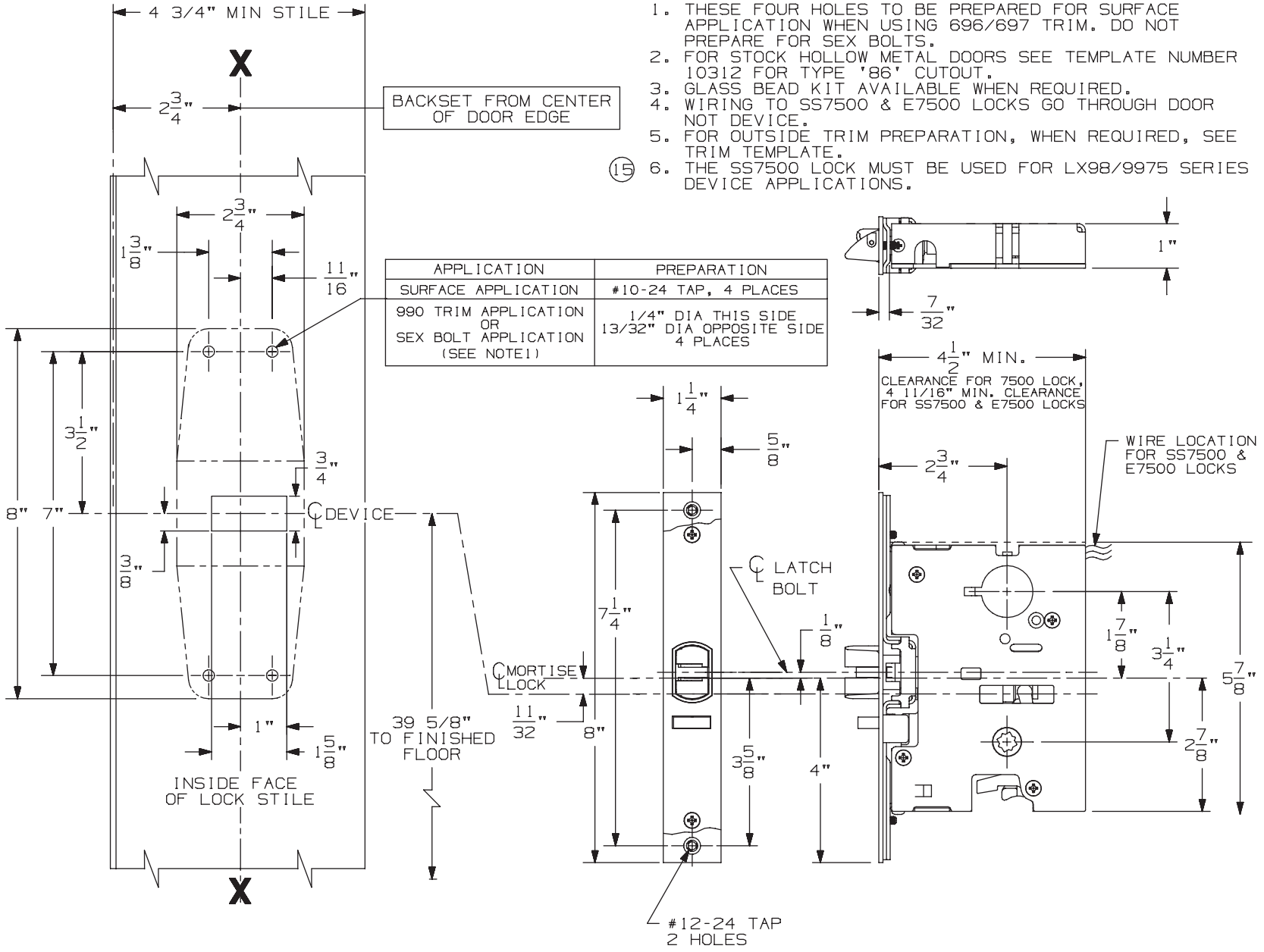

APPLICATION	PREPARATION
SURFACE APPLICATION	#10-24 TAP, 4 PLACES
990 TRIM APPLICATION OR SEX BOLT APPLICATION (SEE NOTE1)	1/4" DIA THIS SIDE 13/32" DIA OPPOSITE SIDE 4 PLACES

LHR APPLICATION SHOWN, RHR APPLICATION OPPOSITE

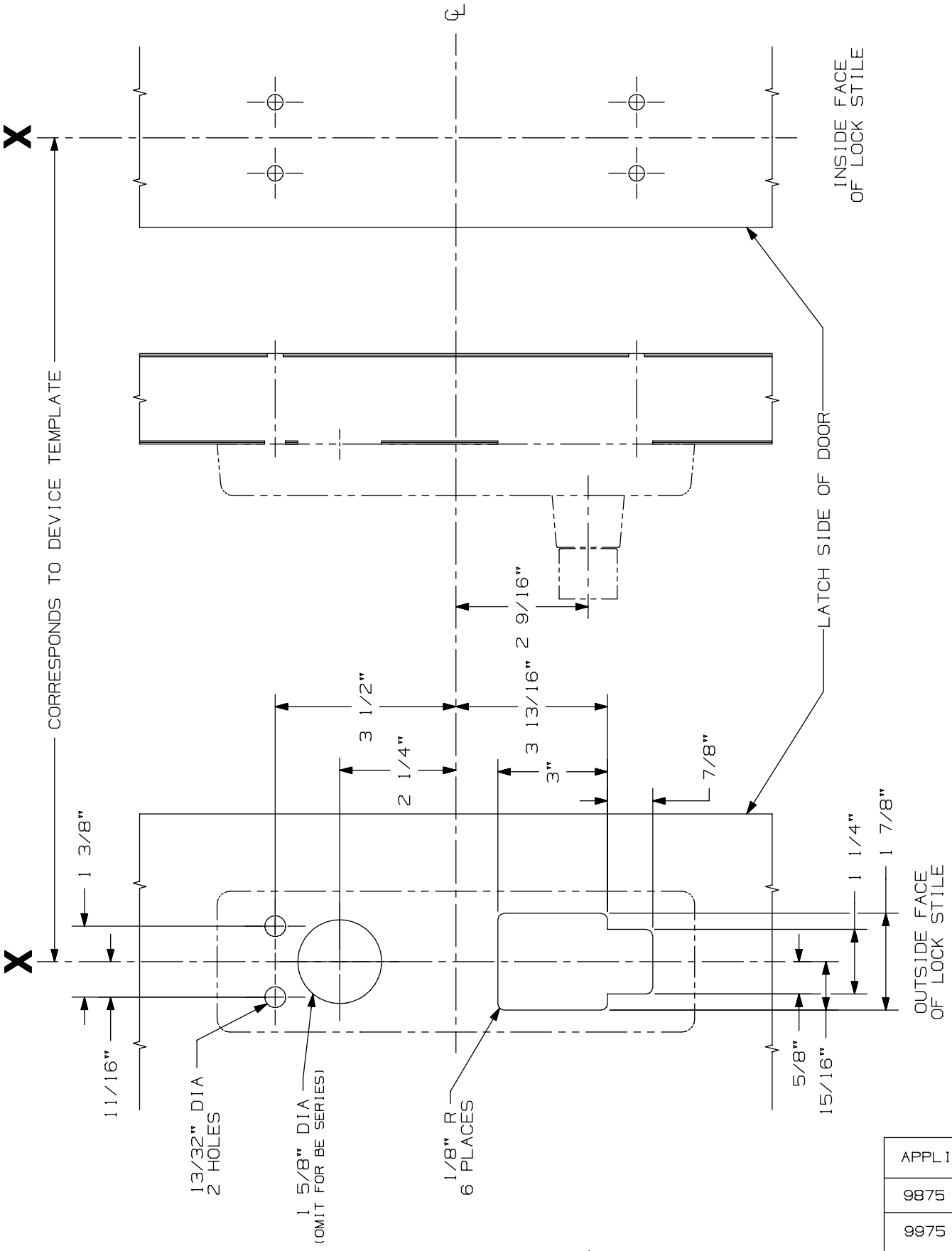

APPLICATIONS
9875 SERIES
9975 SERIES

996L, E996L, 996L-BE, & E996L-BE
Mortise Series
Trim Metal Door Application

VON DUPRIN®

NOTES: See Master Sheet #10001 For Suggested Reinforcing

TEMPLATE NUMBER: 20006_b

DATE: 10-30-14

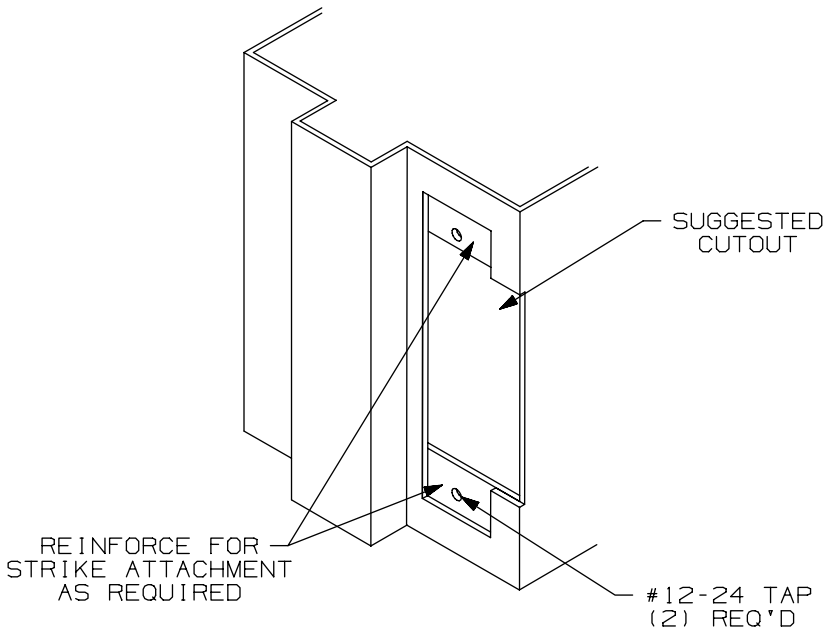

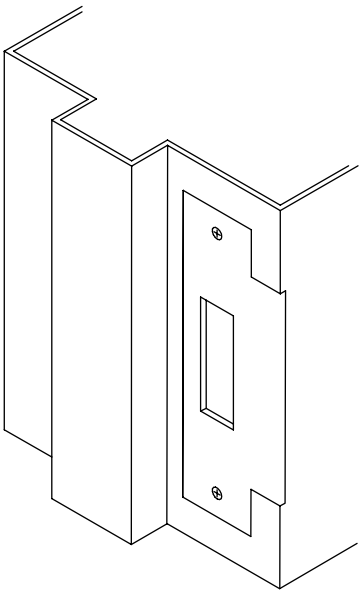

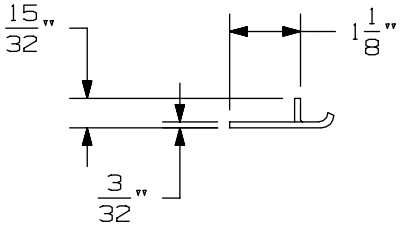

APPLICATION SCHEDULE	
DEVICE	DIM. "A"
9875 & 9875-F	11/16
9975 & 9975-F	11/16
8875 & 8875-F	1/2
5575 & 5575-F	1/2

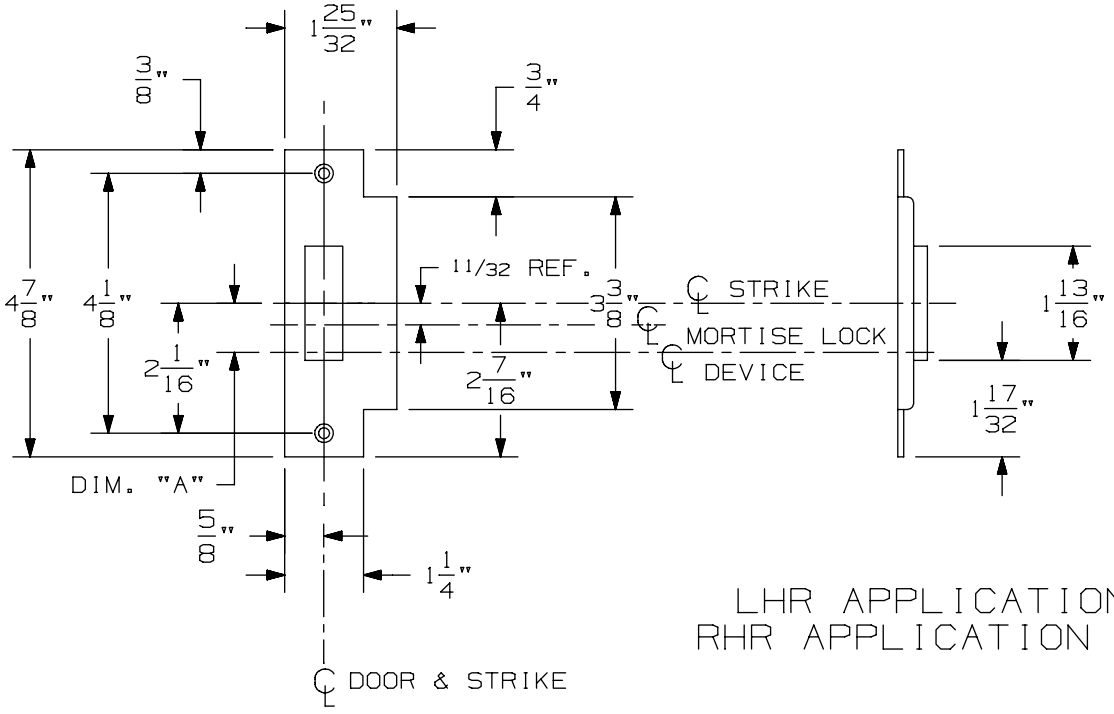

LHR APPLICATION SHOWN
RHR APPLICATION OPPOSITE

575 Mortise Strike (Single Door) for 7500 Mortise Lock

VON DUPRIN®

NOTES: SEE MASTER SHEET #10001 FOR SUGGESTED REINFORCING

TEMPLATE NUMBER: 30210_b

DATE: 07-22-13

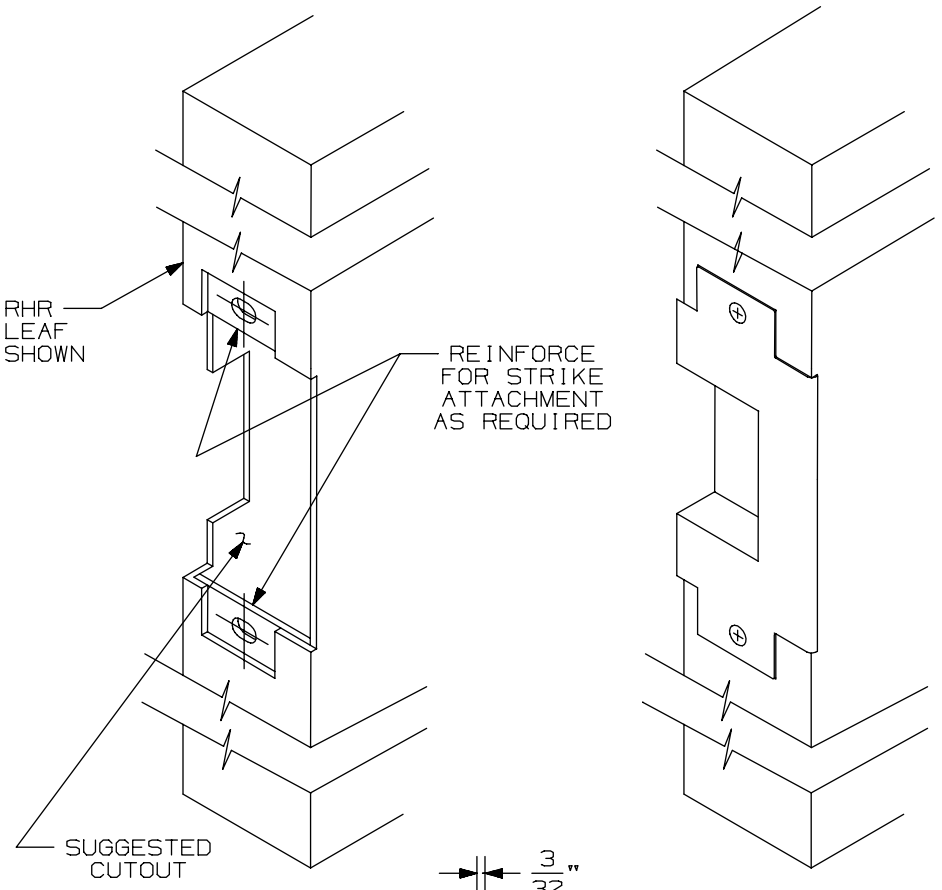

APPLICATION SCHEDULE	
DEVICE	DIM."A"
9875 & 9875-F	11/16
9975 & 9975-F	11/16
8875 & 8875-F	1/2
5575 & 5575-F	1/2

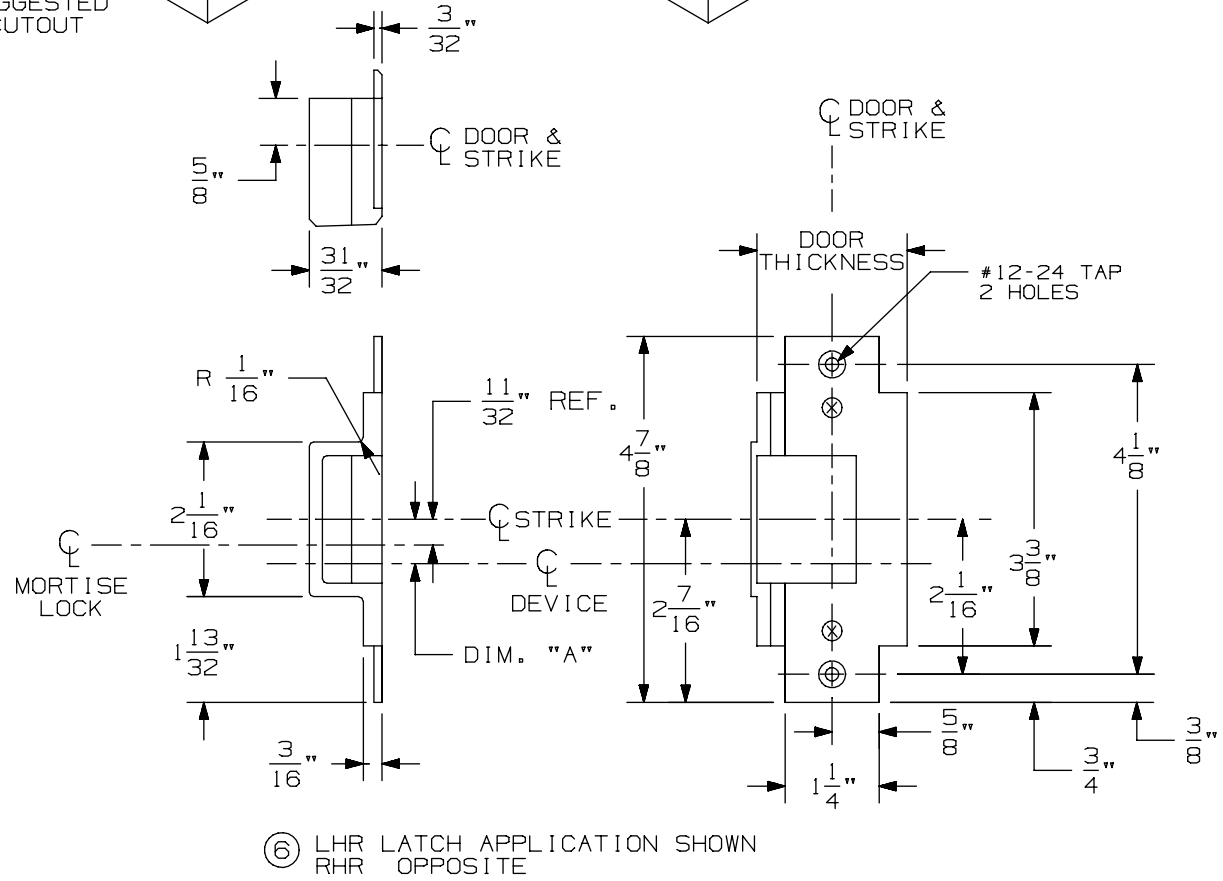

⑥ LHR LATCH APPLICATION SHOWN
RHR OPPOSITE

576A & 576B Mortise Strike for 7500 Mortise Lock

VON DUPRIN®

NOTES: SEE MASTER SHEET #10001 FOR SUGGESTED REINFORCING

TEMPLATE NUMBER: 30211_a

DATE: 05-28-13

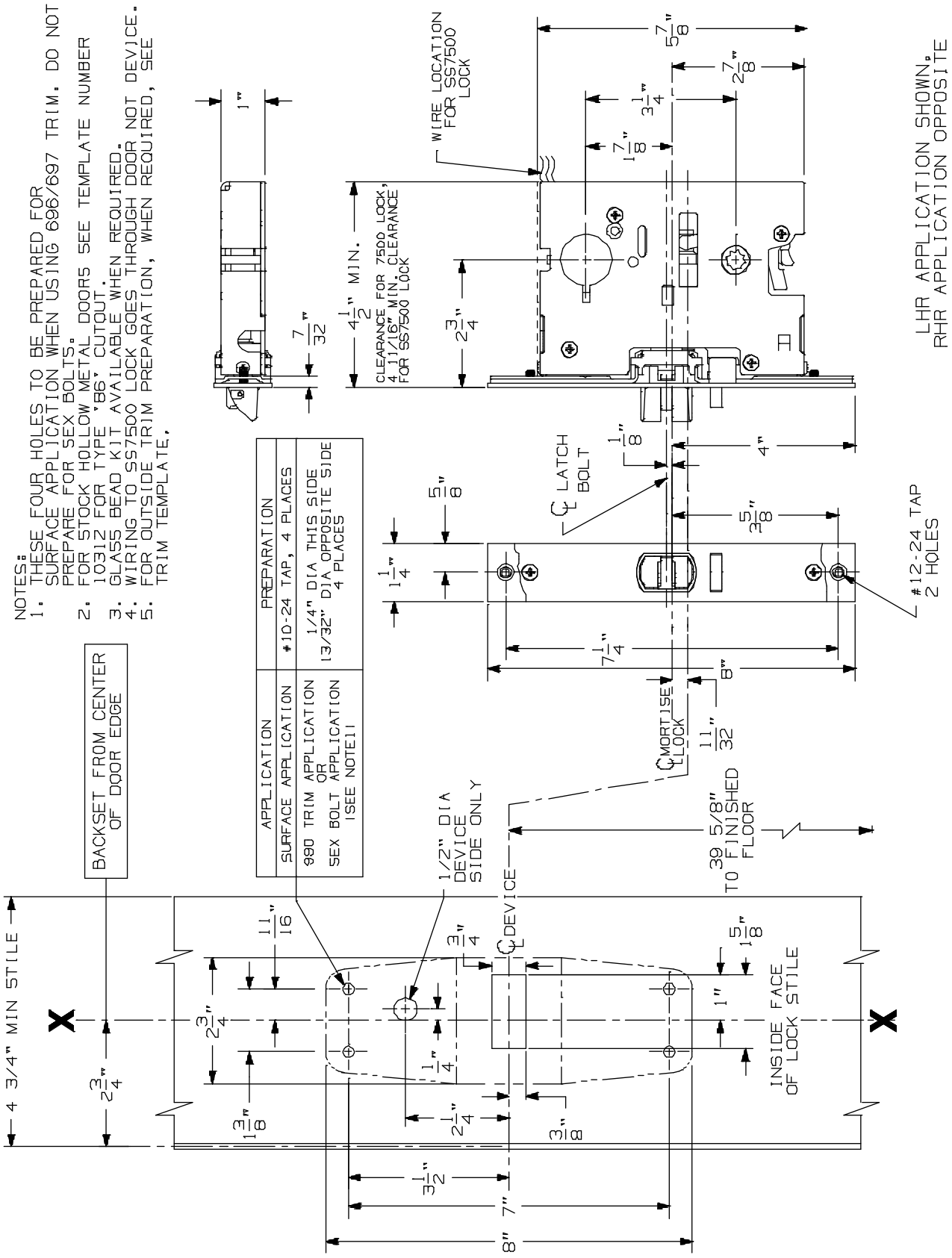

98/9975-2 Series Mortise Lock Devices

VON DUPRIN®

NOTES: SEE MASTER SHEET #10001 FOR SUGGESTED REINFORCING

TEMPLATE NUMBER: 10368_a

DATE: 05-22-13

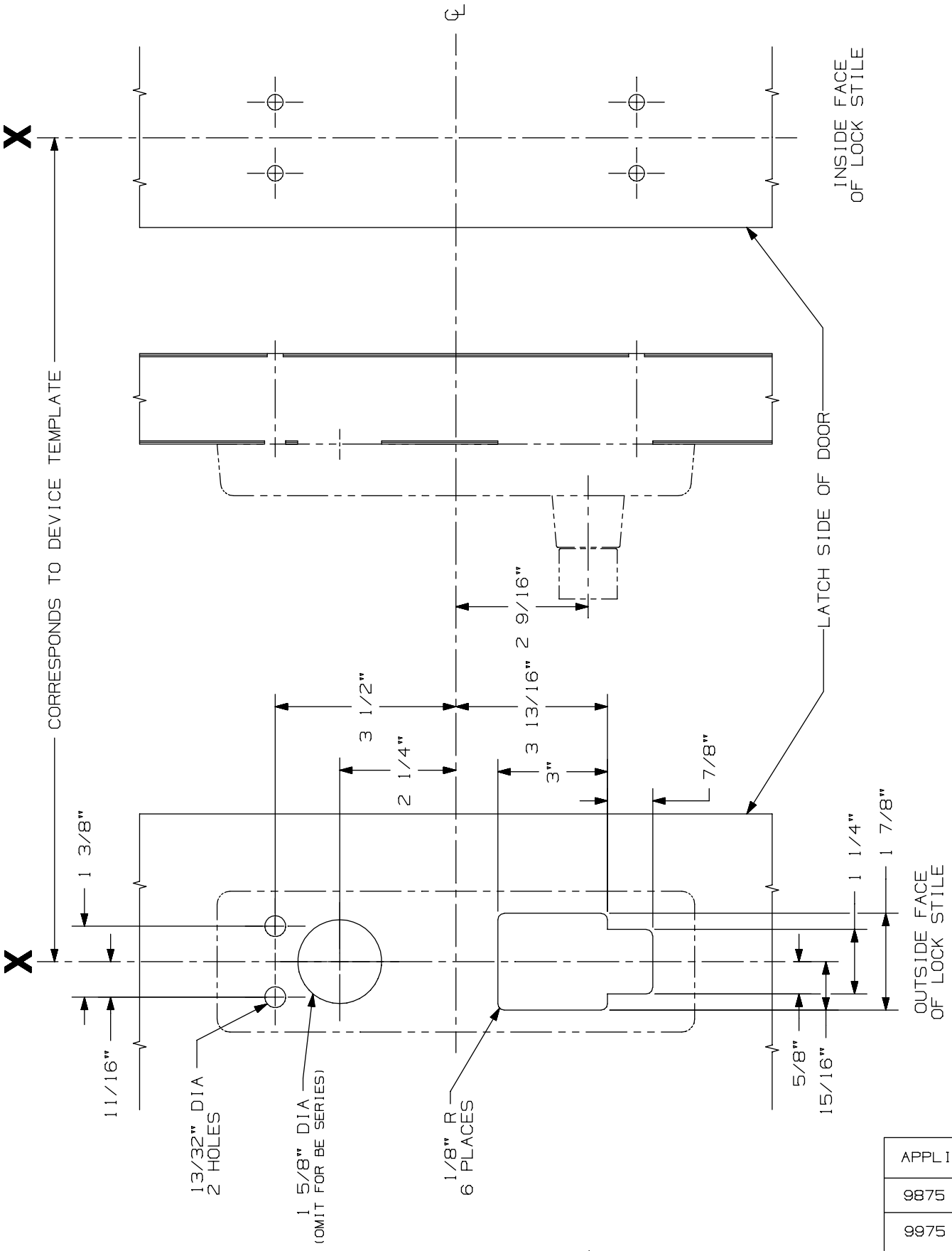

APPLICATIONS
9875 SERIES
9975 SERIES

996L, E996L, 996L-BE, & E996L-BE
Mortise Series
Trim Metal Door Application

VON DUPRIN®

NOTES: See Master Sheet #10001 For Suggested Reinforcing

TEMPLATE NUMBER: 20006_b

DATE: 10-30-14

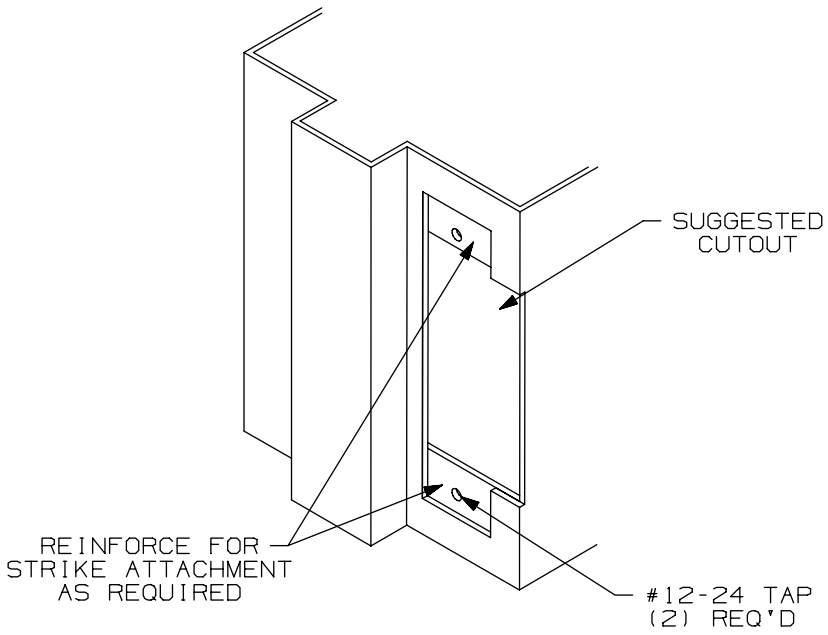

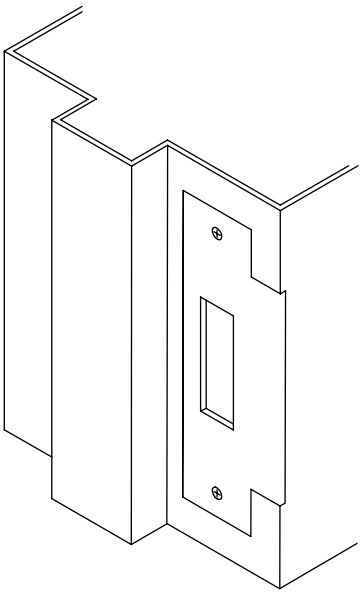

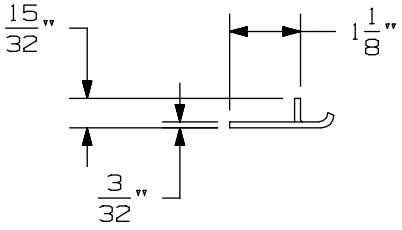

APPLICATION SCHEDULE	
DEVICE	DIM. "A"
9875 & 9875-F	11/16
9975 & 9975-F	11/16
8875 & 8875-F	1/2
5575 & 5575-F	1/2

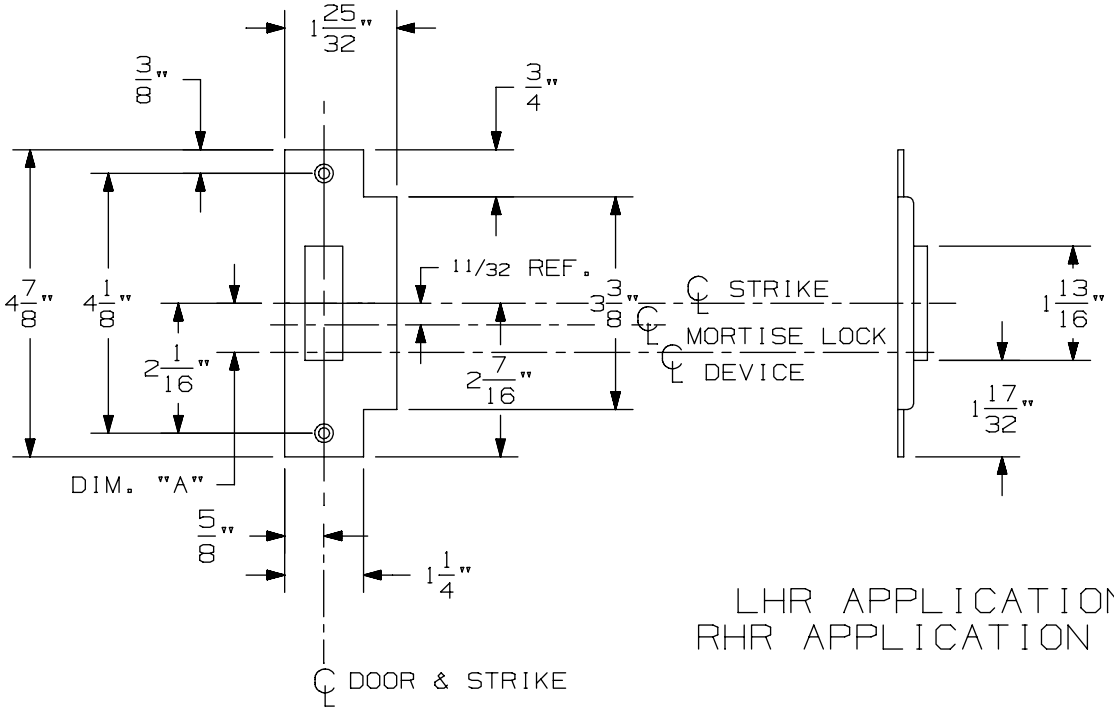

LHR APPLICATION SHOWN
RHR APPLICATION OPPOSITE

575 Mortise Strike (Single Door) for 7500 Mortise Lock

VON DUPRIN®

NOTES: SEE MASTER SHEET #10001 FOR SUGGESTED REINFORCING

TEMPLATE NUMBER: 30210_b

DATE: 07-22-13

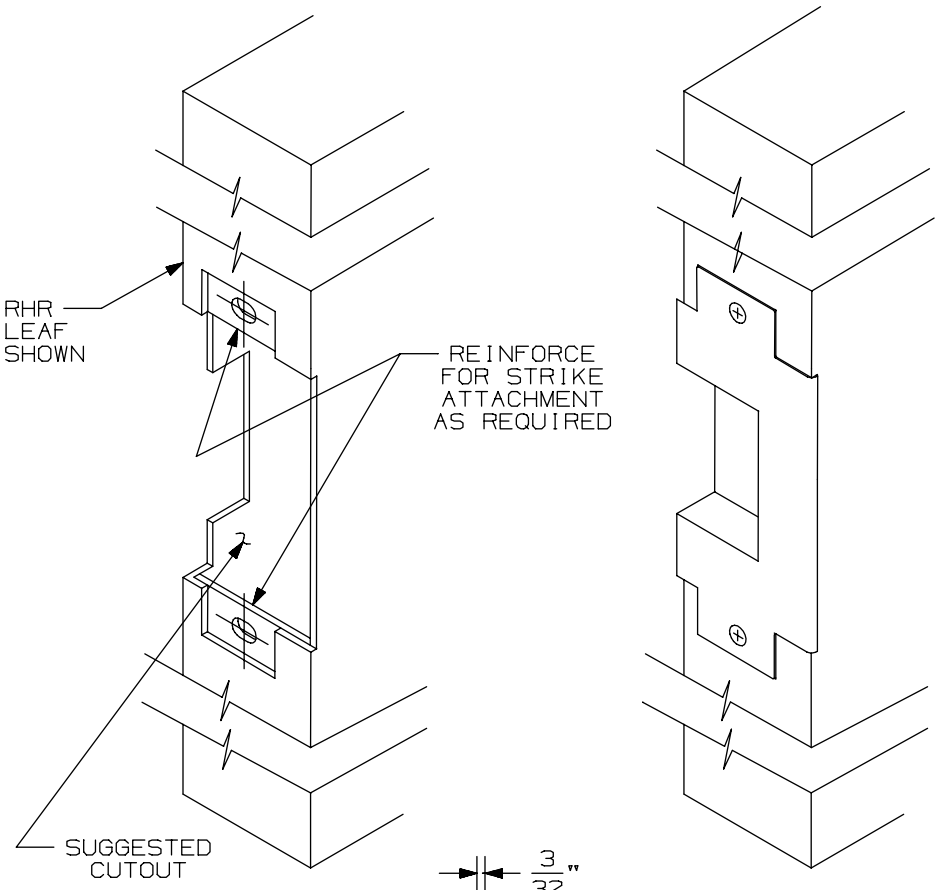

APPLICATION SCHEDULE	
DEVICE	DIM."A"
9875 & 9875-F	11/16
9975 & 9975-F	11/16
8875 & 8875-F	1/2
5575 & 5575-F	1/2

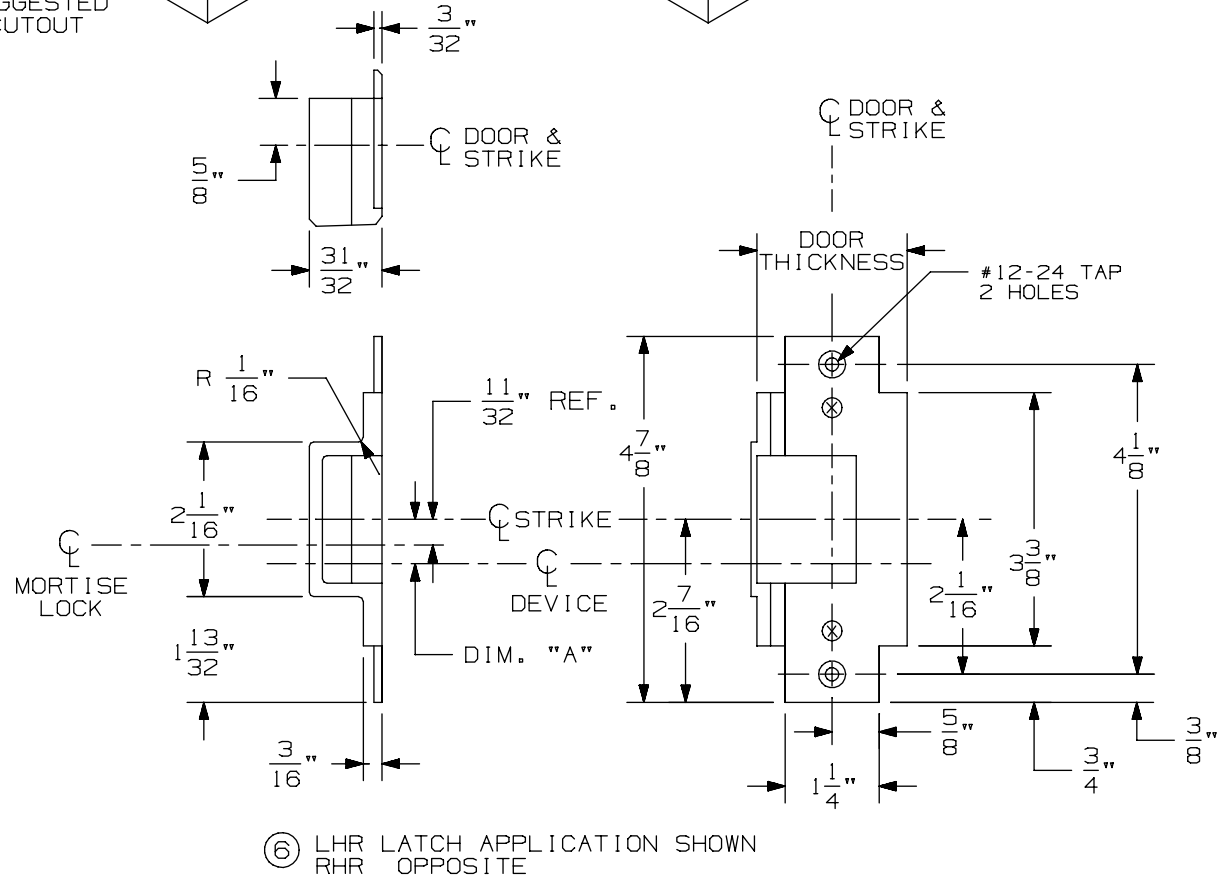

⑥ LHR LATCH APPLICATION SHOWN
RHR OPPOSITE

576A & 576B Mortise Strike for 7500 Mortise Lock

VON DUPRIN®

NOTES: SEE MASTER SHEET #10001 FOR SUGGESTED REINFORCING

TEMPLATE NUMBER: 30211_a

DATE: 05-28-13

9875/9975 & 9875-F/9975-F Series Mortise Lock Devices

NOTES: SEE MASTER SHEET #10001 FOR SUGGESTED REINFORCING

TEMPLATE NUMBER: 10305_a

DATE: 05-21-13

VON DUPRIN®

NOTES:
1. THESE FOUR HOLES TO BE PREPARED FOR SURFACE APPLICATION WHEN USING 696/697 TRIM. DO NOT PREPARE FOR SEX BOLTS.
2. FOR STOCK HOLLOW METAL DOORS SEE TEMPLATE NUMBER 10312 FOR TYPE '86' CUTOUT.
3. GLASS BEAD KIT AVAILABLE WHEN REQUIRED.
4. WIRING TO SS7500 & E7500 LOCKS GO THROUGH DOOR NOT DEVICE.
5. FOR OUTSIDE TRIM PREPARATION, WHEN REQUIRED, SEE TRIM TEMPLATE.
(15) 6. THE SS7500 LOCK MUST BE USED FOR LX98/9975 SERIES DEVICE APPLICATIONS.

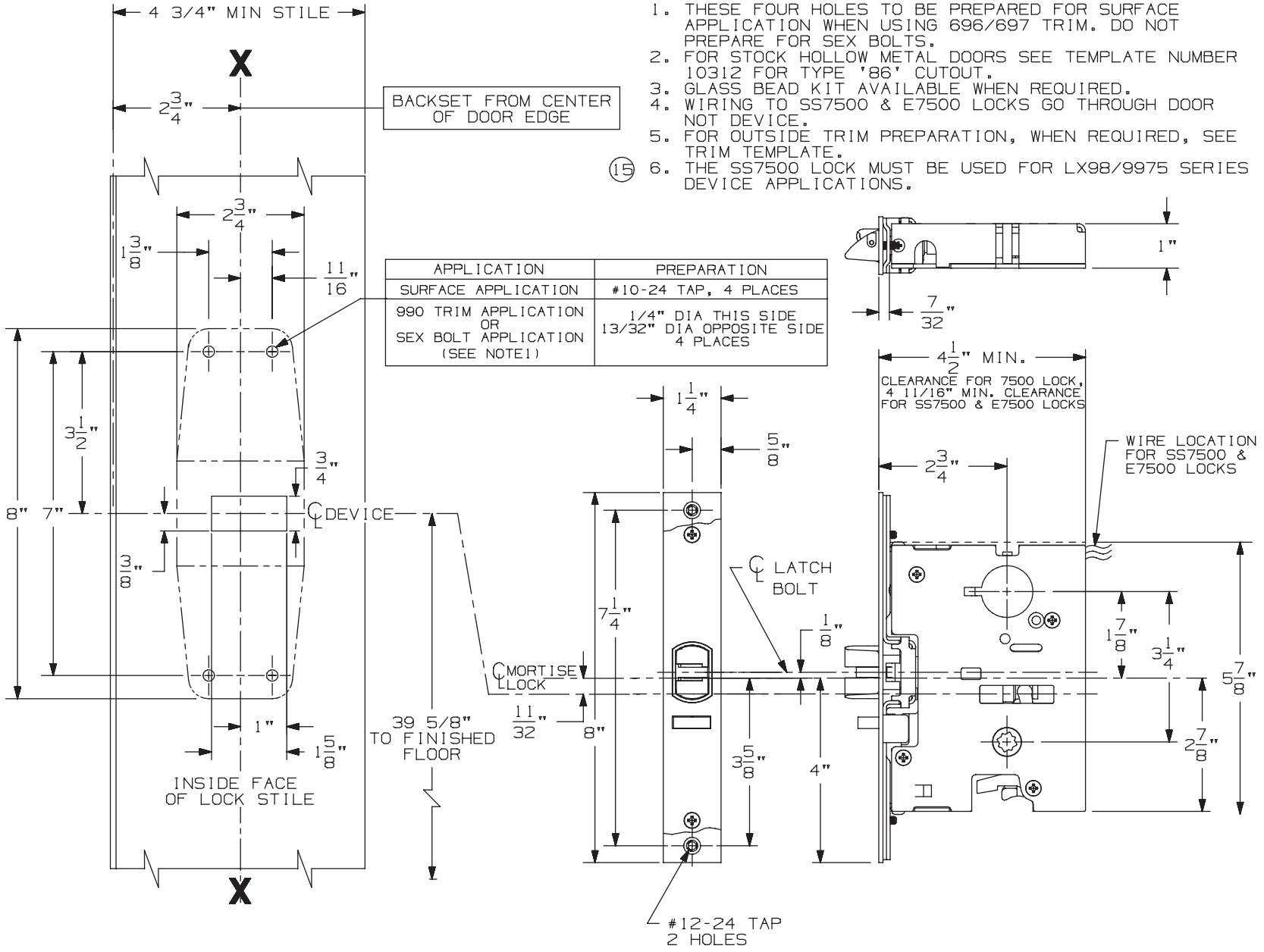

APPLICATION	PREPARATION
SURFACE APPLICATION	#10-24 TAP, 4 PLACES
990 TRIM APPLICATION OR SEX BOLT APPLICATION (SEE NOTE1)	1/4" DIA THIS SIDE 13/32" DIA OPPOSITE SIDE 4 PLACES

LHR APPLICATION SHOWN, RHR APPLICATION OPPOSITE

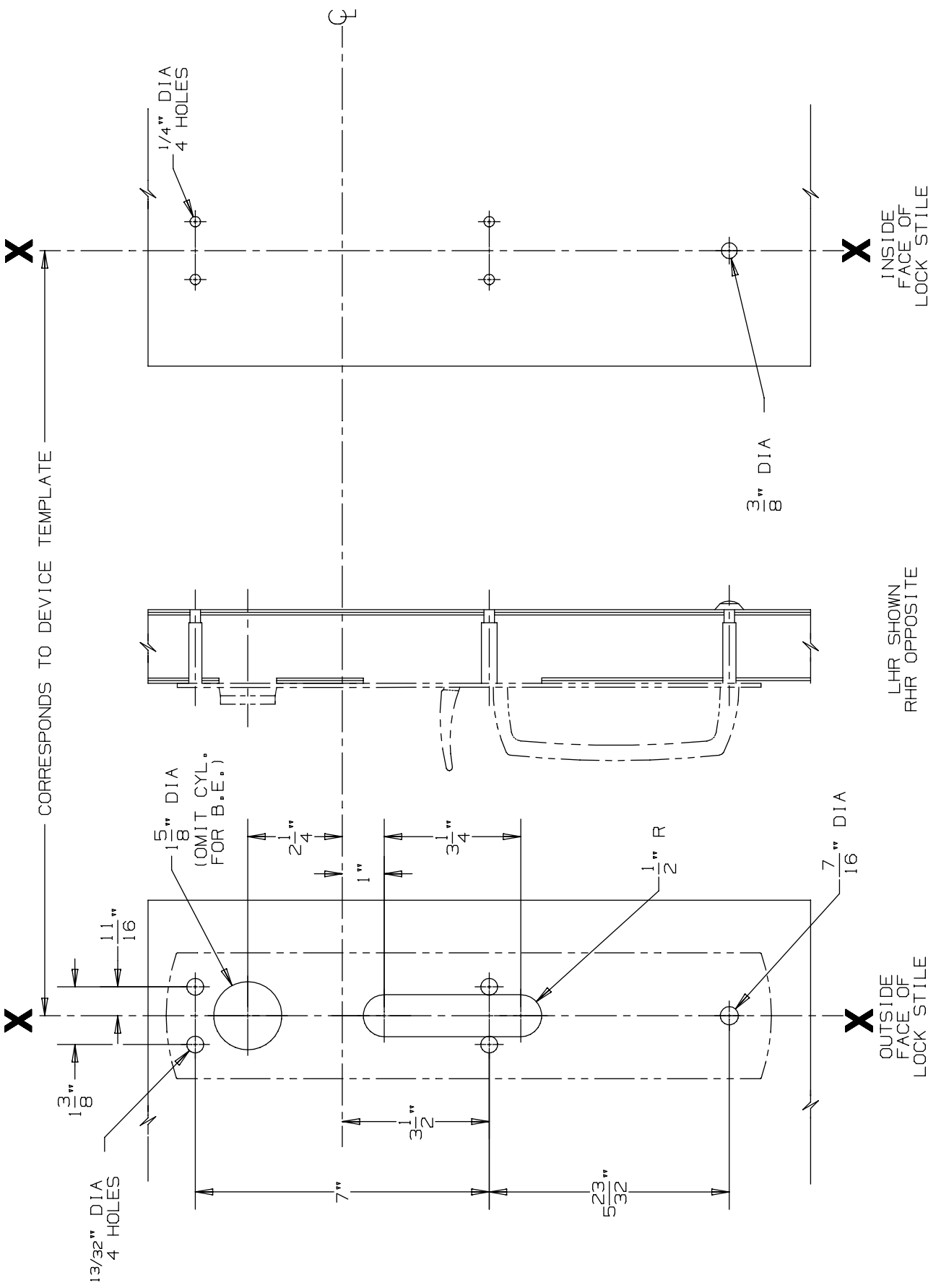

DEVICE APPLICATION SCHEDULE
9875/9975 SERIES DEVICE

990 TP & 990 TP-BE Trim

VON DUPRIN®

NOTES: SEE MASTER SHEET #10001 FOR SUGGESTED REINFORCING

TEMPLATE NUMBER: 20270_a

DATE: 05-23-13

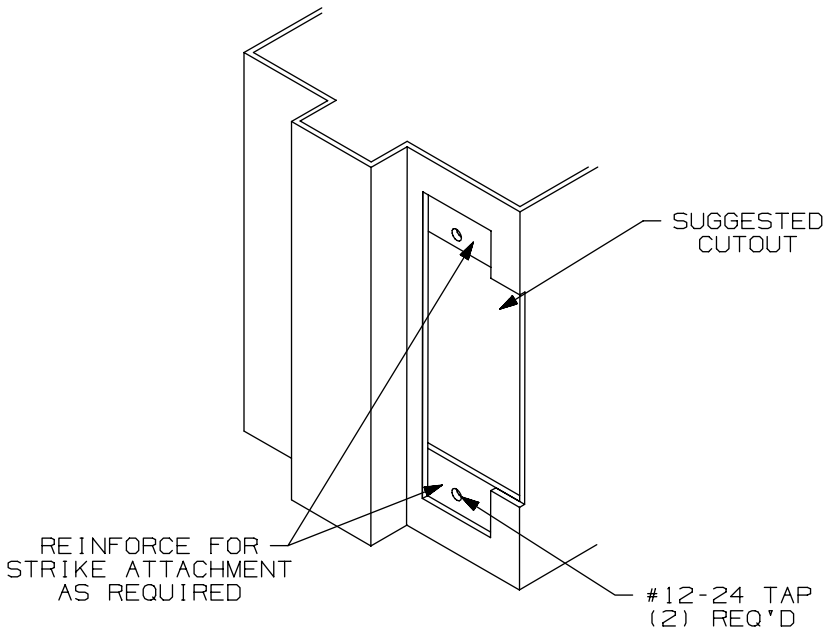

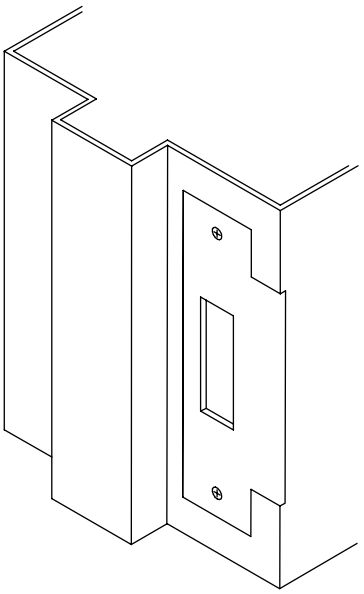

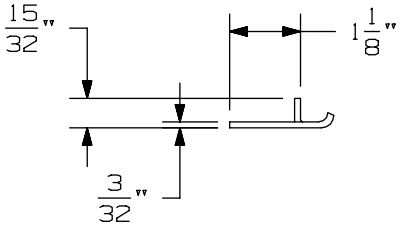

APPLICATION SCHEDULE	
DEVICE	DIM. "A"
9875 & 9875-F	11/16
9975 & 9975-F	11/16
8875 & 8875-F	1/2
5575 & 5575-F	1/2

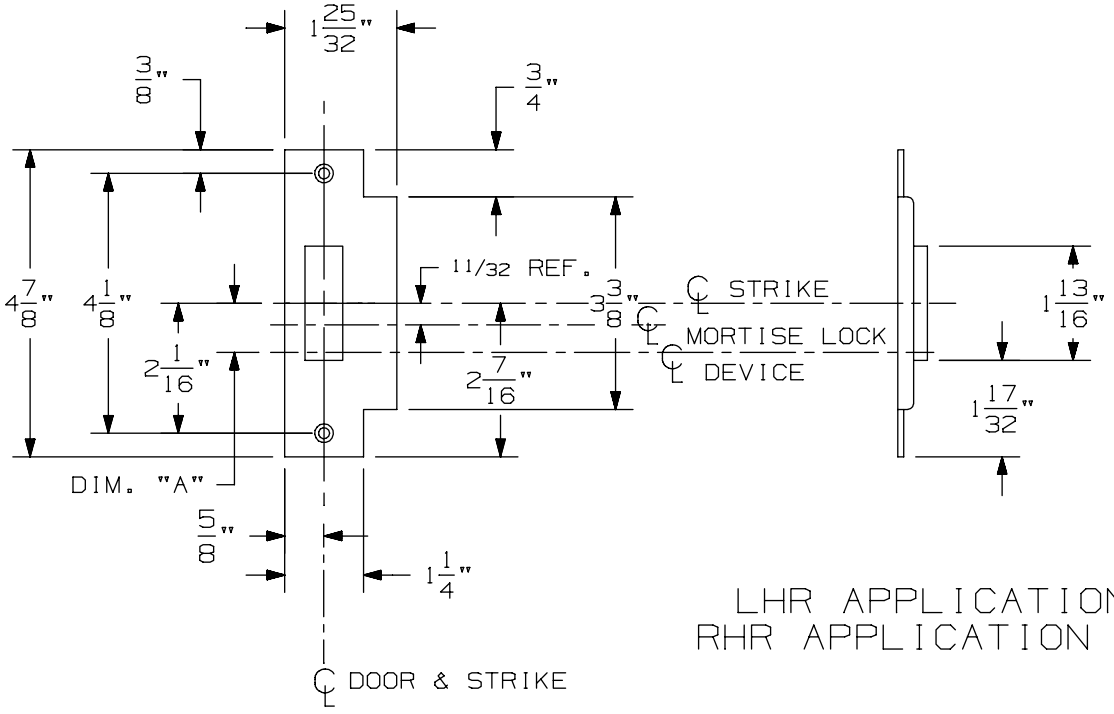

LHR APPLICATION SHOWN
RHR APPLICATION OPPOSITE

575 Mortise Strike (Single Door) for 7500 Mortise Lock

VON DUPRIN®

NOTES: SEE MASTER SHEET #10001 FOR SUGGESTED REINFORCING

TEMPLATE NUMBER: 30210_b

DATE: 07-22-13

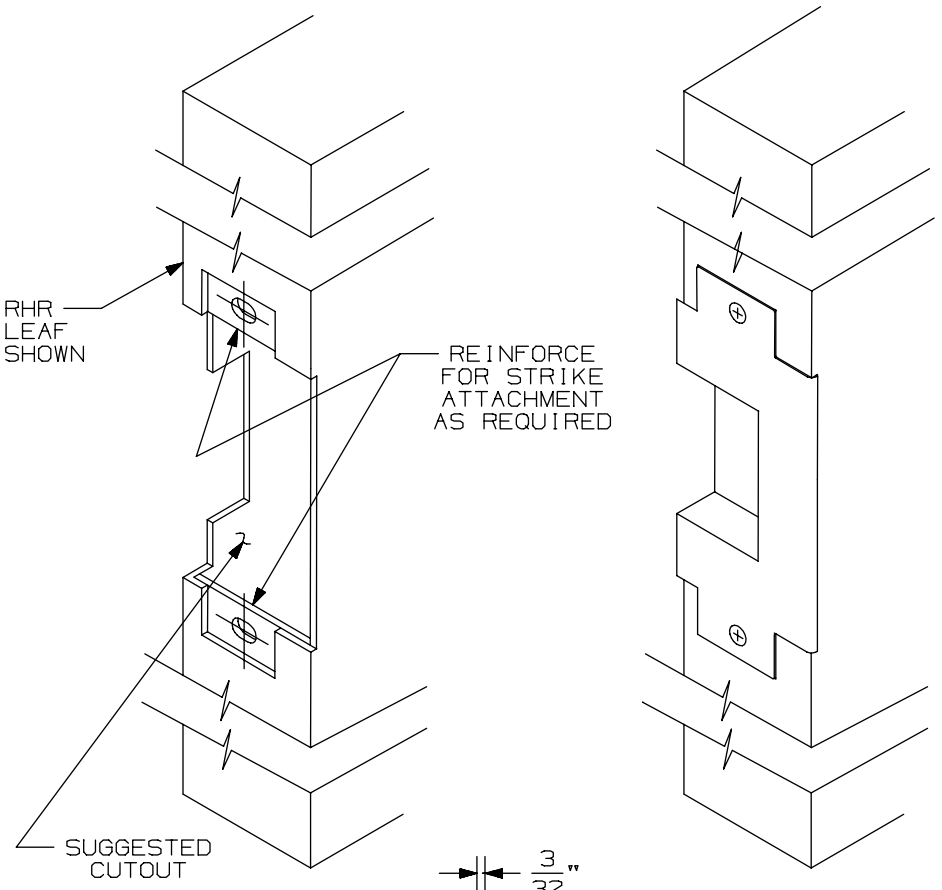

APPLICATION SCHEDULE	
DEVICE	DIM."A"
9875 & 9875-F	11/16
9975 & 9975-F	11/16
8875 & 8875-F	1/2
5575 & 5575-F	1/2

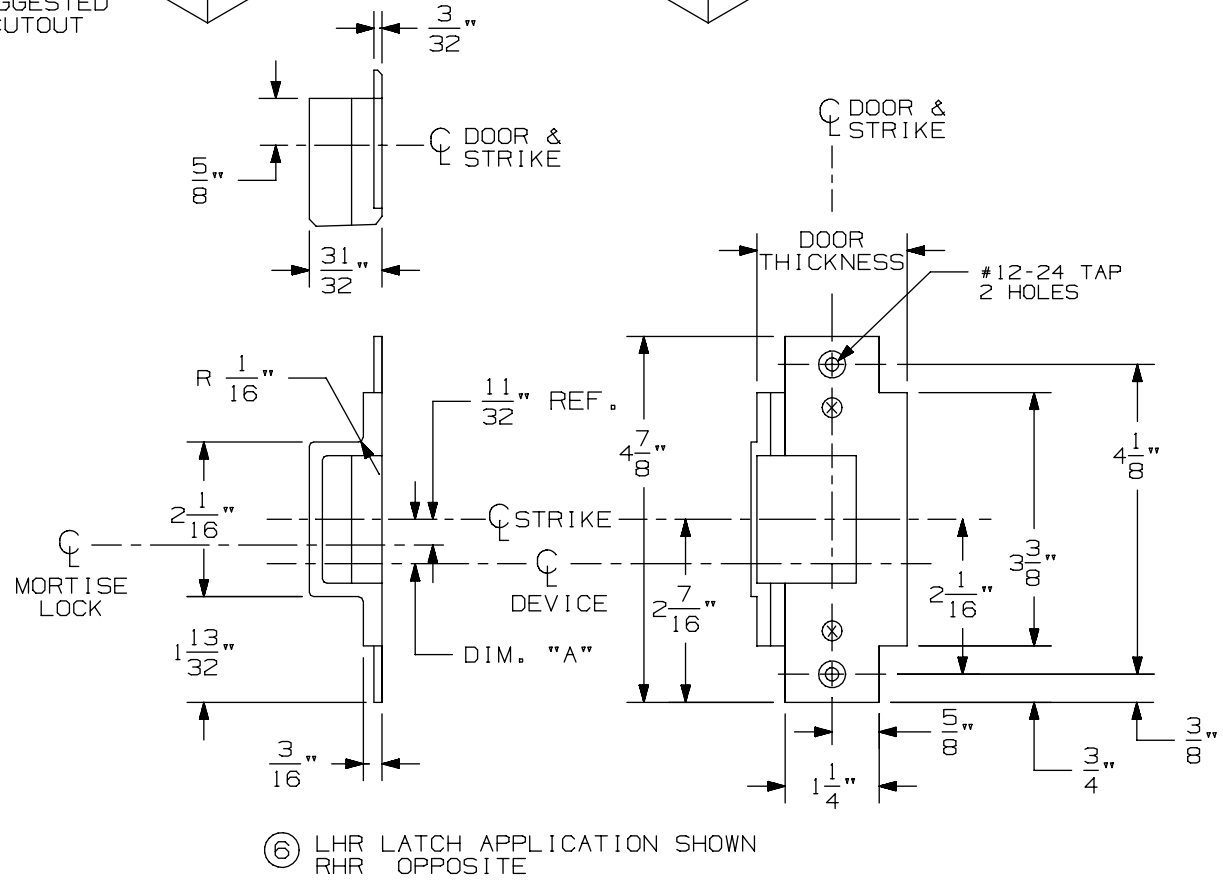

⑥ LHR LATCH APPLICATION SHOWN
RHR OPPOSITE

576A & 576B Mortise Strike for 7500 Mortise Lock

VON DUPRIN®

NOTES: SEE MASTER SHEET #10001 FOR SUGGESTED REINFORCING

TEMPLATE NUMBER: 30211_a

DATE: 05-28-13

9875/9975 & 9875-F/9975-F Series Mortise Lock Devices

NOTES: SEE MASTER SHEET #10001 FOR SUGGESTED REINFORCING

TEMPLATE NUMBER: 10305_a

DATE: 05-21-13

VON DUPRIN®

NOTES:
1. THESE FOUR HOLES TO BE PREPARED FOR SURFACE APPLICATION WHEN USING 696/697 TRIM. DO NOT PREPARE FOR SEX BOLTS.
2. FOR STOCK HOLLOW METAL DOORS SEE TEMPLATE NUMBER 10312 FOR TYPE '86' CUTOUT.
3. GLASS BEAD KIT AVAILABLE WHEN REQUIRED.
4. WIRING TO SS7500 & E7500 LOCKS GO THROUGH DOOR NOT DEVICE.
5. FOR OUTSIDE TRIM PREPARATION, WHEN REQUIRED, SEE TRIM TEMPLATE.
(15) 6. THE SS7500 LOCK MUST BE USED FOR LX98/9975 SERIES DEVICE APPLICATIONS.

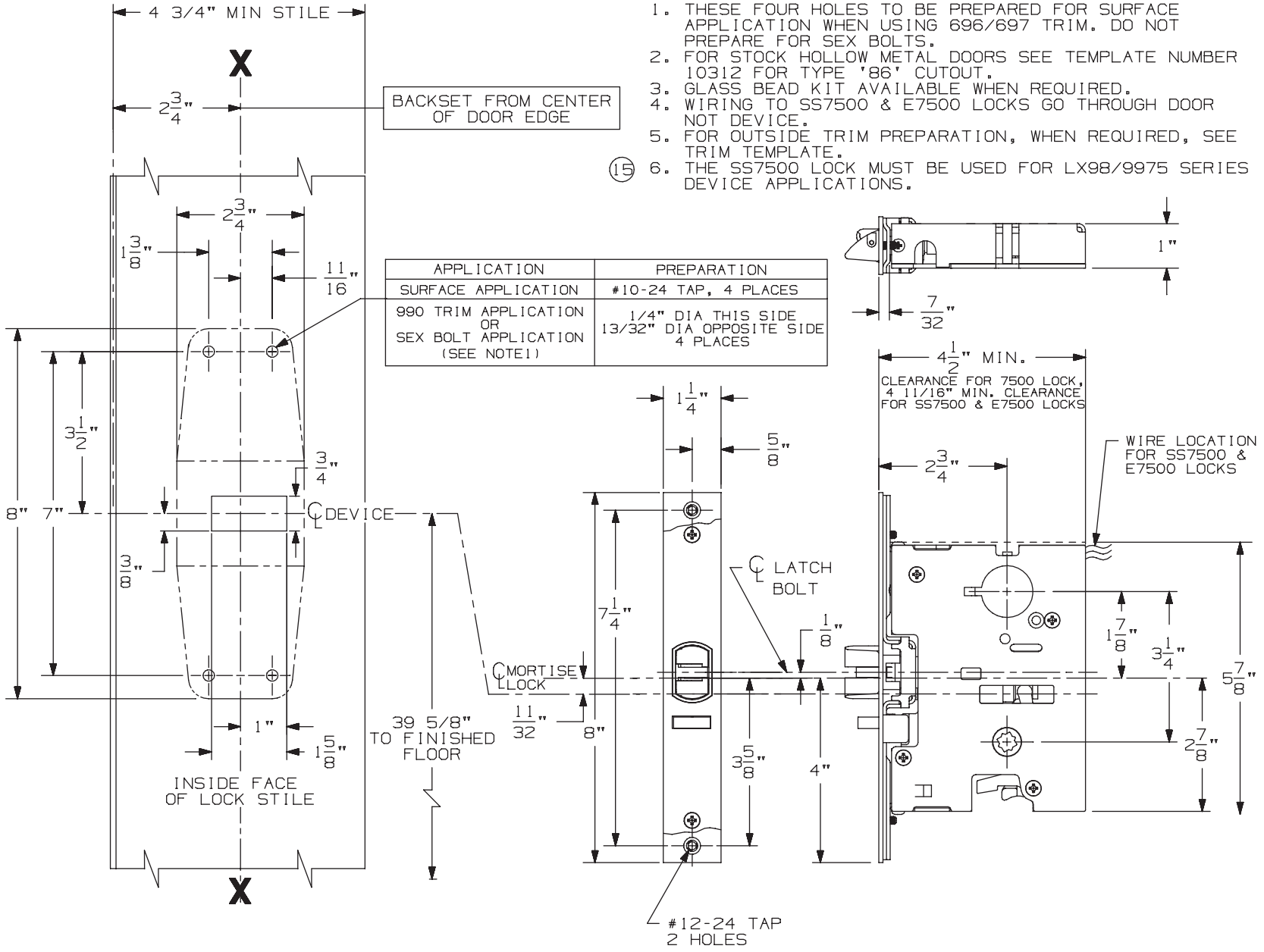

APPLICATION	PREPARATION
SURFACE APPLICATION	#10-24 TAP, 4 PLACES
990 TRIM APPLICATION OR SEX BOLT APPLICATION (SEE NOTE1)	1/4" DIA THIS SIDE 13/32" DIA OPPOSITE SIDE 4 PLACES

LHR APPLICATION SHOWN, RHR APPLICATION OPPOSITE

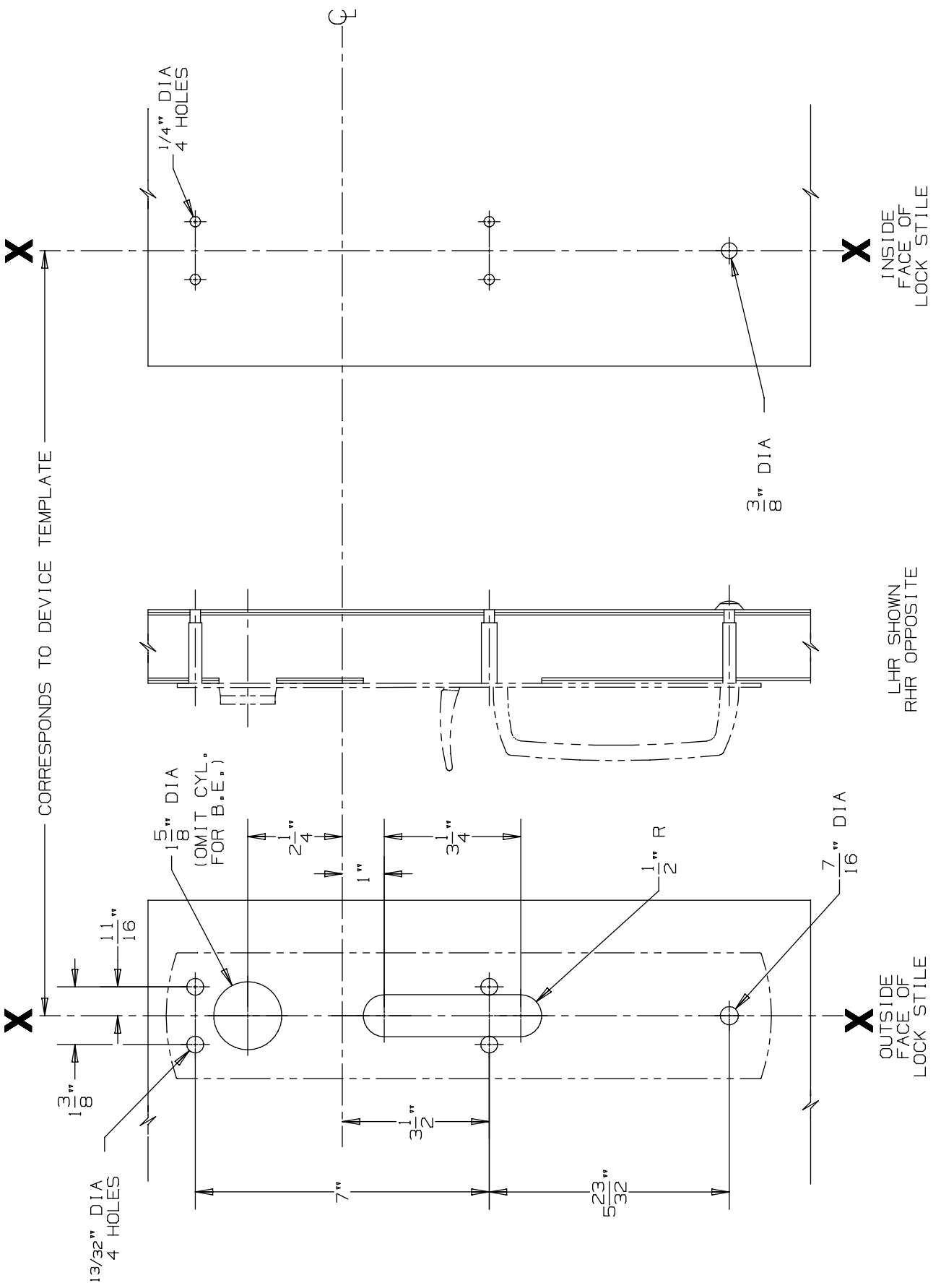

DEVICE APPLICATION SCHEDULE
9875/9975 SERIES DEVICE

990 TP & 990 TP-BE Trim

VON DUPRIN®

NOTES: SEE MASTER SHEET #10001 FOR SUGGESTED REINFORCING

TEMPLATE NUMBER: 20270_a

DATE: 05-23-13

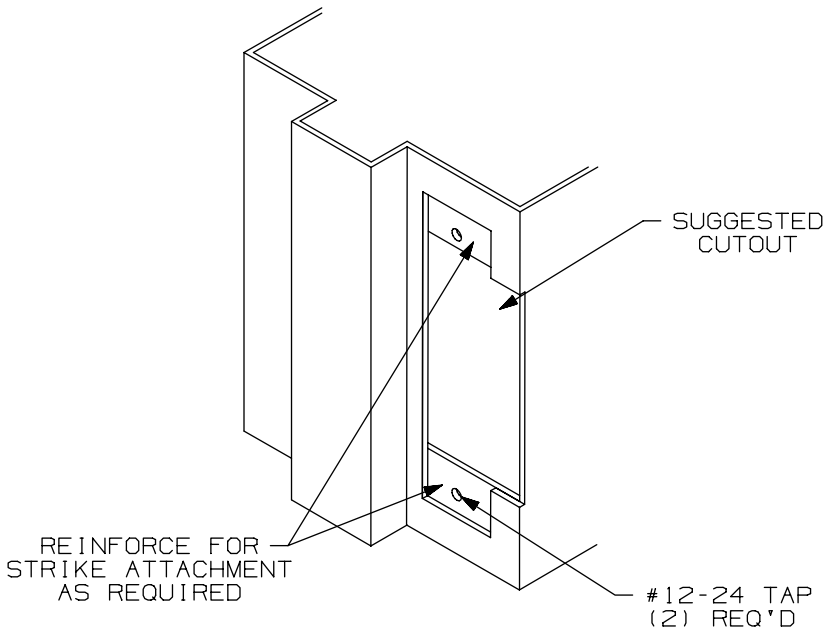

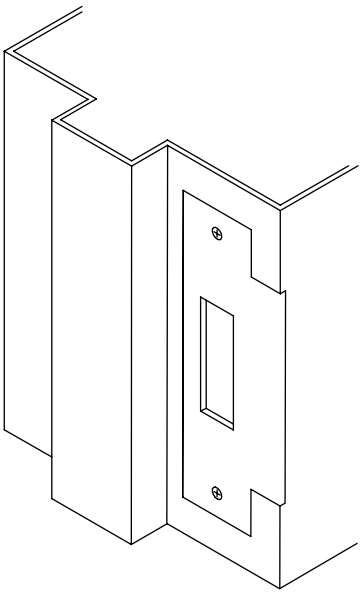

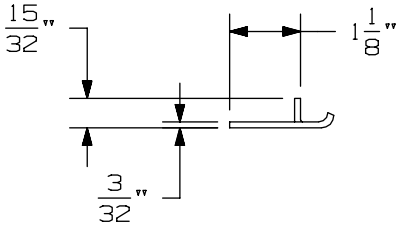

APPLICATION SCHEDULE	
DEVICE	DIM. "A"
9875 & 9875-F	11/16
9975 & 9975-F	11/16
8875 & 8875-F	1/2
5575 & 5575-F	1/2

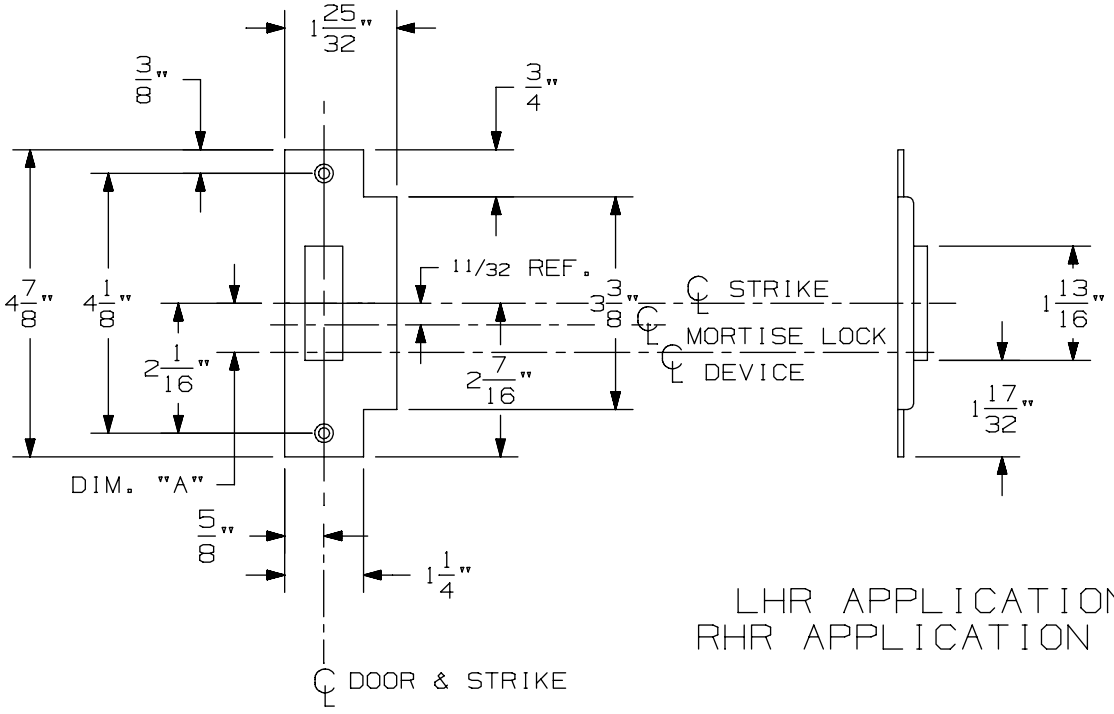

LHR APPLICATION SHOWN
RHR APPLICATION OPPOSITE

575 Mortise Strike (Single Door) for 7500 Mortise Lock

VON DUPRIN®

NOTES: SEE MASTER SHEET #10001 FOR SUGGESTED REINFORCING

TEMPLATE NUMBER: 30210_b

DATE: 07-22-13

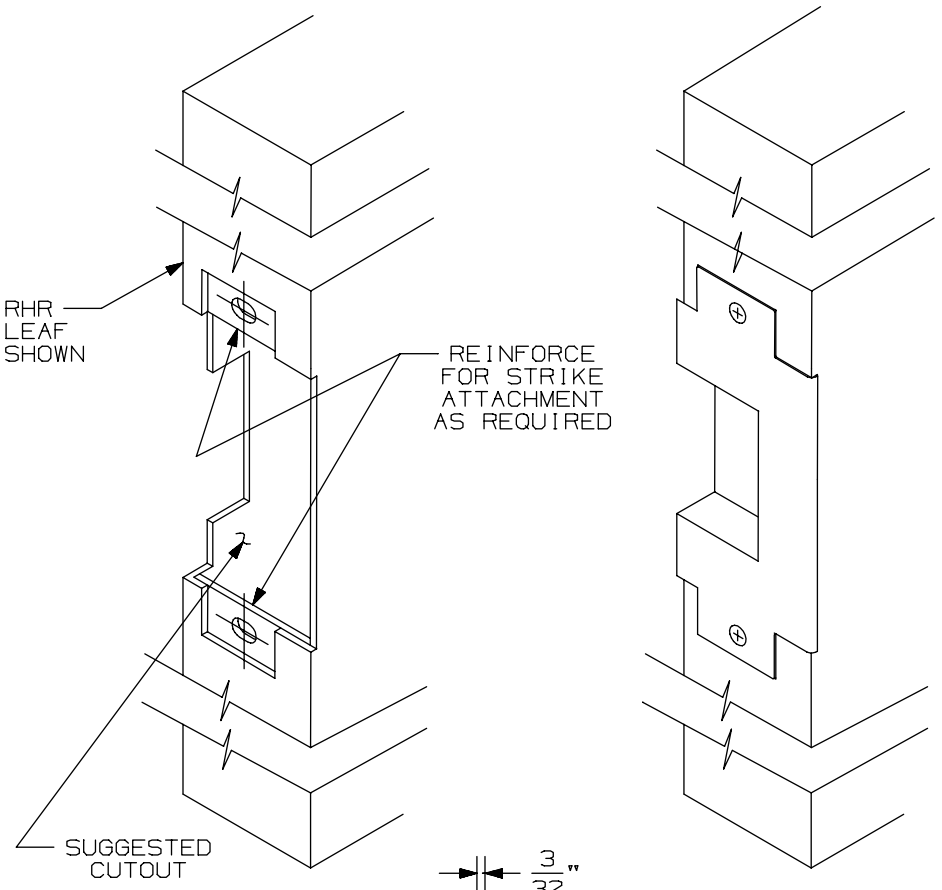

APPLICATION SCHEDULE	
DEVICE	DIM."A"
9875 & 9875-F	11/16
9975 & 9975-F	11/16
8875 & 8875-F	1/2
5575 & 5575-F	1/2

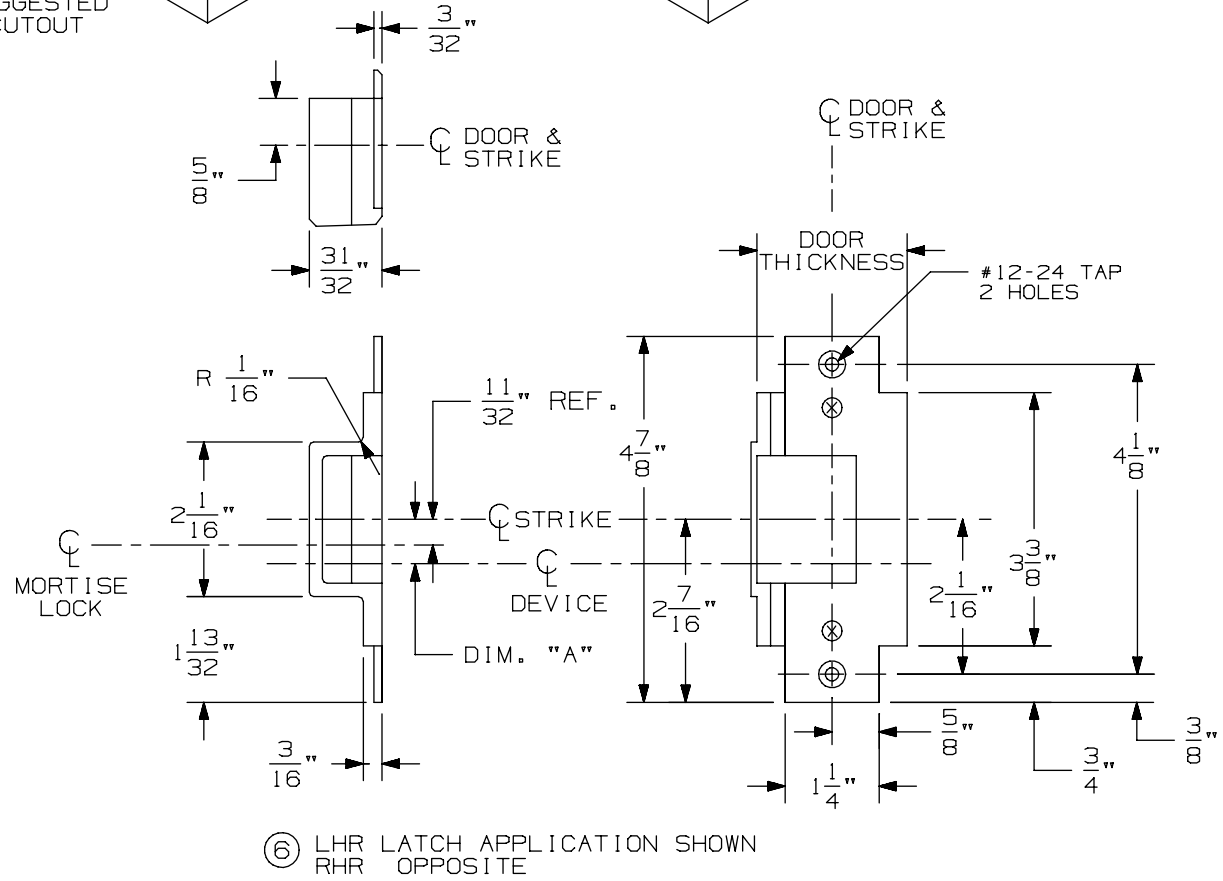

⑥ LHR LATCH APPLICATION SHOWN
RHR OPPOSITE

576A & 576B Mortise Strike for 7500 Mortise Lock

VON DUPRIN®

NOTES: SEE MASTER SHEET #10001 FOR SUGGESTED REINFORCING

TEMPLATE NUMBER: 30211_a

DATE: 05-28-13

98 / 99 Series Exit Devices

-

E9875/E9975 Mortise Electric Locking

9875/9975 & 9875-F/9975-F Series Mortise Lock Devices

NOTES: SEE MASTER SHEET #10001 FOR SUGGESTED REINFORCING

TEMPLATE NUMBER: 10305_a

DATE: 05-21-13

VON DUPRIN®

NOTES:
1. THESE FOUR HOLES TO BE PREPARED FOR SURFACE APPLICATION WHEN USING 696/697 TRIM. DO NOT PREPARE FOR SEX BOLTS.
2. FOR STOCK HOLLOW METAL DOORS SEE TEMPLATE NUMBER 10312 FOR TYPE '86' CUTOUT.
3. GLASS BEAD KIT AVAILABLE WHEN REQUIRED.
4. WIRING TO SS7500 & E7500 LOCKS GO THROUGH DOOR NOT DEVICE.
5. FOR OUTSIDE TRIM PREPARATION, WHEN REQUIRED, SEE TRIM TEMPLATE.
15 6. THE SS7500 LOCK MUST BE USED FOR LX98/9975 SERIES DEVICE APPLICATIONS.

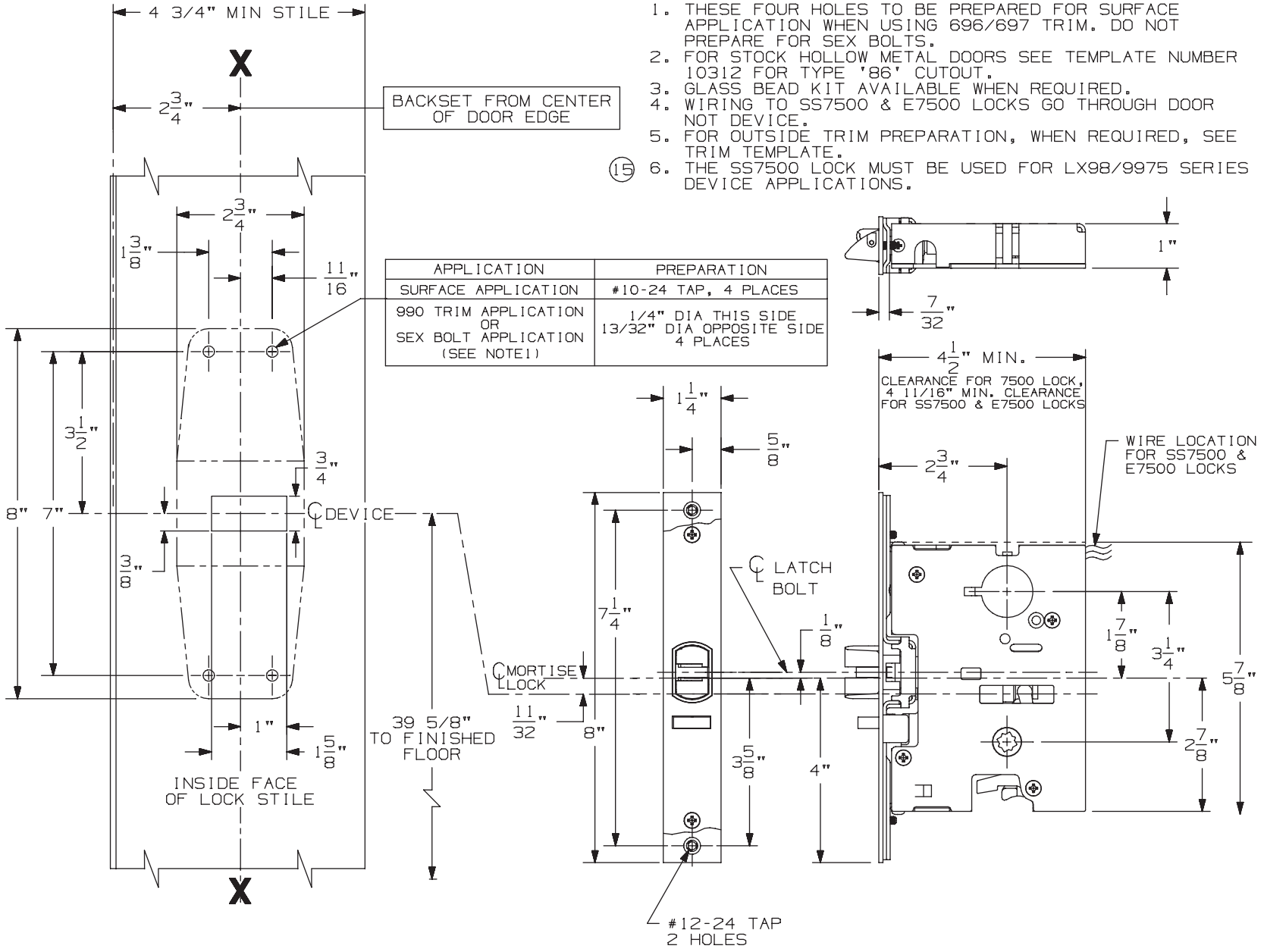

APPLICATION	PREPARATION
SURFACE APPLICATION	#10-24 TAP, 4 PLACES
990 TRIM APPLICATION OR SEX BOLT APPLICATION (SEE NOTE1)	1/4" DIA THIS SIDE 13/32" DIA OPPOSITE SIDE 4 PLACES

LHR APPLICATION SHOWN, RHR APPLICATION OPPOSITE

991 K & 992 L Trim for Mortise Device

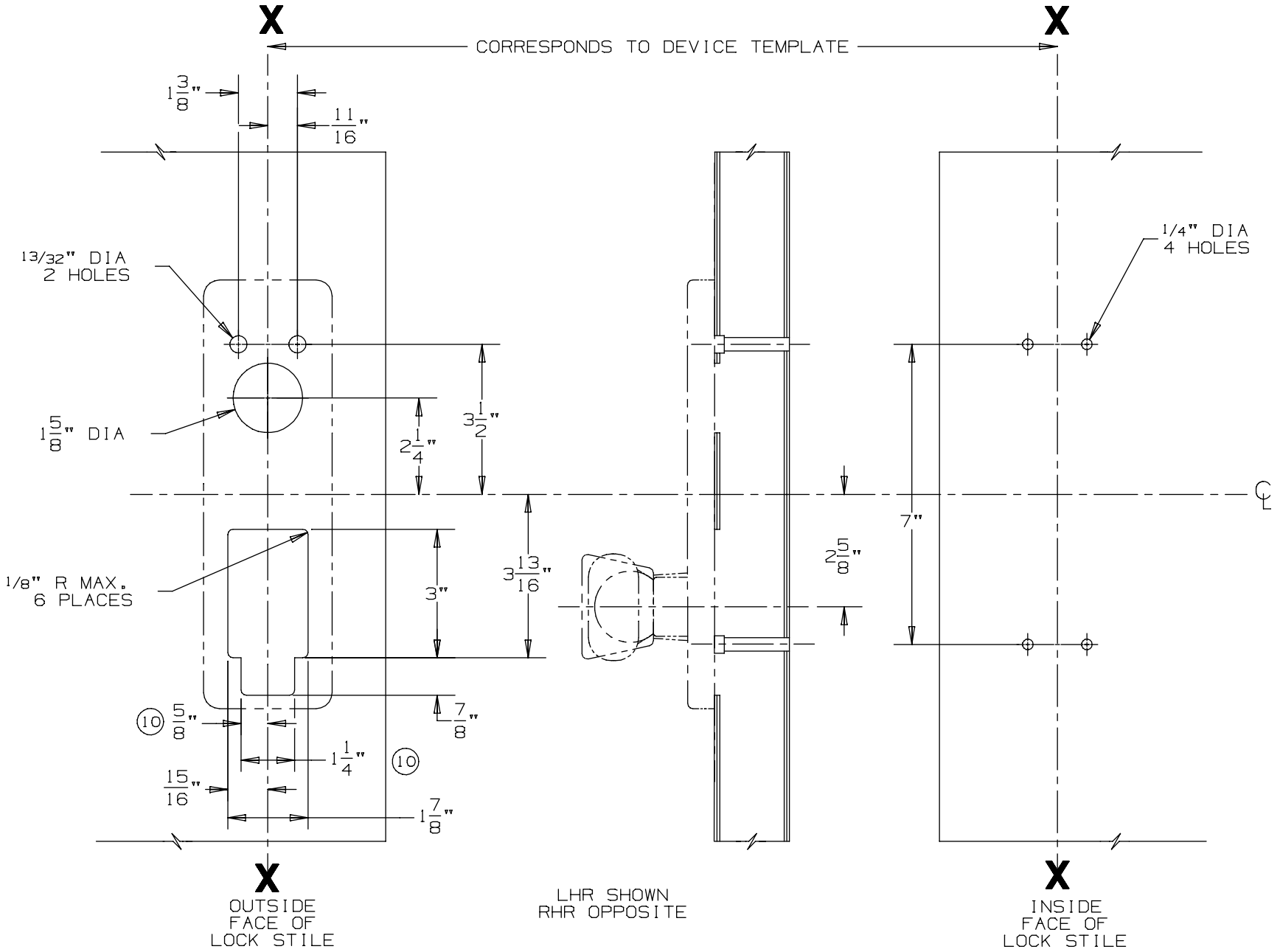

DEVICE APPLICATION SCHEDULE
9875/9975 SERIES DEVICE

NOTES: SEE MASTER SHEET #10001 FOR SUGGESTED REINFORCING

TEMPLATE NUMBER: 20280_a

DATE: 05-23-13

VON DUPRIN®

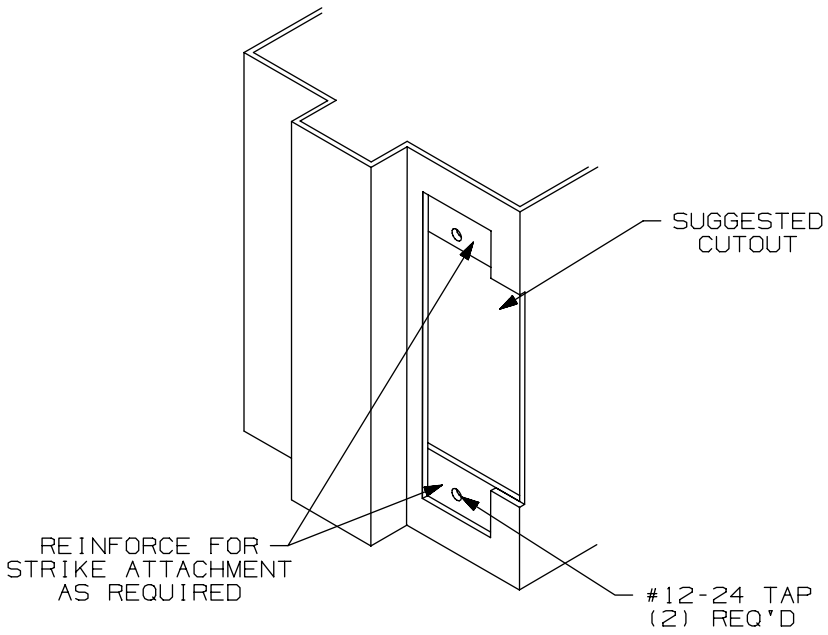

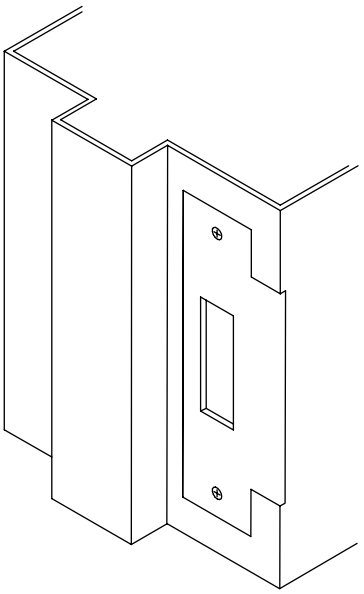

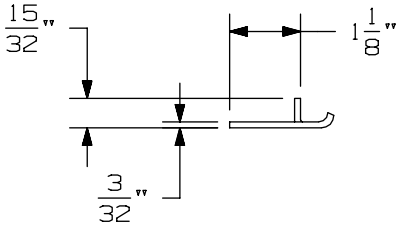

APPLICATION SCHEDULE	
DEVICE	DIM. "A"
9875 & 9875-F	11/16
9975 & 9975-F	11/16
8875 & 8875-F	1/2
5575 & 5575-F	1/2

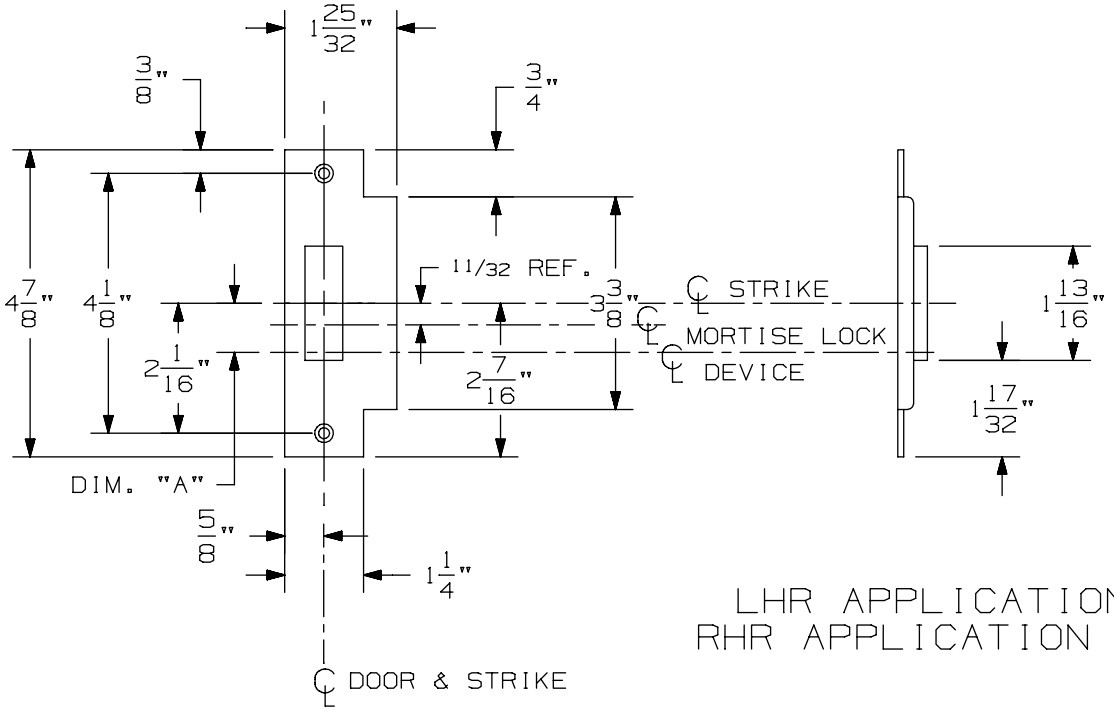

LHR APPLICATION SHOWN
RHR APPLICATION OPPOSITE

575 Mortise Strike (Single Door) for 7500 Mortise Lock

VON DUPRIN®

NOTES: SEE MASTER SHEET #10001 FOR SUGGESTED REINFORCING

TEMPLATE NUMBER: 30210_b

DATE: 07-22-13

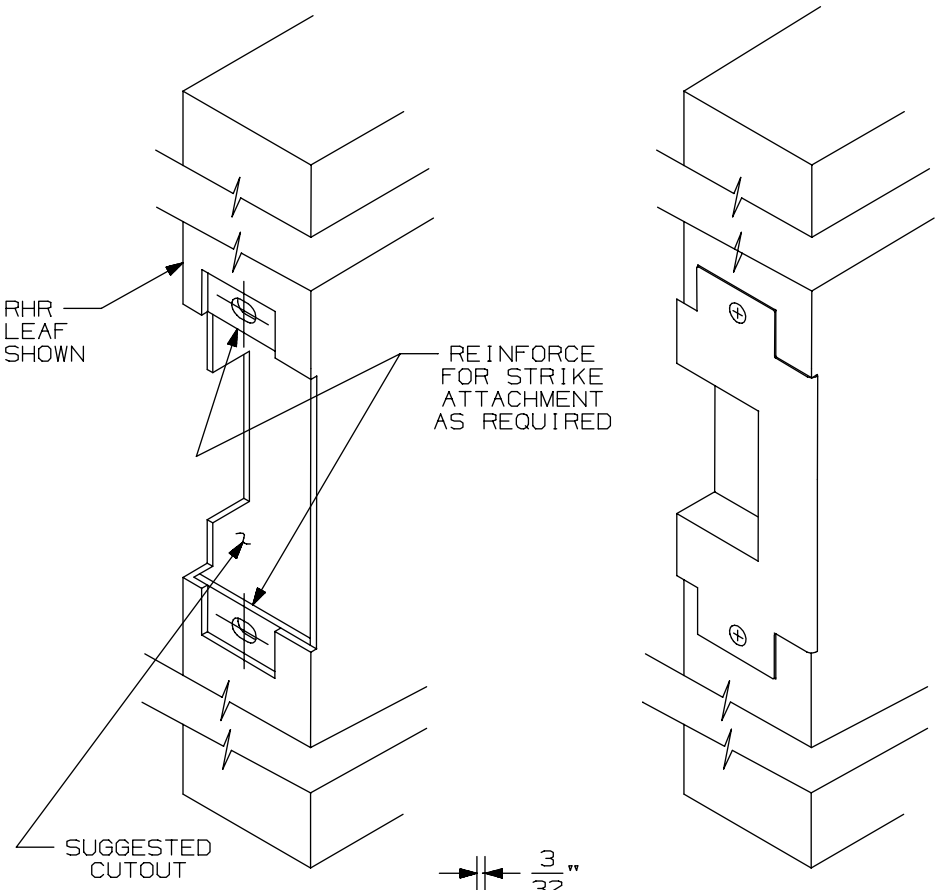

APPLICATION SCHEDULE	
DEVICE	DIM."A"
9875 & 9875-F	11/16
9975 & 9975-F	11/16
8875 & 8875-F	1/2
5575 & 5575-F	1/2

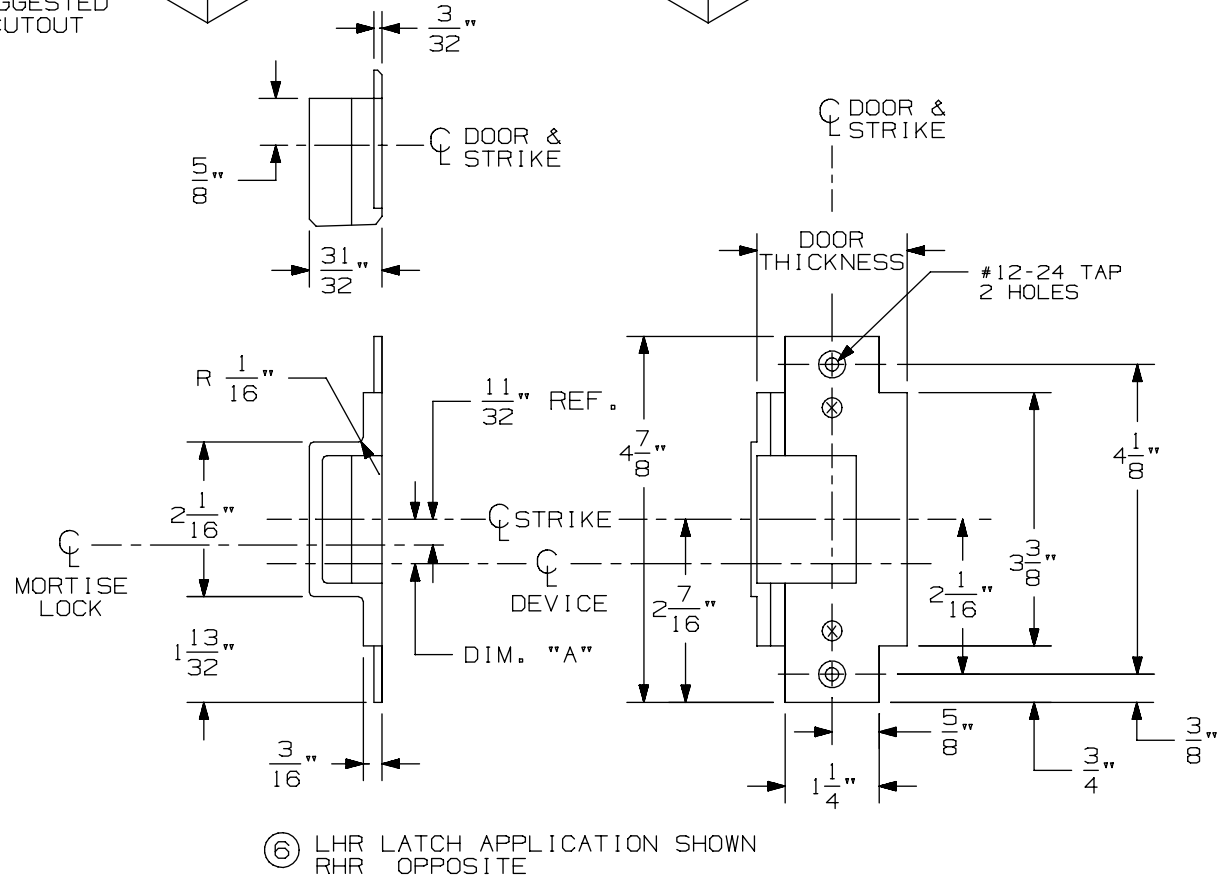

⑥ LHR LATCH APPLICATION SHOWN
RHR OPPOSITE

576A & 576B Mortise Strike for 7500 Mortise Lock

VON DUPRIN®

NOTES: SEE MASTER SHEET #10001 FOR SUGGESTED REINFORCING

TEMPLATE NUMBER: 30211_a

DATE: 05-28-13

9875/9975 & 9875-F/9975-F Series Mortise Lock Devices

NOTES: SEE MASTER SHEET #10001 FOR SUGGESTED REINFORCING

TEMPLATE NUMBER: 10305_a

DATE: 05-21-13

VON DUPRIN®

NOTES:
1. THESE FOUR HOLES TO BE PREPARED FOR SURFACE APPLICATION WHEN USING 696/697 TRIM. DO NOT PREPARE FOR SEX BOLTS.
2. FOR STOCK HOLLOW METAL DOORS SEE TEMPLATE NUMBER 10312 FOR TYPE '86' CUTOUT.
3. GLASS BEAD KIT AVAILABLE WHEN REQUIRED.
4. WIRING TO SS7500 & E7500 LOCKS GO THROUGH DOOR NOT DEVICE.
5. FOR OUTSIDE TRIM PREPARATION, WHEN REQUIRED, SEE TRIM TEMPLATE.
(15) 6. THE SS7500 LOCK MUST BE USED FOR LX98/9975 SERIES DEVICE APPLICATIONS.

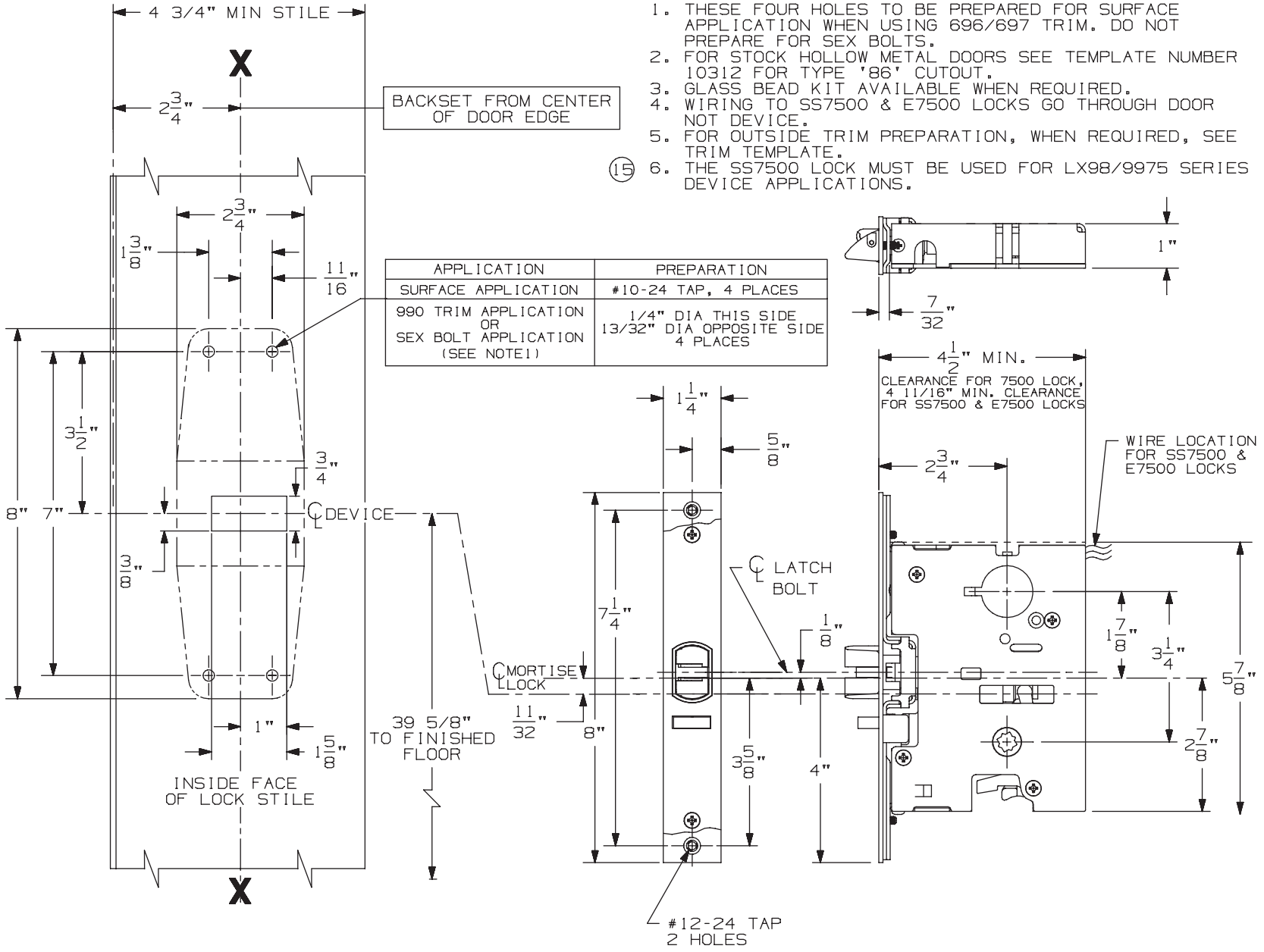

APPLICATION	PREPARATION
SURFACE APPLICATION	#10-24 TAP, 4 PLACES
990 TRIM APPLICATION OR SEX BOLT APPLICATION (SEE NOTE1)	1/4" DIA THIS SIDE 13/32" DIA OPPOSITE SIDE 4 PLACES

LHR APPLICATION SHOWN, RHR APPLICATION OPPOSITE

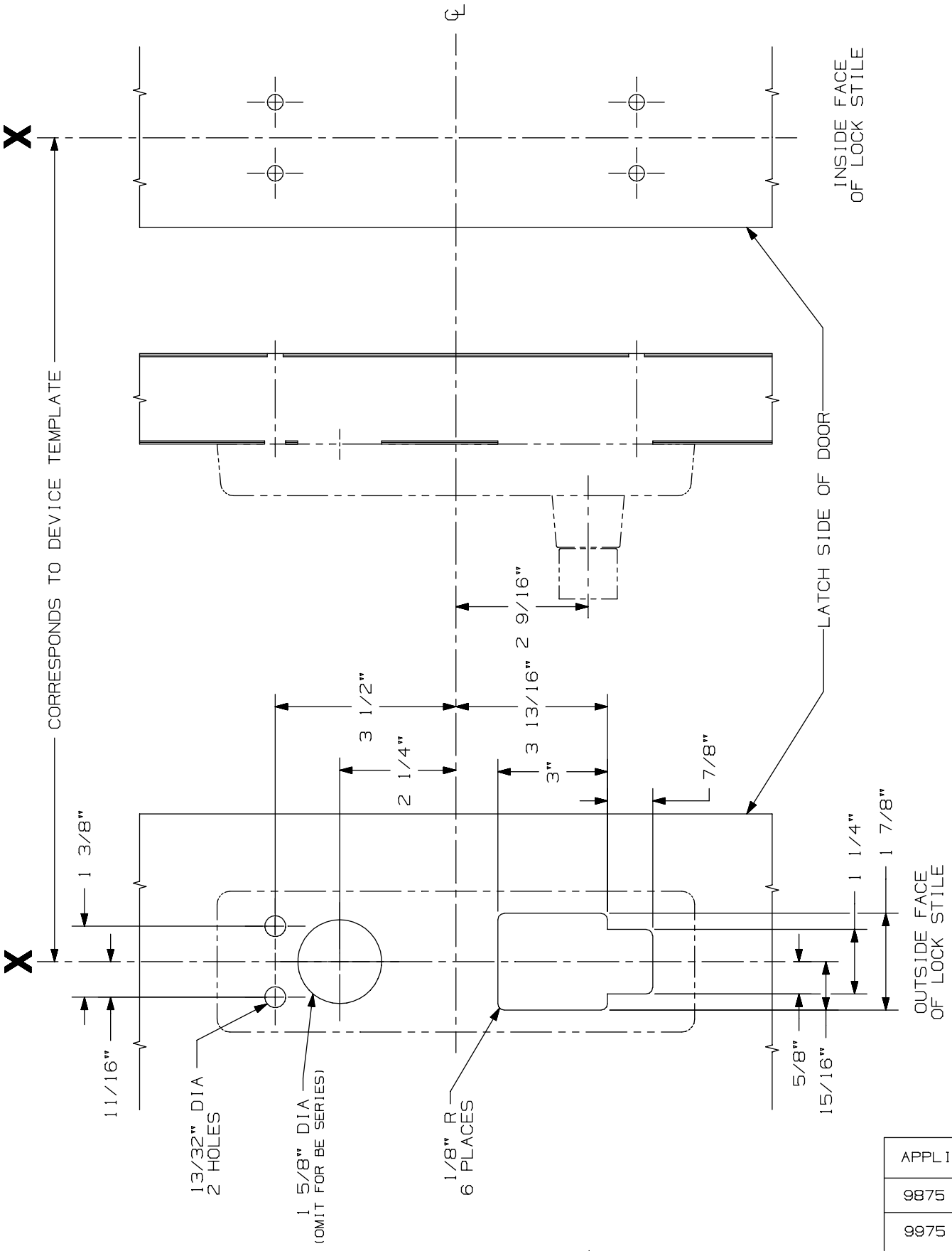

APPLICATIONS
9875 SERIES
9975 SERIES

996L, E996L, 996L-BE, & E996L-BE
Mortise Series
Trim Metal Door Application

VON DUPRIN®

NOTES: See Master Sheet #10001 For Suggested Reinforcing

TEMPLATE NUMBER: 20006_b

DATE: 10-30-14

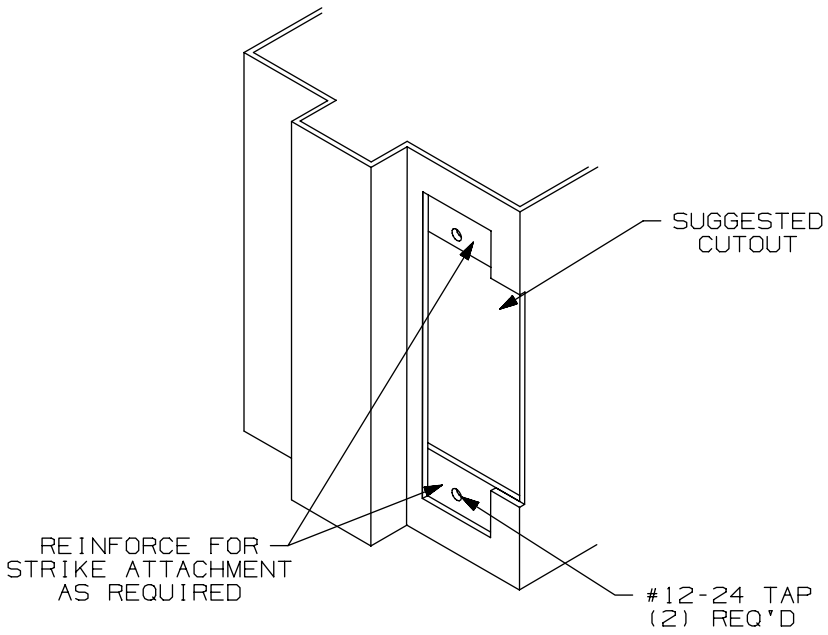

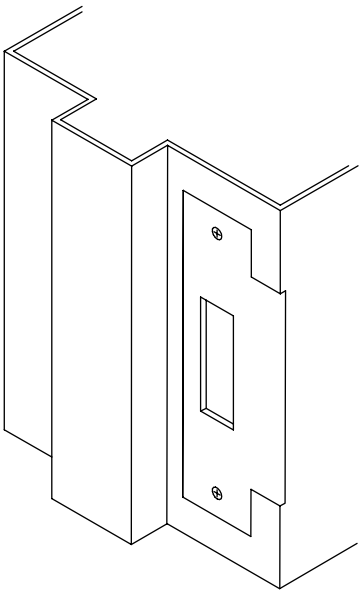

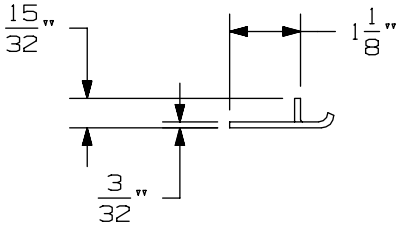

APPLICATION SCHEDULE	
DEVICE	DIM. "A"
9875 & 9875-F	11/16
9975 & 9975-F	11/16
8875 & 8875-F	1/2
5575 & 5575-F	1/2

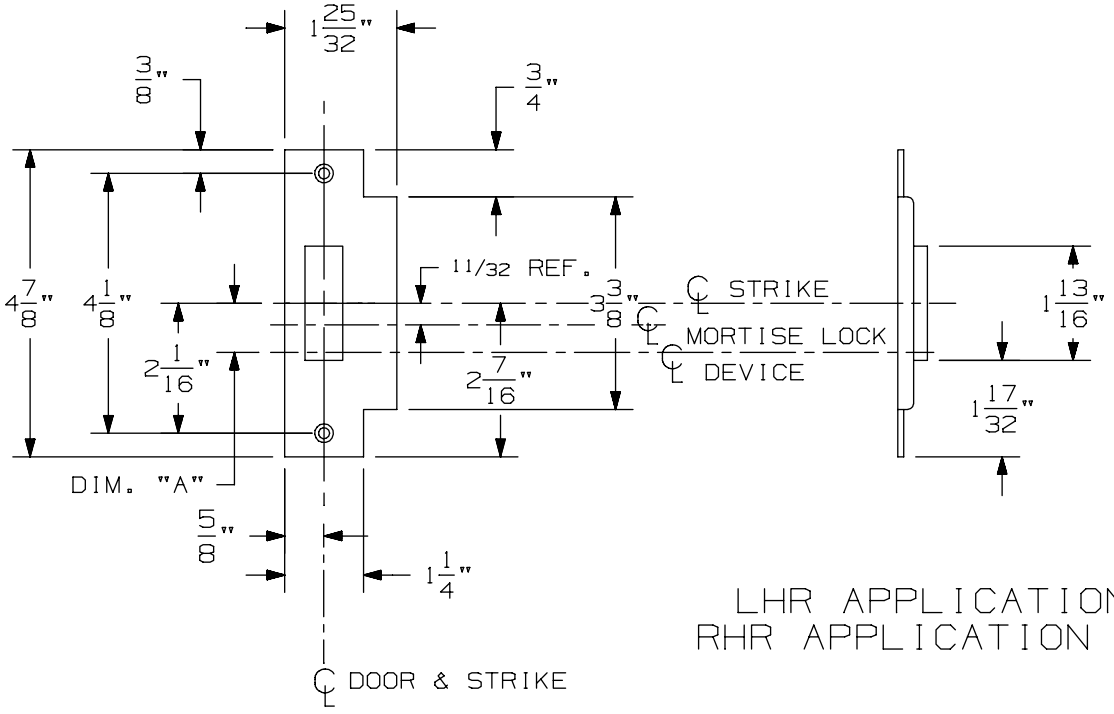

LHR APPLICATION SHOWN
RHR APPLICATION OPPOSITE

575 Mortise Strike (Single Door) for 7500 Mortise Lock

VON DUPRIN®

NOTES: SEE MASTER SHEET #10001 FOR SUGGESTED REINFORCING

TEMPLATE NUMBER: 30210_b

DATE: 07-22-13

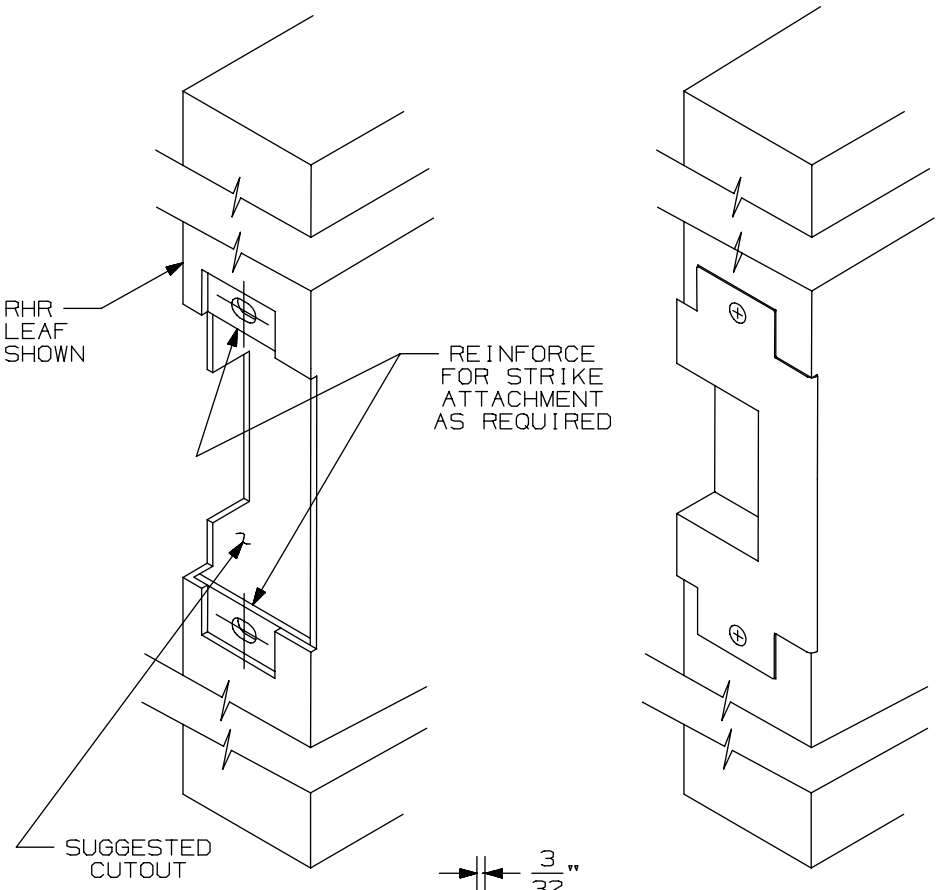

APPLICATION SCHEDULE	
DEVICE	DIM."A"
9875 & 9875-F	11/16
9975 & 9975-F	11/16
8875 & 8875-F	1/2
5575 & 5575-F	1/2

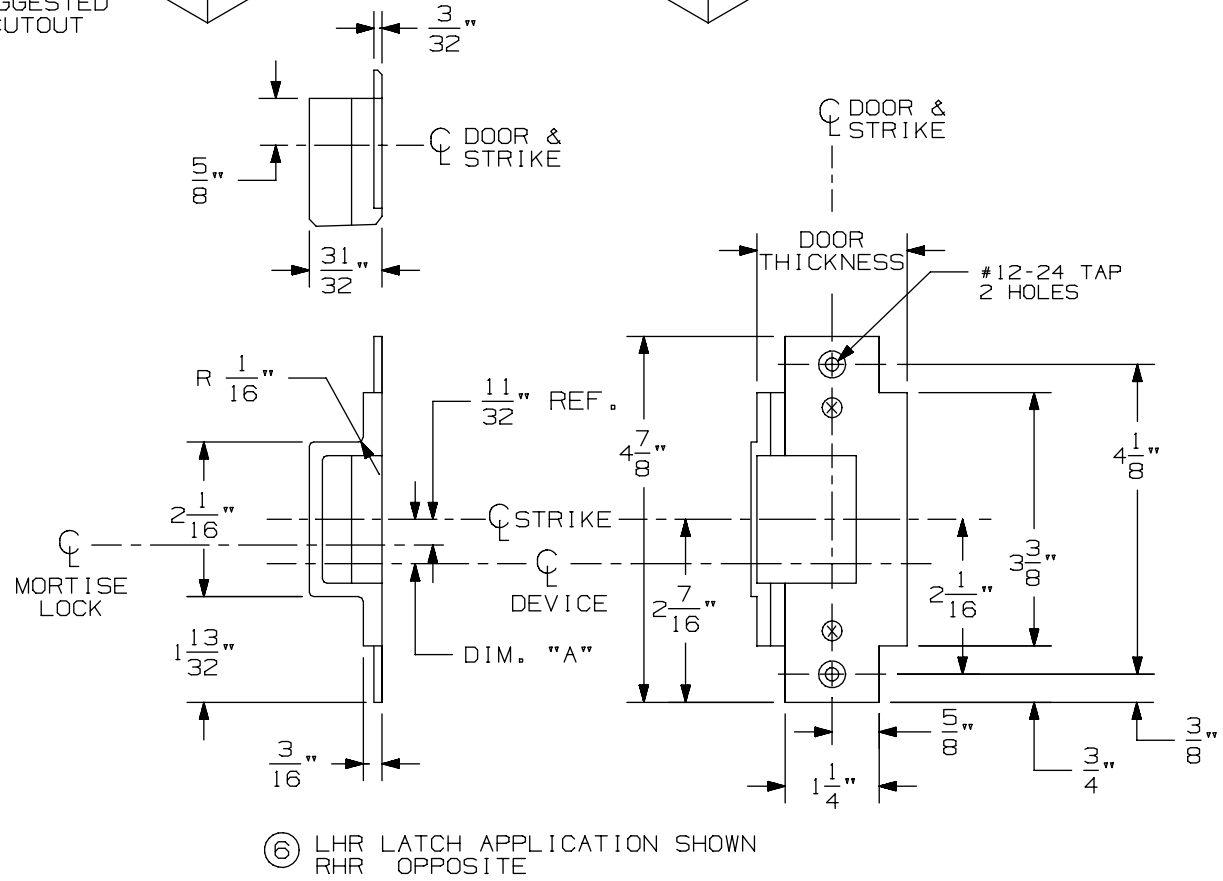

⑥ LHR LATCH APPLICATION SHOWN
RHR OPPOSITE

576A & 576B Mortise Strike for 7500 Mortise Lock

VON DUPRIN®

NOTES: SEE MASTER SHEET #10001 FOR SUGGESTED REINFORCING

TEMPLATE NUMBER: 30211_a

DATE: 05-28-13

9875/9975 & 9875-F/9975-F Series Mortise Lock Devices

NOTES: SEE MASTER SHEET #10001 FOR SUGGESTED REINFORCING

TEMPLATE NUMBER: 10305_a

DATE: 05-21-13

VON DUPRIN®

NOTES:
1. THESE FOUR HOLES TO BE PREPARED FOR SURFACE APPLICATION WHEN USING 696/697 TRIM. DO NOT PREPARE FOR SEX BOLTS.
2. FOR STOCK HOLLOW METAL DOORS SEE TEMPLATE NUMBER 10312 FOR TYPE '86' CUTOUT.
3. GLASS BEAD KIT AVAILABLE WHEN REQUIRED.
4. WIRING TO SS7500 & E7500 LOCKS GO THROUGH DOOR NOT DEVICE.
5. FOR OUTSIDE TRIM PREPARATION, WHEN REQUIRED, SEE TRIM TEMPLATE.
15 6. THE SS7500 LOCK MUST BE USED FOR LX98/9975 SERIES DEVICE APPLICATIONS.

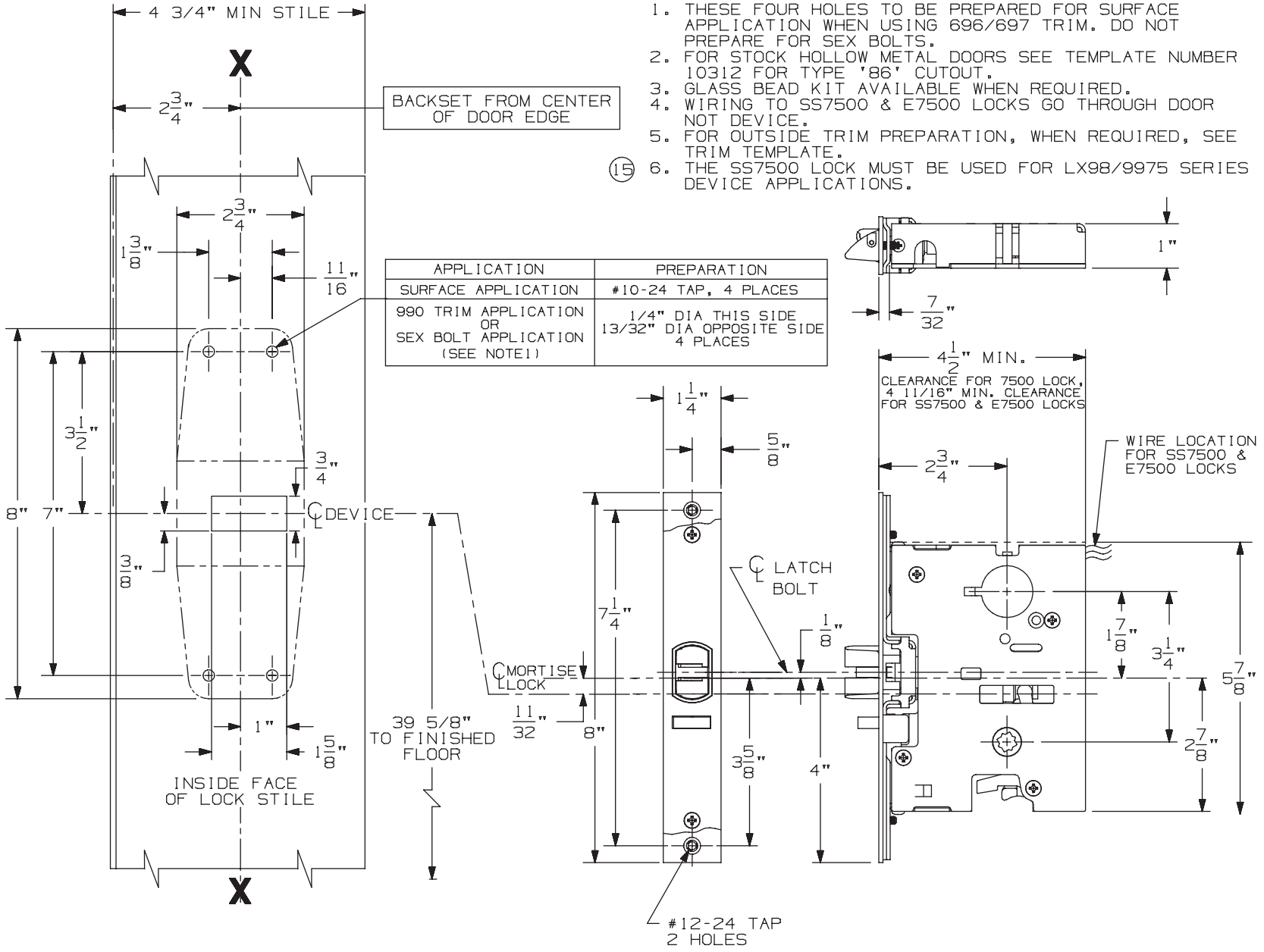

APPLICATION	PREPARATION
SURFACE APPLICATION	#10-24 TAP, 4 PLACES
990 TRIM APPLICATION OR SEX BOLT APPLICATION (SEE NOTE1)	1/4" DIA THIS SIDE 13/32" DIA OPPOSITE SIDE 4 PLACES

LHR APPLICATION SHOWN, RHR APPLICATION OPPOSITE

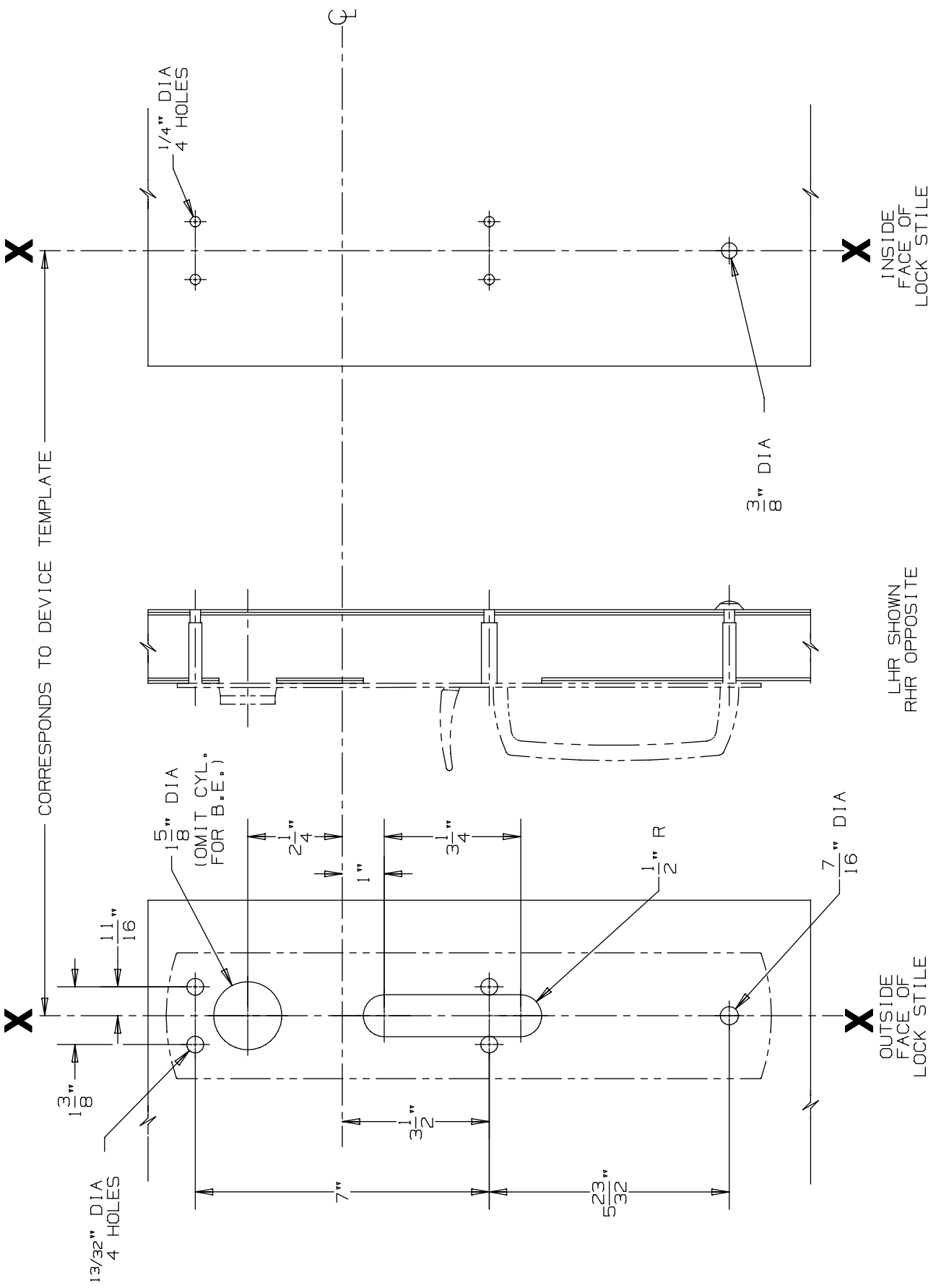

DEVICE APPLICATION SCHEDULE
9875/9975 SERIES DEVICE

990 TP & 990 TP-BE Trim

VON DUPRIN®

NOTES: SEE MASTER SHEET #10001 FOR SUGGESTED REINFORCING

TEMPLATE NUMBER: 20270_a

DATE: 05-23-13

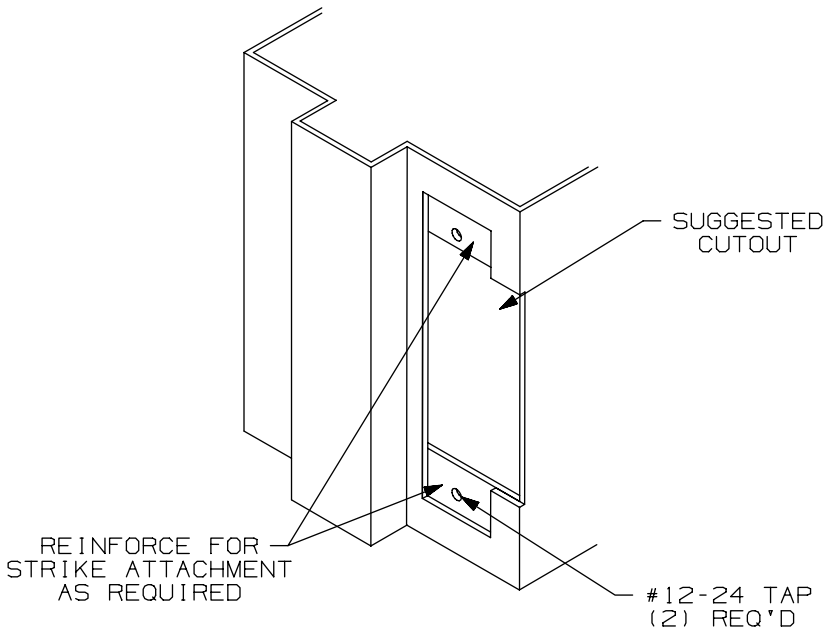

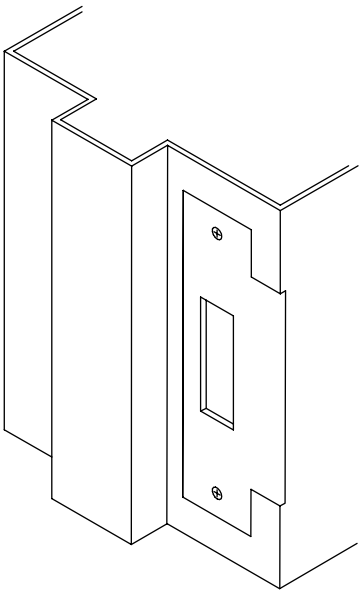

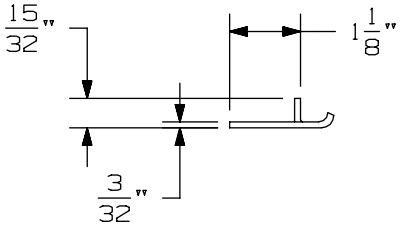

APPLICATION SCHEDULE	
DEVICE	DIM. "A"
9875 & 9875-F	11/16
9975 & 9975-F	11/16
8875 & 8875-F	1/2
5575 & 5575-F	1/2

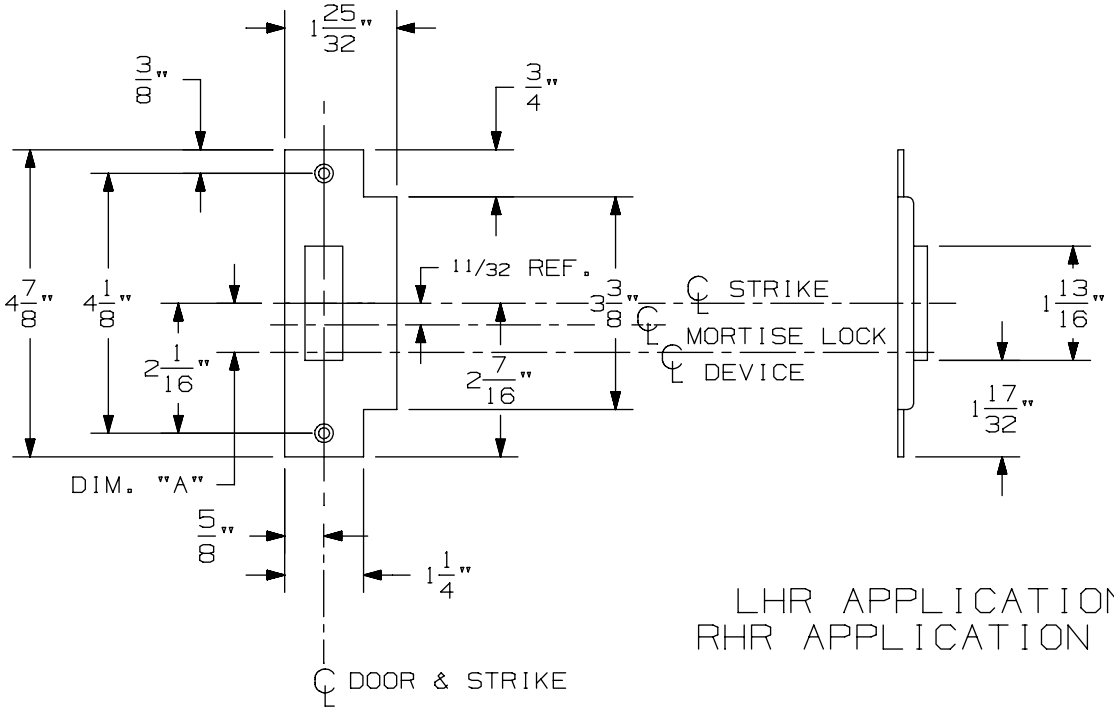

LHR APPLICATION SHOWN
RHR APPLICATION OPPOSITE

575 Mortise Strike (Single Door) for 7500 Mortise Lock

VON DUPRIN®

NOTES: SEE MASTER SHEET #10001 FOR SUGGESTED REINFORCING

TEMPLATE NUMBER: 30210_b

DATE: 07-22-13

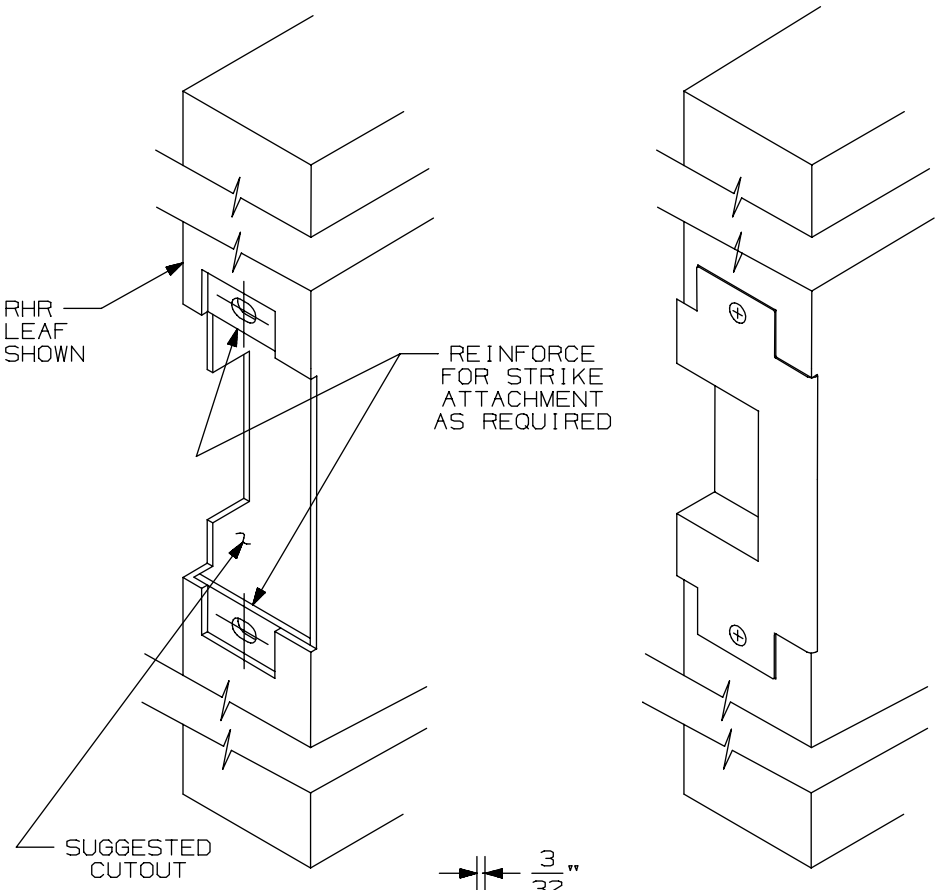

APPLICATION SCHEDULE	
DEVICE	DIM."A"
9875 & 9875-F	11/16
9975 & 9975-F	11/16
8875 & 8875-F	1/2
5575 & 5575-F	1/2

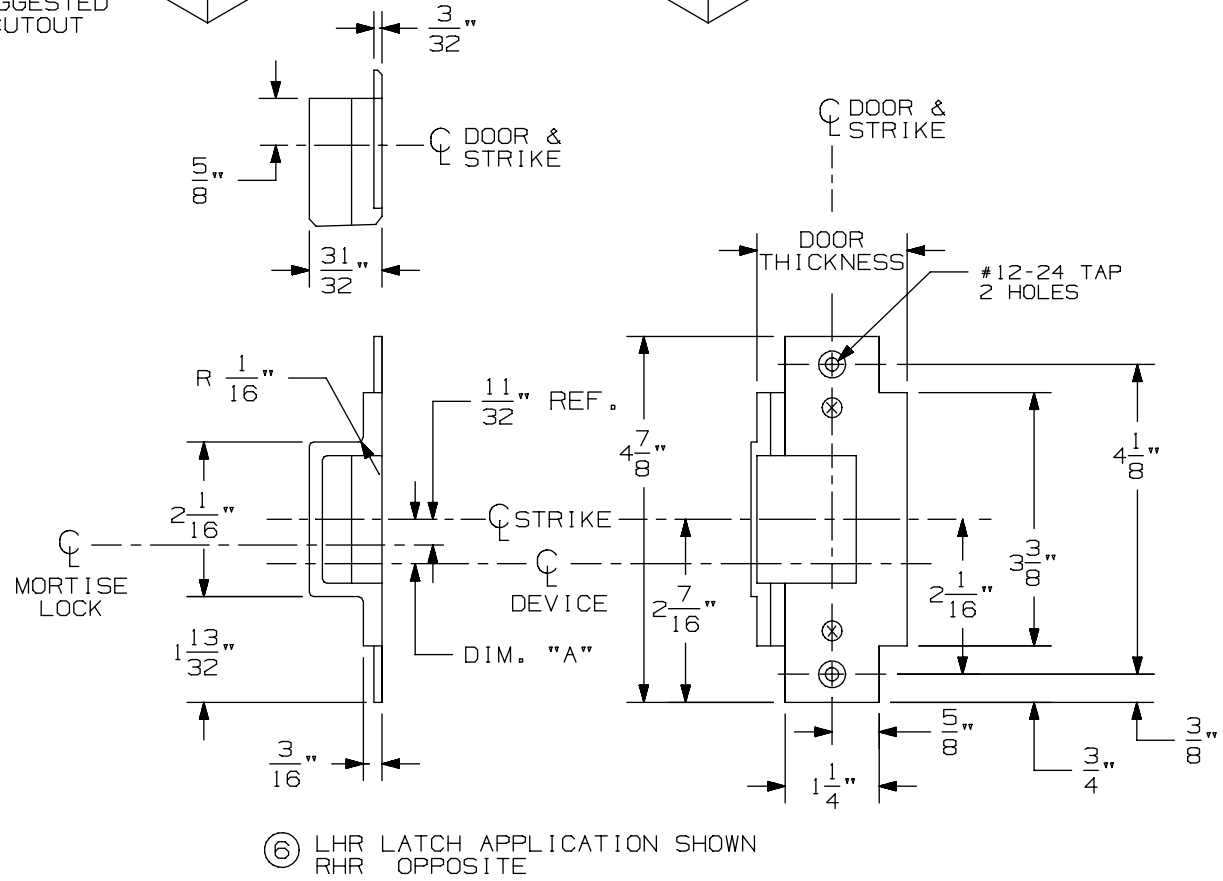

⑥ LHR LATCH APPLICATION SHOWN
RHR OPPOSITE

576A & 576B Mortise Strike for 7500 Mortise Lock

VON DUPRIN®

NOTES: SEE MASTER SHEET #10001 FOR SUGGESTED REINFORCING

TEMPLATE NUMBER: 30211_a

DATE: 05-28-13

98 / 99 Series Exit Devices

-

9875-F/9975-F Mortise Fire (Standard, EL, LX, RX & SS)

9875/9975 & 9875-F/9975-F Series Mortise Lock Devices

NOTES: SEE MASTER SHEET #10001 FOR SUGGESTED REINFORCING

TEMPLATE NUMBER: 10305_a

DATE: 05-21-13

VON DUPRIN®

NOTES:
1. THESE FOUR HOLES TO BE PREPARED FOR SURFACE APPLICATION WHEN USING 696/697 TRIM. DO NOT PREPARE FOR SEX BOLTS.
2. FOR STOCK HOLLOW METAL DOORS SEE TEMPLATE NUMBER 10312 FOR TYPE '86' CUTOUT.
3. GLASS BEAD KIT AVAILABLE WHEN REQUIRED.
4. WIRING TO SS7500 & E7500 LOCKS GO THROUGH DOOR NOT DEVICE.
5. FOR OUTSIDE TRIM PREPARATION, WHEN REQUIRED, SEE TRIM TEMPLATE.
15 6. THE SS7500 LOCK MUST BE USED FOR LX98/9975 SERIES DEVICE APPLICATIONS.

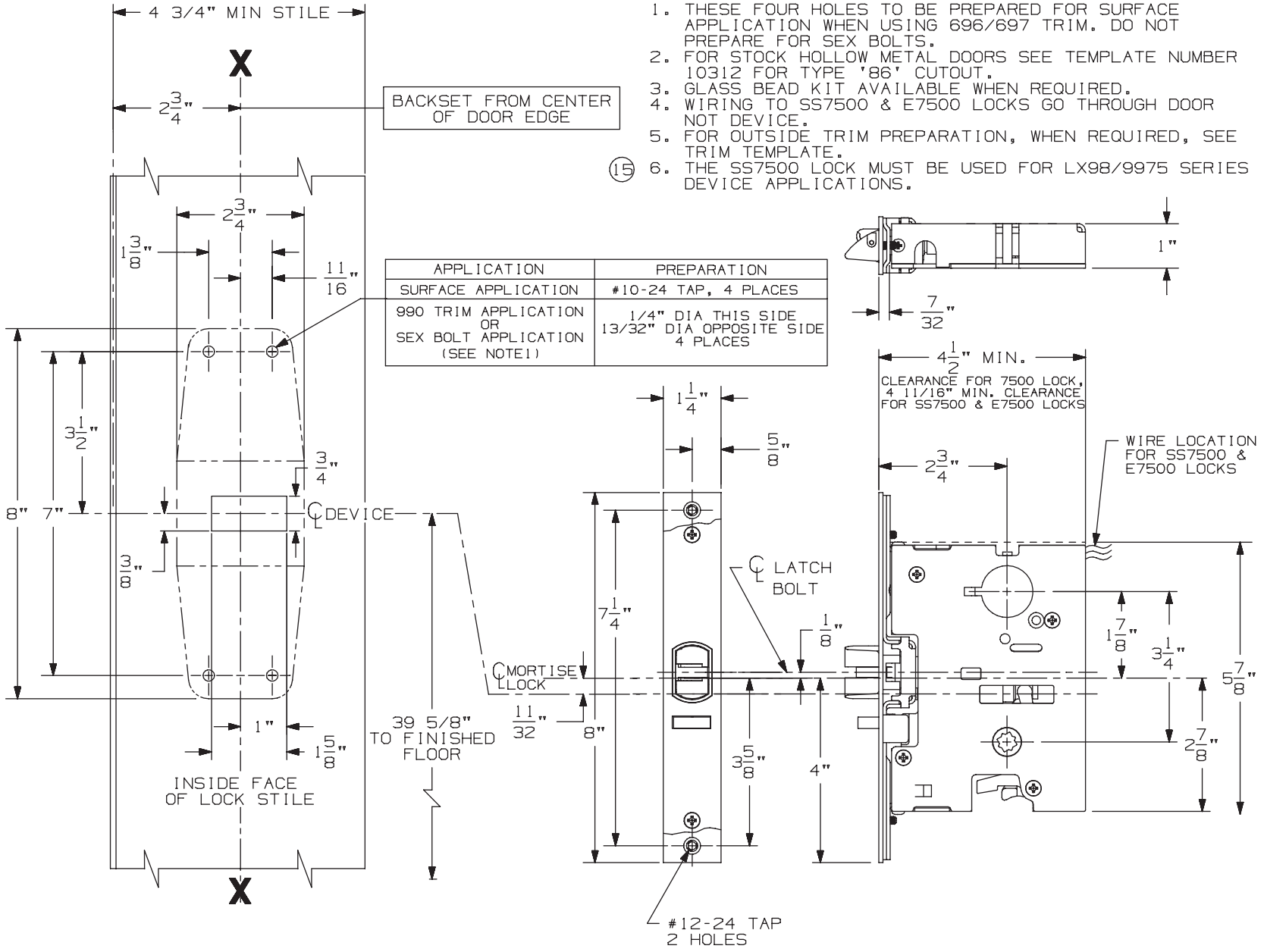

APPLICATION	PREPARATION
SURFACE APPLICATION	#10-24 TAP, 4 PLACES
990 TRIM APPLICATION OR SEX BOLT APPLICATION (SEE NOTE1)	1/4" DIA THIS SIDE 13/32" DIA OPPOSITE SIDE 4 PLACES

LHR APPLICATION SHOWN, RHR APPLICATION OPPOSITE

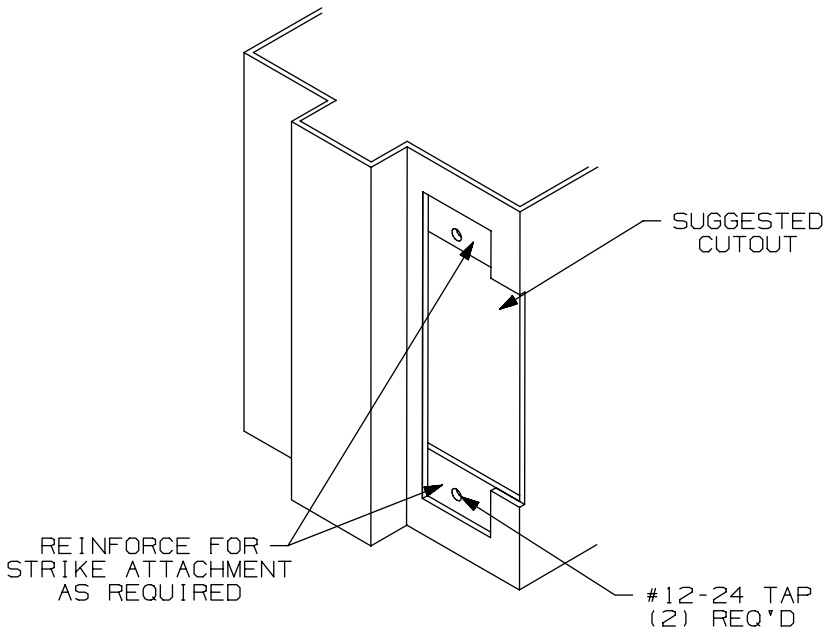

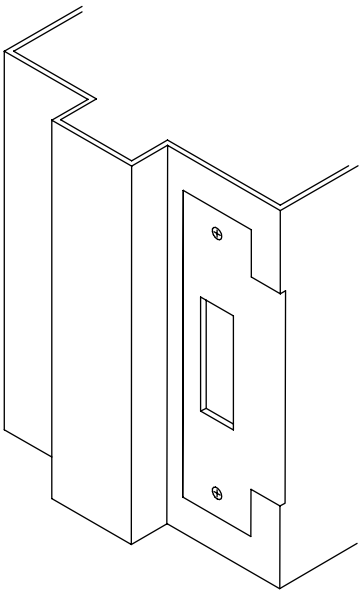

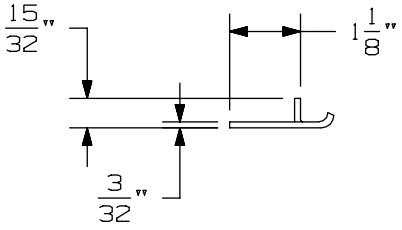

APPLICATION SCHEDULE	
DEVICE	DIM. "A"
9875 & 9875-F	11/16
9975 & 9975-F	11/16
8875 & 8875-F	1/2
5575 & 5575-F	1/2

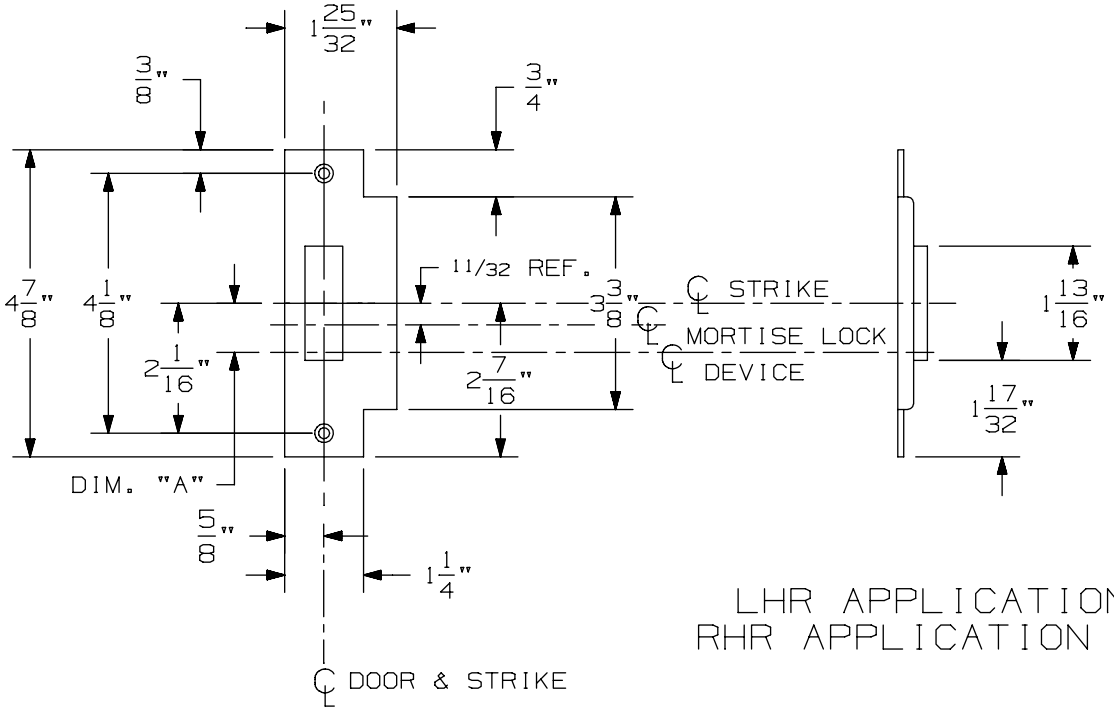

LHR APPLICATION SHOWN
RHR APPLICATION OPPOSITE

575 Mortise Strike (Single Door) for 7500 Mortise Lock

VON DUPRIN®

NOTES: SEE MASTER SHEET #10001 FOR SUGGESTED REINFORCING

TEMPLATE NUMBER: 30210_b

DATE: 07-22-13

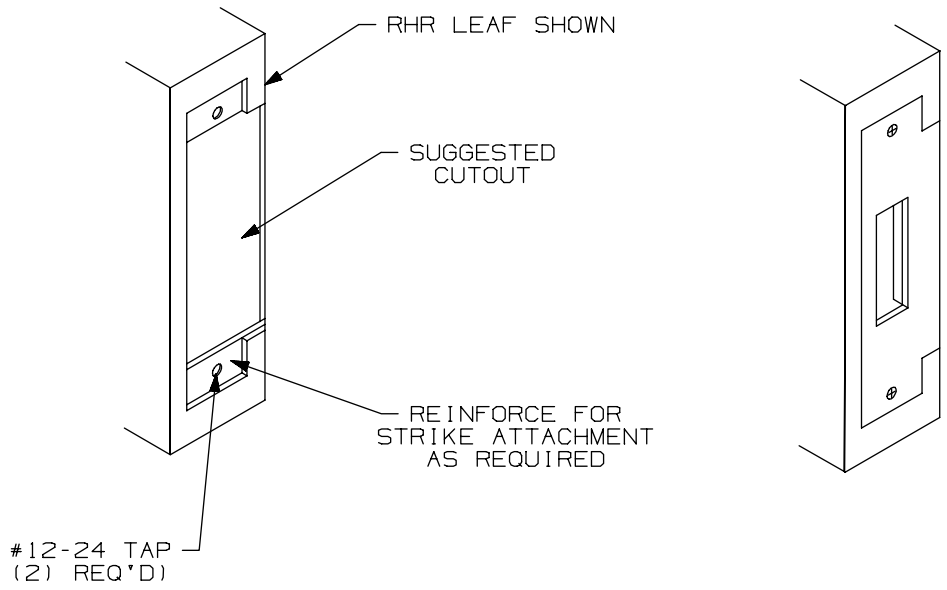

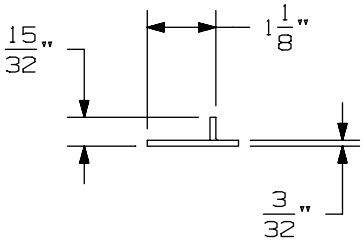

APPLICATION SCHEDULE	
DEVICE	DIM. "A"
9875 & 9875-F	11/16
9975 & 9975-F	11/16
8875 & 8875-F	1/2
5575 & 5575-F	1/2

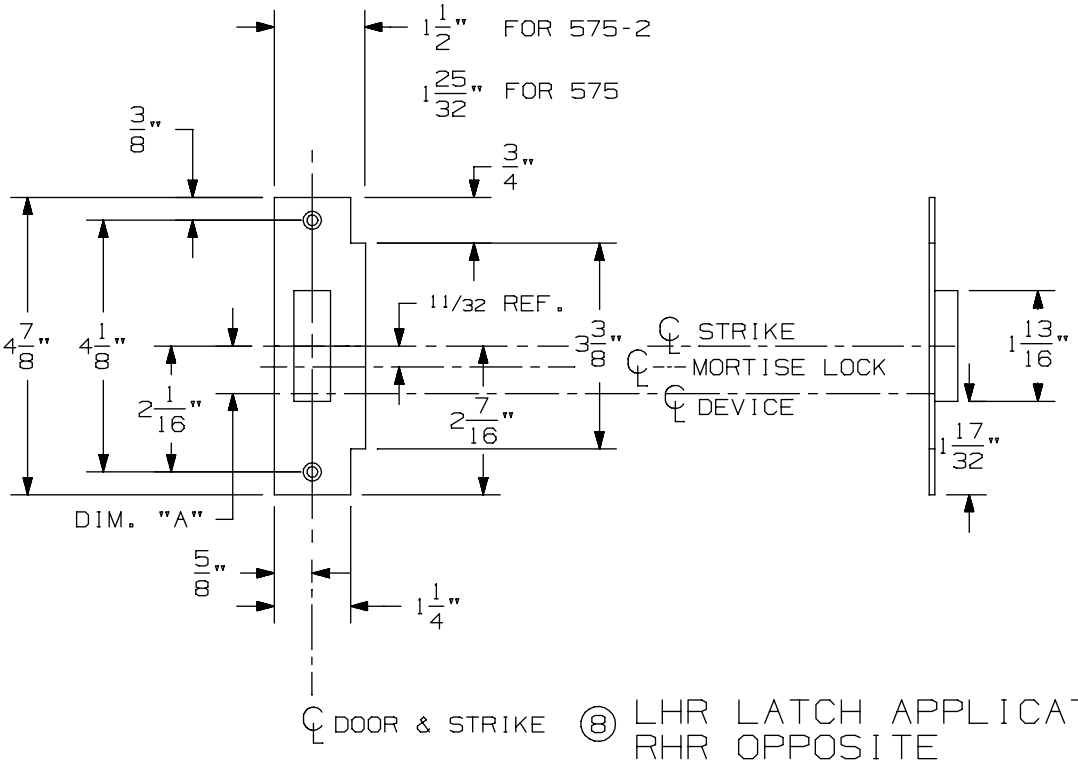

⑧ LHR LATCH APPLICATION SHOWN
RHR OPPOSITE

575-2 Mortise Strike (Double Doors) for 7500 Mortise Lock

VON DUPRIN®

NOTES: SEE MASTER SHEET #10001 FOR SUGGESTED REINFORCING

TEMPLATE NUMBER: 30212_b

DATE: 07-22-13

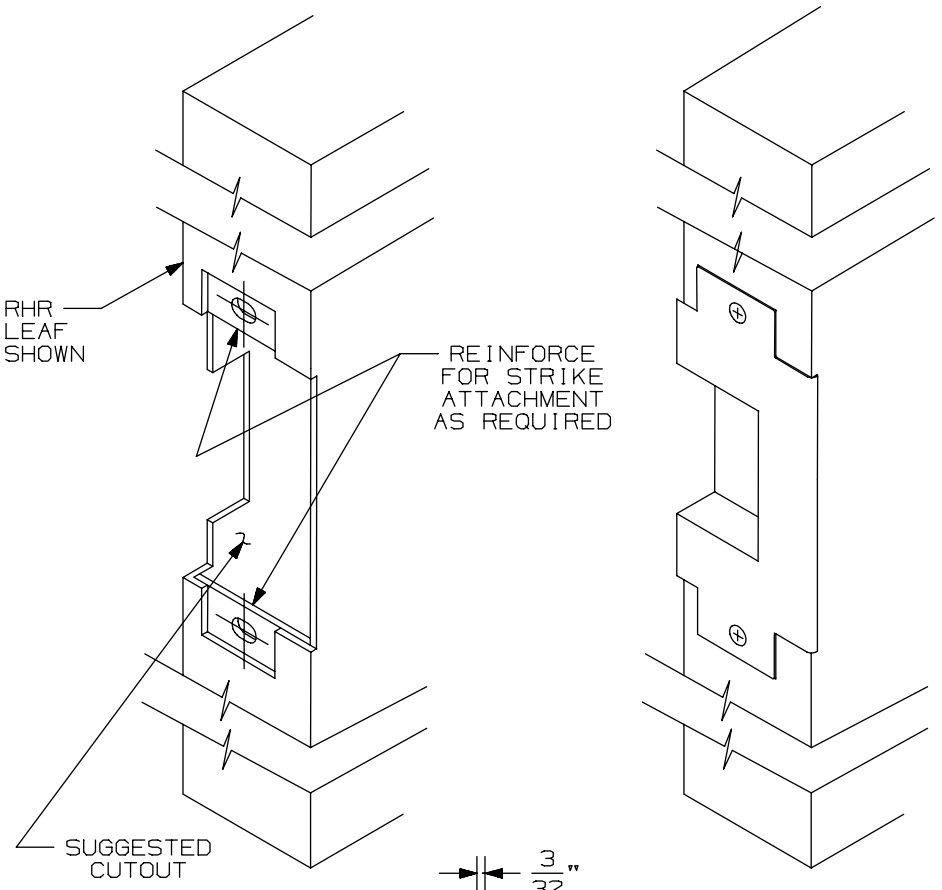

APPLICATION SCHEDULE	
DEVICE	DIM."A"
9875 & 9875-F	11/16
9975 & 9975-F	11/16
8875 & 8875-F	1/2
5575 & 5575-F	1/2

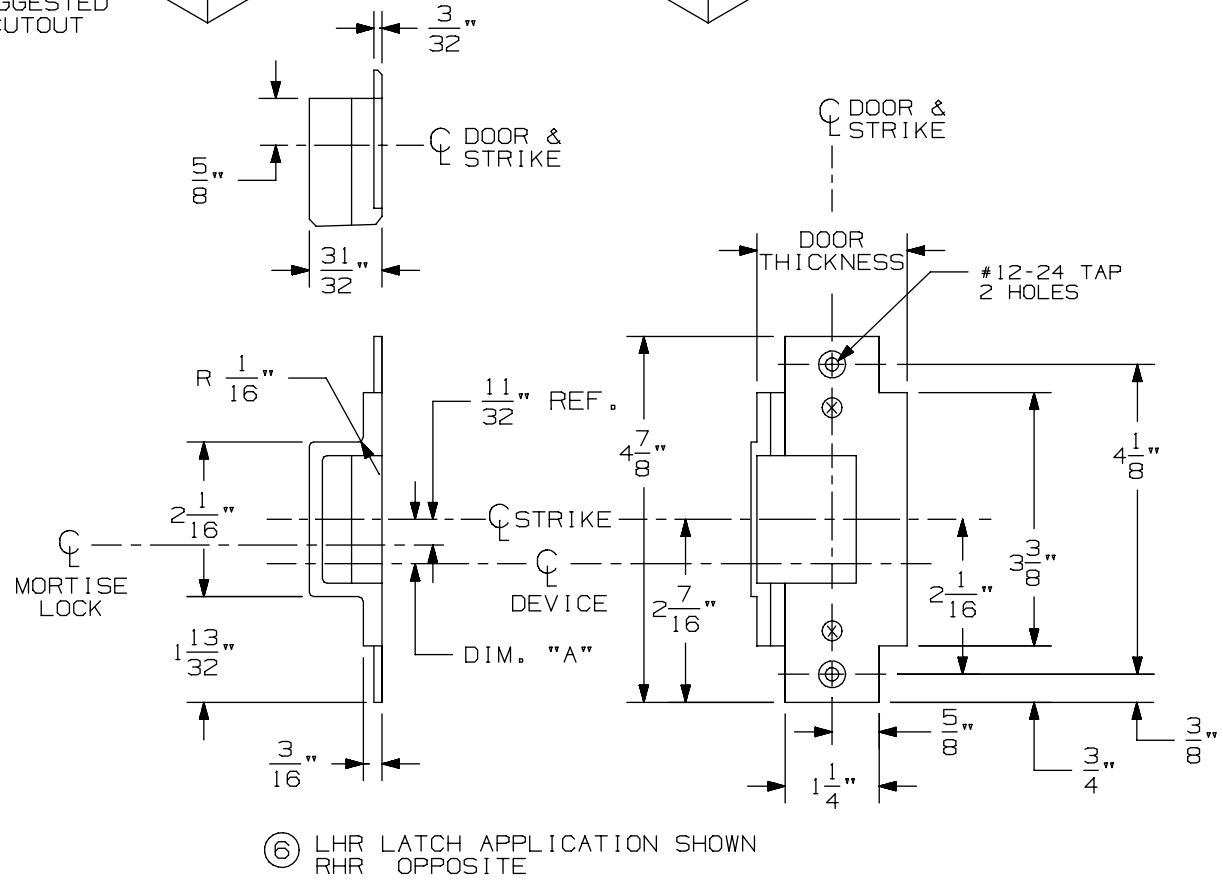

⑥ LHR LATCH APPLICATION SHOWN
RHR OPPOSITE

576A & 576B Mortise Strike for 7500 Mortise Lock

VON DUPRIN®

NOTES: SEE MASTER SHEET #10001 FOR SUGGESTED REINFORCING

TEMPLATE NUMBER: 30211_a

DATE: 05-28-13

9875/9975 & 9875-F/9975-F Series Mortise Lock Devices

NOTES: SEE MASTER SHEET #10001 FOR SUGGESTED REINFORCING

TEMPLATE NUMBER: 10305_a

DATE: 05-21-13

VON DUPRIN®

NOTES:
1. THESE FOUR HOLES TO BE PREPARED FOR SURFACE APPLICATION WHEN USING 696/697 TRIM. DO NOT PREPARE FOR SEX BOLTS.
2. FOR STOCK HOLLOW METAL DOORS SEE TEMPLATE NUMBER 10312 FOR TYPE '86' CUTOUT.
3. GLASS BEAD KIT AVAILABLE WHEN REQUIRED.
4. WIRING TO SS7500 & E7500 LOCKS GO THROUGH DOOR NOT DEVICE.
5. FOR OUTSIDE TRIM PREPARATION, WHEN REQUIRED, SEE TRIM TEMPLATE.
15 6. THE SS7500 LOCK MUST BE USED FOR LX98/9975 SERIES DEVICE APPLICATIONS.

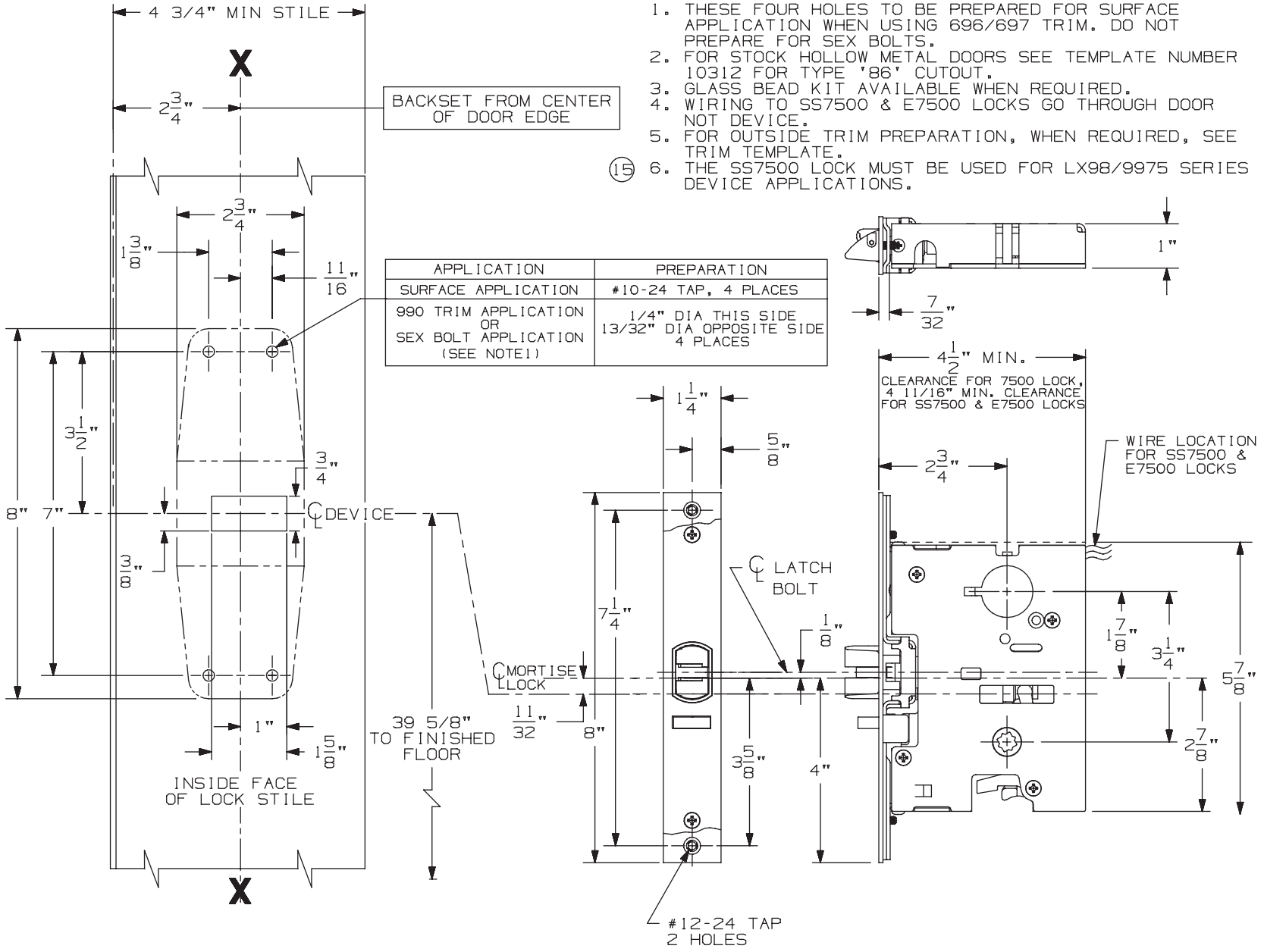

APPLICATION	PREPARATION
SURFACE APPLICATION	#10-24 TAP, 4 PLACES
990 TRIM APPLICATION OR SEX BOLT APPLICATION (SEE NOTE1)	1/4" DIA THIS SIDE 13/32" DIA OPPOSITE SIDE 4 PLACES

LHR APPLICATION SHOWN, RHR APPLICATION OPPOSITE

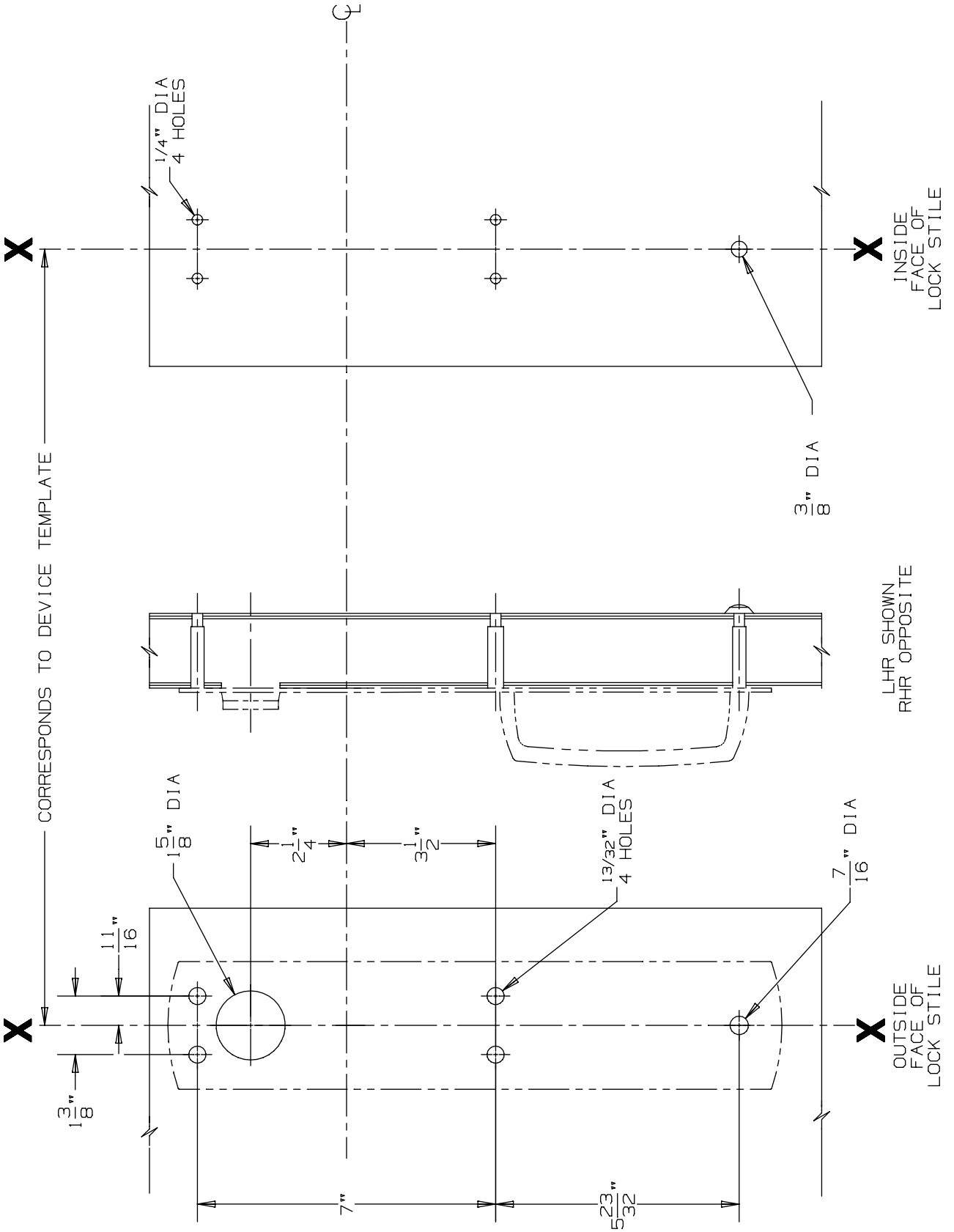

DEVICE APPLICATION SCHEDULE
9875/9975 SERIES DEVICE

990 NL Trim

VON DUPRIN®

NOTES: SEE MASTER SHEET #10001 FOR SUGGESTED REINFORCING

TEMPLATE NUMBER: 20271_a

DATE: 05-23-13

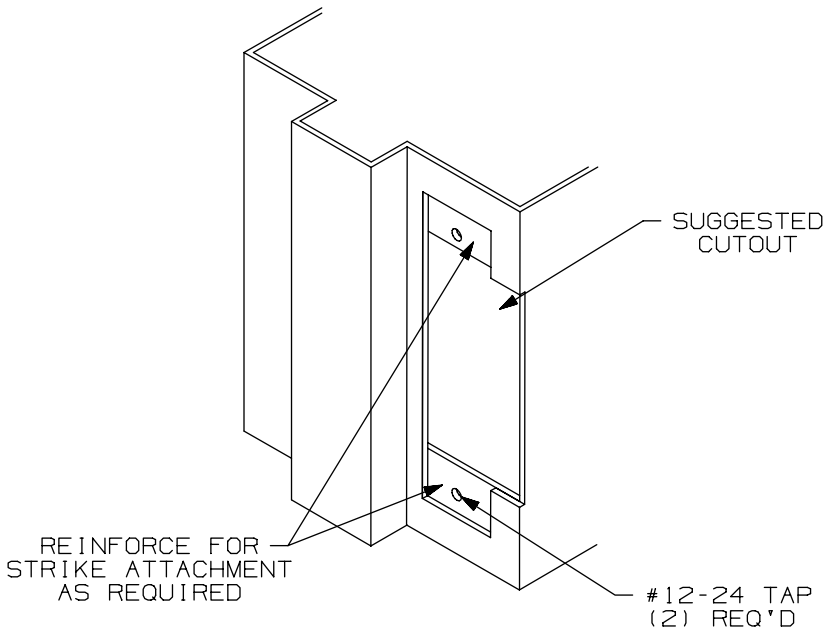

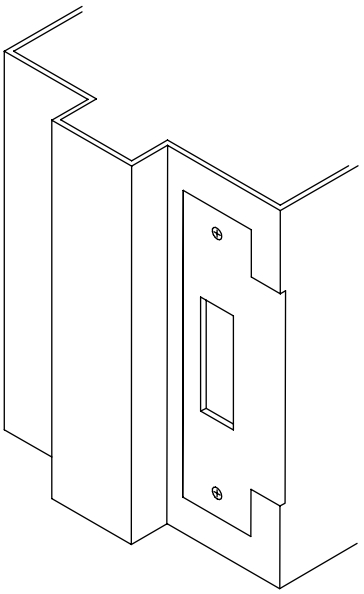

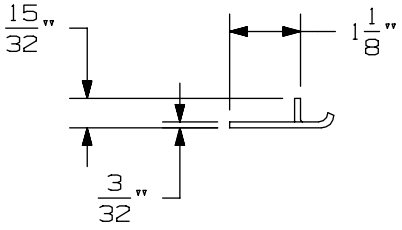

APPLICATION SCHEDULE	
DEVICE	DIM. "A"
9875 & 9875-F	11/16
9975 & 9975-F	11/16
8875 & 8875-F	1/2
5575 & 5575-F	1/2

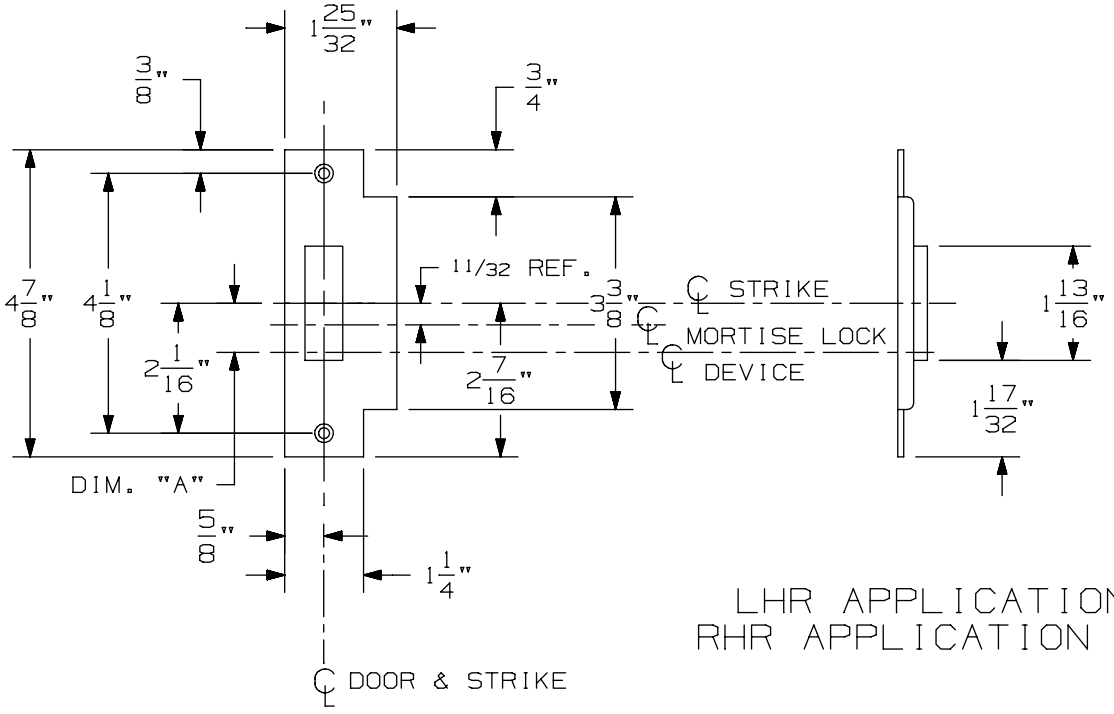

LHR APPLICATION SHOWN
RHR APPLICATION OPPOSITE

575 Mortise Strike (Single Door) for 7500 Mortise Lock

VON DUPRIN®

NOTES: SEE MASTER SHEET #10001 FOR SUGGESTED REINFORCING

TEMPLATE NUMBER: 30210_b

DATE: 07-22-13

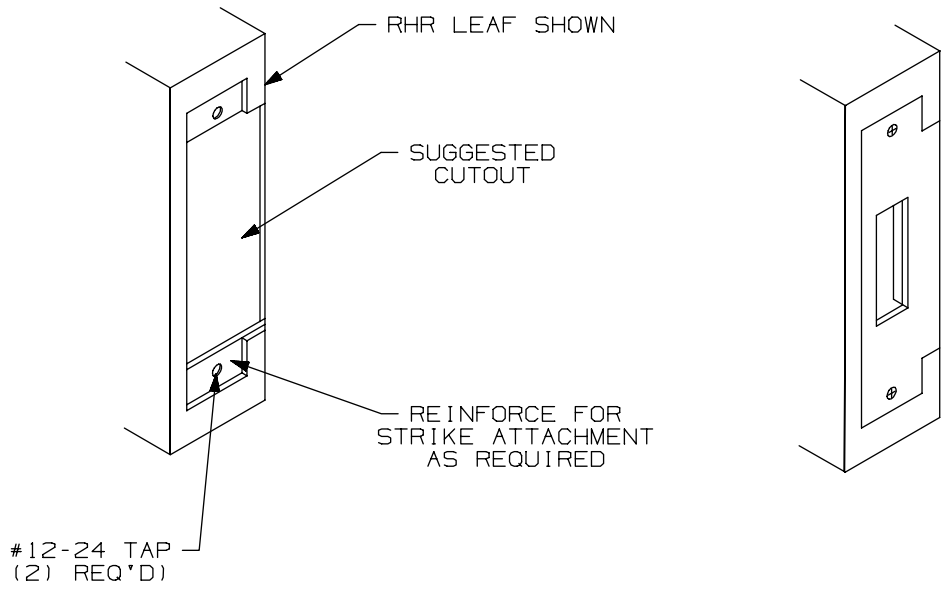

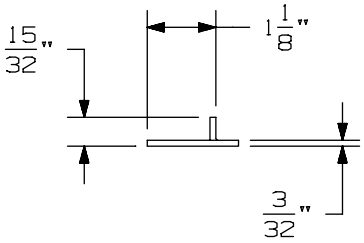

APPLICATION SCHEDULE	
DEVICE	DIM. "A"
9875 & 9875-F	11/16
9975 & 9975-F	11/16
8875 & 8875-F	1/2
5575 & 5575-F	1/2

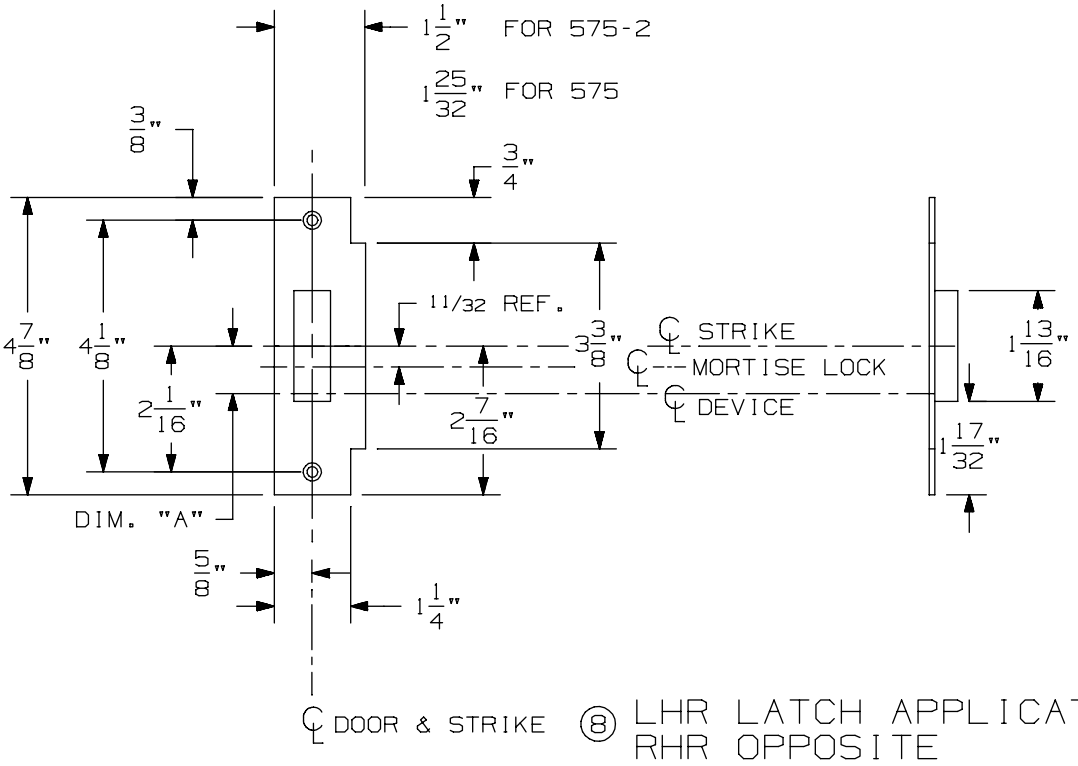

⑧ LHR LATCH APPLICATION SHOWN
RHR OPPOSITE

575-2 Mortise Strike (Double Doors) for 7500 Mortise Lock

VON DUPRIN®

NOTES: SEE MASTER SHEET #10001 FOR SUGGESTED REINFORCING

TEMPLATE NUMBER: 30212_b

DATE: 07-22-13

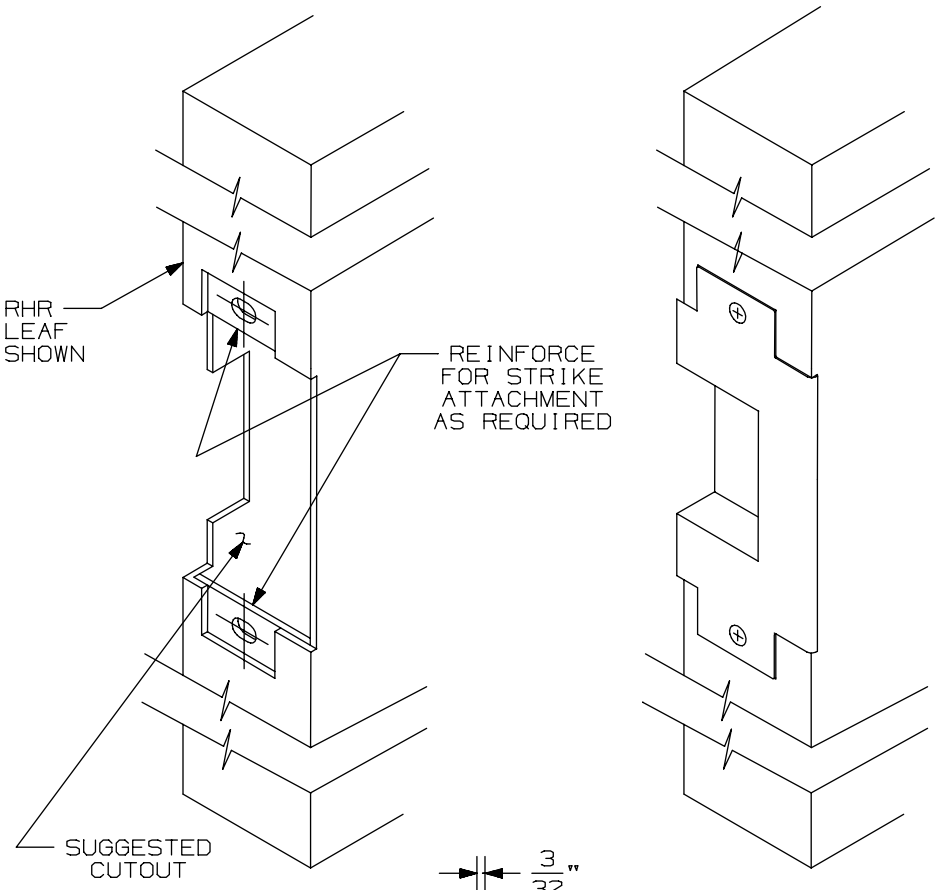

APPLICATION SCHEDULE	
DEVICE	DIM."A"
9875 & 9875-F	11/16
9975 & 9975-F	11/16
8875 & 8875-F	1/2
5575 & 5575-F	1/2

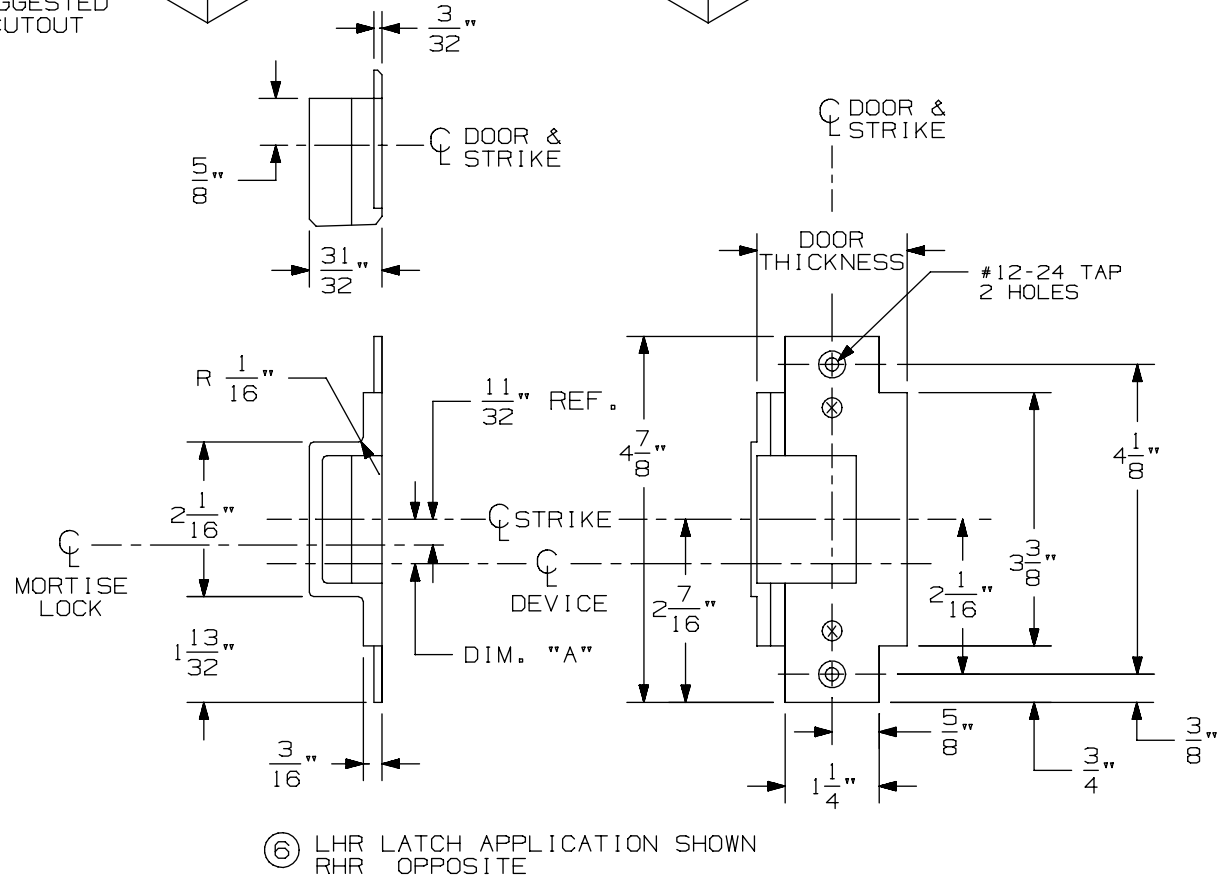

⑥ LHR LATCH APPLICATION SHOWN
RHR OPPOSITE

576A & 576B Mortise Strike for 7500 Mortise Lock

VON DUPRIN®

NOTES: SEE MASTER SHEET #10001 FOR SUGGESTED REINFORCING

TEMPLATE NUMBER: 30211_a

DATE: 05-28-13

9875/9975 & 9875-F/9975-F Series Mortise Lock Devices

NOTES: SEE MASTER SHEET #10001 FOR SUGGESTED REINFORCING

TEMPLATE NUMBER: 10305_a

DATE: 05-21-13

VON DUPRIN®

NOTES:
1. THESE FOUR HOLES TO BE PREPARED FOR SURFACE APPLICATION WHEN USING 696/697 TRIM. DO NOT PREPARE FOR SEX BOLTS.
2. FOR STOCK HOLLOW METAL DOORS SEE TEMPLATE NUMBER 10312 FOR TYPE '86' CUTOUT.
3. GLASS BEAD KIT AVAILABLE WHEN REQUIRED.
4. WIRING TO SS7500 & E7500 LOCKS GO THROUGH DOOR NOT DEVICE.
5. FOR OUTSIDE TRIM PREPARATION, WHEN REQUIRED, SEE TRIM TEMPLATE.
(15) 6. THE SS7500 LOCK MUST BE USED FOR LX98/9975 SERIES DEVICE APPLICATIONS.

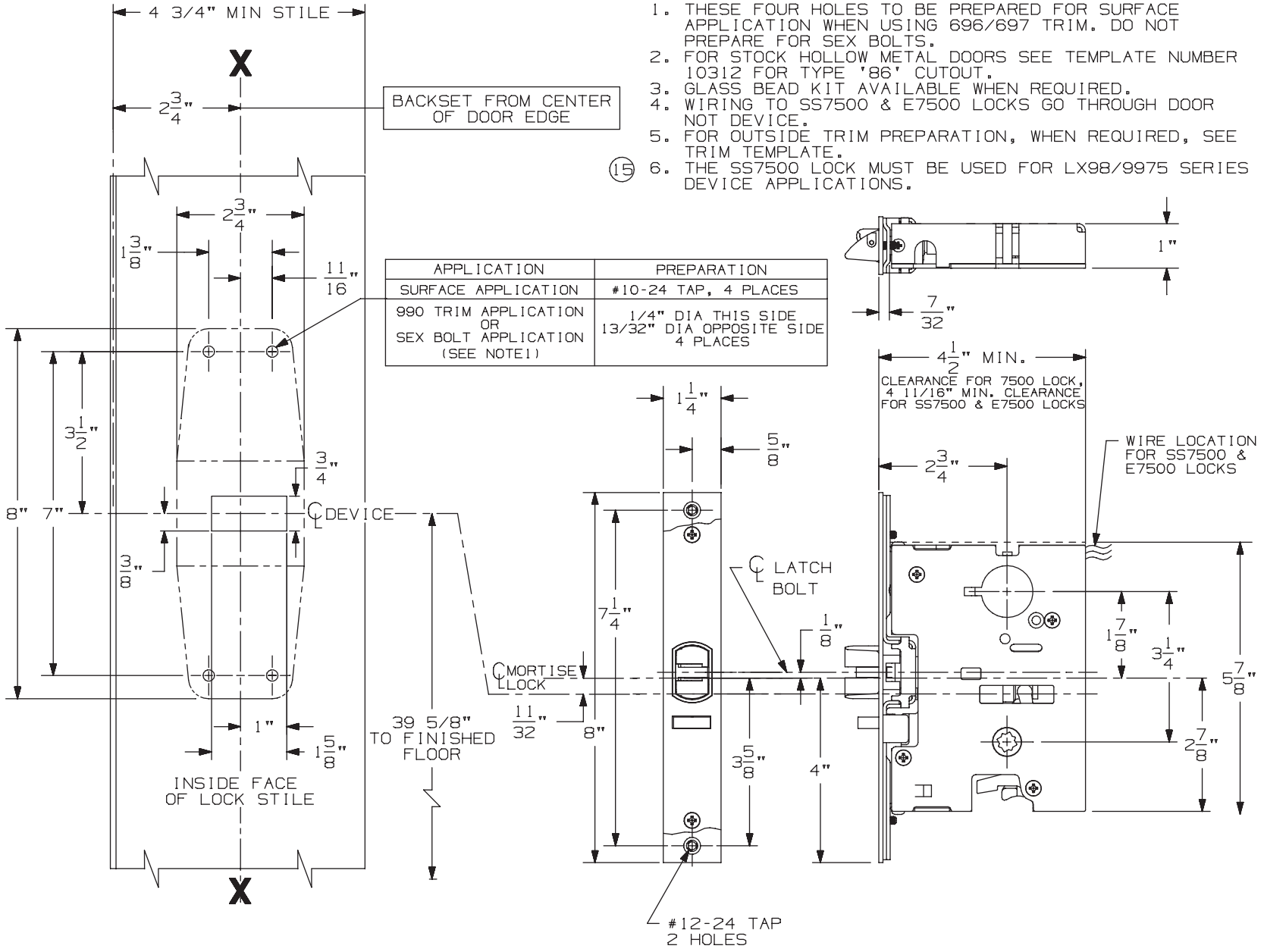

APPLICATION	PREPARATION
SURFACE APPLICATION	#10-24 TAP, 4 PLACES
990 TRIM APPLICATION OR SEX BOLT APPLICATION (SEE NOTE1)	1/4" DIA THIS SIDE 13/32" DIA OPPOSITE SIDE 4 PLACES

LHR APPLICATION SHOWN, RHR APPLICATION OPPOSITE

991 K & 992 L Trim for Mortise Device

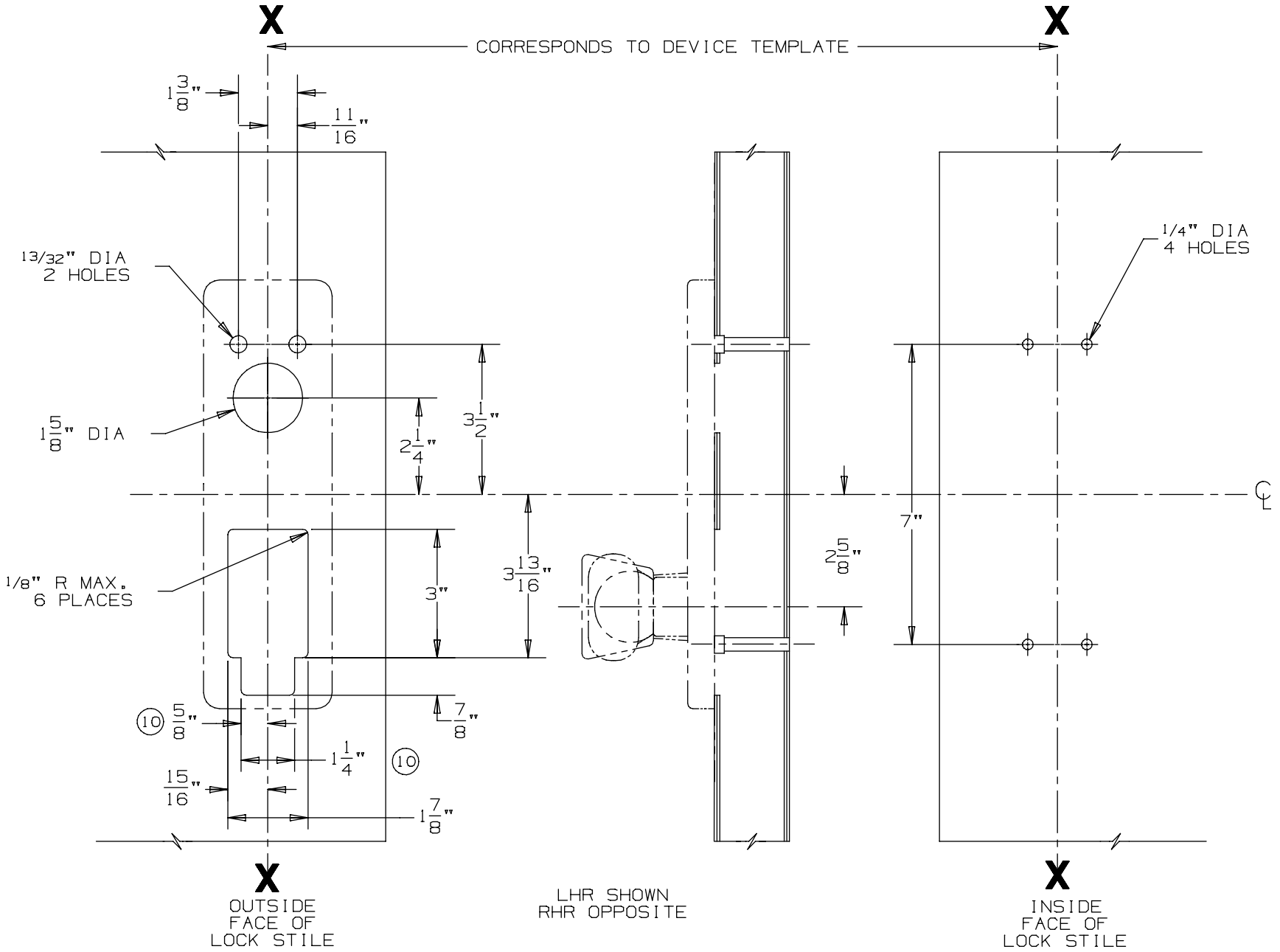

DEVICE APPLICATION SCHEDULE
9875/9975 SERIES DEVICE

NOTES: SEE MASTER SHEET #10001 FOR SUGGESTED REINFORCING

TEMPLATE NUMBER: 20280_a

DATE: 05-23-13

VON DUPRIN®

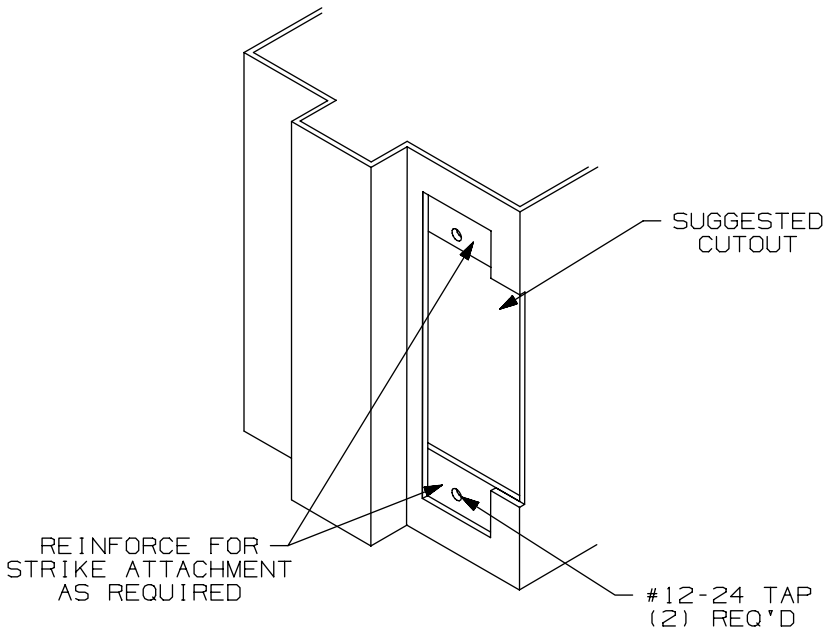

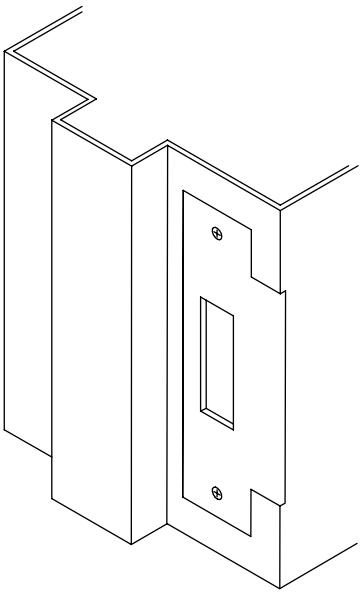

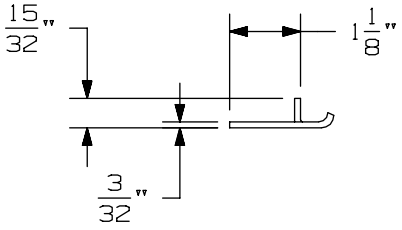

APPLICATION SCHEDULE	
DEVICE	DIM. "A"
9875 & 9875-F	11/16
9975 & 9975-F	11/16
8875 & 8875-F	1/2
5575 & 5575-F	1/2

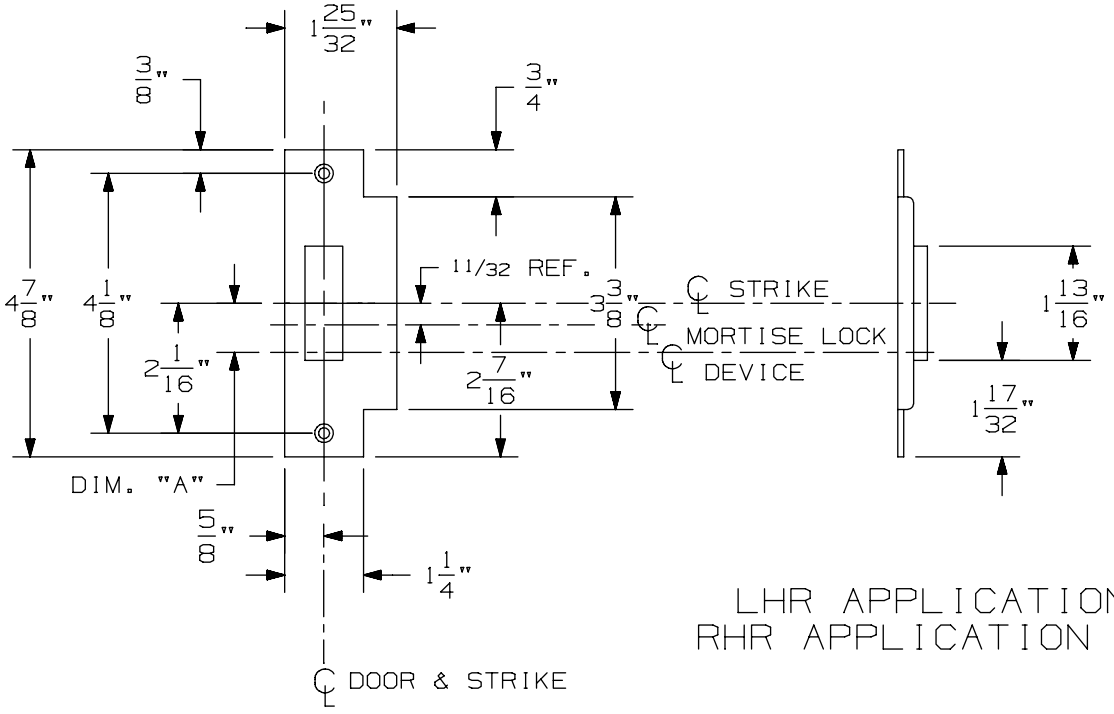

LHR APPLICATION SHOWN
RHR APPLICATION OPPOSITE

575 Mortise Strike (Single Door) for 7500 Mortise Lock

VON DUPRIN®

NOTES: SEE MASTER SHEET #10001 FOR SUGGESTED REINFORCING

TEMPLATE NUMBER: 30210_b

DATE: 07-22-13

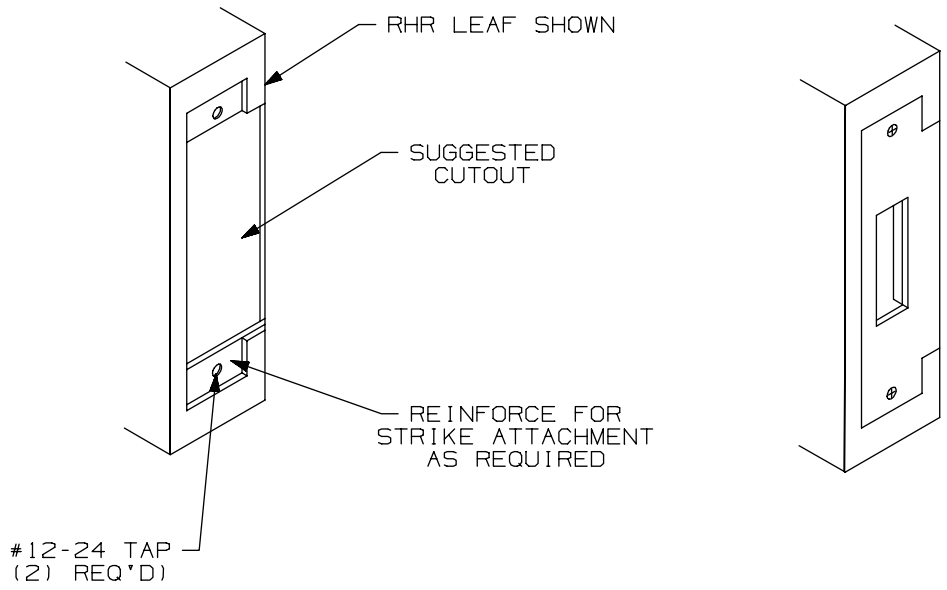

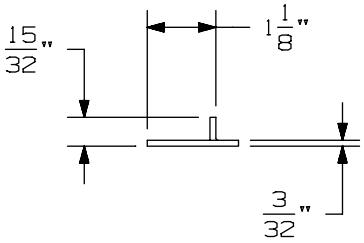

APPLICATION SCHEDULE	
DEVICE	DIM. "A"
9875 & 9875-F	11/16
9975 & 9975-F	11/16
8875 & 8875-F	1/2
5575 & 5575-F	1/2

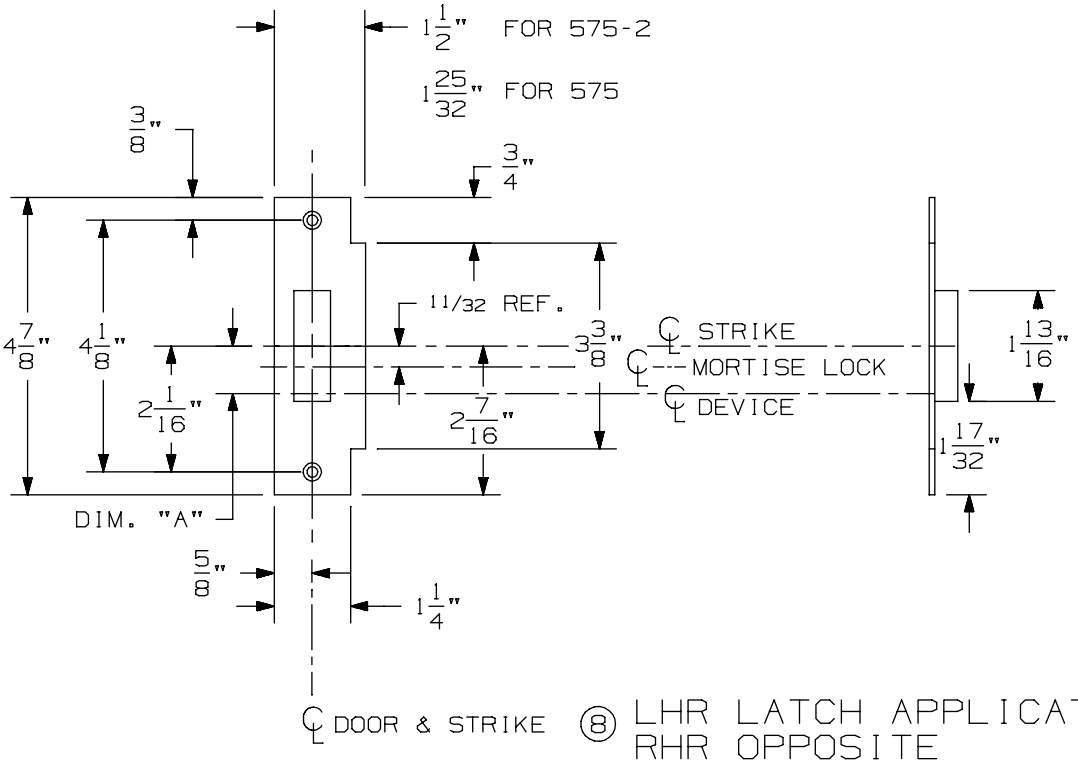

⑧ LHR LATCH APPLICATION SHOWN
RHR OPPOSITE

575-2 Mortise Strike (Double Doors) for 7500 Mortise Lock

VON DUPRIN®

NOTES: SEE MASTER SHEET #10001 FOR SUGGESTED REINFORCING

TEMPLATE NUMBER: 30212_b

DATE: 07-22-13

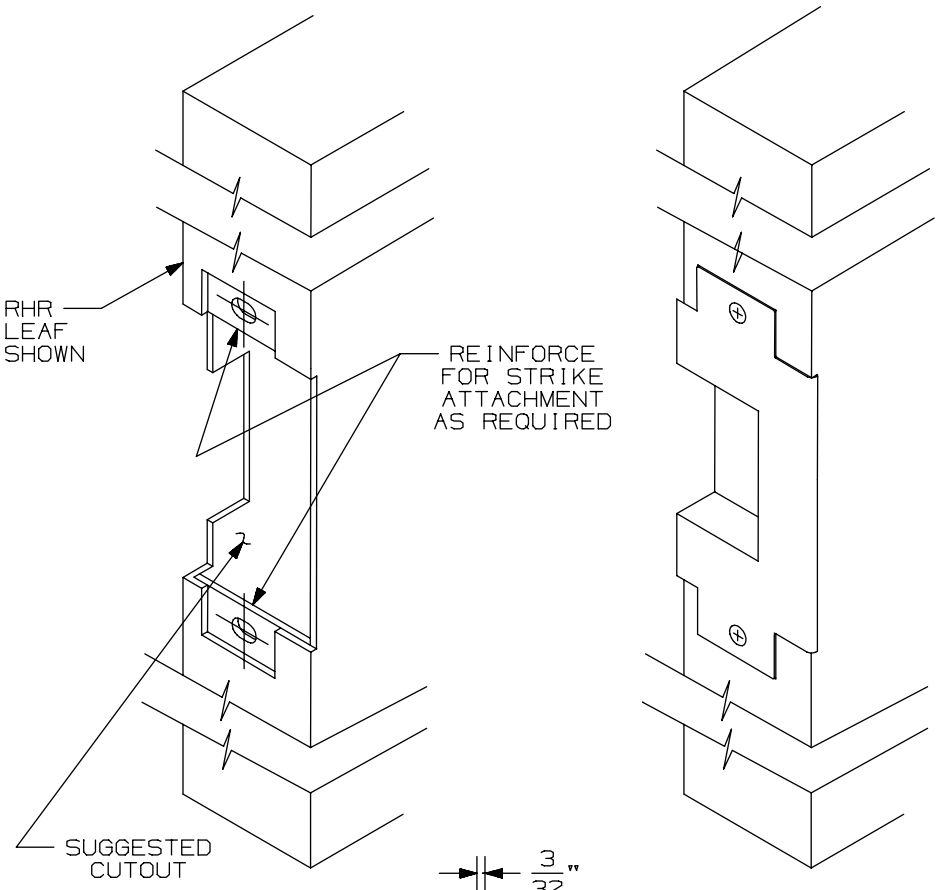

APPLICATION SCHEDULE	
DEVICE	DIM."A"
9875 & 9875-F	11/16
9975 & 9975-F	11/16
8875 & 8875-F	1/2
5575 & 5575-F	1/2

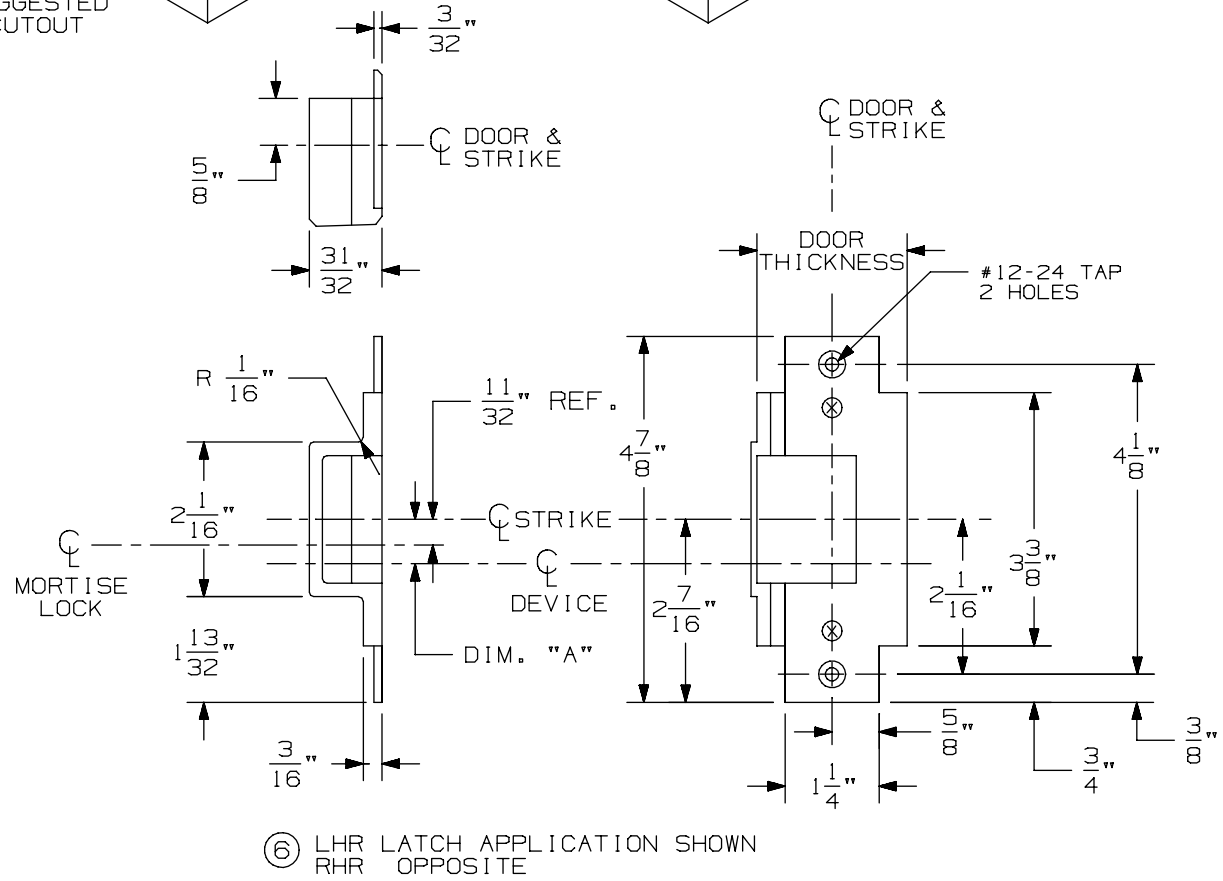

⑥ LHR LATCH APPLICATION SHOWN
RHR OPPOSITE

576A & 576B Mortise Strike for 7500 Mortise Lock

VON DUPRIN®

NOTES: SEE MASTER SHEET #10001 FOR SUGGESTED REINFORCING

TEMPLATE NUMBER: 30211_a

DATE: 05-28-13

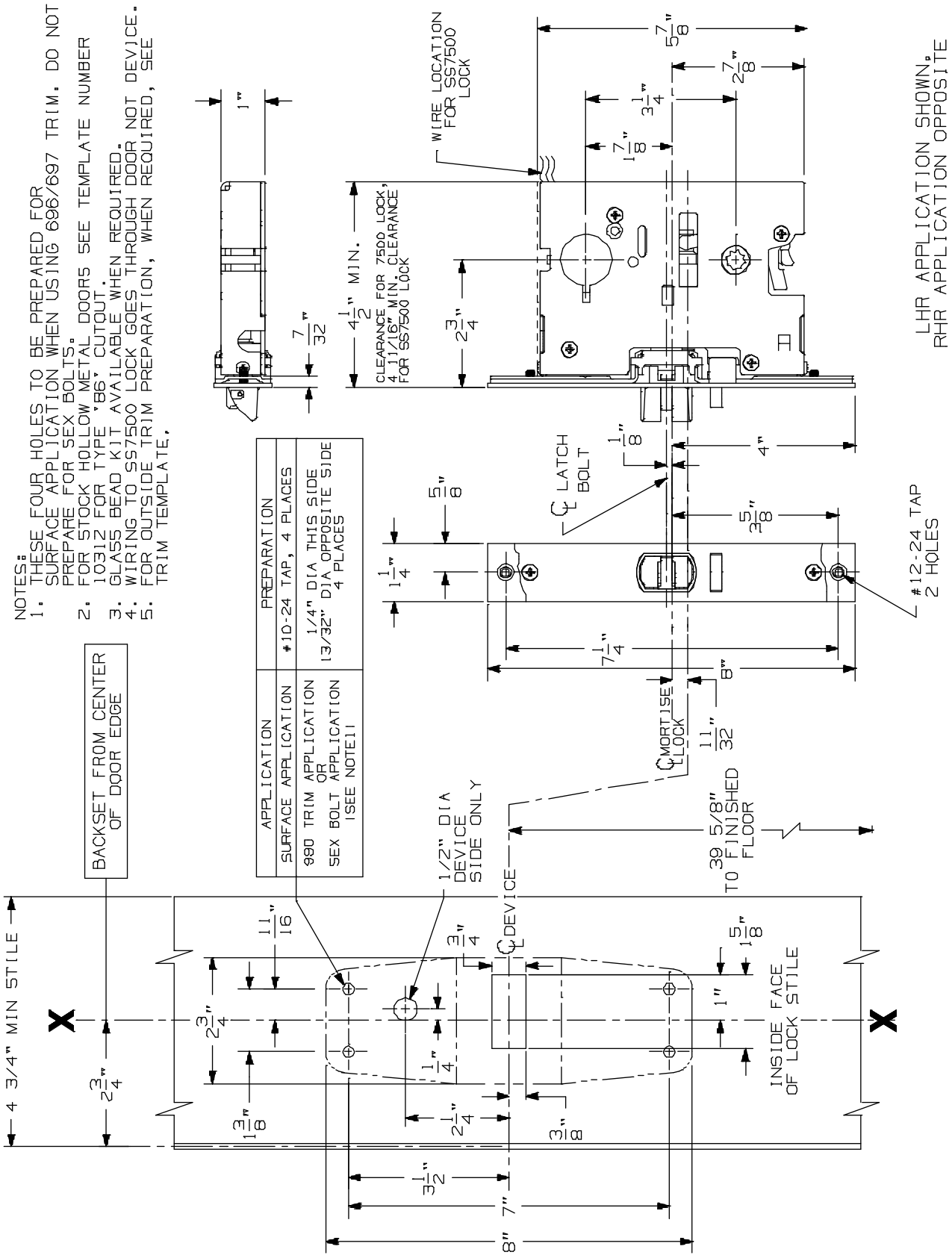

98/9975-2 Series Mortise Lock Devices

VON DUPRIN®

NOTES: SEE MASTER SHEET #10001 FOR SUGGESTED REINFORCING

TEMPLATE NUMBER: 10368_a

DATE: 05-22-13

991 K & 992 L Trim for Mortise Device

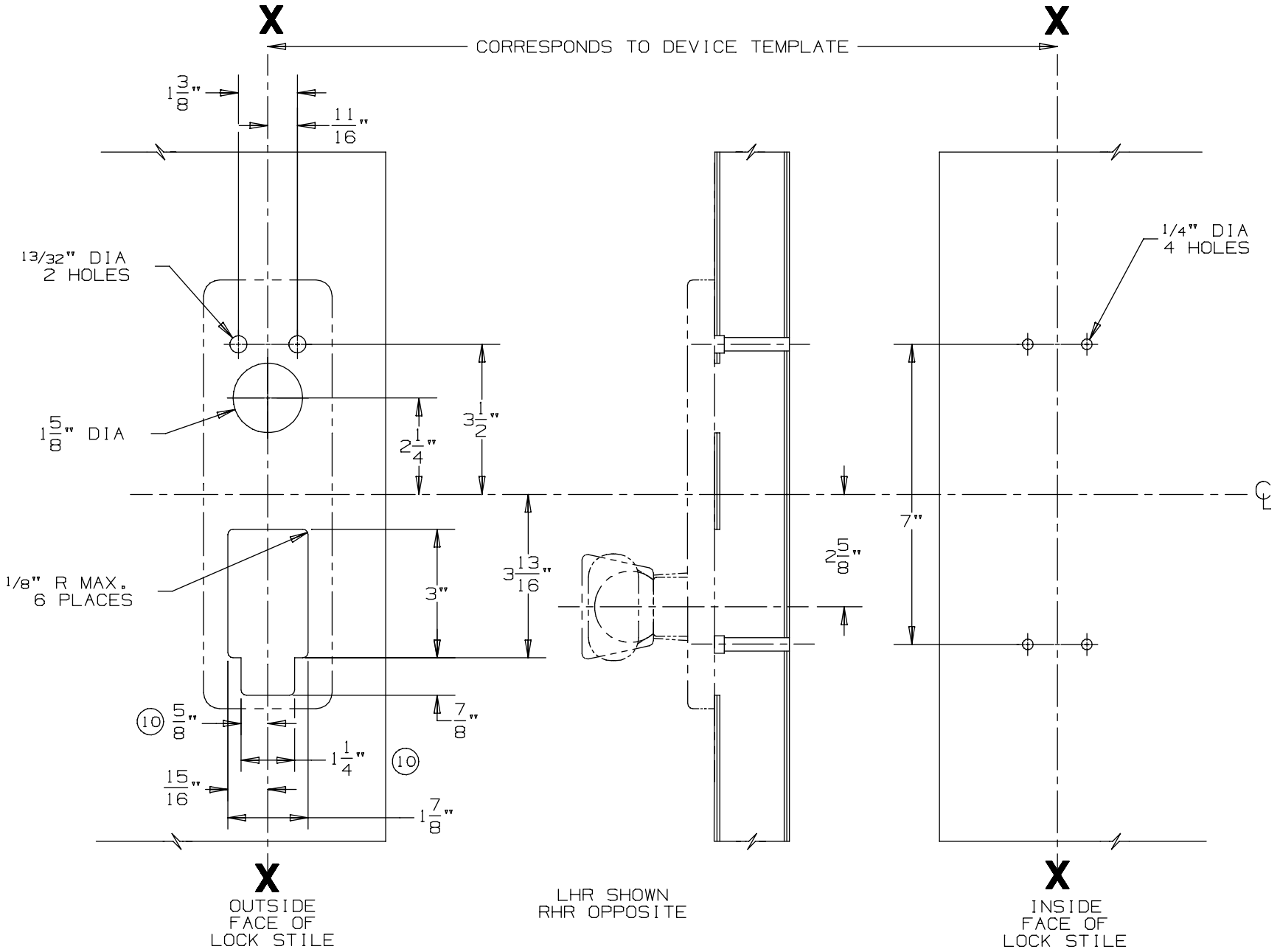

DEVICE APPLICATION SCHEDULE
9875/9975 SERIES DEVICE

NOTES: SEE MASTER SHEET #10001 FOR SUGGESTED REINFORCING

TEMPLATE NUMBER: 20280_a

DATE: 05-23-13

VON DUPRIN®

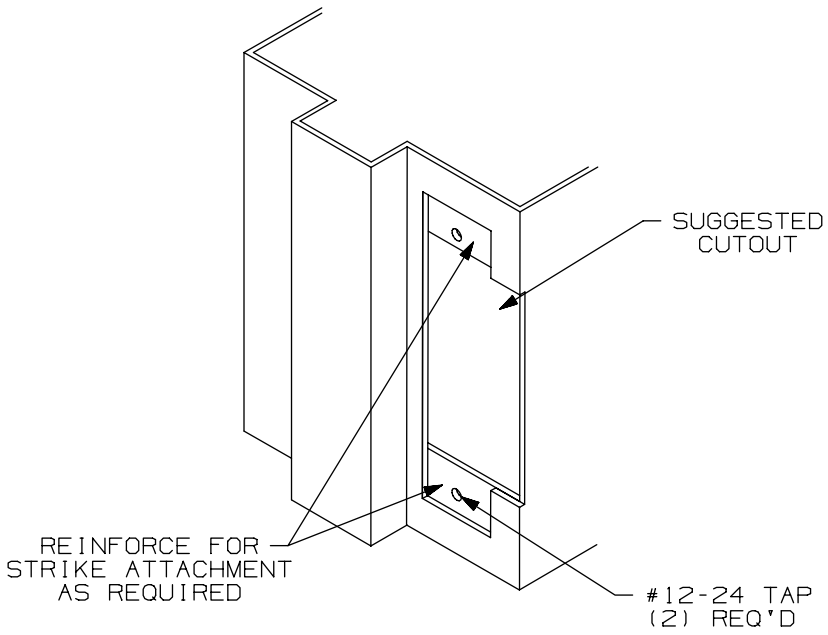

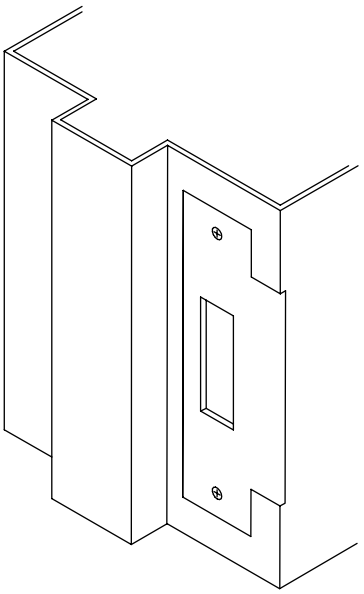

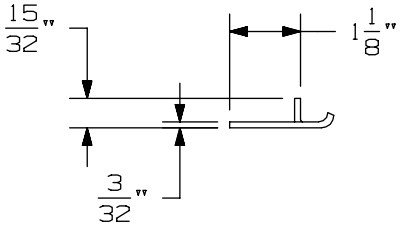

APPLICATION SCHEDULE	
DEVICE	DIM. "A"
9875 & 9875-F	11/16
9975 & 9975-F	11/16
8875 & 8875-F	1/2
5575 & 5575-F	1/2

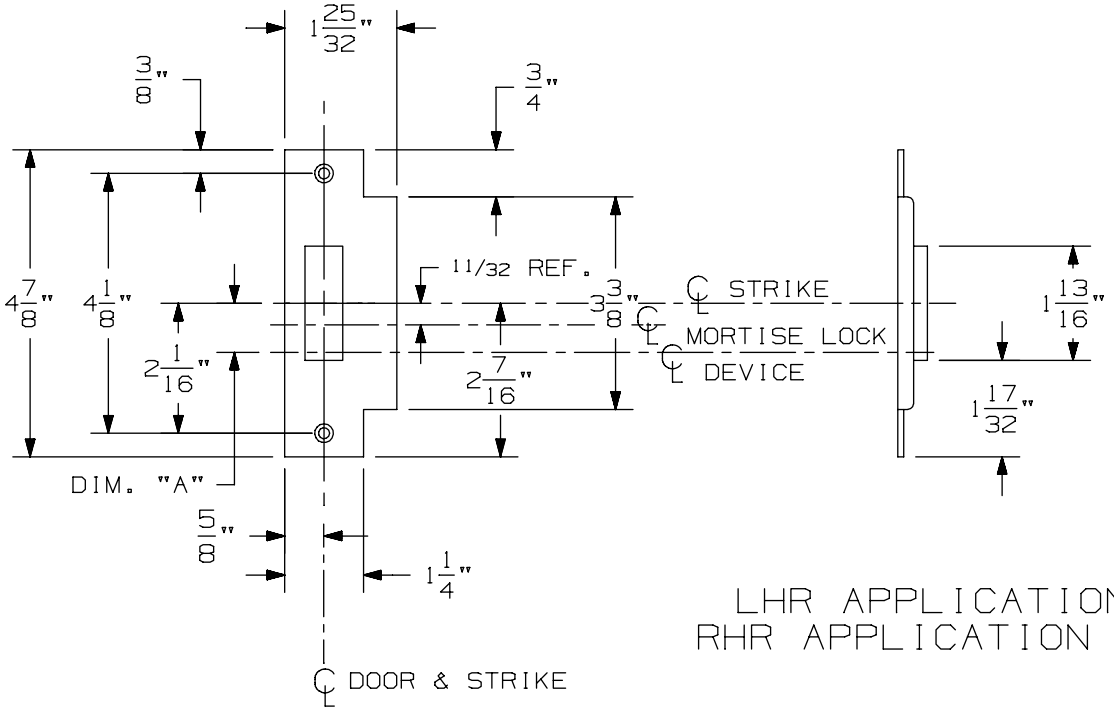

LHR APPLICATION SHOWN
RHR APPLICATION OPPOSITE

575 Mortise Strike (Single Door) for 7500 Mortise Lock

VON DUPRIN®

NOTES: SEE MASTER SHEET #10001 FOR SUGGESTED REINFORCING

TEMPLATE NUMBER: 30210_b

DATE: 07-22-13

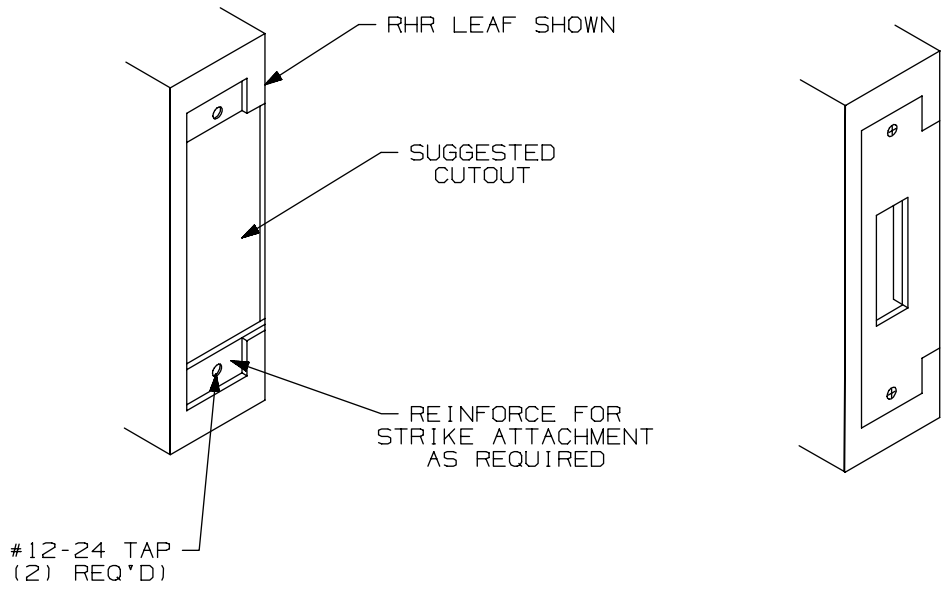

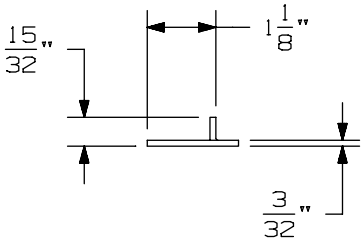

APPLICATION SCHEDULE	
DEVICE	DIM. "A"
9875 & 9875-F	11/16
9975 & 9975-F	11/16
8875 & 8875-F	1/2
5575 & 5575-F	1/2

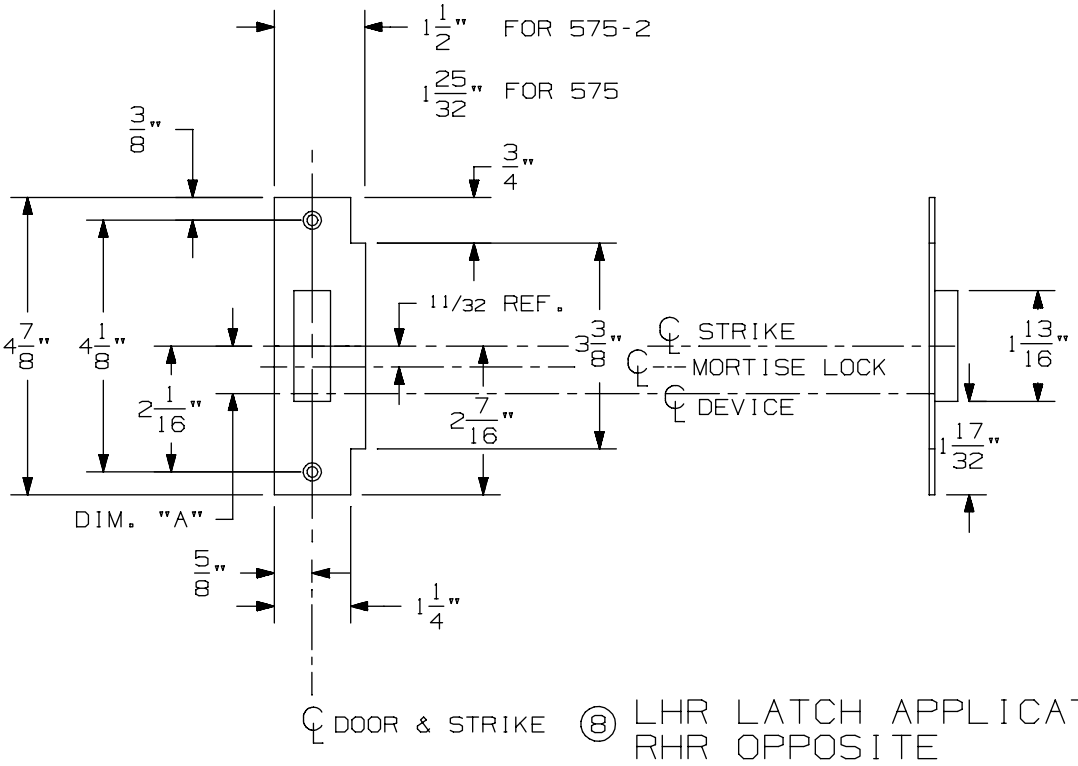

⑧ LHR LATCH APPLICATION SHOWN
RHR OPPOSITE

575-2 Mortise Strike (Double Doors) for 7500 Mortise Lock

VON DUPRIN®

NOTES: SEE MASTER SHEET #10001 FOR SUGGESTED REINFORCING

TEMPLATE NUMBER: 30212_b

DATE: 07-22-13

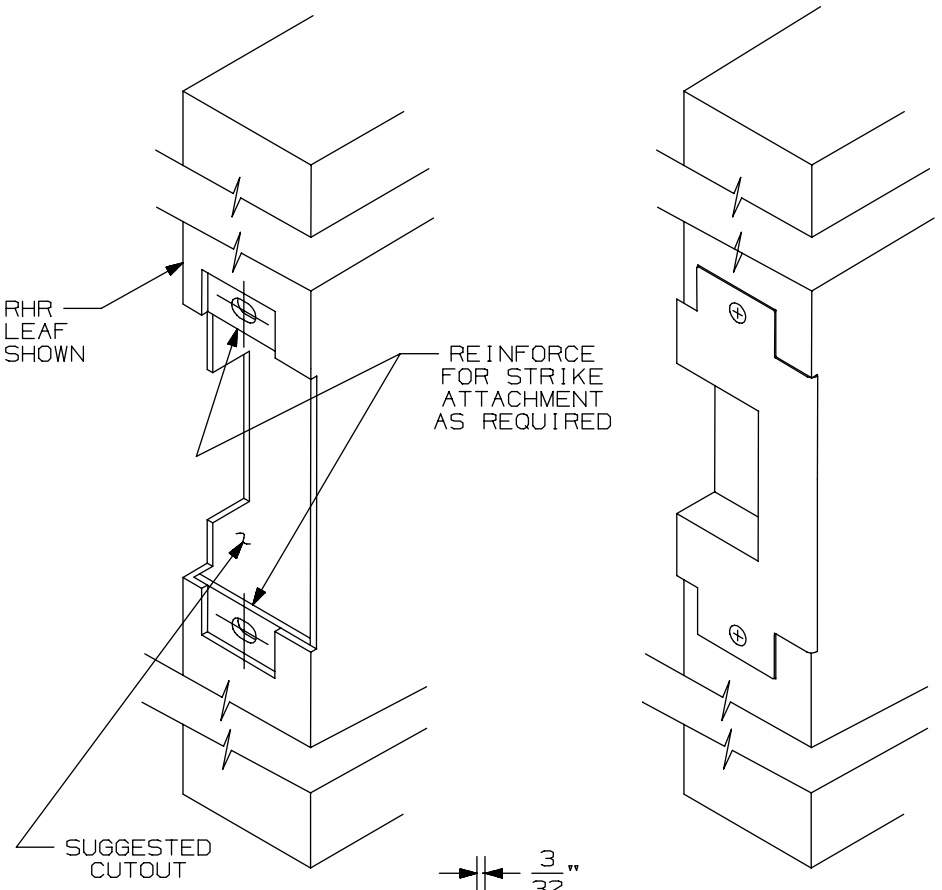

APPLICATION SCHEDULE	
DEVICE	DIM."A"
9875 & 9875-F	11/16
9975 & 9975-F	11/16
8875 & 8875-F	1/2
5575 & 5575-F	1/2

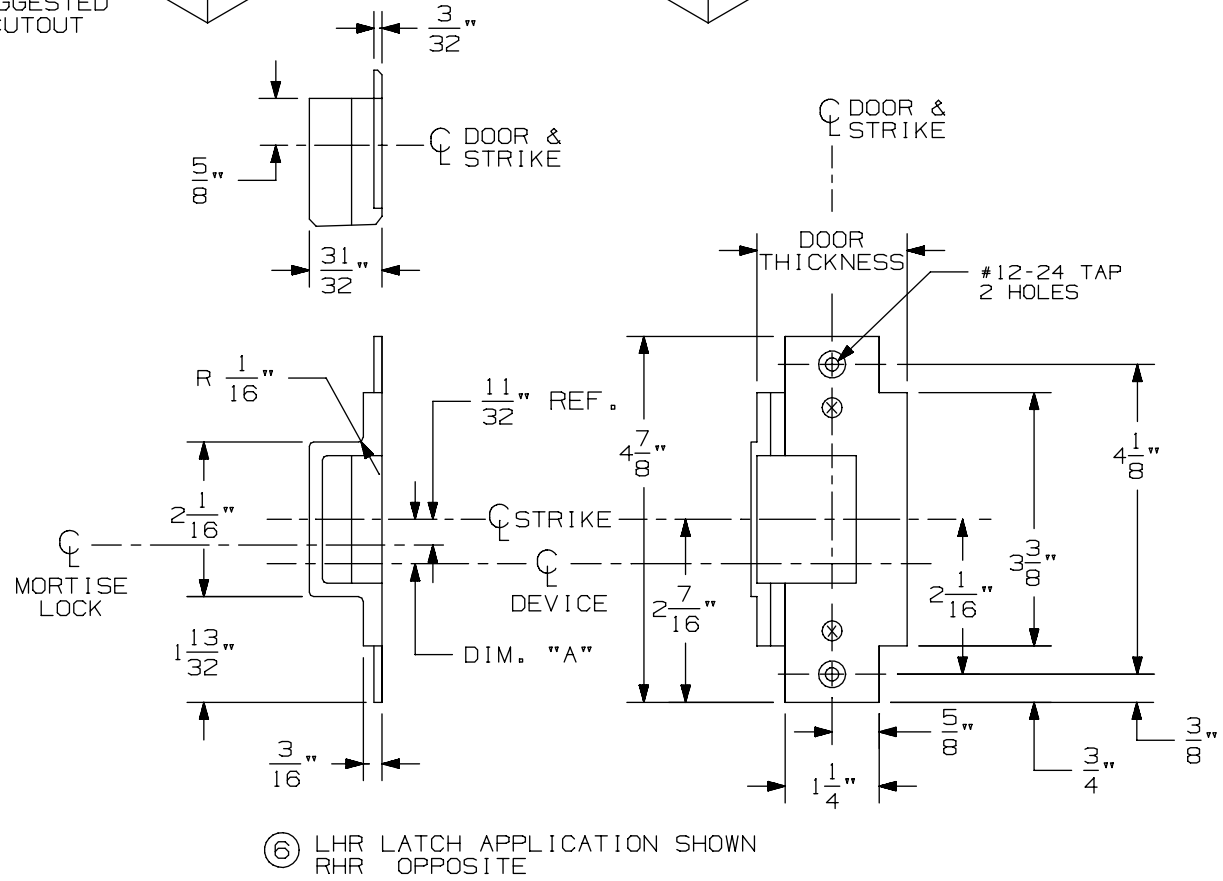

⑥ LHR LATCH APPLICATION SHOWN
RHR OPPOSITE

576A & 576B Mortise Strike for 7500 Mortise Lock

VON DUPRIN®

NOTES: SEE MASTER SHEET #10001 FOR SUGGESTED REINFORCING

TEMPLATE NUMBER: 30211_a

DATE: 05-28-13

9875/9975 & 9875-F/9975-F Series Mortise Lock Devices

NOTES: SEE MASTER SHEET #10001 FOR SUGGESTED REINFORCING

TEMPLATE NUMBER: 10305_a

DATE: 05-21-13

VON DUPRIN®

NOTES:
1. THESE FOUR HOLES TO BE PREPARED FOR SURFACE APPLICATION WHEN USING 696/697 TRIM. DO NOT PREPARE FOR SEX BOLTS.
2. FOR STOCK HOLLOW METAL DOORS SEE TEMPLATE NUMBER 10312 FOR TYPE '86' CUTOUT.
3. GLASS BEAD KIT AVAILABLE WHEN REQUIRED.
4. WIRING TO SS7500 & E7500 LOCKS GO THROUGH DOOR NOT DEVICE.
5. FOR OUTSIDE TRIM PREPARATION, WHEN REQUIRED, SEE TRIM TEMPLATE.
15 6. THE SS7500 LOCK MUST BE USED FOR LX98/9975 SERIES DEVICE APPLICATIONS.

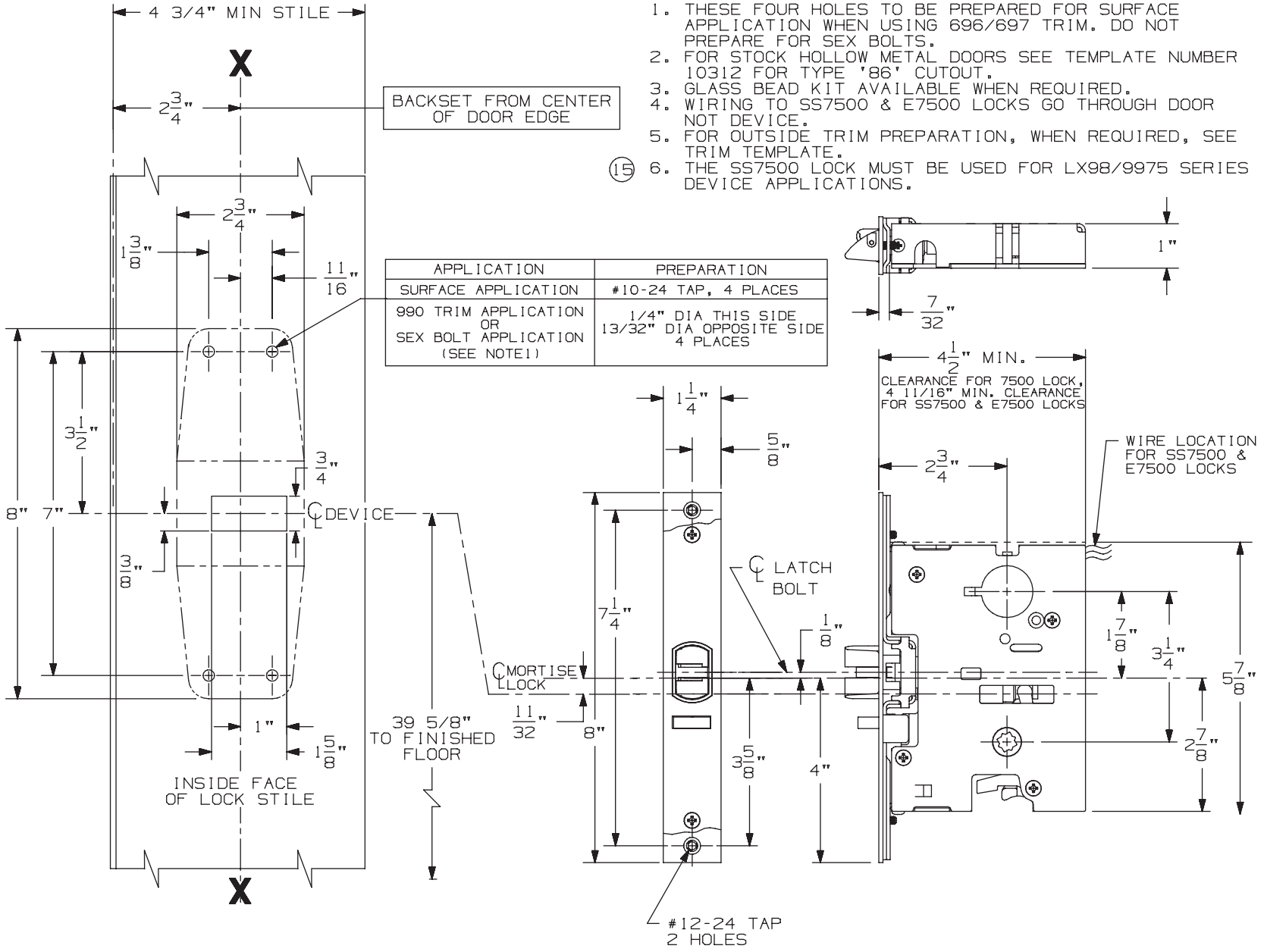

APPLICATION	PREPARATION
SURFACE APPLICATION	#10-24 TAP, 4 PLACES
990 TRIM APPLICATION OR SEX BOLT APPLICATION (SEE NOTE1)	1/4" DIA THIS SIDE 13/32" DIA OPPOSITE SIDE 4 PLACES

LHR APPLICATION SHOWN, RHR APPLICATION OPPOSITE

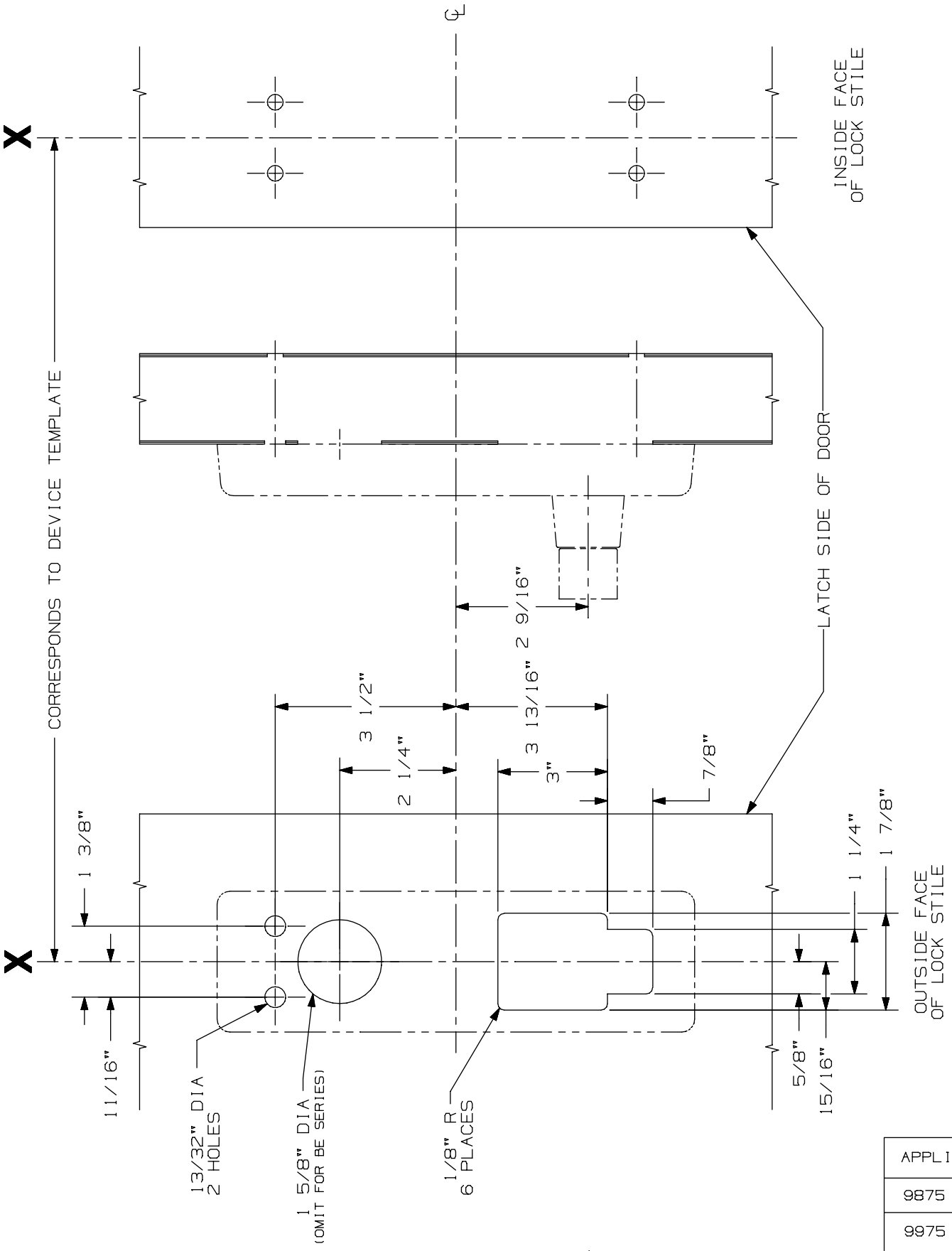

APPLICATIONS
9875 SERIES
9975 SERIES

996L, E996L, 996L-BE, & E996L-BE
Mortise Series
Trim Metal Door Application

VON DUPRIN®

NOTES: See Master Sheet #10001 For Suggested Reinforcing

TEMPLATE NUMBER: 20006_b

DATE: 10-30-14

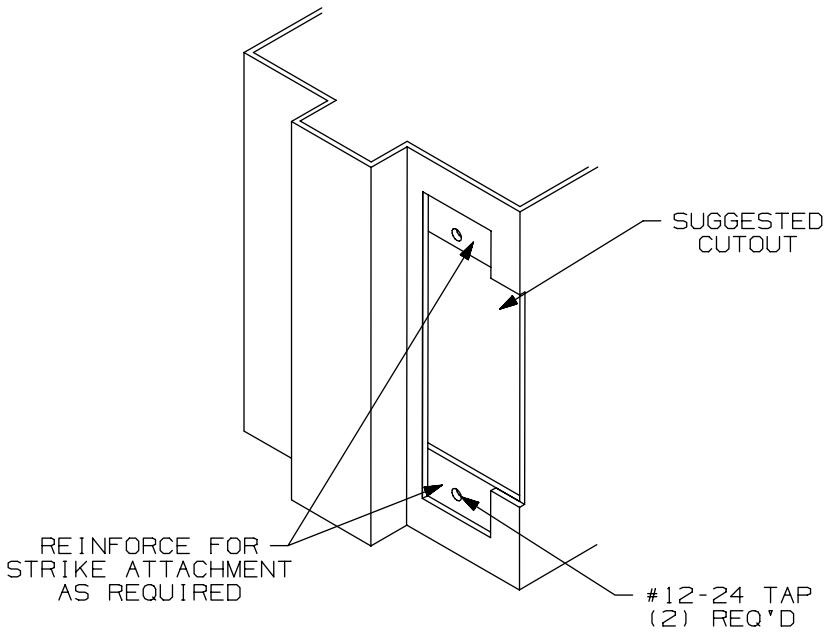

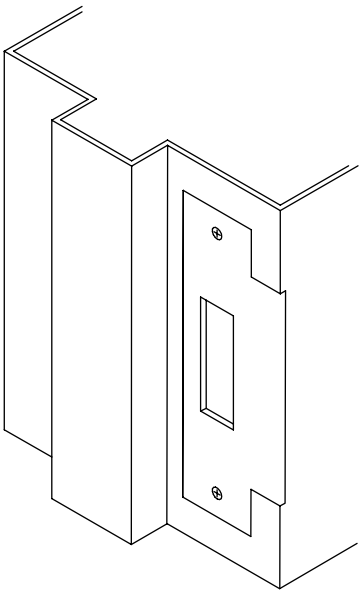

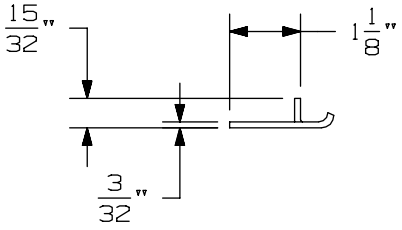

APPLICATION SCHEDULE	
DEVICE	DIM. "A"
9875 & 9875-F	11/16
9975 & 9975-F	11/16
8875 & 8875-F	1/2
5575 & 5575-F	1/2

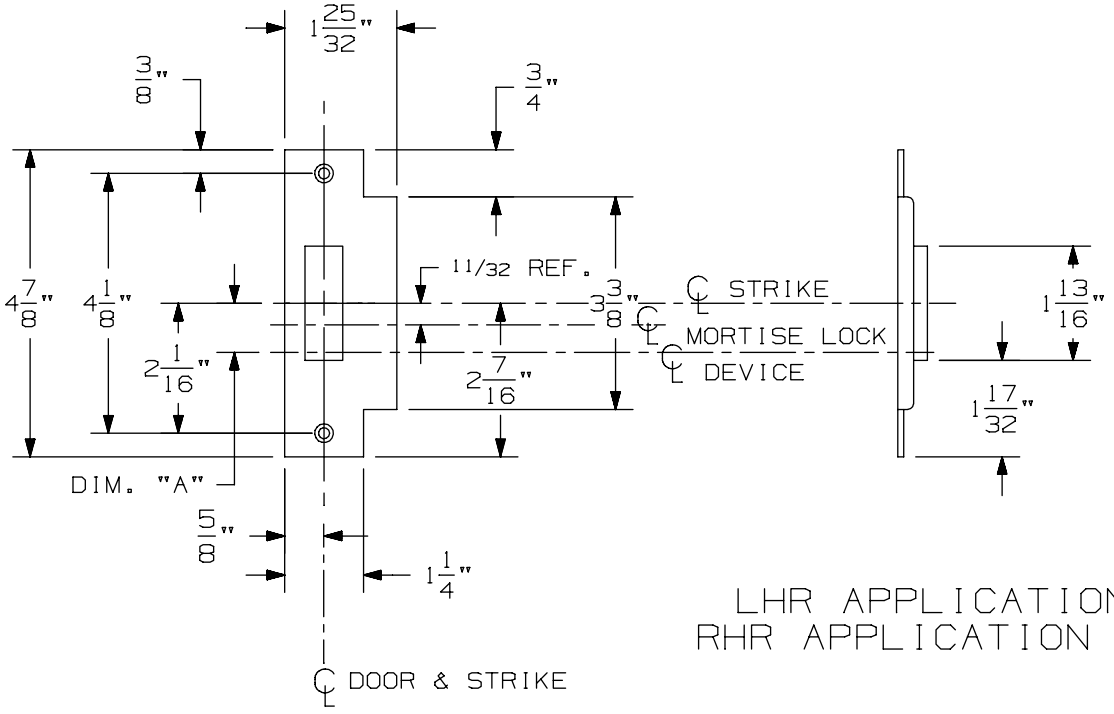

LHR APPLICATION SHOWN
RHR APPLICATION OPPOSITE

575 Mortise Strike (Single Door) for 7500 Mortise Lock

VON DUPRIN®

NOTES: SEE MASTER SHEET #10001 FOR SUGGESTED REINFORCING

TEMPLATE NUMBER: 30210_b

DATE: 07-22-13

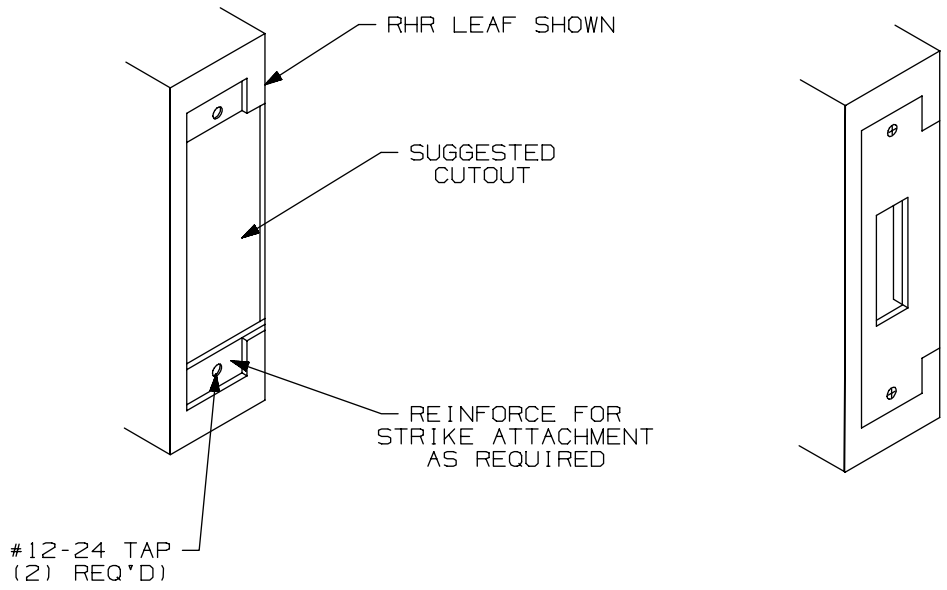

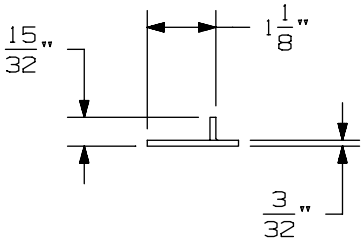

APPLICATION SCHEDULE	
DEVICE	DIM. "A"
9875 & 9875-F	11/16
9975 & 9975-F	11/16
8875 & 8875-F	1/2
5575 & 5575-F	1/2

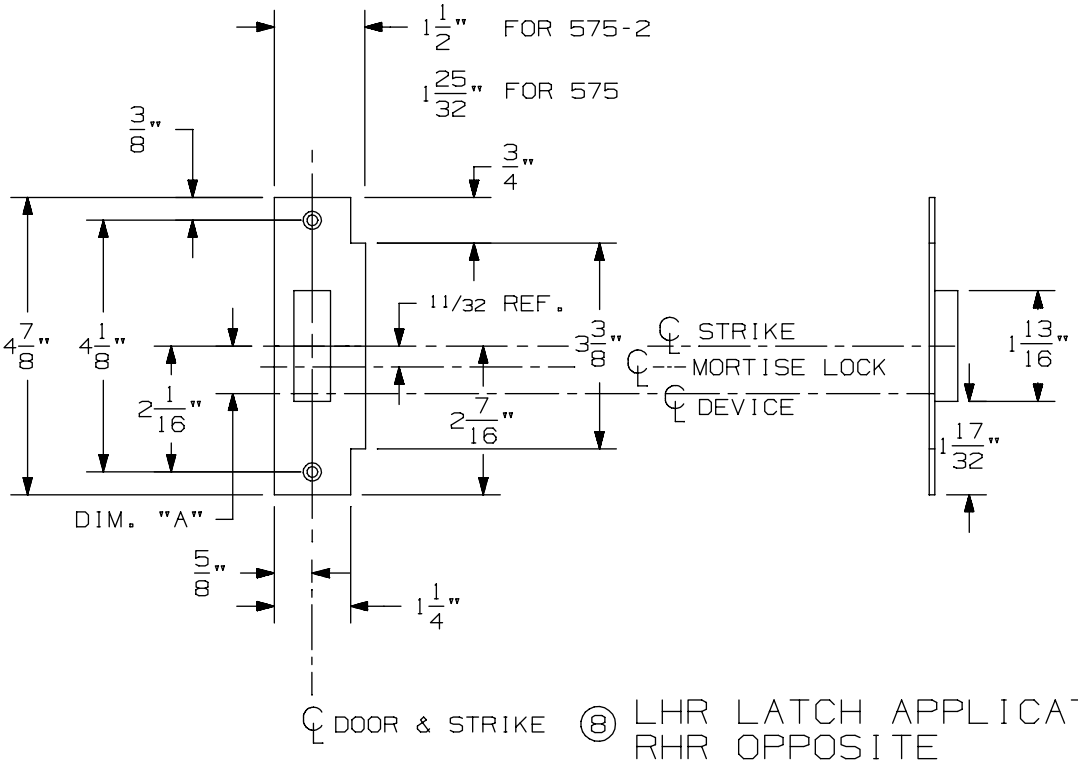

⑧ LHR LATCH APPLICATION SHOWN
RHR OPPOSITE

575-2 Mortise Strike (Double Doors) for 7500 Mortise Lock

VON DUPRIN®

NOTES: SEE MASTER SHEET #10001 FOR SUGGESTED REINFORCING

TEMPLATE NUMBER: 30212_b

DATE: 07-22-13

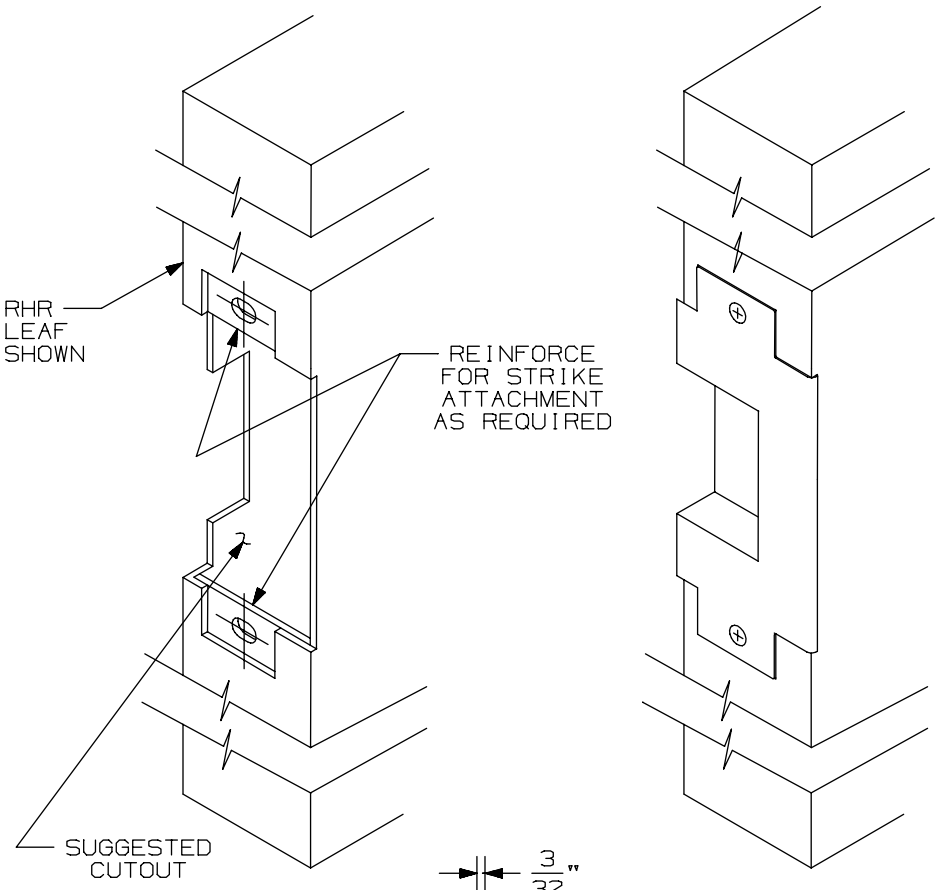

APPLICATION SCHEDULE	
DEVICE	DIM."A"
9875 & 9875-F	11/16
9975 & 9975-F	11/16
8875 & 8875-F	1/2
5575 & 5575-F	1/2

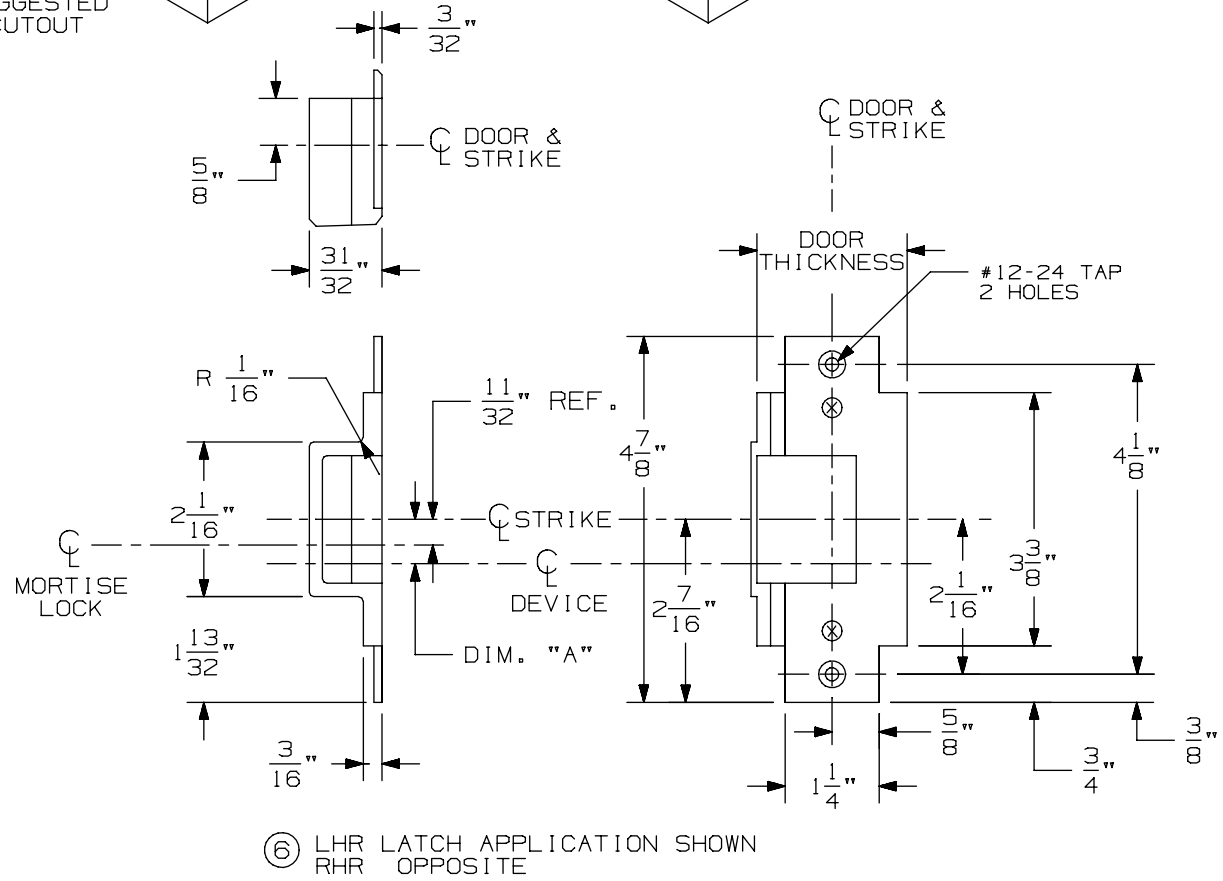

⑥ LHR LATCH APPLICATION SHOWN
RHR OPPOSITE

576A & 576B Mortise Strike for 7500 Mortise Lock

VON DUPRIN®

NOTES: SEE MASTER SHEET #10001 FOR SUGGESTED REINFORCING

TEMPLATE NUMBER: 30211_a

DATE: 05-28-13

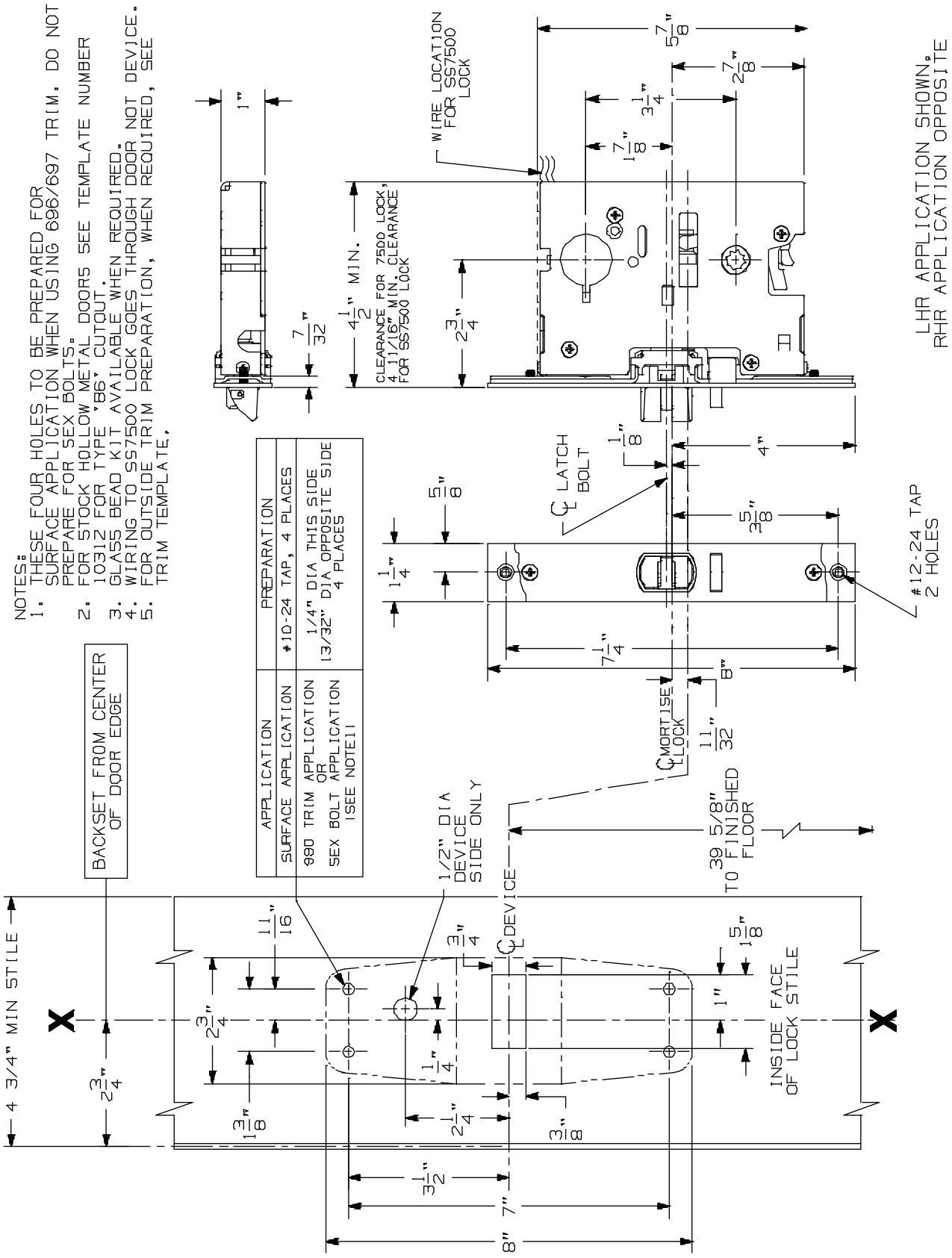

98/9975-2 Series Mortise Lock Devices

VON DUPRIN®

NOTES: SEE MASTER SHEET #10001 FOR SUGGESTED REINFORCING

TEMPLATE NUMBER: 10368_a

DATE: 05-22-13

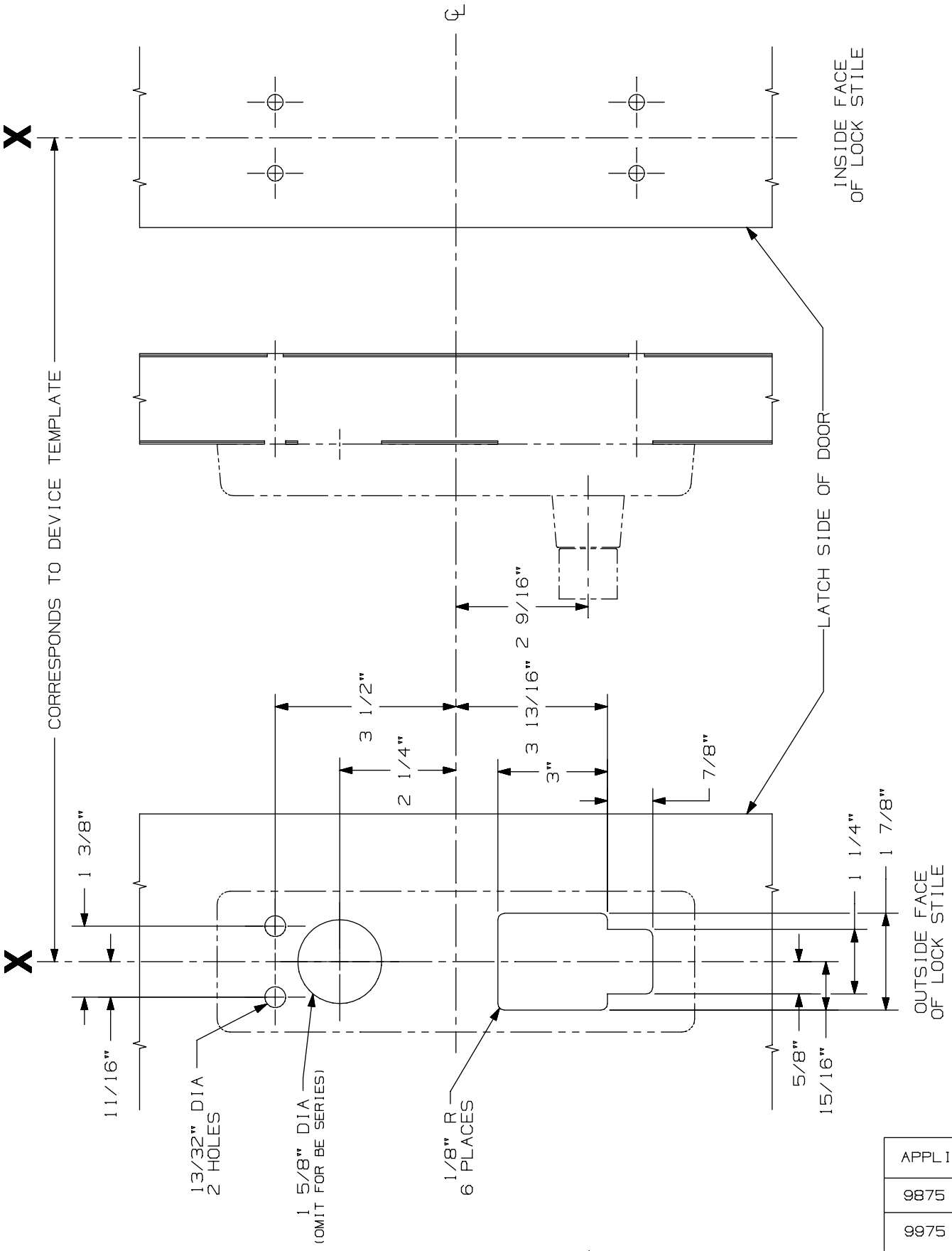

APPLICATIONS
9875 SERIES
9975 SERIES

996L, E996L, 996L-BE, & E996L-BE
Mortise Series
Trim Metal Door Application

VON DUPRIN®

NOTES: See Master Sheet #10001 For Suggested Reinforcing

TEMPLATE NUMBER: 20006_b

DATE: 10-30-14

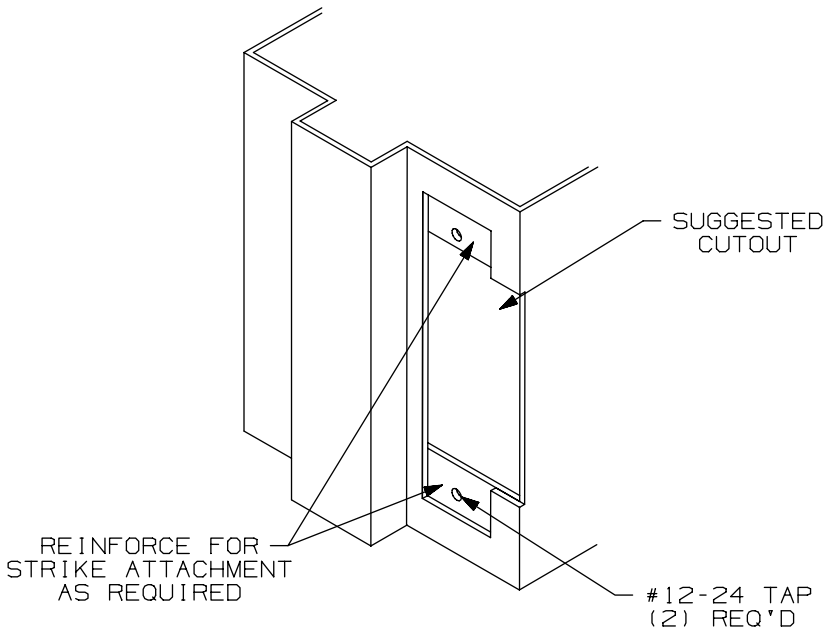

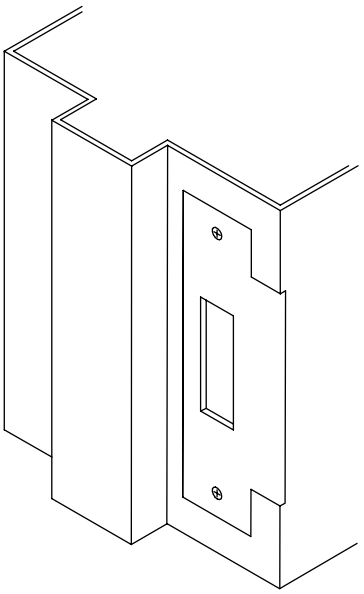

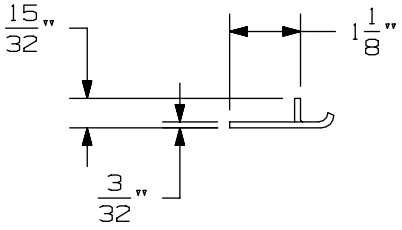

APPLICATION SCHEDULE	
DEVICE	DIM. "A"
9875 & 9875-F	11/16
9975 & 9975-F	11/16
8875 & 8875-F	1/2
5575 & 5575-F	1/2

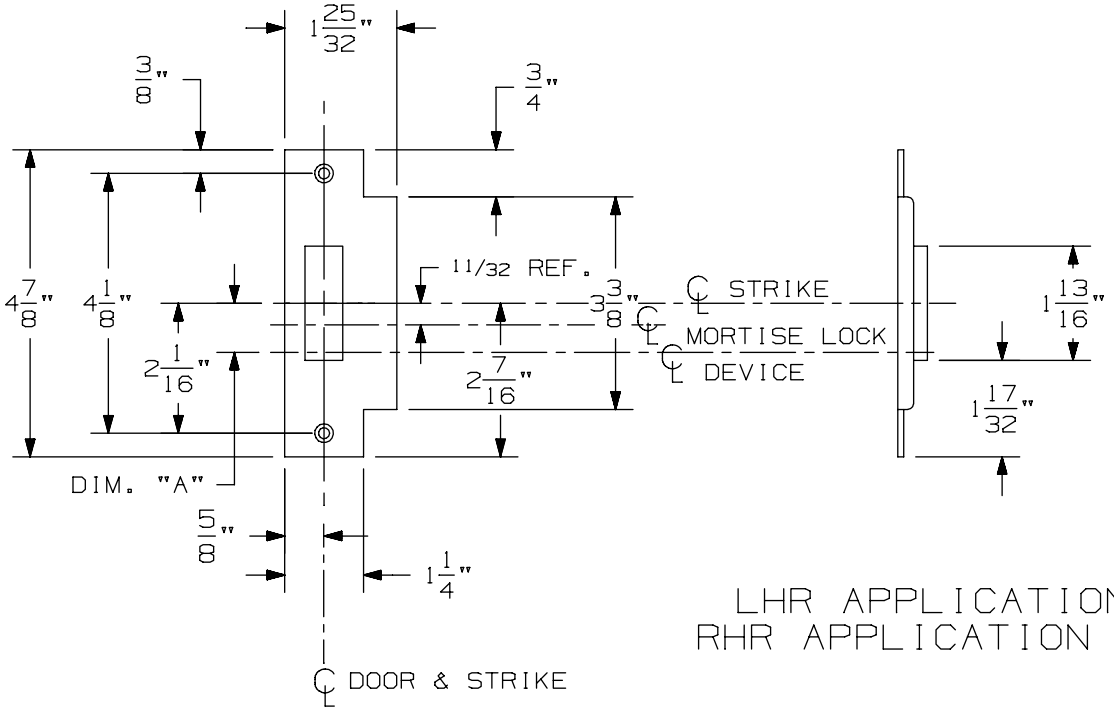

LHR APPLICATION SHOWN
RHR APPLICATION OPPOSITE

575 Mortise Strike (Single Door) for 7500 Mortise Lock

VON DUPRIN®

NOTES: SEE MASTER SHEET #10001 FOR SUGGESTED REINFORCING

TEMPLATE NUMBER: 30210_b

DATE: 07-22-13

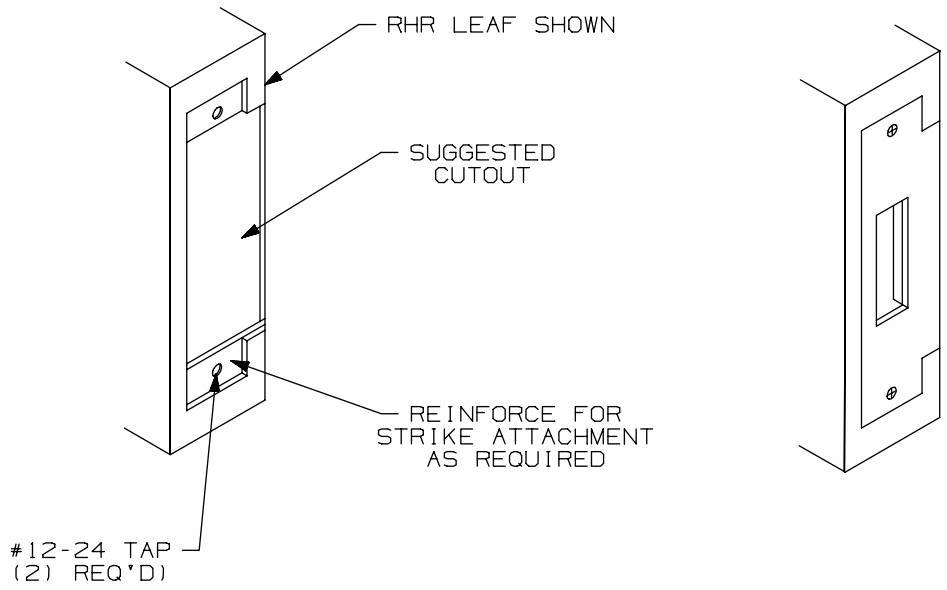

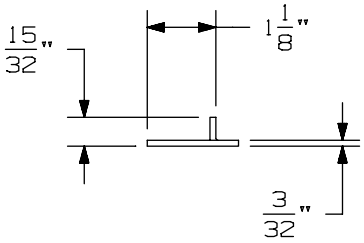

APPLICATION SCHEDULE	
DEVICE	DIM. "A"
9875 & 9875-F	11/16
9975 & 9975-F	11/16
8875 & 8875-F	1/2
5575 & 5575-F	1/2

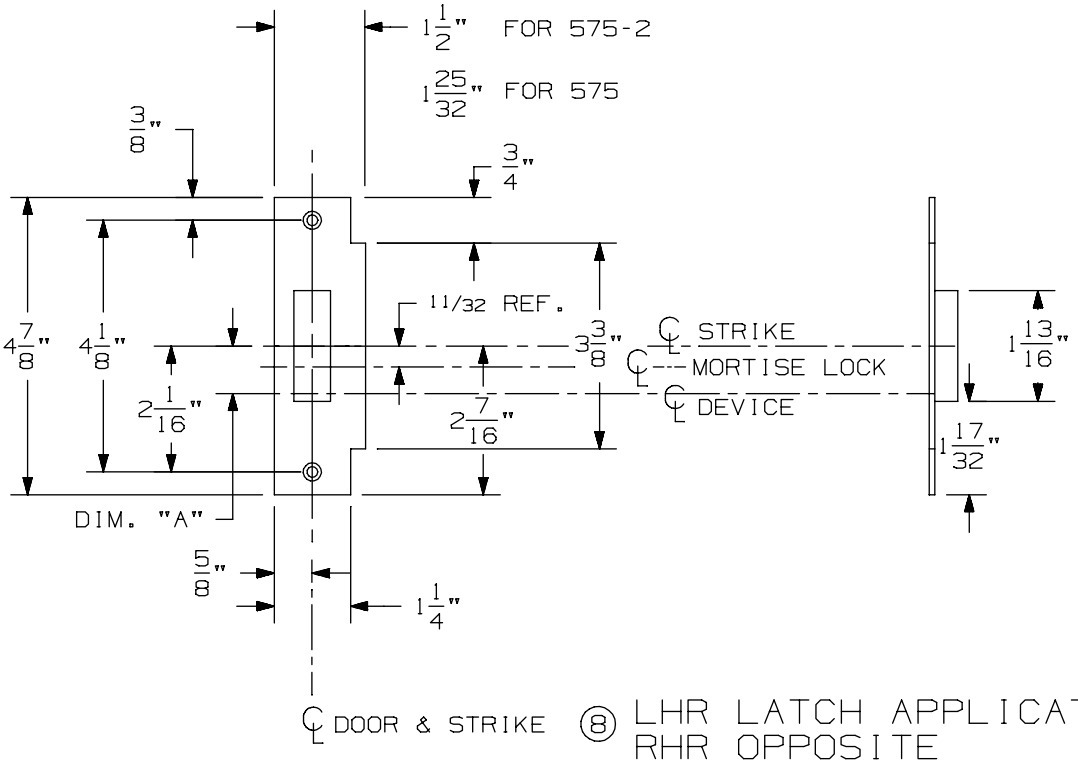

⑧ LHR LATCH APPLICATION SHOWN
RHR OPPOSITE

575-2 Mortise Strike (Double Doors) for 7500 Mortise Lock

VON DUPRIN®

NOTES: SEE MASTER SHEET #10001 FOR SUGGESTED REINFORCING

TEMPLATE NUMBER: 30212_b

DATE: 07-22-13

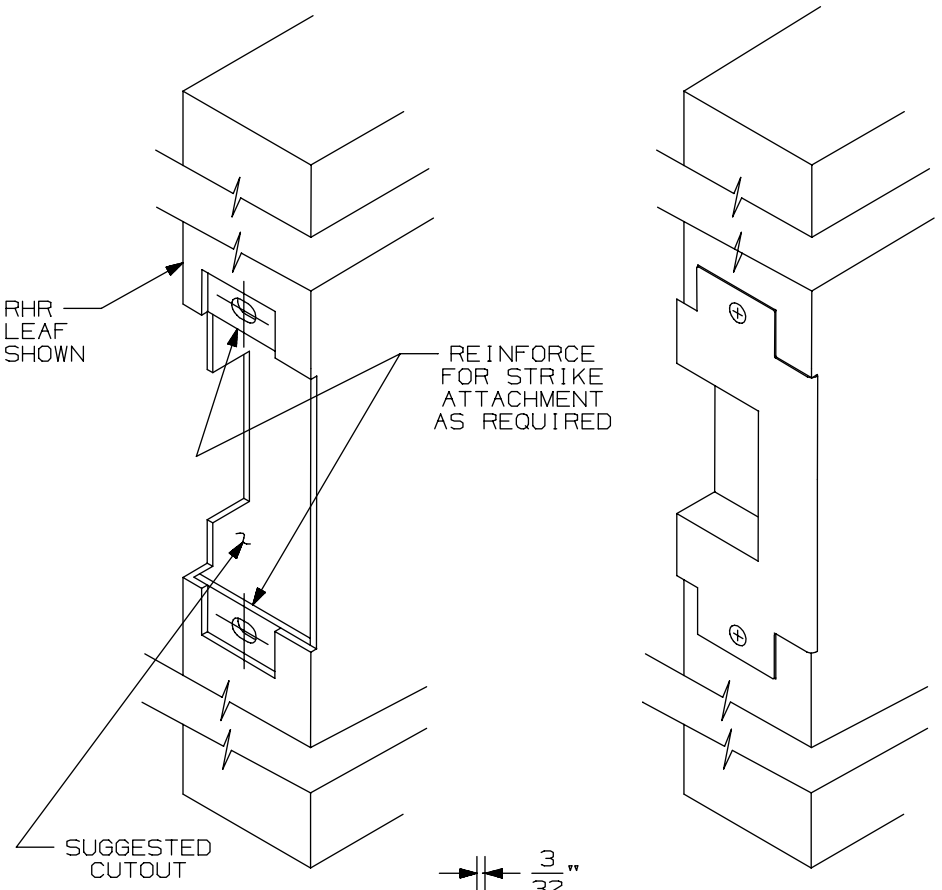

APPLICATION SCHEDULE	
DEVICE	DIM."A"
9875 & 9875-F	11/16
9975 & 9975-F	11/16
8875 & 8875-F	1/2
5575 & 5575-F	1/2

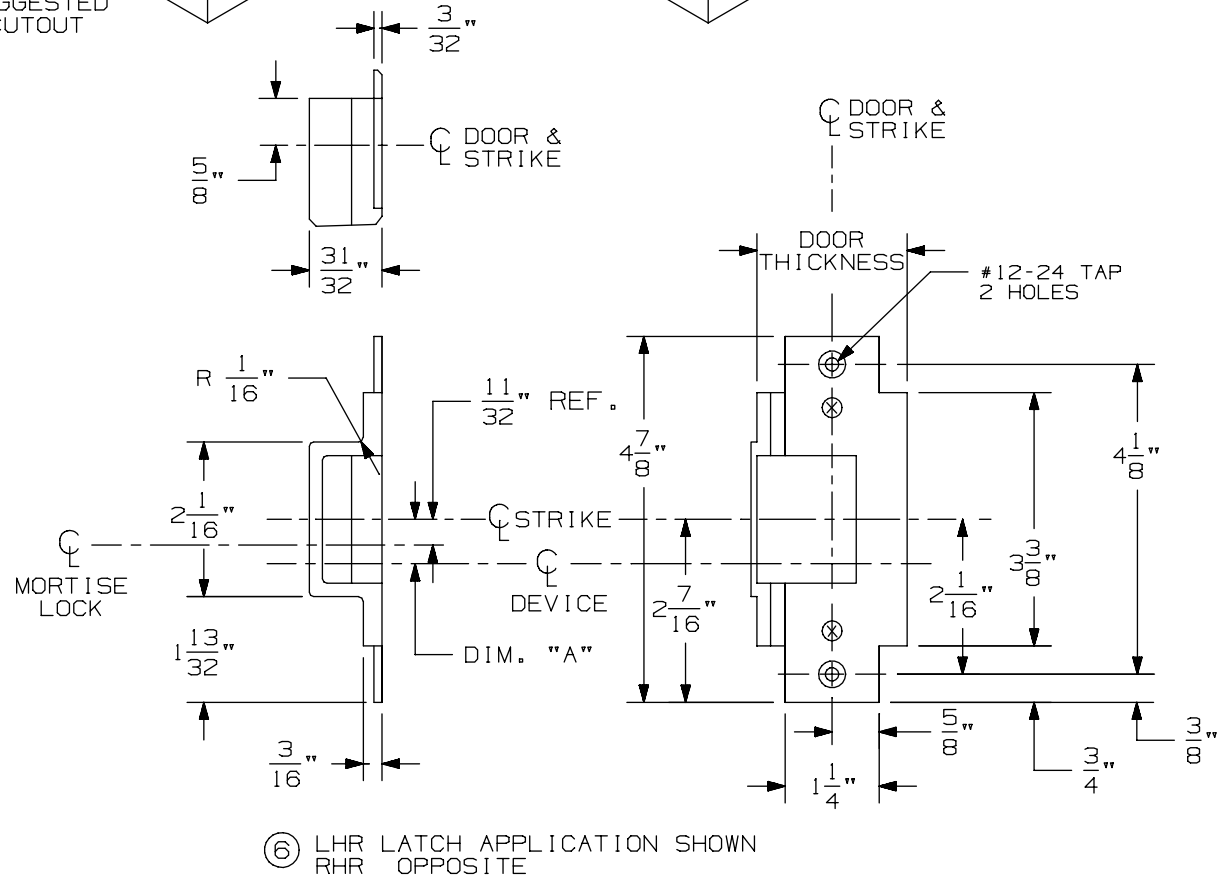

⑥ LHR LATCH APPLICATION SHOWN
RHR OPPOSITE

576A & 576B Mortise Strike for 7500 Mortise Lock

VON DUPRIN®

NOTES: SEE MASTER SHEET #10001 FOR SUGGESTED REINFORCING

TEMPLATE NUMBER: 30211_a

DATE: 05-28-13

9875/9975 & 9875-F/9975-F Series Mortise Lock Devices

NOTES: SEE MASTER SHEET #10001 FOR SUGGESTED REINFORCING

TEMPLATE NUMBER: 10305_a

DATE: 05-21-13

VON DUPRIN®

NOTES:
1. THESE FOUR HOLES TO BE PREPARED FOR SURFACE APPLICATION WHEN USING 696/697 TRIM. DO NOT PREPARE FOR SEX BOLTS.
2. FOR STOCK HOLLOW METAL DOORS SEE TEMPLATE NUMBER 10312 FOR TYPE '86' CUTOUT.
3. GLASS BEAD KIT AVAILABLE WHEN REQUIRED.
4. WIRING TO SS7500 & E7500 LOCKS GO THROUGH DOOR NOT DEVICE.
5. FOR OUTSIDE TRIM PREPARATION, WHEN REQUIRED, SEE TRIM TEMPLATE.
15 6. THE SS7500 LOCK MUST BE USED FOR LX98/9975 SERIES DEVICE APPLICATIONS.

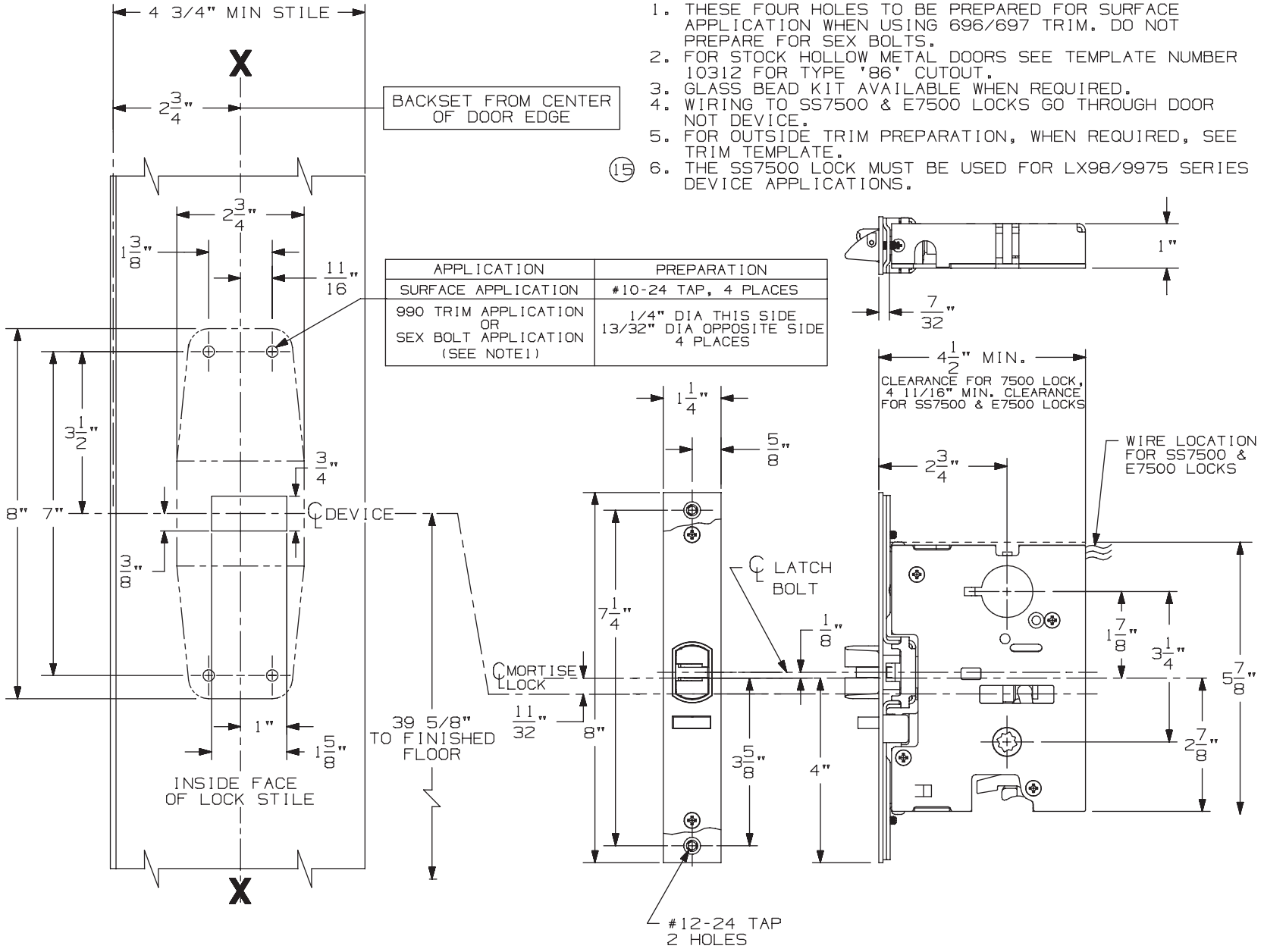

APPLICATION	PREPARATION
SURFACE APPLICATION	#10-24 TAP, 4 PLACES
990 TRIM APPLICATION OR SEX BOLT APPLICATION (SEE NOTE1)	1/4" DIA THIS SIDE 13/32" DIA OPPOSITE SIDE 4 PLACES

LHR APPLICATION SHOWN, RHR APPLICATION OPPOSITE

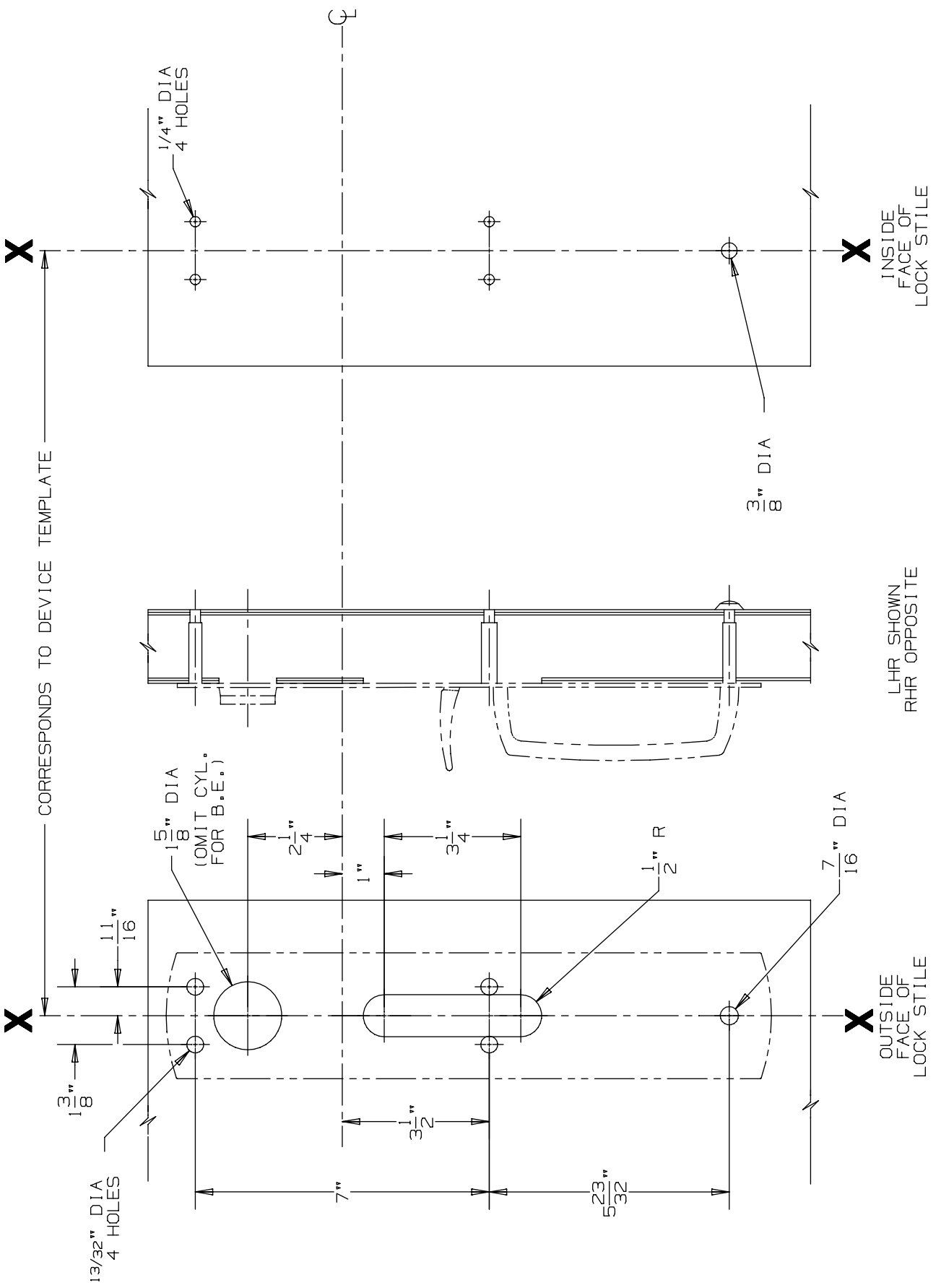

DEVICE APPLICATION SCHEDULE
9875/9975 SERIES DEVICE

990 TP & 990 TP-BE Trim

VON DUPRIN®

NOTES: SEE MASTER SHEET #10001 FOR SUGGESTED REINFORCING

TEMPLATE NUMBER: 20270_a

DATE: 05-23-13

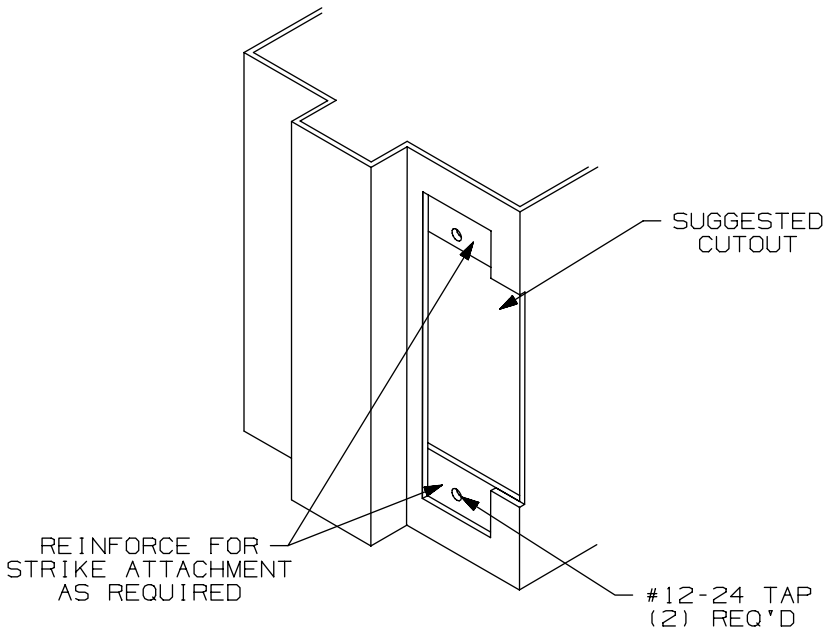

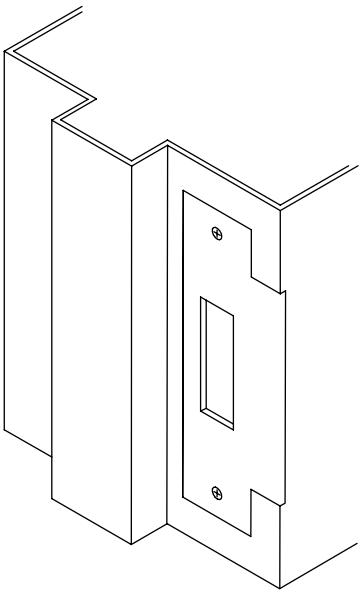

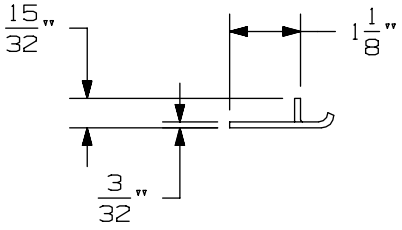

APPLICATION SCHEDULE	
DEVICE	DIM. "A"
9875 & 9875-F	11/16
9975 & 9975-F	11/16
8875 & 8875-F	1/2
5575 & 5575-F	1/2

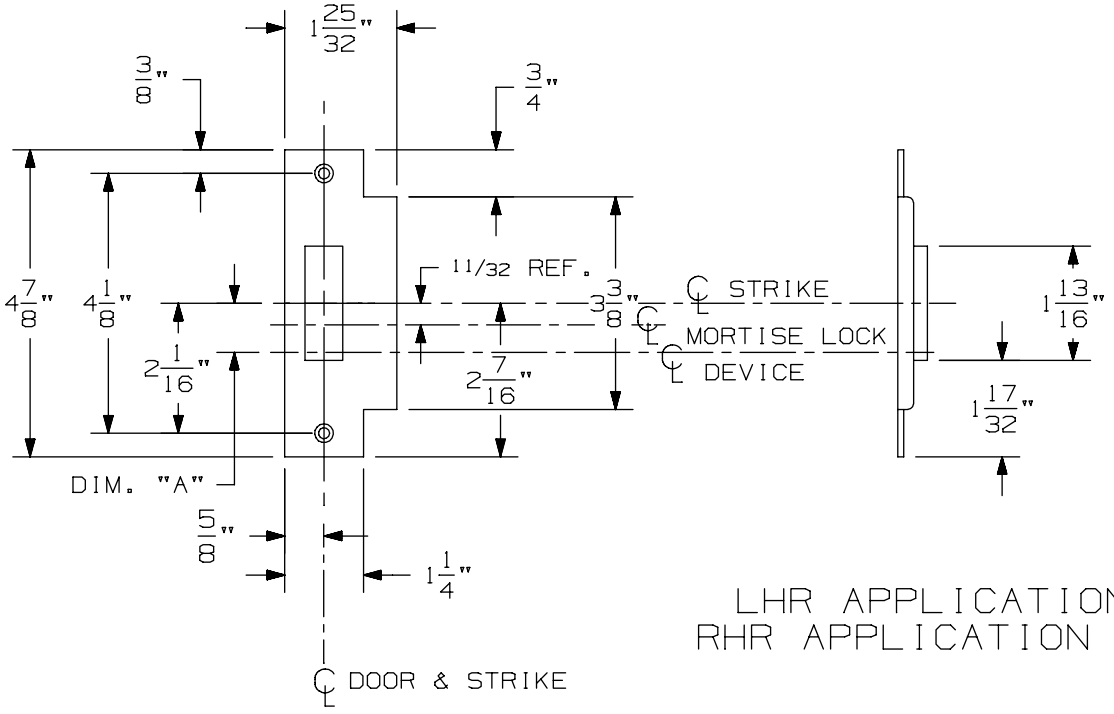

LHR APPLICATION SHOWN
RHR APPLICATION OPPOSITE

575 Mortise Strike (Single Door) for 7500 Mortise Lock

VON DUPRIN®

NOTES: SEE MASTER SHEET #10001 FOR SUGGESTED REINFORCING

TEMPLATE NUMBER: 30210_b

DATE: 07-22-13

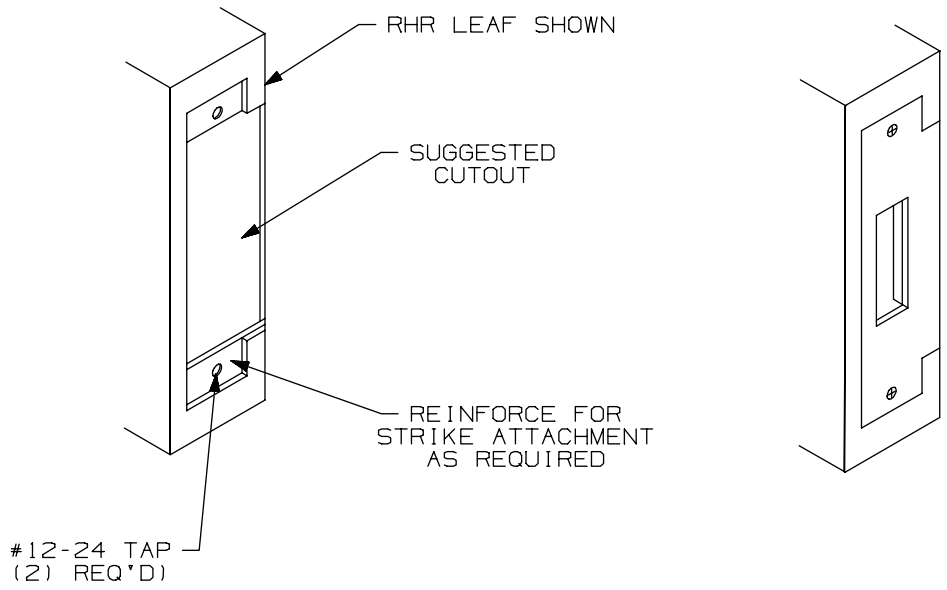

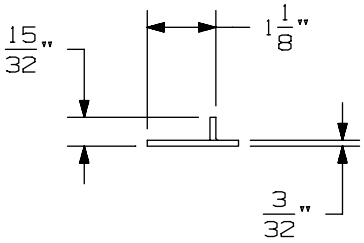

APPLICATION SCHEDULE	
DEVICE	DIM. "A"
9875 & 9875-F	11/16
9975 & 9975-F	11/16
8875 & 8875-F	1/2
5575 & 5575-F	1/2

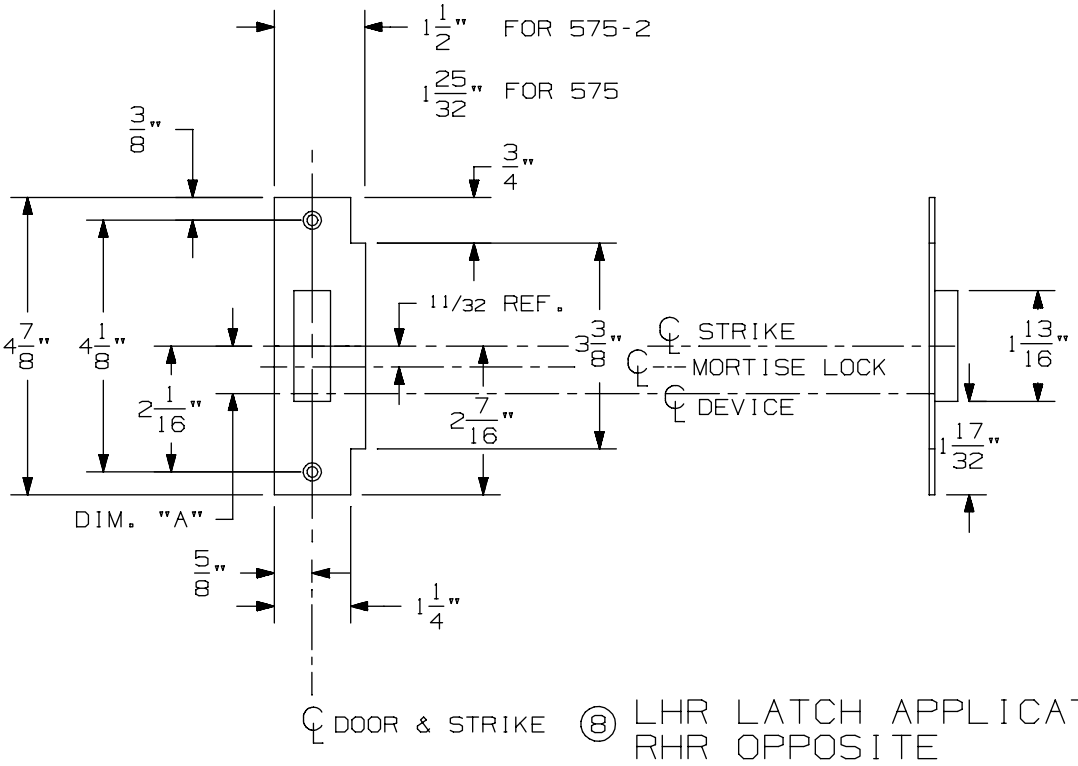

⑧ LHR LATCH APPLICATION SHOWN
RHR OPPOSITE

575-2 Mortise Strike (Double Doors) for 7500 Mortise Lock

VON DUPRIN®

NOTES: SEE MASTER SHEET #10001 FOR SUGGESTED REINFORCING

TEMPLATE NUMBER: 30212_b

DATE: 07-22-13

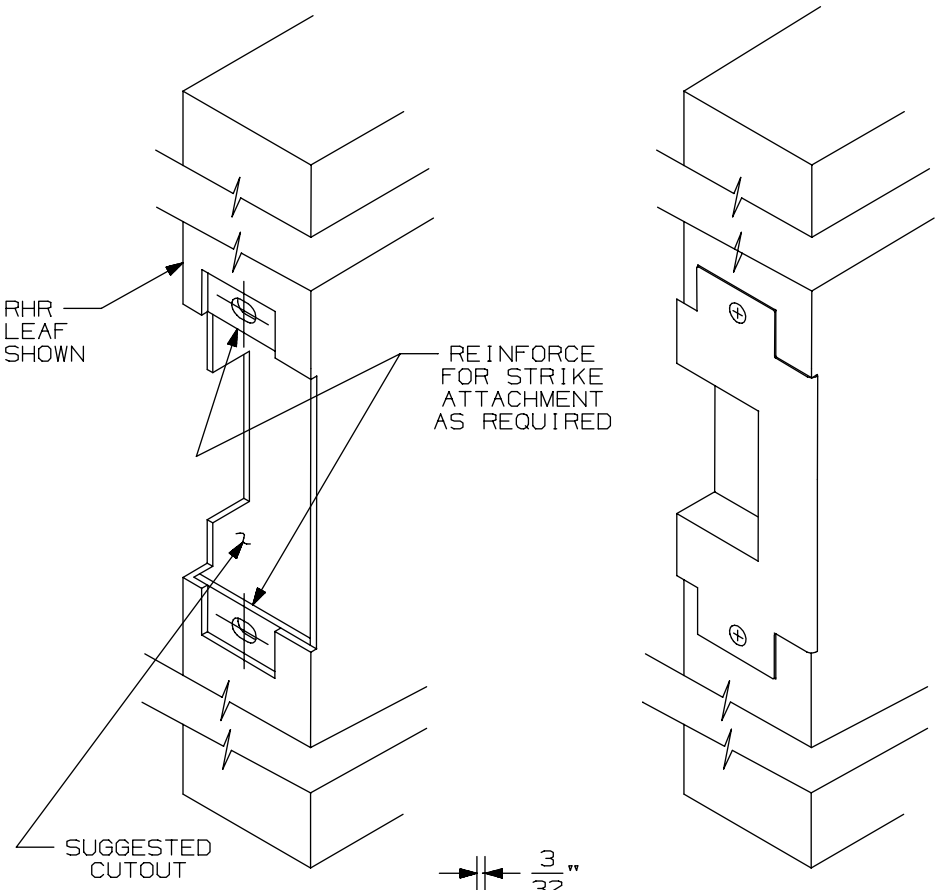

APPLICATION SCHEDULE	
DEVICE	DIM."A"
9875 & 9875-F	11/16
9975 & 9975-F	11/16
8875 & 8875-F	1/2
5575 & 5575-F	1/2

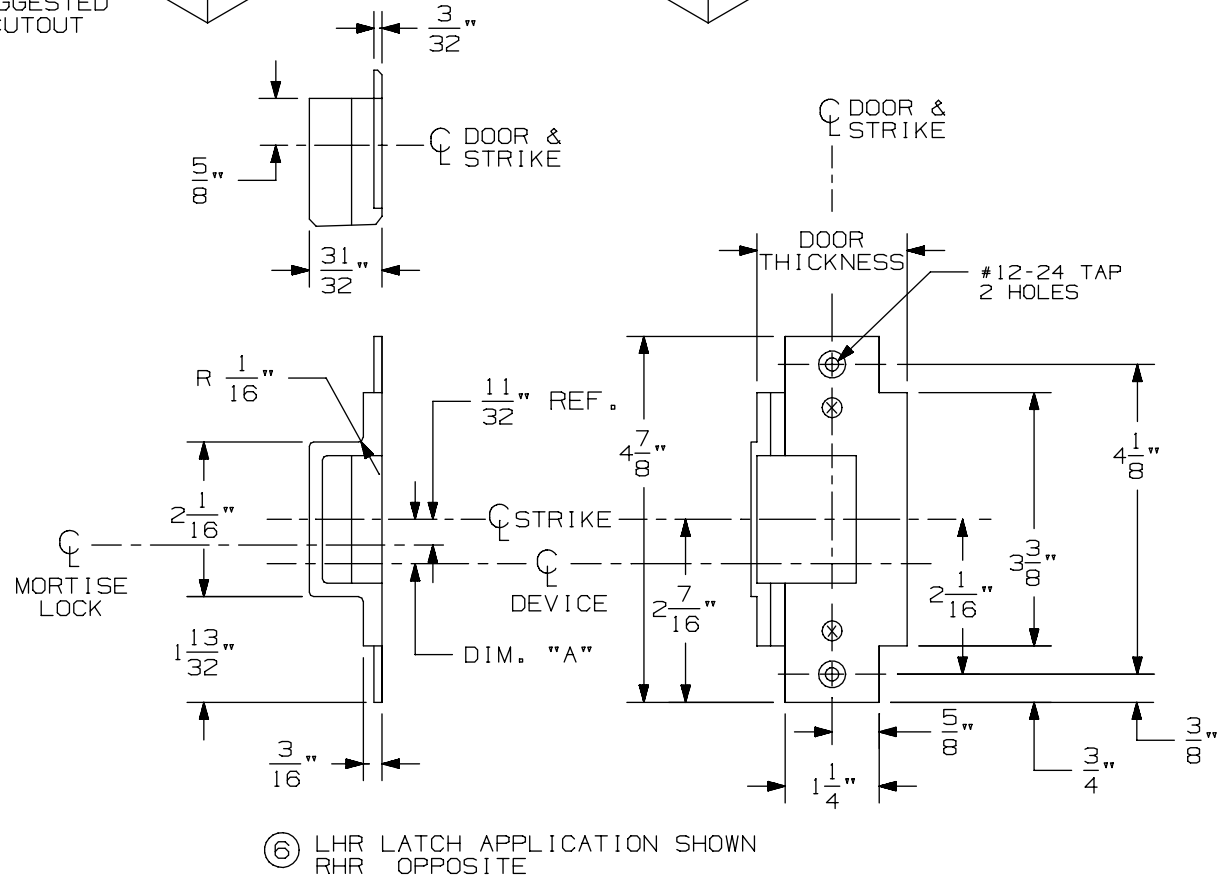

⑥ LHR LATCH APPLICATION SHOWN
RHR OPPOSITE

576A & 576B Mortise Strike for 7500 Mortise Lock

VON DUPRIN®

NOTES: SEE MASTER SHEET #10001 FOR SUGGESTED REINFORCING

TEMPLATE NUMBER: 30211_a

DATE: 05-28-13

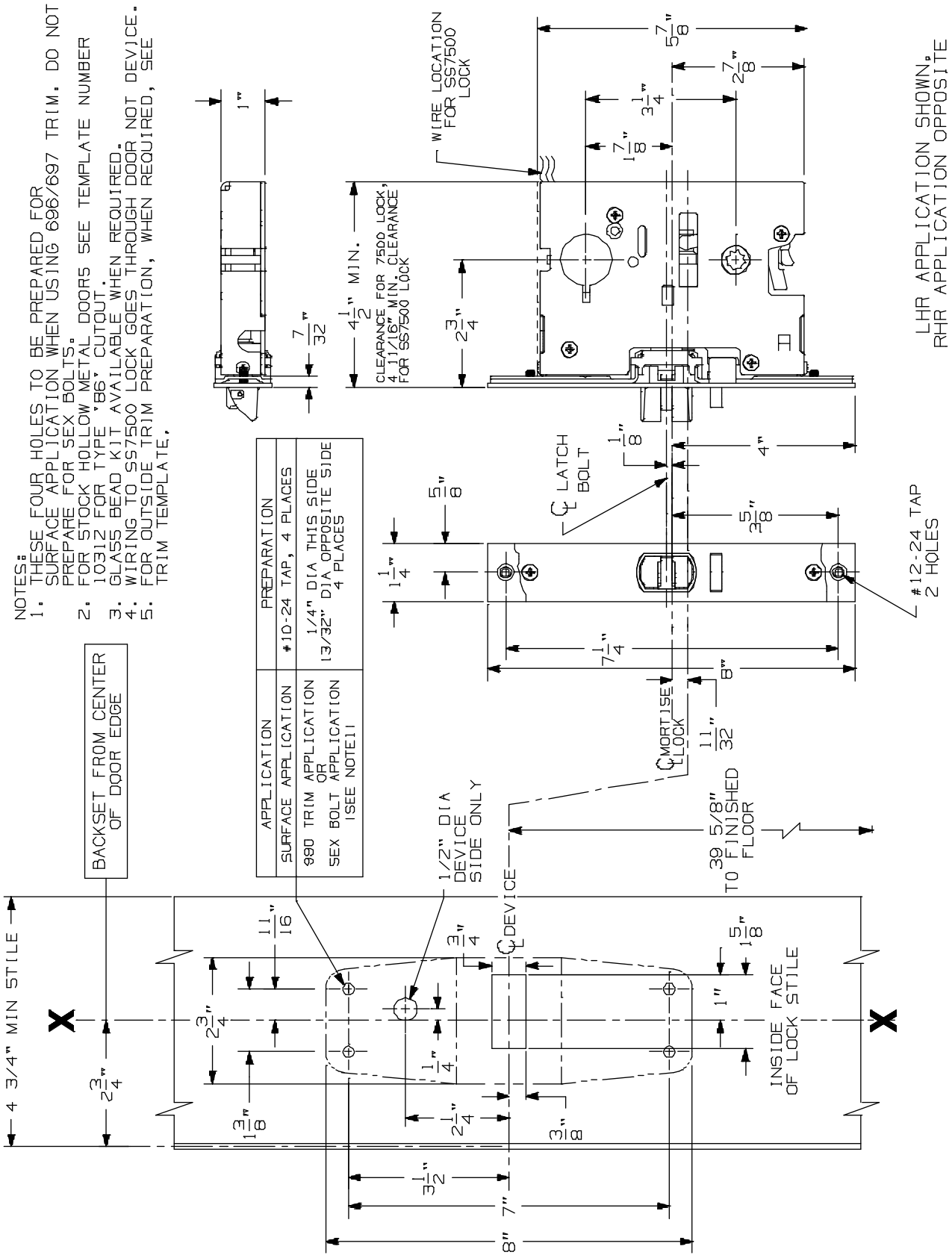

98/9975-2 Series Mortise Lock Devices

VON DUPRIN®

NOTES: SEE MASTER SHEET #10001 FOR SUGGESTED REINFORCING

TEMPLATE NUMBER: 10368_a

DATE: 05-22-13

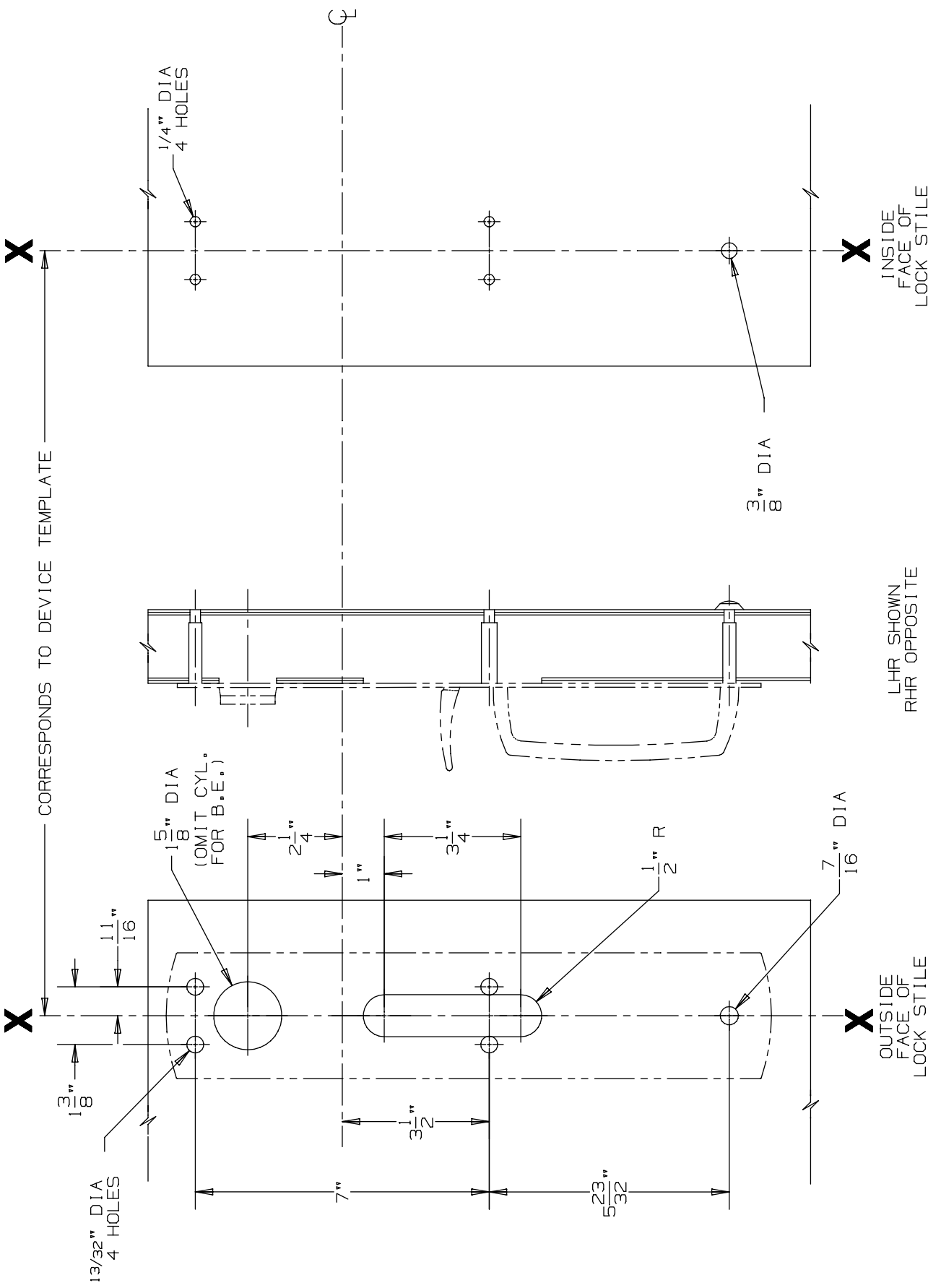

DEVICE APPLICATION SCHEDULE
9875/9975 SERIES DEVICE

990 TP & 990 TP-BE Trim

VON DUPRIN®

NOTES: SEE MASTER SHEET #10001 FOR SUGGESTED REINFORCING

TEMPLATE NUMBER: 20270_a

DATE: 05-23-13

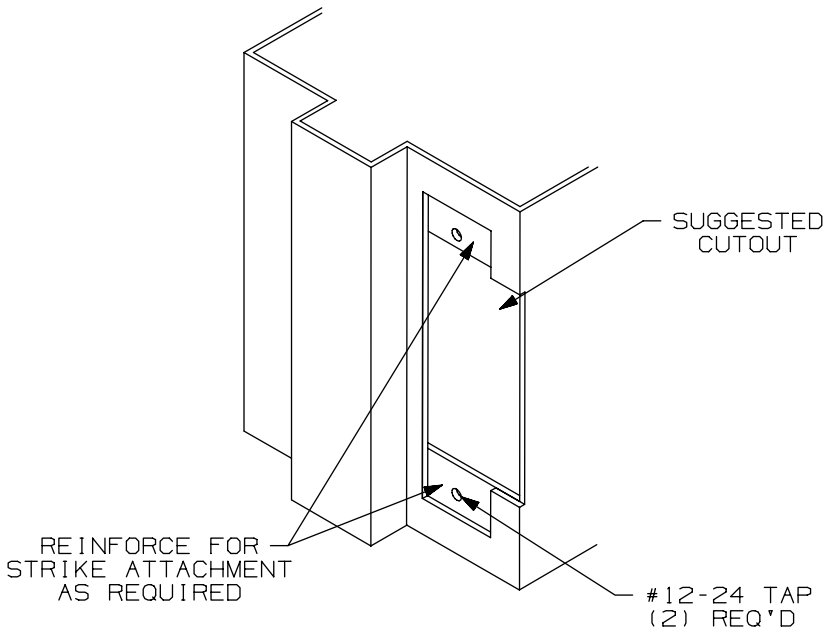

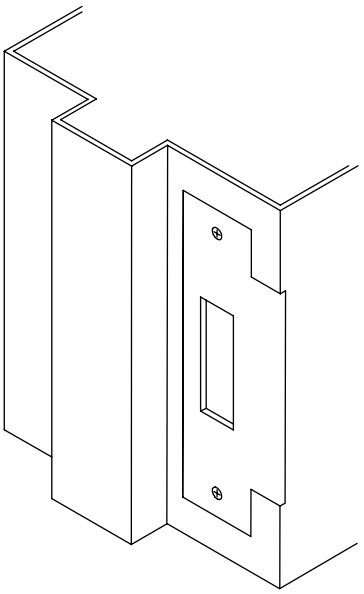

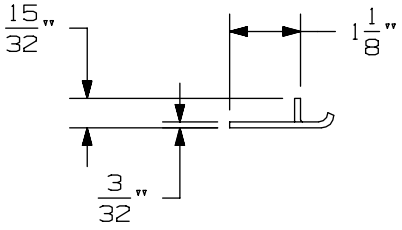

APPLICATION SCHEDULE	
DEVICE	DIM. "A"
9875 & 9875-F	11/16
9975 & 9975-F	11/16
8875 & 8875-F	1/2
5575 & 5575-F	1/2

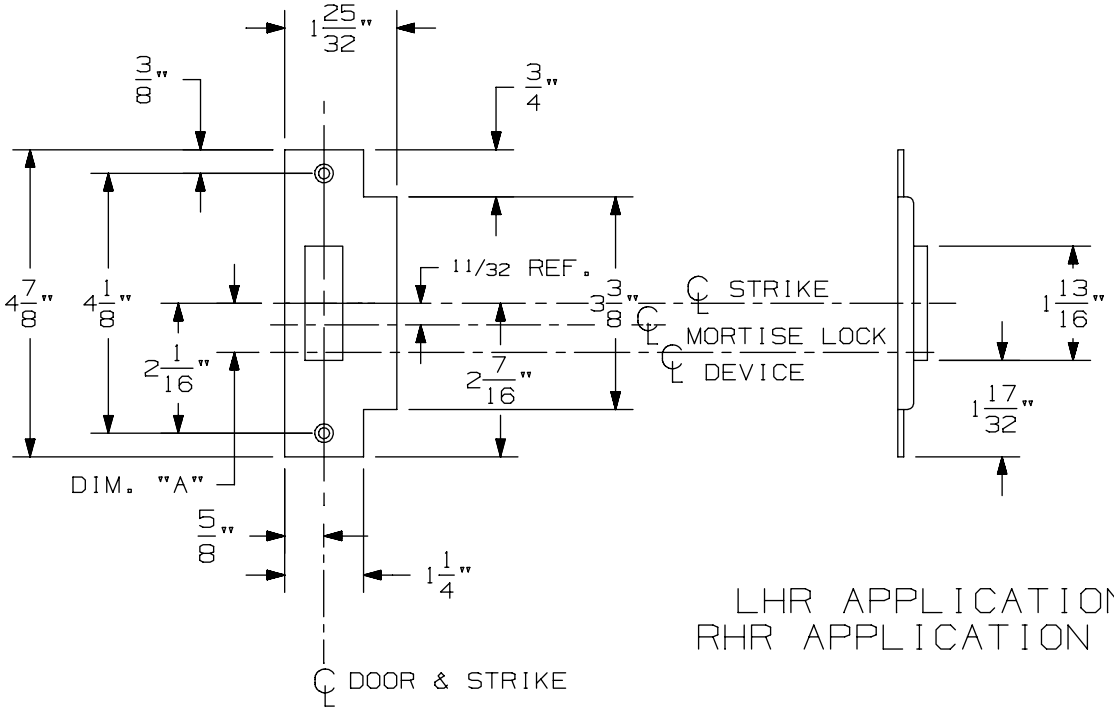

LHR APPLICATION SHOWN
RHR APPLICATION OPPOSITE

575 Mortise Strike (Single Door) for 7500 Mortise Lock

VON DUPRIN®

NOTES: SEE MASTER SHEET #10001 FOR SUGGESTED REINFORCING

TEMPLATE NUMBER: 30210_b

DATE: 07-22-13

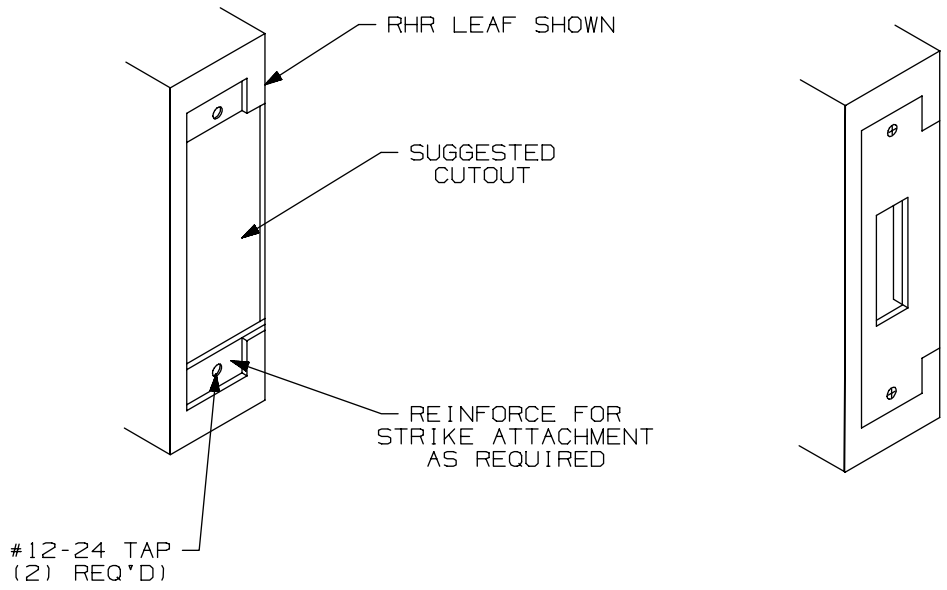

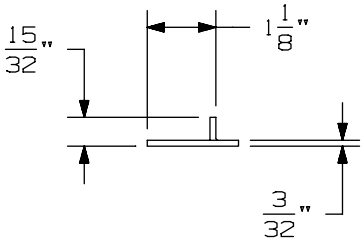

APPLICATION SCHEDULE	
DEVICE	DIM. "A"
9875 & 9875-F	11/16
9975 & 9975-F	11/16
8875 & 8875-F	1/2
5575 & 5575-F	1/2

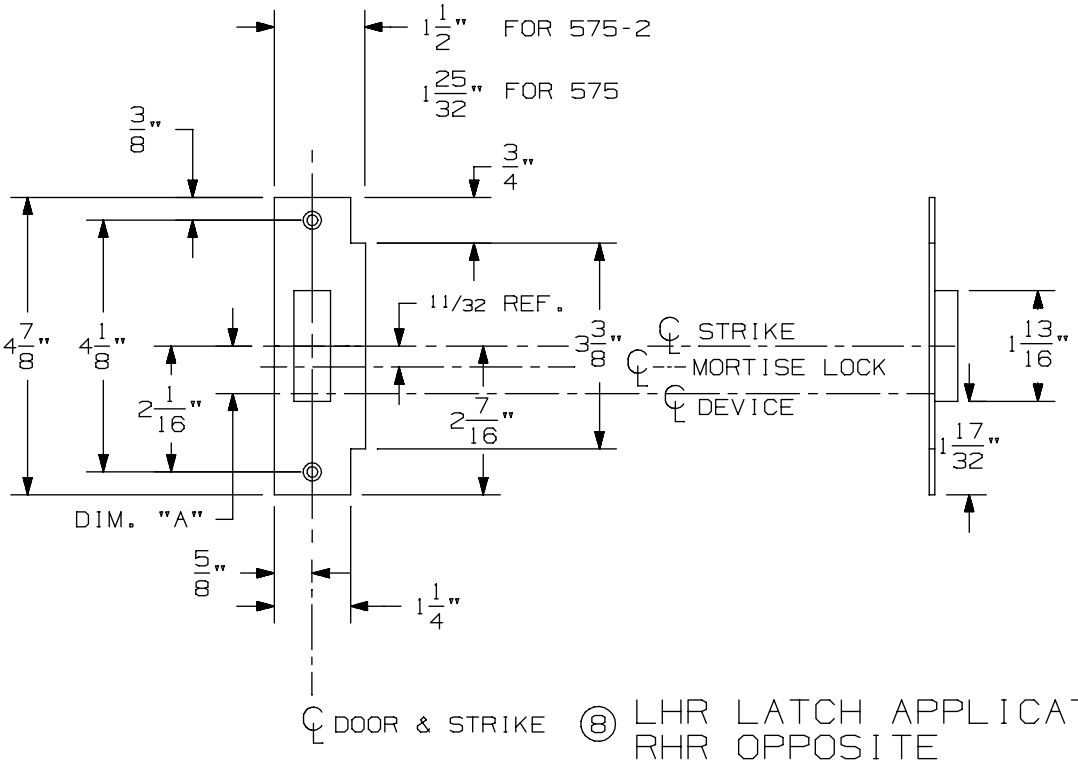

⑧ LHR LATCH APPLICATION SHOWN
RHR OPPOSITE

575-2 Mortise Strike (Double Doors) for 7500 Mortise Lock

VON DUPRIN®

NOTES: SEE MASTER SHEET #10001 FOR SUGGESTED REINFORCING

TEMPLATE NUMBER: 30212_b

DATE: 07-22-13

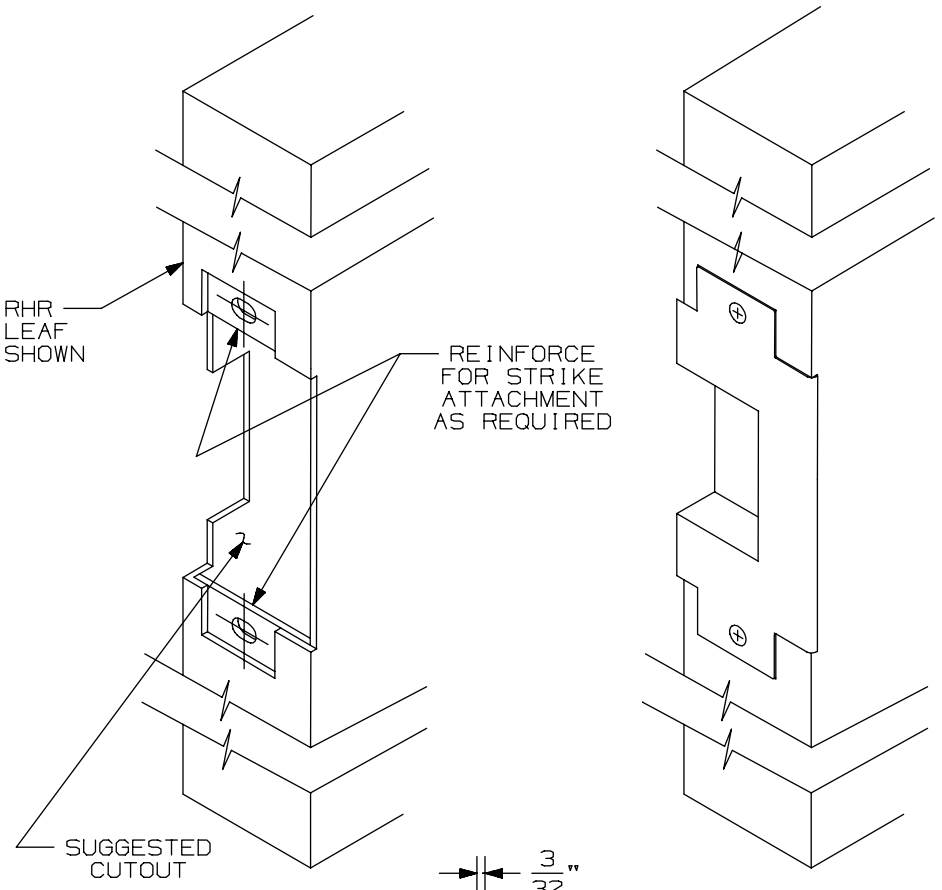

APPLICATION SCHEDULE	
DEVICE	DIM."A"
9875 & 9875-F	11/16
9975 & 9975-F	11/16
8875 & 8875-F	1/2
5575 & 5575-F	1/2

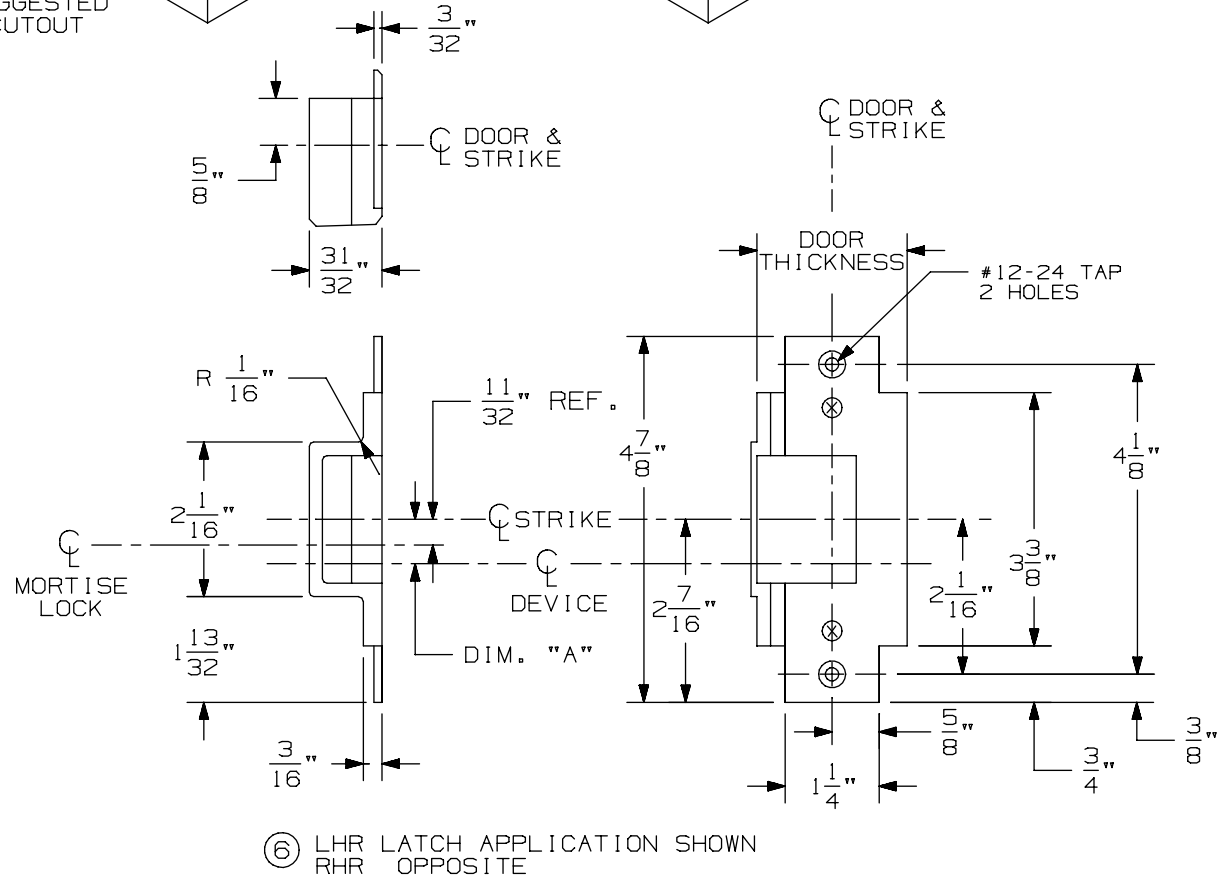

⑥ LHR LATCH APPLICATION SHOWN
RHR OPPOSITE

576A & 576B Mortise Strike for 7500 Mortise Lock

VON DUPRIN®

NOTES: SEE MASTER SHEET #10001 FOR SUGGESTED REINFORCING

TEMPLATE NUMBER: 30211_a

DATE: 05-28-13

98 / 99 Series Exit Devices

-

E9875K-F/E9975K-F

9875/9975 & 9875-F/9975-F Series Mortise Lock Devices

NOTES: SEE MASTER SHEET #10001 FOR SUGGESTED REINFORCING

TEMPLATE NUMBER: 10305_a

DATE: 05-21-13

VON DUPRIN®

NOTES:
1. THESE FOUR HOLES TO BE PREPARED FOR SURFACE APPLICATION WHEN USING 696/697 TRIM. DO NOT PREPARE FOR SEX BOLTS.
2. FOR STOCK HOLLOW METAL DOORS SEE TEMPLATE NUMBER 10312 FOR TYPE '86' CUTOUT.
3. GLASS BEAD KIT AVAILABLE WHEN REQUIRED.
4. WIRING TO SS7500 & E7500 LOCKS GO THROUGH DOOR NOT DEVICE.
5. FOR OUTSIDE TRIM PREPARATION, WHEN REQUIRED, SEE TRIM TEMPLATE.
(15) 6. THE SS7500 LOCK MUST BE USED FOR LX98/9975 SERIES DEVICE APPLICATIONS.

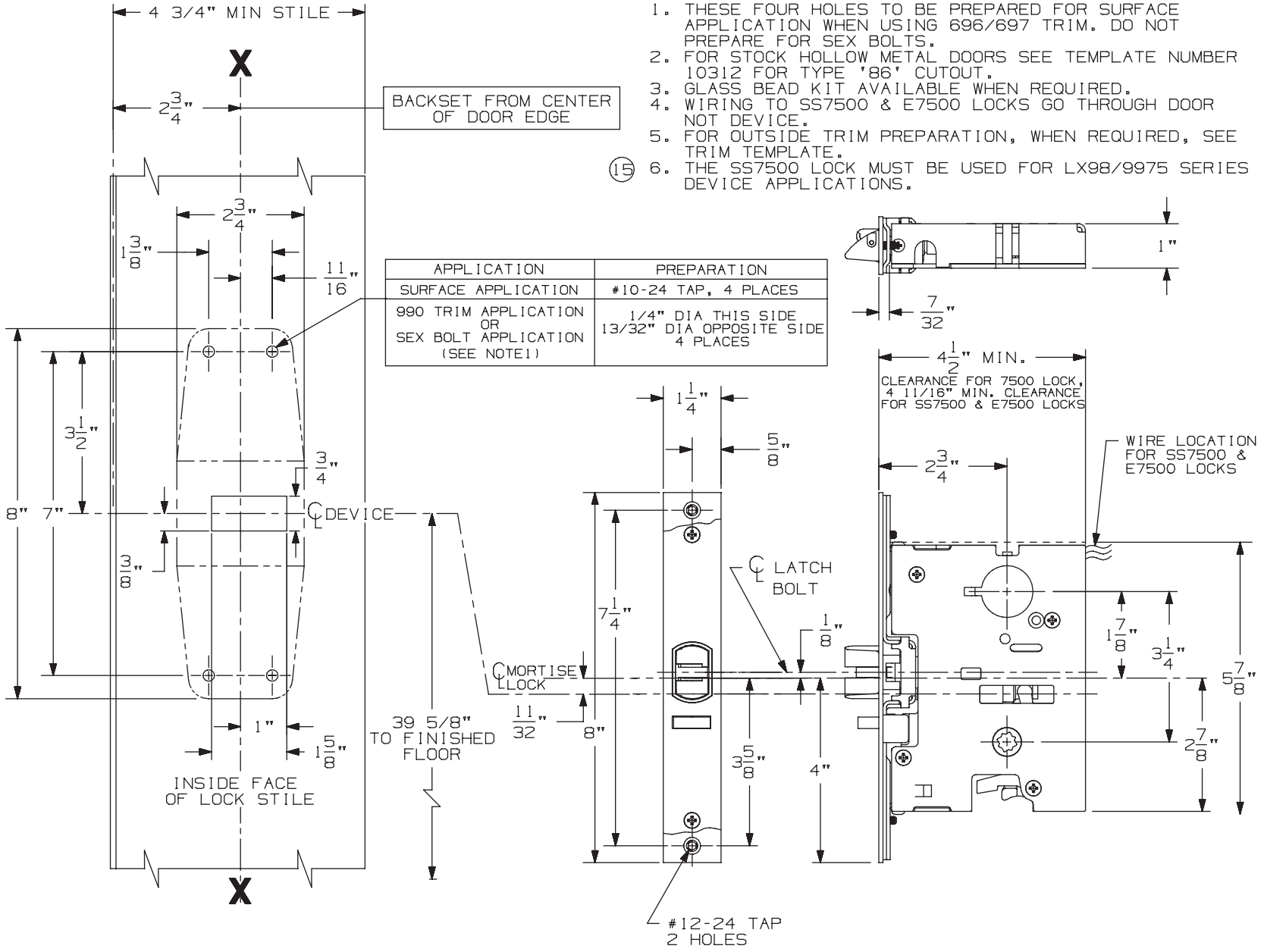

APPLICATION	PREPARATION
SURFACE APPLICATION	#10-24 TAP, 4 PLACES
990 TRIM APPLICATION OR SEX BOLT APPLICATION (SEE NOTE1)	1/4" DIA THIS SIDE 13/32" DIA OPPOSITE SIDE 4 PLACES

LHR APPLICATION SHOWN, RHR APPLICATION OPPOSITE

991 K & 992 L Trim for Mortise Device

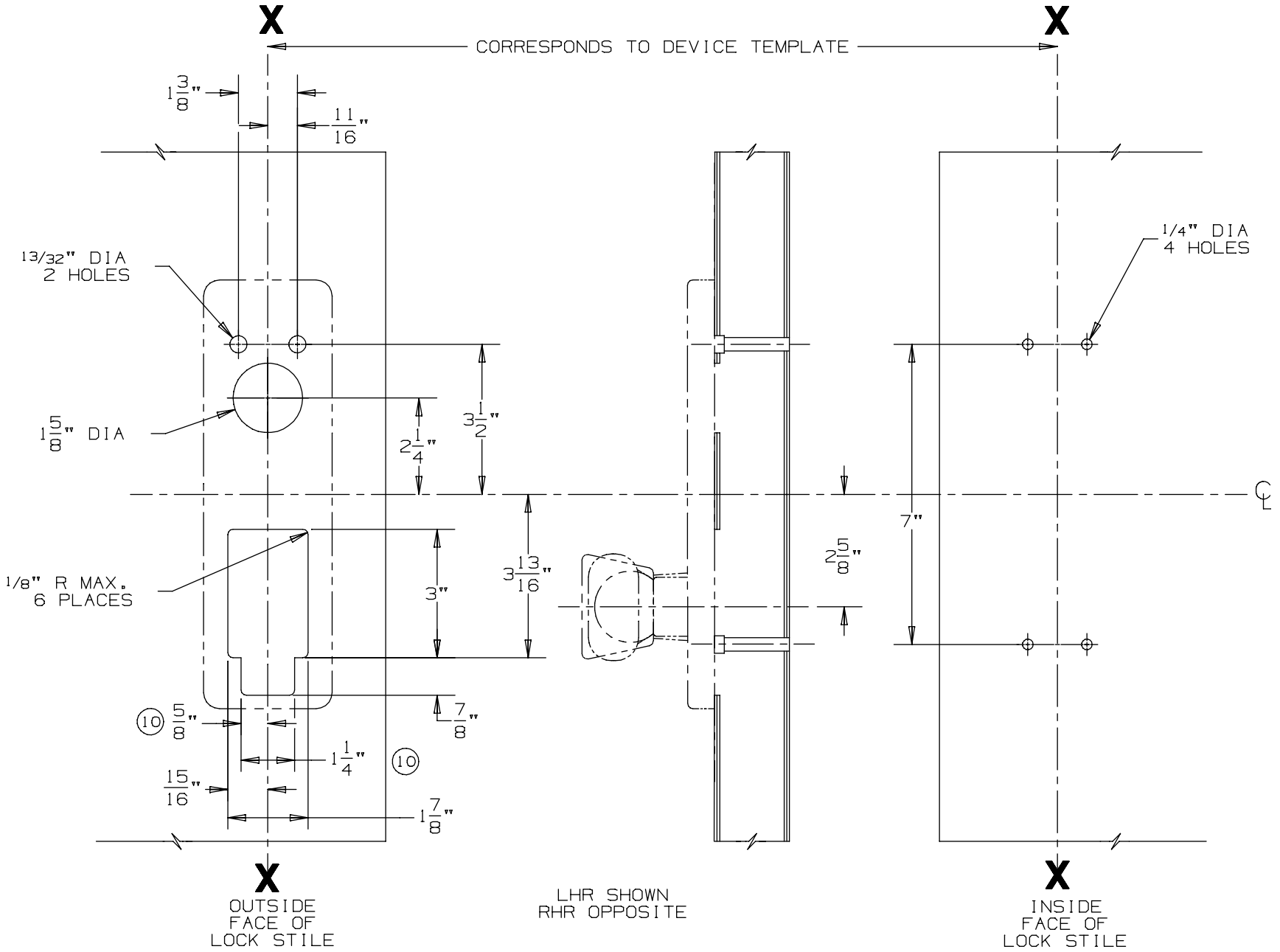

DEVICE APPLICATION SCHEDULE
9875/9975 SERIES DEVICE

NOTES: SEE MASTER SHEET #10001 FOR SUGGESTED REINFORCING

TEMPLATE NUMBER: 20280_a

DATE: 05-23-13

VON DUPRIN®

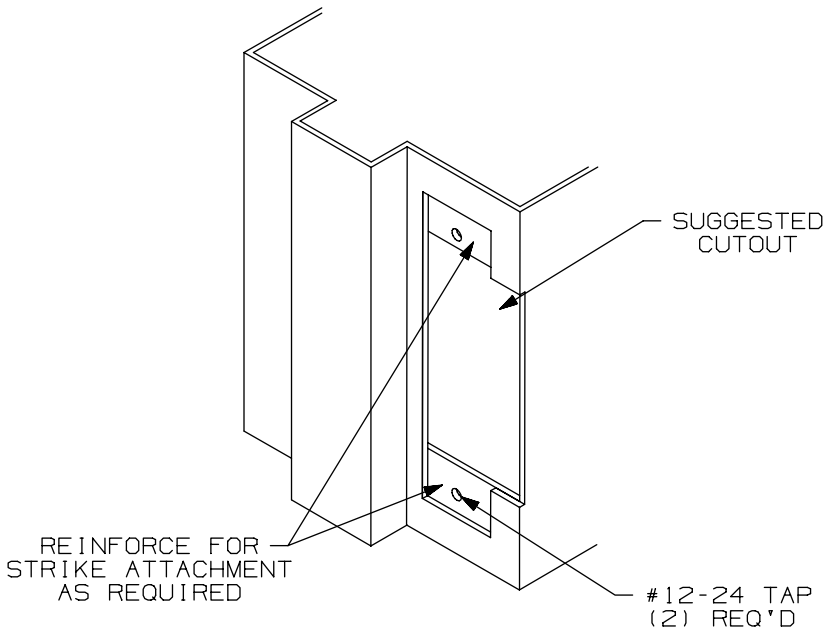

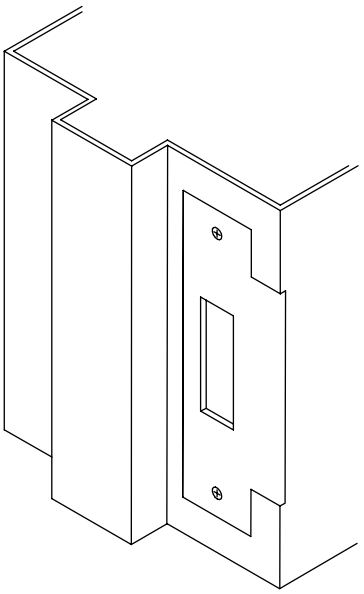

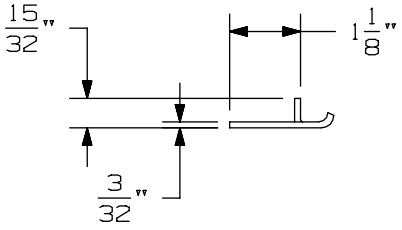

APPLICATION SCHEDULE	
DEVICE	DIM. "A"
9875 & 9875-F	11/16
9975 & 9975-F	11/16
8875 & 8875-F	1/2
5575 & 5575-F	1/2

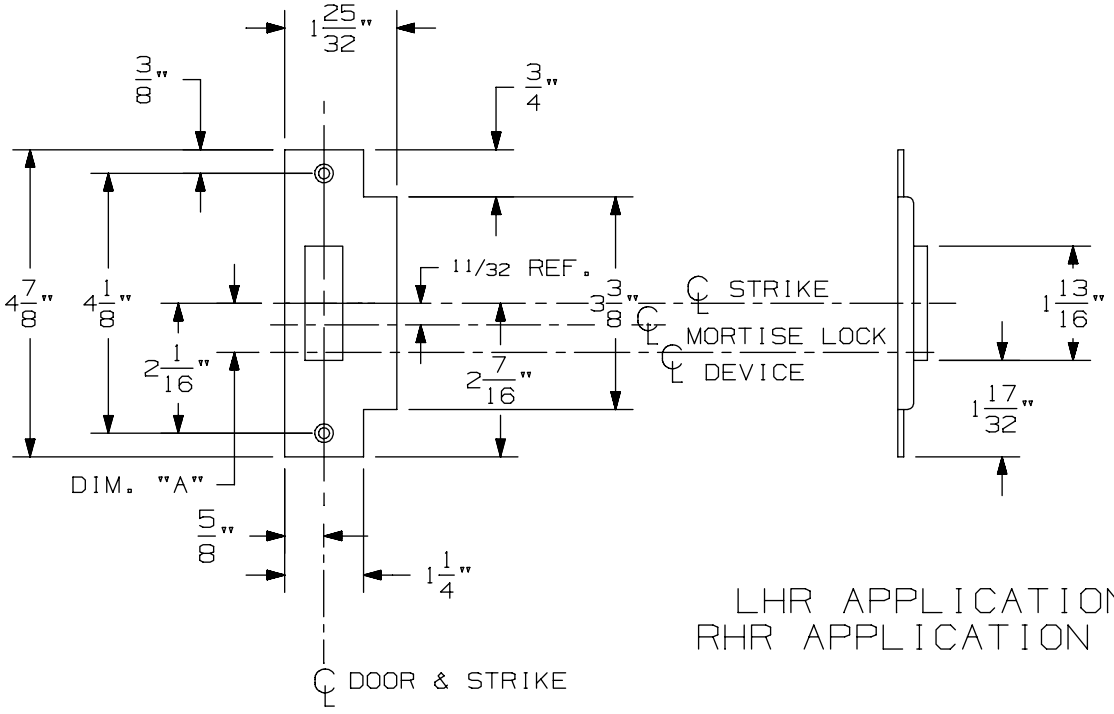

LHR APPLICATION SHOWN
RHR APPLICATION OPPOSITE

575 Mortise Strike (Single Door) for 7500 Mortise Lock

VON DUPRIN®

NOTES: SEE MASTER SHEET #10001 FOR SUGGESTED REINFORCING

TEMPLATE NUMBER: 30210_b

DATE: 07-22-13

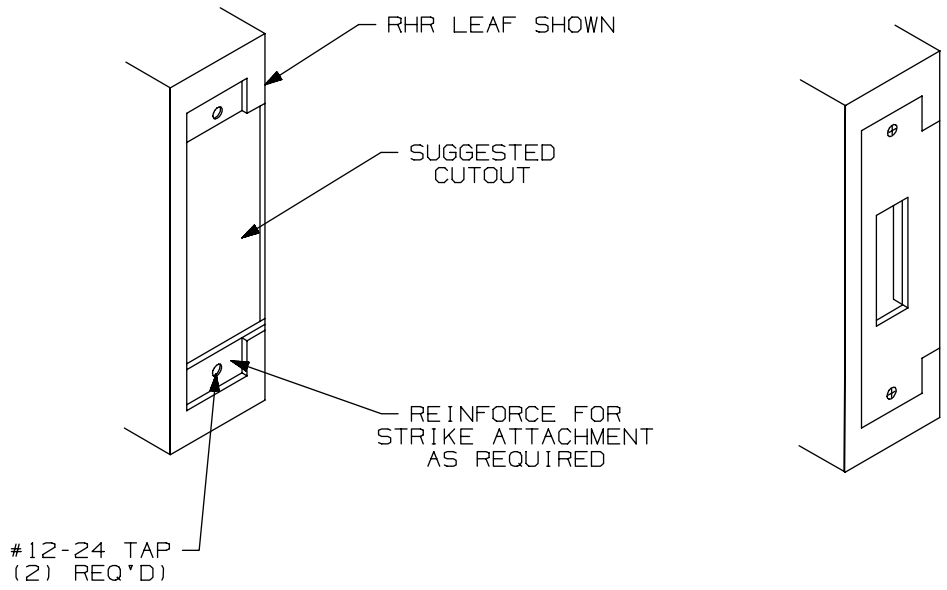

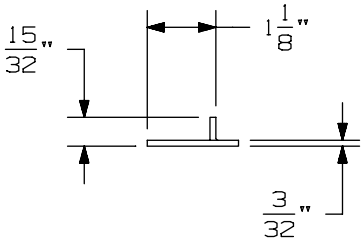

APPLICATION SCHEDULE	
DEVICE	DIM. "A"
9875 & 9875-F	11/16
9975 & 9975-F	11/16
8875 & 8875-F	1/2
5575 & 5575-F	1/2

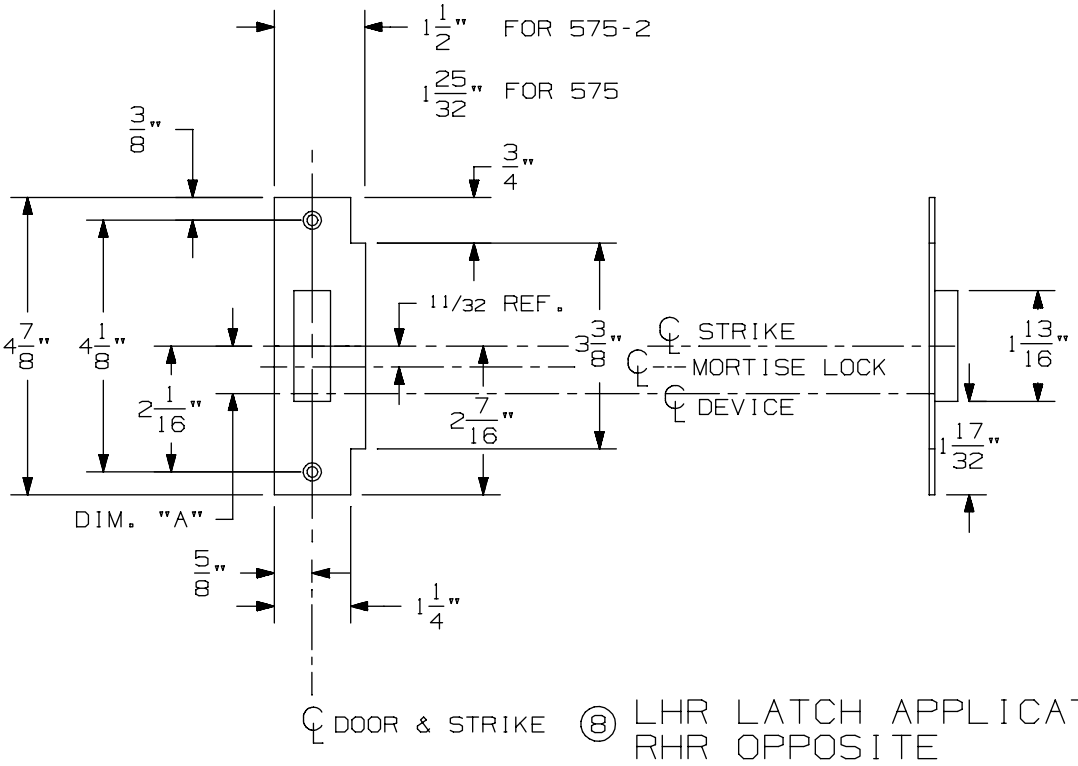

⑧ LHR LATCH APPLICATION SHOWN
RHR OPPOSITE

575-2 Mortise Strike (Double Doors) for 7500 Mortise Lock

VON DUPRIN®

NOTES: SEE MASTER SHEET #10001 FOR SUGGESTED REINFORCING

TEMPLATE NUMBER: 30212_b

DATE: 07-22-13

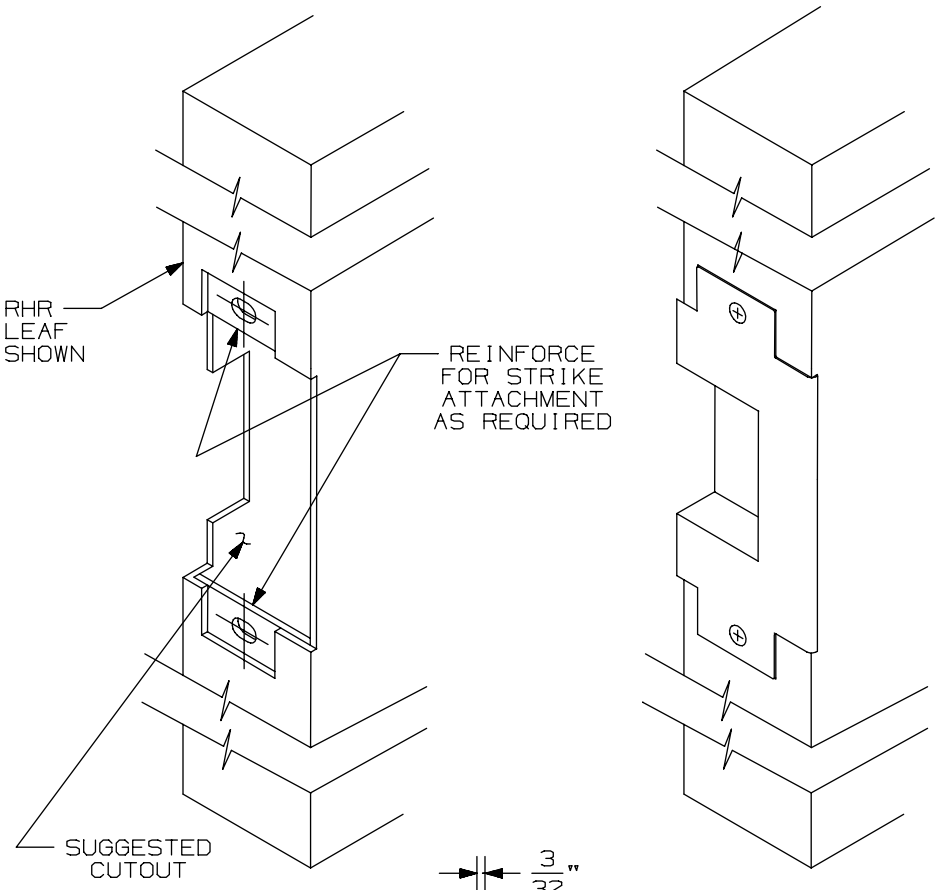

APPLICATION SCHEDULE	
DEVICE	DIM."A"
9875 & 9875-F	11/16
9975 & 9975-F	11/16
8875 & 8875-F	1/2
5575 & 5575-F	1/2

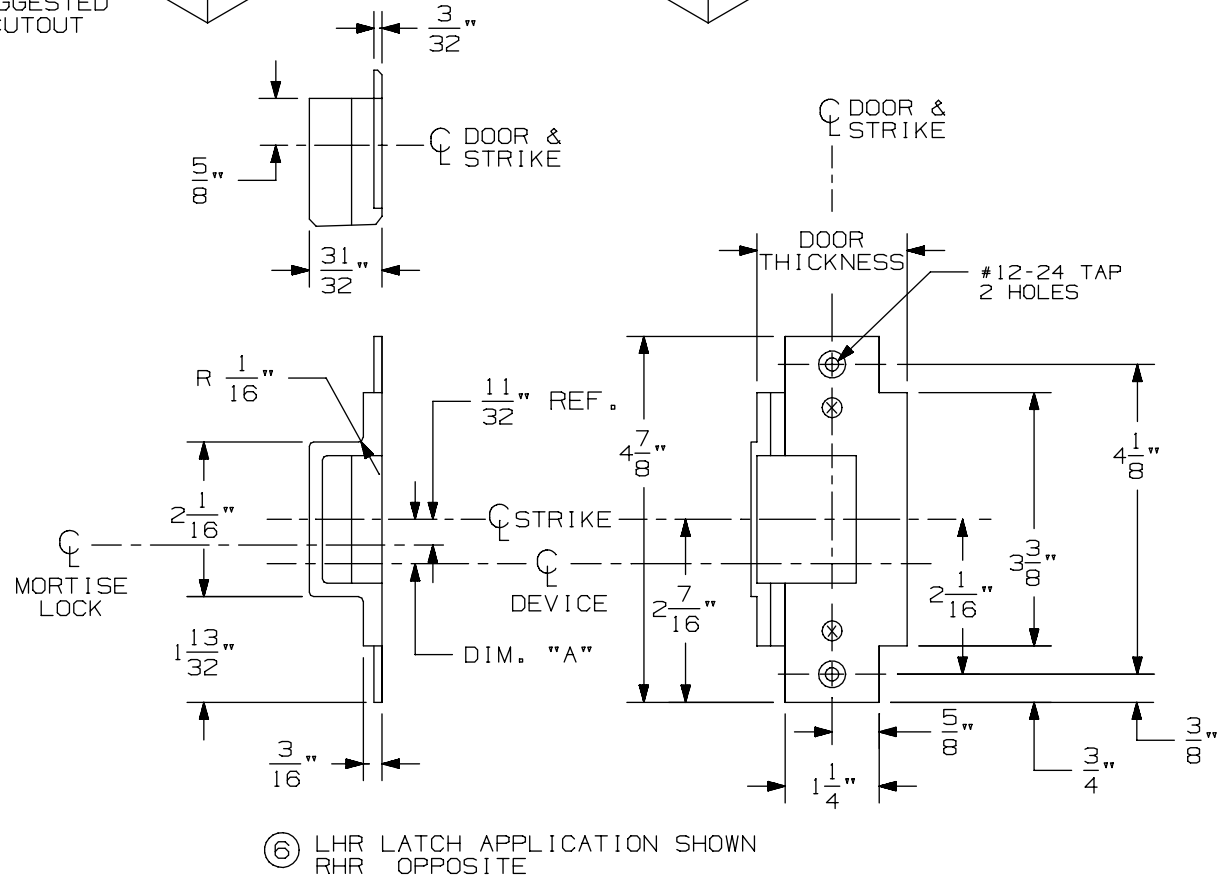

⑥ LHR LATCH APPLICATION SHOWN
RHR OPPOSITE

576A & 576B Mortise Strike for 7500 Mortise Lock

VON DUPRIN®

NOTES: SEE MASTER SHEET #10001 FOR SUGGESTED REINFORCING

TEMPLATE NUMBER: 30211_a

DATE: 05-28-13

9875/9975 & 9875-F/9975-F Series Mortise Lock Devices

NOTES: SEE MASTER SHEET #10001 FOR SUGGESTED REINFORCING

TEMPLATE NUMBER: 10305_a

DATE: 05-21-13

VON DUPRIN®

NOTES:
1. THESE FOUR HOLES TO BE PREPARED FOR SURFACE APPLICATION WHEN USING 696/697 TRIM. DO NOT PREPARE FOR SEX BOLTS.
2. FOR STOCK HOLLOW METAL DOORS SEE TEMPLATE NUMBER 10312 FOR TYPE '86' CUTOUT.
3. GLASS BEAD KIT AVAILABLE WHEN REQUIRED.
4. WIRING TO SS7500 & E7500 LOCKS GO THROUGH DOOR NOT DEVICE.
5. FOR OUTSIDE TRIM PREPARATION, WHEN REQUIRED, SEE TRIM TEMPLATE.
15 6. THE SS7500 LOCK MUST BE USED FOR LX98/9975 SERIES DEVICE APPLICATIONS.

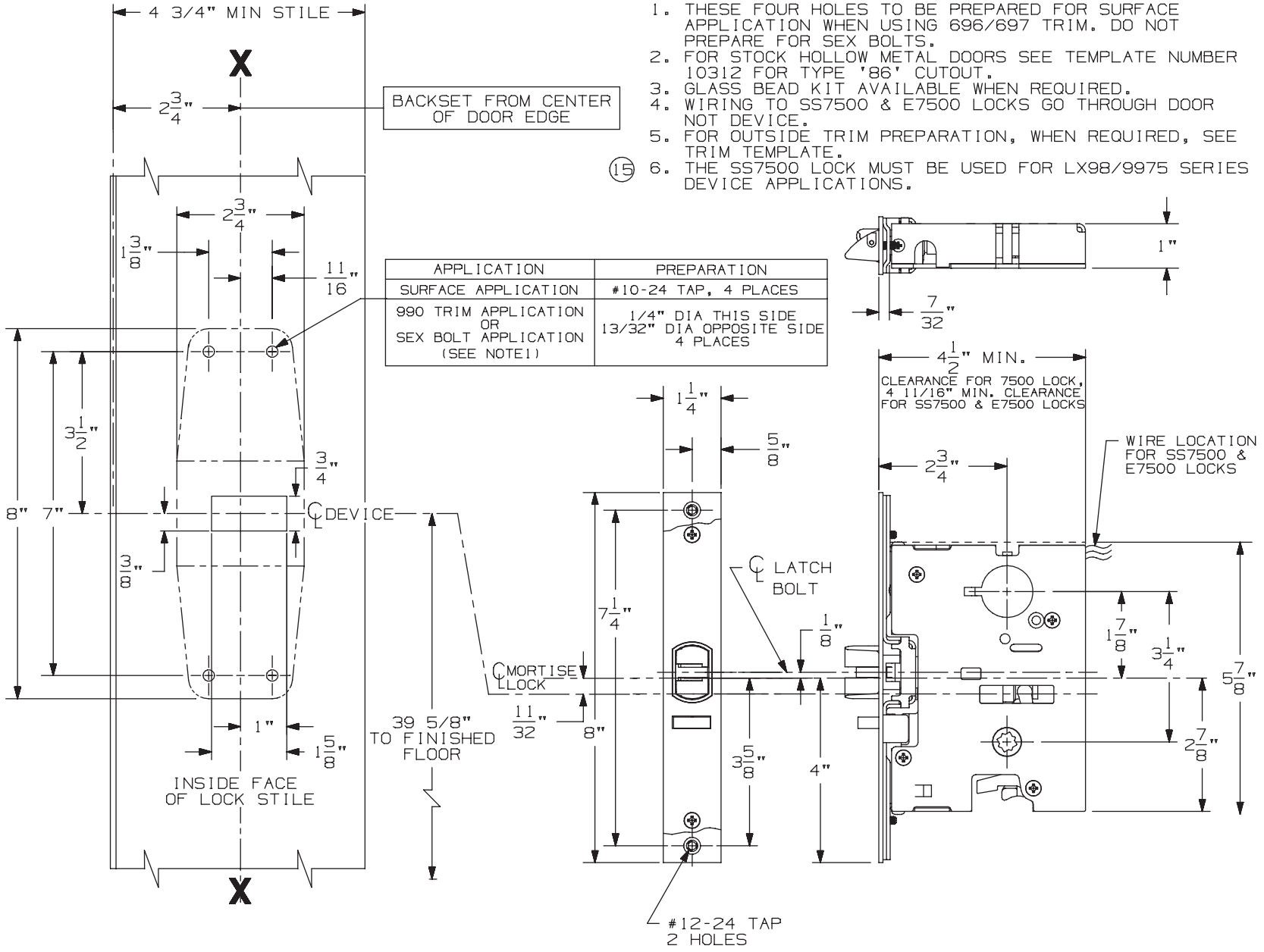

APPLICATION	PREPARATION
SURFACE APPLICATION	#10-24 TAP, 4 PLACES
990 TRIM APPLICATION OR SEX BOLT APPLICATION (SEE NOTE1)	1/4" DIA THIS SIDE 13/32" DIA OPPOSITE SIDE 4 PLACES

LHR APPLICATION SHOWN, RHR APPLICATION OPPOSITE

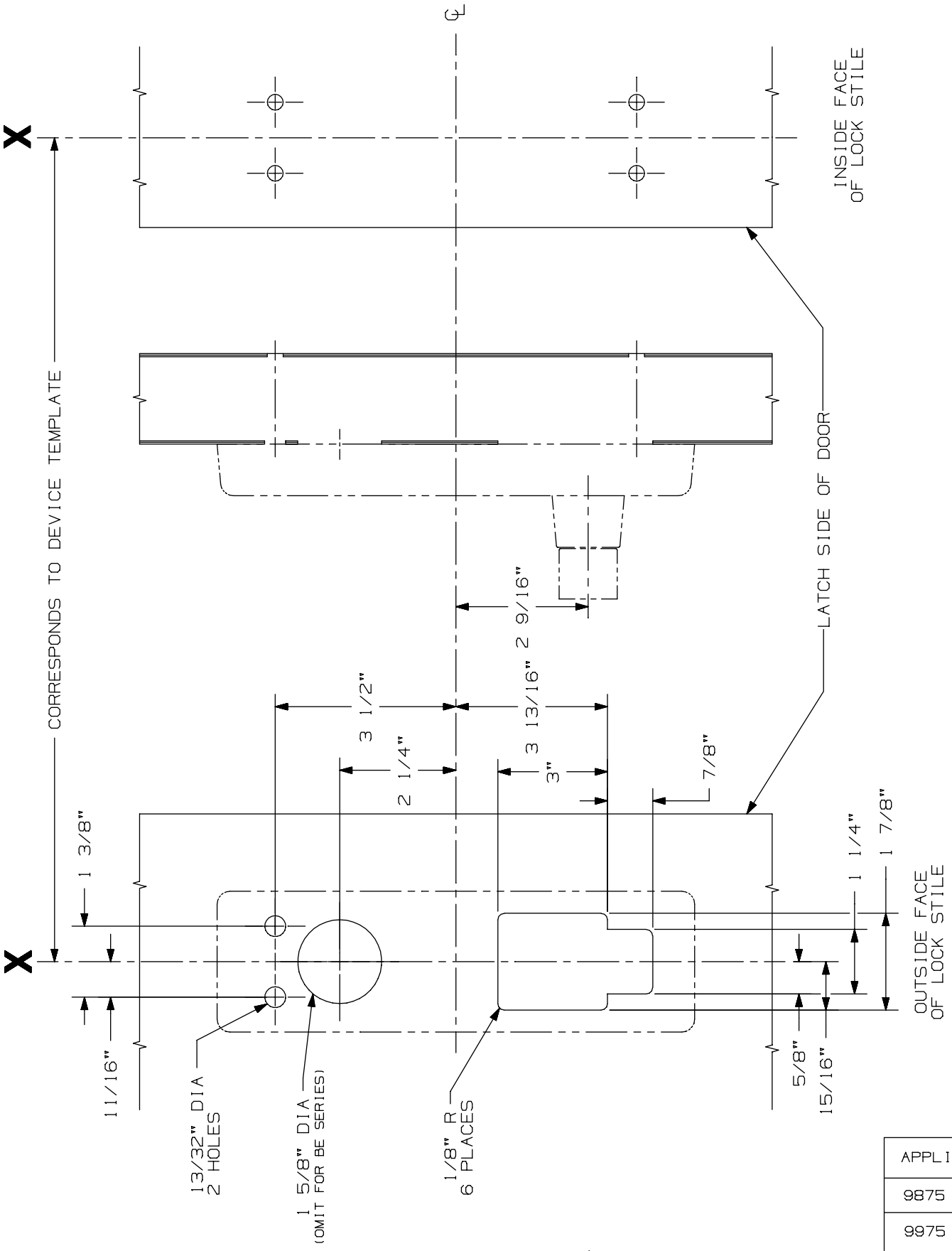

APPLICATIONS
9875 SERIES
9975 SERIES

996L, E996L, 996L-BE, & E996L-BE
Mortise Series
Trim Metal Door Application

VON DUPRIN®

NOTES: See Master Sheet #10001 For Suggested Reinforcing

TEMPLATE NUMBER: 20006_b

DATE: 10-30-14

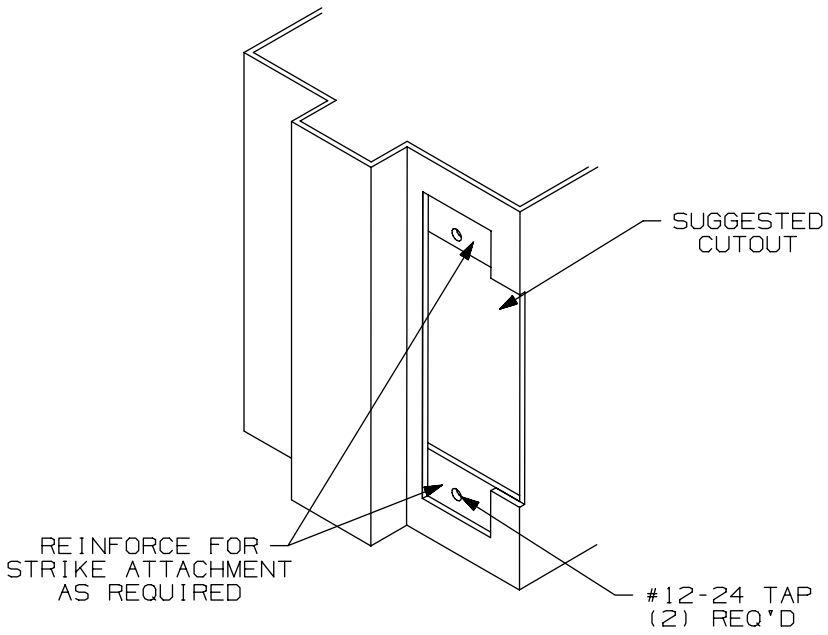

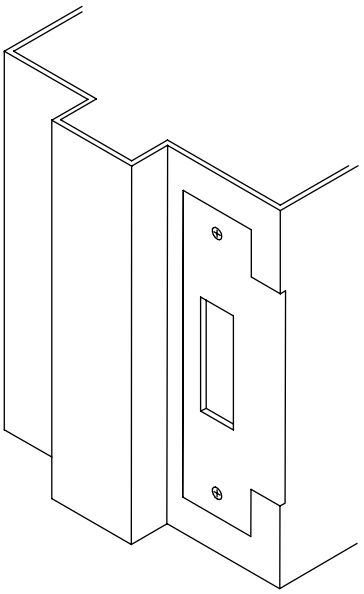

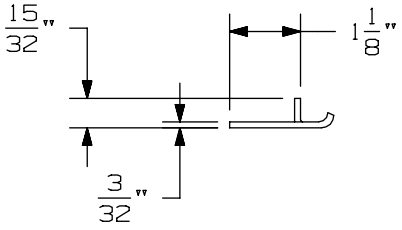

APPLICATION SCHEDULE	
DEVICE	DIM. "A"
9875 & 9875-F	11/16
9975 & 9975-F	11/16
8875 & 8875-F	1/2
5575 & 5575-F	1/2

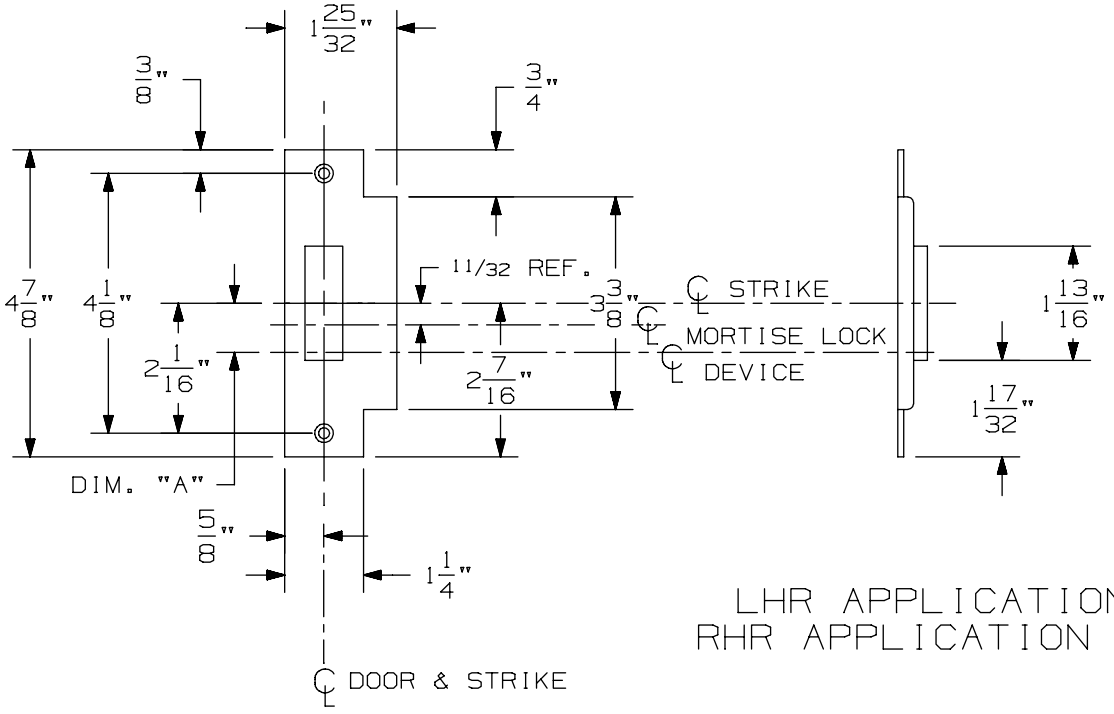

LHR APPLICATION SHOWN
RHR APPLICATION OPPOSITE

575 Mortise Strike (Single Door) for 7500 Mortise Lock

VON DUPRIN®

NOTES: SEE MASTER SHEET #10001 FOR SUGGESTED REINFORCING

TEMPLATE NUMBER: 30210_b

DATE: 07-22-13

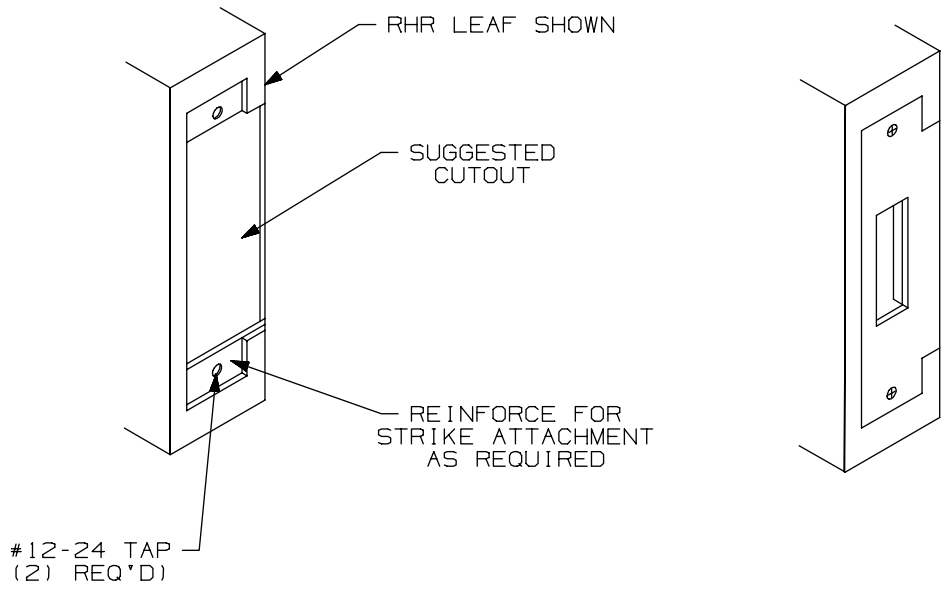

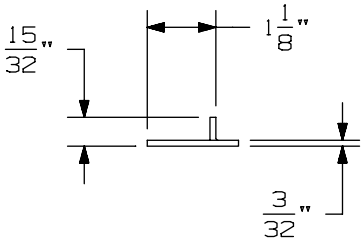

APPLICATION SCHEDULE	
DEVICE	DIM. "A"
9875 & 9875-F	11/16
9975 & 9975-F	11/16
8875 & 8875-F	1/2
5575 & 5575-F	1/2

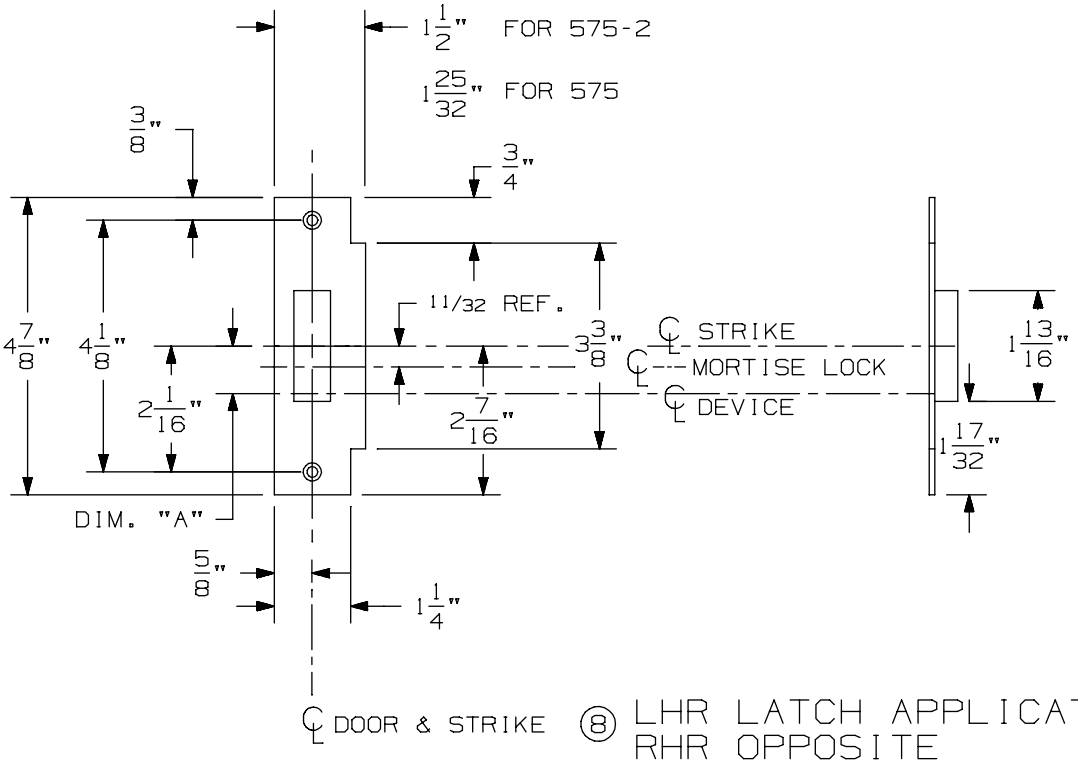

⑧ LHR LATCH APPLICATION SHOWN
RHR OPPOSITE

575-2 Mortise Strike (Double Doors) for 7500 Mortise Lock

VON DUPRIN®

NOTES: SEE MASTER SHEET #10001 FOR SUGGESTED REINFORCING

TEMPLATE NUMBER: 30212_b

DATE: 07-22-13

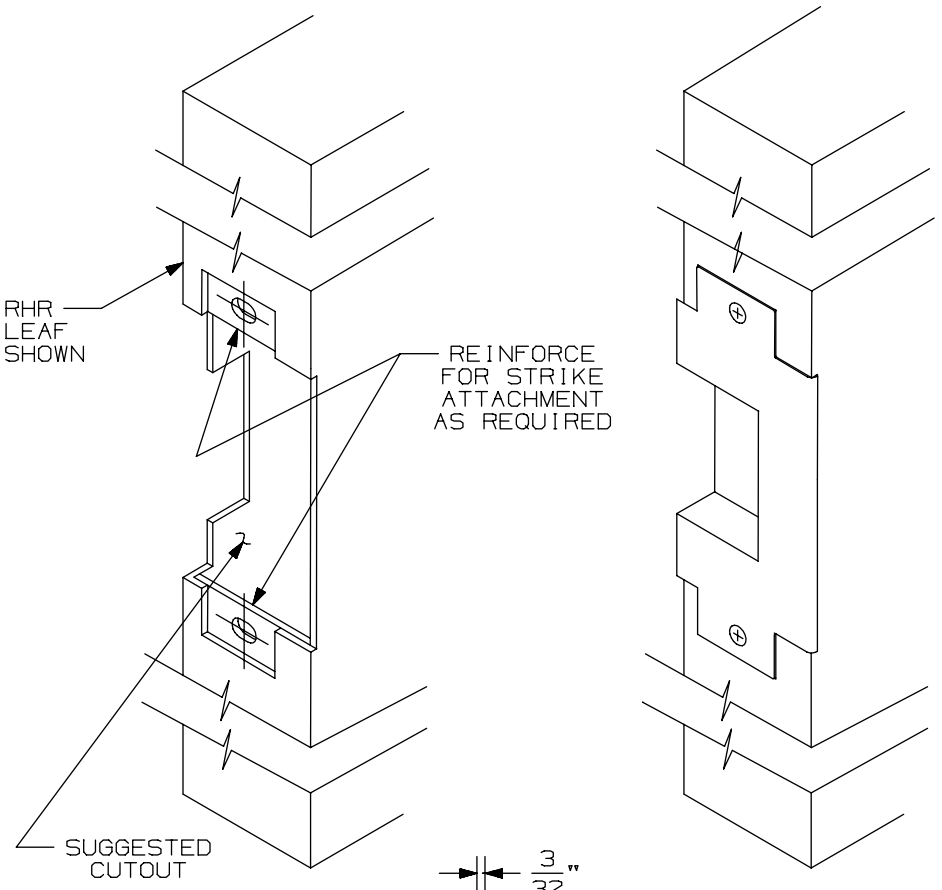

APPLICATION SCHEDULE	
DEVICE	DIM."A"
9875 & 9875-F	11/16
9975 & 9975-F	11/16
8875 & 8875-F	1/2
5575 & 5575-F	1/2

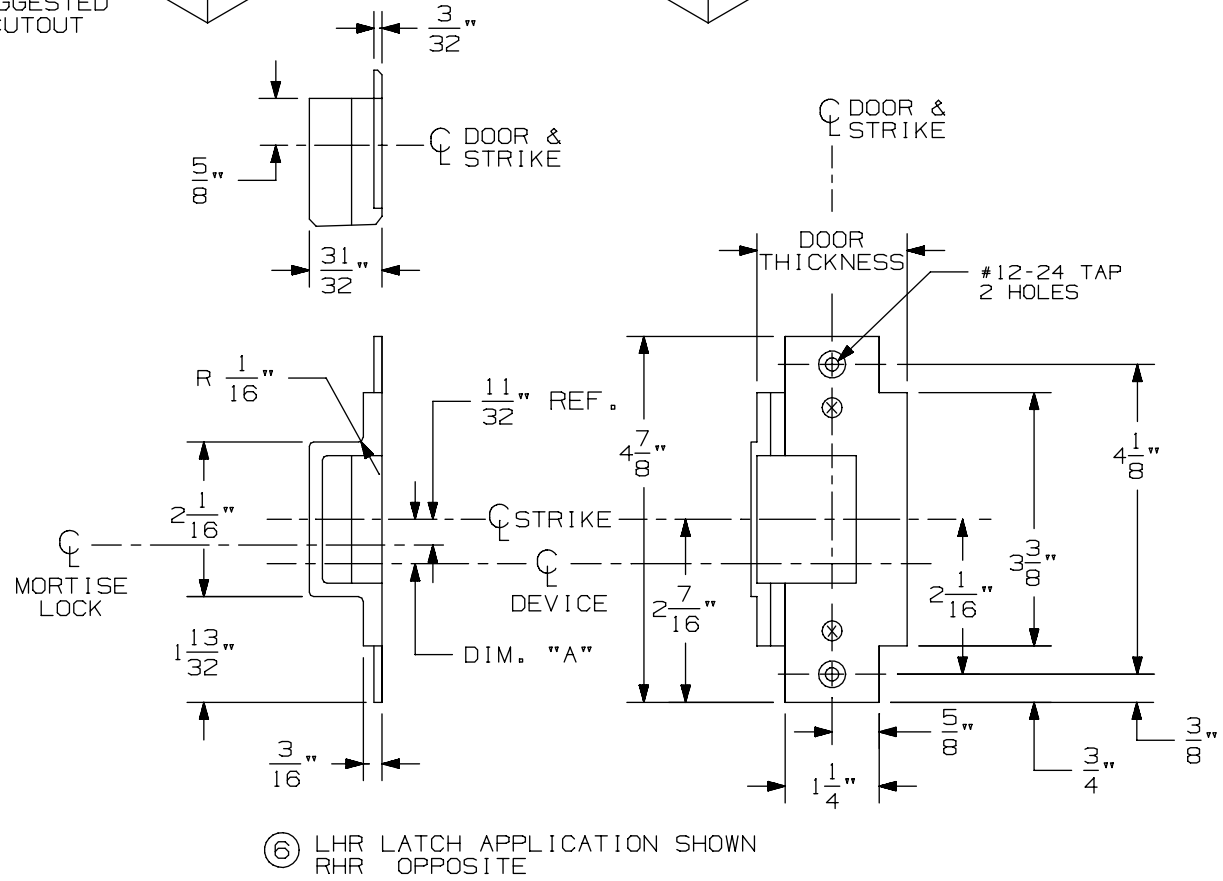

⑥ LHR LATCH APPLICATION SHOWN
RHR OPPOSITE

576A & 576B Mortise Strike for 7500 Mortise Lock

VON DUPRIN®

NOTES: SEE MASTER SHEET #10001 FOR SUGGESTED REINFORCING

TEMPLATE NUMBER: 30211_a

DATE: 05-28-13

9875/9975 & 9875-F/9975-F Series Mortise Lock Devices

NOTES: SEE MASTER SHEET #10001 FOR SUGGESTED REINFORCING

TEMPLATE NUMBER: 10305_a

DATE: 05-21-13

VON DUPRIN®

NOTES:
1. THESE FOUR HOLES TO BE PREPARED FOR SURFACE APPLICATION WHEN USING 696/697 TRIM. DO NOT PREPARE FOR SEX BOLTS.
2. FOR STOCK HOLLOW METAL DOORS SEE TEMPLATE NUMBER 10312 FOR TYPE '86' CUTOUT.
3. GLASS BEAD KIT AVAILABLE WHEN REQUIRED.
4. WIRING TO SS7500 & E7500 LOCKS GO THROUGH DOOR NOT DEVICE.
5. FOR OUTSIDE TRIM PREPARATION, WHEN REQUIRED, SEE TRIM TEMPLATE.
(15) 6. THE SS7500 LOCK MUST BE USED FOR LX98/9975 SERIES DEVICE APPLICATIONS.

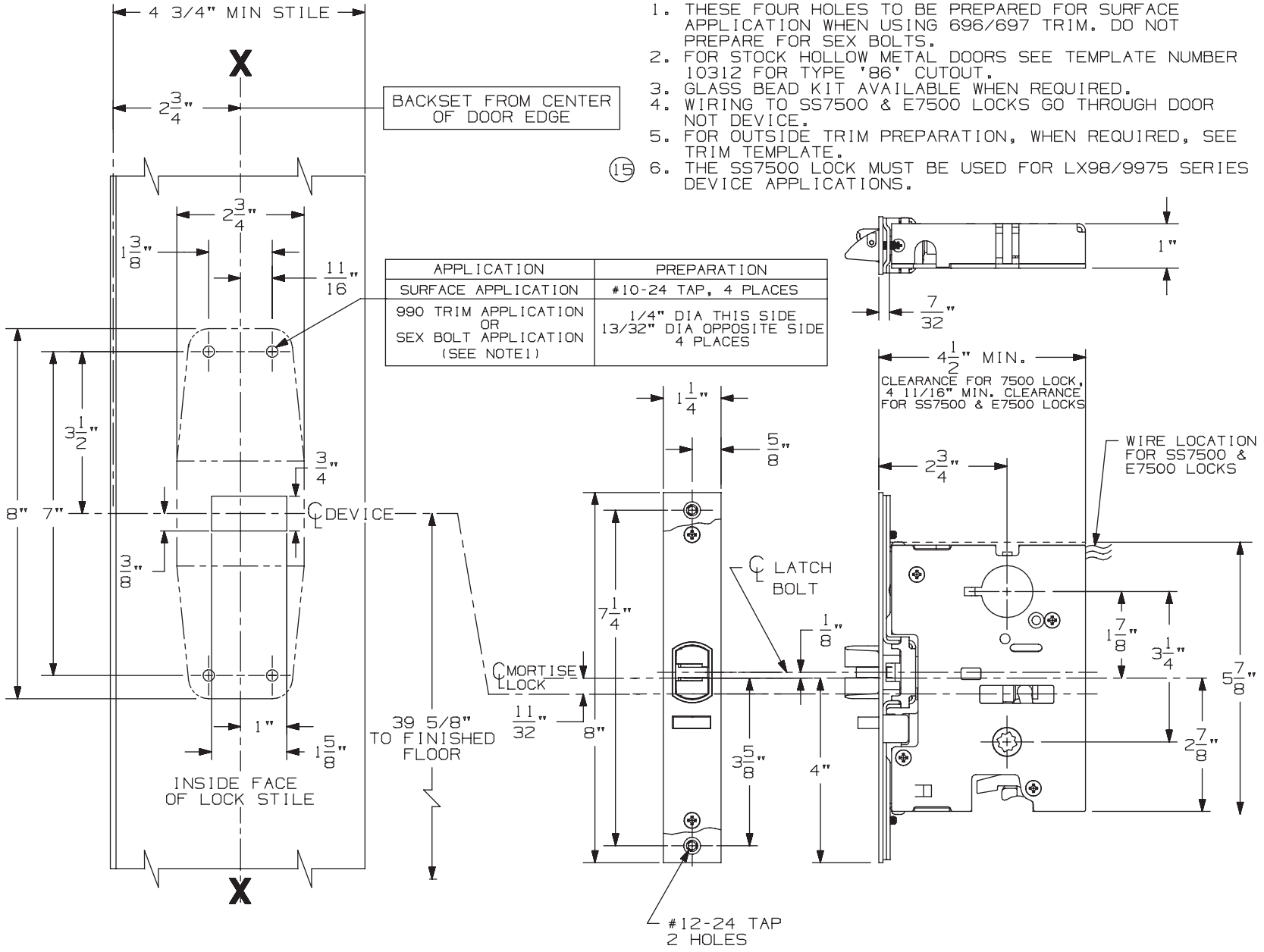

APPLICATION	PREPARATION
SURFACE APPLICATION	#10-24 TAP, 4 PLACES
990 TRIM APPLICATION OR SEX BOLT APPLICATION (SEE NOTE1)	1/4" DIA THIS SIDE 13/32" DIA OPPOSITE SIDE 4 PLACES

LHR APPLICATION SHOWN, RHR APPLICATION OPPOSITE

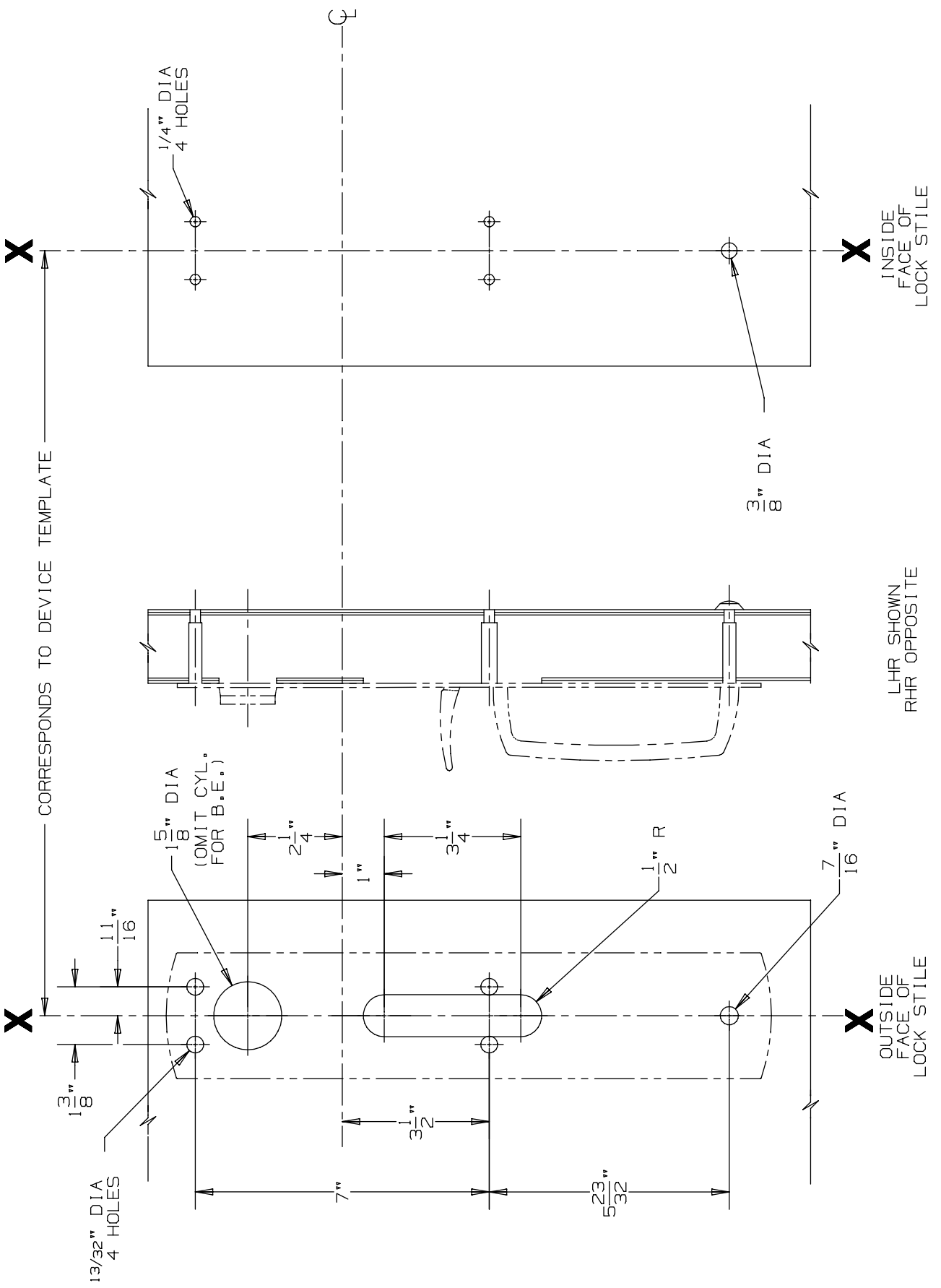

DEVICE APPLICATION SCHEDULE
9875/9975 SERIES DEVICE

990 TP & 990 TP-BE Trim

VON DUPRIN®

NOTES: SEE MASTER SHEET #10001 FOR SUGGESTED REINFORCING

TEMPLATE NUMBER: 20270_a

DATE: 05-23-13

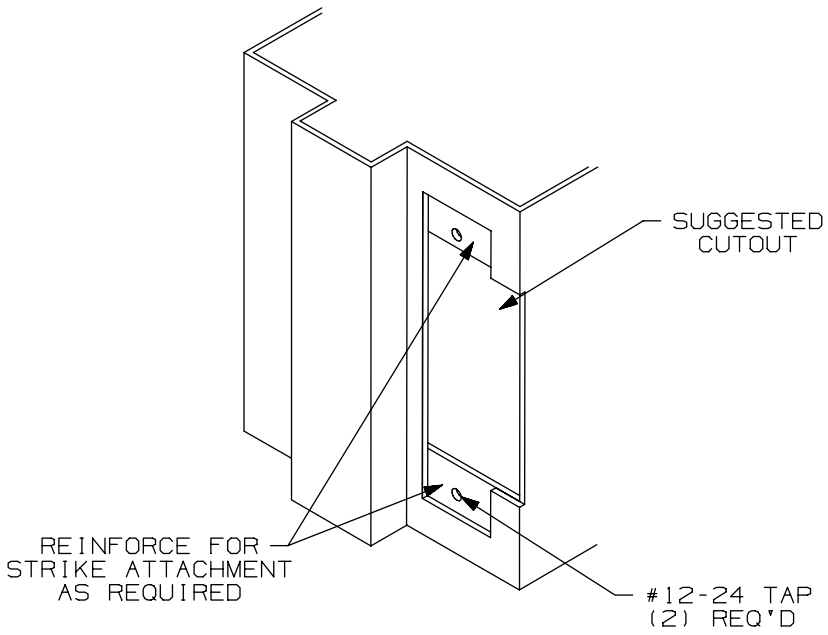

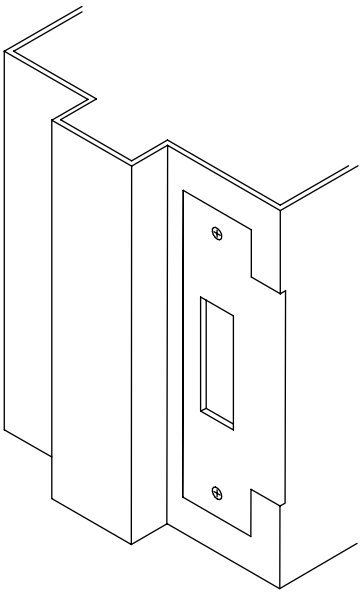

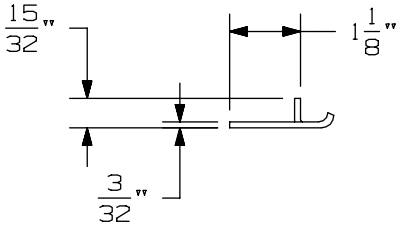

APPLICATION SCHEDULE	
DEVICE	DIM. "A"
9875 & 9875-F	11/16
9975 & 9975-F	11/16
8875 & 8875-F	1/2
5575 & 5575-F	1/2

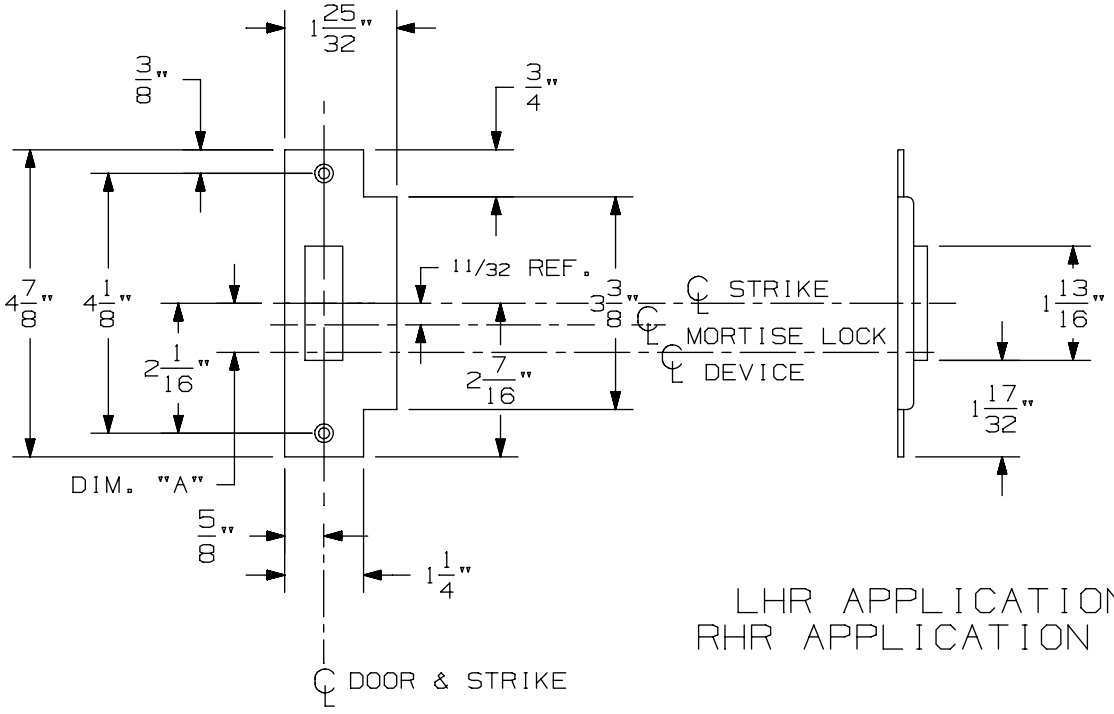

LHR APPLICATION SHOWN
RHR APPLICATION OPPOSITE

575 Mortise Strike (Single Door) for 7500 Mortise Lock

VON DUPRIN®

NOTES: SEE MASTER SHEET #10001 FOR SUGGESTED REINFORCING

TEMPLATE NUMBER: 30210_b

DATE: 07-22-13

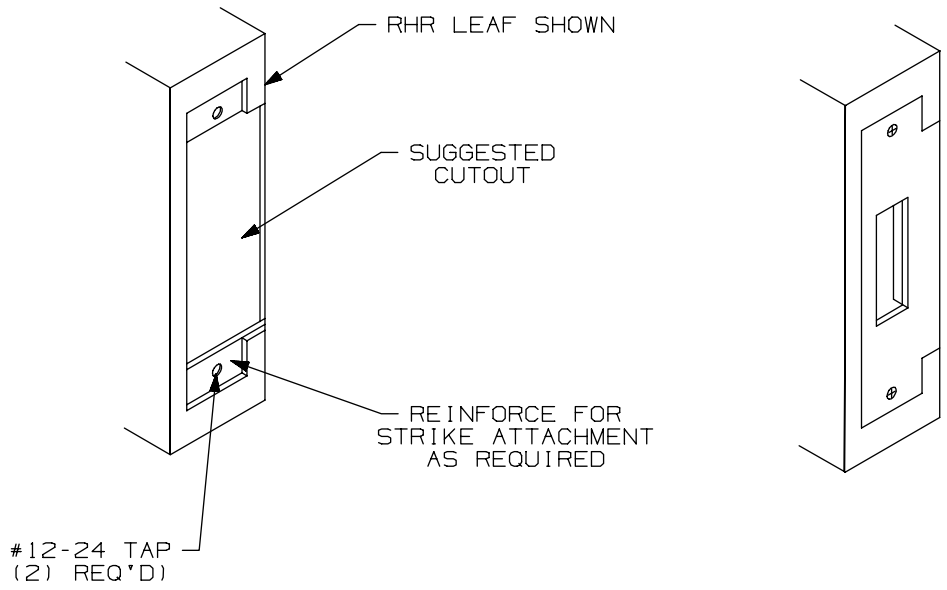

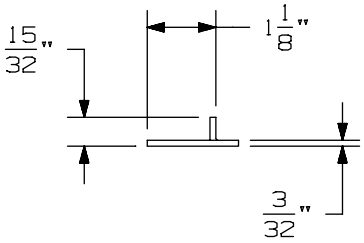

APPLICATION SCHEDULE	
DEVICE	DIM. "A"
9875 & 9875-F	11/16
9975 & 9975-F	11/16
8875 & 8875-F	1/2
5575 & 5575-F	1/2

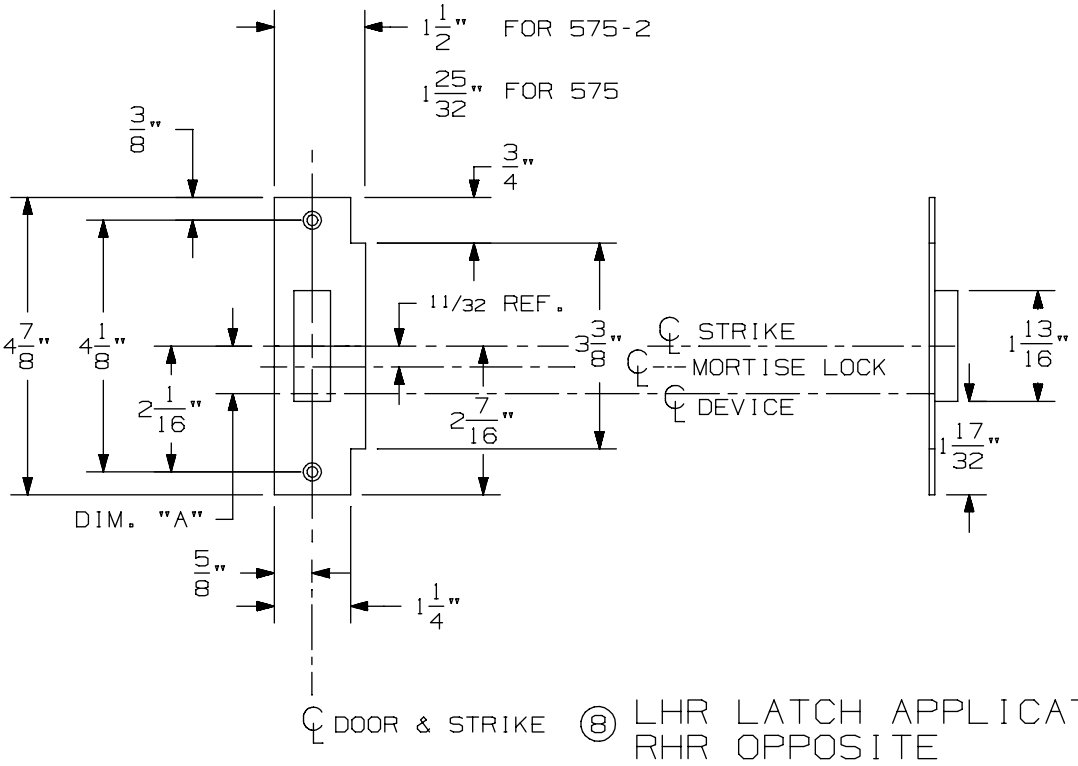

⑧ LHR LATCH APPLICATION SHOWN
RHR OPPOSITE

575-2 Mortise Strike (Double Doors) for 7500 Mortise Lock

VON DUPRIN®

NOTES: SEE MASTER SHEET #10001 FOR SUGGESTED REINFORCING

TEMPLATE NUMBER: 30212_b

DATE: 07-22-13

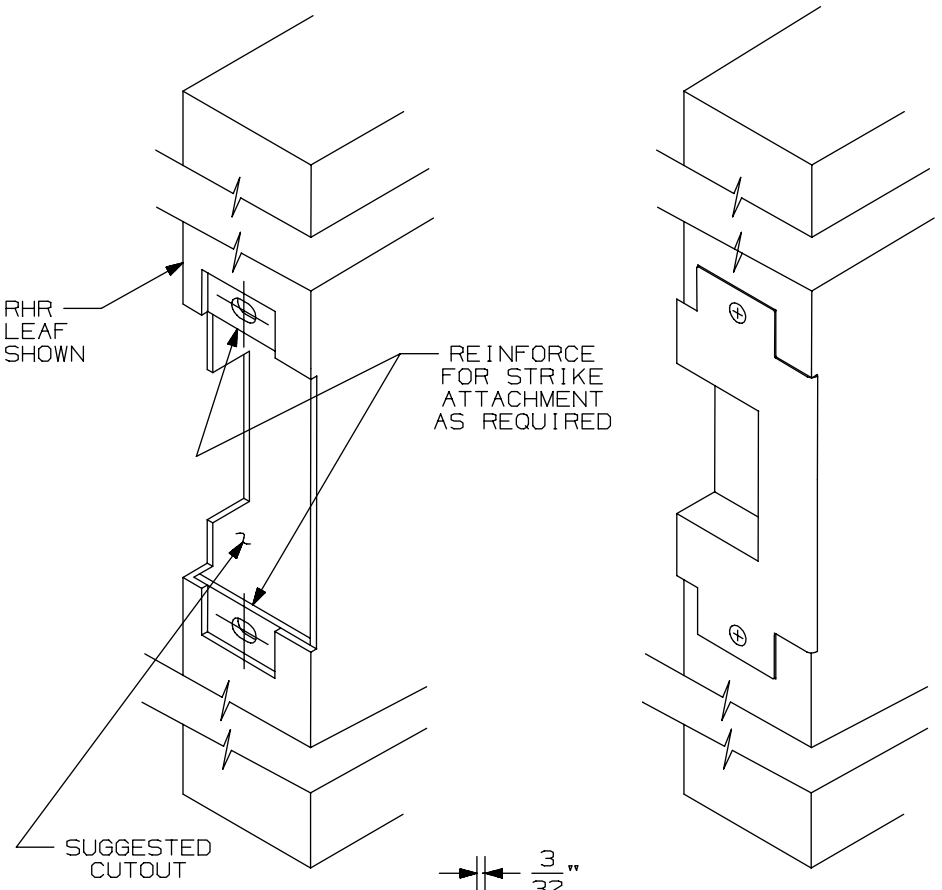

APPLICATION SCHEDULE	
DEVICE	DIM."A"
9875 & 9875-F	11/16
9975 & 9975-F	11/16
8875 & 8875-F	1/2
5575 & 5575-F	1/2

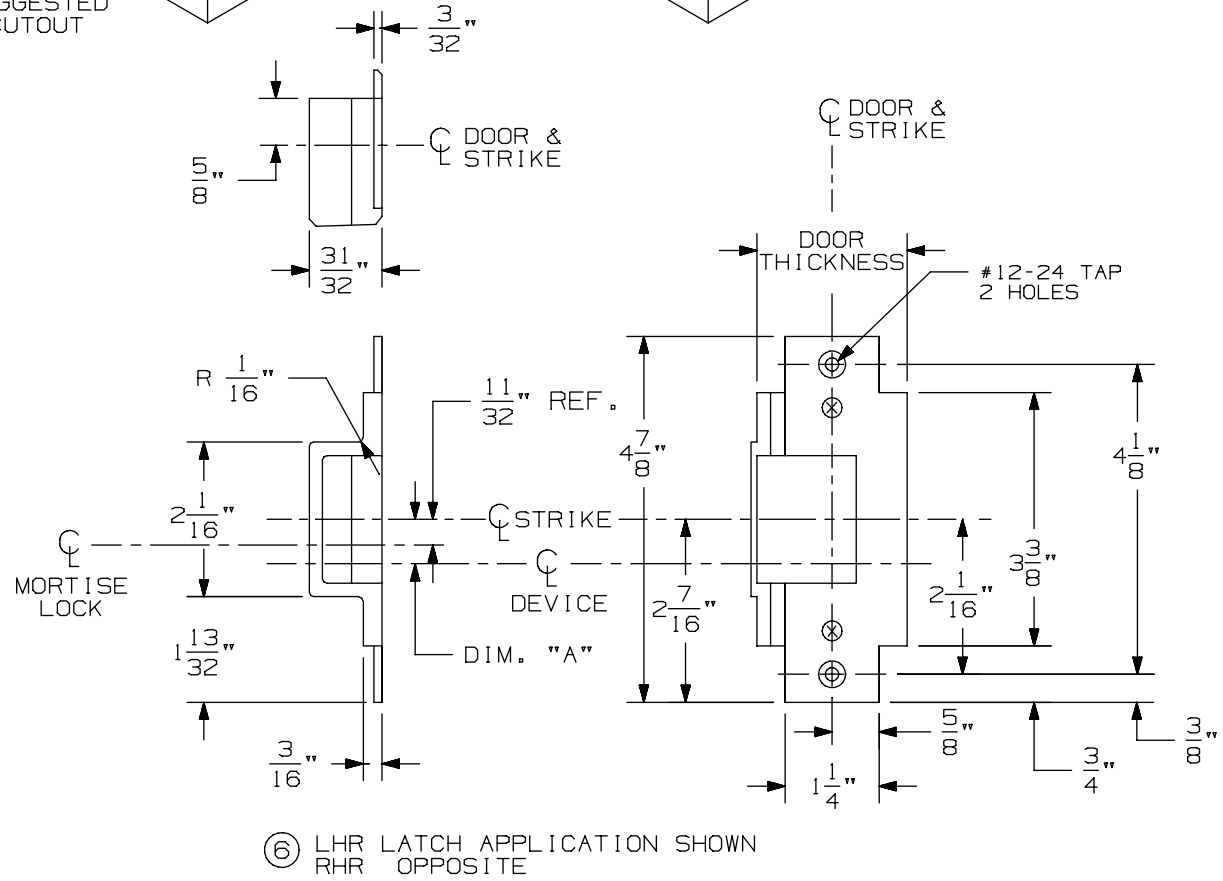

⑥ LHR LATCH APPLICATION SHOWN
RHR OPPOSITE

576A & 576B Mortise Strike for 7500 Mortise Lock

VON DUPRIN®

NOTES: SEE MASTER SHEET #10001 FOR SUGGESTED REINFORCING

TEMPLATE NUMBER: 30211_a

DATE: 05-28-13

98 / 99 Series for 86 Stock Hollow Metal Doors

98 / 99 Series for 86 Stock Hollow Metal Doors - 98/99 Rim (Standard, CD, EL, RX & SS)

TYPE 86 STOCK HOLLOW METAL DOOR

A.N.S.I. CUTOUTS ARE SHOWN FOR REFERENCE ONLY. SEE A.N.S.I. SPECIFICATION NO. A115 FOR THE SIZE AND LOCATION OF THESE CUTOUTS.

LHR SHOWN
RHR OPPOSITE

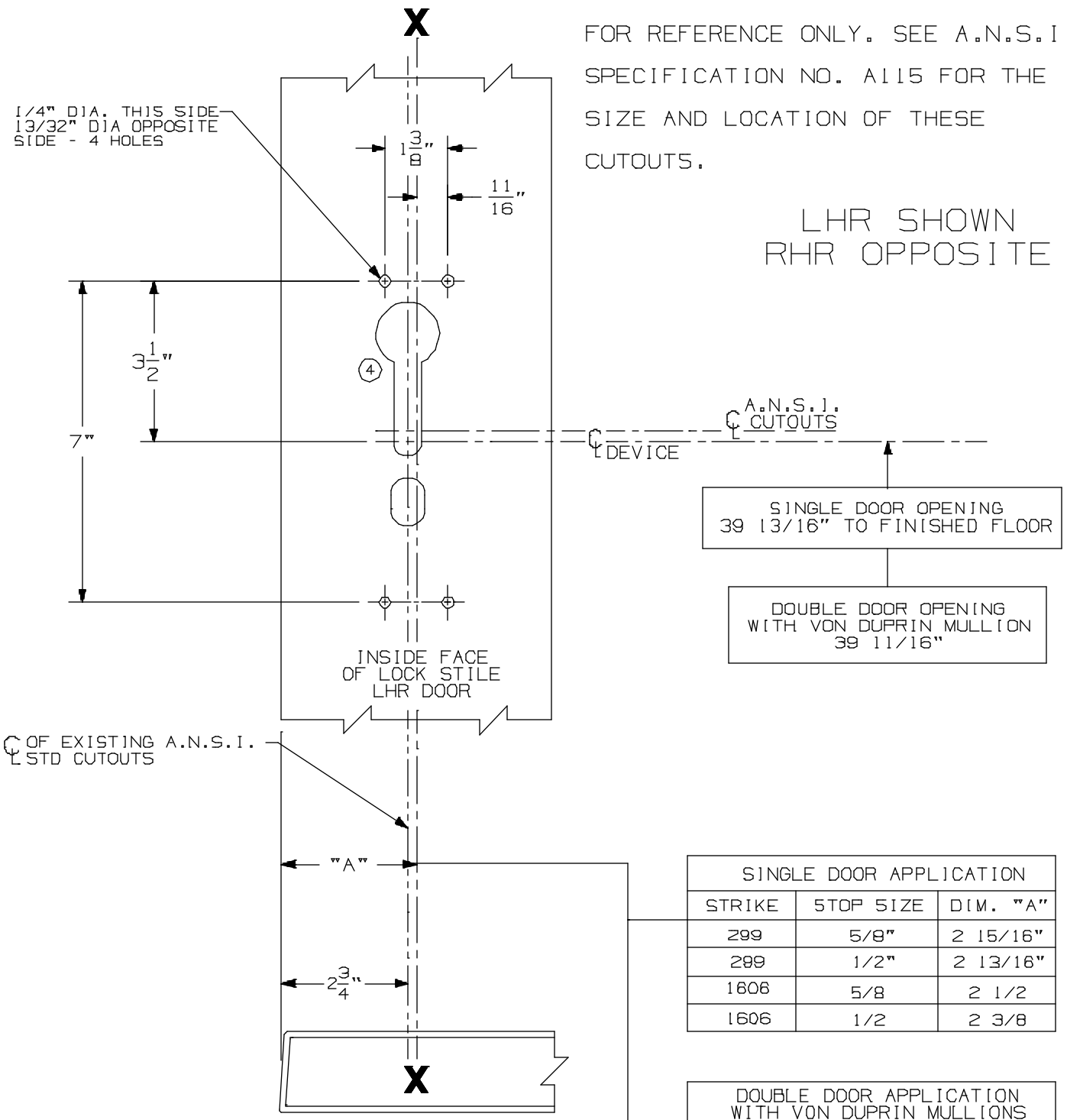

SINGLE DOOR APPLICATION		
STRIKE	STOP SIZE	DIM. "A"
299	5/8"	2 15/16"
299	1/2"	2 13/16"
1606	5/8	2 1/2
1606	1/2	2 3/8

DOUBLE DOOR APPLICATION WITH VON DUPRIN MULLIONS		
MULLION	STRIKE	DIM. "A"
5654	299	2 7/8"
1654	1606	2 7/8"

(4)

FOR ADDITIONAL INFORMATION
SEE TEMPLATE NO. 10300
FOR OUTSIDE TRIM PREPARATION, WHEN REQUIRED, SEE ADDITIONAL TRIM TEMPLATE.

98/99 EO, DT Rim Devices w/ 990, 991/992DT Trim for Type "86" Stock Hollow Metal Applications

VON DUPRIN®

NOTES: SEE MASTER SHEET #10001 FOR SUGGESTED REINFORCING

TEMPLATE NUMBER: 10313_a

DATE: 05-21-13

990 EO TRIM

NOTES: SEE MASTER SHEET #10001 FOR SUGGESTED REINFORCING

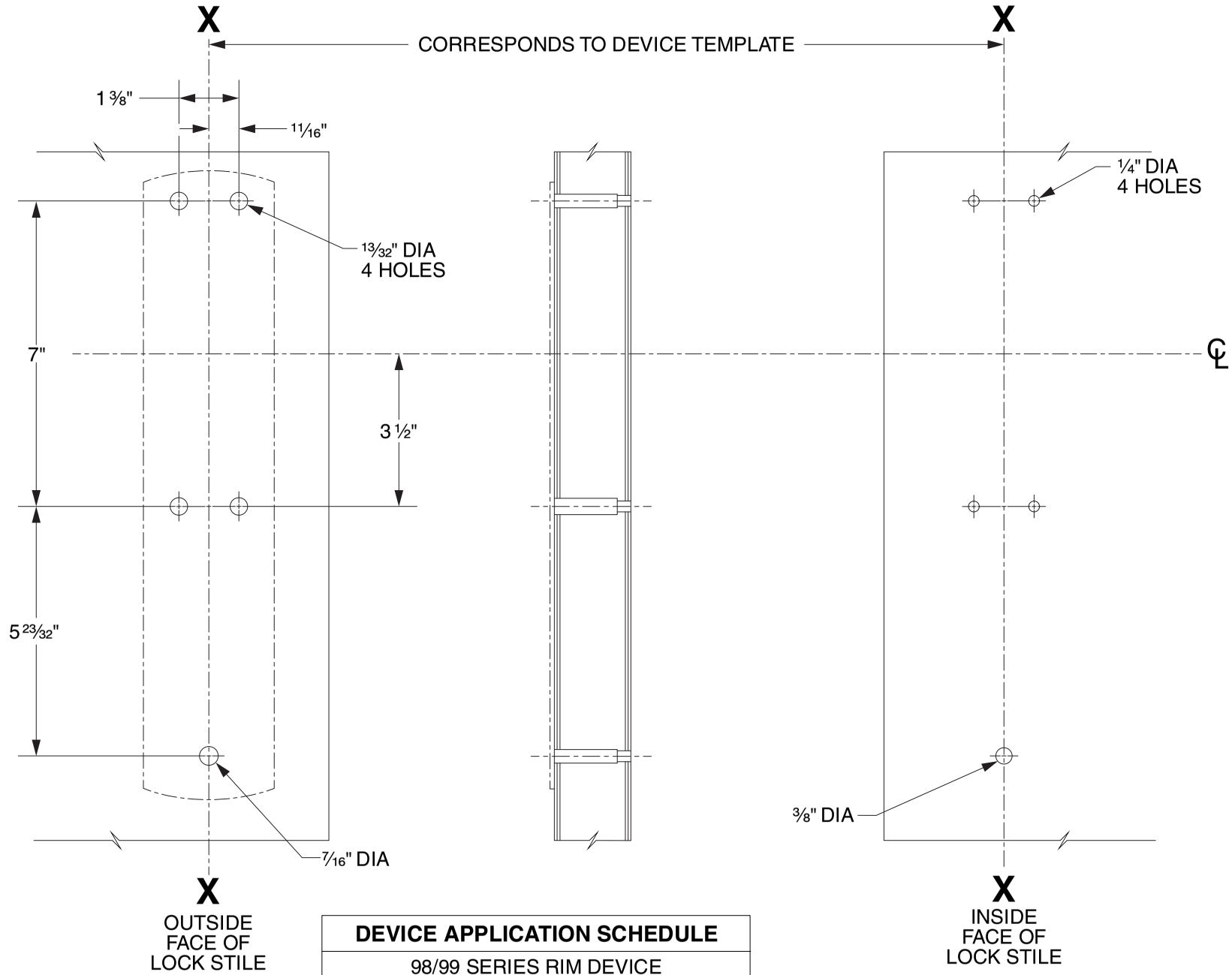

DEVICE APPLICATION SCHEDULE
98/99 SERIES RIM DEVICE
9827/9927 SERIES DEVICE
9847/9947 SERIES DEVICE
9849/9949 SERIES DEVICE
9875/9975 SERIES DEVICE

LHR SHOWN
RHR OPPOSITE

VON DUPRIN®

TEMPLATE NUMBER: 20269_C

DATE: 05-31-13

RIM APPLICATION

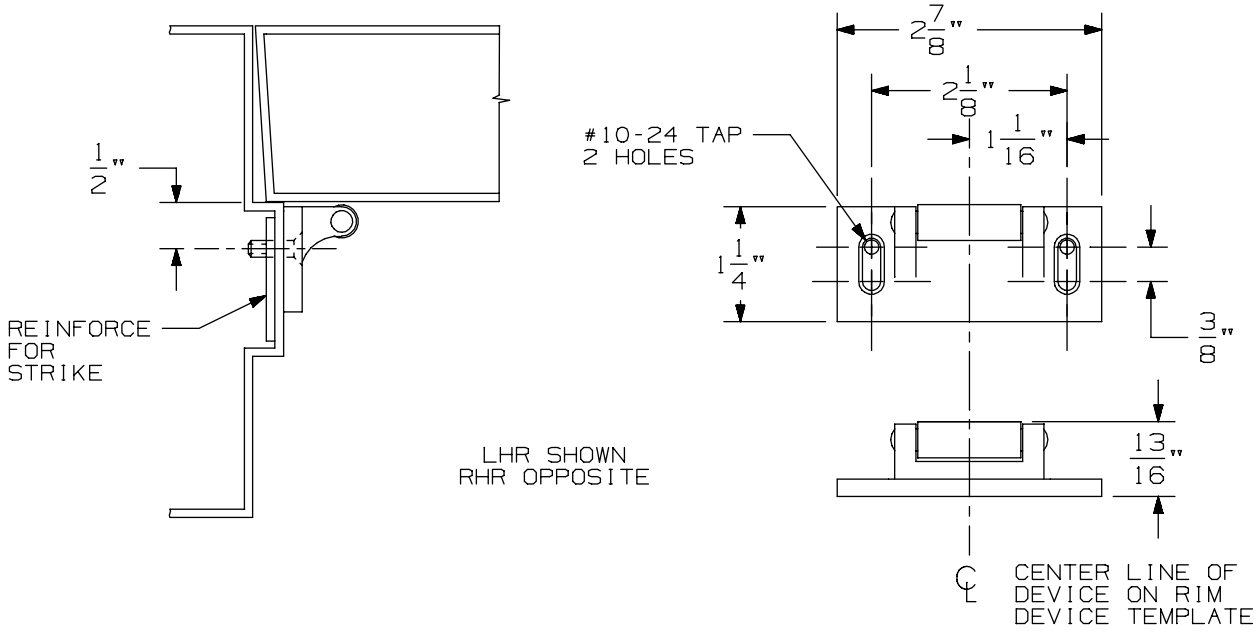

VERTICAL APPLICATION

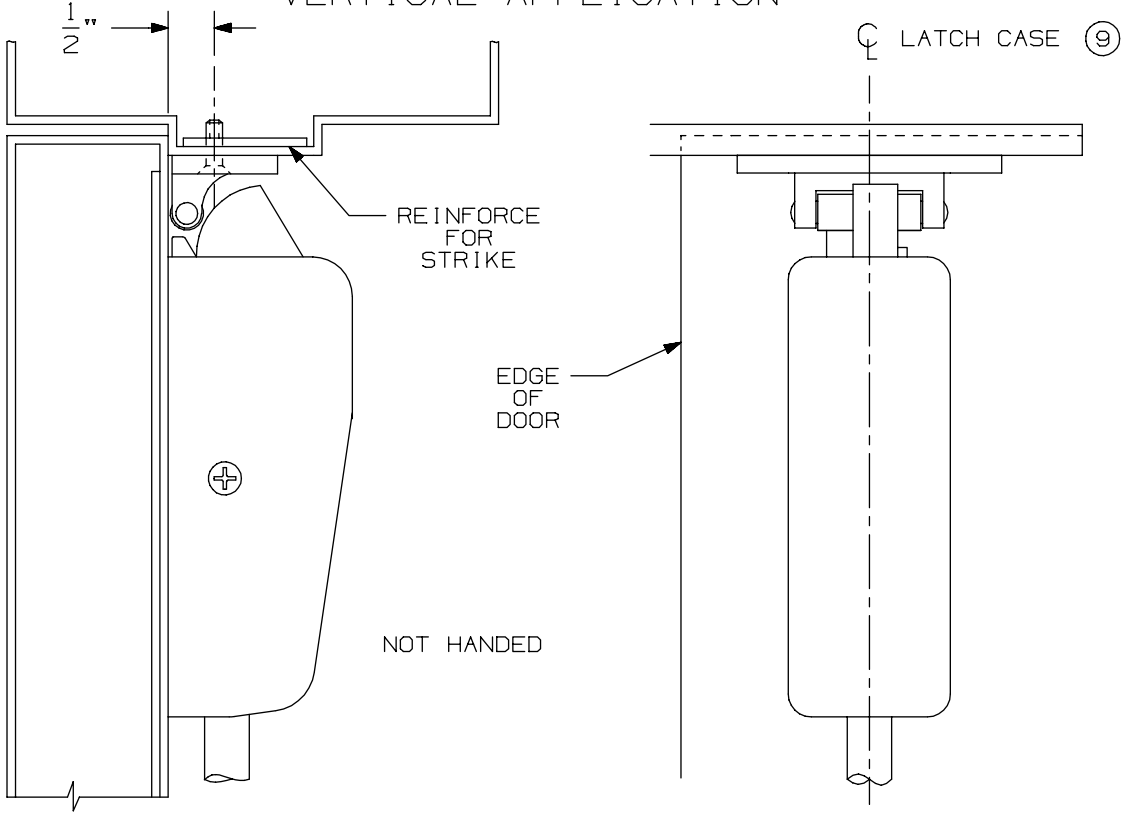

NOTE: LATCH CASE MOUNTING HOLES TO BE PREPARED AT INSTALLATION ON DOOR.

299 & 299F Strike

VON DUPRIN®

NOTES: SEE MASTER SHEET #10001 FOR SUGGESTED REINFORCING

TEMPLATE NUMBER: 30039_a

DATE: 05-23-13

TYPE 86 STOCK HOLLOW METAL DOOR

A.N.S.I. CUTOUTS ARE SHOWN FOR REFERENCE ONLY. SEE A.N.S.I. SPECIFICATION NO. A115 FOR THE SIZE AND LOCATION OF THESE CUTOUTS.

LHR SHOWN
RHR OPPOSITE

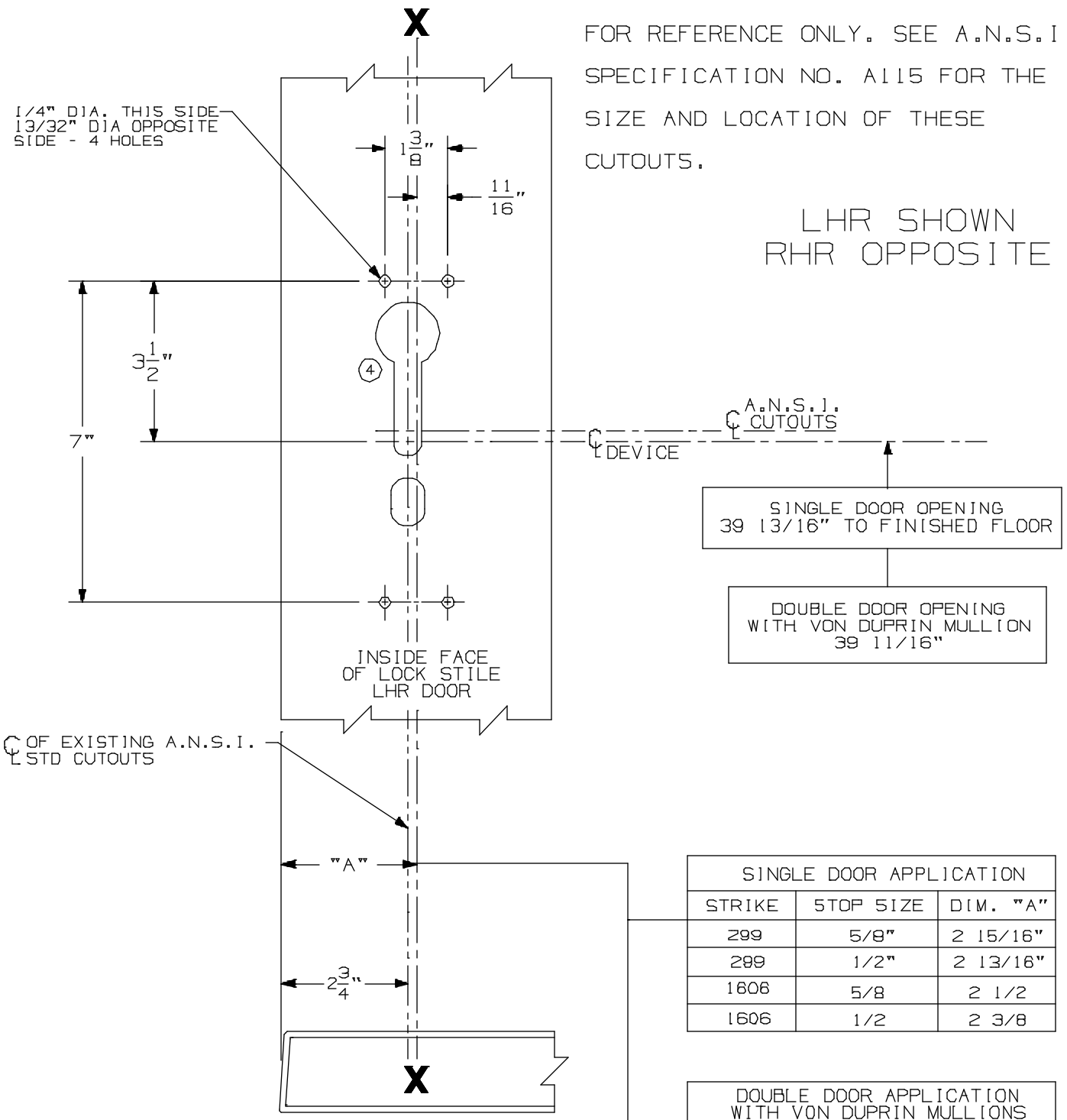

SINGLE DOOR APPLICATION		
STRIKE	STOP SIZE	DIM. "A"
299	5/8"	2 15/16"
299	1/2"	2 13/16"
1606	5/8	2 1/2
1606	1/2	2 3/8

DOUBLE DOOR APPLICATION WITH VON DUPRIN MULLIONS		
MULLION	STRIKE	DIM. "A"
5654	299	2 7/8"
1654	1606	2 7/8"

(4)

FOR ADDITIONAL INFORMATION
SEE TEMPLATE NO. 10300
FOR OUTSIDE TRIM PREPARATION, WHEN REQUIRED, SEE ADDITIONAL TRIM TEMPLATE.

98/99 EO, DT Rim Devices w/ 990, 991/992DT Trim for Type "86" Stock Hollow Metal Applications

VON DUPRIN®

NOTES: SEE MASTER SHEET #10001 FOR SUGGESTED REINFORCING

TEMPLATE NUMBER: 10313_a

DATE: 05-21-13

990 DT TRIM

NOTES: SEE MASTER SHEET #10001 FOR SUGGESTED REINFORCING

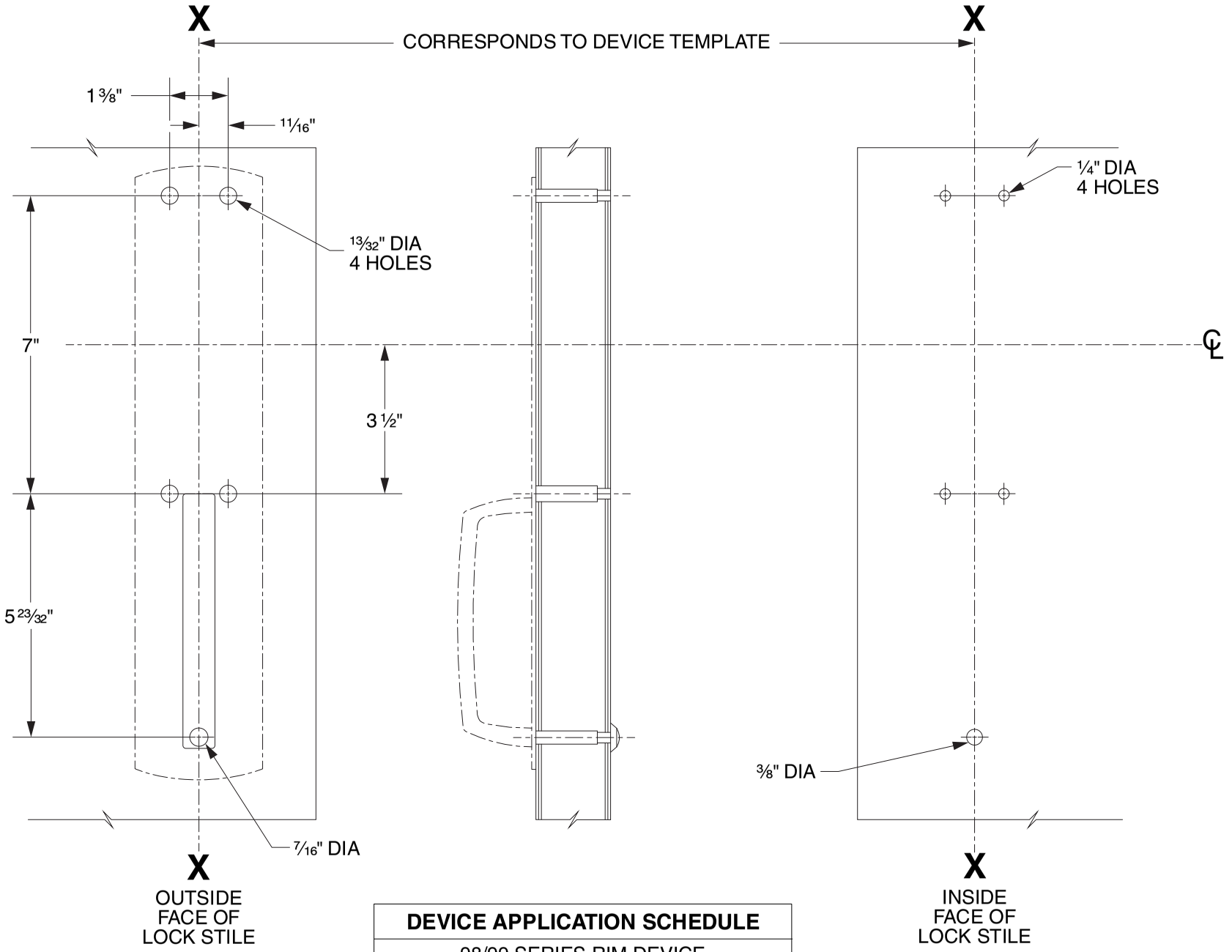

DEVICE APPLICATION SCHEDULE
98/99 SERIES RIM DEVICE
9827/9927 SERIES DEVICE
9847/9947 SERIES DEVICE
9849/9949 SERIES DEVICE
9875/9975 SERIES DEVICE

LHR SHOWN
RHR OPPOSITE

VON DUPRIN®

TEMPLATE NUMBER: 20268_C

DATE: 05-31-13

RIM APPLICATION

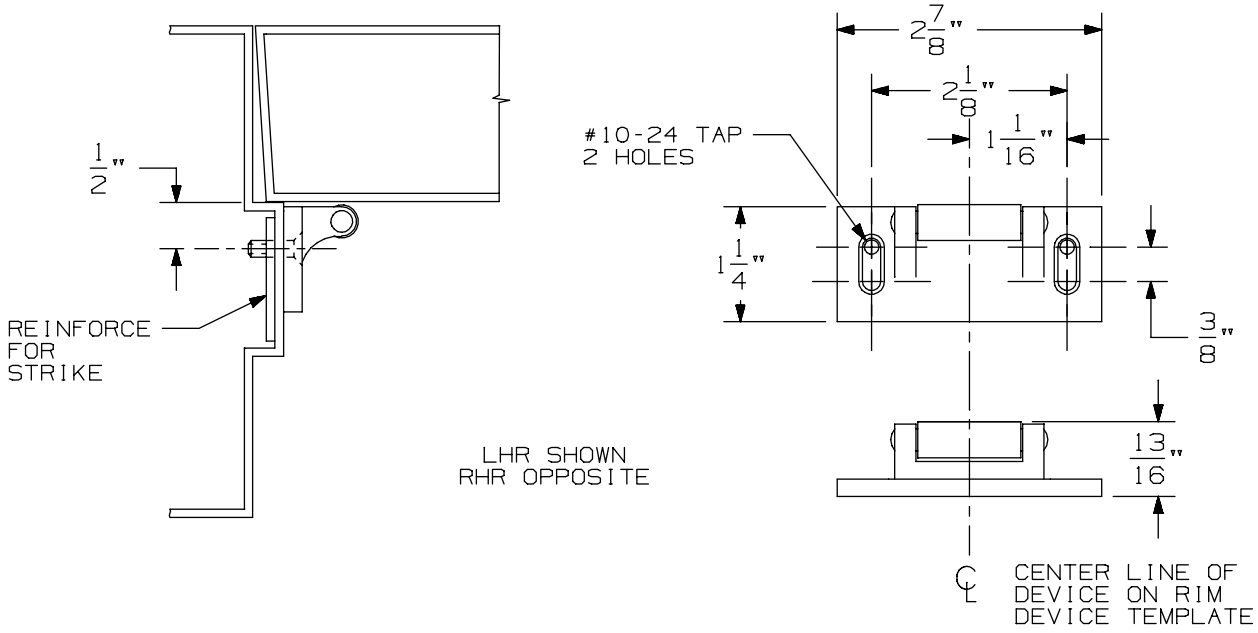

VERTICAL APPLICATION

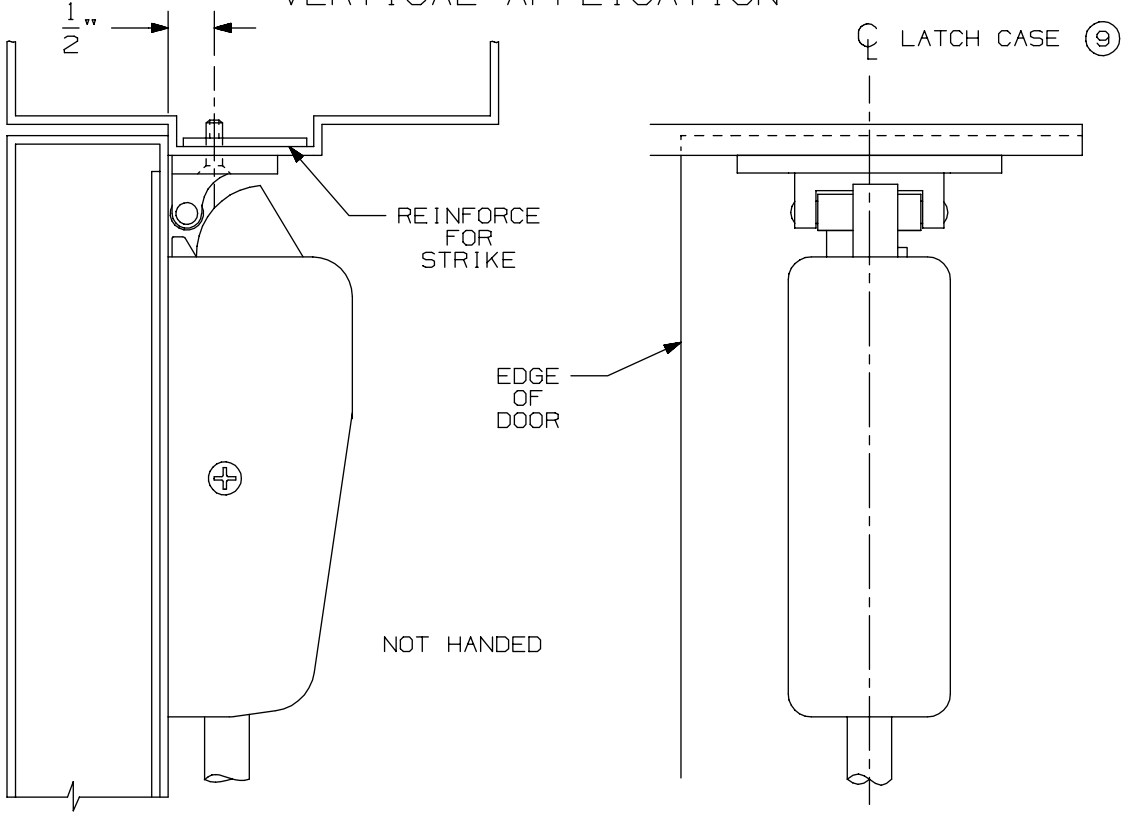

NOTE: LATCH CASE MOUNTING HOLES TO BE PREPARED AT INSTALLATION ON DOOR.

299 & 299F Strike

VON DUPRIN®

NOTES: SEE MASTER SHEET #10001 FOR SUGGESTED REINFORCING

TEMPLATE NUMBER: 30039_a

DATE: 05-23-13

TYPE 86 STOCK HOLLOW METAL DOOR

A.N.S.I. CUTOUTS ARE SHOWN FOR REFERENCE ONLY. SEE A.N.S.I. SPECIFICATION NO. A115 FOR THE SIZE AND LOCATION OF THESE CUTOUTS.

LHR SHOWN
RHR OPPOSITE

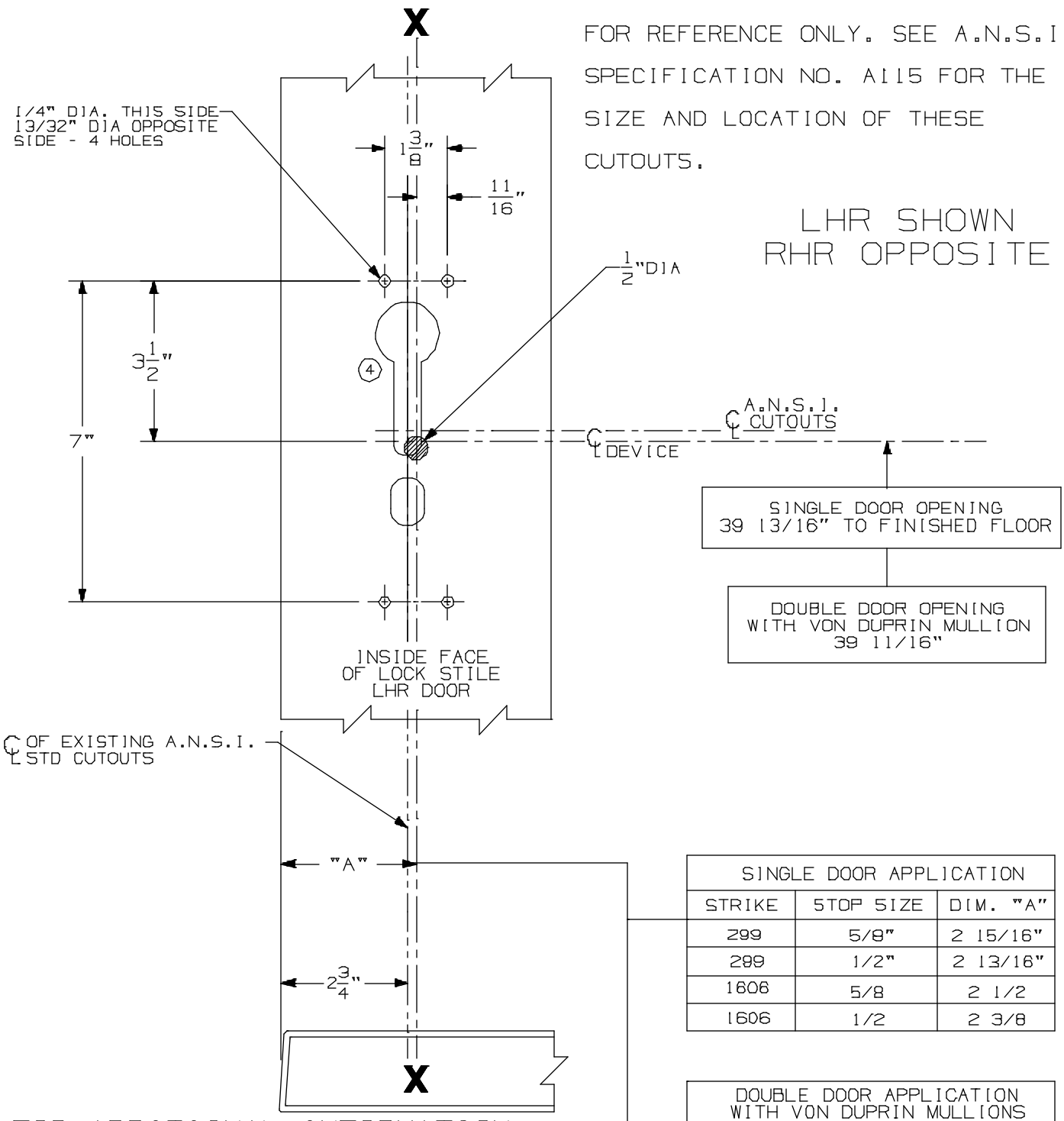

SINGLE DOOR APPLICATION		
STRIKE	STOP SIZE	DIM. "A"
299	5/8"	2 15/16"
299	1/2"	2 13/16"
1606	5/8	2 1/2
1606	1/2	2 3/8

DOUBLE DOOR APPLICATION WITH VON DUPRIN MULLIONS		
MULLION	STRIKE	DIM. "A"
5654	299	2 7/8"
1654	1606	2 7/8"

④

FOR ADDITIONAL INFORMATION
SEE TEMPLATE NO. 10301
FOR OUTSIDE TRIM PREPARATION, WHEN REQUIRED, SEE ADDITIONAL TRIM TEMPLATE.

98/99 NL Rim Device w/ 990, 991/992 Rigid Trim for Type "86" Stock Hollow Metal Applications

VON DUPRIN®

NOTES: SEE MASTER SHEET #10001 FOR SUGGESTED REINFORCING

TEMPLATE NUMBER: 10314_a

DATE: 05-21-13

990 NL TRIM

NOTES: SEE MASTER SHEET #10001 FOR SUGGESTED REINFORCING

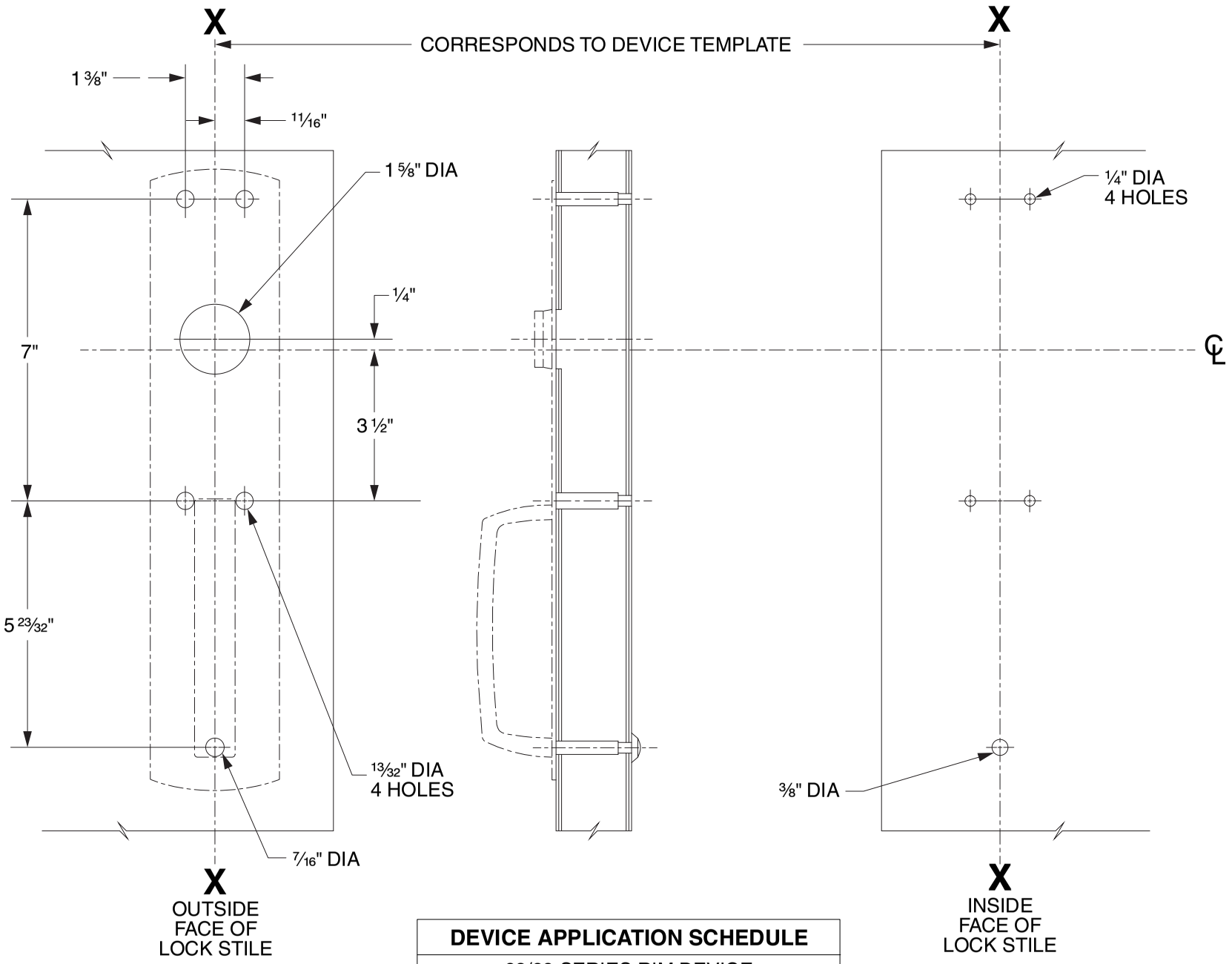

DEVICE APPLICATION SCHEDULE
98/99 SERIES RIM DEVICE
9827/9927 SERIES DEVICE
9847/9947 SERIES DEVICE
9849/9949 SERIES DEVICE

LHR SHOWN
RHR OPPOSITE

VON DUPRIN®

TEMPLATE NUMBER: 20267_C

DATE: 05-31-13

RIM APPLICATION

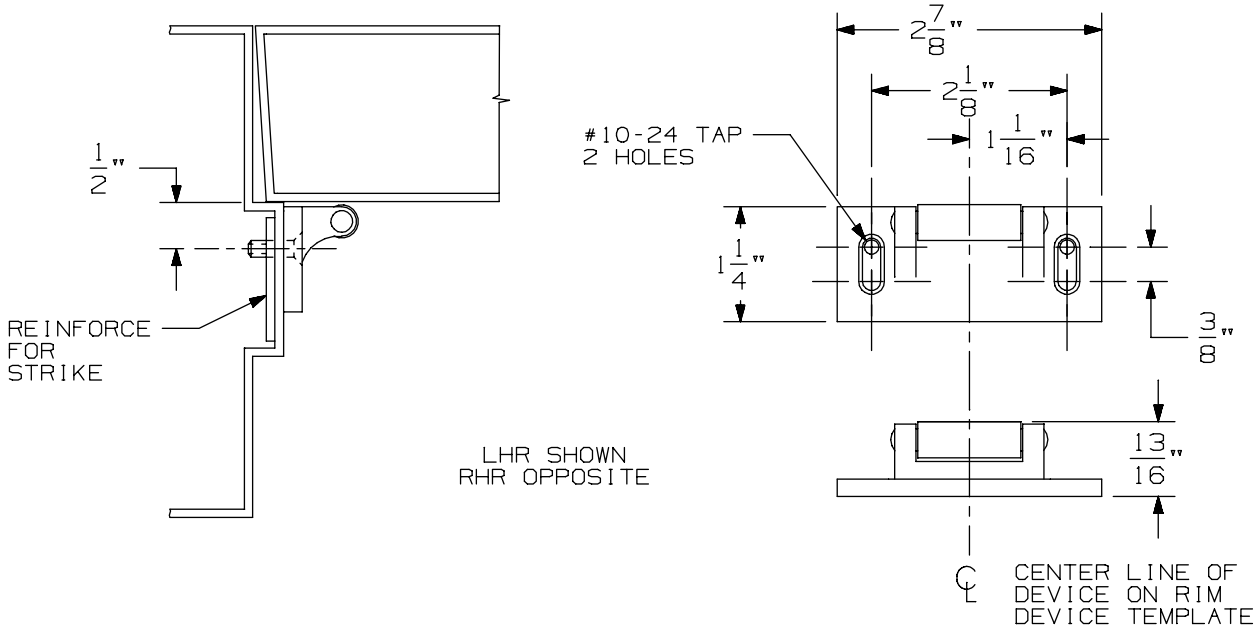

VERTICAL APPLICATION

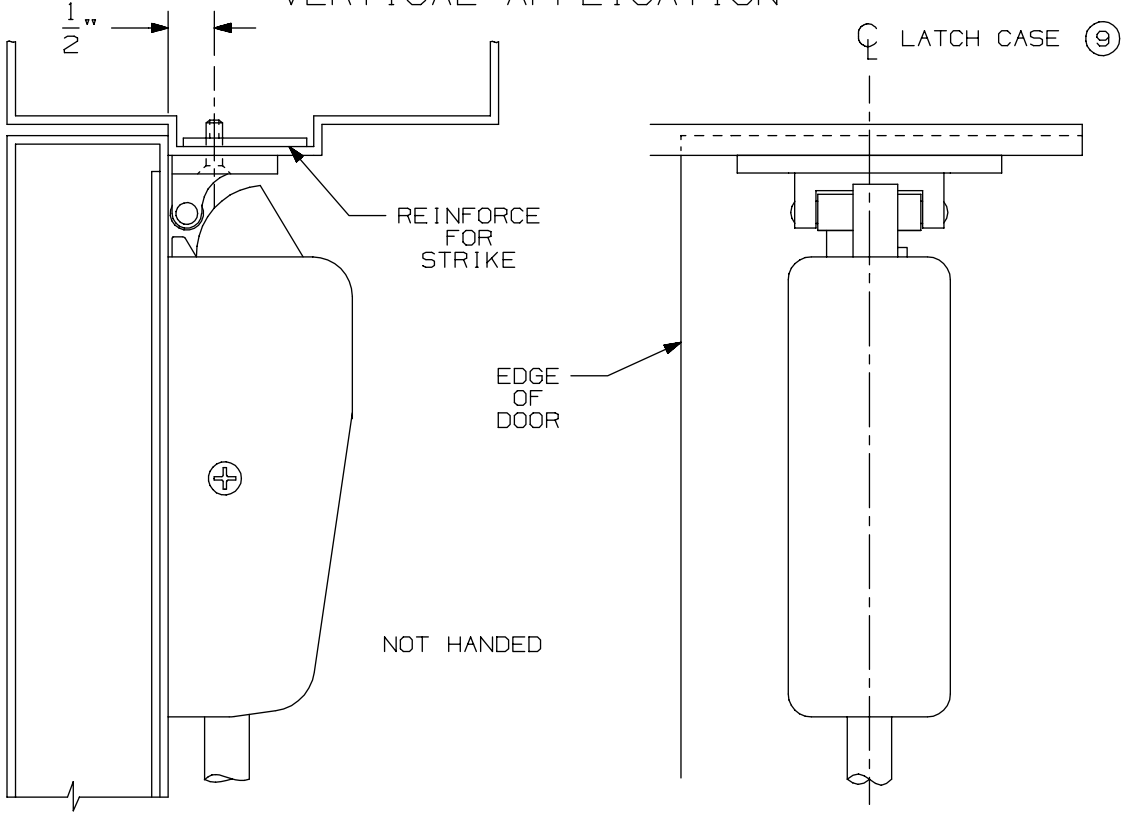

NOTE: LATCH CASE MOUNTING HOLES TO BE PREPARED AT INSTALLATION ON DOOR.

299 & 299F Strike

VON DUPRIN®

NOTES: SEE MASTER SHEET #10001 FOR SUGGESTED REINFORCING

TEMPLATE NUMBER: 30039_a

DATE: 05-23-13

TYPE 86 STOCK HOLLOW METAL DOOR

A.N.S.I. CUTOUTS ARE SHOWN FOR REFERENCE ONLY. SEE A.N.S.I. SPECIFICATION NO. A115 FOR THE SIZE AND LOCATION OF THESE CUTOUTS.

LHR SHOWN
RHR OPPOSITE

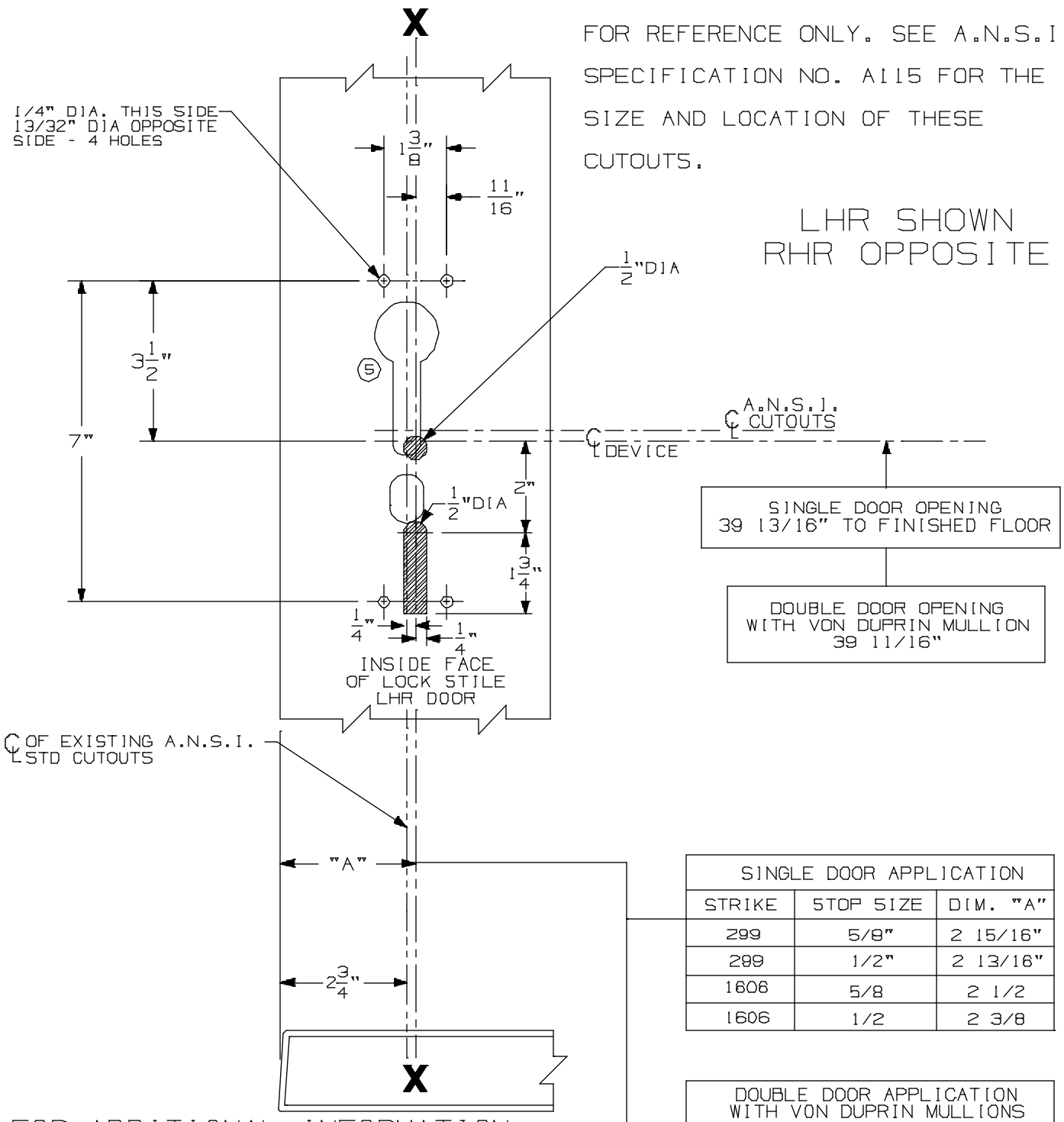

SINGLE DOOR APPLICATION		
STRIKE	STOP SIZE	DIM. "A"
299	5/8"	2 15/16"
299	1/2"	2 13/16"
1606	5/8	2 1/2
1606	1/2	2 3/8

DOUBLE DOOR APPLICATION WITH VON DUPRIN MULLIONS		
MULLION	STRIKE	DIM. "A"
5654	299	2 7/8"
1654	1606	2 7/8"

(5)

FOR ADDITIONAL INFORMATION
SEE TEMPLATE NO. 10302
FOR OUTSIDE TRIM PREPARATION, WHEN REQUIRED, SEE ADDITIONAL TRIM TEMPLATE.

98/99 TP, K, & L Rim Device w/ 990, 991, & 992 Trim for Type "86" Stock Hollow Metal Application

VON DUPRIN®

NOTES: SEE MASTER SHEET #10001 FOR SUGGESTED REINFORCING

TEMPLATE NUMBER: 10315_a

DATE: 05-21-13

991 K & 992 L Trim

NOTES: SEE MASTER SHEET #10001 FOR SUGGESTED REINFORCING

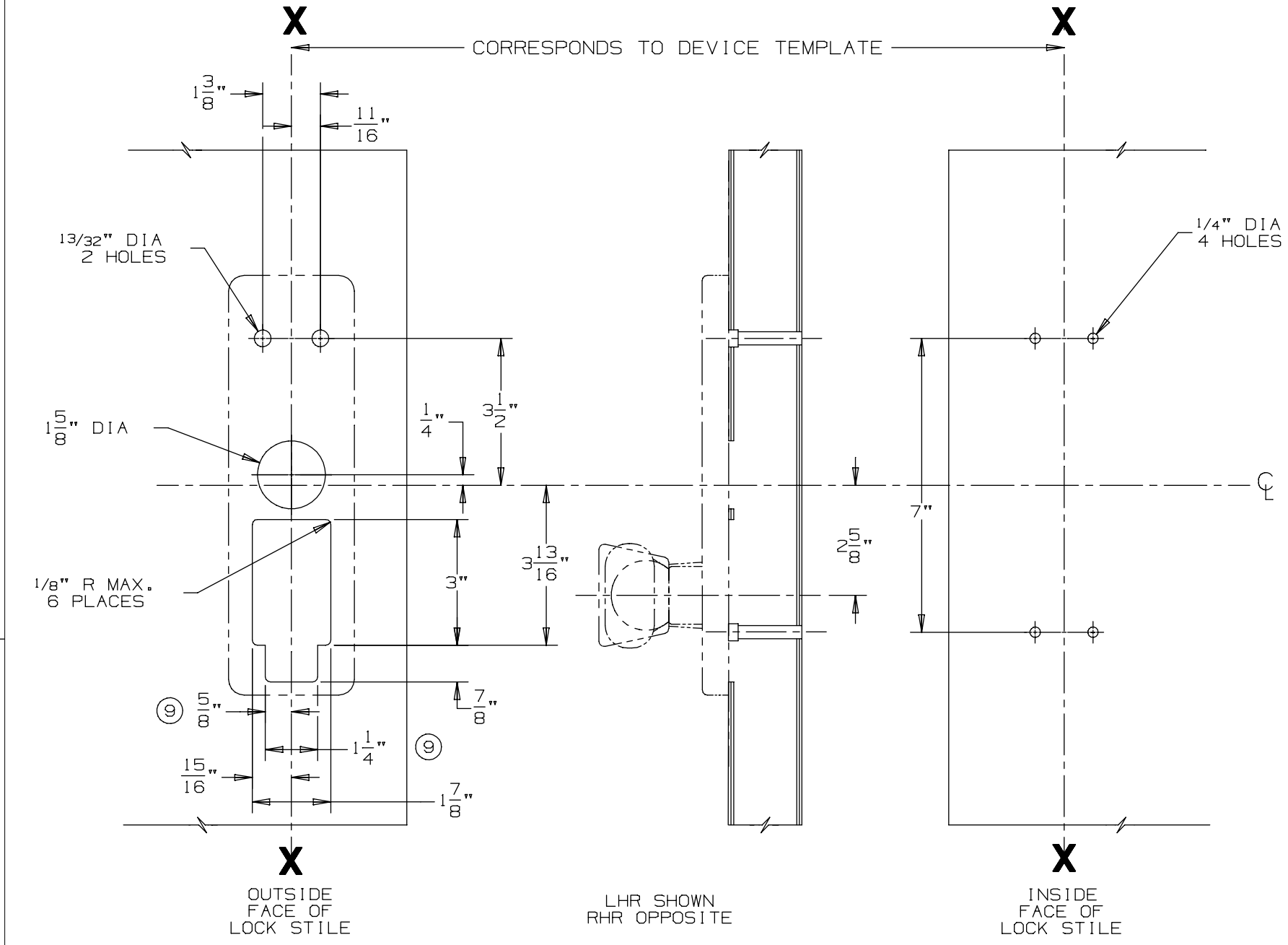

DEVICE APPLICATION SCHEDULE
98/99 SERIES RIM DEVICE
9827/9927 SERIES DEVICE
9847/9947 SERIES DEVICE

VON DUPRIN®

TEMPLATE NUMBER: 20272_a

DATE: 05-23-13

RIM APPLICATION

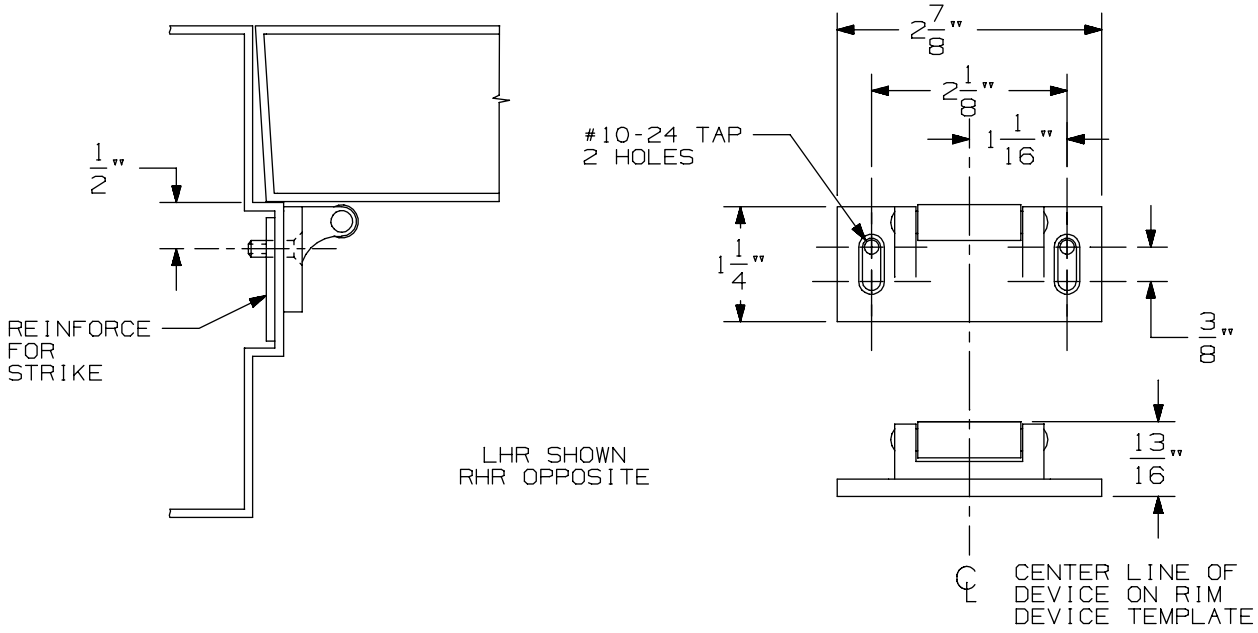

VERTICAL APPLICATION

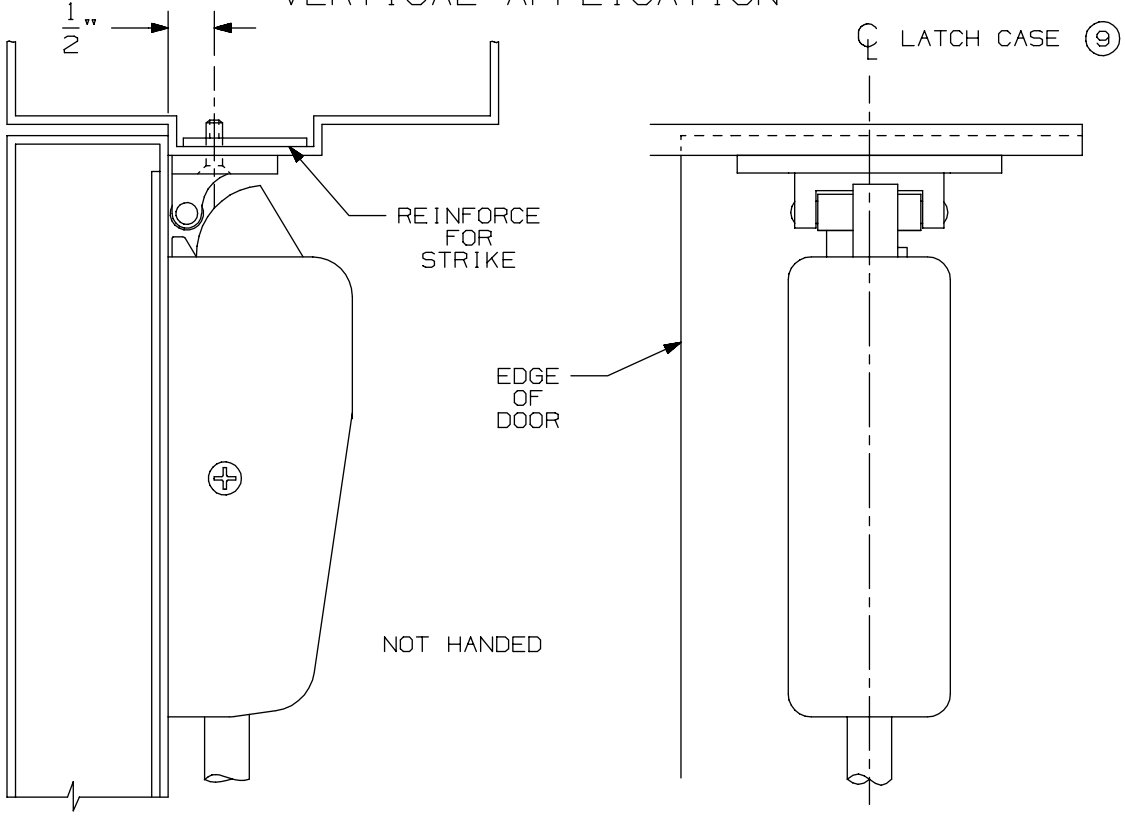

NOTE: LATCH CASE MOUNTING HOLES TO BE PREPARED AT INSTALLATION ON DOOR.

299 & 299F Strike

VON DUPRIN®

NOTES: SEE MASTER SHEET #10001 FOR SUGGESTED REINFORCING

TEMPLATE NUMBER: 30039_a

DATE: 05-23-13

TYPE 86 STOCK HOLLOW METAL DOOR

A.N.S.I. CUTOUTS ARE SHOWN FOR REFERENCE ONLY. SEE A.N.S.I. SPECIFICATION NO. A115 FOR THE SIZE AND LOCATION OF THESE CUTOUTS.

LHR SHOWN
RHR OPPOSITE

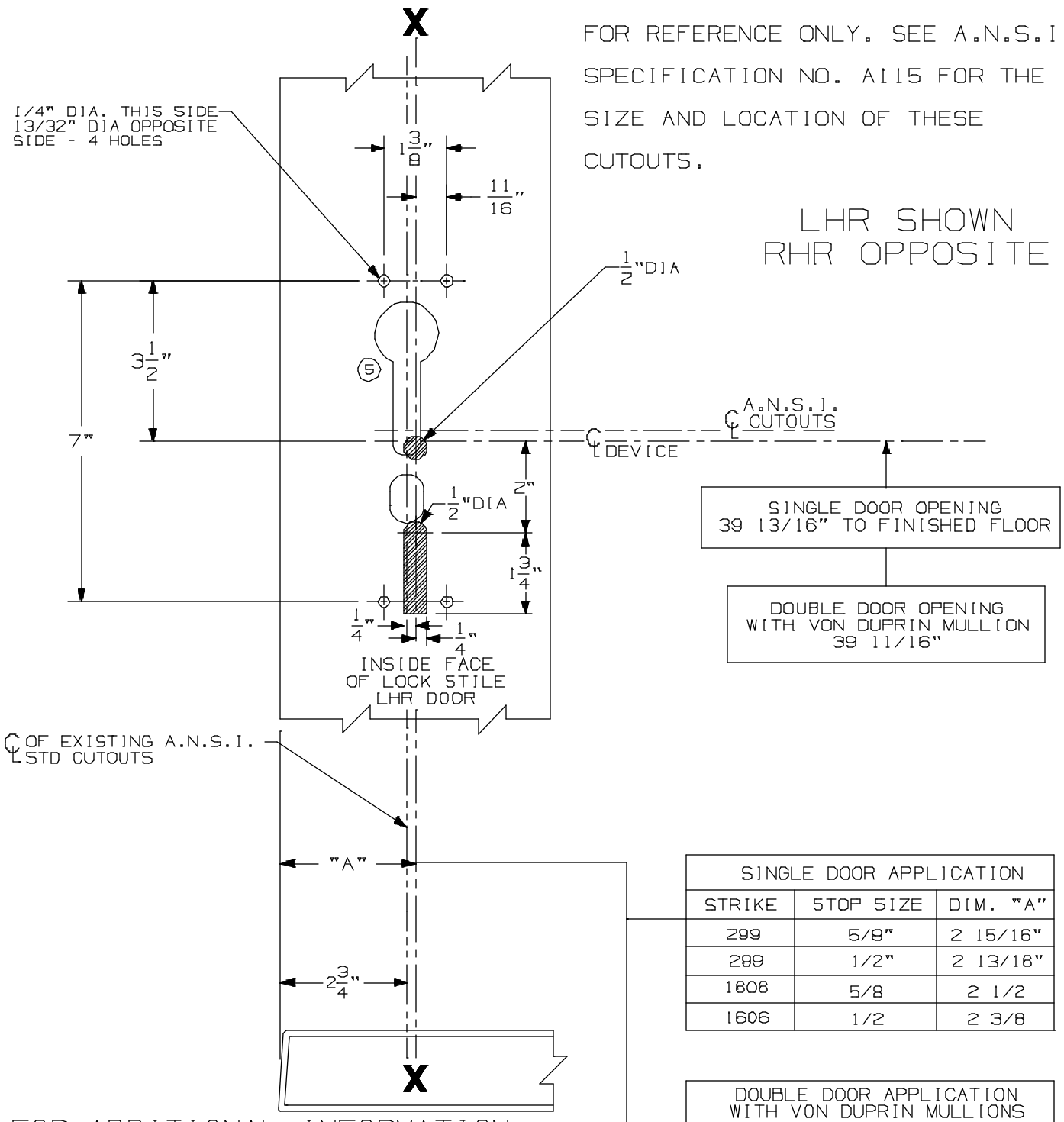

SINGLE DOOR APPLICATION		
STRIKE	STOP SIZE	DIM. "A"
299	5/8"	2 15/16"
299	1/2"	2 13/16"
1606	5/8	2 1/2
1606	1/2	2 3/8

DOUBLE DOOR APPLICATION WITH VON DUPRIN MULLIONS		
MULLION	STRIKE	DIM. "A"
5654	299	2 7/8"
1654	1606	2 7/8"

(5)

FOR ADDITIONAL INFORMATION
SEE TEMPLATE NO. 10302
FOR OUTSIDE TRIM PREPARATION, WHEN REQUIRED, SEE ADDITIONAL TRIM TEMPLATE.

98/99 TP, K, & L Rim Device w/ 990, 991, & 992 Trim for Type "86" Stock Hollow Metal Application

VON DUPRIN®

NOTES: SEE MASTER SHEET #10001 FOR SUGGESTED REINFORCING

TEMPLATE NUMBER: 10315_a

DATE: 05-21-13

DEVICE APPLICATION SCHEDULE	
98 RIM SERIES	99 RIM SERIES
9827 SERIES	9927 SERIES
9847 SERIES	9947 SERIES
9849 SERIES	9949 SERIES

996L, E996L, 996L-BE, E996L-BE 996K, 996K-BE R/V SERIES
TRIM METAL DOOR APPLICATION

VON DUPRIN®

NOTES: SEE MASTER SHEET #10001 FOR SUGGESTED REINFORCING

TEMPLATE NUMBER: 20003_e

DATE: 10-30-14

RIM APPLICATION

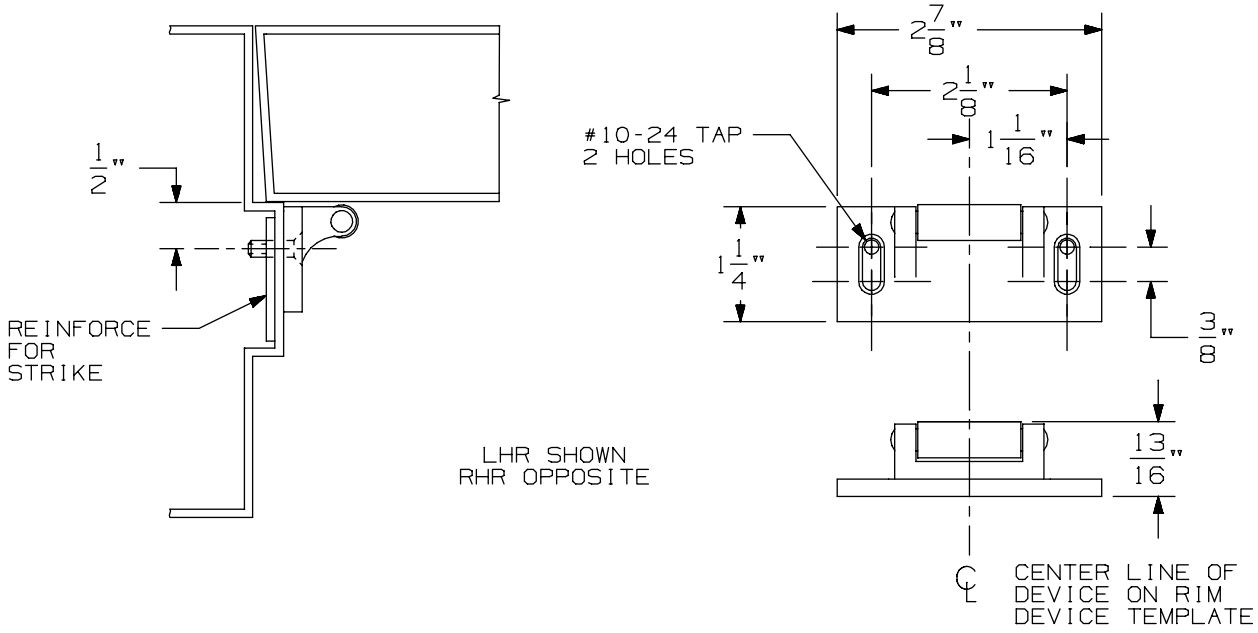

VERTICAL APPLICATION

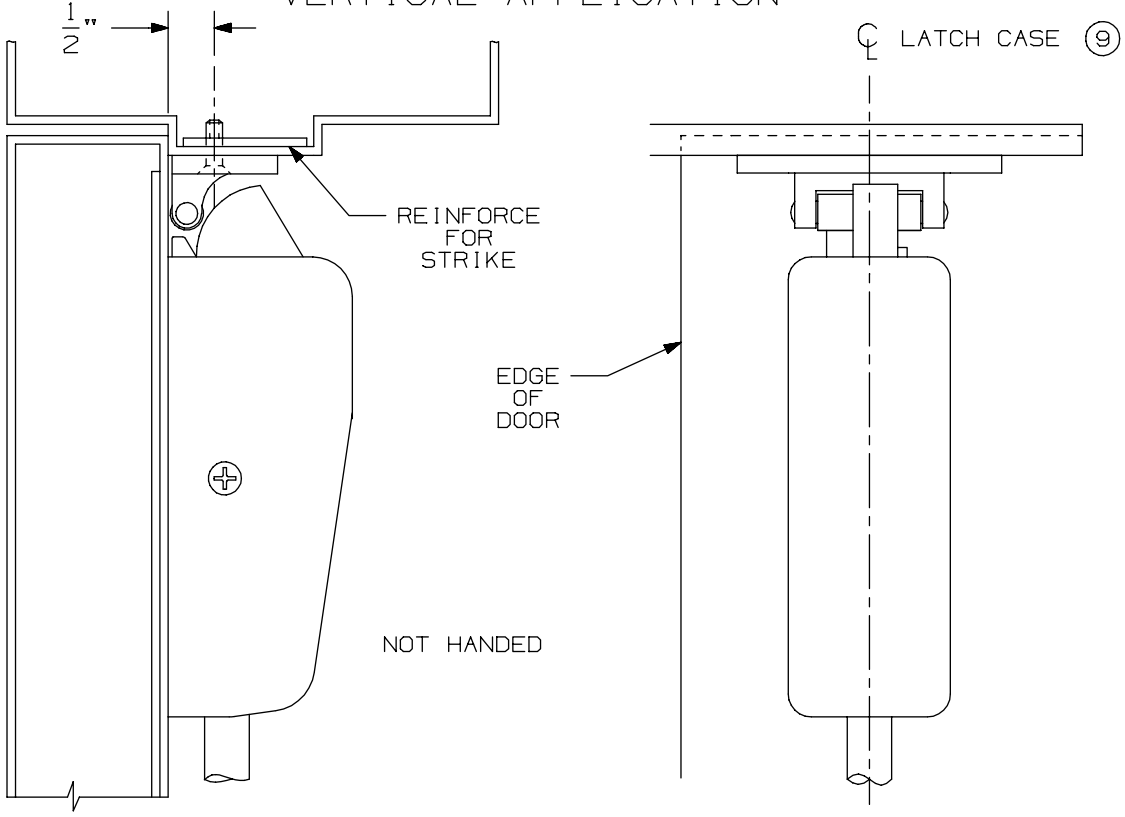

NOTE: LATCH CASE MOUNTING HOLES TO BE PREPARED AT INSTALLATION ON DOOR.

299 & 299F Strike

VON DUPRIN®

NOTES: SEE MASTER SHEET #10001 FOR SUGGESTED REINFORCING

TEMPLATE NUMBER: 30039_a

DATE: 05-23-13

TYPE 86 STOCK HOLLOW METAL DOOR

A.N.S.I. CUTOUTS ARE SHOWN FOR REFERENCE ONLY. SEE A.N.S.I. SPECIFICATION NO. A115 FOR THE SIZE AND LOCATION OF THESE CUTOUTS.

LHR SHOWN
RHR OPPOSITE

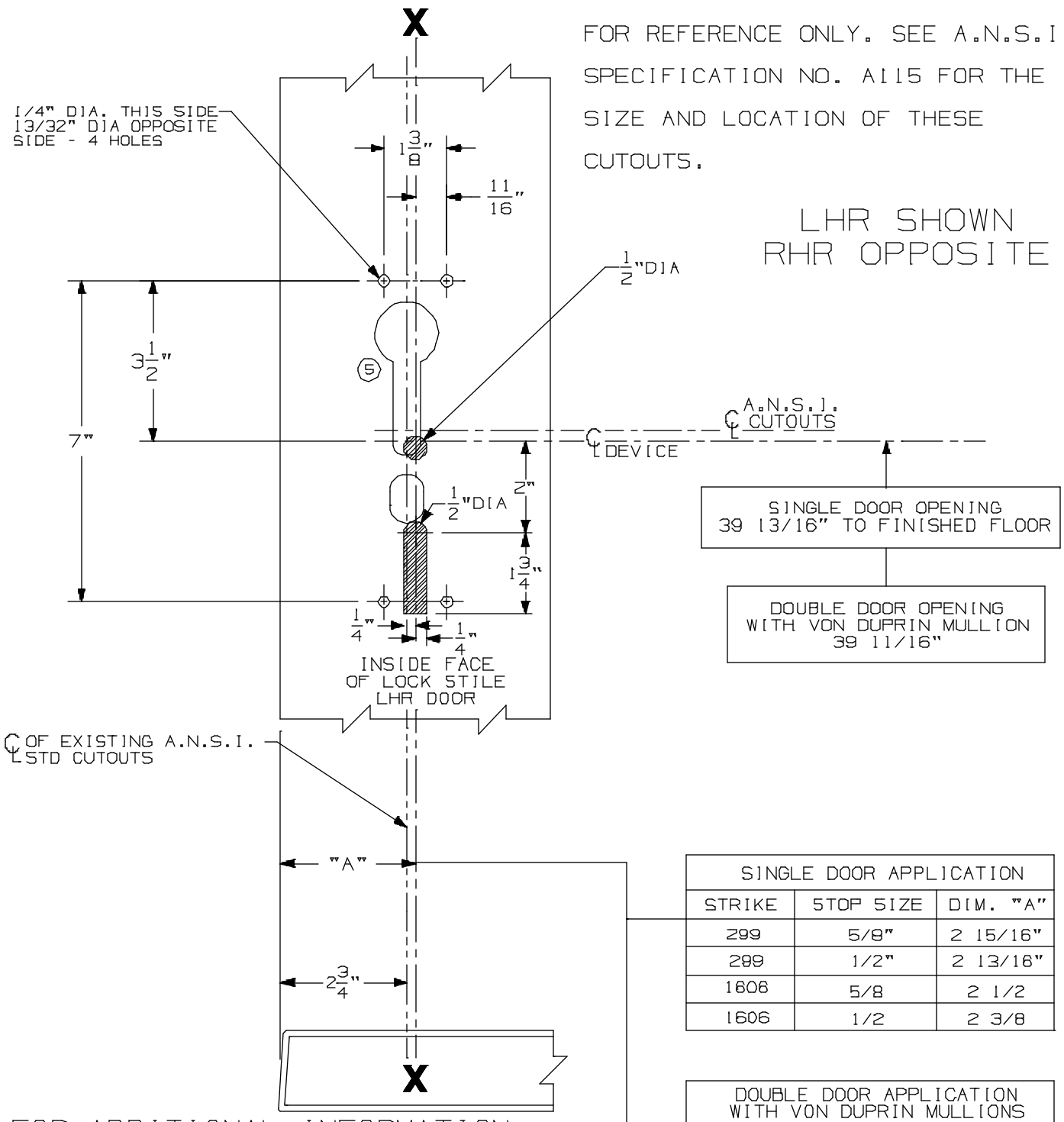

SINGLE DOOR APPLICATION		
STRIKE	STOP SIZE	DIM. "A"
299	5/8"	2 15/16"
299	1/2"	2 13/16"
1606	5/8	2 1/2
1606	1/2	2 3/8

DOUBLE DOOR APPLICATION WITH VON DUPRIN MULLIONS		
MULLION	STRIKE	DIM. "A"
5654	299	2 7/8"
1654	1606	2 7/8"

(5)

FOR ADDITIONAL INFORMATION
SEE TEMPLATE NO. 10302
FOR OUTSIDE TRIM PREPARATION, WHEN REQUIRED, SEE ADDITIONAL TRIM TEMPLATE.

98/99 TP, K, & L Rim Device w/ 990, 991, & 992 Trim for Type "86" Stock Hollow Metal Application

VON DUPRIN®

NOTES: SEE MASTER SHEET #10001 FOR SUGGESTED REINFORCING

TEMPLATE NUMBER: 10315_a

DATE: 05-21-13

990 TP & 990 TP-BE TRIM

NOTES: SEE MASTER SHEET #10001 FOR SUGGESTED REINFORCING

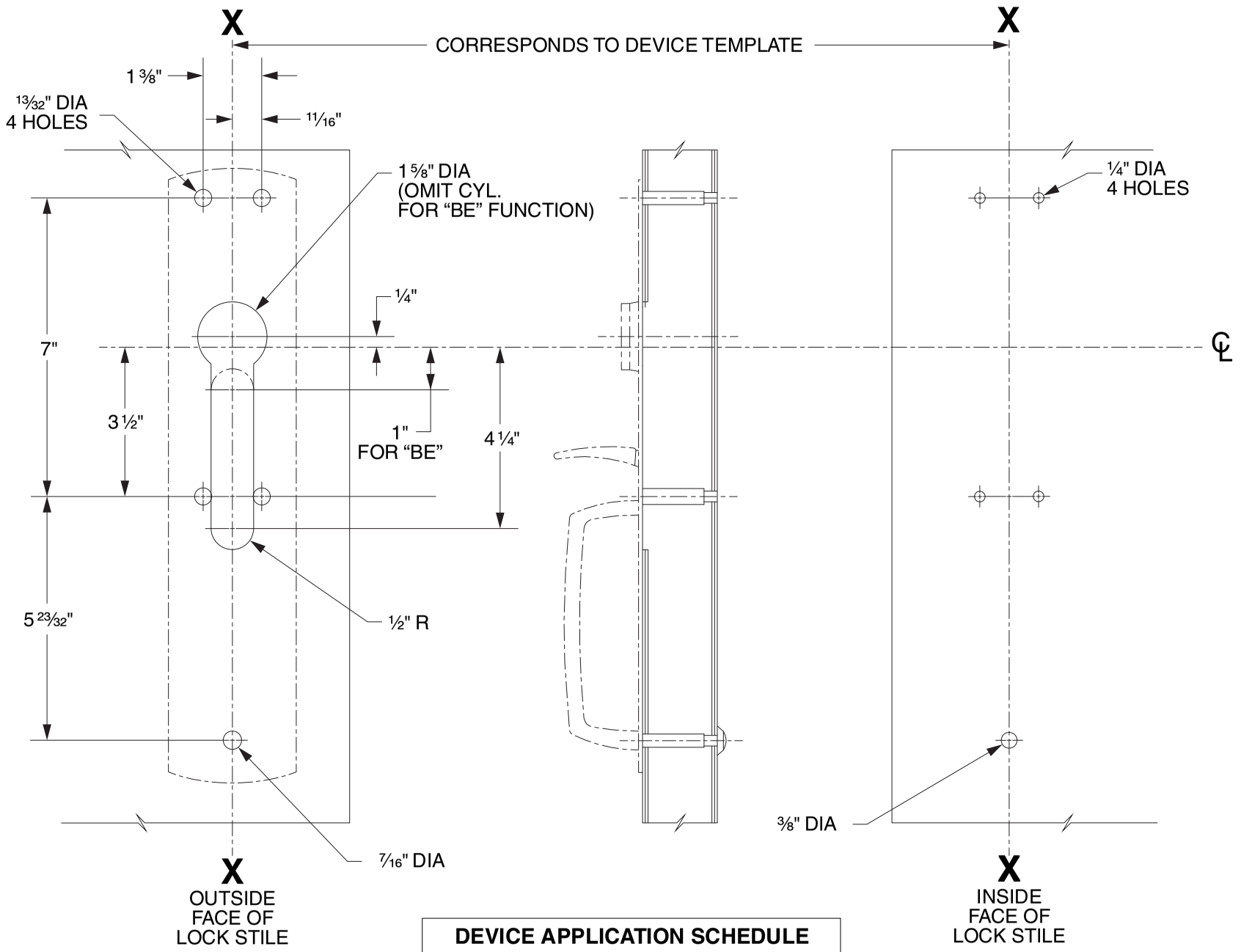

DEVICE APPLICATION SCHEDULE
98/99 SERIES RIM DEVICE
9827/9927 SERIES DEVICE
9847/9947 SERIES DEVICE
9849/9949 SERIES DEVICE

LHR SHOWN
RHR OPPOSITE

VON DUPRIN®

TEMPLATE NUMBER: 20265_C

DATE: 05-31-13

RIM APPLICATION

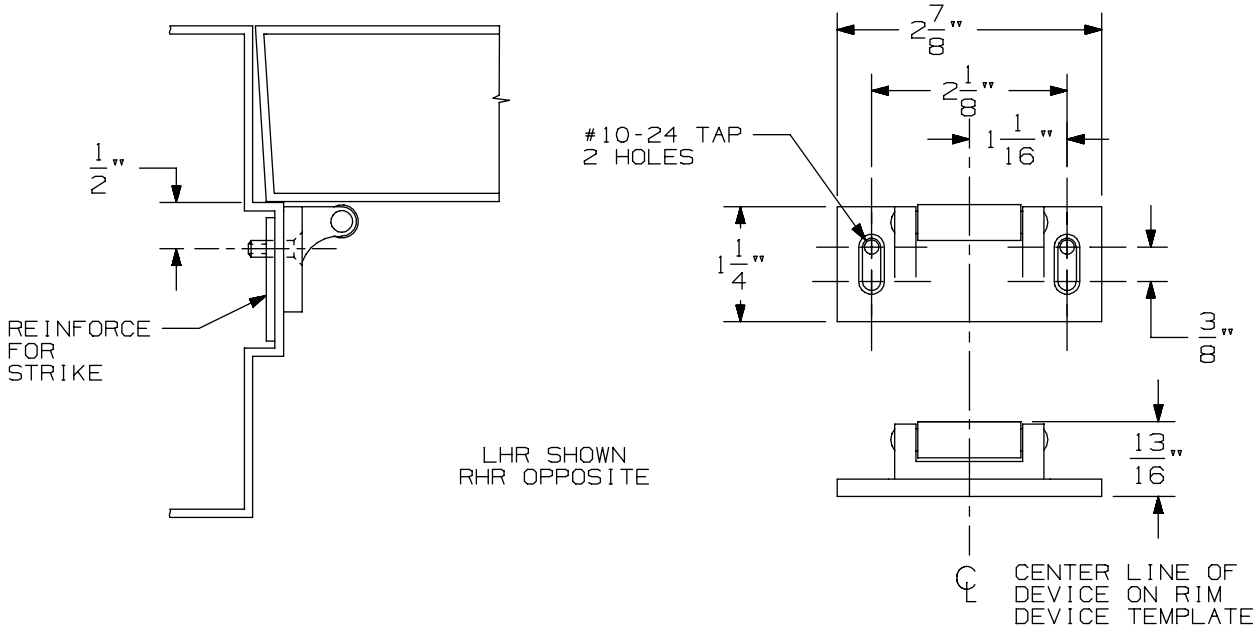

VERTICAL APPLICATION

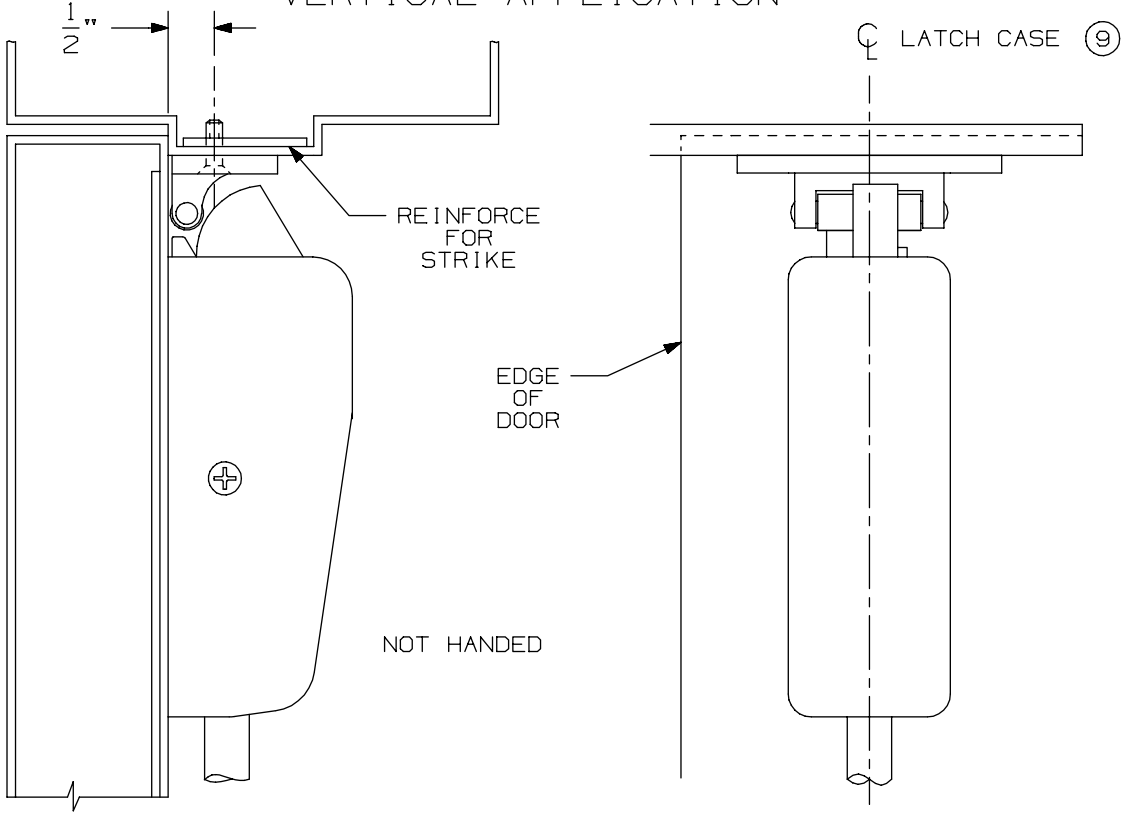

NOTE: LATCH CASE MOUNTING HOLES TO BE PREPARED AT INSTALLATION ON DOOR.

299 & 299F Strike

VON DUPRIN®

NOTES: SEE MASTER SHEET #10001 FOR SUGGESTED REINFORCING

TEMPLATE NUMBER: 30039_a

DATE: 05-23-13

98 / 99 Series for 86 Stock Hollow Metal Doors

-

E98/E99 Rim Electric Locking

TYPE 86 STOCK HOLLOW METAL DOOR

A.N.S.I. CUTOUTS ARE SHOWN FOR REFERENCE ONLY. SEE A.N.S.I. SPECIFICATION NO. A115 FOR THE SIZE AND LOCATION OF THESE CUTOUTS.

LHR SHOWN
RHR OPPOSITE

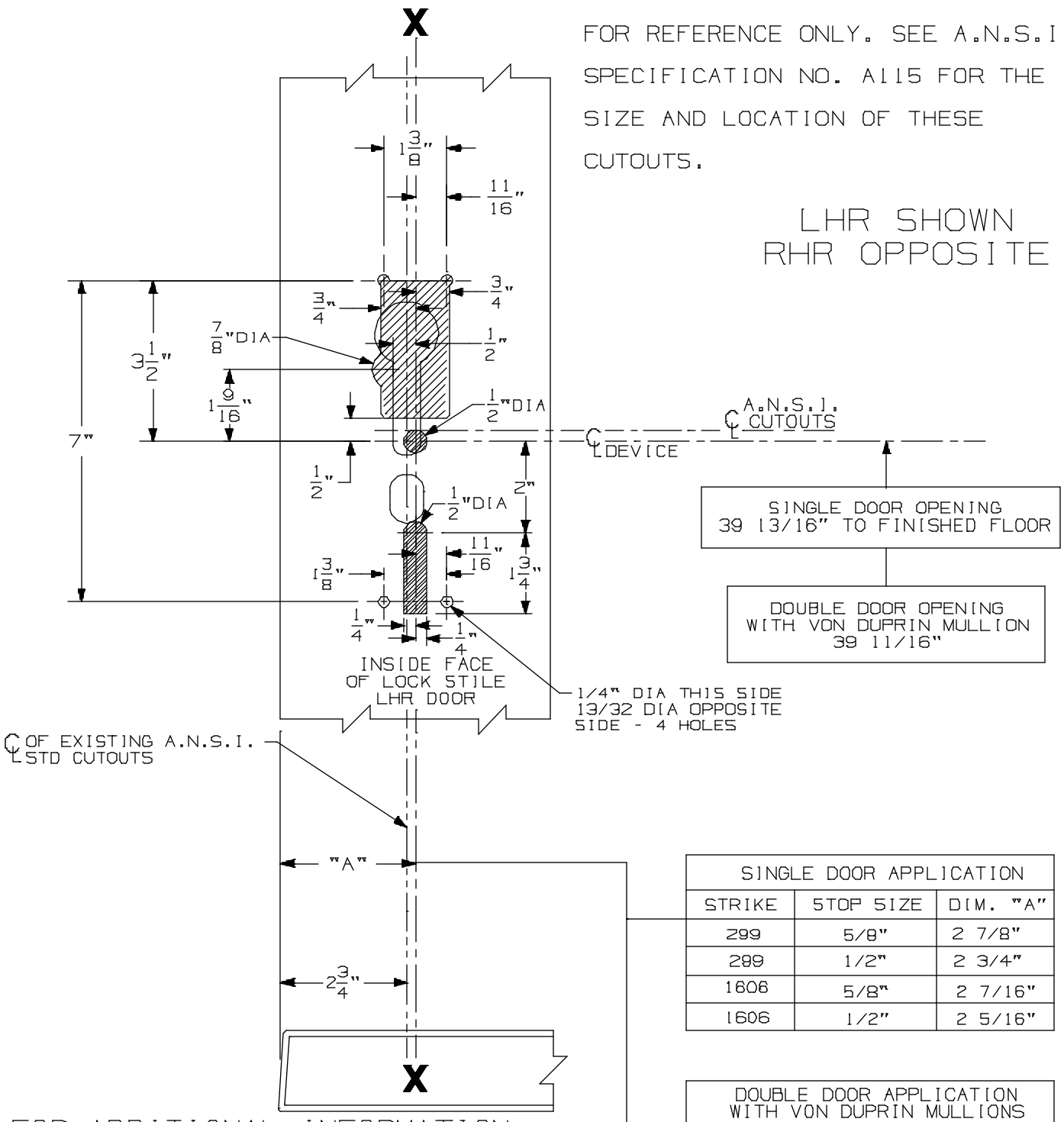

SINGLE DOOR APPLICATION		
STRIKE	STOP SIZE	DIM. "A"
299	5/8"	2 7/8"
299	1/2"	2 3/4"
1606	5/8"	2 7/16"
1606	1/2"	2 5/16"

DOUBLE DOOR APPLICATION WITH VON DUPRIN MULLIONS		
MULLION	STRIKE	DIM. "A"
5654	299	2 13/16"
1654	1606	2 13/16"

(4)

FOR ADDITIONAL INFORMATION
SEE TEMPLATE NO. 10207
FOR OUTSIDE TRIM PREPARATION, WHEN REQUIRED, SEE ADDITIONAL TRIM TEMPLATE.

E98/E99 & E98-F/E99-F Rim Devices w/ 990, 991, 992 Trim for Type "86" Stock Hollow Metal Applications

VON DUPRIN®

NOTES: SEE MASTER SHEET #10001 FOR SUGGESTED REINFORCING

TEMPLATE NUMBER: 10316_a

DATE: 05-21-13

991 K & 992 L Trim

NOTES: SEE MASTER SHEET #10001 FOR SUGGESTED REINFORCING

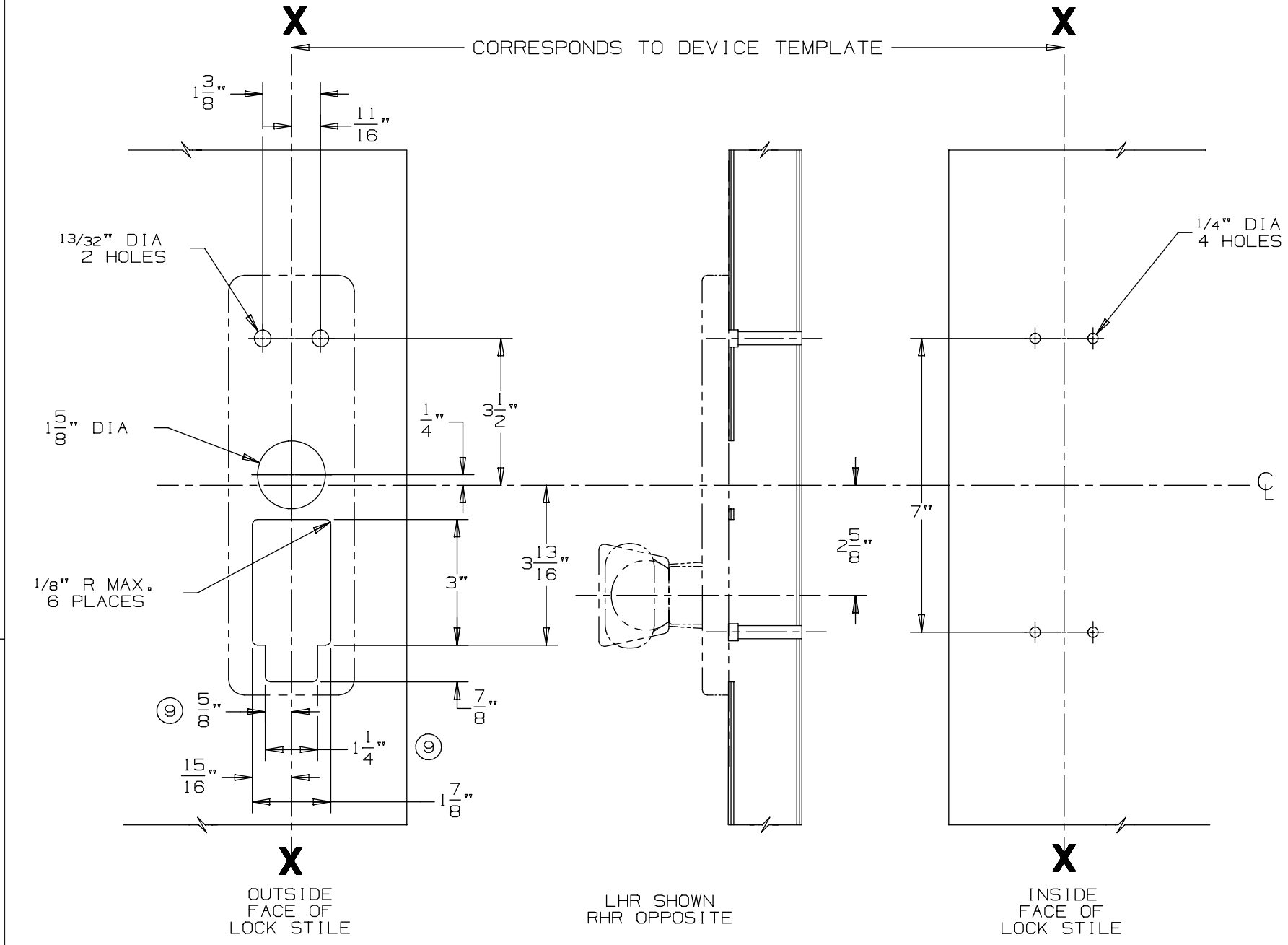

DEVICE APPLICATION SCHEDULE
98/99 SERIES RIM DEVICE
9827/9927 SERIES DEVICE
9847/9947 SERIES DEVICE

VON DUPRIN®

TEMPLATE NUMBER: 20272_a

DATE: 05-23-13

RIM APPLICATION

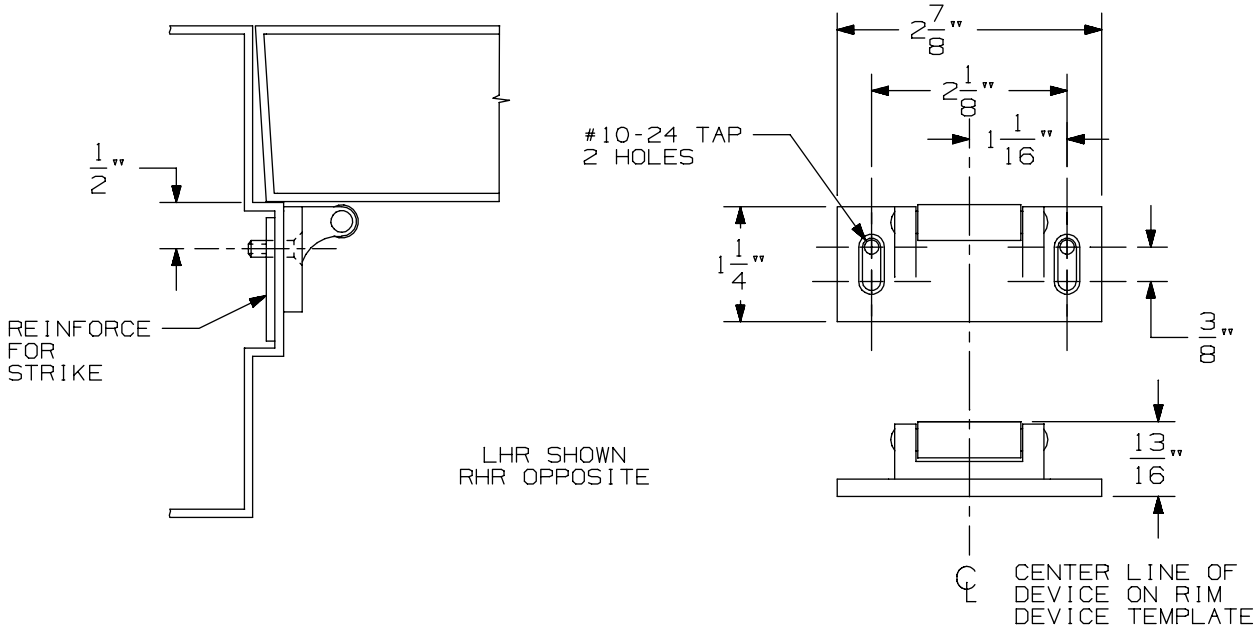

VERTICAL APPLICATION

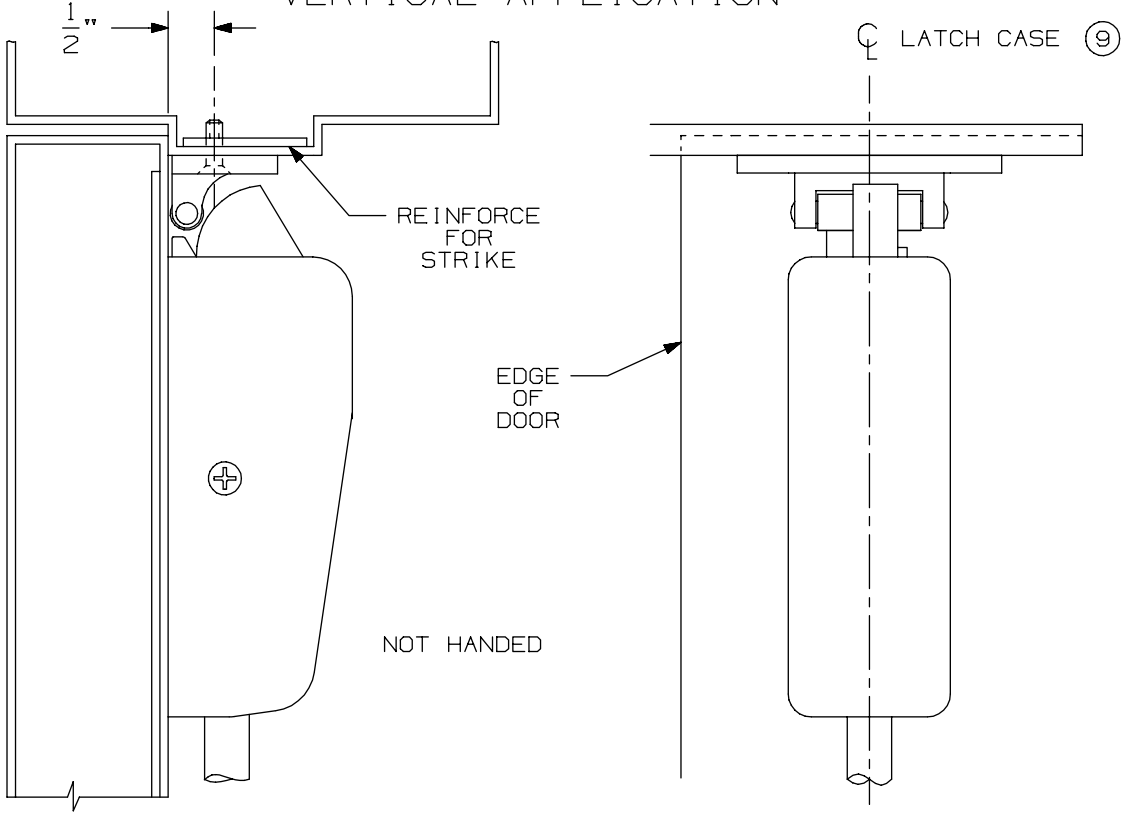

NOTE: LATCH CASE MOUNTING HOLES TO BE PREPARED AT INSTALLATION ON DOOR.

299 & 299F Strike

VON DUPRIN®

NOTES: SEE MASTER SHEET #10001 FOR SUGGESTED REINFORCING

TEMPLATE NUMBER: 30039_a

DATE: 05-23-13

TYPE 86 STOCK HOLLOW METAL DOOR

A.N.S.I. CUTOUTS ARE SHOWN FOR REFERENCE ONLY. SEE A.N.S.I. SPECIFICATION NO. A115 FOR THE SIZE AND LOCATION OF THESE CUTOUTS.

LHR SHOWN
RHR OPPOSITE

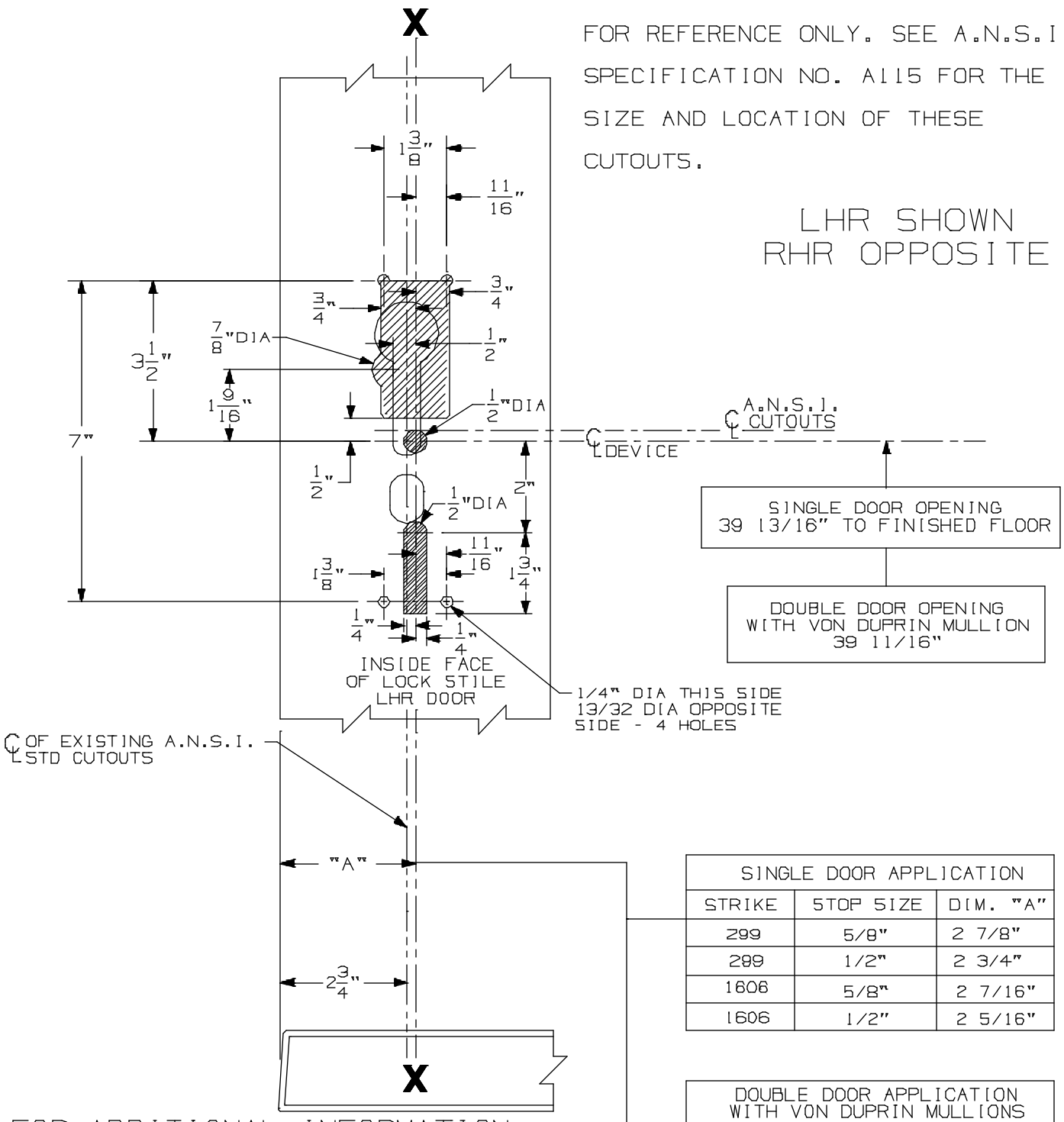

SINGLE DOOR APPLICATION		
STRIKE	STOP SIZE	DIM. "A"
299	5/8"	2 7/8"
299	1/2"	2 3/4"
1606	5/8"	2 7/16"
1606	1/2"	2 5/16"

DOUBLE DOOR APPLICATION WITH VON DUPRIN MULLIONS		
MULLION	STRIKE	DIM. "A"
5654	299	2 13/16"
1654	1606	2 13/16"

(4)

FOR ADDITIONAL INFORMATION
SEE TEMPLATE NO. 10207
FOR OUTSIDE TRIM PREPARATION, WHEN REQUIRED, SEE ADDITIONAL TRIM TEMPLATE.

E98/E99 & E98-F/E99-F Rim Devices w/ 990, 991, 992 Trim for Type "86" Stock Hollow Metal Applications

VON DUPRIN®

NOTES: SEE MASTER SHEET #10001 FOR SUGGESTED REINFORCING

TEMPLATE NUMBER: 10316_a

DATE: 05-21-13

DEVICE APPLICATION SCHEDULE	
98 RIM SERIES	99 RIM SERIES
9827 SERIES	9927 SERIES
9847 SERIES	9947 SERIES
9849 SERIES	9949 SERIES

996L, E996L, 996L-BE, E996L-BE 996K, 996K-BE R/V SERIES
TRIM METAL DOOR APPLICATION

VON DUPRIN®

NOTES: SEE MASTER SHEET #10001 FOR SUGGESTED REINFORCING

TEMPLATE NUMBER: 20003_e

DATE: 10-30-14

RIM APPLICATION

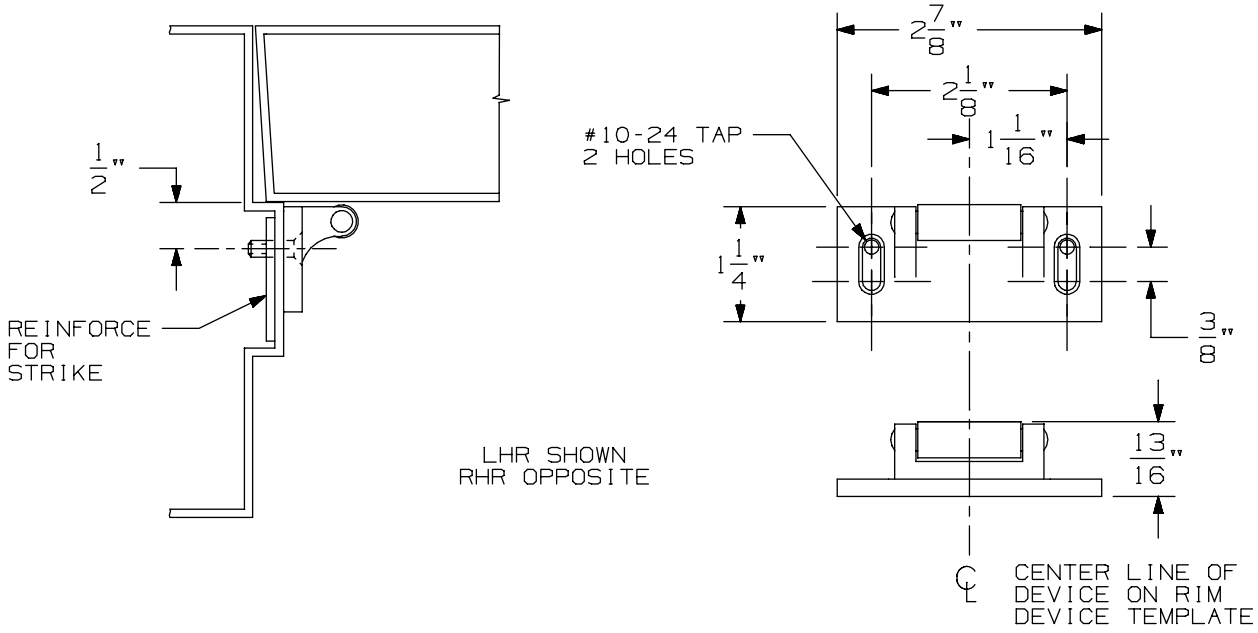

VERTICAL APPLICATION

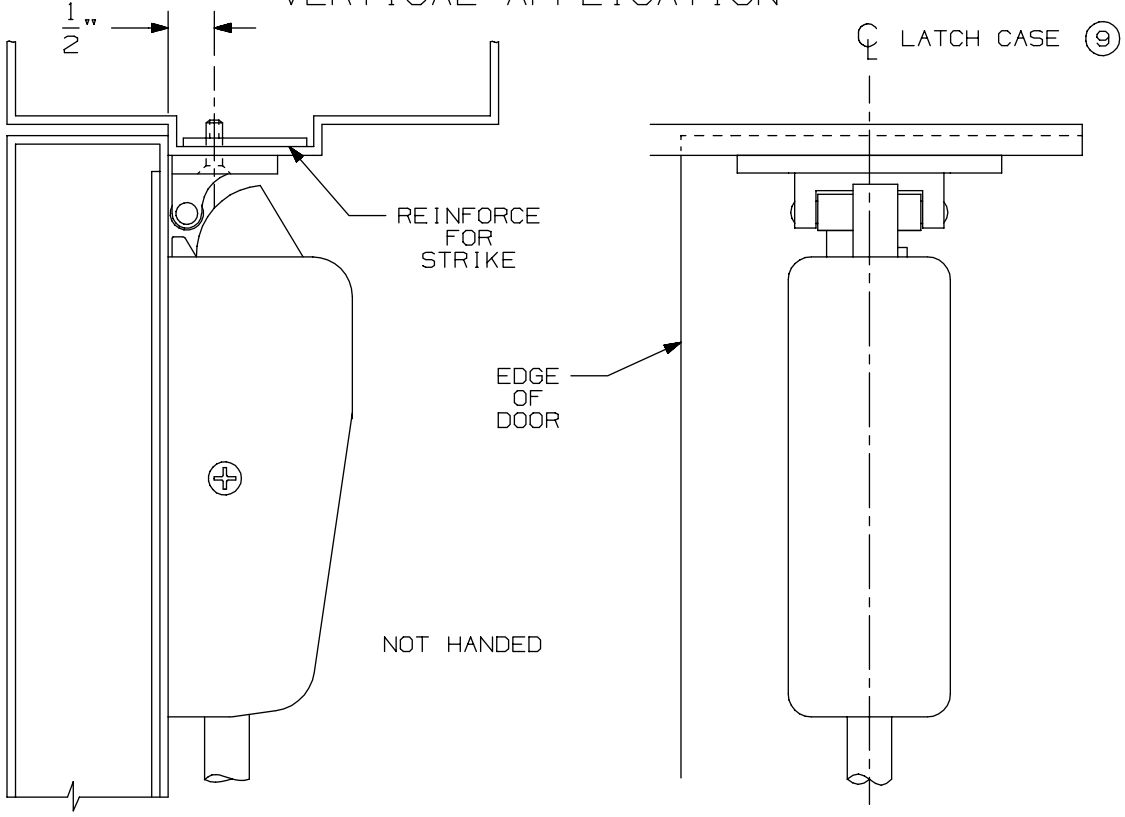

NOTE: LATCH CASE MOUNTING HOLES TO BE PREPARED AT INSTALLATION ON DOOR.

299 & 299F Strike

VON DUPRIN®

NOTES: SEE MASTER SHEET #10001 FOR SUGGESTED REINFORCING

TEMPLATE NUMBER: 30039_a

DATE: 05-23-13

TYPE 86 STOCK HOLLOW METAL DOOR

A.N.S.I. CUTOUTS ARE SHOWN FOR REFERENCE ONLY. SEE A.N.S.I. SPECIFICATION NO. A115 FOR THE SIZE AND LOCATION OF THESE CUTOUTS.

LHR SHOWN
RHR OPPOSITE

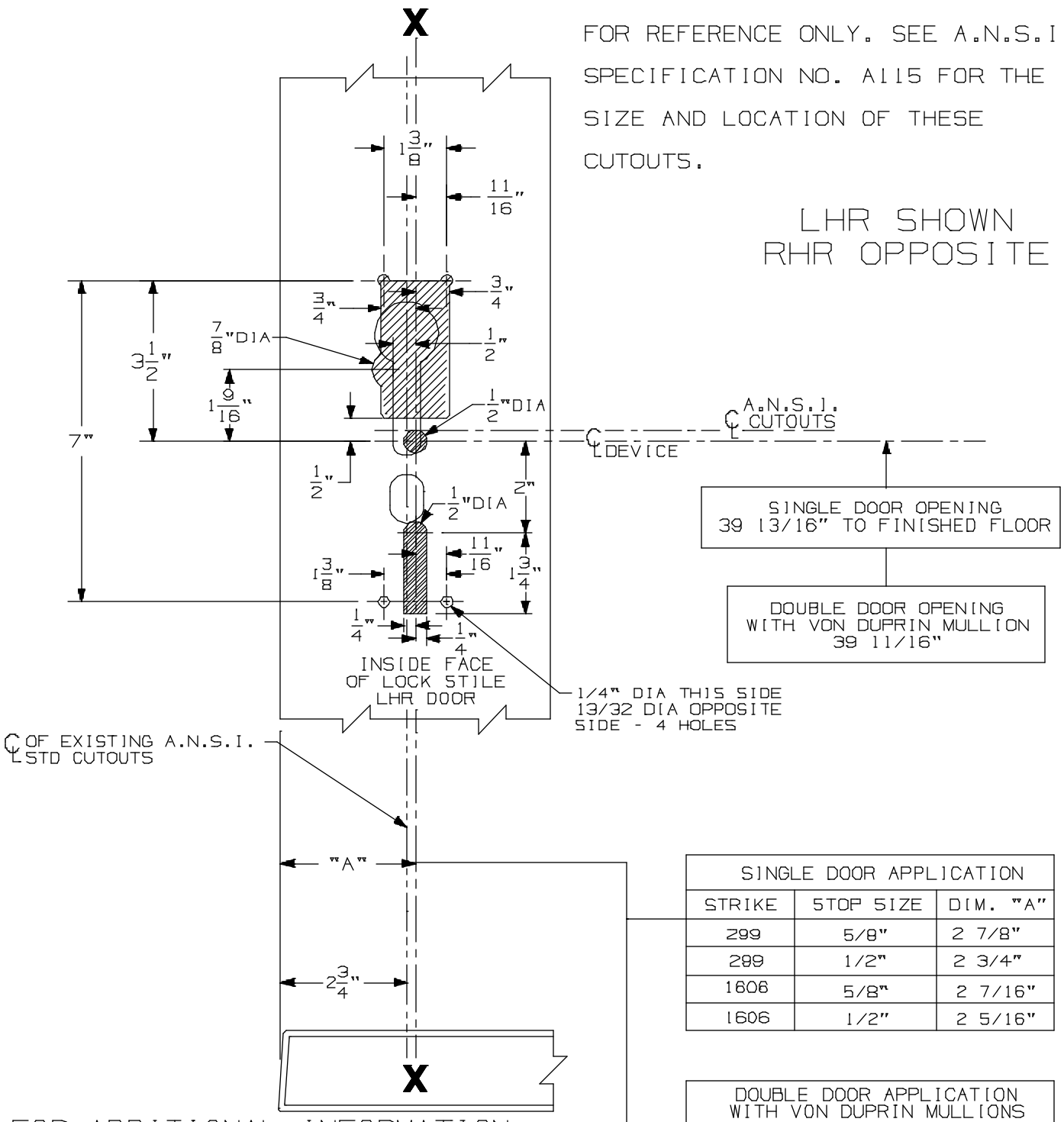

SINGLE DOOR APPLICATION		
STRIKE	STOP SIZE	DIM. "A"
299	5/8"	2 7/8"
299	1/2"	2 3/4"
1606	5/8"	2 7/16"
1606	1/2"	2 5/16"

DOUBLE DOOR APPLICATION WITH VON DUPRIN MULLIONS		
MULLION	STRIKE	DIM. "A"
5654	299	2 13/16"
1654	1606	2 13/16"

(4)

FOR ADDITIONAL INFORMATION
SEE TEMPLATE NO. 10207
FOR OUTSIDE TRIM PREPARATION, WHEN REQUIRED, SEE ADDITIONAL TRIM TEMPLATE.

E98/E99 & E98-F/E99-F Rim Devices w/ 990, 991, 992 Trim for Type "86" Stock Hollow Metal Applications

VON DUPRIN®

NOTES: SEE MASTER SHEET #10001 FOR SUGGESTED REINFORCING

TEMPLATE NUMBER: 10316_a

DATE: 05-21-13

990 TP & 990 TP-BE TRIM

NOTES: SEE MASTER SHEET #10001 FOR SUGGESTED REINFORCING

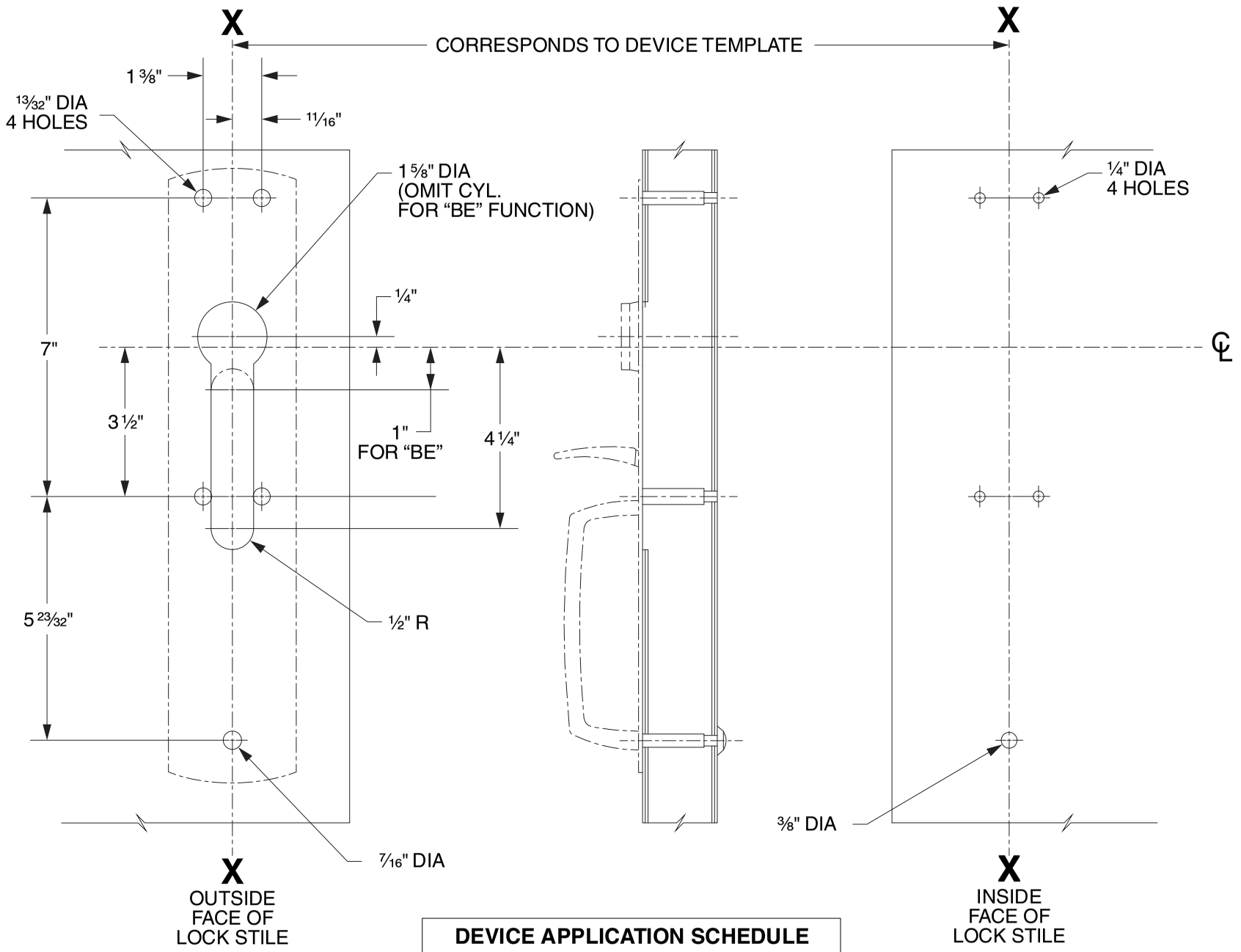

DEVICE APPLICATION SCHEDULE
98/99 SERIES RIM DEVICE
9827/9927 SERIES DEVICE
9847/9947 SERIES DEVICE
9849/9949 SERIES DEVICE

LHR SHOWN
RHR OPPOSITE

VON DUPRIN®

TEMPLATE NUMBER: 20265_C

DATE: 05-31-13

RIM APPLICATION

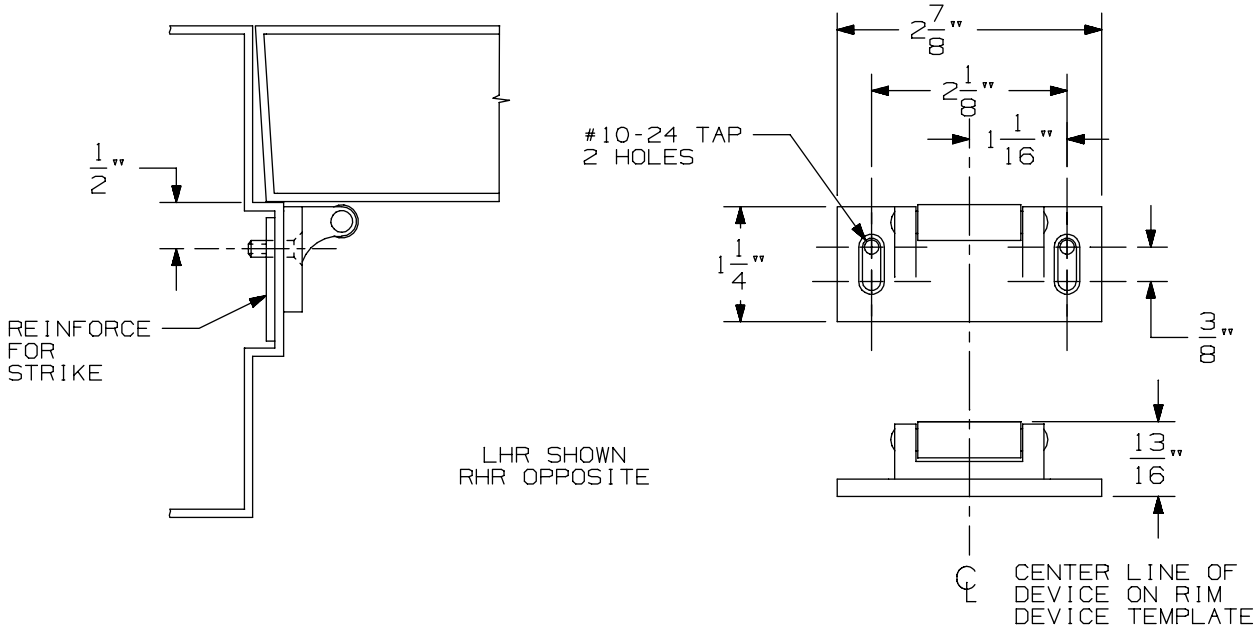

VERTICAL APPLICATION

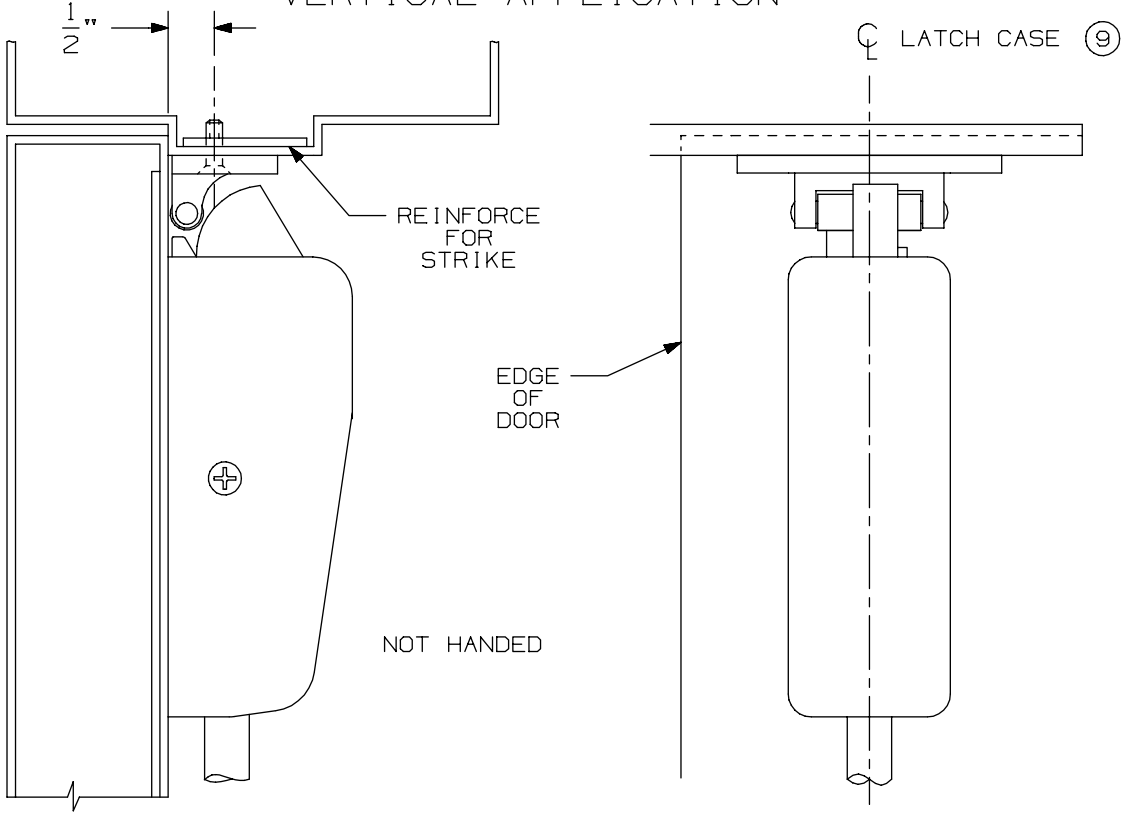

NOTE: LATCH CASE MOUNTING HOLES TO BE PREPARED AT INSTALLATION ON DOOR.

299 & 299F Strike

VON DUPRIN®

NOTES: SEE MASTER SHEET #10001 FOR SUGGESTED REINFORCING

TEMPLATE NUMBER: 30039_a

DATE: 05-23-13

98 / 99 Series for 86 Stock Hollow Metal Doors

-

9827/9927 Surface Vertical Rod (Standard, CD, EL, LX, RX & SS)

FOR ADDITIONAL INFORMATION SEE TEMPLATE NO. 10303

TYPE 161 STOCK HOLLOW METAL DOOR

TYPE 86 STOCK HOLLOW METAL DOOR

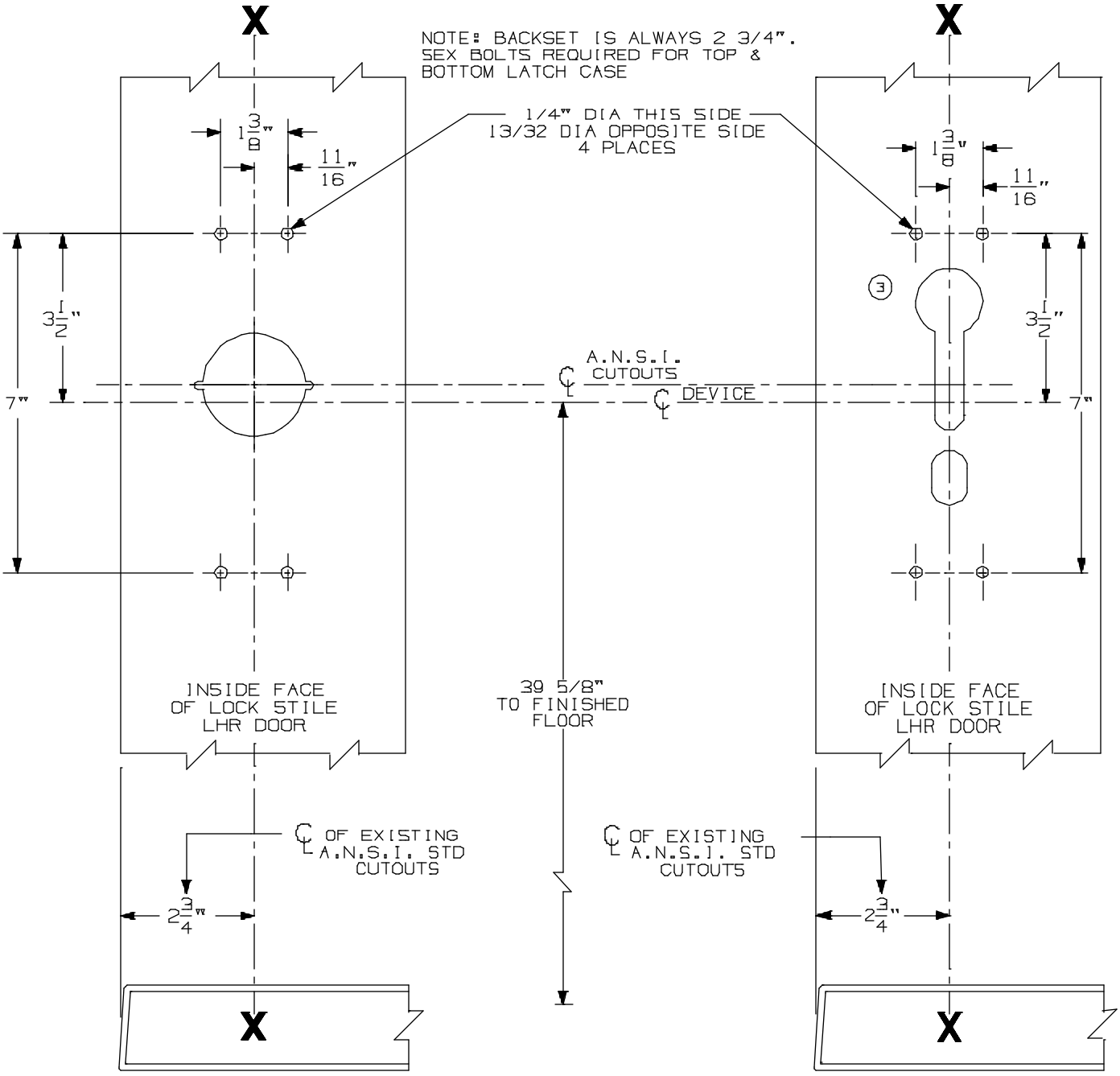

A.N.S.I. CUTOUTS ARE SHOWN FOR REFERENCE ONLY. SEE A.N.S.I. SPECIFICATION NO. A115 FOR THE SIZE AND LOCATION OF THESE CUTOUTS.

FOR OUTSIDE TRIM PREPARATION, SEE ADDITIONAL TRIM TEMPLATE.

LHR SHOWN
RHR OPPOSITE

9827/9927 EO, DT, & NL Vertical Rod Devices w/ 990, 991/992-DT & Rigid Trim for Stock Hollow Metal Applications	VON DUPRIN®	
NOTES: SEE MASTER SHEET #10001 FOR SUGGESTED REINFORCING	TEMPLATE NUMBER: 10310_a	DATE: 05-21-13

990 EO TRIM

NOTES: SEE MASTER SHEET #10001 FOR SUGGESTED REINFORCING

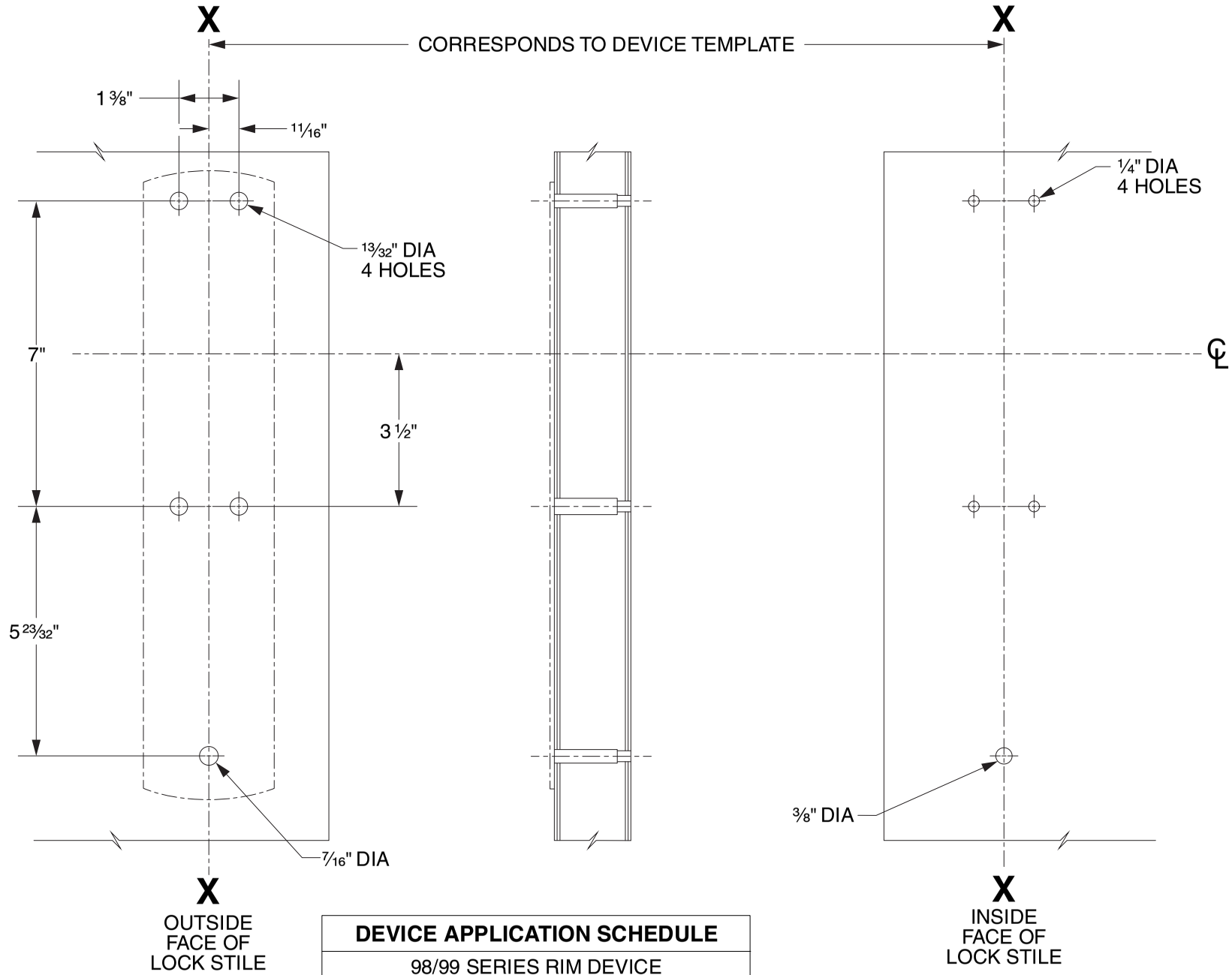

DEVICE APPLICATION SCHEDULE
98/99 SERIES RIM DEVICE
9827/9927 SERIES DEVICE
9847/9947 SERIES DEVICE
9849/9949 SERIES DEVICE
9875/9975 SERIES DEVICE

LHR SHOWN
RHR OPPOSITE

VON DUPRIN®

TEMPLATE NUMBER: 20269_C

DATE: 05-31-13

RIM APPLICATION

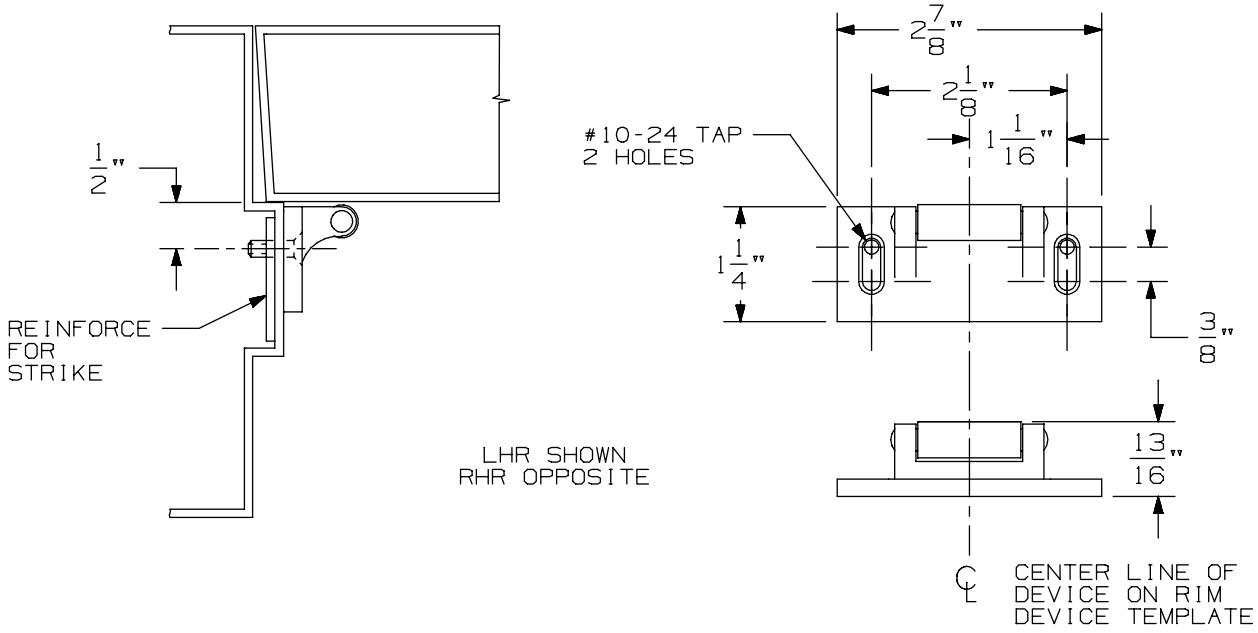

VERTICAL APPLICATION

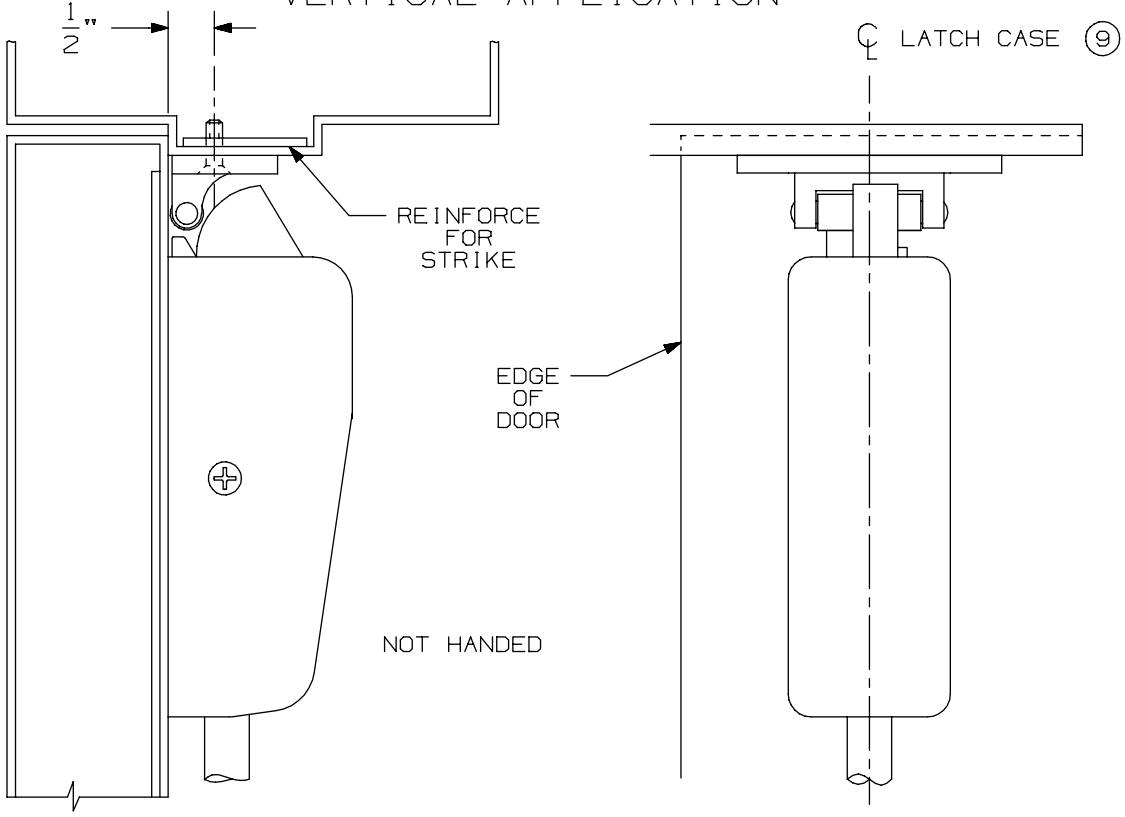

NOTE: LATCH CASE MOUNTING HOLES TO BE PREPARED AT INSTALLATION ON DOOR.

299 & 299F Strike

VON DUPRIN®

NOTES: SEE MASTER SHEET #10001 FOR SUGGESTED REINFORCING

TEMPLATE NUMBER: 30039_a

DATE: 05-23-13

FOR ADDITIONAL INFORMATION SEE TEMPLATE NO. 10303

TYPE 161 STOCK HOLLOW METAL DOOR

TYPE 86 STOCK HOLLOW METAL DOOR

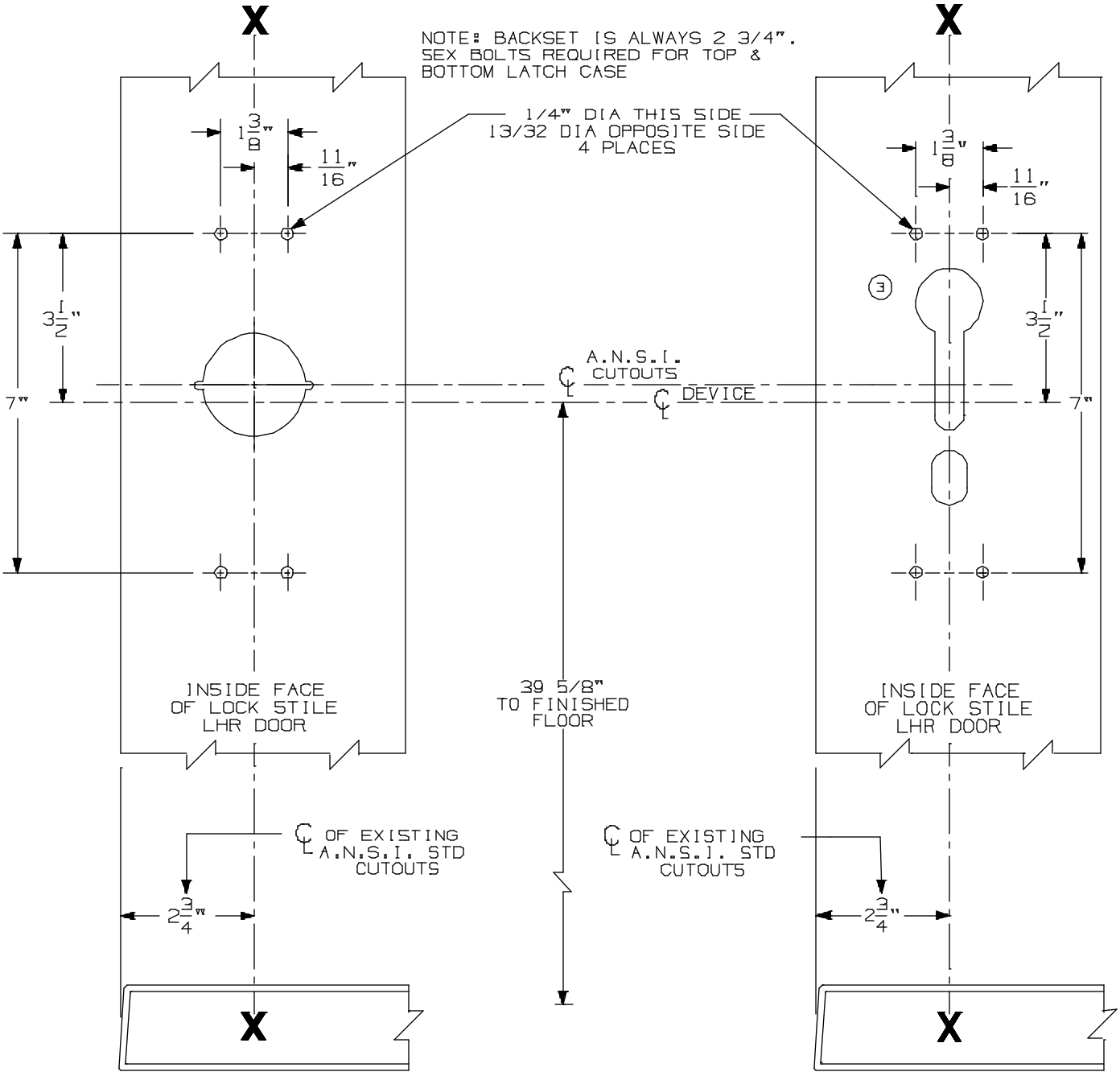

A.N.S.I. CUTOUTS ARE SHOWN FOR REFERENCE ONLY. SEE A.N.S.I. SPECIFICATION NO. A115 FOR THE SIZE AND LOCATION OF THESE CUTOUTS.

FOR OUTSIDE TRIM PREPARATION, SEE ADDITIONAL TRIM TEMPLATE.

LHR SHOWN
RHR OPPOSITE

9827/9927 EO, DT, & NL Vertical Rod Devices w/ 990, 991/992-DT & Rigid Trim for Stock Hollow Metal Applications	VON DUPRIN®	
NOTES: SEE MASTER SHEET #10001 FOR SUGGESTED REINFORCING	TEMPLATE NUMBER: 10310_a	DATE: 05-21-13

990 DT TRIM

NOTES: SEE MASTER SHEET #10001 FOR SUGGESTED REINFORCING

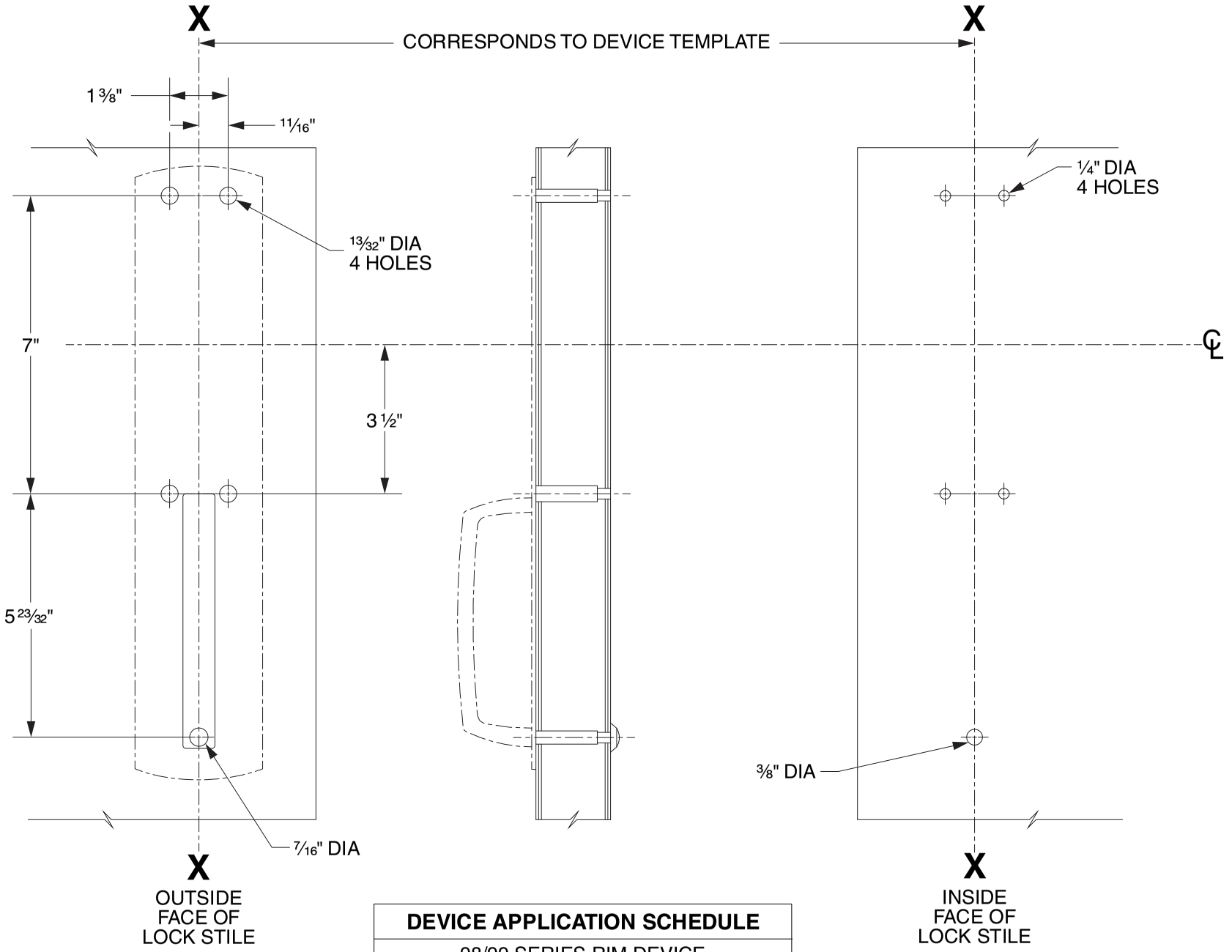

DEVICE APPLICATION SCHEDULE
98/99 SERIES RIM DEVICE
9827/9927 SERIES DEVICE
9847/9947 SERIES DEVICE
9849/9949 SERIES DEVICE
9875/9975 SERIES DEVICE

LHR SHOWN
RHR OPPOSITE

VON DUPRIN®

TEMPLATE NUMBER: 20268_C

DATE: 05-31-13

RIM APPLICATION

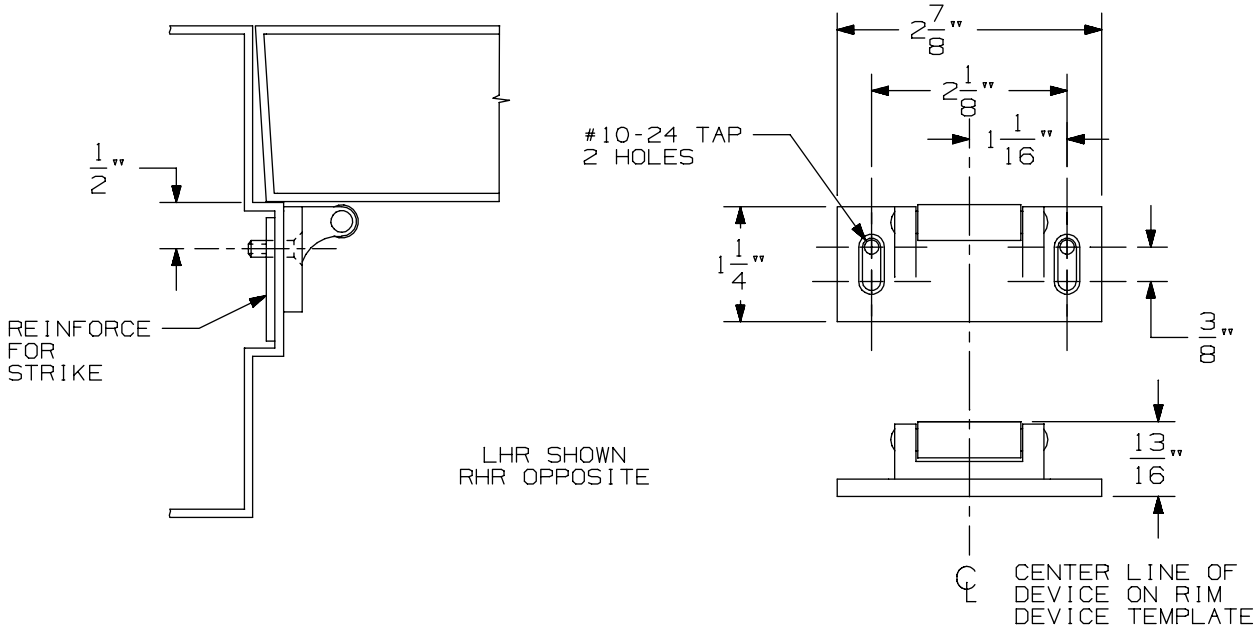

VERTICAL APPLICATION

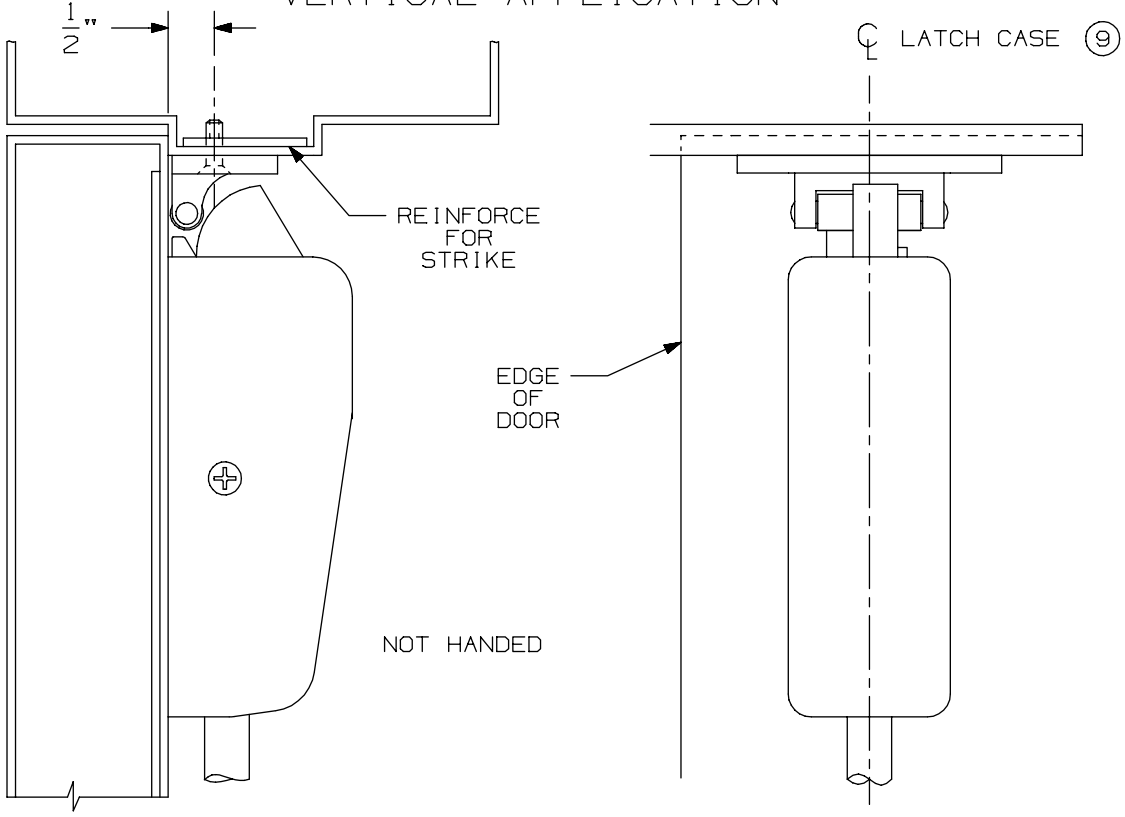

NOTE: LATCH CASE MOUNTING HOLES TO BE PREPARED AT INSTALLATION ON DOOR.

299 & 299F Strike

VON DUPRIN®

NOTES: SEE MASTER SHEET #10001 FOR SUGGESTED REINFORCING

TEMPLATE NUMBER: 30039_a

DATE: 05-23-13

FOR ADDITIONAL INFORMATION SEE TEMPLATE NO. 10303

TYPE 161 STOCK HOLLOW METAL DOOR

TYPE 86 STOCK HOLLOW METAL DOOR

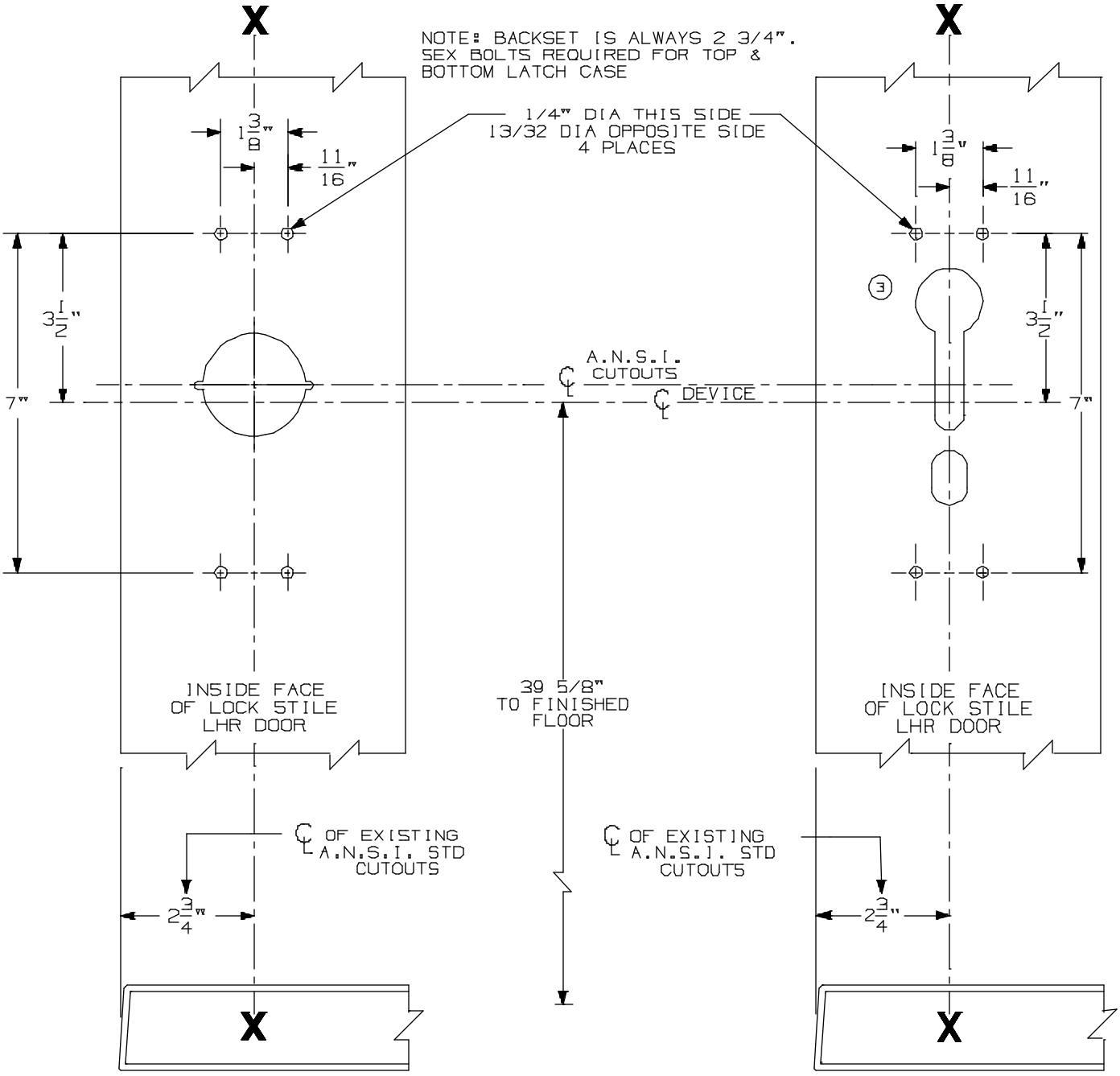

A.N.S.I. CUTOUTS ARE SHOWN FOR REFERENCE ONLY. SEE A.N.S.I. SPECIFICATION NO. A115 FOR THE SIZE AND LOCATION OF THESE CUTOUTS.

FOR OUTSIDE TRIM PREPARATION, SEE ADDITIONAL TRIM TEMPLATE.

LHR SHOWN
RHR OPPOSITE

9827/9927 EO, DT, & NL Vertical Rod Devices w/ 990, 991/992-DT & Rigid Trim for Stock Hollow Metal Applications	VON DUPRIN®	
NOTES: SEE MASTER SHEET #10001 FOR SUGGESTED REINFORCING	TEMPLATE NUMBER: 10310_a	DATE: 05-21-13

990 NL TRIM

NOTES: SEE MASTER SHEET #10001 FOR SUGGESTED REINFORCING

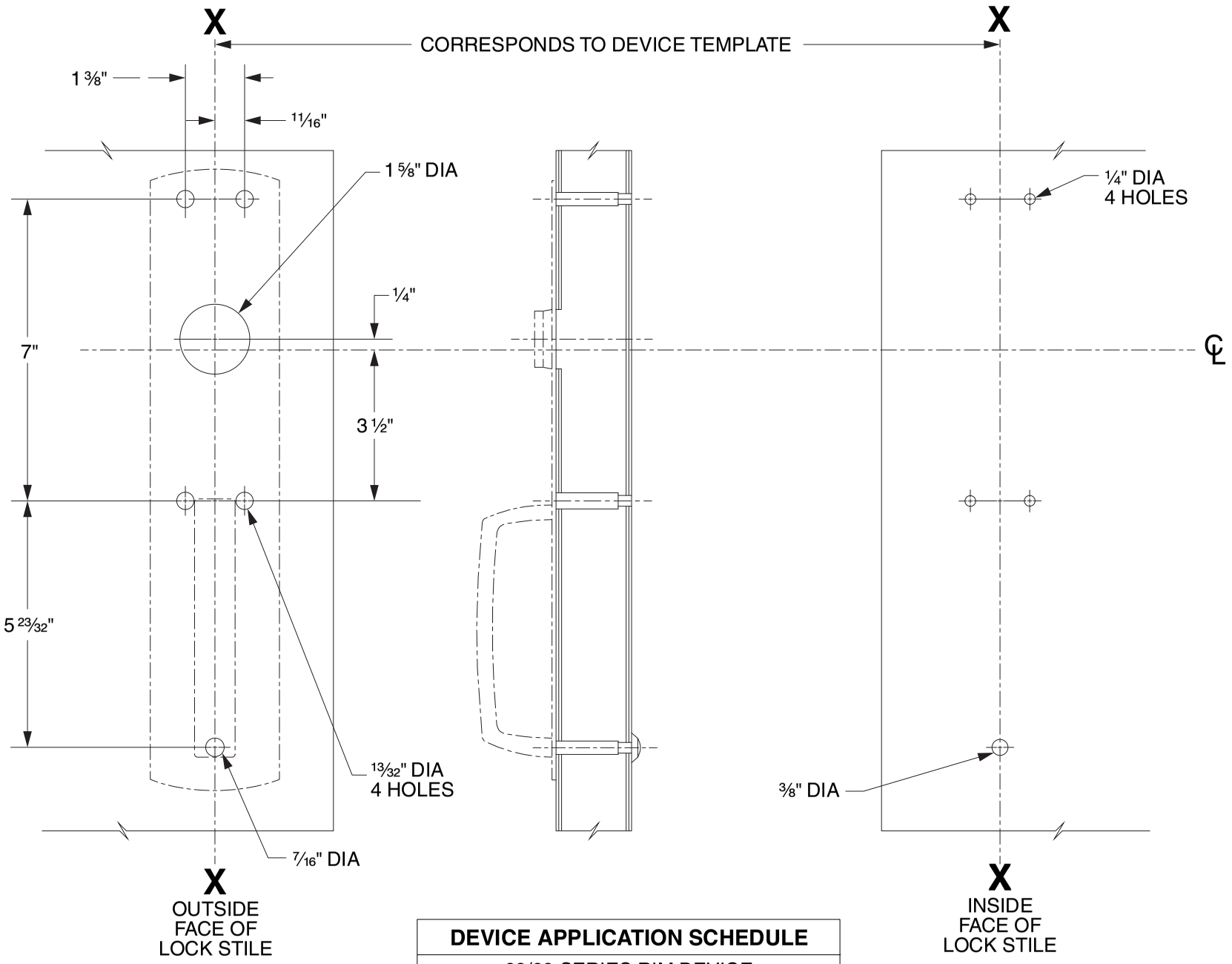

DEVICE APPLICATION SCHEDULE
98/99 SERIES RIM DEVICE
9827/9927 SERIES DEVICE
9847/9947 SERIES DEVICE
9849/9949 SERIES DEVICE

LHR SHOWN
RHR OPPOSITE

VON DUPRIN®

TEMPLATE NUMBER: 20267_C

DATE: 05-31-13

RIM APPLICATION

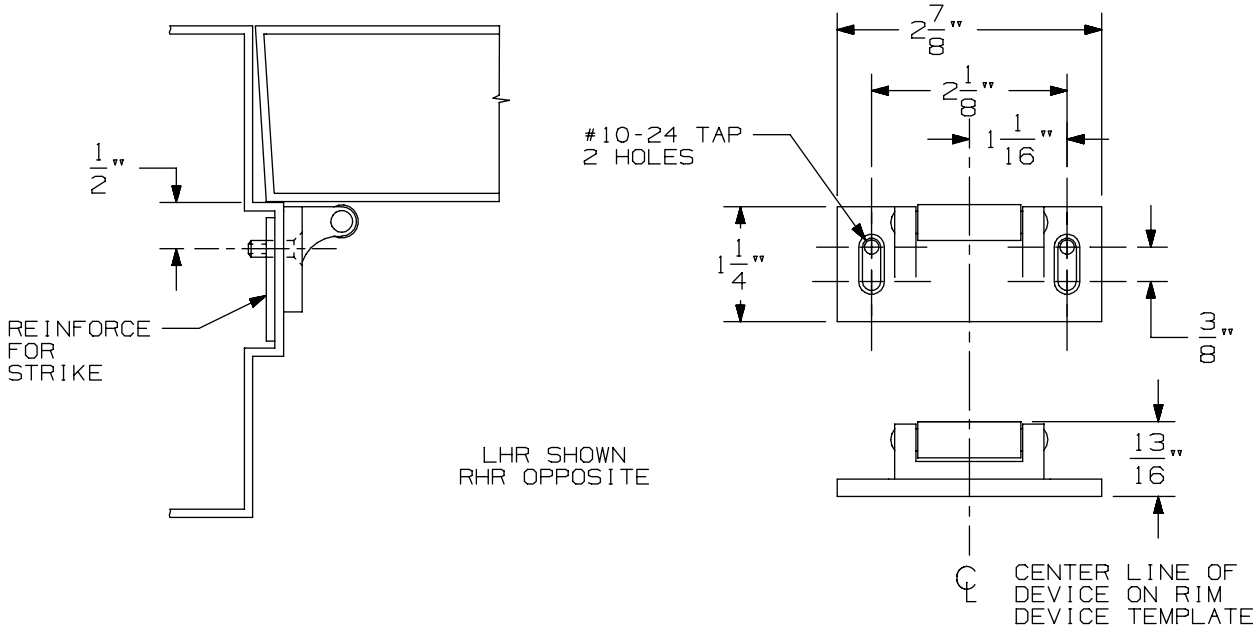

VERTICAL APPLICATION

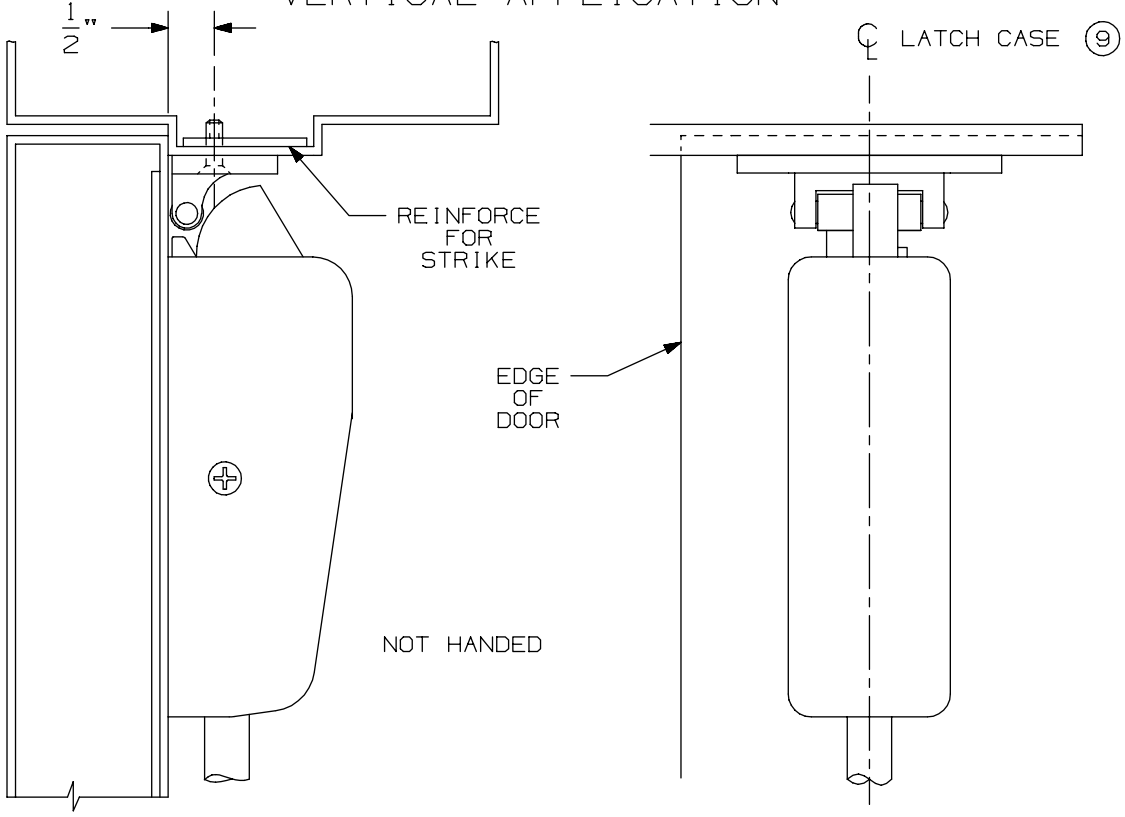

NOTE: LATCH CASE MOUNTING HOLES TO BE PREPARED AT INSTALLATION ON DOOR.

299 & 299F Strike

VON DUPRIN®

NOTES: SEE MASTER SHEET #10001 FOR SUGGESTED REINFORCING

TEMPLATE NUMBER: 30039_a

DATE: 05-23-13

FOR ADDITIONAL INFORMATION SEE TEMPLATE NO. 10304

TYPE 161 STOCK HOLLOW METAL DOOR

TYPE 86 STOCK HOLLOW METAL DOOR

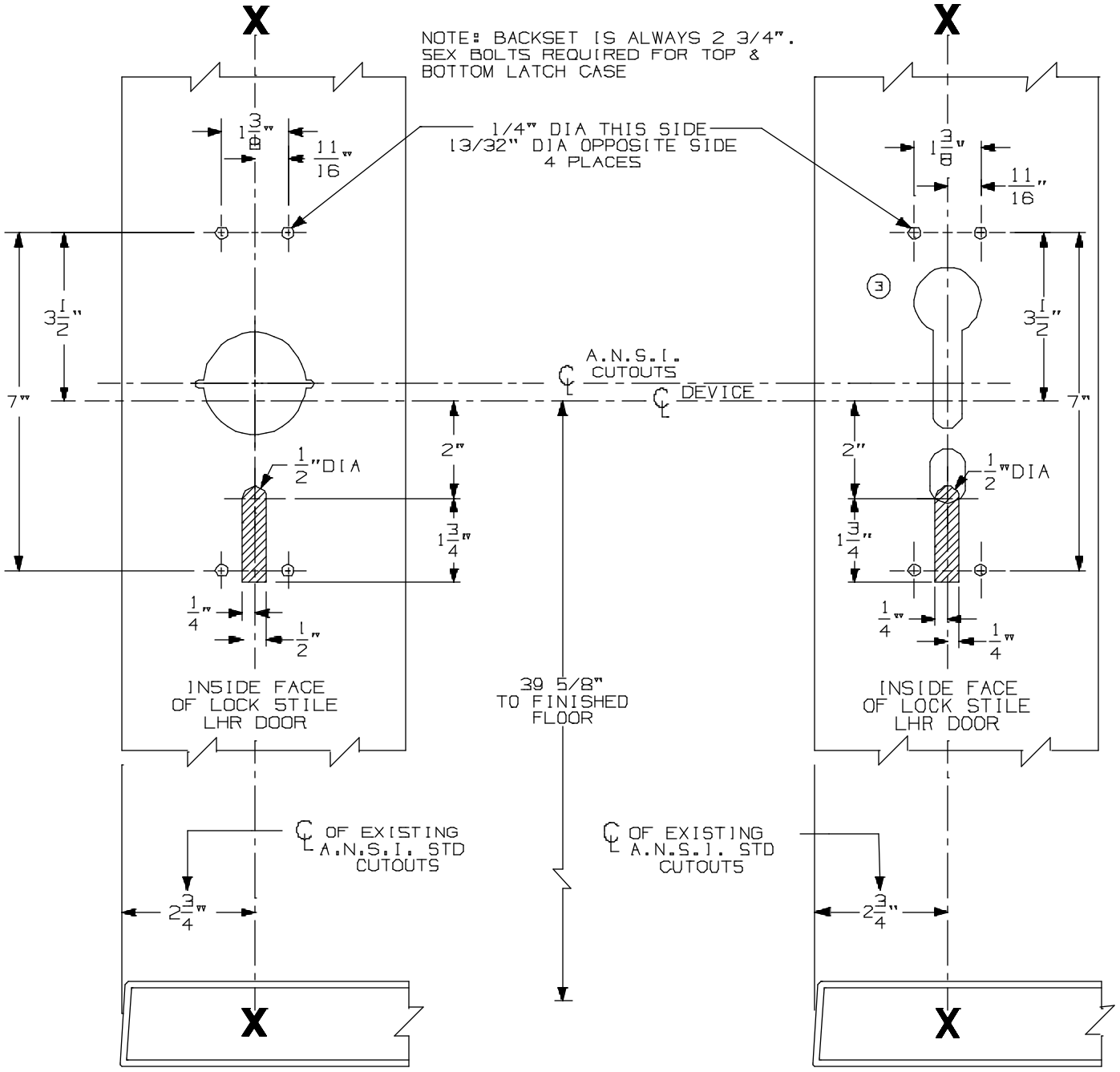

A.N.S.I. CUTOUTS ARE SHOWN FOR REFERENCE ONLY. SEE A.N.S.I. SPECIFICATION NO. A115 FOR THE SIZE AND LOCATION OF THESE CUTOUTS.

FOR OUTSIDE TRIM PREPARATION, SEE ADDITIONAL TRIM TEMPLATE.

LHR SHOWN
RHR OPPOSITE

9827/9927 TP, K, & L Vertical Rod Devices w/ 990, 991, & 992 Trim for Stock Hollow Metal Applications	VON DUPRIN®	
NOTES: SEE MASTER SHEET #10001 FOR SUGGESTED REINFORCING	TEMPLATE NUMBER: 10311_a	DATE: 05-21-13

991 K & 992 L Trim

NOTES: SEE MASTER SHEET #10001 FOR SUGGESTED REINFORCING

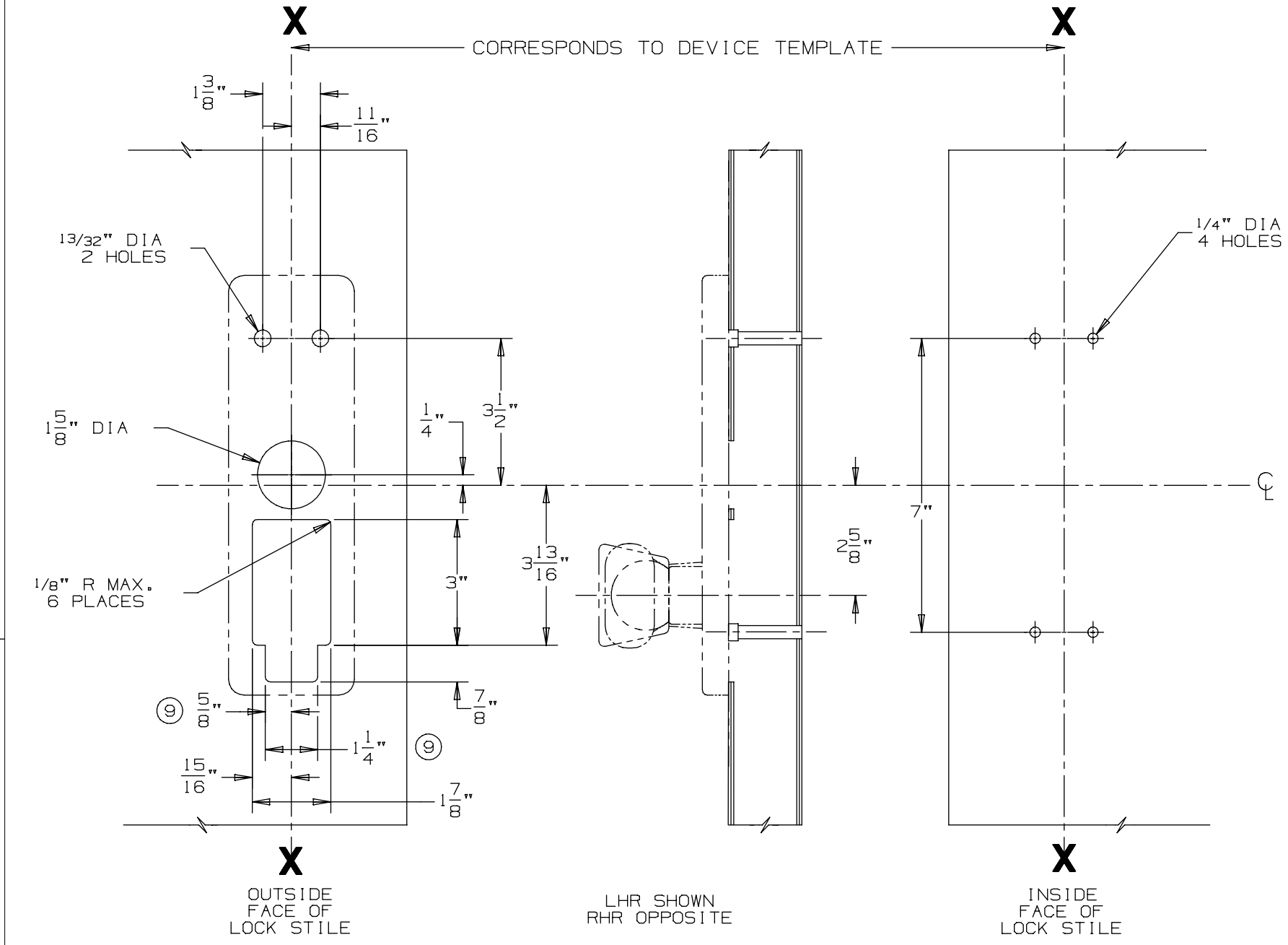

DEVICE APPLICATION SCHEDULE
98/99 SERIES RIM DEVICE
9827/9927 SERIES DEVICE
9847/9947 SERIES DEVICE

VON DUPRIN®

TEMPLATE NUMBER: 20272_a

DATE: 05-23-13

RIM APPLICATION

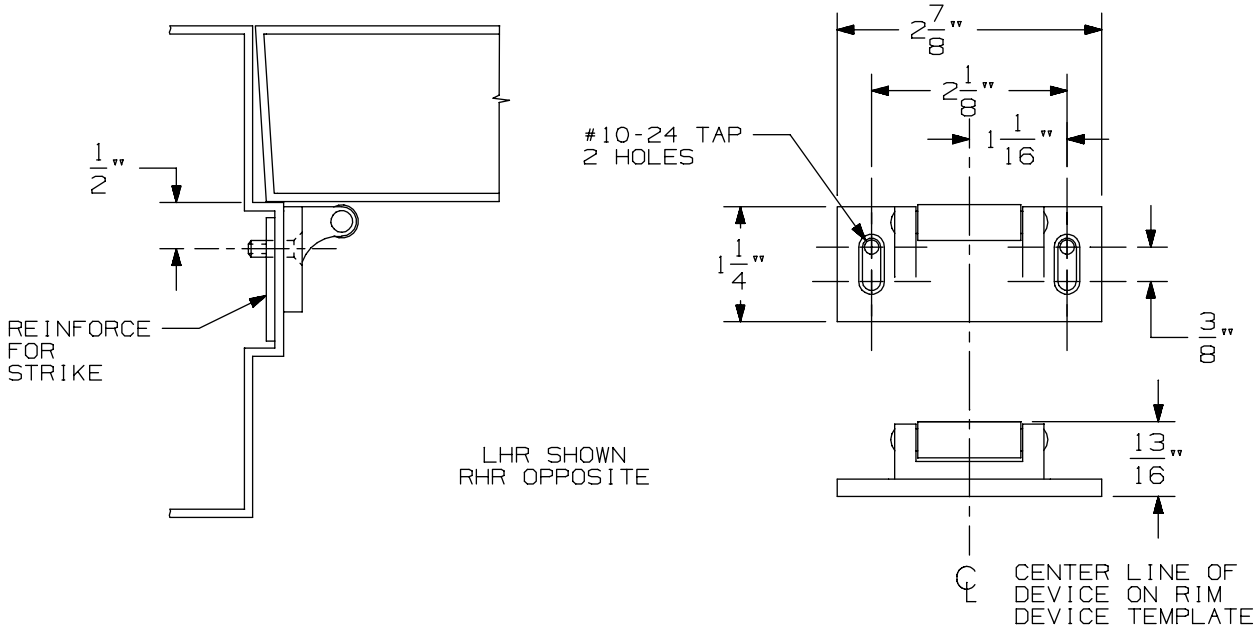

VERTICAL APPLICATION

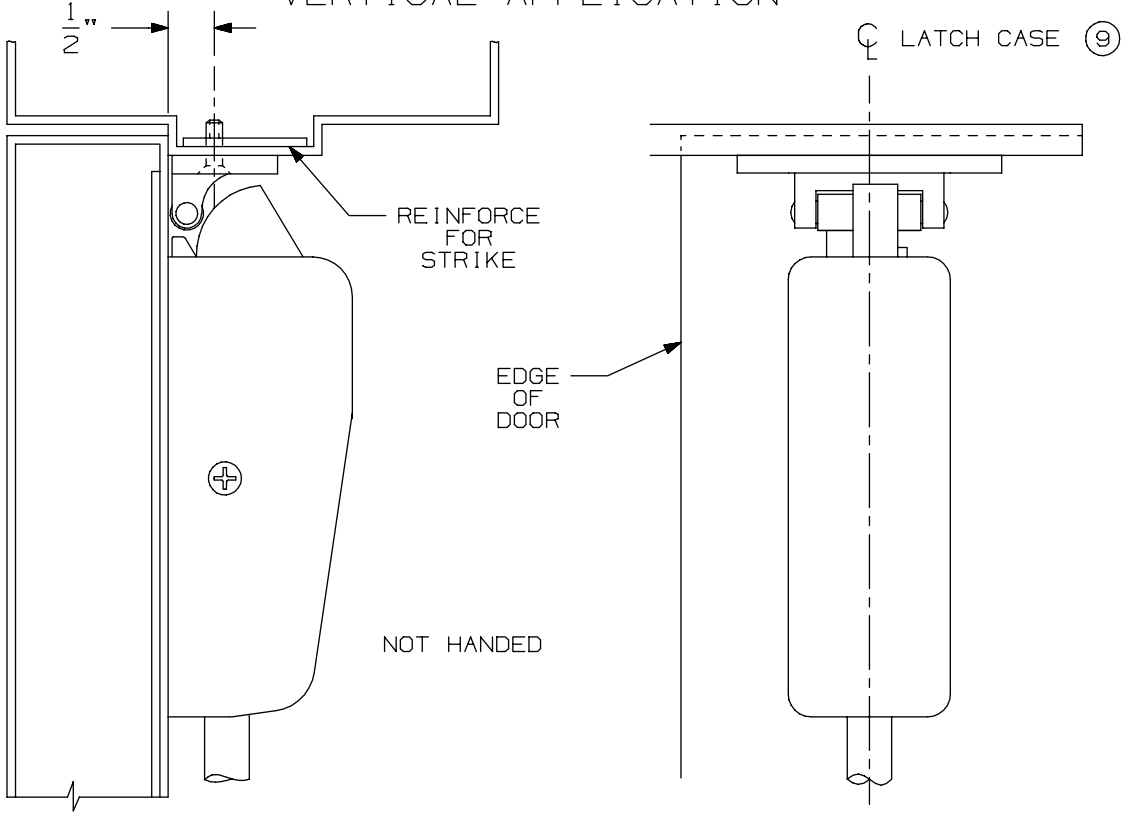

NOTE: LATCH CASE MOUNTING HOLES TO BE PREPARED AT INSTALLATION ON DOOR.

299 & 299F Strike

VON DUPRIN®

NOTES: SEE MASTER SHEET #10001 FOR SUGGESTED REINFORCING

TEMPLATE NUMBER: 30039_a

DATE: 05-23-13

FOR ADDITIONAL INFORMATION SEE TEMPLATE NO. 10304

TYPE 161 STOCK HOLLOW METAL DOOR

TYPE 86 STOCK HOLLOW METAL DOOR

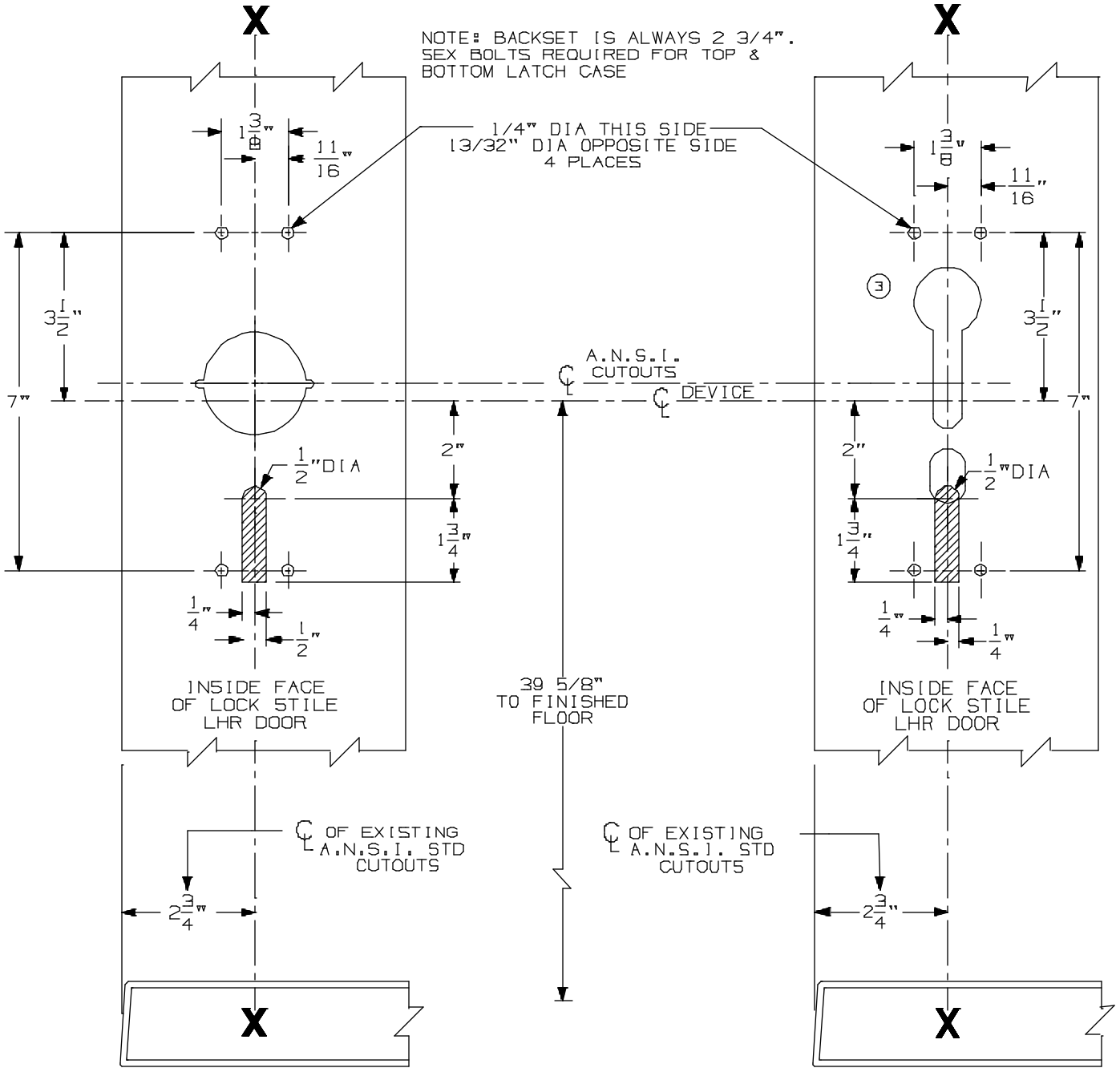

A.N.S.I. CUTOUTS ARE SHOWN FOR REFERENCE ONLY. SEE A.N.S.I. SPECIFICATION NO. A115 FOR THE SIZE AND LOCATION OF THESE CUTOUTS.

FOR OUTSIDE TRIM PREPARATION, SEE ADDITIONAL TRIM TEMPLATE.

LHR SHOWN
RHR OPPOSITE

9827/9927 TP, K, & L Vertical Rod Devices w/ 990, 991, & 992 Trim for Stock Hollow Metal Applications	VON DUPRIN®	
NOTES: SEE MASTER SHEET #10001 FOR SUGGESTED REINFORCING	TEMPLATE NUMBER: 10311_a	DATE: 05-21-13

DEVICE APPLICATION SCHEDULE	
98 RIM SERIES	99 RIM SERIES
9827 SERIES	9927 SERIES
9847 SERIES	9947 SERIES
9849 SERIES	9949 SERIES

996L, E996L, 996L-BE, E996L-BE 996K, 996K-BE R/V SERIES
TRIM METAL DOOR APPLICATION

VON DUPRIN®

NOTES: SEE MASTER SHEET #10001 FOR SUGGESTED REINFORCING

TEMPLATE NUMBER: 20003_e

DATE: 10-30-14

RIM APPLICATION

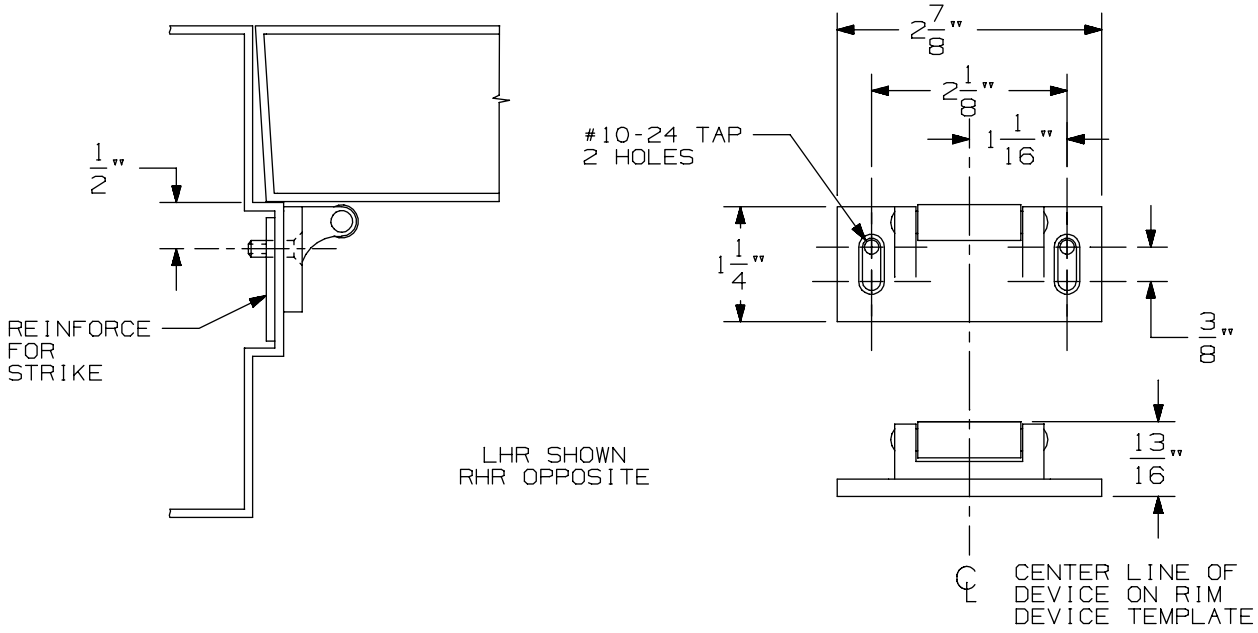

VERTICAL APPLICATION

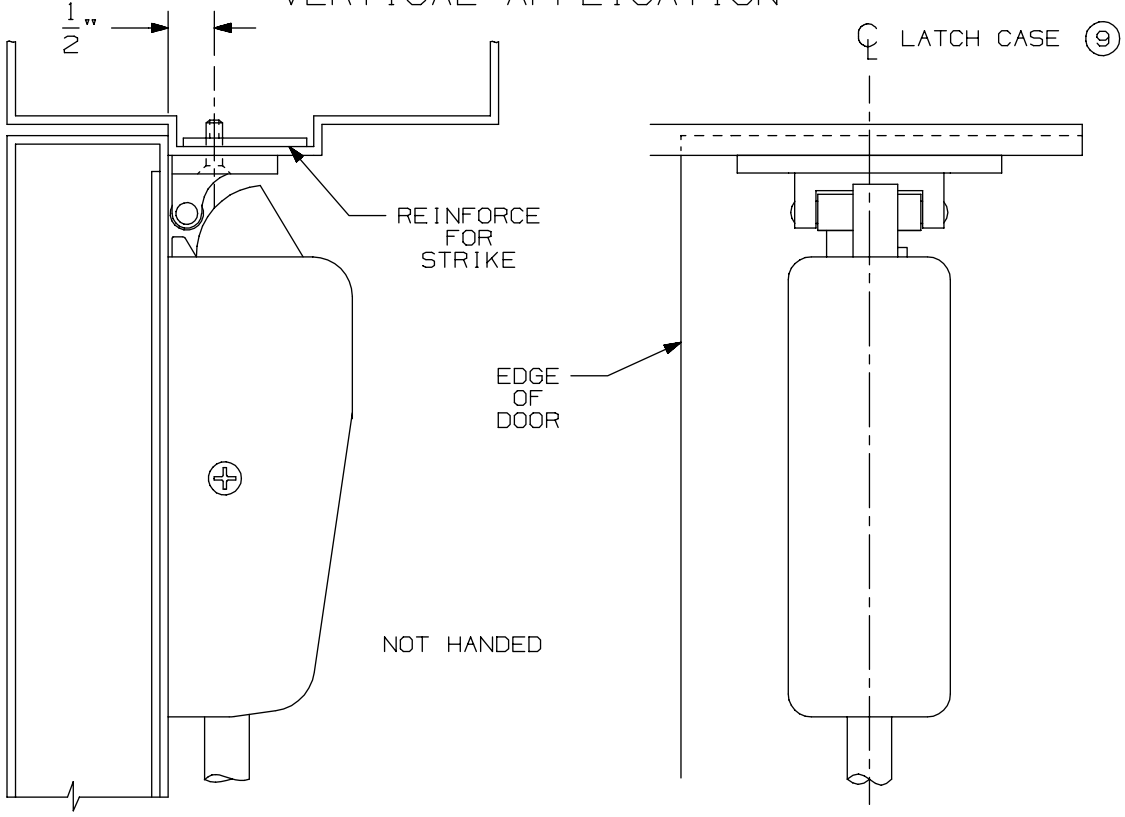

NOTE: LATCH CASE MOUNTING HOLES TO BE PREPARED AT INSTALLATION ON DOOR.

299 & 299F Strike

VON DUPRIN®

NOTES: SEE MASTER SHEET #10001 FOR SUGGESTED REINFORCING

TEMPLATE NUMBER: 30039_a

DATE: 05-23-13

FOR ADDITIONAL INFORMATION SEE TEMPLATE NO. 10304

TYPE 161 STOCK HOLLOW METAL DOOR

TYPE 86 STOCK HOLLOW METAL DOOR

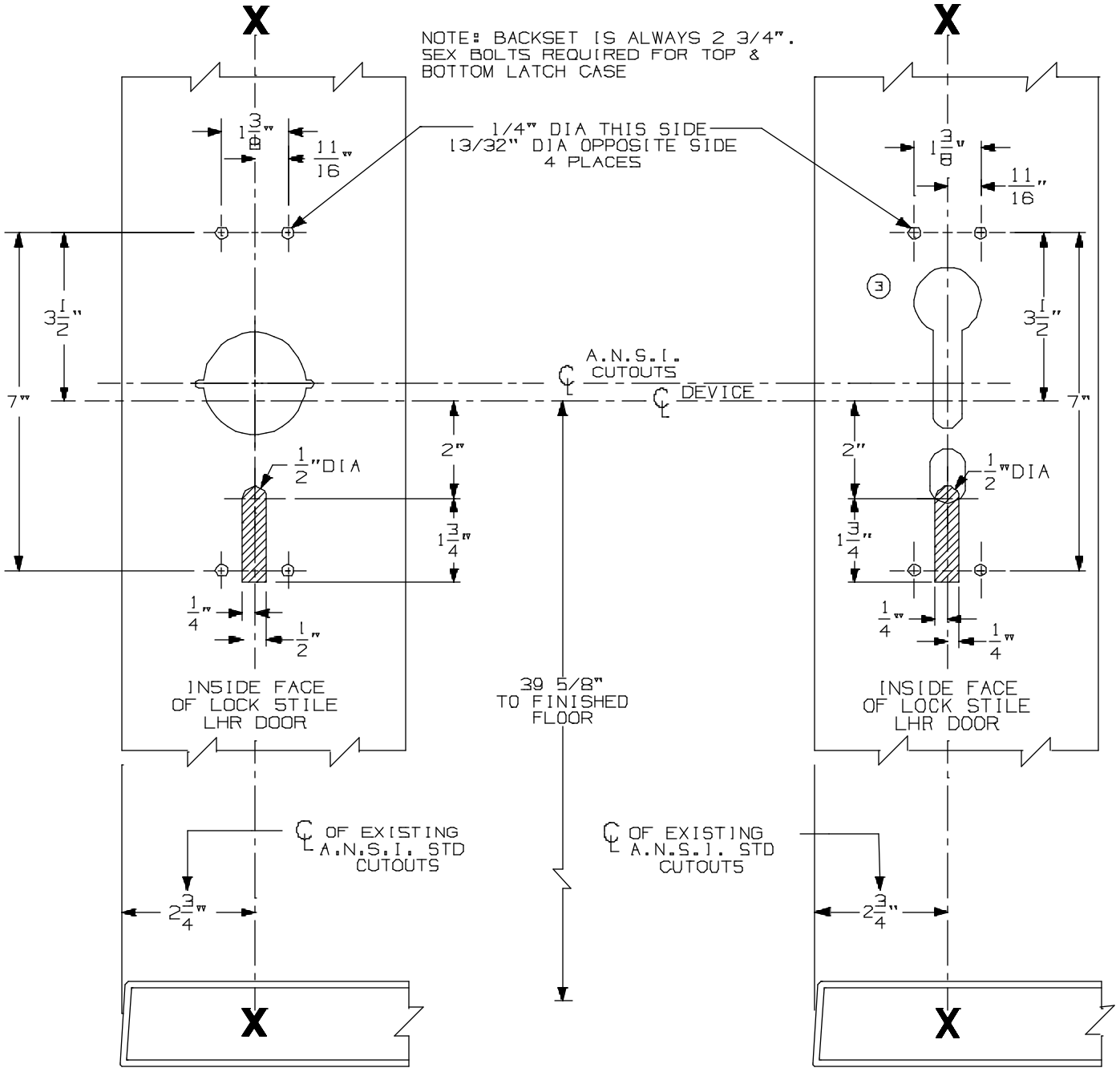

A.N.S.I. CUTOUTS ARE SHOWN FOR REFERENCE ONLY. SEE A.N.S.I. SPECIFICATION NO. A115 FOR THE SIZE AND LOCATION OF THESE CUTOUTS.

FOR OUTSIDE TRIM PREPARATION, SEE ADDITIONAL TRIM TEMPLATE.

LHR SHOWN
RHR OPPOSITE

9827/9927 TP, K, & L Vertical Rod Devices w/ 990, 991, & 992 Trim for Stock Hollow Metal Applications	VON DUPRIN®	
NOTES: SEE MASTER SHEET #10001 FOR SUGGESTED REINFORCING	TEMPLATE NUMBER: 10311_a	DATE: 05-21-13

990 TP & 990 TP-BE TRIM

NOTES: SEE MASTER SHEET #10001 FOR SUGGESTED REINFORCING

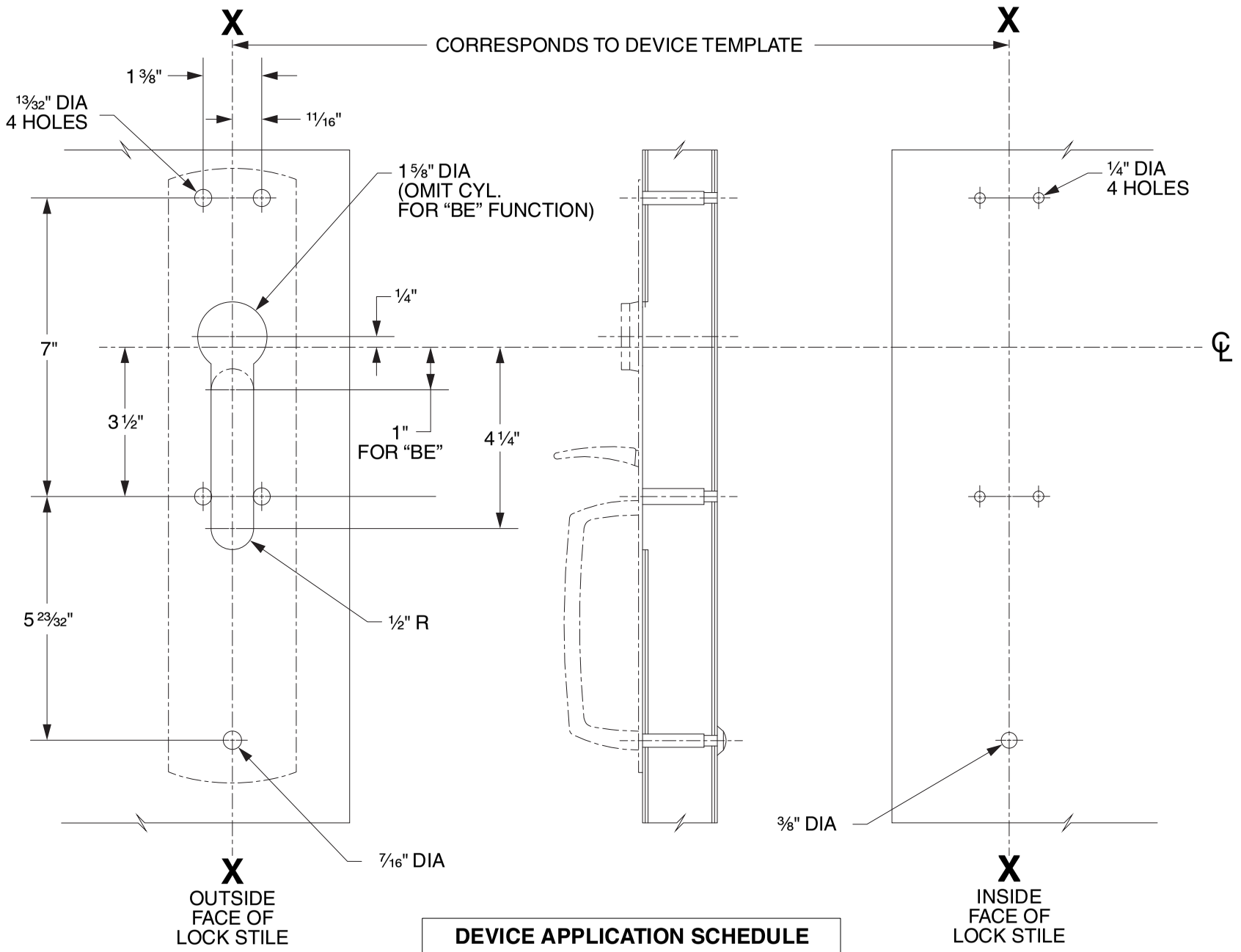

DEVICE APPLICATION SCHEDULE
98/99 SERIES RIM DEVICE
9827/9927 SERIES DEVICE
9847/9947 SERIES DEVICE
9849/9949 SERIES DEVICE

LHR SHOWN
RHR OPPOSITE

VON DUPRIN®

TEMPLATE NUMBER: 20265_C

DATE: 05-31-13

RIM APPLICATION

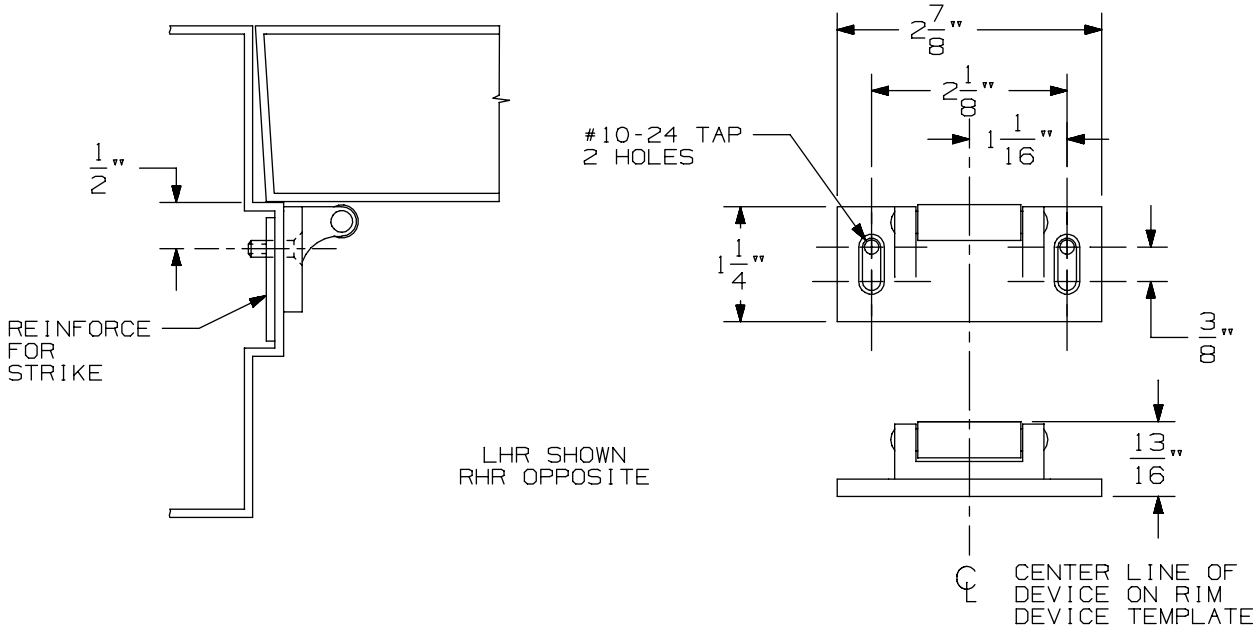

VERTICAL APPLICATION

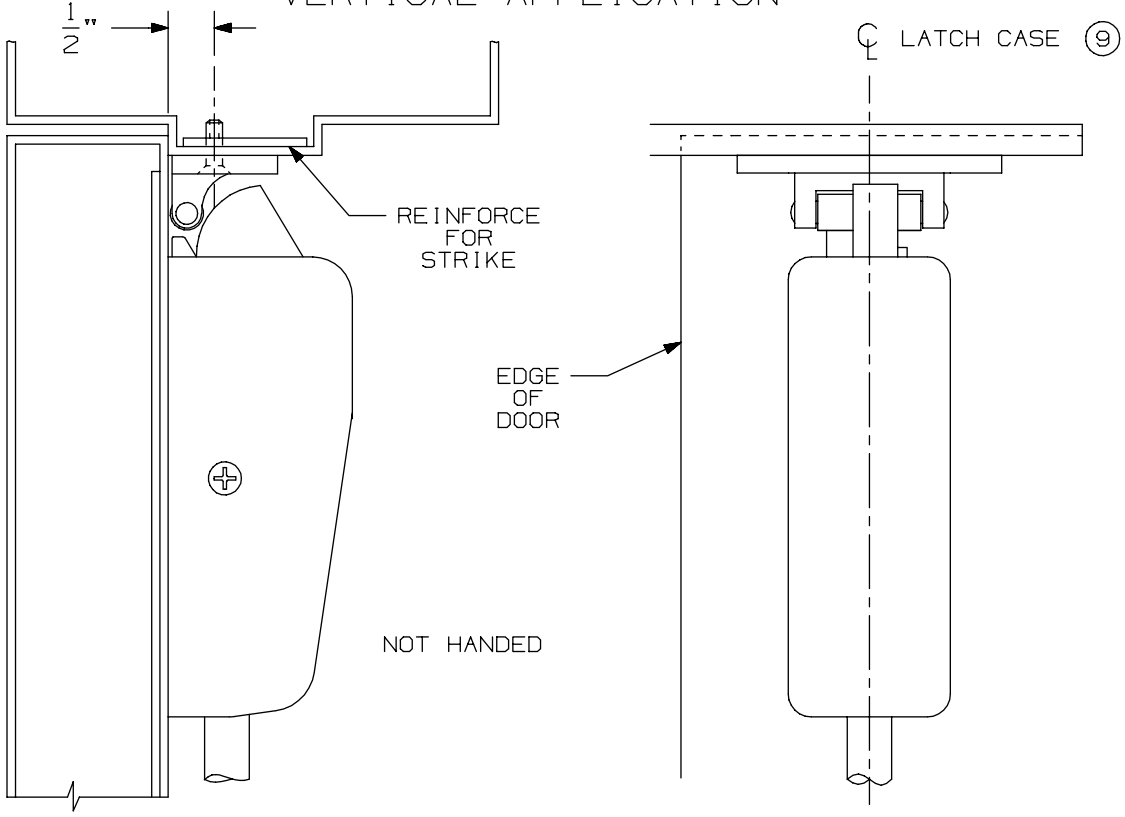

NOTE: LATCH CASE MOUNTING HOLES TO BE PREPARED AT INSTALLATION ON DOOR.

299 & 299F Strike

VON DUPRIN®

NOTES: SEE MASTER SHEET #10001 FOR SUGGESTED REINFORCING

TEMPLATE NUMBER: 30039_a

DATE: 05-23-13

98 / 99 Series for 86 Stock Hollow Metal Doors

-

9875/9975 Mortise Template (Standard, CD, EL, LX, RX & SS)

ANSI MORTISE LOCK PREPARATION

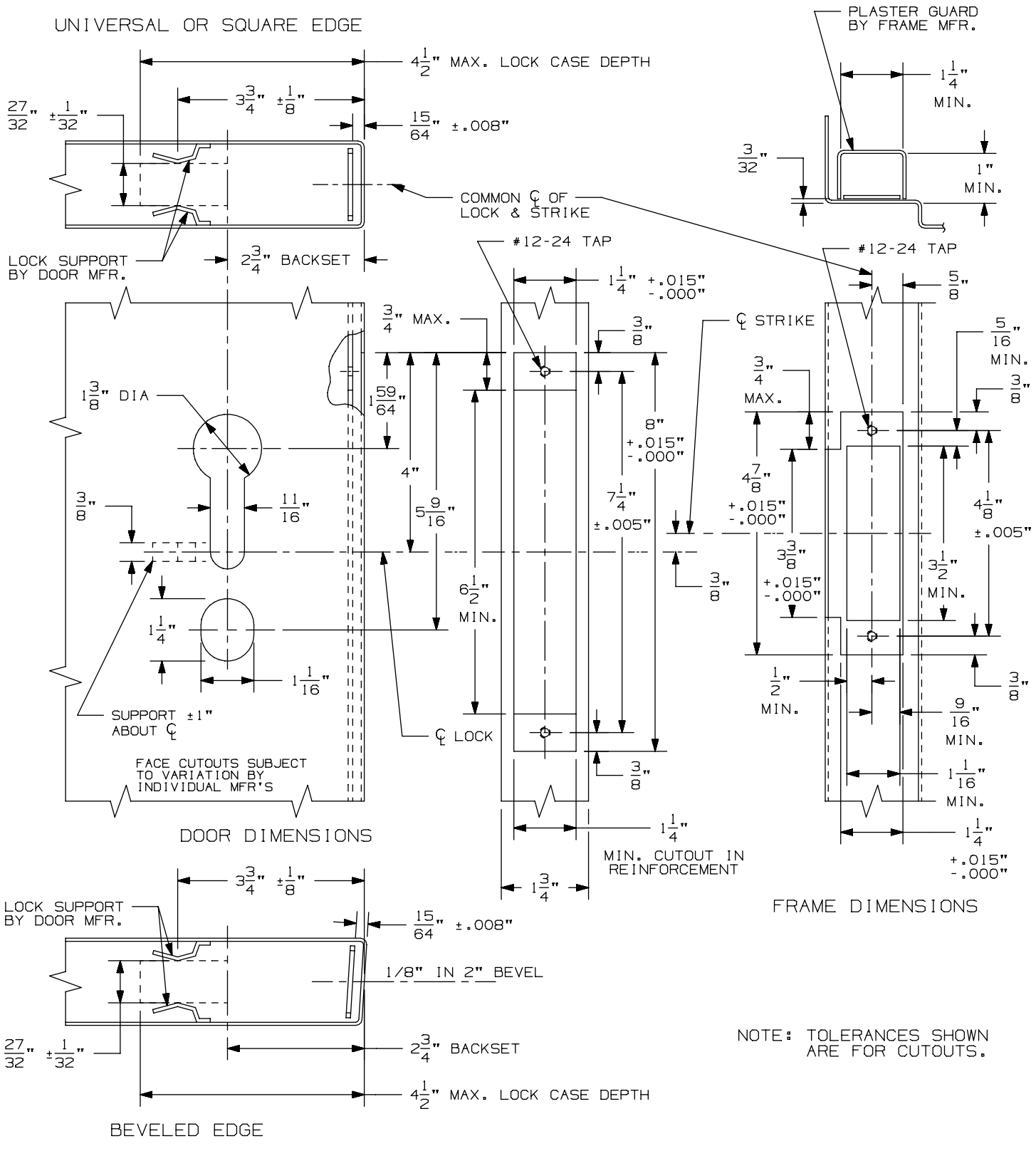

7500 Mortise Lock	VON DUPRIN®
NOTES: SEE MASTER SHEET #10001 FOR SUGGESTED REINFORCING	TEMPLATE NUMBER: 40019_a — DATE: 05-28-13

FOR MORTISE APPLICATION SEE TEMPLATE NO. 10305

TYPE 86 STOCK HOLLOW METAL DOOR

NOTE: BACKSET IS ALWAYS 2 3/4"

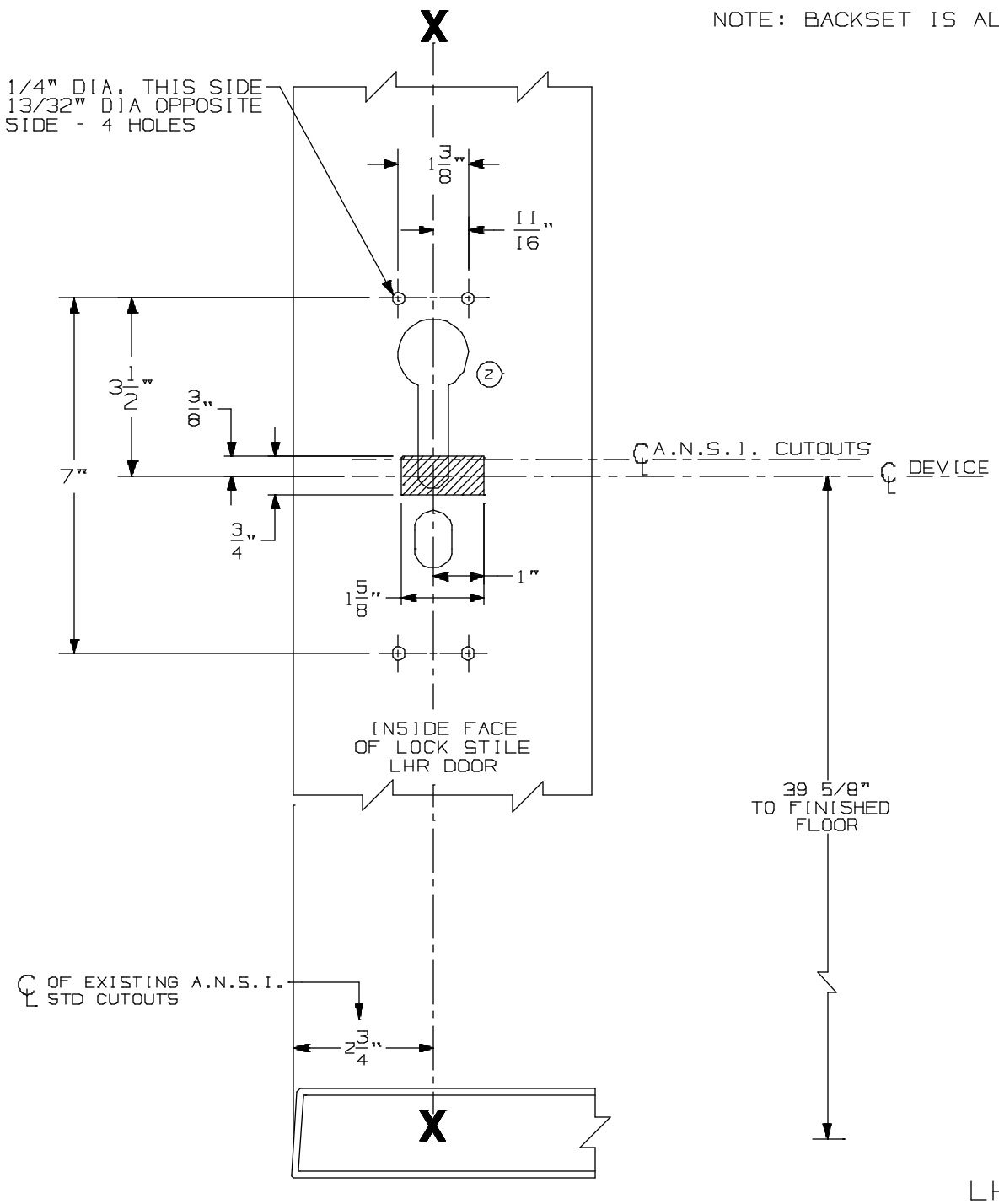

LHR SHOWN
RHR OPPOSITE

A.N.S.I. CUTOUTS ARE SHOWN FOR REFERENCE ONLY. SEE A.N.S.I. SPECIFICATION NO. A115 FOR THE SIZE AND LOCATION OF THESE CUTOUTS.

FOR OUTSIDE TRIM PREPARATION, SEE ADDITIONAL TRIM TEMPLATE.

9875/9975 Series Mortise Lock Devices w/ 990, 991, & 992 Trim for Stock Hollow Metal Applications	VON DUPRIN®	
NOTES: SEE MASTER SHEET #10001 FOR SUGGESTED REINFORCING	TEMPLATE NUMBER: 10312_a	DATE: 05-21-13

990 EO TRIM

NOTES: SEE MASTER SHEET #10001 FOR SUGGESTED REINFORCING

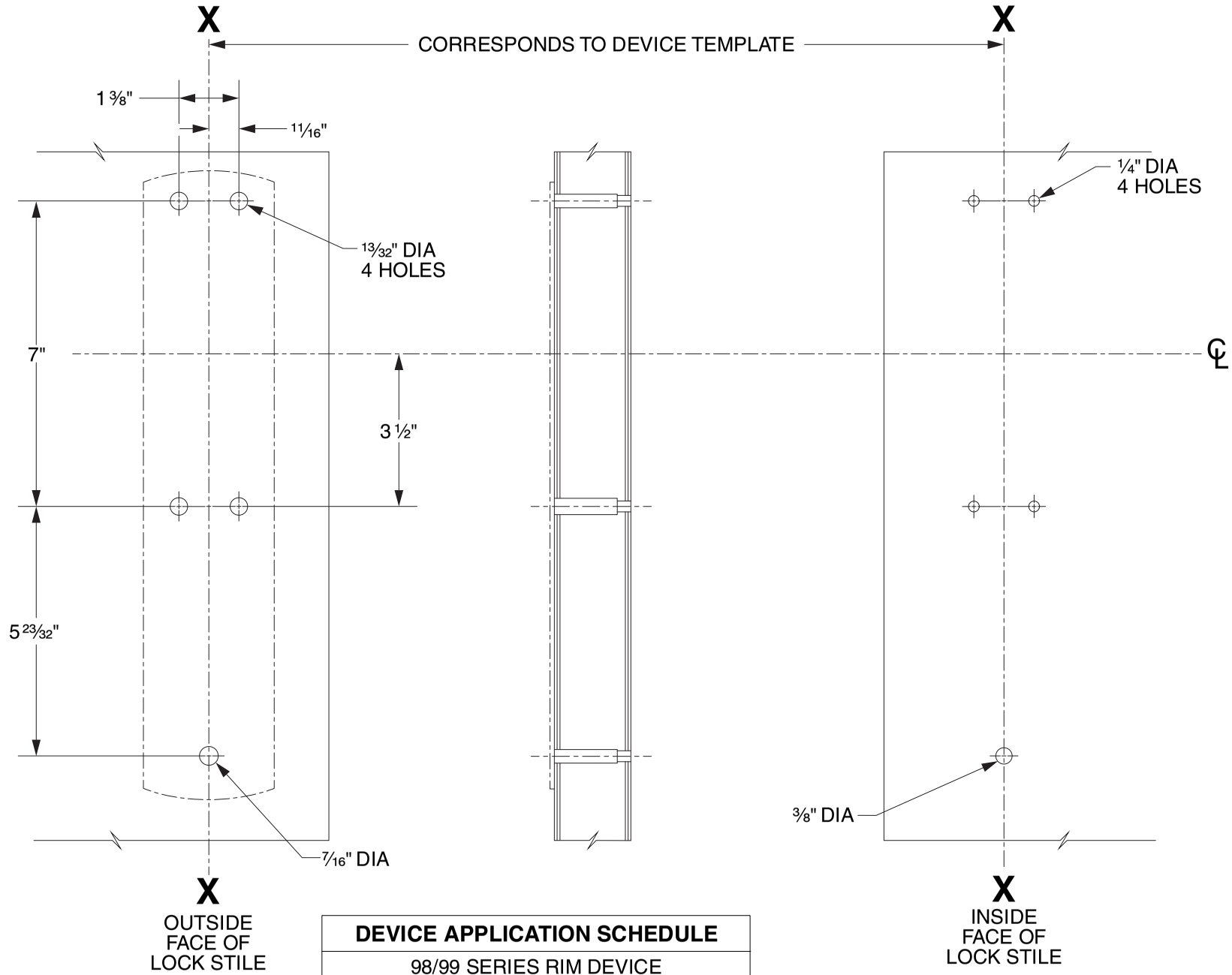

DEVICE APPLICATION SCHEDULE
98/99 SERIES RIM DEVICE
9827/9927 SERIES DEVICE
9847/9947 SERIES DEVICE
9849/9949 SERIES DEVICE
9875/9975 SERIES DEVICE

LHR SHOWN
RHR OPPOSITE

VON DUPRIN®

TEMPLATE NUMBER: 20269_C

DATE: 05-31-13

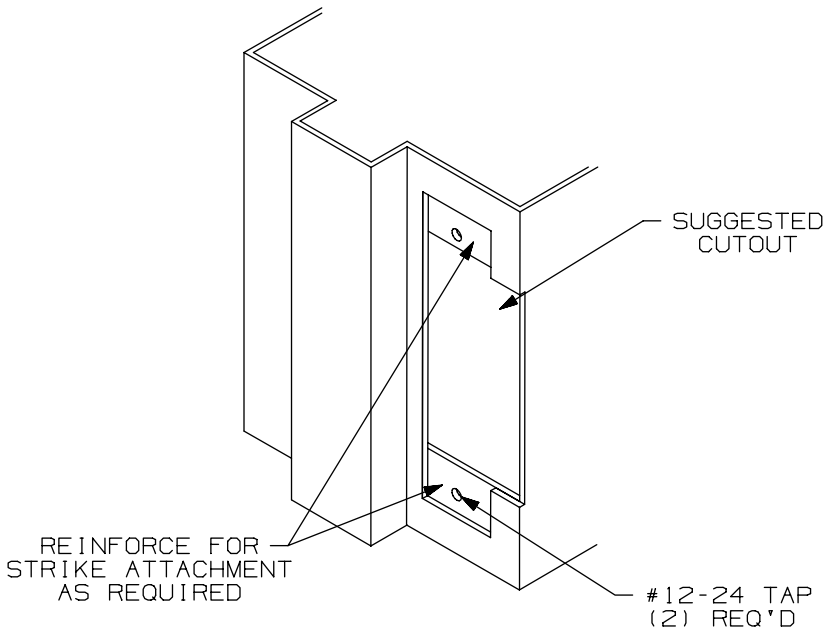

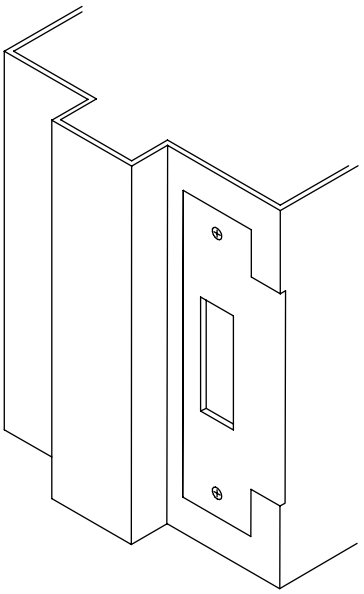

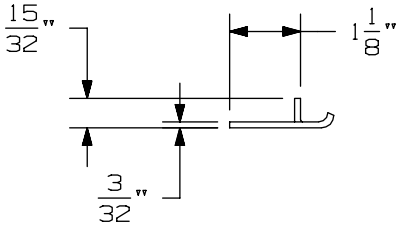

APPLICATION SCHEDULE	
DEVICE	DIM. "A"
9875 & 9875-F	11/16
9975 & 9975-F	11/16
8875 & 8875-F	1/2
5575 & 5575-F	1/2

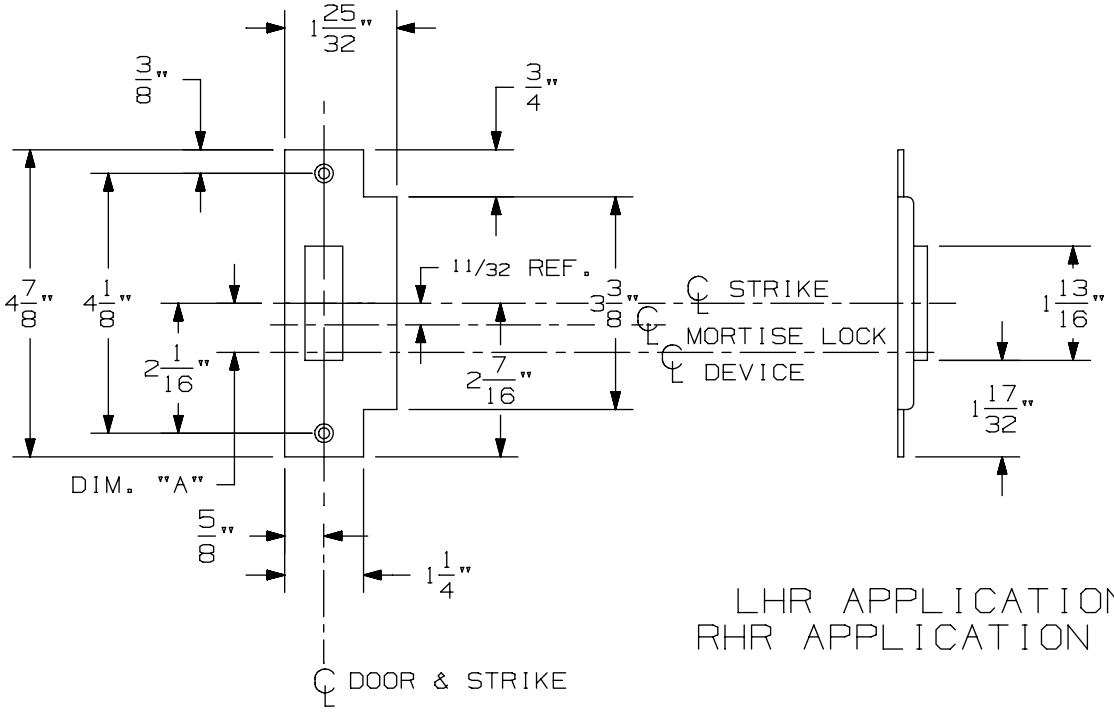

LHR APPLICATION SHOWN
RHR APPLICATION OPPOSITE

575 Mortise Strike (Single Door) for 7500 Mortise Lock

VON DUPRIN®

NOTES: SEE MASTER SHEET #10001 FOR SUGGESTED REINFORCING

TEMPLATE NUMBER: 30210_b

DATE: 07-22-13

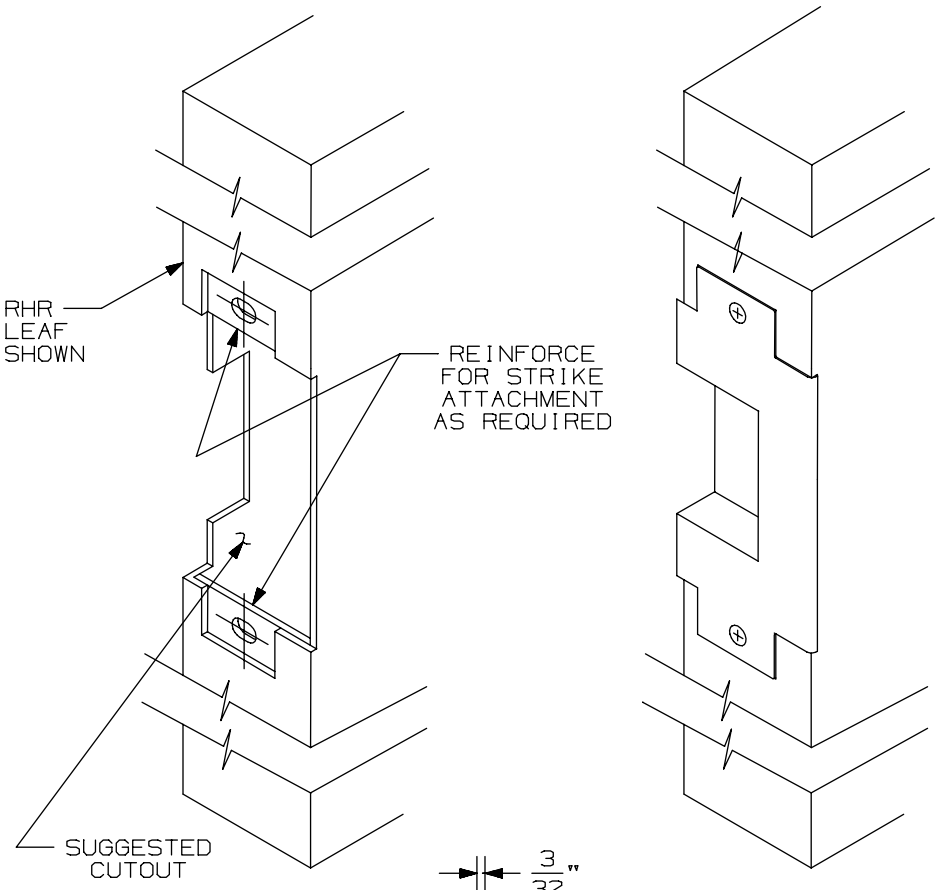

APPLICATION SCHEDULE	
DEVICE	DIM."A"
9875 & 9875-F	11/16
9975 & 9975-F	11/16
8875 & 8875-F	1/2
5575 & 5575-F	1/2

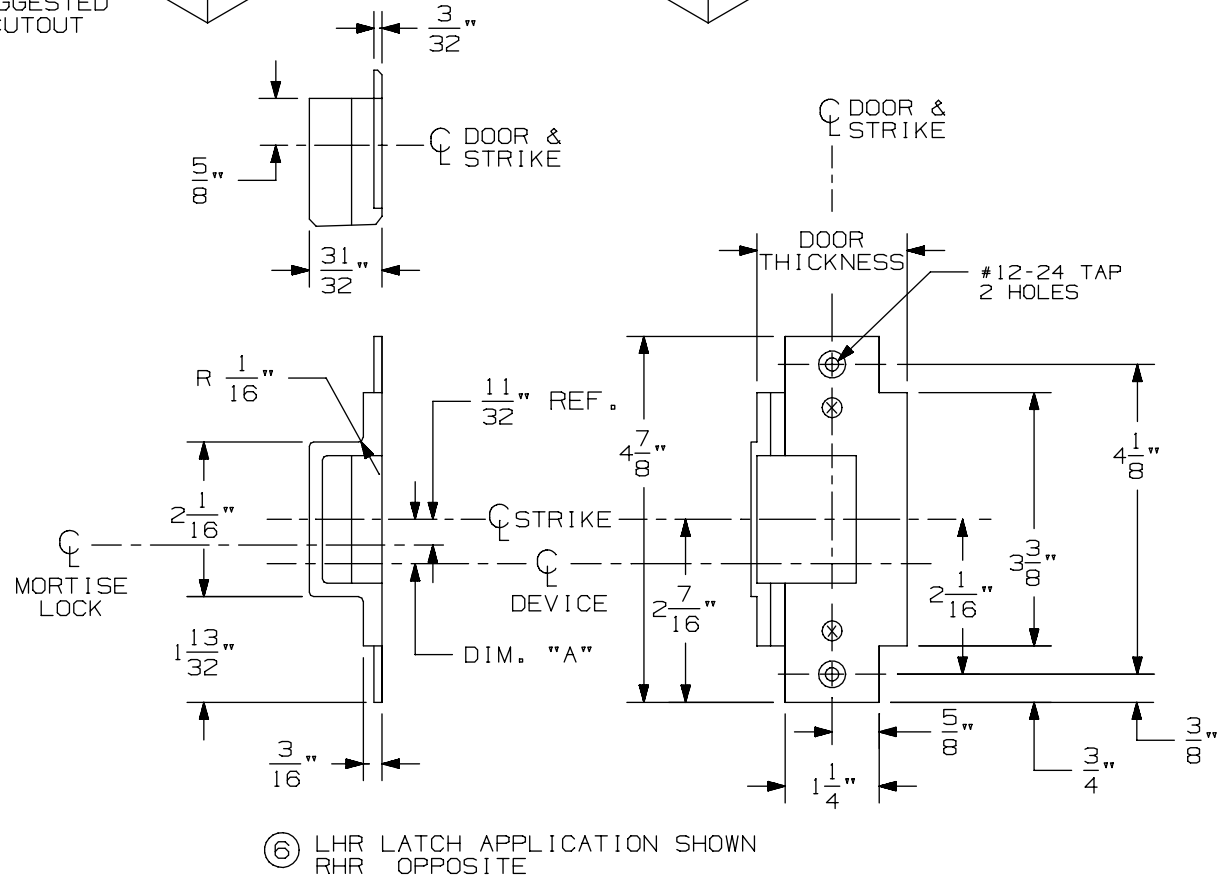

⑥ LHR LATCH APPLICATION SHOWN
RHR OPPOSITE

576A & 576B Mortise Strike for 7500 Mortise Lock

VON DUPRIN®

NOTES: SEE MASTER SHEET #10001 FOR SUGGESTED REINFORCING

TEMPLATE NUMBER: 30211_a

DATE: 05-28-13

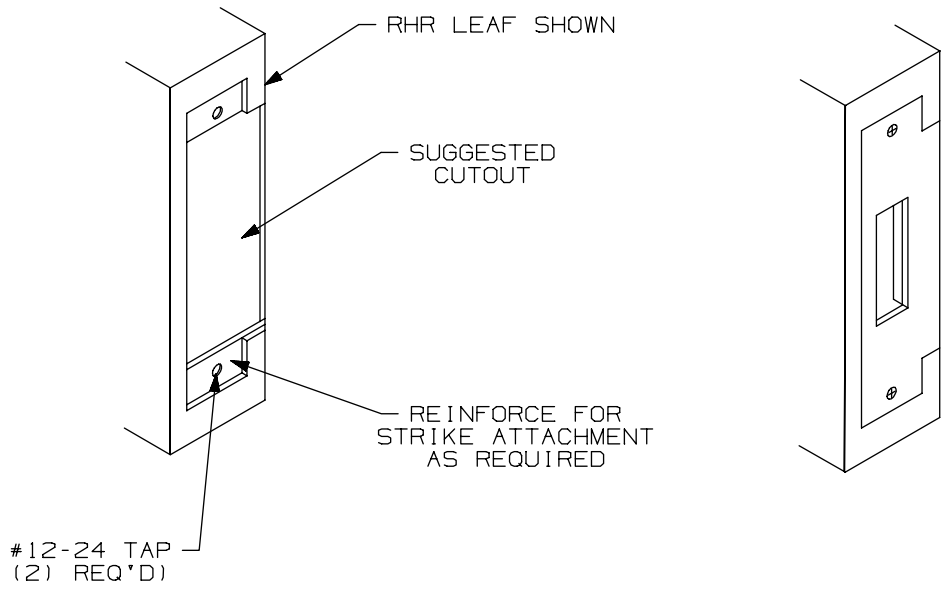

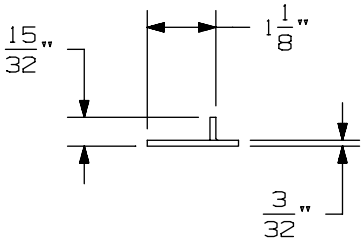

APPLICATION SCHEDULE	
DEVICE	DIM. "A"
9875 & 9875-F	11/16
9975 & 9975-F	11/16
8875 & 8875-F	1/2
5575 & 5575-F	1/2

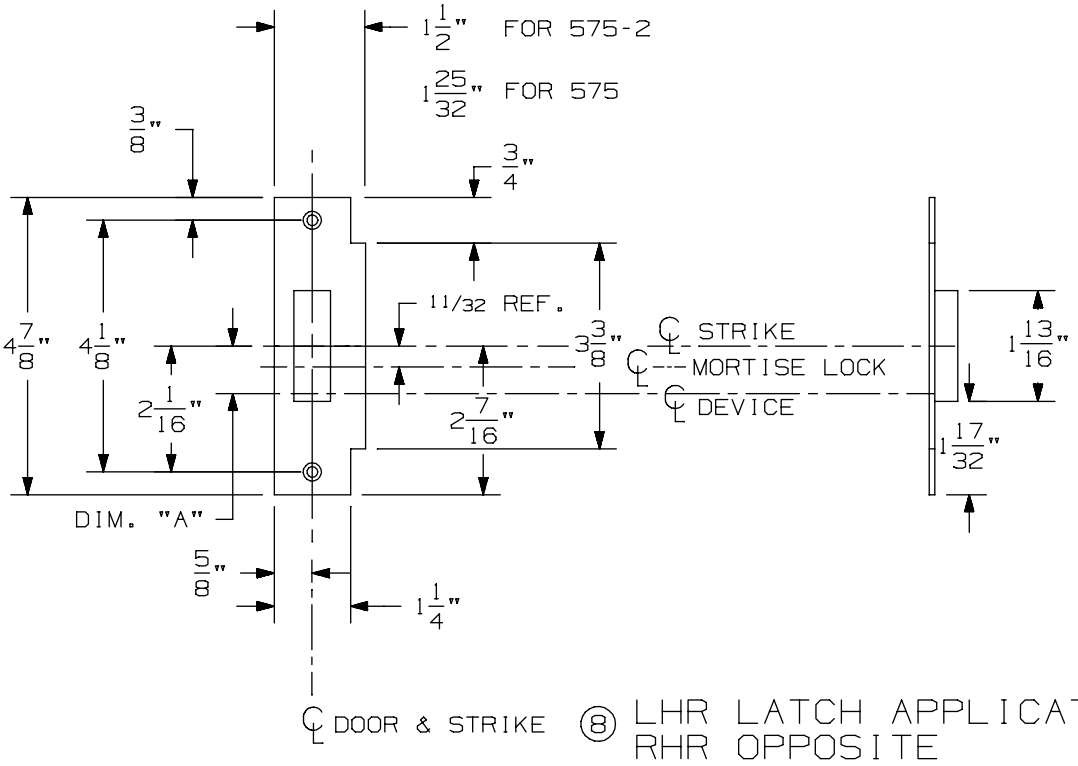

⑧ LHR LATCH APPLICATION SHOWN
RHR OPPOSITE

575-2 Mortise Strike (Double Doors) for 7500 Mortise Lock

VON DUPRIN®

NOTES: SEE MASTER SHEET #10001 FOR SUGGESTED REINFORCING

TEMPLATE NUMBER: 30212_b

DATE: 07-22-13

FOR MORTISE APPLICATION SEE TEMPLATE NO. 10305

TYPE 86 STOCK HOLLOW METAL DOOR

NOTE: BACKSET IS ALWAYS 2 3/4"

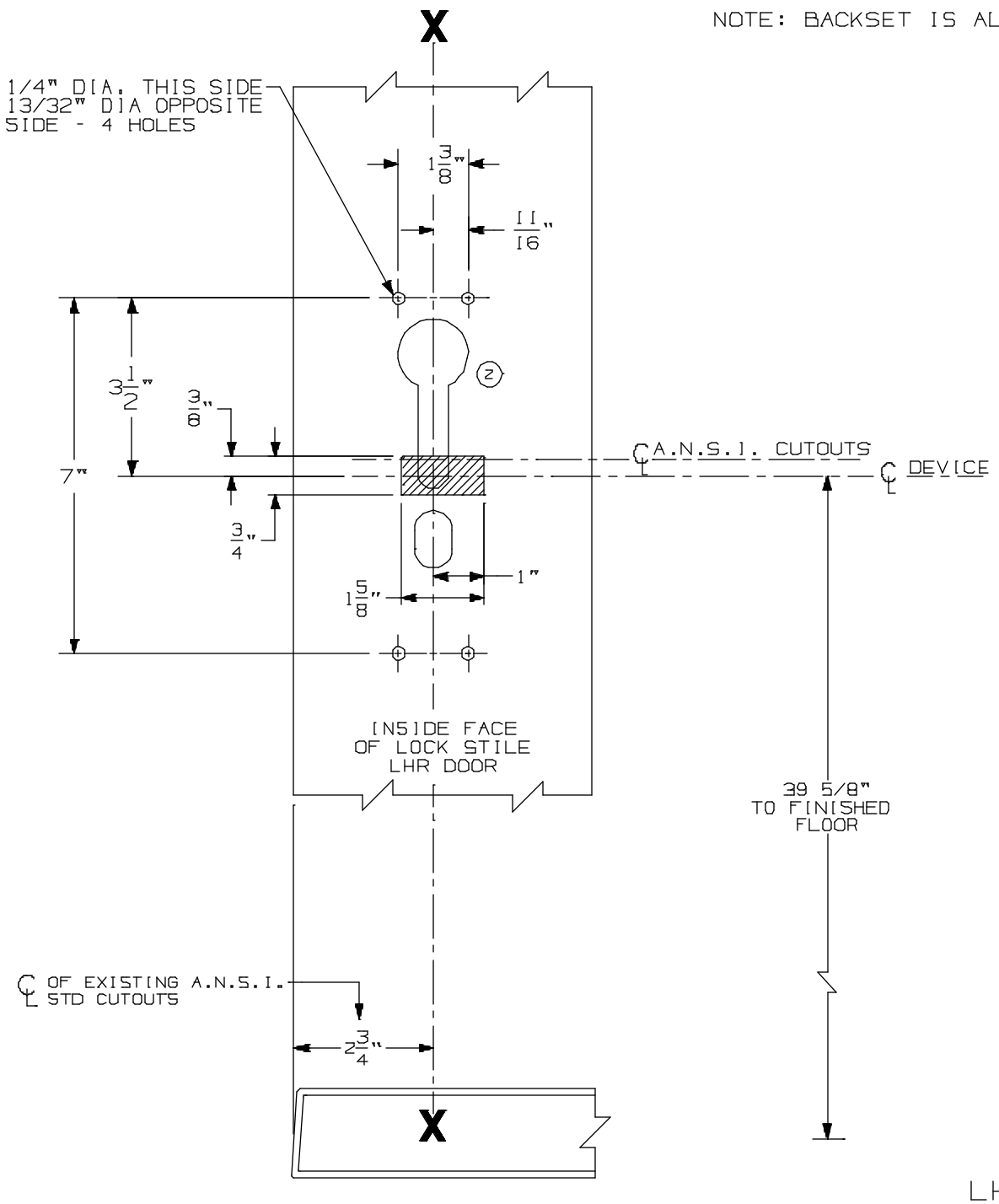

LHR SHOWN
RHR OPPOSITE

A.N.S.I. CUTOUTS ARE SHOWN FOR REFERENCE ONLY. SEE A.N.S.I. SPECIFICATION NO. A115 FOR THE SIZE AND LOCATION OF THESE CUTOUTS.

FOR OUTSIDE TRIM PREPARATION, SEE ADDITIONAL TRIM TEMPLATE.

9875/9975 Series Mortise Lock Devices w/ 990, 991, & 992 Trim for Stock Hollow Metal Applications	VON DUPRIN®	
NOTES: SEE MASTER SHEET #10001 FOR SUGGESTED REINFORCING	TEMPLATE NUMBER: 10312_a	DATE: 05-21-13

990 DT TRIM

NOTES: SEE MASTER SHEET #10001 FOR SUGGESTED REINFORCING

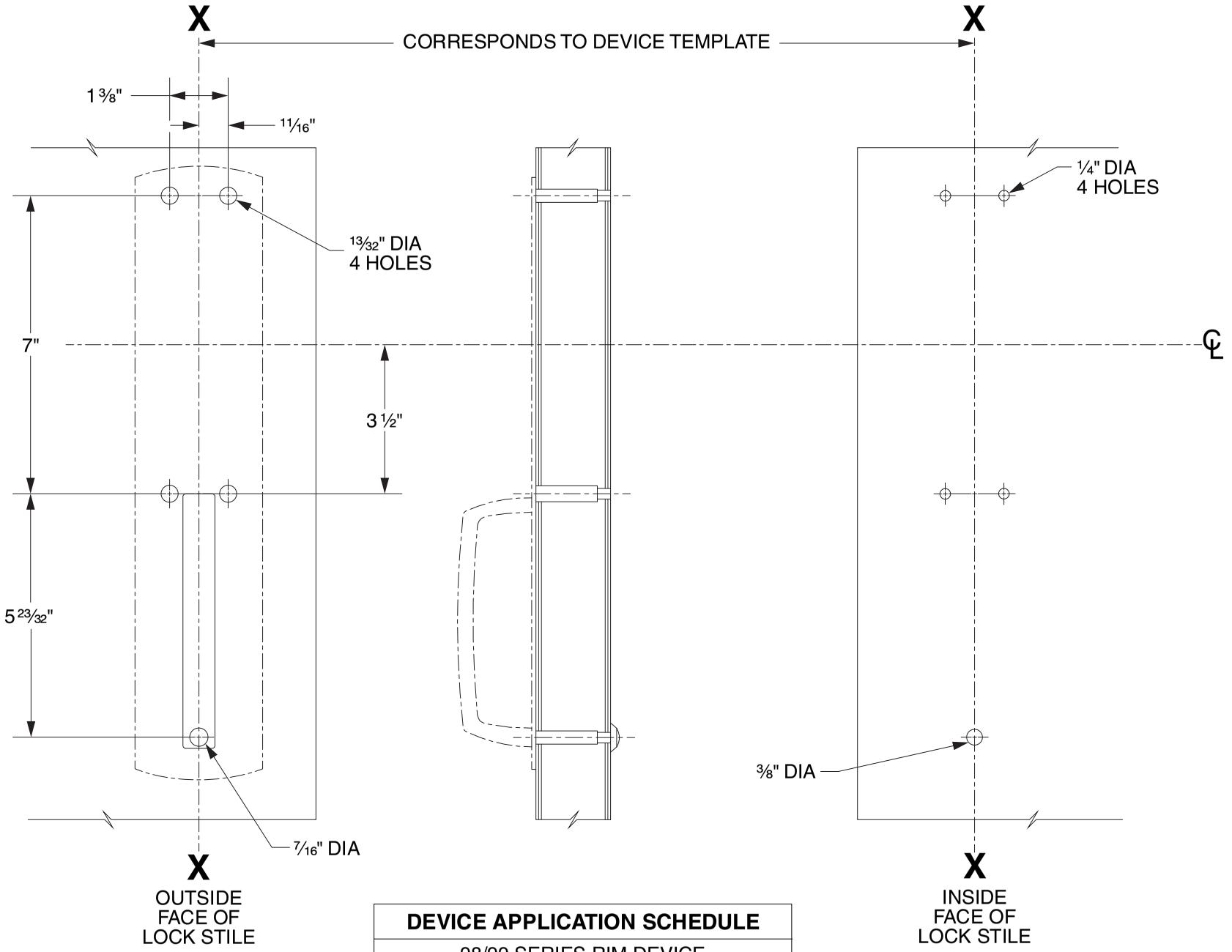

DEVICE APPLICATION SCHEDULE
98/99 SERIES RIM DEVICE
9827/9927 SERIES DEVICE
9847/9947 SERIES DEVICE
9849/9949 SERIES DEVICE
9875/9975 SERIES DEVICE

LHR SHOWN
RHR OPPOSITE

VON DUPRIN®

TEMPLATE NUMBER: 20268_C

DATE: 05-31-13

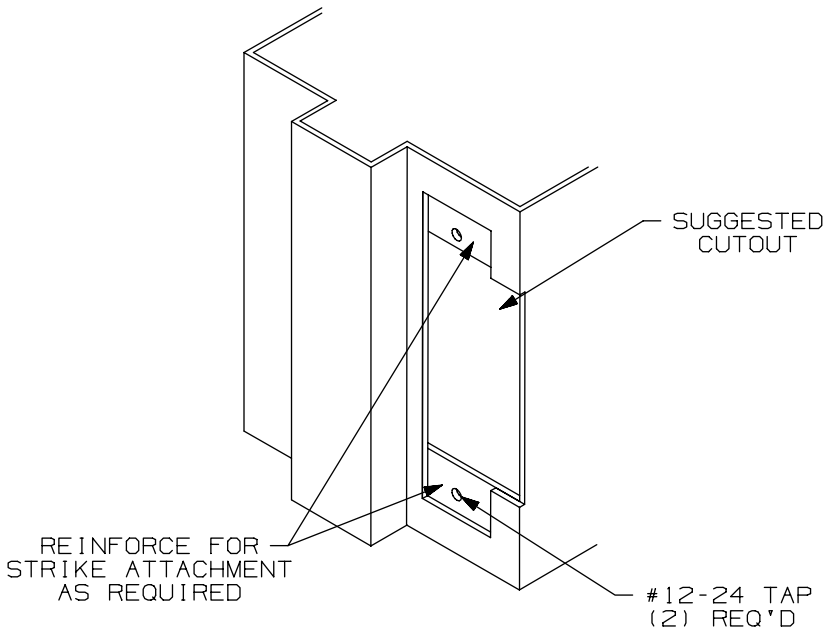

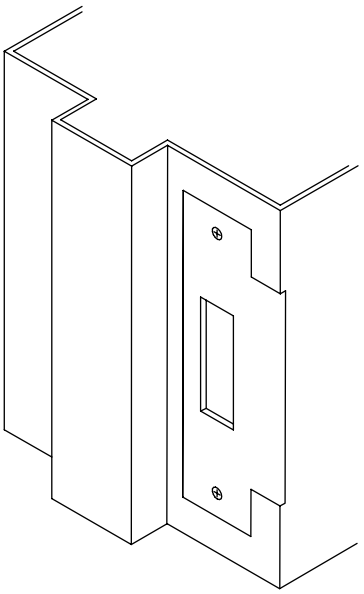

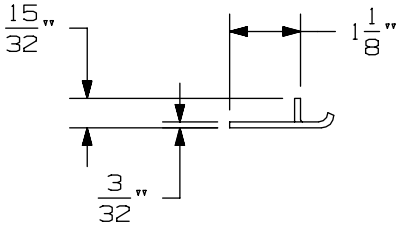

APPLICATION SCHEDULE	
DEVICE	DIM. "A"
9875 & 9875-F	11/16
9975 & 9975-F	11/16
8875 & 8875-F	1/2
5575 & 5575-F	1/2

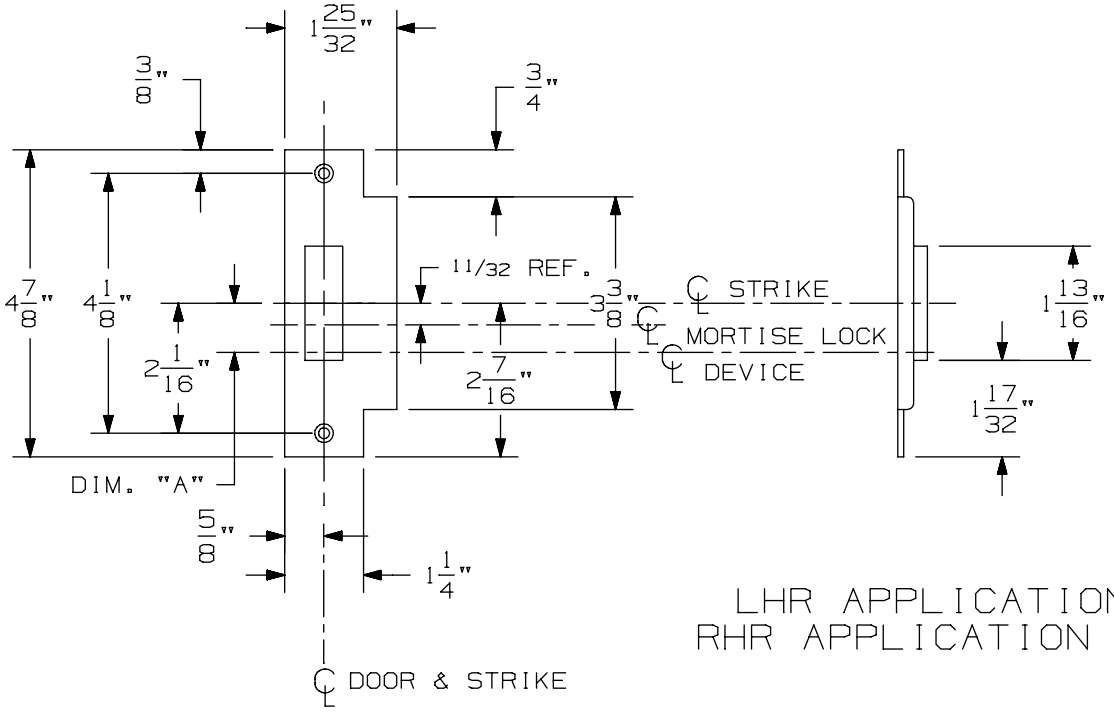

LHR APPLICATION SHOWN
RHR APPLICATION OPPOSITE

575 Mortise Strike (Single Door) for 7500 Mortise Lock

VON DUPRIN®

NOTES: SEE MASTER SHEET #10001 FOR SUGGESTED REINFORCING

TEMPLATE NUMBER: 30210_b

DATE: 07-22-13

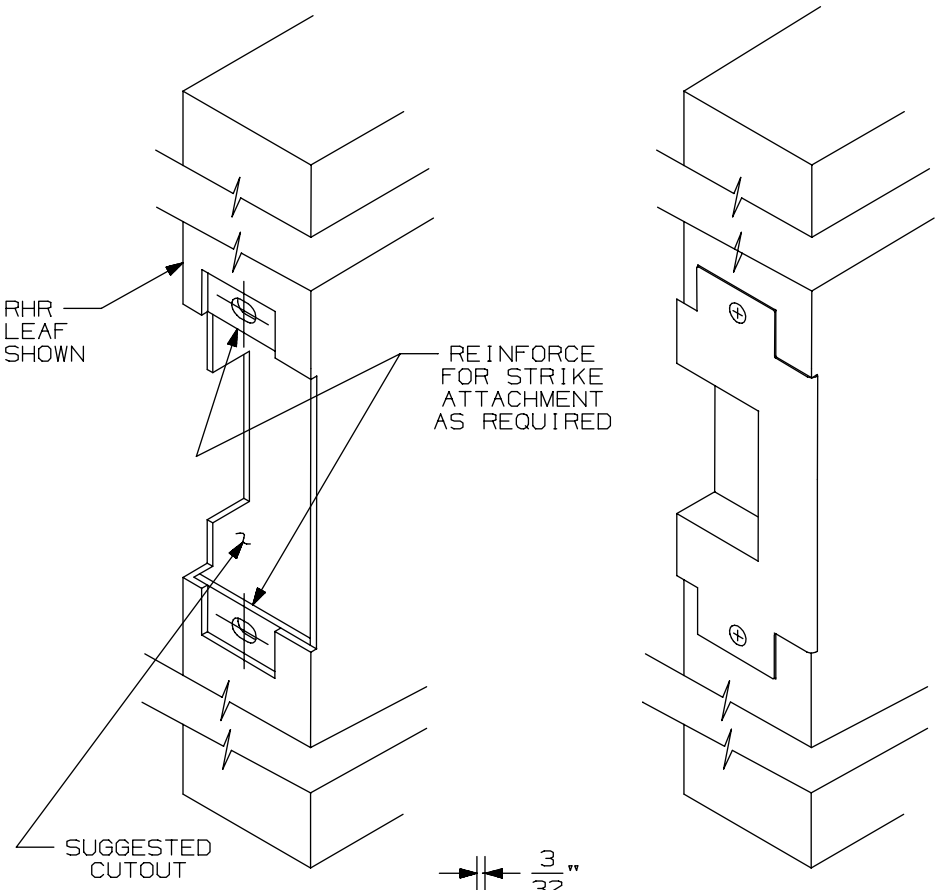

APPLICATION SCHEDULE	
DEVICE	DIM."A"
9875 & 9875-F	11/16
9975 & 9975-F	11/16
8875 & 8875-F	1/2
5575 & 5575-F	1/2

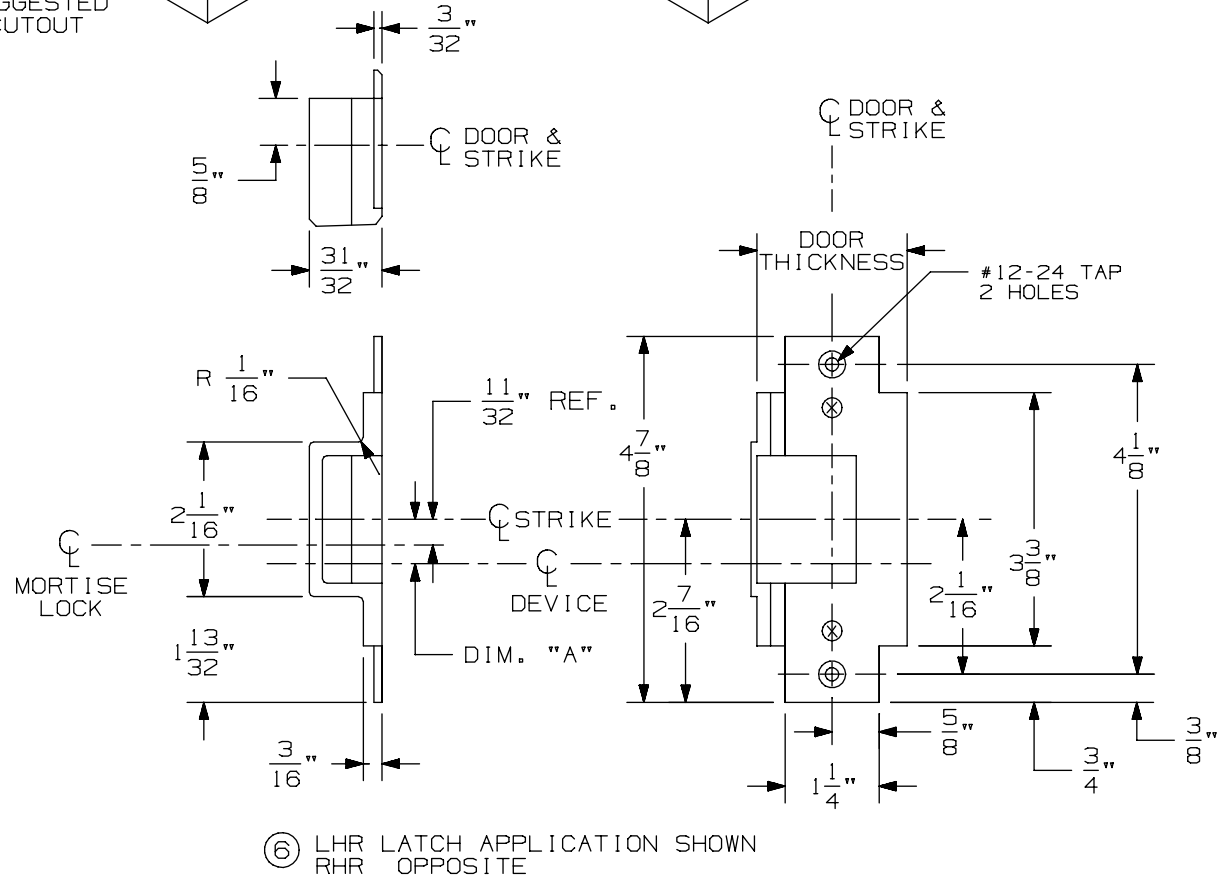

⑥ LHR LATCH APPLICATION SHOWN
RHR OPPOSITE

576A & 576B Mortise Strike for 7500 Mortise Lock

VON DUPRIN®

NOTES: SEE MASTER SHEET #10001 FOR SUGGESTED REINFORCING

TEMPLATE NUMBER: 30211_a

DATE: 05-28-13

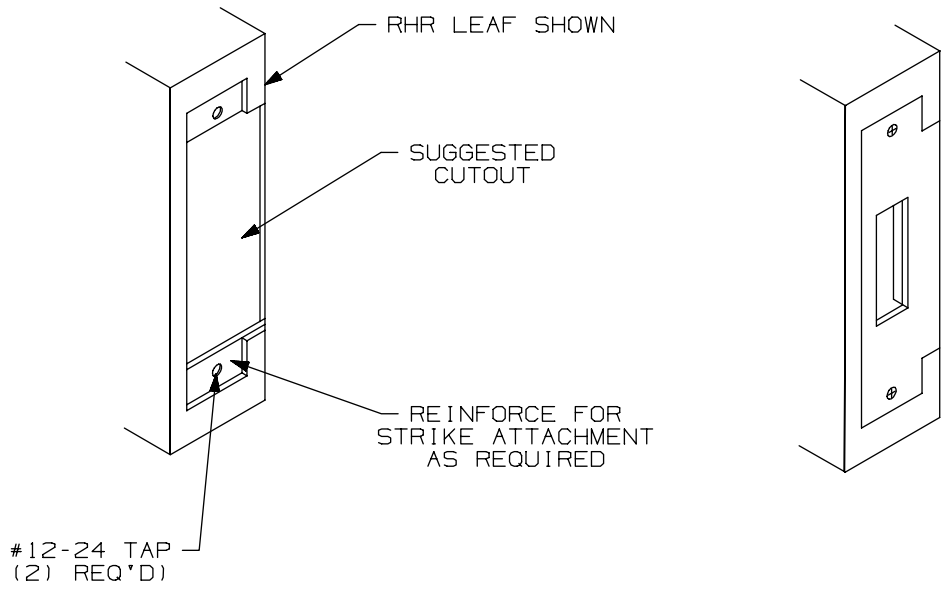

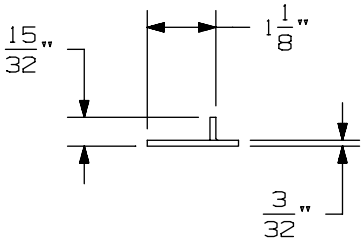

APPLICATION SCHEDULE	
DEVICE	DIM. "A"
9875 & 9875-F	11/16
9975 & 9975-F	11/16
8875 & 8875-F	1/2
5575 & 5575-F	1/2

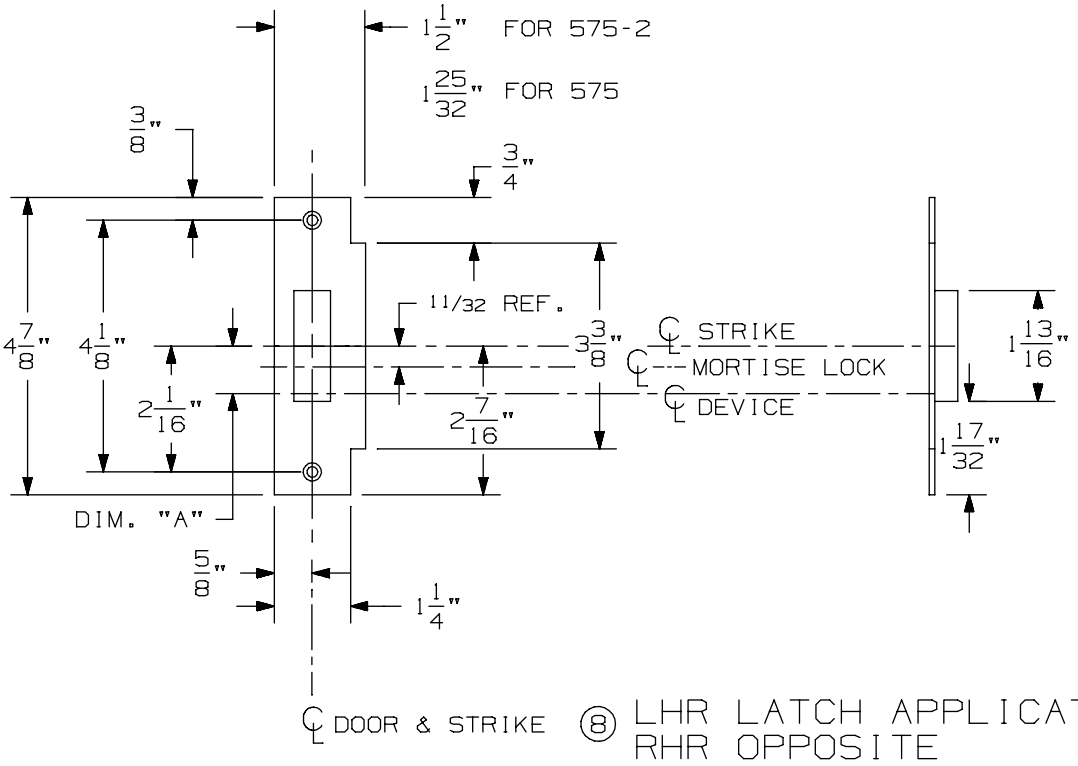

⑧ LHR LATCH APPLICATION SHOWN
RHR OPPOSITE

575-2 Mortise Strike (Double Doors) for 7500 Mortise Lock

VON DUPRIN®

NOTES: SEE MASTER SHEET #10001 FOR SUGGESTED REINFORCING

TEMPLATE NUMBER: 30212_b

DATE: 07-22-13

FOR MORTISE APPLICATION SEE TEMPLATE NO. 10305

TYPE 86 STOCK HOLLOW METAL DOOR

NOTE: BACKSET IS ALWAYS 2 3/4"

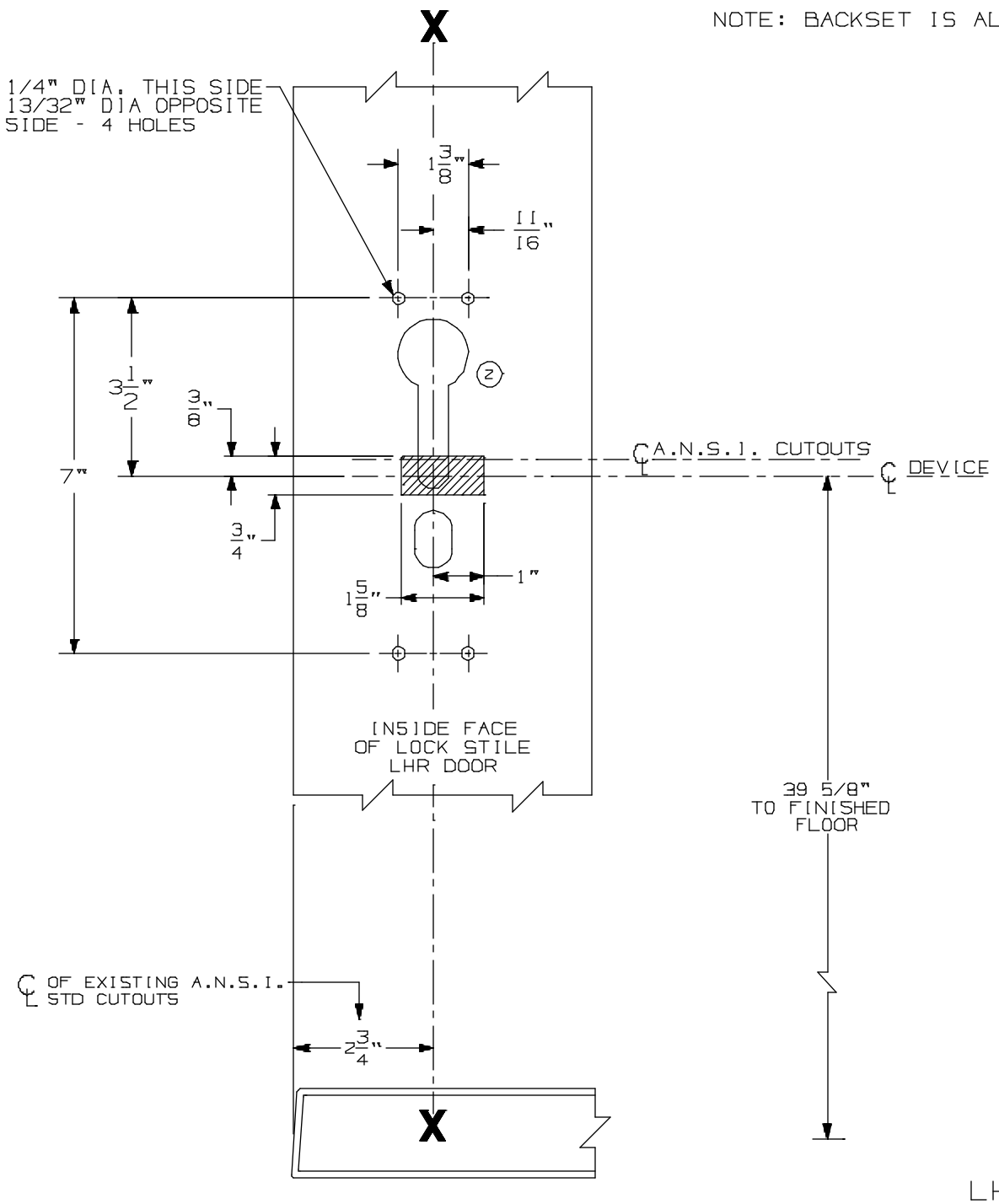

LHR SHOWN
RHR OPPOSITE

A.N.S.I. CUTOUTS ARE SHOWN FOR REFERENCE ONLY. SEE A.N.S.I. SPECIFICATION NO. A115 FOR THE SIZE AND LOCATION OF THESE CUTOUTS.

FOR OUTSIDE TRIM PREPARATION, SEE ADDITIONAL TRIM TEMPLATE.

9875/9975 Series Mortise Lock Devices w/ 990, 991, & 992 Trim for Stock Hollow Metal Applications	VON DUPRIN®	
NOTES: SEE MASTER SHEET #10001 FOR SUGGESTED REINFORCING	TEMPLATE NUMBER: 10312_a	DATE: 05-21-13

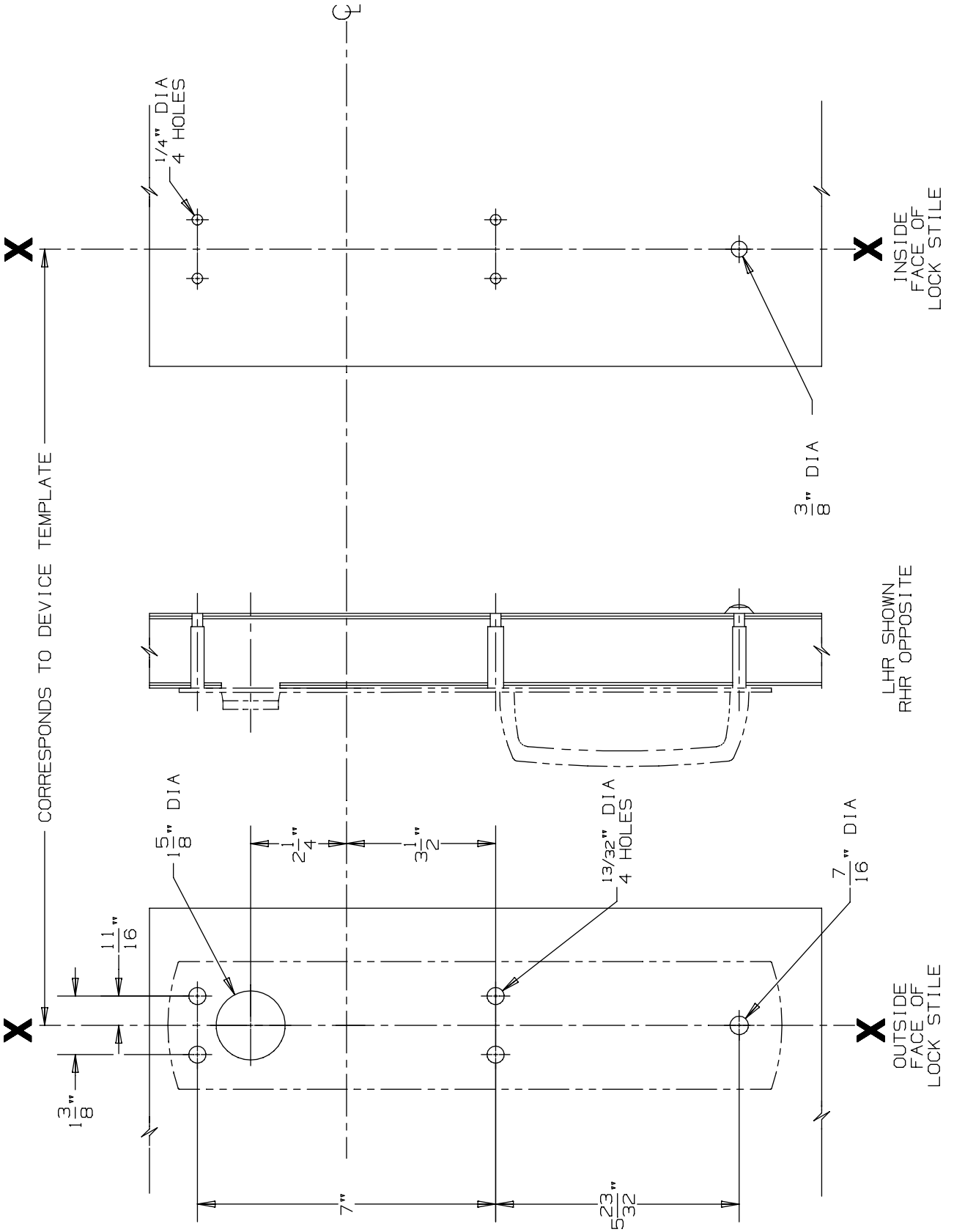

DEVICE APPLICATION SCHEDULE
9875/9975 SERIES DEVICE

990 NL Trim

VON DUPRIN®

NOTES: SEE MASTER SHEET #10001 FOR SUGGESTED REINFORCING

TEMPLATE NUMBER: 20271_a

DATE: 05-23-13

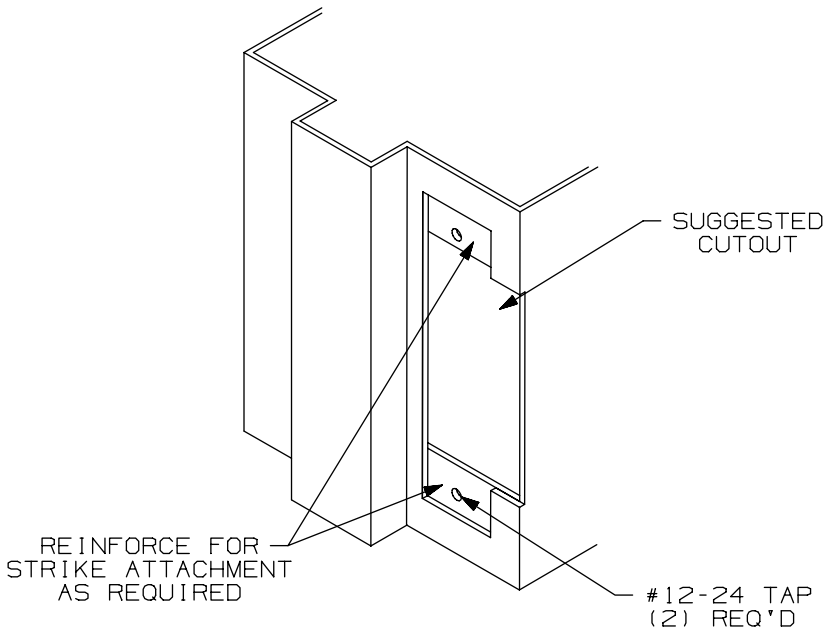

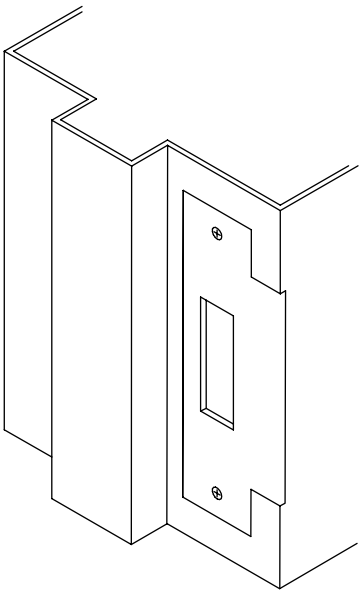

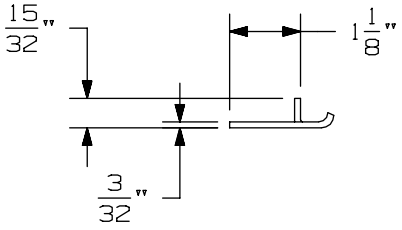

APPLICATION SCHEDULE	
DEVICE	DIM. "A"
9875 & 9875-F	11/16
9975 & 9975-F	11/16
8875 & 8875-F	1/2
5575 & 5575-F	1/2

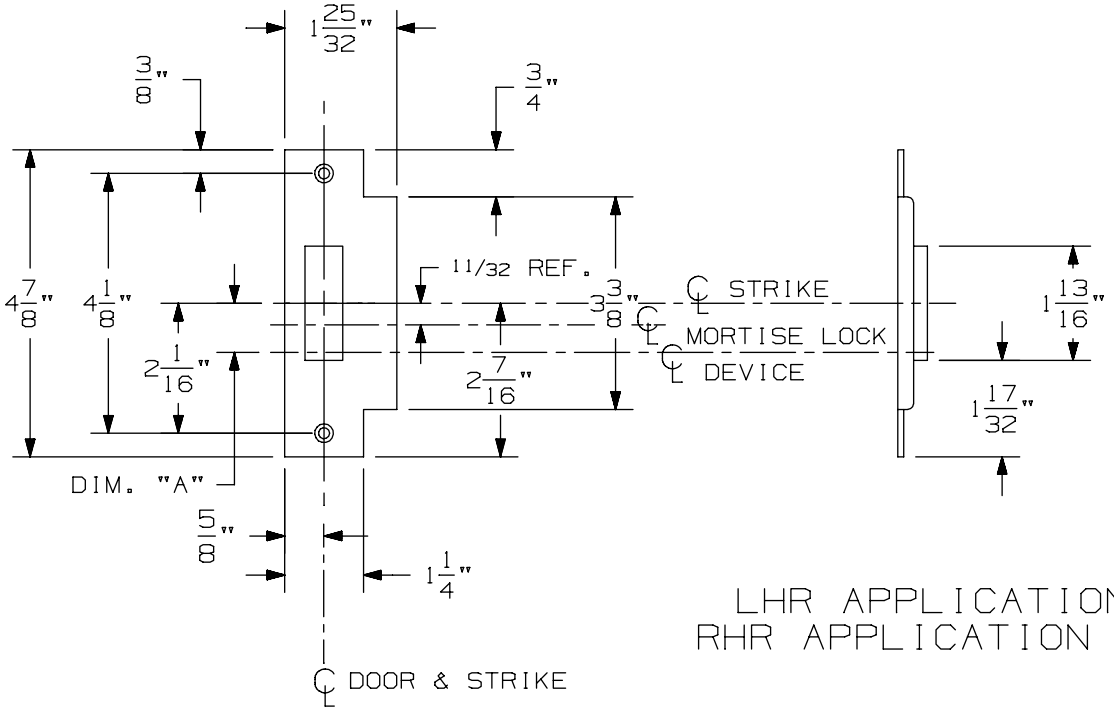

LHR APPLICATION SHOWN
RHR APPLICATION OPPOSITE

575 Mortise Strike (Single Door) for 7500 Mortise Lock

VON DUPRIN®

NOTES: SEE MASTER SHEET #10001 FOR SUGGESTED REINFORCING

TEMPLATE NUMBER: 30210_b

DATE: 07-22-13

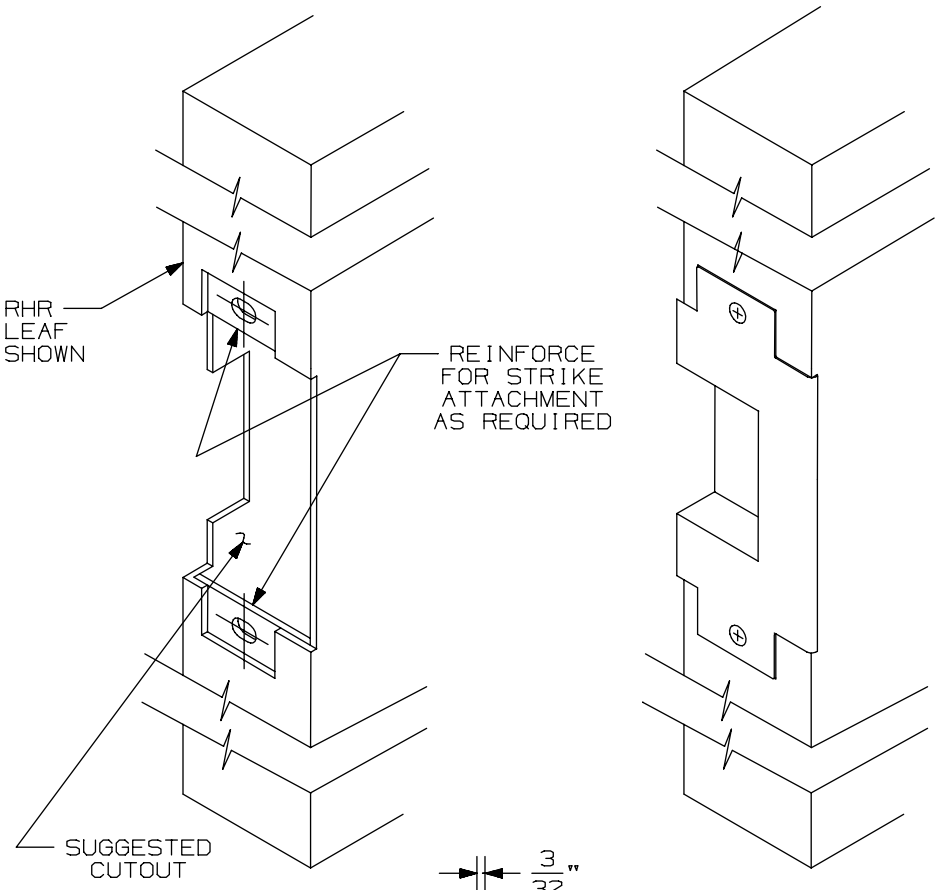

APPLICATION SCHEDULE	
DEVICE	DIM."A"
9875 & 9875-F	11/16
9975 & 9975-F	11/16
8875 & 8875-F	1/2
5575 & 5575-F	1/2

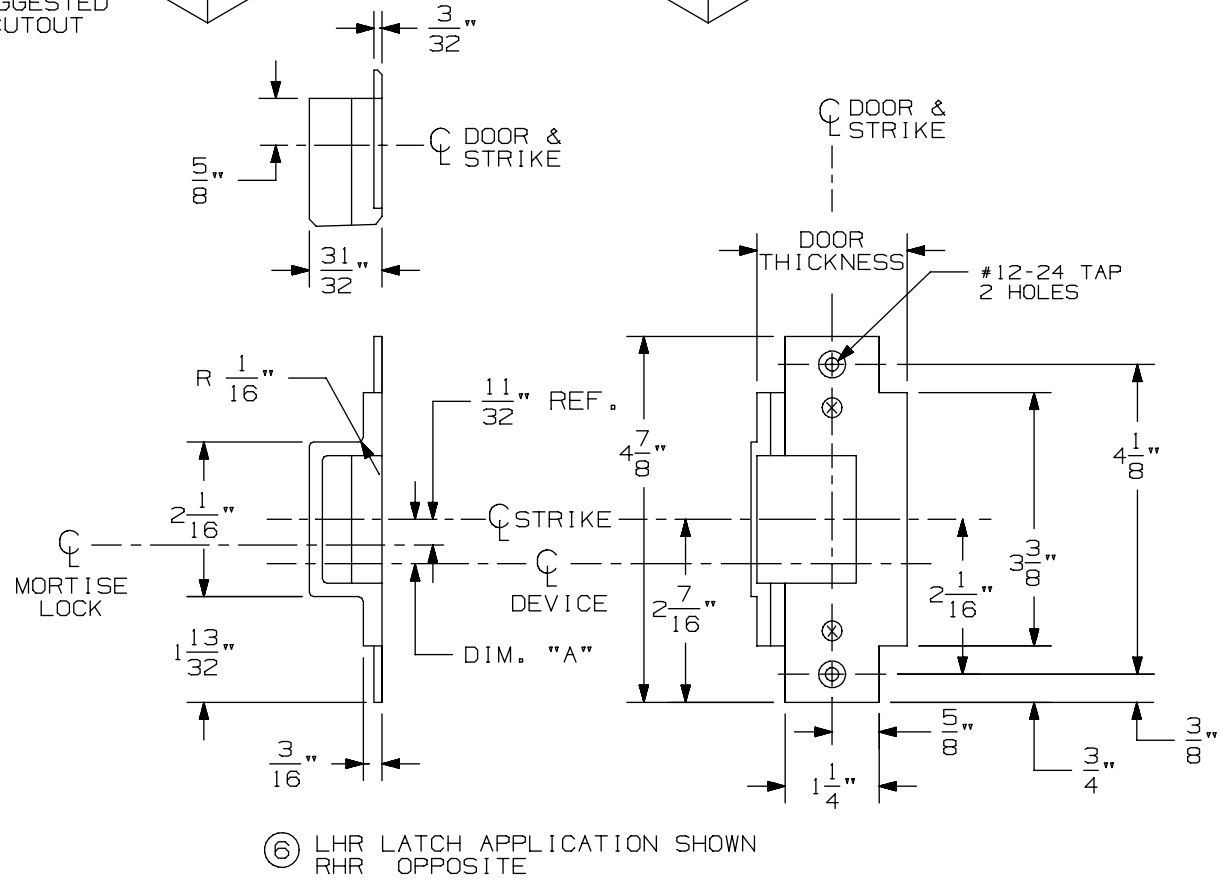

⑥ LHR LATCH APPLICATION SHOWN
RHR OPPOSITE

576A & 576B Mortise Strike for 7500 Mortise Lock

VON DUPRIN®

NOTES: SEE MASTER SHEET #10001 FOR SUGGESTED REINFORCING

TEMPLATE NUMBER: 30211_a

DATE: 05-28-13

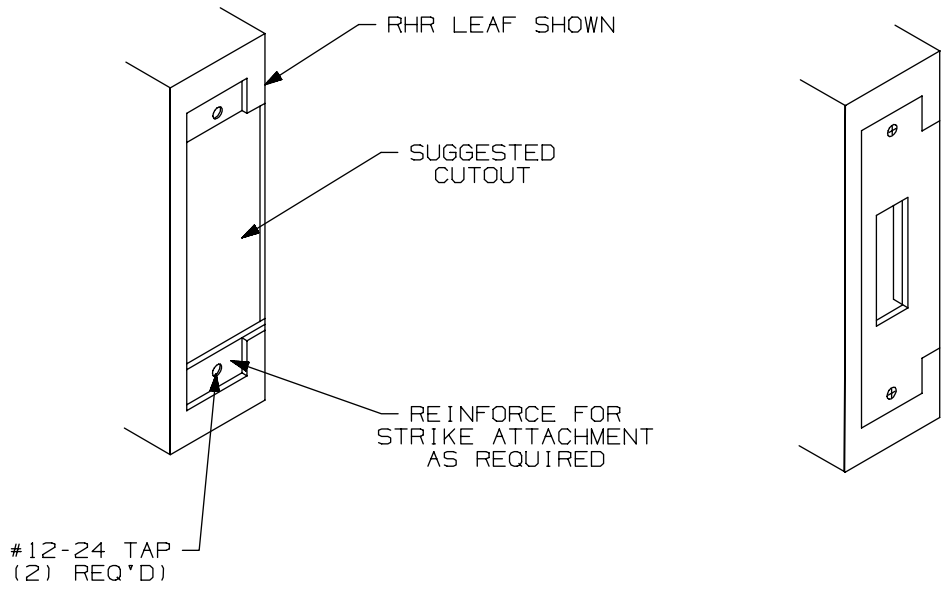

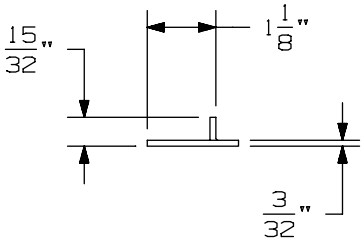

APPLICATION SCHEDULE	
DEVICE	DIM. "A"
9875 & 9875-F	11/16
9975 & 9975-F	11/16
8875 & 8875-F	1/2
5575 & 5575-F	1/2

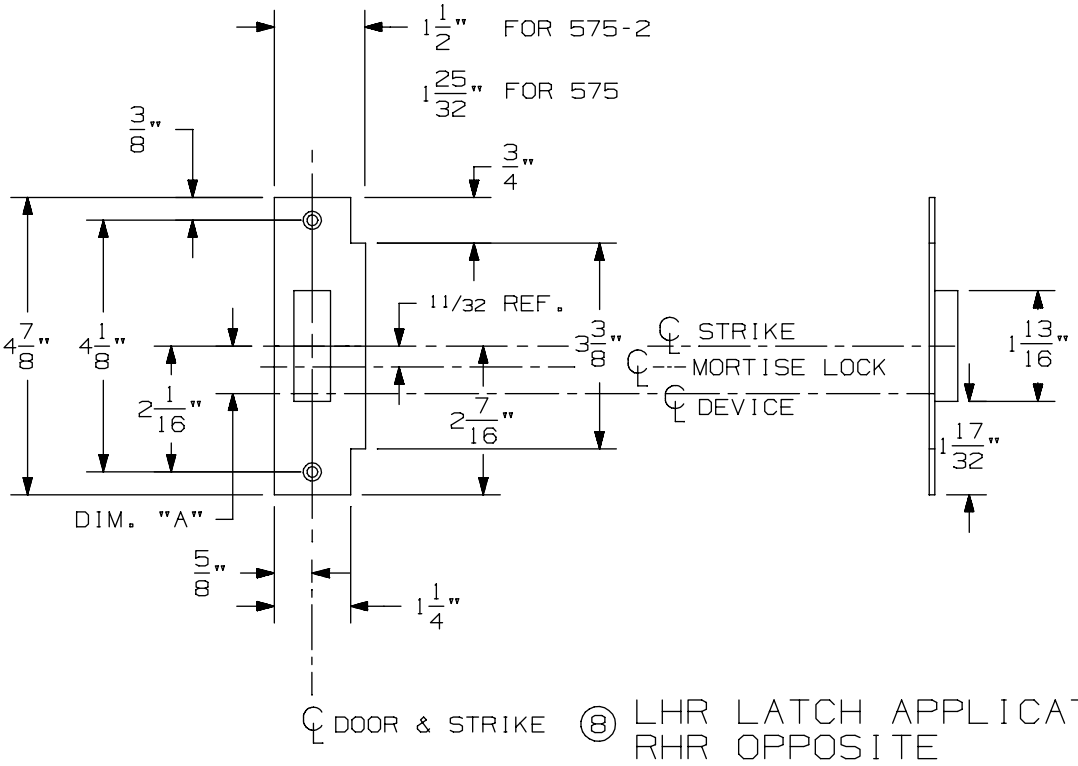

⑧ LHR LATCH APPLICATION SHOWN
RHR OPPOSITE

575-2 Mortise Strike (Double Doors) for 7500 Mortise Lock

VON DUPRIN®

NOTES: SEE MASTER SHEET #10001 FOR SUGGESTED REINFORCING

TEMPLATE NUMBER: 30212_b

DATE: 07-22-13

FOR MORTISE APPLICATION SEE TEMPLATE NO. 10305

TYPE 86 STOCK HOLLOW METAL DOOR

NOTE: BACKSET IS ALWAYS 2 3/4"

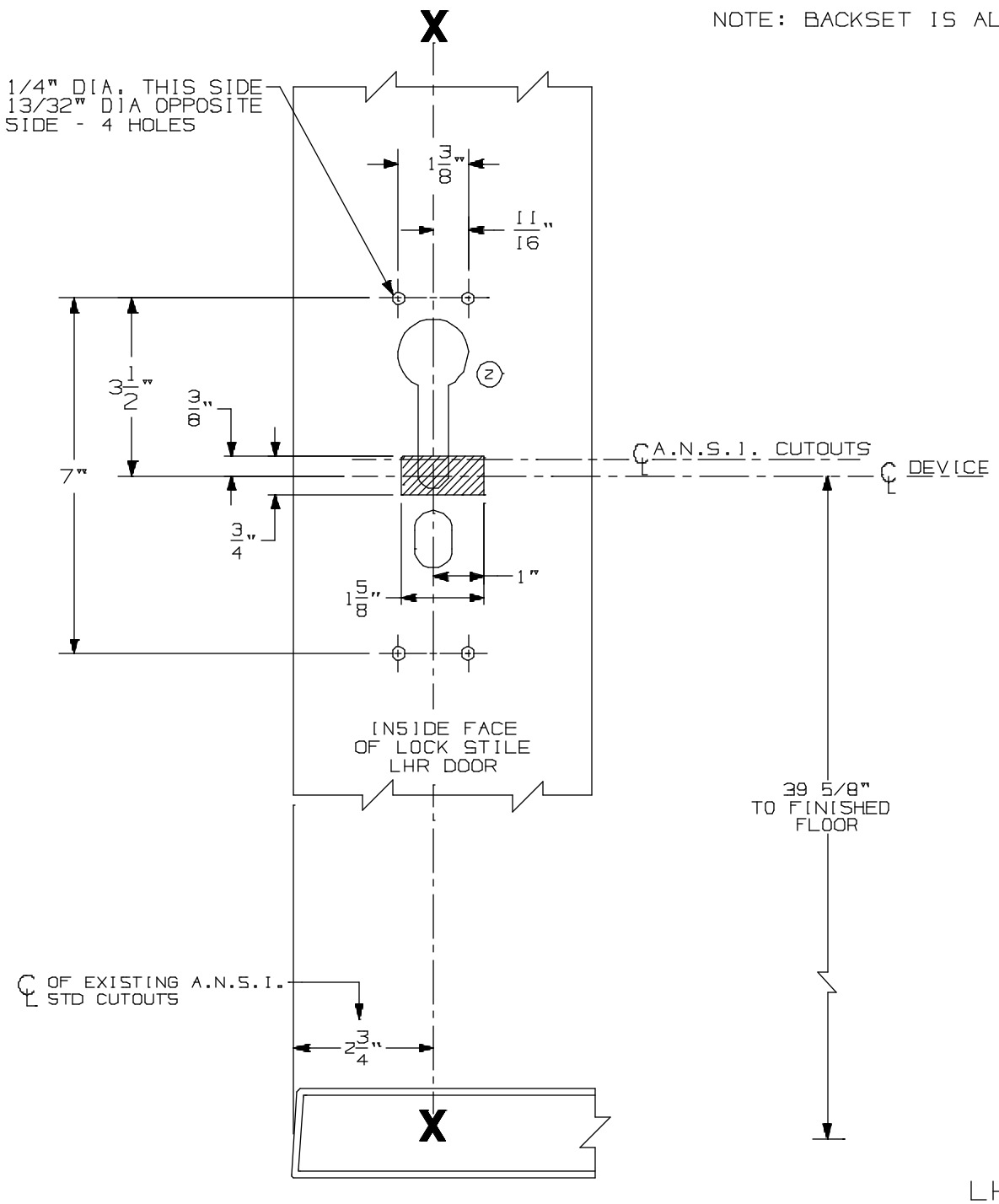

LHR SHOWN
RHR OPPOSITE

A.N.S.I. CUTOUTS ARE SHOWN FOR REFERENCE ONLY. SEE A.N.S.I. SPECIFICATION NO. A115 FOR THE SIZE AND LOCATION OF THESE CUTOUTS.

FOR OUTSIDE TRIM PREPARATION, SEE ADDITIONAL TRIM TEMPLATE.

9875/9975 Series Mortise Lock Devices w/ 990, 991, & 992 Trim for Stock Hollow Metal Applications	VON DUPRIN®	
NOTES: SEE MASTER SHEET #10001 FOR SUGGESTED REINFORCING	TEMPLATE NUMBER: 10312_a	DATE: 05-21-13

991 K & 992 L Trim for Mortise Device

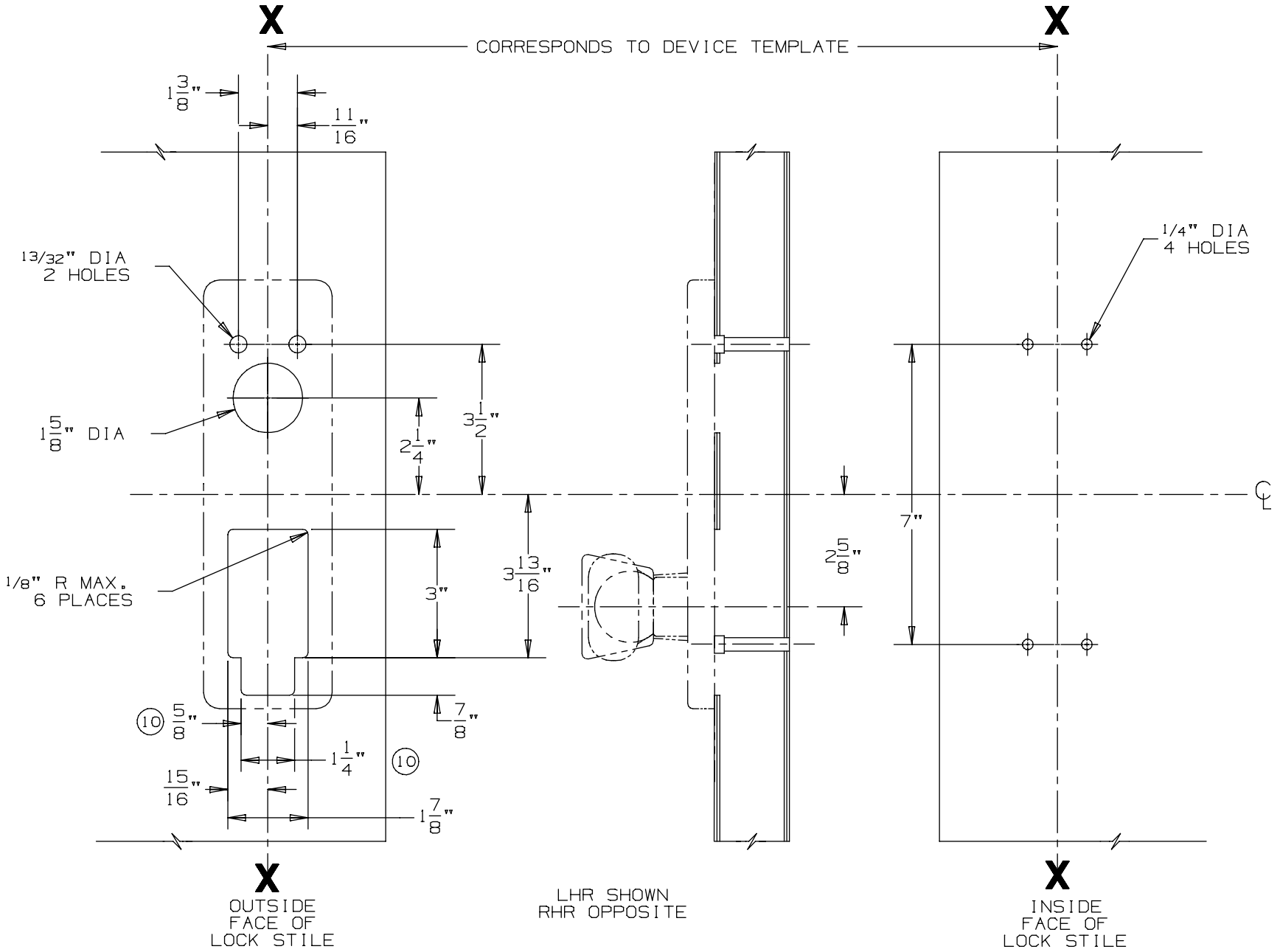

DEVICE APPLICATION SCHEDULE
9875/9975 SERIES DEVICE

NOTES: SEE MASTER SHEET #10001 FOR SUGGESTED REINFORCING

TEMPLATE NUMBER: 20280_a

DATE: 05-23-13

VON DUPRIN®

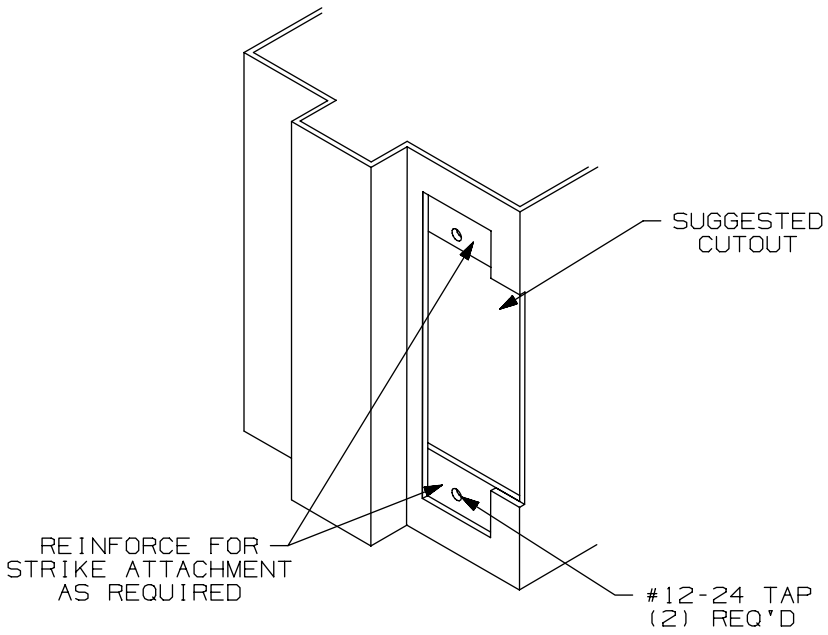

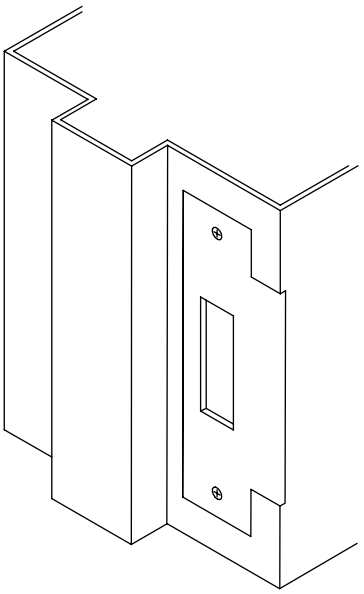

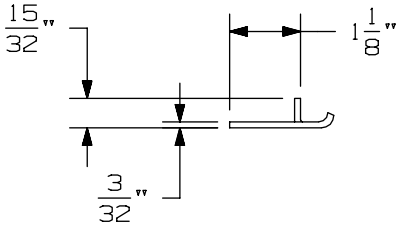

APPLICATION SCHEDULE	
DEVICE	DIM. "A"
9875 & 9875-F	11/16
9975 & 9975-F	11/16
8875 & 8875-F	1/2
5575 & 5575-F	1/2

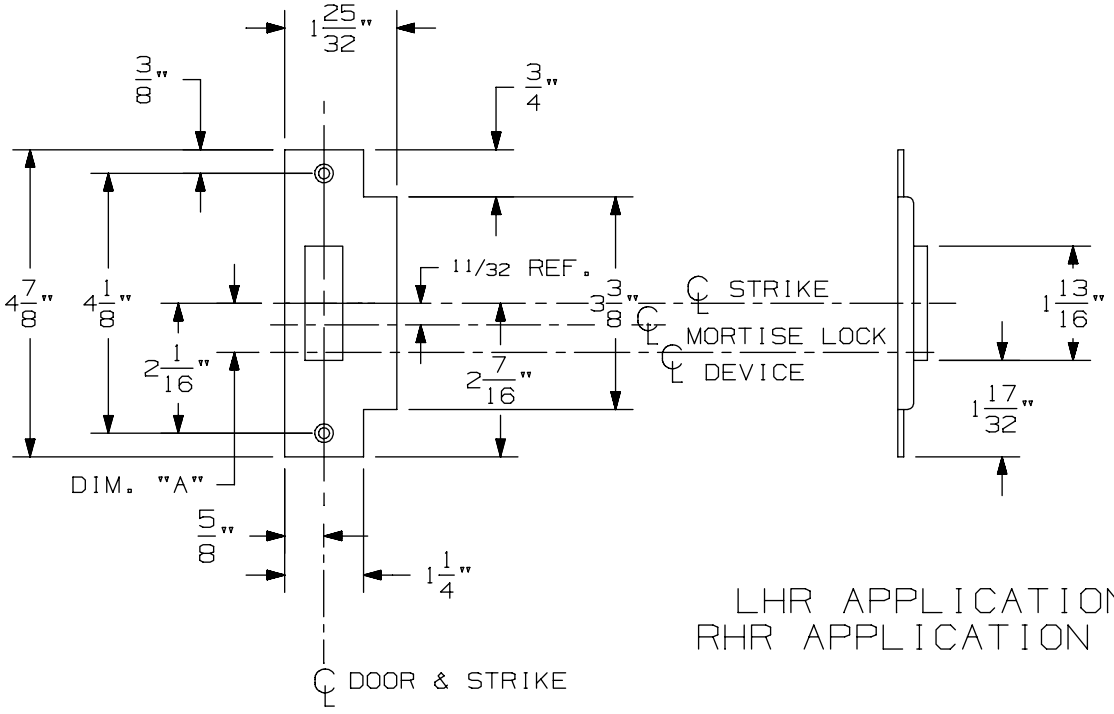

LHR APPLICATION SHOWN
RHR APPLICATION OPPOSITE

575 Mortise Strike (Single Door) for 7500 Mortise Lock

VON DUPRIN®

NOTES: SEE MASTER SHEET #10001 FOR SUGGESTED REINFORCING

TEMPLATE NUMBER: 30210_b

DATE: 07-22-13

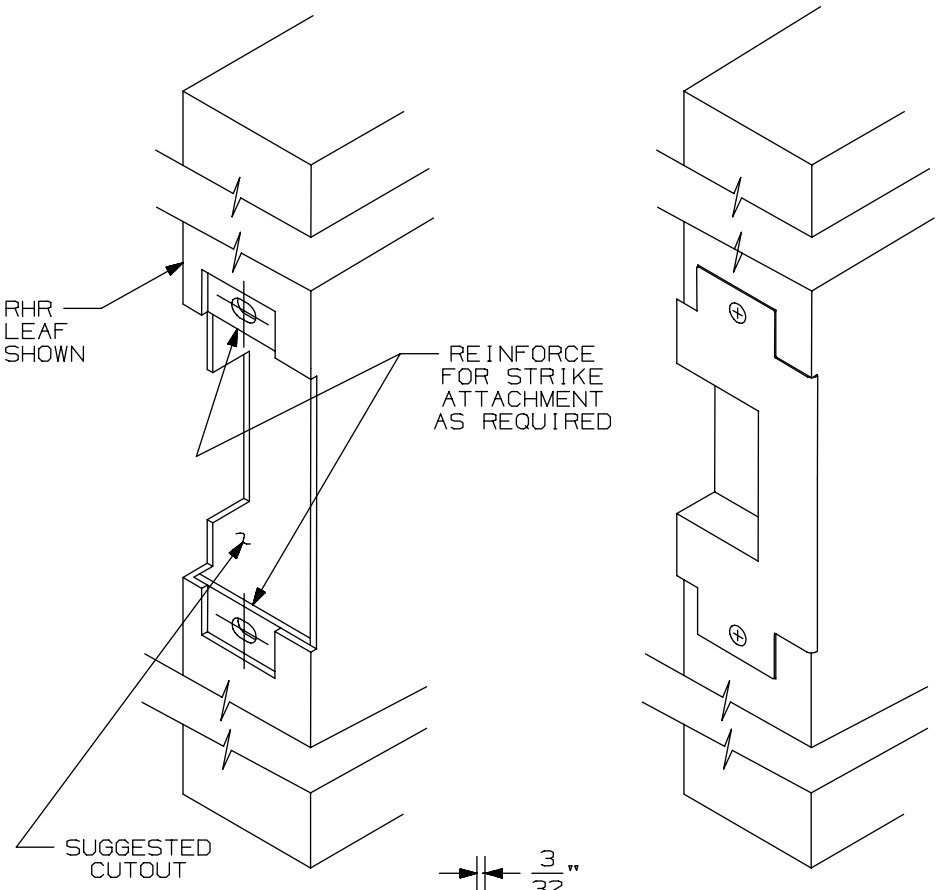

APPLICATION SCHEDULE	
DEVICE	DIM."A"
9875 & 9875-F	11/16
9975 & 9975-F	11/16
8875 & 8875-F	1/2
5575 & 5575-F	1/2

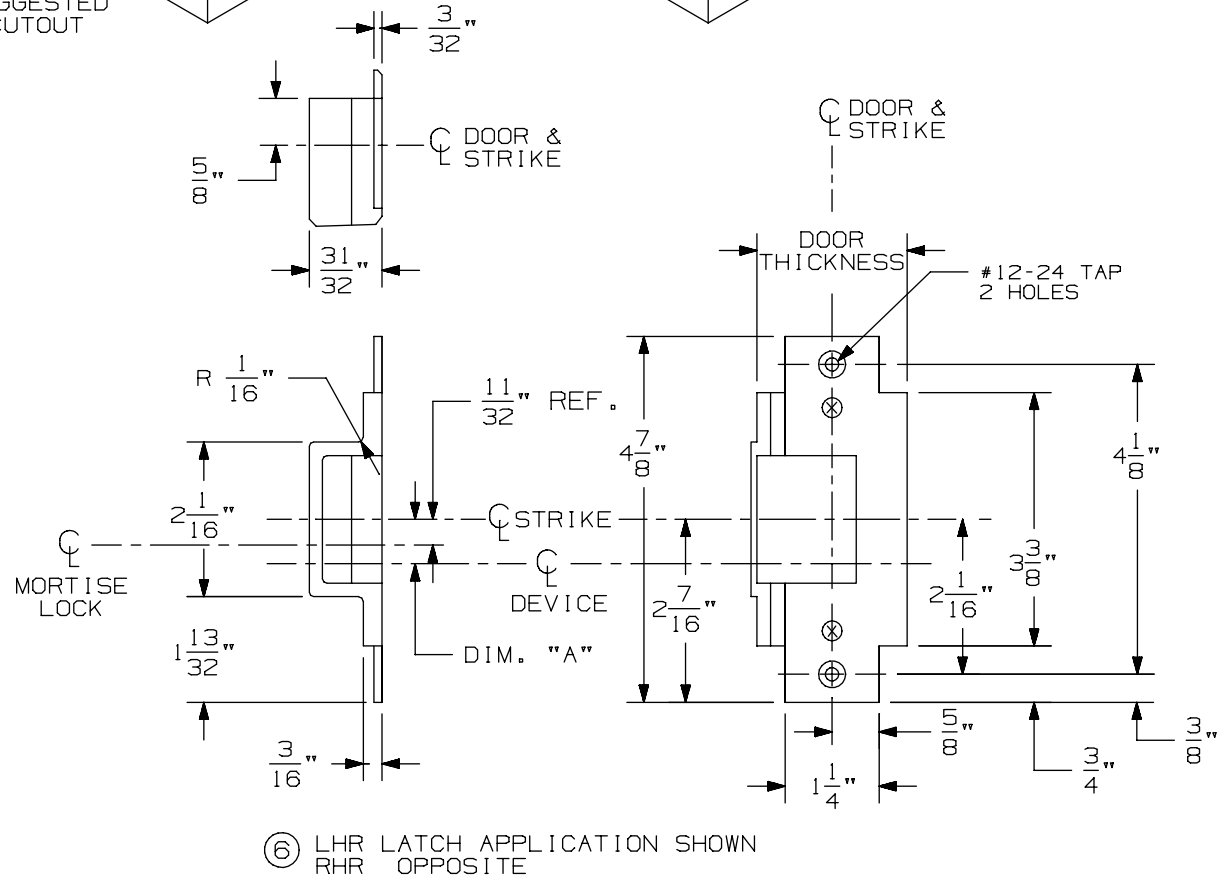

⑥ LHR LATCH APPLICATION SHOWN
RHR OPPOSITE

576A & 576B Mortise Strike for 7500 Mortise Lock

VON DUPRIN®

NOTES: SEE MASTER SHEET #10001 FOR SUGGESTED REINFORCING

TEMPLATE NUMBER: 30211_a

DATE: 05-28-13

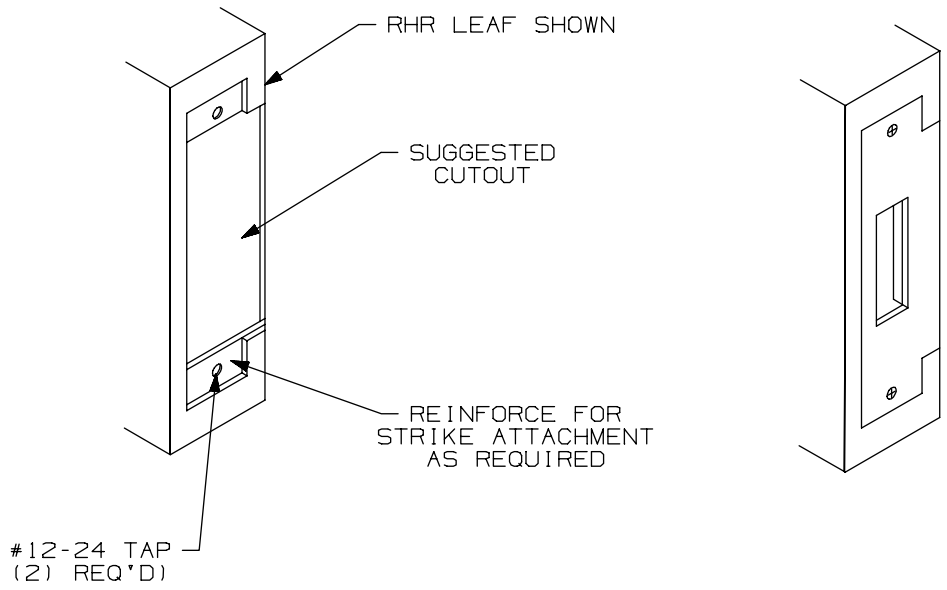

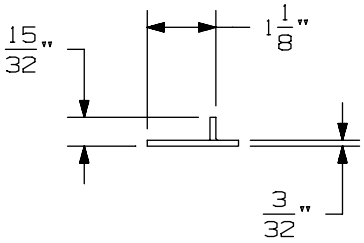

APPLICATION SCHEDULE	
DEVICE	DIM. "A"
9875 & 9875-F	11/16
9975 & 9975-F	11/16
8875 & 8875-F	1/2
5575 & 5575-F	1/2

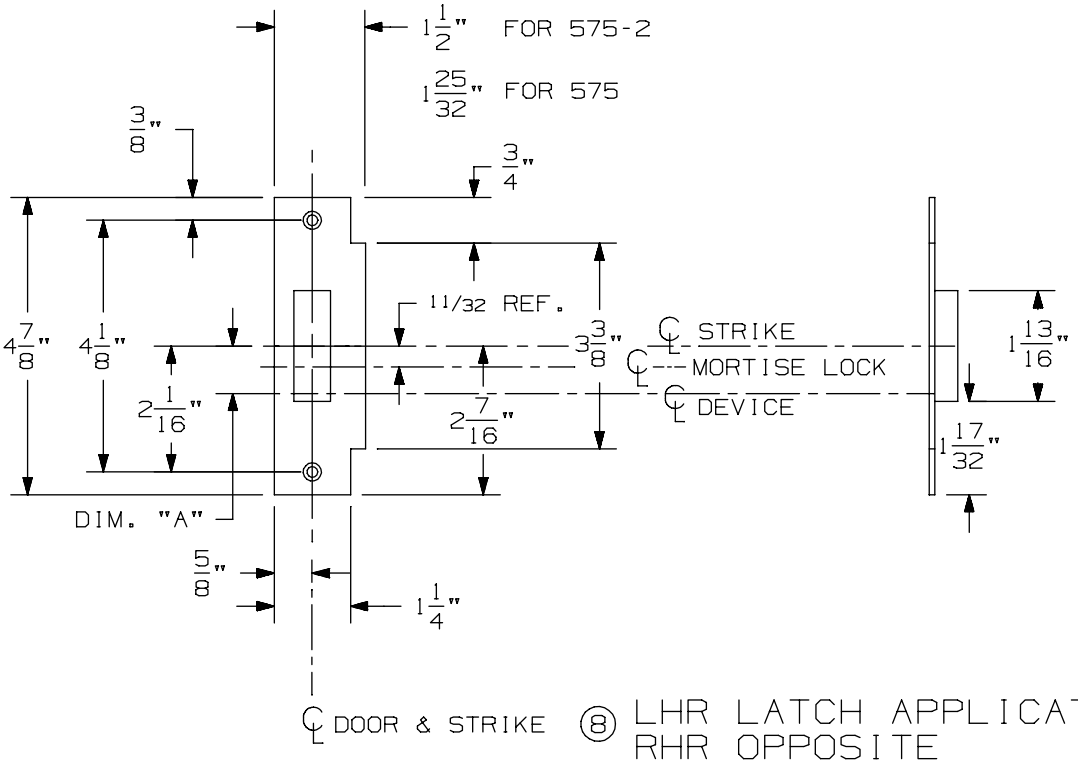

⑧ LHR LATCH APPLICATION SHOWN
RHR OPPOSITE

575-2 Mortise Strike (Double Doors) for 7500 Mortise Lock

VON DUPRIN®

NOTES: SEE MASTER SHEET #10001 FOR SUGGESTED REINFORCING

TEMPLATE NUMBER: 30212_b

DATE: 07-22-13

FOR MORTISE APPLICATION SEE TEMPLATE NO. 10305

TYPE 86 STOCK HOLLOW METAL DOOR

NOTE: BACKSET IS ALWAYS 2 3/4"

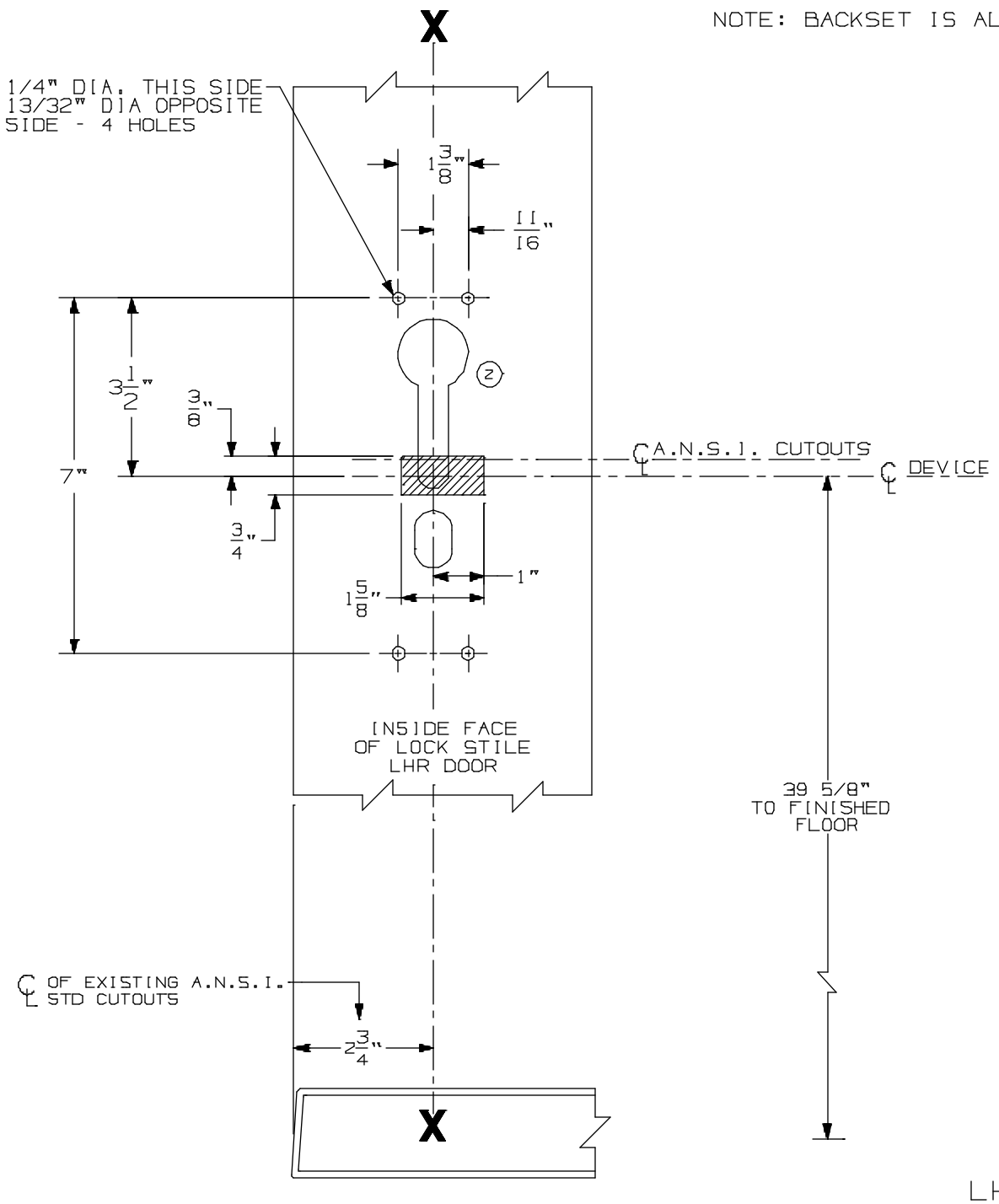

LHR SHOWN
RHR OPPOSITE

A.N.S.I. CUTOUTS ARE SHOWN FOR REFERENCE ONLY. SEE A.N.S.I. SPECIFICATION NO. A115 FOR THE SIZE AND LOCATION OF THESE CUTOUTS.

FOR OUTSIDE TRIM PREPARATION, SEE ADDITIONAL TRIM TEMPLATE.

9875/9975 Series Mortise Lock Devices w/ 990, 991, & 992 Trim for Stock Hollow Metal Applications	VON DUPRIN®	
NOTES: SEE MASTER SHEET #10001 FOR SUGGESTED REINFORCING	TEMPLATE NUMBER: 10312_a	DATE: 05-21-13

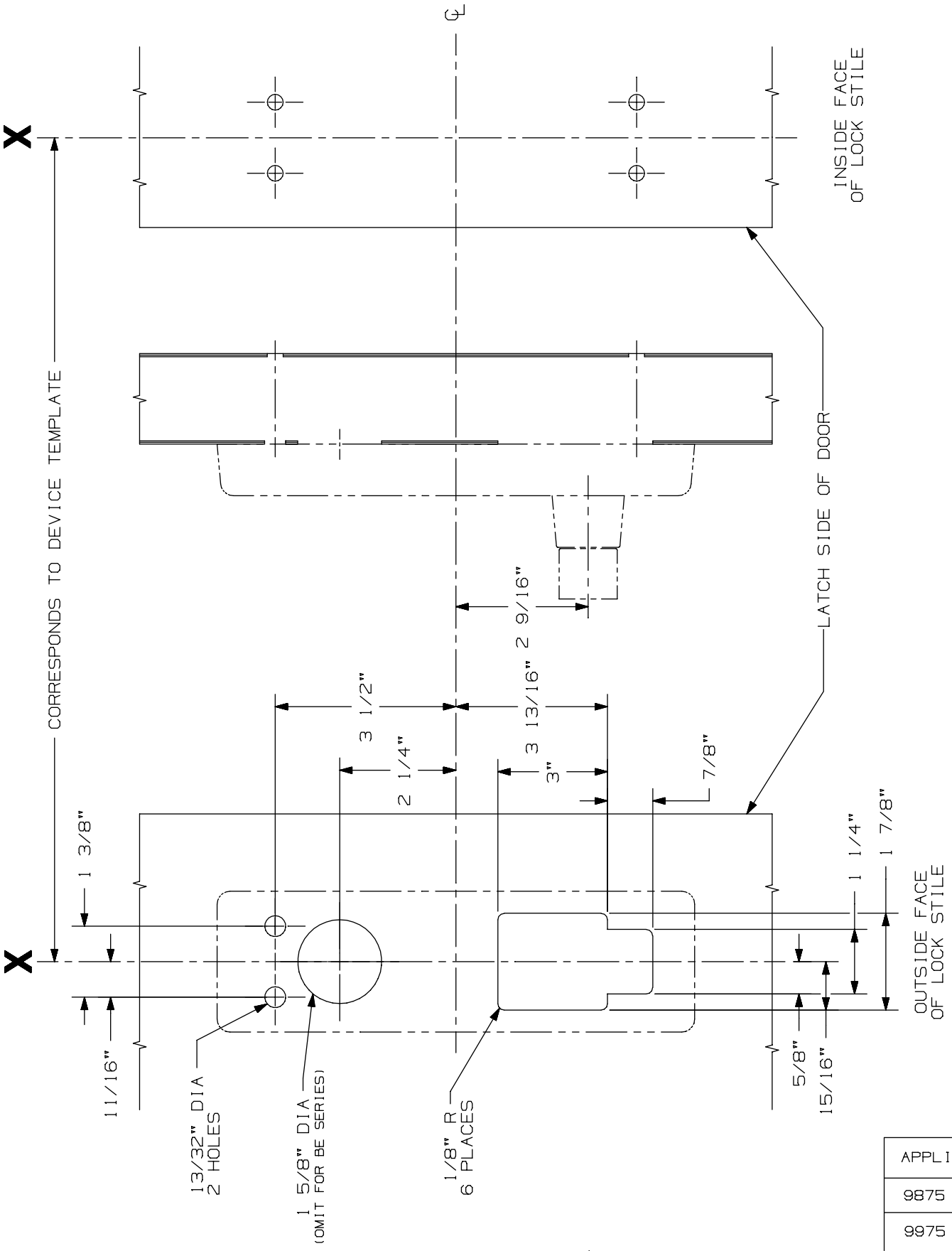

APPLICATIONS
9875 SERIES
9975 SERIES

996L, E996L, 996L-BE, & E996L-BE
Mortise Series
Trim Metal Door Application

VON DUPRIN®

NOTES: See Master Sheet #10001 For Suggested Reinforcing

TEMPLATE NUMBER: 20006_b

DATE: 10-30-14

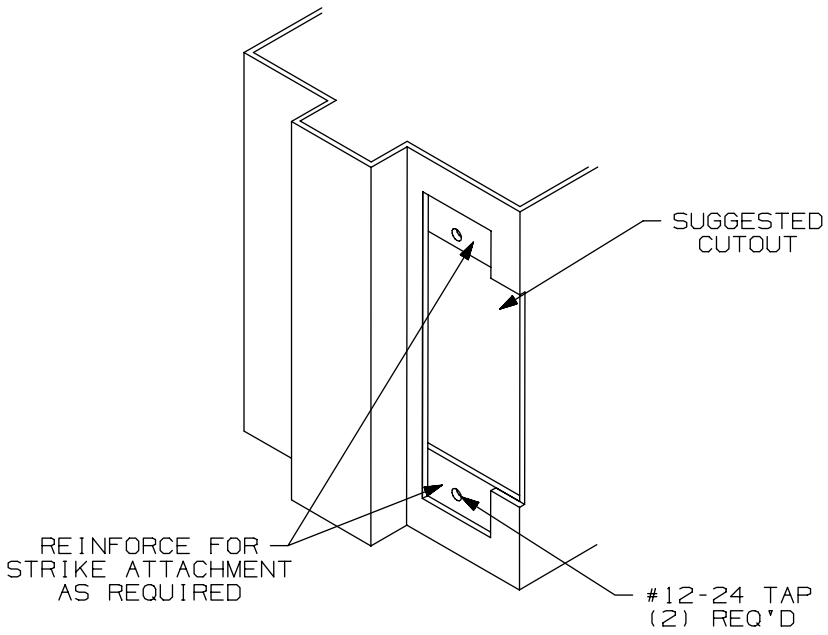

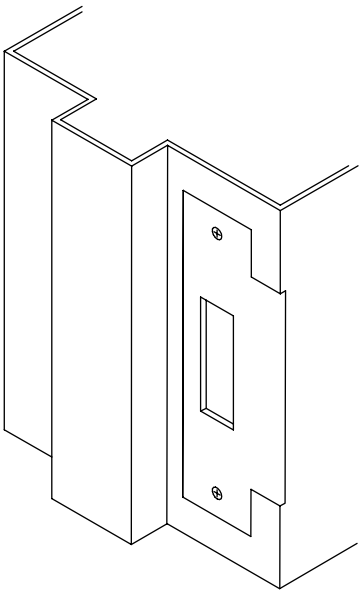

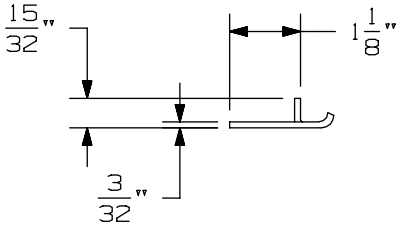

APPLICATION SCHEDULE	
DEVICE	DIM. "A"
9875 & 9875-F	11/16
9975 & 9975-F	11/16
8875 & 8875-F	1/2
5575 & 5575-F	1/2

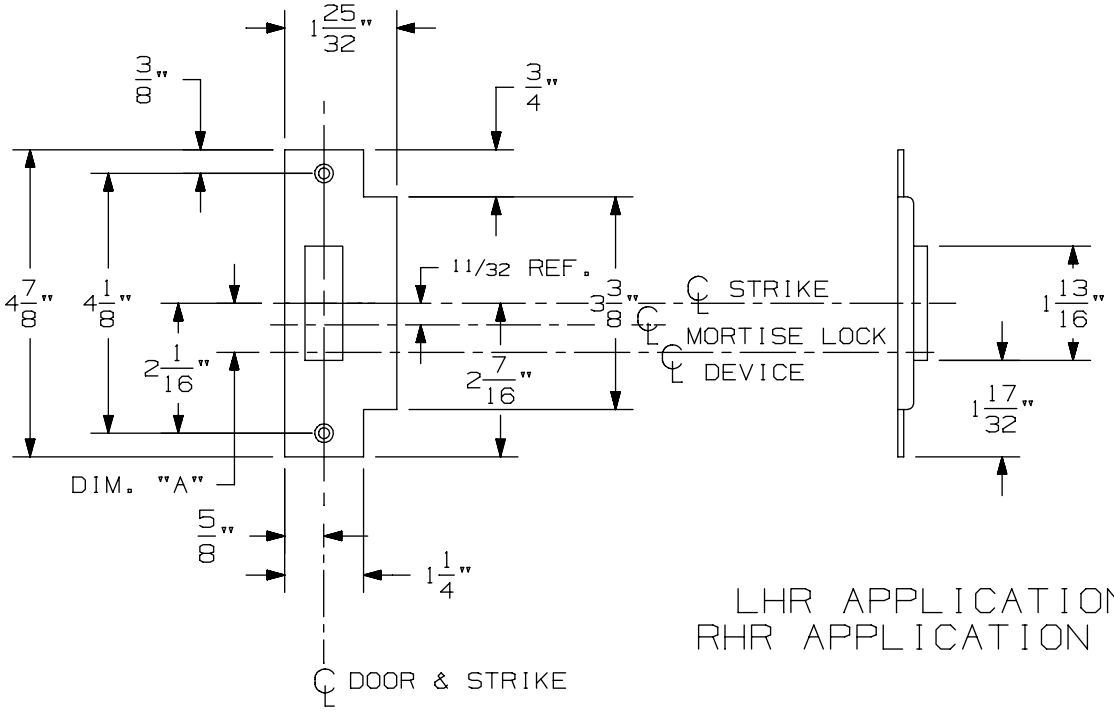

LHR APPLICATION SHOWN
RHR APPLICATION OPPOSITE

575 Mortise Strike (Single Door) for 7500 Mortise Lock

VON DUPRIN®

NOTES: SEE MASTER SHEET #10001 FOR SUGGESTED REINFORCING

TEMPLATE NUMBER: 30210_b

DATE: 07-22-13

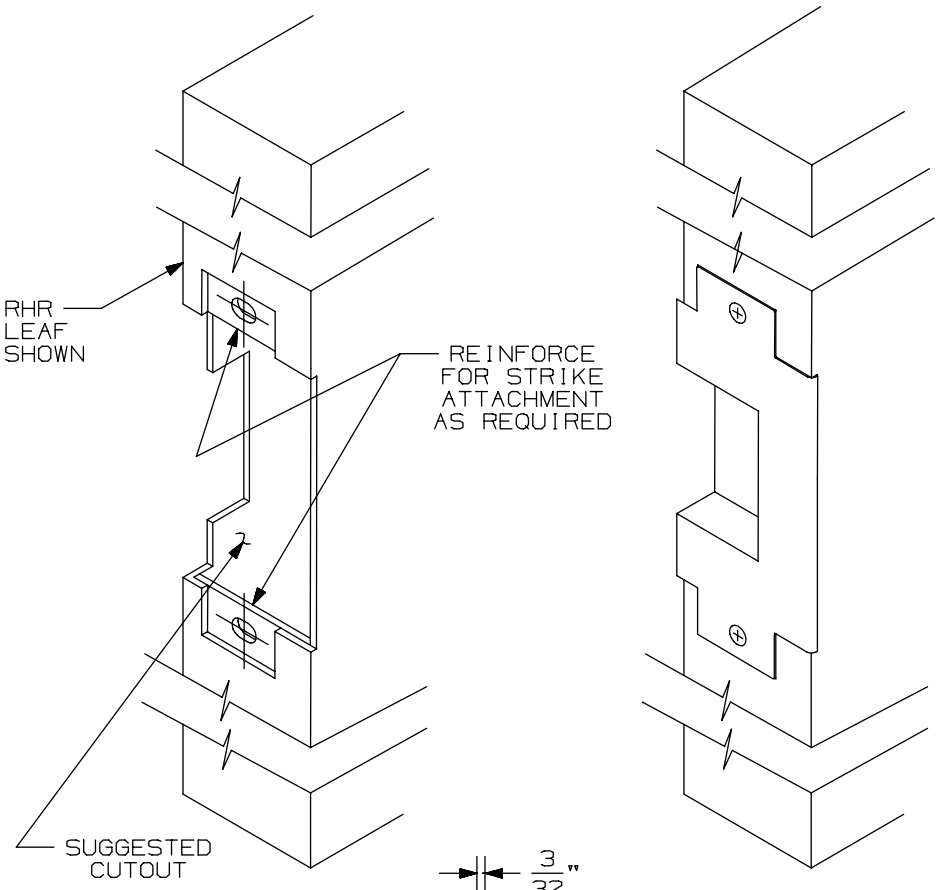

APPLICATION SCHEDULE	
DEVICE	DIM."A"
9875 & 9875-F	11/16
9975 & 9975-F	11/16
8875 & 8875-F	1/2
5575 & 5575-F	1/2

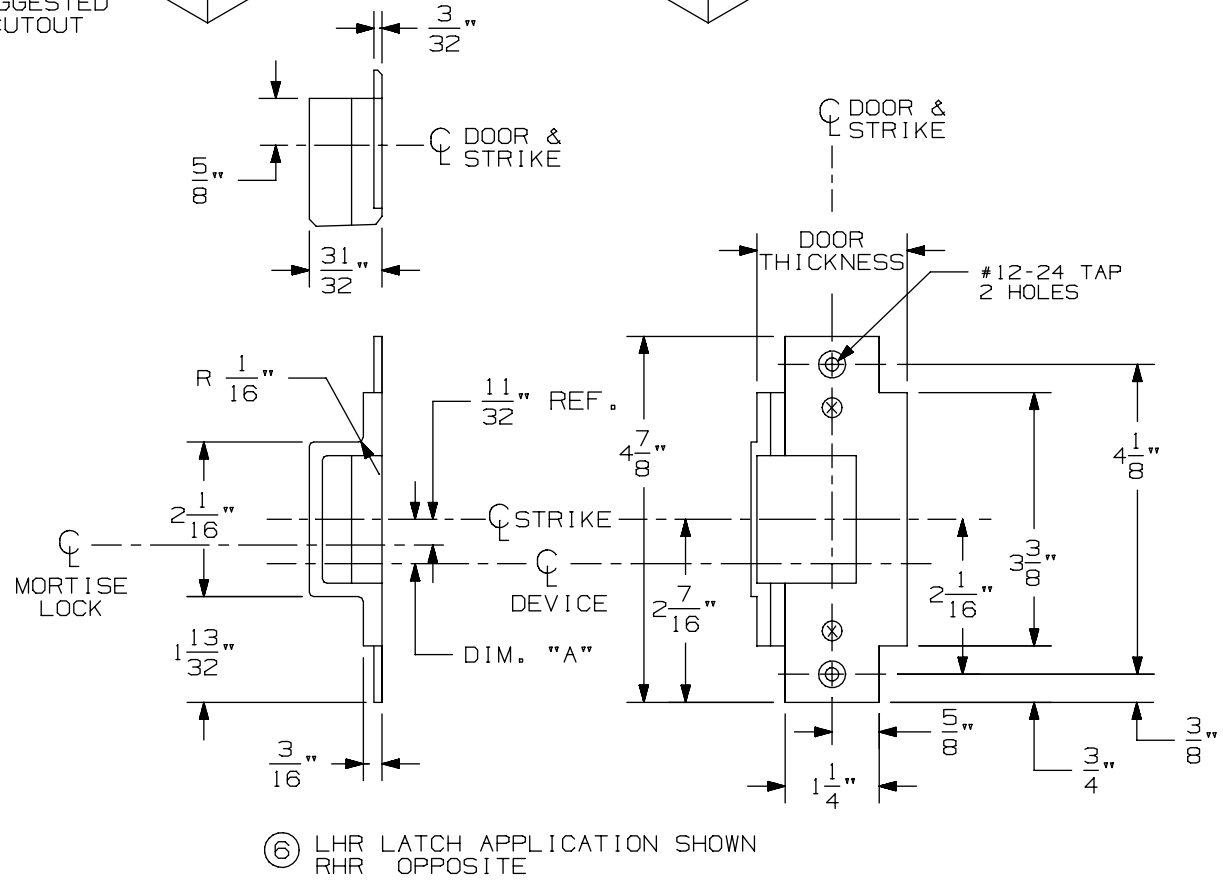

⑥ LHR LATCH APPLICATION SHOWN
RHR OPPOSITE

576A & 576B Mortise Strike for 7500 Mortise Lock

VON DUPRIN®

NOTES: SEE MASTER SHEET #10001 FOR SUGGESTED REINFORCING

TEMPLATE NUMBER: 30211_a

DATE: 05-28-13

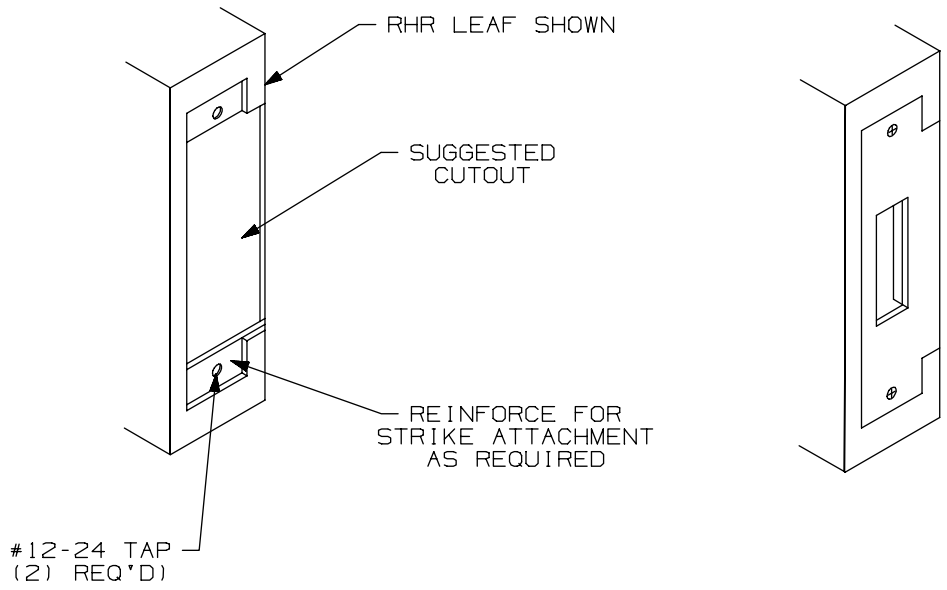

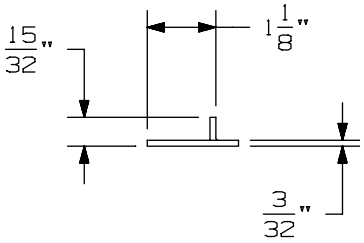

APPLICATION SCHEDULE	
DEVICE	DIM. "A"
9875 & 9875-F	11/16
9975 & 9975-F	11/16
8875 & 8875-F	1/2
5575 & 5575-F	1/2

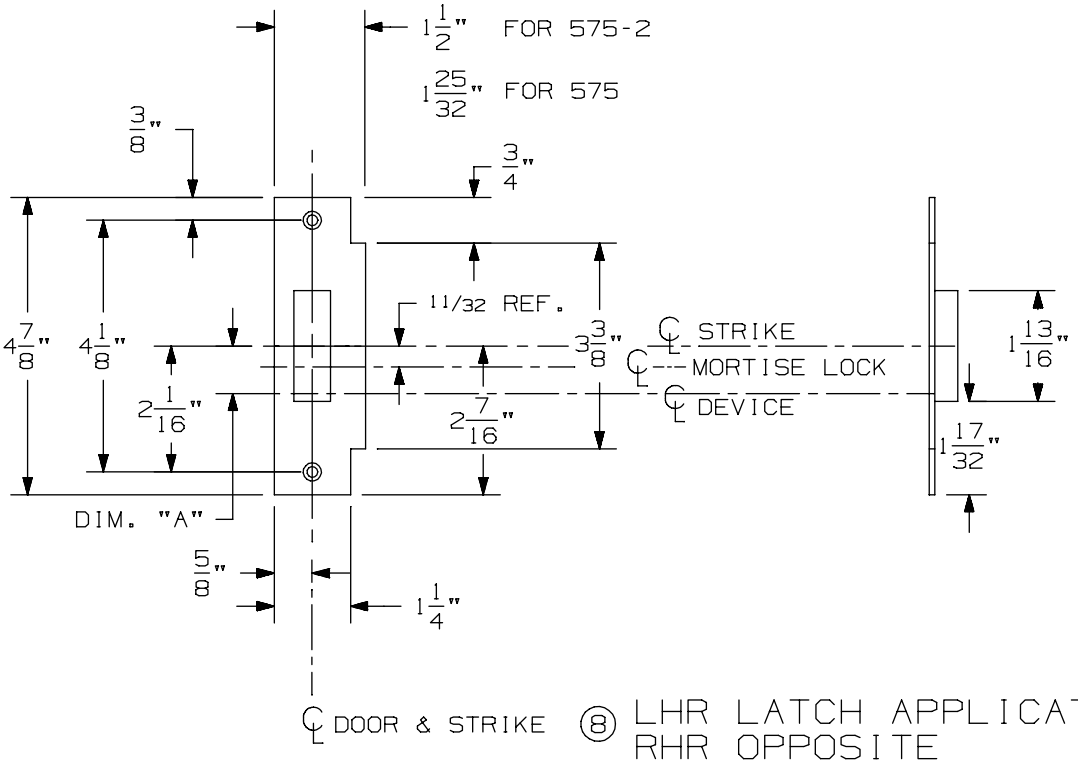

⑧ LHR LATCH APPLICATION SHOWN
RHR OPPOSITE

575-2 Mortise Strike (Double Doors) for 7500 Mortise Lock

VON DUPRIN®

NOTES: SEE MASTER SHEET #10001 FOR SUGGESTED REINFORCING

TEMPLATE NUMBER: 30212_b

DATE: 07-22-13

FOR MORTISE APPLICATION SEE TEMPLATE NO. 10305

TYPE 86 STOCK HOLLOW METAL DOOR

NOTE: BACKSET IS ALWAYS 2 3/4"

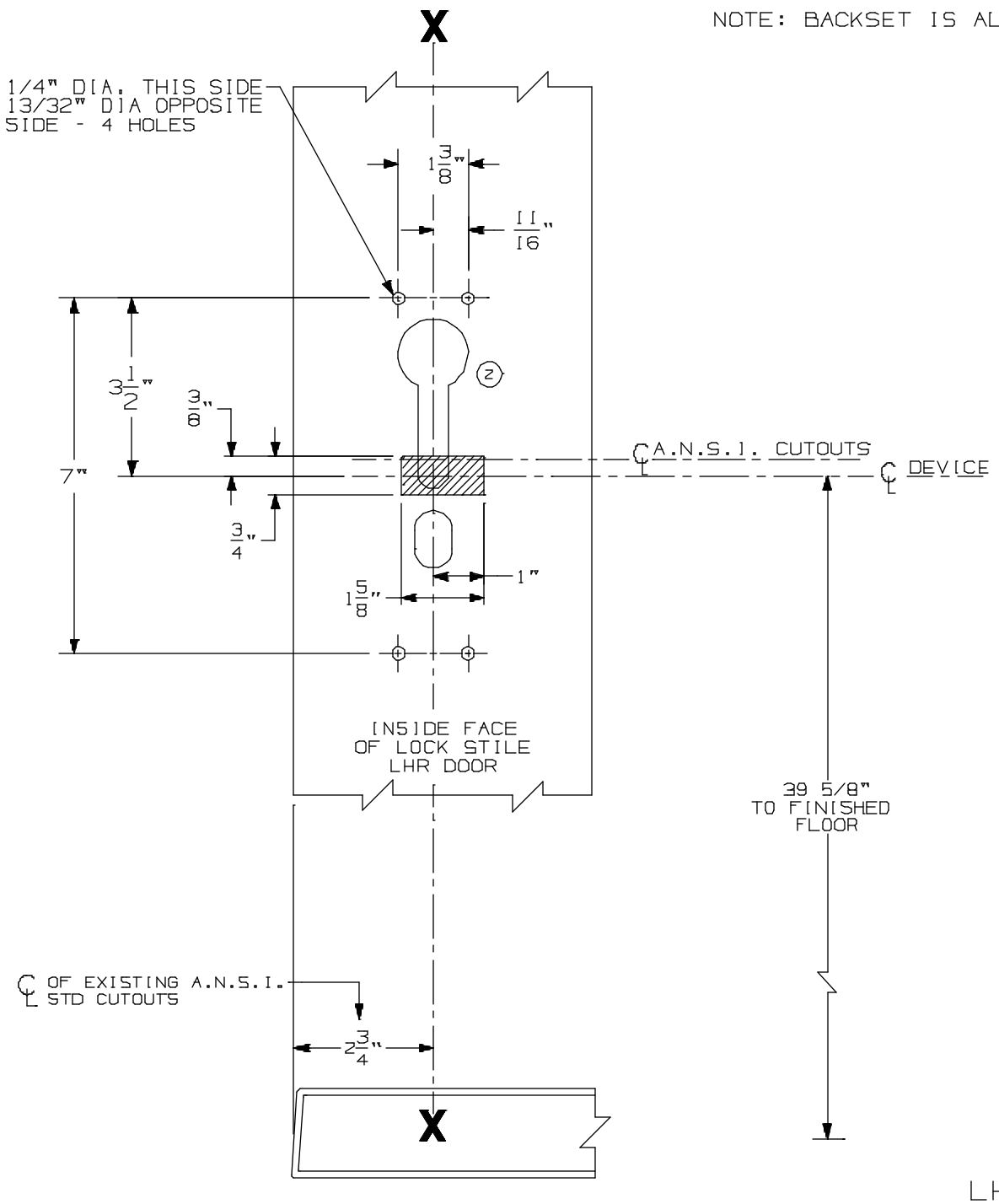

LHR SHOWN
RHR OPPOSITE

A.N.S.I. CUTOUTS ARE SHOWN FOR REFERENCE ONLY. SEE A.N.S.I. SPECIFICATION NO. A115 FOR THE SIZE AND LOCATION OF THESE CUTOUTS.

FOR OUTSIDE TRIM PREPARATION, SEE ADDITIONAL TRIM TEMPLATE.

9875/9975 Series Mortise Lock Devices w/ 990, 991, & 992 Trim for Stock Hollow Metal Applications	VON DUPRIN®	
NOTES: SEE MASTER SHEET #10001 FOR SUGGESTED REINFORCING	TEMPLATE NUMBER: 10312_a	DATE: 05-21-13

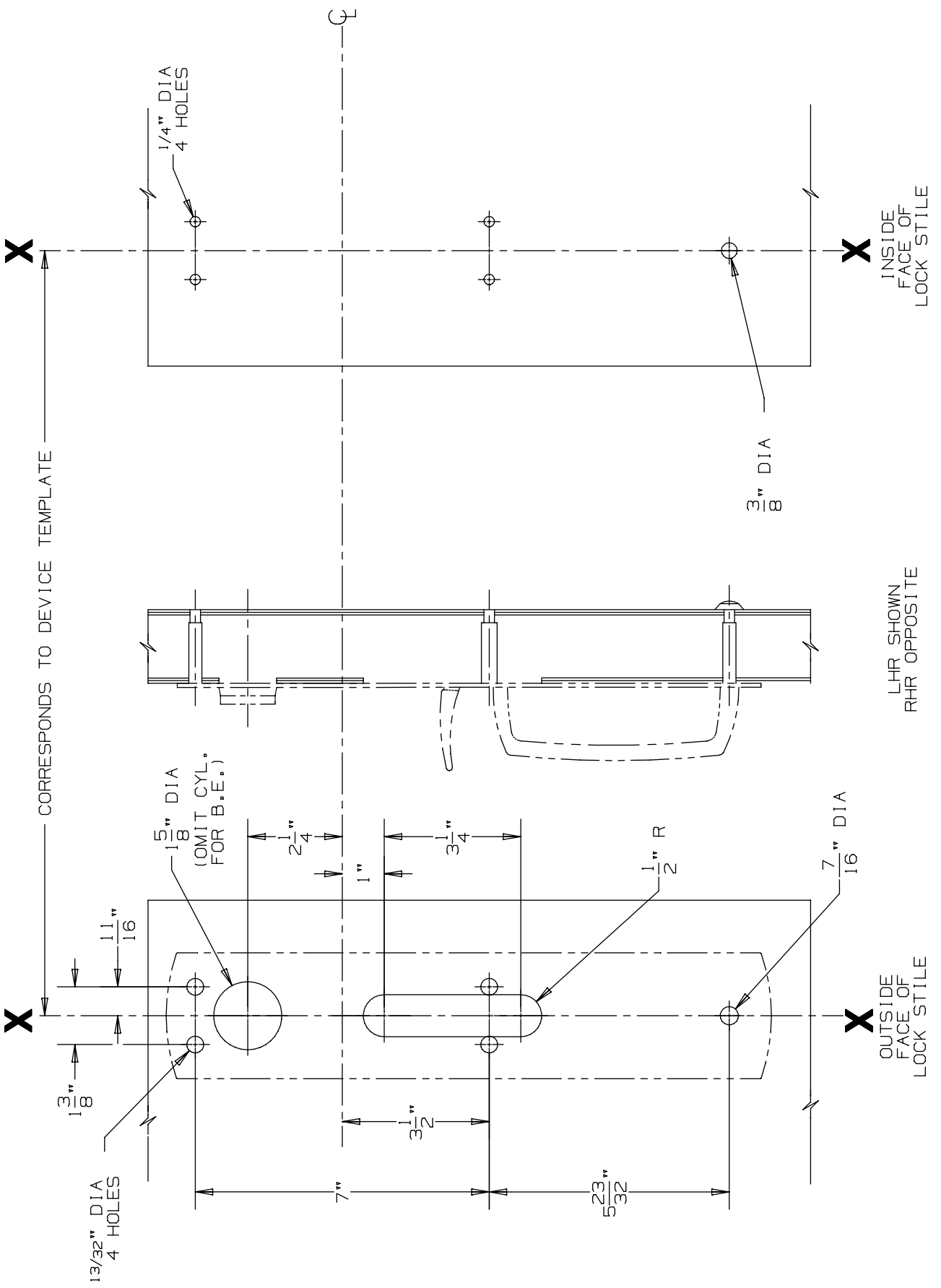

DEVICE APPLICATION SCHEDULE
9875/9975 SERIES DEVICE

990 TP & 990 TP-BE Trim

VON DUPRIN®

NOTES: SEE MASTER SHEET #10001 FOR SUGGESTED REINFORCING

TEMPLATE NUMBER: 20270_a

DATE: 05-23-13

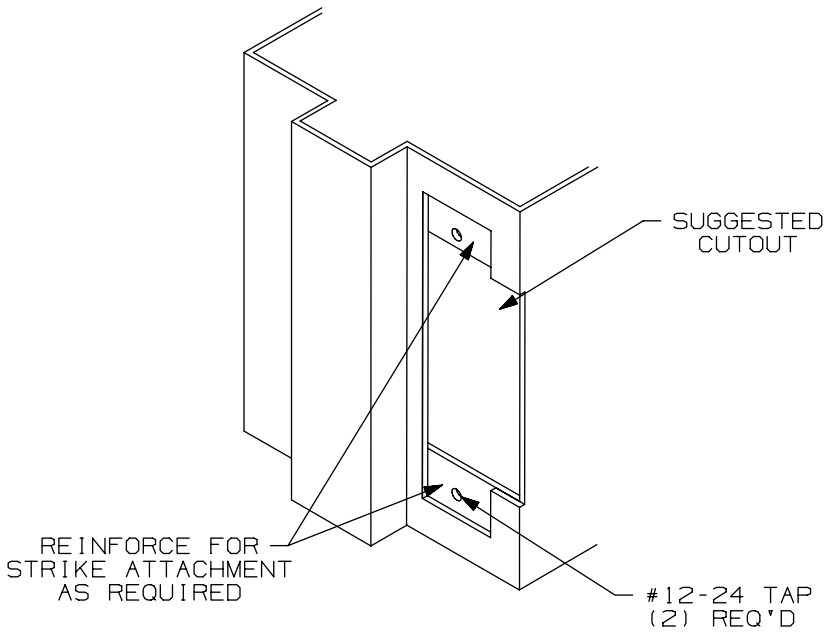

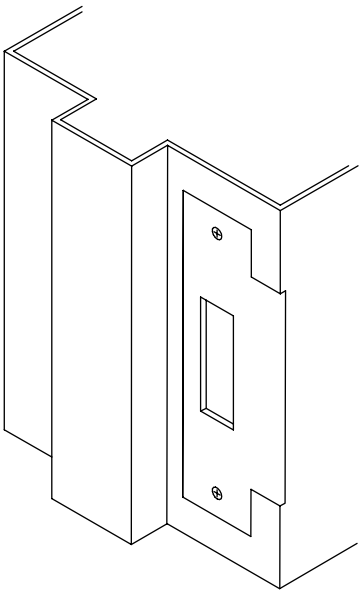

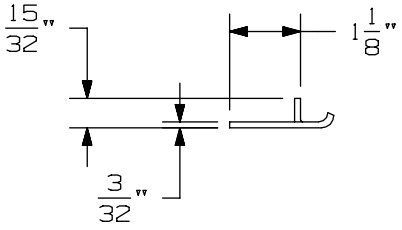

APPLICATION SCHEDULE	
DEVICE	DIM. "A"
9875 & 9875-F	11/16
9975 & 9975-F	11/16
8875 & 8875-F	1/2
5575 & 5575-F	1/2

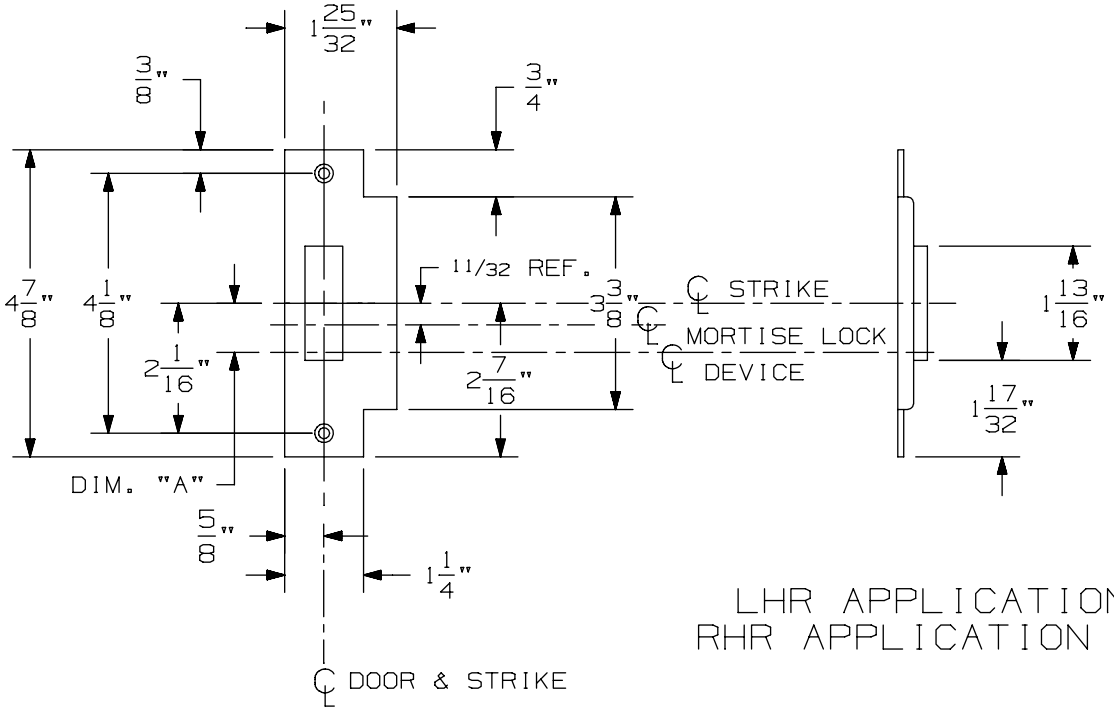

LHR APPLICATION SHOWN
RHR APPLICATION OPPOSITE

575 Mortise Strike (Single Door) for 7500 Mortise Lock

VON DUPRIN®

NOTES: SEE MASTER SHEET #10001 FOR SUGGESTED REINFORCING

TEMPLATE NUMBER: 30210_b

DATE: 07-22-13

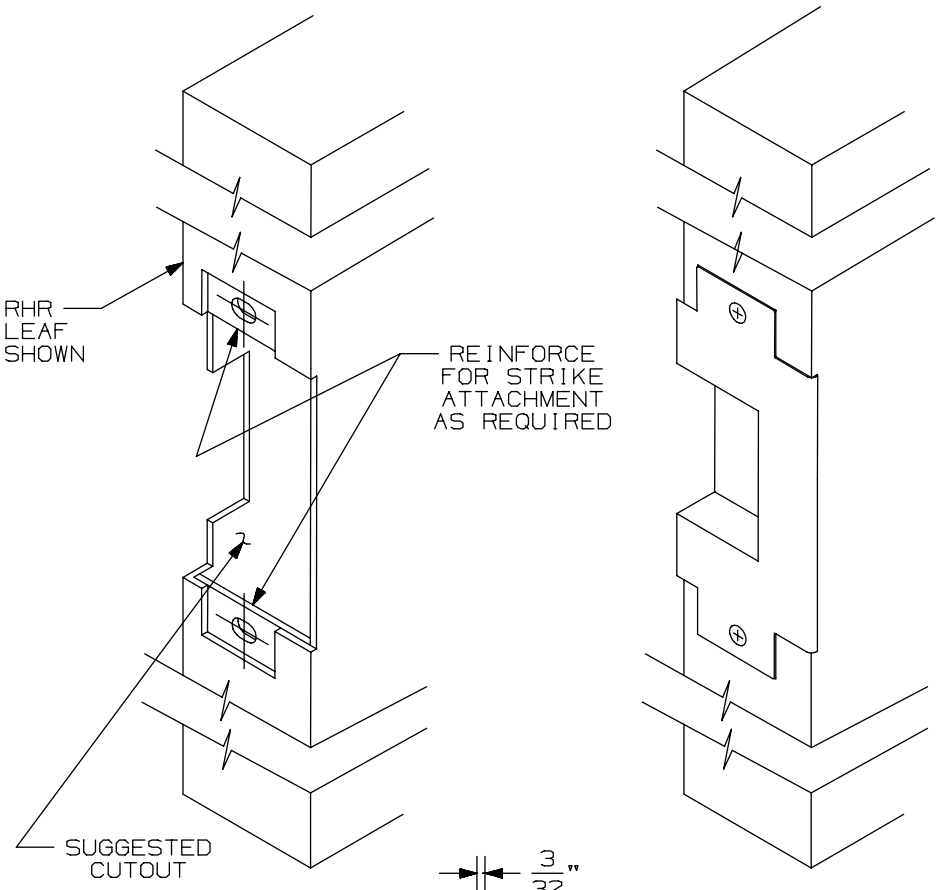

APPLICATION SCHEDULE	
DEVICE	DIM."A"
9875 & 9875-F	11/16
9975 & 9975-F	11/16
8875 & 8875-F	1/2
5575 & 5575-F	1/2

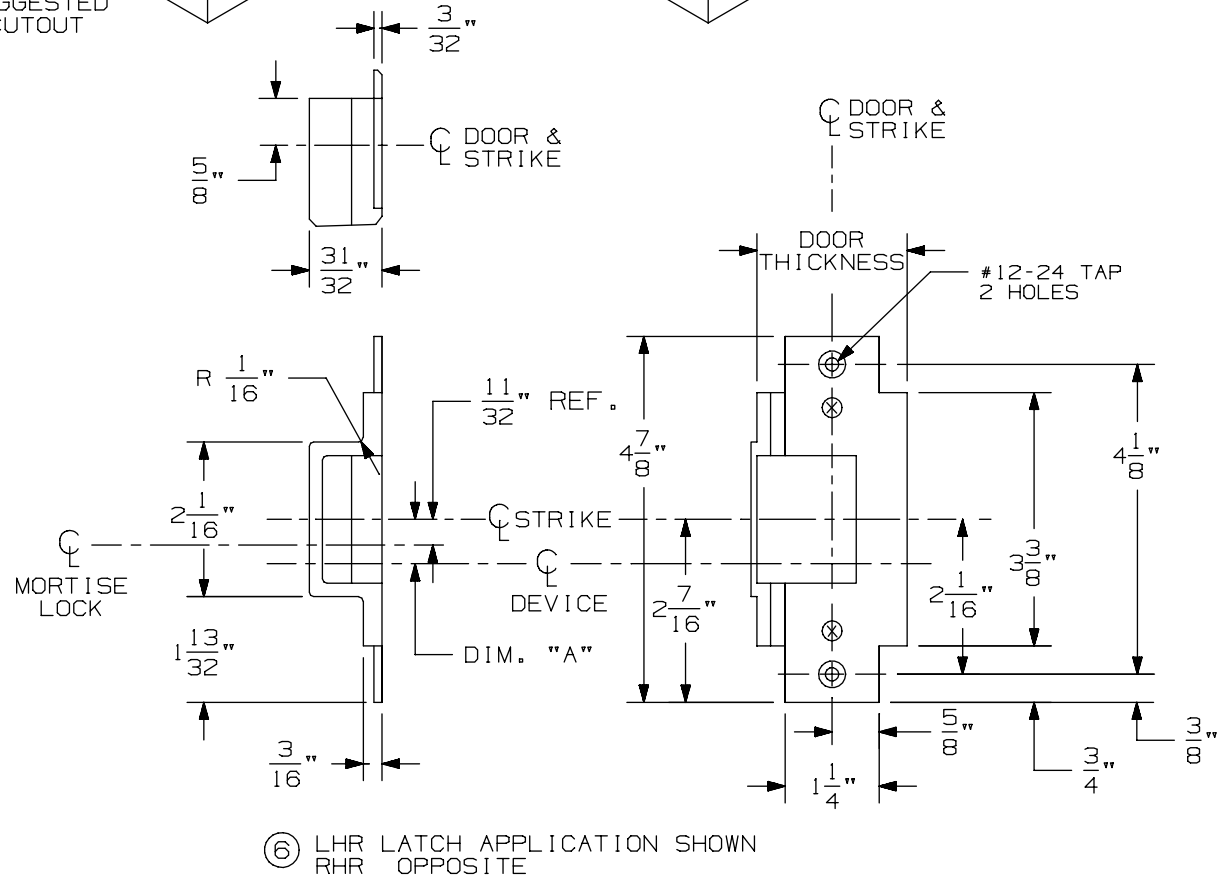

⑥ LHR LATCH APPLICATION SHOWN
RHR OPPOSITE

576A & 576B Mortise Strike for 7500 Mortise Lock

VON DUPRIN®

NOTES: SEE MASTER SHEET #10001 FOR SUGGESTED REINFORCING

TEMPLATE NUMBER: 30211_a

DATE: 05-28-13

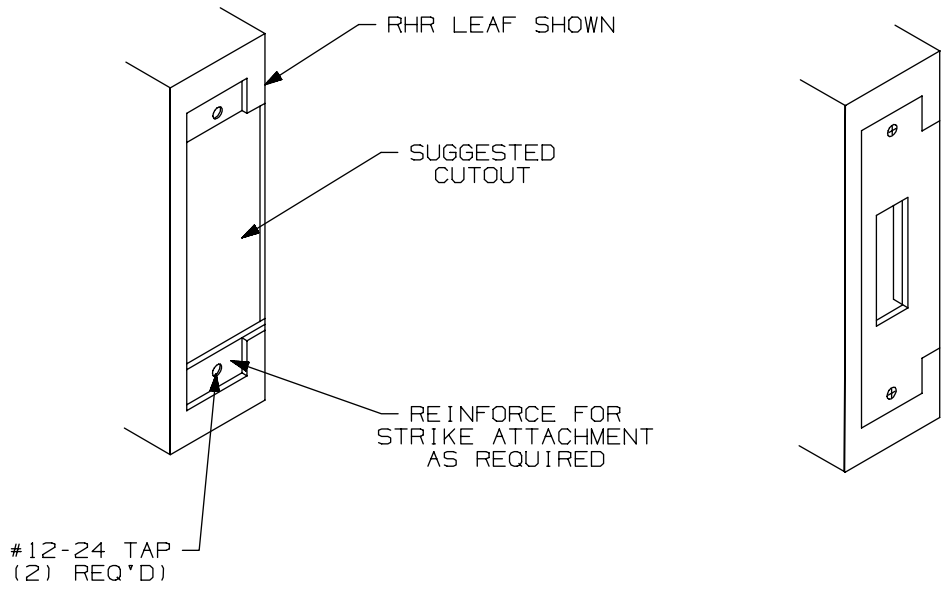

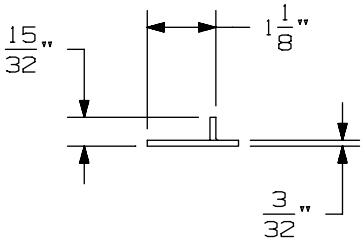

APPLICATION SCHEDULE	
DEVICE	DIM. "A"
9875 & 9875-F	11/16
9975 & 9975-F	11/16
8875 & 8875-F	1/2
5575 & 5575-F	1/2

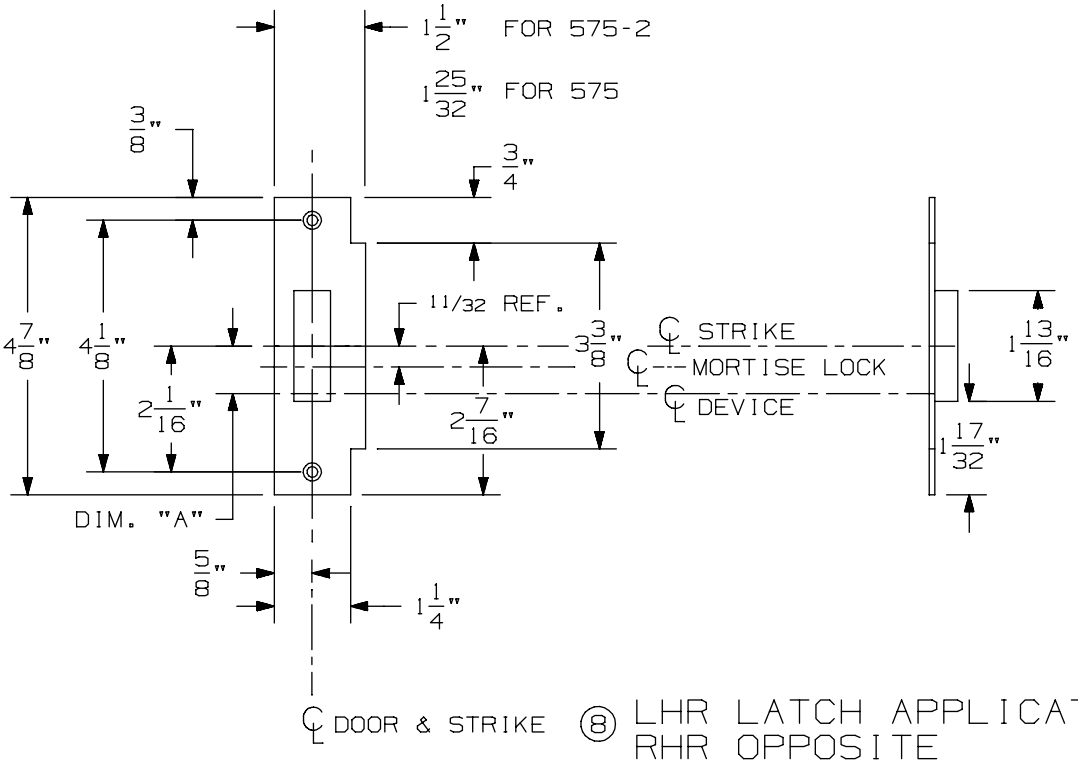

⑧ LHR LATCH APPLICATION SHOWN
RHR OPPOSITE

575-2 Mortise Strike (Double Doors) for 7500 Mortise Lock

VON DUPRIN®

NOTES: SEE MASTER SHEET #10001 FOR SUGGESTED REINFORCING

TEMPLATE NUMBER: 30212_b

DATE: 07-22-13

98 / 99 Series for 86 Stock Hollow Metal Doors

98 / 99 Series for 86 Stock Hollow Metal Doors - 98/99 Rim (Standard, CD, EL, LX, RX & SS)

TYPE 161 STOCK HOLLOW METAL DOOR

A.N.S.I. CUTOUTS ARE SHOWN FOR REFERENCE ONLY. SEE A.N.S.I. SPECIFICATION NO. A115 FOR THE SIZE AND LOCATION OF THESE CUTOUTS.

LHR SHOWN
RHR OPPOSITE

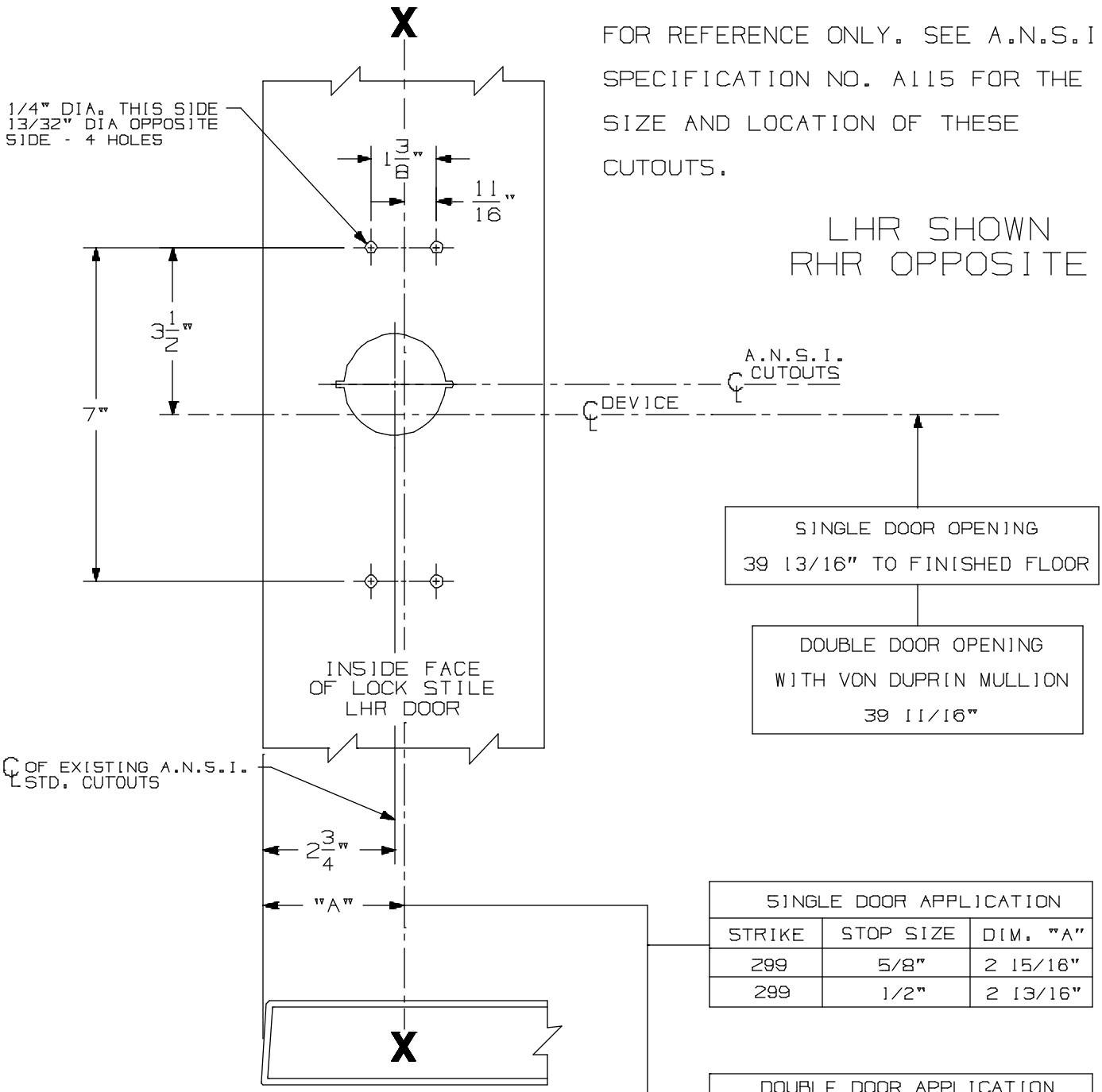

SINGLE DOOR OPENING
39 13/16" TO FINISHED FLOOR

DOUBLE DOOR OPENING
WITH VON DUPRIN MULLION
39 11/16"

SINGLE DOOR APPLICATION		
STRIKE	STOP SIZE	DIM. "A"
299	5/8"	2 15/16"
299	1/2"	2 13/16"

DOUBLE DOOR APPLICATION WITH VON DUPRIN MULLIONS		
MULLION	STRIKE	DIM. "A"
5654	299	2 7/8"
1654	1606	2 7/8"

FOR ADDITIONAL INFORMATION
SEE TEMPLATE NO. 10300 AND 10301 ④

FOR OUTSIDE TRIM PREPARATION, WHEN REQUIRED, SEE ADDITIONAL TRIM TEMPLATE.

98/99 EO, DT, NL Rim Devices w/ 990, 991/992DT & Rigid Trim for Type "161" Stock Hollow Metal Applications

VON DUPRIN®

NOTES: SEE MASTER SHEET #10001 FOR SUGGESTED REINFORCING

TEMPLATE NUMBER: 10307_a

DATE: 05-21-13

990 EO TRIM

NOTES: SEE MASTER SHEET #10001 FOR SUGGESTED REINFORCING

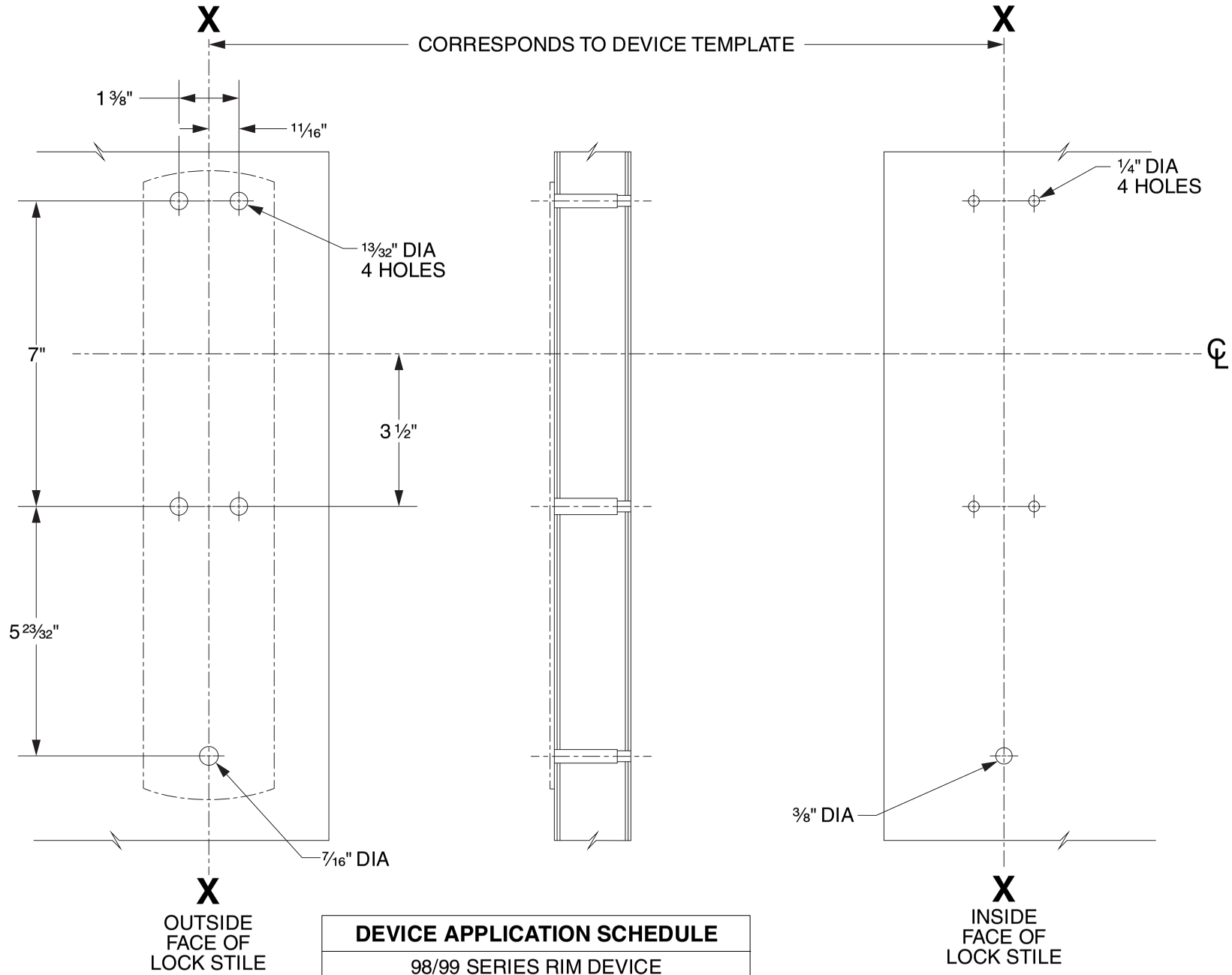

DEVICE APPLICATION SCHEDULE
98/99 SERIES RIM DEVICE
9827/9927 SERIES DEVICE
9847/9947 SERIES DEVICE
9849/9949 SERIES DEVICE
9875/9975 SERIES DEVICE

LHR SHOWN
RHR OPPOSITE

VON DUPRIN®

TEMPLATE NUMBER: 20269_C

DATE: 05-31-13

RIM APPLICATION

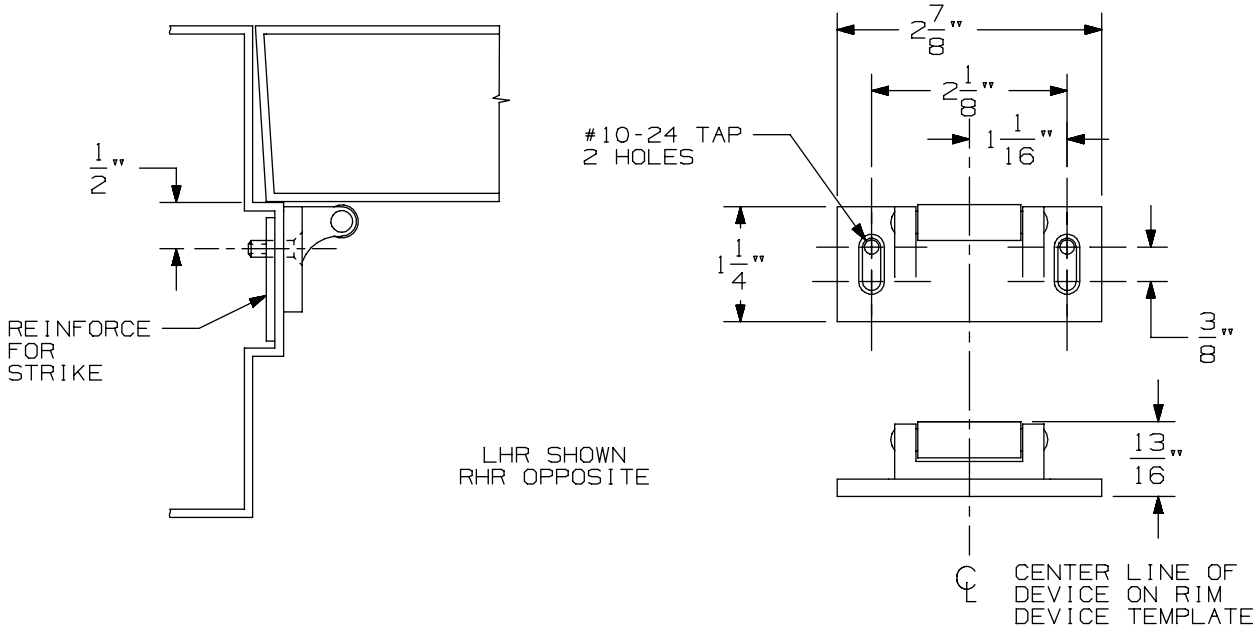

VERTICAL APPLICATION

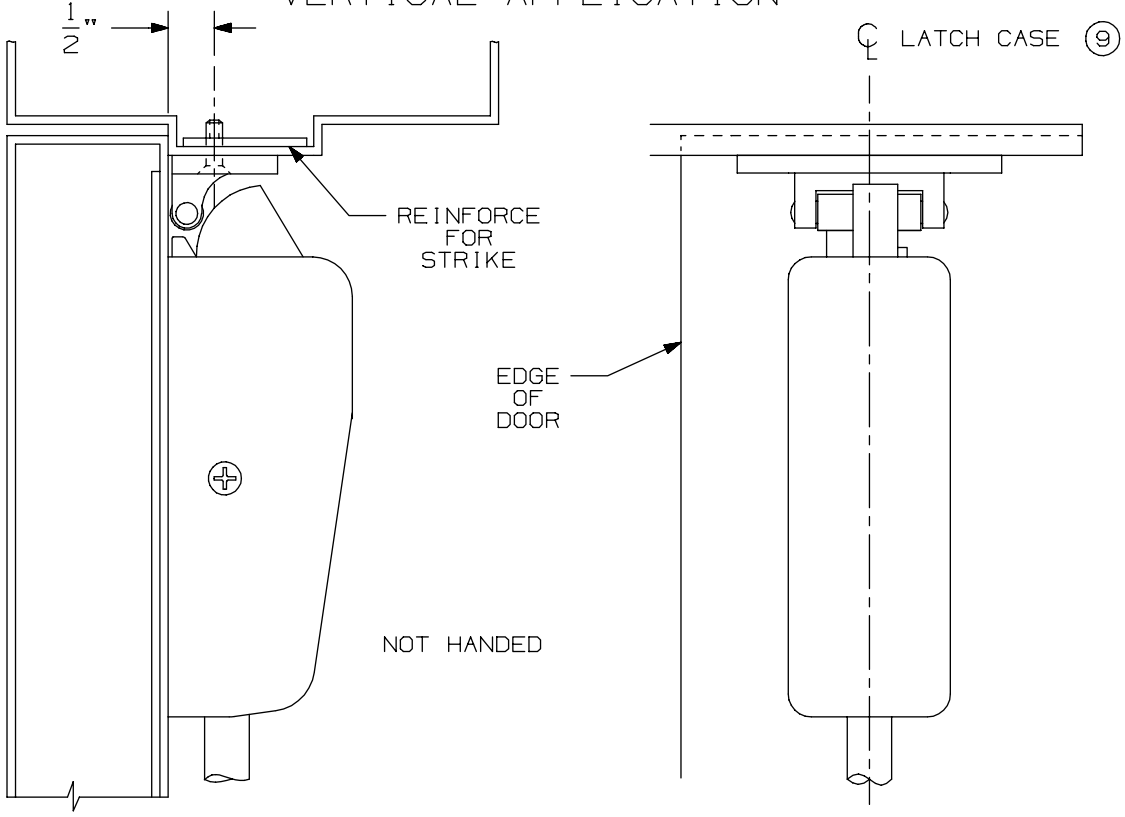

NOTE: LATCH CASE MOUNTING HOLES TO BE PREPARED AT INSTALLATION ON DOOR.

299 & 299F Strike

VON DUPRIN®

NOTES: SEE MASTER SHEET #10001 FOR SUGGESTED REINFORCING

TEMPLATE NUMBER: 30039_a

DATE: 05-23-13

TYPE 161 STOCK HOLLOW METAL DOOR

A.N.S.I. CUTOUTS ARE SHOWN FOR REFERENCE ONLY. SEE A.N.S.I. SPECIFICATION NO. A115 FOR THE SIZE AND LOCATION OF THESE CUTOUTS.

LHR SHOWN
RHR OPPOSITE

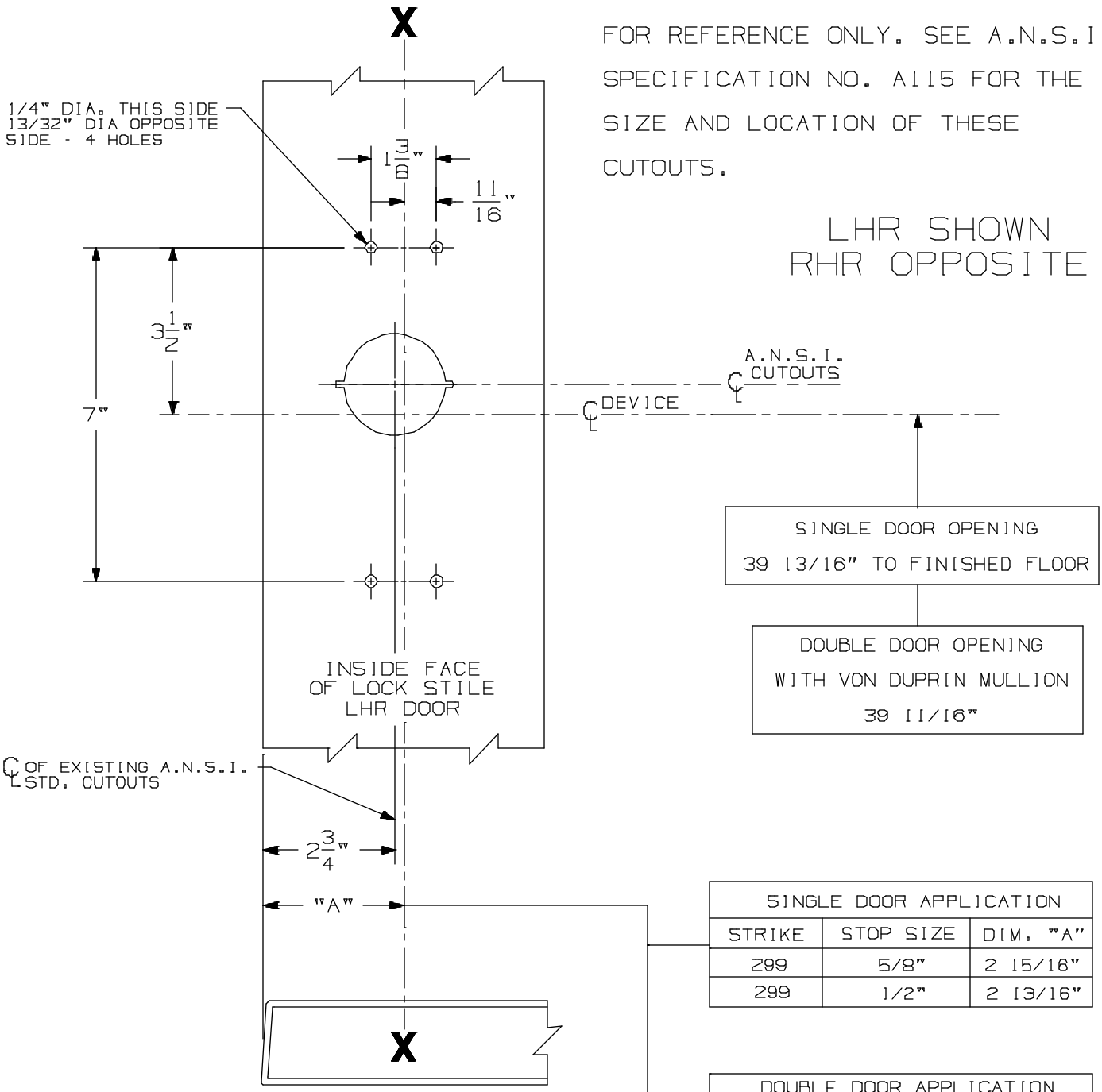

SINGLE DOOR OPENING
39 13/16" TO FINISHED FLOOR

DOUBLE DOOR OPENING
WITH VON DUPRIN MULLION
39 11/16"

SINGLE DOOR APPLICATION		
STRIKE	STOP SIZE	DIM. "A"
299	5/8"	2 15/16"
299	1/2"	2 13/16"

DOUBLE DOOR APPLICATION WITH VON DUPRIN MULLIONS		
MULLION	STRIKE	DIM. "A"
5654	299	2 7/8"
1654	1606	2 7/8"

FOR ADDITIONAL INFORMATION
SEE TEMPLATE NO. 10300 AND 10301 ④

FOR OUTSIDE TRIM PREPARATION, WHEN REQUIRED, SEE ADDITIONAL TRIM TEMPLATE.

98/99 EO, DT, NL Rim Devices w/ 990, 991/992DT & Rigid Trim for Type "161" Stock Hollow Metal Applications

VON DUPRIN®

NOTES: SEE MASTER SHEET #10001 FOR SUGGESTED REINFORCING

TEMPLATE NUMBER: 10307_a

DATE: 05-21-13

990 DT TRIM

NOTES: SEE MASTER SHEET #10001 FOR SUGGESTED REINFORCING

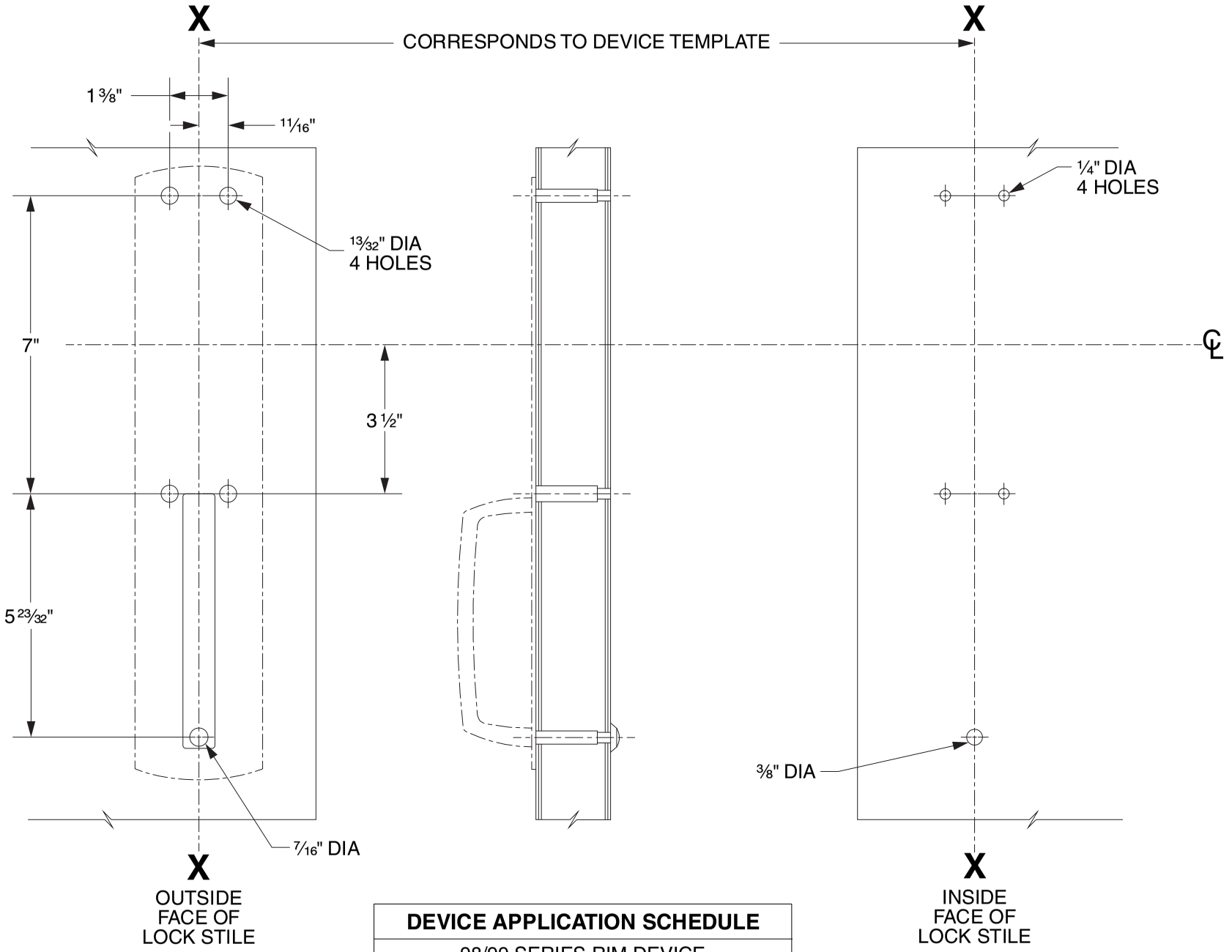

DEVICE APPLICATION SCHEDULE
98/99 SERIES RIM DEVICE
9827/9927 SERIES DEVICE
9847/9947 SERIES DEVICE
9849/9949 SERIES DEVICE
9875/9975 SERIES DEVICE

LHR SHOWN
RHR OPPOSITE

VON DUPRIN®

TEMPLATE NUMBER: 20268_C

DATE: 05-31-13

RIM APPLICATION

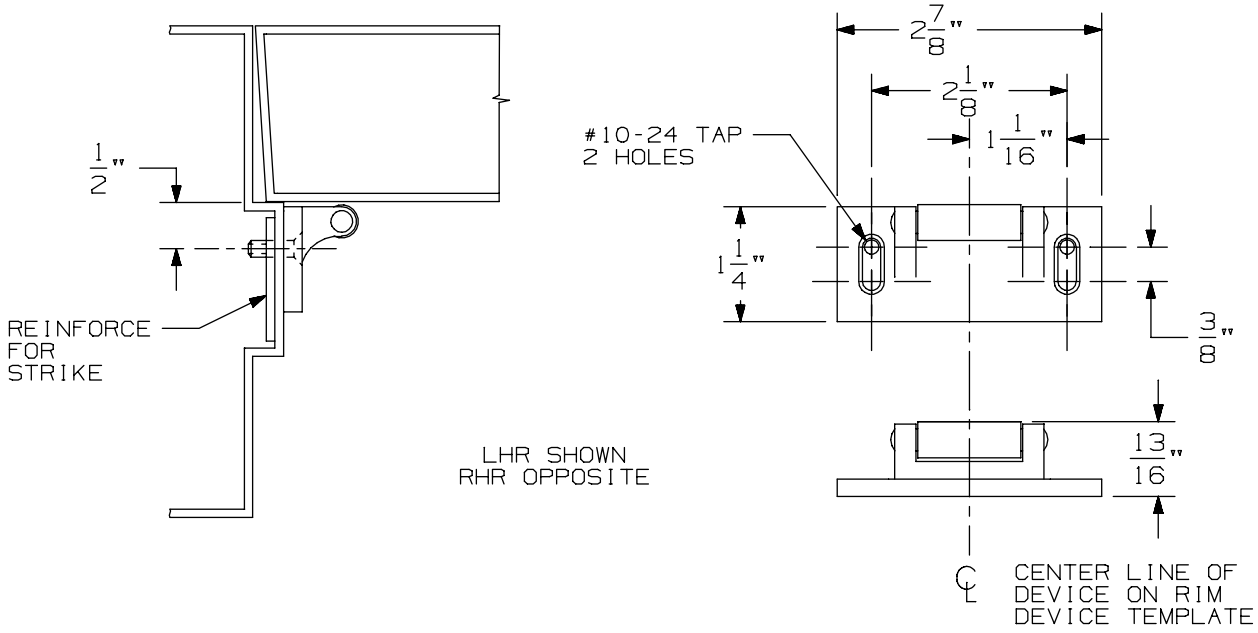

VERTICAL APPLICATION

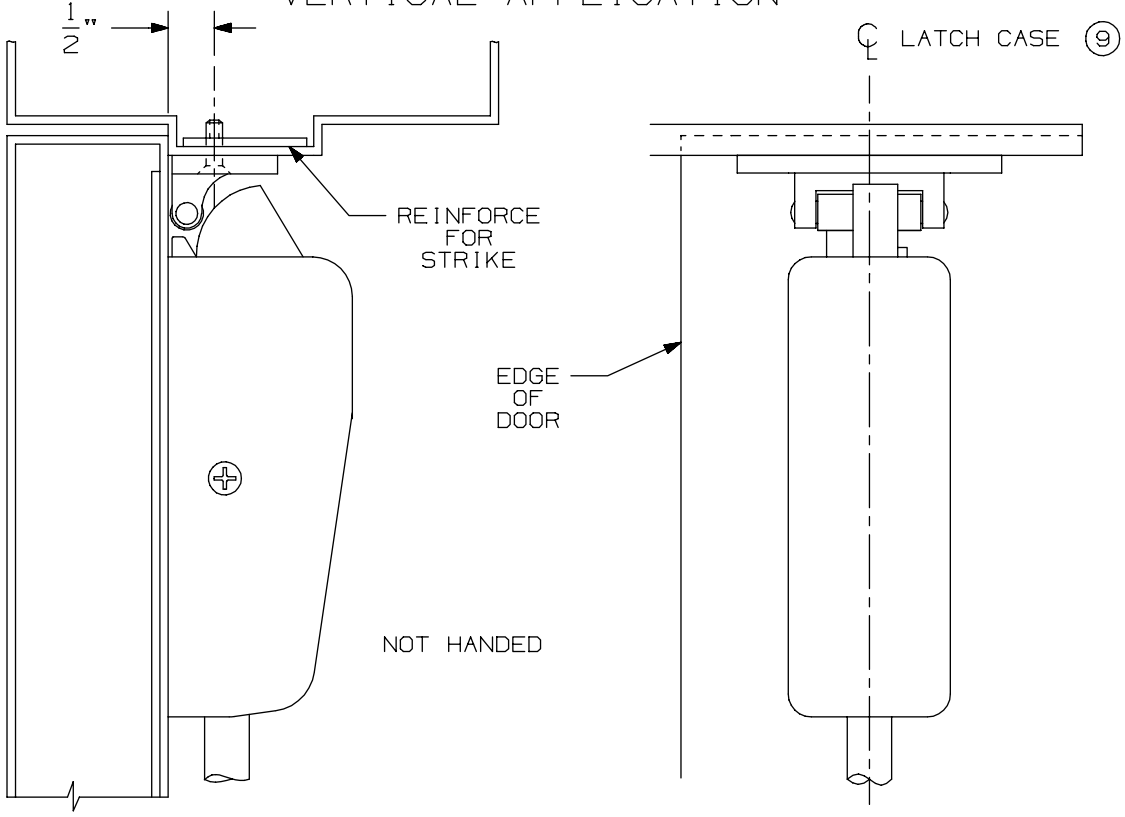

NOTE: LATCH CASE MOUNTING HOLES TO BE PREPARED AT INSTALLATION ON DOOR.

299 & 299F Strike

VON DUPRIN®

NOTES: SEE MASTER SHEET #10001 FOR SUGGESTED REINFORCING

TEMPLATE NUMBER: 30039_a

DATE: 05-23-13

TYPE 161 STOCK HOLLOW METAL DOOR

A.N.S.I. CUTOUTS ARE SHOWN FOR REFERENCE ONLY. SEE A.N.S.I. SPECIFICATION NO. A115 FOR THE SIZE AND LOCATION OF THESE CUTOUTS.

LHR SHOWN
RHR OPPOSITE

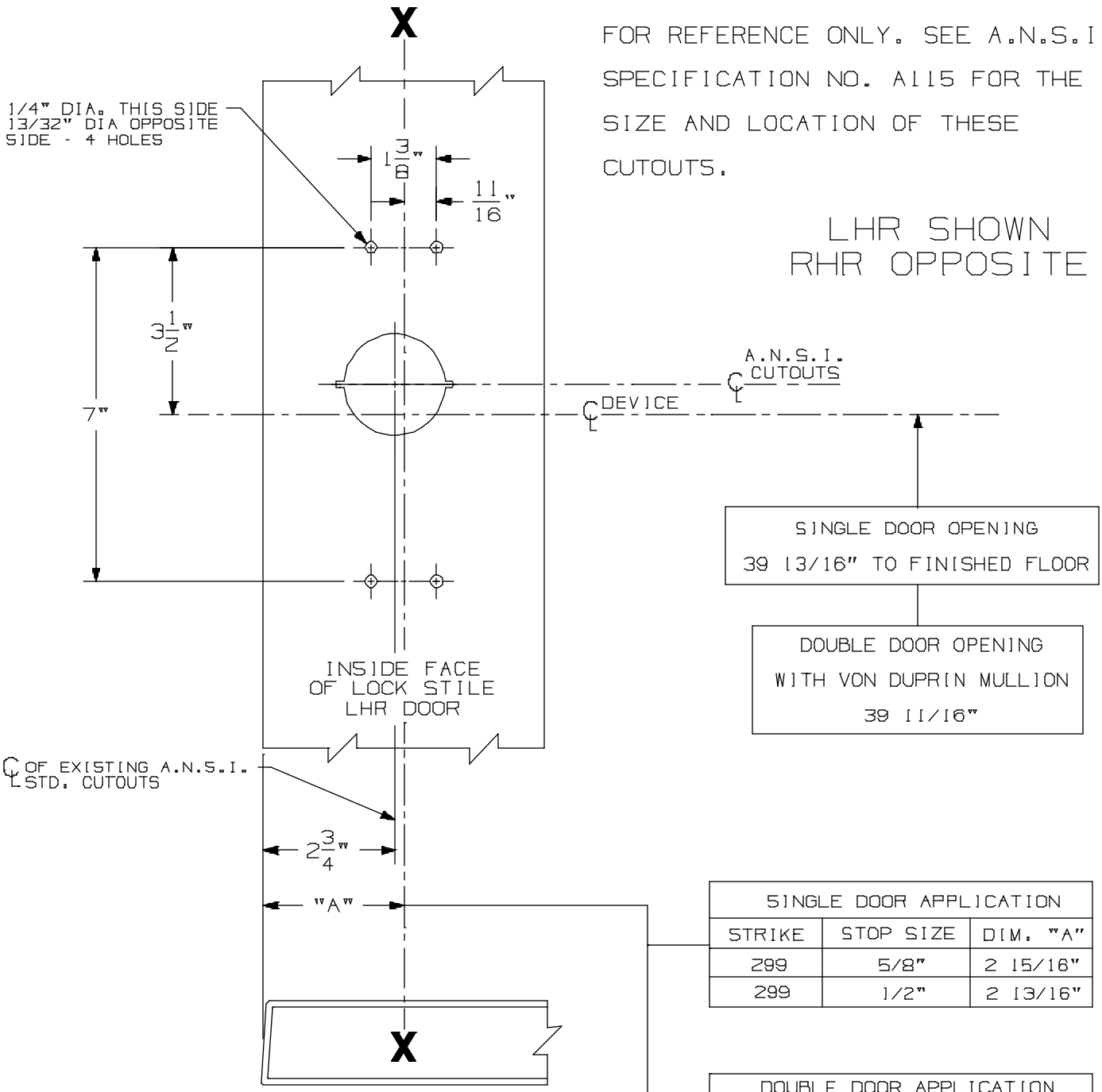

SINGLE DOOR OPENING
39 13/16" TO FINISHED FLOOR

DOUBLE DOOR OPENING
WITH VON DUPRIN MULLION
39 11/16"

SINGLE DOOR APPLICATION		
STRIKE	STOP SIZE	DIM. "A"
299	5/8"	2 15/16"
299	1/2"	2 13/16"

DOUBLE DOOR APPLICATION WITH VON DUPRIN MULLIONS		
MULLION	STRIKE	DIM. "A"
5654	299	2 7/8"
1654	1606	2 7/8"

FOR ADDITIONAL INFORMATION
SEE TEMPLATE NO. 10300 AND 10301 ④

FOR OUTSIDE TRIM PREPARATION, WHEN REQUIRED, SEE ADDITIONAL TRIM TEMPLATE.

98/99 EO, DT, NL Rim Devices w/ 990, 991/992DT & Rigid Trim for Type "161" Stock Hollow Metal Applications

VON DUPRIN®

NOTES: SEE MASTER SHEET #10001 FOR SUGGESTED REINFORCING

TEMPLATE NUMBER: 10307_a

DATE: 05-21-13

990 NL TRIM

NOTES: SEE MASTER SHEET #10001 FOR SUGGESTED REINFORCING

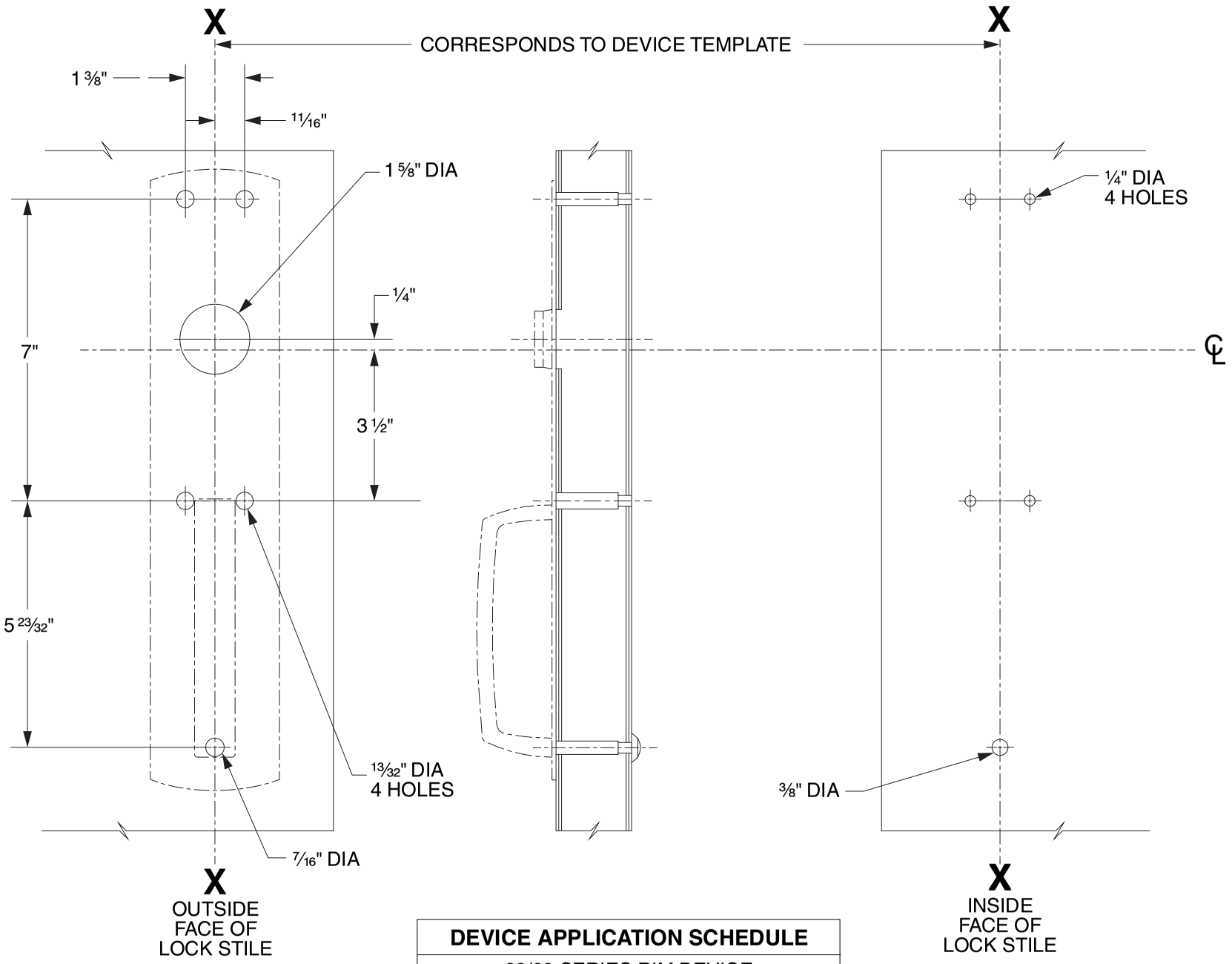

DEVICE APPLICATION SCHEDULE
98/99 SERIES RIM DEVICE
9827/9927 SERIES DEVICE
9847/9947 SERIES DEVICE
9849/9949 SERIES DEVICE

LHR SHOWN
RHR OPPOSITE

VON DUPRIN®

TEMPLATE NUMBER: 20267_C

DATE: 05-31-13

RIM APPLICATION

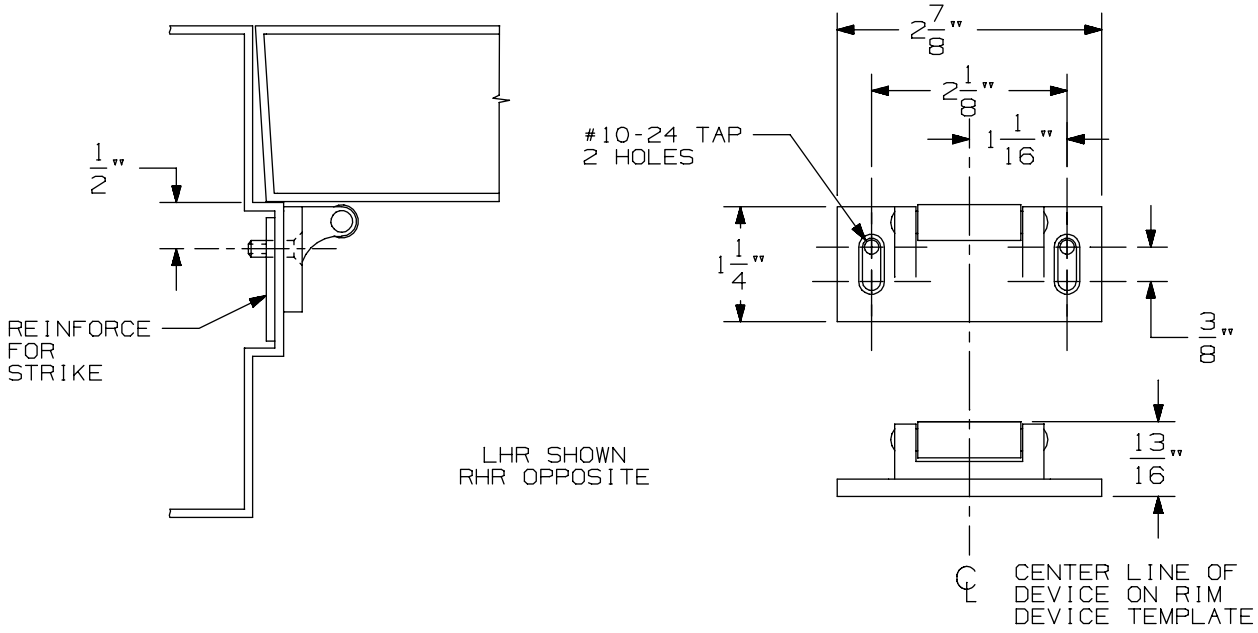

VERTICAL APPLICATION

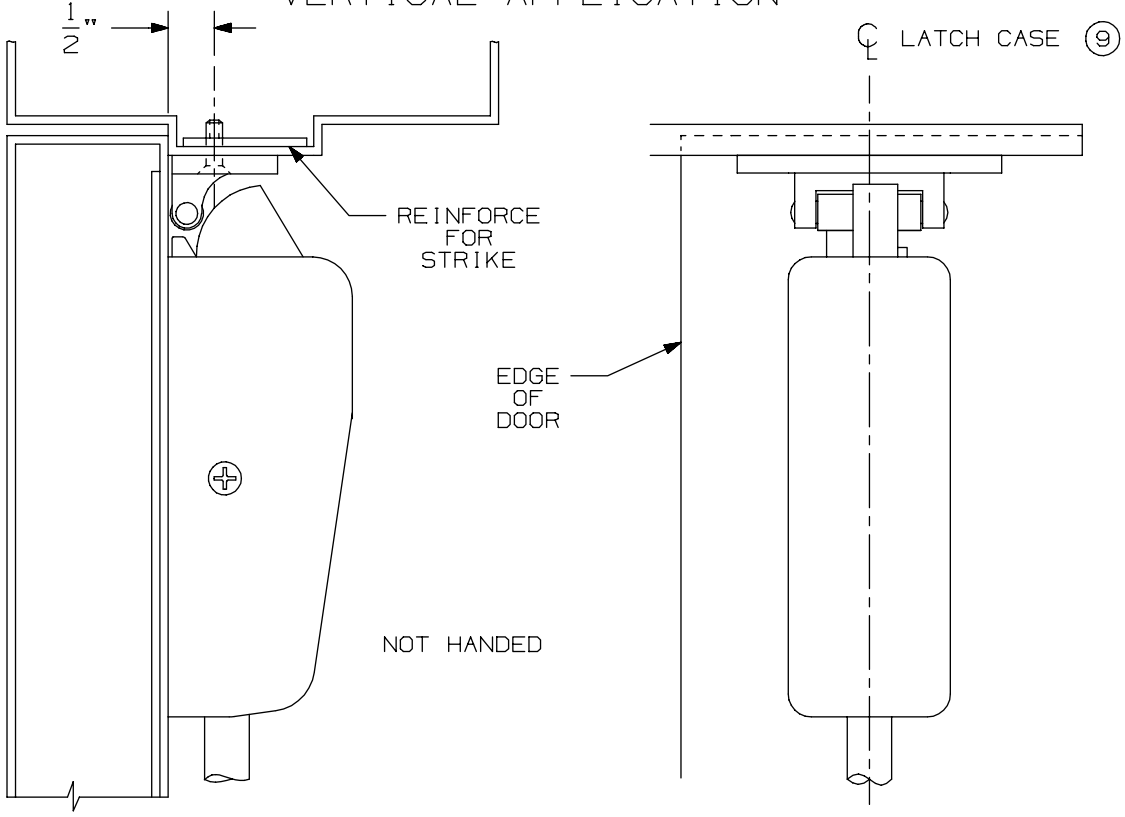

NOTE: LATCH CASE MOUNTING HOLES TO BE PREPARED AT INSTALLATION ON DOOR.

299 & 299F Strike

VON DUPRIN®

NOTES: SEE MASTER SHEET #10001 FOR SUGGESTED REINFORCING

TEMPLATE NUMBER: 30039_a

DATE: 05-23-13

TYPE 161 STOCK HOLLOW METAL DOOR

A.N.S.I. CUTOUTS ARE SHOWN FOR REFERENCE ONLY. SEE A.N.S.I. SPECIFICATION NO. A115 FOR THE SIZE AND LOCATION OF THESE CUTOUTS.

LHR SHOWN
RHR OPPOSITE

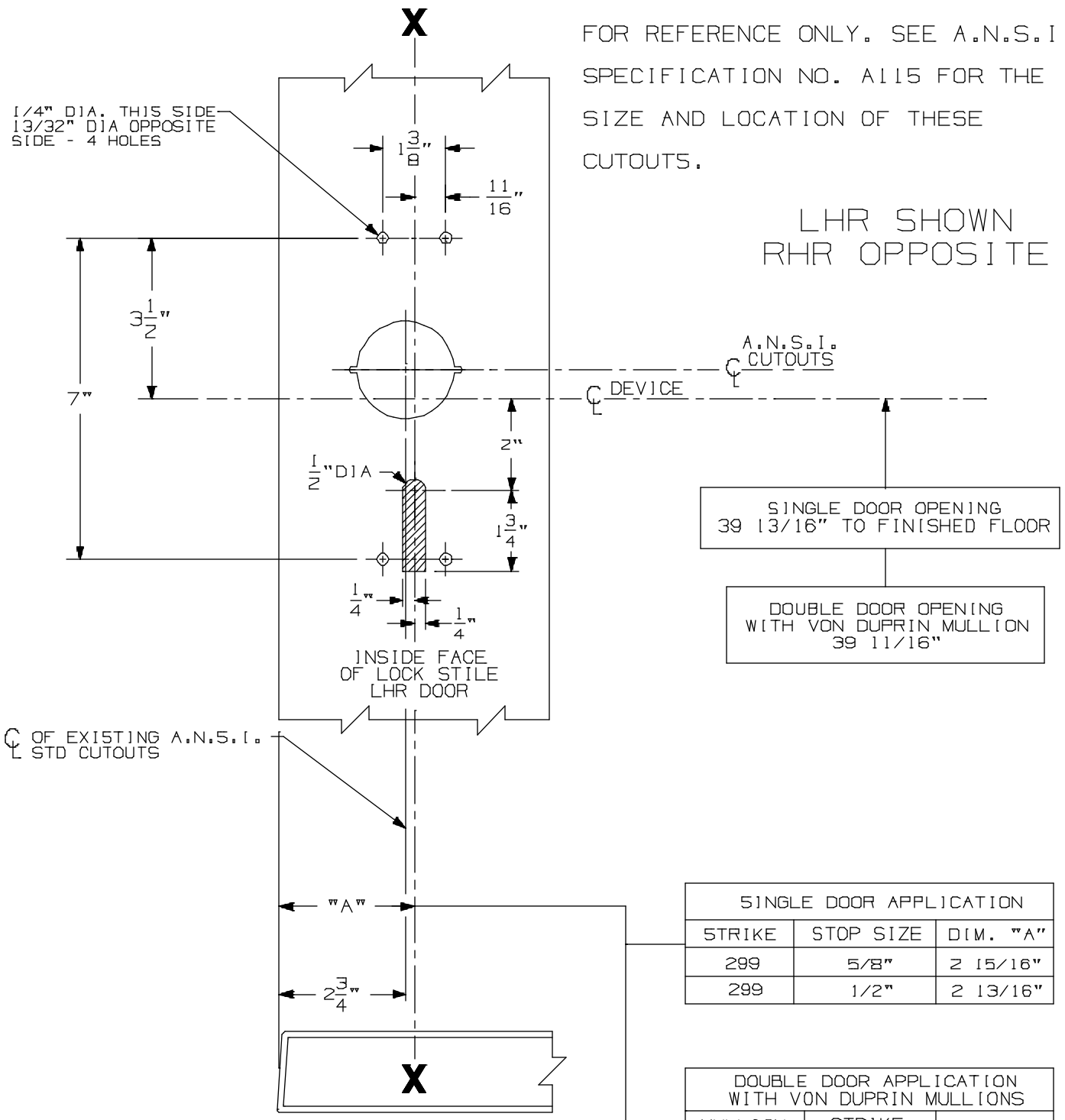

SINGLE DOOR APPLICATION		
STRIKE	STOP SIZE	DIM. "A"
299	5/8"	2 15/16"
299	1/2"	2 13/16"

DOUBLE DOOR APPLICATION WITH VON DUPRIN MULLIONS		
MULLION	STRIKE	DIM. "A"
5654	299	2 7/8"
1654	1606	2 7/8"

(5)

FOR ADDITIONAL INFORMATION SEE TEMPLATE NO. 10302

FOR OUTSIDE TRIM PREPARATION, WHEN REQUIRED, SEE ADDITIONAL TRIM TEMPLATE.

98/99 TP, K, & L Rim Devices w/ 990, 991, & 992 Trim for Type "161" Stock Hollow Metal Applications

VON DUPRIN®

NOTES: SEE MASTER SHEET #10001 FOR SUGGESTED REINFORCING

TEMPLATE NUMBER: 10309_a

DATE: 05-21-13

991 K & 992 L Trim

NOTES: SEE MASTER SHEET #10001 FOR SUGGESTED REINFORCING

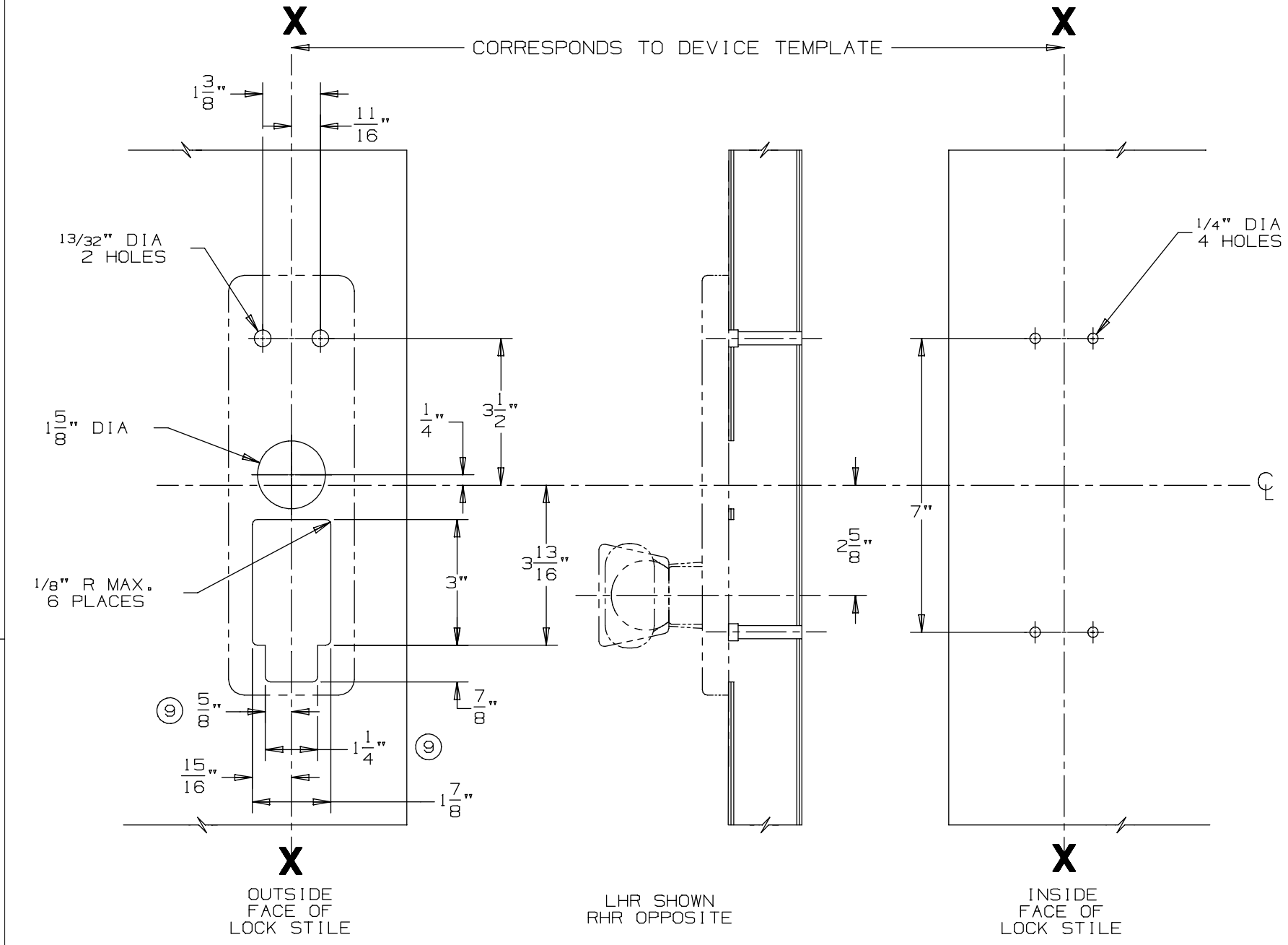

DEVICE APPLICATION SCHEDULE
98/99 SERIES RIM DEVICE
9827/9927 SERIES DEVICE
9847/9947 SERIES DEVICE

VON DUPRIN®

TEMPLATE NUMBER: 20272_a

DATE: 05-23-13

RIM APPLICATION

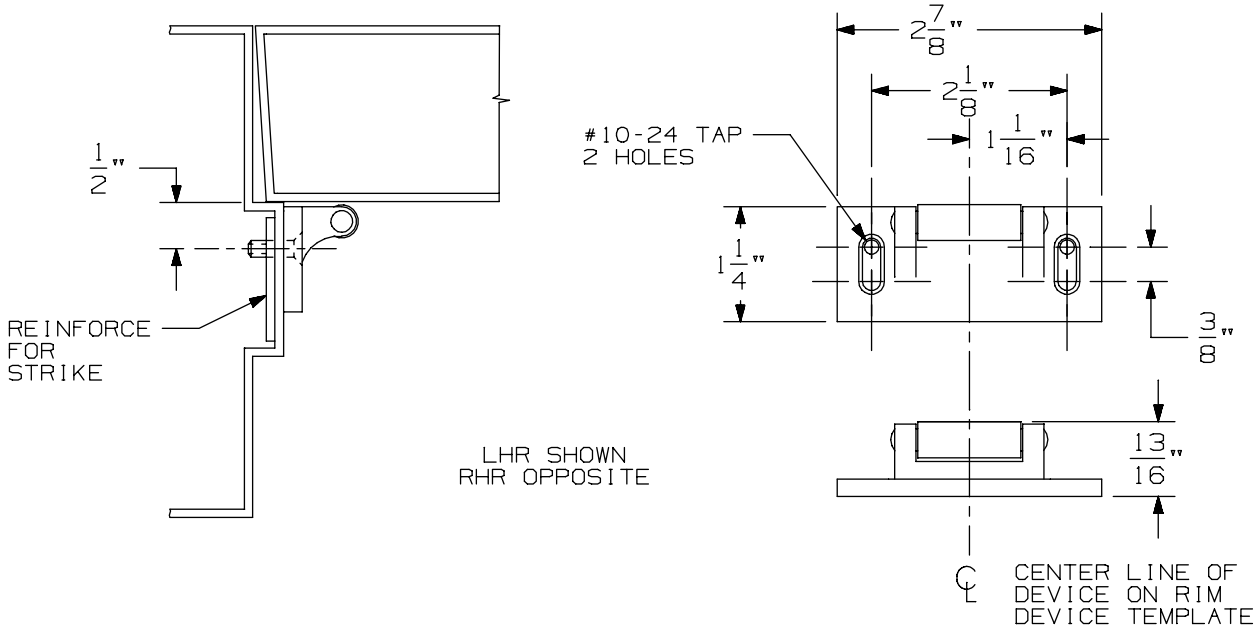

VERTICAL APPLICATION

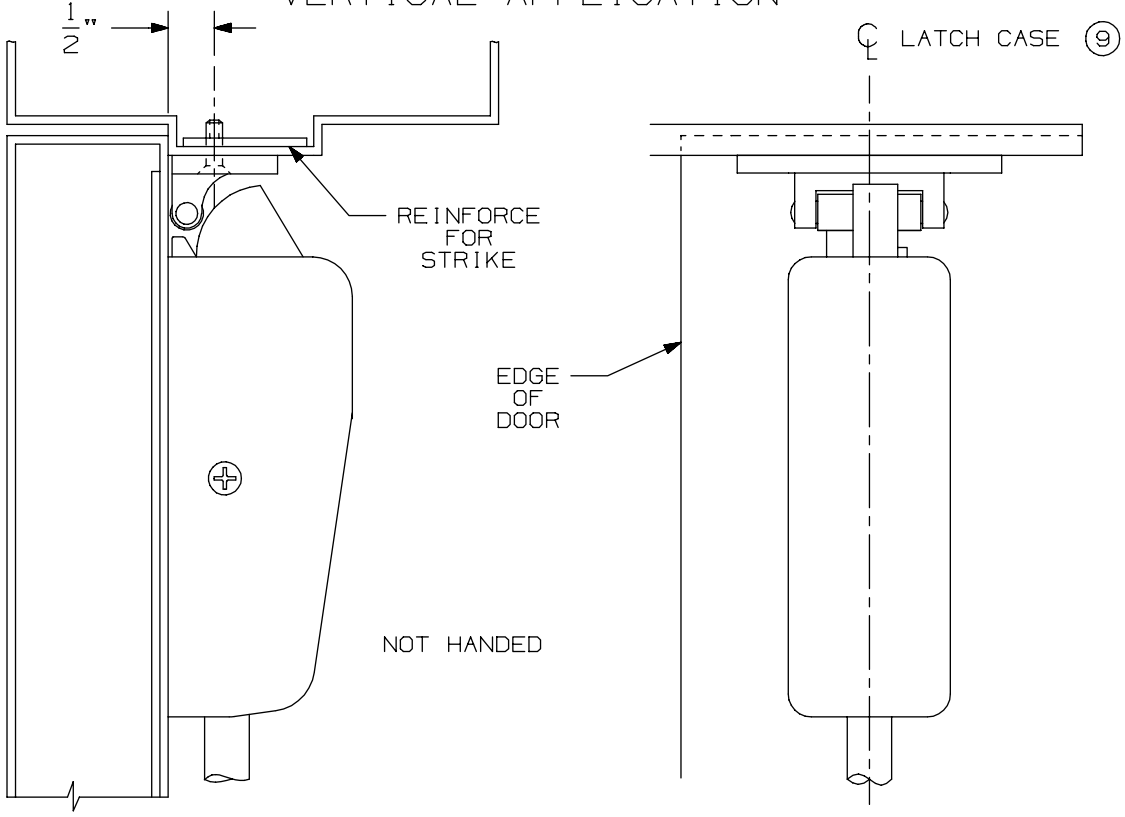

NOTE: LATCH CASE MOUNTING HOLES TO BE PREPARED AT INSTALLATION ON DOOR.

299 & 299F Strike

VON DUPRIN®

NOTES: SEE MASTER SHEET #10001 FOR SUGGESTED REINFORCING

TEMPLATE NUMBER: 30039_a

DATE: 05-23-13

TYPE 161 STOCK HOLLOW METAL DOOR

A.N.S.I. CUTOUTS ARE SHOWN FOR REFERENCE ONLY. SEE A.N.S.I. SPECIFICATION NO. A115 FOR THE SIZE AND LOCATION OF THESE CUTOUTS.

LHR SHOWN
RHR OPPOSITE

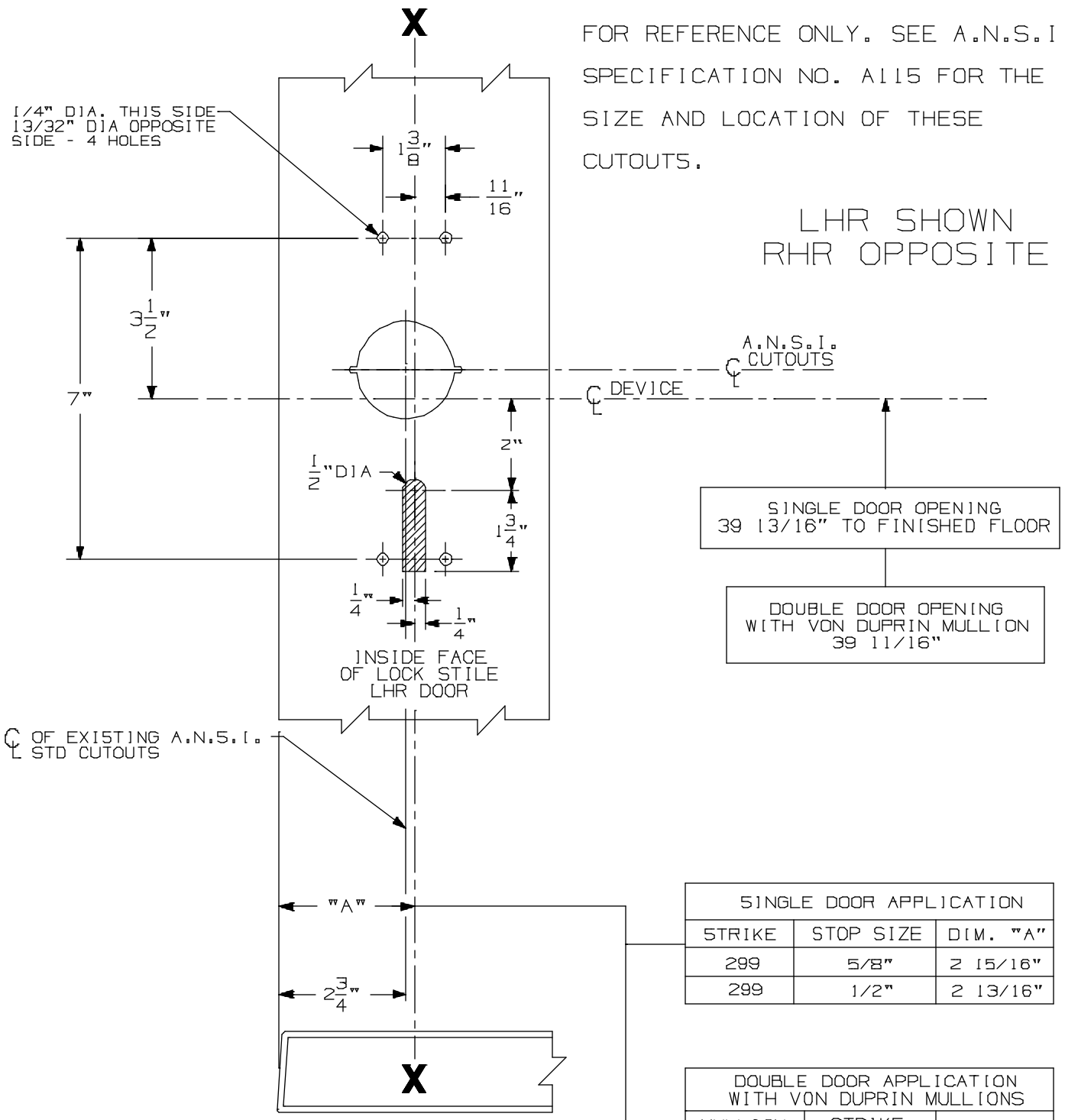

SINGLE DOOR APPLICATION		
STRIKE	STOP SIZE	DIM. "A"
299	5/8"	2 15/16"
299	1/2"	2 13/16"

DOUBLE DOOR APPLICATION WITH VON DUPRIN MULLIONS		
MULLION	STRIKE	DIM. "A"
5654	299	2 7/8"
1654	1606	2 7/8"

(5)

FOR ADDITIONAL INFORMATION SEE TEMPLATE NO. 10302

FOR OUTSIDE TRIM PREPARATION, WHEN REQUIRED, SEE ADDITIONAL TRIM TEMPLATE.

98/99 TP, K, & L Rim Devices w/ 990, 991, & 992 Trim for Type "161" Stock Hollow Metal Applications

VON DUPRIN®

NOTES: SEE MASTER SHEET #10001 FOR SUGGESTED REINFORCING

TEMPLATE NUMBER: 10309_a

DATE: 05-21-13

DEVICE APPLICATION SCHEDULE	
98 RIM SERIES	99 RIM SERIES
9827 SERIES	9927 SERIES
9847 SERIES	9947 SERIES
9849 SERIES	9949 SERIES

996L, E996L, 996L-BE, E996L-BE 996K, 996K-BE R/V SERIES
TRIM METAL DOOR APPLICATION

VON DUPRIN®

NOTES: SEE MASTER SHEET #10001 FOR SUGGESTED REINFORCING

TEMPLATE NUMBER: 20003_e

DATE: 10-30-14

RIM APPLICATION

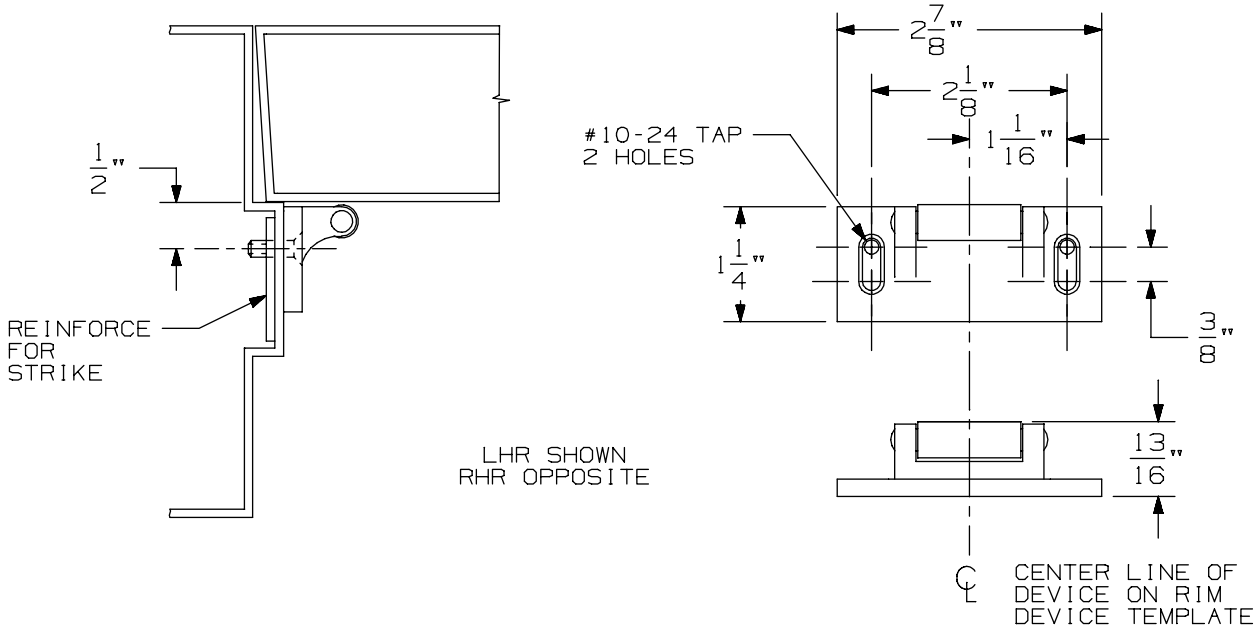

VERTICAL APPLICATION

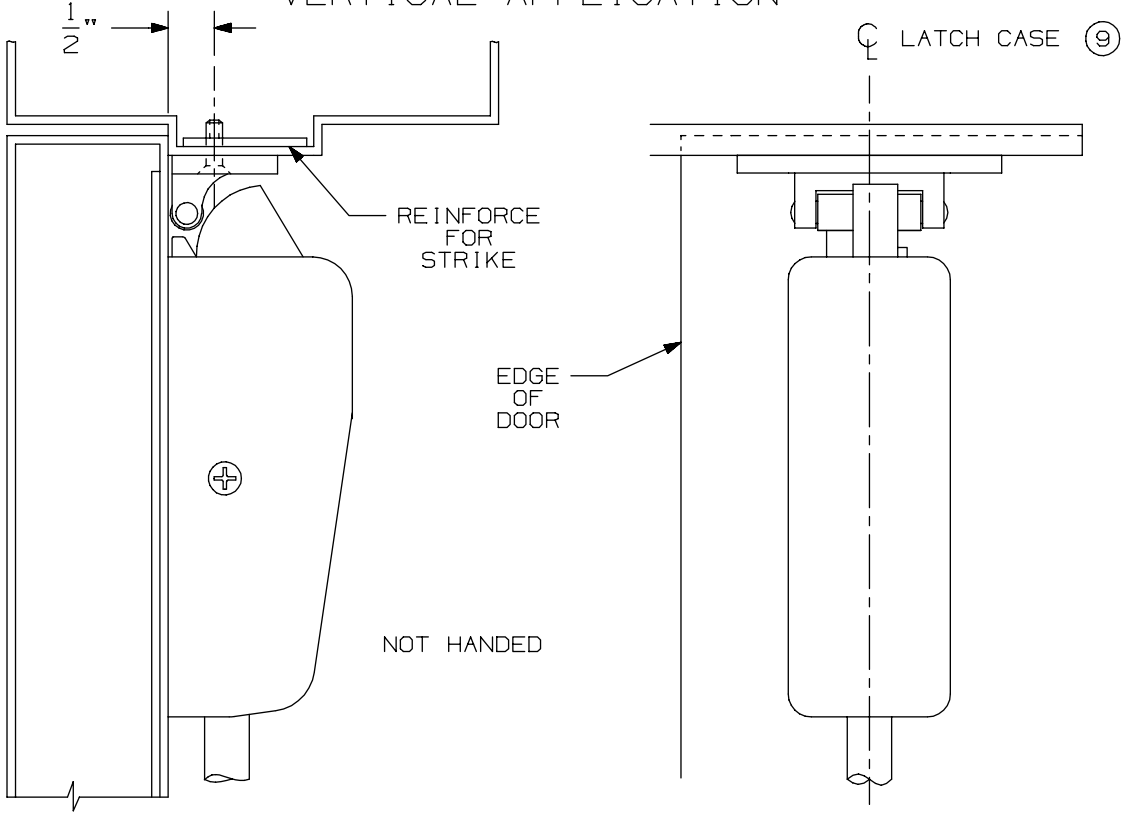

NOTE: LATCH CASE MOUNTING HOLES TO BE PREPARED AT INSTALLATION ON DOOR.

299 & 299F Strike

VON DUPRIN®

NOTES: SEE MASTER SHEET #10001 FOR SUGGESTED REINFORCING

TEMPLATE NUMBER: 30039_a

DATE: 05-23-13

TYPE 161 STOCK HOLLOW METAL DOOR

A.N.S.I. CUTOUTS ARE SHOWN FOR REFERENCE ONLY. SEE A.N.S.I. SPECIFICATION NO. A115 FOR THE SIZE AND LOCATION OF THESE CUTOUTS.

LHR SHOWN
RHR OPPOSITE

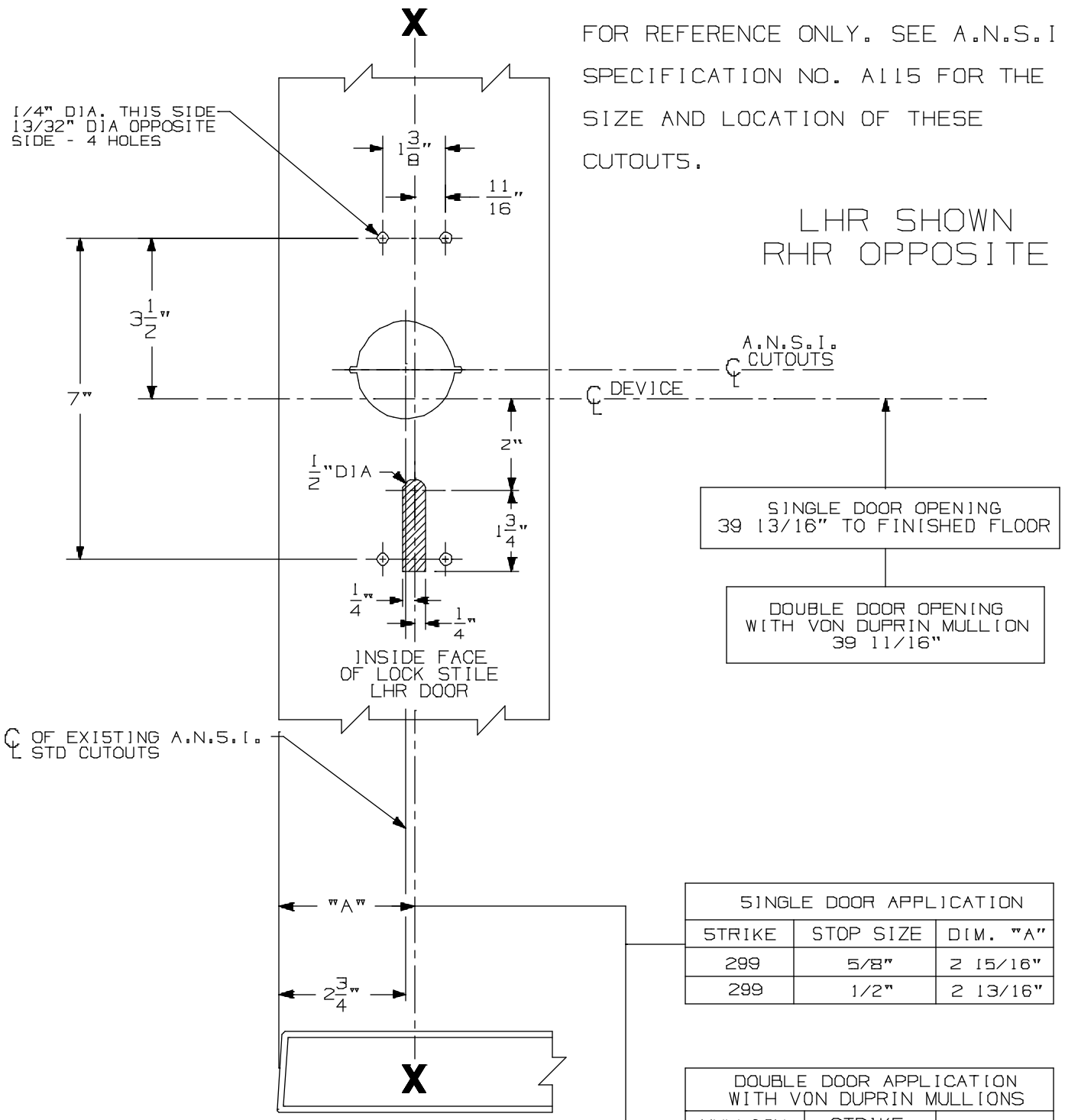

SINGLE DOOR APPLICATION		
STRIKE	STOP SIZE	DIM. "A"
299	5/8"	2 15/16"
299	1/2"	2 13/16"

DOUBLE DOOR APPLICATION WITH VON DUPRIN MULLIONS		
MULLION	STRIKE	DIM. "A"
5654	299	2 7/8"
1654	1606	2 7/8"

(5)

FOR ADDITIONAL INFORMATION SEE TEMPLATE NO. 10302

FOR OUTSIDE TRIM PREPARATION, WHEN REQUIRED, SEE ADDITIONAL TRIM TEMPLATE.

98/99 TP, K, & L Rim Devices w/ 990, 991, & 992 Trim for Type "161" Stock Hollow Metal Applications

VON DUPRIN®

NOTES: SEE MASTER SHEET #10001 FOR SUGGESTED REINFORCING

TEMPLATE NUMBER: 10309_a

DATE: 05-21-13

990 TP & 990 TP-BE TRIM

NOTES: SEE MASTER SHEET #10001 FOR SUGGESTED REINFORCING

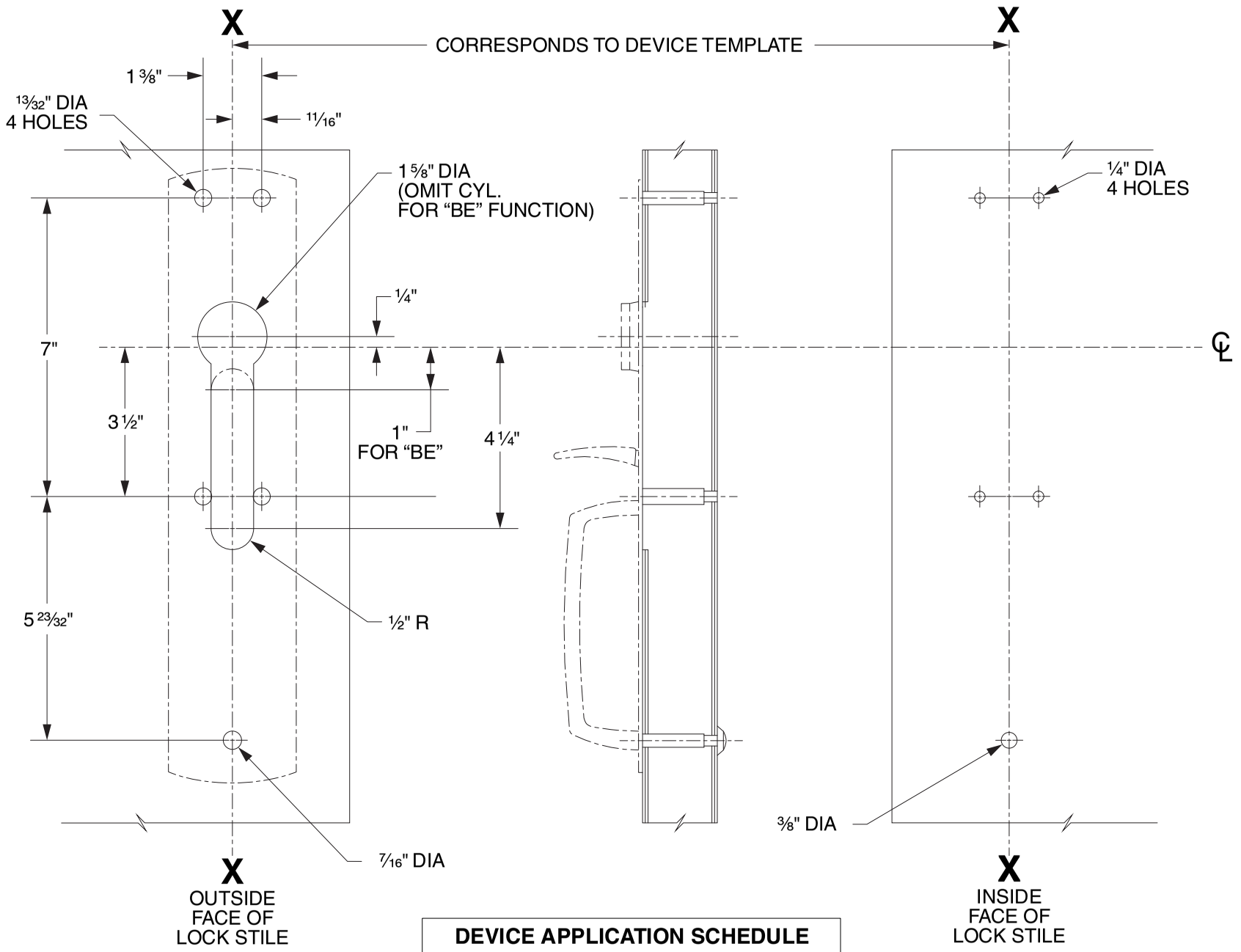

DEVICE APPLICATION SCHEDULE
98/99 SERIES RIM DEVICE
9827/9927 SERIES DEVICE
9847/9947 SERIES DEVICE
9849/9949 SERIES DEVICE

LHR SHOWN
RHR OPPOSITE

VON DUPRIN®

TEMPLATE NUMBER: 20265_C

DATE: 05-31-13

RIM APPLICATION

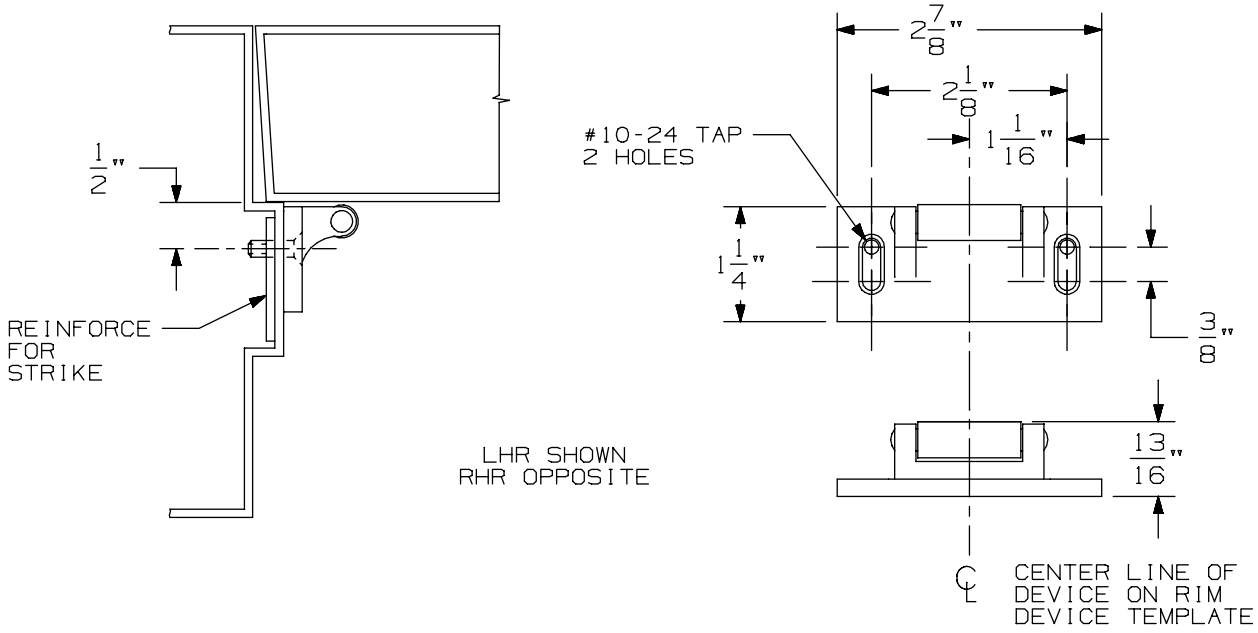

VERTICAL APPLICATION

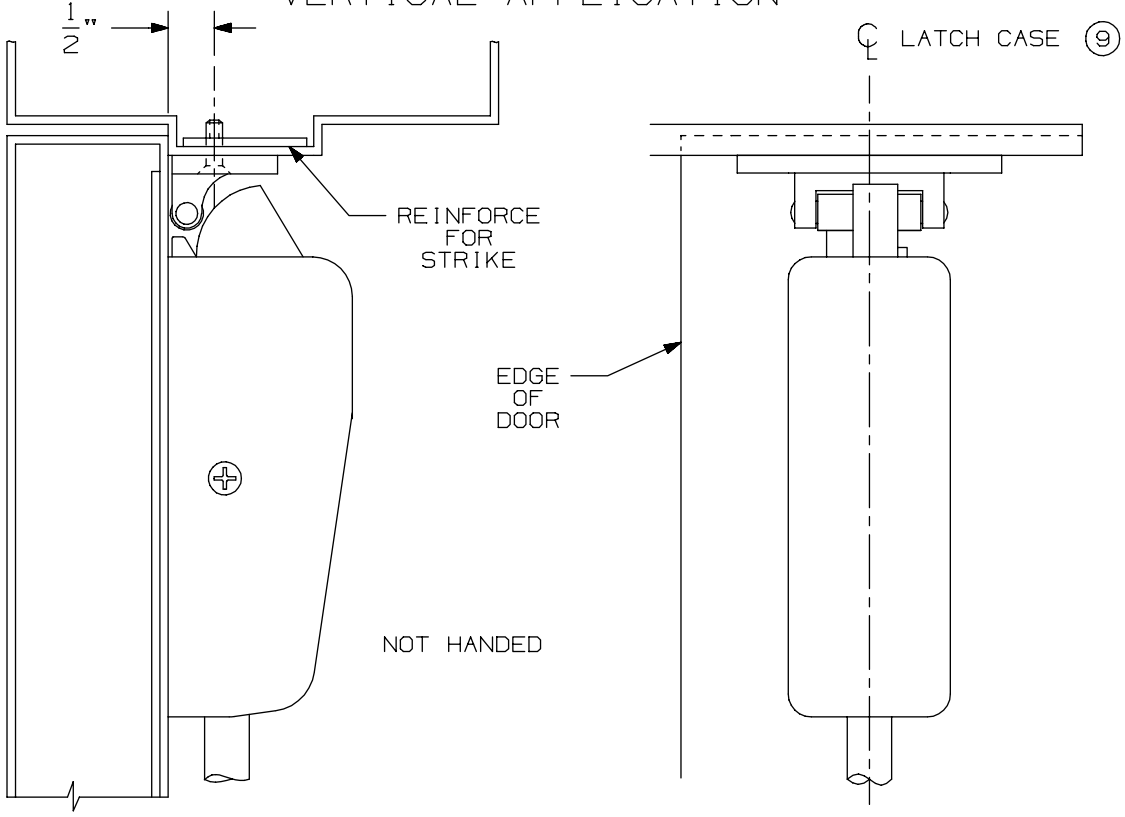

NOTE: LATCH CASE MOUNTING HOLES TO BE PREPARED AT INSTALLATION ON DOOR.

299 & 299F Strike

VON DUPRIN®

NOTES: SEE MASTER SHEET #10001 FOR SUGGESTED REINFORCING

TEMPLATE NUMBER: 30039_a

DATE: 05-23-13

98 / 99 Series for 86 Stock Hollow Metal Doors - E98 & E99 Rim Electric Locking

TYPE 161 STOCK HOLLOW METAL DOOR

A.N.S.I. CUTOUTS ARE SHOWN FOR REFERENCE ONLY. SEE A.N.S.I. SPECIFICATION NO. A115 FOR THE SIZE AND LOCATION OF THESE CUTOUTS.

LHR SHOWN
RHR OPPOSITE

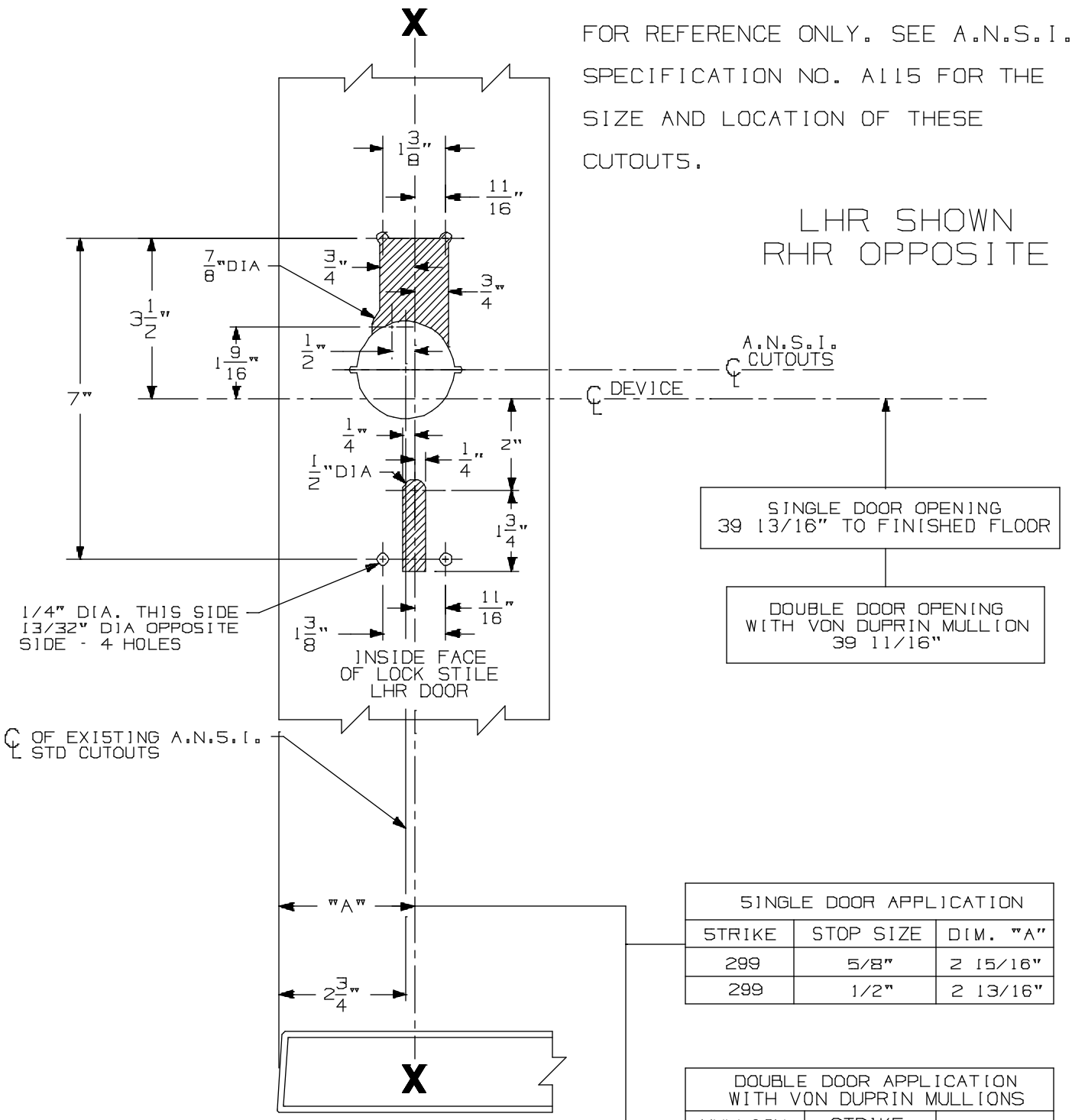

SINGLE DOOR APPLICATION		
STRIKE	STOP SIZE	DIM. "A"
299	5/8"	2 15/16"
299	1/2"	2 13/16"

DOUBLE DOOR APPLICATION WITH VON DUPRIN MULLIONS		
MULLION	STRIKE	DIM. "A"
5654	299	2 7/8"
1654	1606	2 7/8"

④

FOR ADDITIONAL INFORMATION
SEE TEMPLATE NO. 10207
FOR OUTSIDE TRIM PREPARATION, WHEN REQUIRED, SEE ADDITIONAL TRIM TEMPLATE.

E98/E99 Series Rim Device w/ 990, 991, 992 Trim for Type "161" Stock Hollow Metal Applications

VON DUPRIN®

NOTES: SEE MASTER SHEET #10001 FOR SUGGESTED REINFORCING

TEMPLATE NUMBER: 10308_a

DATE: 05-21-13

991 K & 992 L Trim

NOTES: SEE MASTER SHEET #10001 FOR SUGGESTED REINFORCING

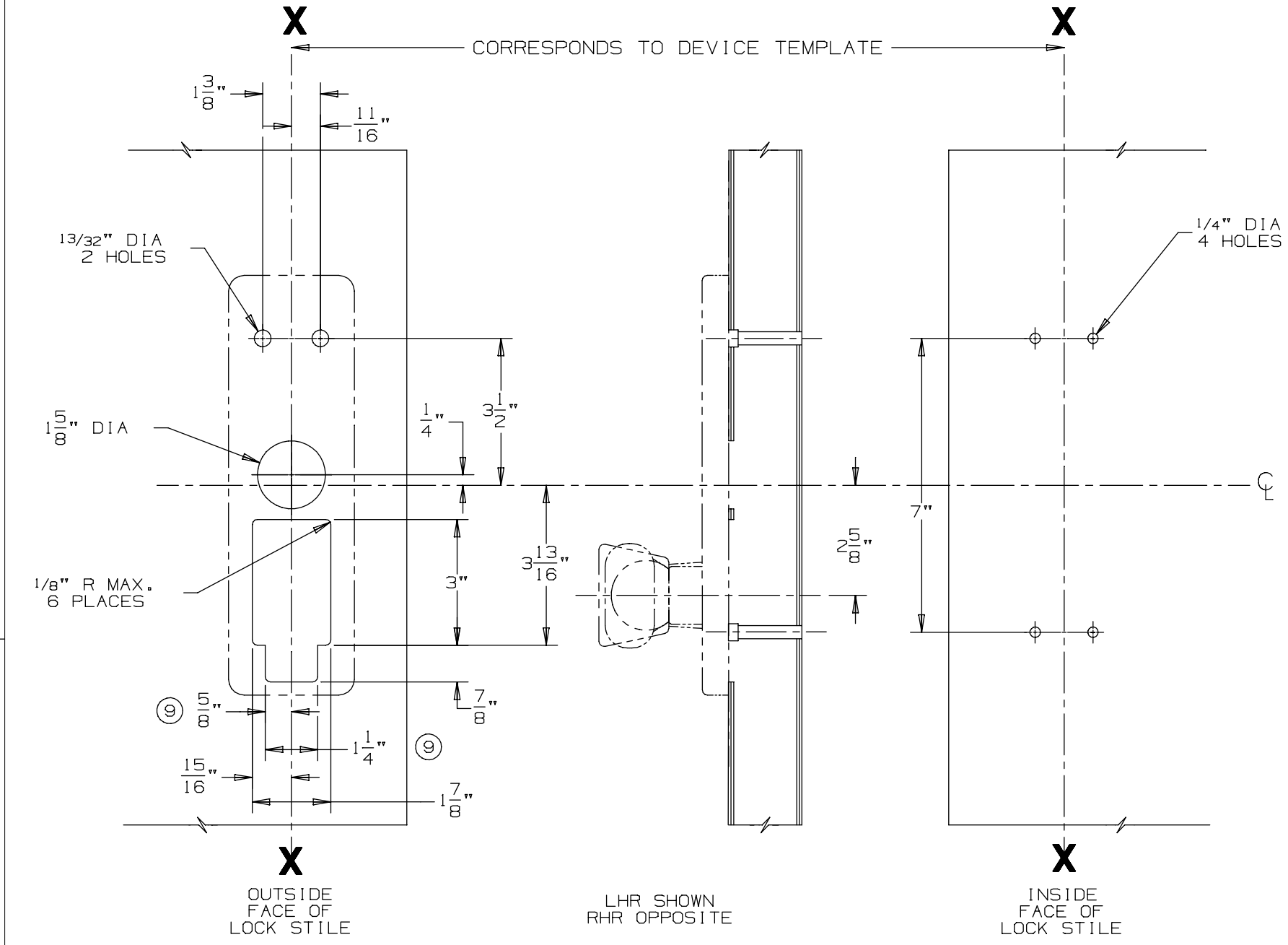

DEVICE APPLICATION SCHEDULE
98/99 SERIES RIM DEVICE
9827/9927 SERIES DEVICE
9847/9947 SERIES DEVICE

VON DUPRIN®

TEMPLATE NUMBER: 20272_a

DATE: 05-23-13

RIM APPLICATION

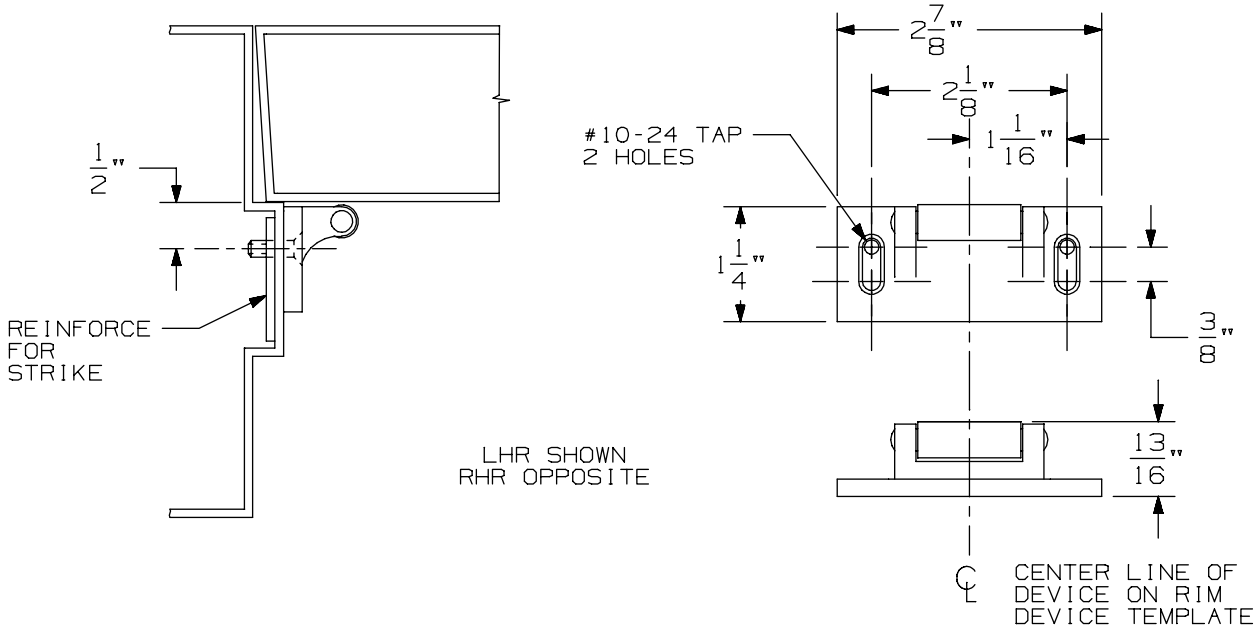

VERTICAL APPLICATION

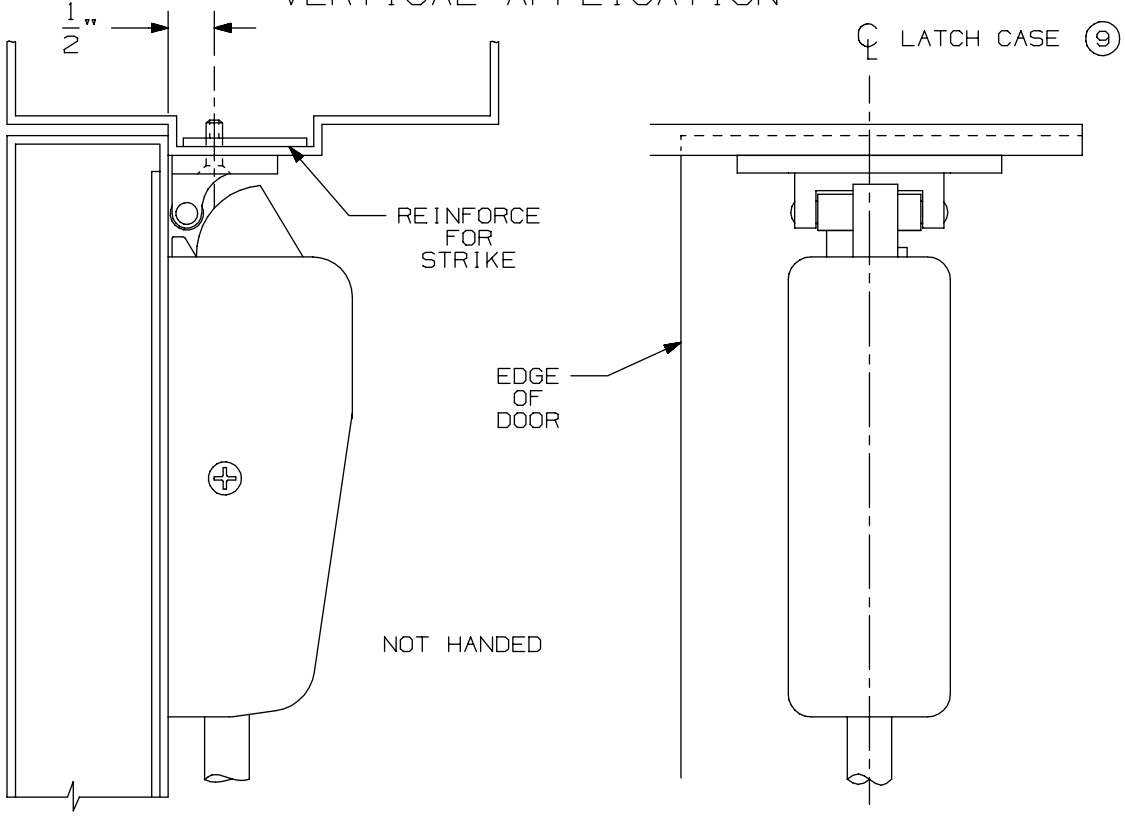

NOTE: LATCH CASE MOUNTING HOLES TO BE PREPARED AT INSTALLATION ON DOOR.

299 & 299F Strike

VON DUPRIN®

NOTES: SEE MASTER SHEET #10001 FOR SUGGESTED REINFORCING

TEMPLATE NUMBER: 30039_a

DATE: 05-23-13

TYPE 161 STOCK HOLLOW METAL DOOR

A.N.S.I. CUTOUTS ARE SHOWN FOR REFERENCE ONLY. SEE A.N.S.I. SPECIFICATION NO. A115 FOR THE SIZE AND LOCATION OF THESE CUTOUTS.

LHR SHOWN
RHR OPPOSITE

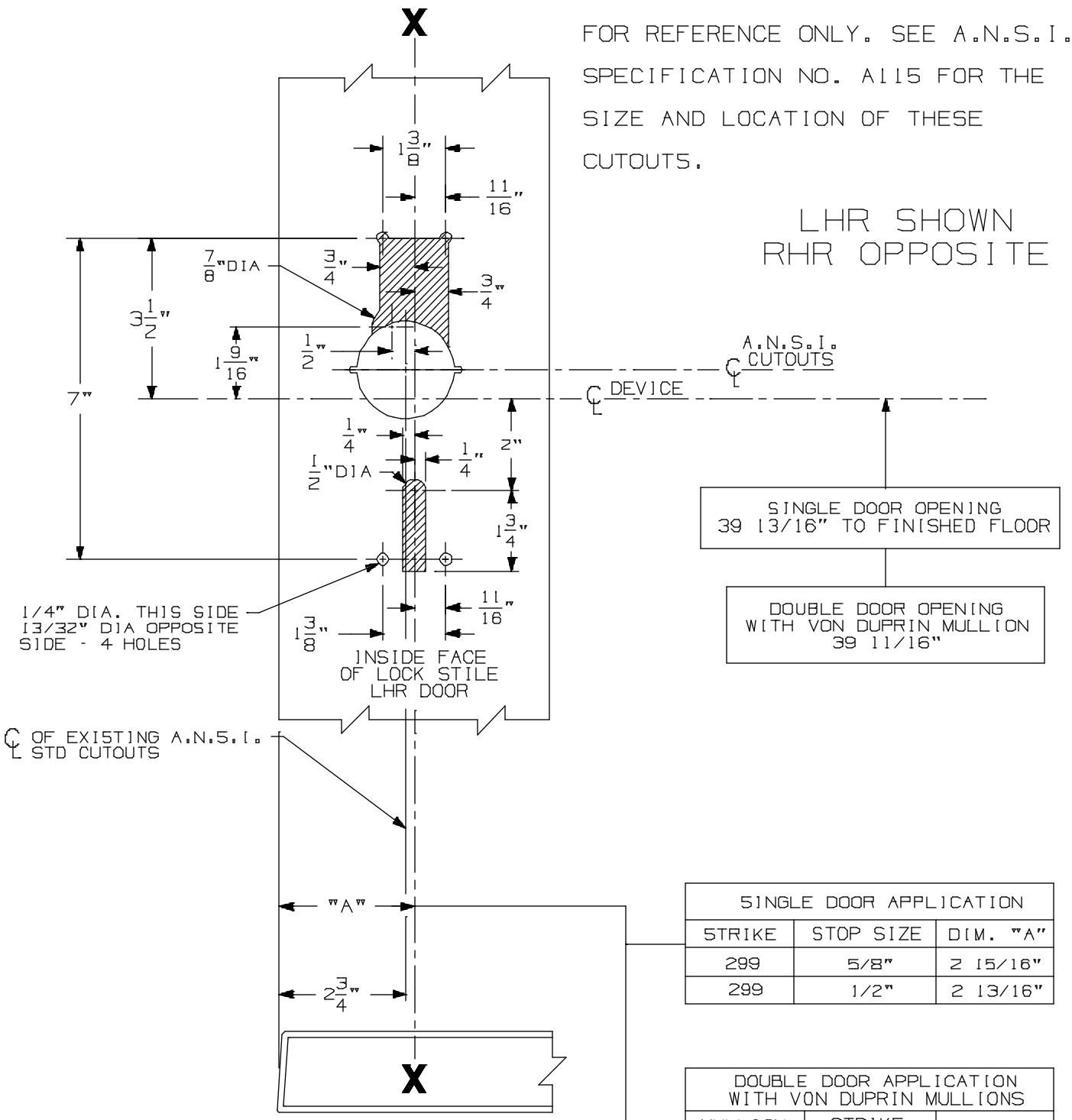

SINGLE DOOR APPLICATION		
STRIKE	STOP SIZE	DIM. "A"
299	5/8"	2 15/16"
299	1/2"	2 13/16"

DOUBLE DOOR APPLICATION WITH VON DUPRIN MULLIONS		
MULLION	STRIKE	DIM. "A"
5654	299	2 7/8"
1654	1606	2 7/8"

④

FOR ADDITIONAL INFORMATION
SEE TEMPLATE NO. 10207
FOR OUTSIDE TRIM PREPARATION, WHEN REQUIRED, SEE ADDITIONAL TRIM TEMPLATE.

E98/E99 Series Rim Device w/ 990, 991, 992 Trim for Type "161" Stock Hollow Metal Applications

VON DUPRIN®

NOTES: SEE MASTER SHEET #10001 FOR SUGGESTED REINFORCING

TEMPLATE NUMBER: 10308_a

DATE: 05-21-13

DEVICE APPLICATION SCHEDULE	
98 RIM SERIES	99 RIM SERIES
9827 SERIES	9927 SERIES
9847 SERIES	9947 SERIES
9849 SERIES	9949 SERIES

996L, E996L, 996L-BE, E996L-BE 996K, 996K-BE R/V SERIES
TRIM METAL DOOR APPLICATION

VON DUPRIN®

NOTES: SEE MASTER SHEET #10001 FOR SUGGESTED REINFORCING

TEMPLATE NUMBER: 20003_e

DATE: 10-30-14

RIM APPLICATION

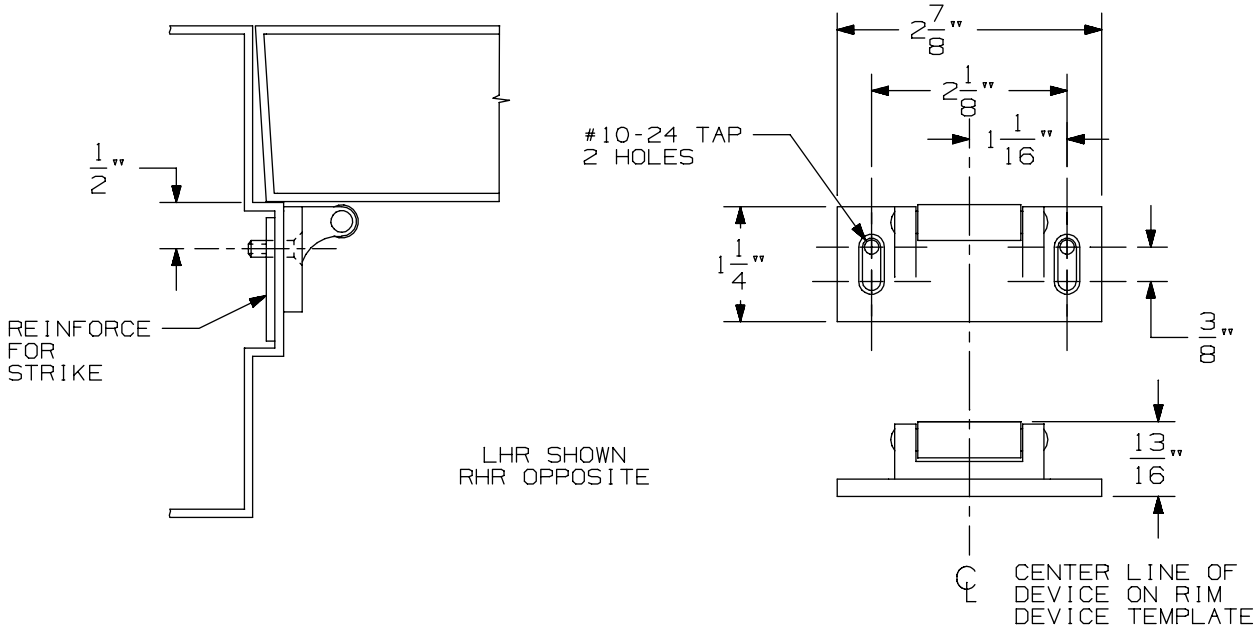

VERTICAL APPLICATION

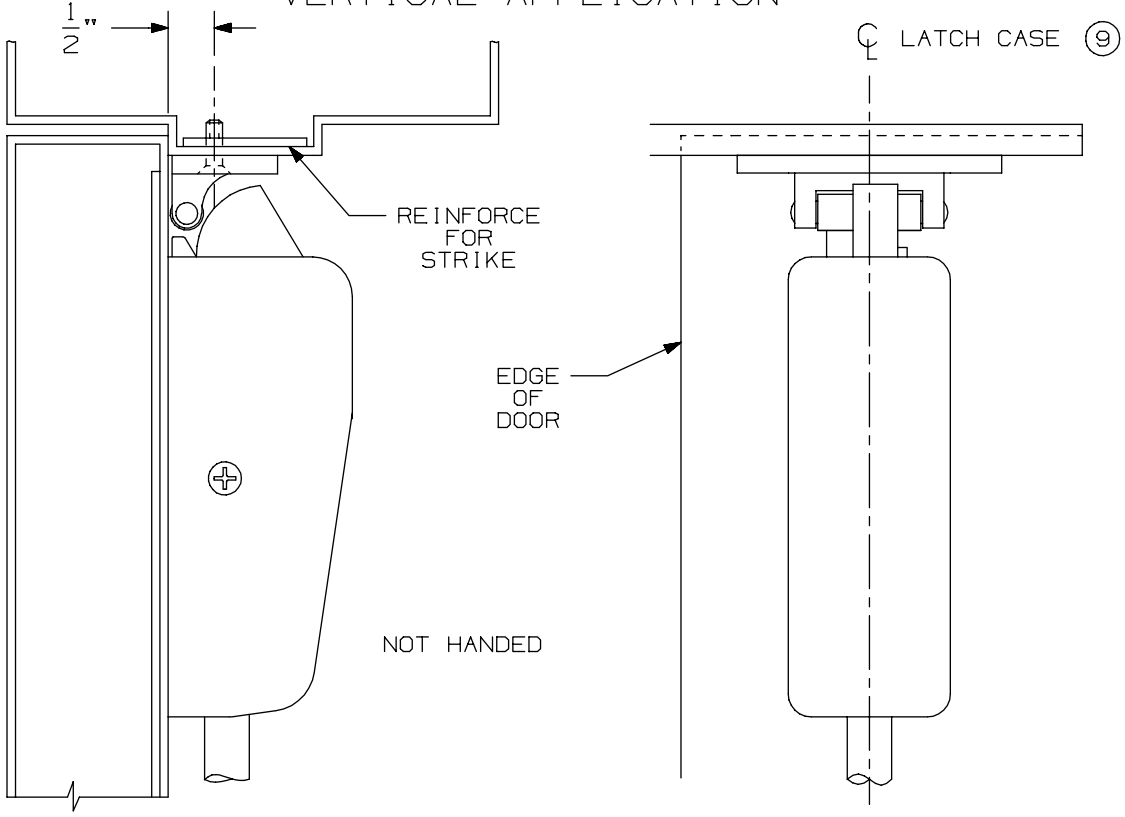

NOTE: LATCH CASE MOUNTING HOLES TO BE PREPARED AT INSTALLATION ON DOOR.

299 & 299F Strike

VON DUPRIN®

NOTES: SEE MASTER SHEET #10001 FOR SUGGESTED REINFORCING

TEMPLATE NUMBER: 30039_a

DATE: 05-23-13

TYPE 161 STOCK HOLLOW METAL DOOR

A.N.S.I. CUTOUTS ARE SHOWN FOR REFERENCE ONLY. SEE A.N.S.I. SPECIFICATION NO. A115 FOR THE SIZE AND LOCATION OF THESE CUTOUTS.

LHR SHOWN
RHR OPPOSITE

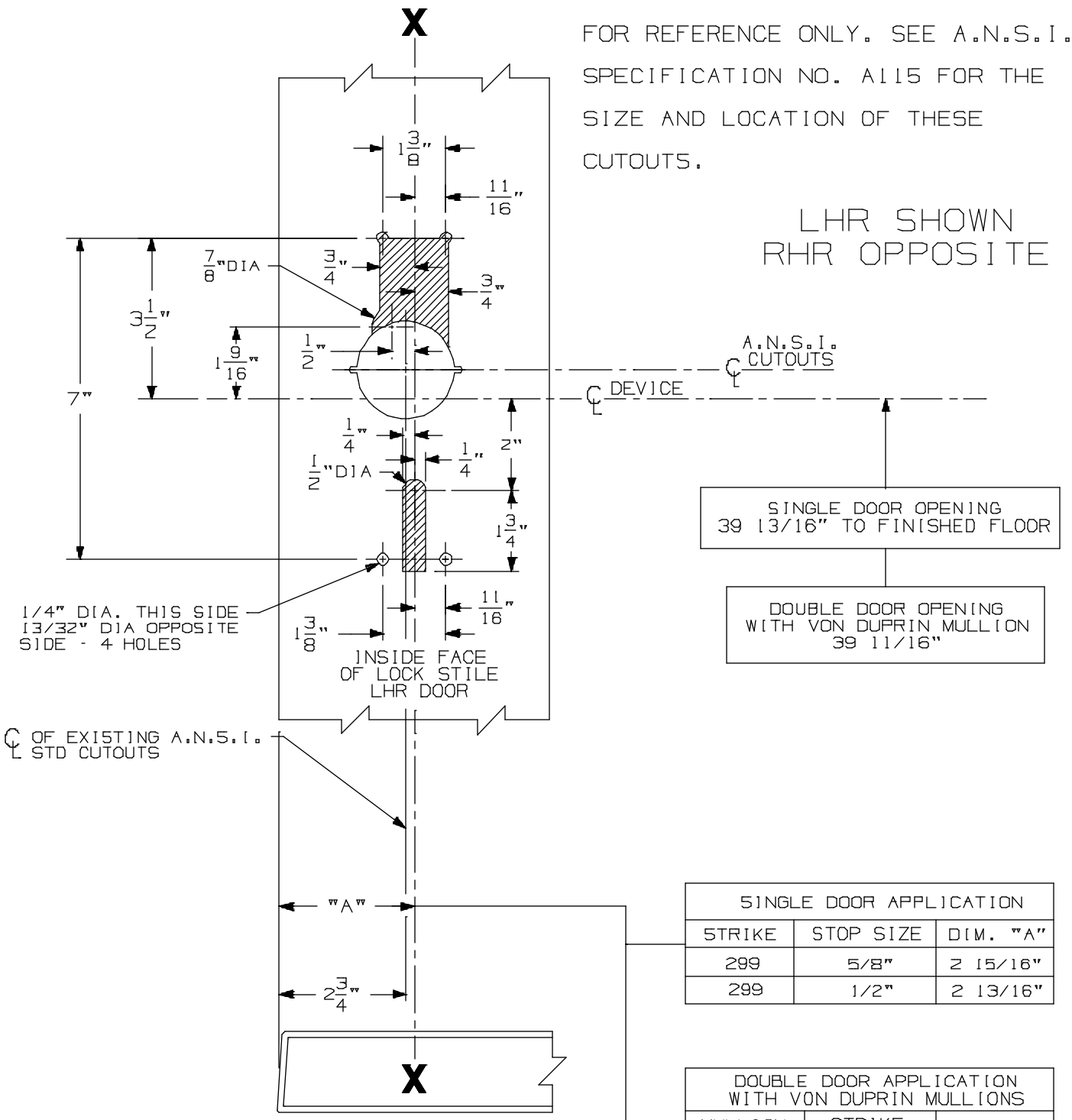

SINGLE DOOR APPLICATION		
STRIKE	STOP SIZE	DIM. "A"
299	5/8"	2 15/16"
299	1/2"	2 13/16"

DOUBLE DOOR APPLICATION WITH VON DUPRIN MULLIONS		
MULLION	STRIKE	DIM. "A"
5654	299	2 7/8"
1654	1606	2 7/8"

④

FOR ADDITIONAL INFORMATION
SEE TEMPLATE NO. 10207
FOR OUTSIDE TRIM PREPARATION, WHEN REQUIRED, SEE ADDITIONAL TRIM TEMPLATE.

E98/E99 Series Rim Device w/ 990, 991, 992 Trim for Type "161" Stock Hollow Metal Applications

VON DUPRIN®

NOTES: SEE MASTER SHEET #10001 FOR SUGGESTED REINFORCING

TEMPLATE NUMBER: 10308_a

DATE: 05-21-13

990 TP & 990 TP-BE TRIM

NOTES: SEE MASTER SHEET #10001 FOR SUGGESTED REINFORCING

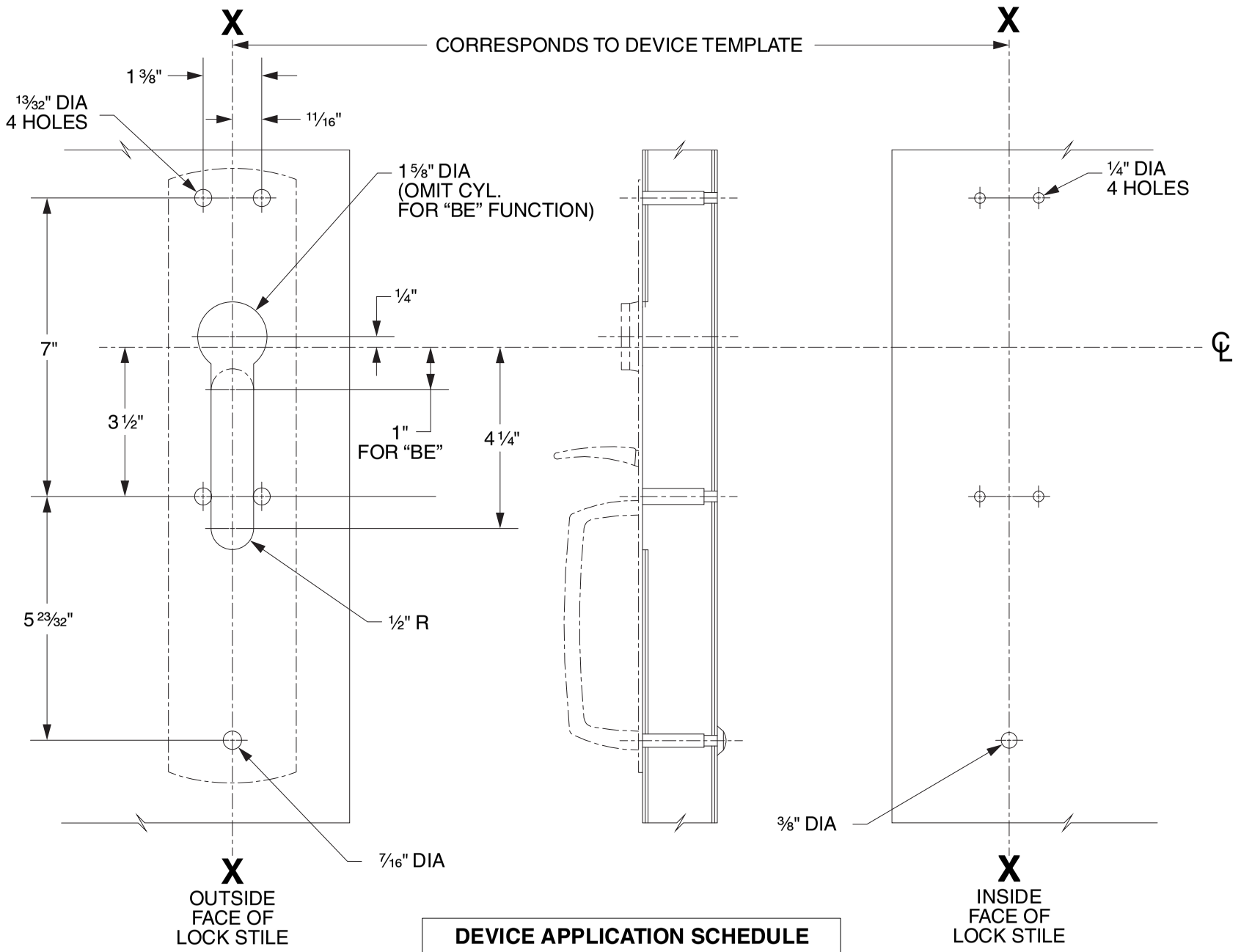

DEVICE APPLICATION SCHEDULE
98/99 SERIES RIM DEVICE
9827/9927 SERIES DEVICE
9847/9947 SERIES DEVICE
9849/9949 SERIES DEVICE

LHR SHOWN
RHR OPPOSITE

VON DUPRIN®

TEMPLATE NUMBER: 20265_C

DATE: 05-31-13

RIM APPLICATION

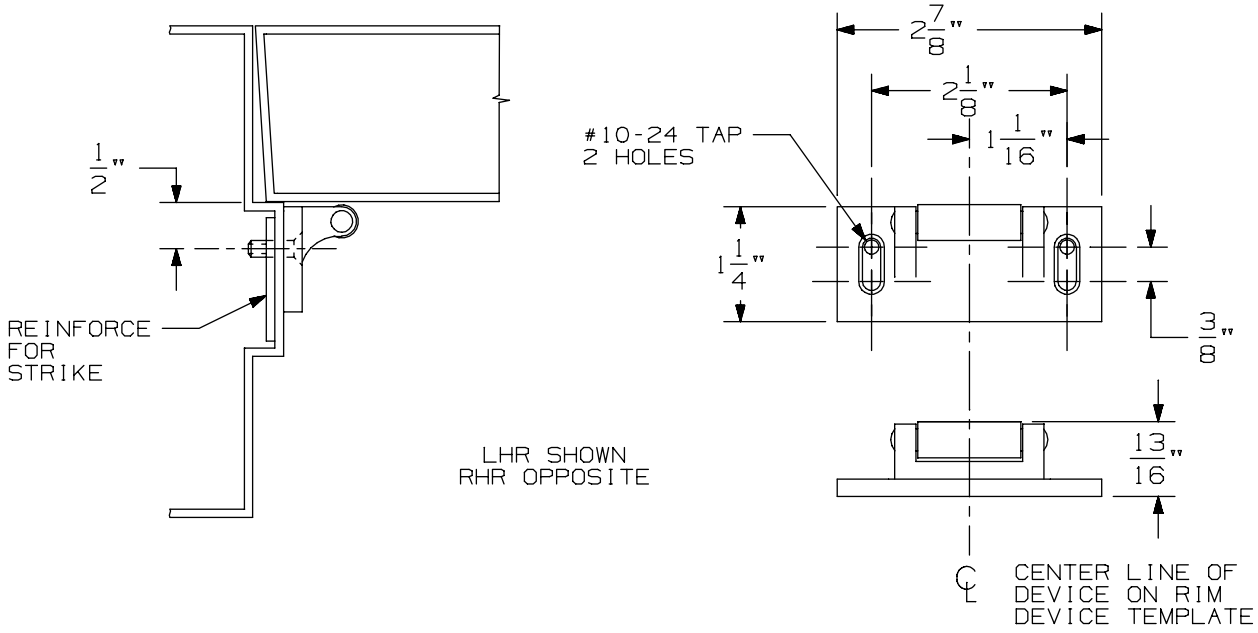

VERTICAL APPLICATION

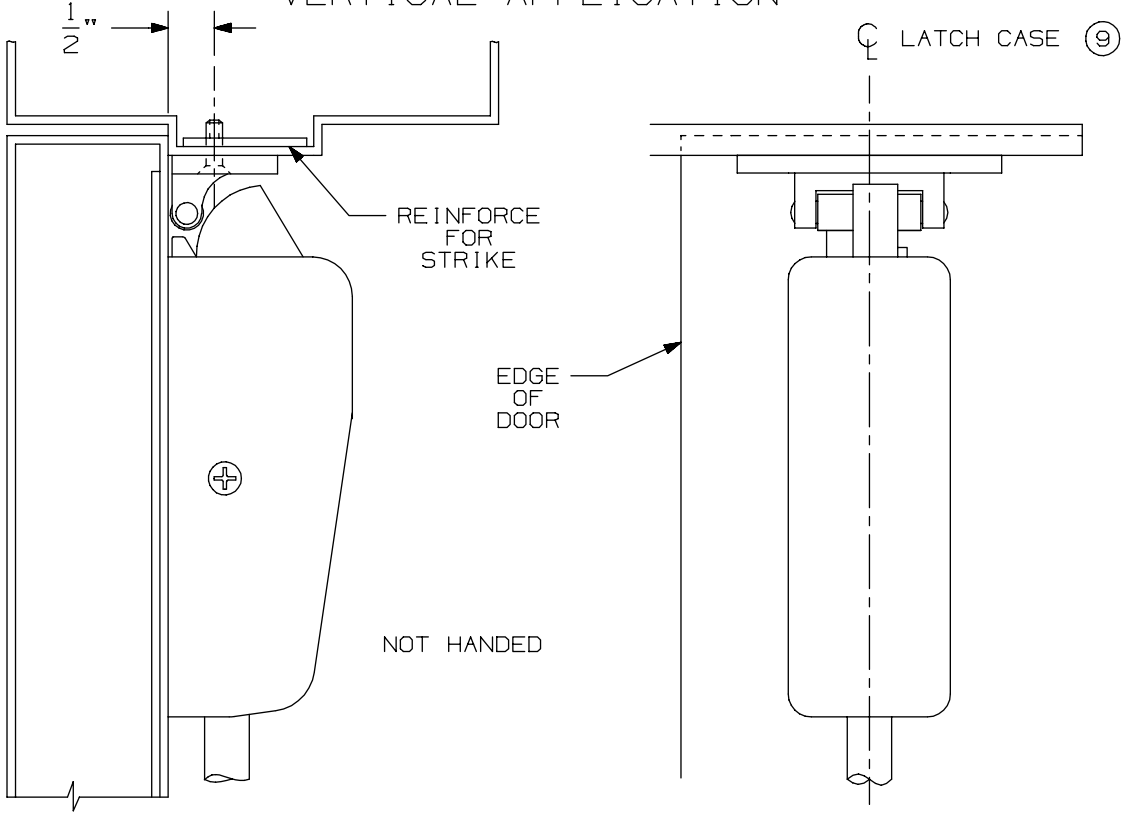

NOTE: LATCH CASE MOUNTING HOLES TO BE PREPARED AT INSTALLATION ON DOOR.

299 & 299F Strike

VON DUPRIN®

NOTES: SEE MASTER SHEET #10001 FOR SUGGESTED REINFORCING

TEMPLATE NUMBER: 30039_a

DATE: 05-23-13

98 / 99 Series for 86 Stock Hollow Metal Doors - 9827/9927 Surface Vertical Rod (Standard, CD, EL, RX & SS)

FOR ADDITIONAL INFORMATION SEE TEMPLATE NO. 10303

TYPE 161 STOCK HOLLOW METAL DOOR

TYPE 86 STOCK HOLLOW METAL DOOR

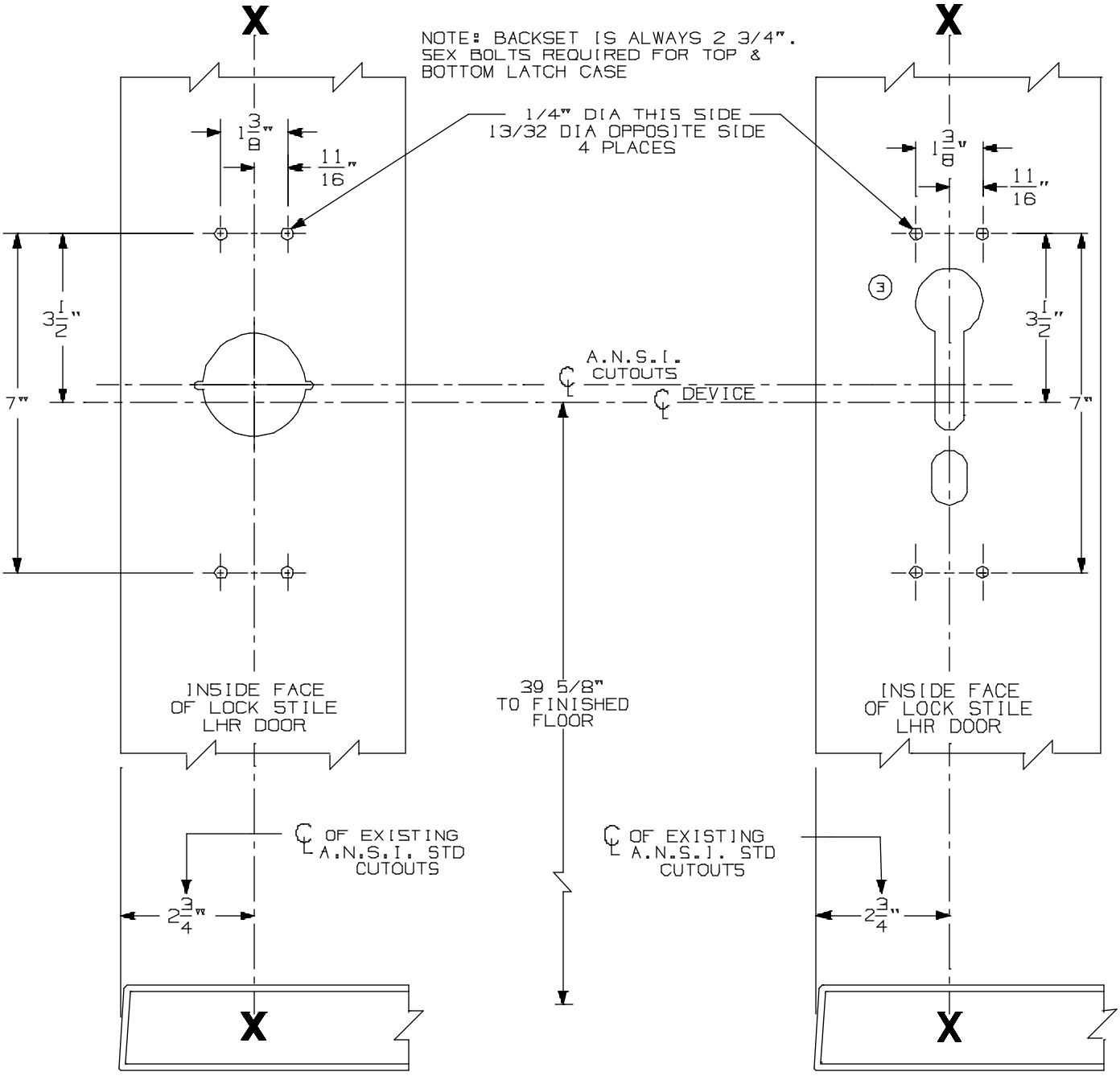

A.N.S.I. CUTOUTS ARE SHOWN FOR REFERENCE ONLY. SEE A.N.S.I. SPECIFICATION NO. A115 FOR THE SIZE AND LOCATION OF THESE CUTOUTS.

FOR OUTSIDE TRIM PREPARATION, SEE ADDITIONAL TRIM TEMPLATE.

LHR SHOWN
RHR OPPOSITE

9827/9927 EO, DT, & NL Vertical Rod Devices w/ 990, 991/992-DT & Rigid Trim for Stock Hollow Metal Applications	VON DUPRIN®	
NOTES: SEE MASTER SHEET #10001 FOR SUGGESTED REINFORCING	TEMPLATE NUMBER: 10310_a	DATE: 05-21-13

990 EO TRIM

NOTES: SEE MASTER SHEET #10001 FOR SUGGESTED REINFORCING

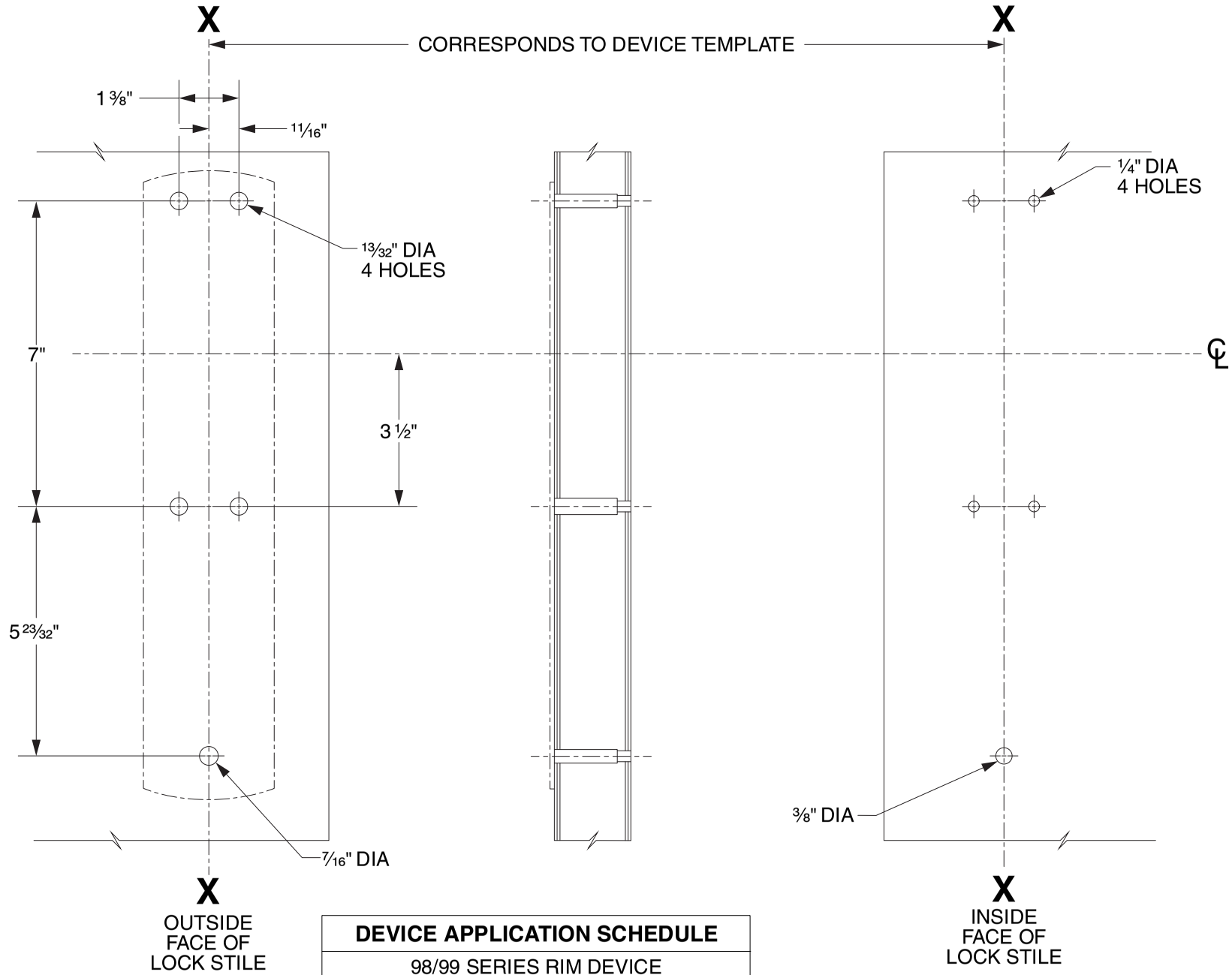

DEVICE APPLICATION SCHEDULE
98/99 SERIES RIM DEVICE
9827/9927 SERIES DEVICE
9847/9947 SERIES DEVICE
9849/9949 SERIES DEVICE
9875/9975 SERIES DEVICE

LHR SHOWN
RHR OPPOSITE

VON DUPRIN®

TEMPLATE NUMBER: 20269_C

DATE: 05-31-13

RIM APPLICATION

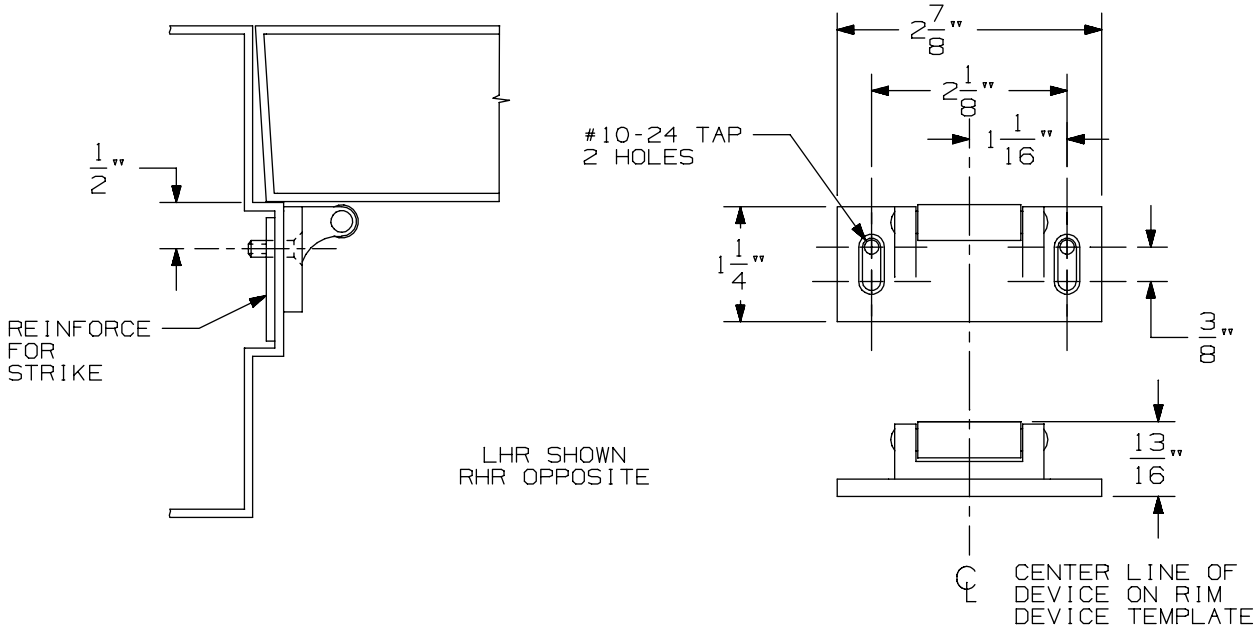

VERTICAL APPLICATION

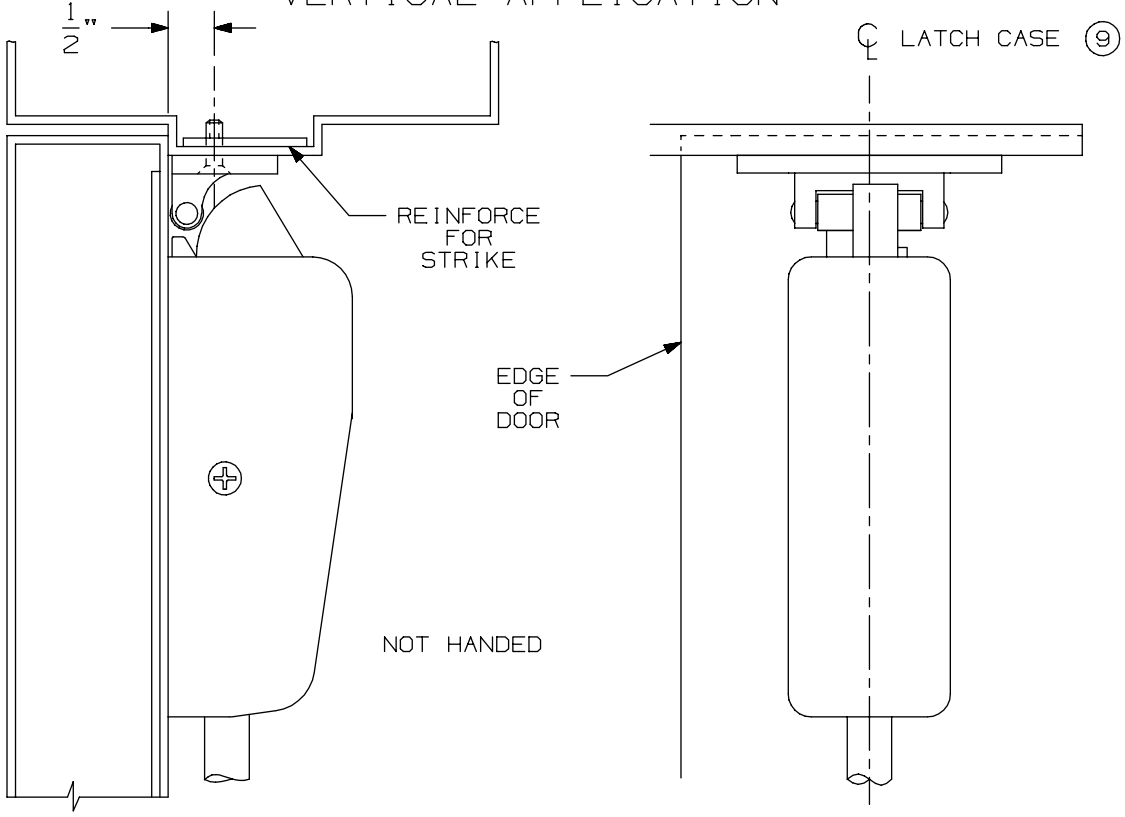

NOTE: LATCH CASE MOUNTING HOLES TO BE PREPARED AT INSTALLATION ON DOOR.

299 & 299F Strike

VON DUPRIN®

NOTES: SEE MASTER SHEET #10001 FOR SUGGESTED REINFORCING

TEMPLATE NUMBER: 30039_a

DATE: 05-23-13

FOR ADDITIONAL INFORMATION SEE TEMPLATE NO. 10303

TYPE 161 STOCK HOLLOW METAL DOOR

TYPE 86 STOCK HOLLOW METAL DOOR

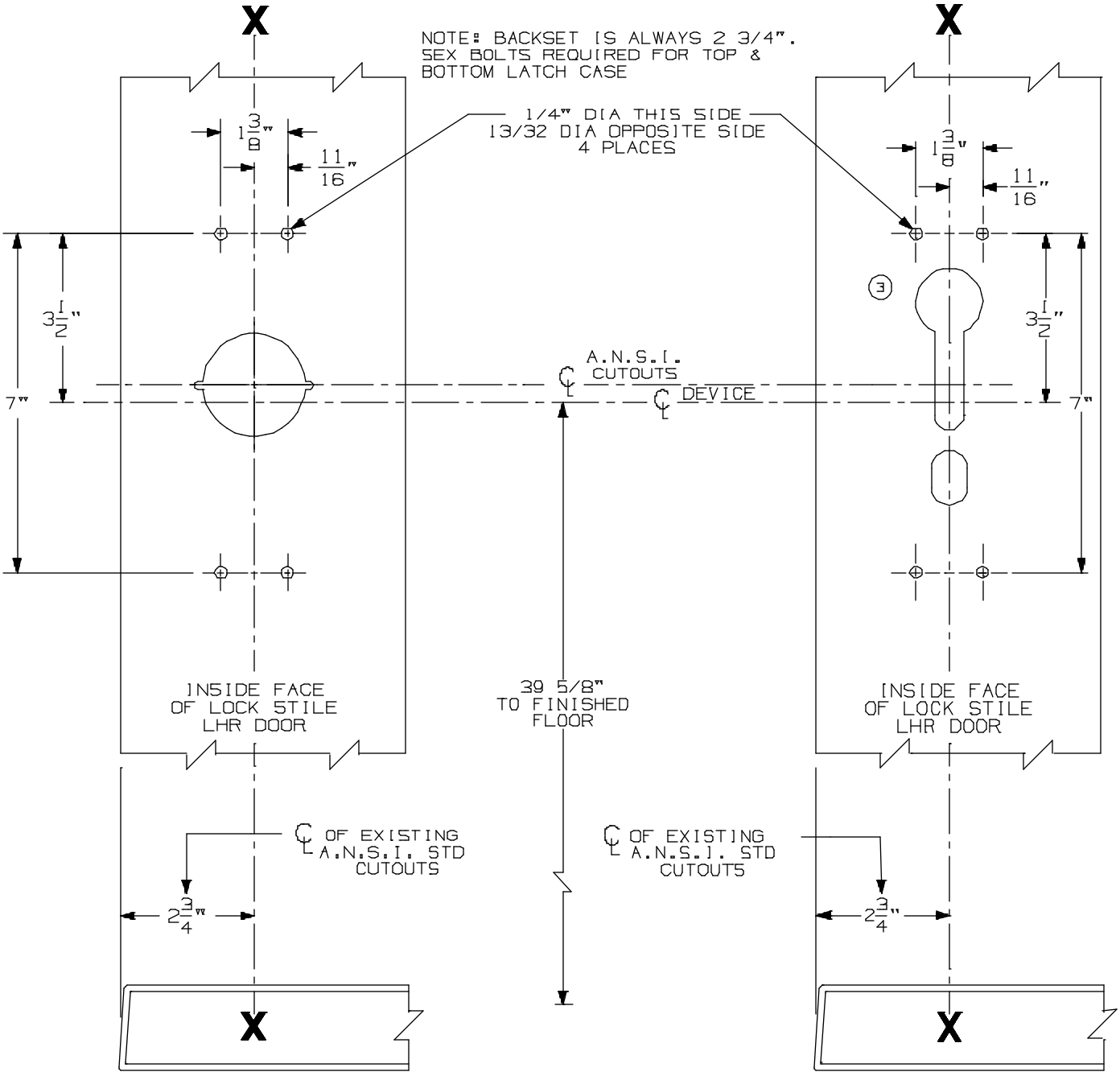

A.N.S.I. CUTOUTS ARE SHOWN FOR REFERENCE ONLY. SEE A.N.S.I. SPECIFICATION NO. A115 FOR THE SIZE AND LOCATION OF THESE CUTOUTS.

FOR OUTSIDE TRIM PREPARATION, SEE ADDITIONAL TRIM TEMPLATE.

LHR SHOWN
RHR OPPOSITE

9827/9927 EO, DT, & NL Vertical Rod Devices w/ 990, 991/992-DT & Rigid Trim for Stock Hollow Metal Applications	VON DUPRIN®	
NOTES: SEE MASTER SHEET #10001 FOR SUGGESTED REINFORCING	TEMPLATE NUMBER: 10310_a	DATE: 05-21-13

990 DT TRIM

NOTES: SEE MASTER SHEET #10001 FOR SUGGESTED REINFORCING

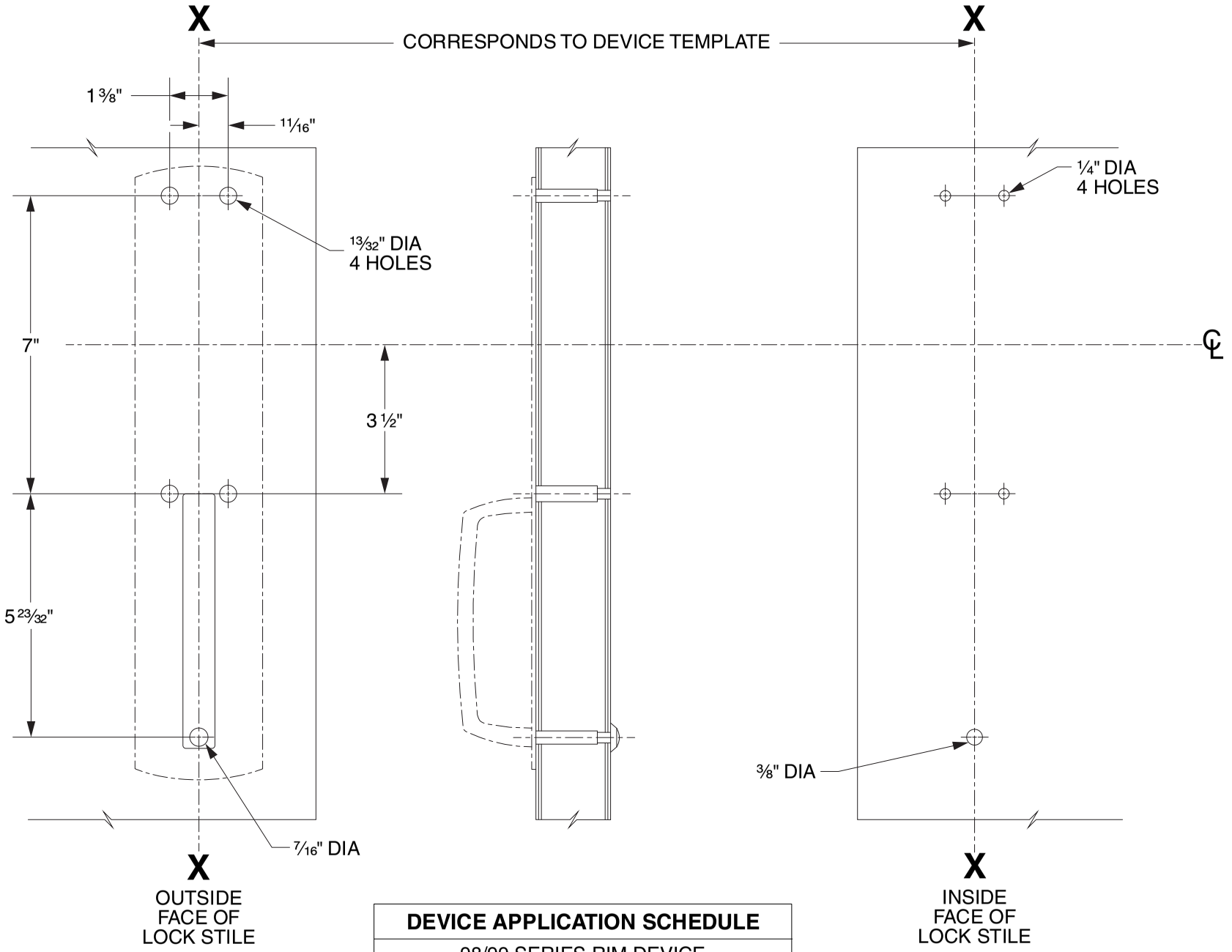

DEVICE APPLICATION SCHEDULE
98/99 SERIES RIM DEVICE
9827/9927 SERIES DEVICE
9847/9947 SERIES DEVICE
9849/9949 SERIES DEVICE
9875/9975 SERIES DEVICE

LHR SHOWN
RHR OPPOSITE

VON DUPRIN®

TEMPLATE NUMBER: 20268_C

DATE: 05-31-13

RIM APPLICATION

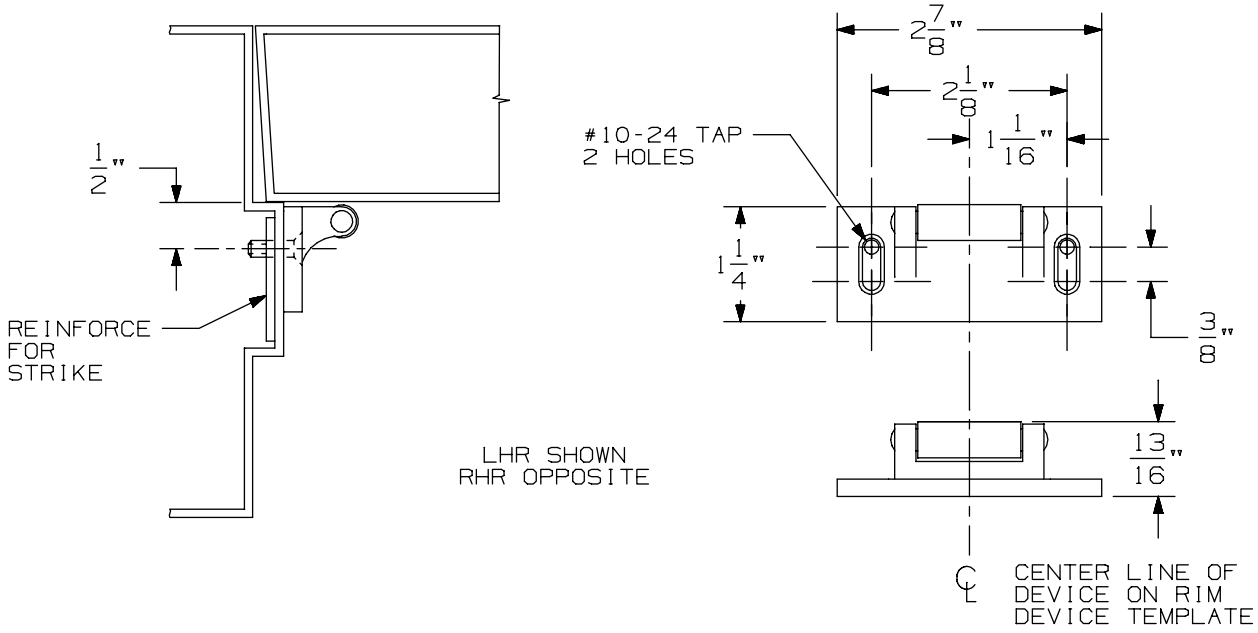

VERTICAL APPLICATION

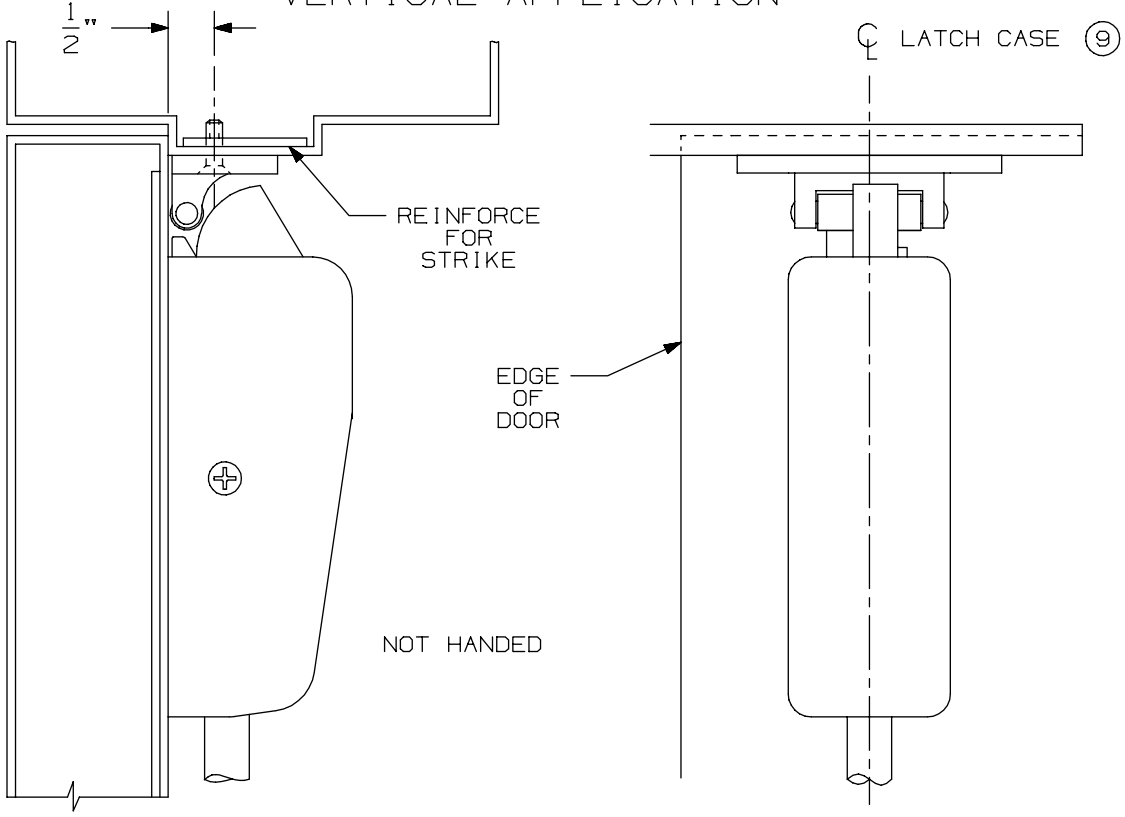

NOTE: LATCH CASE MOUNTING HOLES TO BE PREPARED AT INSTALLATION ON DOOR.

299 & 299F Strike

VON DUPRIN®

NOTES: SEE MASTER SHEET #10001 FOR SUGGESTED REINFORCING

TEMPLATE NUMBER: 30039_a

DATE: 05-23-13

FOR ADDITIONAL INFORMATION SEE TEMPLATE NO. 10303

TYPE 161 STOCK HOLLOW METAL DOOR

TYPE 86 STOCK HOLLOW METAL DOOR

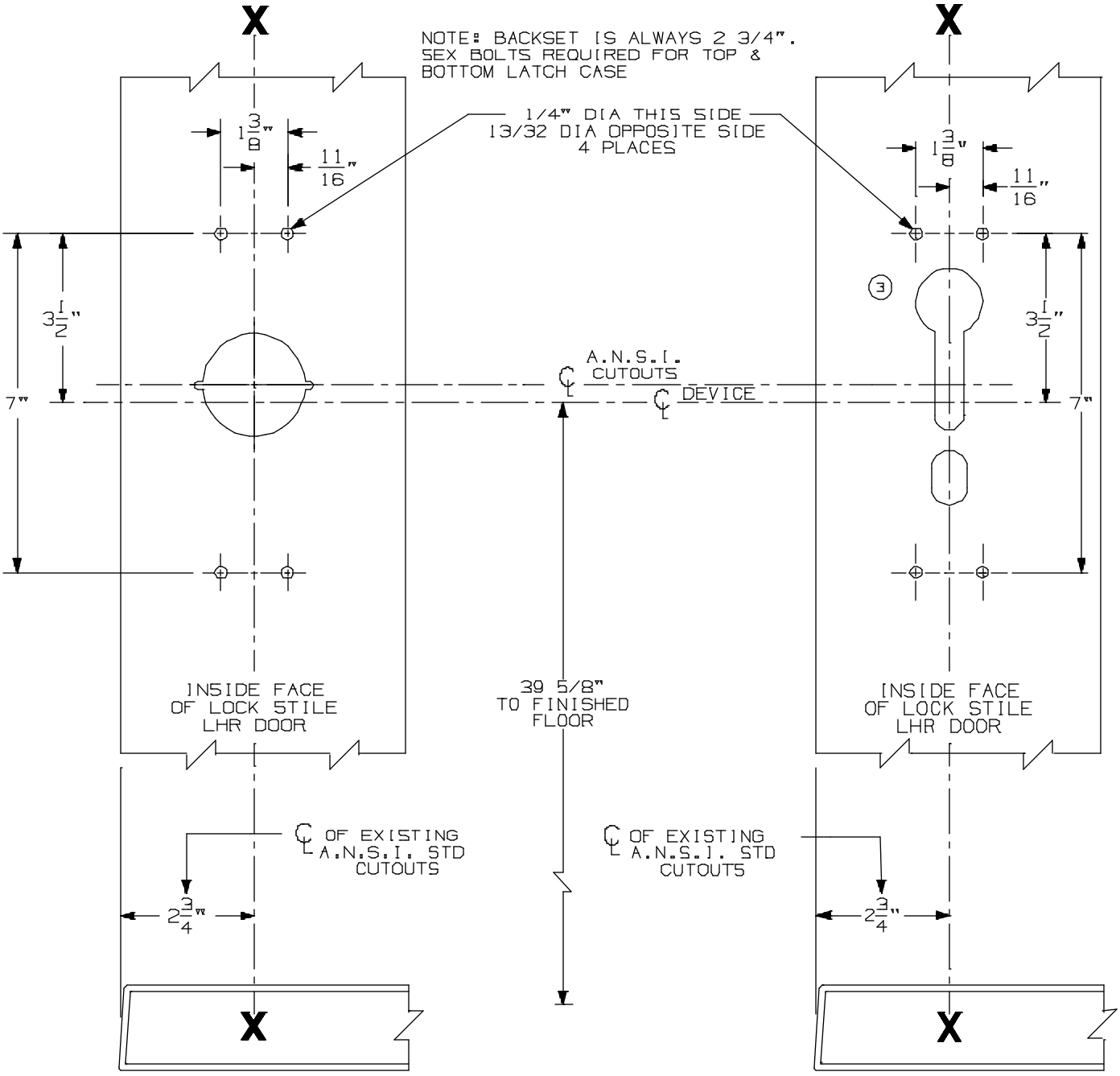

A.N.S.I. CUTOUTS ARE SHOWN FOR REFERENCE ONLY. SEE A.N.S.I. SPECIFICATION NO. A115 FOR THE SIZE AND LOCATION OF THESE CUTOUTS.

FOR OUTSIDE TRIM PREPARATION, SEE ADDITIONAL TRIM TEMPLATE.

LHR SHOWN
RHR OPPOSITE

9827/9927 EO, DT, & NL Vertical Rod Devices w/ 990, 991/992-DT & Rigid Trim for Stock Hollow Metal Applications	VON DUPRIN®	
NOTES: SEE MASTER SHEET #10001 FOR SUGGESTED REINFORCING	TEMPLATE NUMBER: 10310_a	DATE: 05-21-13

990 NL TRIM

NOTES: SEE MASTER SHEET #10001 FOR SUGGESTED REINFORCING

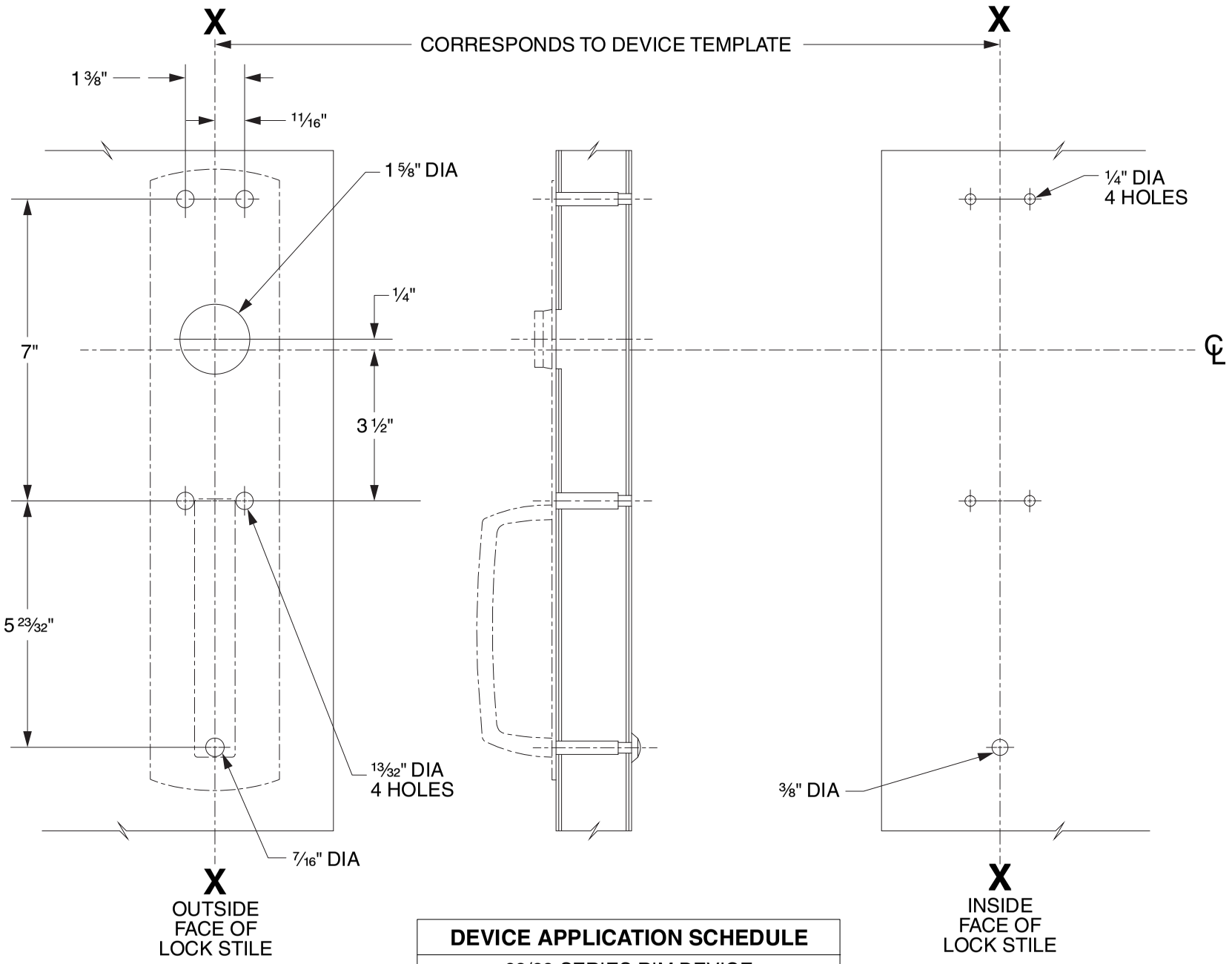

DEVICE APPLICATION SCHEDULE
98/99 SERIES RIM DEVICE
9827/9927 SERIES DEVICE
9847/9947 SERIES DEVICE
9849/9949 SERIES DEVICE

LHR SHOWN
RHR OPPOSITE

VON DUPRIN®

TEMPLATE NUMBER: 20267_C

DATE: 05-31-13

RIM APPLICATION

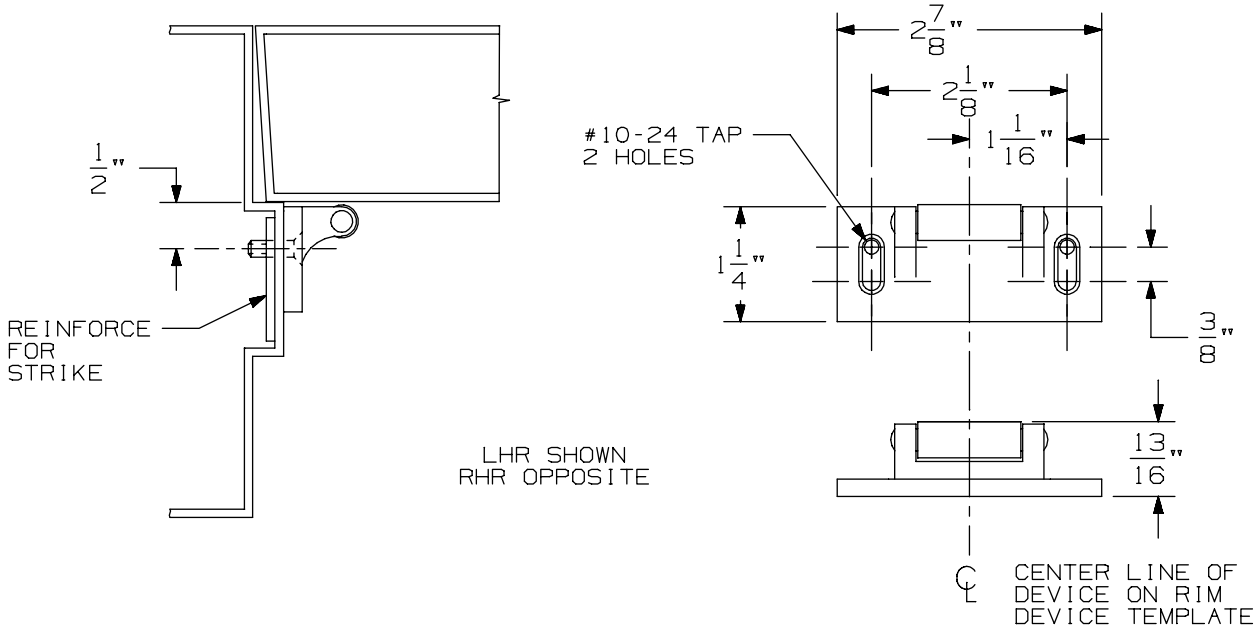

VERTICAL APPLICATION

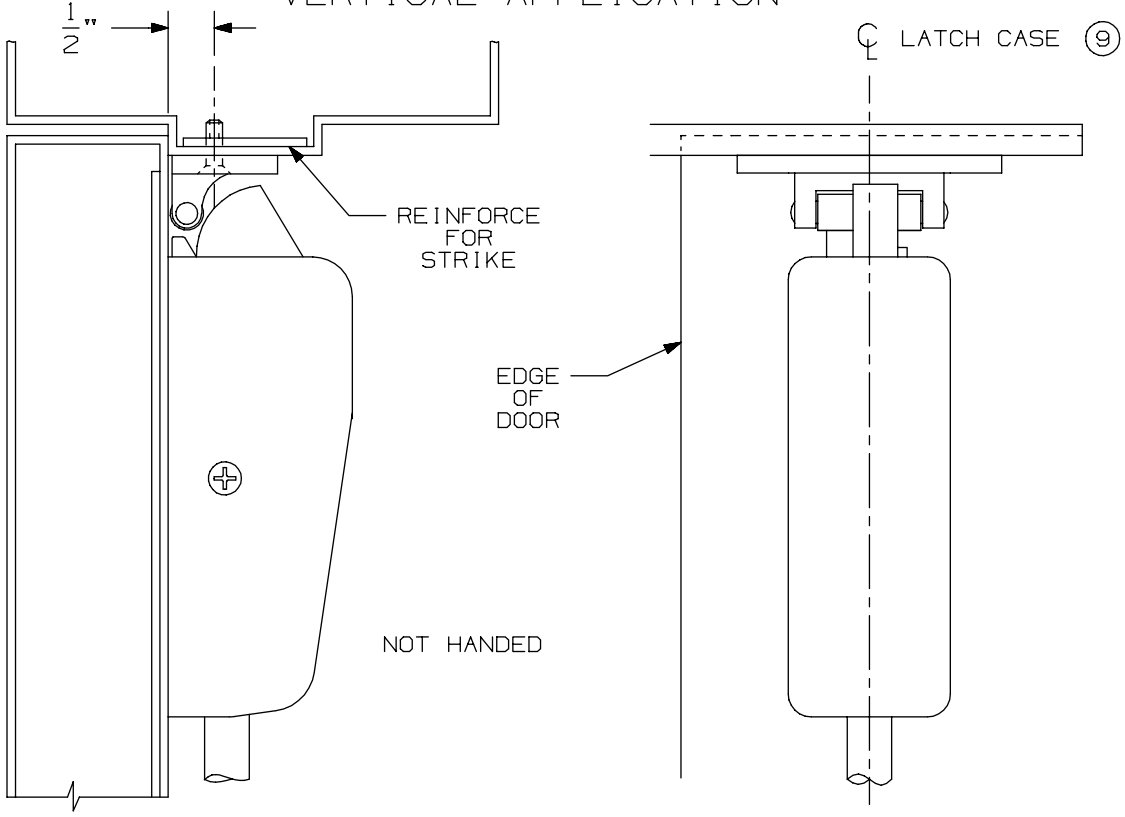

NOTE: LATCH CASE MOUNTING HOLES TO BE PREPARED AT INSTALLATION ON DOOR.

299 & 299F Strike

VON DUPRIN®

NOTES: SEE MASTER SHEET #10001 FOR SUGGESTED REINFORCING

TEMPLATE NUMBER: 30039_a

DATE: 05-23-13

FOR ADDITIONAL INFORMATION SEE TEMPLATE NO. 10304

TYPE 161 STOCK HOLLOW METAL DOOR

TYPE 86 STOCK HOLLOW METAL DOOR

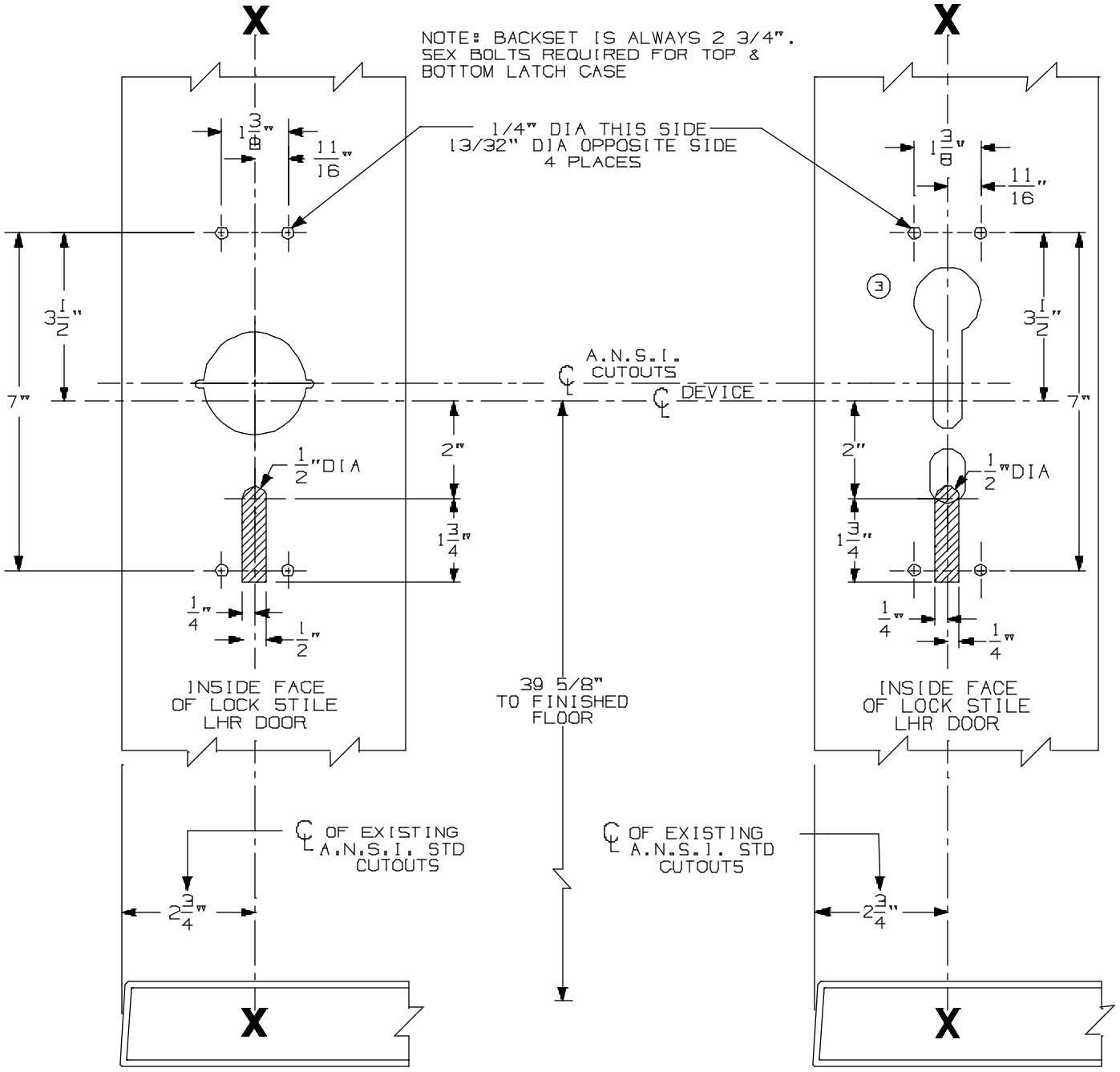

A.N.S.I. CUTOUTS ARE SHOWN FOR REFERENCE ONLY. SEE A.N.S.I. SPECIFICATION NO. A115 FOR THE SIZE AND LOCATION OF THESE CUTOUTS.

FOR OUTSIDE TRIM PREPARATION, SEE ADDITIONAL TRIM TEMPLATE.

LHR SHOWN
RHR OPPOSITE

9827/9927 TP, K, & L Vertical Rod Devices w/ 990, 991, & 992 Trim for Stock Hollow Metal Applications	VON DUPRIN®	
NOTES: SEE MASTER SHEET #10001 FOR SUGGESTED REINFORCING	TEMPLATE NUMBER: 10311_a	DATE: 05-21-13

991 K & 992 L Trim

NOTES: SEE MASTER SHEET #10001 FOR SUGGESTED REINFORCING

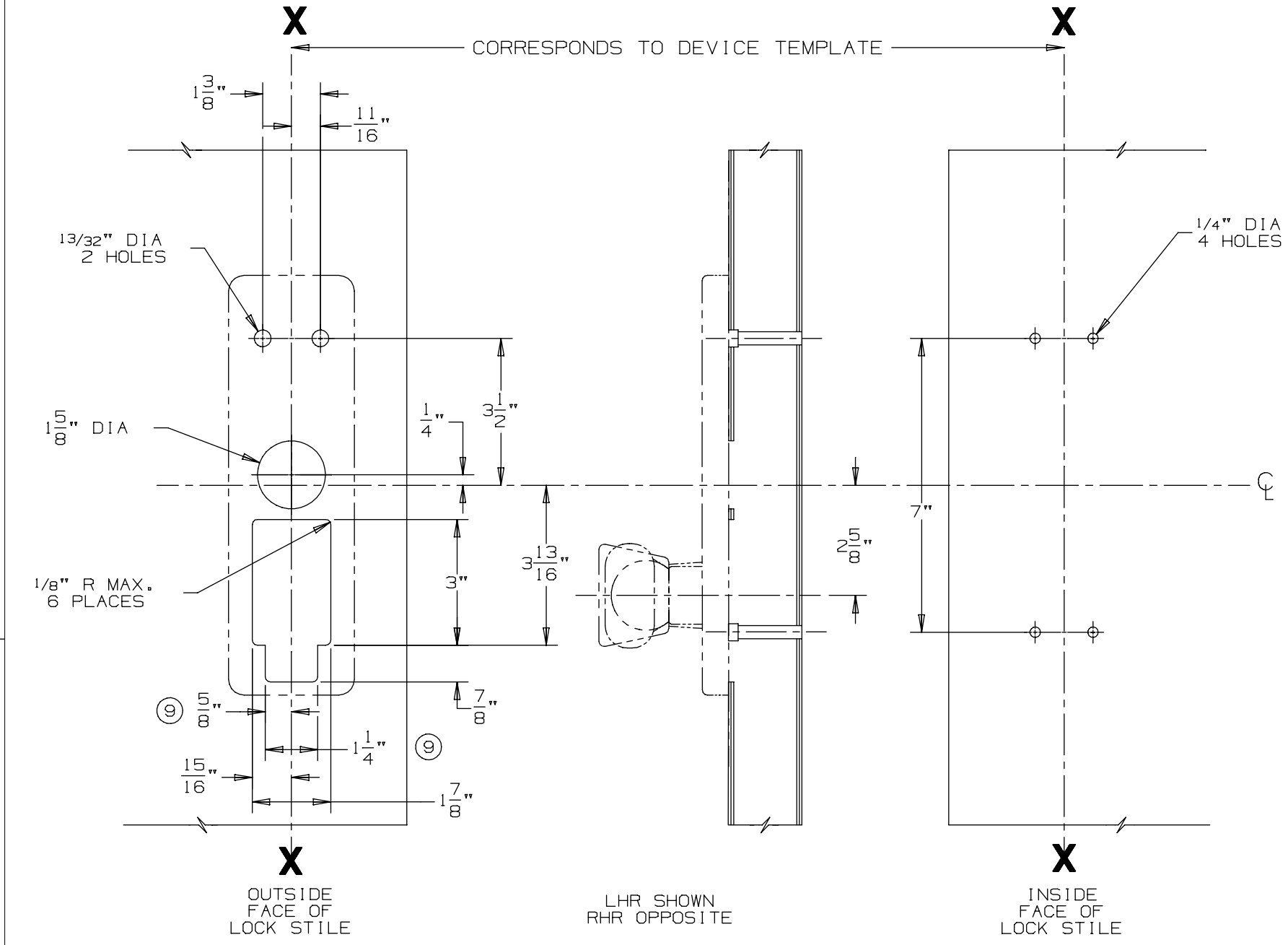

DEVICE APPLICATION SCHEDULE
98/99 SERIES RIM DEVICE
9827/9927 SERIES DEVICE
9847/9947 SERIES DEVICE

VON DUPRIN®

TEMPLATE NUMBER: 20272_a

DATE: 05-23-13

RIM APPLICATION

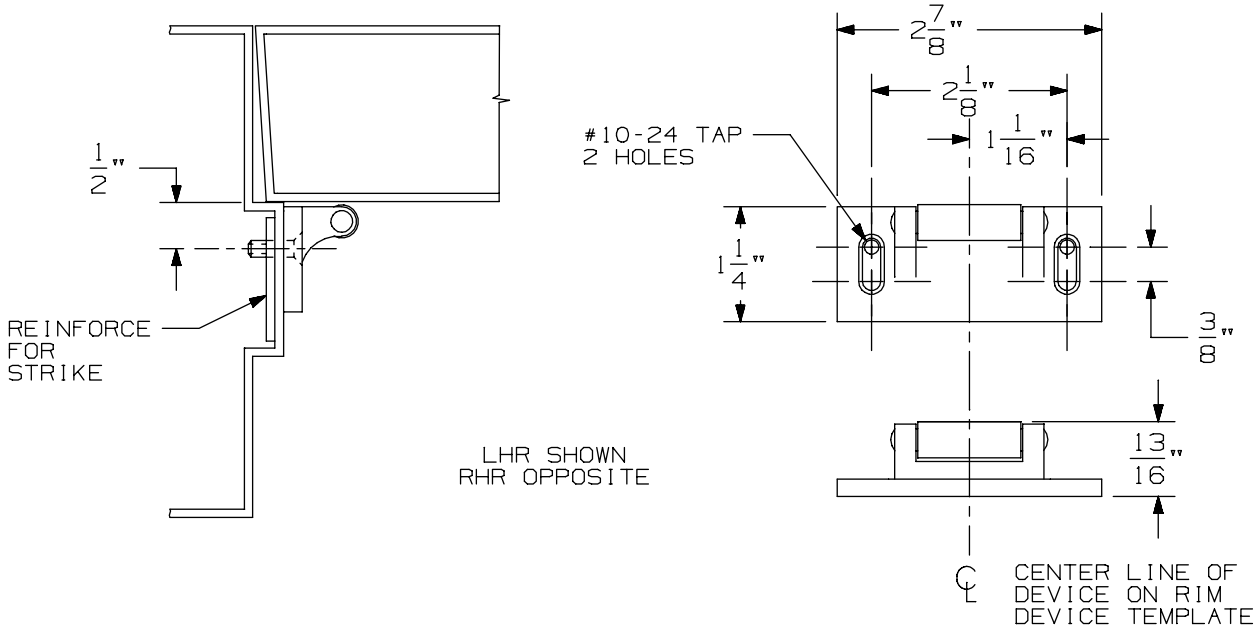

VERTICAL APPLICATION

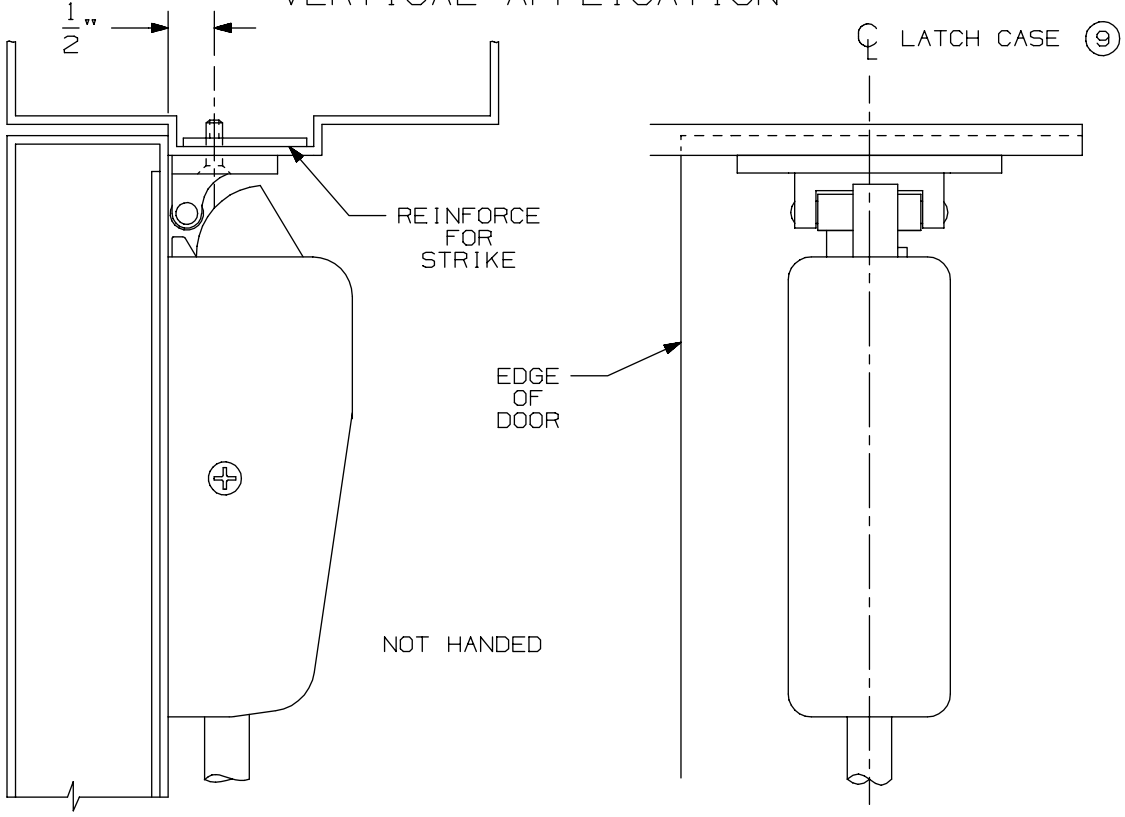

NOTE: LATCH CASE MOUNTING HOLES TO BE PREPARED AT INSTALLATION ON DOOR.

299 & 299F Strike

VON DUPRIN®

NOTES: SEE MASTER SHEET #10001 FOR SUGGESTED REINFORCING

TEMPLATE NUMBER: 30039_a

DATE: 05-23-13

FOR ADDITIONAL INFORMATION SEE TEMPLATE NO. 10304

TYPE 161 STOCK HOLLOW METAL DOOR

TYPE 86 STOCK HOLLOW METAL DOOR

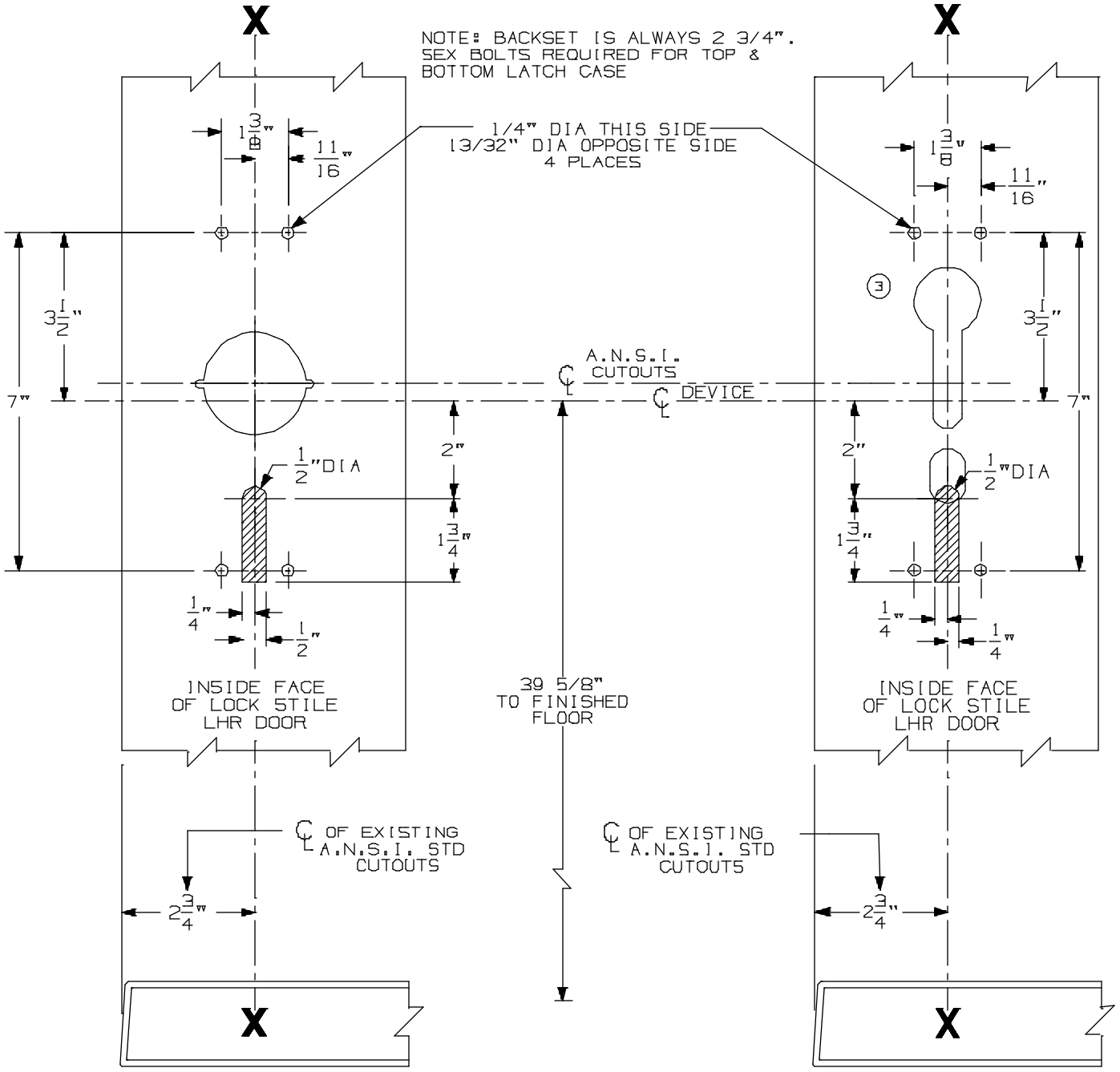

A.N.S.I. CUTOUTS ARE SHOWN FOR REFERENCE ONLY. SEE A.N.S.I. SPECIFICATION NO. A115 FOR THE SIZE AND LOCATION OF THESE CUTOUTS.

FOR OUTSIDE TRIM PREPARATION, SEE ADDITIONAL TRIM TEMPLATE.

LHR SHOWN
RHR OPPOSITE

9827/9927 TP, K, & L Vertical Rod Devices w/ 990, 991, & 992 Trim for Stock Hollow Metal Applications	VON DUPRIN®	
NOTES: SEE MASTER SHEET #10001 FOR SUGGESTED REINFORCING	TEMPLATE NUMBER: 10311_a	DATE: 05-21-13

DEVICE APPLICATION SCHEDULE	
98 RIM SERIES	99 RIM SERIES
9827 SERIES	9927 SERIES
9847 SERIES	9947 SERIES
9849 SERIES	9949 SERIES

996L, E996L, 996L-BE, E996L-BE 996K, 996K-BE R/V SERIES
TRIM METAL DOOR APPLICATION

VON DUPRIN®

NOTES: SEE MASTER SHEET #10001 FOR SUGGESTED REINFORCING

TEMPLATE NUMBER: 20003_e

DATE: 10-30-14

RIM APPLICATION

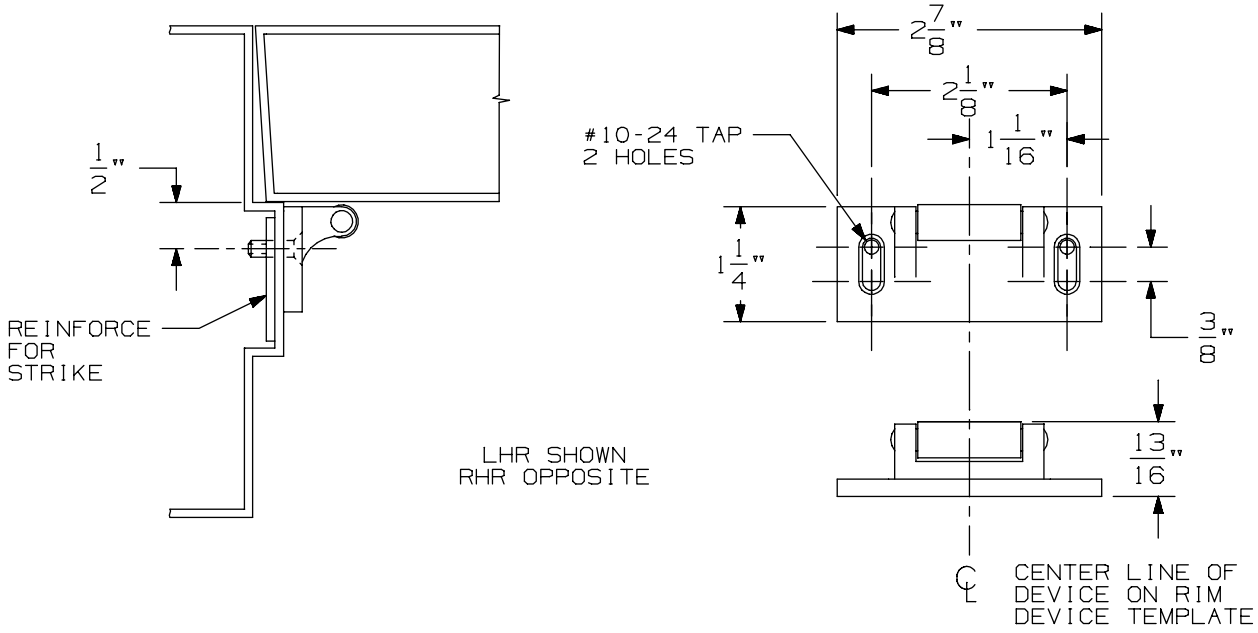

VERTICAL APPLICATION

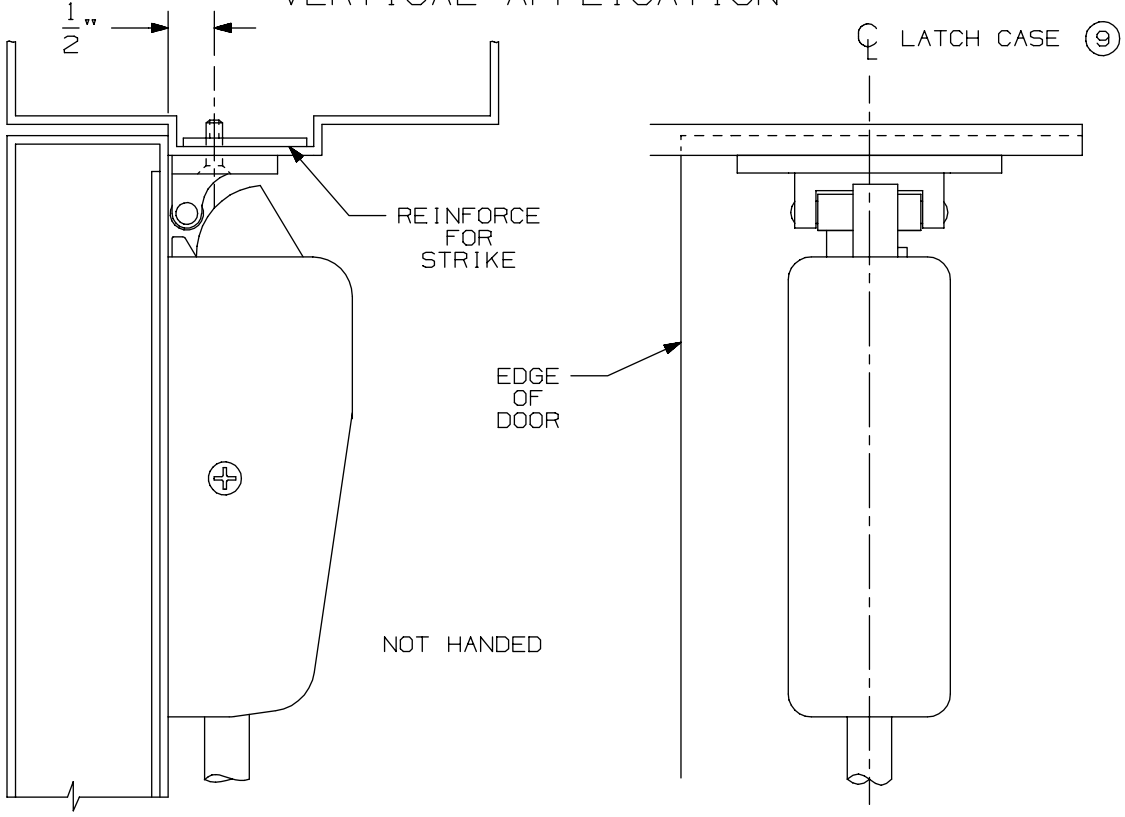

NOTE: LATCH CASE MOUNTING HOLES TO BE PREPARED AT INSTALLATION ON DOOR.

299 & 299F Strike

VON DUPRIN®

NOTES: SEE MASTER SHEET #10001 FOR SUGGESTED REINFORCING

TEMPLATE NUMBER: 30039_a

DATE: 05-23-13

FOR ADDITIONAL INFORMATION SEE TEMPLATE NO. 10304

TYPE 161 STOCK HOLLOW METAL DOOR

TYPE 86 STOCK HOLLOW METAL DOOR

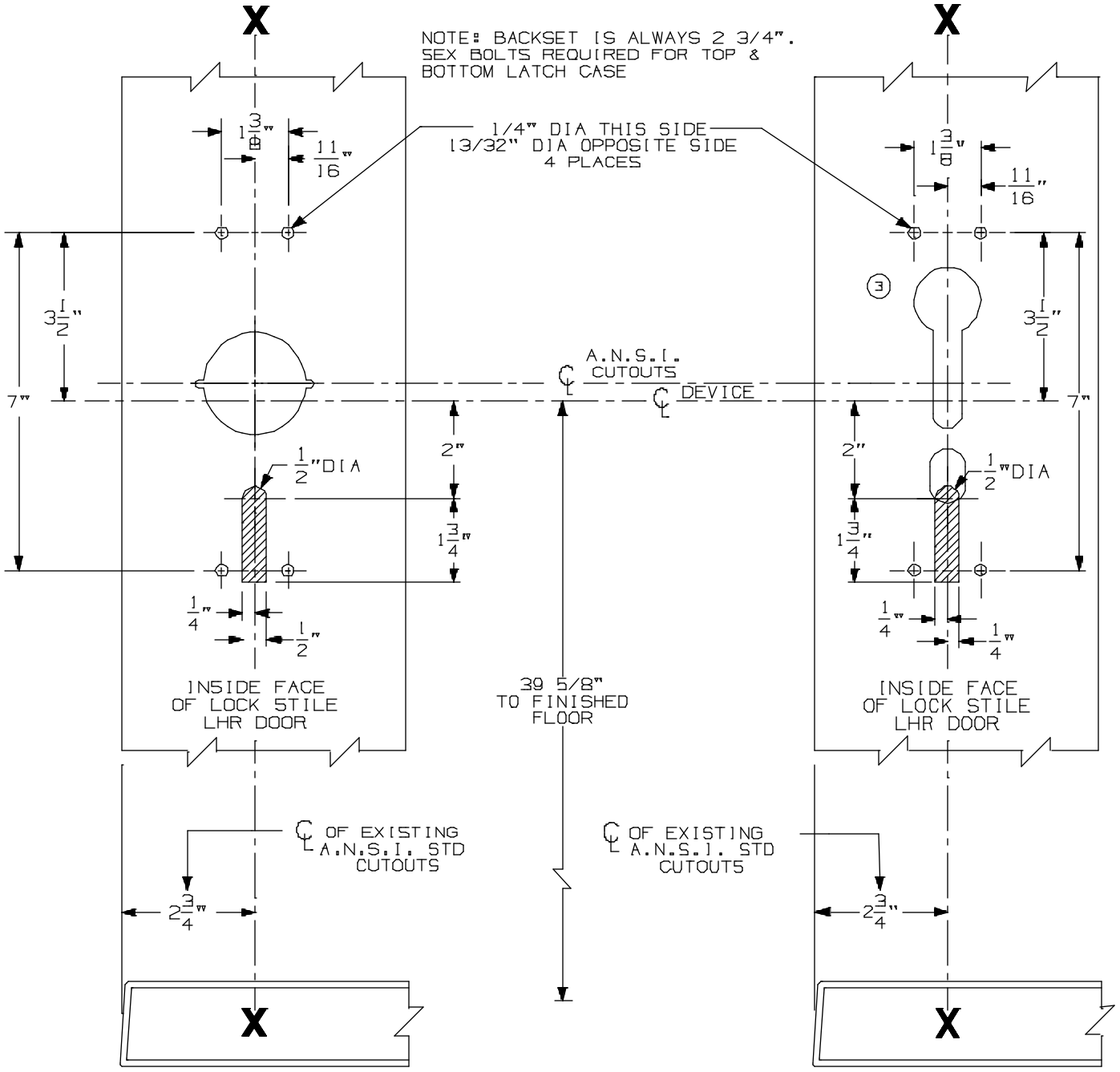

A.N.S.I. CUTOUTS ARE SHOWN FOR REFERENCE ONLY. SEE A.N.S.I. SPECIFICATION NO. A115 FOR THE SIZE AND LOCATION OF THESE CUTOUTS.

FOR OUTSIDE TRIM PREPARATION, SEE ADDITIONAL TRIM TEMPLATE.

LHR SHOWN
RHR OPPOSITE

9827/9927 TP, K, & L Vertical Rod Devices w/ 990, 991, & 992 Trim for Stock Hollow Metal Applications	VON DUPRIN®	
NOTES: SEE MASTER SHEET #10001 FOR SUGGESTED REINFORCING	TEMPLATE NUMBER: 10311_a	DATE: 05-21-13

990 TP & 990 TP-BE TRIM

NOTES: SEE MASTER SHEET #10001 FOR SUGGESTED REINFORCING

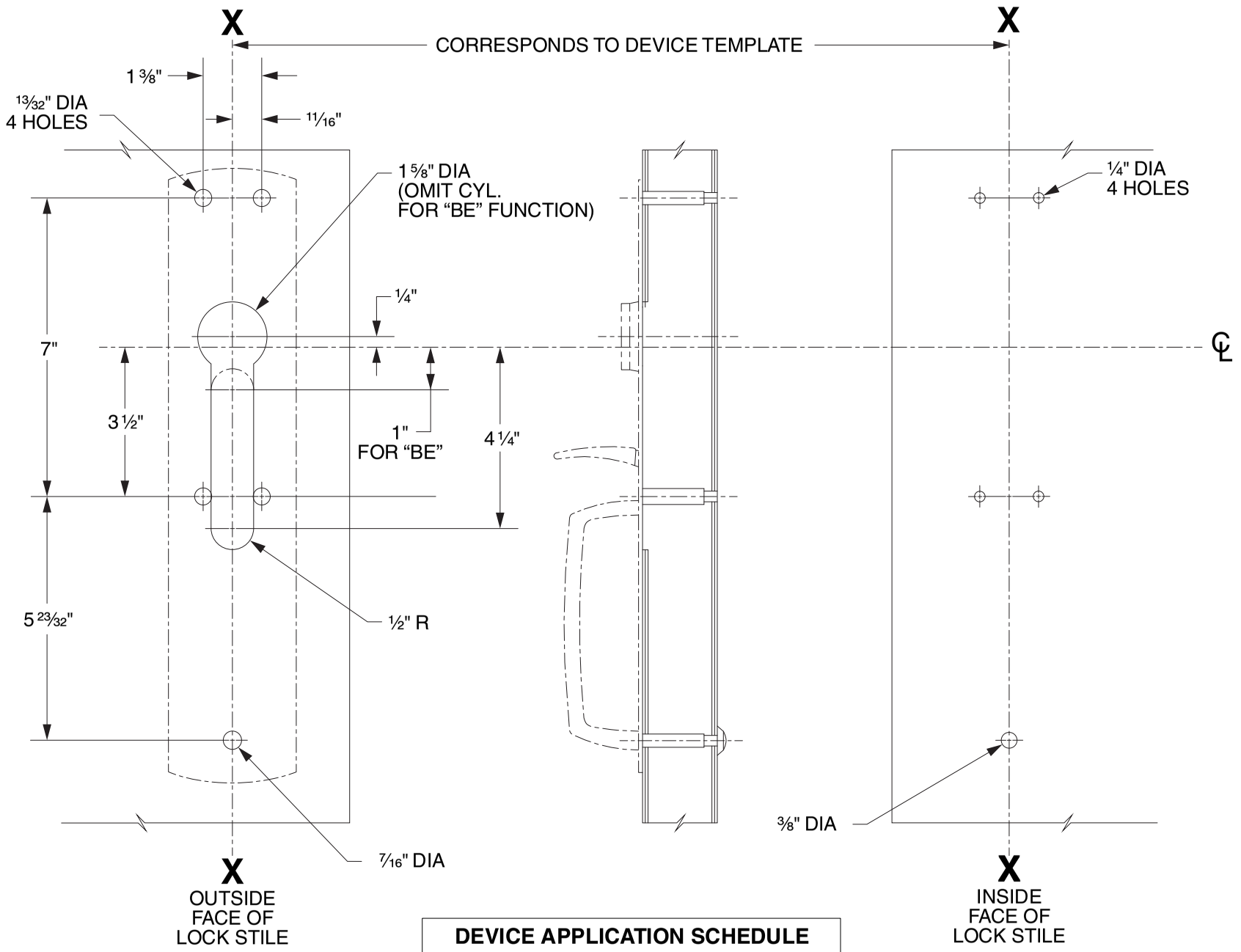

DEVICE APPLICATION SCHEDULE
98/99 SERIES RIM DEVICE
9827/9927 SERIES DEVICE
9847/9947 SERIES DEVICE
9849/9949 SERIES DEVICE

LHR SHOWN
RHR OPPOSITE

VON DUPRIN®

TEMPLATE NUMBER: 20265_C

DATE: 05-31-13

RIM APPLICATION

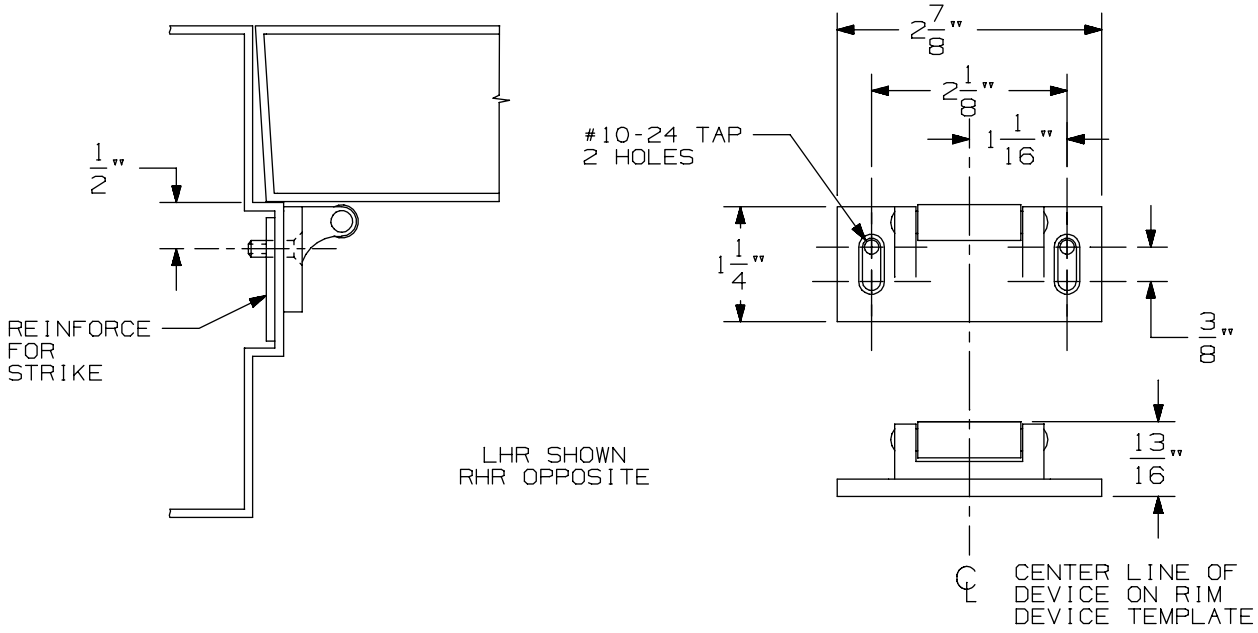

VERTICAL APPLICATION

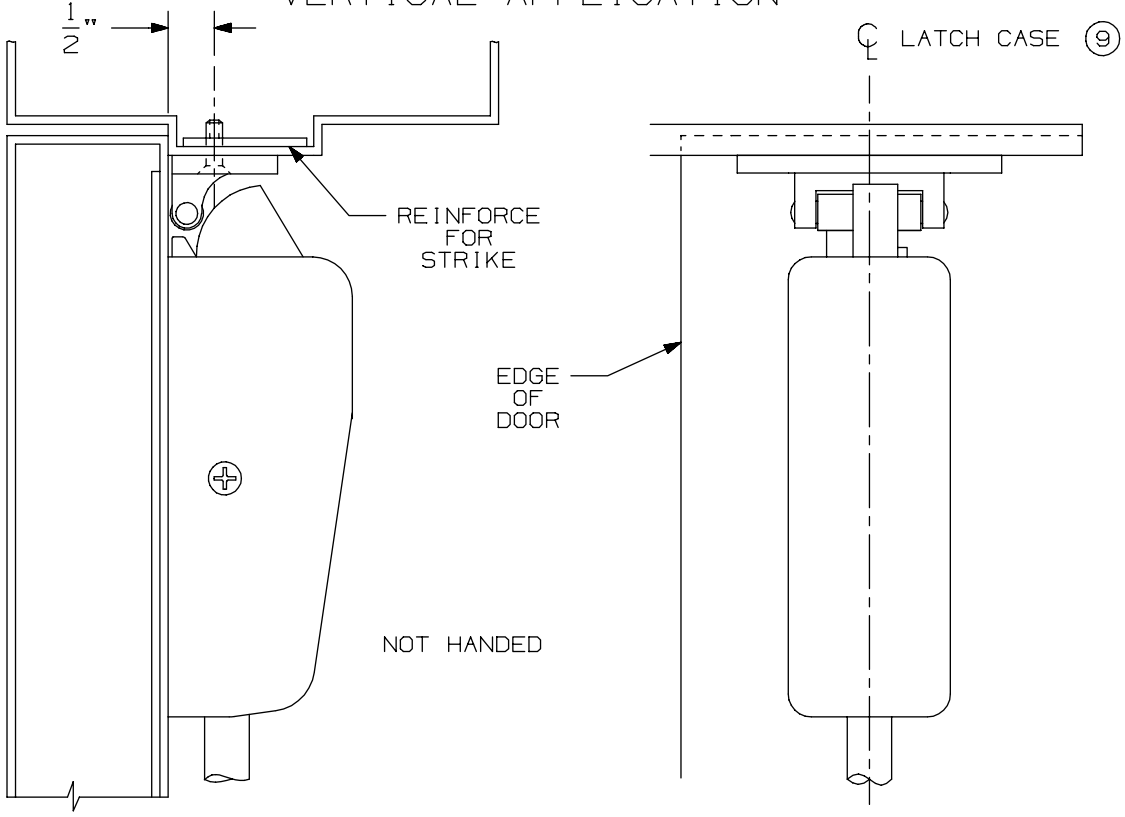

NOTE: LATCH CASE MOUNTING HOLES TO BE PREPARED AT INSTALLATION ON DOOR.

299 & 299F Strike

VON DUPRIN®

NOTES: SEE MASTER SHEET #10001 FOR SUGGESTED REINFORCING

TEMPLATE NUMBER: 30039_a

DATE: 05-23-13

98 / 99 Series Chex-it® Exit Devices

98 / 99 Series Chex-it® Exit Devices

-

CX98/CX99 Rim

APPLICATION	PREPARATION
SURFACE APPLICATION	#10-24 TAP 4 PLACES
990 TRIM APPLICATION OR SEX BOLT APPLICATION (SEE NOTE 1)	1/4" DIA THIS SIDE 13/32" DIA OPPOSITE SIDE - 4 PLACES

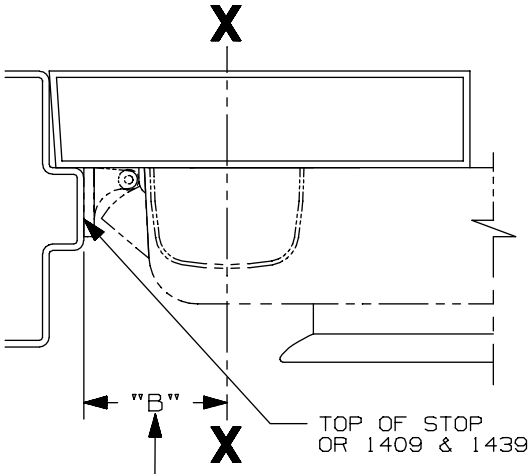

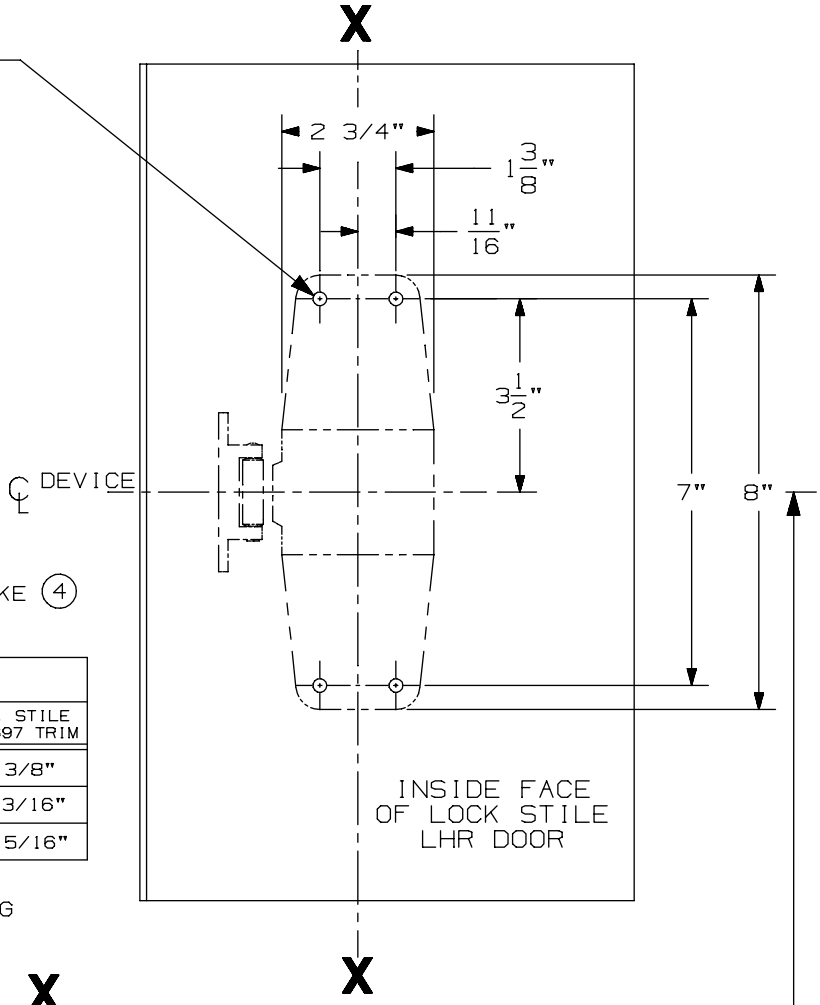

SINGLE DOOR INSTALLATION			
STRIKE	DIM. "B"	MIN. STILE 990/991/992 TRIM	MIN. STILE 696/697 TRIM
299 & 299-F	2 3/8"	4 1/2"	4 3/8"
(4) 1409 & 1439	1 9/16"	3 13/16"	3 13/16"
1606	1 15/16"	4 1/16"	3 15/16"

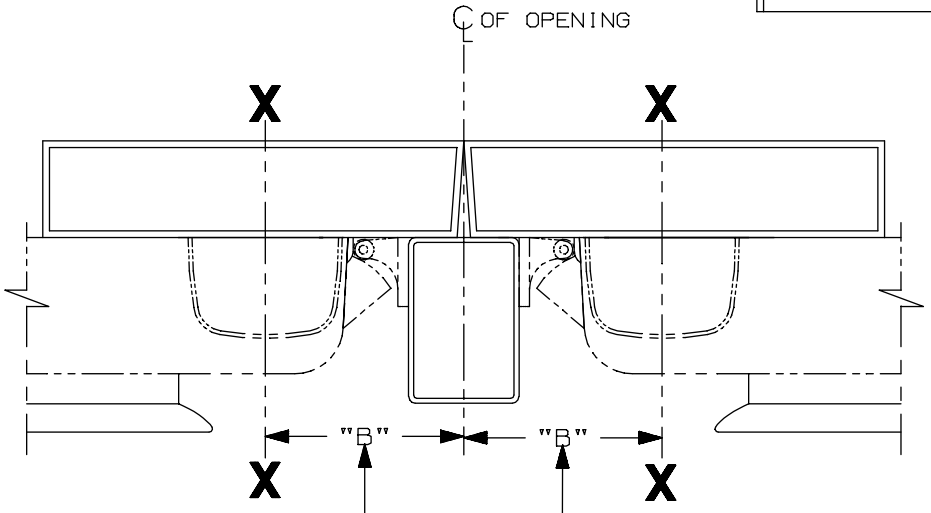

SINGLE DOOR OPENING
39 13/16" TO FINISHED FLOOR

DOUBLE DOOR OPENING
WITH VON DUPRIN MULLION
39 11/16"

LHR APPLICATION SHOWN,
RHR APPLICATION OPPOSITE

DOUBLE DOOR INSTALLATION WITH VON DUPRIN MULLIONS				
MULLION	STRIKE	DIM. "B"	MIN. STILE 990/991/992 TRIM	MIN. STILE 696/697 TRIM
(4) 4954/9954	299/299-F	3 3/8"	4 7/8"	4 3/4"
9954	499-F	3 1/2"	5"	4 7/8"
5654	299	2 15/16"	4 3/8"	4 1/4"
5754	1408	2 1/8"	3 13/16"	3 13/16"
1654	1606	2 15/16"	4 3/8"	4 1/4"

NOTES:
1. THESE FOUR HOLES TO BE PREPARED FOR SURFACE APPLICATION WHEN USING 696/697 TRIM. DO NOT PREPARE FOR SEX BOLTS.
2. FOR STOCK HOLLOW METAL DOORS SEE TEMPLATE NO. 10307 FOR TYPE "161" CUTOUT AND 10313 FOR TYPE "86" CUTOUT.
3. GLASS BEAD KIT AVAILABLE WHEN REQUIRED.
4. FOR OUTSIDE TRIM PREPARATION, WHEN REQUIRED, SEE TRIM TEMPLATE.
5. 9954 W/299-F FOR HURRICANE APPLICATIONS ONLY. (4)

CX98/99 EO, DT Series Rim Device

VON DUPRIN®

NOTES: SEE MASTER SHEET #10001 FOR SUGGESTED REINFORCING

TEMPLATE NUMBER: 10353_a

DATE: 05-22-13

RIM APPLICATION

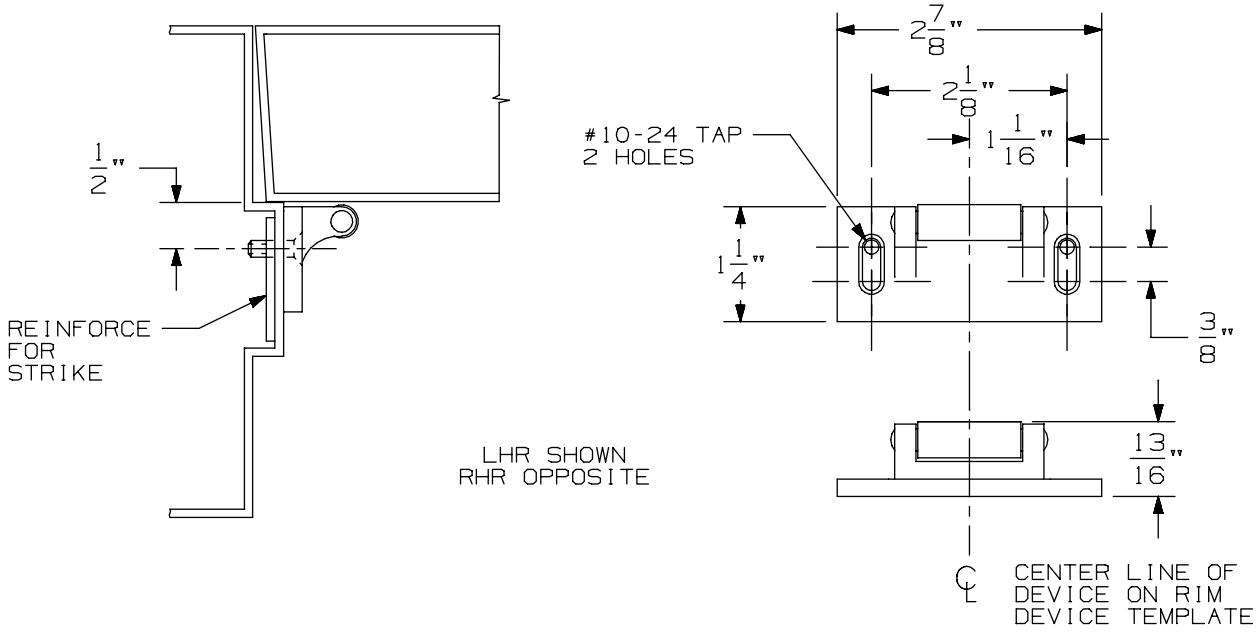

VERTICAL APPLICATION

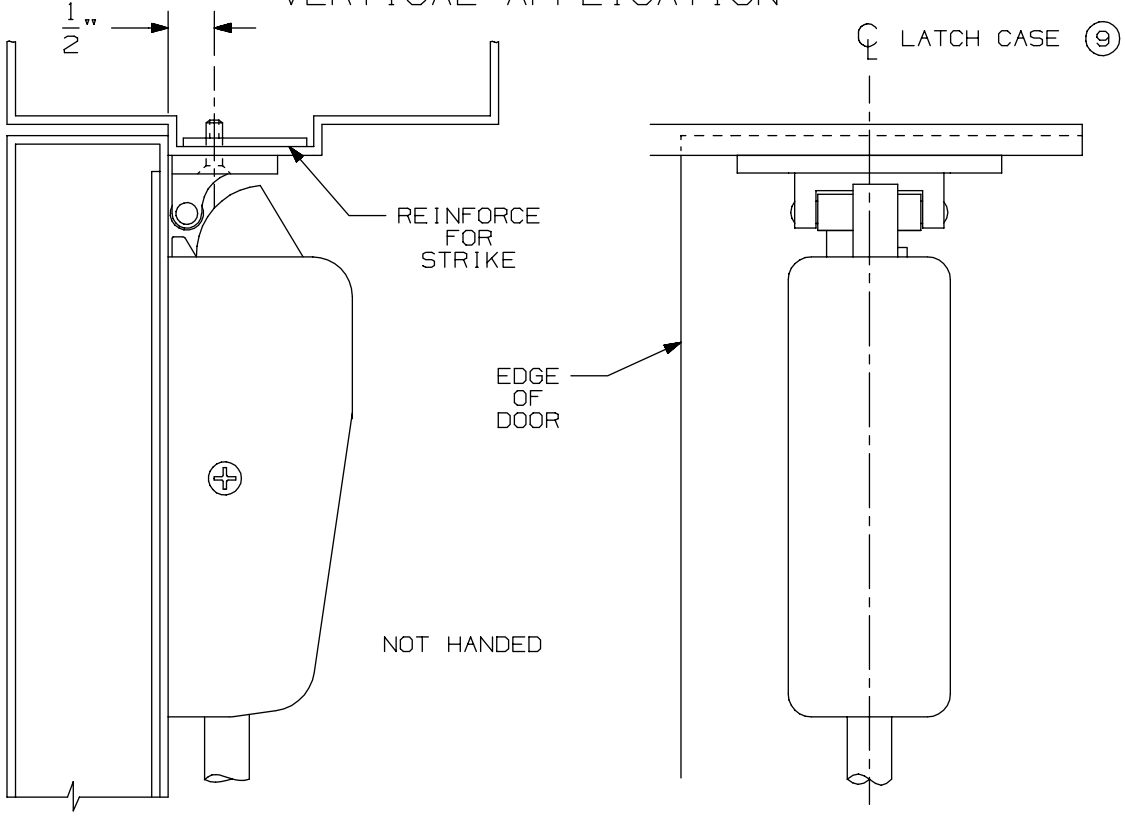

NOTE: LATCH CASE MOUNTING HOLES TO BE PREPARED AT INSTALLATION ON DOOR.

299 & 299F Strike

VON DUPRIN®

NOTES: SEE MASTER SHEET #10001 FOR SUGGESTED REINFORCING

TEMPLATE NUMBER: 30039_a

DATE: 05-23-13

APPLICATION	PREPARATION
SURFACE APPLICATION	#10-24 TAP 4 PLACES
990 TRIM APPLICATION OR SEX BOLT APPLICATION (SEE NOTE 1)	1/4" DIA THIS SIDE 13/32" DIA OPPOSITE SIDE - 4 PLACES

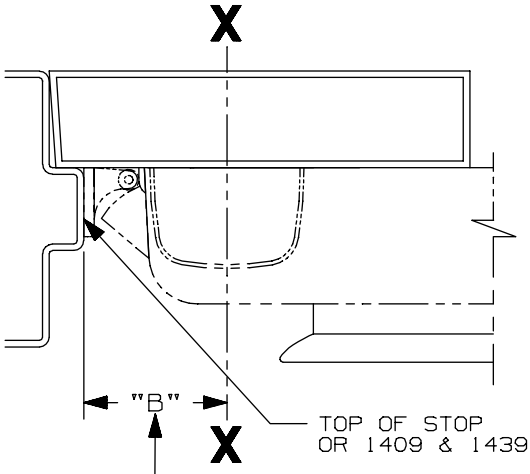

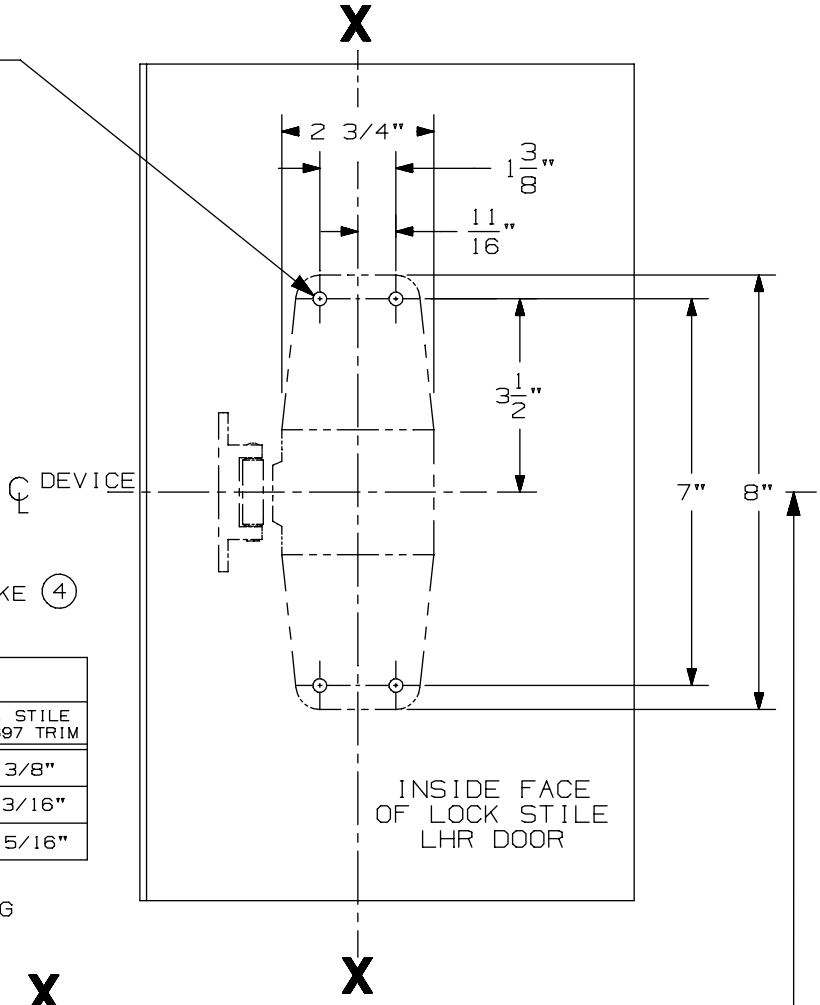

SINGLE DOOR INSTALLATION			
STRIKE	DIM. "B"	MIN. STILE 990/991/992 TRIM	MIN. STILE 696/697 TRIM
299 & 299-F	2 3/8"	4 1/2"	4 3/8"
(4) 1409 & 1439	1 9/16"	3 13/16"	3 13/16"
1606	1 15/16"	4 1/16"	3 15/16"

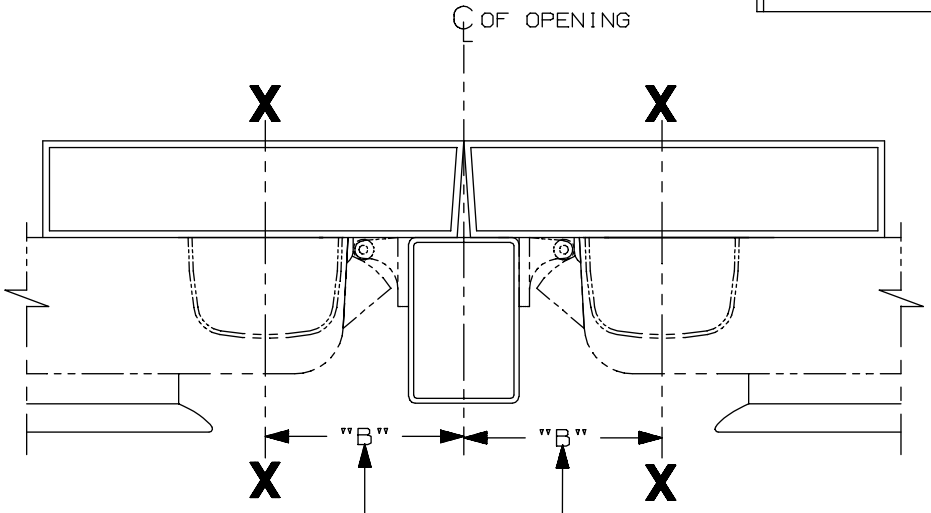

SINGLE DOOR OPENING
39 13/16" TO FINISHED FLOOR

DOUBLE DOOR OPENING
WITH VON DUPRIN MULLION
39 11/16"

LHR APPLICATION SHOWN,
RHR APPLICATION OPPOSITE

DOUBLE DOOR INSTALLATION WITH VON DUPRIN MULLIONS				
MULLION	STRIKE	DIM. "B"	MIN. STILE 990/991/992 TRIM	MIN. STILE 696/697 TRIM
(4) 4954/9954	299/299-F	3 3/8"	4 7/8"	4 3/4"
9954	499-F	3 1/2"	5"	4 7/8"
5654	299	2 15/16"	4 3/8"	4 1/4"
5754	1408	2 1/8"	3 13/16"	3 13/16"
1654	1606	2 15/16"	4 3/8"	4 1/4"

NOTES:
1. THESE FOUR HOLES TO BE PREPARED FOR SURFACE APPLICATION WHEN USING 696/697 TRIM. DO NOT PREPARE FOR SEX BOLTS.
2. FOR STOCK HOLLOW METAL DOORS SEE TEMPLATE NO. 10307 FOR TYPE "161" CUTOUT AND 10313 FOR TYPE "86" CUTOUT.
3. GLASS BEAD KIT AVAILABLE WHEN REQUIRED.
4. FOR OUTSIDE TRIM PREPARATION, WHEN REQUIRED, SEE TRIM TEMPLATE.
5. 9954 W/299-F FOR HURRICANE APPLICATIONS ONLY. (4)

CX98/99 EO, DT Series Rim Device

VON DUPRIN®

NOTES: SEE MASTER SHEET #10001 FOR SUGGESTED REINFORCING

TEMPLATE NUMBER: 10353_a

DATE: 05-22-13

990 DT TRIM

NOTES: SEE MASTER SHEET #10001 FOR SUGGESTED REINFORCING

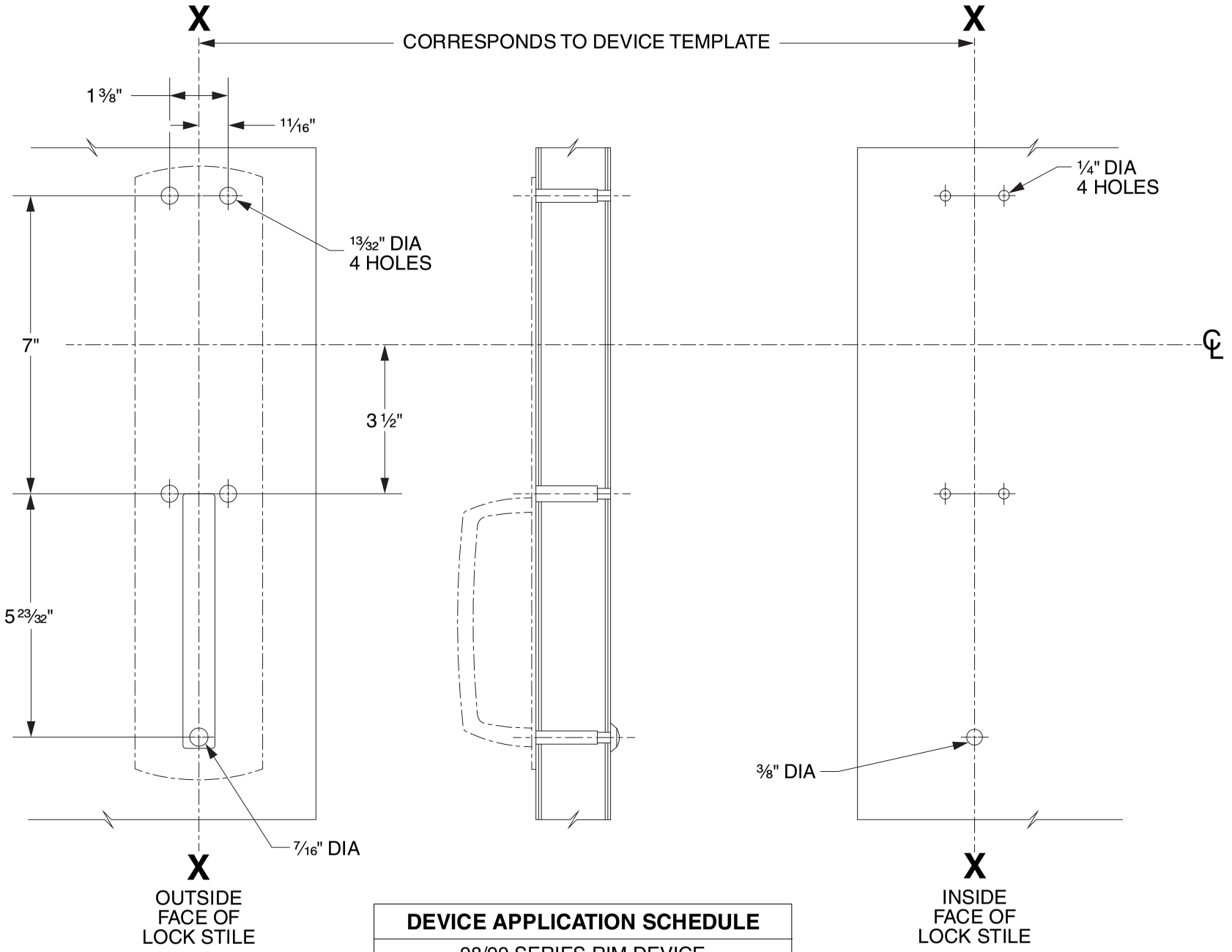

DEVICE APPLICATION SCHEDULE
98/99 SERIES RIM DEVICE
9827/9927 SERIES DEVICE
9847/9947 SERIES DEVICE
9849/9949 SERIES DEVICE
9875/9975 SERIES DEVICE

LHR SHOWN
RHR OPPOSITE

VON DUPRIN®

TEMPLATE NUMBER: 20268_C

DATE: 05-31-13

RIM APPLICATION

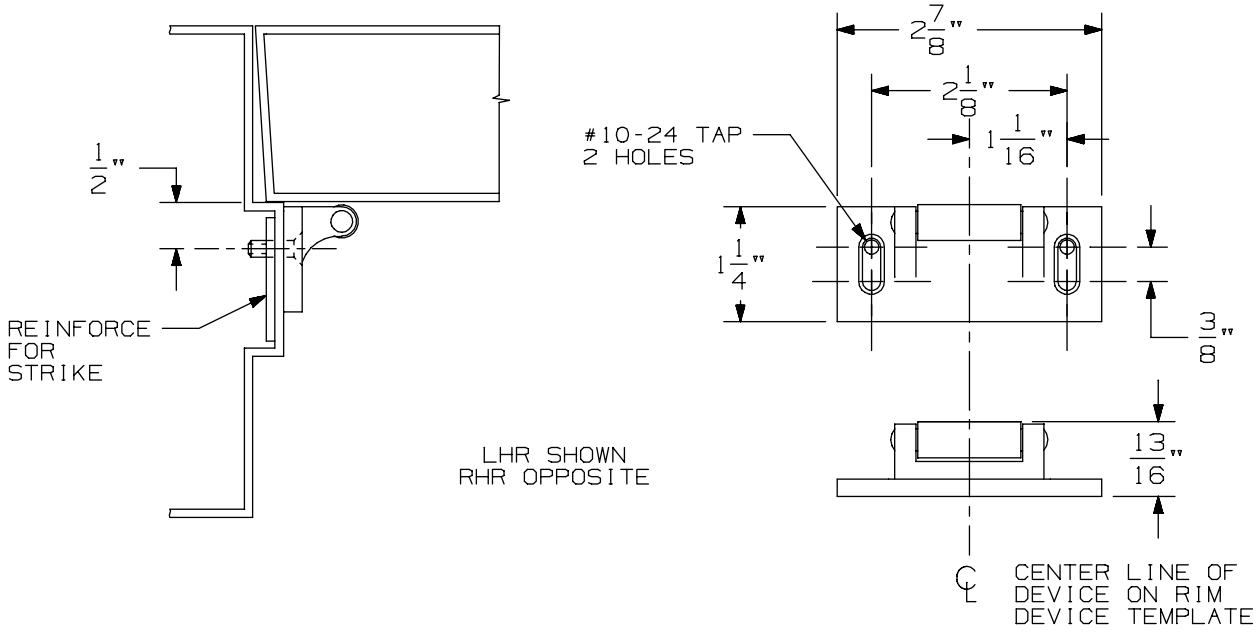

VERTICAL APPLICATION

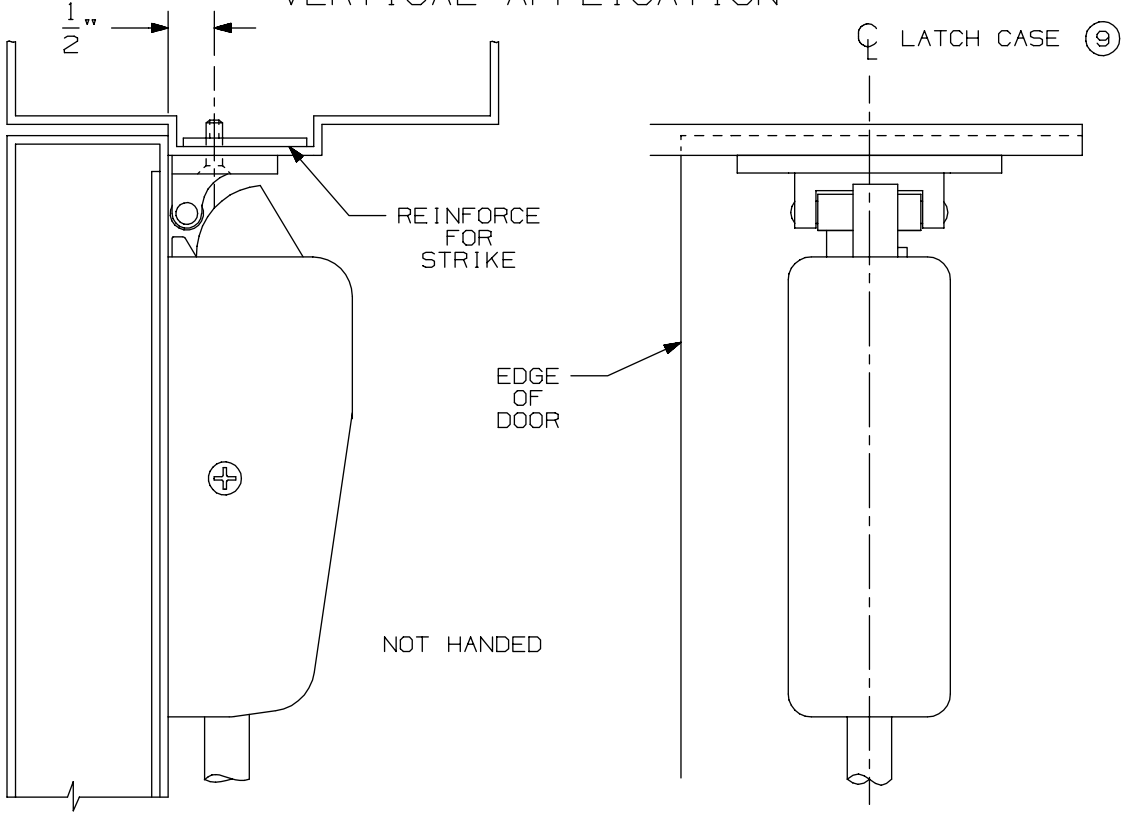

NOTE: LATCH CASE MOUNTING HOLES TO BE PREPARED AT INSTALLATION ON DOOR.

299 & 299F Strike

VON DUPRIN®

NOTES: SEE MASTER SHEET #10001 FOR SUGGESTED REINFORCING

TEMPLATE NUMBER: 30039_a

DATE: 05-23-13

APPLICATION	PREPARATION
SURFACE APPLICATION	#10-24 TAP 4 PLACES
990 TRIM APPLICATION OR SEX BOLT APPLICATION (SEE NOTE 1)	1/4' DIA THIS SIDE 13/32" DIA OPPOSITE SIDE - 4 PLACES

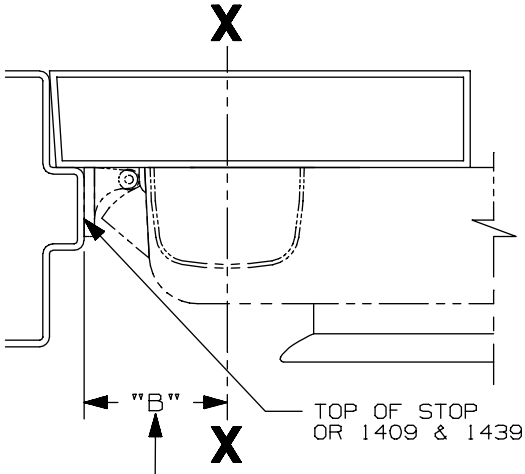

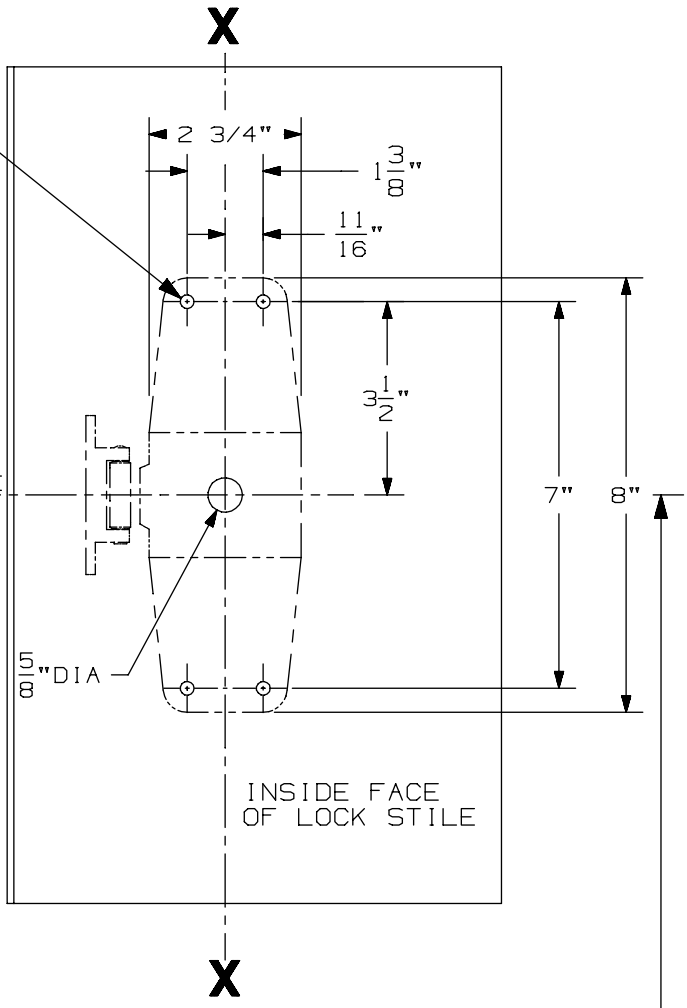

SINGLE DOOR INSTALLATION			
STRIKE	DIM. "B"	MIN. STILE 990/991/992 TRIM	MIN. STILE 696/697 TRIM
299 & 299-F	2 3/8"	4 1/2"	4 3/8"
(6) 1409 & 1439	1 9/16"	3 13/16"	3 13/16"
1606	1 15/16"	4 1/16"	3 15/16"

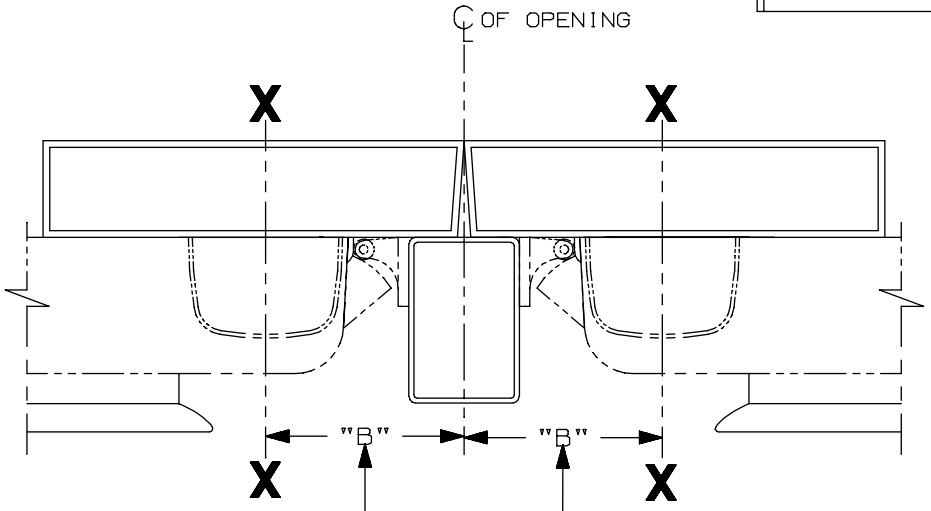

SINGLE DOOR OPENING
39 13/16" TO FINISHED FLOOR

DOUBLE DOOR OPENING
WITH VON DUPRIN MULLION
39 11/16"

LHR APPLICATION SHOWN
RHR APPLICATION OPPOSITE

DOUBLE DOOR INSTALLATION WITH VON DUPRIN MULLIONS				
MULLION	STRIKE	DIM. "B"	MIN. STILE 990/991/992 TRIM	MIN. STILE 696/697 TRIM
(6) 4954/9954	299/299-F	3 3/8"	4 7/8"	4 3/4"
9954	499-F	3 1/2"	5"	4 7/8"
5654	299	2 15/16"	4 3/8"	4 1/4"
5754	1408	2 1/8"	3 13/16"	3 13/16"
1654	1606	2 15/16"	4 3/8"	4 1/4"

NOTES:
1. THESE FOUR HOLES TO BE PREPARED FOR SURFACE APPLICATION WHEN USING 696/697 TRIM. DO NOT PREPARE FOR SEX BOLTS.
2. FOR STOCK HOLLOW METAL DOORS SEE TEMPLATE NO. 10307 FOR TYPE "161" CUTOUT AND 10314 FOR TYPE "86" CUTOUT.
3. GLASS BEAD KIT AVAILABLE WHEN REQUIRED.
4. FOR OUTSIDE TRIM PREPARATION, WHEN REQUIRED, SEE TRIM TEMPLATE.
5. 9954 W/299-F FOR HURRICANE APPLICATIONS ONLY. (6)

CX98/CX99 NL Series Rim Device

VON DUPRIN®

NOTES: SEE MASTER SHEET #10001 FOR SUGGESTED REINFORCING

TEMPLATE NUMBER: 10354_a

DATE: 05-22-13

990 NL TRIM

NOTES: SEE MASTER SHEET #10001 FOR SUGGESTED REINFORCING

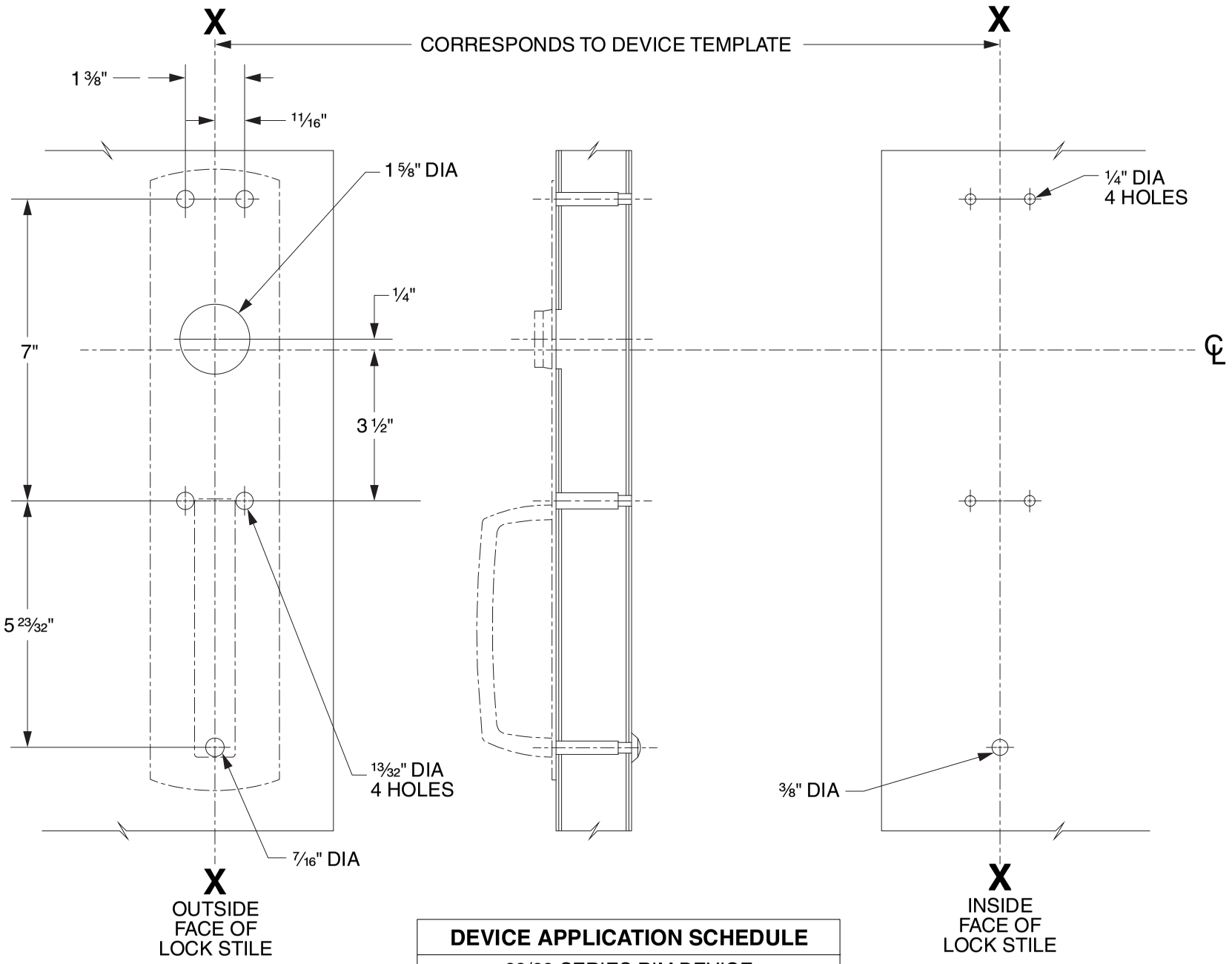

DEVICE APPLICATION SCHEDULE
98/99 SERIES RIM DEVICE
9827/9927 SERIES DEVICE
9847/9947 SERIES DEVICE
9849/9949 SERIES DEVICE

LHR SHOWN
RHR OPPOSITE

VON DUPRIN®

TEMPLATE NUMBER: 20267_C

DATE: 05-31-13

RIM APPLICATION

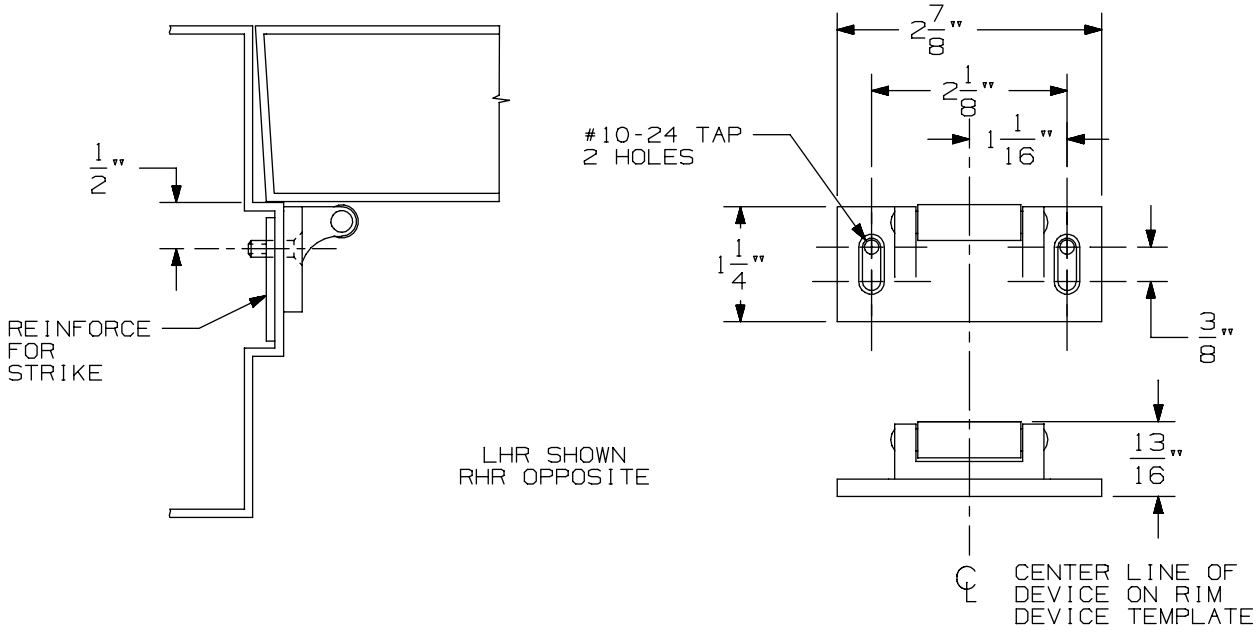

VERTICAL APPLICATION

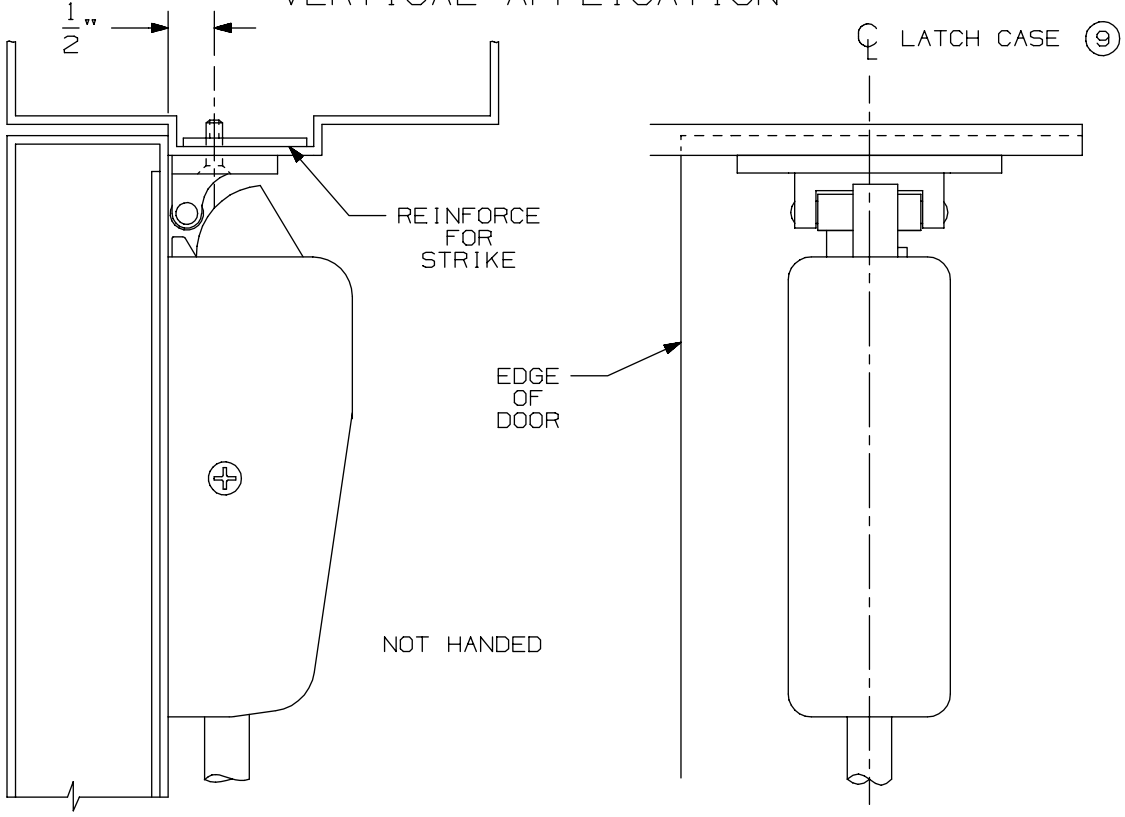

NOTE: LATCH CASE MOUNTING HOLES TO BE PREPARED AT INSTALLATION ON DOOR.

299 & 299F Strike

VON DUPRIN®

NOTES: SEE MASTER SHEET #10001 FOR SUGGESTED REINFORCING

TEMPLATE NUMBER: 30039_a

DATE: 05-23-13

APPLICATION	PREPARATION
SURFACE APPLICATION	#10-24 TAP 4 PLACES
990 TRIM APPLICATION OR SEX BOLT APPLICATION (SEE NOTE 1)	1/4' DIA THIS SIDE 13/32" DIA OPPOSITE SIDE - 4 PLACES

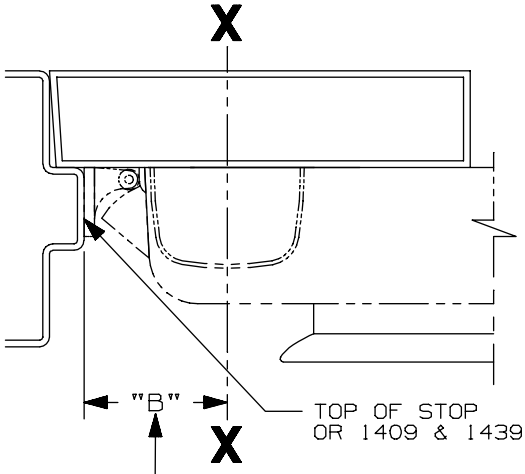

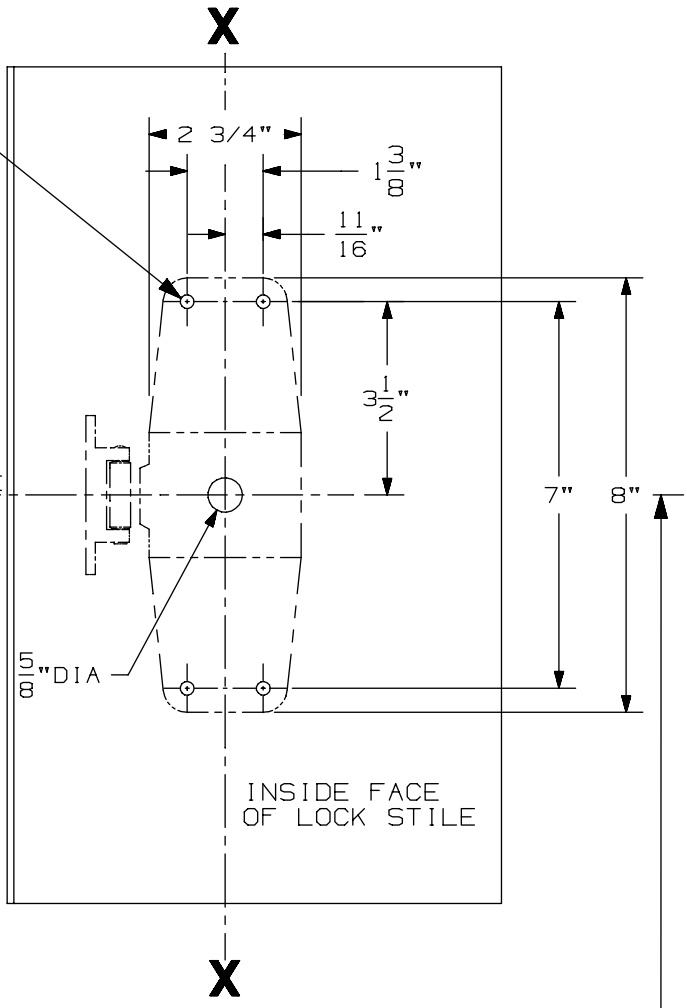

SINGLE DOOR INSTALLATION			
STRIKE	DIM. "B"	MIN. STILE 990/991/992 TRIM	MIN. STILE 696/697 TRIM
299 & 299-F	2 3/8"	4 1/2"	4 3/8"
(6) 1409 & 1439	1 9/16"	3 13/16"	3 13/16"
1606	1 15/16"	4 1/16"	3 15/16"

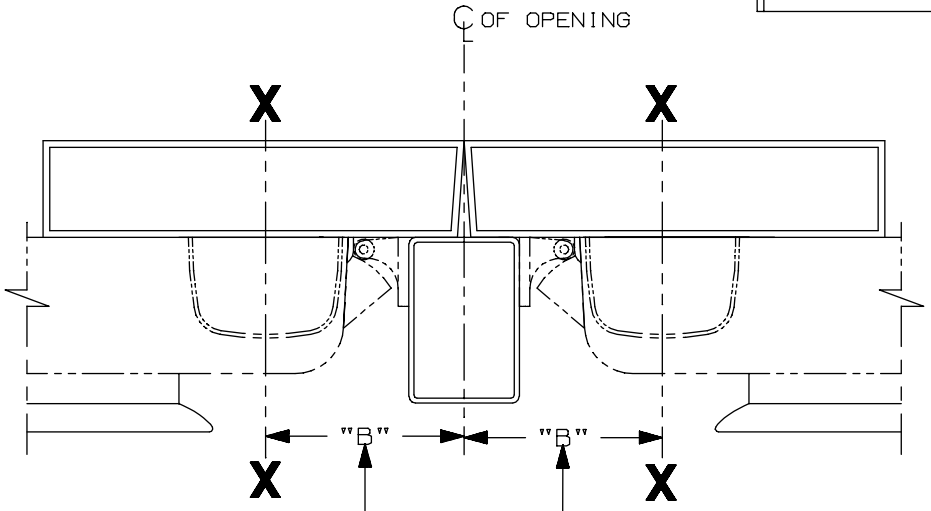

SINGLE DOOR OPENING
39 13/16" TO FINISHED FLOOR

DOUBLE DOOR OPENING
WITH VON DUPRIN MULLION
39 11/16"

LHR APPLICATION SHOWN
RHR APPLICATION OPPOSITE

DOUBLE DOOR INSTALLATION WITH VON DUPRIN MULLIONS				
MULLION	STRIKE	DIM. "B"	MIN. STILE 990/991/992 TRIM	MIN. STILE 696/697 TRIM
(6) 4954/9954	299/299-F	3 3/8"	4 7/8"	4 3/4"
9954	499-F	3 1/2"	5"	4 7/8"
5654	299	2 15/16"	4 3/8"	4 1/4"
5754	1408	2 1/8"	3 13/16"	3 13/16"
1654	1606	2 15/16"	4 3/8"	4 1/4"

NOTES:
1. THESE FOUR HOLES TO BE PREPARED FOR SURFACE APPLICATION WHEN USING 696/697 TRIM. DO NOT PREPARE FOR SEX BOLTS.
2. FOR STOCK HOLLOW METAL DOORS SEE TEMPLATE NO. 10307 FOR TYPE "161" CUTOUT AND 10314 FOR TYPE "86" CUTOUT.
3. GLASS BEAD KIT AVAILABLE WHEN REQUIRED.
4. FOR OUTSIDE TRIM PREPARATION, WHEN REQUIRED, SEE TRIM TEMPLATE.
5. 9954 W/299-F FOR HURRICANE APPLICATIONS ONLY. (6)

CX98/CX99 NL Series Rim Device

VON DUPRIN®

NOTES: SEE MASTER SHEET #10001 FOR SUGGESTED REINFORCING

TEMPLATE NUMBER: 10354_a

DATE: 05-22-13

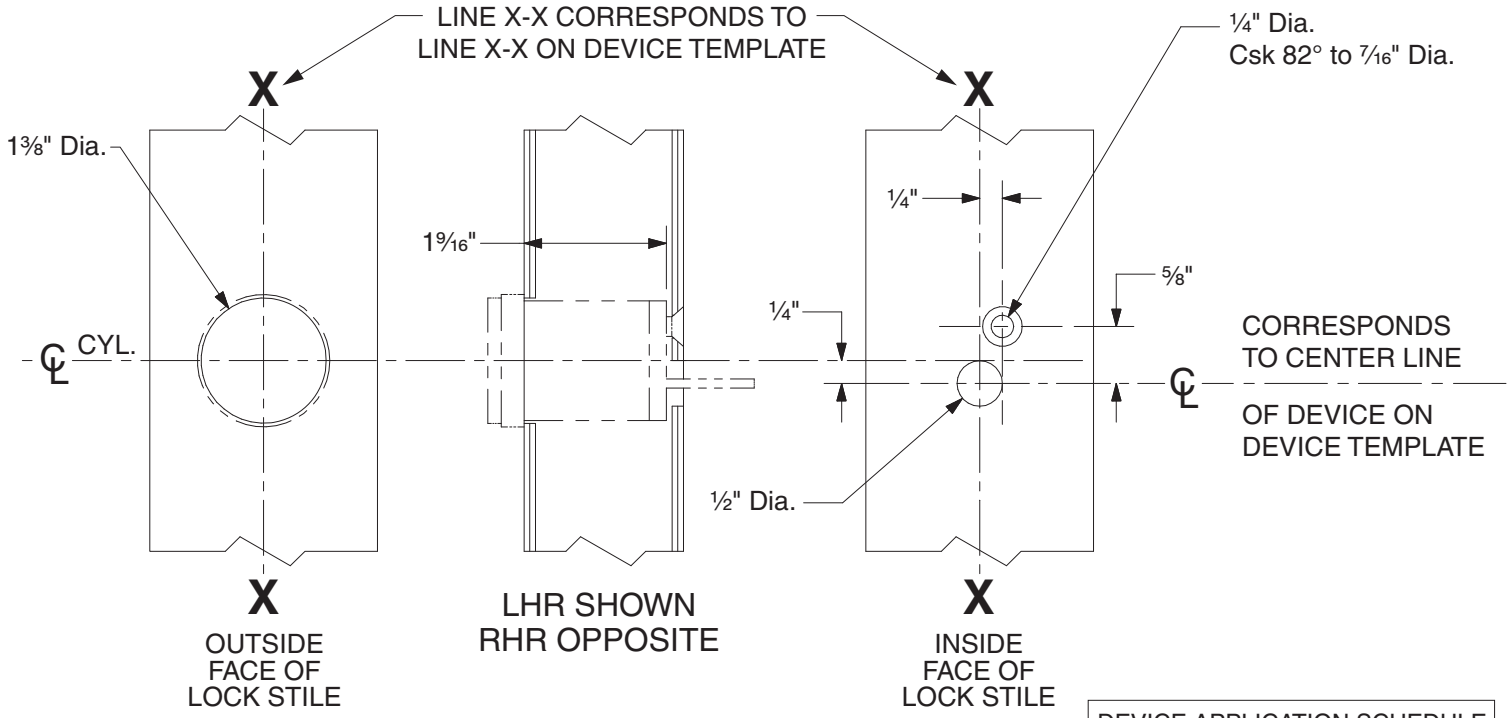

DEVICE APPLICATION SCHEDULE	
98 RIM SERIES	99 RIM SERIES
9827 SERIES	9927 SERIES
9847 SERIES	9947 SERIES
22 RIM SERIES	2227 SERIES

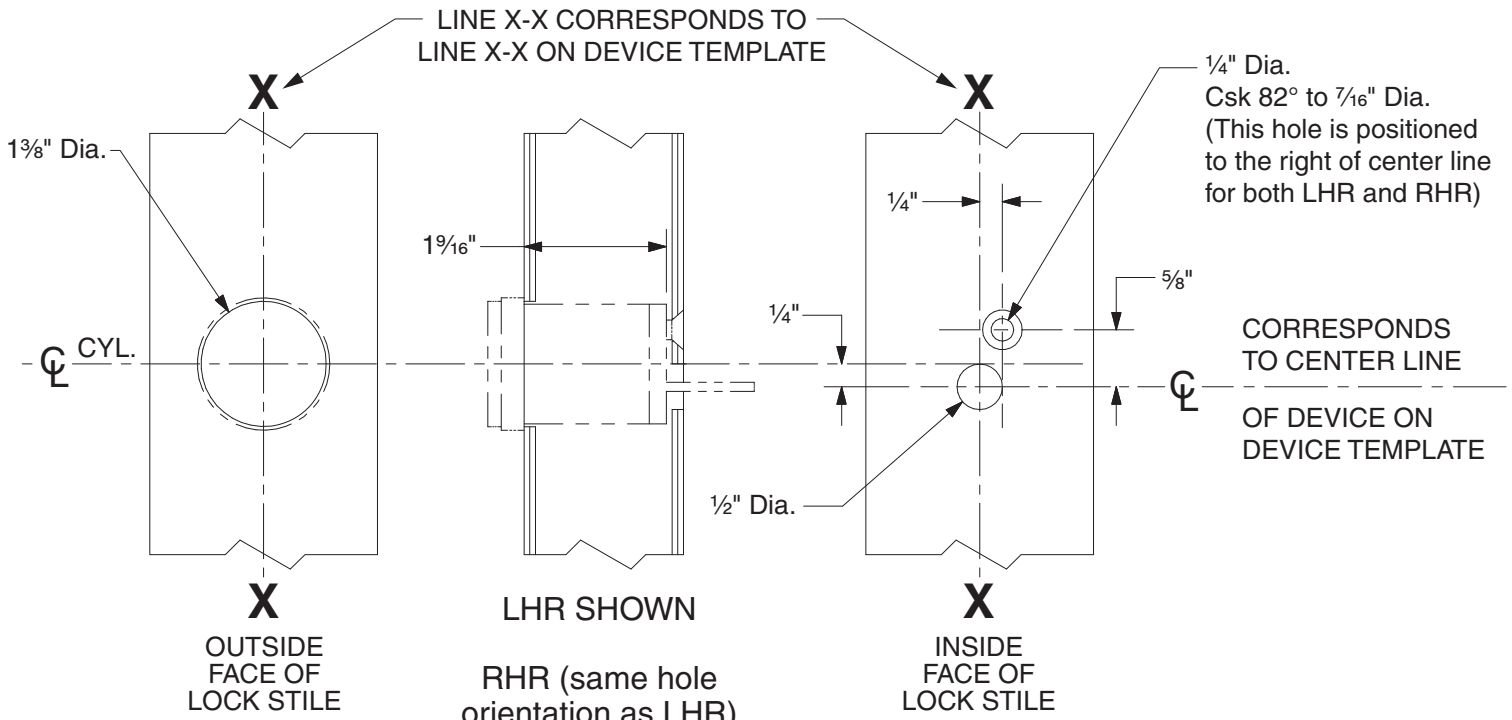

DEVICE APPLICATION SCHEDULE	
9849 SERIES	9949 SERIES

110NL Cylinder Preparation

VON DUPRIN®

NOTES: SEE MASTER SHEET #10001 FOR SUGGESTED REINFORCING

TEMPLATE NUMBER: 40022_c

DATE: 05-28-13

RIM APPLICATION

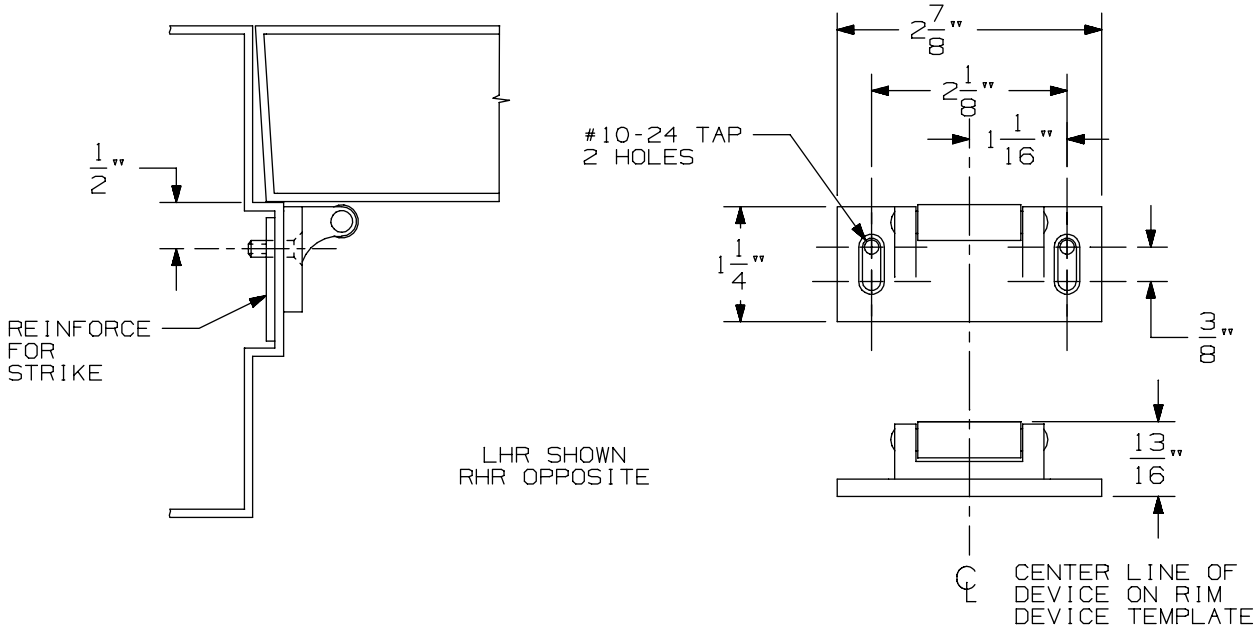

VERTICAL APPLICATION

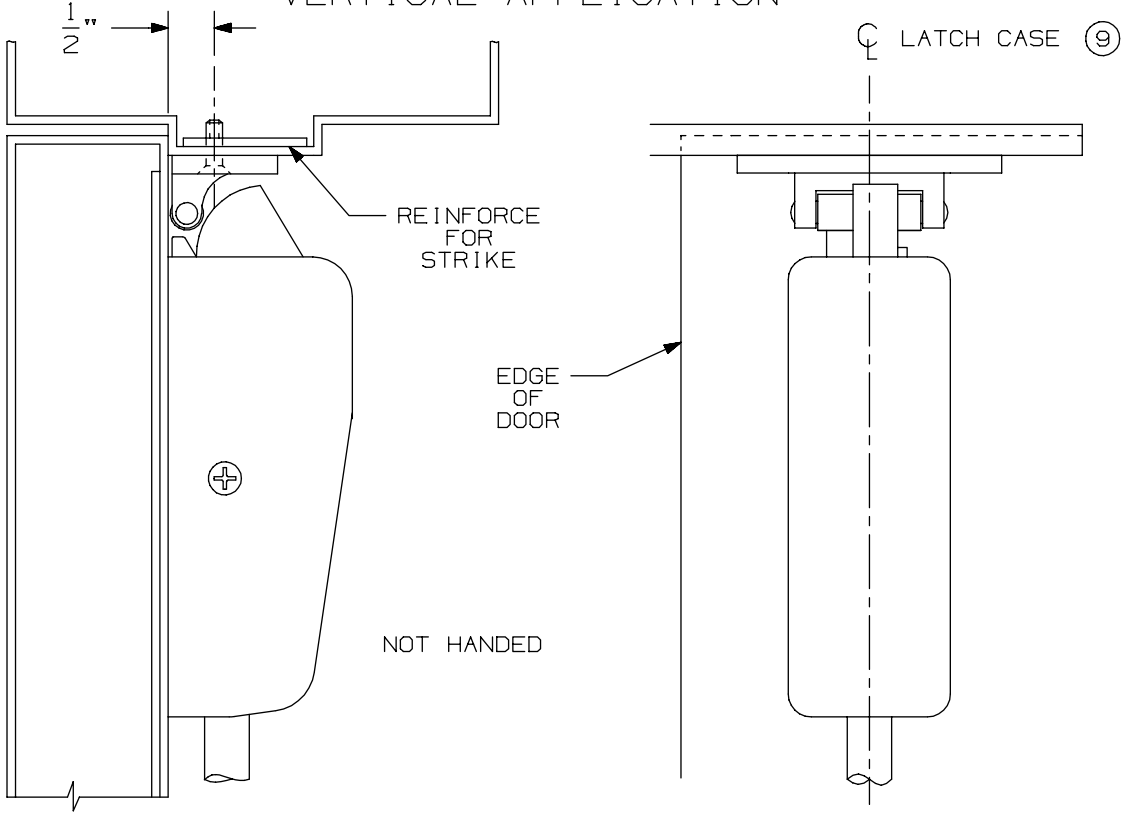

NOTE: LATCH CASE MOUNTING HOLES TO BE PREPARED AT INSTALLATION ON DOOR.

299 & 299F Strike

VON DUPRIN®

NOTES: SEE MASTER SHEET #10001 FOR SUGGESTED REINFORCING

TEMPLATE NUMBER: 30039_a

DATE: 05-23-13

APPLICATION	PREPARATION
SURFACE APPLICATION	#10-24 TAP 4 PLACES
990 TRIM APPLICATION OR SEX BOLT APPLICATION (SEE NOTE1)	1/4' DIA THIS SIDE 13/32" DIA OPPOSITE SIDE - 4 PLACES

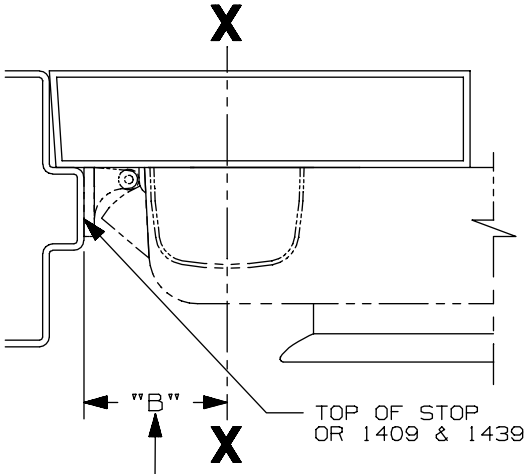

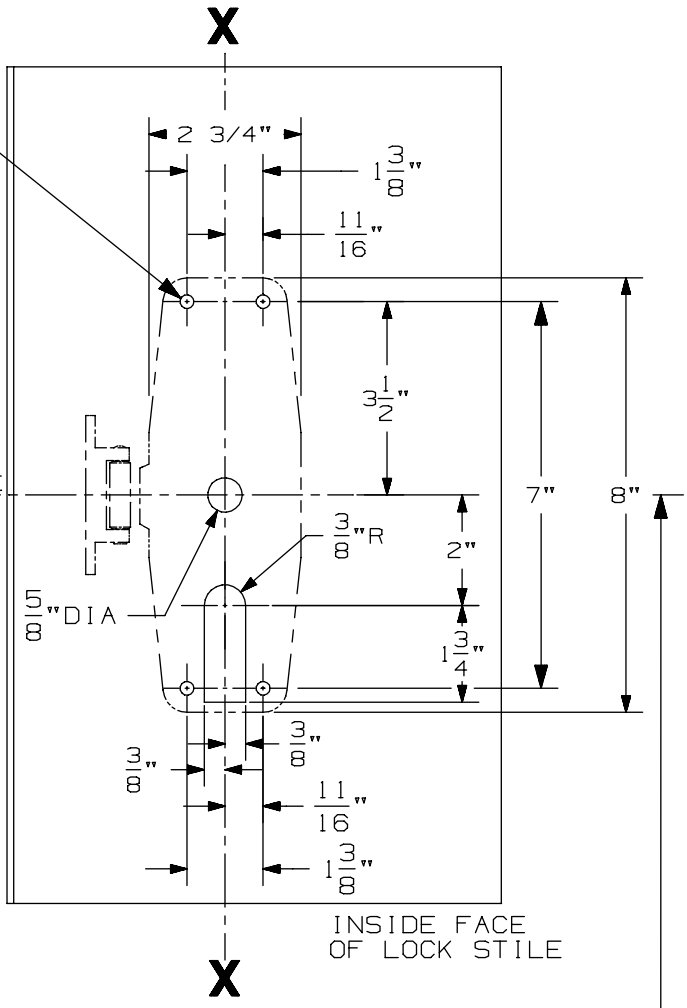

SINGLE DOOR INSTALLATION			
STRIKE	DIM. "B"	MIN. STILE 990/991/992 TRIM	MIN. STILE 696/697 TRIM
299 & 299-F	2 3/8"	4 1/2"	4 3/8"
(5) 1409 & 1439	1 9/16"	3 13/16"	3 13/16"
1606	1 15/16"	4 1/16"	3 15/16"

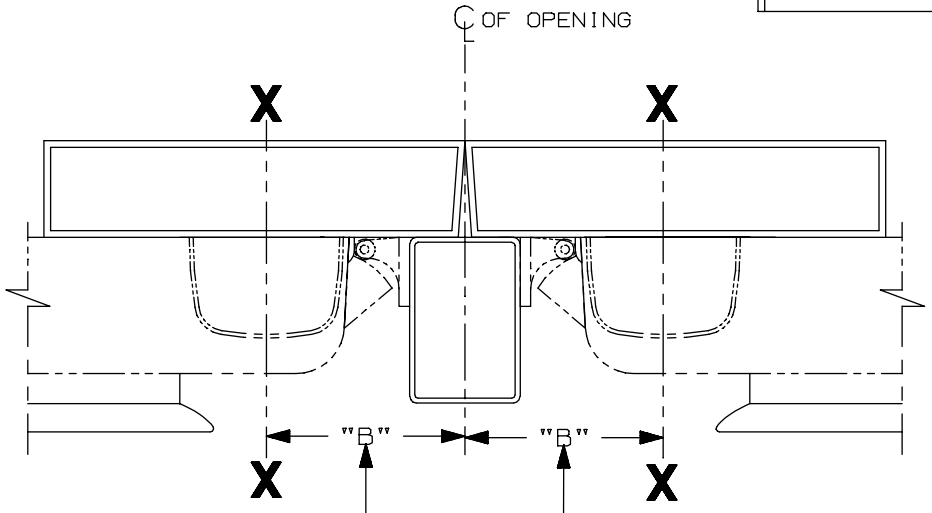

SINGLE DOOR OPENING
39 13/16" TO FINISHED FLOOR

DOUBLE DOOR OPENING
WITH VON DUPRIN MULLION
39 11/16"

LHR APPLICATION SHOWN,
RHR APPLICATION OPPSITE

DOUBLE DOOR INSTALLATION WITH VON DUPRIN MULLIONS				
MULLION	STRIKE	DIM. "B"	MIN. STILE 990/991/992 TRIM	MIN. STILE 696/697 TRIM
(5) 4954/9954	299/299-F	3 3/8"	4 7/8"	4 3/4"
9954	499-F	3 1/2"	5"	4 7/8"
5654	299	2 15/16"	4 3/8"	4 1/4"
5754	1408	2 1/8"	3 13/16"	3 13/16"
1654	1606	2 15/16"	4 3/8"	4 1/4"

NOTES:
1. THESE FOUR HOLES TO BE PREPARED FOR SURFACE APPLICATION WHEN USING 696/697 TRIM. DO NOT PREPARE FOR SEX BOLTS.
2. FOR STOCK HOLLOW METAL DOORS SEE TEMPLATE NO. 10309 FOR TYPE "161" CUTOUT AND 10315 FOR TYPE "86" CUTOUT.
3. GLASS BEAD KIT AVAILABLE WHEN REQUIRED.
4. FOR OUTSIDE TRIM PREPARATION, WHEN REQUIRED, SEE TRIM TEMPLATE.
5. 9954 W/299-F FOR HURRICANE APPLICATIONS ONLY. (5)

CX98/CX99 TP, K, & L Series Rim Device

VON DUPRIN®

NOTES: SEE MASTER SHEET #10001 FOR SUGGESTED REINFORCING

TEMPLATE NUMBER: 10355_a

DATE: 05-22-13

991 K & 992 L Trim

NOTES: SEE MASTER SHEET #10001 FOR SUGGESTED REINFORCING

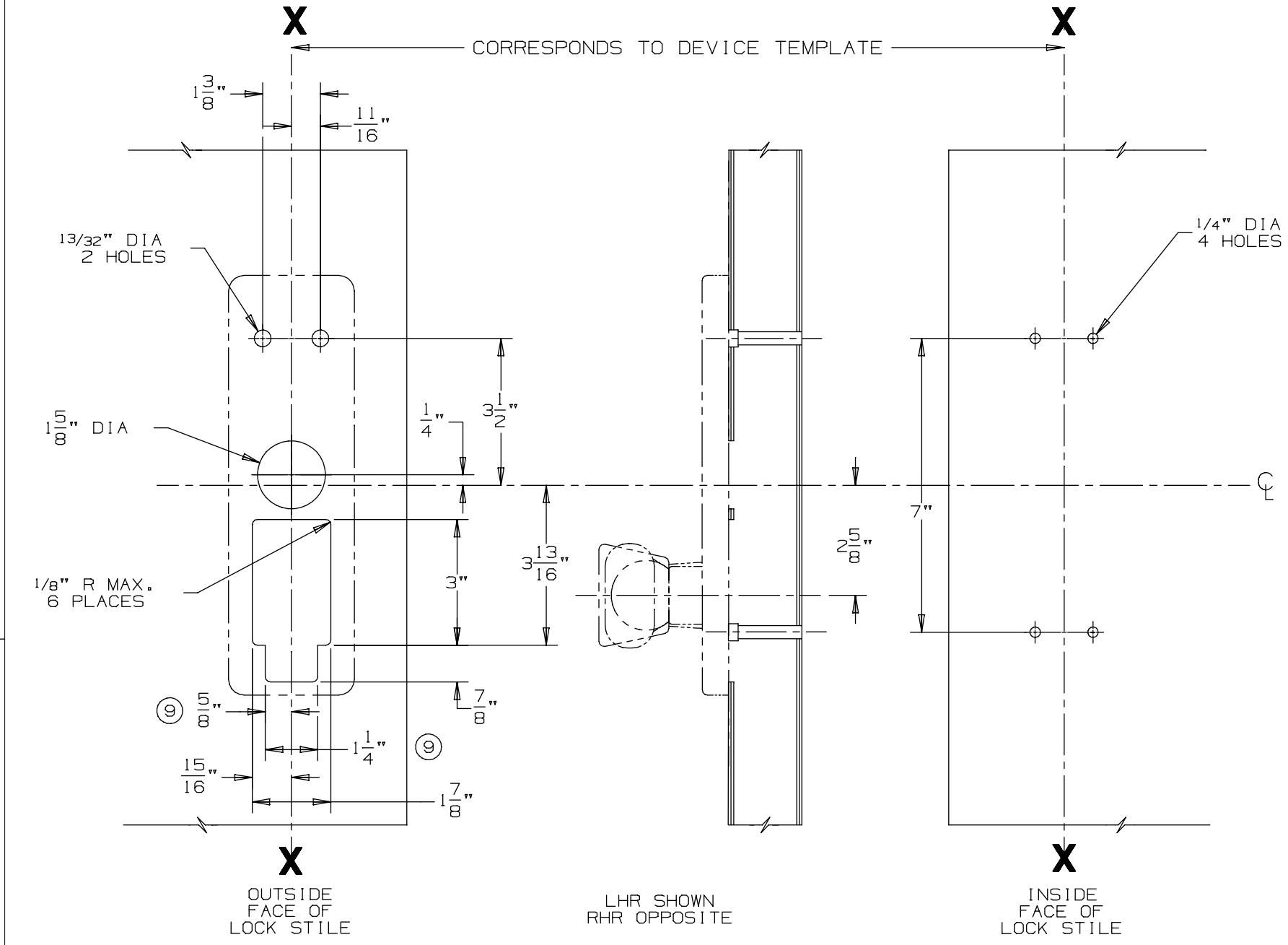

DEVICE APPLICATION SCHEDULE
98/99 SERIES RIM DEVICE
9827/9927 SERIES DEVICE
9847/9947 SERIES DEVICE

VON DUPRIN®

TEMPLATE NUMBER: 20272_a

DATE: 05-23-13

RIM APPLICATION

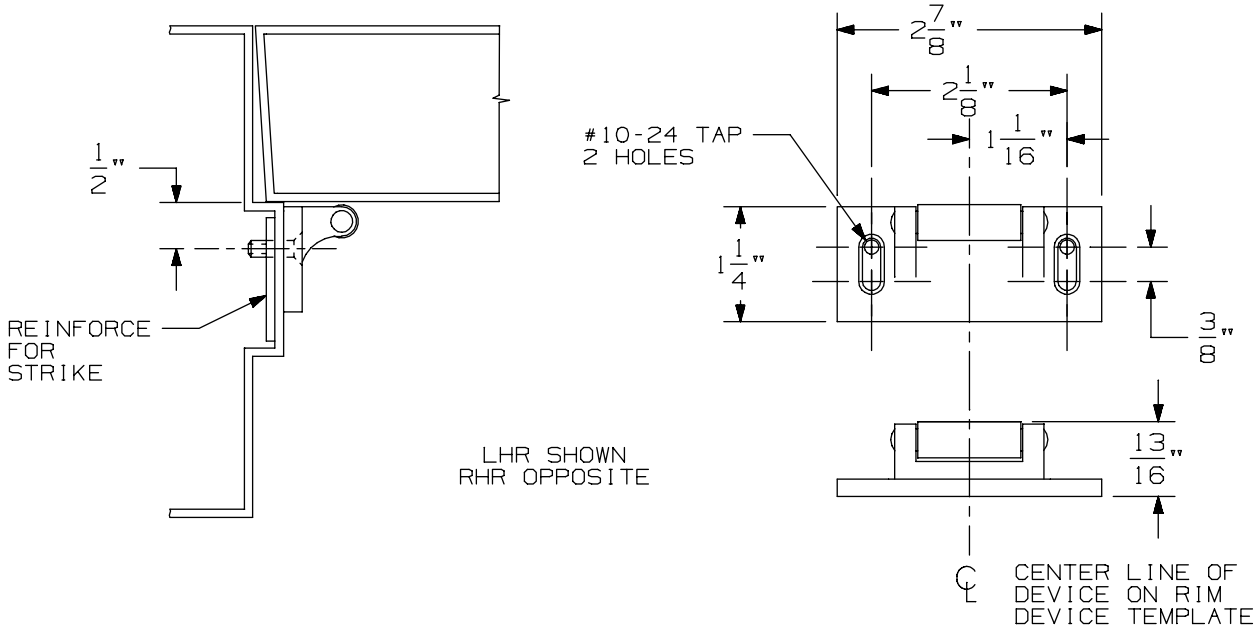

VERTICAL APPLICATION

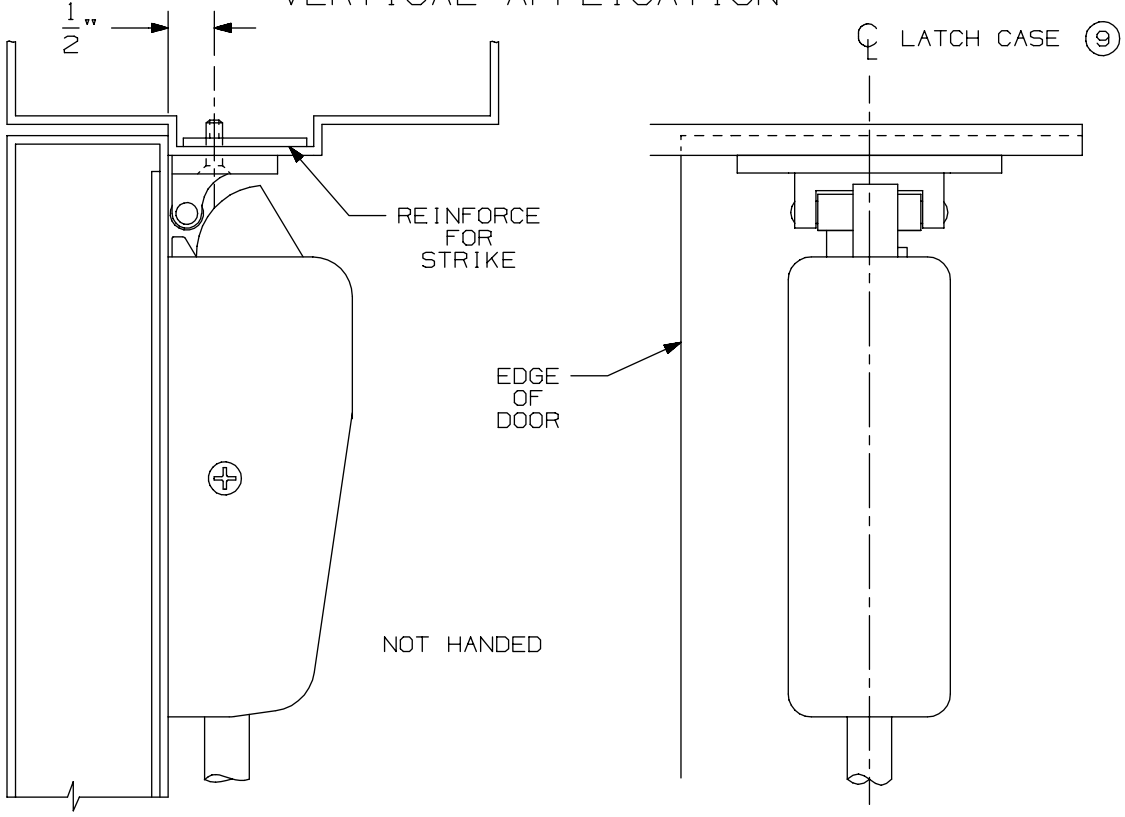

NOTE: LATCH CASE MOUNTING HOLES TO BE PREPARED AT INSTALLATION ON DOOR.

299 & 299F Strike

VON DUPRIN®

NOTES: SEE MASTER SHEET #10001 FOR SUGGESTED REINFORCING

TEMPLATE NUMBER: 30039_a

DATE: 05-23-13

APPLICATION	PREPARATION
SURFACE APPLICATION	#10-24 TAP 4 PLACES
990 TRIM APPLICATION OR SEX BOLT APPLICATION (SEE NOTE1)	1/4' DIA THIS SIDE 13/32" DIA OPPOSITE SIDE - 4 PLACES

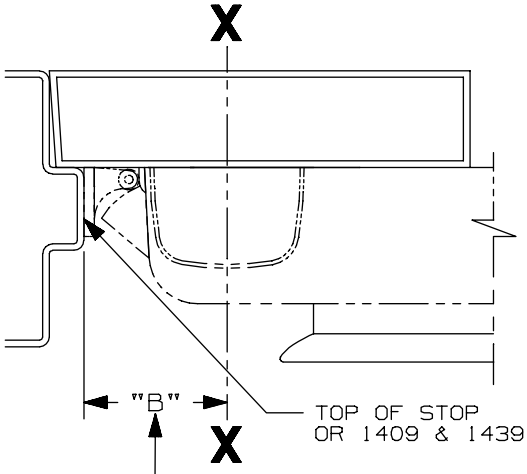

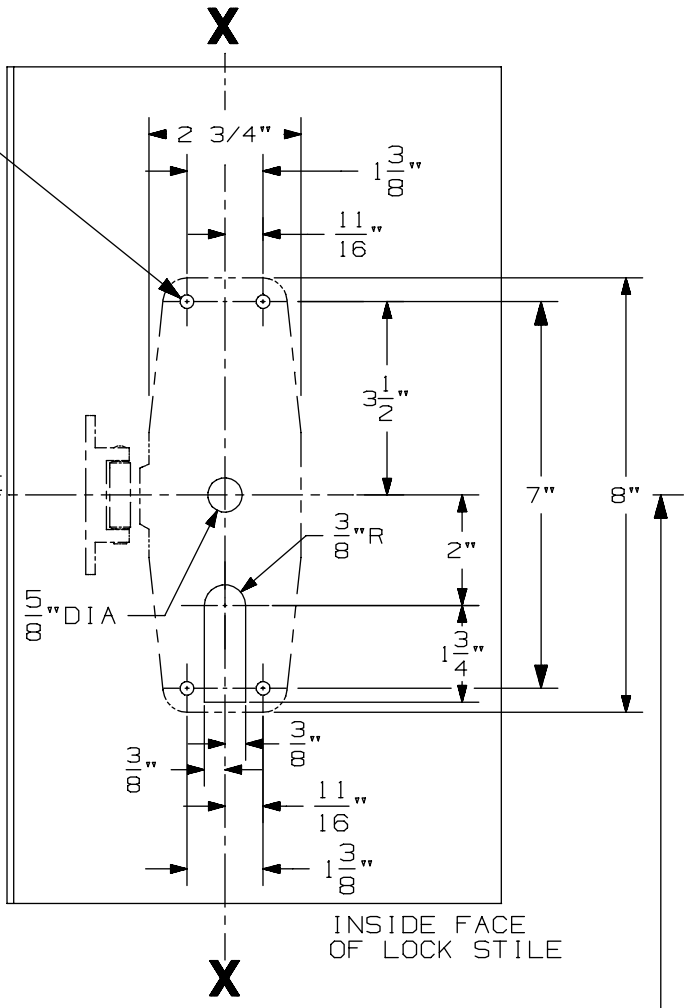

SINGLE DOOR INSTALLATION			
STRIKE	DIM. "B"	MIN. STILE 990/991/992 TRIM	MIN. STILE 696/697 TRIM
299 & 299-F	2 3/8"	4 1/2"	4 3/8"
(5) 1409 & 1439	1 9/16"	3 13/16"	3 13/16"
1606	1 15/16"	4 1/16"	3 15/16"

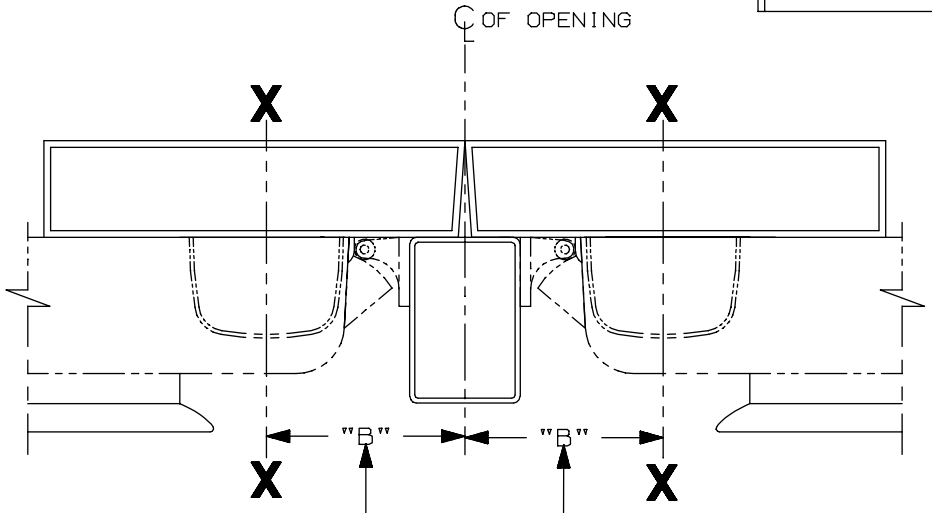

SINGLE DOOR OPENING
39 13/16" TO FINISHED FLOOR

DOUBLE DOOR OPENING
WITH VON DUPRIN MULLION
39 11/16"

LHR APPLICATION SHOWN,
RHR APPLICATION OPPSITE

DOUBLE DOOR INSTALLATION WITH VON DUPRIN MULLIONS				
MULLION	STRIKE	DIM. "B"	MIN. STILE 990/991/992 TRIM	MIN. STILE 696/697 TRIM
(5) 4954/9954	299/299-F	3 3/8"	4 7/8"	4 3/4"
9954	499-F	3 1/2"	5"	4 7/8"
5654	299	2 15/16"	4 3/8"	4 1/4"
5754	1408	2 1/8"	3 13/16"	3 13/16"
1654	1606	2 15/16"	4 3/8"	4 1/4"

NOTES:
1. THESE FOUR HOLES TO BE PREPARED FOR SURFACE APPLICATION WHEN USING 696/697 TRIM. DO NOT PREPARE FOR SEX BOLTS.
2. FOR STOCK HOLLOW METAL DOORS SEE TEMPLATE NO. 10309 FOR TYPE "161" CUTOUT AND 10315 FOR TYPE "86" CUTOUT.
3. GLASS BEAD KIT AVAILABLE WHEN REQUIRED.
4. FOR OUTSIDE TRIM PREPARATION, WHEN REQUIRED, SEE TRIM TEMPLATE.
5. 9954 W/299-F FOR HURRICANE APPLICATIONS ONLY. (5)

CX98/CX99 TP, K, & L Series Rim Device

VON DUPRIN®

NOTES: SEE MASTER SHEET #10001 FOR SUGGESTED REINFORCING

TEMPLATE NUMBER: 10355_a

DATE: 05-22-13

DEVICE APPLICATION SCHEDULE	
98 RIM SERIES	99 RIM SERIES
9827 SERIES	9927 SERIES
9847 SERIES	9947 SERIES
9849 SERIES	9949 SERIES

996L, E996L, 996L-BE, E996L-BE 996K, 996K-BE R/V SERIES
TRIM METAL DOOR APPLICATION

VON DUPRIN®

NOTES: SEE MASTER SHEET #10001 FOR SUGGESTED REINFORCING

TEMPLATE NUMBER: 20003_e

DATE: 10-30-14

RIM APPLICATION

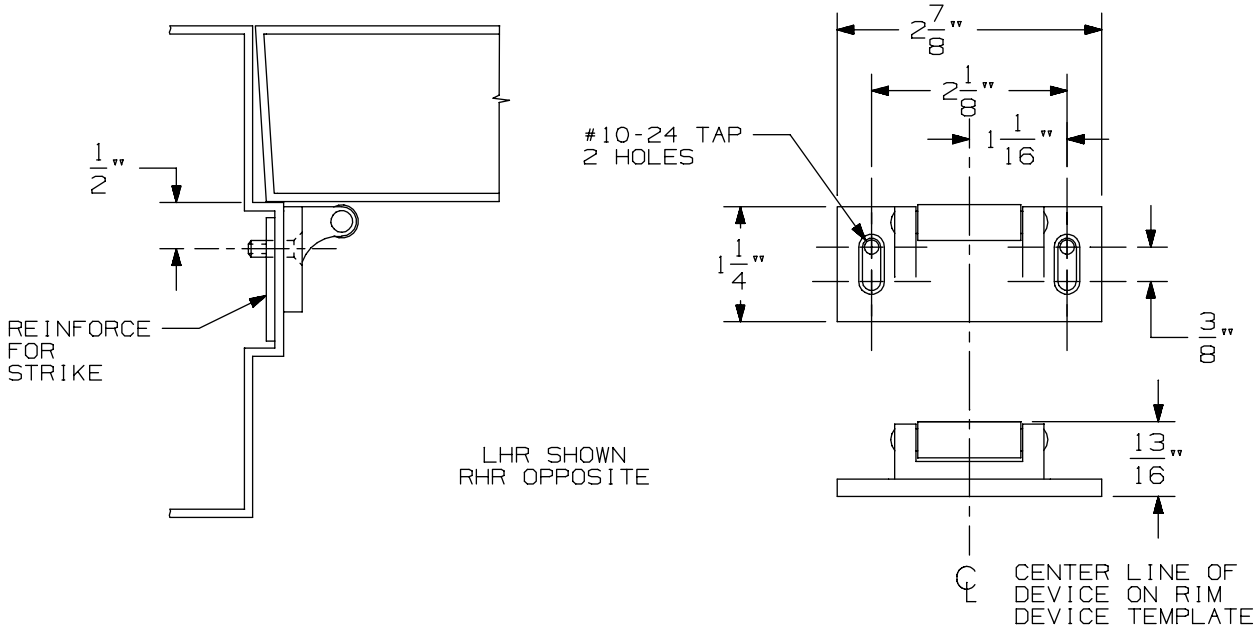

VERTICAL APPLICATION

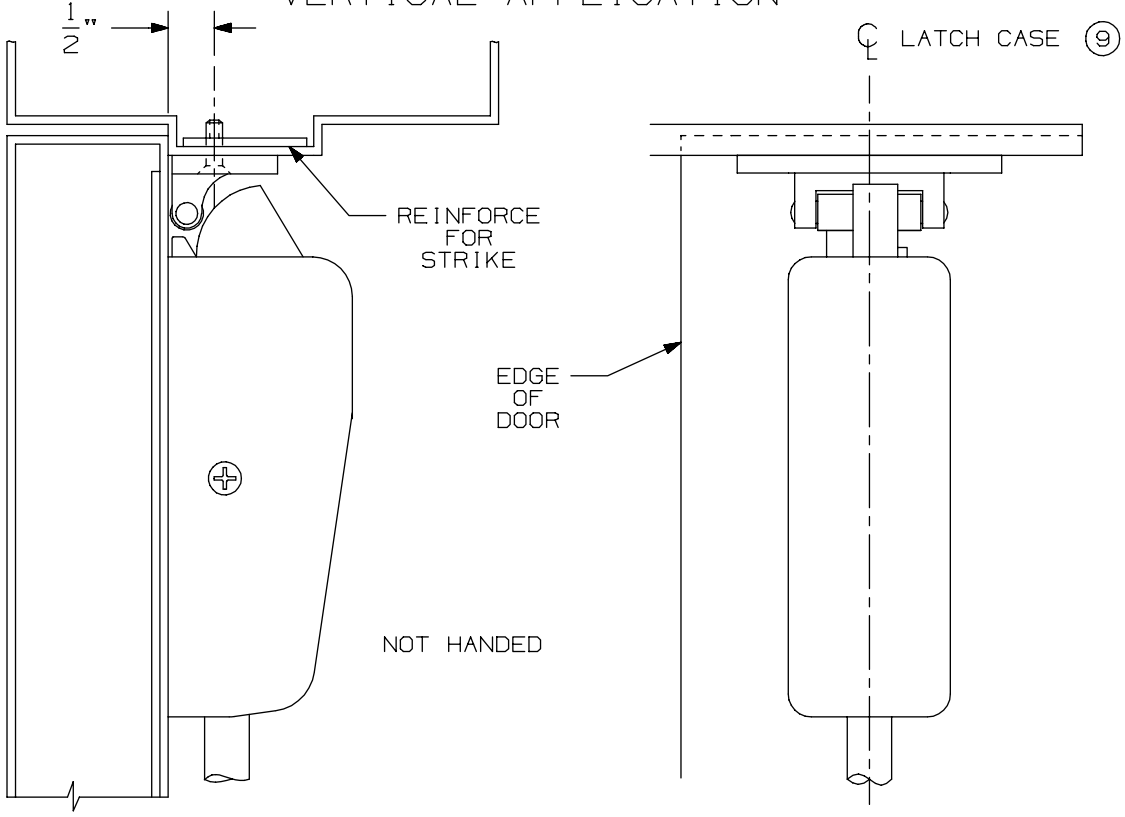

NOTE: LATCH CASE MOUNTING HOLES TO BE PREPARED AT INSTALLATION ON DOOR.

299 & 299F Strike

VON DUPRIN®

NOTES: SEE MASTER SHEET #10001 FOR SUGGESTED REINFORCING

TEMPLATE NUMBER: 30039_a

DATE: 05-23-13

APPLICATION	PREPARATION
SURFACE APPLICATION	#10-24 TAP 4 PLACES
990 TRIM APPLICATION OR SEX BOLT APPLICATION (SEE NOTE1)	1/4' DIA THIS SIDE 13/32" DIA OPPOSITE SIDE - 4 PLACES

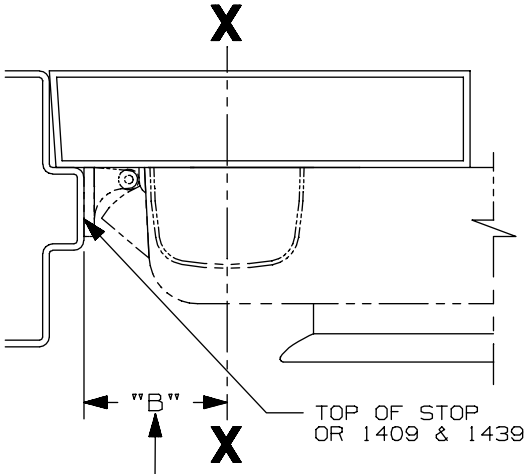

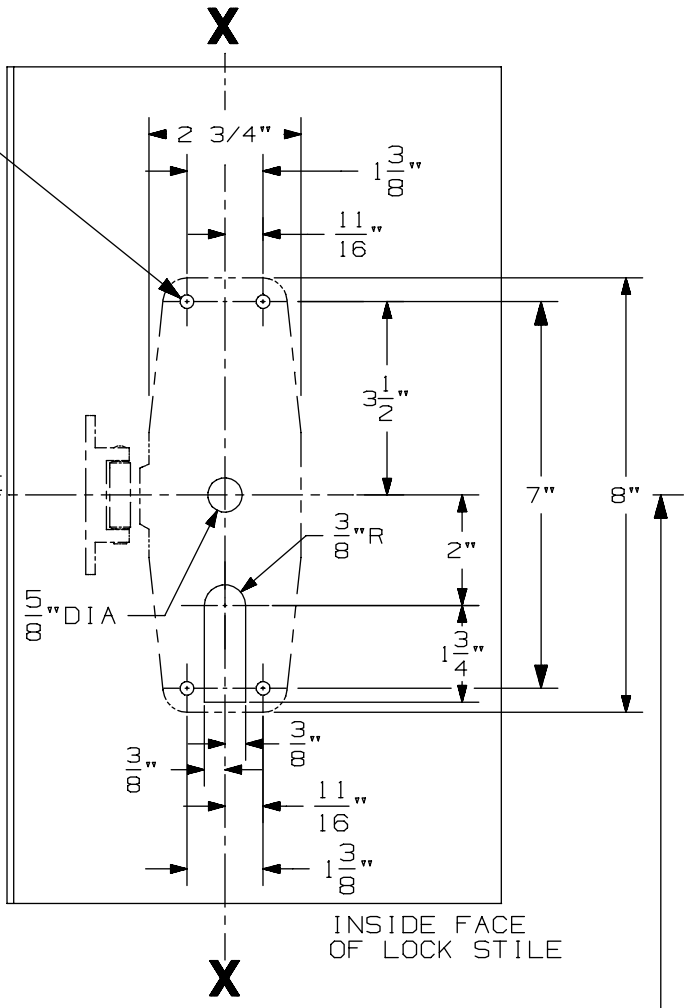

SINGLE DOOR INSTALLATION			
STRIKE	DIM. "B"	MIN. STILE 990/991/992 TRIM	MIN. STILE 696/697 TRIM
299 & 299-F	2 3/8"	4 1/2"	4 3/8"
(5) 1409 & 1439	1 9/16"	3 13/16"	3 13/16"
1606	1 15/16"	4 1/16"	3 15/16"

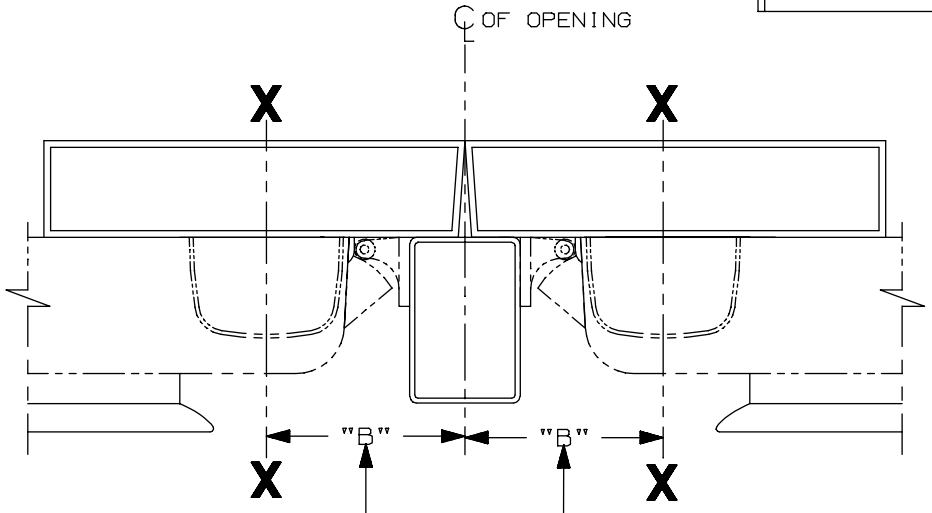

SINGLE DOOR OPENING
39 13/16" TO FINISHED FLOOR

DOUBLE DOOR OPENING
WITH VON DUPRIN MULLION
39 11/16"

LHR APPLICATION SHOWN,
RHR APPLICATION OPPSITE

DOUBLE DOOR INSTALLATION WITH VON DUPRIN MULLIONS				
MULLION	STRIKE	DIM. "B"	MIN. STILE 990/991/992 TRIM	MIN. STILE 696/697 TRIM
(5) 4954/9954	299/299-F	3 3/8"	4 7/8"	4 3/4"
9954	499-F	3 1/2"	5"	4 7/8"
5654	299	2 15/16"	4 3/8"	4 1/4"
5754	1408	2 1/8"	3 13/16"	3 13/16"
1654	1606	2 15/16"	4 3/8"	4 1/4"

NOTES:
1. THESE FOUR HOLES TO BE PREPARED FOR SURFACE APPLICATION WHEN USING 696/697 TRIM. DO NOT PREPARE FOR SEX BOLTS.
2. FOR STOCK HOLLOW METAL DOORS SEE TEMPLATE NO. 10309 FOR TYPE "161" CUTOUT AND 10315 FOR TYPE "86" CUTOUT.
3. GLASS BEAD KIT AVAILABLE WHEN REQUIRED.
4. FOR OUTSIDE TRIM PREPARATION, WHEN REQUIRED, SEE TRIM TEMPLATE.
5. 9954 W/299-F FOR HURRICANE APPLICATIONS ONLY. (5)

CX98/CX99 TP, K, & L Series Rim Device

VON DUPRIN®

NOTES: SEE MASTER SHEET #10001 FOR SUGGESTED REINFORCING

TEMPLATE NUMBER: 10355_a

DATE: 05-22-13

990 TP & 990 TP-BE TRIM

NOTES: SEE MASTER SHEET #10001 FOR SUGGESTED REINFORCING

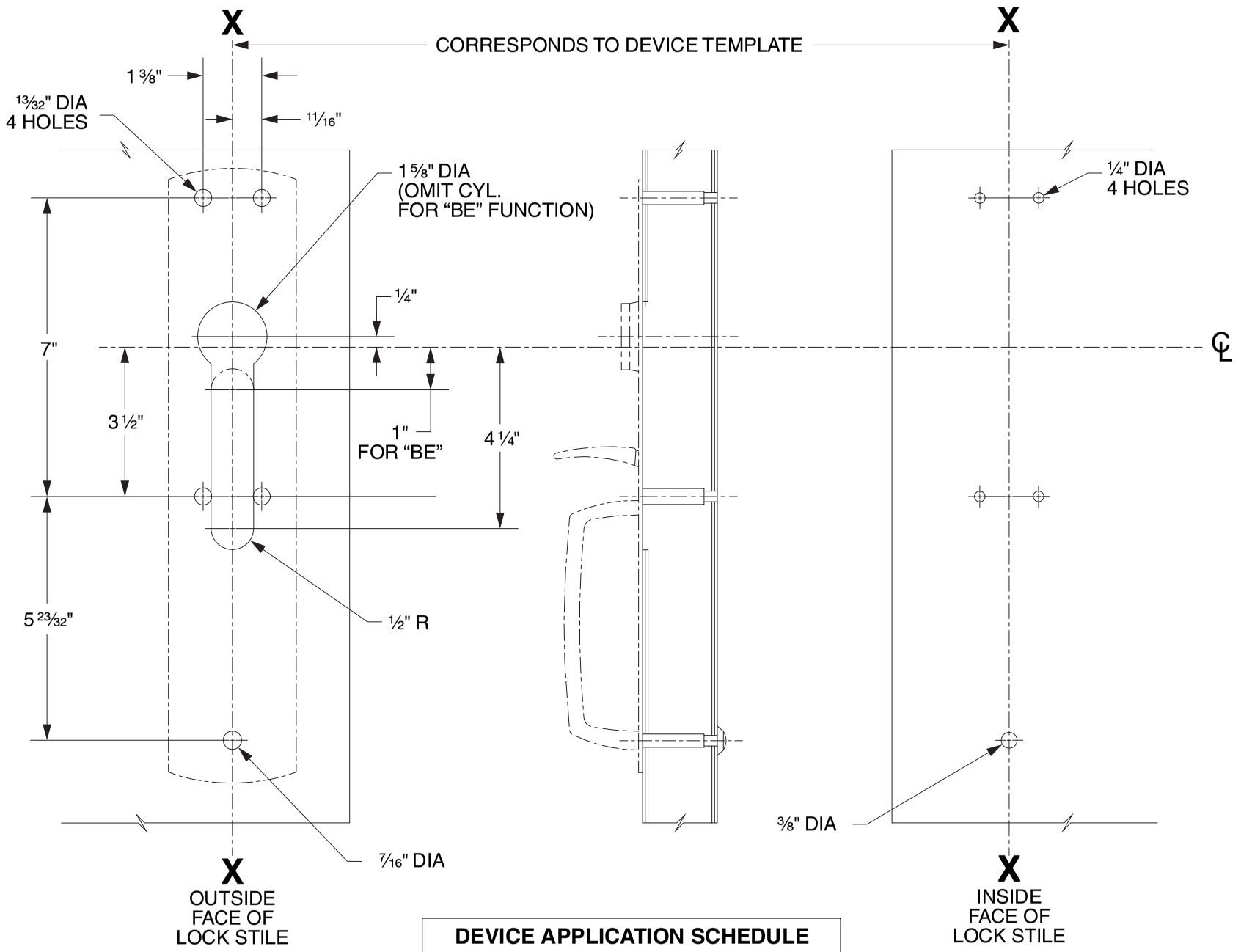

DEVICE APPLICATION SCHEDULE
98/99 SERIES RIM DEVICE
9827/9927 SERIES DEVICE
9847/9947 SERIES DEVICE
9849/9949 SERIES DEVICE

LHR SHOWN
RHR OPPOSITE

VON DUPRIN®

TEMPLATE NUMBER: 20265_C

DATE: 05-31-13

RIM APPLICATION

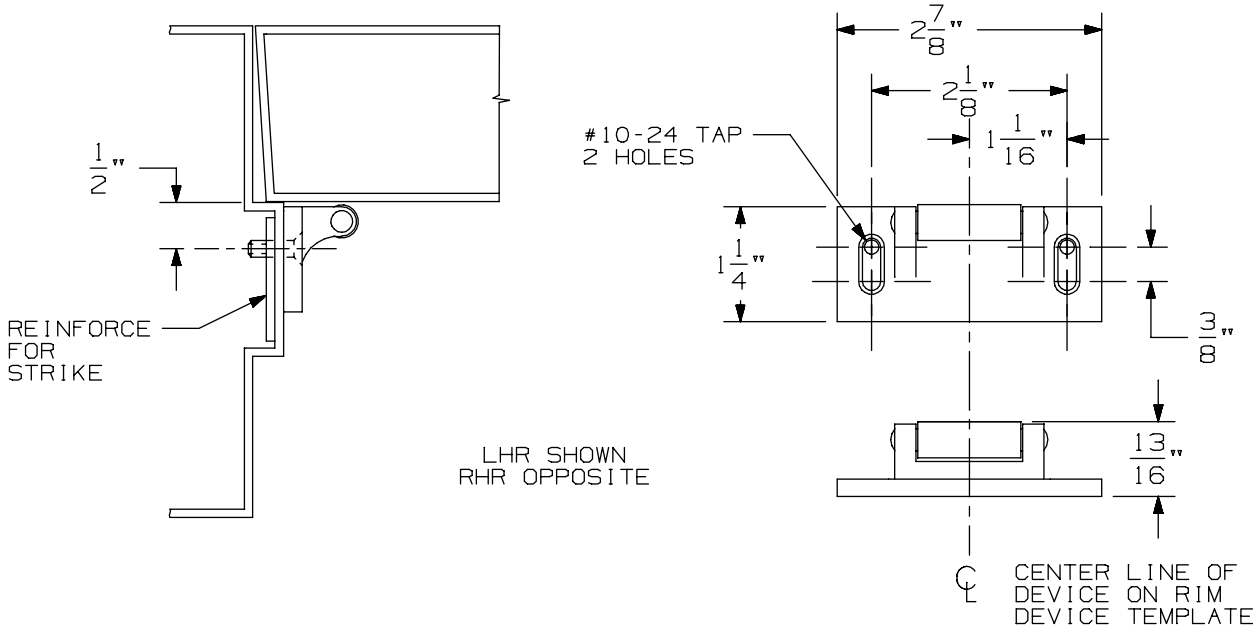

VERTICAL APPLICATION

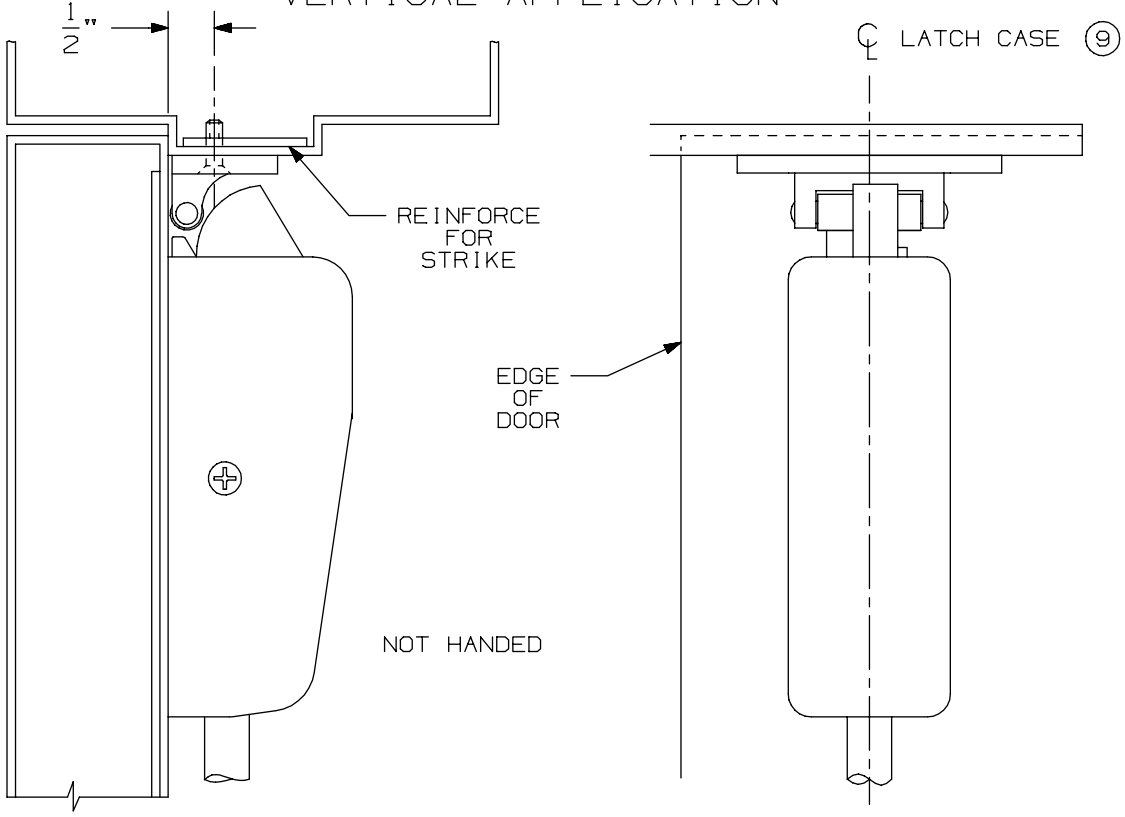

NOTE: LATCH CASE MOUNTING HOLES TO BE PREPARED AT INSTALLATION ON DOOR.

299 & 299F Strike

VON DUPRIN®

NOTES: SEE MASTER SHEET #10001 FOR SUGGESTED REINFORCING

TEMPLATE NUMBER: 30039_a

DATE: 05-23-13

98 / 99 Series Chex-it® Exit Devices

-

CX98-F/CX99-F Rim Fire

APPLICATION	PREPARATION
SURFACE APPLICATION	#10-24 TAP 4 PLACES
990 TRIM APPLICATION OR SEX BOLT APPLICATION (SEE NOTE 1)	1/4" DIA THIS SIDE 13/32" DIA OPPOSITE SIDE - 4 PLACES

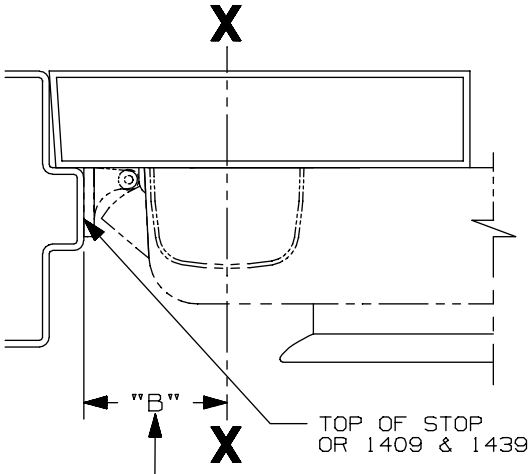

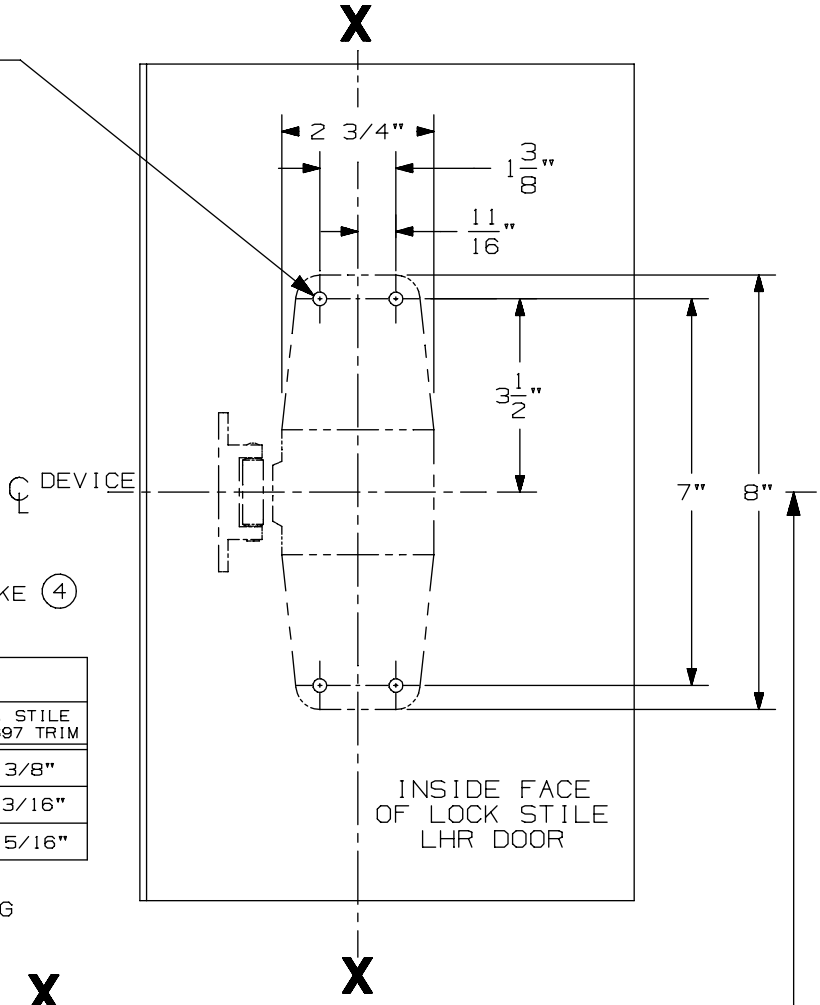

SINGLE DOOR INSTALLATION			
STRIKE	DIM. "B"	MIN. STILE 990/991/992 TRIM	MIN. STILE 696/697 TRIM
299 & 299-F	2 3/8"	4 1/2"	4 3/8"
(4) 1409 & 1439	1 9/16"	3 13/16"	3 13/16"
1606	1 15/16"	4 1/16"	3 15/16"

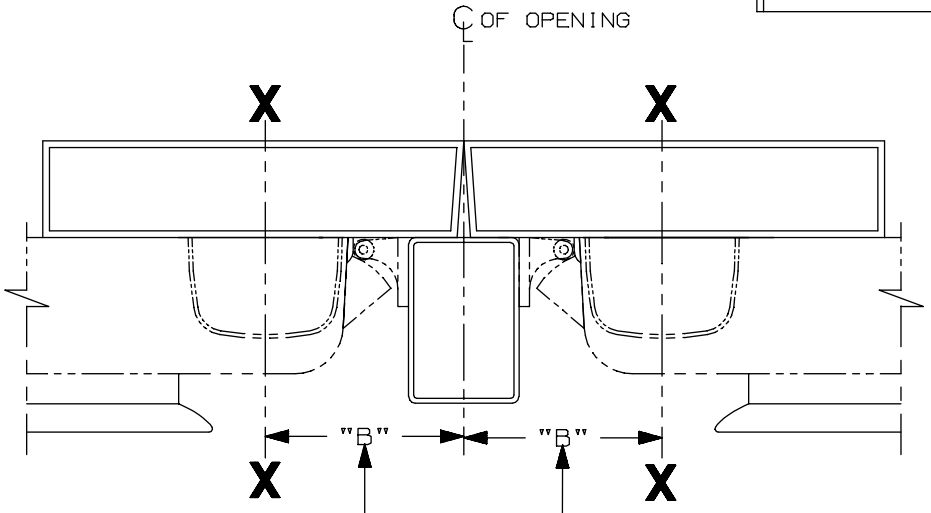

SINGLE DOOR OPENING
39 13/16" TO FINISHED FLOOR

DOUBLE DOOR OPENING
WITH VON DUPRIN MULLION
39 11/16"

LHR APPLICATION SHOWN,
RHR APPLICATION OPPOSITE

DOUBLE DOOR INSTALLATION WITH VON DUPRIN MULLIONS				
MULLION	STRIKE	DIM. "B"	MIN. STILE 990/991/992 TRIM	MIN. STILE 696/697 TRIM
(4) 4954/9954	299/299-F	3 3/8"	4 7/8"	4 3/4"
9954	499-F	3 1/2"	5"	4 7/8"
5654	299	2 15/16"	4 3/8"	4 1/4"
5754	1408	2 1/8"	3 13/16"	3 13/16"
1654	1606	2 15/16"	4 3/8"	4 1/4"

NOTES:
1. THESE FOUR HOLES TO BE PREPARED FOR SURFACE APPLICATION WHEN USING 696/697 TRIM. DO NOT PREPARE FOR SEX BOLTS.
2. FOR STOCK HOLLOW METAL DOORS SEE TEMPLATE NO. 10307 FOR TYPE "161" CUTOUT AND 10313 FOR TYPE "86" CUTOUT.
3. GLASS BEAD KIT AVAILABLE WHEN REQUIRED.
4. FOR OUTSIDE TRIM PREPARATION, WHEN REQUIRED, SEE TRIM TEMPLATE.
5. 9954 W/299-F FOR HURRICANE APPLICATIONS ONLY. (4)

CX98/99 EO, DT Series Rim Device

VON DUPRIN®

NOTES: SEE MASTER SHEET #10001 FOR SUGGESTED REINFORCING

TEMPLATE NUMBER: 10353_a

DATE: 05-22-13

RIM APPLICATION

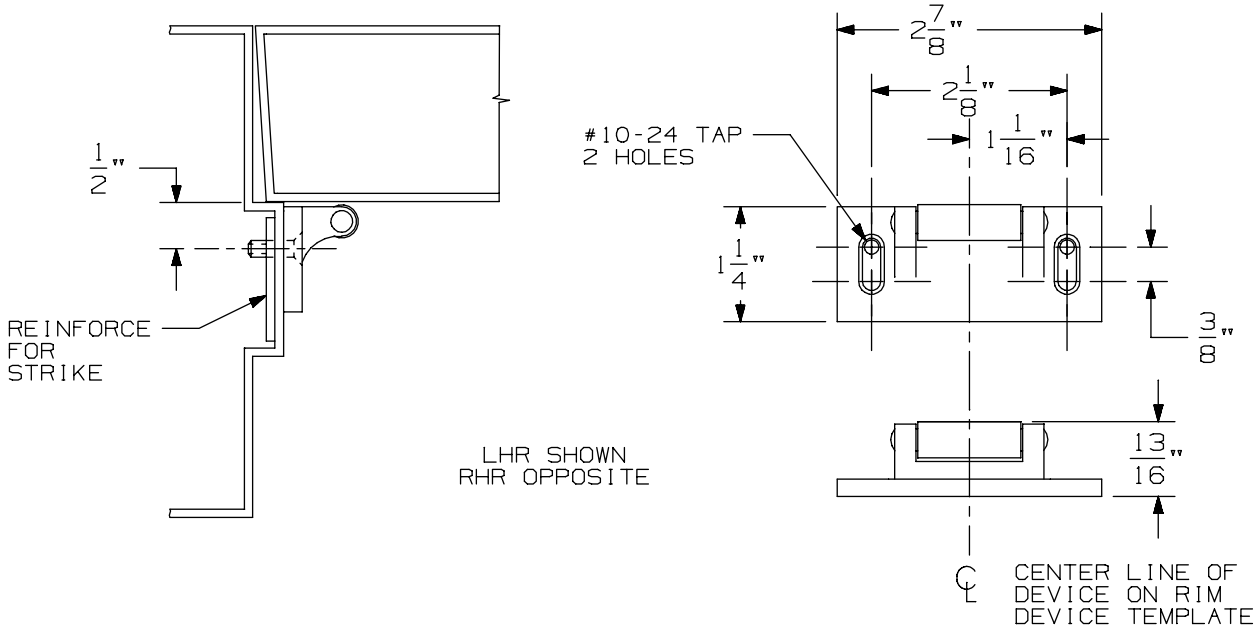

VERTICAL APPLICATION

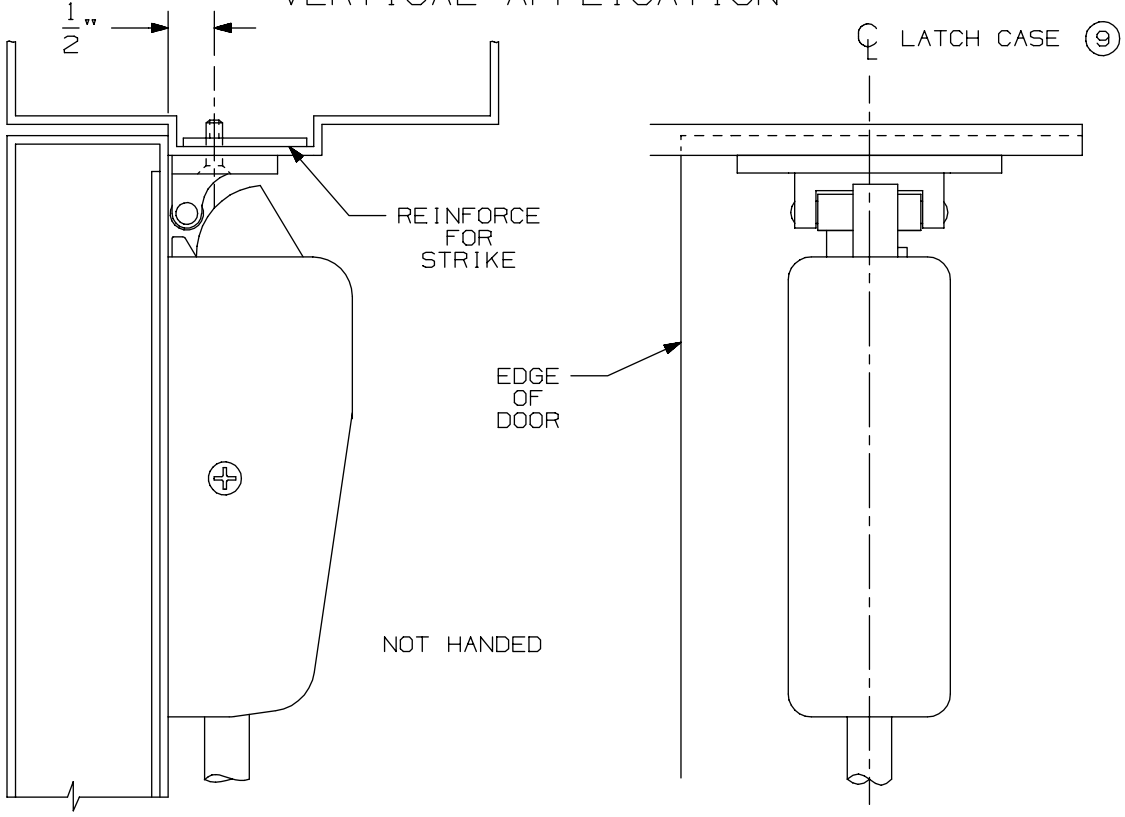

NOTE: LATCH CASE MOUNTING HOLES TO BE PREPARED AT INSTALLATION ON DOOR.

299 & 299F Strike

VON DUPRIN®

NOTES: SEE MASTER SHEET #10001 FOR SUGGESTED REINFORCING

TEMPLATE NUMBER: 30039_a

DATE: 05-23-13

APPLICATION	PREPARATION
SURFACE APPLICATION	#10-24 TAP 4 PLACES
990 TRIM APPLICATION OR SEX BOLT APPLICATION (SEE NOTE 1)	1/4' DIA THIS SIDE 13/32" DIA OPPOSITE SIDE - 4 PLACES

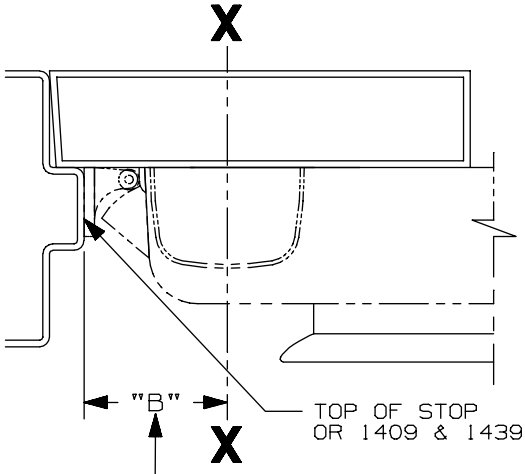

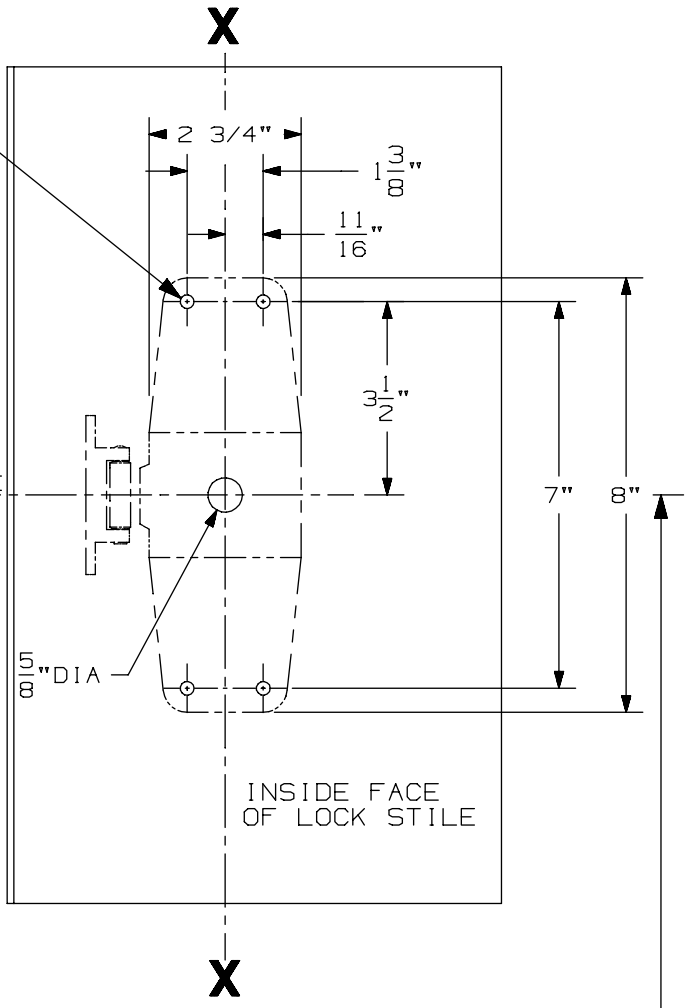

SINGLE DOOR INSTALLATION			
STRIKE	DIM. "B"	MIN. STILE 990/991/992 TRIM	MIN. STILE 696/697 TRIM
299 & 299-F	2 3/8"	4 1/2"	4 3/8"
(6) 1409 & 1439	1 9/16"	3 13/16"	3 13/16"
1606	1 15/16"	4 1/16"	3 15/16"

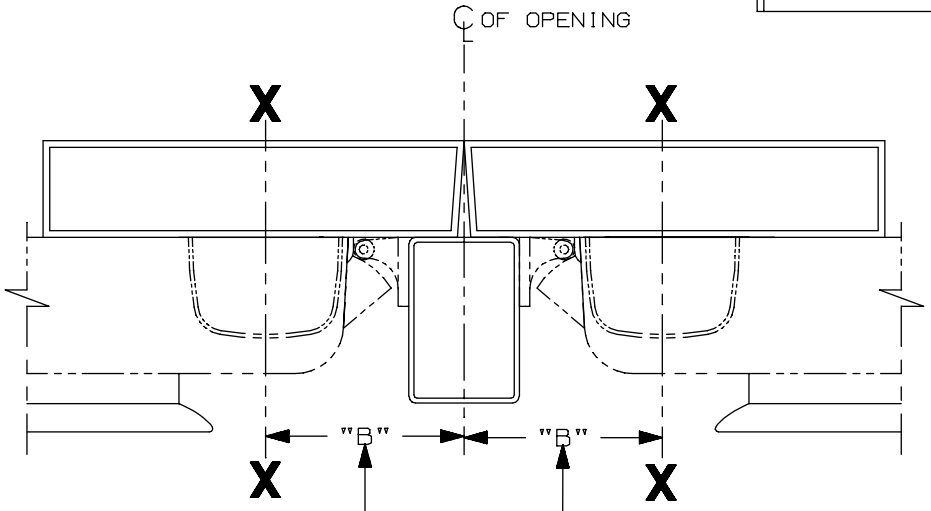

SINGLE DOOR OPENING
39 13/16" TO FINISHED FLOOR

DOUBLE DOOR OPENING
WITH VON DUPRIN MULLION
39 11/16"

LHR APPLICATION SHOWN
RHR APPLICATION OPPOSITE

DOUBLE DOOR INSTALLATION WITH VON DUPRIN MULLIONS				
MULLION	STRIKE	DIM. "B"	MIN. STILE 990/991/992 TRIM	MIN. STILE 696/697 TRIM
(6) 4954/9954	299/299-F	3 3/8"	4 7/8"	4 3/4"
9954	499-F	3 1/2"	5"	4 7/8"
5654	299	2 15/16"	4 3/8"	4 1/4"
5754	1408	2 1/8"	3 13/16"	3 13/16"
1654	1606	2 15/16"	4 3/8"	4 1/4"

NOTES:
1. THESE FOUR HOLES TO BE PREPARED FOR SURFACE APPLICATION WHEN USING 696/697 TRIM. DO NOT PREPARE FOR SEX BOLTS.
2. FOR STOCK HOLLOW METAL DOORS SEE TEMPLATE NO. 10307 FOR TYPE "161" CUTOUT AND 10314 FOR TYPE "86" CUTOUT.
3. GLASS BEAD KIT AVAILABLE WHEN REQUIRED.
4. FOR OUTSIDE TRIM PREPARATION, WHEN REQUIRED, SEE TRIM TEMPLATE.
5. 9954 W/299-F FOR HURRICANE APPLICATIONS ONLY. (6)

CX98/CX99 NL Series Rim Device

VON DUPRIN®

NOTES: SEE MASTER SHEET #10001 FOR SUGGESTED REINFORCING

TEMPLATE NUMBER: 10354_a

DATE: 05-22-13

990 NL TRIM

NOTES: SEE MASTER SHEET #10001 FOR SUGGESTED REINFORCING

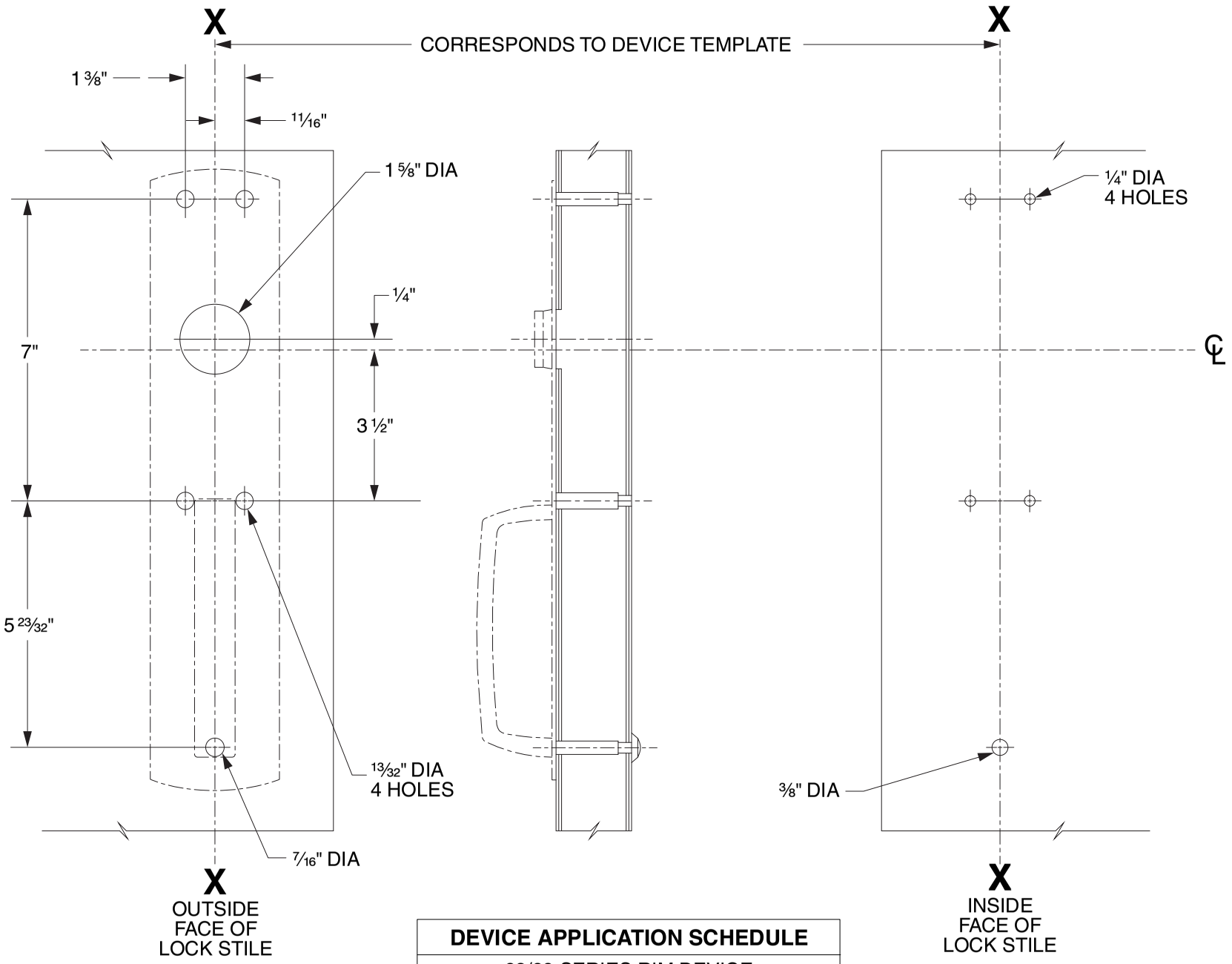

DEVICE APPLICATION SCHEDULE
98/99 SERIES RIM DEVICE
9827/9927 SERIES DEVICE
9847/9947 SERIES DEVICE
9849/9949 SERIES DEVICE

LHR SHOWN
RHR OPPOSITE

VON DUPRIN®

TEMPLATE NUMBER: 20267_C

DATE: 05-31-13

RIM APPLICATION

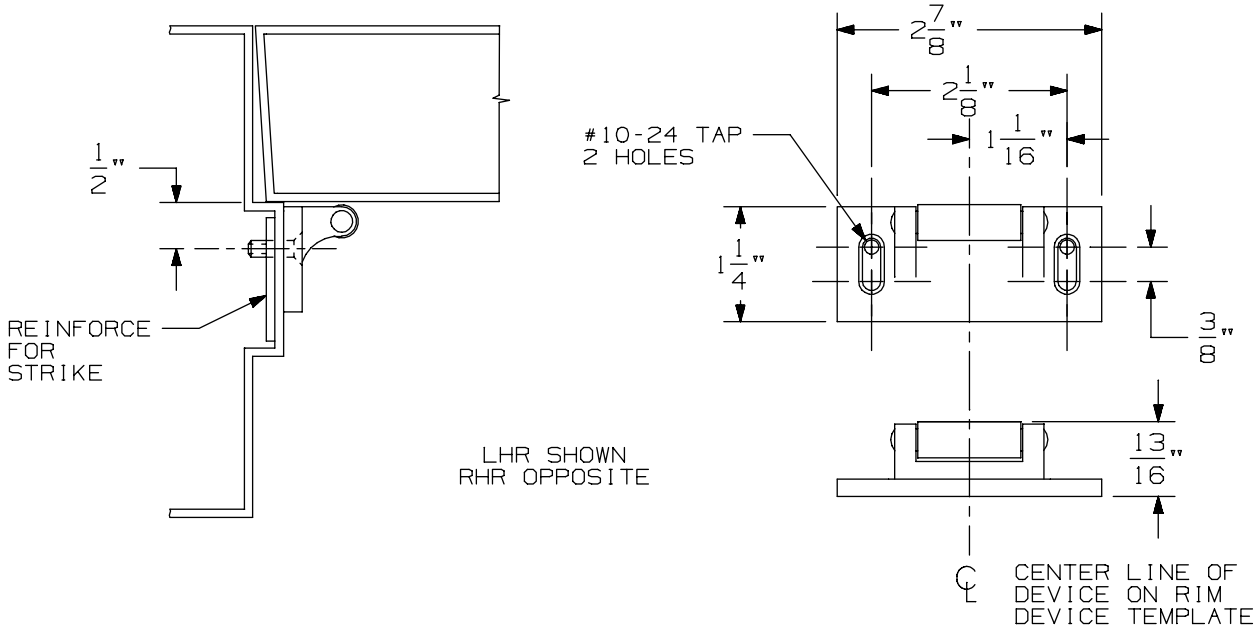

VERTICAL APPLICATION

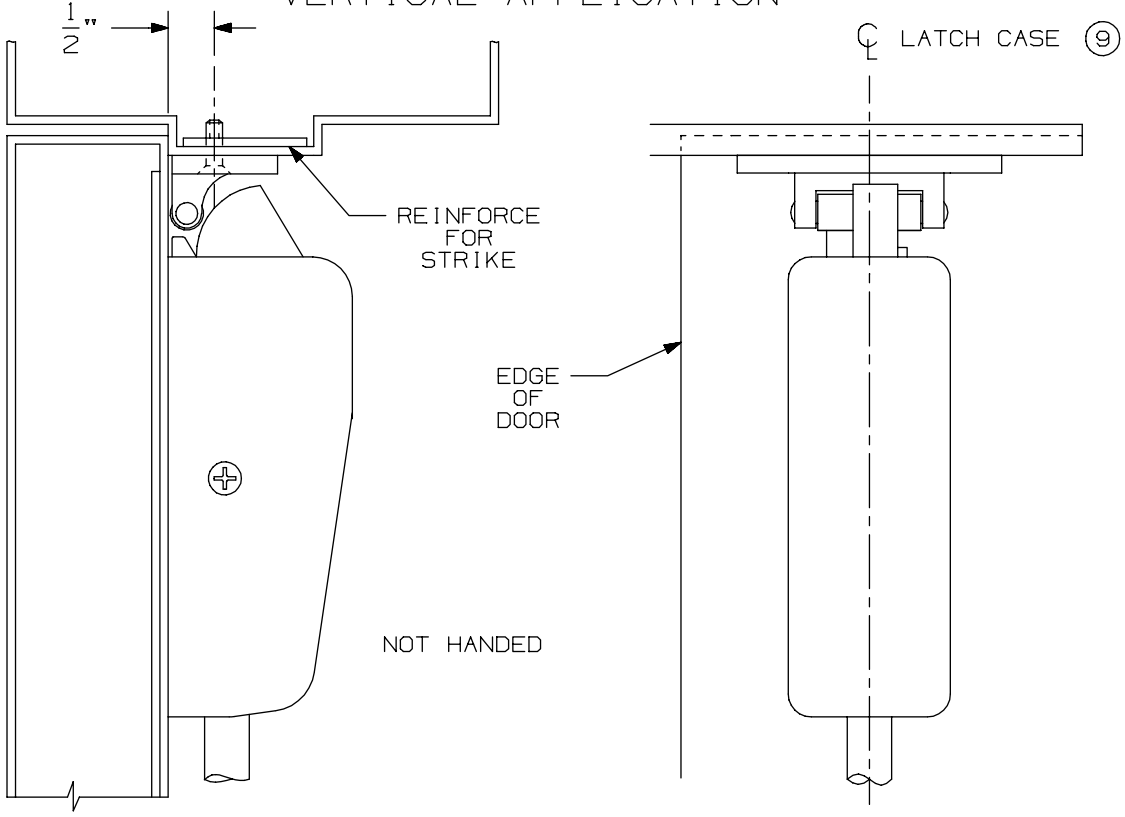

NOTE: LATCH CASE MOUNTING HOLES TO BE PREPARED AT INSTALLATION ON DOOR.

299 & 299F Strike

VON DUPRIN®

NOTES: SEE MASTER SHEET #10001 FOR SUGGESTED REINFORCING

TEMPLATE NUMBER: 30039_a

DATE: 05-23-13

APPLICATION	PREPARATION
SURFACE APPLICATION	#10-24 TAP 4 PLACES
990 TRIM APPLICATION OR SEX BOLT APPLICATION (SEE NOTE 1)	1/4' DIA THIS SIDE 13/32" DIA OPPOSITE SIDE - 4 PLACES

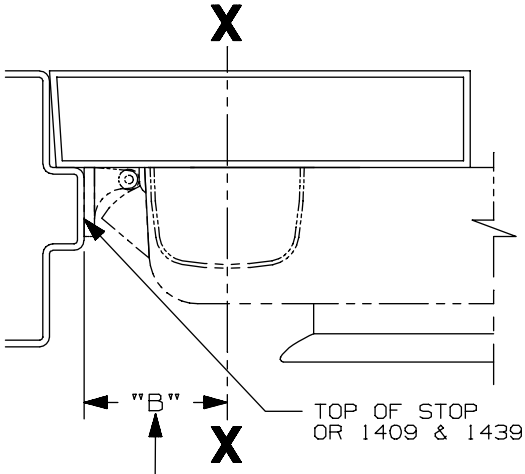

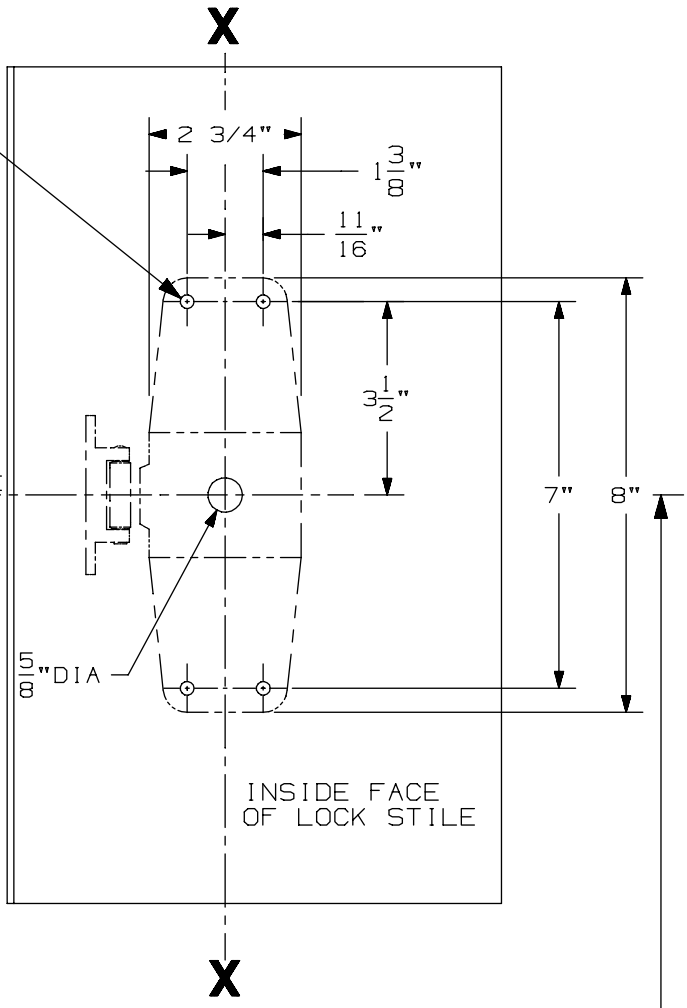

SINGLE DOOR INSTALLATION			
STRIKE	DIM. "B"	MIN. STILE 990/991/992 TRIM	MIN. STILE 696/697 TRIM
299 & 299-F	2 3/8"	4 1/2"	4 3/8"
(6) 1409 & 1439	1 9/16"	3 13/16"	3 13/16"
1606	1 15/16"	4 1/16"	3 15/16"

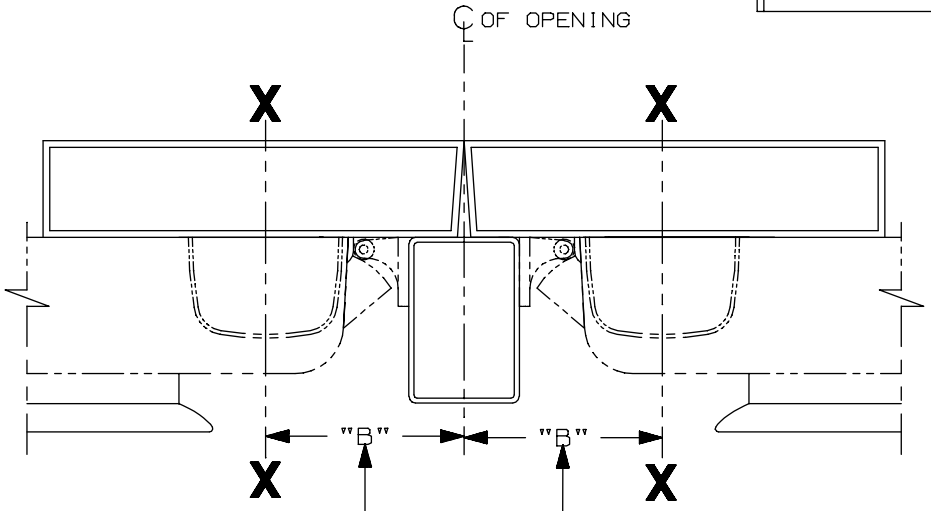

SINGLE DOOR OPENING
39 13/16" TO FINISHED FLOOR

DOUBLE DOOR OPENING
WITH VON DUPRIN MULLION
39 11/16"

LHR APPLICATION SHOWN
RHR APPLICATION OPPOSITE

DOUBLE DOOR INSTALLATION WITH VON DUPRIN MULLIONS				
MULLION	STRIKE	DIM. "B"	MIN. STILE 990/991/992 TRIM	MIN. STILE 696/697 TRIM
(6) 4954/9954	299/299-F	3 3/8"	4 7/8"	4 3/4"
9954	499-F	3 1/2"	5"	4 7/8"
5654	299	2 15/16"	4 3/8"	4 1/4"
5754	1408	2 1/8"	3 13/16"	3 13/16"
1654	1606	2 15/16"	4 3/8"	4 1/4"

NOTES:
1. THESE FOUR HOLES TO BE PREPARED FOR SURFACE APPLICATION WHEN USING 696/697 TRIM. DO NOT PREPARE FOR SEX BOLTS.
2. FOR STOCK HOLLOW METAL DOORS SEE TEMPLATE NO. 10307 FOR TYPE "161" CUTOUT AND 10314 FOR TYPE "86" CUTOUT.
3. GLASS BEAD KIT AVAILABLE WHEN REQUIRED.
4. FOR OUTSIDE TRIM PREPARATION, WHEN REQUIRED, SEE TRIM TEMPLATE.
5. 9954 W/299-F FOR HURRICANE APPLICATIONS ONLY. (6)

CX98/CX99 NL Series Rim Device

VON DUPRIN®

NOTES: SEE MASTER SHEET #10001 FOR SUGGESTED REINFORCING

TEMPLATE NUMBER: 10354_a

DATE: 05-22-13

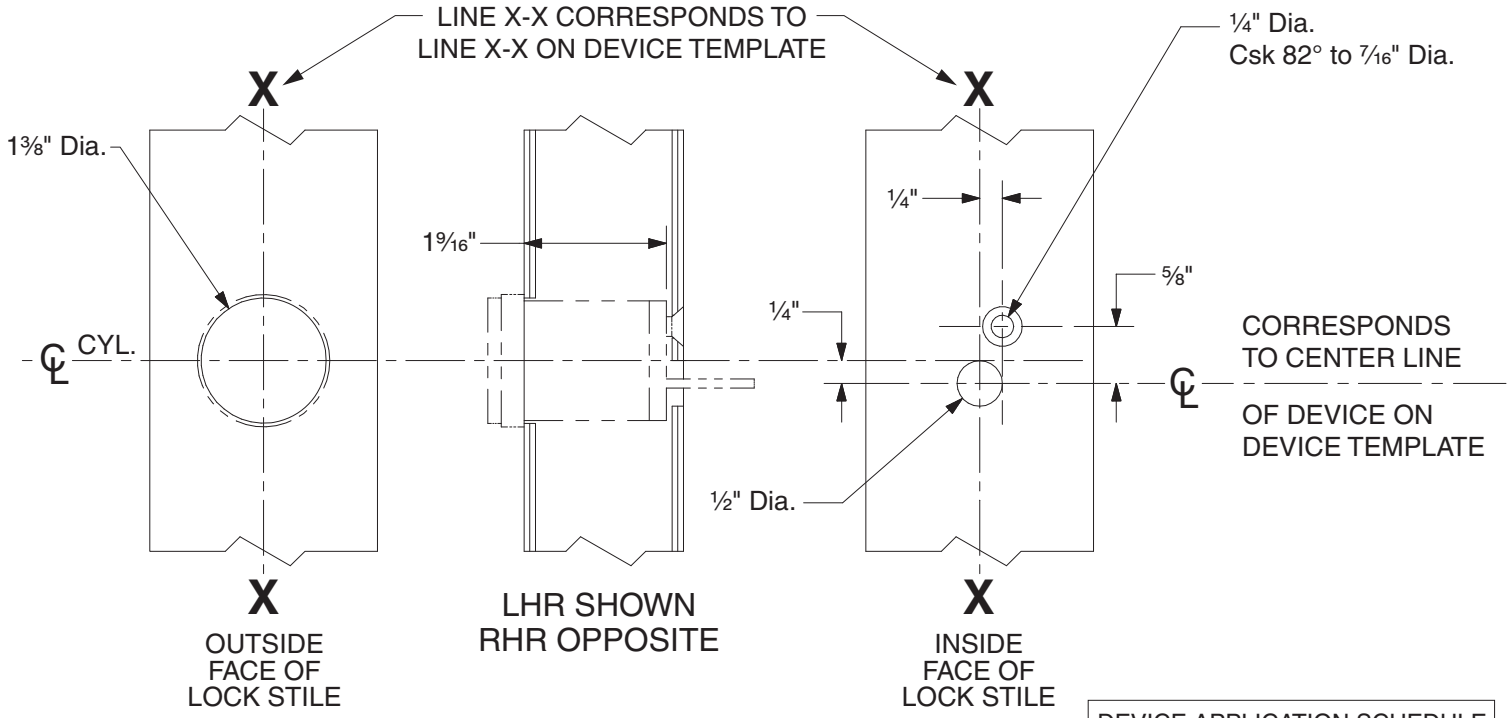

DEVICE APPLICATION SCHEDULE	
98 RIM SERIES	99 RIM SERIES
9827 SERIES	9927 SERIES
9847 SERIES	9947 SERIES
22 RIM SERIES	2227 SERIES

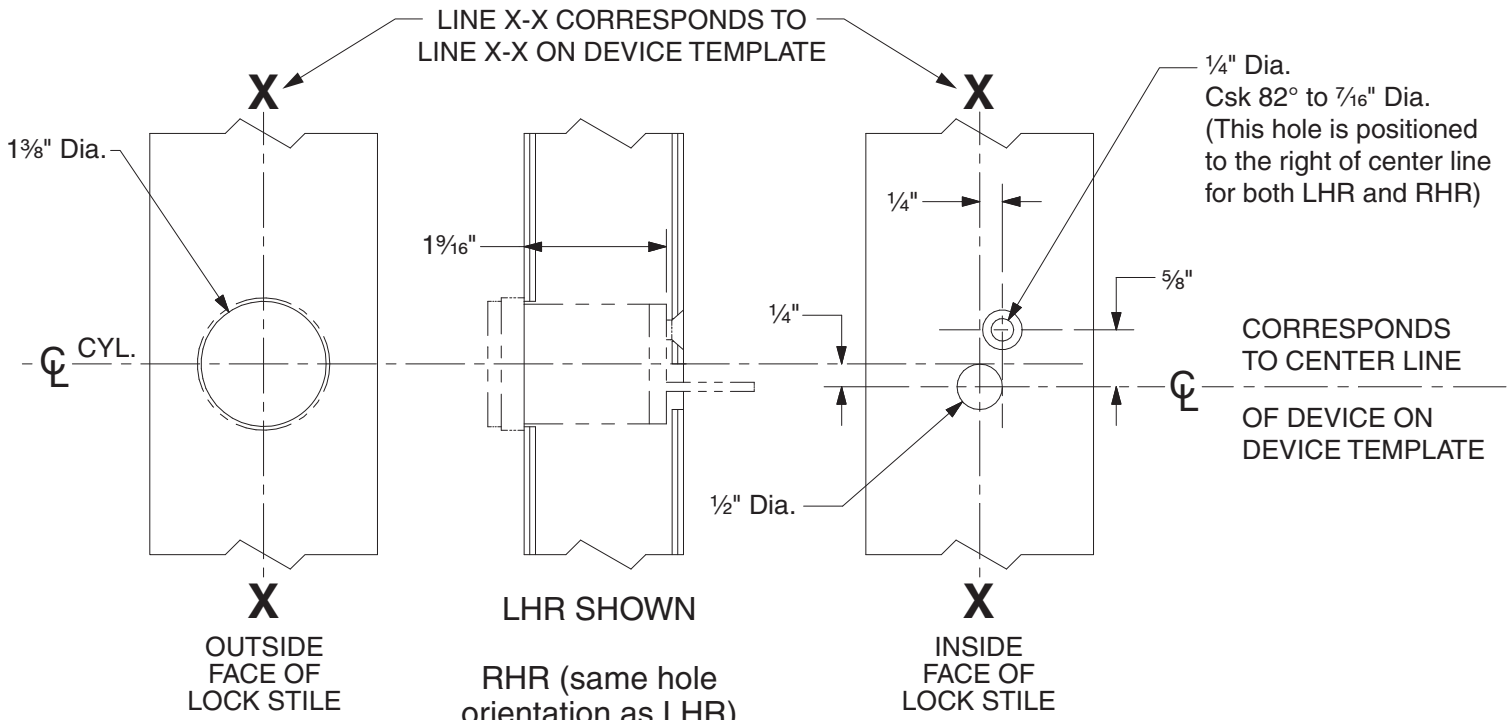

DEVICE APPLICATION SCHEDULE	
9849 SERIES	9949 SERIES

110NL Cylinder Preparation

VON DUPRIN®

NOTES: SEE MASTER SHEET #10001 FOR SUGGESTED REINFORCING

TEMPLATE NUMBER: 40022_c

DATE: 05-28-13

RIM APPLICATION

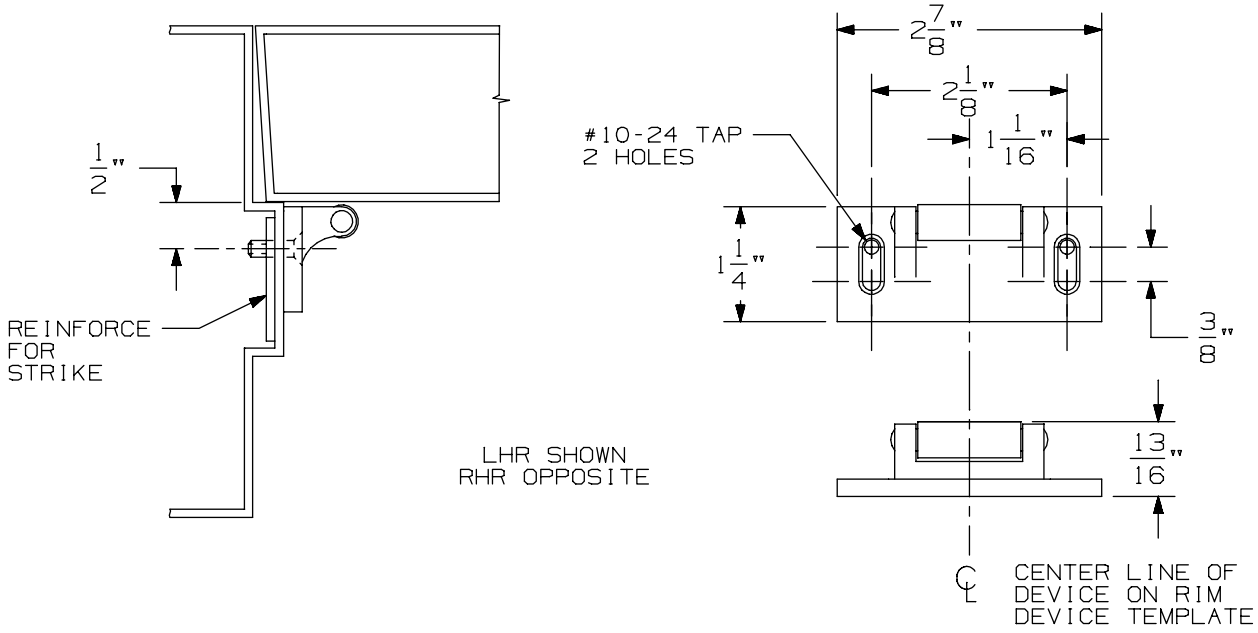

VERTICAL APPLICATION

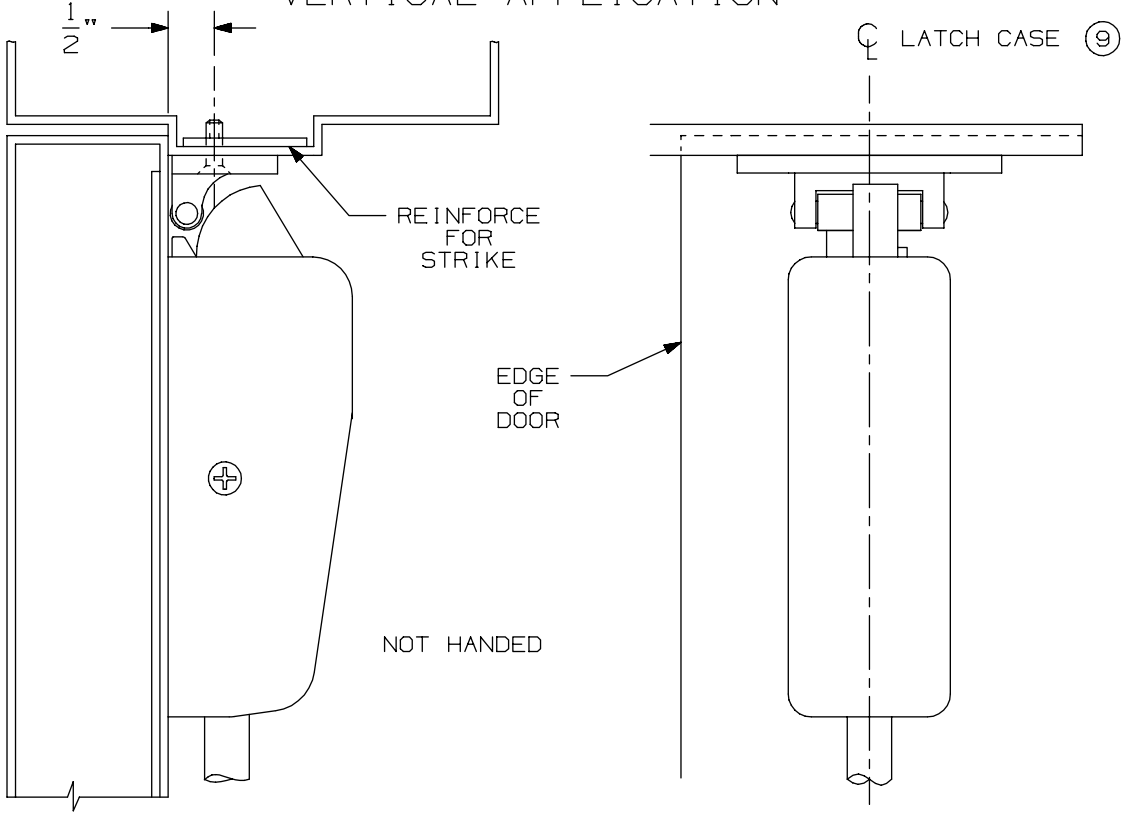

NOTE: LATCH CASE MOUNTING HOLES TO BE PREPARED AT INSTALLATION ON DOOR.

299 & 299F Strike

VON DUPRIN®

NOTES: SEE MASTER SHEET #10001 FOR SUGGESTED REINFORCING

TEMPLATE NUMBER: 30039_a

DATE: 05-23-13

APPLICATION	PREPARATION
SURFACE APPLICATION	#10-24 TAP 4 PLACES
990 TRIM APPLICATION OR SEX BOLT APPLICATION (SEE NOTE1)	1/4' DIA THIS SIDE 13/32" DIA OPPOSITE SIDE - 4 PLACES

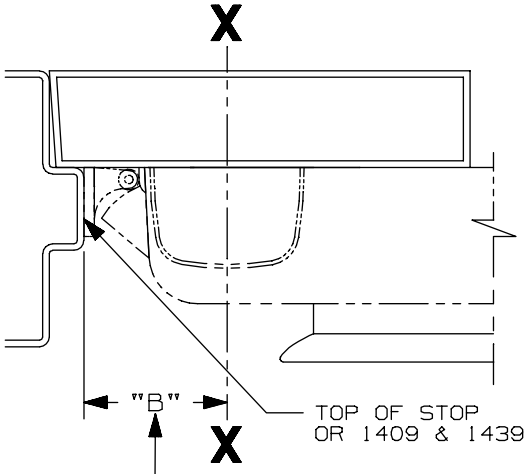

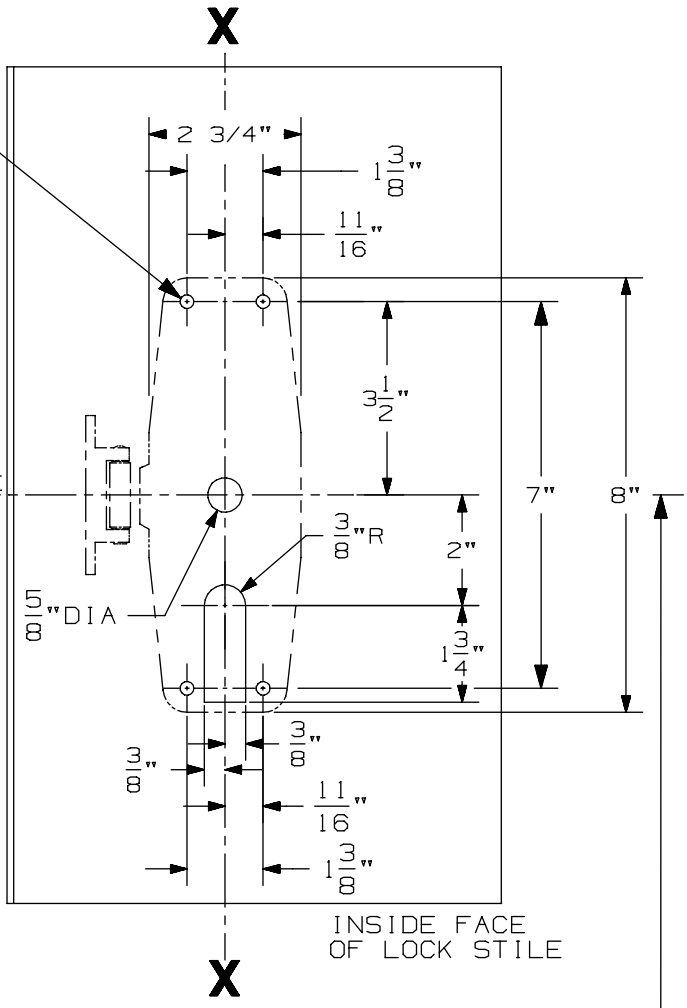

SINGLE DOOR INSTALLATION			
STRIKE	DIM. "B"	MIN. STILE 990/991/992 TRIM	MIN. STILE 696/697 TRIM
299 & 299-F	2 3/8"	4 1/2"	4 3/8"
(5) 1409 & 1439	1 9/16"	3 13/16"	3 13/16"
1606	1 15/16"	4 1/16"	3 15/16"

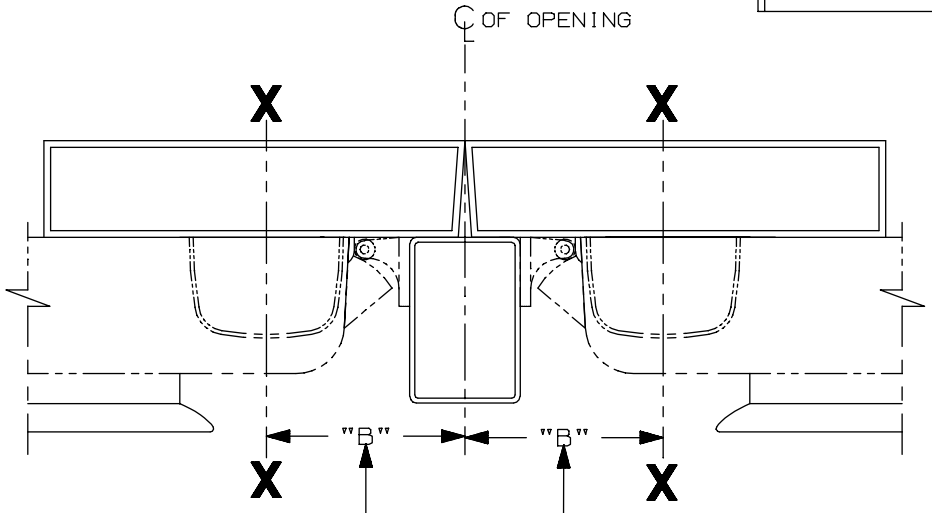

SINGLE DOOR OPENING
39 13/16" TO FINISHED FLOOR

DOUBLE DOOR OPENING
WITH VON DUPRIN MULLION
39 11/16"

LHR APPLICATION SHOWN,
RHR APPLICATION OPPSITE

DOUBLE DOOR INSTALLATION WITH VON DUPRIN MULLIONS				
MULLION	STRIKE	DIM. "B"	MIN. STILE 990/991/992 TRIM	MIN. STILE 696/697 TRIM
(5) 4954/9954	299/299-F	3 3/8"	4 7/8"	4 3/4"
9954	499-F	3 1/2"	5"	4 7/8"
5654	299	2 15/16"	4 3/8"	4 1/4"
5754	1408	2 1/8"	3 13/16"	3 13/16"
1654	1606	2 15/16"	4 3/8"	4 1/4"

NOTES:
1. THESE FOUR HOLES TO BE PREPARED FOR SURFACE APPLICATION WHEN USING 696/697 TRIM. DO NOT PREPARE FOR SEX BOLTS.
2. FOR STOCK HOLLOW METAL DOORS SEE TEMPLATE NO. 10309 FOR TYPE "161" CUTOUT AND 10315 FOR TYPE "86" CUTOUT.
3. GLASS BEAD KIT AVAILABLE WHEN REQUIRED.
4. FOR OUTSIDE TRIM PREPARATION, WHEN REQUIRED, SEE TRIM TEMPLATE.
5. 9954 W/299-F FOR HURRICANE APPLICATIONS ONLY. (5)

CX98/CX99 TP, K, & L Series Rim Device

VON DUPRIN®

NOTES: SEE MASTER SHEET #10001 FOR SUGGESTED REINFORCING

TEMPLATE NUMBER: 10355_a

DATE: 05-22-13

991 K & 992 L Trim

NOTES: SEE MASTER SHEET #10001 FOR SUGGESTED REINFORCING

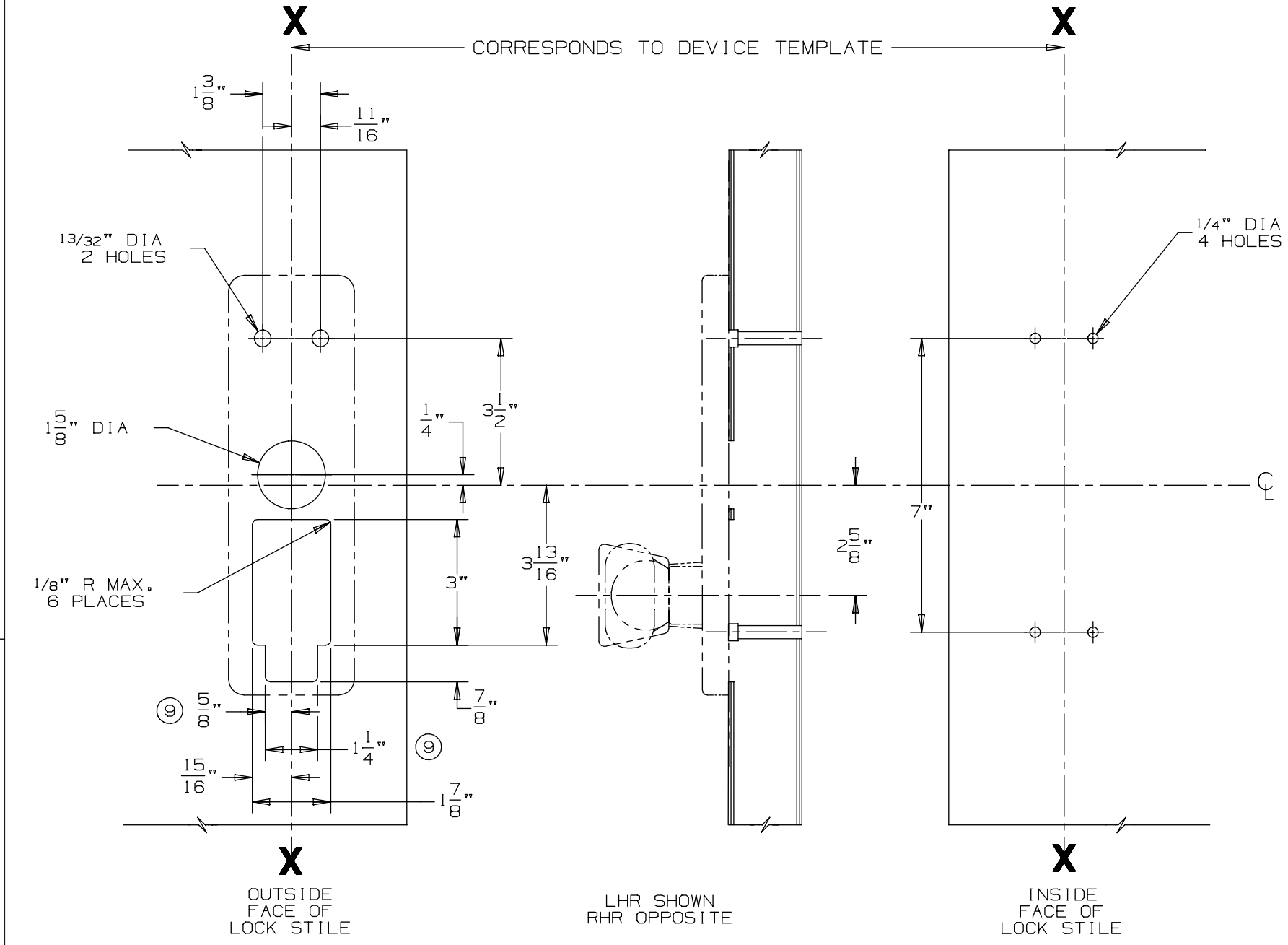

DEVICE APPLICATION SCHEDULE
98/99 SERIES RIM DEVICE
9827/9927 SERIES DEVICE
9847/9947 SERIES DEVICE

VON DUPRIN®

TEMPLATE NUMBER: 20272_a

DATE: 05-23-13

RIM APPLICATION

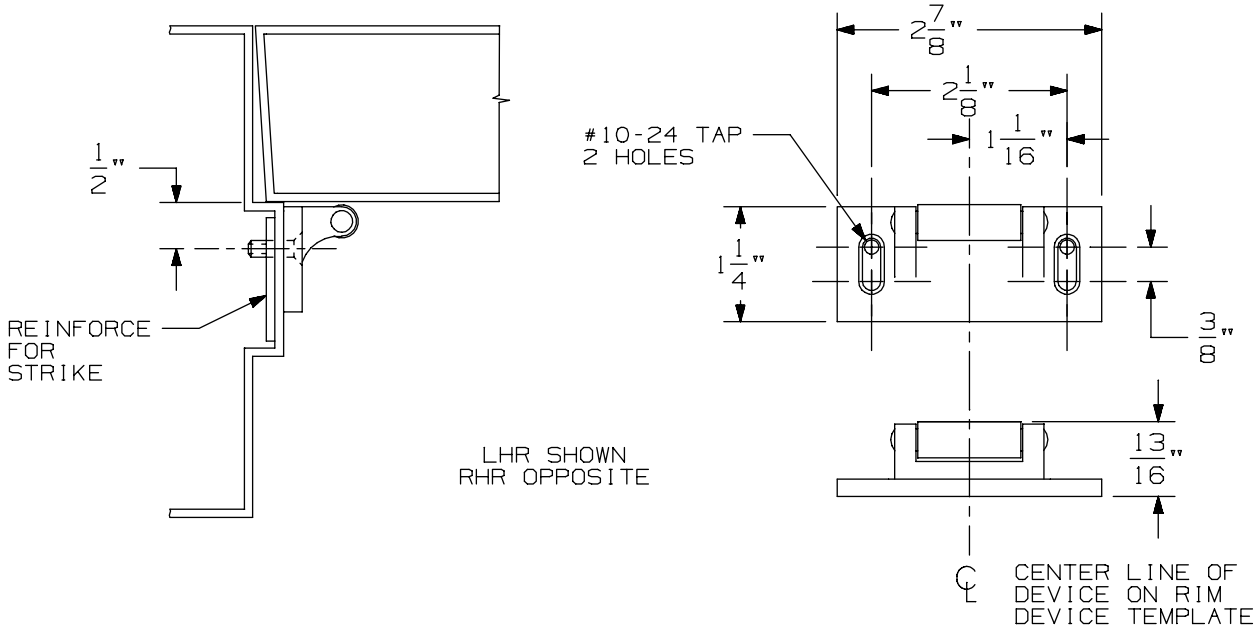

VERTICAL APPLICATION

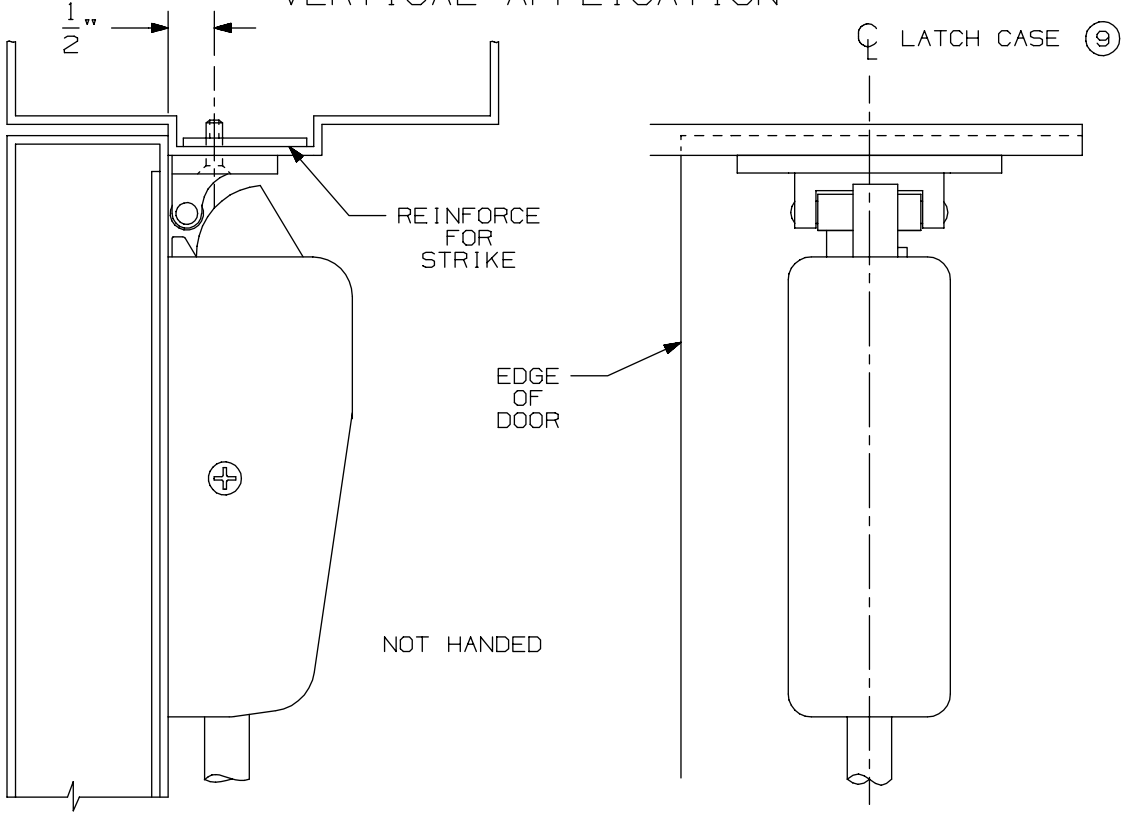

NOTE: LATCH CASE MOUNTING HOLES TO BE PREPARED AT INSTALLATION ON DOOR.

299 & 299F Strike

VON DUPRIN®

NOTES: SEE MASTER SHEET #10001 FOR SUGGESTED REINFORCING

TEMPLATE NUMBER: 30039_a

DATE: 05-23-13

APPLICATION	PREPARATION
SURFACE APPLICATION	#10-24 TAP 4 PLACES
990 TRIM APPLICATION OR SEX BOLT APPLICATION (SEE NOTE1)	1/4' DIA THIS SIDE 13/32" DIA OPPOSITE SIDE - 4 PLACES

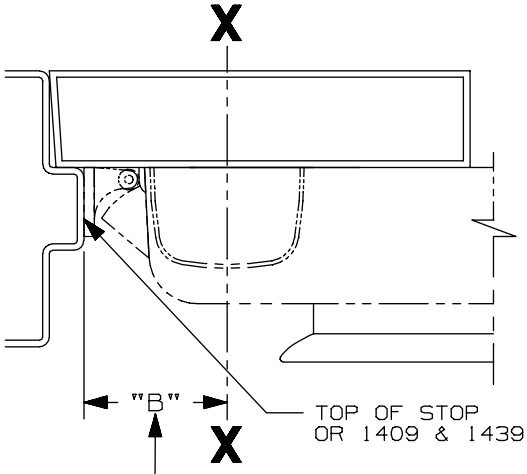

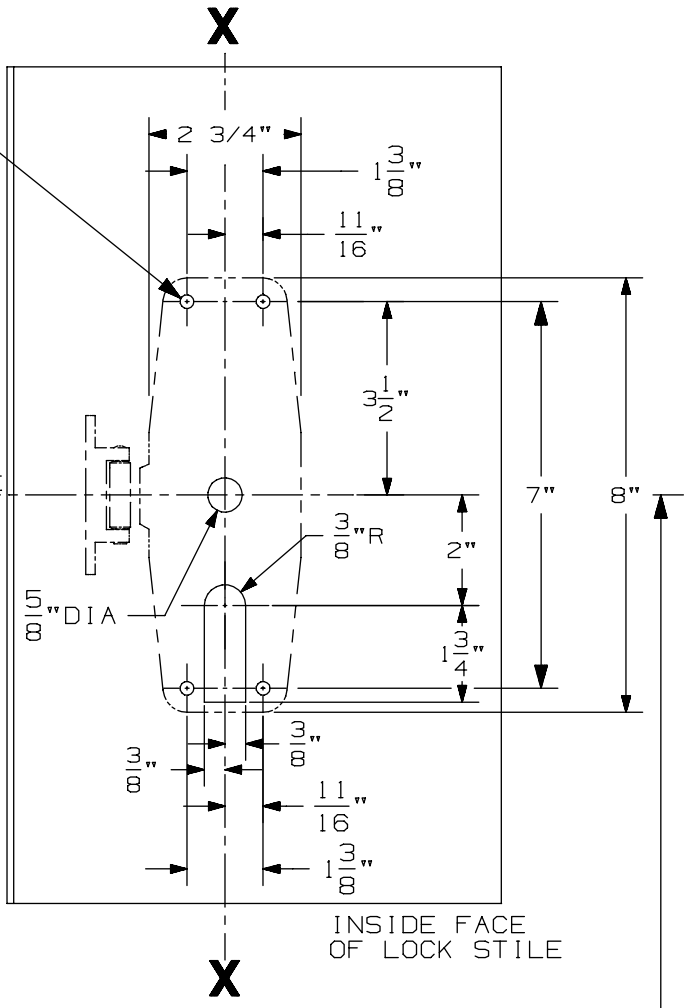

SINGLE DOOR INSTALLATION			
STRIKE	DIM. "B"	MIN. STILE 990/991/992 TRIM	MIN. STILE 696/697 TRIM
299 & 299-F	2 3/8"	4 1/2"	4 3/8"
(5) 1409 & 1439	1 9/16"	3 13/16"	3 13/16"
1606	1 15/16"	4 1/16"	3 15/16"

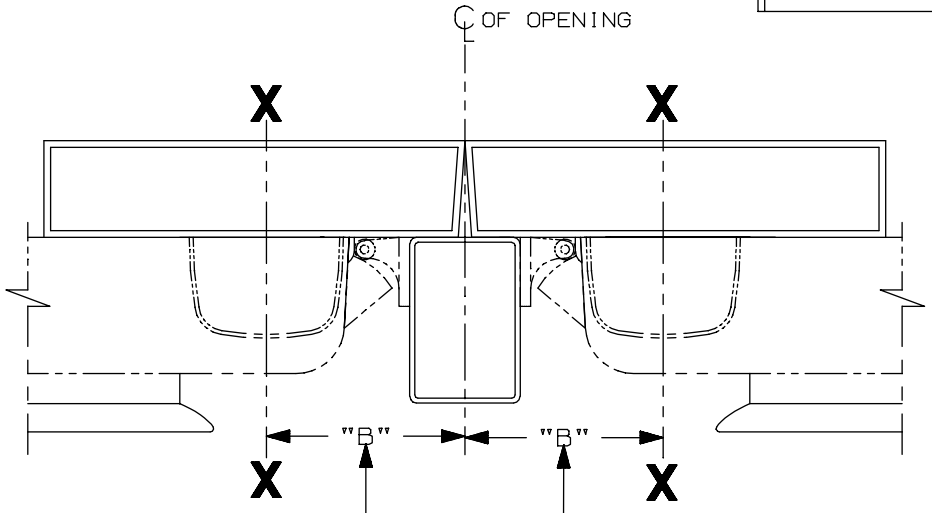

SINGLE DOOR OPENING
39 13/16" TO FINISHED FLOOR

DOUBLE DOOR OPENING
WITH VON DUPRIN MULLION
39 11/16"

LHR APPLICATION SHOWN,
RHR APPLICATION OPPSITE

DOUBLE DOOR INSTALLATION WITH VON DUPRIN MULLIONS				
MULLION	STRIKE	DIM. "B"	MIN. STILE 990/991/992 TRIM	MIN. STILE 696/697 TRIM
(5) 4954/9954	299/299-F	3 3/8"	4 7/8"	4 3/4"
9954	499-F	3 1/2"	5"	4 7/8"
5654	299	2 15/16"	4 3/8"	4 1/4"
5754	1408	2 1/8"	3 13/16"	3 13/16"
1654	1606	2 15/16"	4 3/8"	4 1/4"

NOTES:
1. THESE FOUR HOLES TO BE PREPARED FOR SURFACE APPLICATION WHEN USING 696/697 TRIM. DO NOT PREPARE FOR SEX BOLTS.
2. FOR STOCK HOLLOW METAL DOORS SEE TEMPLATE NO. 10309 FOR TYPE "161" CUTOUT AND 10315 FOR TYPE "86" CUTOUT.
3. GLASS BEAD KIT AVAILABLE WHEN REQUIRED.
4. FOR OUTSIDE TRIM PREPARATION, WHEN REQUIRED, SEE TRIM TEMPLATE.
5. 9954 W/299-F FOR HURRICANE APPLICATIONS ONLY. (5)

CX98/CX99 TP, K, & L Series Rim Device

VON DUPRIN®

NOTES: SEE MASTER SHEET #10001 FOR SUGGESTED REINFORCING

TEMPLATE NUMBER: 10355_a

DATE: 05-22-13

DEVICE APPLICATION SCHEDULE	
98 RIM SERIES	99 RIM SERIES
9827 SERIES	9927 SERIES
9847 SERIES	9947 SERIES
9849 SERIES	9949 SERIES

996L, E996L, 996L-BE, E996L-BE 996K, 996K-BE R/V SERIES
TRIM METAL DOOR APPLICATION

VON DUPRIN®

NOTES: SEE MASTER SHEET #10001 FOR SUGGESTED REINFORCING

TEMPLATE NUMBER: 20003_e

DATE: 10-30-14

RIM APPLICATION

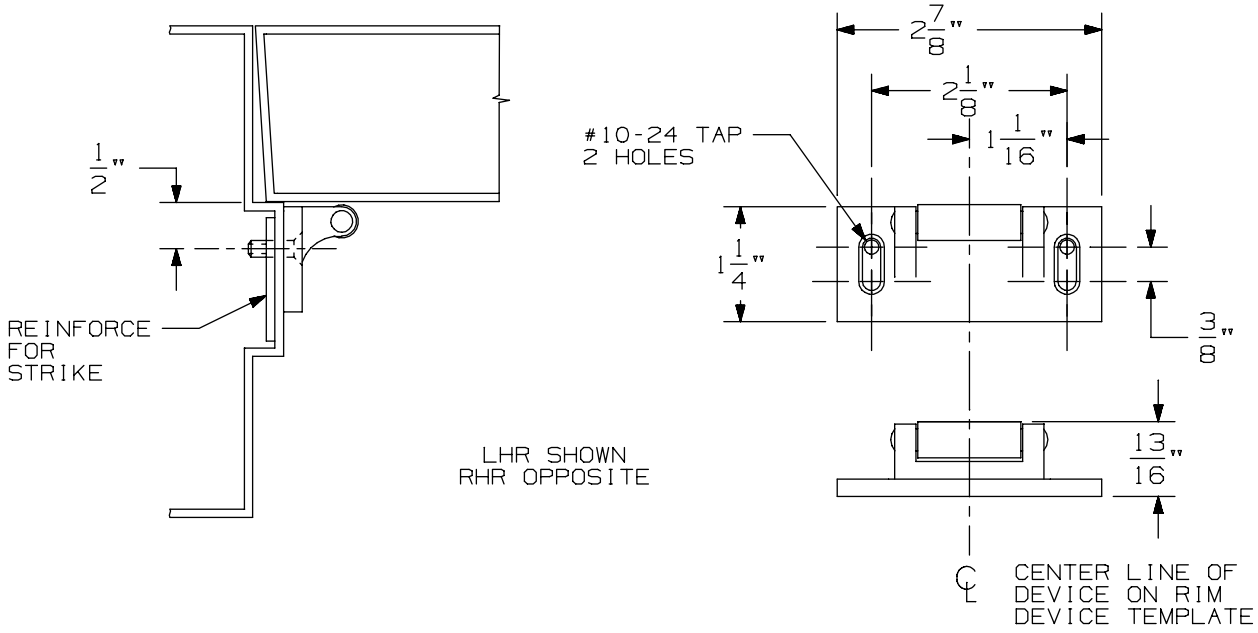

VERTICAL APPLICATION

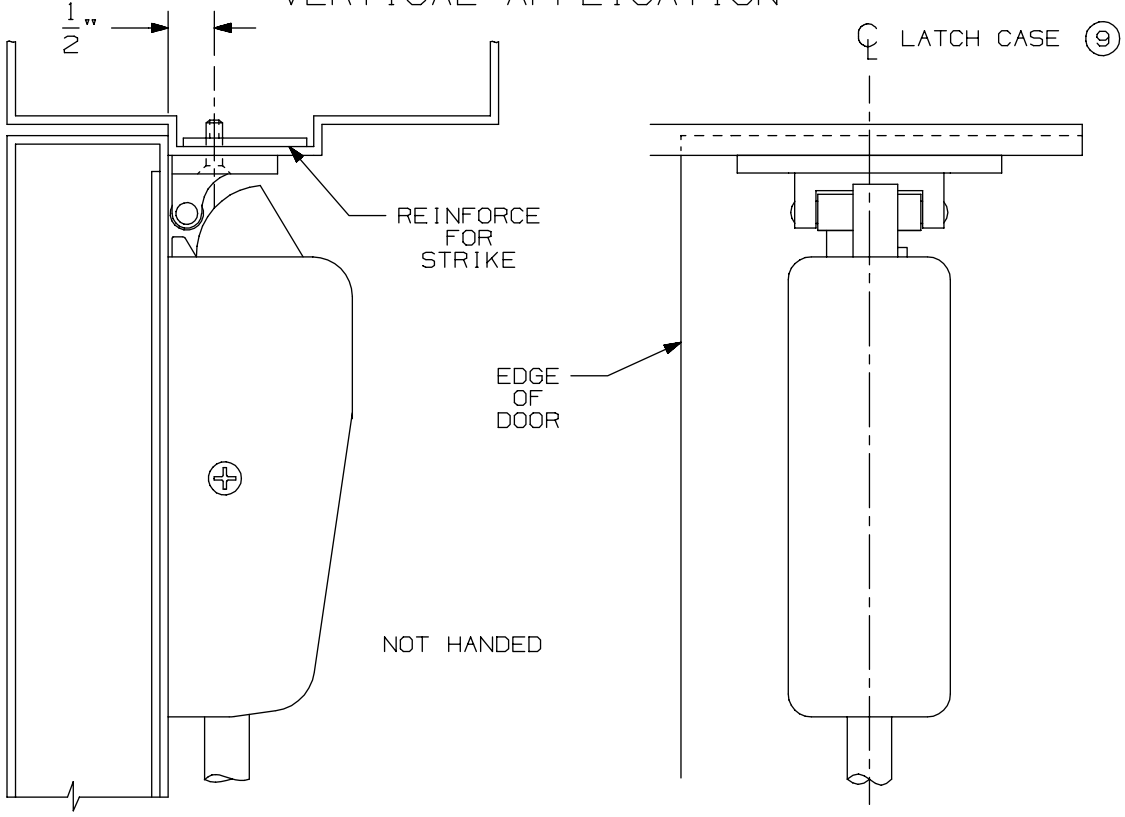

NOTE: LATCH CASE MOUNTING HOLES TO BE PREPARED AT INSTALLATION ON DOOR.

299 & 299F Strike

VON DUPRIN®

NOTES: SEE MASTER SHEET #10001 FOR SUGGESTED REINFORCING

TEMPLATE NUMBER: 30039_a

DATE: 05-23-13

APPLICATION	PREPARATION
SURFACE APPLICATION	#10-24 TAP 4 PLACES
990 TRIM APPLICATION OR SEX BOLT APPLICATION (SEE NOTE1)	1/4' DIA THIS SIDE 13/32" DIA OPPOSITE SIDE - 4 PLACES

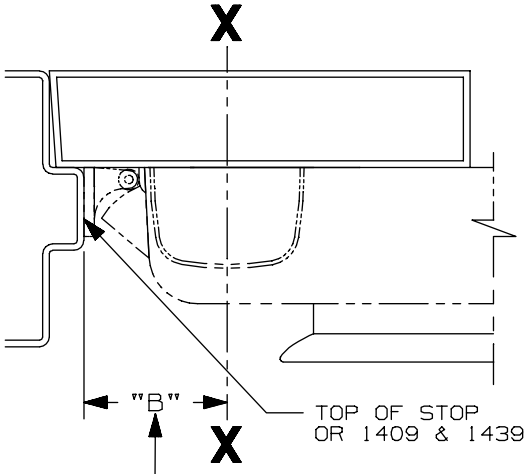

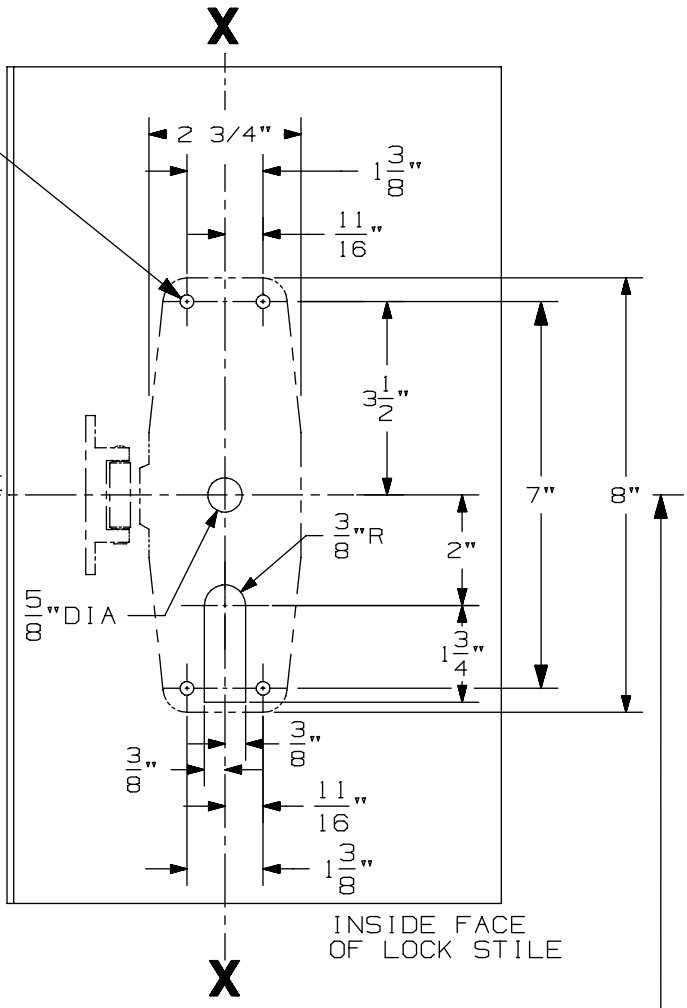

SINGLE DOOR INSTALLATION			
STRIKE	DIM. "B"	MIN. STILE 990/991/992 TRIM	MIN. STILE 696/697 TRIM
299 & 299-F	2 3/8"	4 1/2"	4 3/8"
(5) 1409 & 1439	1 9/16"	3 13/16"	3 13/16"
1606	1 15/16"	4 1/16"	3 15/16"

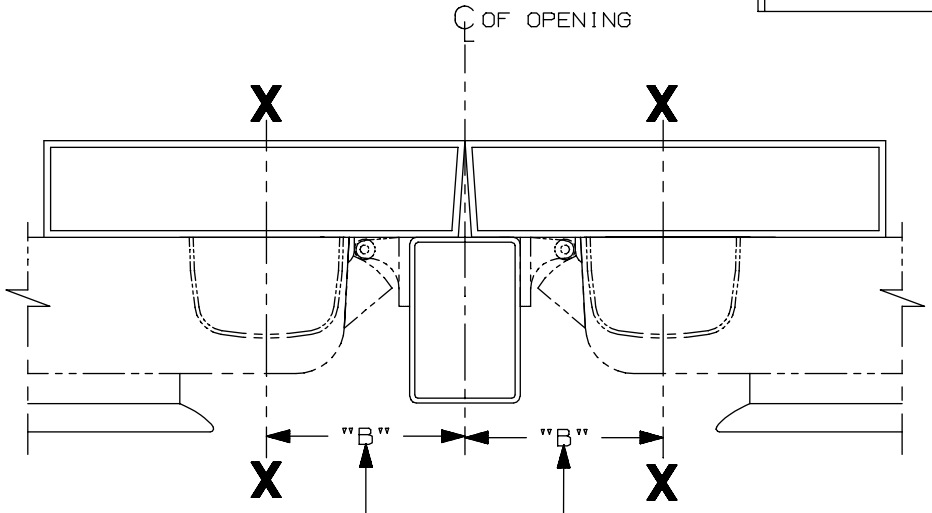

SINGLE DOOR OPENING
39 13/16" TO FINISHED FLOOR

DOUBLE DOOR OPENING
WITH VON DUPRIN MULLION
39 11/16"

LHR APPLICATION SHOWN,
RHR APPLICATION OPPSITE

DOUBLE DOOR INSTALLATION WITH VON DUPRIN MULLIONS				
MULLION	STRIKE	DIM. "B"	MIN. STILE 990/991/992 TRIM	MIN. STILE 696/697 TRIM
(5) 4954/9954	299/299-F	3 3/8"	4 7/8"	4 3/4"
9954	499-F	3 1/2"	5"	4 7/8"
5654	299	2 15/16"	4 3/8"	4 1/4"
5754	1408	2 1/8"	3 13/16"	3 13/16"
1654	1606	2 15/16"	4 3/8"	4 1/4"

NOTES:
1. THESE FOUR HOLES TO BE PREPARED FOR SURFACE APPLICATION WHEN USING 696/697 TRIM. DO NOT PREPARE FOR SEX BOLTS.
2. FOR STOCK HOLLOW METAL DOORS SEE TEMPLATE NO. 10309 FOR TYPE "161" CUTOUT AND 10315 FOR TYPE "86" CUTOUT.
3. GLASS BEAD KIT AVAILABLE WHEN REQUIRED.
4. FOR OUTSIDE TRIM PREPARATION, WHEN REQUIRED, SEE TRIM TEMPLATE.
5. 9954 W/299-F FOR HURRICANE APPLICATIONS ONLY. (5)

CX98/CX99 TP, K, & L Series Rim Device

VON DUPRIN®

NOTES: SEE MASTER SHEET #10001 FOR SUGGESTED REINFORCING

TEMPLATE NUMBER: 10355_a

DATE: 05-22-13

990 TP & 990 TP-BE TRIM

NOTES: SEE MASTER SHEET #10001 FOR SUGGESTED REINFORCING

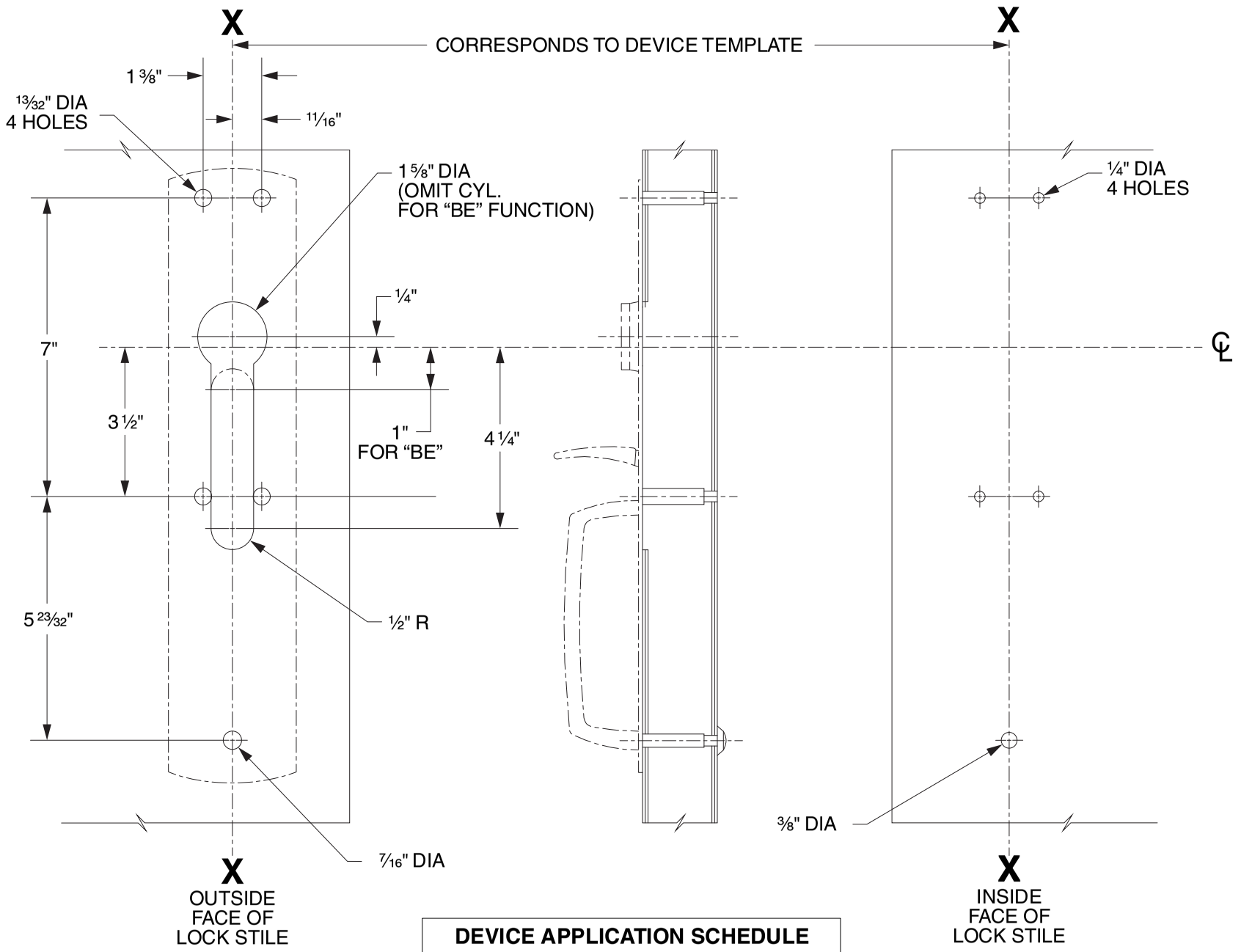

DEVICE APPLICATION SCHEDULE
98/99 SERIES RIM DEVICE
9827/9927 SERIES DEVICE
9847/9947 SERIES DEVICE
9849/9949 SERIES DEVICE

LHR SHOWN
RHR OPPOSITE

VON DUPRIN®

TEMPLATE NUMBER: 20265_C

DATE: 05-31-13

RIM APPLICATION

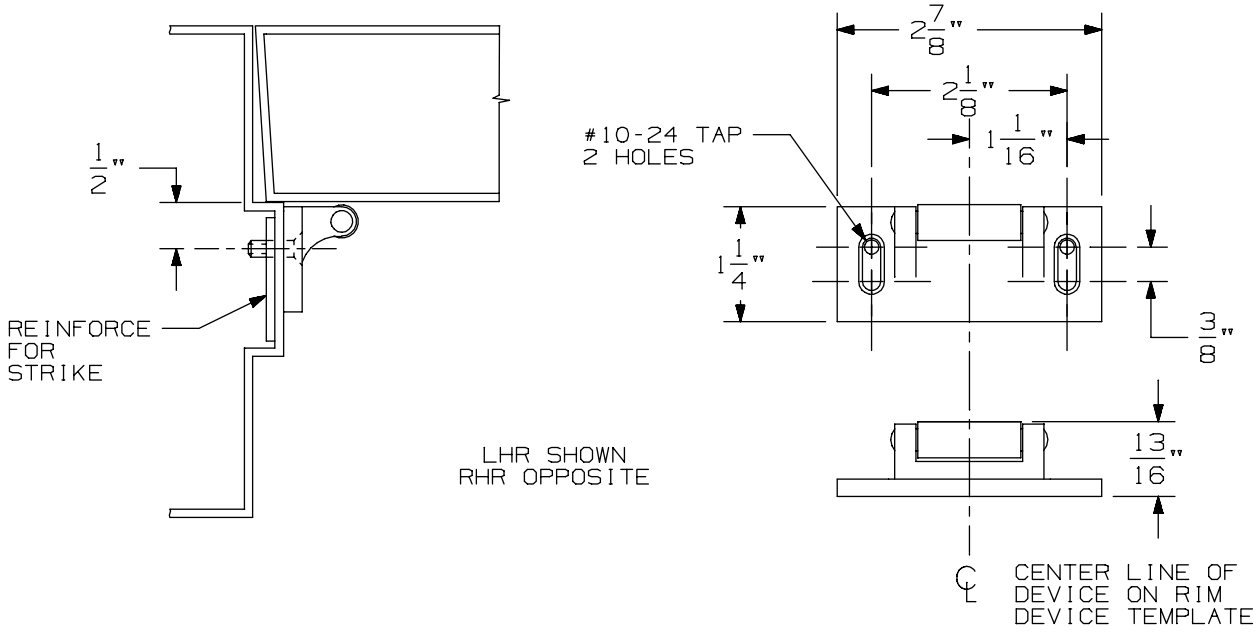

VERTICAL APPLICATION

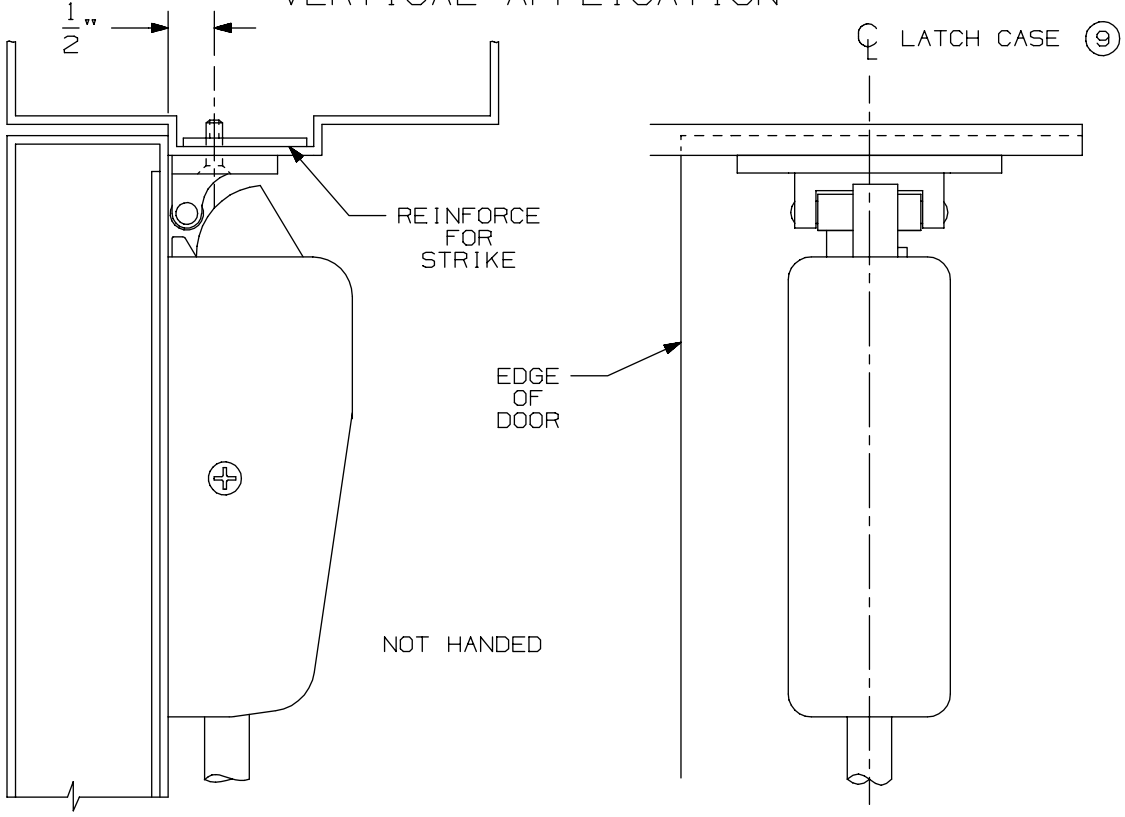

NOTE: LATCH CASE MOUNTING HOLES TO BE PREPARED AT INSTALLATION ON DOOR.

299 & 299F Strike

VON DUPRIN®

NOTES: SEE MASTER SHEET #10001 FOR SUGGESTED REINFORCING

TEMPLATE NUMBER: 30039_a

DATE: 05-23-13

98 / 99 Series Chex-it® Exit Devices

-

CX9827/CX9927 Surface Vertical Rod

DEVICE APPLICATION SCHEDULE		
INSTALLATION	MIN. STILE	BACKSET
TWO VERT. ROD DEVICES	3 11/16"	2 3/16"
VERT. ROD & MORTISE DEVICE	SEE TEMP. 10305	2 3/4"
SINGLE DOOR	3 11/16"	2 3/16"

APPLICATION	PREPARATION
SURFACE APPLICATION	#10-24 TAP-4 PLACES
990 TRIM APPLICATION SEX BOLT APPLICATION (SEE NOTE 1)	1/4" DIA. THIS SIDE 13/32" DIA. OPPOSITE SIDE - 4 PLACES

NOTES:

1. THESE FOUR HOLES TO BE PREPARED FOR SURFACE APPLICATION WHEN USING 696/697 TRIM. DO NOT PREPARE FOR SEX BOLTS.
2. FOR STOCK HOLLOW METAL DOORS SEE TEMPLATE NO. 10310.
3. LATCH CASE PREPARATION TO BE MADE AT INSTALLATION ON DOOR.
4. IT IS RECOMMENDED THE MOUNTING HOLES BE PREPARED IN THE FIELD.
5. FOR OUTSIDE TRIM PREPARATION, WHEN REQUIRED, SEE TRIM TEMPLATE.
6. LHR APPLICATION SHOWN, RHR APPLICATION OPPOSITE.
7. BACKSET MAY VARY WHEN USED WITH COORDINATOR.
8. GLASS BEAD KIT AVAILABLE WHEN REQUIRED.

RECOMMENDED DOOR UNDERCUT IS 1/4" FROM FINISHED FLOOR (PANIC & FIRE) OR 1/8" FROM THRESHOLD (PANIC ONLY).

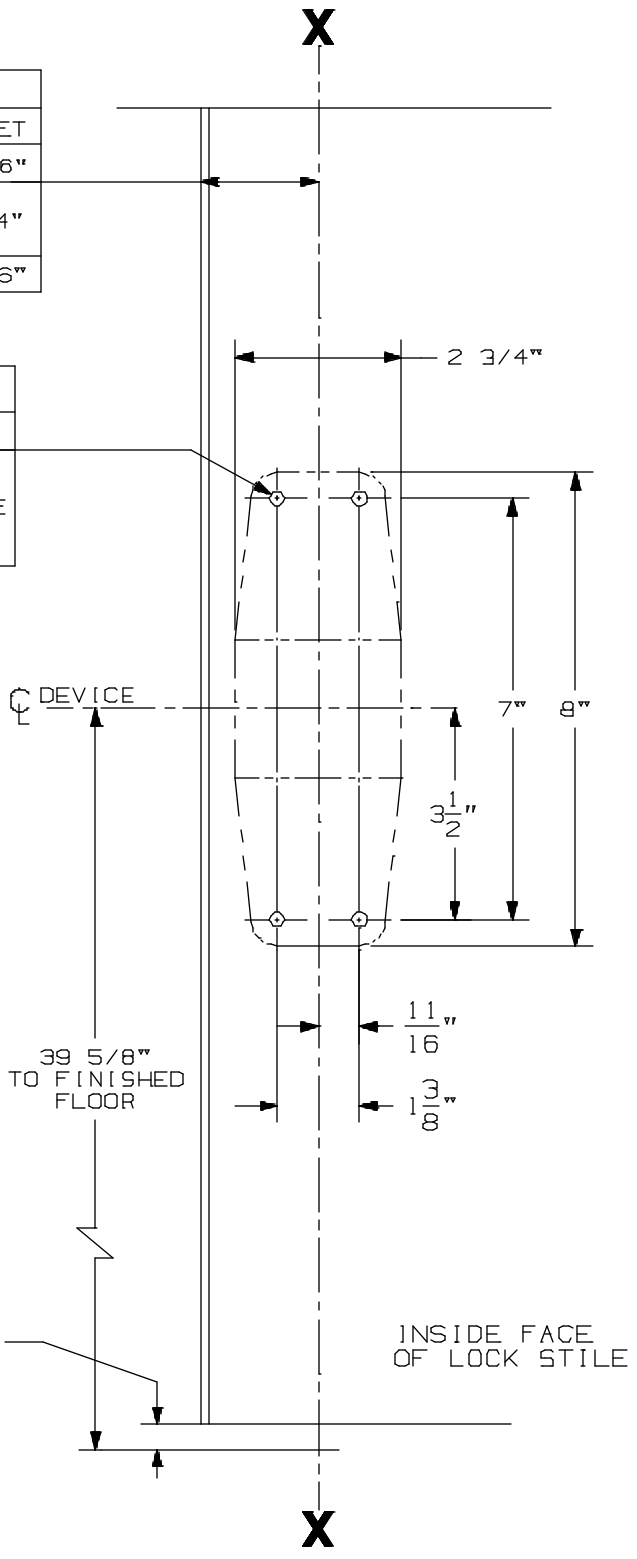

CX9827/9927 EO & DT Series Vertical Rod Devices

VON DUPRIN®

NOTES: SEE MASTER SHEET #10001 FOR SUGGESTED REINFORCING

TEMPLATE NUMBER: 10356_a

DATE: 05-22-13

RIM APPLICATION

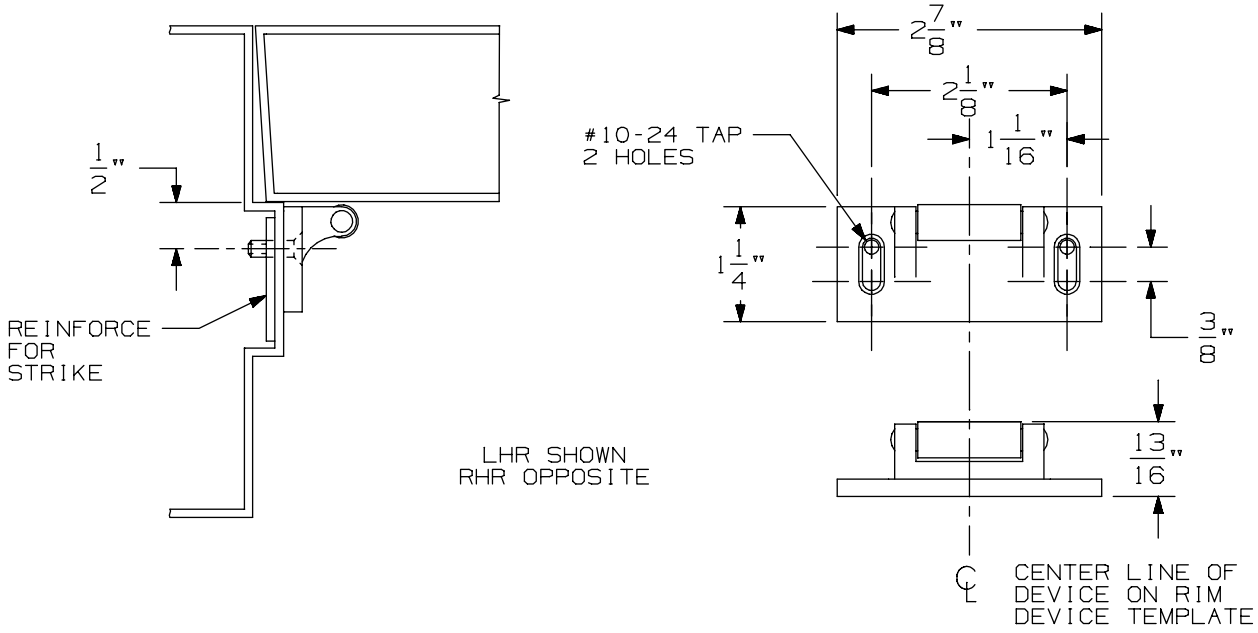

VERTICAL APPLICATION

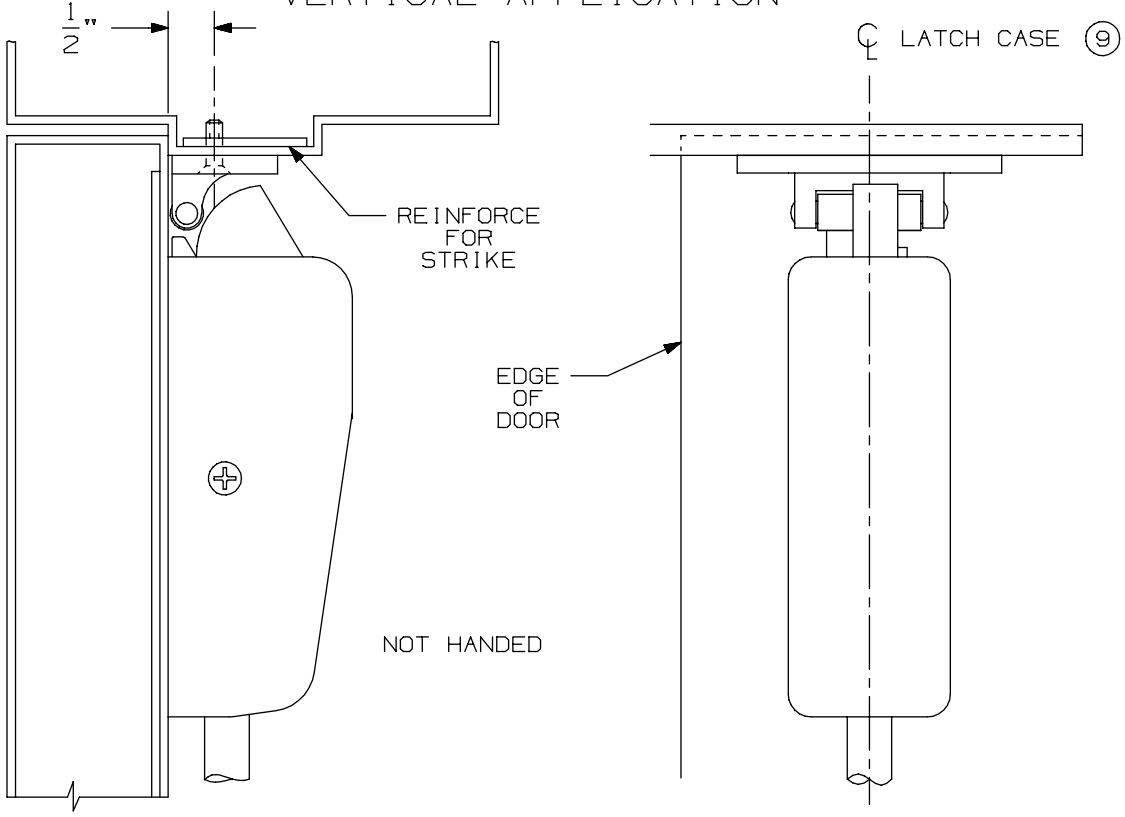

NOTE: LATCH CASE MOUNTING HOLES TO BE PREPARED AT INSTALLATION ON DOOR.

299 & 299F Strike

VON DUPRIN®

NOTES: SEE MASTER SHEET #10001 FOR SUGGESTED REINFORCING

TEMPLATE NUMBER: 30039_a

DATE: 05-23-13

DEVICE APPLICATION SCHEDULE		
INSTALLATION	MIN. STILE	BACKSET
TWO VERT. ROD DEVICES	3 11/16"	2 3/16"
VERT. ROD & MORTISE DEVICE	SEE TEMP. 10305	2 3/4"
SINGLE DOOR	3 11/16"	2 3/16"

APPLICATION	PREPARATION
SURFACE APPLICATION	#10-24 TAP-4 PLACES
990 TRIM APPLICATION SEX BOLT APPLICATION (SEE NOTE 1)	1/4" DIA. THIS SIDE 13/32" DIA. OPPOSITE SIDE - 4 PLACES

NOTES:

1. THESE FOUR HOLES TO BE PREPARED FOR SURFACE APPLICATION WHEN USING 696/697 TRIM. DO NOT PREPARE FOR SEX BOLTS.
2. FOR STOCK HOLLOW METAL DOORS SEE TEMPLATE NO. 10310.
3. LATCH CASE PREPARATION TO BE MADE AT INSTALLATION ON DOOR.
4. IT IS RECOMMENDED THE MOUNTING HOLES BE PREPARED IN THE FIELD.
5. FOR OUTSIDE TRIM PREPARATION, WHEN REQUIRED, SEE TRIM TEMPLATE.
6. LHR APPLICATION SHOWN, RHR APPLICATION OPPOSITE.
7. BACKSET MAY VARY WHEN USED WITH COORDINATOR.
8. GLASS BEAD KIT AVAILABLE WHEN REQUIRED.

RECOMMENDED DOOR UNDERCUT IS 1/4" FROM FINISHED FLOOR (PANIC & FIRE) OR 1/8" FROM THRESHOLD (PANIC ONLY).

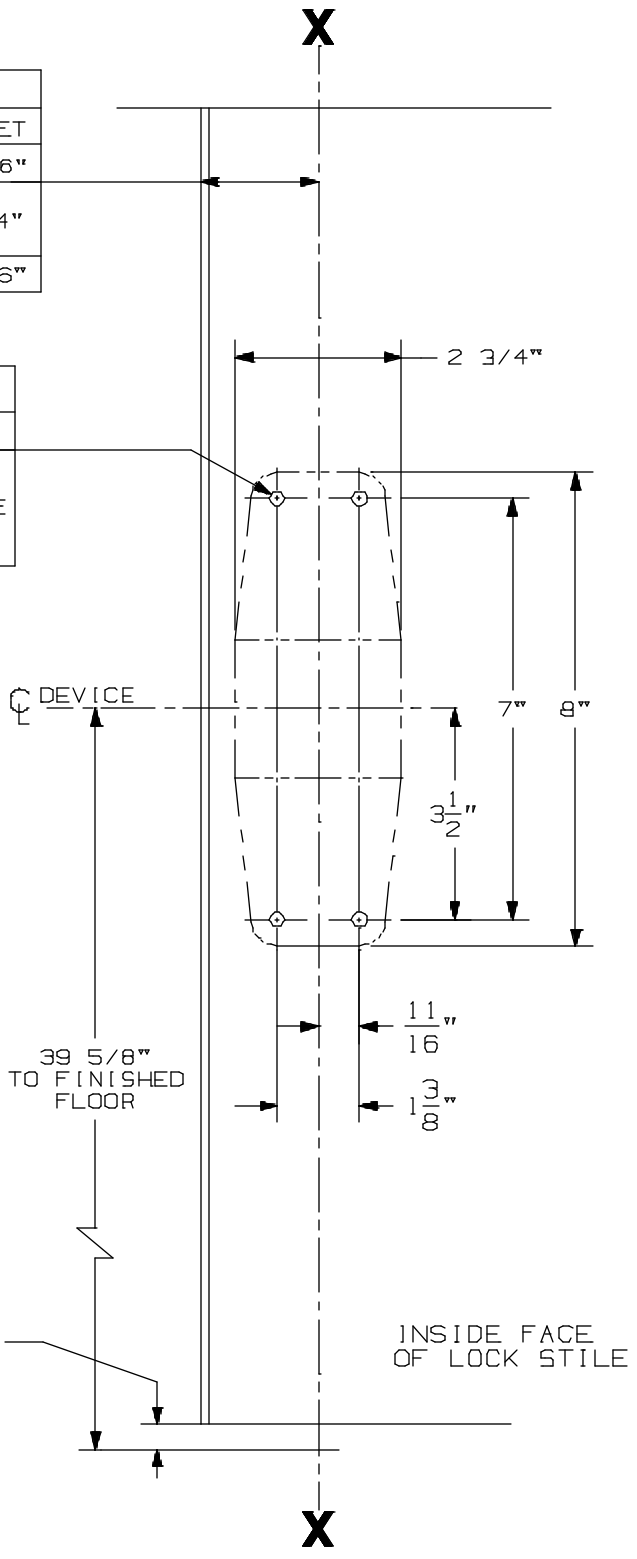

CX9827/9927 EO & DT Series Vertical Rod Devices

VON DUPRIN®

NOTES: SEE MASTER SHEET #10001 FOR SUGGESTED REINFORCING

TEMPLATE NUMBER: 10356_a

DATE: 05-22-13

990 DT TRIM

NOTES: SEE MASTER SHEET #10001 FOR SUGGESTED REINFORCING

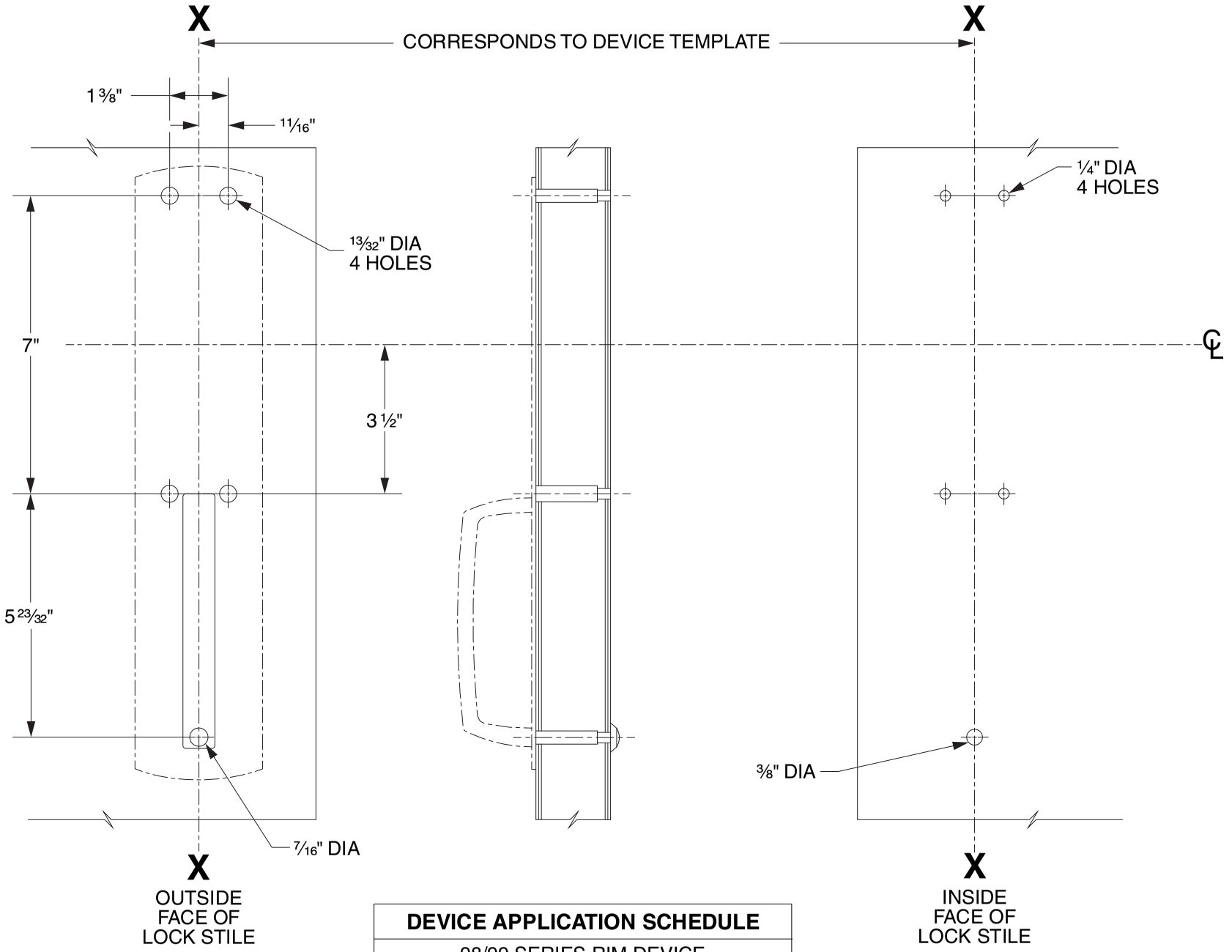

DEVICE APPLICATION SCHEDULE
98/99 SERIES RIM DEVICE
9827/9927 SERIES DEVICE
9847/9947 SERIES DEVICE
9849/9949 SERIES DEVICE
9875/9975 SERIES DEVICE

LHR SHOWN
RHR OPPOSITE

VON DUPRIN®

TEMPLATE NUMBER: 20268_C

DATE: 05-31-13

RIM APPLICATION

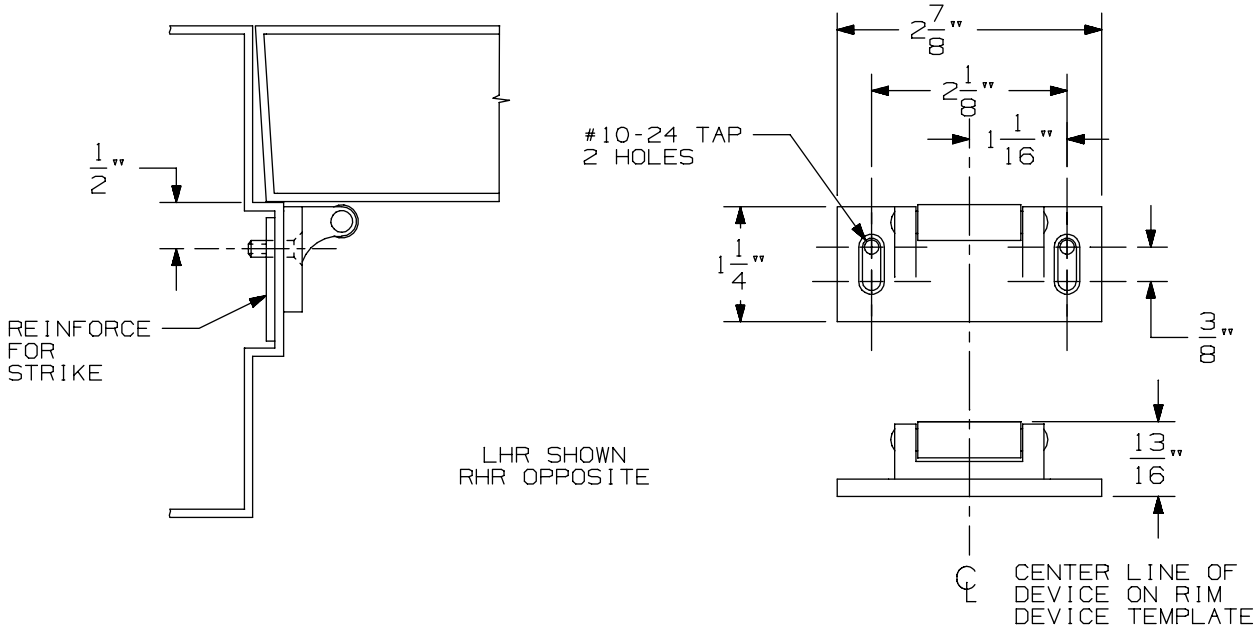

VERTICAL APPLICATION

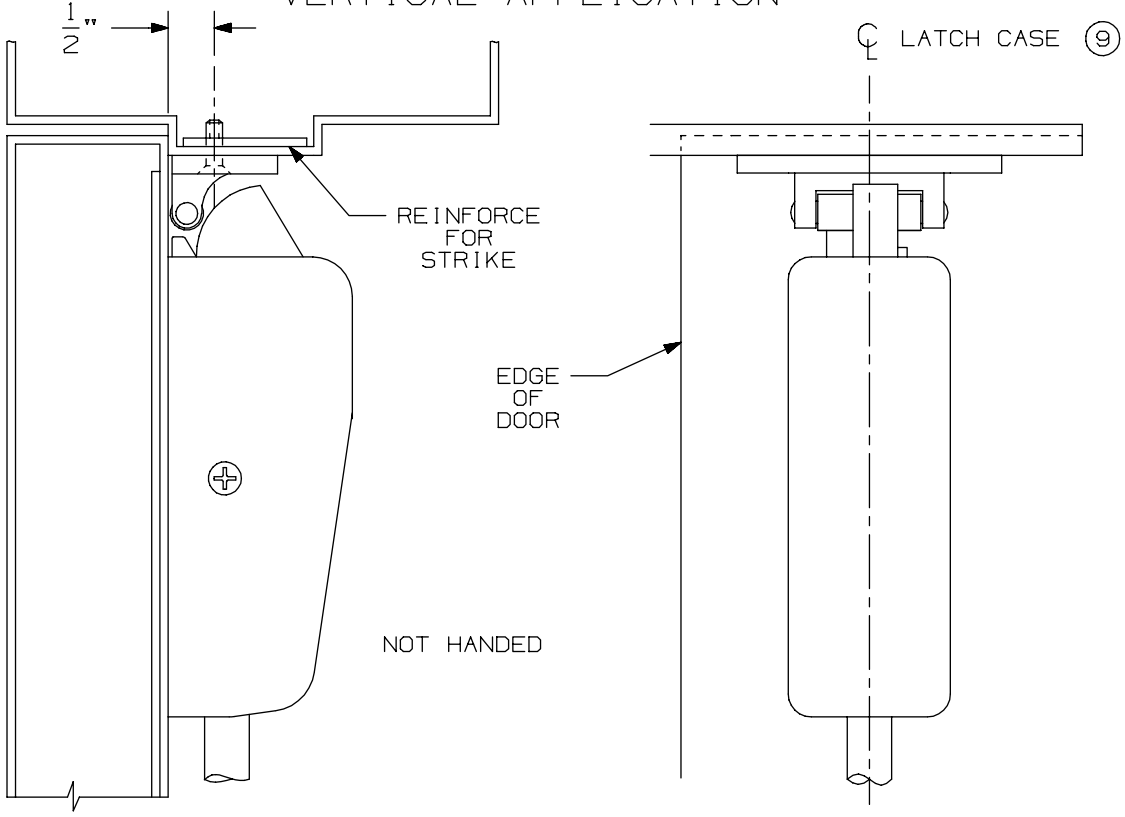

NOTE: LATCH CASE MOUNTING HOLES TO BE PREPARED AT INSTALLATION ON DOOR.

299 & 299F Strike

VON DUPRIN®

NOTES: SEE MASTER SHEET #10001 FOR SUGGESTED REINFORCING

TEMPLATE NUMBER: 30039_a

DATE: 05-23-13

DEVICE APPLICATION SCHEDULE		
INSTALLATION	MIN. STILE	BACKSET
TWO VERT. ROD DEVICES	3 11/16"	2 3/16"
VERT. ROD & MORTISE DEVICE	SEE TEMP. 10305	2 3/4"
SINGLE DOOR	3 11/16"	2 3/16"

APPLICATION	PREPARATION
990 TRIM APPLICATION SEX BOLT APPLICATION (SEE NOTE 1)	1/4" DIA. THIS SIDE 13/32" DIA. OPPOSITE SIDE - 4 PLACES

NOTES:

1. THESE FOUR HOLES TO BE PREPARED FOR SURFACE APPLICATION (#10-24 TAP) WHEN USING 696/697 TRIM. DO NOT PREPARE FOR SEX BOLTS.
2. FOR STOCK HOLLOW METAL DOORS SEE TEMPLATE NO. 10311.
3. LATCH CASE PREPARATION TO BE MADE AT INSTALLATION ON DOOR.
4. IT IS RECOMMENDED THE MOUNTING HOLES BE PREPARED IN THE FIELD.
5. FOR OUTSIDE TRIM PREPARATION, WHEN REQUIRED, SEE TRIM TEMPLATE.
6. LHR APPLICATION SHOWN, RHR APPLICATION OPPOSITE.
7. BACKSET MAY VARY WHEN USED WITH COORDINATOR.
8. GLASS BEAD KIT AVAILABLE WHEN REQUIRED.

RECOMMENDED DOOR UNDERCUT IS 1/4" FROM FINISHED FLOOR (PANIC & FIRE) OR 1/8" FROM THRESHOLD (PANIC ONLY).

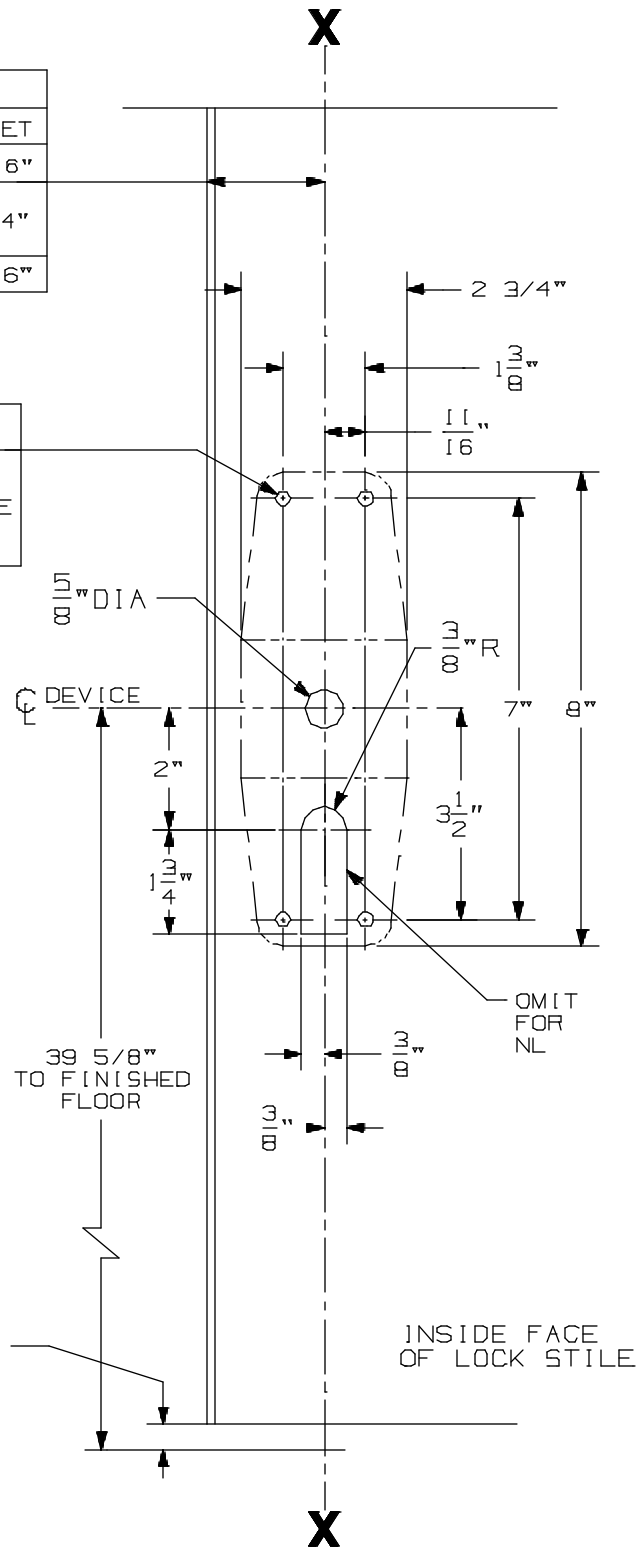

CX9827/CX9927 NL, TP, K, & L Series Vertical Rod Devices

VON DUPRIN®

NOTES: SEE MASTER SHEET #10001 FOR SUGGESTED REINFORCING

TEMPLATE NUMBER: 10357_a

DATE: 05-22-13

990 NL TRIM

NOTES: SEE MASTER SHEET #10001 FOR SUGGESTED REINFORCING

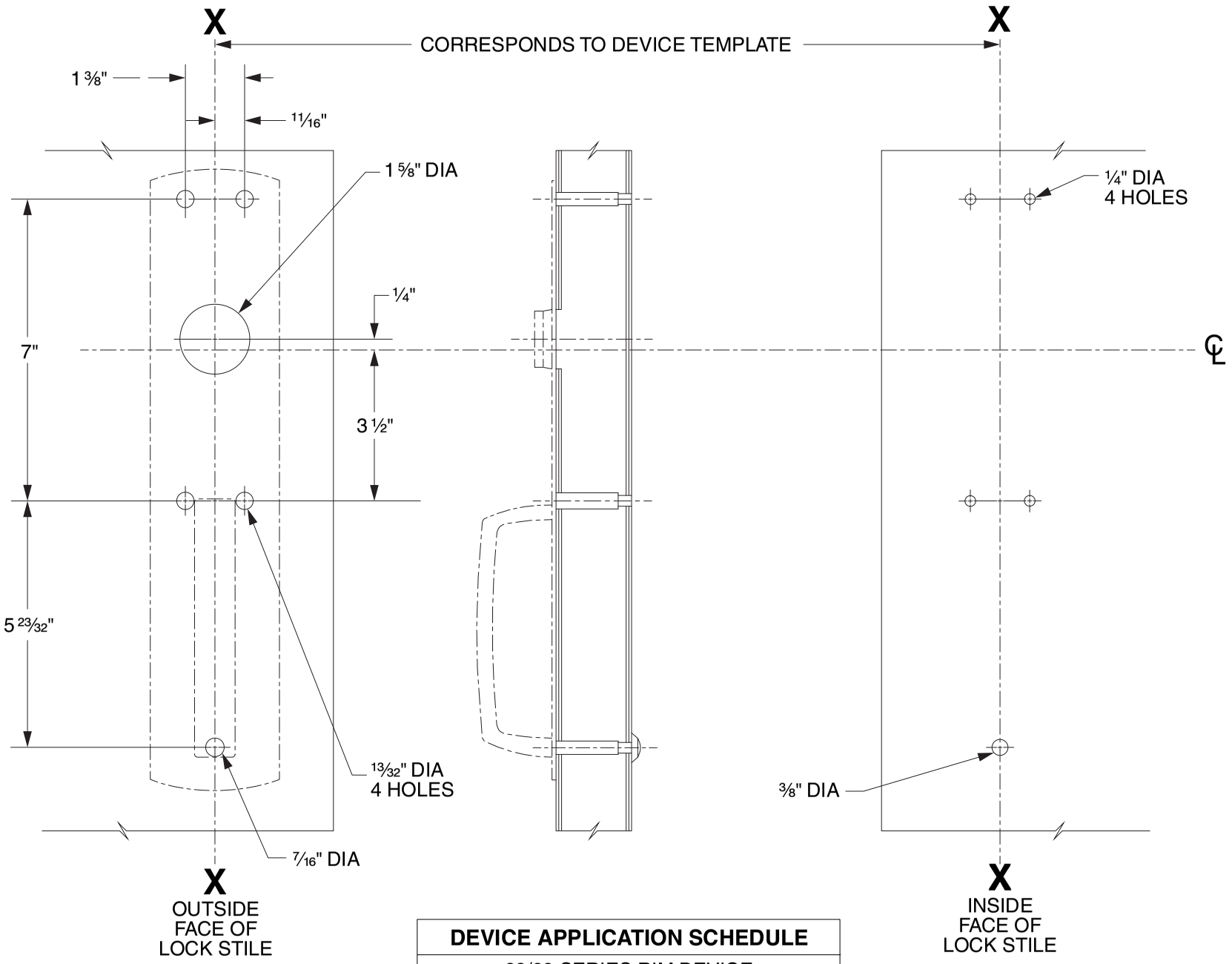

DEVICE APPLICATION SCHEDULE
98/99 SERIES RIM DEVICE
9827/9927 SERIES DEVICE
9847/9947 SERIES DEVICE
9849/9949 SERIES DEVICE

LHR SHOWN
RHR OPPOSITE

VON DUPRIN®

TEMPLATE NUMBER: 20267_C

DATE: 05-31-13

RIM APPLICATION

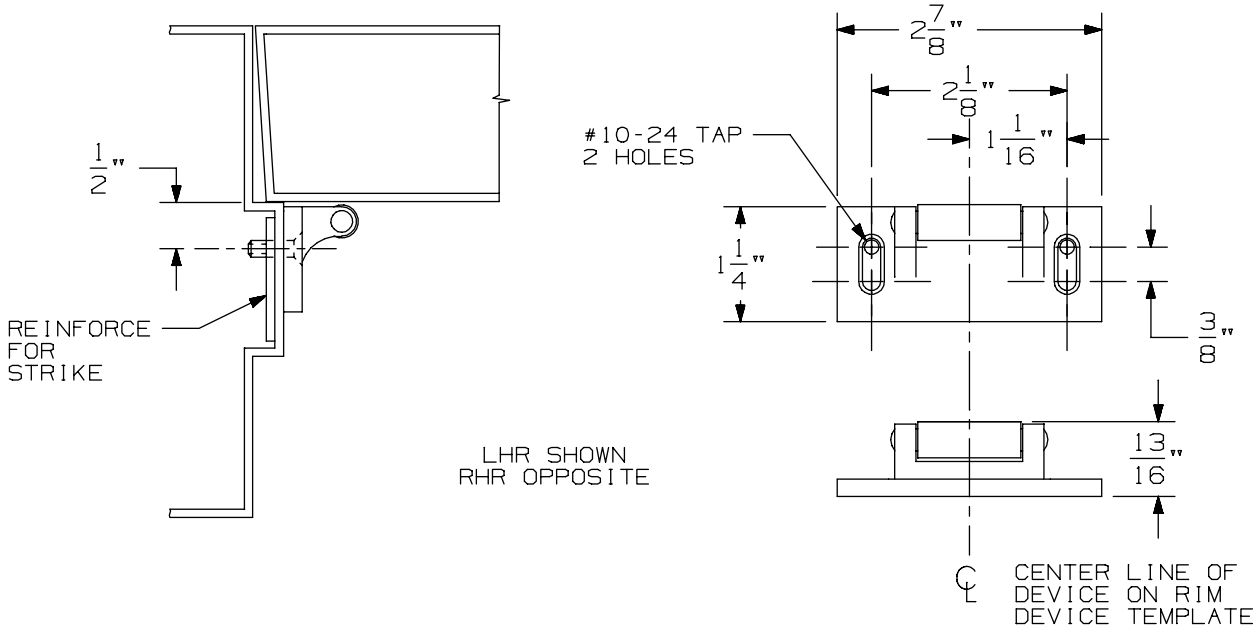

VERTICAL APPLICATION

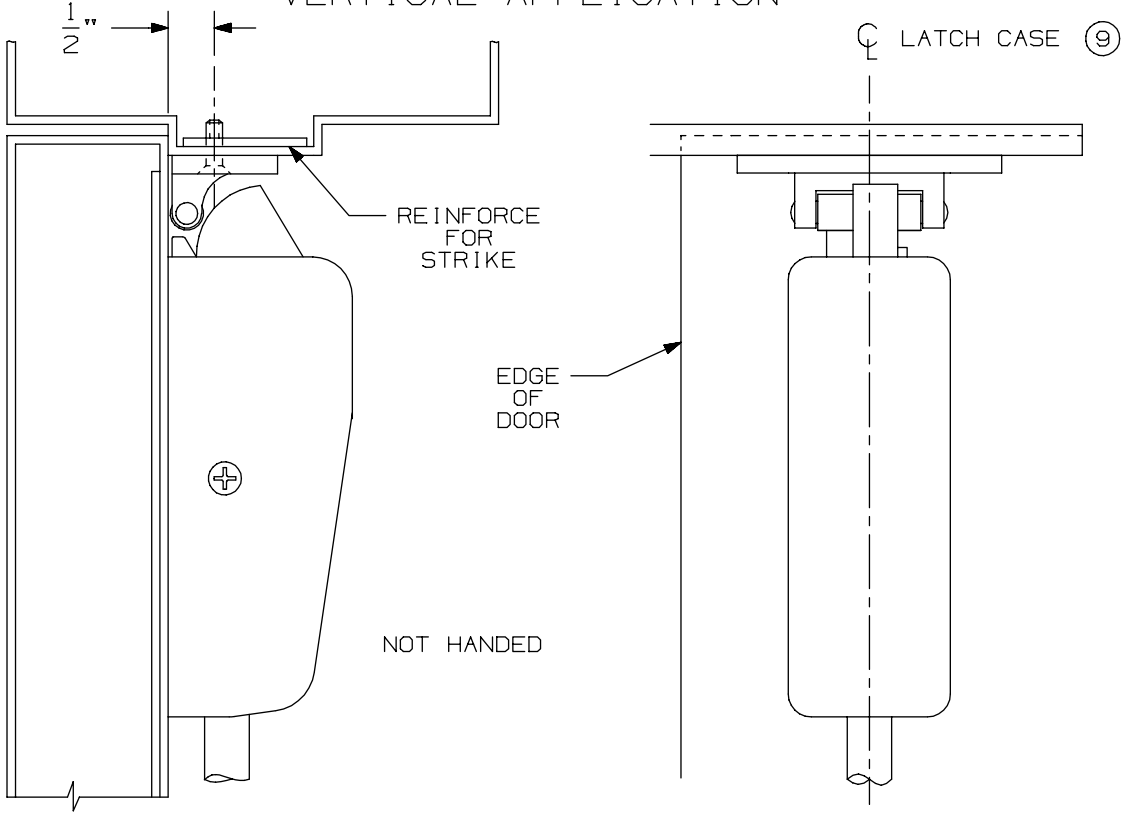

NOTE: LATCH CASE MOUNTING HOLES TO BE PREPARED AT INSTALLATION ON DOOR.

299 & 299F Strike

VON DUPRIN®

NOTES: SEE MASTER SHEET #10001 FOR SUGGESTED REINFORCING

TEMPLATE NUMBER: 30039_a

DATE: 05-23-13

DEVICE APPLICATION SCHEDULE		
INSTALLATION	MIN. STILE	BACKSET
TWO VERT. ROD DEVICES	3 11/16"	2 3/16"
VERT. ROD & MORTISE DEVICE	SEE TEMP. 10305	2 3/4"
SINGLE DOOR	3 11/16"	2 3/16"

APPLICATION	PREPARATION
990 TRIM APPLICATION SEX BOLT APPLICATION (SEE NOTE 1)	1/4" DIA. THIS SIDE 13/32" DIA. OPPOSITE SIDE - 4 PLACES

NOTES:

1. THESE FOUR HOLES TO BE PREPARED FOR SURFACE APPLICATION (#10-24 TAP) WHEN USING 696/697 TRIM. DO NOT PREPARE FOR SEX BOLTS.
2. FOR STOCK HOLLOW METAL DOORS SEE TEMPLATE NO. 10311.
3. LATCH CASE PREPARATION TO BE MADE AT INSTALLATION ON DOOR.
4. IT IS RECOMMENDED THE MOUNTING HOLES BE PREPARED IN THE FIELD.
5. FOR OUTSIDE TRIM PREPARATION, WHEN REQUIRED, SEE TRIM TEMPLATE.
6. LHR APPLICATION SHOWN, RHR APPLICATION OPPOSITE.
7. BACKSET MAY VARY WHEN USED WITH COORDINATOR.
8. GLASS BEAD KIT AVAILABLE WHEN REQUIRED.

RECOMMENDED DOOR UNDERCUT IS 1/4" FROM FINISHED FLOOR (PANIC & FIRE) OR 1/8" FROM THRESHOLD (PANIC ONLY).

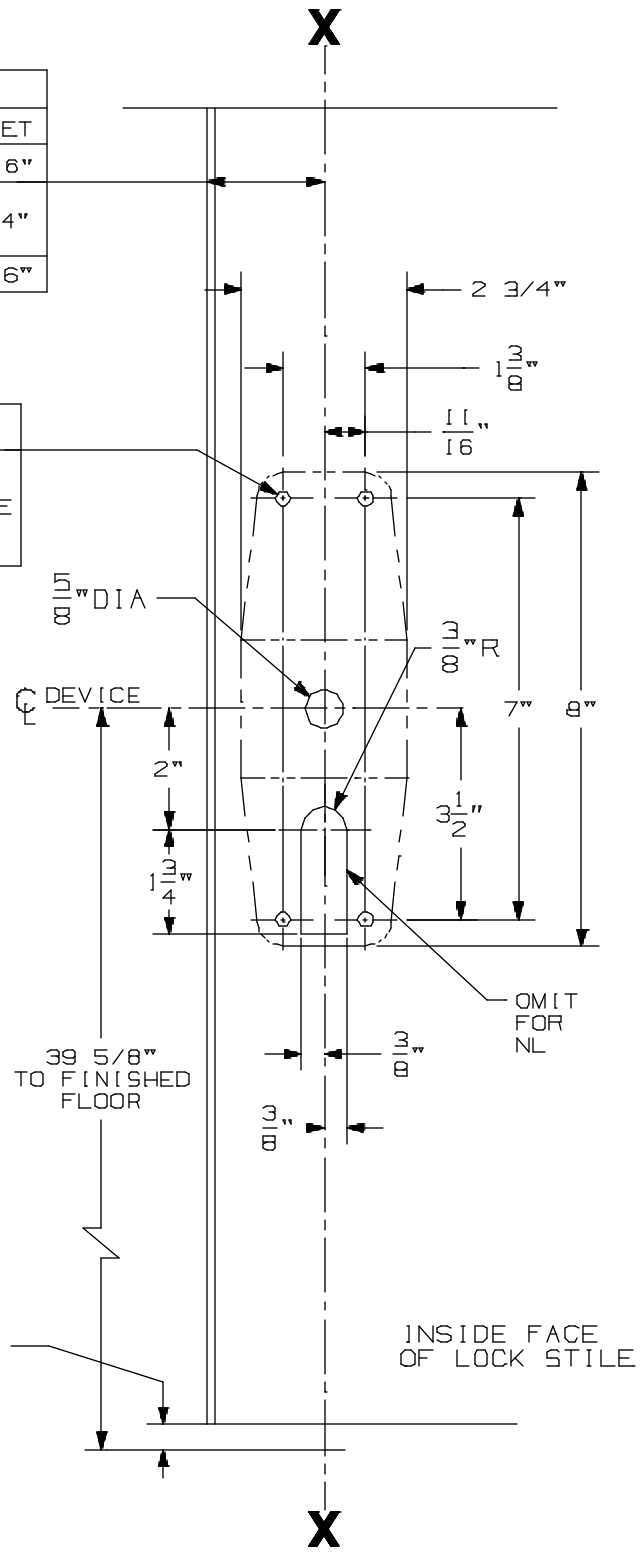

CX9827/CX9927 NL, TP, K, & L Series Vertical Rod Devices

VON DUPRIN®

NOTES: SEE MASTER SHEET #10001 FOR SUGGESTED REINFORCING

TEMPLATE NUMBER: 10357_a

DATE: 05-22-13

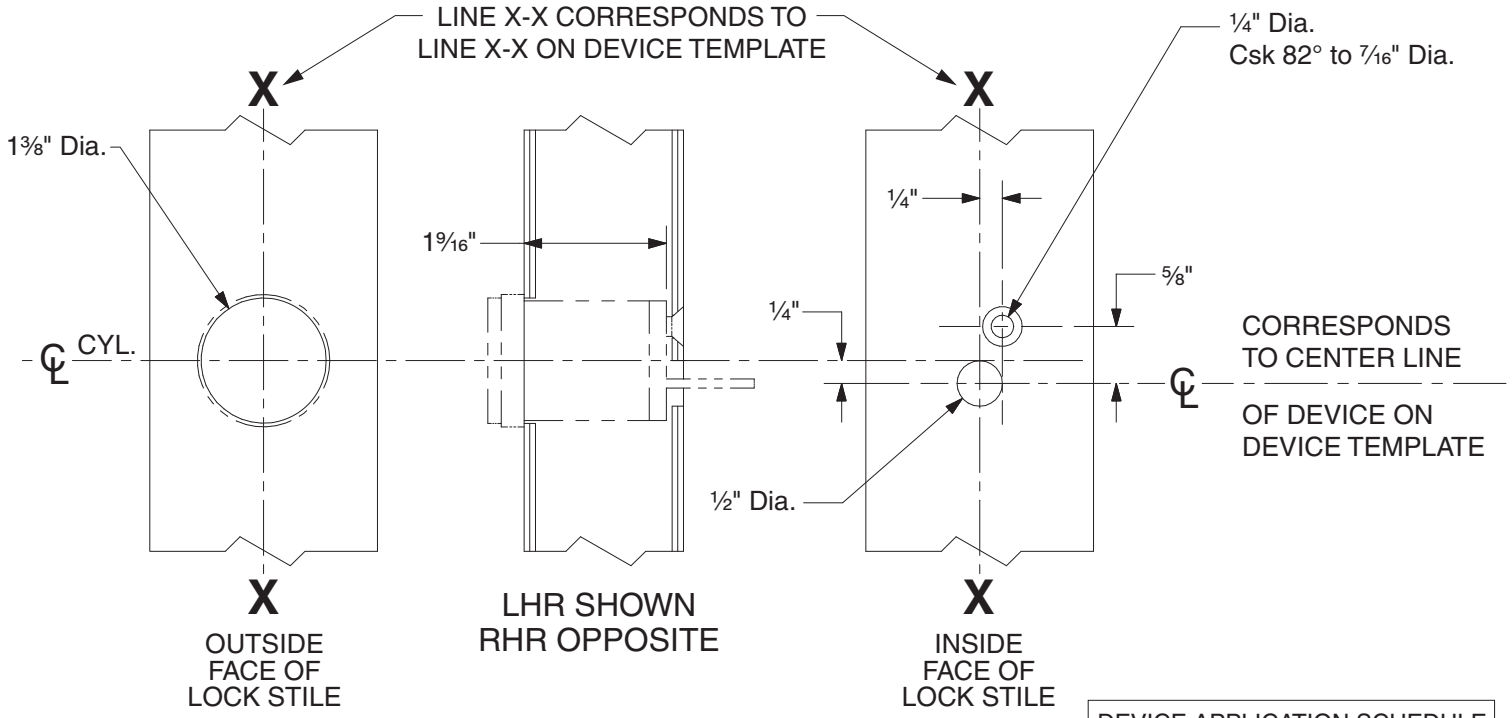

DEVICE APPLICATION SCHEDULE	
98 RIM SERIES	99 RIM SERIES
9827 SERIES	9927 SERIES
9847 SERIES	9947 SERIES
22 RIM SERIES	2227 SERIES

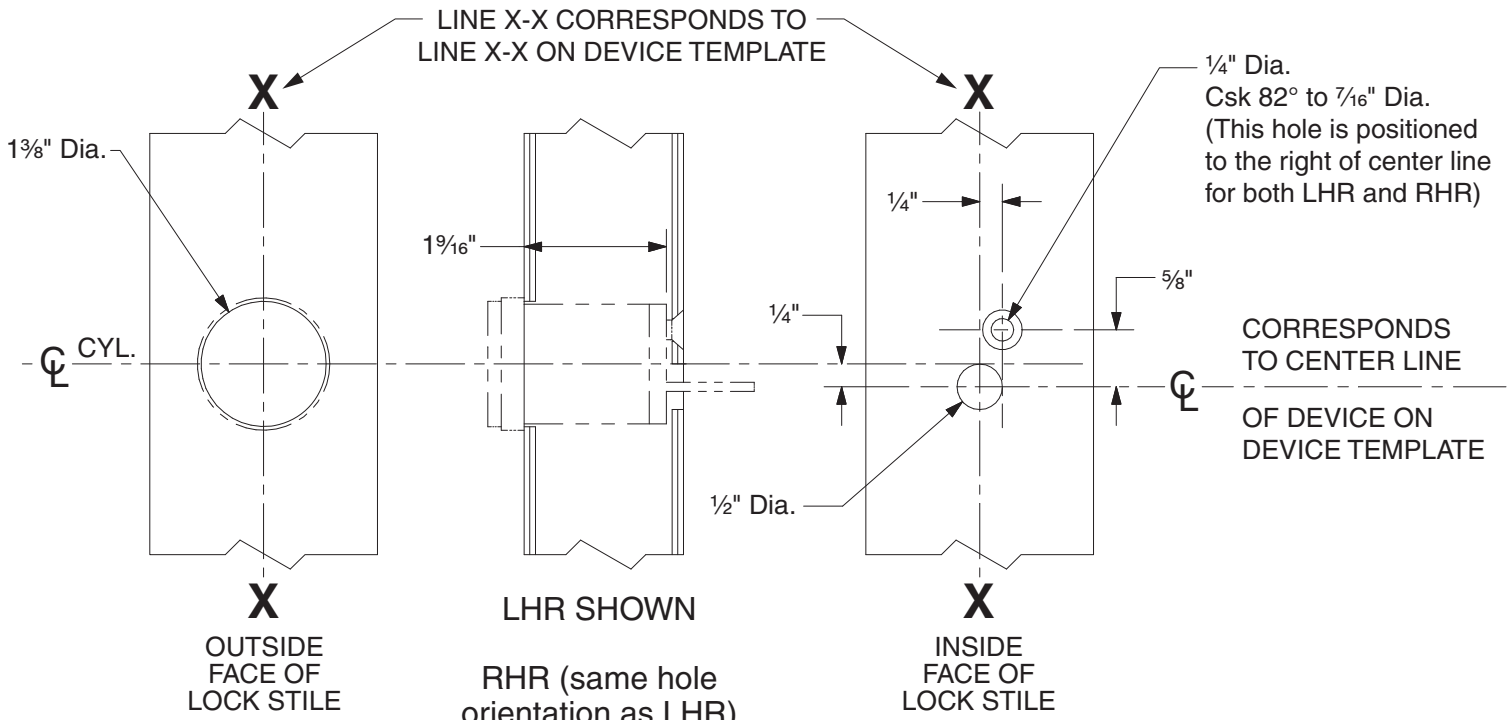

DEVICE APPLICATION SCHEDULE	
9849 SERIES	9949 SERIES

110NL Cylinder Preparation

VON DUPRIN®

NOTES: SEE MASTER SHEET #10001 FOR SUGGESTED REINFORCING

TEMPLATE NUMBER: 40022_c

DATE: 05-28-13

RIM APPLICATION

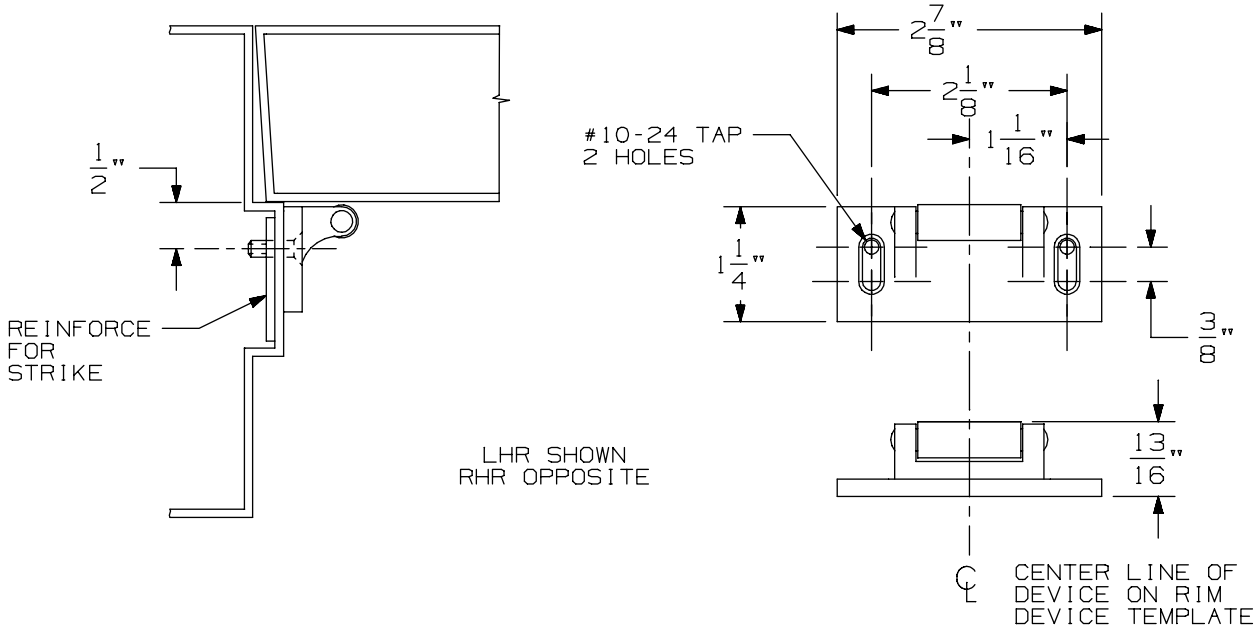

VERTICAL APPLICATION

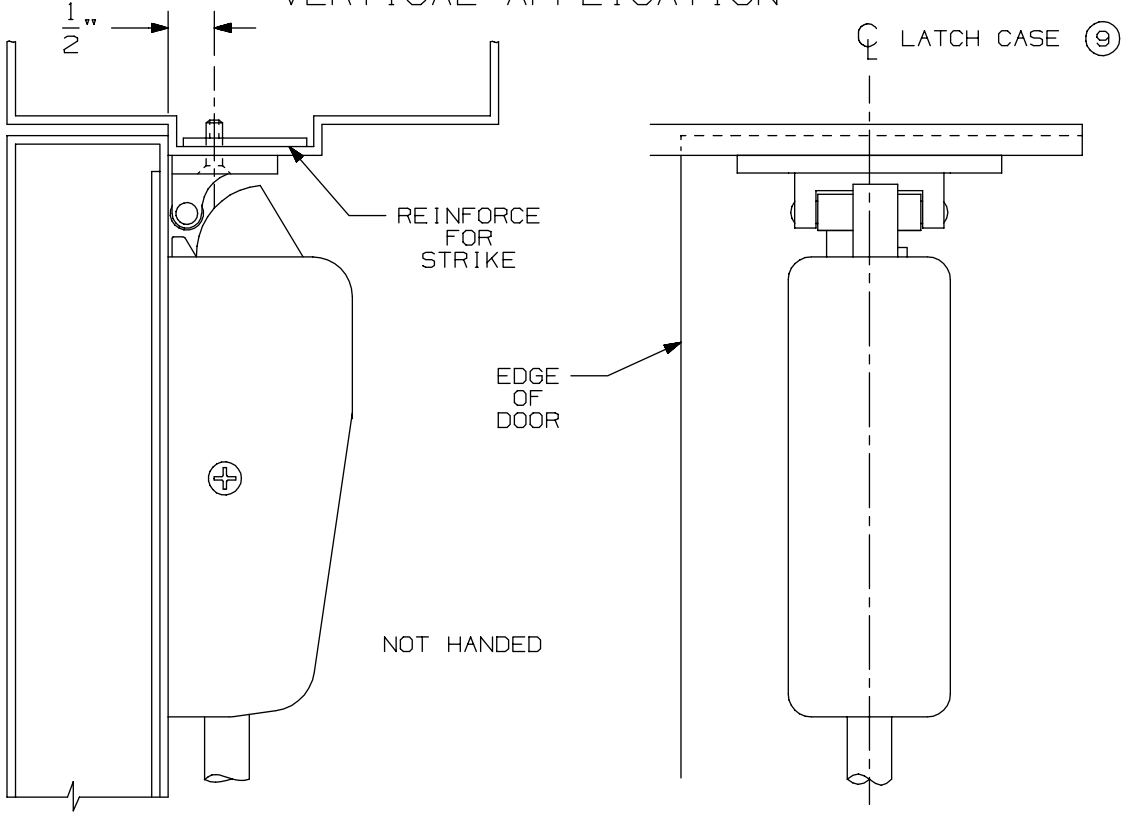

NOTE: LATCH CASE MOUNTING HOLES TO BE PREPARED AT INSTALLATION ON DOOR.

299 & 299F Strike

VON DUPRIN®

NOTES: SEE MASTER SHEET #10001 FOR SUGGESTED REINFORCING

TEMPLATE NUMBER: 30039_a

DATE: 05-23-13

DEVICE APPLICATION SCHEDULE		
INSTALLATION	MIN. STILE	BACKSET
TWO VERT. ROD DEVICES	3 11/16"	2 3/16"
VERT. ROD & MORTISE DEVICE	SEE TEMP. 10305	2 3/4"
SINGLE DOOR	3 11/16"	2 3/16"

APPLICATION	PREPARATION
990 TRIM APPLICATION SEX BOLT APPLICATION (SEE NOTE 1)	1/4" DIA. THIS SIDE 13/32" DIA. OPPOSITE SIDE - 4 PLACES

NOTES:

1. THESE FOUR HOLES TO BE PREPARED FOR SURFACE APPLICATION (#10-24 TAP) WHEN USING 696/697 TRIM. DO NOT PREPARE FOR SEX BOLTS.
2. FOR STOCK HOLLOW METAL DOORS SEE TEMPLATE NO. 10311.
3. LATCH CASE PREPARATION TO BE MADE AT INSTALLATION ON DOOR.
4. IT IS RECOMMENDED THE MOUNTING HOLES BE PREPARED IN THE FIELD.
5. FOR OUTSIDE TRIM PREPARATION, WHEN REQUIRED, SEE TRIM TEMPLATE.
6. LHR APPLICATION SHOWN, RHR APPLICATION OPPOSITE.
7. BACKSET MAY VARY WHEN USED WITH COORDINATOR.
8. GLASS BEAD KIT AVAILABLE WHEN REQUIRED.

RECOMMENDED DOOR UNDERCUT IS 1/4" FROM FINISHED FLOOR (PANIC & FIRE) OR 1/8" FROM THRESHOLD (PANIC ONLY).

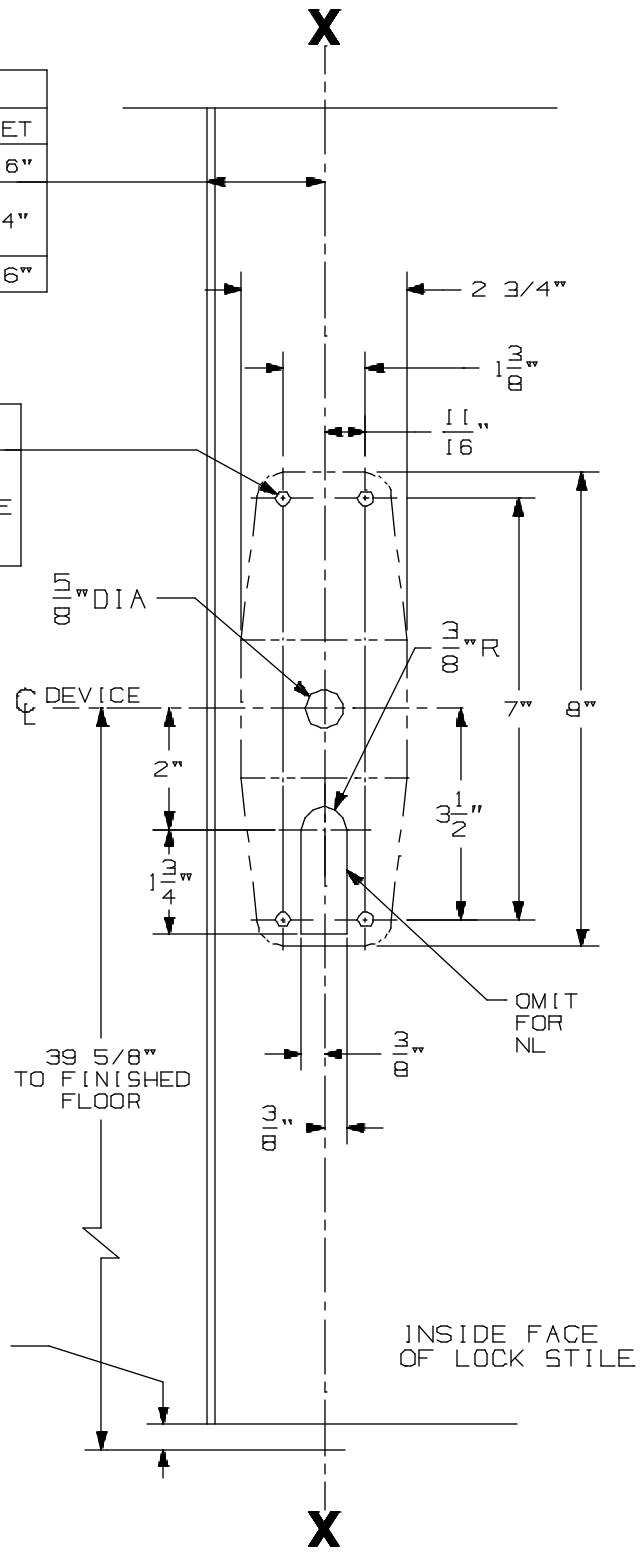

CX9827/CX9927 NL, TP, K, & L Series Vertical Rod Devices

VON DUPRIN®

NOTES: SEE MASTER SHEET #10001 FOR SUGGESTED REINFORCING

TEMPLATE NUMBER: 10357_a

DATE: 05-22-13

991 K & 992 L Trim

NOTES: SEE MASTER SHEET #10001 FOR SUGGESTED REINFORCING

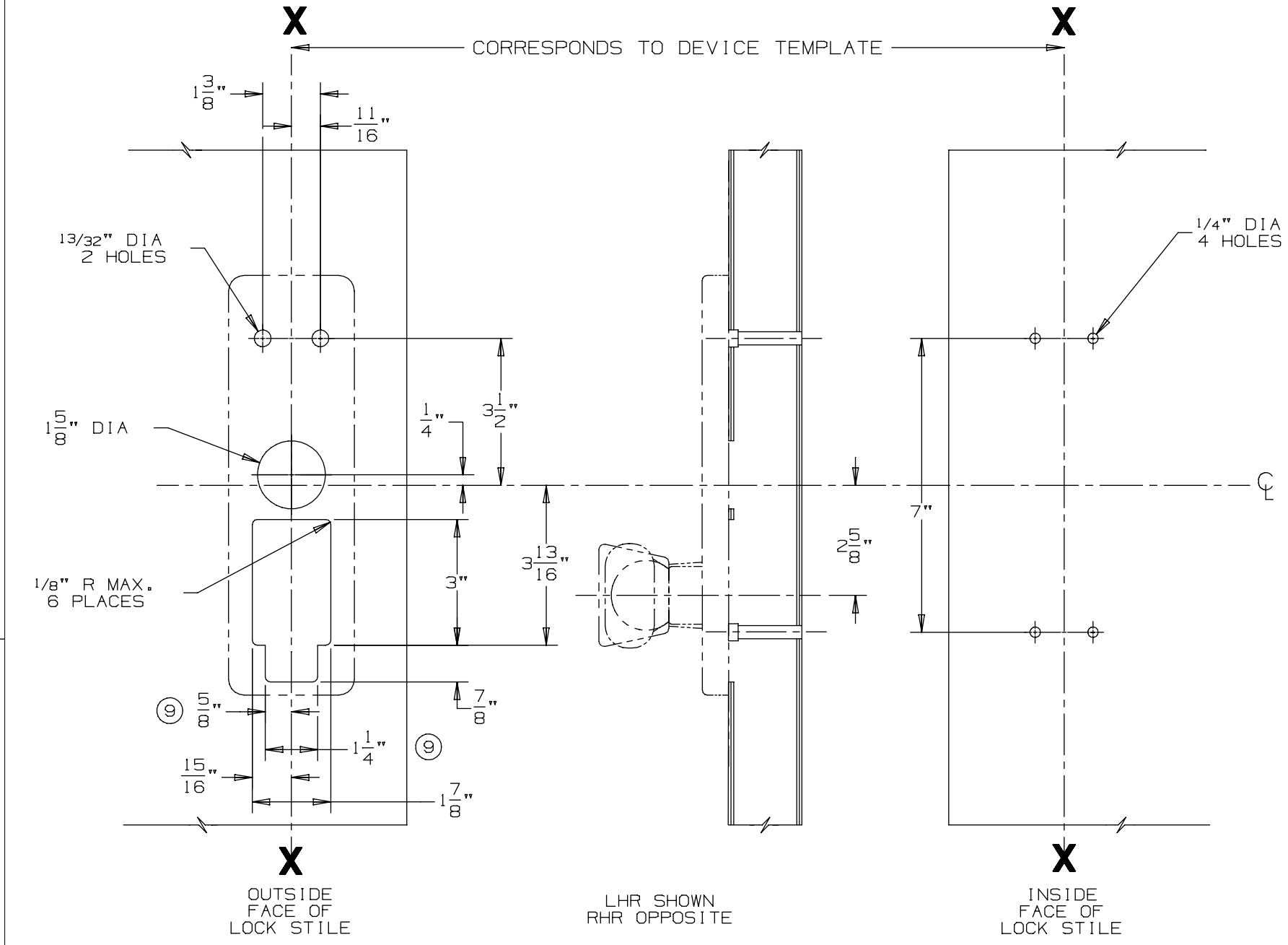

DEVICE APPLICATION SCHEDULE
98/99 SERIES RIM DEVICE
9827/9927 SERIES DEVICE
9847/9947 SERIES DEVICE

VON DUPRIN®

TEMPLATE NUMBER: 20272_a

DATE: 05-23-13

RIM APPLICATION

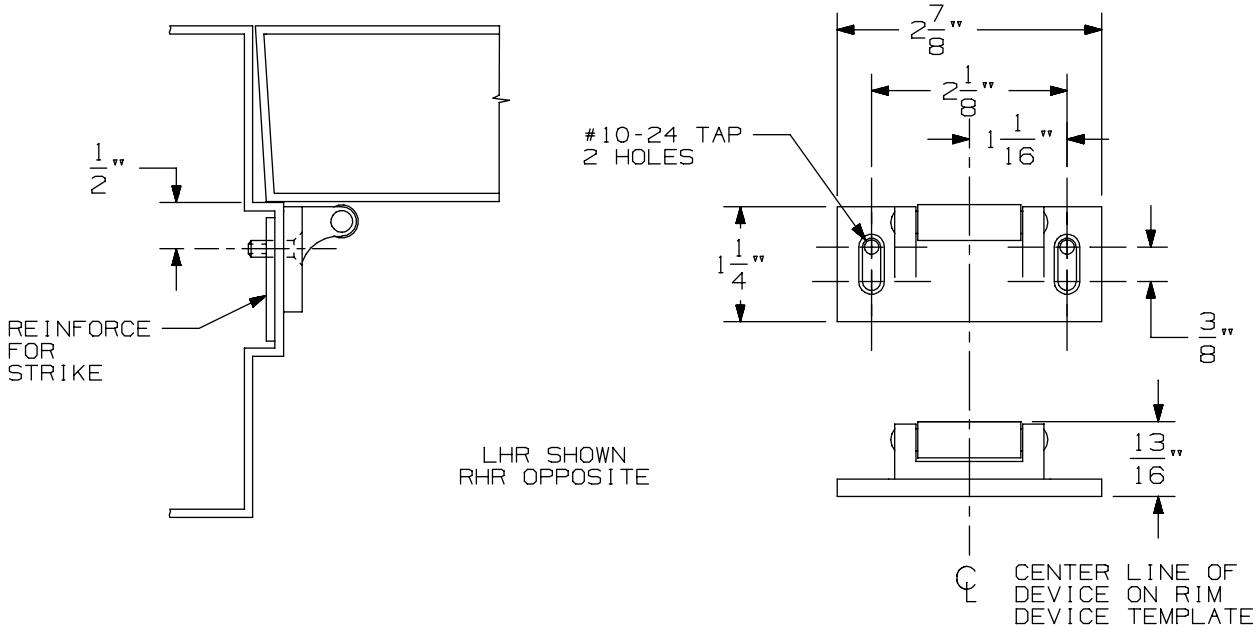

VERTICAL APPLICATION

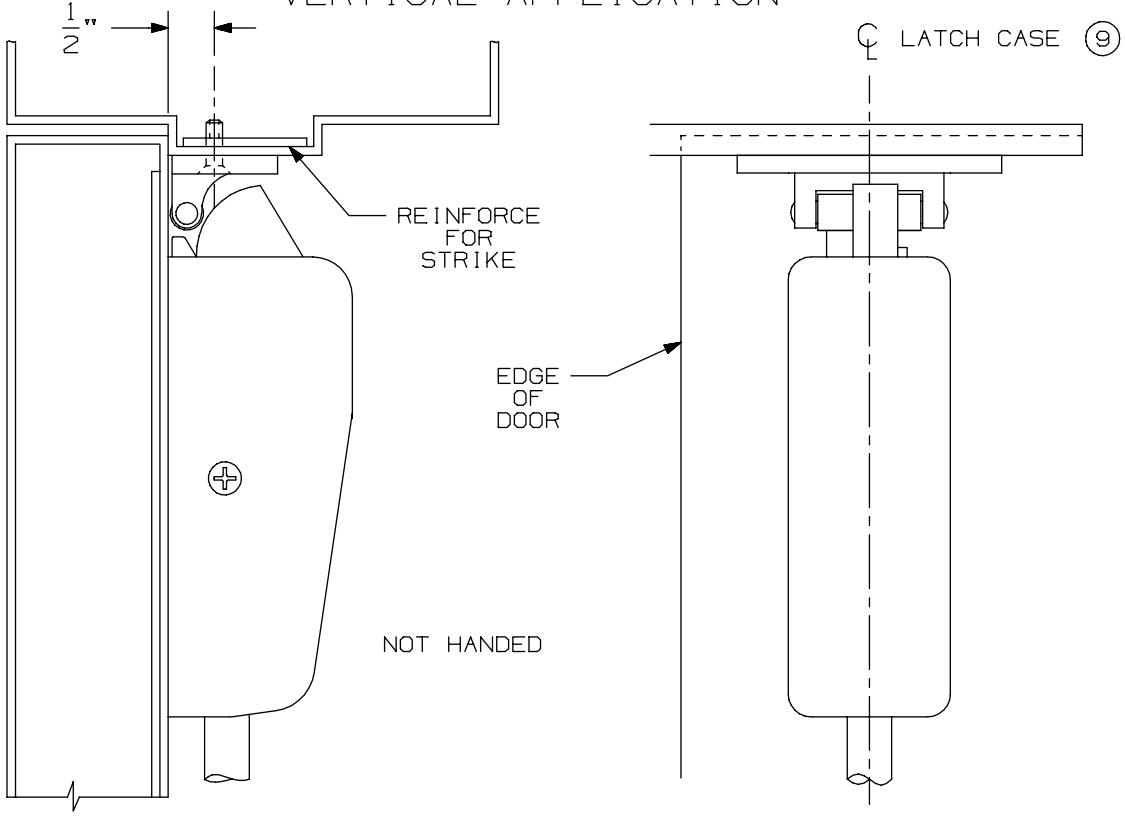

NOTE: LATCH CASE MOUNTING HOLES TO BE PREPARED AT INSTALLATION ON DOOR.

299 & 299F Strike

VON DUPRIN®

NOTES: SEE MASTER SHEET #10001 FOR SUGGESTED REINFORCING

TEMPLATE NUMBER: 30039_a

DATE: 05-23-13

DEVICE APPLICATION SCHEDULE		
INSTALLATION	MIN. STILE	BACKSET
TWO VERT. ROD DEVICES	3 11/16"	2 3/16"
VERT. ROD & MORTISE DEVICE	SEE TEMP. 10305	2 3/4"
SINGLE DOOR	3 11/16"	2 3/16"

APPLICATION	PREPARATION
990 TRIM APPLICATION SEX BOLT APPLICATION (SEE NOTE 1)	1/4" DIA. THIS SIDE 13/32" DIA. OPPOSITE SIDE - 4 PLACES

NOTES:

1. THESE FOUR HOLES TO BE PREPARED FOR SURFACE APPLICATION (#10-24 TAP) WHEN USING 696/697 TRIM. DO NOT PREPARE FOR SEX BOLTS.
2. FOR STOCK HOLLOW METAL DOORS SEE TEMPLATE NO. 10311.
3. LATCH CASE PREPARATION TO BE MADE AT INSTALLATION ON DOOR.
4. IT IS RECOMMENDED THE MOUNTING HOLES BE PREPARED IN THE FIELD.
5. FOR OUTSIDE TRIM PREPARATION, WHEN REQUIRED, SEE TRIM TEMPLATE.
6. LHR APPLICATION SHOWN, RHR APPLICATION OPPOSITE.
7. BACKSET MAY VARY WHEN USED WITH COORDINATOR.
8. GLASS BEAD KIT AVAILABLE WHEN REQUIRED.

RECOMMENDED DOOR UNDERCUT IS 1/4" FROM FINISHED FLOOR (PANIC & FIRE) OR 1/8" FROM THRESHOLD (PANIC ONLY).

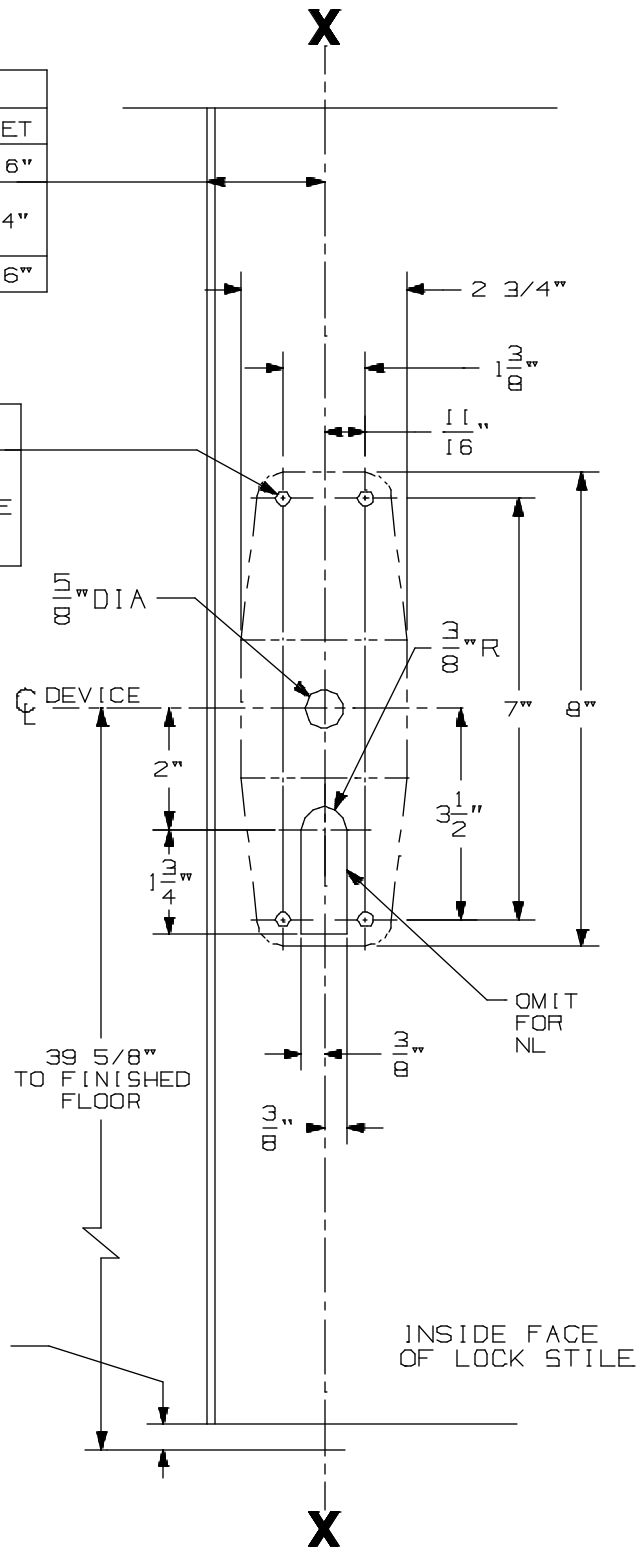

CX9827/CX9927 NL, TP, K, & L Series Vertical Rod Devices

VON DUPRIN®

NOTES: SEE MASTER SHEET #10001 FOR SUGGESTED REINFORCING

TEMPLATE NUMBER: 10357_a

DATE: 05-22-13

DEVICE APPLICATION SCHEDULE	
98 RIM SERIES	99 RIM SERIES
9827 SERIES	9927 SERIES
9847 SERIES	9947 SERIES
9849 SERIES	9949 SERIES

996L, E996L, 996L-BE, E996L-BE 996K, 996K-BE R/V SERIES
TRIM METAL DOOR APPLICATION

VON DUPRIN®

NOTES: SEE MASTER SHEET #10001 FOR SUGGESTED REINFORCING

TEMPLATE NUMBER: 20003_e

DATE: 10-30-14

RIM APPLICATION

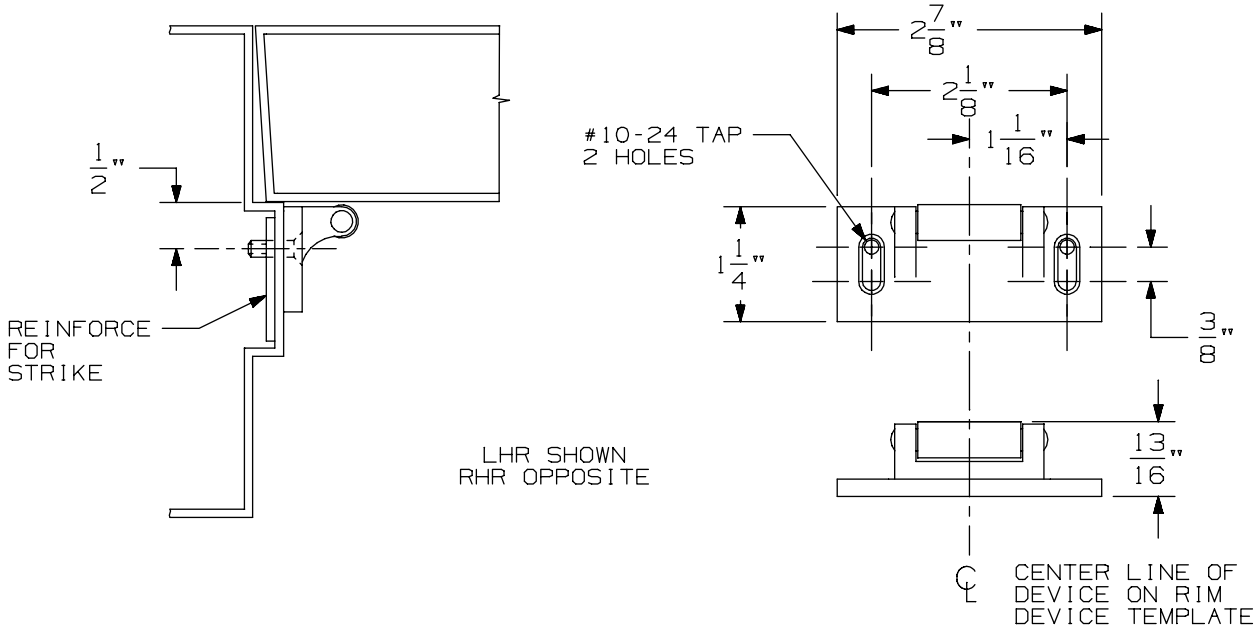

VERTICAL APPLICATION

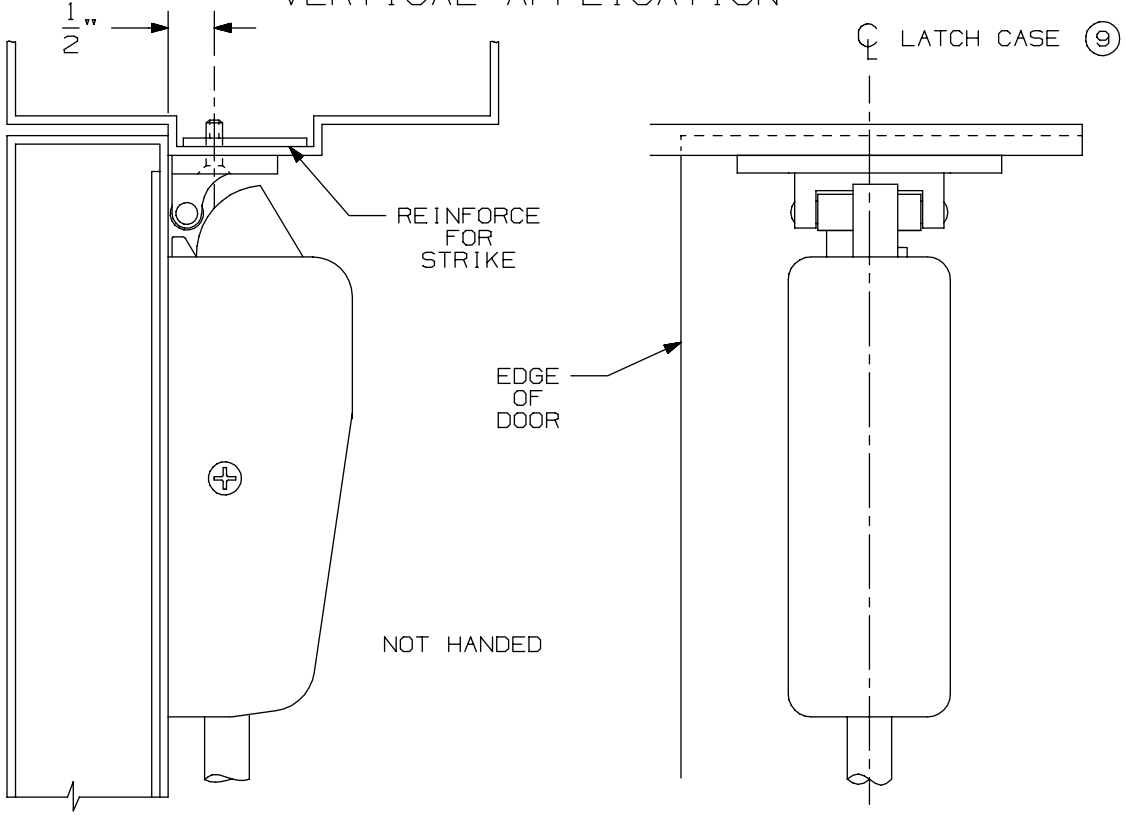

NOTE: LATCH CASE MOUNTING HOLES TO BE PREPARED AT INSTALLATION ON DOOR.

299 & 299F Strike

VON DUPRIN®

NOTES: SEE MASTER SHEET #10001 FOR SUGGESTED REINFORCING

TEMPLATE NUMBER: 30039_a

DATE: 05-23-13

DEVICE APPLICATION SCHEDULE		
INSTALLATION	MIN. STILE	BACKSET
TWO VERT. ROD DEVICES	3 11/16"	2 3/16"
VERT. ROD & MORTISE DEVICE	SEE TEMP. 10305	2 3/4"
SINGLE DOOR	3 11/16"	2 3/16"

APPLICATION	PREPARATION
990 TRIM APPLICATION SEX BOLT APPLICATION (SEE NOTE 1)	1/4" DIA. THIS SIDE 13/32" DIA. OPPOSITE SIDE - 4 PLACES

NOTES:

1. THESE FOUR HOLES TO BE PREPARED FOR SURFACE APPLICATION (#10-24 TAP) WHEN USING 696/697 TRIM. DO NOT PREPARE FOR SEX BOLTS.
2. FOR STOCK HOLLOW METAL DOORS SEE TEMPLATE NO. 10311.
3. LATCH CASE PREPARATION TO BE MADE AT INSTALLATION ON DOOR.
4. IT IS RECOMMENDED THE MOUNTING HOLES BE PREPARED IN THE FIELD.
5. FOR OUTSIDE TRIM PREPARATION, WHEN REQUIRED, SEE TRIM TEMPLATE.
6. LHR APPLICATION SHOWN, RHR APPLICATION OPPOSITE.
7. BACKSET MAY VARY WHEN USED WITH COORDINATOR.
8. GLASS BEAD KIT AVAILABLE WHEN REQUIRED.

RECOMMENDED DOOR UNDERCUT IS 1/4" FROM FINISHED FLOOR (PANIC & FIRE) OR 1/8" FROM THRESHOLD (PANIC ONLY).

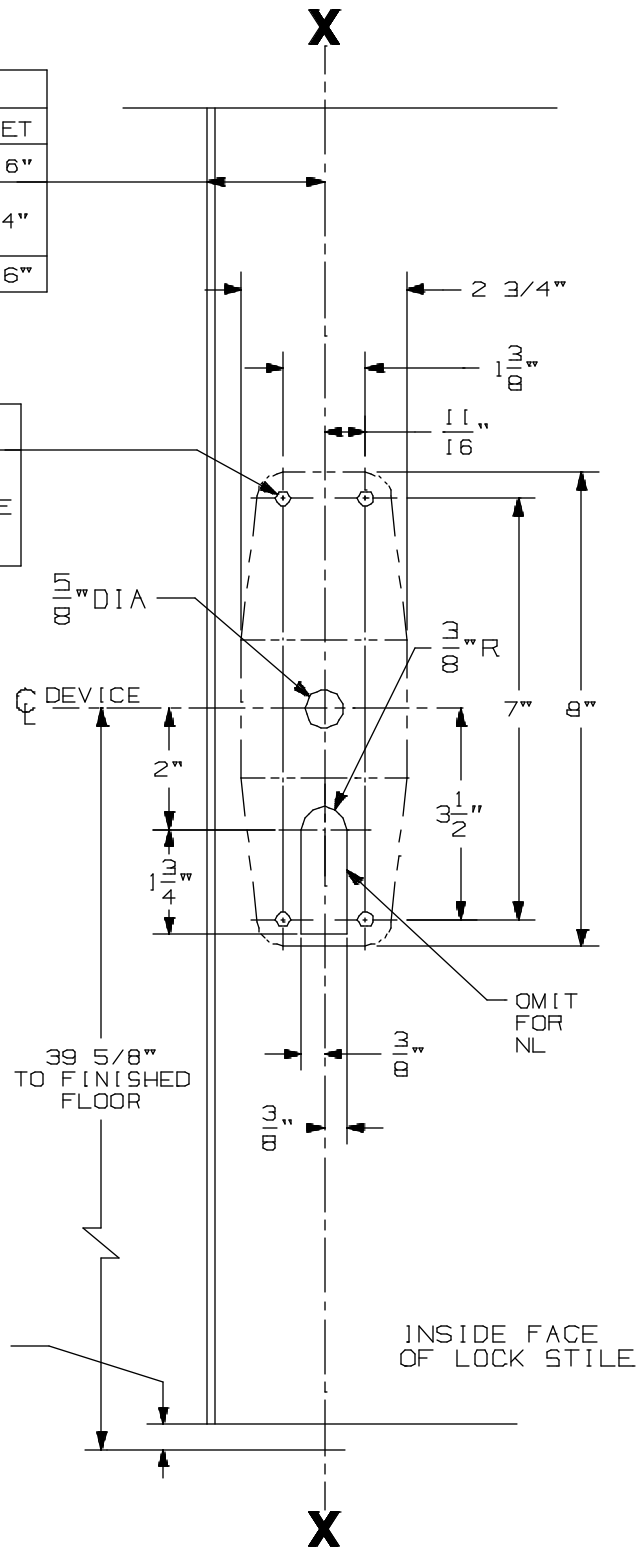

CX9827/CX9927 NL, TP, K, & L Series Vertical Rod Devices

VON DUPRIN®

NOTES: SEE MASTER SHEET #10001 FOR SUGGESTED REINFORCING

TEMPLATE NUMBER: 10357_a

DATE: 05-22-13

990 TP & 990 TP-BE TRIM

NOTES: SEE MASTER SHEET #10001 FOR SUGGESTED REINFORCING

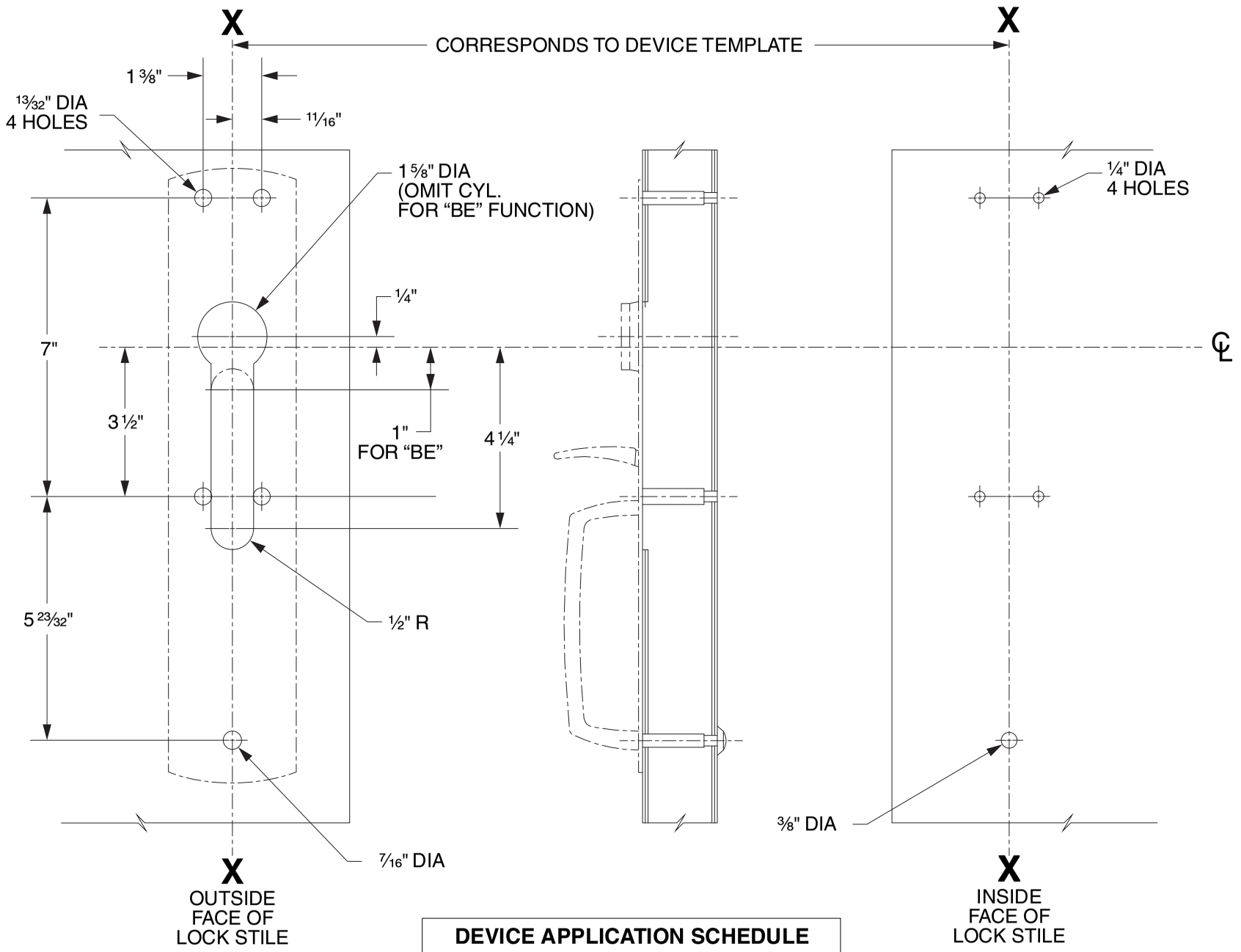

DEVICE APPLICATION SCHEDULE
98/99 SERIES RIM DEVICE
9827/9927 SERIES DEVICE
9847/9947 SERIES DEVICE
9849/9949 SERIES DEVICE

LHR SHOWN
RHR OPPOSITE

VON DUPRIN®

TEMPLATE NUMBER: 20265_C

DATE: 05-31-13

RIM APPLICATION

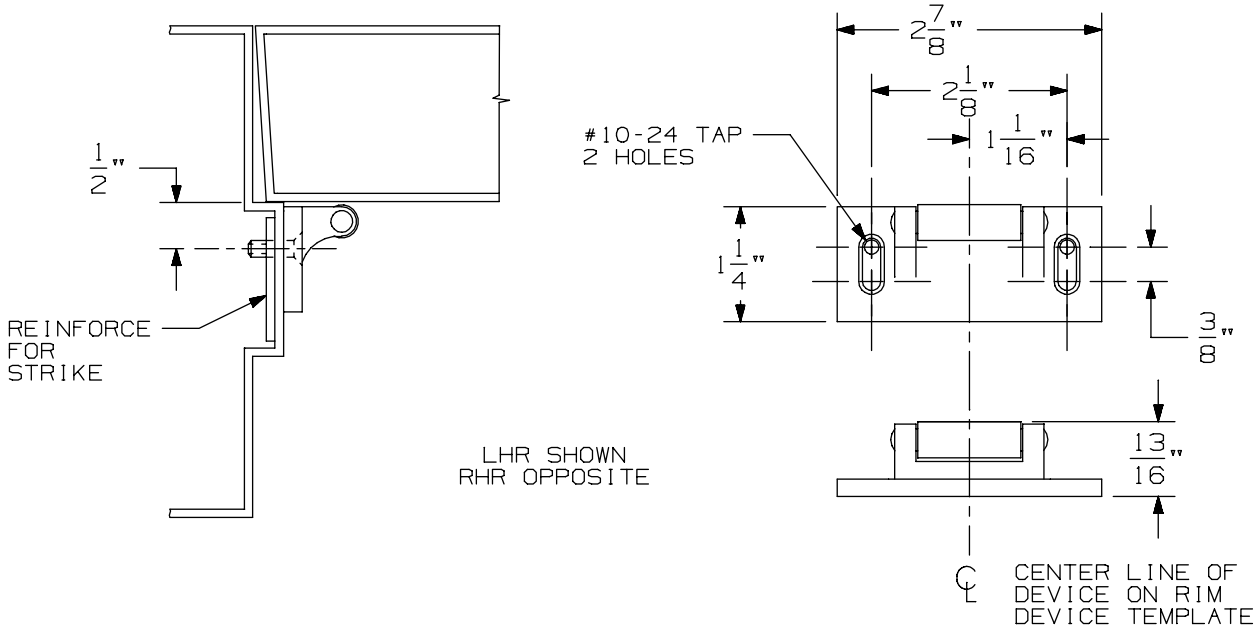

VERTICAL APPLICATION

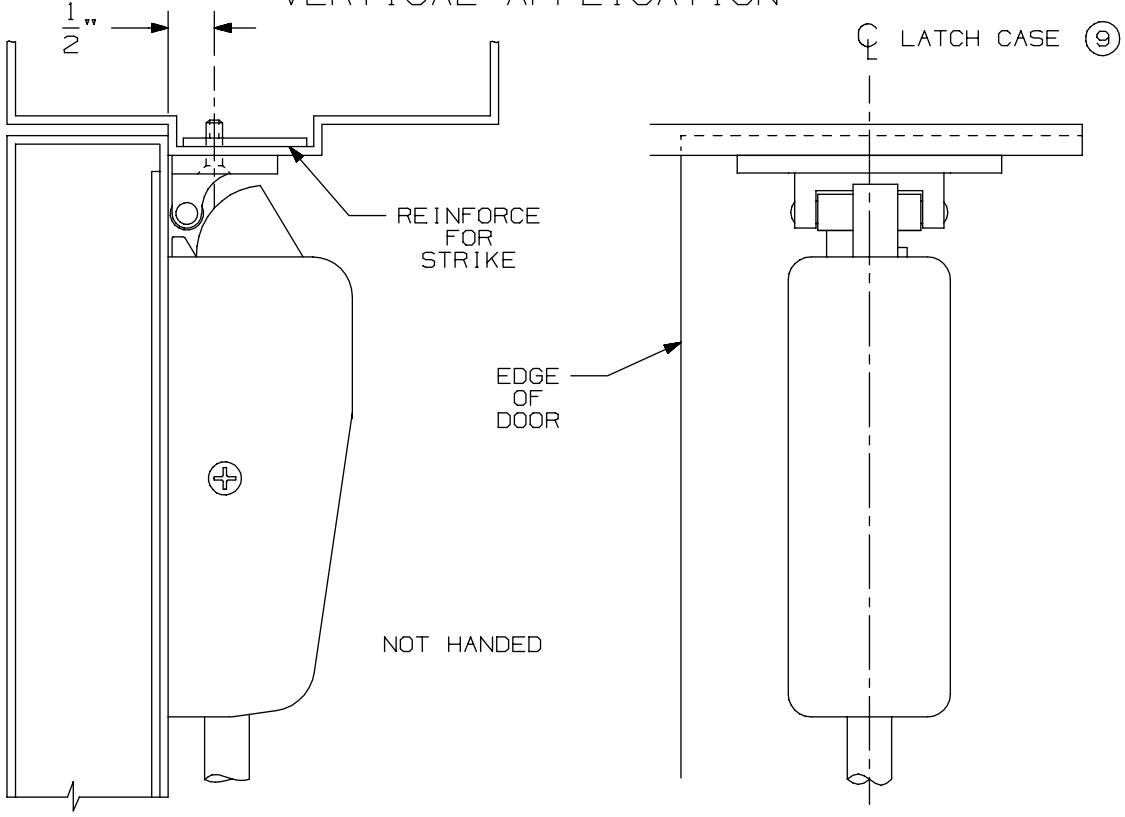

NOTE: LATCH CASE MOUNTING HOLES TO BE PREPARED AT INSTALLATION ON DOOR.

299 & 299F Strike

VON DUPRIN®

NOTES: SEE MASTER SHEET #10001 FOR SUGGESTED REINFORCING

TEMPLATE NUMBER: 30039_a

DATE: 05-23-13

DEVICE APPLICATION SCHEDULE		
INSTALLATION	MIN. STILE	BACKSET
TWO VERT. ROD DEVICES	3 11/16"	2 3/16"
VERT. ROD & MORTISE DEVICE	SEE TEMP. 10305	2 3/4"
SINGLE DOOR	3 11/16"	2 3/16"

APPLICATION	PREPARATION
SURFACE APPLICATION	#10-24 TAP-4 PLACES
990 TRIM APPLICATION SEX BOLT APPLICATION (SEE NOTE 1)	1/4" DIA. THIS SIDE 13/32" DIA. OPPOSITE SIDE - 4 PLACES

NOTES:

1. THESE FOUR HOLES TO BE PREPARED FOR SURFACE APPLICATION WHEN USING 696/697 TRIM. DO NOT PREPARE FOR SEX BOLTS.
2. FOR STOCK HOLLOW METAL DOORS SEE TEMPLATE NO. 10310.
3. LATCH CASE PREPARATION TO BE MADE AT INSTALLATION ON DOOR.
4. IT IS RECOMMENDED THE MOUNTING HOLES BE PREPARED IN THE FIELD.
5. FOR OUTSIDE TRIM PREPARATION, WHEN REQUIRED, SEE TRIM TEMPLATE.
6. LHR APPLICATION SHOWN, RHR APPLICATION OPPOSITE.
7. BACKSET MAY VARY WHEN USED WITH COORDINATOR.
8. GLASS BEAD KIT AVAILABLE WHEN REQUIRED.

RECOMMENDED DOOR UNDERCUT IS 1/4" FROM FINISHED FLOOR (PANIC & FIRE) OR 1/8" FROM THRESHOLD (PANIC ONLY).

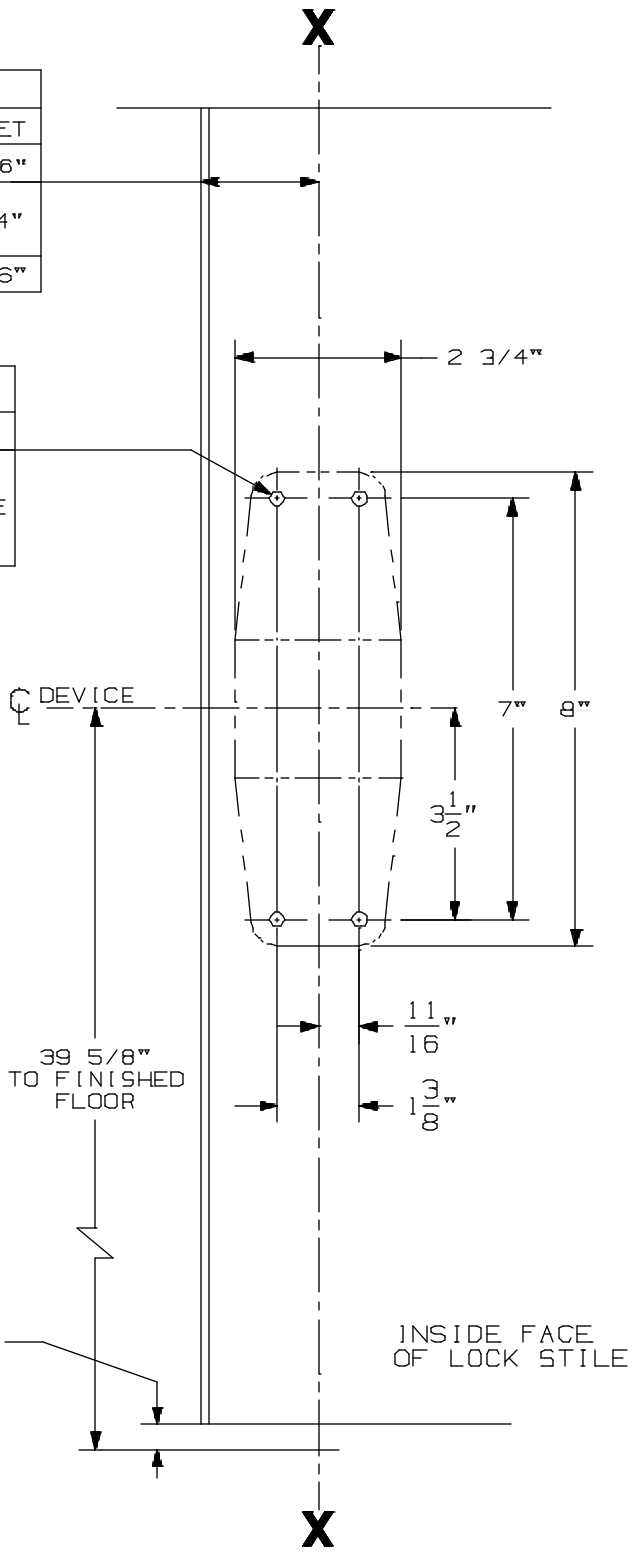

CX9827/9927 EO & DT Series Vertical Rod Devices

VON DUPRIN®

NOTES: SEE MASTER SHEET #10001 FOR SUGGESTED REINFORCING

TEMPLATE NUMBER: 10356_a

DATE: 05-22-13

990 DT TRIM

NOTES: SEE MASTER SHEET #10001 FOR SUGGESTED REINFORCING

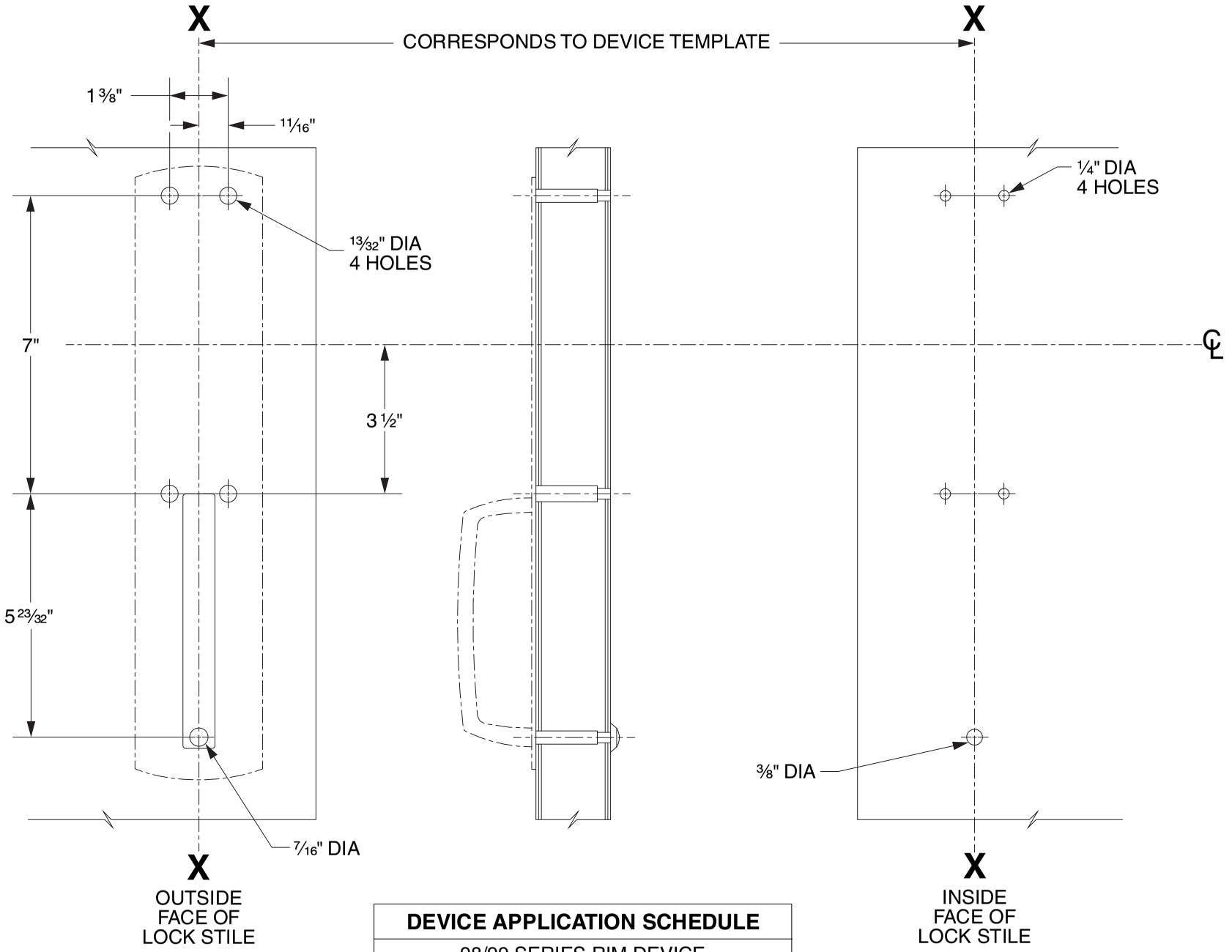

DEVICE APPLICATION SCHEDULE
98/99 SERIES RIM DEVICE
9827/9927 SERIES DEVICE
9847/9947 SERIES DEVICE
9849/9949 SERIES DEVICE
9875/9975 SERIES DEVICE

LHR SHOWN
RHR OPPOSITE

VON DUPRIN®

TEMPLATE NUMBER: 20268_C

DATE: 05-31-13

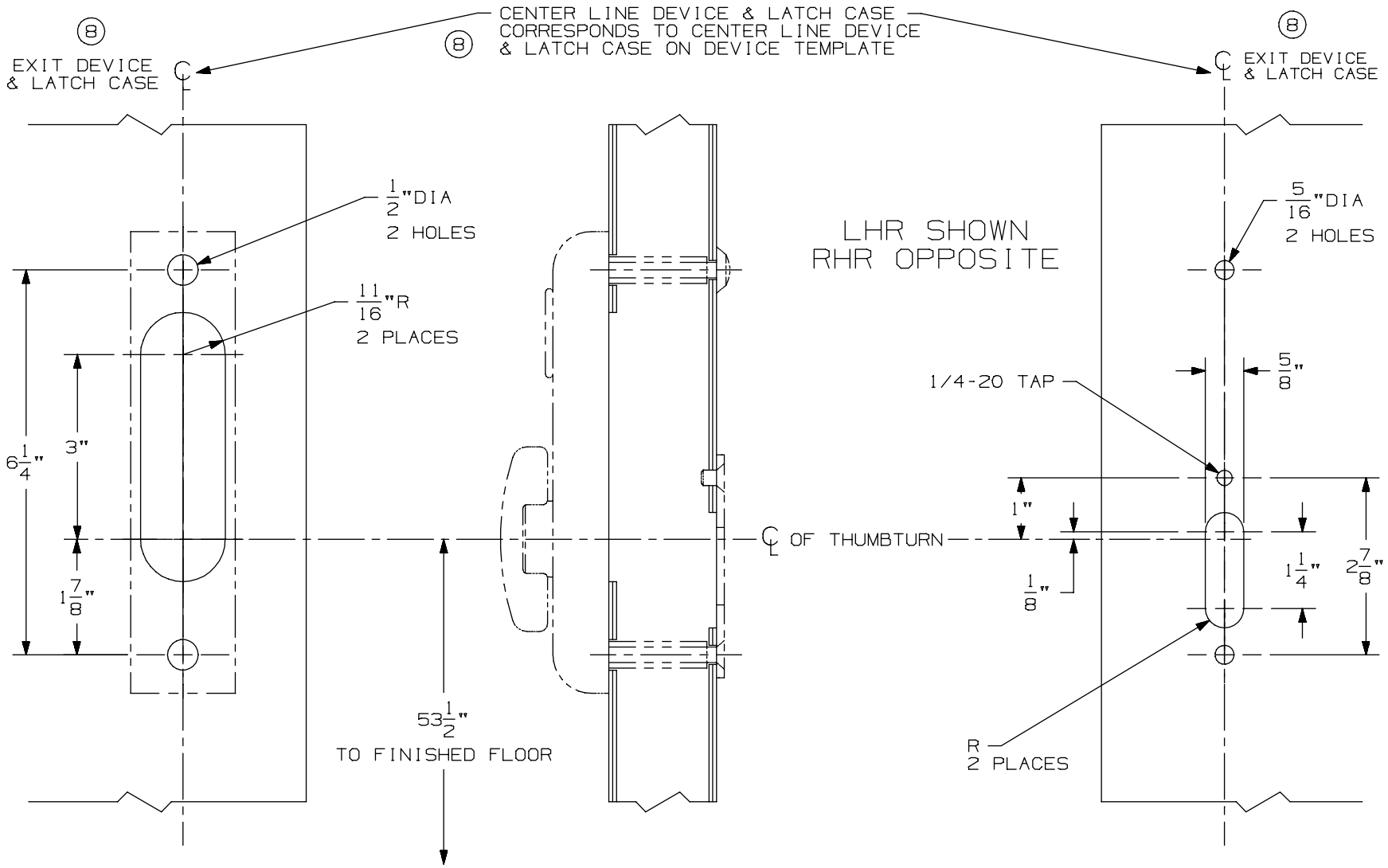

OUTSIDE
FACE OF
LOCK STILE

INSIDE
FACE OF
LOCK STILE

DEVICE APPLICATION SCHEDULE
2227 VERT. ROD DEVICE
2227-F VERT. ROD DEVICE
3327/3527 VERT. ROD DEVICE
8 3327A/3527A VERT. ROD DEVICE
8 3327A-F/3527A-F VERT. ROD DEVICE
9827/9927 VERT. ROD DEVICE
9827-F/9927-F VERT. ROD DEVICE

NOTES: SEE MASTER SHEET #10001 FOR SUGGESTED REINFORCING

374-T Control

VON DUPRIN®

TEMPLATE NUMBER: 40118_a

DATE: 05-28-13

RIM APPLICATION

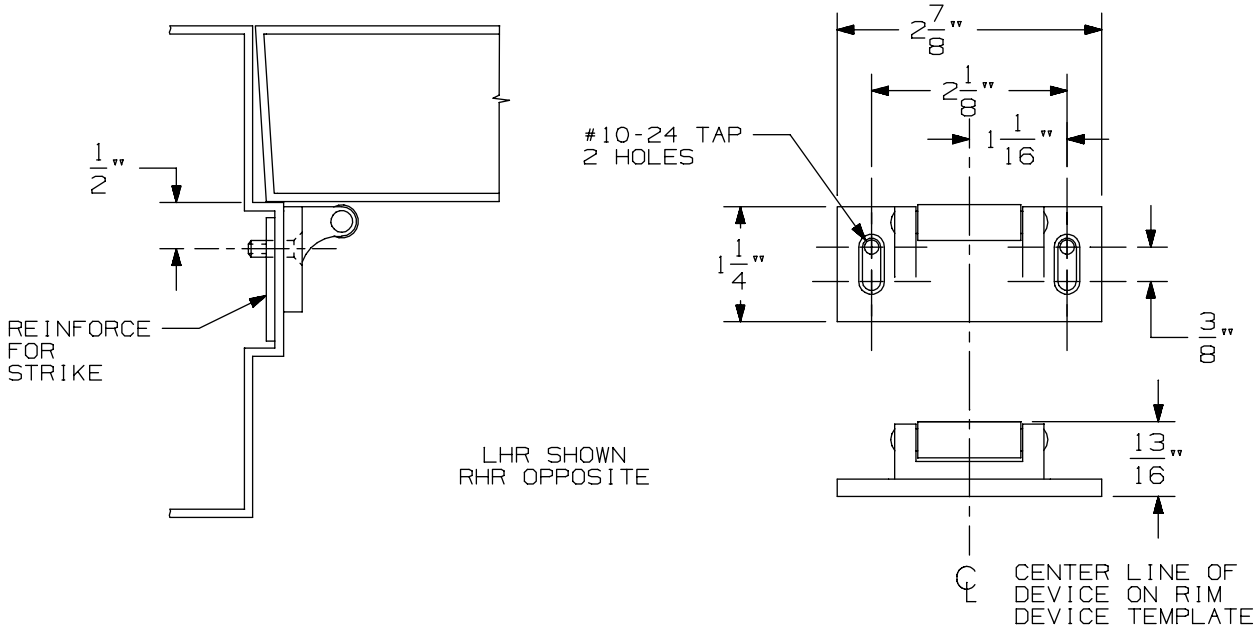

VERTICAL APPLICATION

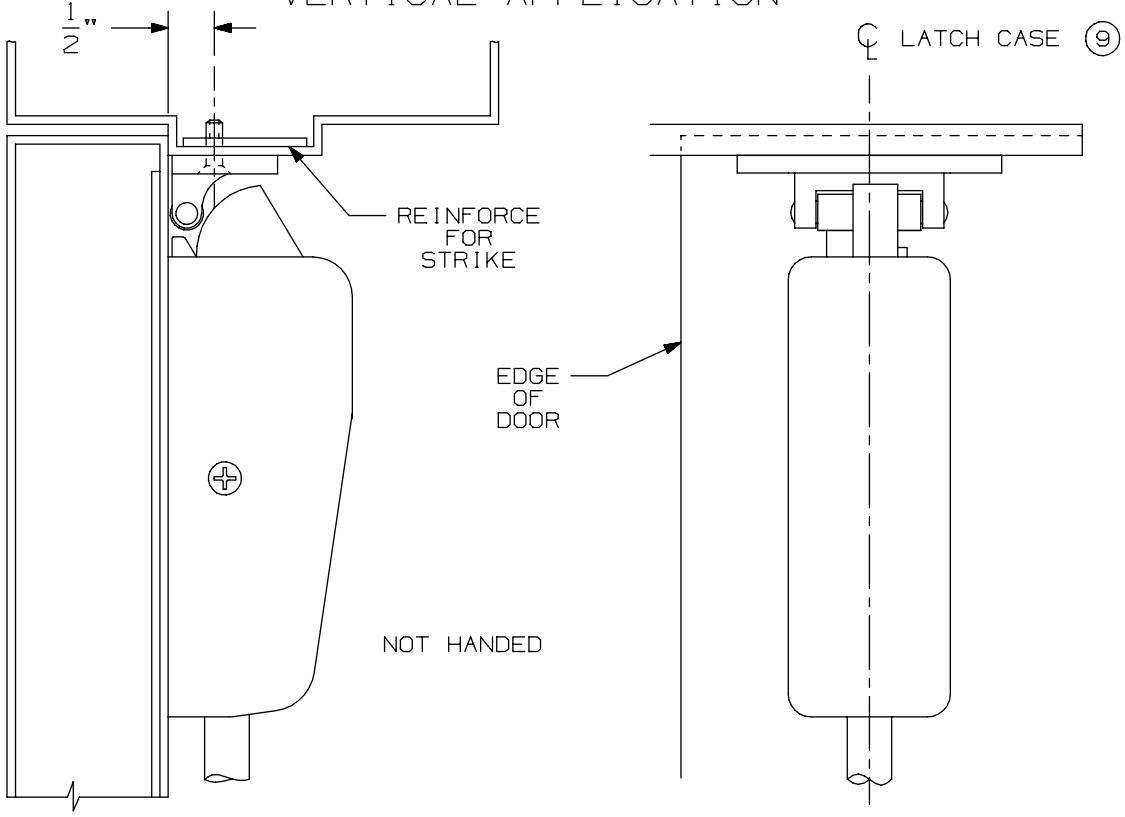

NOTE: LATCH CASE MOUNTING HOLES TO BE PREPARED AT INSTALLATION ON DOOR.

299 & 299F Strike

VON DUPRIN®

NOTES: SEE MASTER SHEET #10001 FOR SUGGESTED REINFORCING

TEMPLATE NUMBER: 30039_a

DATE: 05-23-13

98 / 99 Series Chex-it® Exit Devices

-

CX9827-F/ CX9927-F Surface Vertical Rod Fire

DEVICE APPLICATION SCHEDULE		
INSTALLATION	MIN. STILE	BACKSET
TWO VERT. ROD DEVICES	3 11/16"	2 3/16"
VERT. ROD & MORTISE DEVICE	SEE TEMP. 10305	2 3/4"
SINGLE DOOR	3 11/16"	2 3/16"

APPLICATION	PREPARATION
SURFACE APPLICATION	#10-24 TAP-4 PLACES
990 TRIM APPLICATION SEX BOLT APPLICATION (SEE NOTE 1)	1/4" DIA. THIS SIDE 13/32" DIA. OPPOSITE SIDE - 4 PLACES

NOTES:

1. THESE FOUR HOLES TO BE PREPARED FOR SURFACE APPLICATION WHEN USING 696/697 TRIM. DO NOT PREPARE FOR SEX BOLTS.
2. FOR STOCK HOLLOW METAL DOORS SEE TEMPLATE NO. 10310.
3. LATCH CASE PREPARATION TO BE MADE AT INSTALLATION ON DOOR.
4. IT IS RECOMMENDED THE MOUNTING HOLES BE PREPARED IN THE FIELD.
5. FOR OUTSIDE TRIM PREPARATION, WHEN REQUIRED, SEE TRIM TEMPLATE.
6. LHR APPLICATION SHOWN, RHR APPLICATION OPPOSITE.
7. BACKSET MAY VARY WHEN USED WITH COORDINATOR.
8. GLASS BEAD KIT AVAILABLE WHEN REQUIRED.

RECOMMENDED DOOR UNDERCUT IS 1/4" FROM FINISHED FLOOR (PANIC & FIRE) OR 1/8" FROM THRESHOLD (PANIC ONLY).

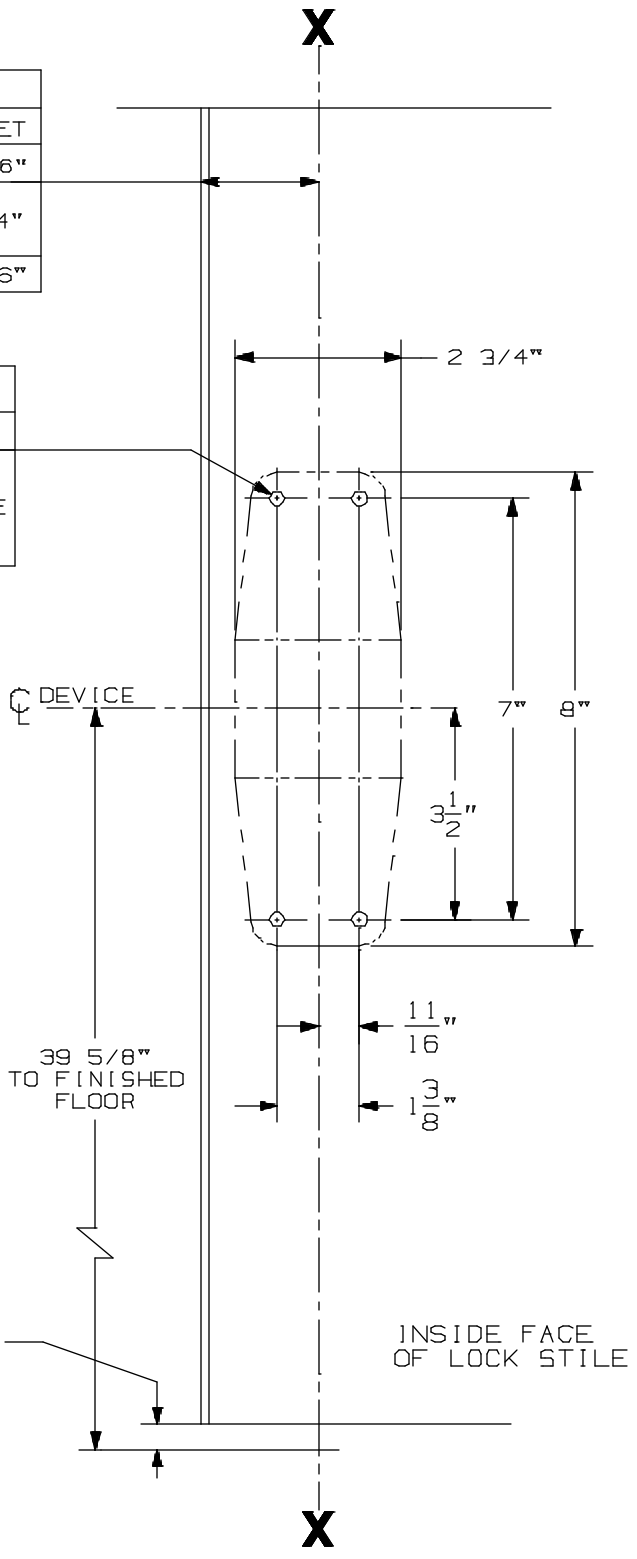

CX9827/9927 EO & DT Series Vertical Rod Devices

VON DUPRIN®

NOTES: SEE MASTER SHEET #10001 FOR SUGGESTED REINFORCING

TEMPLATE NUMBER: 10356_a

DATE: 05-22-13

RIM APPLICATION

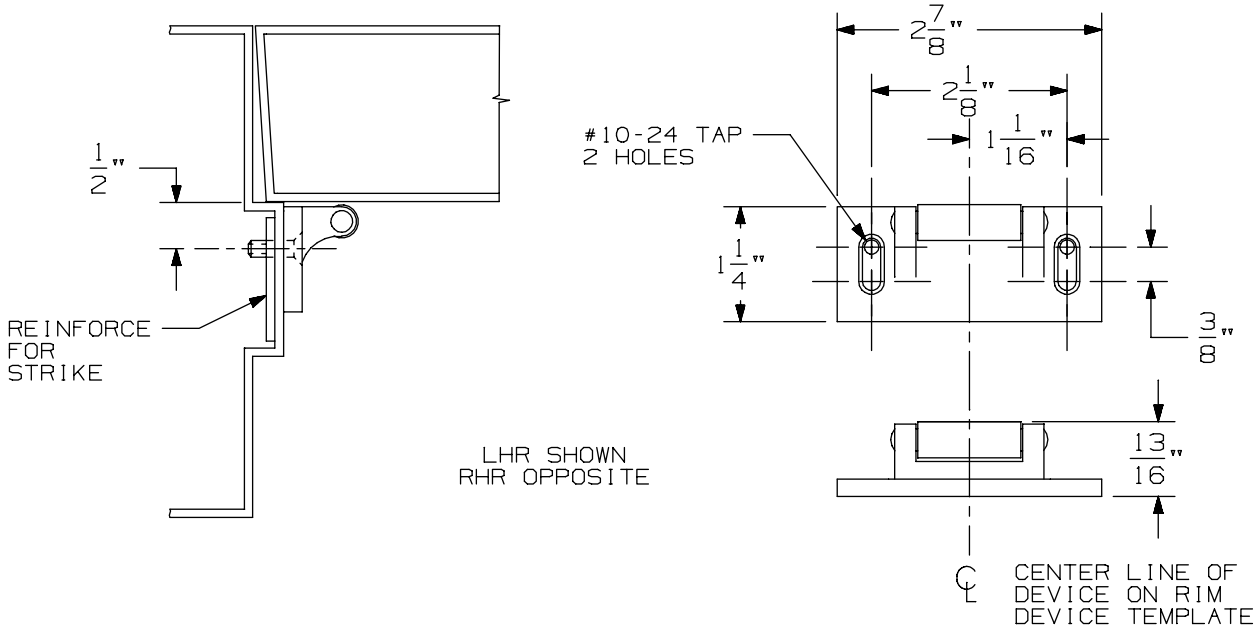

VERTICAL APPLICATION

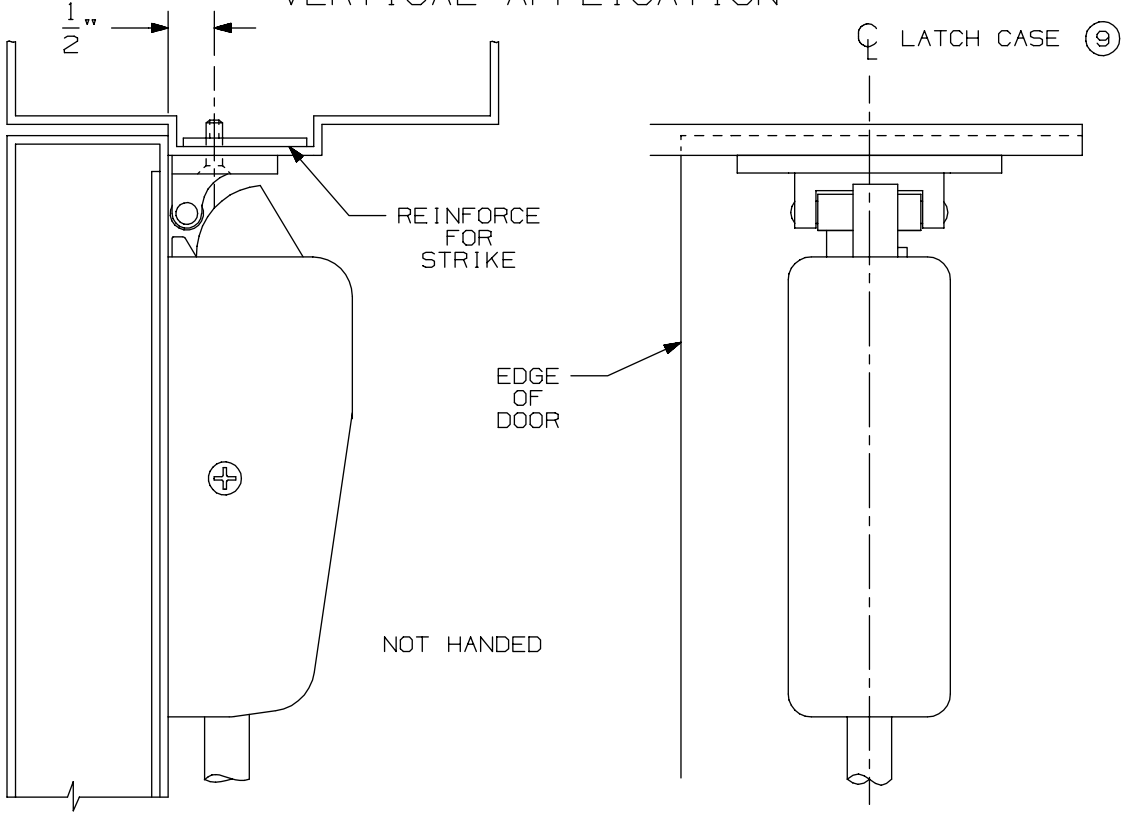

NOTE: LATCH CASE MOUNTING HOLES TO BE PREPARED AT INSTALLATION ON DOOR.

299 & 299F Strike

VON DUPRIN®

NOTES: SEE MASTER SHEET #10001 FOR SUGGESTED REINFORCING

TEMPLATE NUMBER: 30039_a

DATE: 05-23-13

DEVICE APPLICATION SCHEDULE		
INSTALLATION	MIN. STILE	BACKSET
TWO VERT. ROD DEVICES	3 11/16"	2 3/16"
VERT. ROD & MORTISE DEVICE	SEE TEMP. 10305	2 3/4"
SINGLE DOOR	3 11/16"	2 3/16"

APPLICATION	PREPARATION
990 TRIM APPLICATION SEX BOLT APPLICATION (SEE NOTE 1)	1/4" DIA. THIS SIDE 13/32" DIA. OPPOSITE SIDE - 4 PLACES

NOTES:

1. THESE FOUR HOLES TO BE PREPARED FOR SURFACE APPLICATION (#10-24 TAP) WHEN USING 696/697 TRIM. DO NOT PREPARE FOR SEX BOLTS.
2. FOR STOCK HOLLOW METAL DOORS SEE TEMPLATE NO. 10311.
3. LATCH CASE PREPARATION TO BE MADE AT INSTALLATION ON DOOR.
4. IT IS RECOMMENDED THE MOUNTING HOLES BE PREPARED IN THE FIELD.
5. FOR OUTSIDE TRIM PREPARATION, WHEN REQUIRED, SEE TRIM TEMPLATE.
6. LHR APPLICATION SHOWN, RHR APPLICATION OPPOSITE.
7. BACKSET MAY VARY WHEN USED WITH COORDINATOR.
8. GLASS BEAD KIT AVAILABLE WHEN REQUIRED.

RECOMMENDED DOOR UNDERCUT IS 1/4" FROM FINISHED FLOOR (PANIC & FIRE) OR 1/8" FROM THRESHOLD (PANIC ONLY).

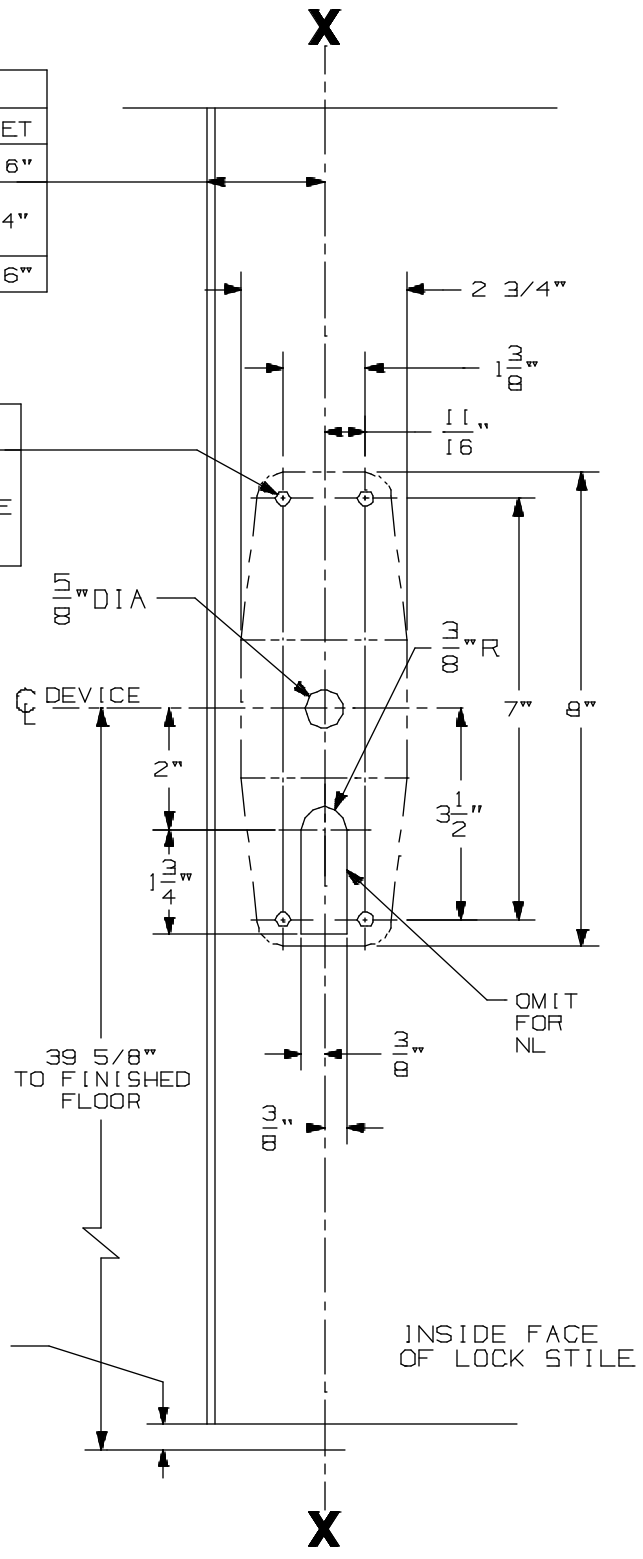

CX9827/CX9927 NL, TP, K, & L Series Vertical Rod Devices

VON DUPRIN®

NOTES: SEE MASTER SHEET #10001 FOR SUGGESTED REINFORCING

TEMPLATE NUMBER: 10357_a

DATE: 05-22-13

990 NL TRIM

NOTES: SEE MASTER SHEET #10001 FOR SUGGESTED REINFORCING

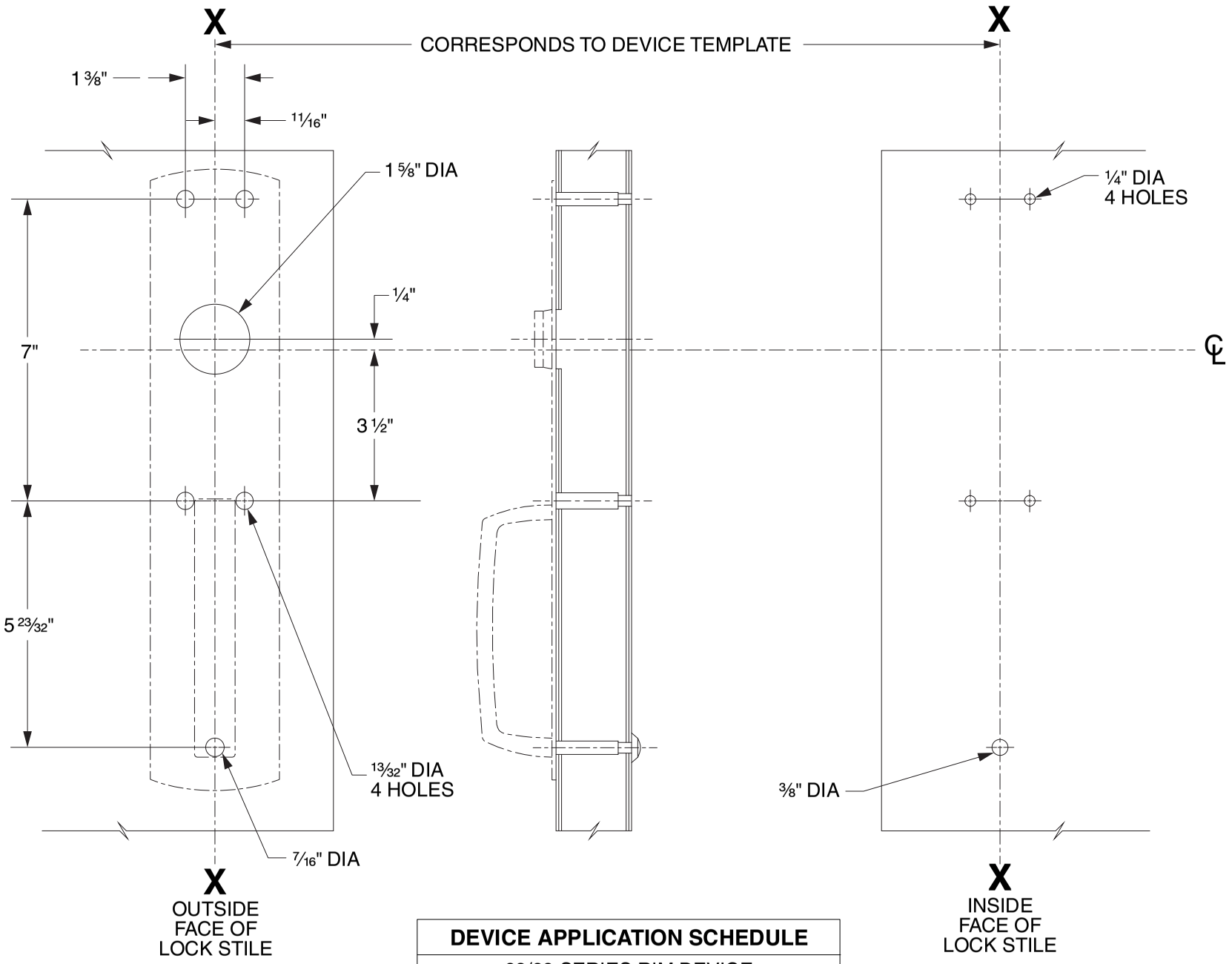

DEVICE APPLICATION SCHEDULE
98/99 SERIES RIM DEVICE
9827/9927 SERIES DEVICE
9847/9947 SERIES DEVICE
9849/9949 SERIES DEVICE

LHR SHOWN
RHR OPPOSITE

VON DUPRIN®

TEMPLATE NUMBER: 20267_C

DATE: 05-31-13

RIM APPLICATION

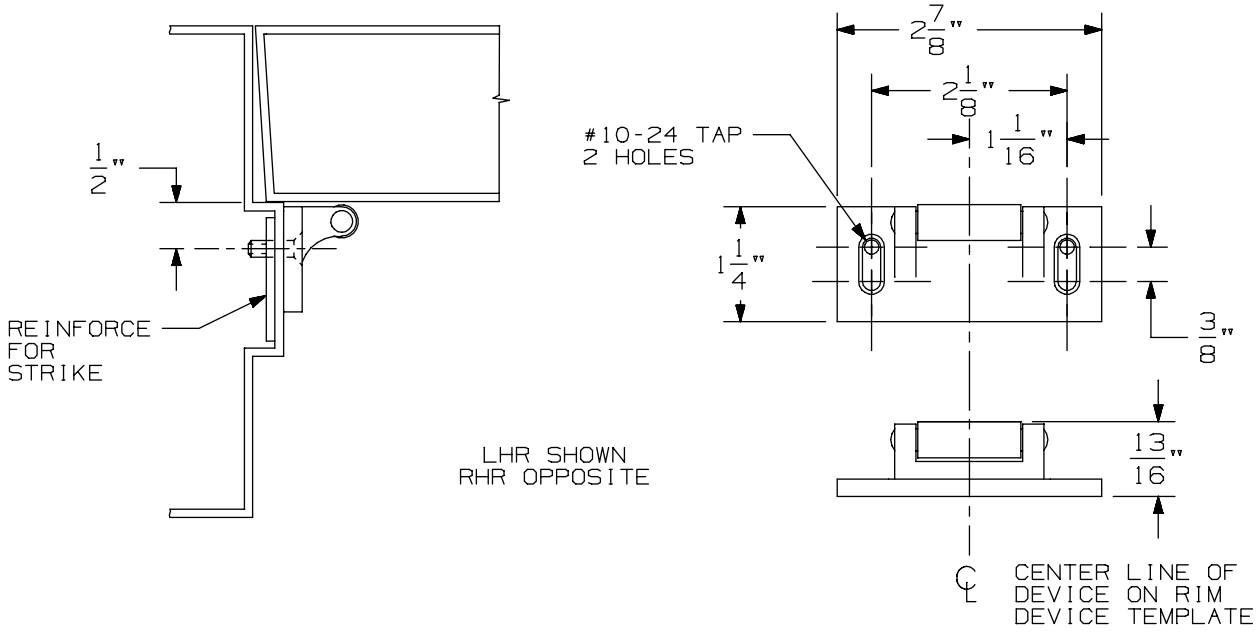

VERTICAL APPLICATION

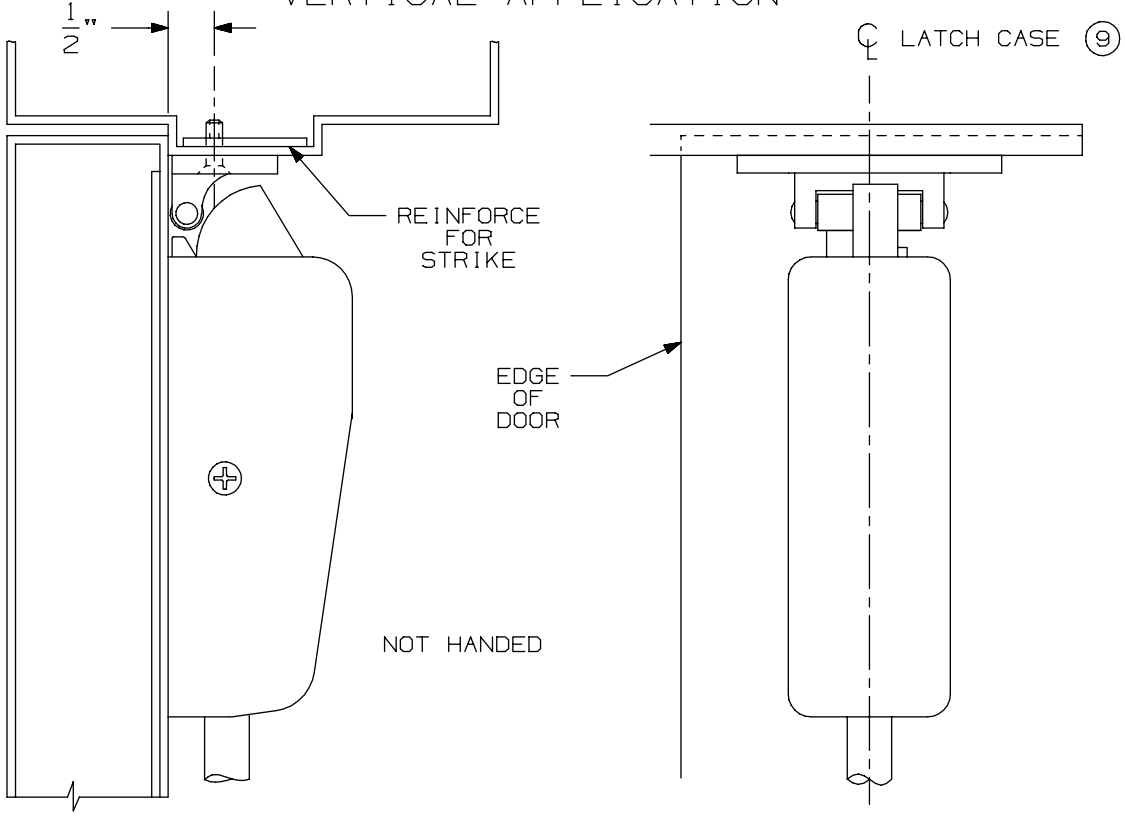

NOTE: LATCH CASE MOUNTING HOLES TO BE PREPARED AT INSTALLATION ON DOOR.

299 & 299F Strike

VON DUPRIN®

NOTES: SEE MASTER SHEET #10001 FOR SUGGESTED REINFORCING

TEMPLATE NUMBER: 30039_a

DATE: 05-23-13

DEVICE APPLICATION SCHEDULE		
INSTALLATION	MIN. STILE	BACKSET
TWO VERT. ROD DEVICES	3 11/16"	2 3/16"
VERT. ROD & MORTISE DEVICE	SEE TEMP. 10305	2 3/4"
SINGLE DOOR	3 11/16"	2 3/16"

APPLICATION	PREPARATION
990 TRIM APPLICATION SEX BOLT APPLICATION (SEE NOTE 1)	1/4" DIA. THIS SIDE 13/32" DIA. OPPOSITE SIDE - 4 PLACES

NOTES:

1. THESE FOUR HOLES TO BE PREPARED FOR SURFACE APPLICATION (#10-24 TAP) WHEN USING 696/697 TRIM. DO NOT PREPARE FOR SEX BOLTS.
2. FOR STOCK HOLLOW METAL DOORS SEE TEMPLATE NO. 10311.
3. LATCH CASE PREPARATION TO BE MADE AT INSTALLATION ON DOOR.
4. IT IS RECOMMENDED THE MOUNTING HOLES BE PREPARED IN THE FIELD.
5. FOR OUTSIDE TRIM PREPARATION, WHEN REQUIRED, SEE TRIM TEMPLATE.
6. LHR APPLICATION SHOWN, RHR APPLICATION OPPOSITE.
7. BACKSET MAY VARY WHEN USED WITH COORDINATOR.
8. GLASS BEAD KIT AVAILABLE WHEN REQUIRED.

RECOMMENDED DOOR UNDERCUT IS 1/4" FROM FINISHED FLOOR (PANIC & FIRE) OR 1/8" FROM THRESHOLD (PANIC ONLY).

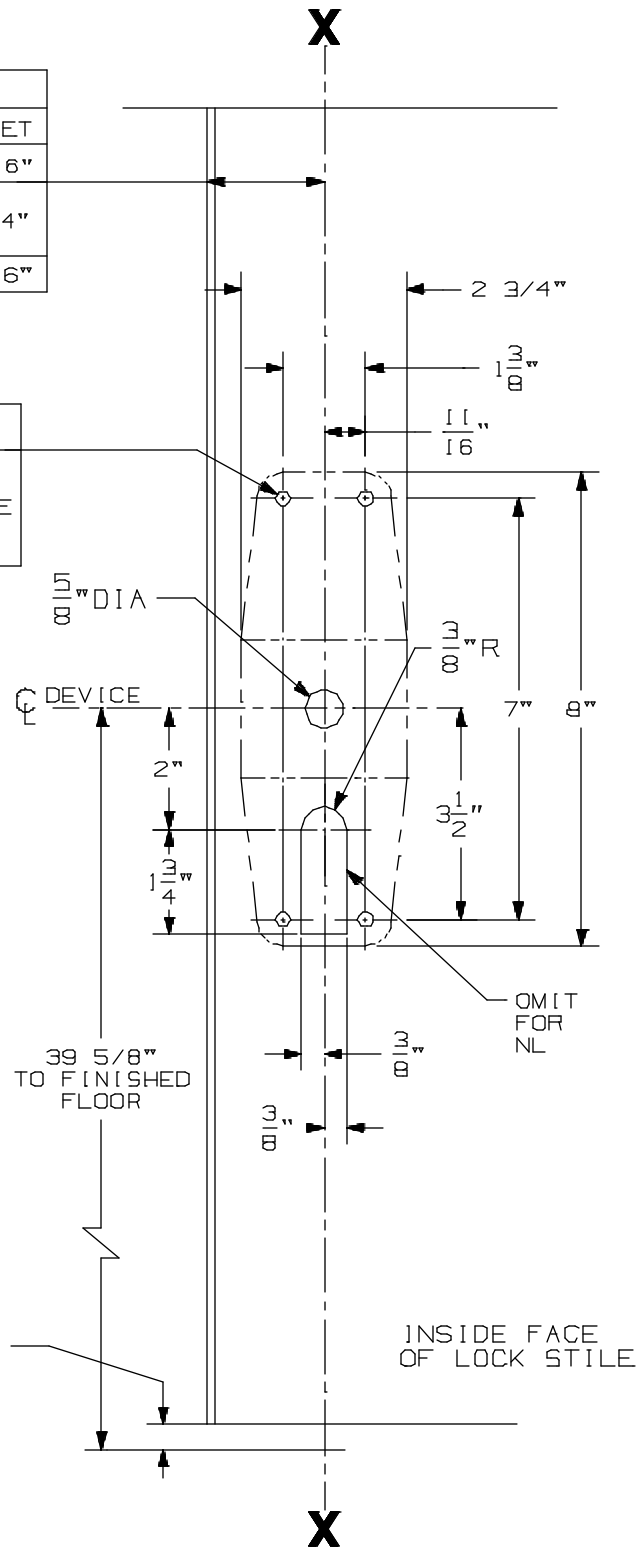

CX9827/CX9927 NL, TP, K, & L Series Vertical Rod Devices

VON DUPRIN®

NOTES: SEE MASTER SHEET #10001 FOR SUGGESTED REINFORCING

TEMPLATE NUMBER: 10357_a

DATE: 05-22-13

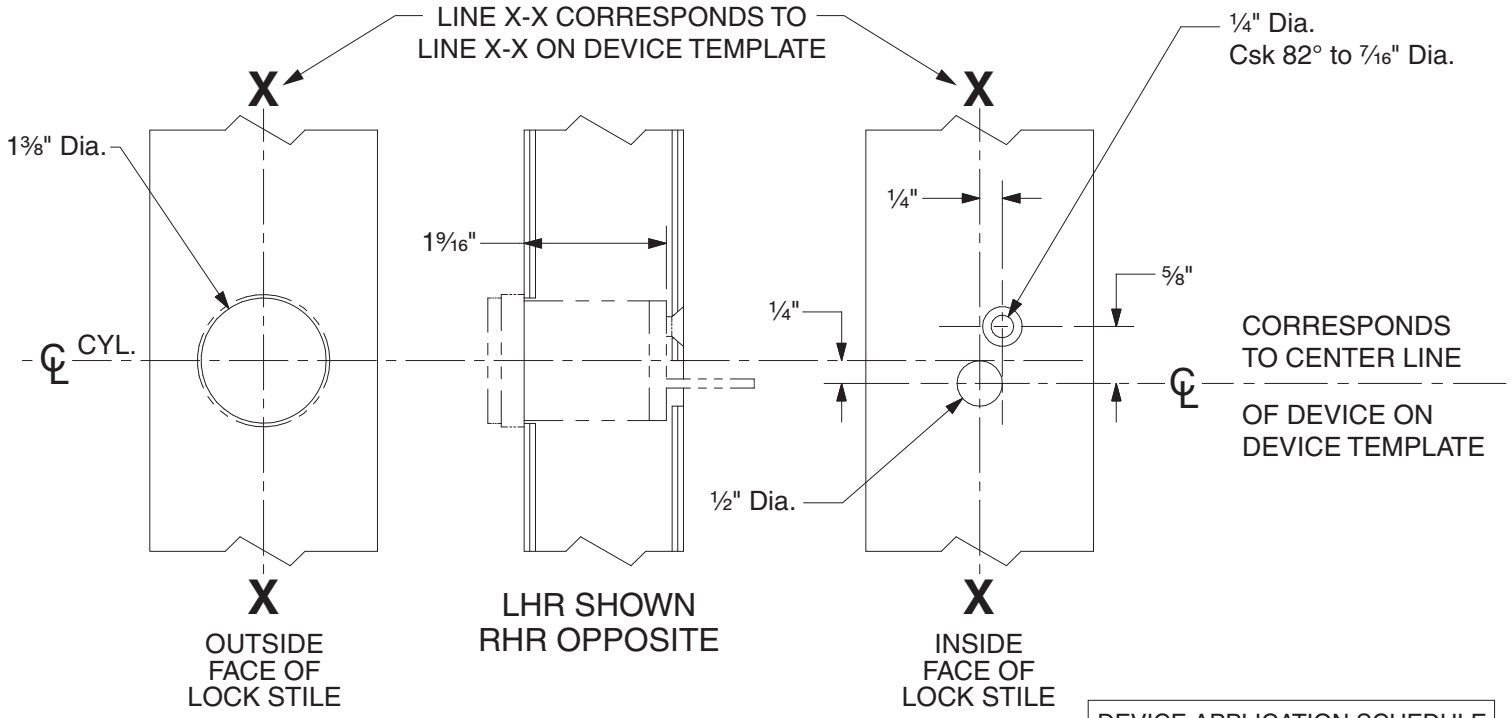

DEVICE APPLICATION SCHEDULE	
98 RIM SERIES	99 RIM SERIES
9827 SERIES	9927 SERIES
9847 SERIES	9947 SERIES
22 RIM SERIES	2227 SERIES

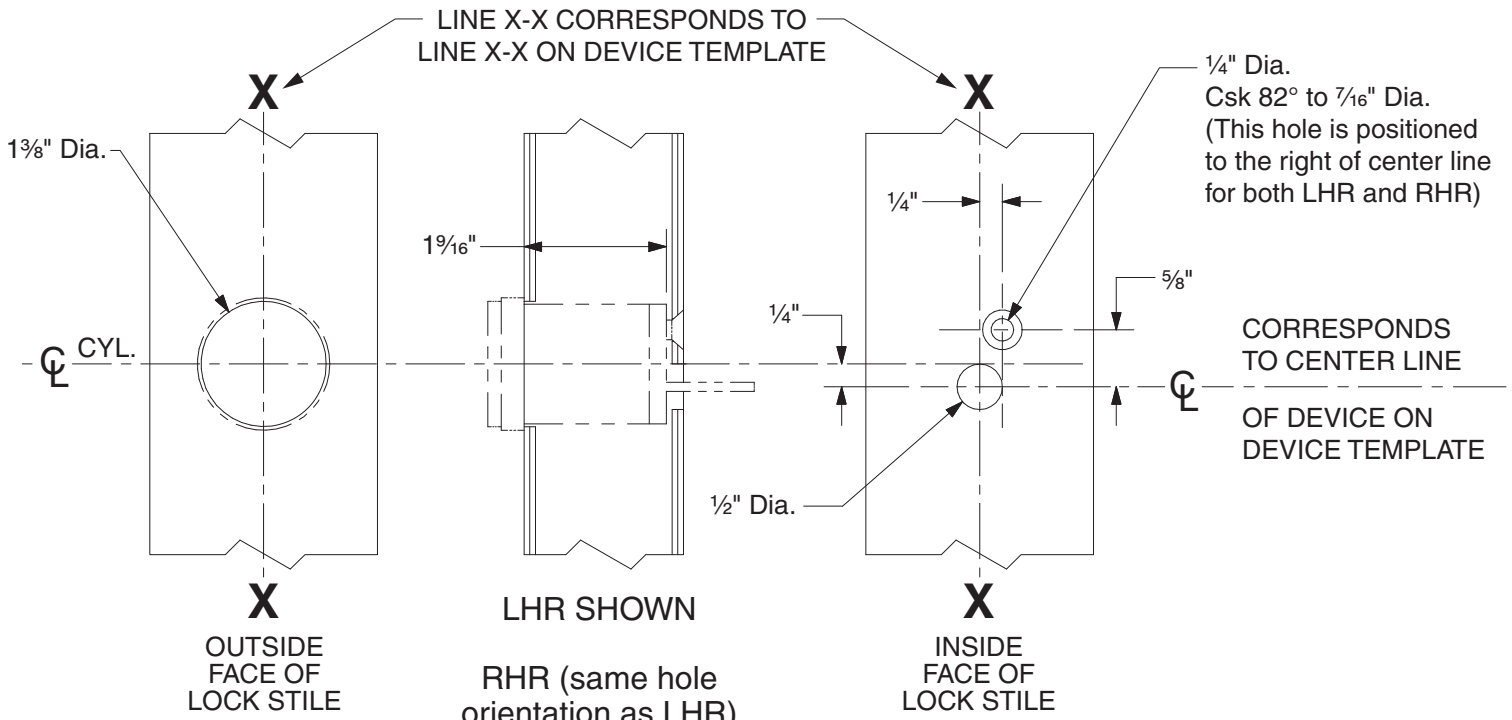

DEVICE APPLICATION SCHEDULE	
9849 SERIES	9949 SERIES

110NL Cylinder Preparation

VON DUPRIN®

NOTES: SEE MASTER SHEET #10001 FOR SUGGESTED REINFORCING

TEMPLATE NUMBER: 40022_c

DATE: 05-28-13

RIM APPLICATION

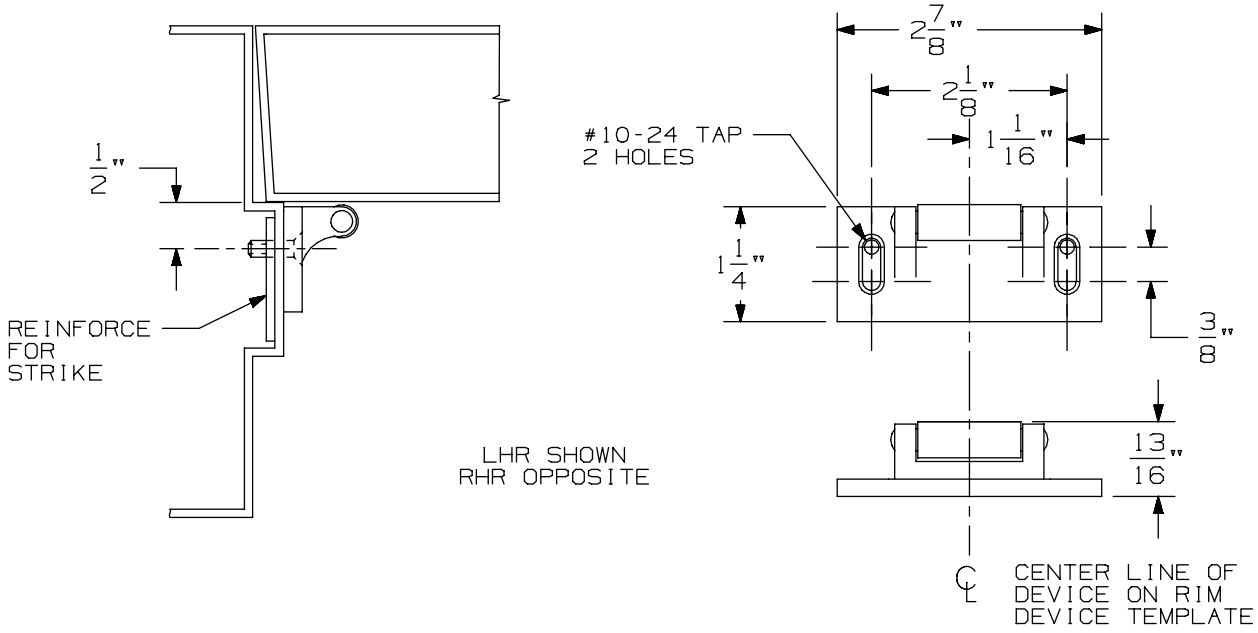

VERTICAL APPLICATION

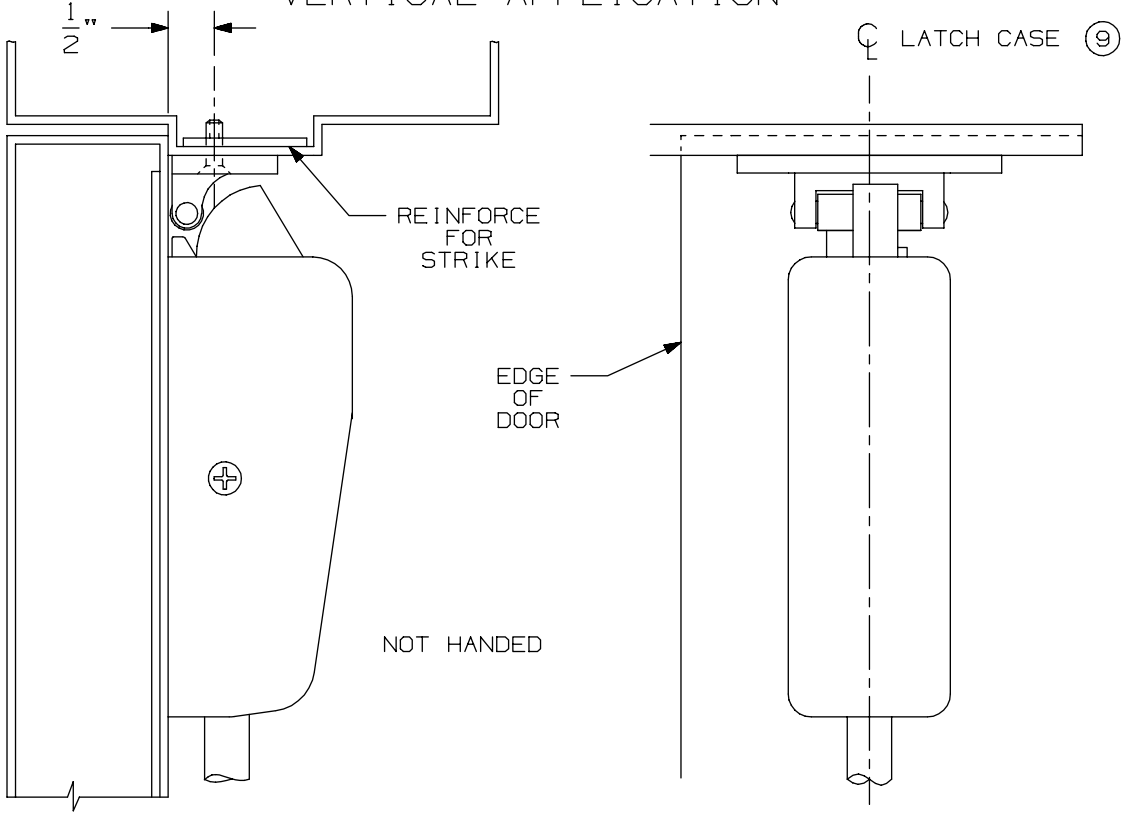

NOTE: LATCH CASE MOUNTING HOLES TO BE PREPARED AT INSTALLATION ON DOOR.

299 & 299F Strike

VON DUPRIN®

NOTES: SEE MASTER SHEET #10001 FOR SUGGESTED REINFORCING

TEMPLATE NUMBER: 30039_a

DATE: 05-23-13

DEVICE APPLICATION SCHEDULE		
INSTALLATION	MIN. STILE	BACKSET
TWO VERT. ROD DEVICES	3 11/16"	2 3/16"
VERT. ROD & MORTISE DEVICE	SEE TEMP. 10305	2 3/4"
SINGLE DOOR	3 11/16"	2 3/16"

APPLICATION	PREPARATION
990 TRIM APPLICATION SEX BOLT APPLICATION (SEE NOTE 1)	1/4" DIA. THIS SIDE 13/32" DIA. OPPOSITE SIDE - 4 PLACES

NOTES:

1. THESE FOUR HOLES TO BE PREPARED FOR SURFACE APPLICATION (#10-24 TAP) WHEN USING 696/697 TRIM. DO NOT PREPARE FOR SEX BOLTS.
2. FOR STOCK HOLLOW METAL DOORS SEE TEMPLATE NO. 10311.
3. LATCH CASE PREPARATION TO BE MADE AT INSTALLATION ON DOOR.
4. IT IS RECOMMENDED THE MOUNTING HOLES BE PREPARED IN THE FIELD.
5. FOR OUTSIDE TRIM PREPARATION, WHEN REQUIRED, SEE TRIM TEMPLATE.
6. LHR APPLICATION SHOWN, RHR APPLICATION OPPOSITE.
7. BACKSET MAY VARY WHEN USED WITH COORDINATOR.
8. GLASS BEAD KIT AVAILABLE WHEN REQUIRED.

RECOMMENDED DOOR UNDERCUT IS 1/4" FROM FINISHED FLOOR (PANIC & FIRE) OR 1/8" FROM THRESHOLD (PANIC ONLY).

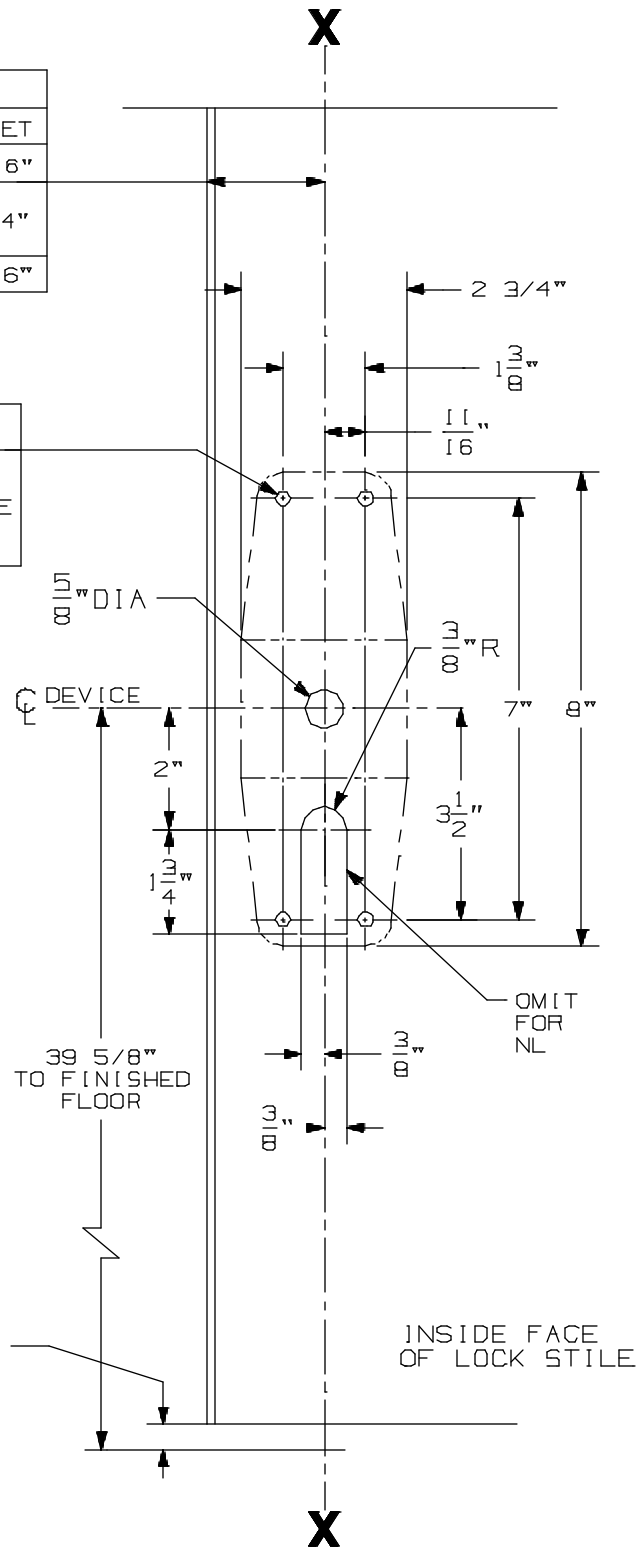

CX9827/CX9927 NL, TP, K, & L Series Vertical Rod Devices

VON DUPRIN®

NOTES: SEE MASTER SHEET #10001 FOR SUGGESTED REINFORCING

TEMPLATE NUMBER: 10357_a

DATE: 05-22-13

991 K & 992 L Trim

NOTES: SEE MASTER SHEET #10001 FOR SUGGESTED REINFORCING

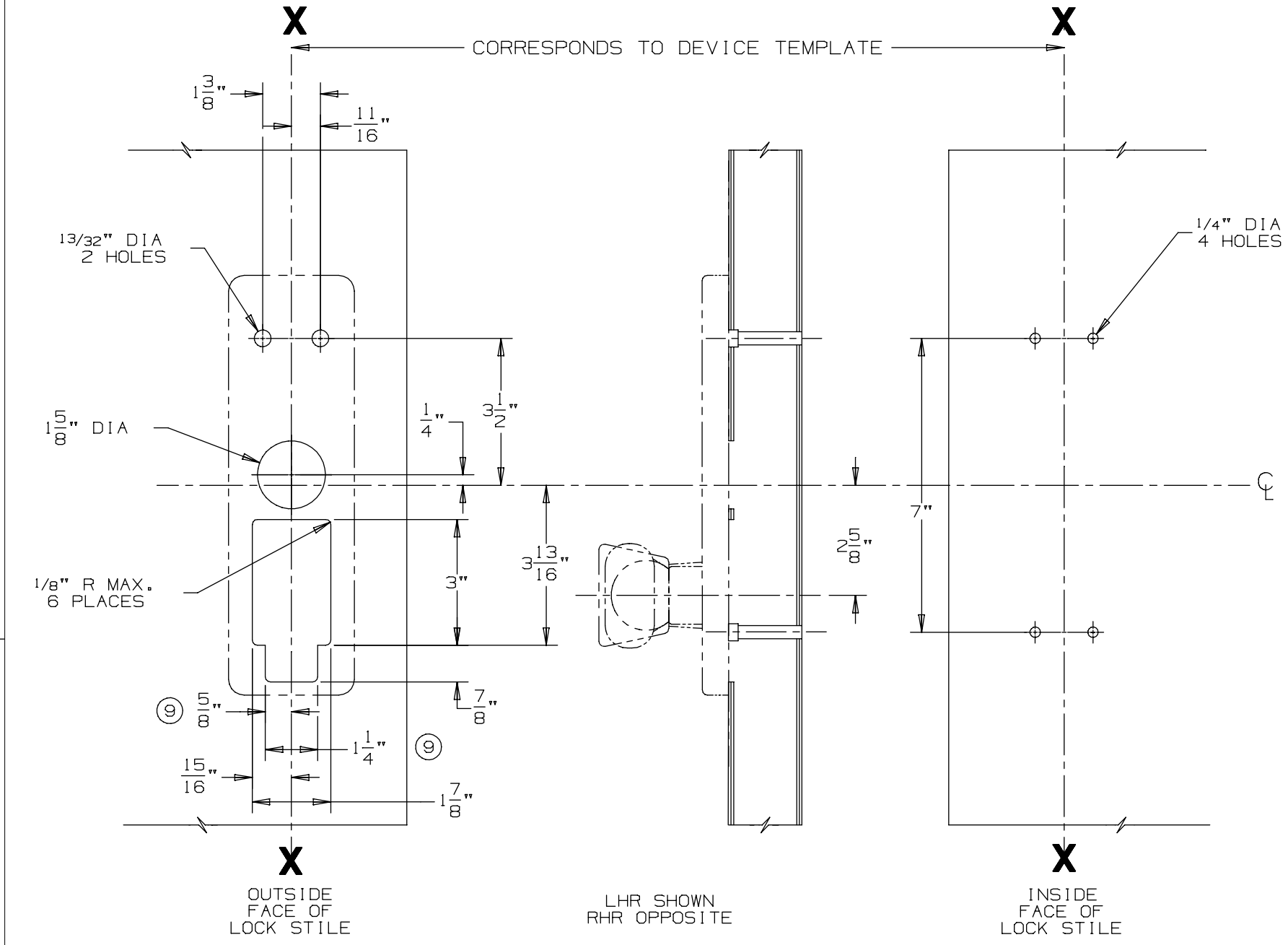

DEVICE APPLICATION SCHEDULE
98/99 SERIES RIM DEVICE
9827/9927 SERIES DEVICE
9847/9947 SERIES DEVICE

VON DUPRIN®

TEMPLATE NUMBER: 20272_a

DATE: 05-23-13

RIM APPLICATION

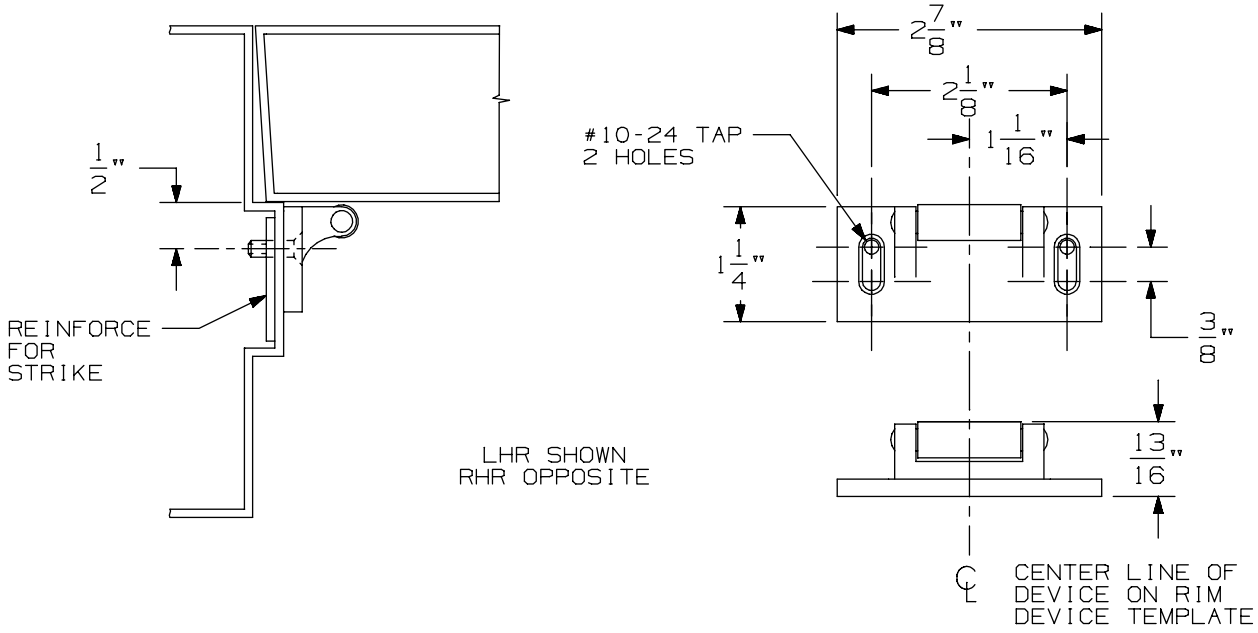

VERTICAL APPLICATION

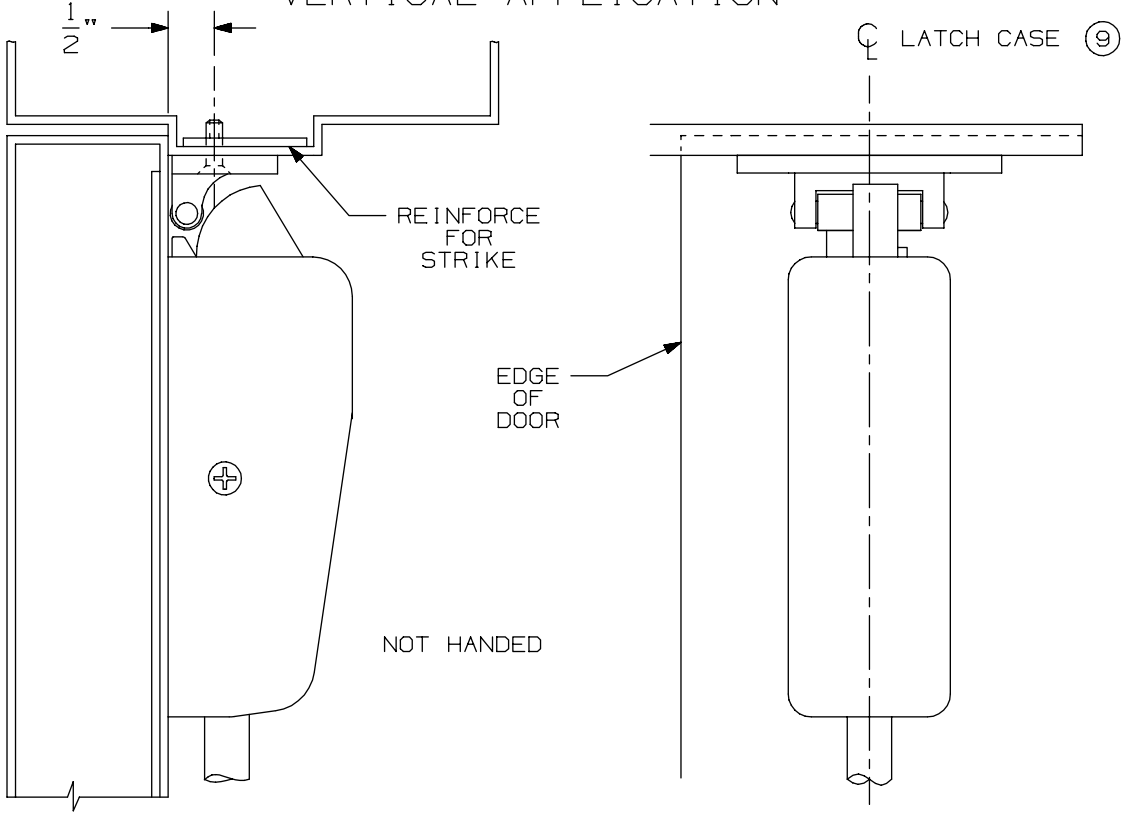

NOTE: LATCH CASE MOUNTING HOLES TO BE PREPARED AT INSTALLATION ON DOOR.

299 & 299F Strike

VON DUPRIN®

NOTES: SEE MASTER SHEET #10001 FOR SUGGESTED REINFORCING

TEMPLATE NUMBER: 30039_a

DATE: 05-23-13

DEVICE APPLICATION SCHEDULE		
INSTALLATION	MIN. STILE	BACKSET
TWO VERT. ROD DEVICES	3 11/16"	2 3/16"
VERT. ROD & MORTISE DEVICE	SEE TEMP. 10305	2 3/4"
SINGLE DOOR	3 11/16"	2 3/16"

APPLICATION	PREPARATION
990 TRIM APPLICATION SEX BOLT APPLICATION (SEE NOTE 1)	1/4" DIA. THIS SIDE 13/32" DIA. OPPOSITE SIDE - 4 PLACES

NOTES:

1. THESE FOUR HOLES TO BE PREPARED FOR SURFACE APPLICATION (#10-24 TAP) WHEN USING 696/697 TRIM. DO NOT PREPARE FOR SEX BOLTS.
2. FOR STOCK HOLLOW METAL DOORS SEE TEMPLATE NO. 10311.
3. LATCH CASE PREPARATION TO BE MADE AT INSTALLATION ON DOOR.
4. IT IS RECOMMENDED THE MOUNTING HOLES BE PREPARED IN THE FIELD.
5. FOR OUTSIDE TRIM PREPARATION, WHEN REQUIRED, SEE TRIM TEMPLATE.
6. LHR APPLICATION SHOWN, RHR APPLICATION OPPOSITE.
7. BACKSET MAY VARY WHEN USED WITH COORDINATOR.
8. GLASS BEAD KIT AVAILABLE WHEN REQUIRED.

RECOMMENDED DOOR UNDERCUT IS 1/4" FROM FINISHED FLOOR (PANIC & FIRE) OR 1/8" FROM THRESHOLD (PANIC ONLY).

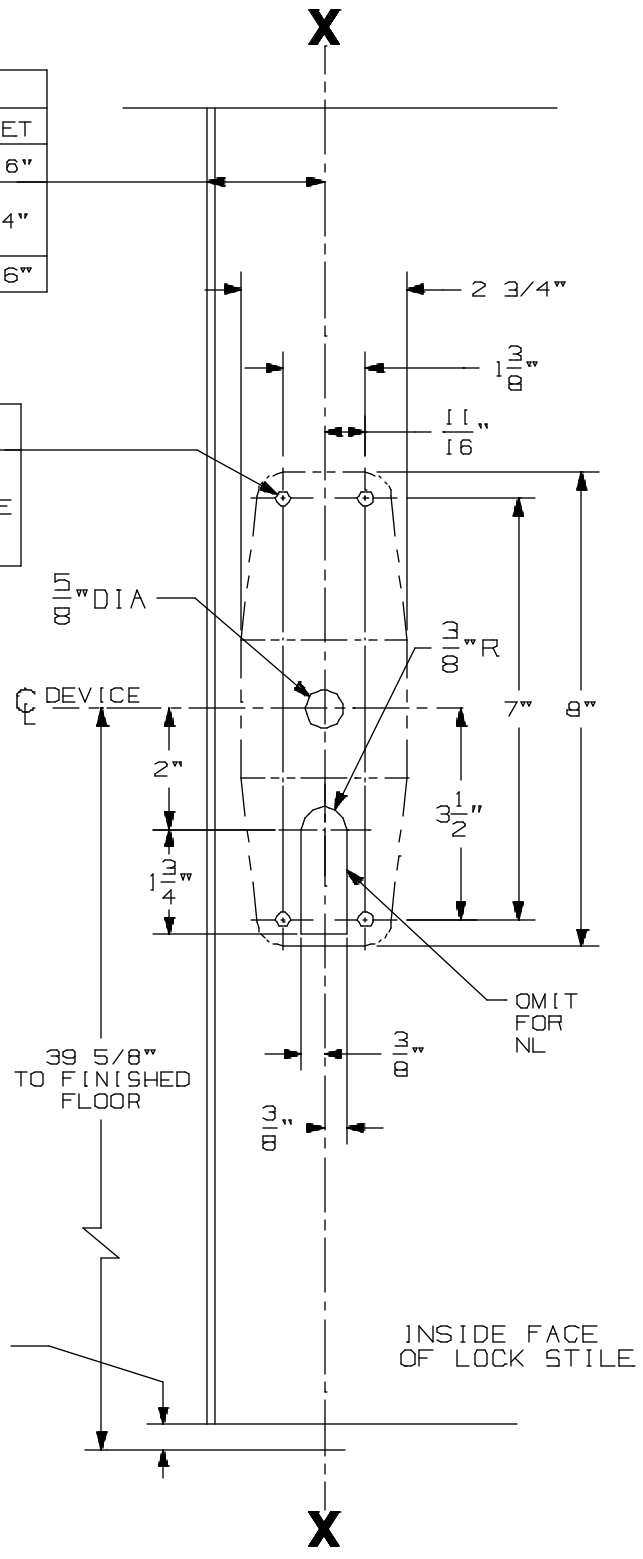

CX9827/CX9927 NL, TP, K, & L Series Vertical Rod Devices

VON DUPRIN®

NOTES: SEE MASTER SHEET #10001 FOR SUGGESTED REINFORCING

TEMPLATE NUMBER: 10357_a

DATE: 05-22-13

DEVICE APPLICATION SCHEDULE	
98 RIM SERIES	99 RIM SERIES
9827 SERIES	9927 SERIES
9847 SERIES	9947 SERIES
9849 SERIES	9949 SERIES

996L, E996L, 996L-BE, E996L-BE 996K, 996K-BE R/V SERIES
TRIM METAL DOOR APPLICATION

VON DUPRIN®

NOTES: SEE MASTER SHEET #10001 FOR SUGGESTED REINFORCING

TEMPLATE NUMBER: 20003_e

DATE: 10-30-14

RIM APPLICATION

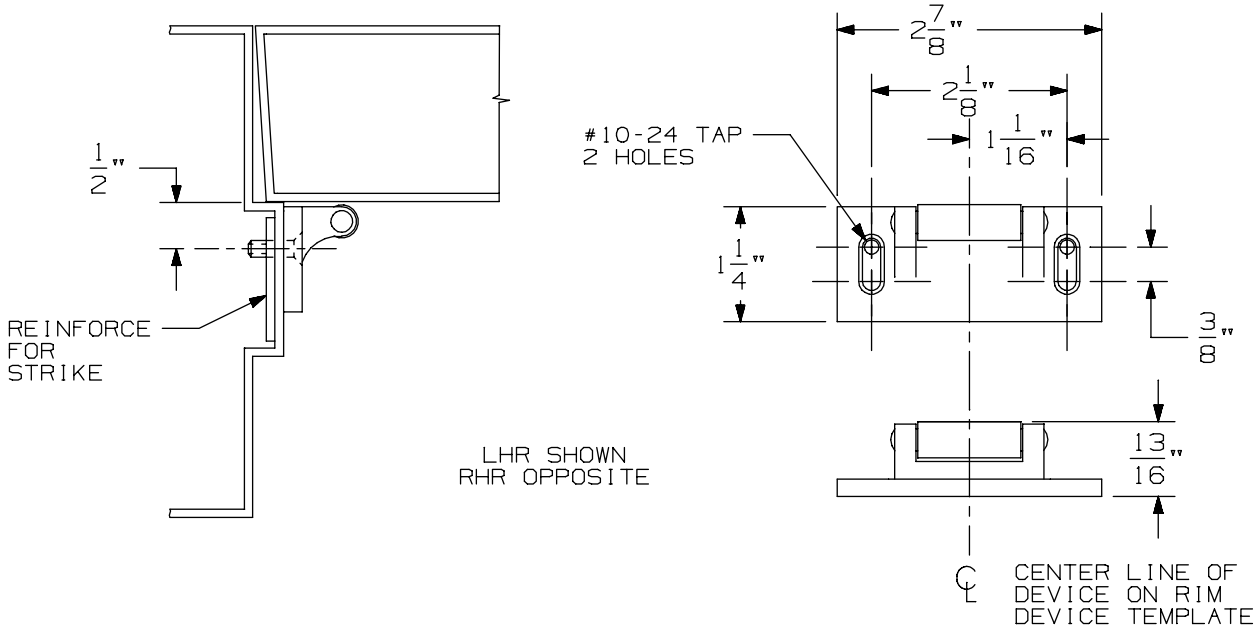

VERTICAL APPLICATION

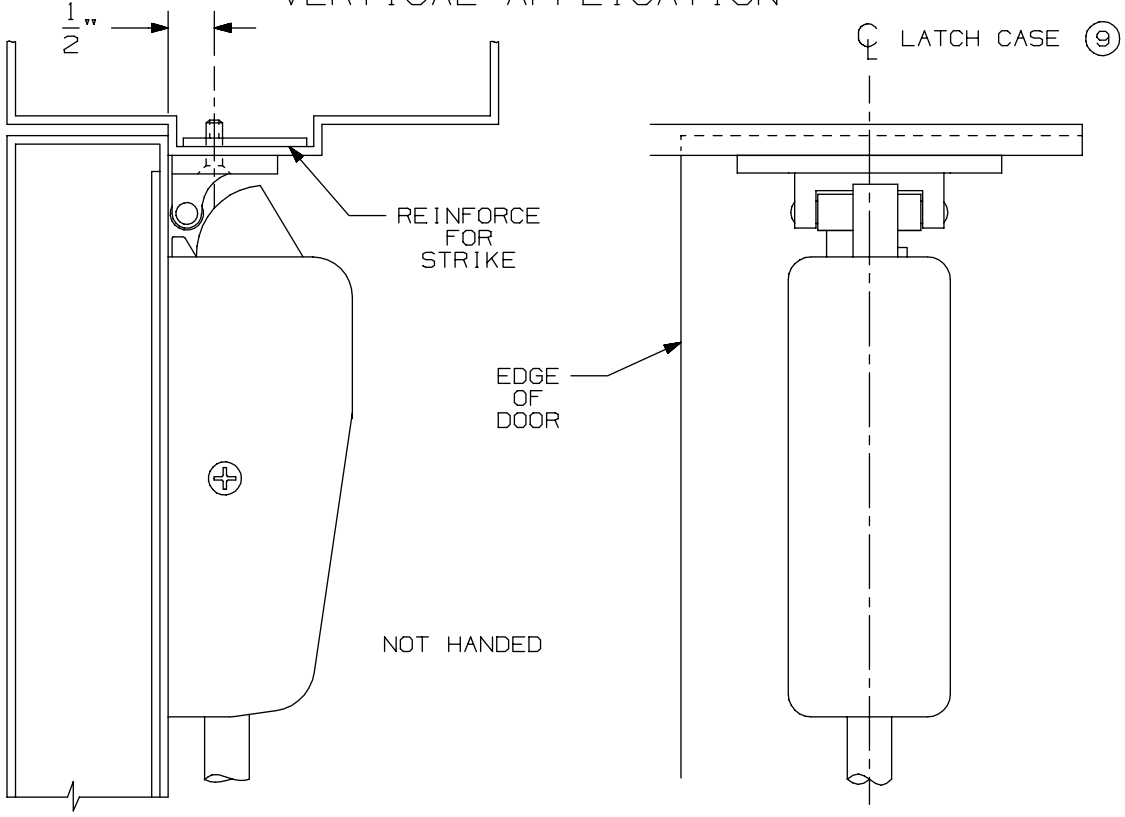

NOTE: LATCH CASE MOUNTING HOLES TO BE PREPARED AT INSTALLATION ON DOOR.

299 & 299F Strike

VON DUPRIN®

NOTES: SEE MASTER SHEET #10001 FOR SUGGESTED REINFORCING

TEMPLATE NUMBER: 30039_a

DATE: 05-23-13

DEVICE APPLICATION SCHEDULE		
INSTALLATION	MIN. STILE	BACKSET
TWO VERT. ROD DEVICES	3 11/16"	2 3/16"
VERT. ROD & MORTISE DEVICE	SEE TEMP. 10305	2 3/4"
SINGLE DOOR	3 11/16"	2 3/16"

APPLICATION	PREPARATION
990 TRIM APPLICATION SEX BOLT APPLICATION (SEE NOTE 1)	1/4" DIA. THIS SIDE 13/32" DIA. OPPOSITE SIDE - 4 PLACES

NOTES:

1. THESE FOUR HOLES TO BE PREPARED FOR SURFACE APPLICATION (#10-24 TAP) WHEN USING 696/697 TRIM. DO NOT PREPARE FOR SEX BOLTS.
2. FOR STOCK HOLLOW METAL DOORS SEE TEMPLATE NO. 10311.
3. LATCH CASE PREPARATION TO BE MADE AT INSTALLATION ON DOOR.
4. IT IS RECOMMENDED THE MOUNTING HOLES BE PREPARED IN THE FIELD.
5. FOR OUTSIDE TRIM PREPARATION, WHEN REQUIRED, SEE TRIM TEMPLATE.
6. LHR APPLICATION SHOWN, RHR APPLICATION OPPOSITE.
7. BACKSET MAY VARY WHEN USED WITH COORDINATOR.
8. GLASS BEAD KIT AVAILABLE WHEN REQUIRED.

RECOMMENDED DOOR UNDERCUT IS 1/4" FROM FINISHED FLOOR (PANIC & FIRE) OR 1/8" FROM THRESHOLD (PANIC ONLY).

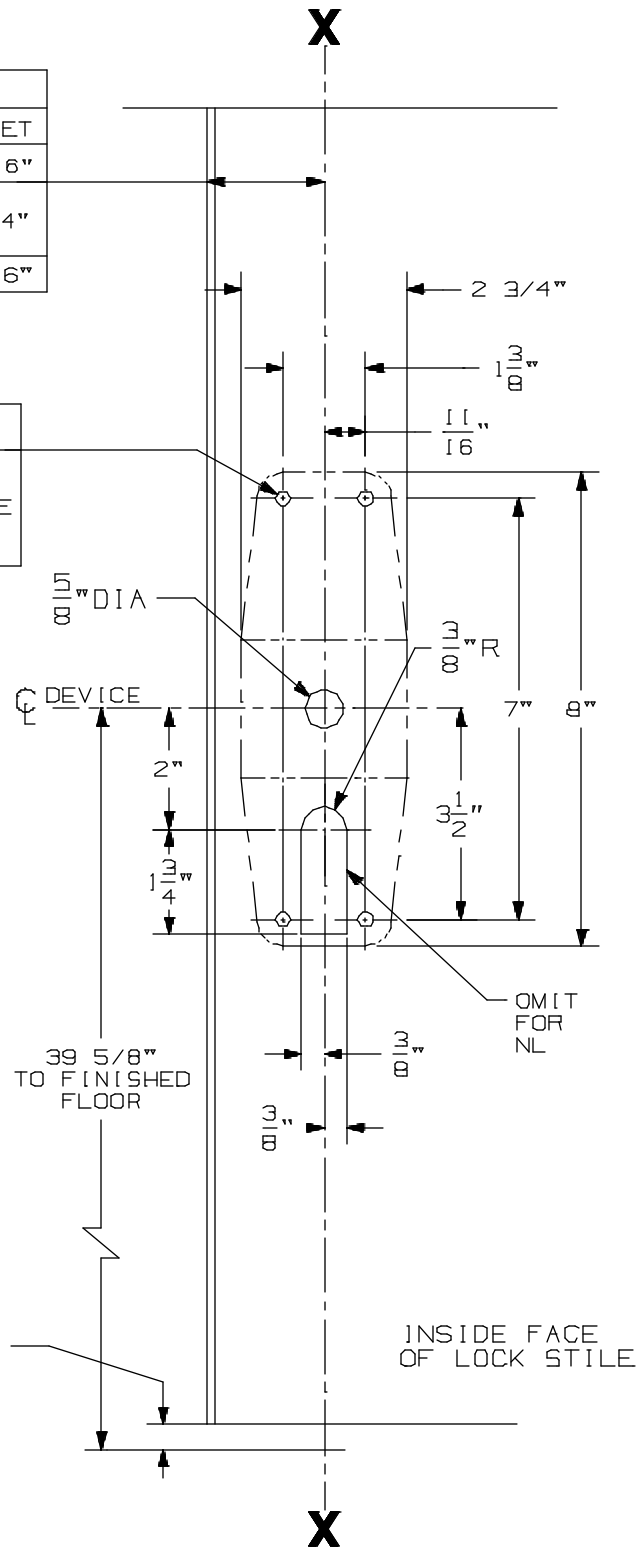

CX9827/CX9927 NL, TP, K, & L Series Vertical Rod Devices

VON DUPRIN®

NOTES: SEE MASTER SHEET #10001 FOR SUGGESTED REINFORCING

TEMPLATE NUMBER: 10357_a

DATE: 05-22-13

990 TP & 990 TP-BE TRIM

NOTES: SEE MASTER SHEET #10001 FOR SUGGESTED REINFORCING

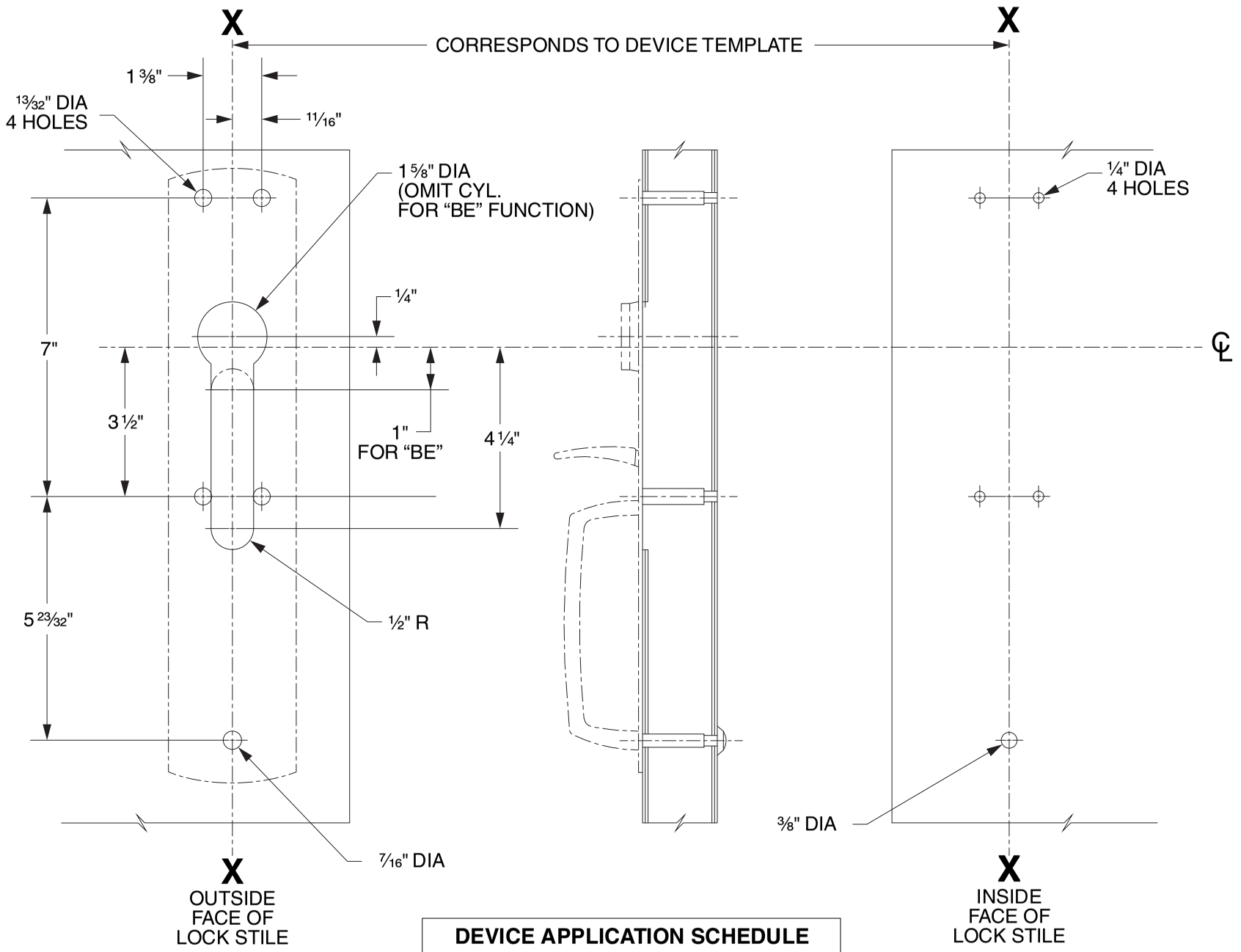

DEVICE APPLICATION SCHEDULE
98/99 SERIES RIM DEVICE
9827/9927 SERIES DEVICE
9847/9947 SERIES DEVICE
9849/9949 SERIES DEVICE

LHR SHOWN
RHR OPPOSITE

VON DUPRIN®

TEMPLATE NUMBER: 20265_C

DATE: 05-31-13

RIM APPLICATION

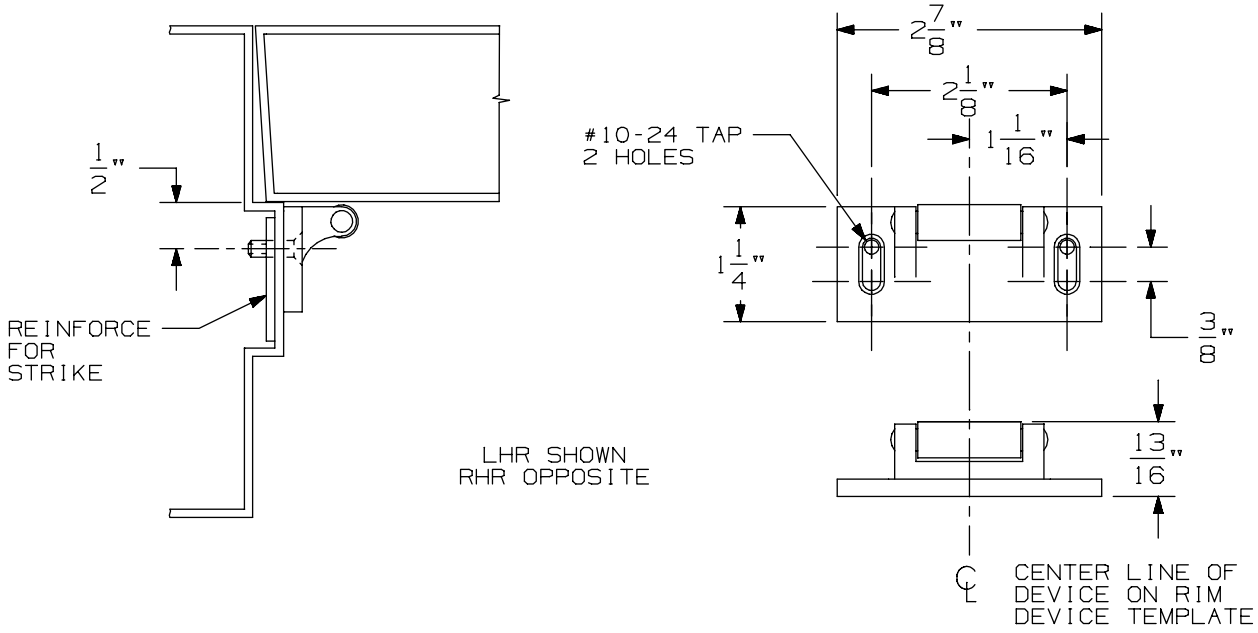

VERTICAL APPLICATION

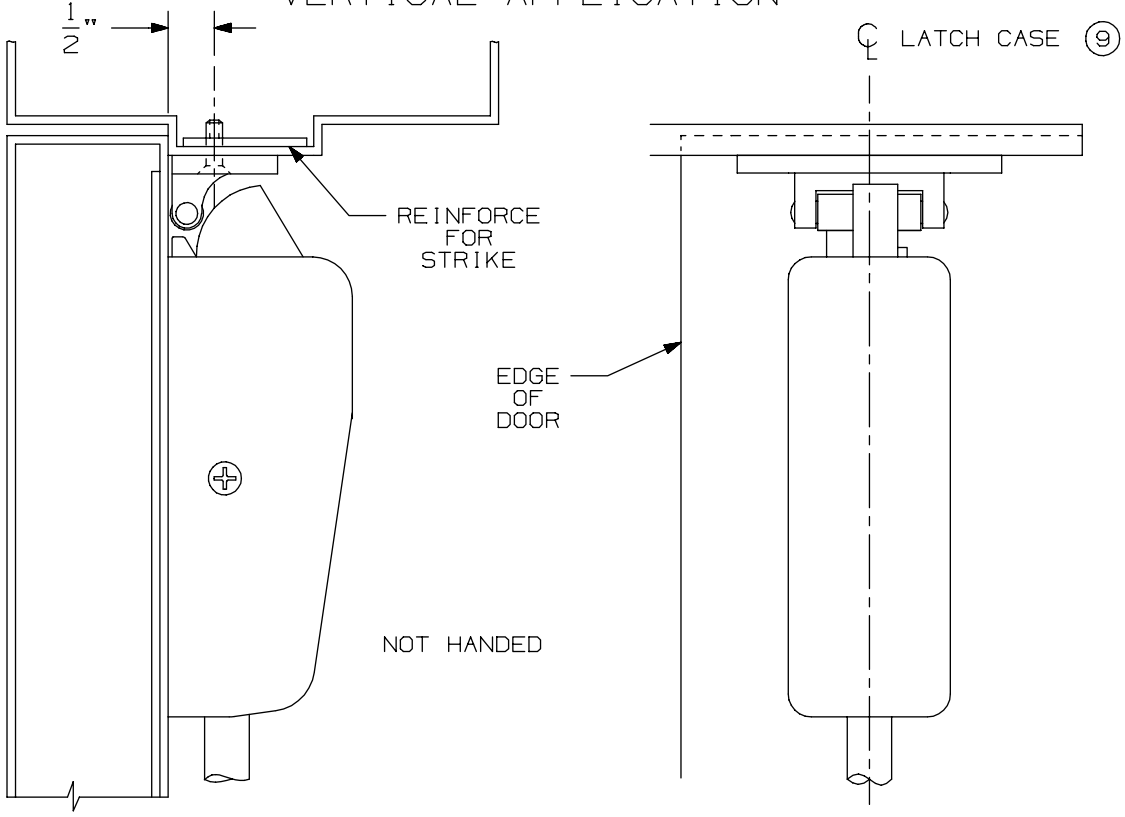

NOTE: LATCH CASE MOUNTING HOLES TO BE PREPARED AT INSTALLATION ON DOOR.

299 & 299F Strike

VON DUPRIN®

NOTES: SEE MASTER SHEET #10001 FOR SUGGESTED REINFORCING

TEMPLATE NUMBER: 30039_a

DATE: 05-23-13

DEVICE APPLICATION SCHEDULE		
INSTALLATION	MIN. STILE	BACKSET
TWO VERT. ROD DEVICES	3 11/16"	2 3/16"
VERT. ROD & MORTISE DEVICE	SEE TEMP. 10305	2 3/4"
SINGLE DOOR	3 11/16"	2 3/16"

APPLICATION	PREPARATION
SURFACE APPLICATION	#10-24 TAP-4 PLACES
990 TRIM APPLICATION SEX BOLT APPLICATION (SEE NOTE 1)	1/4" DIA. THIS SIDE 13/32" DIA. OPPOSITE SIDE - 4 PLACES

NOTES:

1. THESE FOUR HOLES TO BE PREPARED FOR SURFACE APPLICATION WHEN USING 696/697 TRIM. DO NOT PREPARE FOR SEX BOLTS.
2. FOR STOCK HOLLOW METAL DOORS SEE TEMPLATE NO. 10310.
3. LATCH CASE PREPARATION TO BE MADE AT INSTALLATION ON DOOR.
4. IT IS RECOMMENDED THE MOUNTING HOLES BE PREPARED IN THE FIELD.
5. FOR OUTSIDE TRIM PREPARATION, WHEN REQUIRED, SEE TRIM TEMPLATE.
6. LHR APPLICATION SHOWN, RHR APPLICATION OPPOSITE.
7. BACKSET MAY VARY WHEN USED WITH COORDINATOR.
8. GLASS BEAD KIT AVAILABLE WHEN REQUIRED.

RECOMMENDED DOOR UNDERCUT IS 1/4" FROM FINISHED FLOOR (PANIC & FIRE) OR 1/8" FROM THRESHOLD (PANIC ONLY).

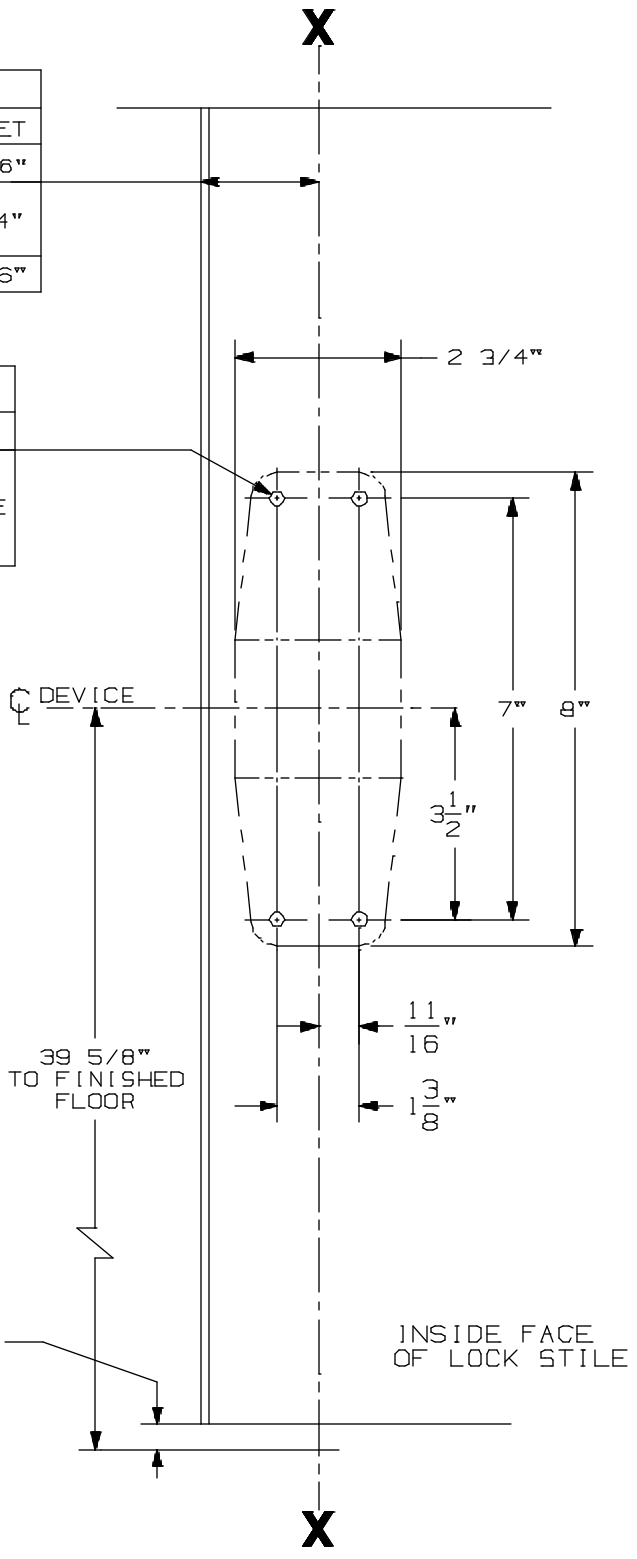

CX9827/9927 EO & DT Series Vertical Rod Devices

VON DUPRIN®

NOTES: SEE MASTER SHEET #10001 FOR SUGGESTED REINFORCING

TEMPLATE NUMBER: 10356_a

DATE: 05-22-13

990 DT TRIM

NOTES: SEE MASTER SHEET #10001 FOR SUGGESTED REINFORCING

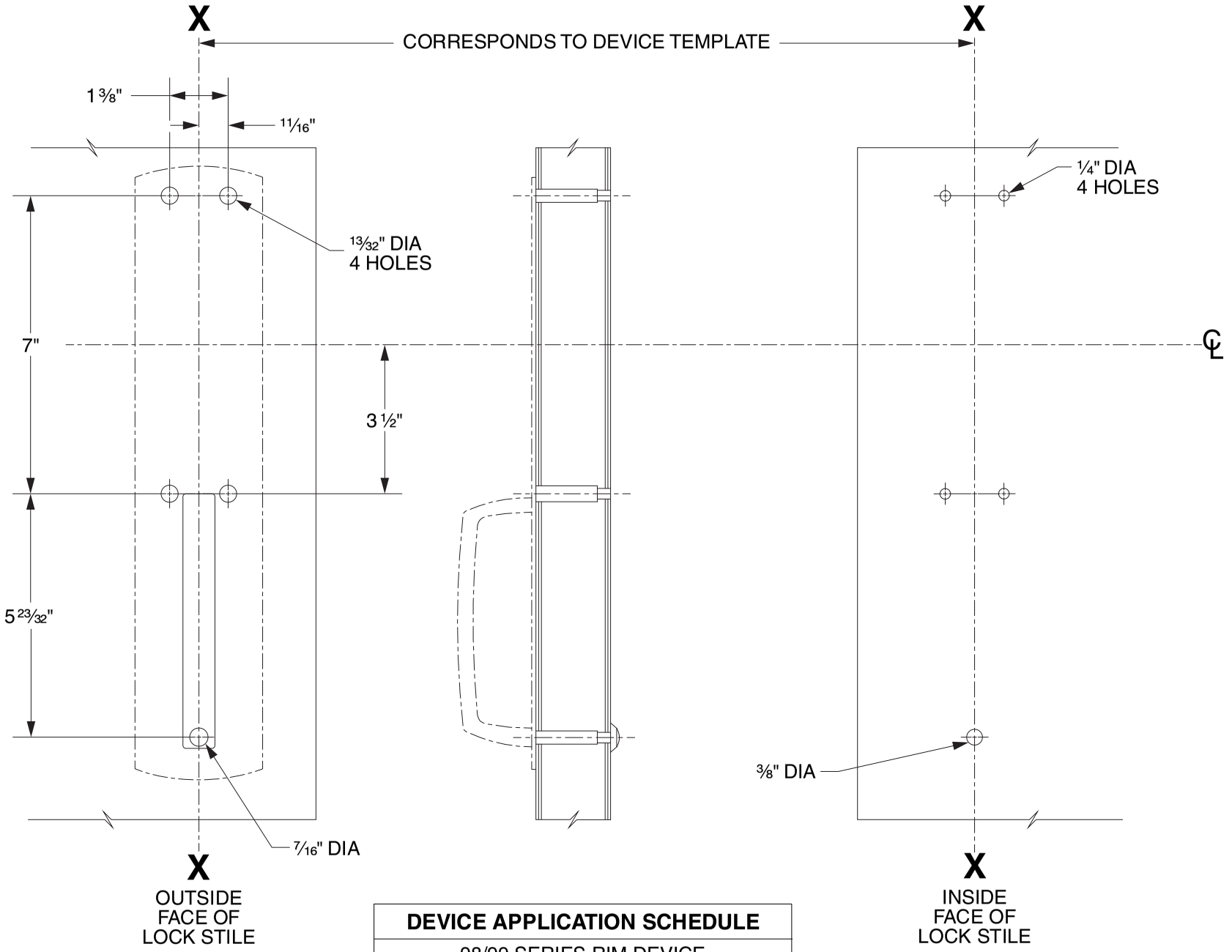

DEVICE APPLICATION SCHEDULE
98/99 SERIES RIM DEVICE
9827/9927 SERIES DEVICE
9847/9947 SERIES DEVICE
9849/9949 SERIES DEVICE
9875/9975 SERIES DEVICE

LHR SHOWN
RHR OPPOSITE

VON DUPRIN®

TEMPLATE NUMBER: 20268_C

DATE: 05-31-13

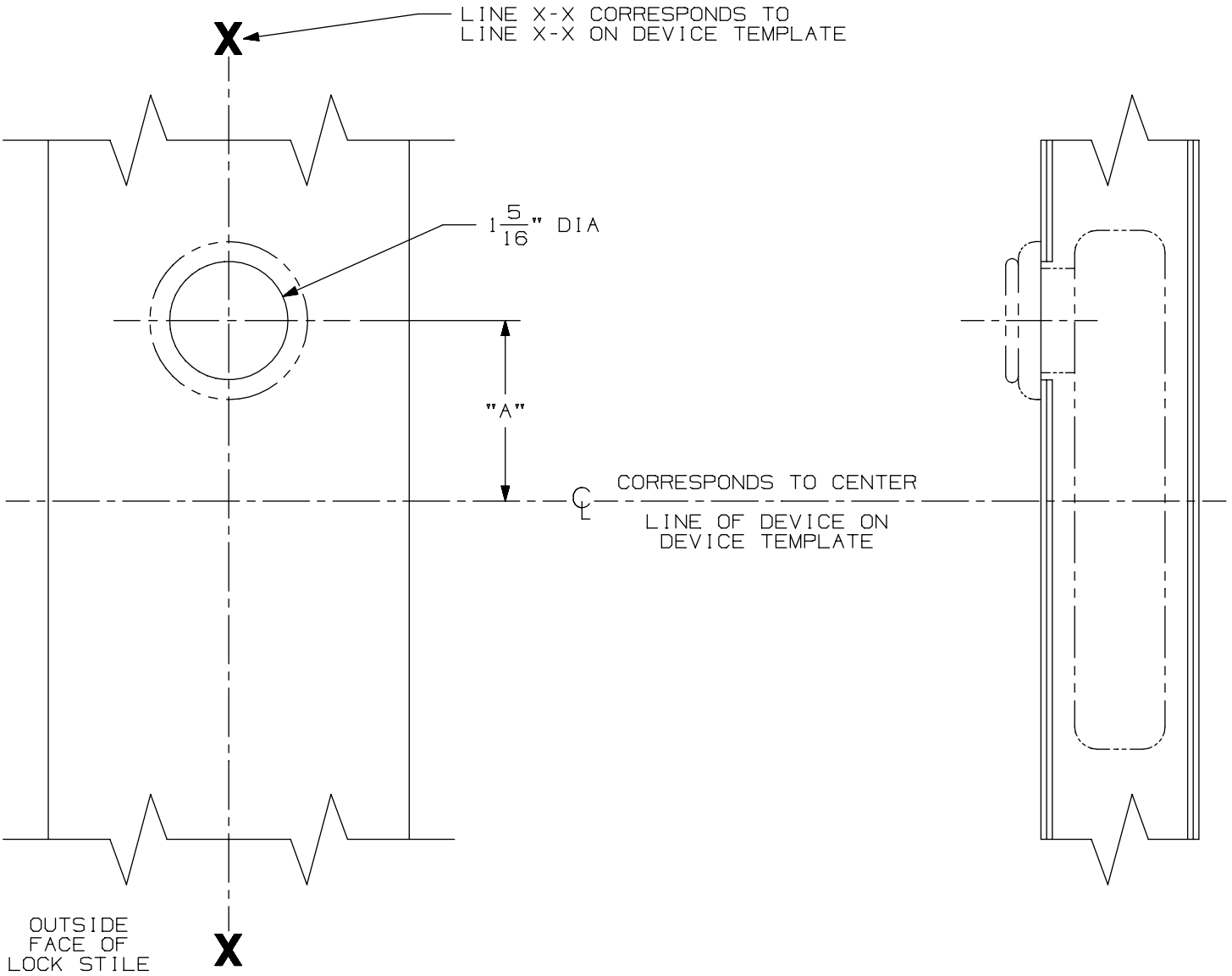

DEVICE APPLICATION SCHEDULE	
DEVICE	DIM. "A"
55 MORT.	2"
88 MORT.	2"
99 MORT.	2 7/32"

③

NOTE:
LHR APPLICATION SHOWN, RHR APPLICATION OPPOSITE

Cylinder Preparation Mortise Devices

VON DUPRIN®

NOTES: SEE MASTER SHEET #10001 FOR SUGGESTED REINFORCING

TEMPLATE NUMBER: 40018_a

DATE: 05-28-13

RIM APPLICATION

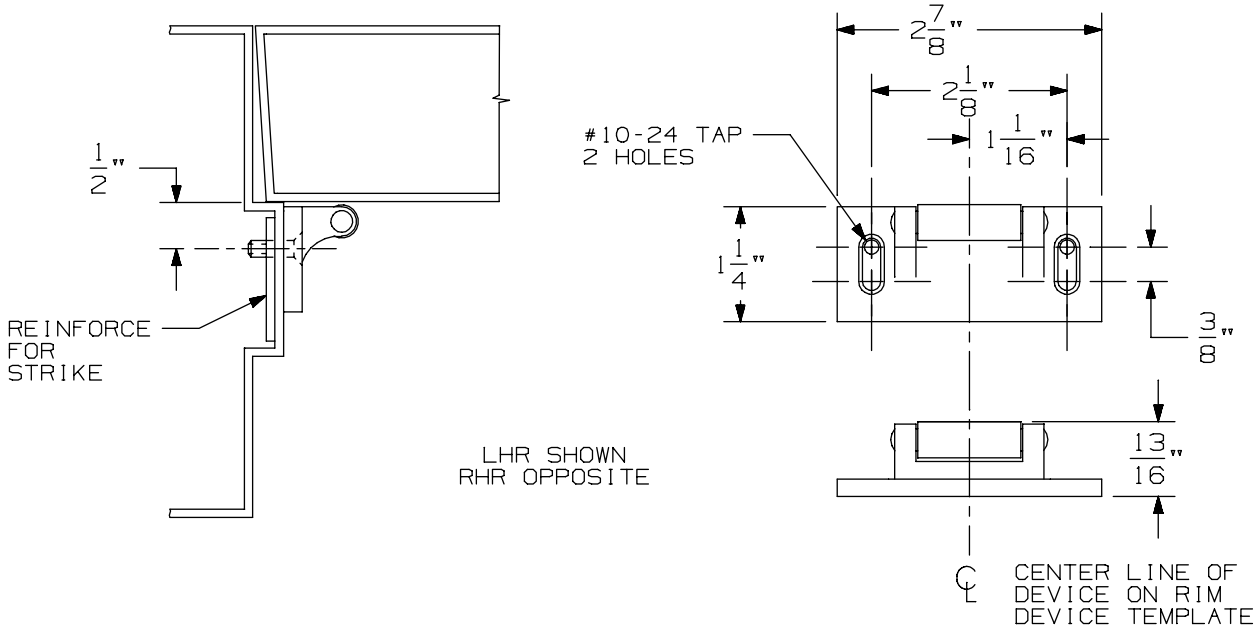

VERTICAL APPLICATION

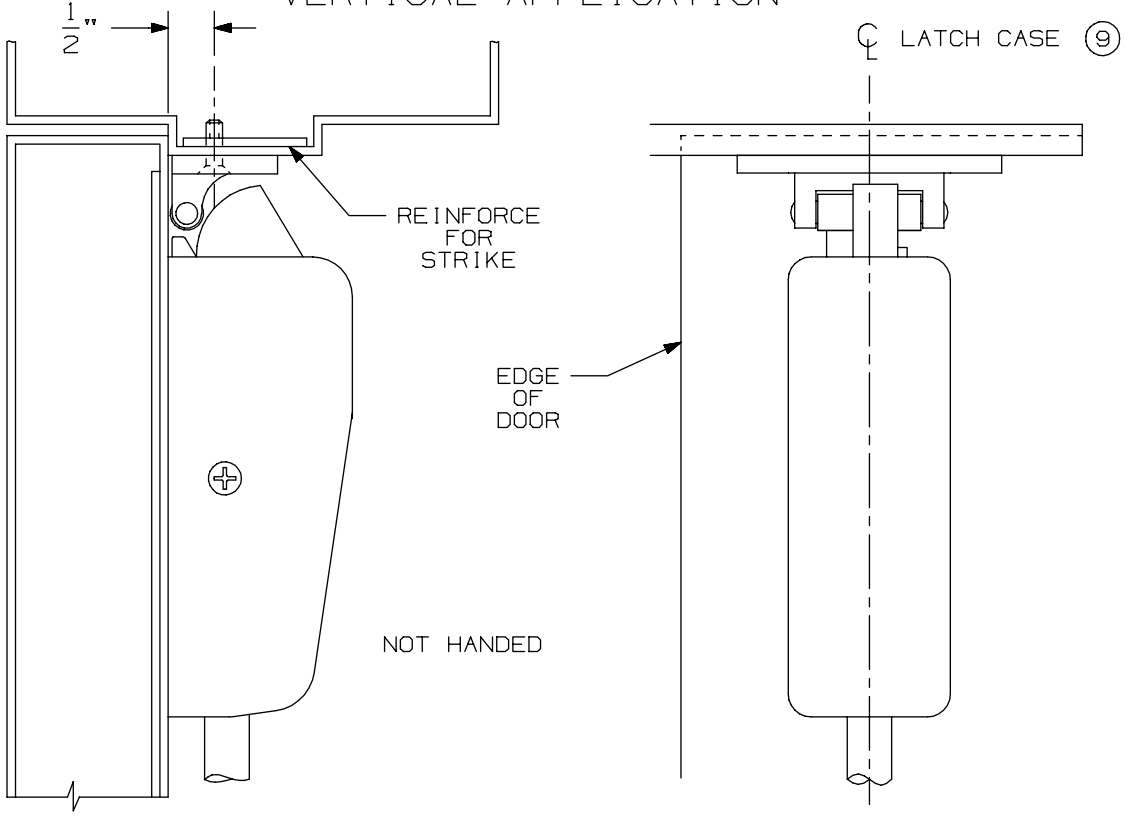

NOTE: LATCH CASE MOUNTING HOLES TO BE PREPARED AT INSTALLATION ON DOOR.

299 & 299F Strike

VON DUPRIN®

NOTES: SEE MASTER SHEET #10001 FOR SUGGESTED REINFORCING

TEMPLATE NUMBER: 30039_a

DATE: 05-23-13

98 / 99 Series Chex-it® Exit Devices

-

CX9847/ CX9947 Concealed Vertical Rod

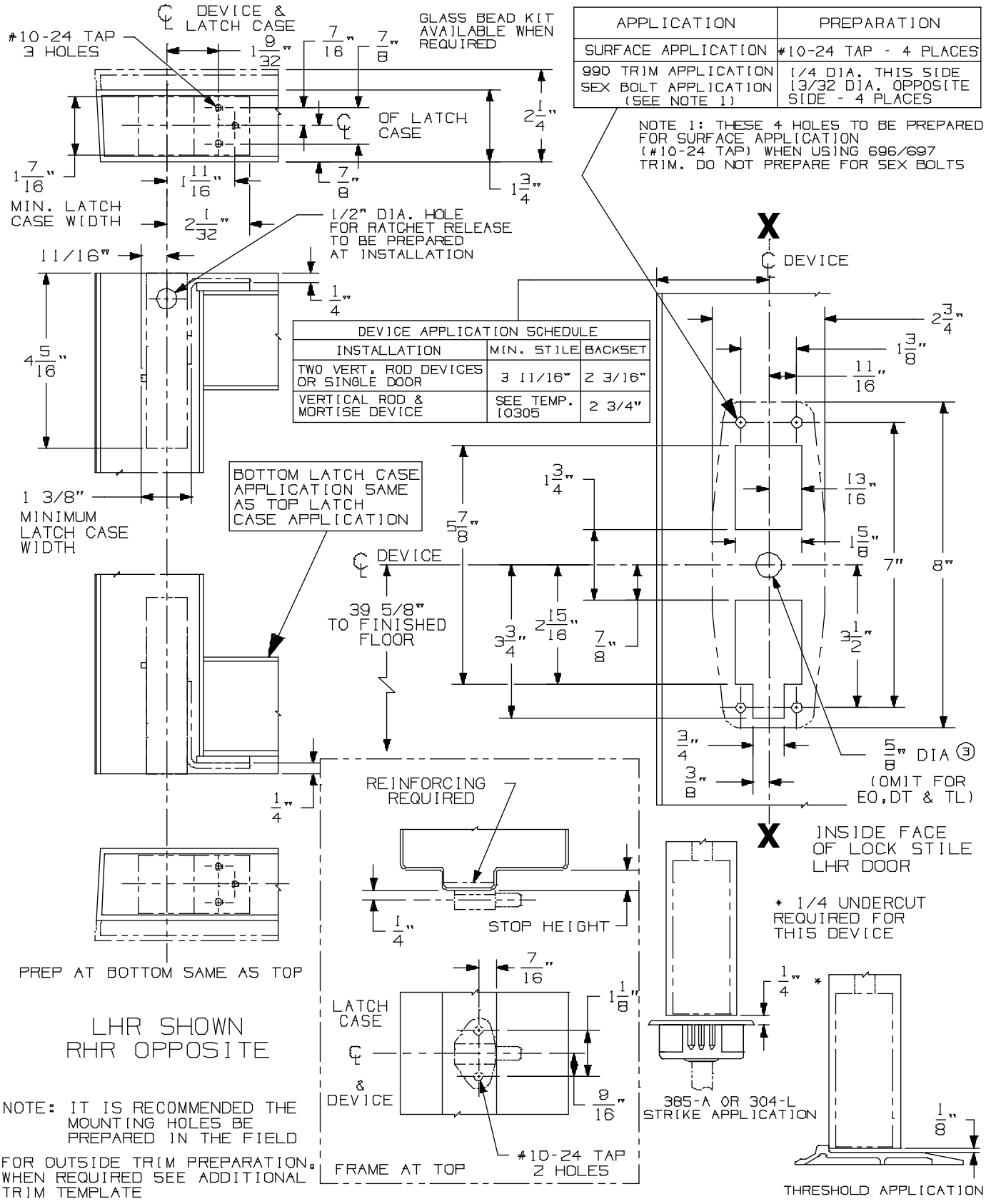

CX98/9947 & CX98/9948 Series Concealed Vertical Rod Device

VON DUPRIN®

NOTES: SEE MASTER SHEET #10001 FOR SUGGESTED REINFORCING

TEMPLATE NUMBER: 10360_a

DATE: 05-22-13

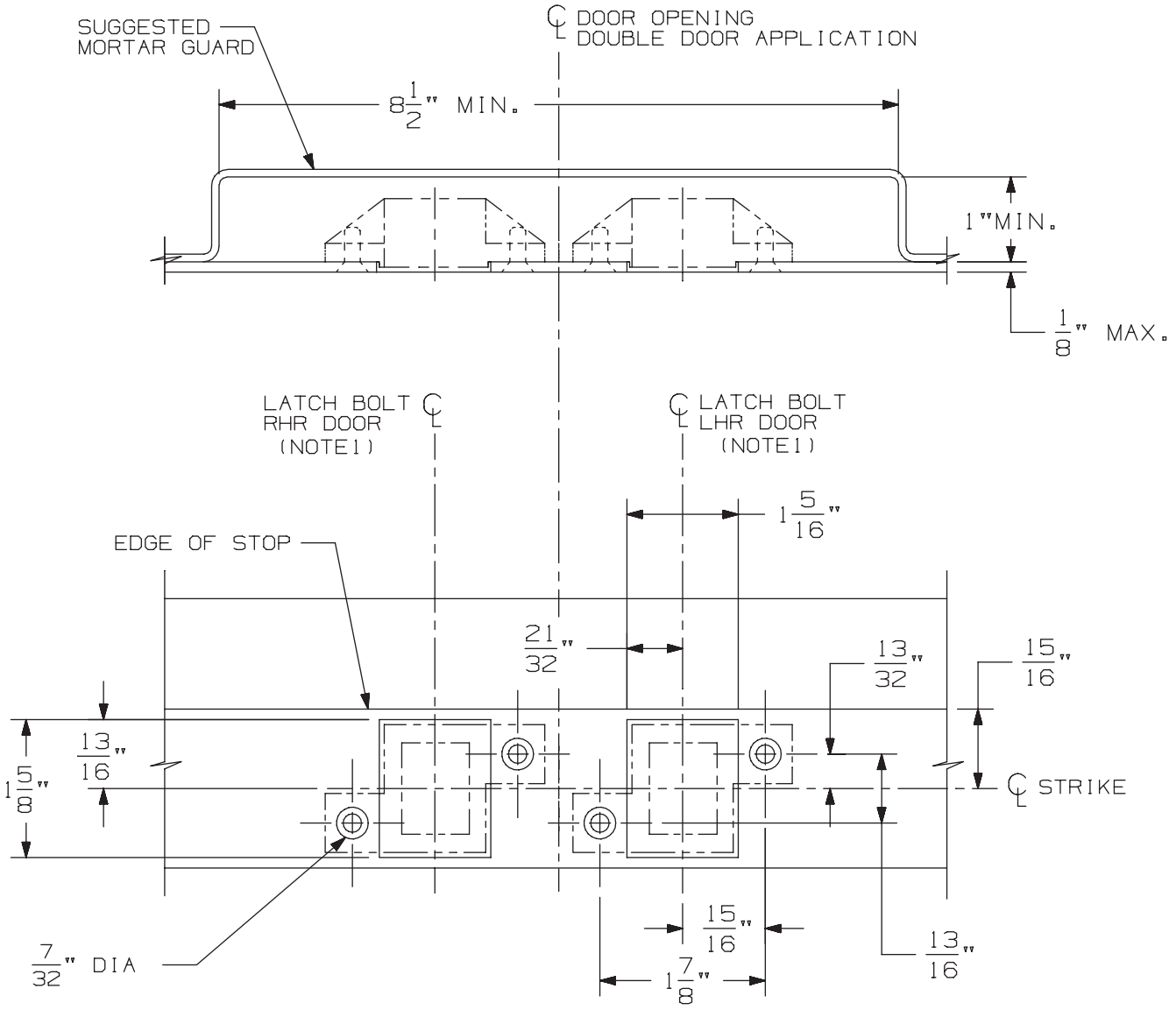

3/8" DIA X 82° C'SINK

IN FRAME
2 HOLES
EACH STRIKE

DOUBLE DOOR APPLICATION SHOWN.
FOR SINGLE DOOR APPLICATION USE
APPROPRIATE HANDING AS SHOWN.

DEVICE APPLICATION SCHEDULE
33/3547 & 33/3547-F SERIES DEVICE
98/99/47 & 98/99/47-F SERIES DEVICE
5547/5547 WDC SERIES
33/3547A & 33/3547A-F SERIES DEVICE
(9) 94/9547 SERIES DEVICE

NOTES: 1. SEE DEVICE TEMPLATE FOR LOCATION OF LATCH BOLT.

2. IF DEVICE IS TO BE MOUNTED ON WOOD DOORS, SEE WOOD DOOR TEMPLATE FOR LATCH BOLT LOCATION.

338 Strike for Hollow Metal Frame Preparation

VON DUPRIN®

NOTES: SEE MASTER SHEET #10001 FOR SUGGESTED REINFORCING

TEMPLATE NUMBER: 30038_a

DATE: 05-23-13

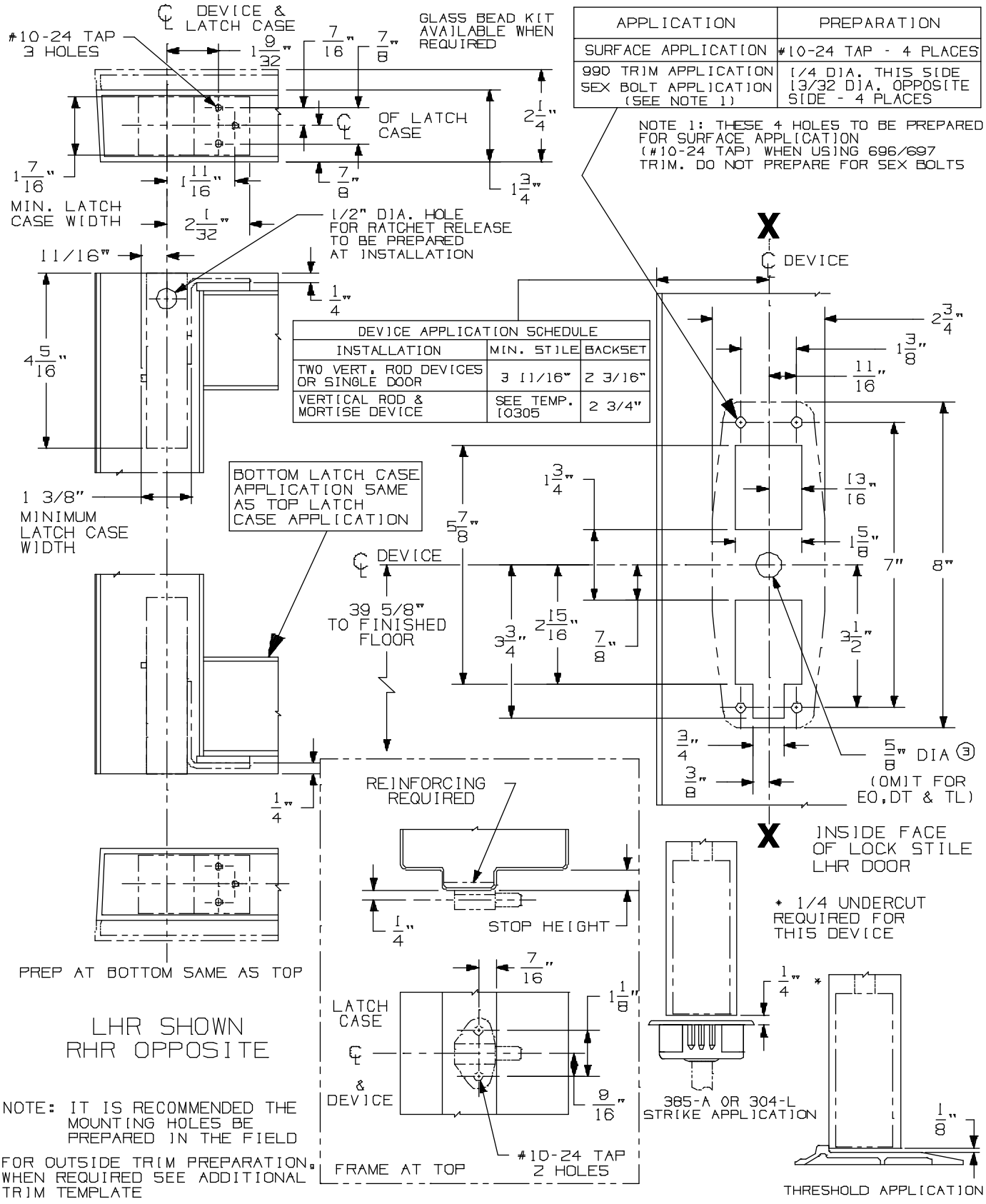

CX98/9947 & CX98/9948 Series Concealed Vertical Rod Device

VON DUPRIN®

NOTES: SEE MASTER SHEET #10001 FOR SUGGESTED REINFORCING

TEMPLATE NUMBER: 10360_a

DATE: 05-22-13

990 DT TRIM

NOTES: SEE MASTER SHEET #10001 FOR SUGGESTED REINFORCING

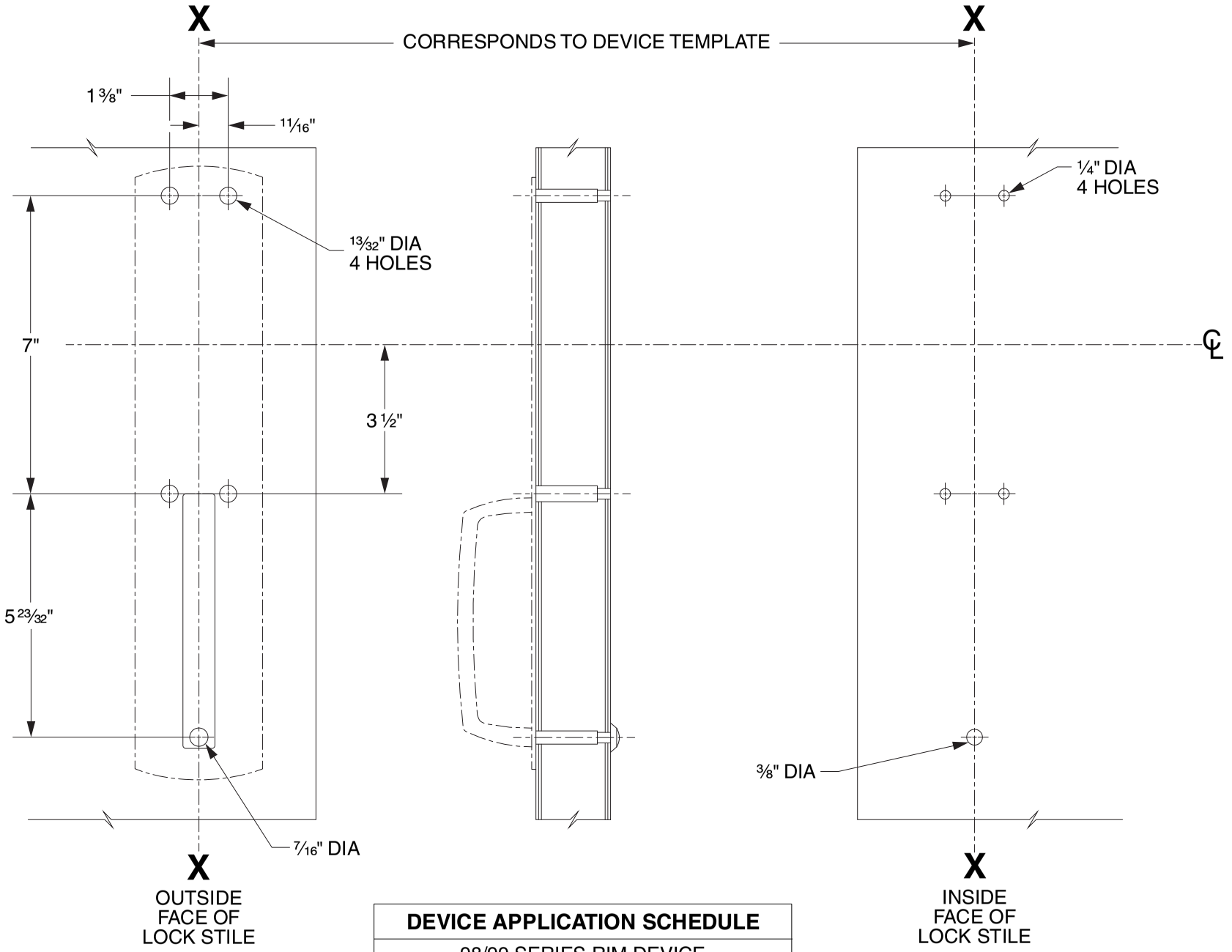

DEVICE APPLICATION SCHEDULE
98/99 SERIES RIM DEVICE
9827/9927 SERIES DEVICE
9847/9947 SERIES DEVICE
9849/9949 SERIES DEVICE
9875/9975 SERIES DEVICE

LHR SHOWN
RHR OPPOSITE

VON DUPRIN®

TEMPLATE NUMBER: 20268_C

DATE: 05-31-13

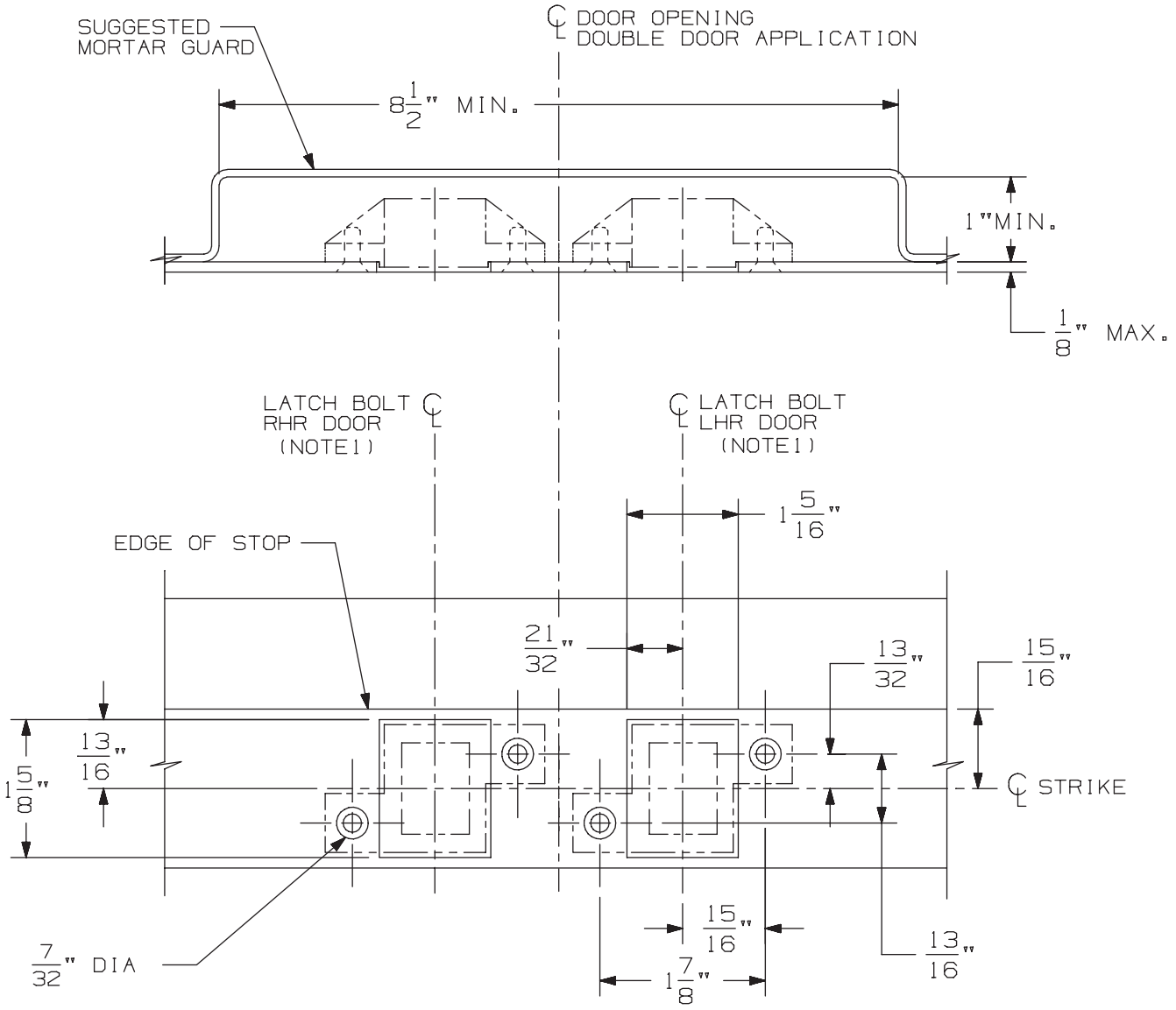

3/8" DIA X 82° C'SINK

IN FRAME
2 HOLES
EACH STRIKE

DOUBLE DOOR APPLICATION SHOWN.
FOR SINGLE DOOR APPLICATION USE
APPROPRIATE HANDING AS SHOWN.

DEVICE APPLICATION SCHEDULE
33/3547 & 33/3547-F SERIES DEVICE
98/99/47 & 98/99/47-F SERIES DEVICE
5547/5547 WDC SERIES
33/3547A & 33/3547A-F SERIES DEVICE
(9) 94/9547 SERIES DEVICE

NOTES: 1. SEE DEVICE TEMPLATE FOR LOCATION OF LATCH BOLT.

2. IF DEVICE IS TO BE MOUNTED ON WOOD DOORS, SEE WOOD DOOR TEMPLATE FOR LATCH BOLT LOCATION.

338 Strike for Hollow Metal Frame Preparation

VON DUPRIN®

NOTES: SEE MASTER SHEET #10001 FOR SUGGESTED REINFORCING

TEMPLATE NUMBER: 30038_a

DATE: 05-23-13

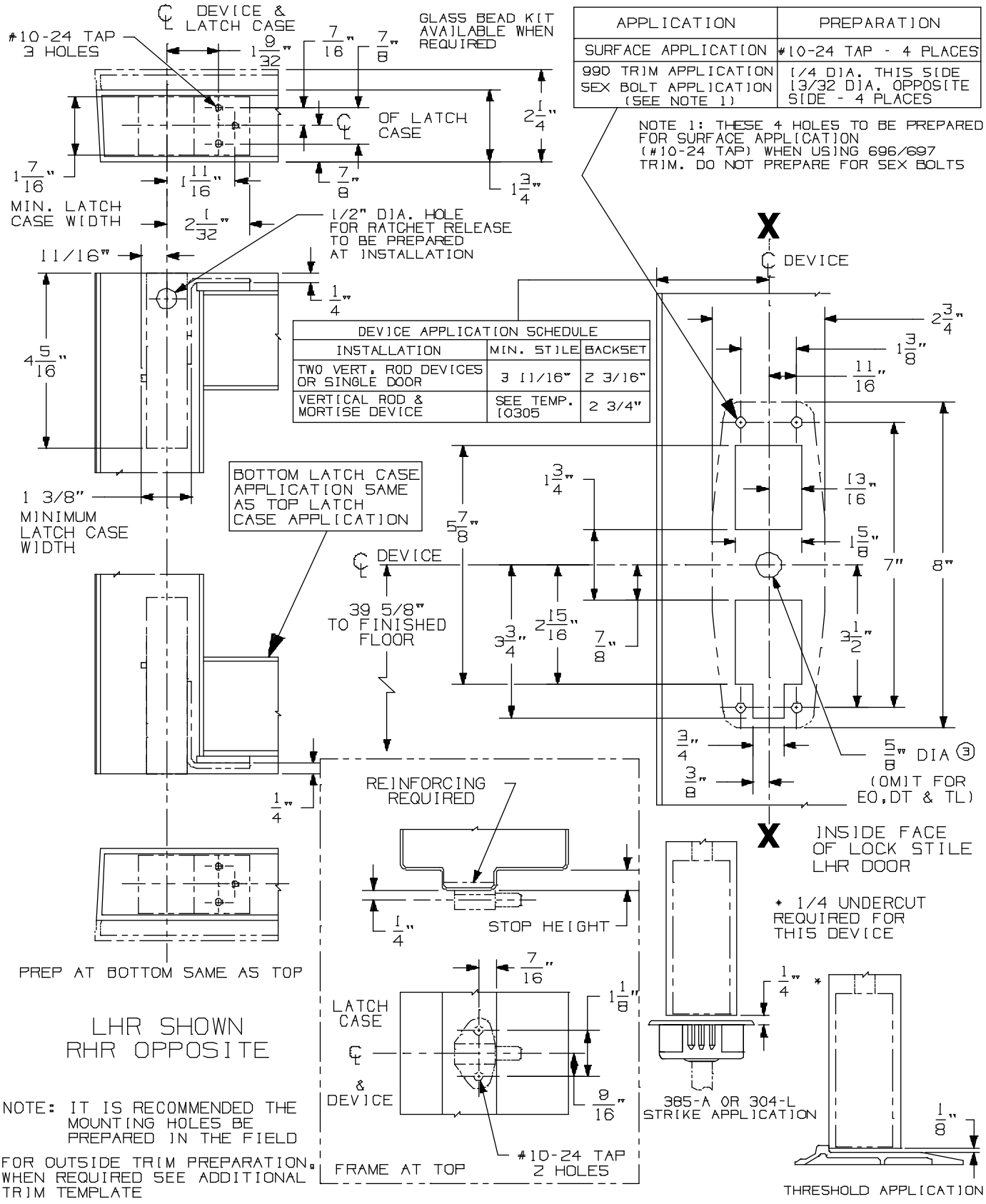

CX98/9947 & CX98/9948 Series Concealed Vertical Rod Device

VON DUPRIN®

NOTES: SEE MASTER SHEET #10001 FOR SUGGESTED REINFORCING

TEMPLATE NUMBER: 10360_a

DATE: 05-22-13

990 NL TRIM

NOTES: SEE MASTER SHEET #10001 FOR SUGGESTED REINFORCING

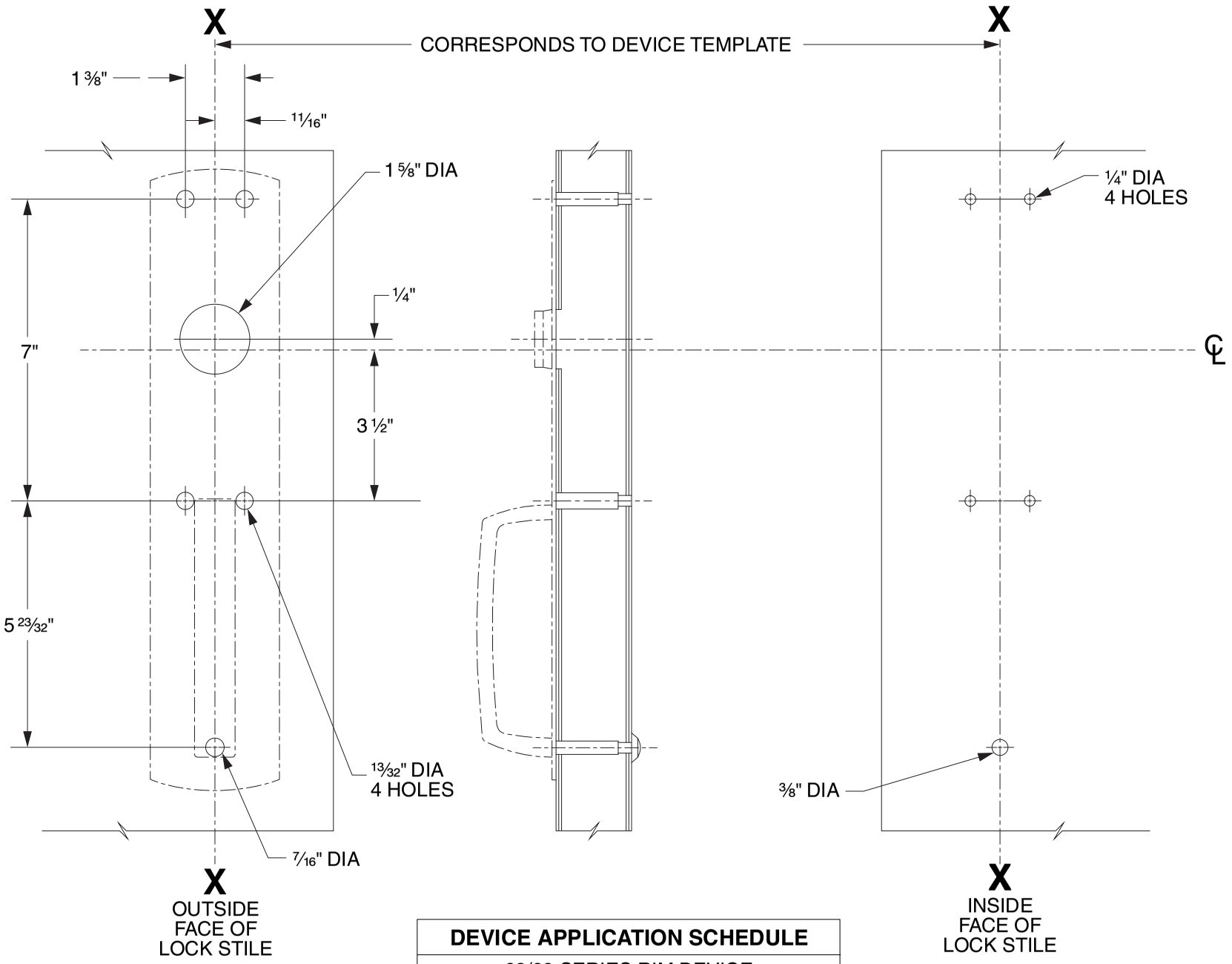

DEVICE APPLICATION SCHEDULE
98/99 SERIES RIM DEVICE
9827/9927 SERIES DEVICE
9847/9947 SERIES DEVICE
9849/9949 SERIES DEVICE

LHR SHOWN
RHR OPPOSITE

VON DUPRIN®

TEMPLATE NUMBER: 20267_C

DATE: 05-31-13

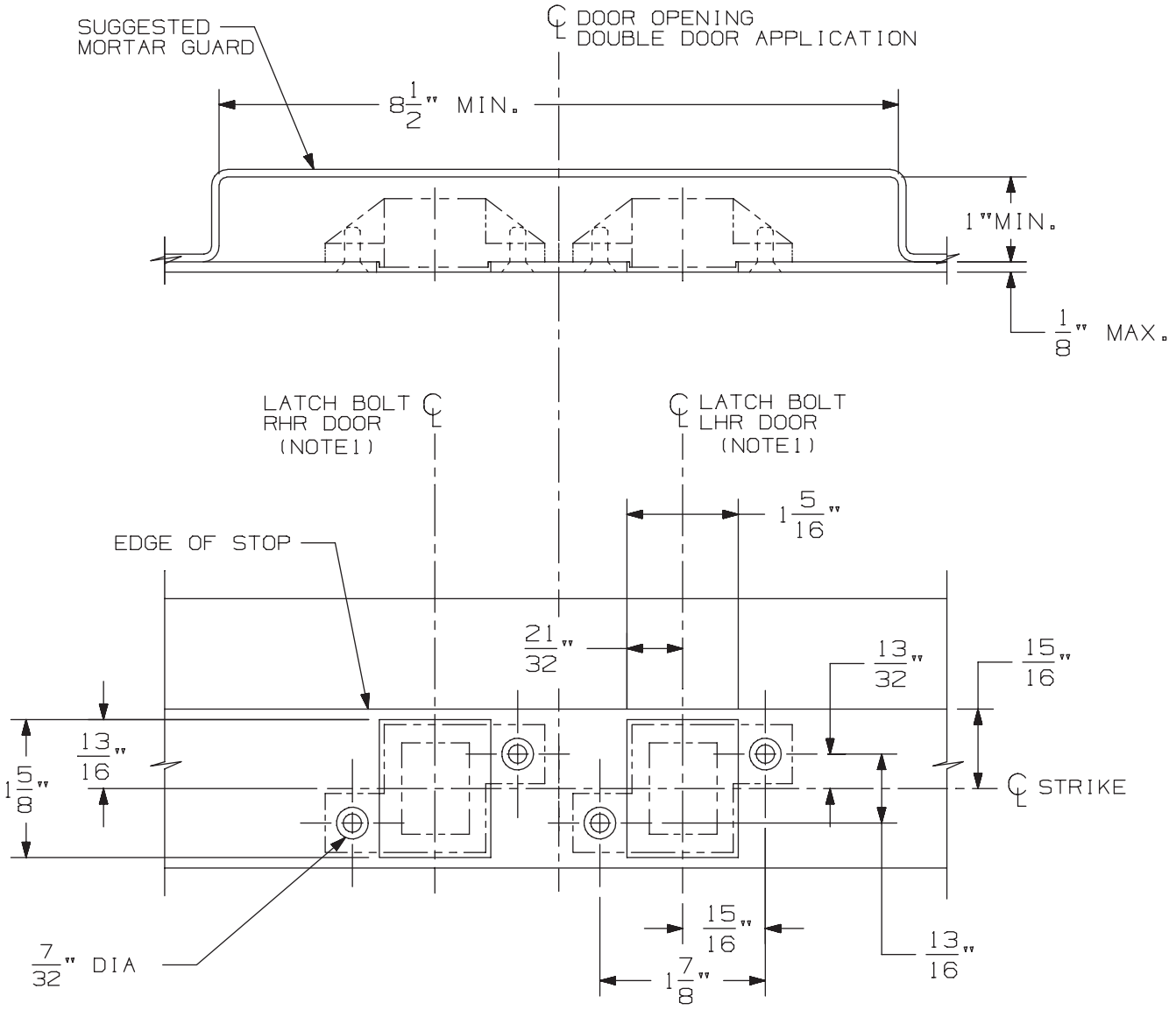

3/8" DIA X 82° C'SINK

IN FRAME
2 HOLES
EACH STRIKE

DOUBLE DOOR APPLICATION SHOWN.
FOR SINGLE DOOR APPLICATION USE
APPROPRIATE HANDING AS SHOWN.

DEVICE APPLICATION SCHEDULE
33/3547 & 33/3547-F SERIES DEVICE
98/99/47 & 98/99/47-F SERIES DEVICE
5547/5547 WDC SERIES
33/3547A & 33/3547A-F SERIES DEVICE
(9) 94/9547 SERIES DEVICE

NOTES: 1. SEE DEVICE TEMPLATE FOR LOCATION OF LATCH BOLT.

2. IF DEVICE IS TO BE MOUNTED ON WOOD DOORS, SEE WOOD DOOR TEMPLATE FOR LATCH BOLT LOCATION.

338 Strike for Hollow Metal Frame Preparation

VON DUPRIN®

NOTES: SEE MASTER SHEET #10001 FOR SUGGESTED REINFORCING

TEMPLATE NUMBER: 30038_a

DATE: 05-23-13

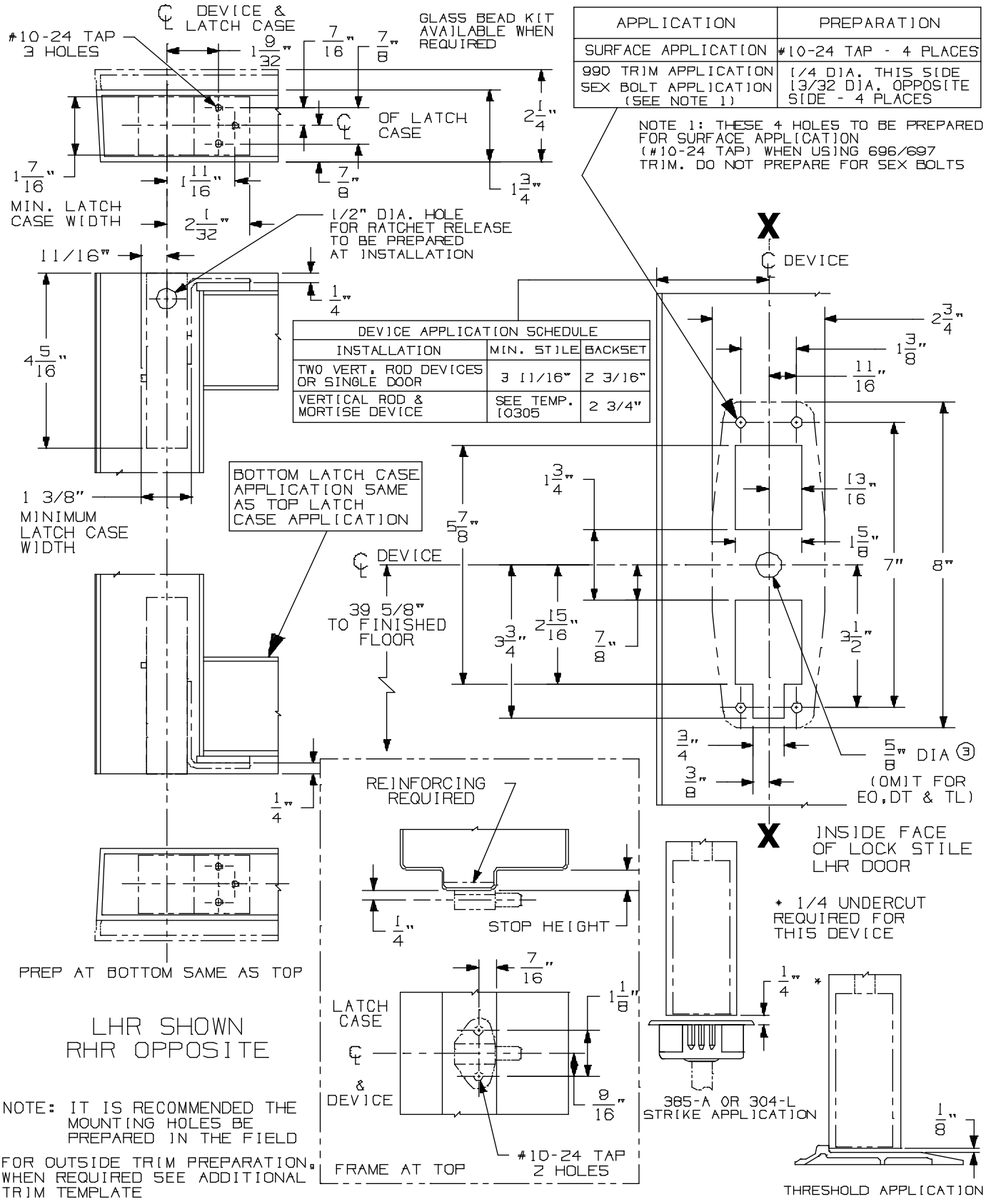

CX98/9947 & CX98/9948 Series Concealed Vertical Rod Device

VON DUPRIN®

NOTES: SEE MASTER SHEET #10001 FOR SUGGESTED REINFORCING

TEMPLATE NUMBER: 10360_a

DATE: 05-22-13

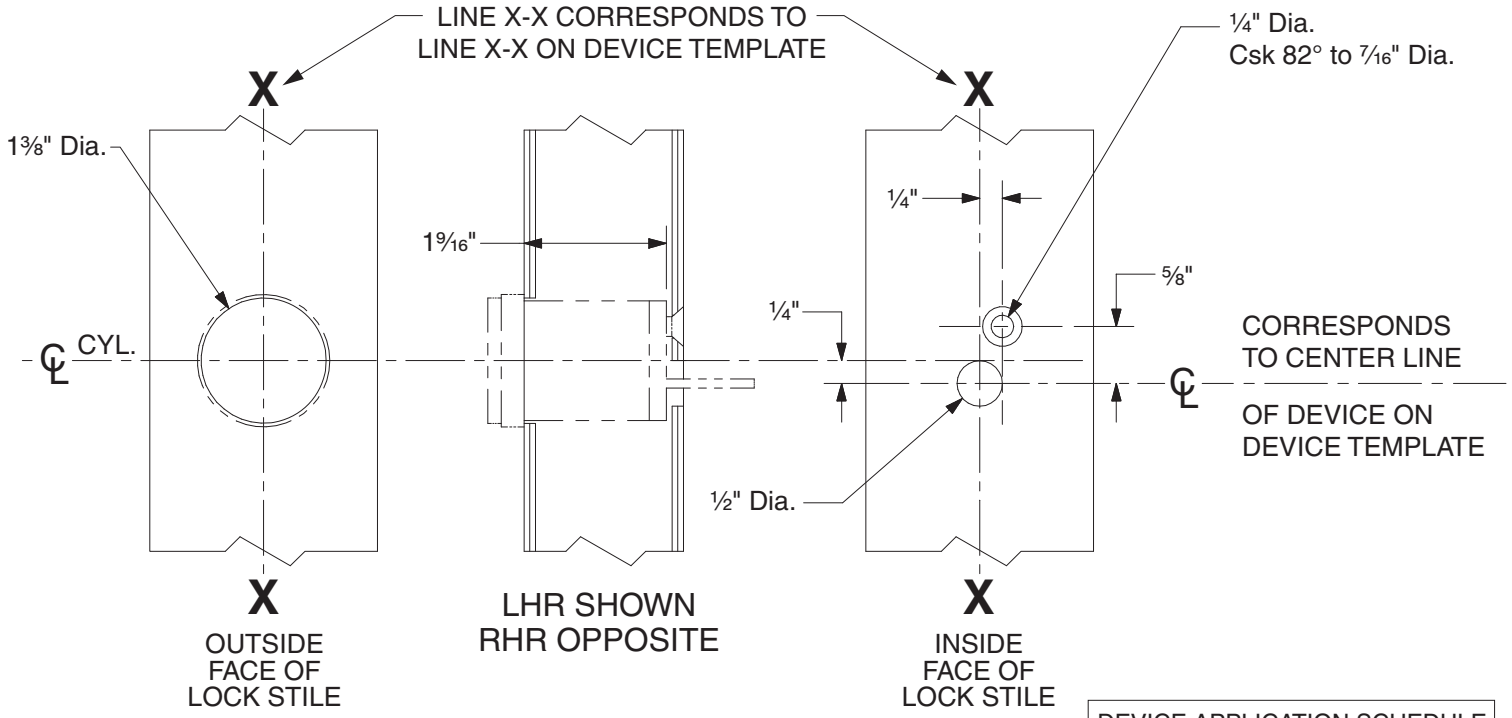

DEVICE APPLICATION SCHEDULE	
98 RIM SERIES	99 RIM SERIES
9827 SERIES	9927 SERIES
9847 SERIES	9947 SERIES
22 RIM SERIES	2227 SERIES

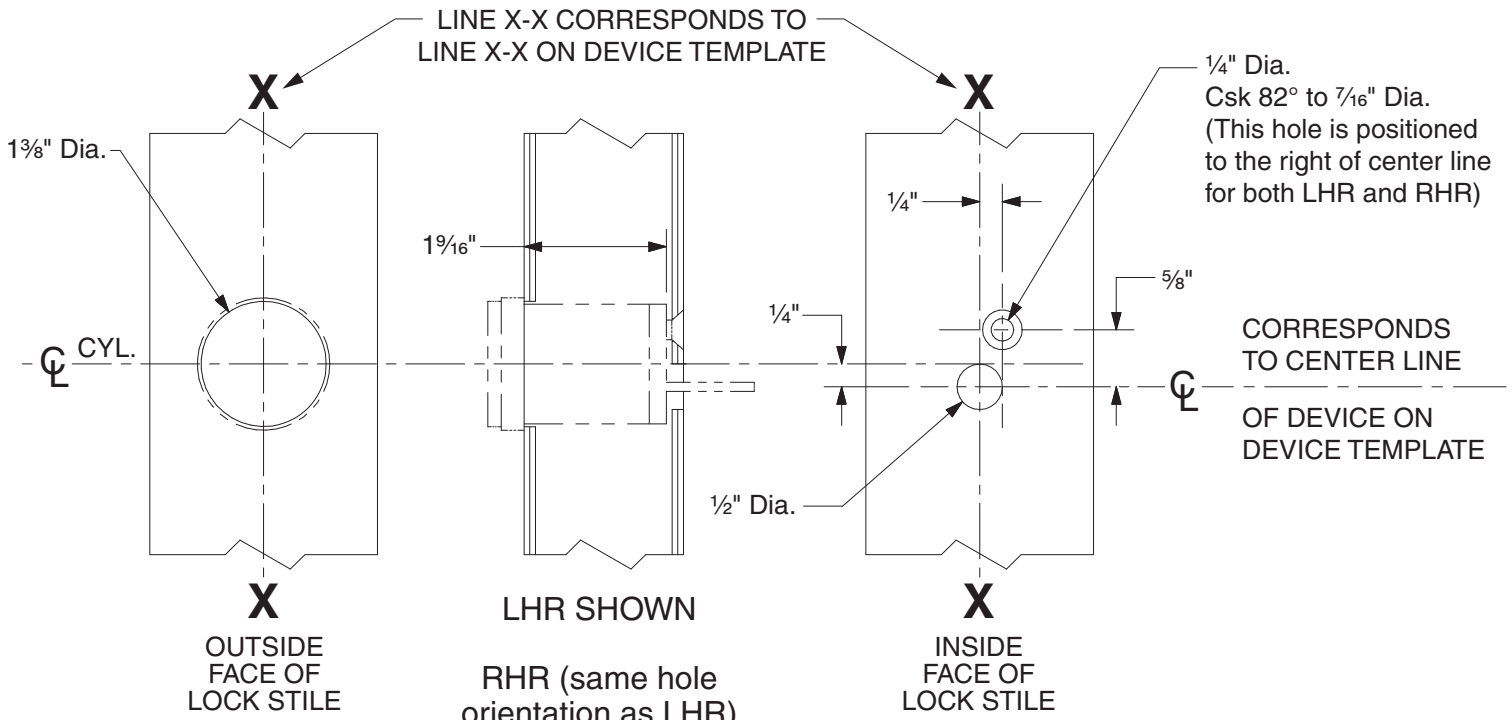

DEVICE APPLICATION SCHEDULE	
9849 SERIES	9949 SERIES

110NL Cylinder Preparation

VON DUPRIN®

NOTES: SEE MASTER SHEET #10001 FOR SUGGESTED REINFORCING

TEMPLATE NUMBER: 40022_c

DATE: 05-28-13

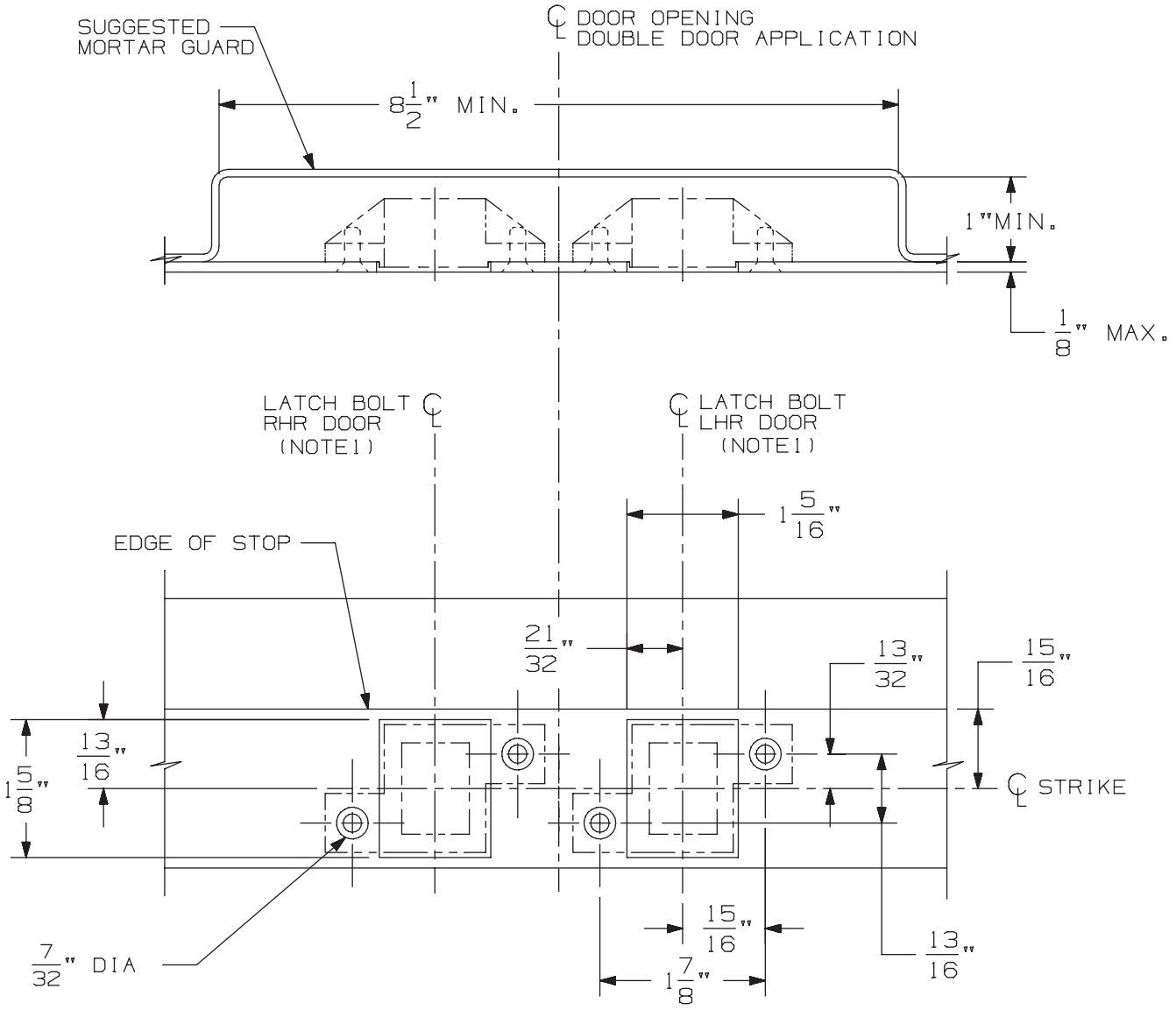

3/8" DIA X 82° C'SINK

IN FRAME
2 HOLES
EACH STRIKE

DOUBLE DOOR APPLICATION SHOWN.
FOR SINGLE DOOR APPLICATION USE
APPROPRIATE HANDING AS SHOWN.

DEVICE APPLICATION SCHEDULE
33/3547 & 33/3547-F SERIES DEVICE
98/99/47 & 98/99/47-F SERIES DEVICE
5547/5547 WDC SERIES
33/3547A & 33/3547A-F SERIES DEVICE
(9) 94/9547 SERIES DEVICE

NOTES: 1. SEE DEVICE TEMPLATE FOR LOCATION OF LATCH BOLT.

2. IF DEVICE IS TO BE MOUNTED ON WOOD DOORS, SEE WOOD DOOR TEMPLATE FOR LATCH BOLT LOCATION.

338 Strike for Hollow Metal Frame Preparation

VON DUPRIN®

NOTES: SEE MASTER SHEET #10001 FOR SUGGESTED REINFORCING

TEMPLATE NUMBER: 30038_a

DATE: 05-23-13

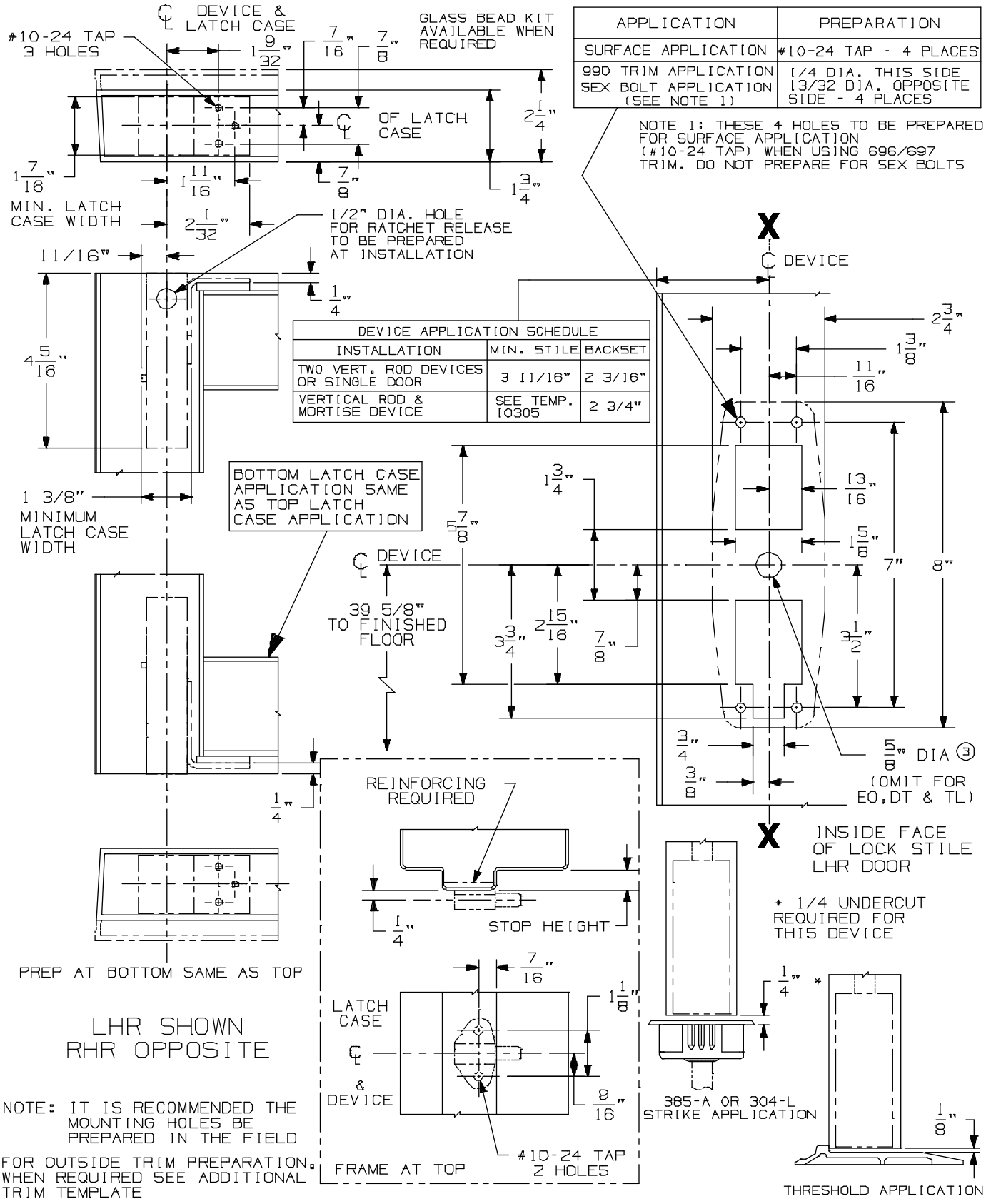

CX98/9947 & CX98/9948 Series Concealed Vertical Rod Device

VON DUPRIN®

NOTES: SEE MASTER SHEET #10001 FOR SUGGESTED REINFORCING

TEMPLATE NUMBER: 10360_a

DATE: 05-22-13

991 K & 992 L Trim

NOTES: SEE MASTER SHEET #10001 FOR SUGGESTED REINFORCING

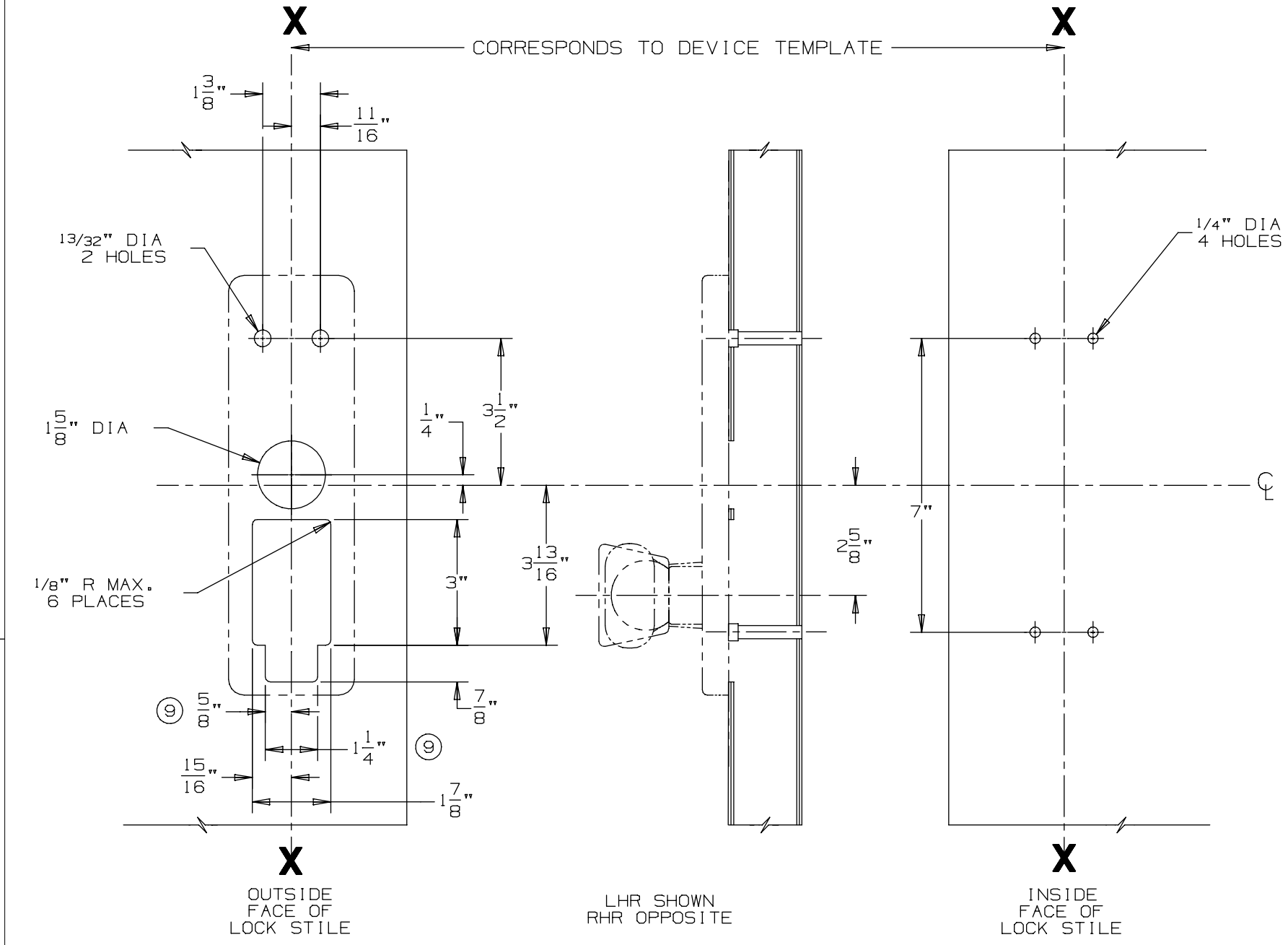

DEVICE APPLICATION SCHEDULE
98/99 SERIES RIM DEVICE
9827/9927 SERIES DEVICE
9847/9947 SERIES DEVICE

VON DUPRIN®

TEMPLATE NUMBER: 20272_a

DATE: 05-23-13

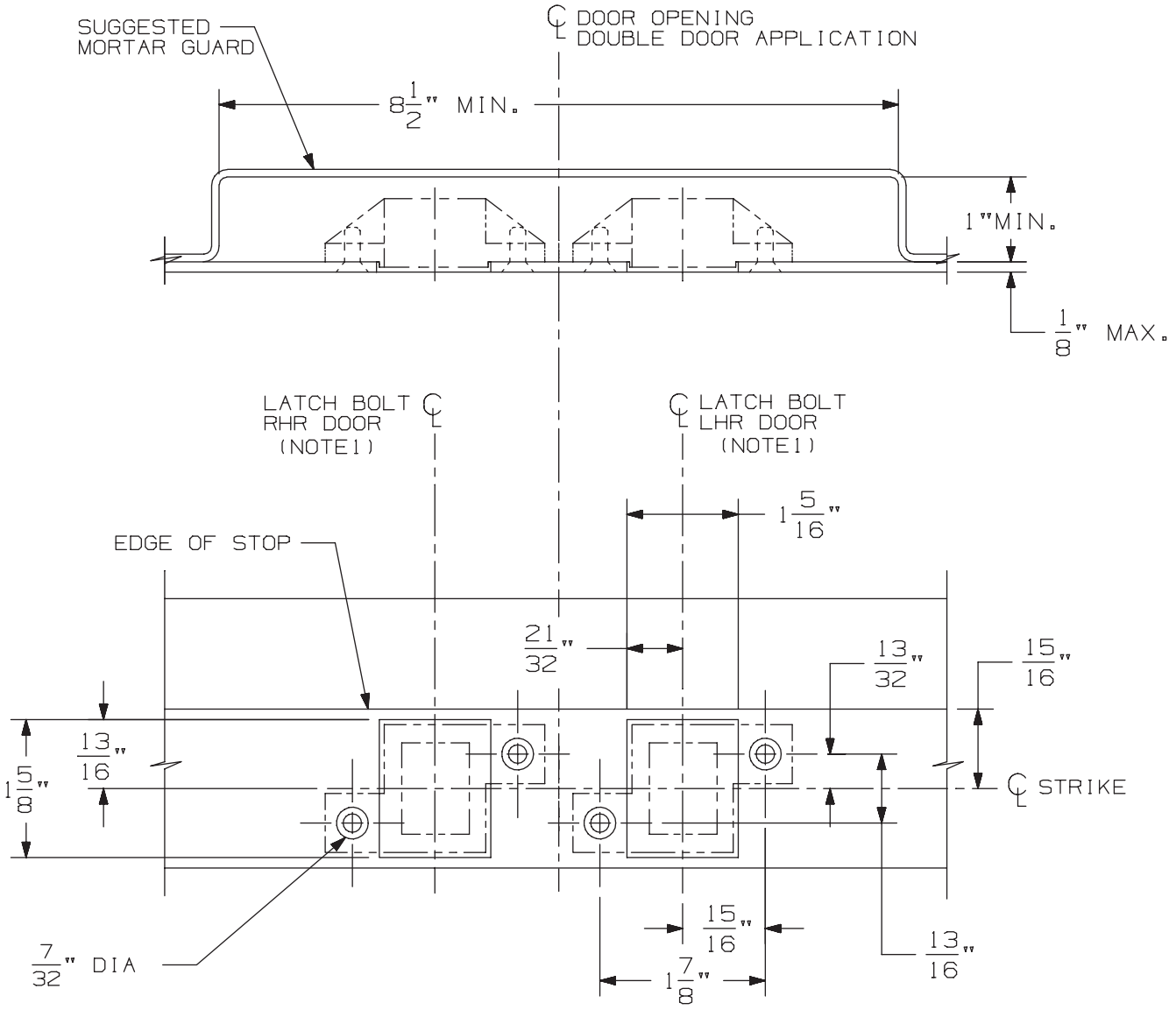

3/8" DIA X 82° C'SINK

IN FRAME
2 HOLES
EACH STRIKE

DOUBLE DOOR APPLICATION SHOWN.
FOR SINGLE DOOR APPLICATION USE
APPROPRIATE HANDING AS SHOWN.

DEVICE APPLICATION SCHEDULE
33/3547 & 33/3547-F SERIES DEVICE
98/99/47 & 98/99/47-F SERIES DEVICE
5547/5547 WDC SERIES
33/3547A & 33/3547A-F SERIES DEVICE
(9) 94/9547 SERIES DEVICE

NOTES: 1. SEE DEVICE TEMPLATE FOR LOCATION OF LATCH BOLT.

2. IF DEVICE IS TO BE MOUNTED ON WOOD DOORS, SEE WOOD DOOR TEMPLATE FOR LATCH BOLT LOCATION.

338 Strike for Hollow Metal Frame Preparation

VON DUPRIN®

NOTES: SEE MASTER SHEET #10001 FOR SUGGESTED REINFORCING

TEMPLATE NUMBER: 30038_a

DATE: 05-23-13

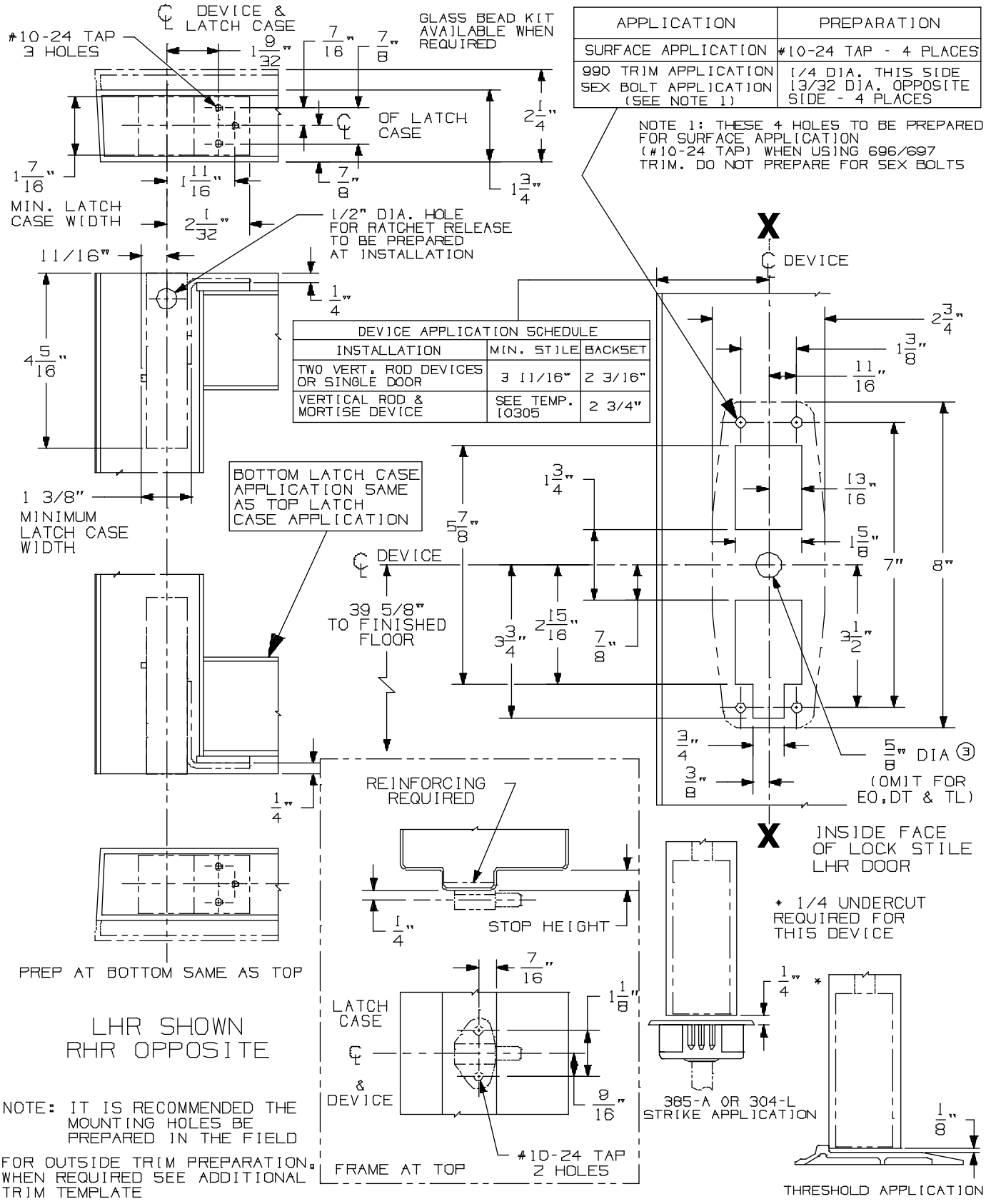

CX98/9947 & CX98/9948 Series Concealed Vertical Rod Device

VON DUPRIN®

NOTES: SEE MASTER SHEET #10001 FOR SUGGESTED REINFORCING

TEMPLATE NUMBER: 10360_a

DATE: 05-22-13

DEVICE APPLICATION SCHEDULE	
98 RIM SERIES	99 RIM SERIES
9827 SERIES	9927 SERIES
9847 SERIES	9947 SERIES
9849 SERIES	9949 SERIES

996L, E996L, 996L-BE, E996L-BE 996K, 996K-BE R/V SERIES
TRIM METAL DOOR APPLICATION

VON DUPRIN®

NOTES: SEE MASTER SHEET #10001 FOR SUGGESTED REINFORCING

TEMPLATE NUMBER: 20003_e

DATE: 10-30-14

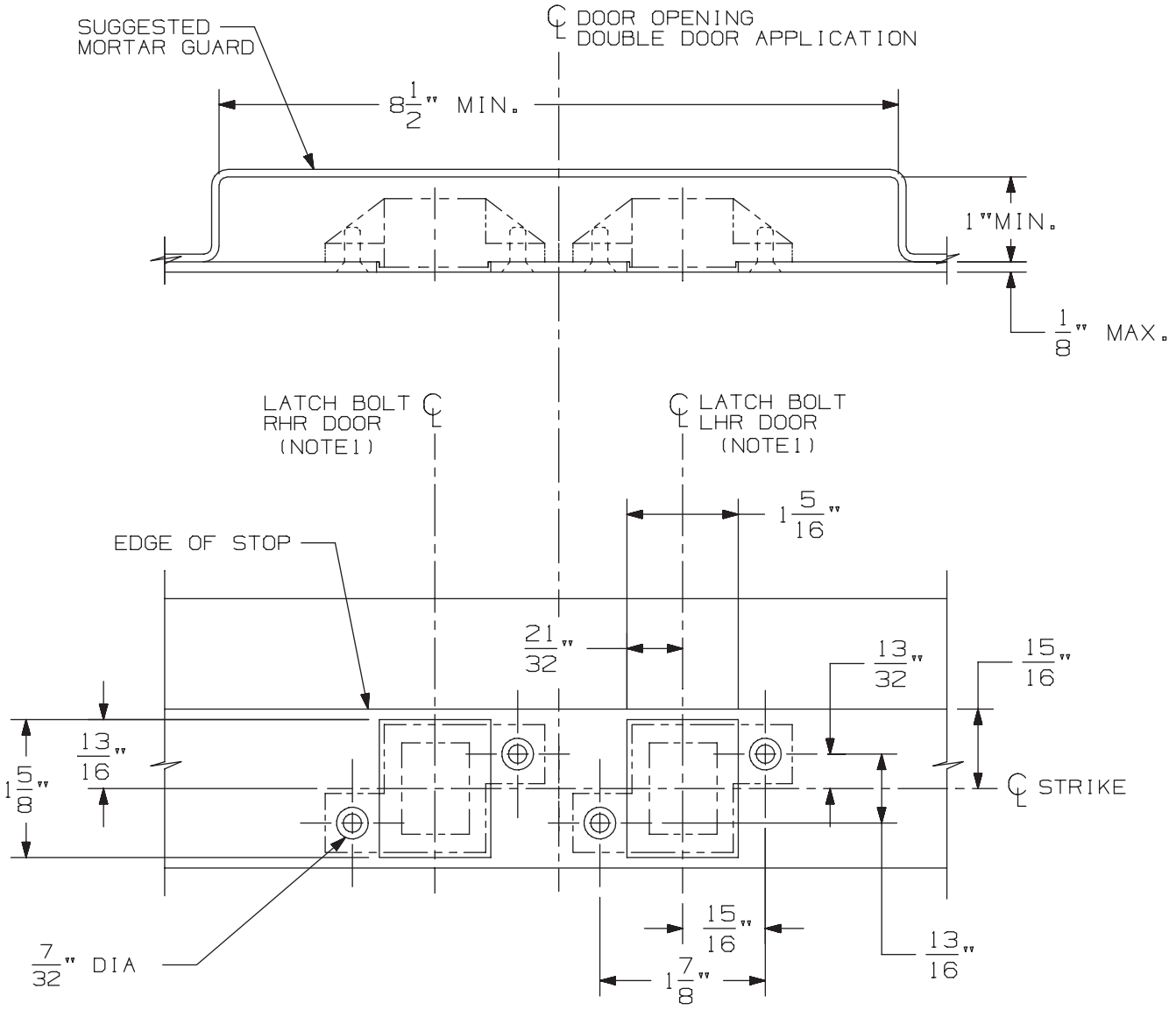

3/8" DIA X 82° C'SINK

IN FRAME
2 HOLES
EACH STRIKE

DOUBLE DOOR APPLICATION SHOWN.
FOR SINGLE DOOR APPLICATION USE
APPROPRIATE HANDING AS SHOWN.

DEVICE APPLICATION SCHEDULE
33/3547 & 33/3547-F SERIES DEVICE
98/99/47 & 98/99/47-F SERIES DEVICE
5547/5547 WDC SERIES
33/3547A & 33/3547A-F SERIES DEVICE
(9) 94/9547 SERIES DEVICE

NOTES: 1. SEE DEVICE TEMPLATE FOR LOCATION OF LATCH BOLT.

2. IF DEVICE IS TO BE MOUNTED ON WOOD DOORS, SEE WOOD DOOR TEMPLATE FOR LATCH BOLT LOCATION.

338 Strike for Hollow Metal Frame Preparation

VON DUPRIN®

NOTES: SEE MASTER SHEET #10001 FOR SUGGESTED REINFORCING

TEMPLATE NUMBER: 30038_a

DATE: 05-23-13

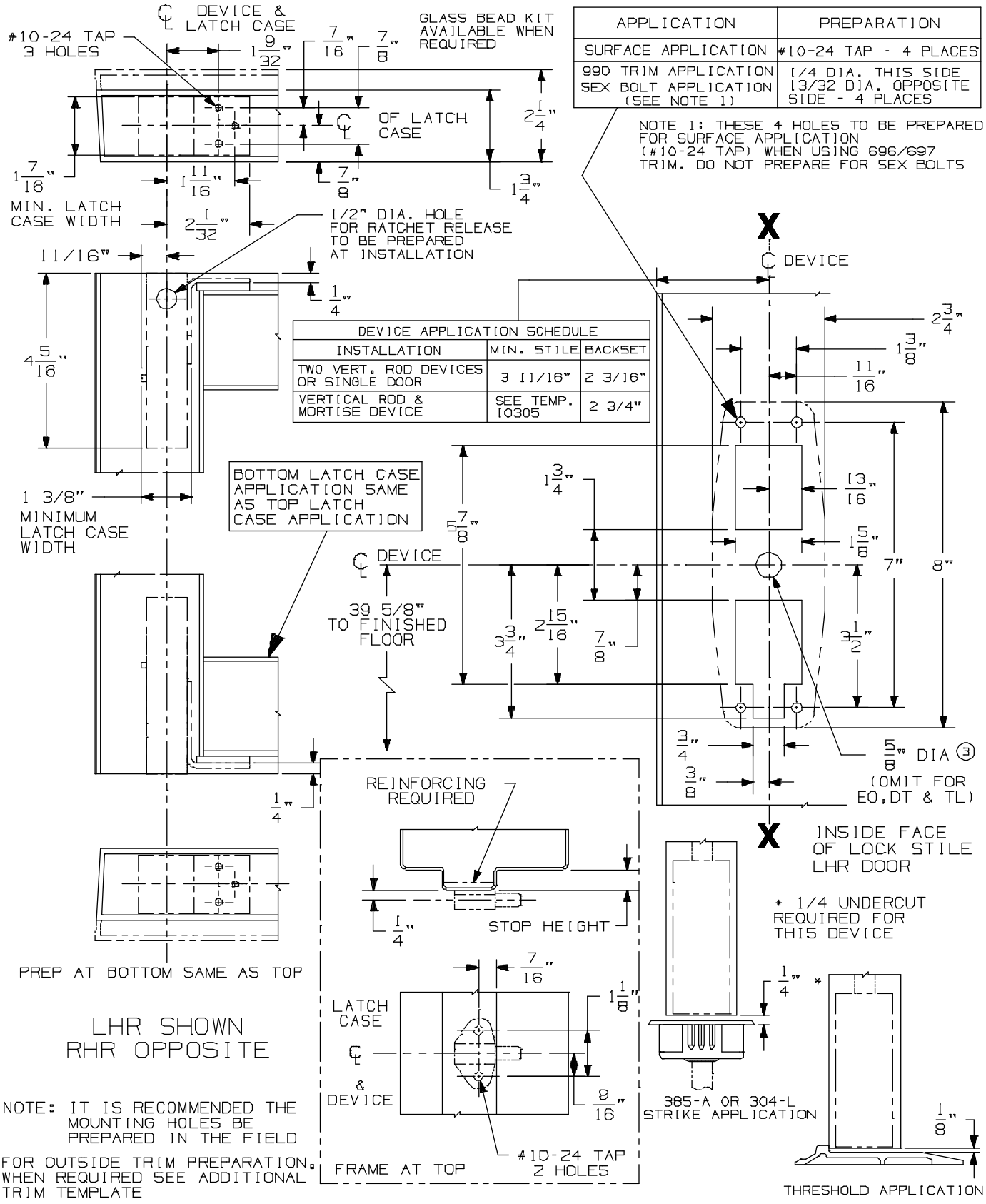

CX98/9947 & CX98/9948 Series Concealed Vertical Rod Device

VON DUPRIN®

NOTES: SEE MASTER SHEET #10001 FOR SUGGESTED REINFORCING

TEMPLATE NUMBER: 10360_a

DATE: 05-22-13

990 TP & 990 TP-BE TRIM

NOTES: SEE MASTER SHEET #10001 FOR SUGGESTED REINFORCING

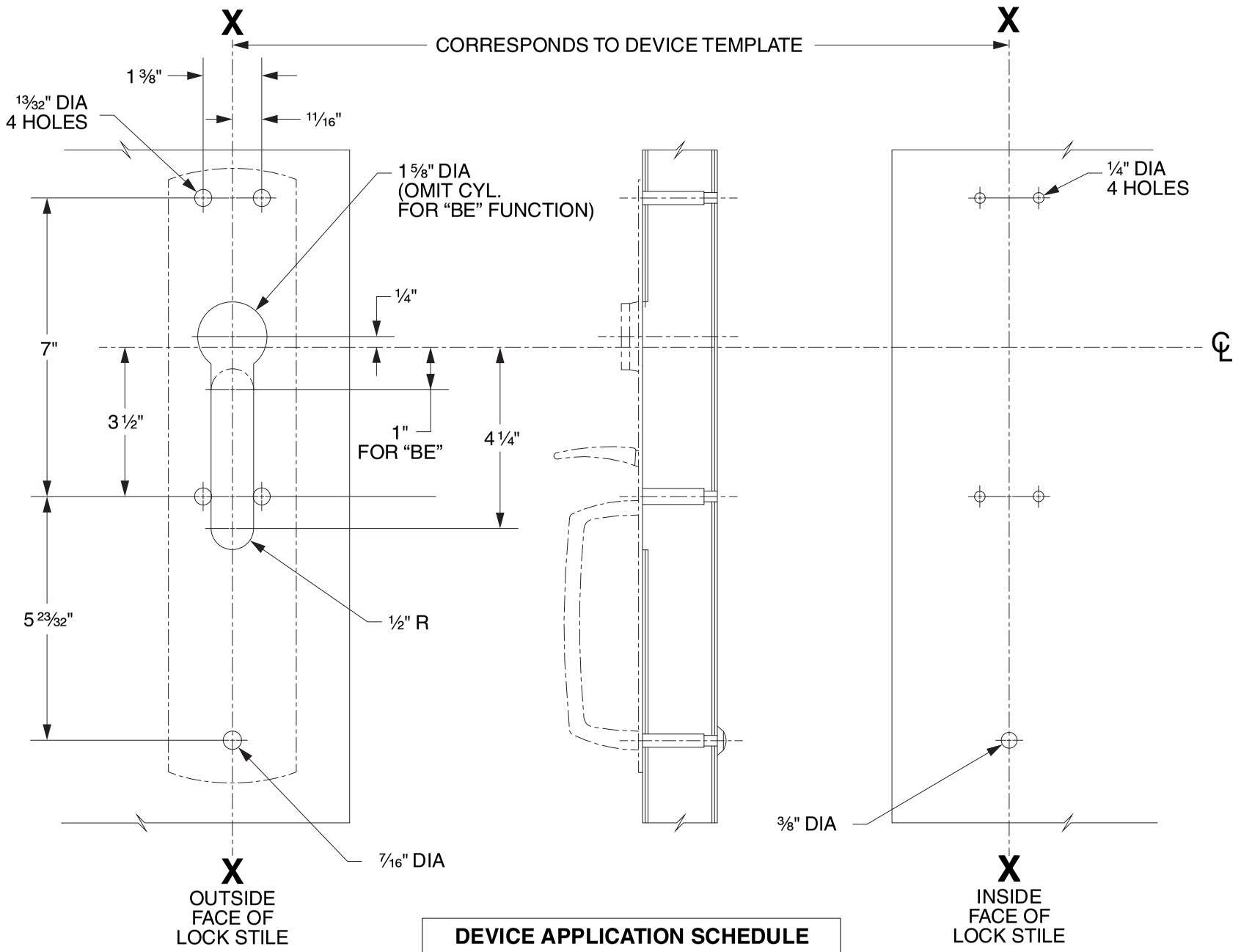

DEVICE APPLICATION SCHEDULE
98/99 SERIES RIM DEVICE
9827/9927 SERIES DEVICE
9847/9947 SERIES DEVICE
9849/9949 SERIES DEVICE

LHR SHOWN
RHR OPPOSITE

VON DUPRIN®

TEMPLATE NUMBER: 20265_C

DATE: 05-31-13

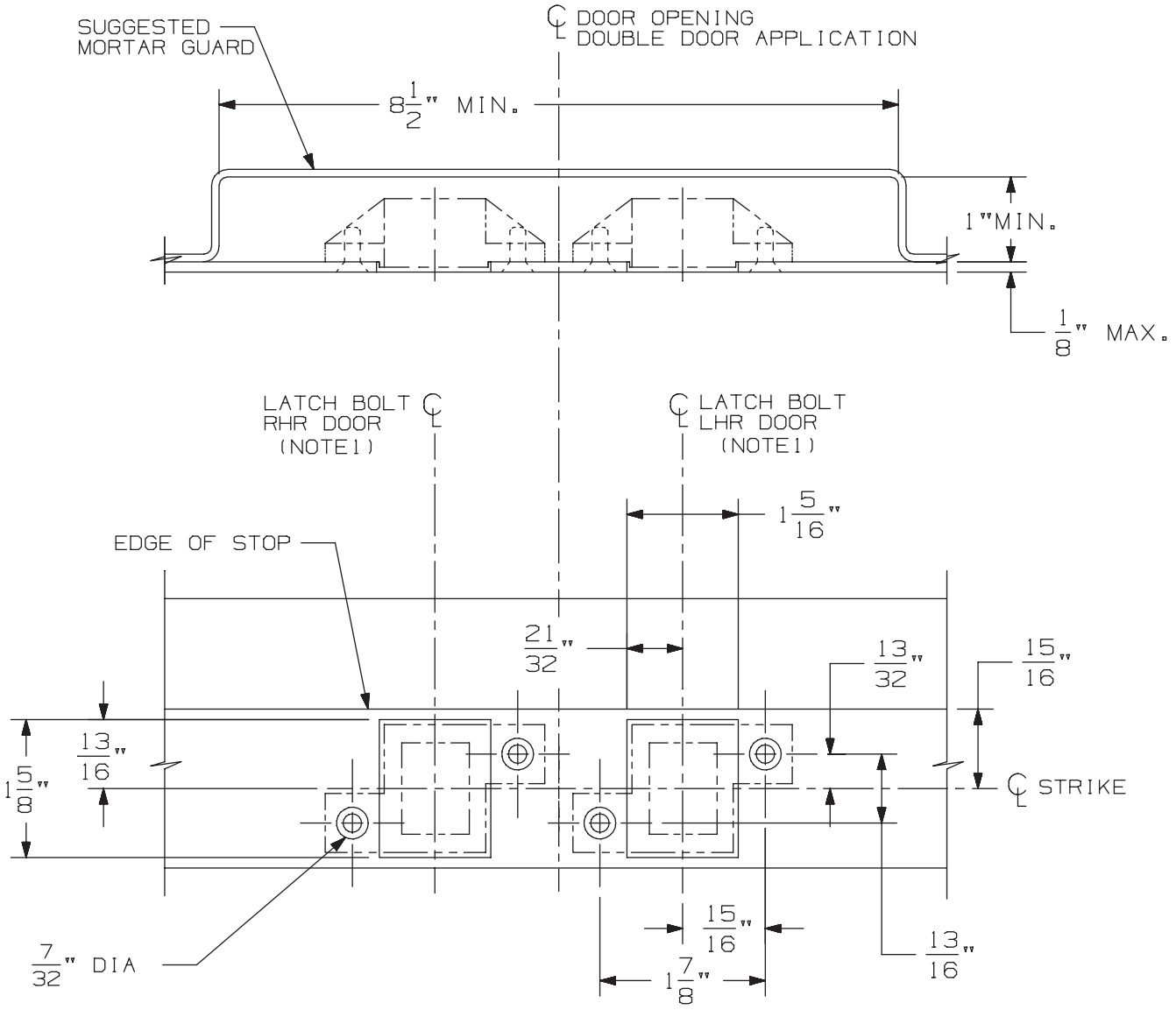

3/8" DIA X 82° C'SINK

IN FRAME
2 HOLES
EACH STRIKE

DOUBLE DOOR APPLICATION SHOWN.
FOR SINGLE DOOR APPLICATION USE
APPROPRIATE HANDING AS SHOWN.

DEVICE APPLICATION SCHEDULE
33/3547 & 33/3547-F SERIES DEVICE
98/99/47 & 98/99/47-F SERIES DEVICE
5547/5547 WDC SERIES
33/3547A & 33/3547A-F SERIES DEVICE
(9) 94/9547 SERIES DEVICE

NOTES: 1. SEE DEVICE TEMPLATE FOR LOCATION OF LATCH BOLT.

2. IF DEVICE IS TO BE MOUNTED ON WOOD DOORS, SEE WOOD DOOR TEMPLATE FOR LATCH BOLT LOCATION.

338 Strike for Hollow Metal Frame Preparation

VON DUPRIN®

NOTES: SEE MASTER SHEET #10001 FOR SUGGESTED REINFORCING

TEMPLATE NUMBER: 30038_a

DATE: 05-23-13

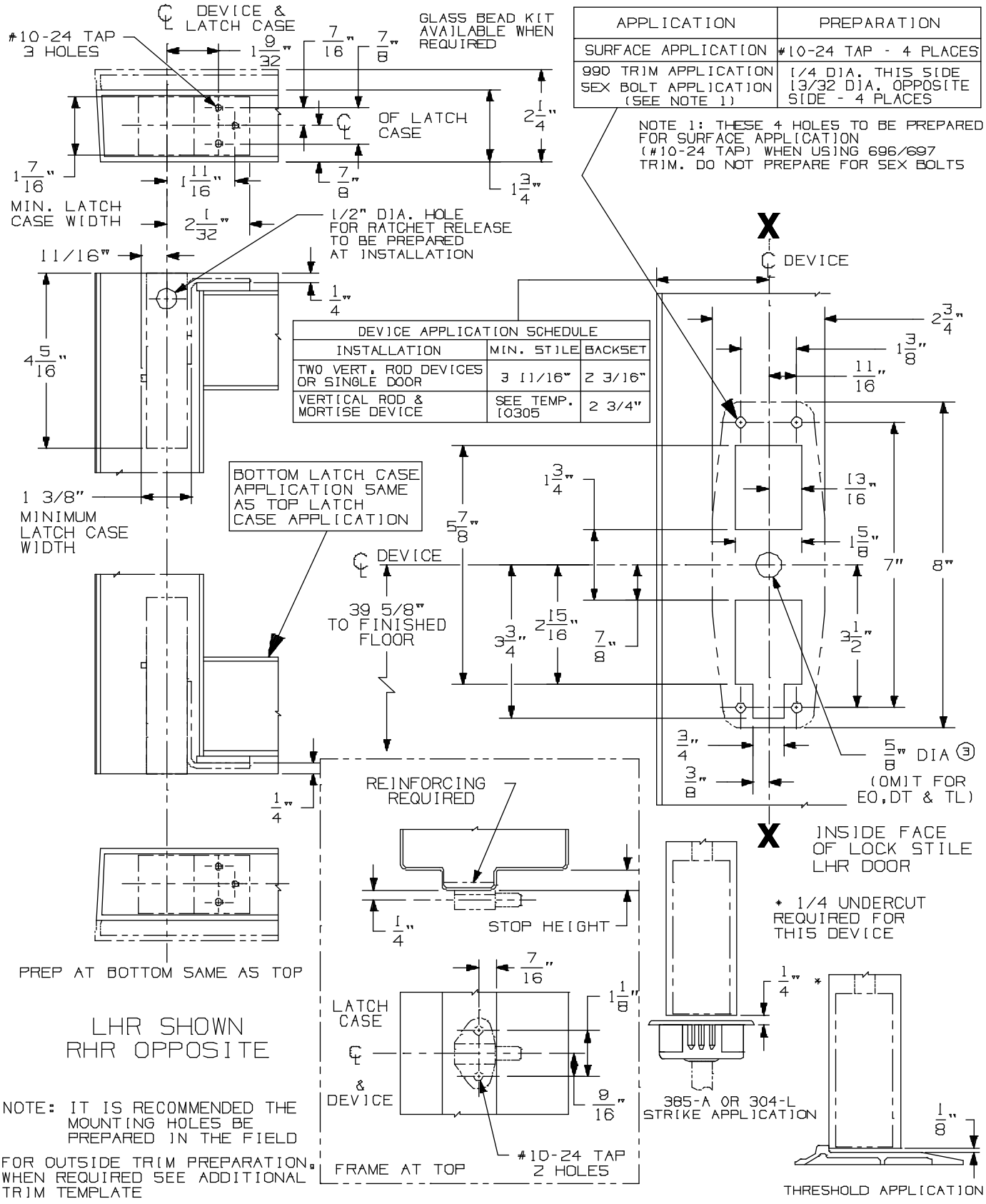

CX98/9947 & CX98/9948 Series Concealed Vertical Rod Device

VON DUPRIN®

NOTES: SEE MASTER SHEET #10001 FOR SUGGESTED REINFORCING

TEMPLATE NUMBER: 10360_a

DATE: 05-22-13

990 DT TRIM

NOTES: SEE MASTER SHEET #10001 FOR SUGGESTED REINFORCING

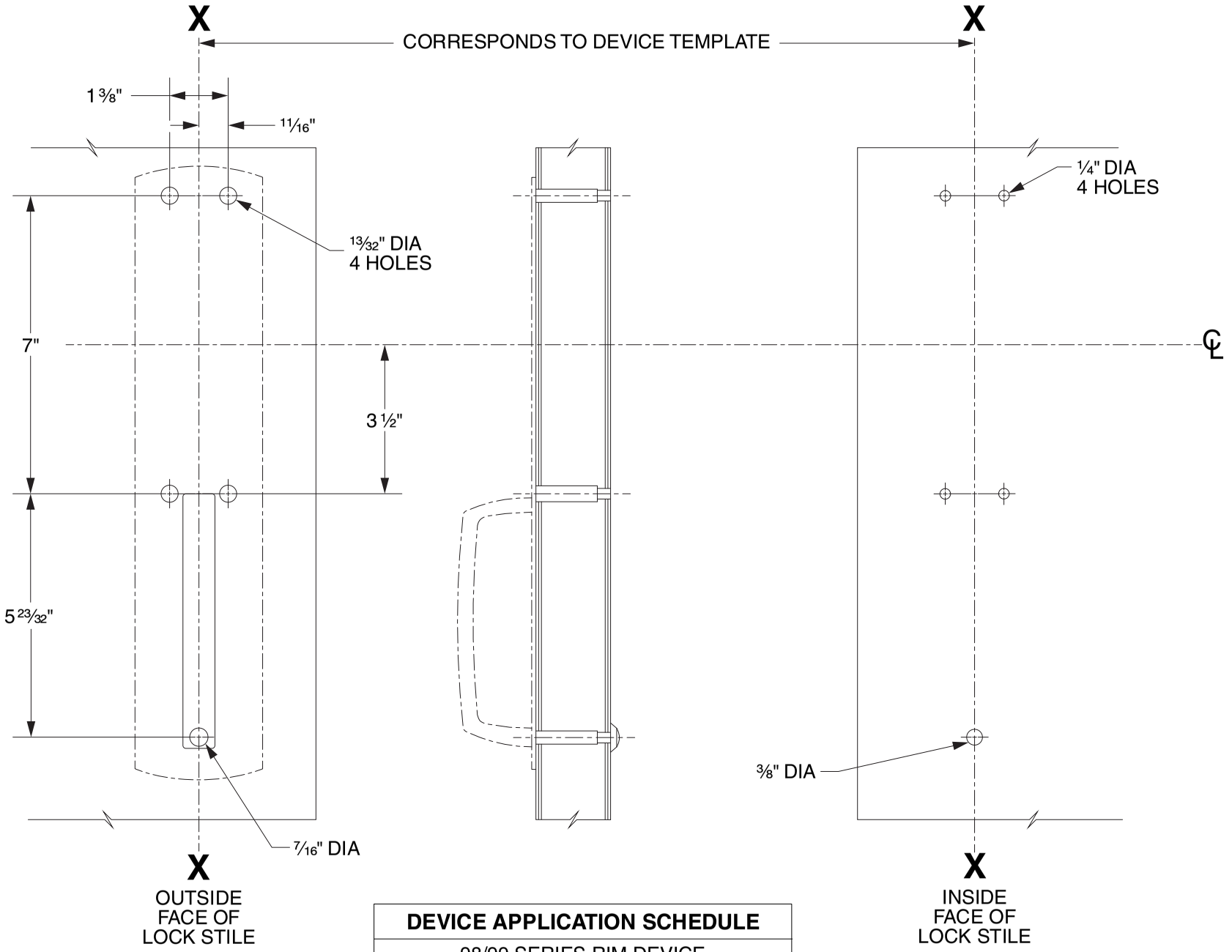

DEVICE APPLICATION SCHEDULE
98/99 SERIES RIM DEVICE
9827/9927 SERIES DEVICE
9847/9947 SERIES DEVICE
9849/9949 SERIES DEVICE
9875/9975 SERIES DEVICE

LHR SHOWN
RHR OPPOSITE

VON DUPRIN®

TEMPLATE NUMBER: 20268_C

DATE: 05-31-13

376-T Control

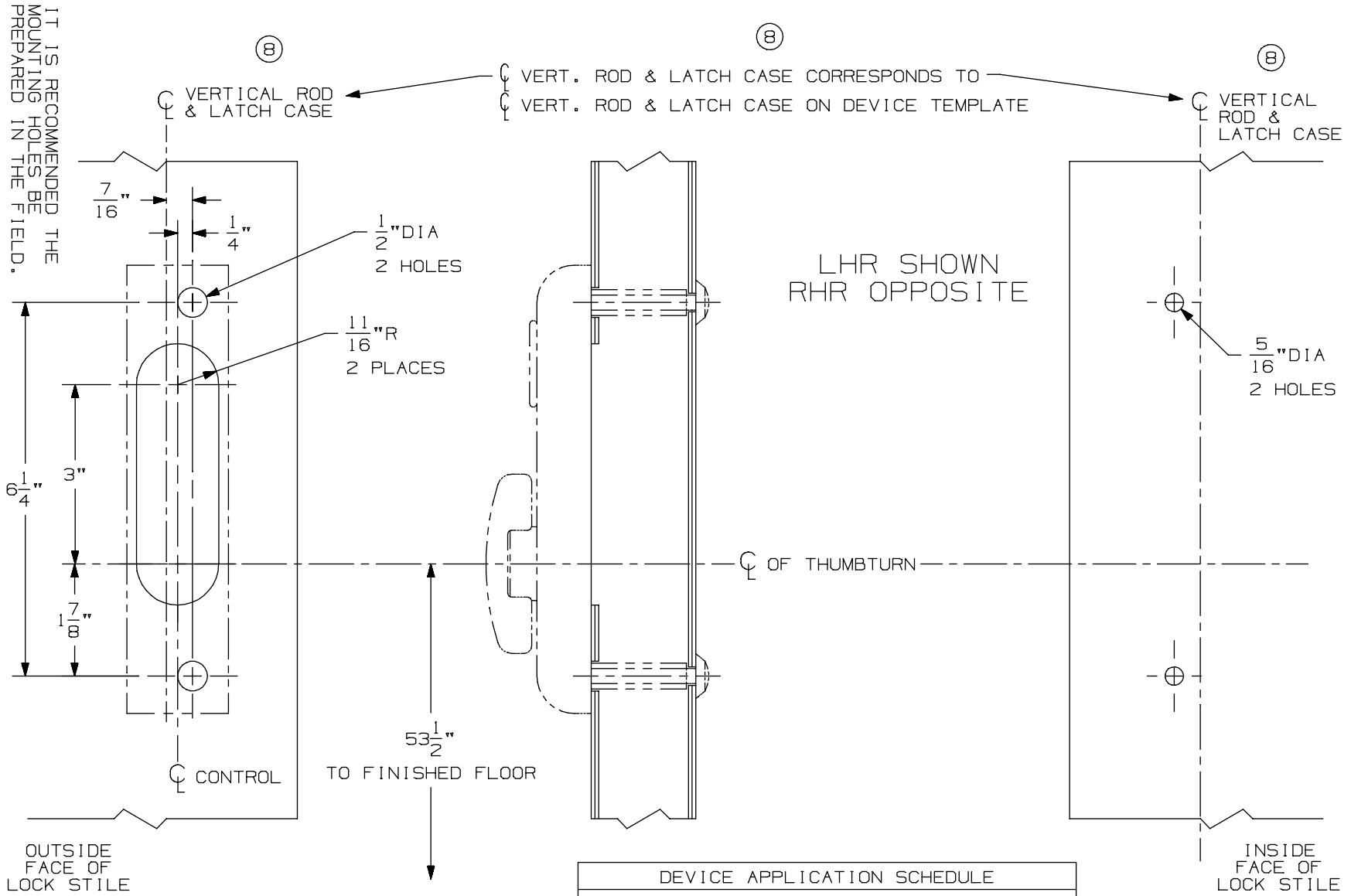

DEVICE APPLICATION SCHEDULE
5547/5547-F VERT. ROD DEVICE
8847-F VERT. ROD DEVICE
* 3347/3547 VERT. ROD DEVICE
3347-F/3547-F VERT. ROD DEVICE
⑧ * 3347A/3547A VERT. ROD DEVICE
⑧ 3347A-F/3547A-F VERT. ROD DEVICE
9847/9947 VERT. ROD DEVICE
9847-F/9947-F VERTICAL ROD DEVICE

⑧ * NOT TO BE USED WITH 1 1/16" LATCH CASE BACKSET ON BULLNOSE EDGE DOORS WITH WEATHERSTRIP CHANNEL.

NOTES: SEE MASTER SHEET #10001 FOR SUGGESTED REINFORCING

TEMPLATE NUMBER: 40114_a

DATE: 05-28-13

VON DUPRIN®

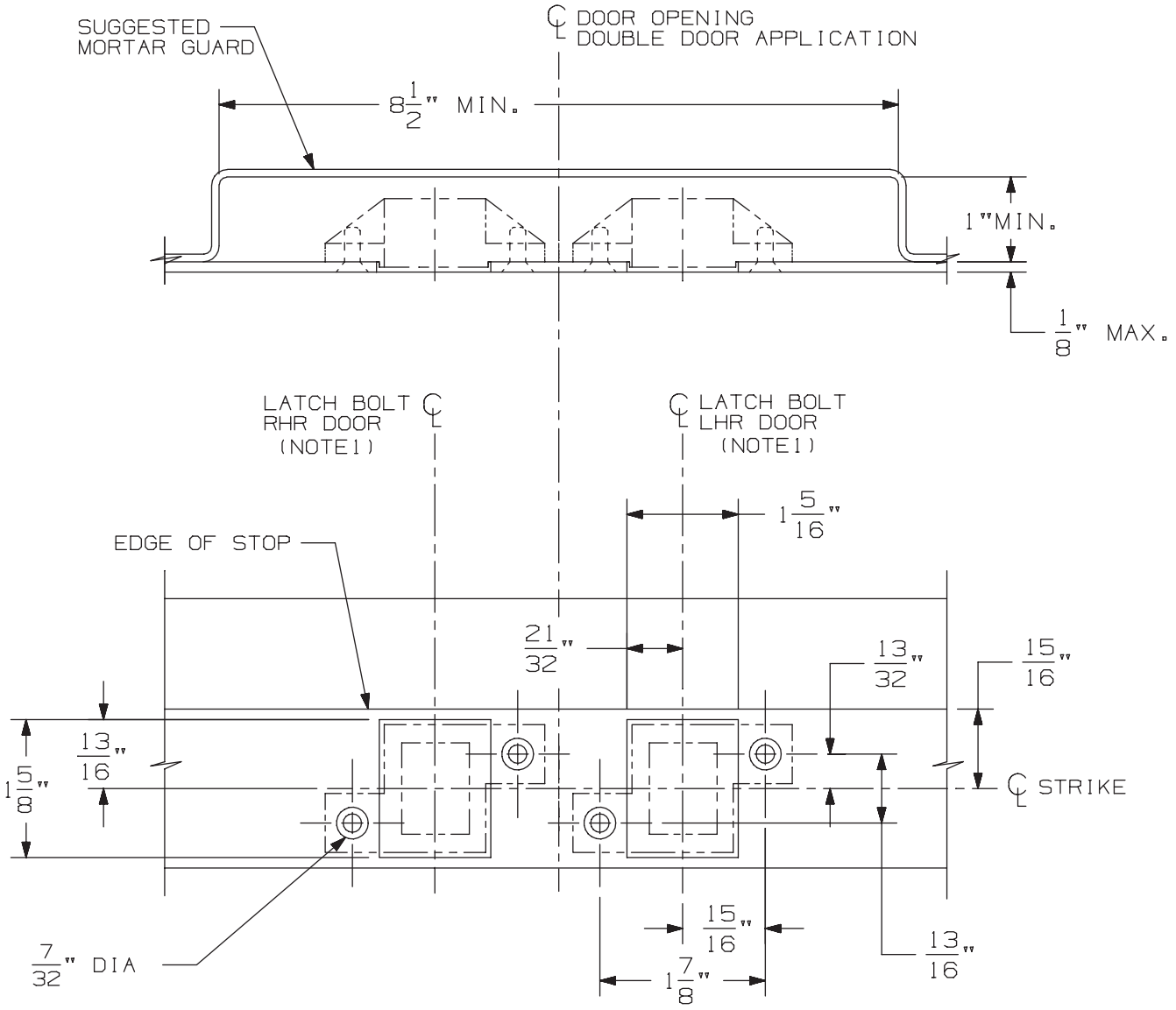

3/8" DIA X 82° C'SINK

IN FRAME
2 HOLES
EACH STRIKE

DOUBLE DOOR APPLICATION SHOWN.
FOR SINGLE DOOR APPLICATION USE
APPROPRIATE HANDING AS SHOWN.

DEVICE APPLICATION SCHEDULE
33/3547 & 33/3547-F SERIES DEVICE
98/99/47 & 98/99/47-F SERIES DEVICE
5547/5547 WDC SERIES
33/3547A & 33/3547A-F SERIES DEVICE
(9) 94/9547 SERIES DEVICE

NOTES: 1. SEE DEVICE TEMPLATE FOR LOCATION OF LATCH BOLT.

2. IF DEVICE IS TO BE MOUNTED ON WOOD DOORS, SEE WOOD DOOR TEMPLATE FOR LATCH BOLT LOCATION.

338 Strike for Hollow Metal Frame Preparation

VON DUPRIN®

NOTES: SEE MASTER SHEET #10001 FOR SUGGESTED REINFORCING

TEMPLATE NUMBER: 30038_a

DATE: 05-23-13

98 / 99 Series Chex-it® Exit Devices - CX9847-F/ CX9947-F/ CX9848-F/ CX9948-F Concealed Vertical Rod Fire

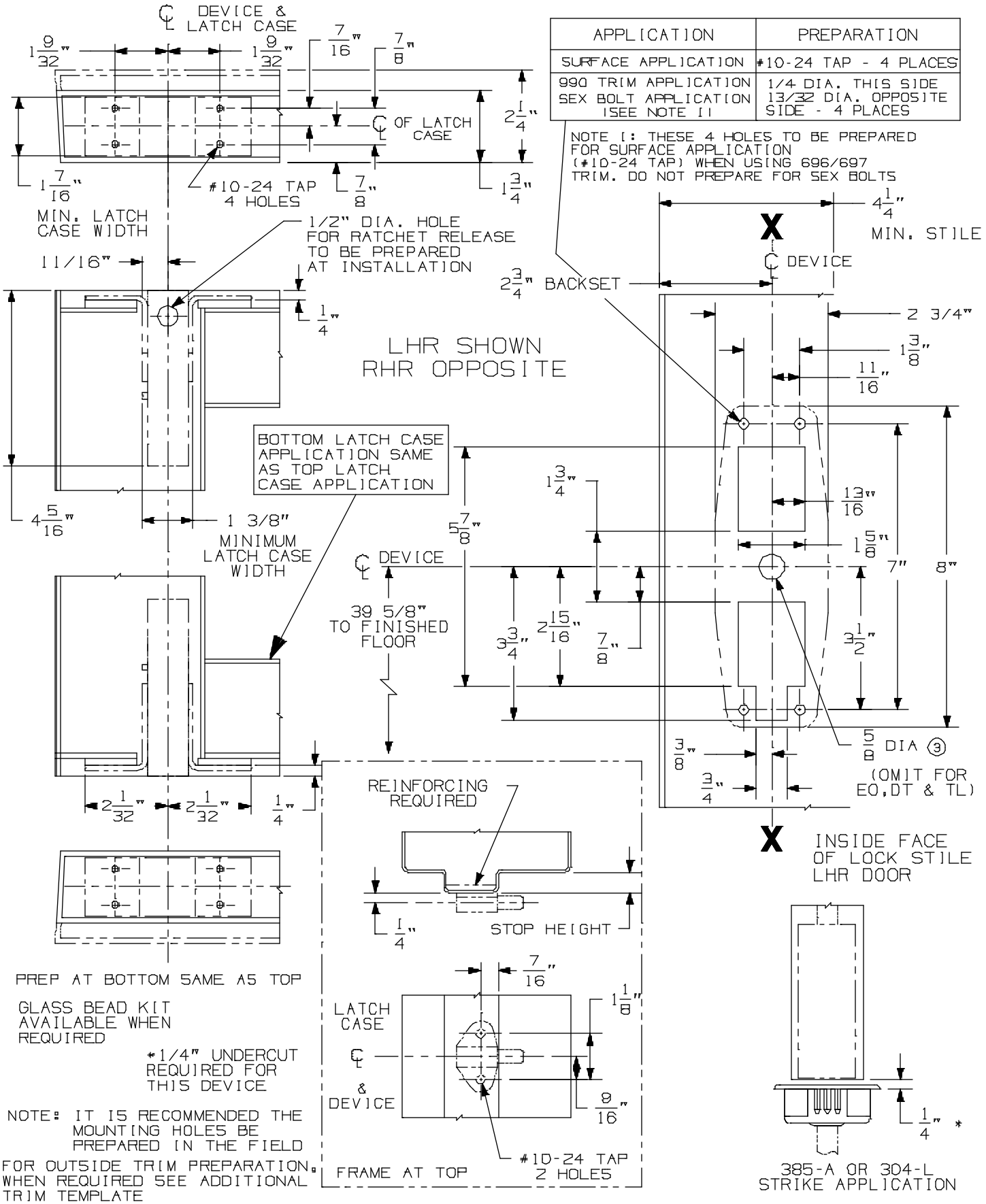

APPLICATION	PREPARATION
SURFACE APPLICATION	#10-24 TAP - 4 PLACES
990 TRIM APPLICATION SEX BOLT APPLICATION (SEE NOTE 1)	1/4 DIA. THIS SIDE 13/32 DIA. OPPOSITE SIDE - 4 PLACES

CX98/9947-F & CX98/9948-F Series Concealed Vertical Rod Device

VON DUPRIN®

NOTES: SEE MASTER SHEET #10001 FOR SUGGESTED REINFORCING

TEMPLATE NUMBER: 10359_a

DATE: 05-22-13

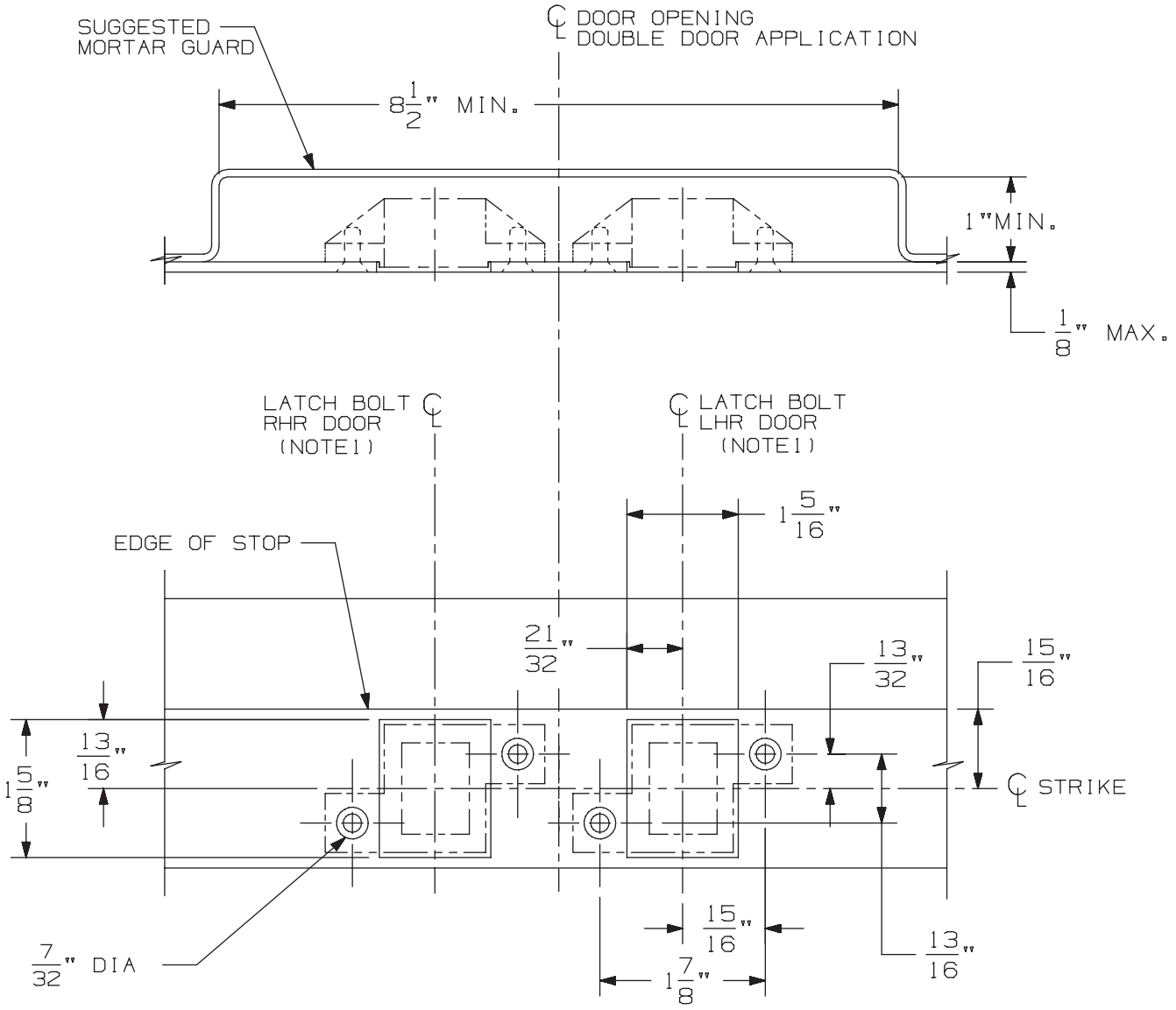

3/8" DIA X 82° C'SINK

IN FRAME
2 HOLES
EACH STRIKE

DOUBLE DOOR APPLICATION SHOWN.
FOR SINGLE DOOR APPLICATION USE
APPROPRIATE HANDING AS SHOWN.

DEVICE APPLICATION SCHEDULE
33/3547 & 33/3547-F SERIES DEVICE
98/99/47 & 98/99/47-F SERIES DEVICE
5547/5547 WDC SERIES
33/3547A & 33/3547A-F SERIES DEVICE
(9) 94/9547 SERIES DEVICE

NOTES: 1. SEE DEVICE TEMPLATE FOR LOCATION OF LATCH BOLT.

2. IF DEVICE IS TO BE MOUNTED ON WOOD DOORS, SEE WOOD DOOR TEMPLATE FOR LATCH BOLT LOCATION.

338 Strike for Hollow Metal Frame Preparation

VON DUPRIN®

NOTES: SEE MASTER SHEET #10001 FOR SUGGESTED REINFORCING

TEMPLATE NUMBER: 30038_a

DATE: 05-23-13

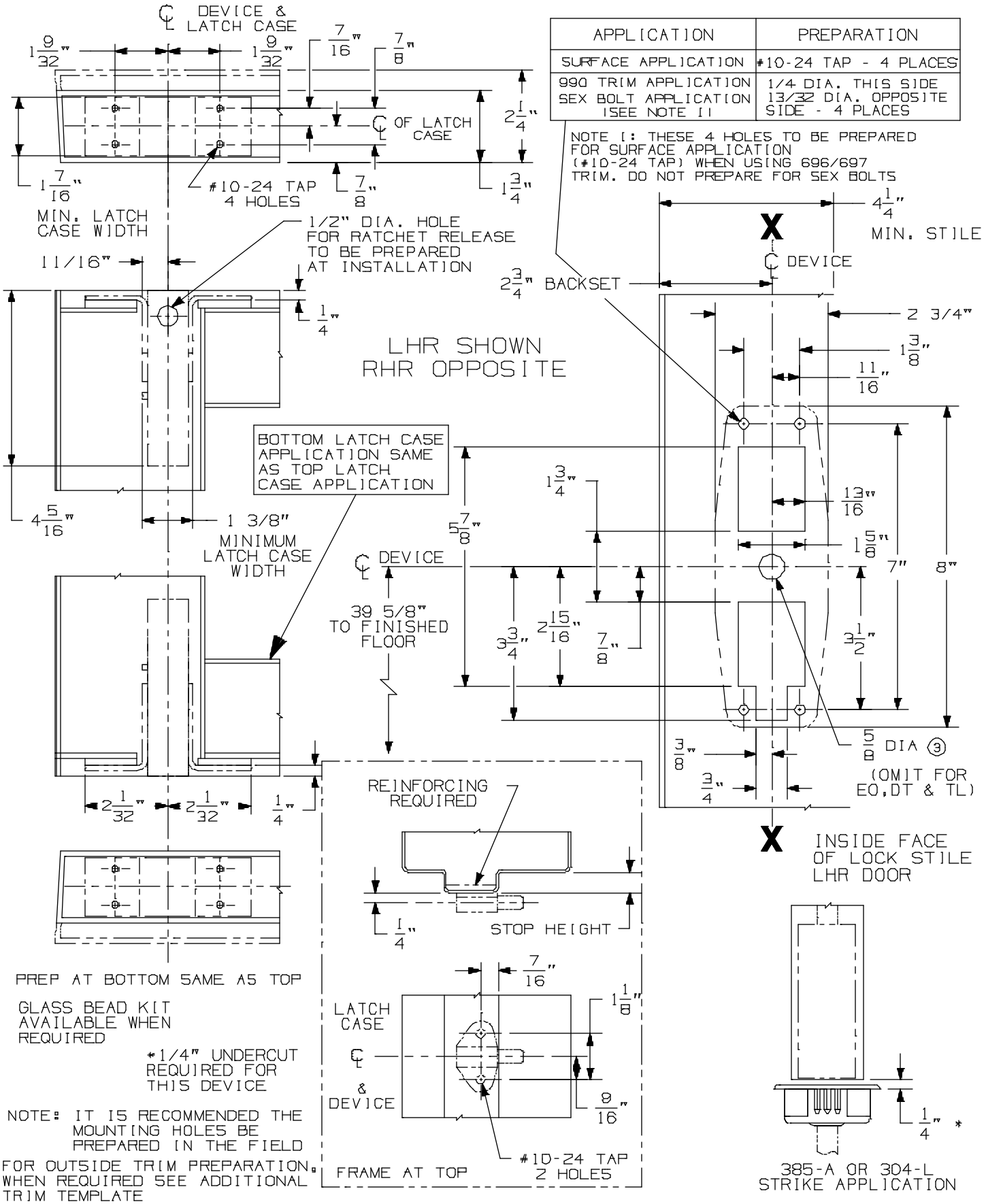

APPLICATION	PREPARATION
SURFACE APPLICATION	#10-24 TAP - 4 PLACES
990 TRIM APPLICATION SEX BOLT APPLICATION (SEE NOTE 1)	1/4 DIA. THIS SIDE 13/32 DIA. OPPOSITE SIDE - 4 PLACES

CX98/9947-F & CX98/9948-F Series Concealed Vertical Rod Device

VON DUPRIN®

NOTES: SEE MASTER SHEET #10001 FOR SUGGESTED REINFORCING

TEMPLATE NUMBER: 10359_a

DATE: 05-22-13

990 NL TRIM

NOTES: SEE MASTER SHEET #10001 FOR SUGGESTED REINFORCING

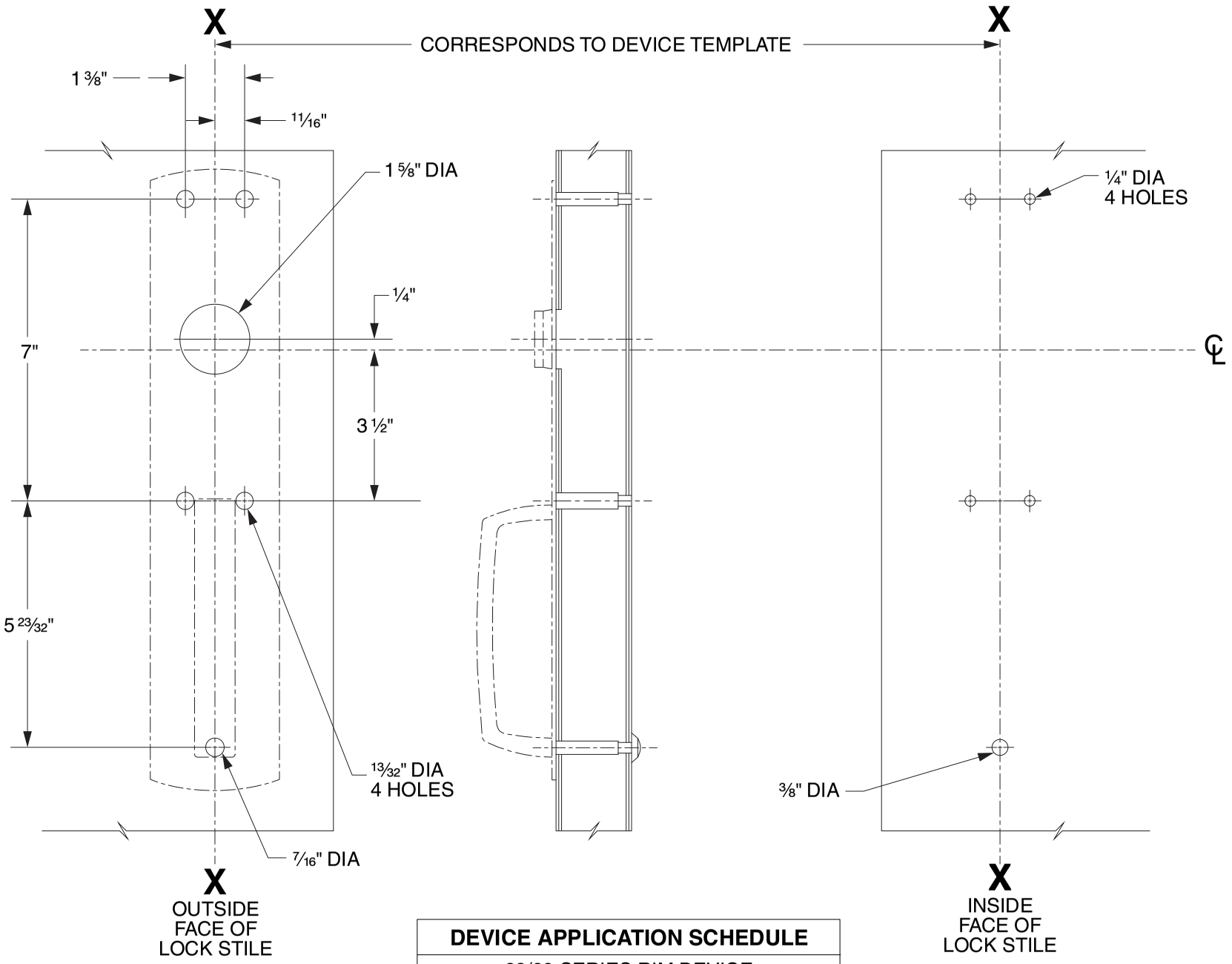

DEVICE APPLICATION SCHEDULE
98/99 SERIES RIM DEVICE
9827/9927 SERIES DEVICE
9847/9947 SERIES DEVICE
9849/9949 SERIES DEVICE

LHR SHOWN
RHR OPPOSITE

VON DUPRIN®

TEMPLATE NUMBER: 20267_C

DATE: 05-31-13

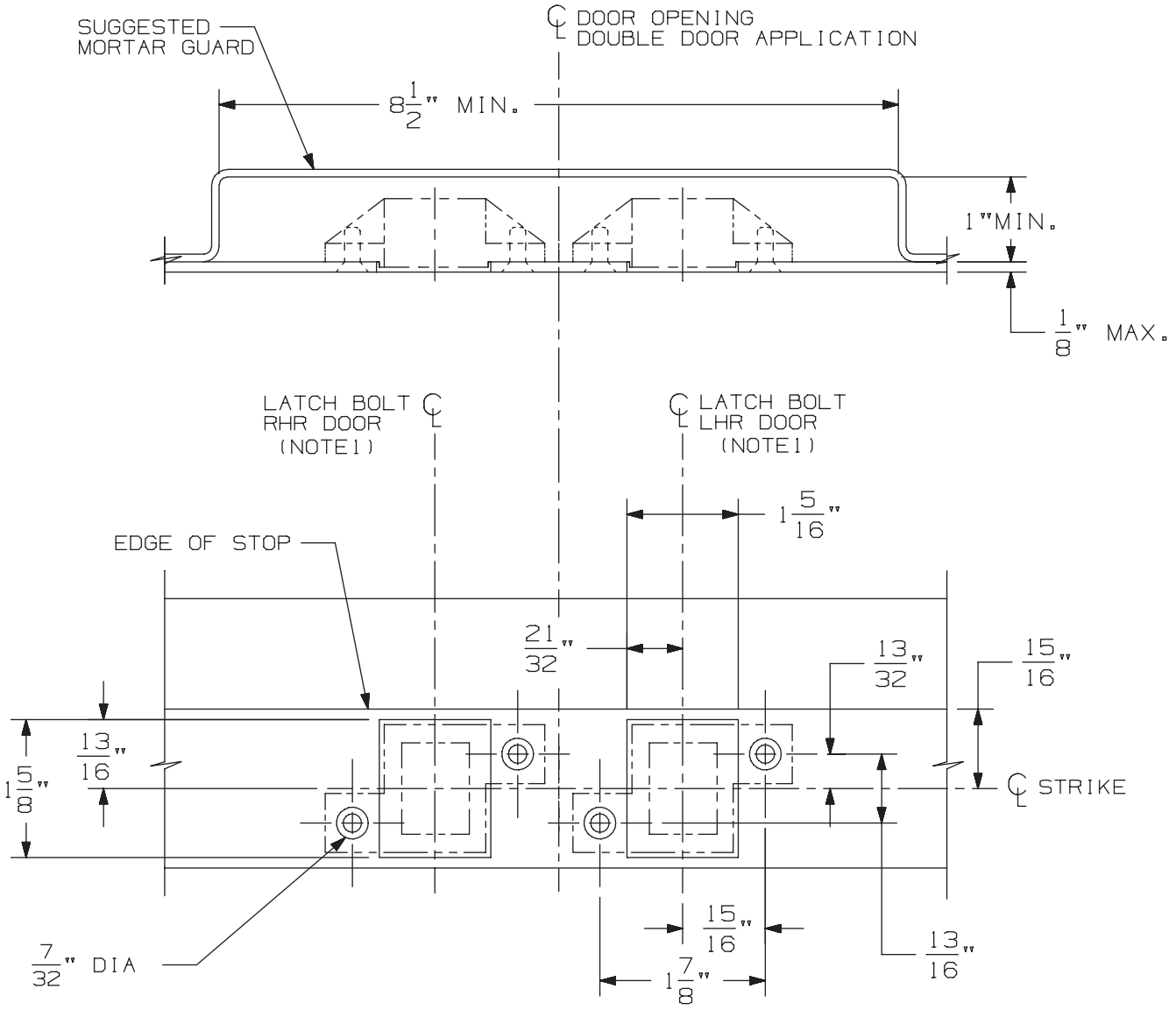

3/8" DIA X 82° C'SINK

IN FRAME
2 HOLES
EACH STRIKE

DOUBLE DOOR APPLICATION SHOWN.
FOR SINGLE DOOR APPLICATION USE
APPROPRIATE HANDING AS SHOWN.

DEVICE APPLICATION SCHEDULE
33/3547 & 33/3547-F SERIES DEVICE
98/99/47 & 98/99/47-F SERIES DEVICE
5547/5547 WDC SERIES
33/3547A & 33/3547A-F SERIES DEVICE
(9) 94/9547 SERIES DEVICE

NOTES: 1. SEE DEVICE TEMPLATE FOR LOCATION OF LATCH BOLT.

2. IF DEVICE IS TO BE MOUNTED ON WOOD DOORS, SEE WOOD DOOR TEMPLATE FOR LATCH BOLT LOCATION.

338 Strike for Hollow Metal Frame Preparation

VON DUPRIN®

NOTES: SEE MASTER SHEET #10001 FOR SUGGESTED REINFORCING

TEMPLATE NUMBER: 30038_a

DATE: 05-23-13

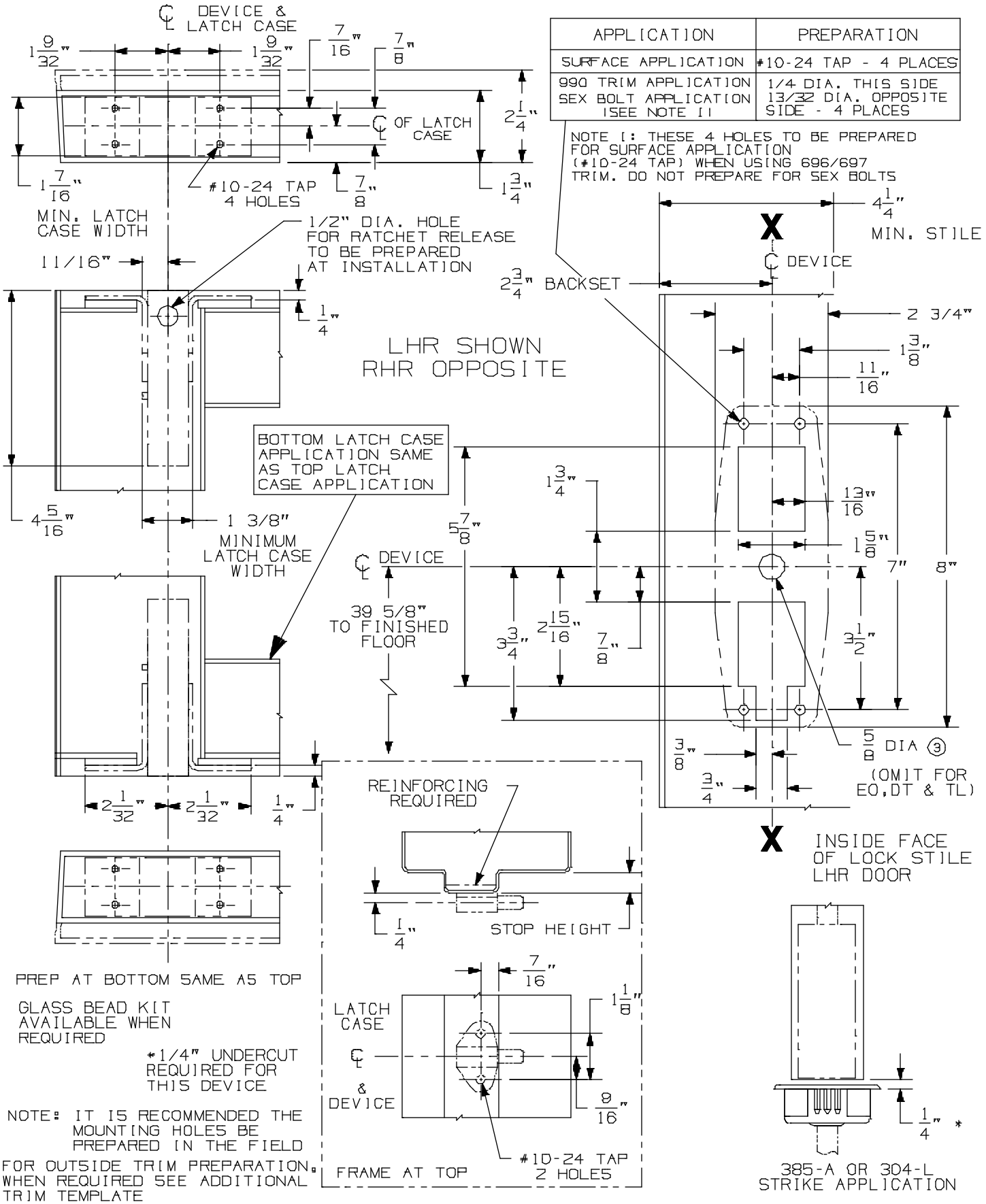

APPLICATION	PREPARATION
SURFACE APPLICATION	#10-24 TAP - 4 PLACES
990 TRIM APPLICATION SEX BOLT APPLICATION (SEE NOTE 1)	1/4 DIA. THIS SIDE 13/32 DIA. OPPOSITE SIDE - 4 PLACES

CX98/9947-F & CX98/9948-F Series Concealed Vertical Rod Device

VON DUPRIN®

NOTES: SEE MASTER SHEET #10001 FOR SUGGESTED REINFORCING

TEMPLATE NUMBER: 10359_a

DATE: 05-22-13

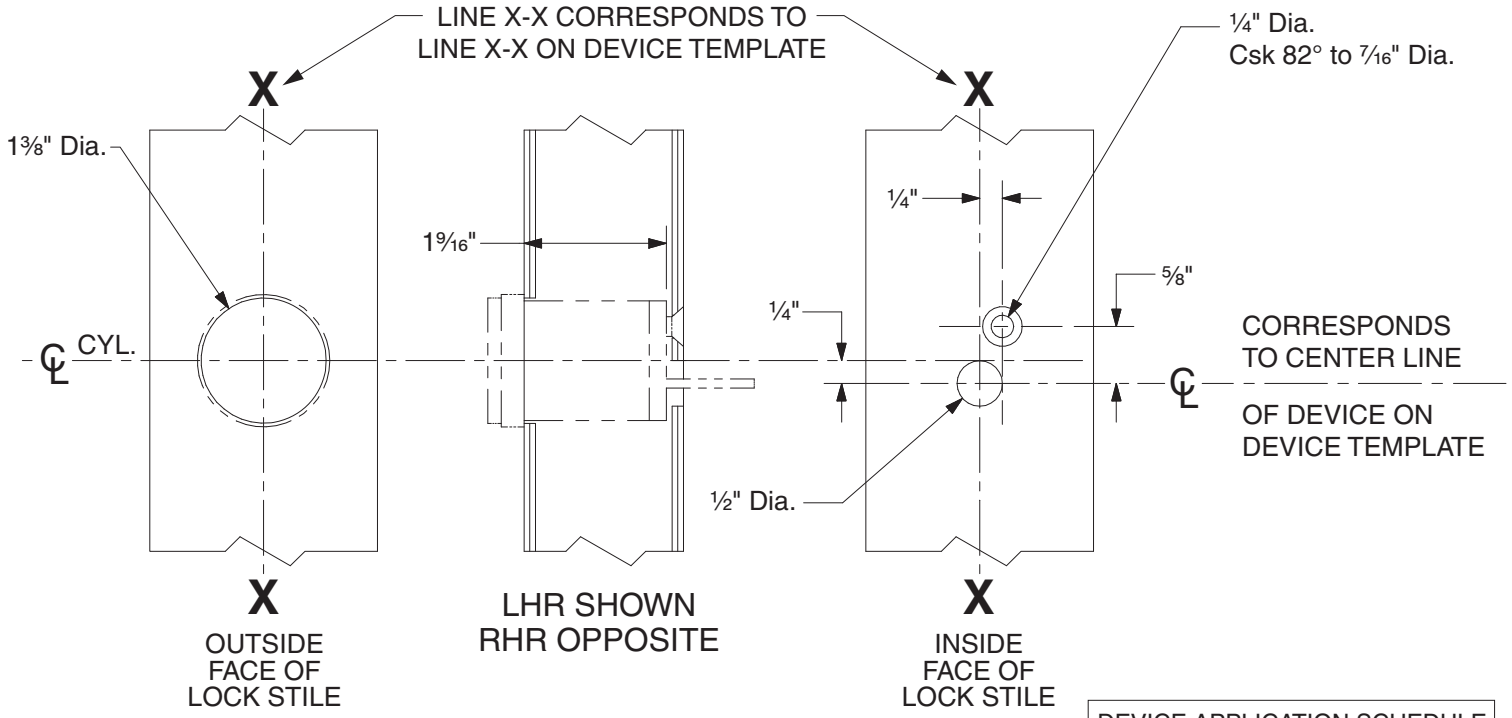

DEVICE APPLICATION SCHEDULE	
98 RIM SERIES	99 RIM SERIES
9827 SERIES	9927 SERIES
9847 SERIES	9947 SERIES
22 RIM SERIES	2227 SERIES

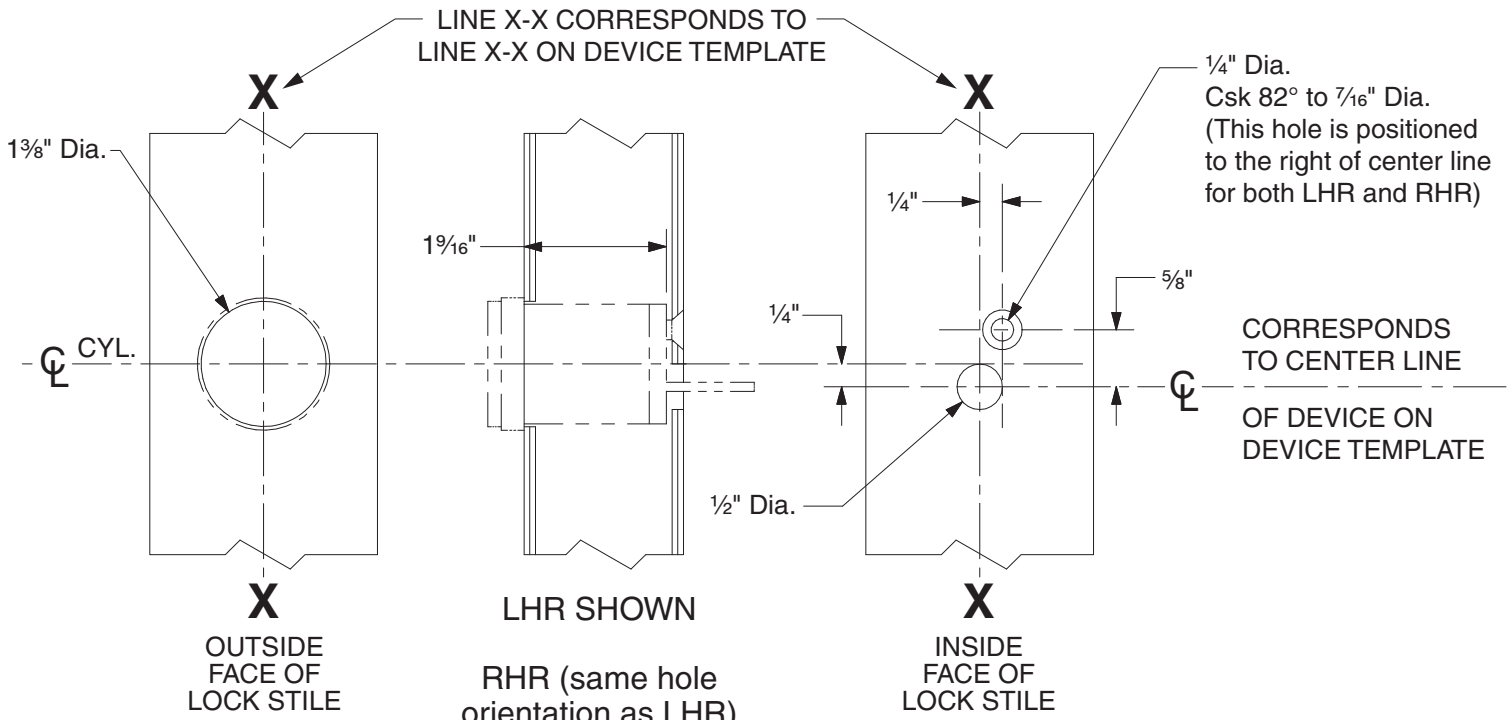

DEVICE APPLICATION SCHEDULE	
9849 SERIES	9949 SERIES

110NL Cylinder Preparation

VON DUPRIN®

NOTES: SEE MASTER SHEET #10001 FOR SUGGESTED REINFORCING

TEMPLATE NUMBER: 40022_c

DATE: 05-28-13

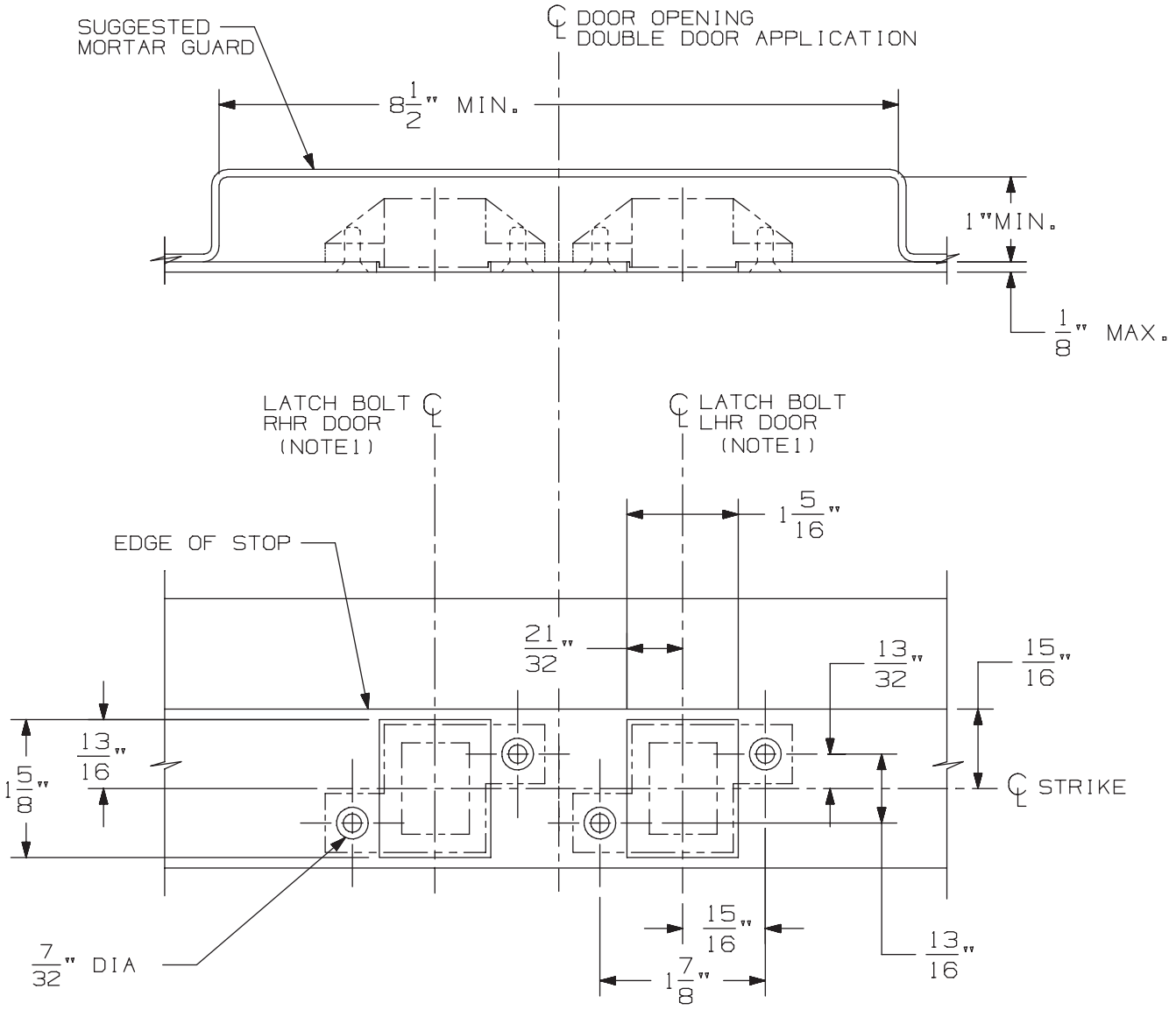

3/8" DIA X 82° C'SINK

IN FRAME
2 HOLES
EACH STRIKE

DOUBLE DOOR APPLICATION SHOWN.
FOR SINGLE DOOR APPLICATION USE
APPROPRIATE HANDING AS SHOWN.

DEVICE APPLICATION SCHEDULE
33/3547 & 33/3547-F SERIES DEVICE
98/99/47 & 98/99/47-F SERIES DEVICE
5547/5547 WDC SERIES
33/3547A & 33/3547A-F SERIES DEVICE
(9) 94/9547 SERIES DEVICE

NOTES: 1. SEE DEVICE TEMPLATE FOR LOCATION OF LATCH BOLT.

2. IF DEVICE IS TO BE MOUNTED ON WOOD DOORS, SEE WOOD DOOR TEMPLATE FOR LATCH BOLT LOCATION.

338 Strike for Hollow Metal Frame Preparation

VON DUPRIN®

NOTES: SEE MASTER SHEET #10001 FOR SUGGESTED REINFORCING

TEMPLATE NUMBER: 30038_a

DATE: 05-23-13

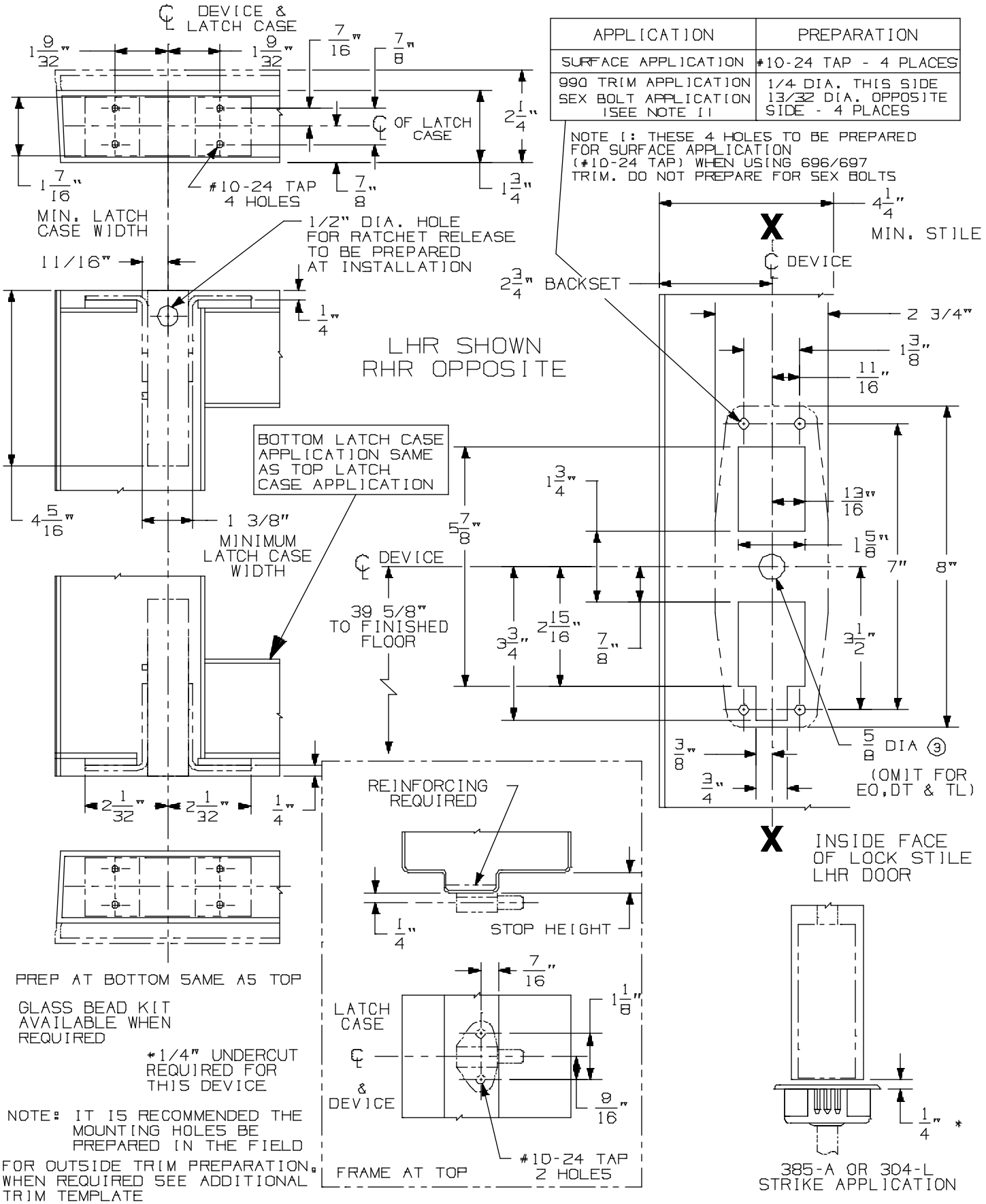

APPLICATION	PREPARATION
SURFACE APPLICATION	#10-24 TAP - 4 PLACES
990 TRIM APPLICATION SEX BOLT APPLICATION (SEE NOTE 1)	1/4 DIA. THIS SIDE 13/32 DIA. OPPOSITE SIDE - 4 PLACES

CX98/9947-F & CX98/9948-F Series Concealed Vertical Rod Device

VON DUPRIN®

NOTES: SEE MASTER SHEET #10001 FOR SUGGESTED REINFORCING

TEMPLATE NUMBER: 10359_a

DATE: 05-22-13

991 K & 992 L Trim

NOTES: SEE MASTER SHEET #10001 FOR SUGGESTED REINFORCING

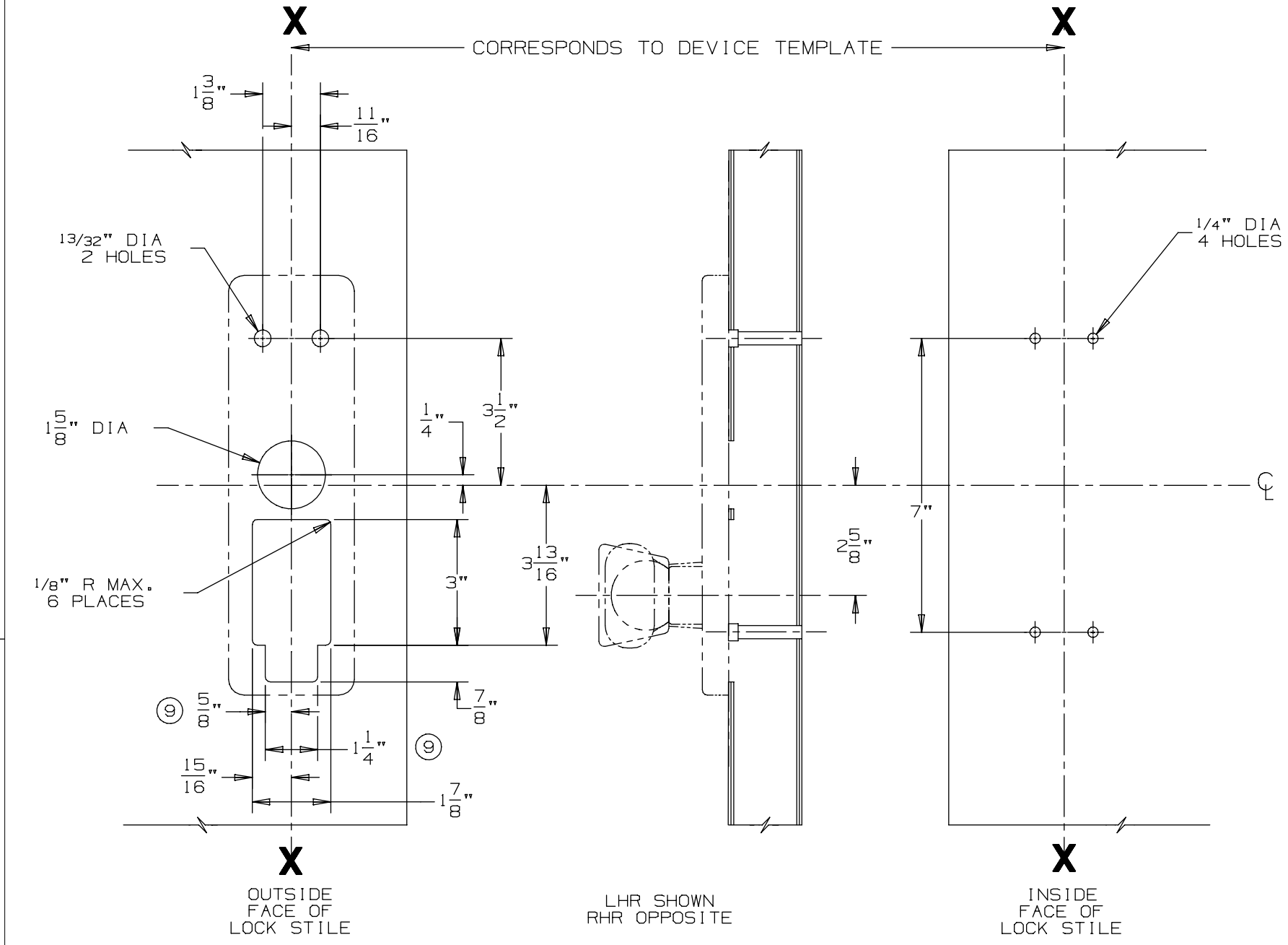

DEVICE APPLICATION SCHEDULE
98/99 SERIES RIM DEVICE
9827/9927 SERIES DEVICE
9847/9947 SERIES DEVICE

VON DUPRIN®

TEMPLATE NUMBER: 20272_a

DATE: 05-23-13

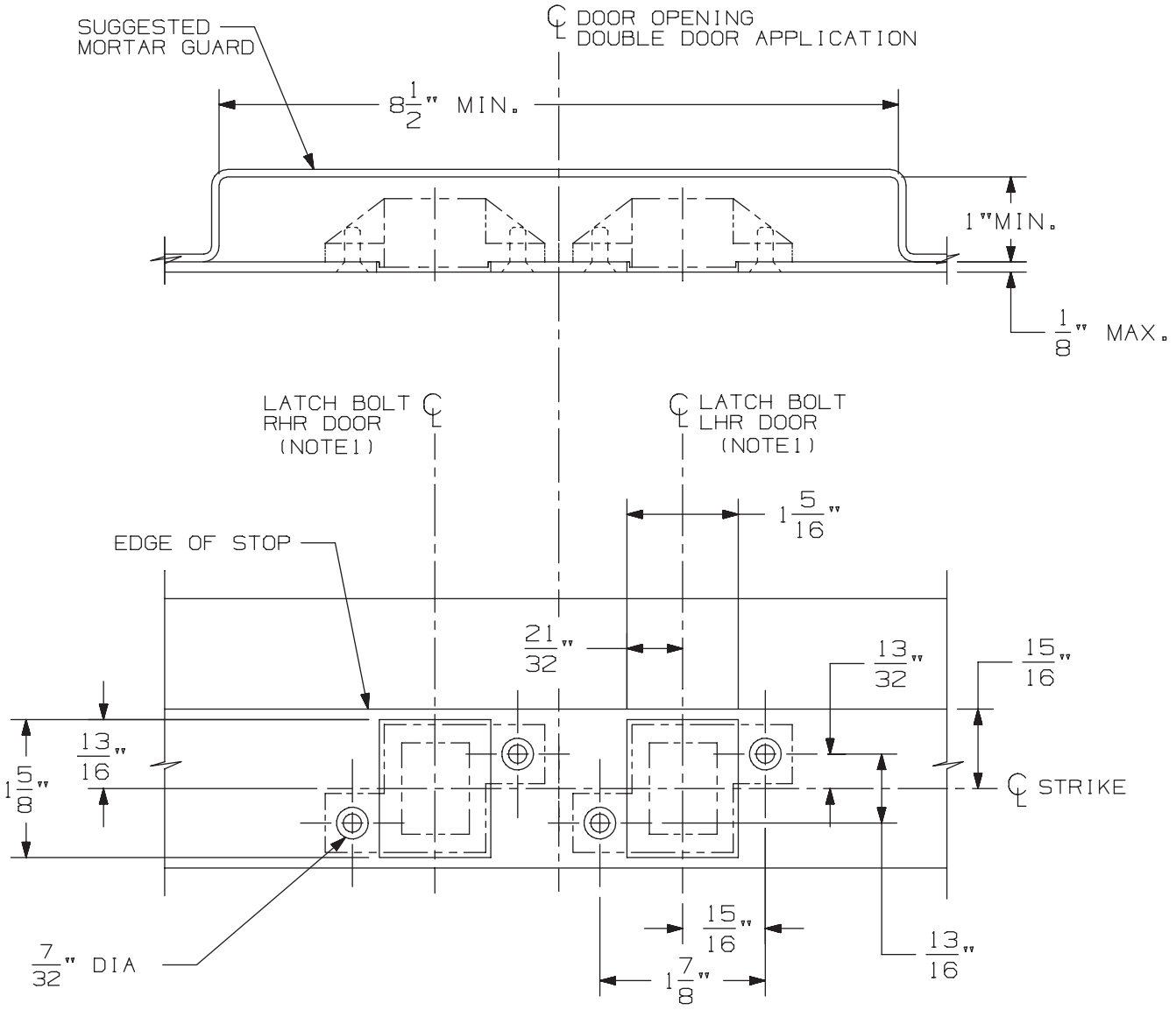

3/8" DIA X 82° C'SINK

IN FRAME
2 HOLES
EACH STRIKE

DOUBLE DOOR APPLICATION SHOWN.
FOR SINGLE DOOR APPLICATION USE
APPROPRIATE HANDING AS SHOWN.

DEVICE APPLICATION SCHEDULE
33/3547 & 33/3547-F SERIES DEVICE
98/99/47 & 98/99/47-F SERIES DEVICE
5547/5547 WDC SERIES
33/3547A & 33/3547A-F SERIES DEVICE
(9) 94/9547 SERIES DEVICE

NOTES: 1. SEE DEVICE TEMPLATE FOR LOCATION OF LATCH BOLT.

2. IF DEVICE IS TO BE MOUNTED ON WOOD DOORS, SEE WOOD DOOR TEMPLATE FOR LATCH BOLT LOCATION.

338 Strike for Hollow Metal Frame Preparation

VON DUPRIN®

NOTES: SEE MASTER SHEET #10001 FOR SUGGESTED REINFORCING

TEMPLATE NUMBER: 30038_a

DATE: 05-23-13

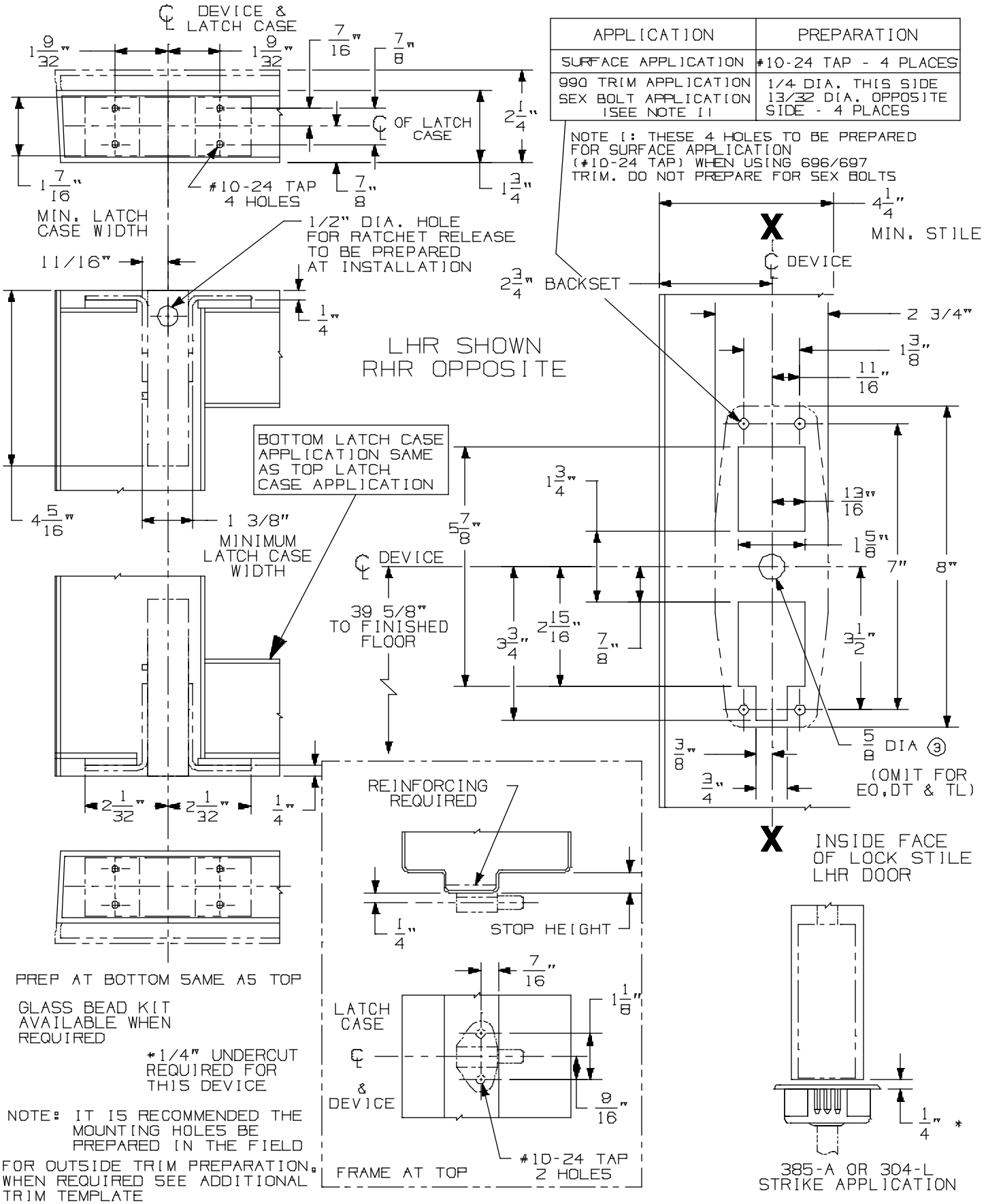

APPLICATION	PREPARATION
SURFACE APPLICATION	#10-24 TAP - 4 PLACES
990 TRIM APPLICATION SEX BOLT APPLICATION (SEE NOTE 1)	1/4 DIA. THIS SIDE 13/32 DIA. OPPOSITE SIDE - 4 PLACES

CX98/9947-F & CX98/9948-F Series Concealed Vertical Rod Device

VON DUPRIN®

NOTES: SEE MASTER SHEET #10001 FOR SUGGESTED REINFORCING

TEMPLATE NUMBER: 10359_a

DATE: 05-22-13

DEVICE APPLICATION SCHEDULE	
98 RIM SERIES	99 RIM SERIES
9827 SERIES	9927 SERIES
9847 SERIES	9947 SERIES
9849 SERIES	9949 SERIES

996L, E996L, 996L-BE, E996L-BE 996K, 996K-BE R/V SERIES
TRIM METAL DOOR APPLICATION

VON DUPRIN®

NOTES: SEE MASTER SHEET #10001 FOR SUGGESTED REINFORCING

TEMPLATE NUMBER: 20003_e

DATE: 10-30-14

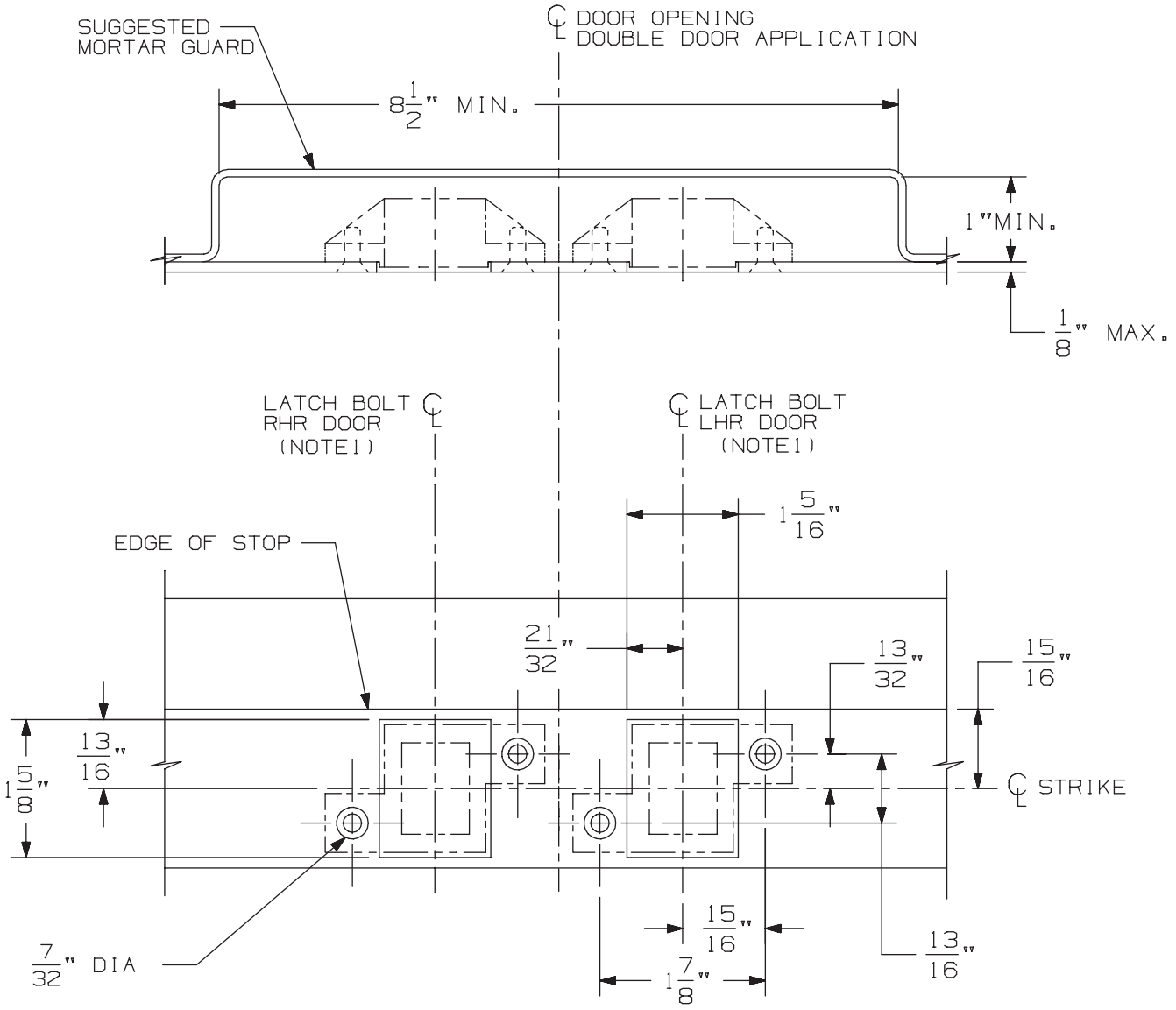

3/8" DIA X 82° C'SINK

IN FRAME
2 HOLES
EACH STRIKE

DOUBLE DOOR APPLICATION SHOWN.
FOR SINGLE DOOR APPLICATION USE
APPROPRIATE HANDING AS SHOWN.

DEVICE APPLICATION SCHEDULE
33/3547 & 33/3547-F SERIES DEVICE
98/99/47 & 98/99/47-F SERIES DEVICE
5547/5547 WDC SERIES
33/3547A & 33/3547A-F SERIES DEVICE
(9) 94/9547 SERIES DEVICE

NOTES: 1. SEE DEVICE TEMPLATE FOR LOCATION OF LATCH BOLT.

2. IF DEVICE IS TO BE MOUNTED ON WOOD DOORS, SEE WOOD DOOR TEMPLATE FOR LATCH BOLT LOCATION.

338 Strike for Hollow Metal Frame Preparation

VON DUPRIN®

NOTES: SEE MASTER SHEET #10001 FOR SUGGESTED REINFORCING

TEMPLATE NUMBER: 30038_a

DATE: 05-23-13

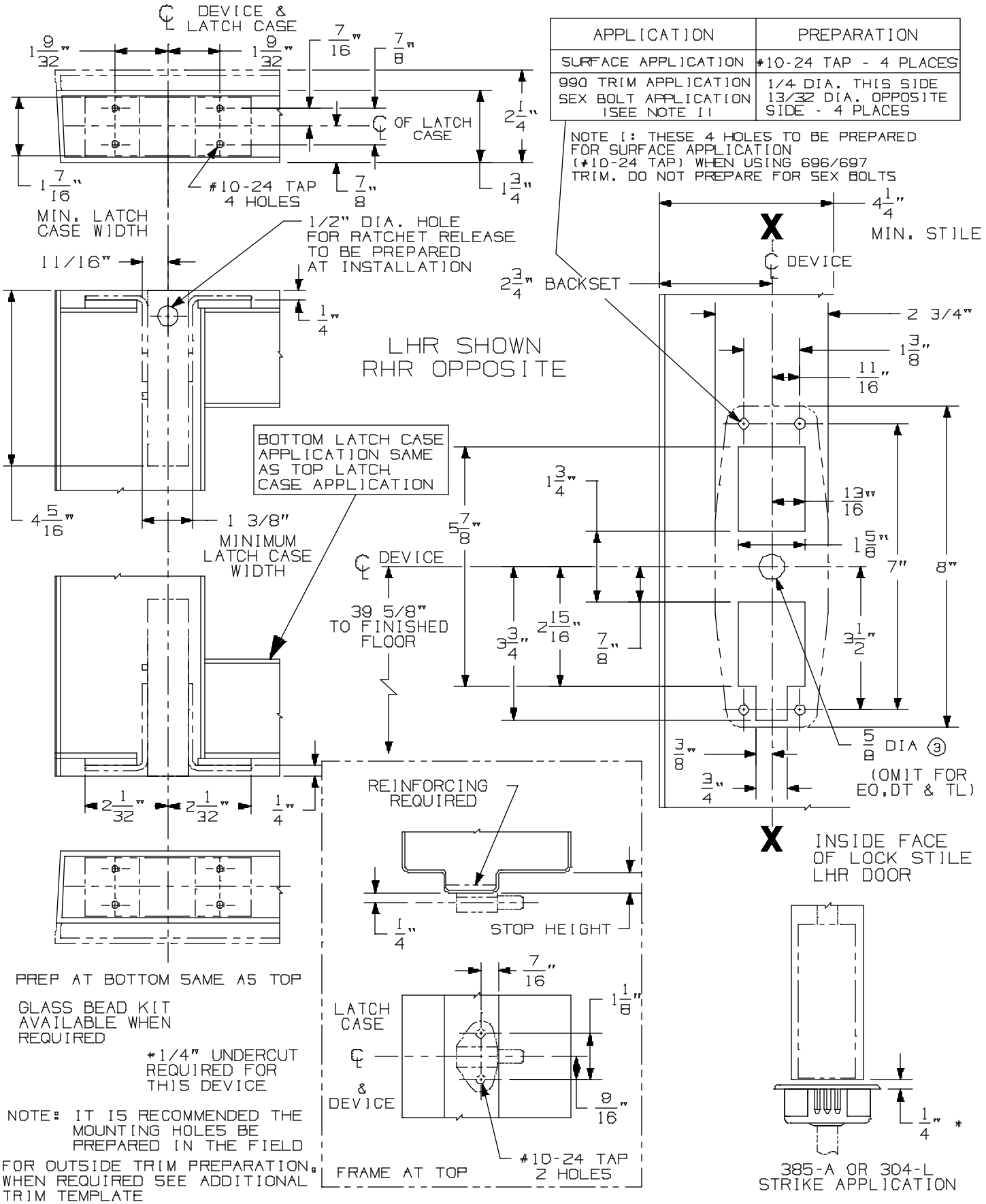

APPLICATION	PREPARATION
SURFACE APPLICATION	#10-24 TAP - 4 PLACES
990 TRIM APPLICATION SEX BOLT APPLICATION (SEE NOTE 1)	1/4 DIA. THIS SIDE 13/32 DIA. OPPOSITE SIDE - 4 PLACES

CX98/9947-F & CX98/9948-F Series Concealed Vertical Rod Device

VON DUPRIN®

NOTES: SEE MASTER SHEET #10001 FOR SUGGESTED REINFORCING

TEMPLATE NUMBER: 10359_a

DATE: 05-22-13

990 TP & 990 TP-BE TRIM

NOTES: SEE MASTER SHEET #10001 FOR SUGGESTED REINFORCING

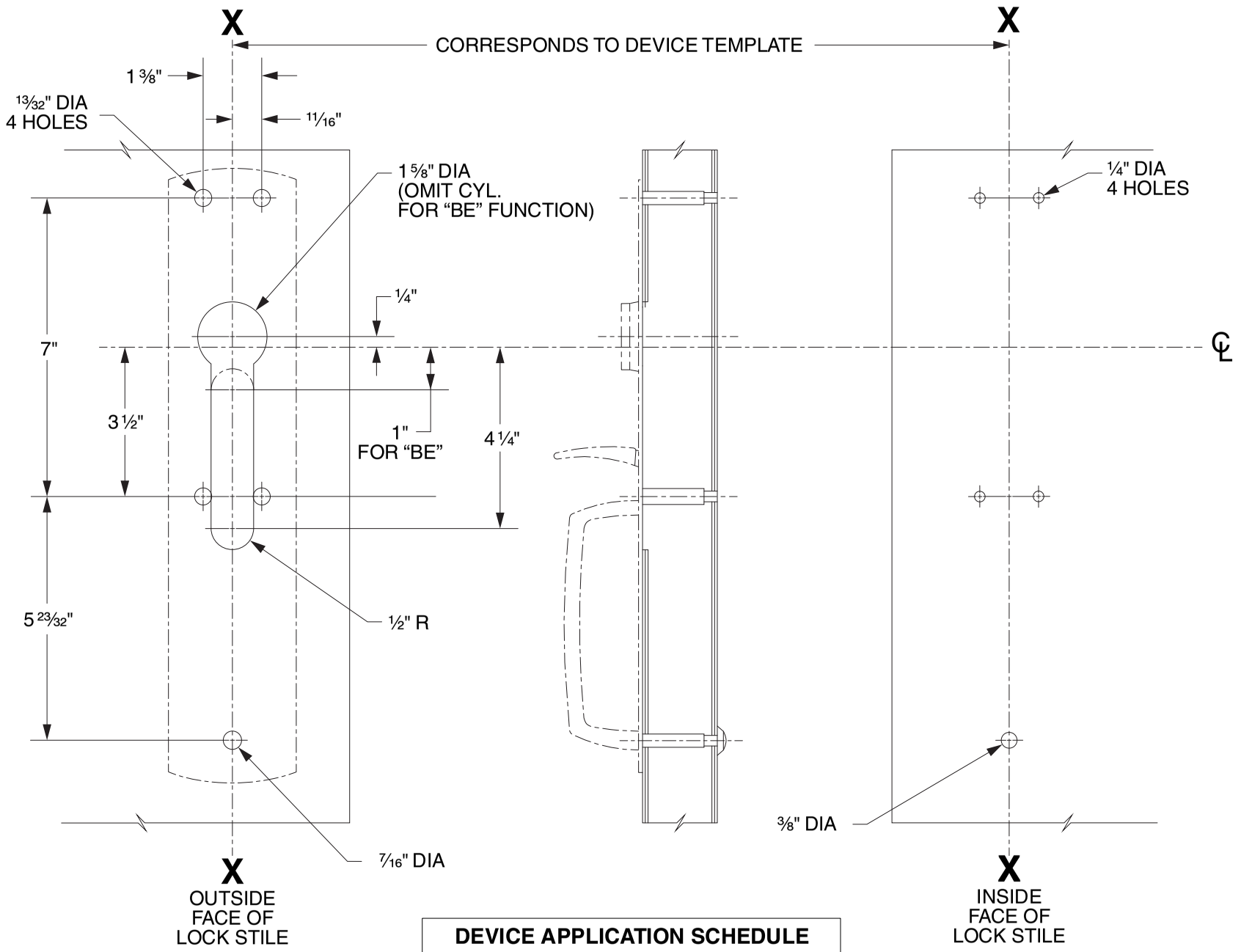

DEVICE APPLICATION SCHEDULE
98/99 SERIES RIM DEVICE
9827/9927 SERIES DEVICE
9847/9947 SERIES DEVICE
9849/9949 SERIES DEVICE

LHR SHOWN
RHR OPPOSITE

VON DUPRIN®

TEMPLATE NUMBER: 20265_C

DATE: 05-31-13

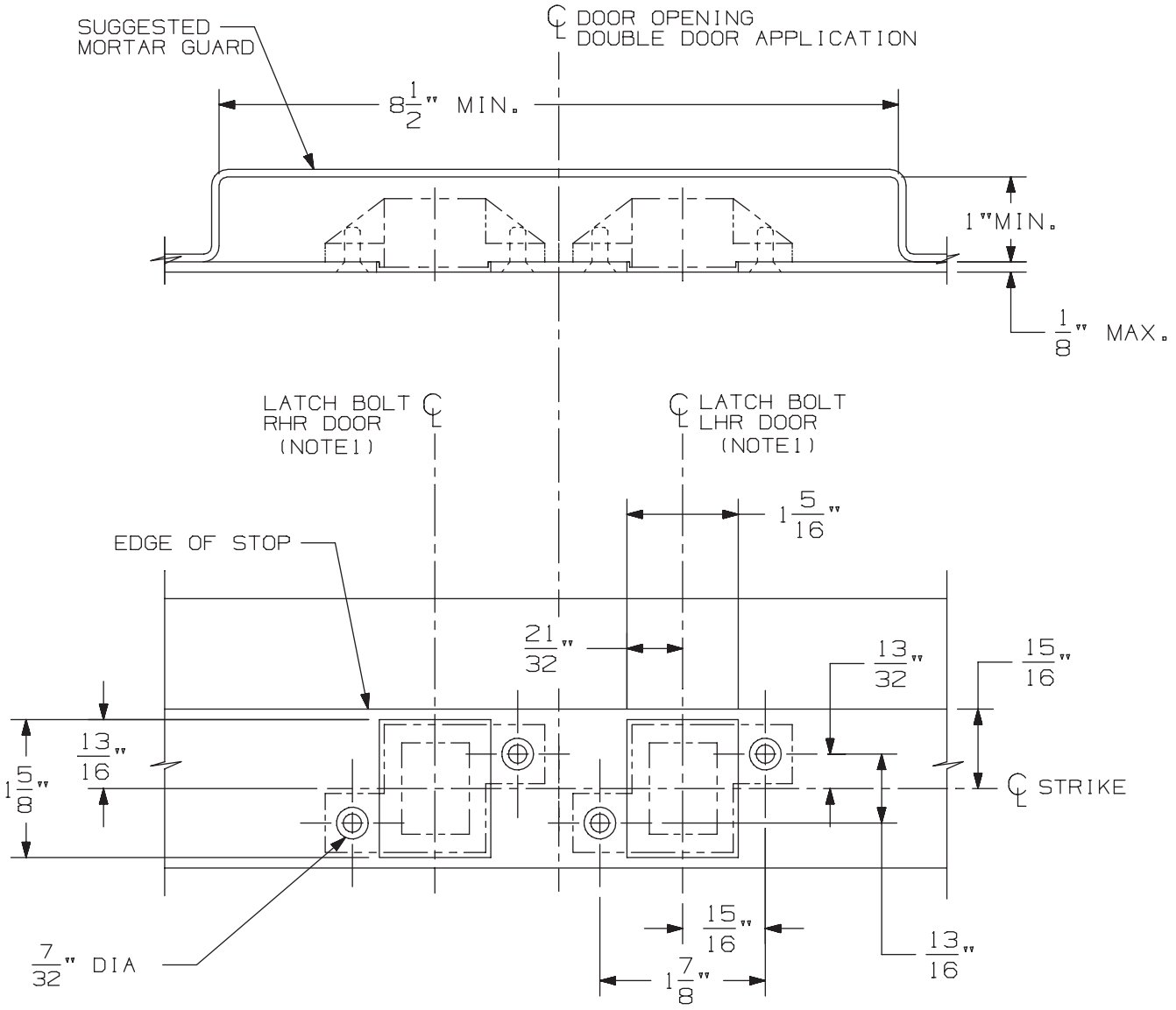

3/8" DIA X 82° C'SINK

IN FRAME
2 HOLES
EACH STRIKE

DOUBLE DOOR APPLICATION SHOWN.
FOR SINGLE DOOR APPLICATION USE
APPROPRIATE HANDING AS SHOWN.

DEVICE APPLICATION SCHEDULE
33/3547 & 33/3547-F SERIES DEVICE
98/99/47 & 98/99/47-F SERIES DEVICE
5547/5547 WDC SERIES
33/3547A & 33/3547A-F SERIES DEVICE
(9) 94/9547 SERIES DEVICE

NOTES: 1. SEE DEVICE TEMPLATE FOR LOCATION OF LATCH BOLT.

2. IF DEVICE IS TO BE MOUNTED ON WOOD DOORS, SEE WOOD DOOR TEMPLATE FOR LATCH BOLT LOCATION.

338 Strike for Hollow Metal Frame Preparation

VON DUPRIN®

NOTES: SEE MASTER SHEET #10001 FOR SUGGESTED REINFORCING

TEMPLATE NUMBER: 30038_a

DATE: 05-23-13

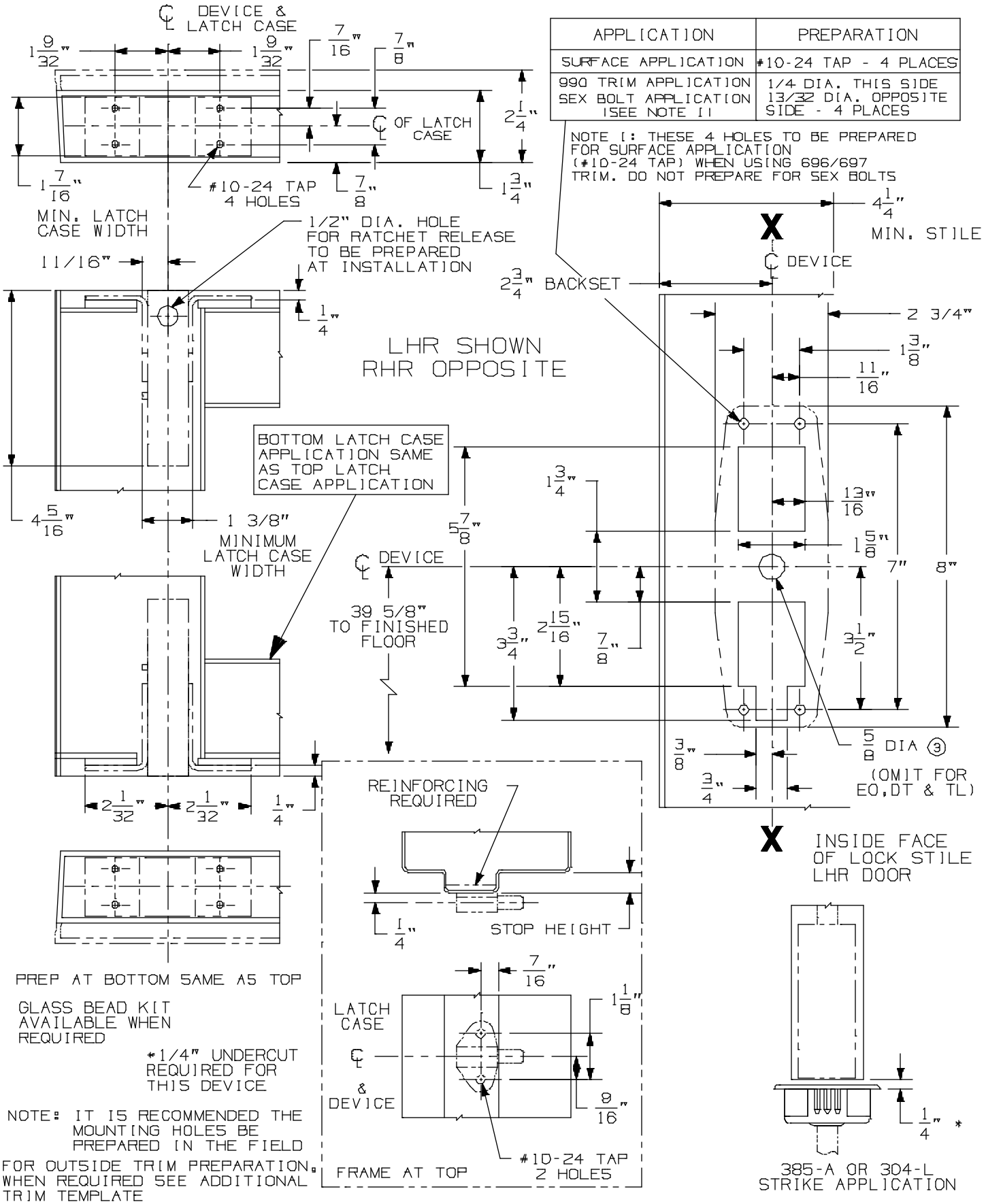

APPLICATION	PREPARATION
SURFACE APPLICATION	#10-24 TAP - 4 PLACES
990 TRIM APPLICATION SEX BOLT APPLICATION (SEE NOTE 1)	1/4 DIA. THIS SIDE 13/32 DIA. OPPOSITE SIDE - 4 PLACES

CX98/9947-F & CX98/9948-F Series Concealed Vertical Rod Device

VON DUPRIN®

NOTES: SEE MASTER SHEET #10001 FOR SUGGESTED REINFORCING

TEMPLATE NUMBER: 10359_a

DATE: 05-22-13

990 DT TRIM

NOTES: SEE MASTER SHEET #10001 FOR SUGGESTED REINFORCING

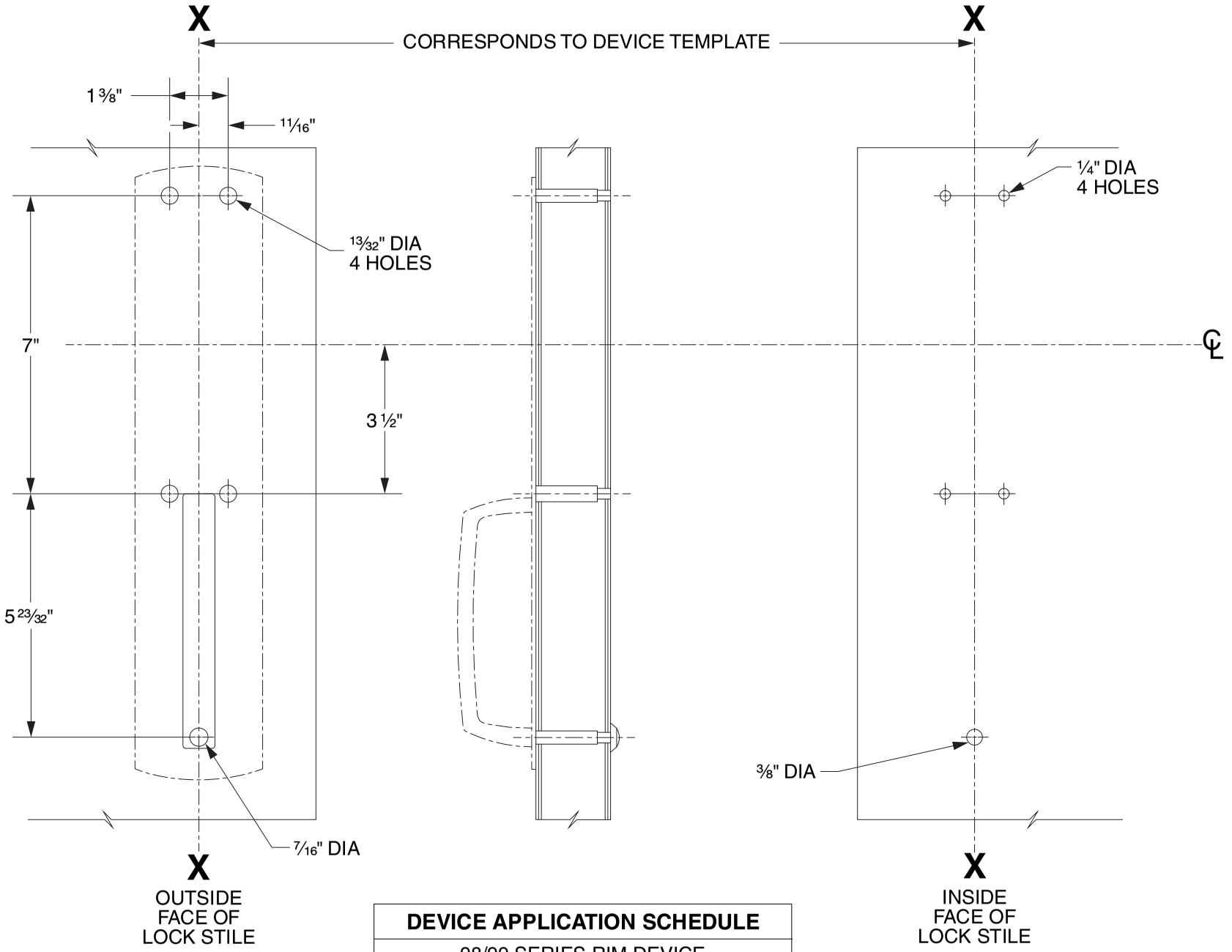

DEVICE APPLICATION SCHEDULE
98/99 SERIES RIM DEVICE
9827/9927 SERIES DEVICE
9847/9947 SERIES DEVICE
9849/9949 SERIES DEVICE
9875/9975 SERIES DEVICE

LHR SHOWN
RHR OPPOSITE

VON DUPRIN®

TEMPLATE NUMBER: 20268_C

DATE: 05-31-13

376-T Control

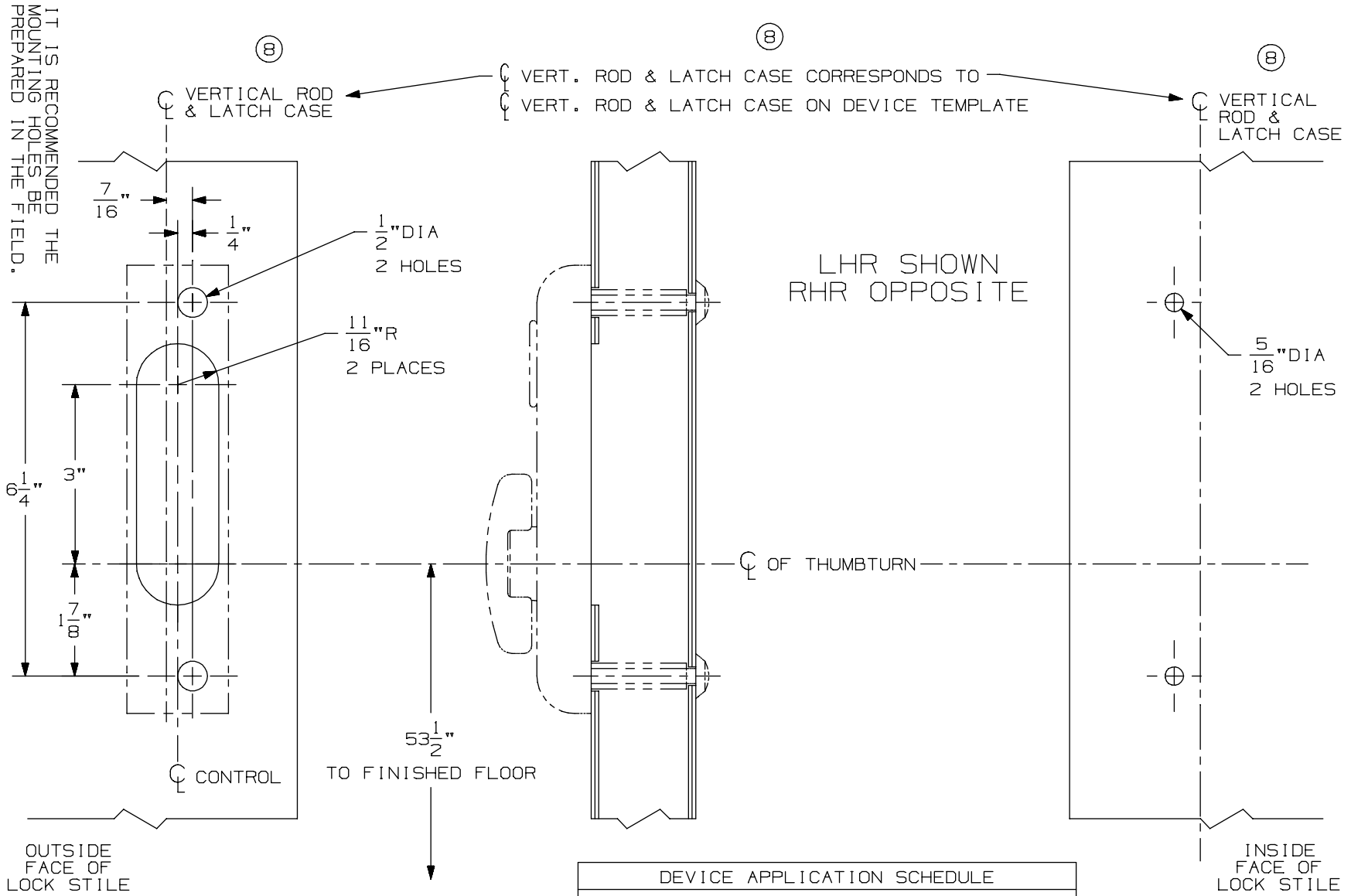

DEVICE APPLICATION SCHEDULE
5547/5547-F VERT. ROD DEVICE
8847-F VERT. ROD DEVICE
* 3347/3547 VERT. ROD DEVICE
3347-F/3547-F VERT. ROD DEVICE
⑧ * 3347A/3547A VERT. ROD DEVICE
⑧ 3347A-F/3547A-F VERT. ROD DEVICE
9847/9947 VERT. ROD DEVICE
9847-F/9947-F VERTICAL ROD DEVICE

⑧ * NOT TO BE USED WITH 1 1/16" LATCH CASE BACKSET ON BULLNOSE EDGE DOORS WITH WEATHERSTRIP CHANNEL.

NOTES: SEE MASTER SHEET #10001 FOR SUGGESTED REINFORCING

TEMPLATE NUMBER: 40114_a

DATE: 05-28-13

VON DUPRIN®

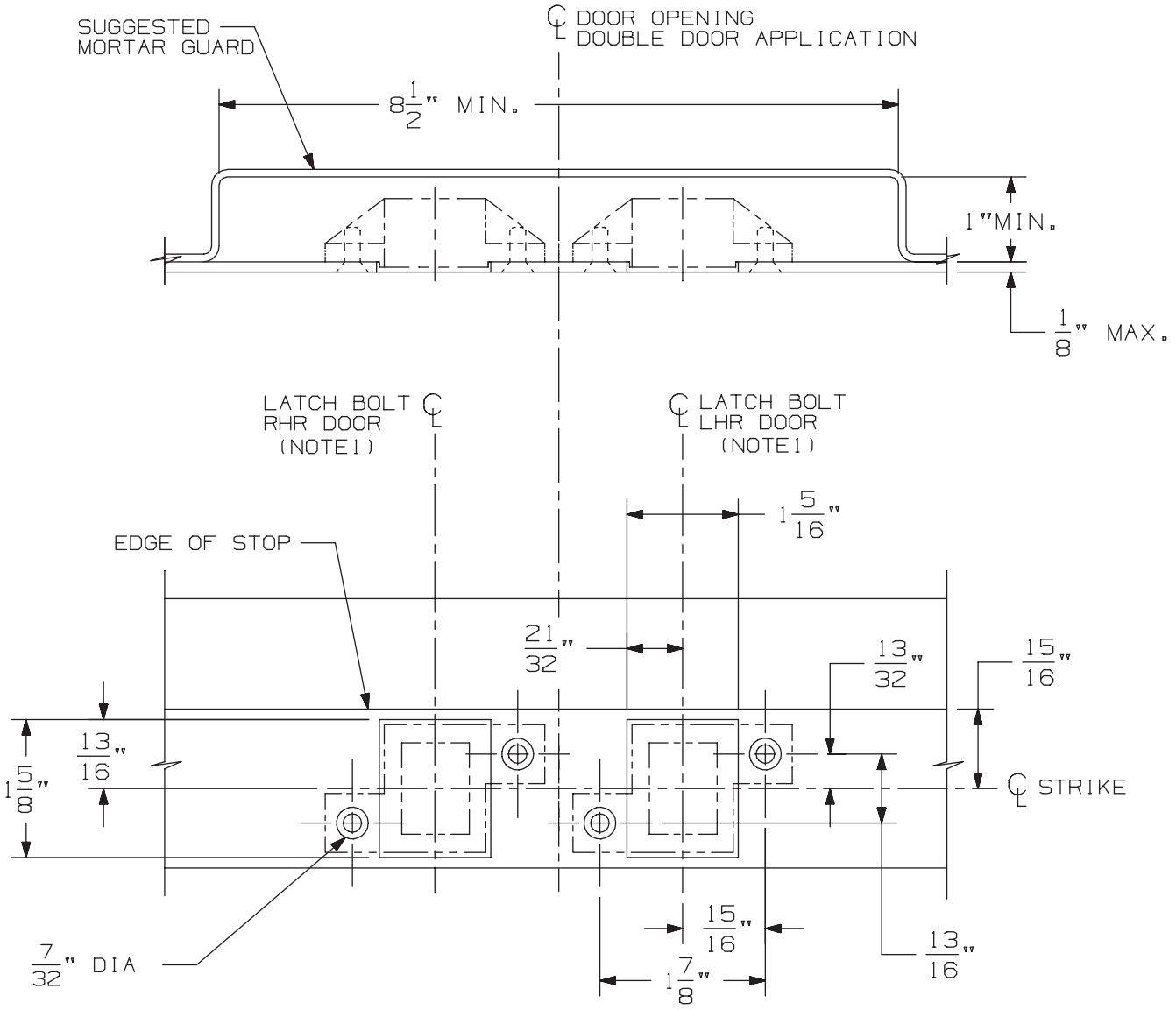

3/8" DIA X 82° C'SINK

IN FRAME
2 HOLES
EACH STRIKE

DOUBLE DOOR APPLICATION SHOWN.
FOR SINGLE DOOR APPLICATION USE
APPROPRIATE HANDING AS SHOWN.

DEVICE APPLICATION SCHEDULE
33/3547 & 33/3547-F SERIES DEVICE
98/99/47 & 98/99/47-F SERIES DEVICE
5547/5547 WDC SERIES
33/3547A & 33/3547A-F SERIES DEVICE
(9) 94/9547 SERIES DEVICE

NOTES: 1. SEE DEVICE TEMPLATE FOR LOCATION OF LATCH BOLT.

2. IF DEVICE IS TO BE MOUNTED ON WOOD DOORS, SEE WOOD DOOR TEMPLATE FOR LATCH BOLT LOCATION.

338 Strike for Hollow Metal Frame Preparation

VON DUPRIN®

NOTES: SEE MASTER SHEET #10001 FOR SUGGESTED REINFORCING

TEMPLATE NUMBER: 30038_a

DATE: 05-23-13

98 / 99 Series Chex-it® Exit Devices - CX9875 and CX9975 Mortise

CX9875/9975 Series Mortise Lock Devices

NOTES: SEE MASTER SHEET #10001 FOR SUGGESTED REINFORCING

TEMPLATE NUMBER: 10358_a

DATE: 05-22-13

VON DUPRIN®

NOTES:
1. THESE FOUR HOLES TO BE PREPARED FOR SURFACE APPLICATION WHEN USING 696/697 TRIM. DO NOT PREPARE FOR SEX BOLTS.
2. FOR STOCK HOLLOW METAL DOORS SEE TEMPLATE NUMBER 10312 FOR TYPE '86' CUTOUT.
3. GLASS BEAD KIT AVAILABLE WHEN REQUIRED.
4. WIRING TO SS7500 & E7500 LOCKS GO THROUGH DOOR NOT DEVICE.
5. FOR OUTSIDE TRIM PREPARATION, WHEN REQUIRED, SEE TRIM TEMPLATE.
6. CX DEVICE WIRES EXIT DEVICE NEAR HINGE SIDE.

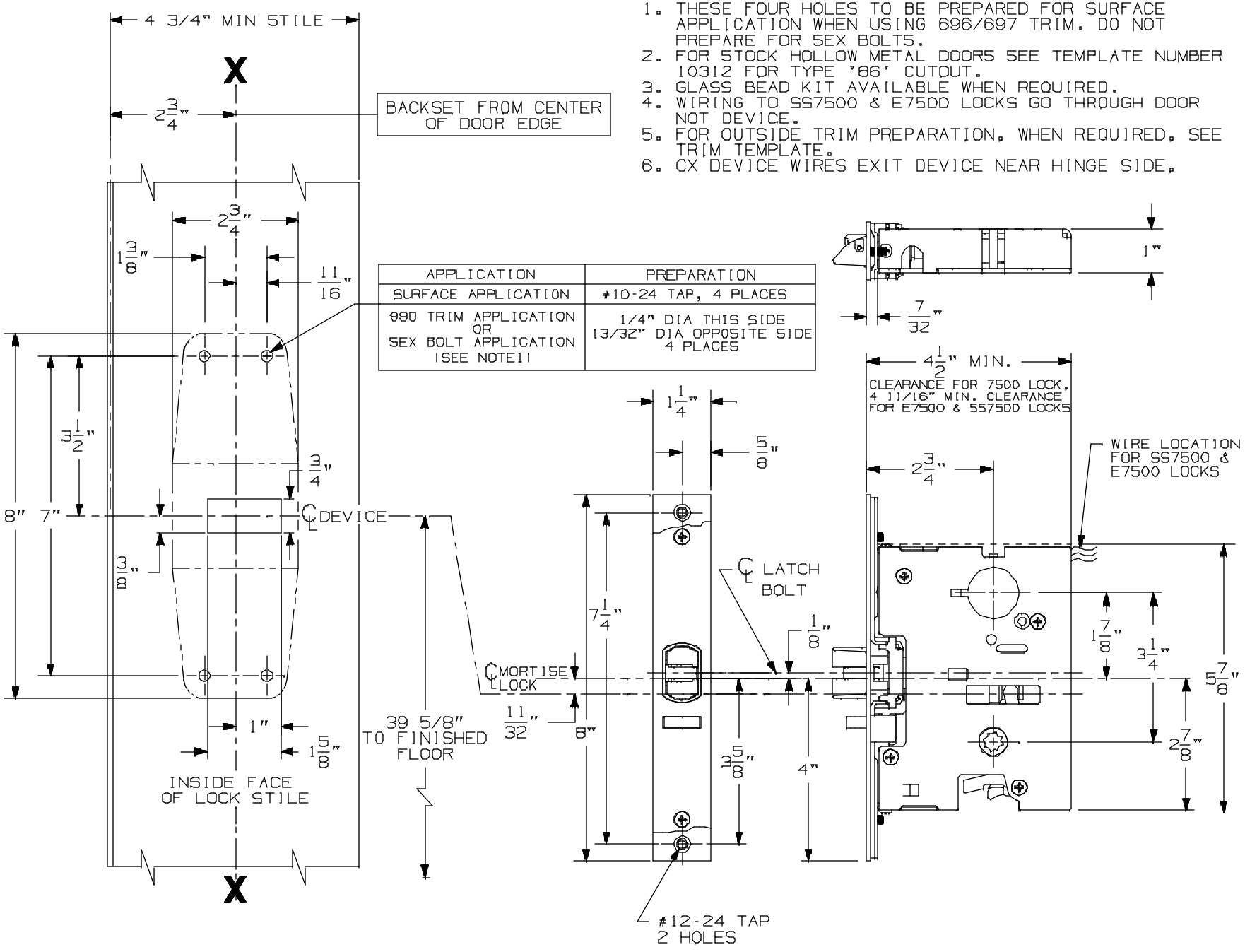

APPLICATION	PREPARATION
SURFACE APPLICATION	#10-24 TAP, 4 PLACES
990 TRIM APPLICATION OR SEX BOLT APPLICATION (SEE NOTE11	1/4" DIA THIS SIDE 13/32" DIA OPPOSITE SIDE 4 PLACES

LHR APPLICATION SHOWN,
RHR APPLICATION OPPOSITE

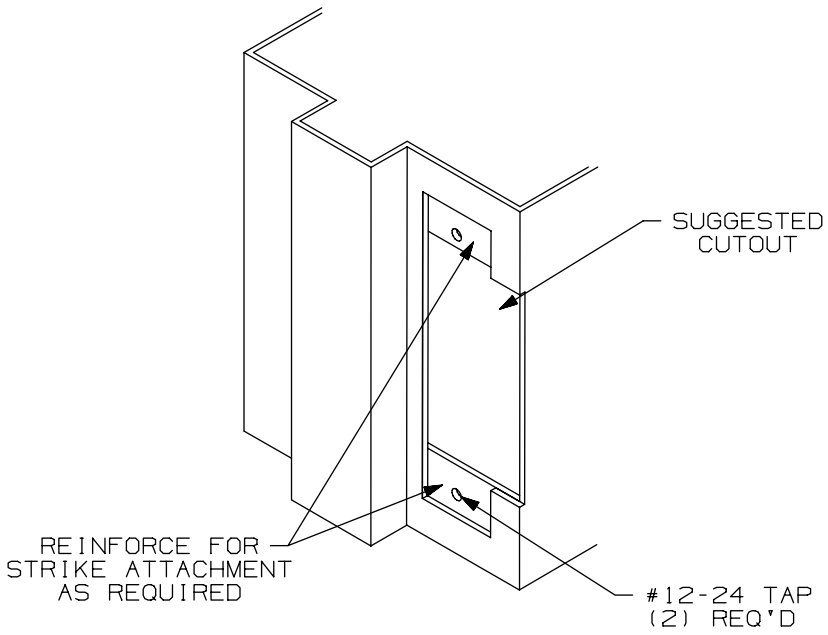

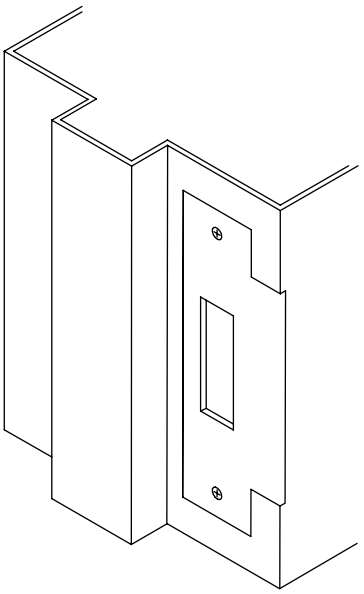

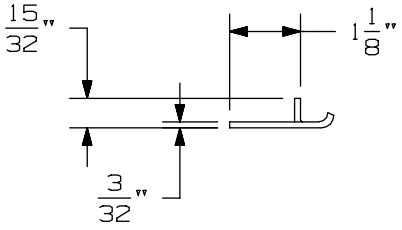

APPLICATION SCHEDULE	
DEVICE	DIM. "A"
9875 & 9875-F	11/16
9975 & 9975-F	11/16
8875 & 8875-F	1/2
5575 & 5575-F	1/2

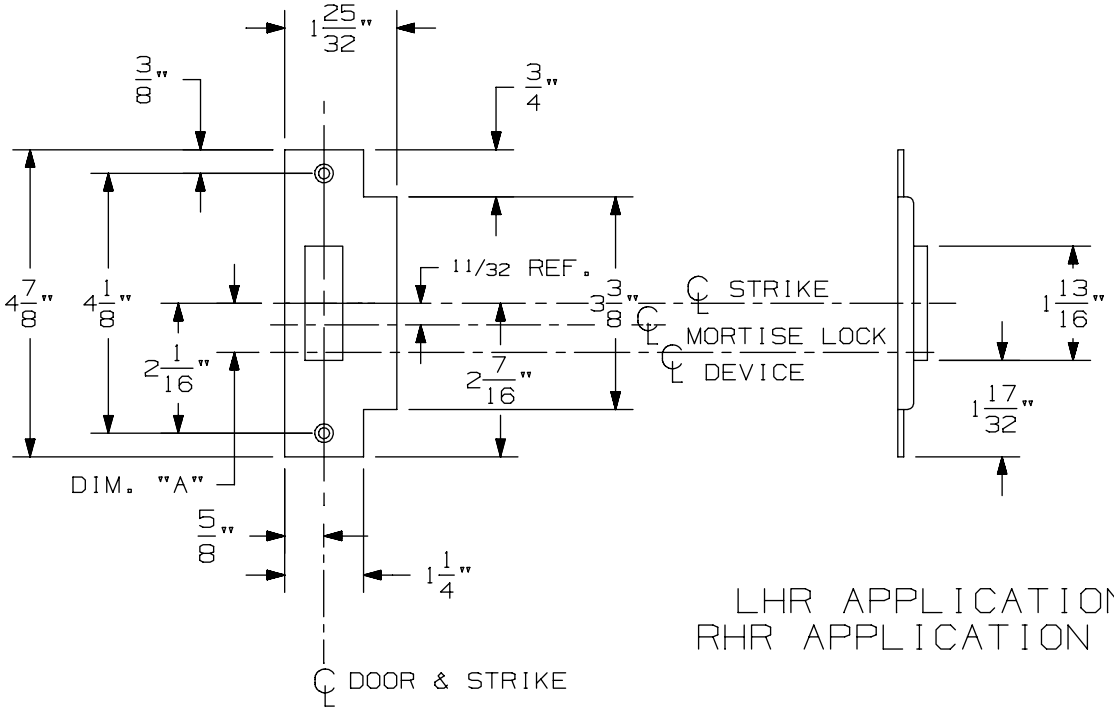

LHR APPLICATION SHOWN
RHR APPLICATION OPPOSITE

575 Mortise Strike (Single Door) for 7500 Mortise Lock

VON DUPRIN®

NOTES: SEE MASTER SHEET #10001 FOR SUGGESTED REINFORCING

TEMPLATE NUMBER: 30210_b

DATE: 07-22-13

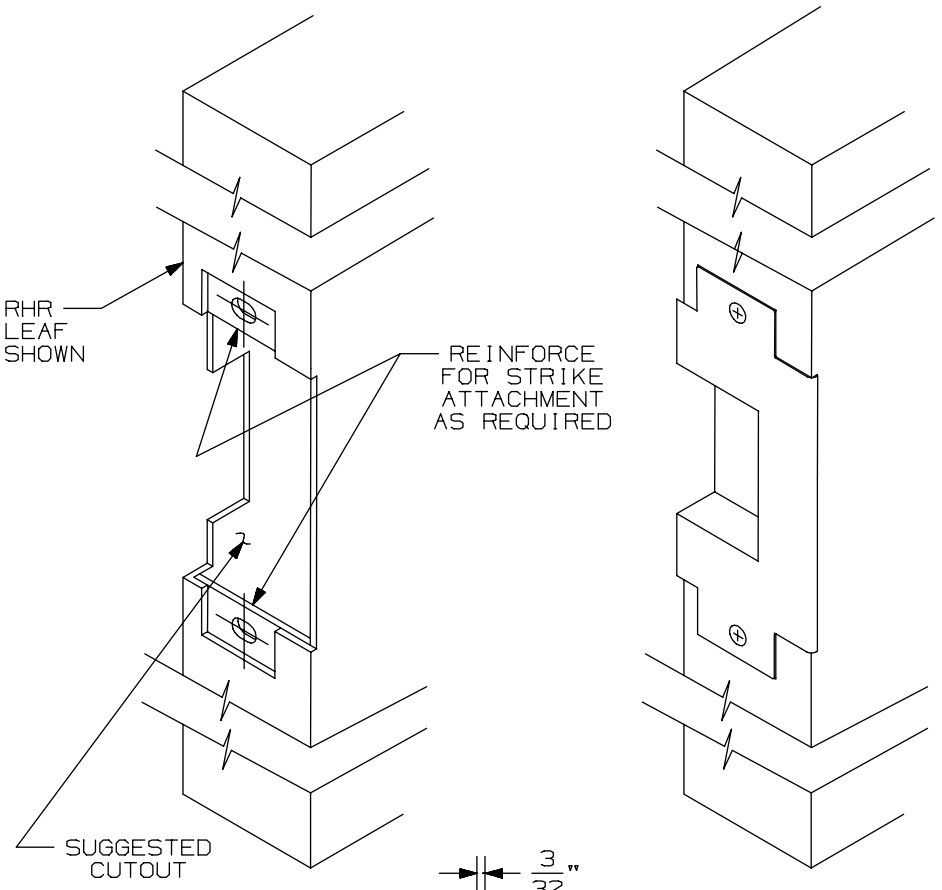

APPLICATION SCHEDULE	
DEVICE	DIM."A"
9875 & 9875-F	11/16
9975 & 9975-F	11/16
8875 & 8875-F	1/2
5575 & 5575-F	1/2

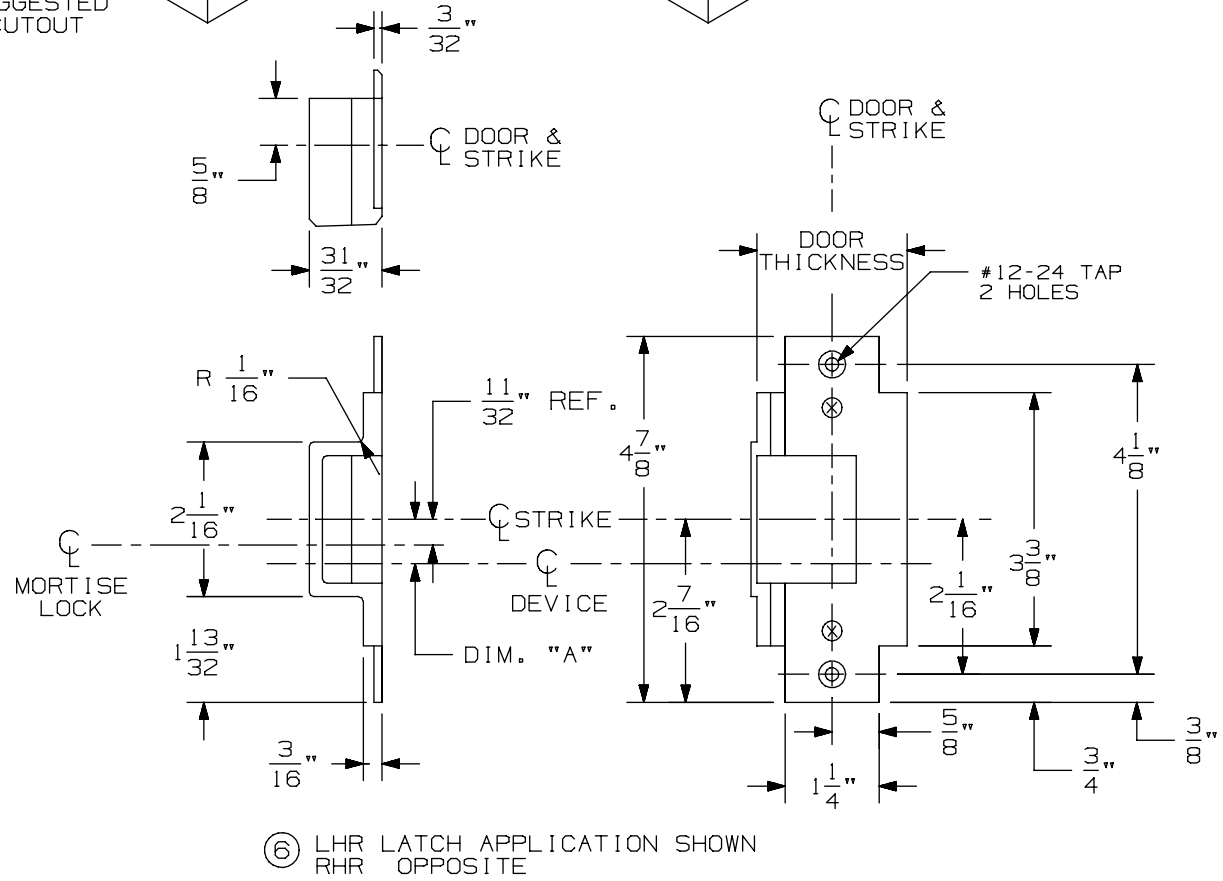

⑥ LHR LATCH APPLICATION SHOWN
RHR OPPOSITE

576A & 576B Mortise Strike for 7500 Mortise Lock

VON DUPRIN®

NOTES: SEE MASTER SHEET #10001 FOR SUGGESTED REINFORCING

TEMPLATE NUMBER: 30211_a

DATE: 05-28-13

CX9875/9975 Series Mortise Lock Devices

NOTES: SEE MASTER SHEET #10001 FOR SUGGESTED REINFORCING

TEMPLATE NUMBER: 10358_a

DATE: 05-22-13

VON DUPRIN®

NOTES:
1. THESE FOUR HOLES TO BE PREPARED FOR SURFACE APPLICATION WHEN USING 696/697 TRIM. DO NOT PREPARE FOR SEX BOLTS.
2. FOR STOCK HOLLOW METAL DOORS SEE TEMPLATE NUMBER 10312 FOR TYPE '86' CUTOUT.
3. GLASS BEAD KIT AVAILABLE WHEN REQUIRED.
4. WIRING TO SS7500 & E7500 LOCKS GO THROUGH DOOR NOT DEVICE.
5. FOR OUTSIDE TRIM PREPARATION, WHEN REQUIRED, SEE TRIM TEMPLATE.
6. CX DEVICE WIRES EXIT DEVICE NEAR HINGE SIDE.

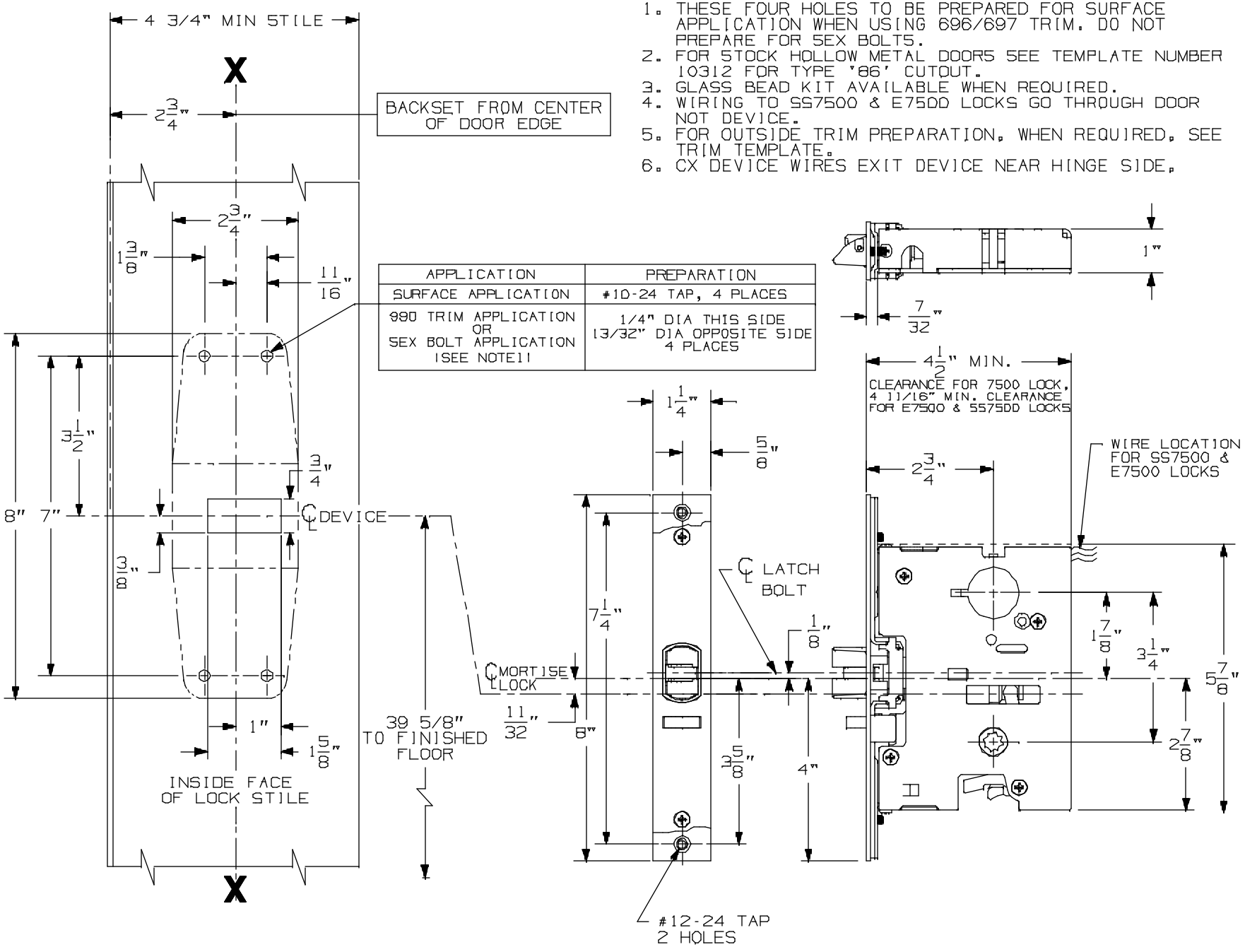

APPLICATION	PREPARATION
SURFACE APPLICATION	#10-24 TAP, 4 PLACES
990 TRIM APPLICATION OR SEX BOLT APPLICATION (SEE NOTE11	1/4" DIA THIS SIDE 13/32" DIA OPPOSITE SIDE 4 PLACES

LHR APPLICATION SHOWN,
RHR APPLICATION OPPOSITE

990 DT TRIM

NOTES: SEE MASTER SHEET #10001 FOR SUGGESTED REINFORCING

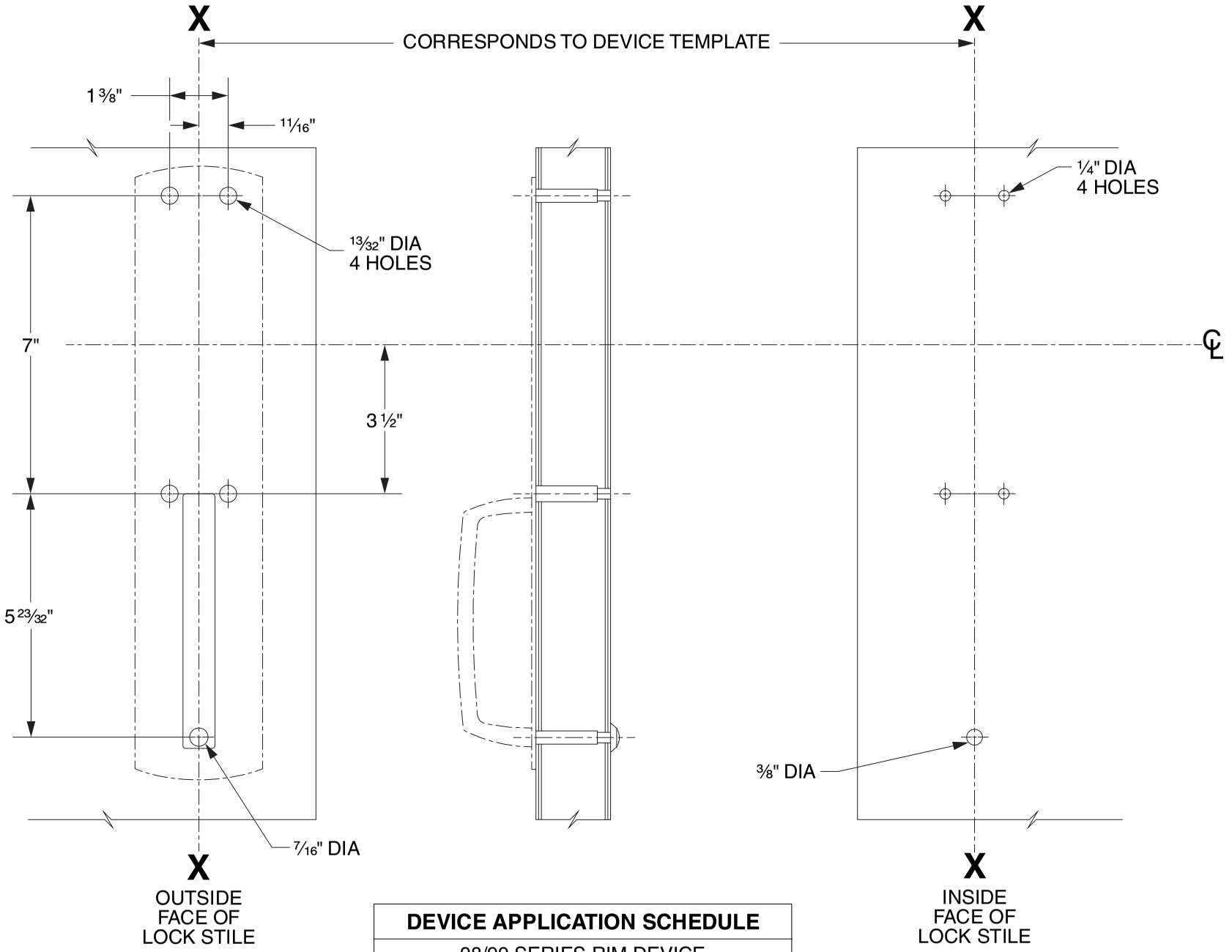

DEVICE APPLICATION SCHEDULE
98/99 SERIES RIM DEVICE
9827/9927 SERIES DEVICE
9847/9947 SERIES DEVICE
9849/9949 SERIES DEVICE
9875/9975 SERIES DEVICE

LHR SHOWN
RHR OPPOSITE

VON DUPRIN®

TEMPLATE NUMBER: 20268_C

DATE: 05-31-13

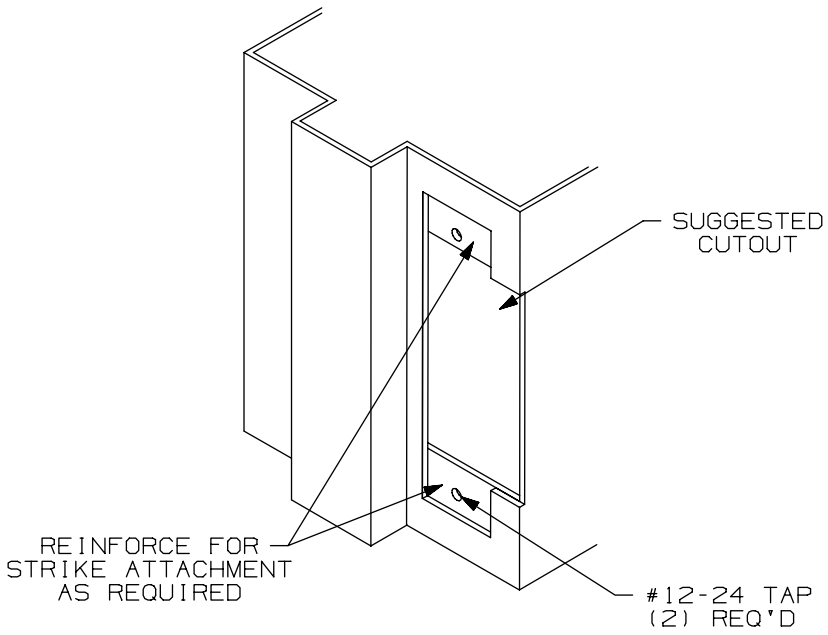

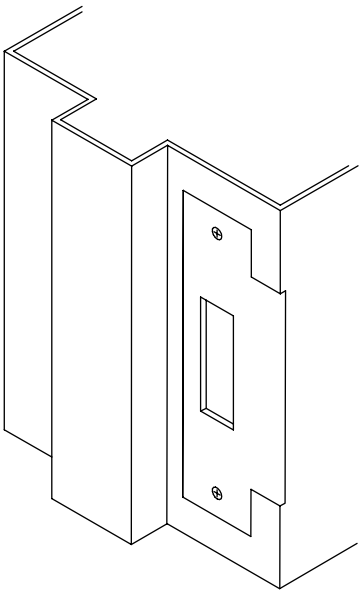

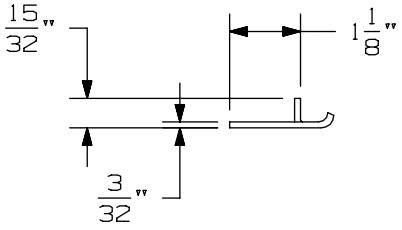

APPLICATION SCHEDULE	
DEVICE	DIM. "A"
9875 & 9875-F	11/16
9975 & 9975-F	11/16
8875 & 8875-F	1/2
5575 & 5575-F	1/2

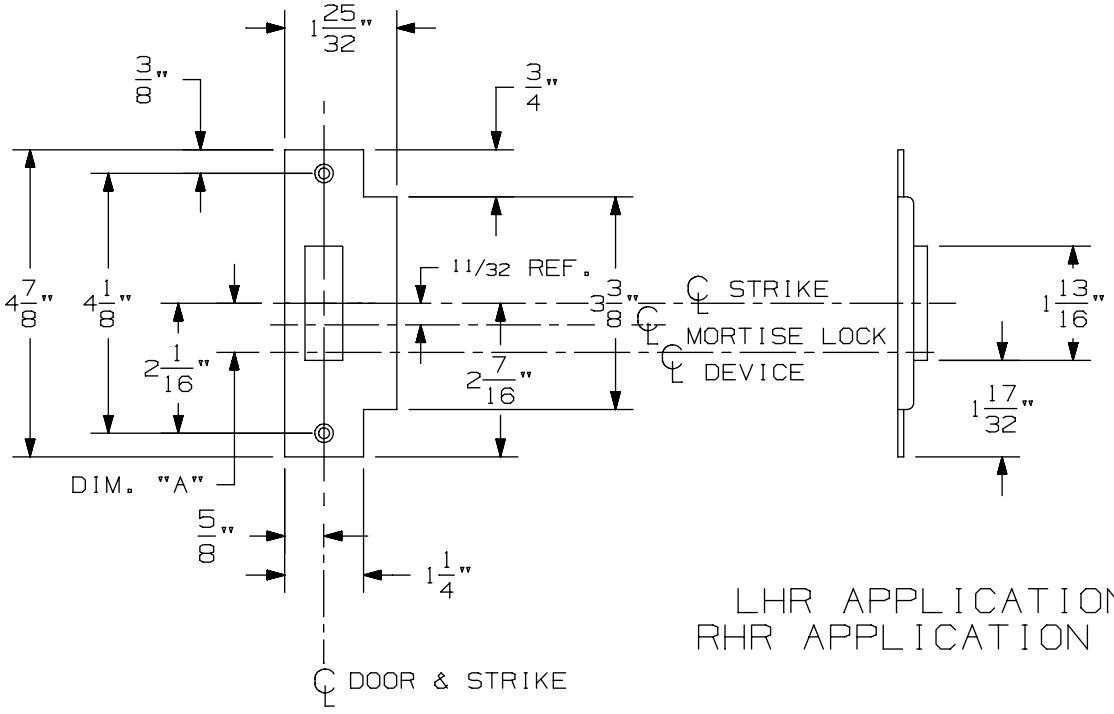

LHR APPLICATION SHOWN
RHR APPLICATION OPPOSITE

575 Mortise Strike (Single Door) for 7500 Mortise Lock

VON DUPRIN®

NOTES: SEE MASTER SHEET #10001 FOR SUGGESTED REINFORCING

TEMPLATE NUMBER: 30210_b

DATE: 07-22-13

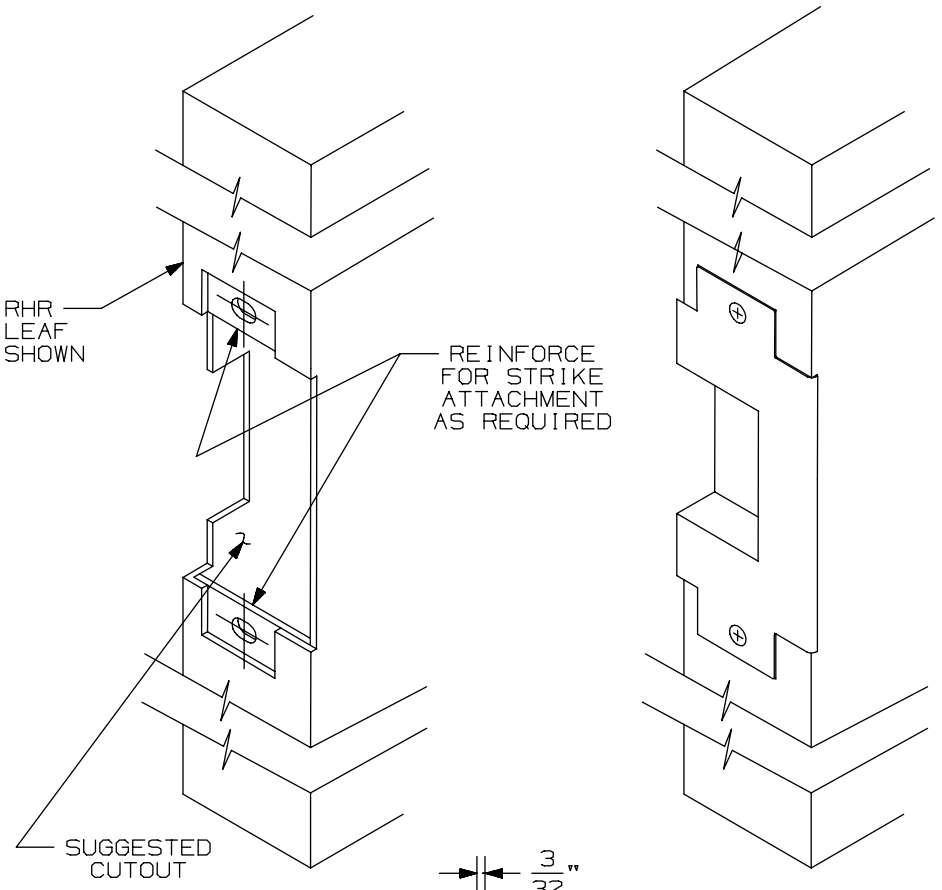

APPLICATION SCHEDULE	
DEVICE	DIM."A"
9875 & 9875-F	11/16
9975 & 9975-F	11/16
8875 & 8875-F	1/2
5575 & 5575-F	1/2

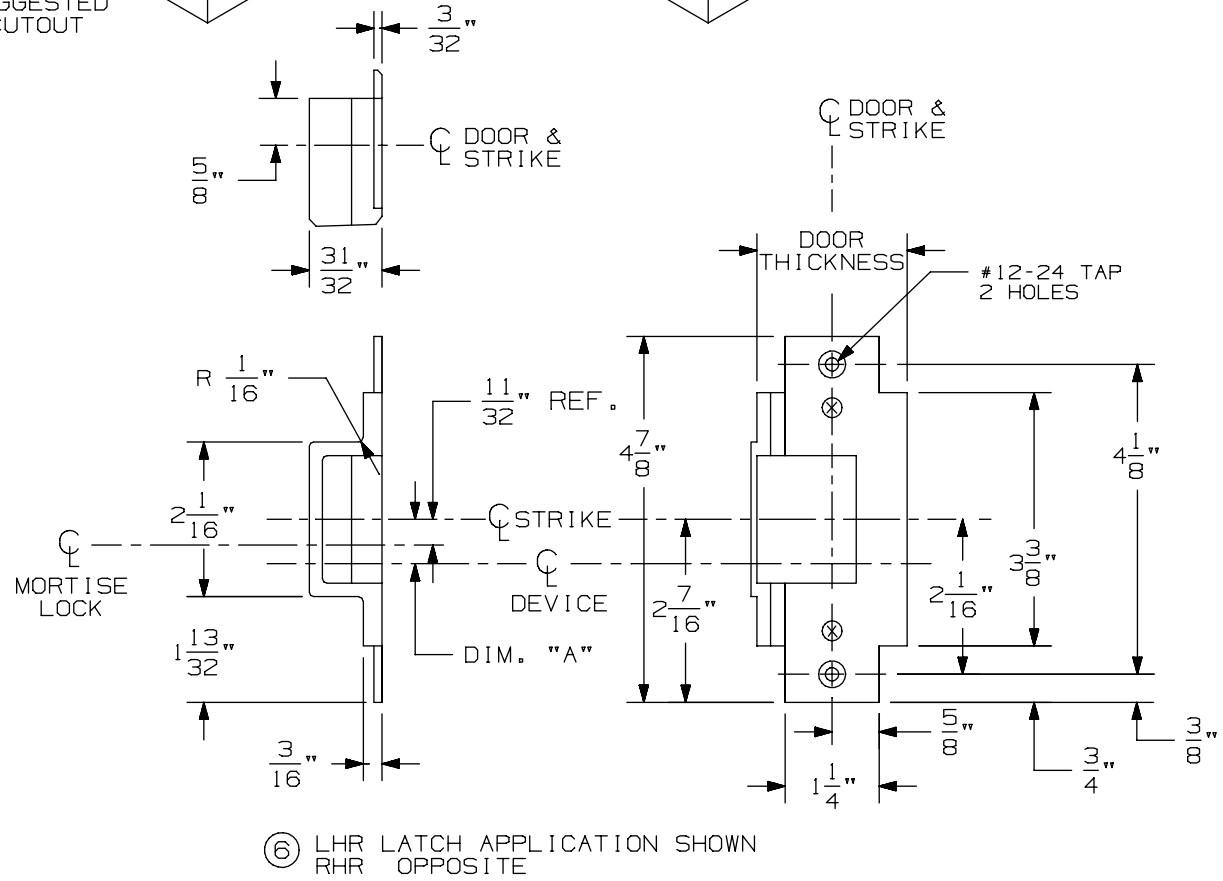

⑥ LHR LATCH APPLICATION SHOWN
RHR OPPOSITE

576A & 576B Mortise Strike for 7500 Mortise Lock

VON DUPRIN®

NOTES: SEE MASTER SHEET #10001 FOR SUGGESTED REINFORCING

TEMPLATE NUMBER: 30211_a

DATE: 05-28-13

CX9875/9975 Series Mortise Lock Devices

NOTES: SEE MASTER SHEET #10001 FOR SUGGESTED REINFORCING

TEMPLATE NUMBER: 10358_a

DATE: 05-22-13

VON DUPRIN®

NOTES:
1. THESE FOUR HOLES TO BE PREPARED FOR SURFACE APPLICATION WHEN USING 696/697 TRIM. DO NOT PREPARE FOR SEX BOLTS.
2. FOR STOCK HOLLOW METAL DOORS SEE TEMPLATE NUMBER 10312 FOR TYPE '86' CUTOUT.
3. GLASS BEAD KIT AVAILABLE WHEN REQUIRED.
4. WIRING TO SS7500 & E7500 LOCKS GO THROUGH DOOR NOT DEVICE.
5. FOR OUTSIDE TRIM PREPARATION, WHEN REQUIRED, SEE TRIM TEMPLATE.
6. CX DEVICE WIRES EXIT DEVICE NEAR HINGE SIDE.

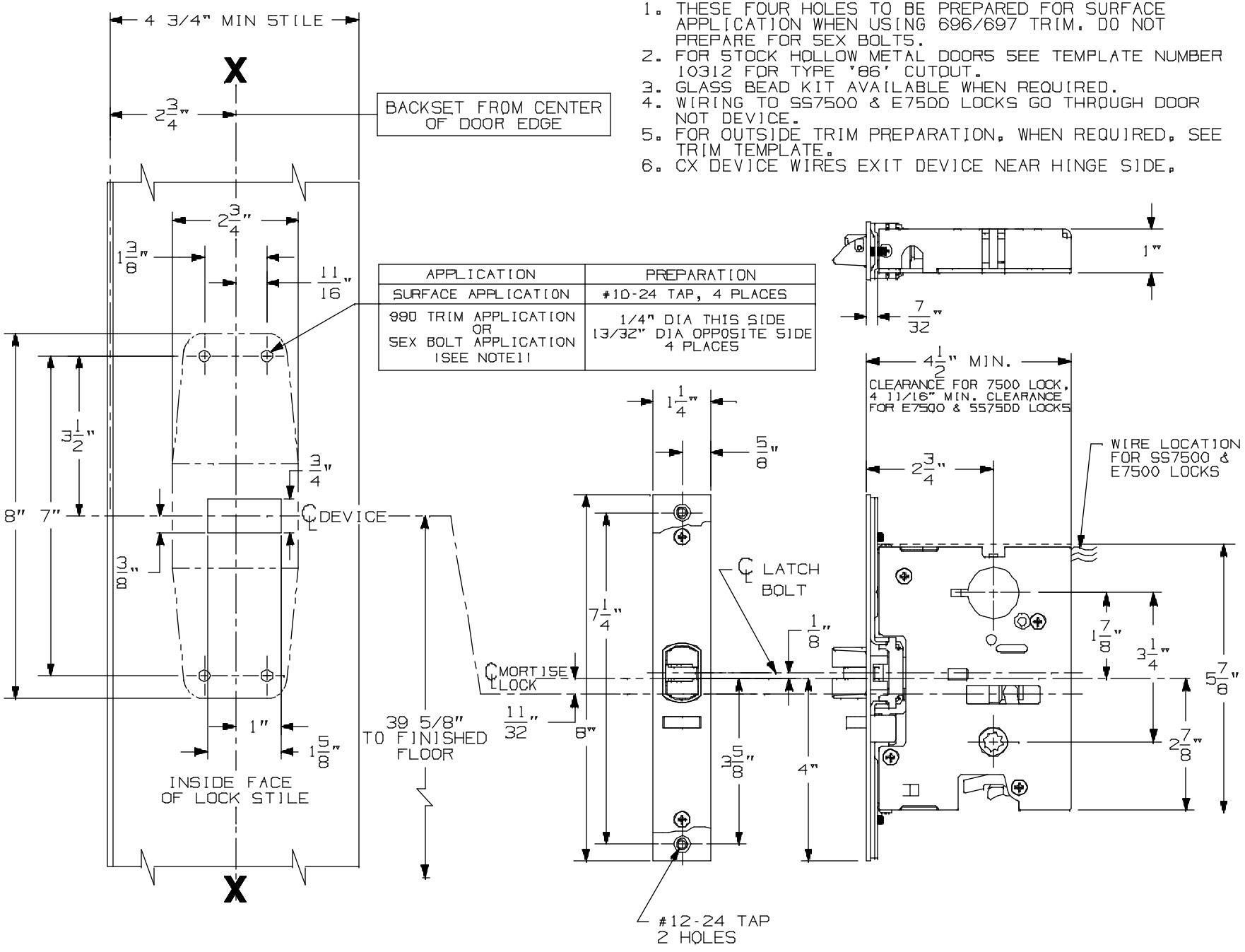

APPLICATION	PREPARATION
SURFACE APPLICATION	#10-24 TAP, 4 PLACES
990 TRIM APPLICATION OR SEX BOLT APPLICATION (SEE NOTE11	1/4" DIA THIS SIDE 13/32" DIA OPPOSITE SIDE 4 PLACES

LHR APPLICATION SHOWN,
RHR APPLICATION OPPOSITE

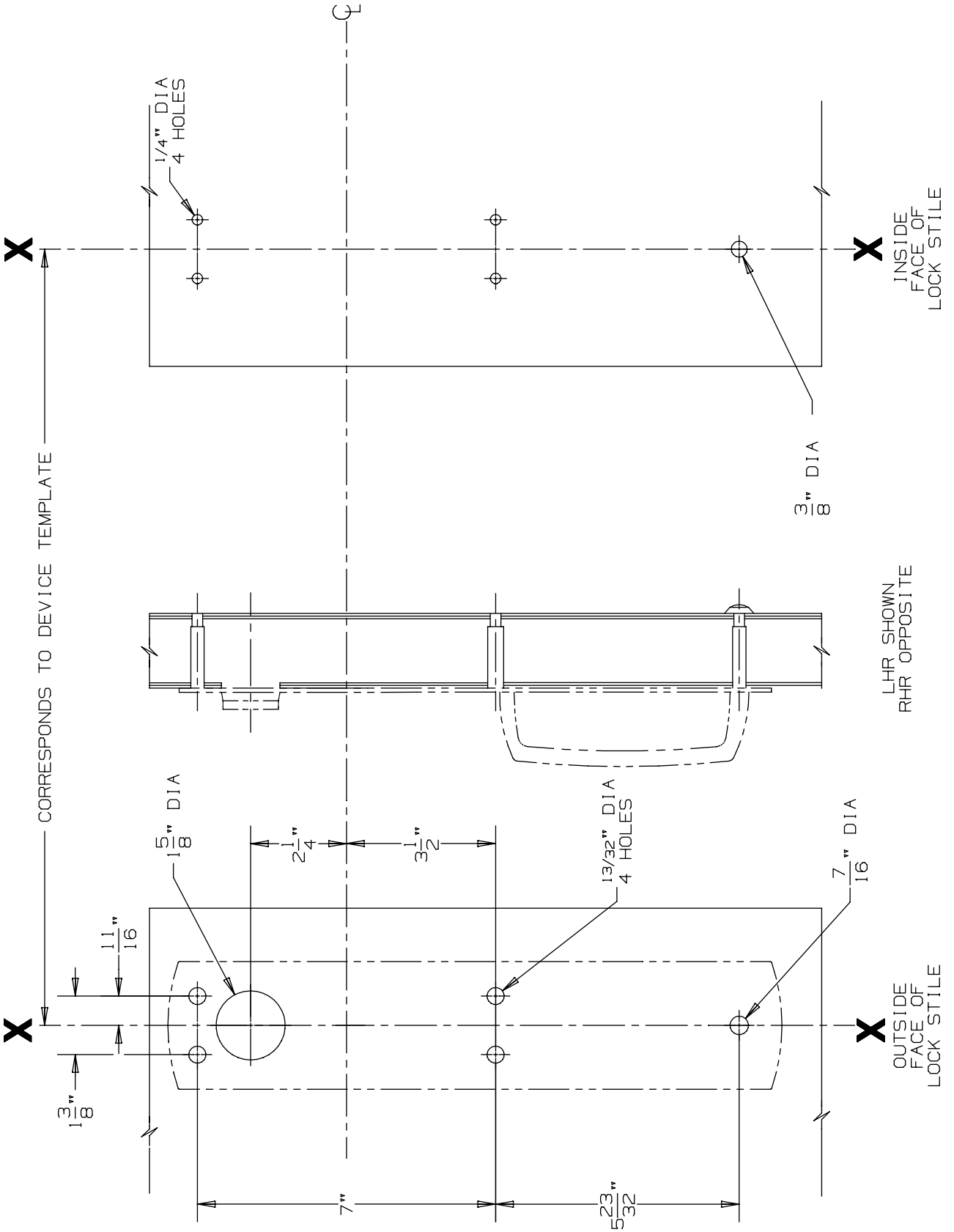

DEVICE APPLICATION SCHEDULE
9875/9975 SERIES DEVICE

990 NL Trim

VON DUPRIN®

NOTES: SEE MASTER SHEET #10001 FOR SUGGESTED REINFORCING

TEMPLATE NUMBER: 20271_a

DATE: 05-23-13

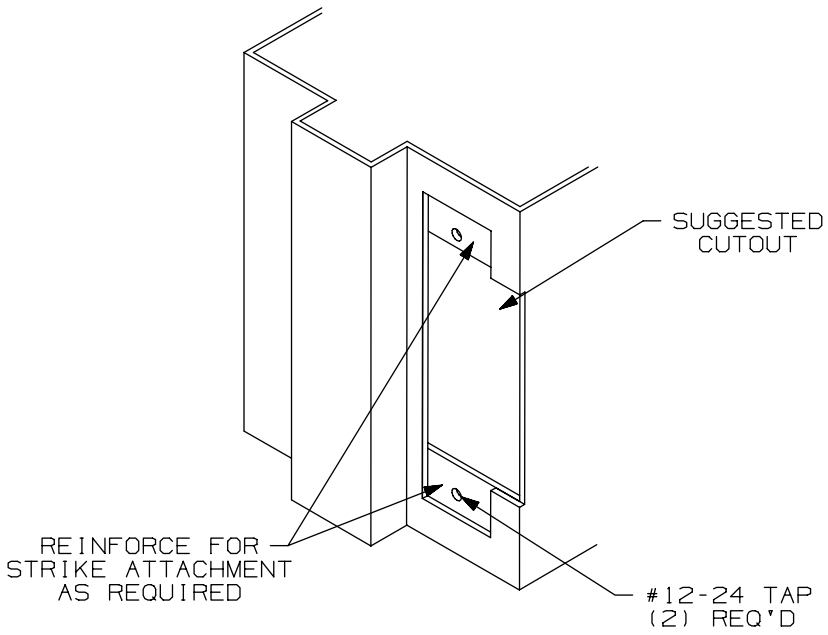

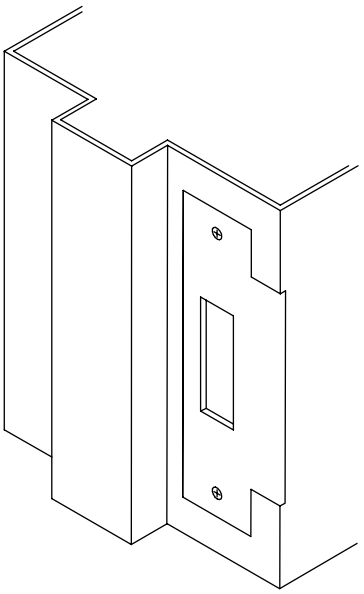

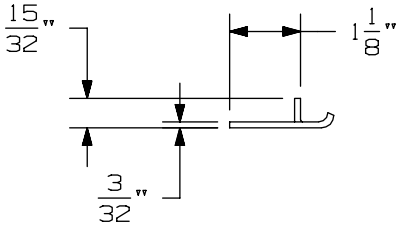

APPLICATION SCHEDULE	
DEVICE	DIM. "A"
9875 & 9875-F	11/16
9975 & 9975-F	11/16
8875 & 8875-F	1/2
5575 & 5575-F	1/2

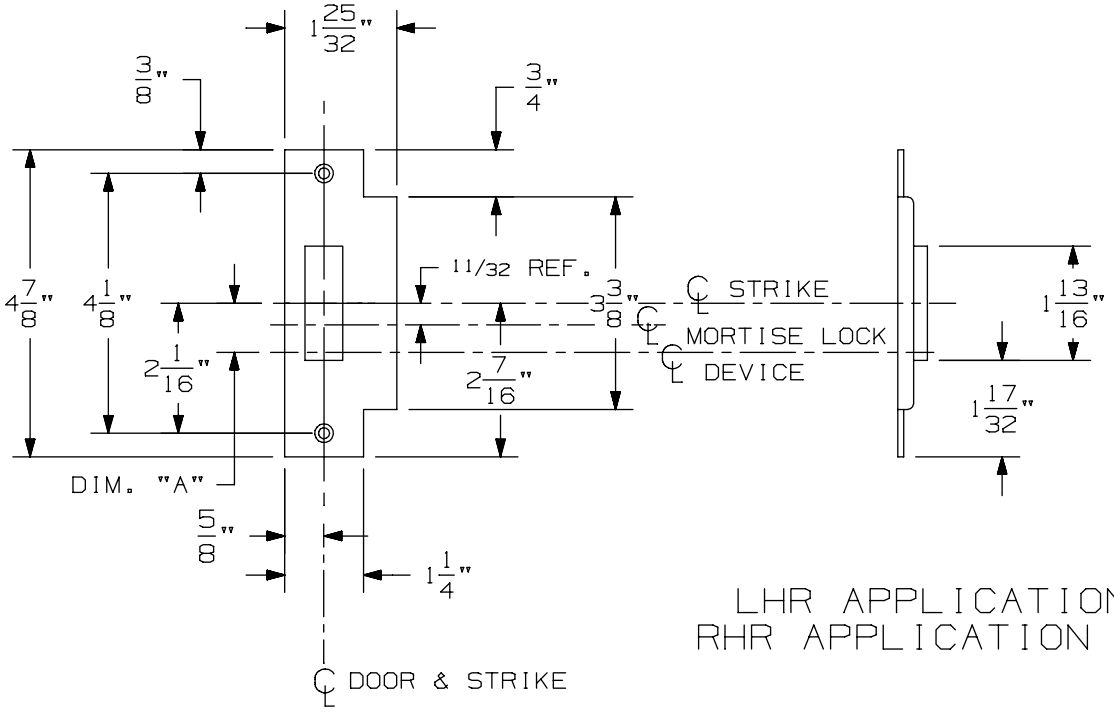

LHR APPLICATION SHOWN
RHR APPLICATION OPPOSITE

575 Mortise Strike (Single Door) for 7500 Mortise Lock

VON DUPRIN®

NOTES: SEE MASTER SHEET #10001 FOR SUGGESTED REINFORCING

TEMPLATE NUMBER: 30210_b

DATE: 07-22-13

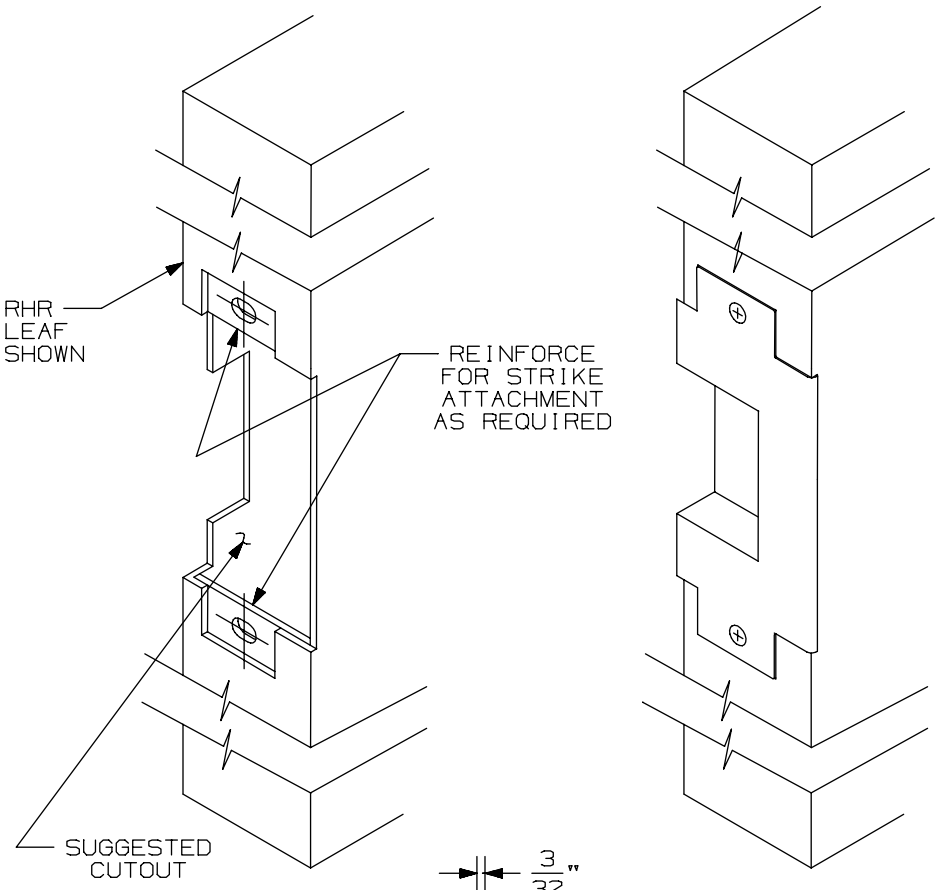

APPLICATION SCHEDULE	
DEVICE	DIM."A"
9875 & 9875-F	11/16
9975 & 9975-F	11/16
8875 & 8875-F	1/2
5575 & 5575-F	1/2

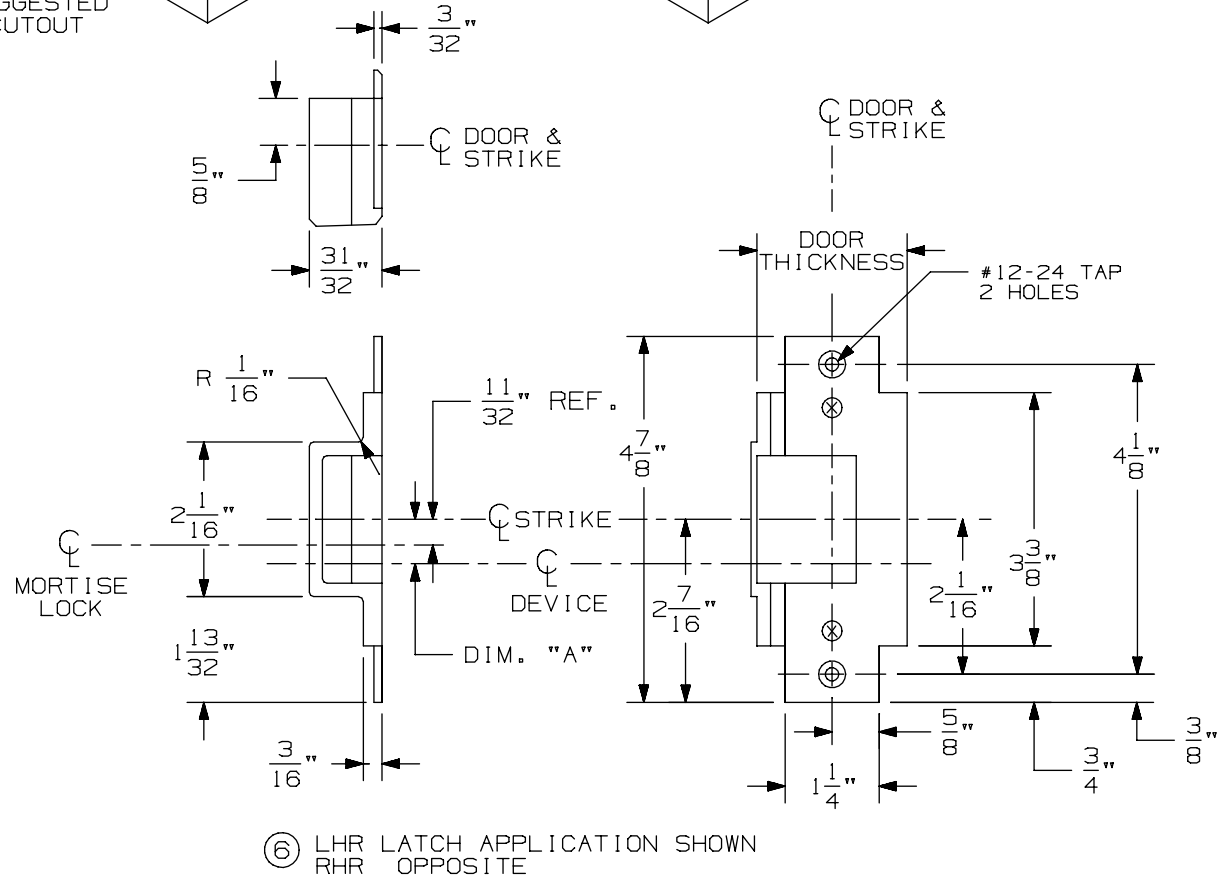

⑥ LHR LATCH APPLICATION SHOWN
RHR OPPOSITE

576A & 576B Mortise Strike for 7500 Mortise Lock

VON DUPRIN®

NOTES: SEE MASTER SHEET #10001 FOR SUGGESTED REINFORCING

TEMPLATE NUMBER: 30211_a

DATE: 05-28-13

CX9875/9975 Series Mortise Lock Devices

NOTES: SEE MASTER SHEET #10001 FOR SUGGESTED REINFORCING

TEMPLATE NUMBER: 10358_a

DATE: 05-22-13

VON DUPRIN®

NOTES:
1. THESE FOUR HOLES TO BE PREPARED FOR SURFACE APPLICATION WHEN USING 696/697 TRIM. DO NOT PREPARE FOR SEX BOLTS.
2. FOR STOCK HOLLOW METAL DOORS SEE TEMPLATE NUMBER 10312 FOR TYPE '86' CUTOUT.
3. GLASS BEAD KIT AVAILABLE WHEN REQUIRED.
4. WIRING TO SS7500 & E7500 LOCKS GO THROUGH DOOR NOT DEVICE.
5. FOR OUTSIDE TRIM PREPARATION, WHEN REQUIRED, SEE TRIM TEMPLATE.
6. CX DEVICE WIRES EXIT DEVICE NEAR HINGE SIDE.

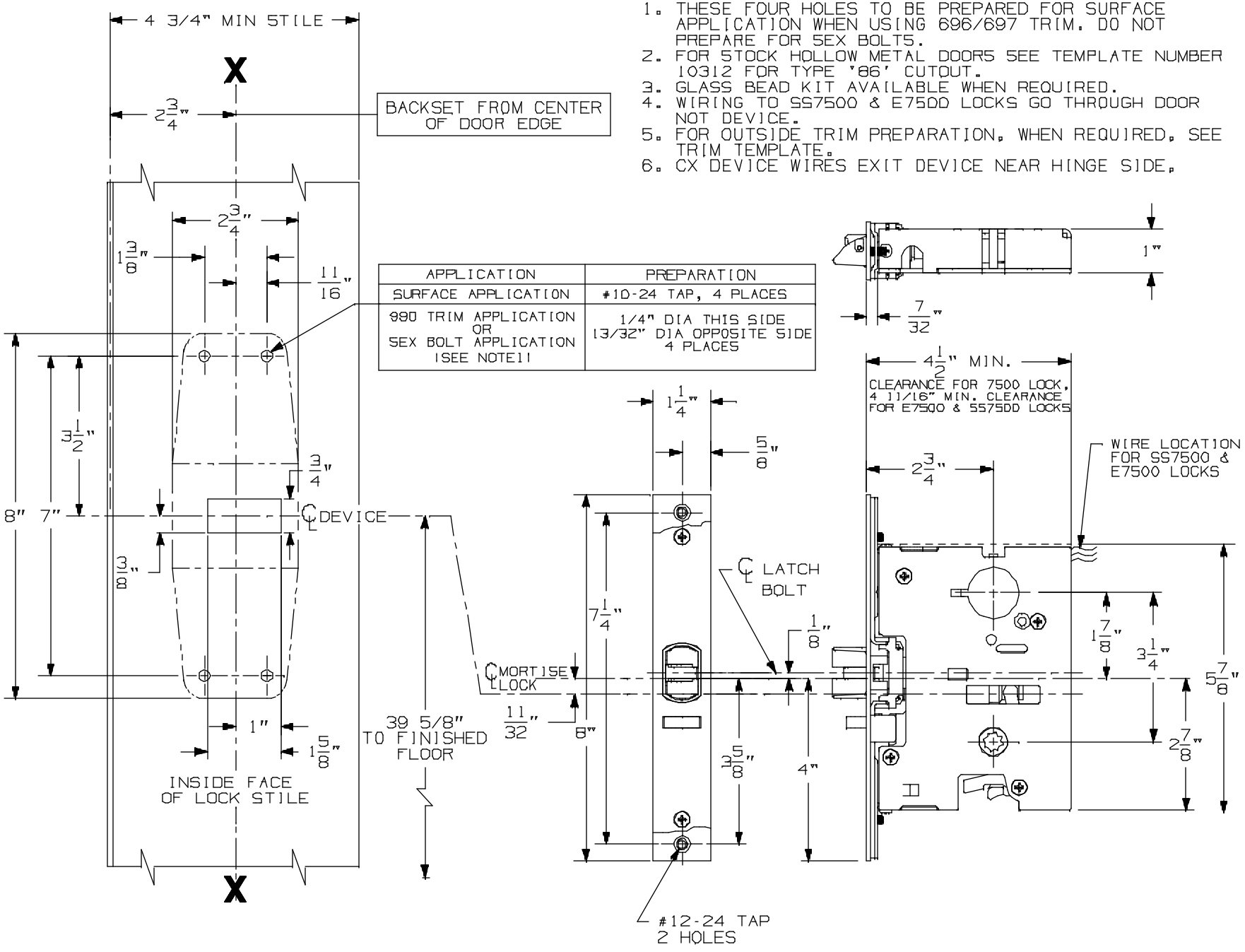

APPLICATION	PREPARATION
SURFACE APPLICATION	#10-24 TAP, 4 PLACES
990 TRIM APPLICATION OR SEX BOLT APPLICATION (SEE NOTE11	1/4" DIA THIS SIDE 13/32" DIA OPPOSITE SIDE 4 PLACES

LHR APPLICATION SHOWN,
RHR APPLICATION OPPOSITE

991 K & 992 L Trim for Mortise Device

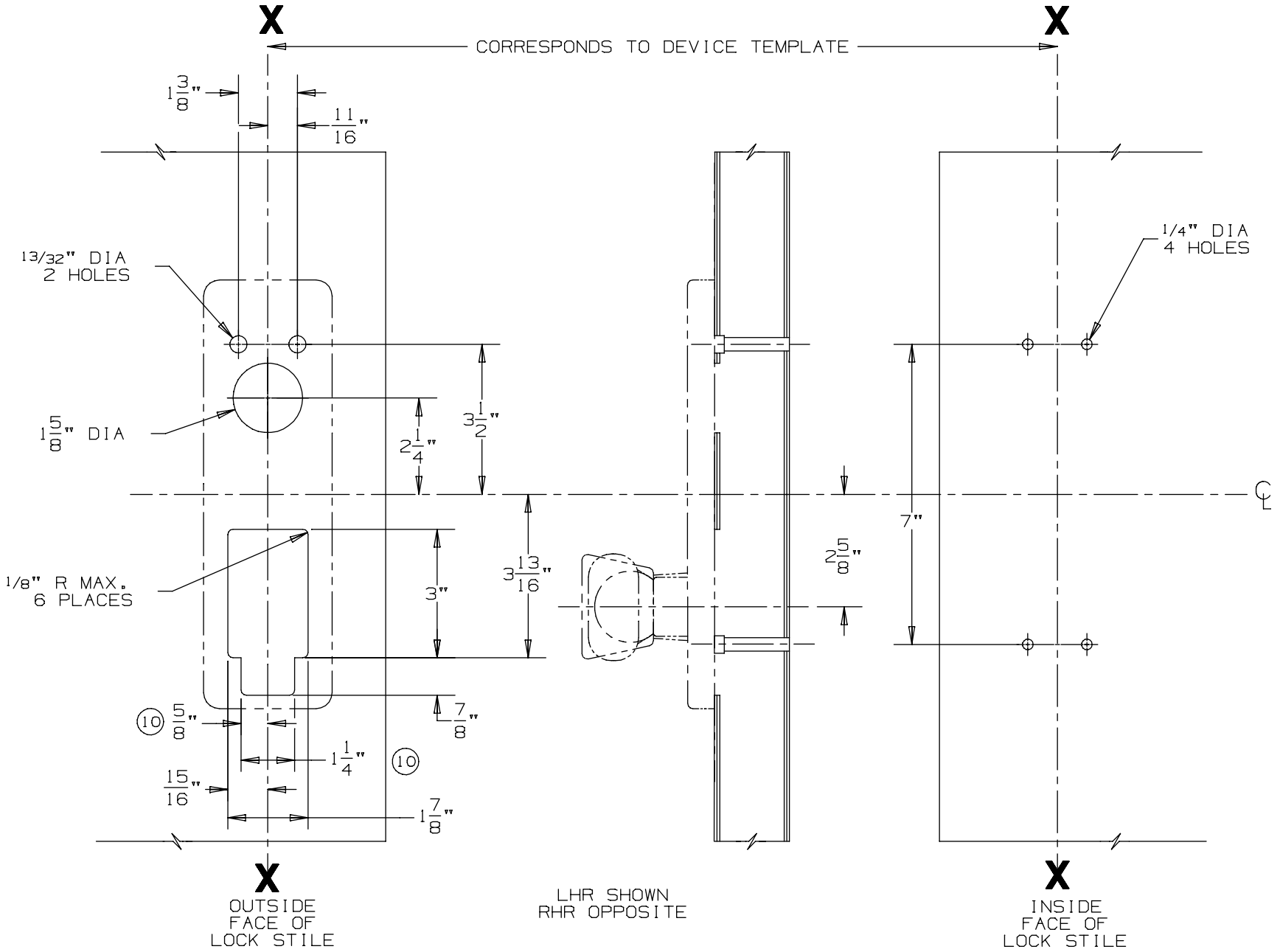

DEVICE APPLICATION SCHEDULE
9875/9975 SERIES DEVICE

NOTES: SEE MASTER SHEET #10001 FOR SUGGESTED REINFORCING

TEMPLATE NUMBER: 20280_a

DATE: 05-23-13

VON DUPRIN®

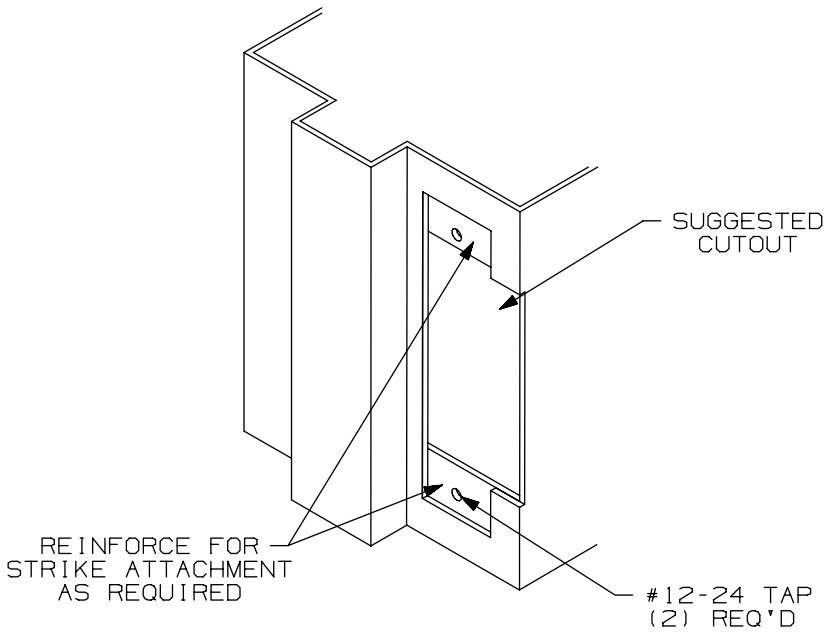

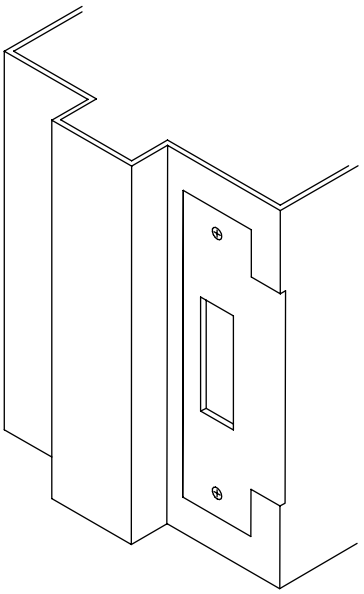

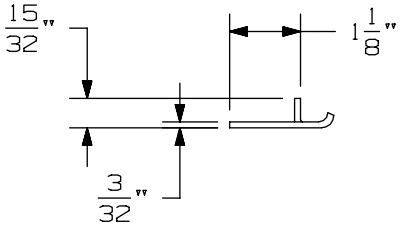

APPLICATION SCHEDULE	
DEVICE	DIM. "A"
9875 & 9875-F	11/16
9975 & 9975-F	11/16
8875 & 8875-F	1/2
5575 & 5575-F	1/2

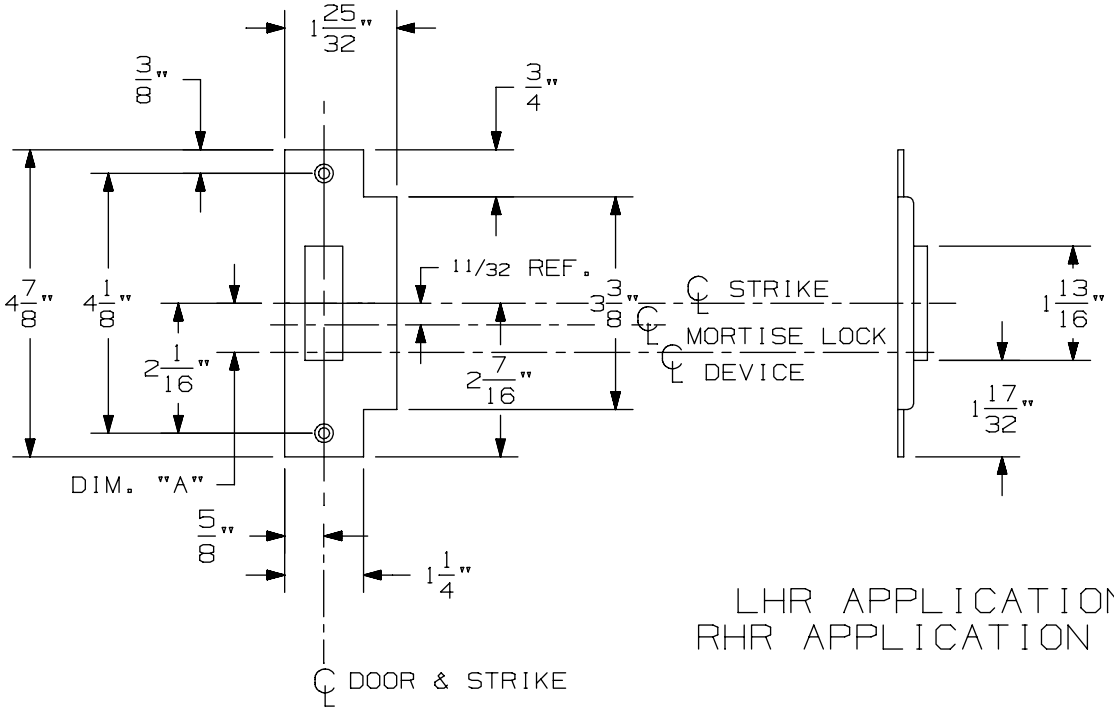

LHR APPLICATION SHOWN
RHR APPLICATION OPPOSITE

575 Mortise Strike (Single Door) for 7500 Mortise Lock

VON DUPRIN®

NOTES: SEE MASTER SHEET #10001 FOR SUGGESTED REINFORCING

TEMPLATE NUMBER: 30210_b

DATE: 07-22-13

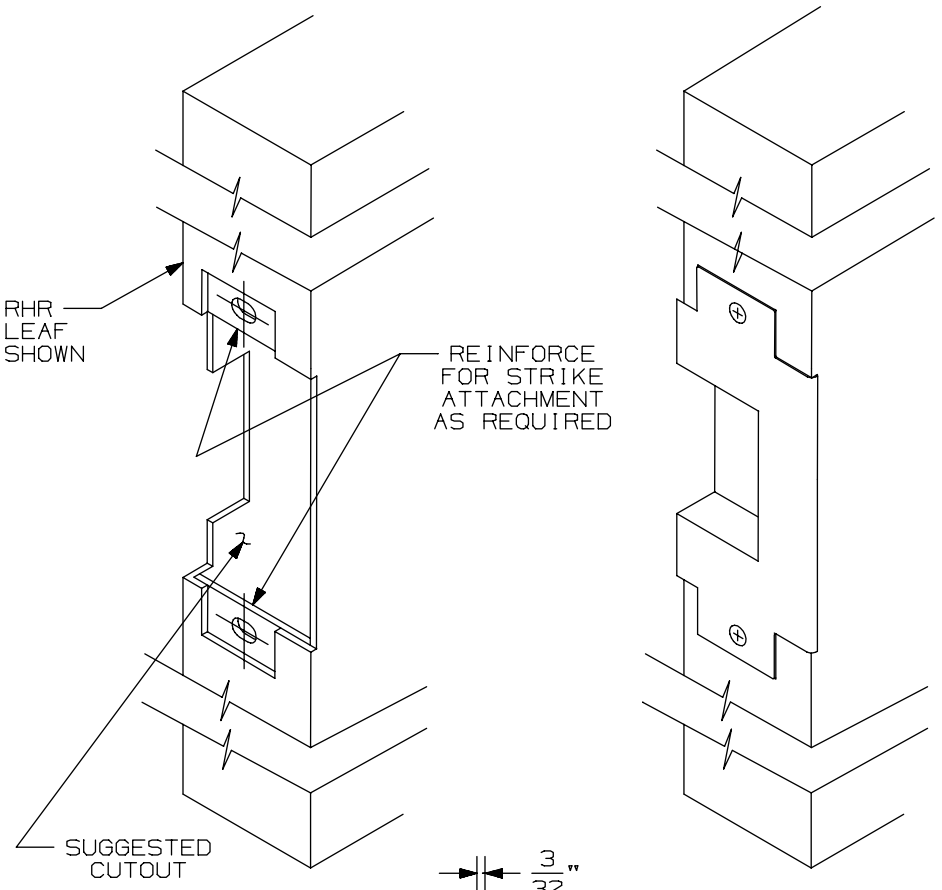

APPLICATION SCHEDULE	
DEVICE	DIM."A"
9875 & 9875-F	11/16
9975 & 9975-F	11/16
8875 & 8875-F	1/2
5575 & 5575-F	1/2

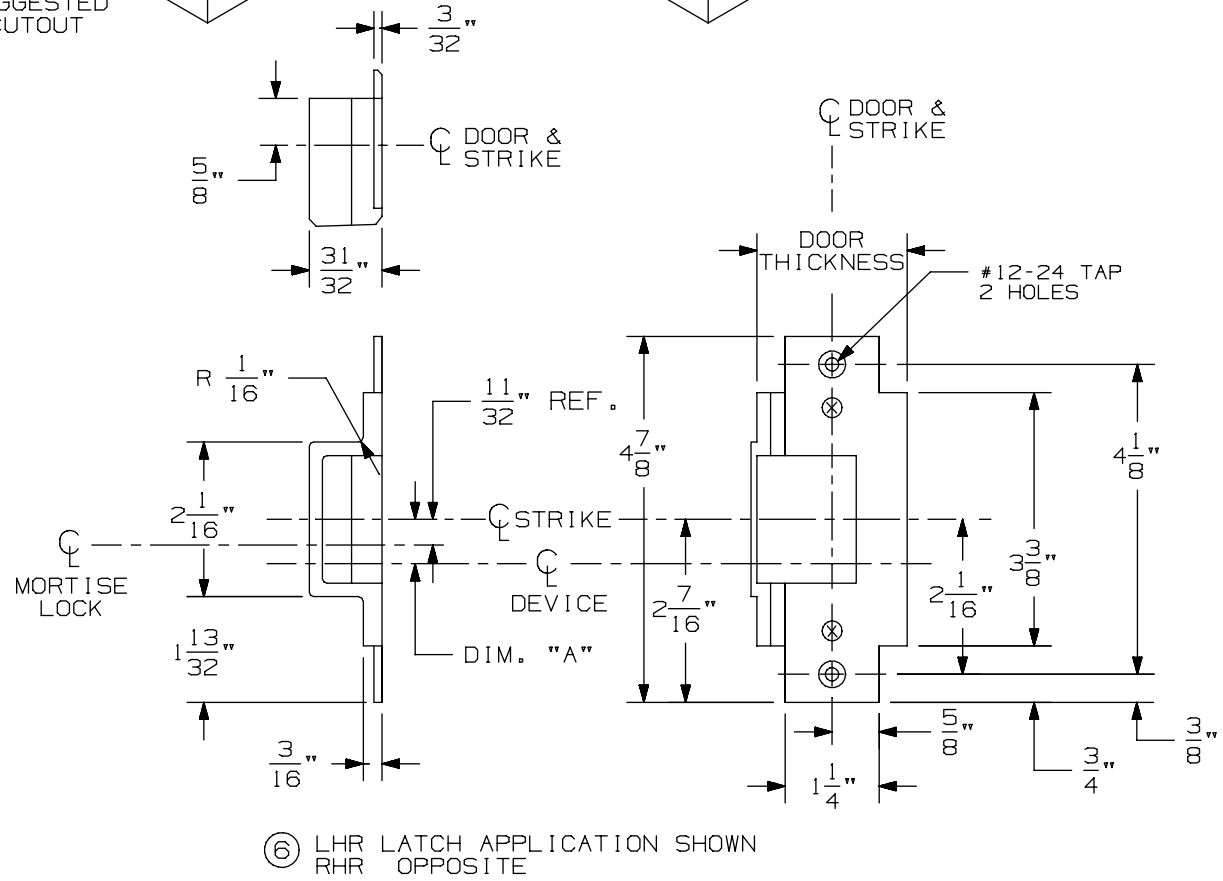

⑥ LHR LATCH APPLICATION SHOWN
RHR OPPOSITE

576A & 576B Mortise Strike for 7500 Mortise Lock

VON DUPRIN®

NOTES: SEE MASTER SHEET #10001 FOR SUGGESTED REINFORCING

TEMPLATE NUMBER: 30211_a

DATE: 05-28-13

CX9875/9975 Series Mortise Lock Devices

NOTES: SEE MASTER SHEET #10001 FOR SUGGESTED REINFORCING

TEMPLATE NUMBER: 10358_a

DATE: 05-22-13

VON DUPRIN®

NOTES:
1. THESE FOUR HOLES TO BE PREPARED FOR SURFACE APPLICATION WHEN USING 696/697 TRIM. DO NOT PREPARE FOR SEX BOLTS.
2. FOR STOCK HOLLOW METAL DOORS SEE TEMPLATE NUMBER 10312 FOR TYPE '86' CUTOUT.
3. GLASS BEAD KIT AVAILABLE WHEN REQUIRED.
4. WIRING TO SS7500 & E7500 LOCKS GO THROUGH DOOR NOT DEVICE.
5. FOR OUTSIDE TRIM PREPARATION, WHEN REQUIRED, SEE TRIM TEMPLATE.
6. CX DEVICE WIRES EXIT DEVICE NEAR HINGE SIDE.

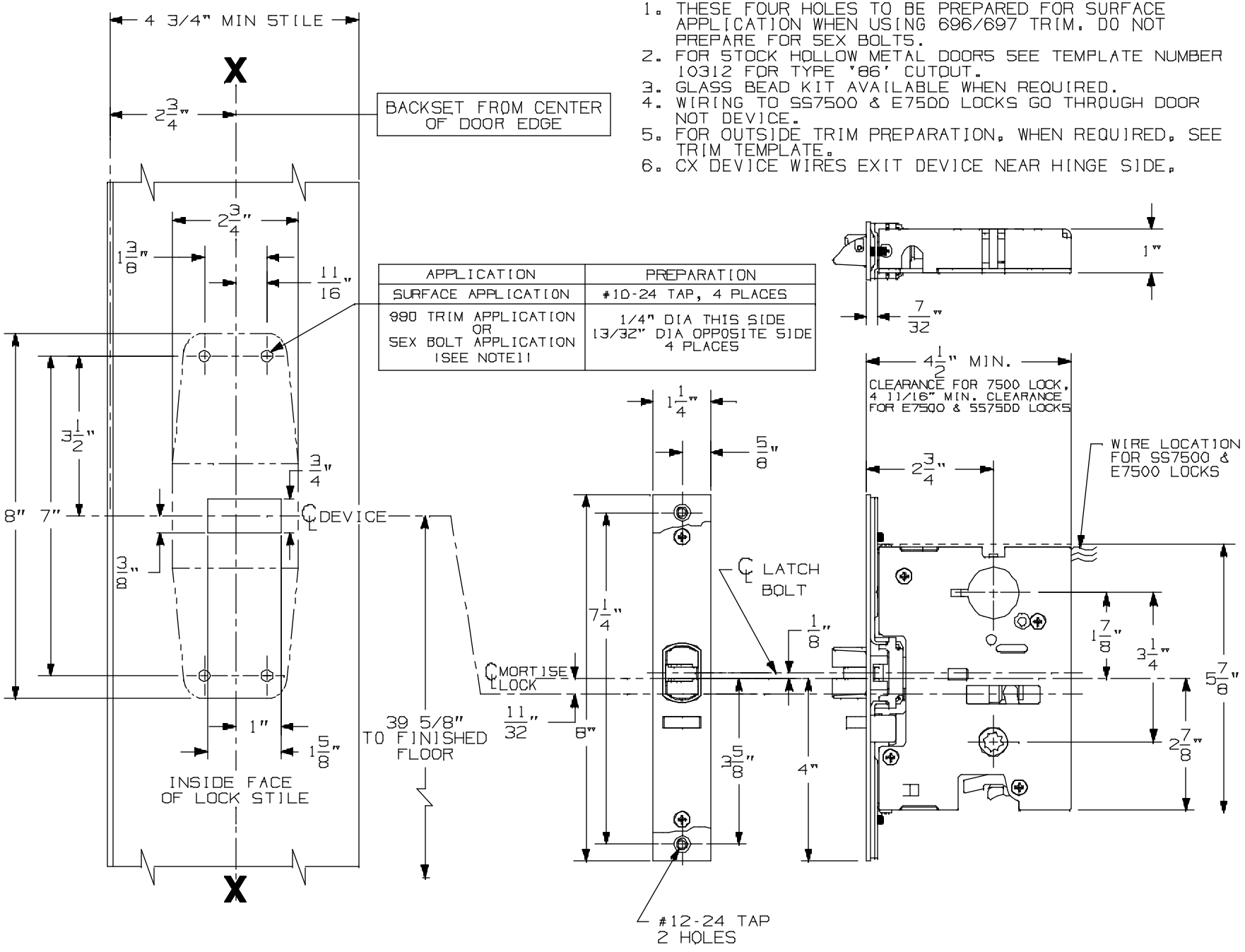

APPLICATION	PREPARATION
SURFACE APPLICATION	#10-24 TAP, 4 PLACES
990 TRIM APPLICATION OR SEX BOLT APPLICATION (SEE NOTE11	1/4" DIA THIS SIDE 13/32" DIA OPPOSITE SIDE 4 PLACES

LHR APPLICATION SHOWN,
RHR APPLICATION OPPOSITE

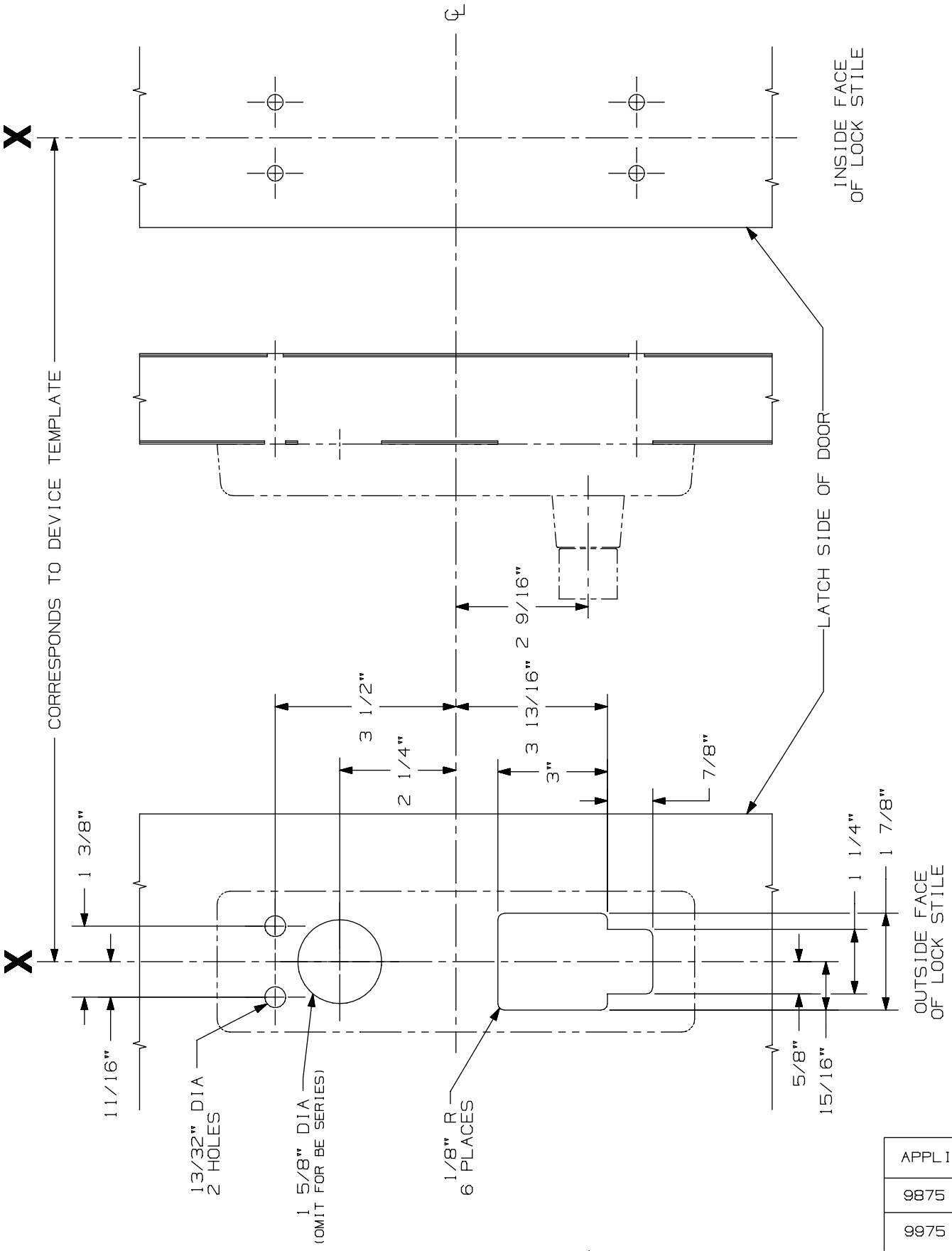

APPLICATIONS
9875 SERIES
9975 SERIES

996L, E996L, 996L-BE, & E996L-BE
Mortise Series
Trim Metal Door Application

VON DUPRIN®

NOTES: See Master Sheet #10001 For Suggested Reinforcing

TEMPLATE NUMBER: 20006_b

DATE: 10-30-14

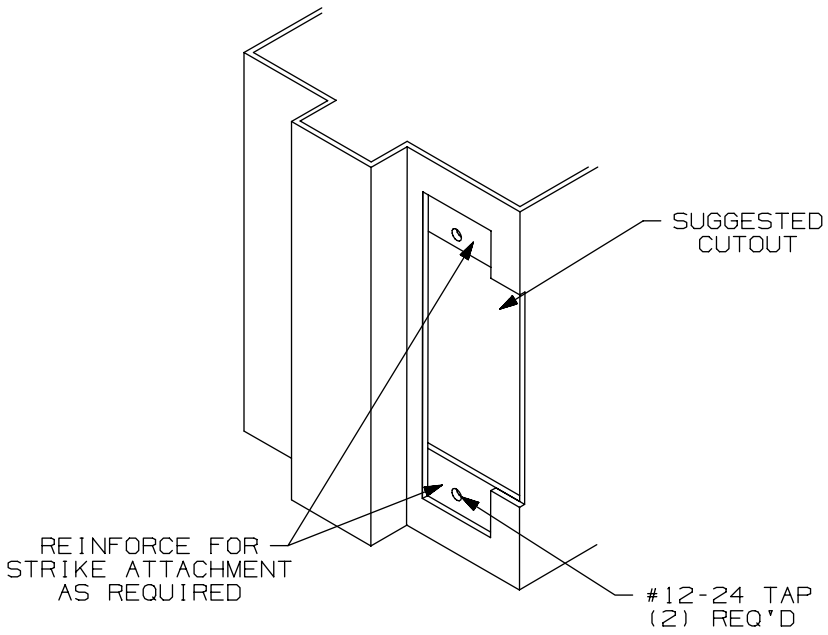

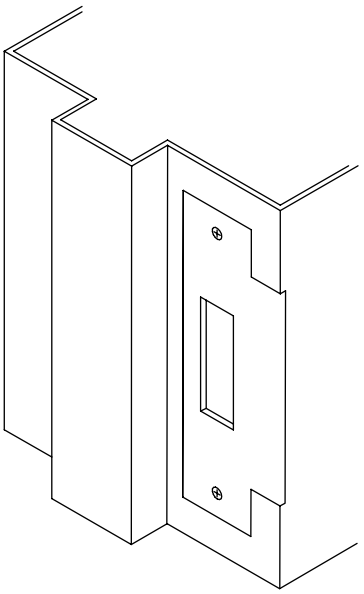

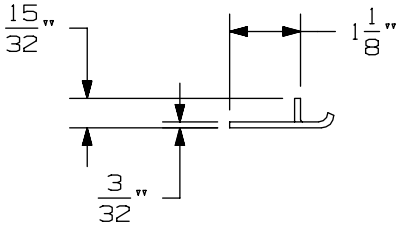

APPLICATION SCHEDULE	
DEVICE	DIM. "A"
9875 & 9875-F	11/16
9975 & 9975-F	11/16
8875 & 8875-F	1/2
5575 & 5575-F	1/2

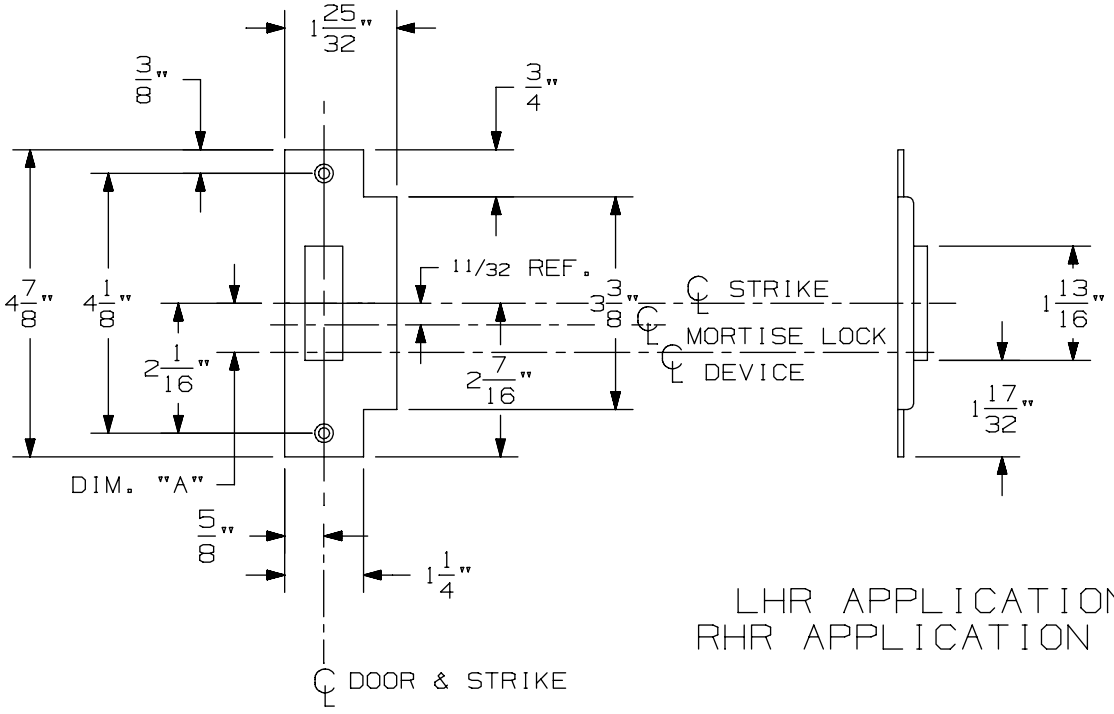

LHR APPLICATION SHOWN
RHR APPLICATION OPPOSITE

575 Mortise Strike (Single Door) for 7500 Mortise Lock

VON DUPRIN®

NOTES: SEE MASTER SHEET #10001 FOR SUGGESTED REINFORCING

TEMPLATE NUMBER: 30210_b

DATE: 07-22-13

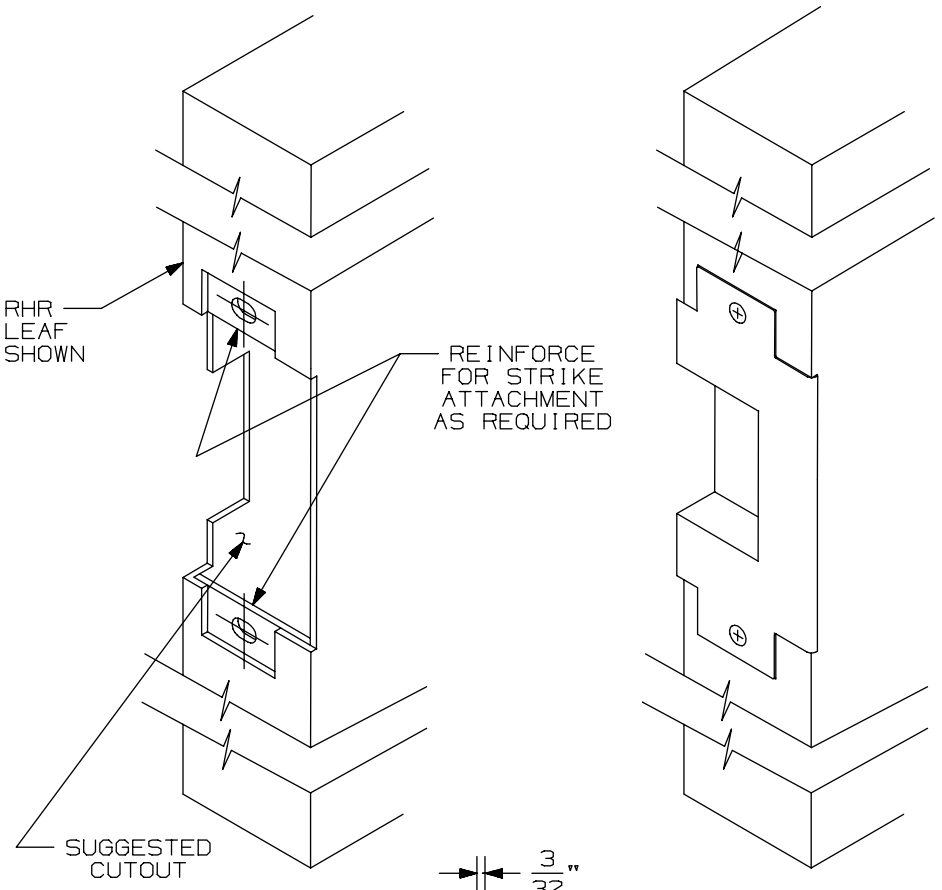

APPLICATION SCHEDULE	
DEVICE	DIM."A"
9875 & 9875-F	11/16
9975 & 9975-F	11/16
8875 & 8875-F	1/2
5575 & 5575-F	1/2

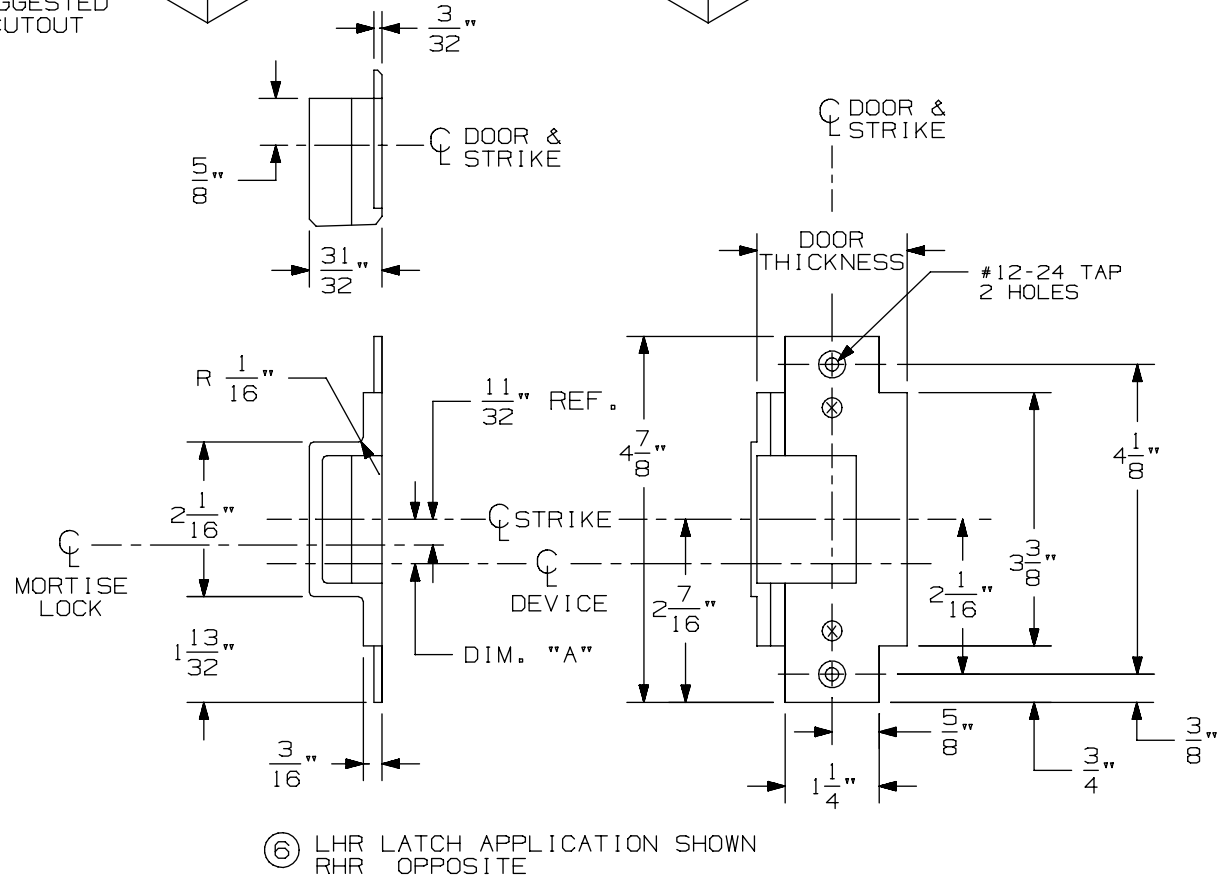

⑥ LHR LATCH APPLICATION SHOWN
RHR OPPOSITE

576A & 576B Mortise Strike for 7500 Mortise Lock

VON DUPRIN®

NOTES: SEE MASTER SHEET #10001 FOR SUGGESTED REINFORCING

TEMPLATE NUMBER: 30211_a

DATE: 05-28-13

CX9875/9975 Series Mortise Lock Devices

NOTES: SEE MASTER SHEET #10001 FOR SUGGESTED REINFORCING

TEMPLATE NUMBER: 10358_a

DATE: 05-22-13

VON DUPRIN®

NOTES:
1. THESE FOUR HOLES TO BE PREPARED FOR SURFACE APPLICATION WHEN USING 696/697 TRIM. DO NOT PREPARE FOR SEX BOLTS.
2. FOR STOCK HOLLOW METAL DOORS SEE TEMPLATE NUMBER 10312 FOR TYPE '86' CUTOUT.
3. GLASS BEAD KIT AVAILABLE WHEN REQUIRED.
4. WIRING TO SS7500 & E7500 LOCKS GO THROUGH DOOR NOT DEVICE.
5. FOR OUTSIDE TRIM PREPARATION, WHEN REQUIRED, SEE TRIM TEMPLATE.
6. CX DEVICE WIRES EXIT DEVICE NEAR HINGE SIDE.

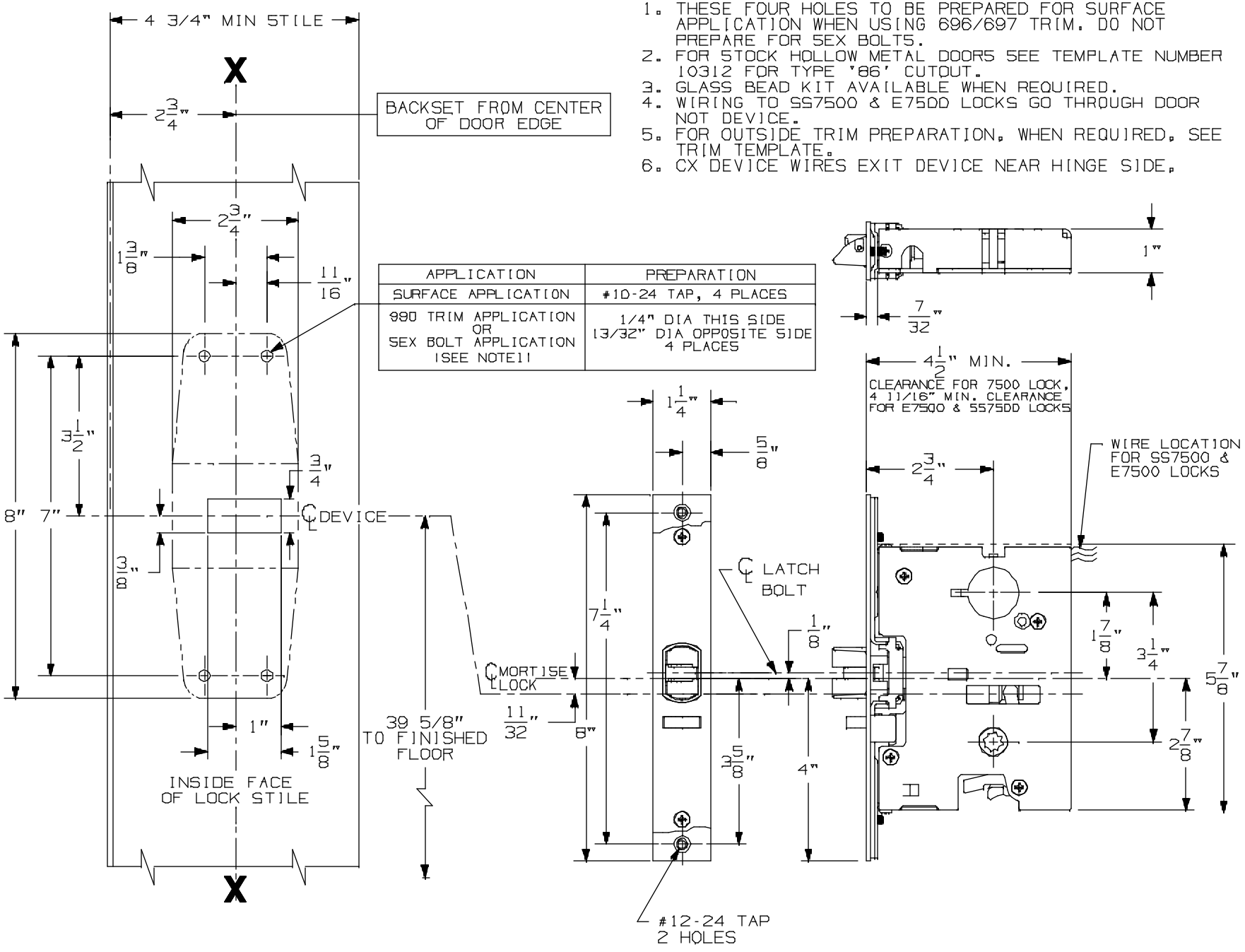

APPLICATION	PREPARATION
SURFACE APPLICATION	#10-24 TAP, 4 PLACES
990 TRIM APPLICATION OR SEX BOLT APPLICATION (SEE NOTE11	1/4" DIA THIS SIDE 13/32" DIA OPPOSITE SIDE 4 PLACES

LHR APPLICATION SHOWN,
RHR APPLICATION OPPOSITE

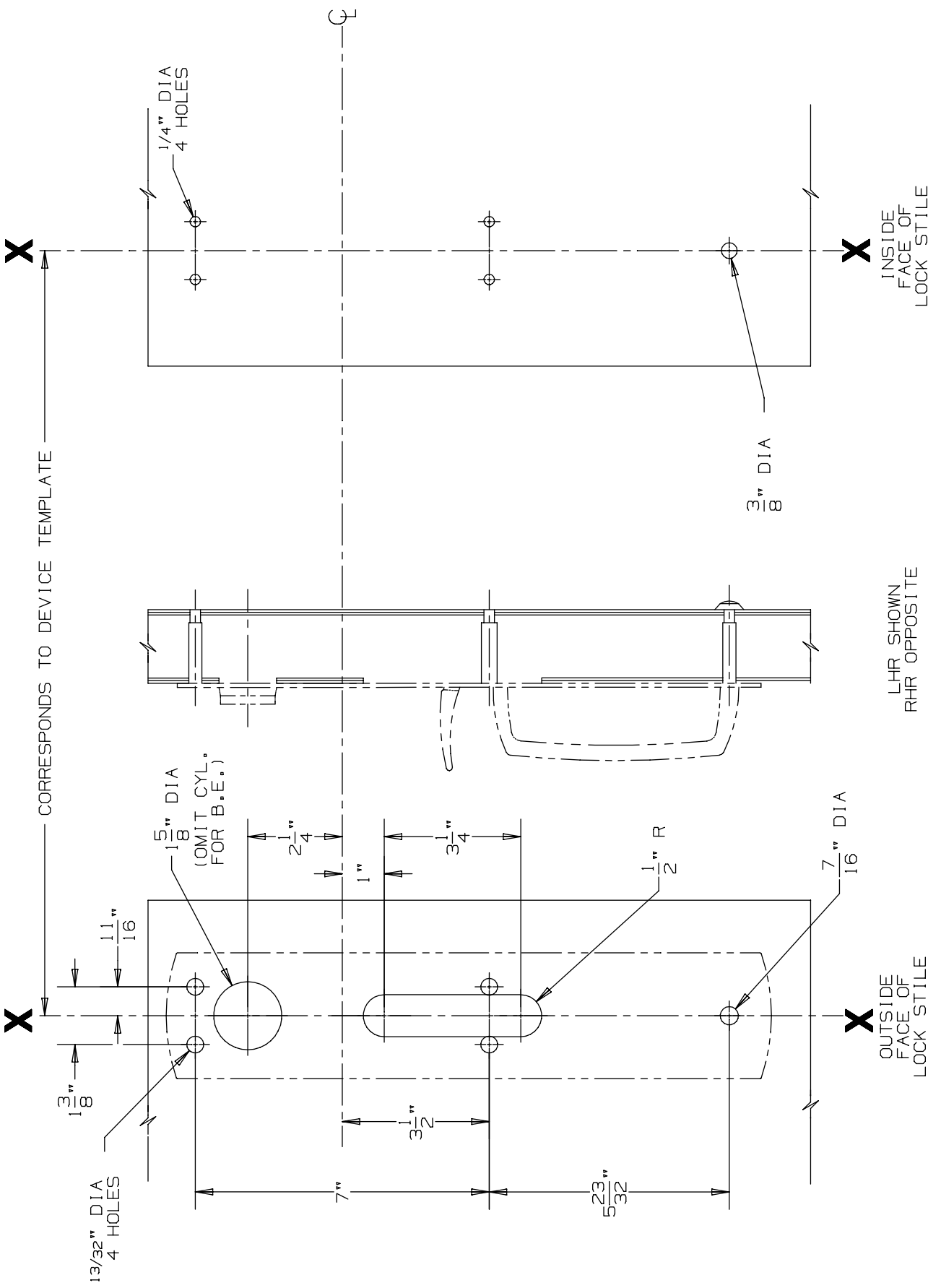

DEVICE APPLICATION SCHEDULE
9875/9975 SERIES DEVICE

990 TP & 990 TP-BE Trim

VON DUPRIN®

NOTES: SEE MASTER SHEET #10001 FOR SUGGESTED REINFORCING

TEMPLATE NUMBER: 20270_a

DATE: 05-23-13

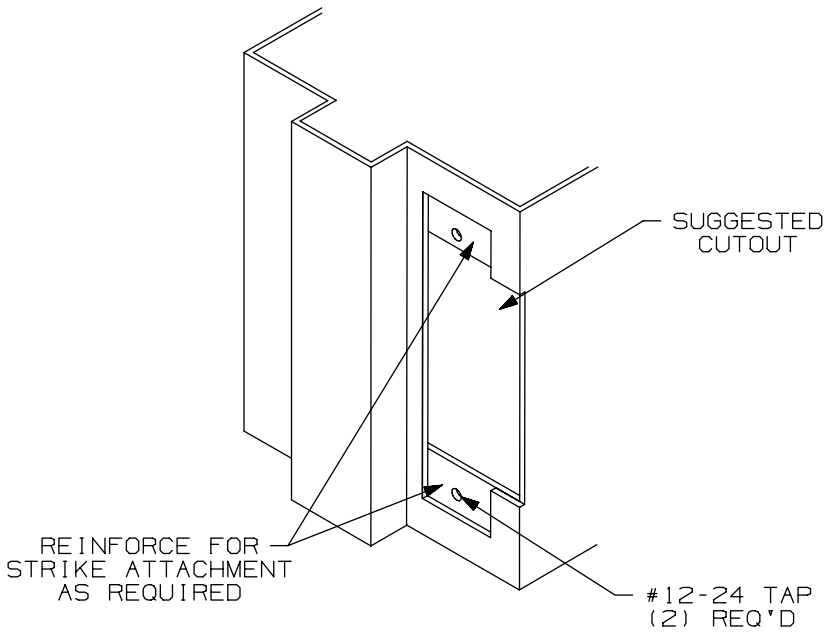

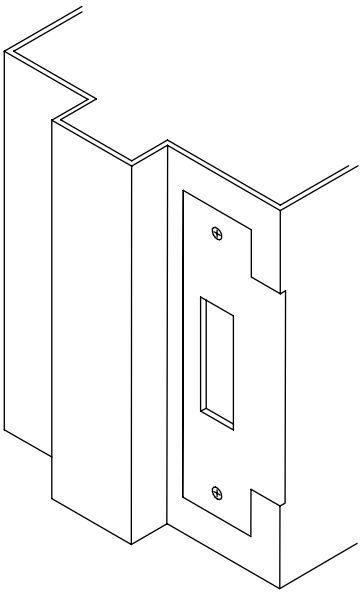

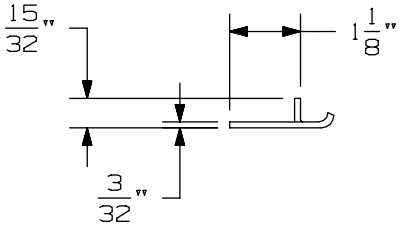

APPLICATION SCHEDULE	
DEVICE	DIM. "A"
9875 & 9875-F	11/16
9975 & 9975-F	11/16
8875 & 8875-F	1/2
5575 & 5575-F	1/2

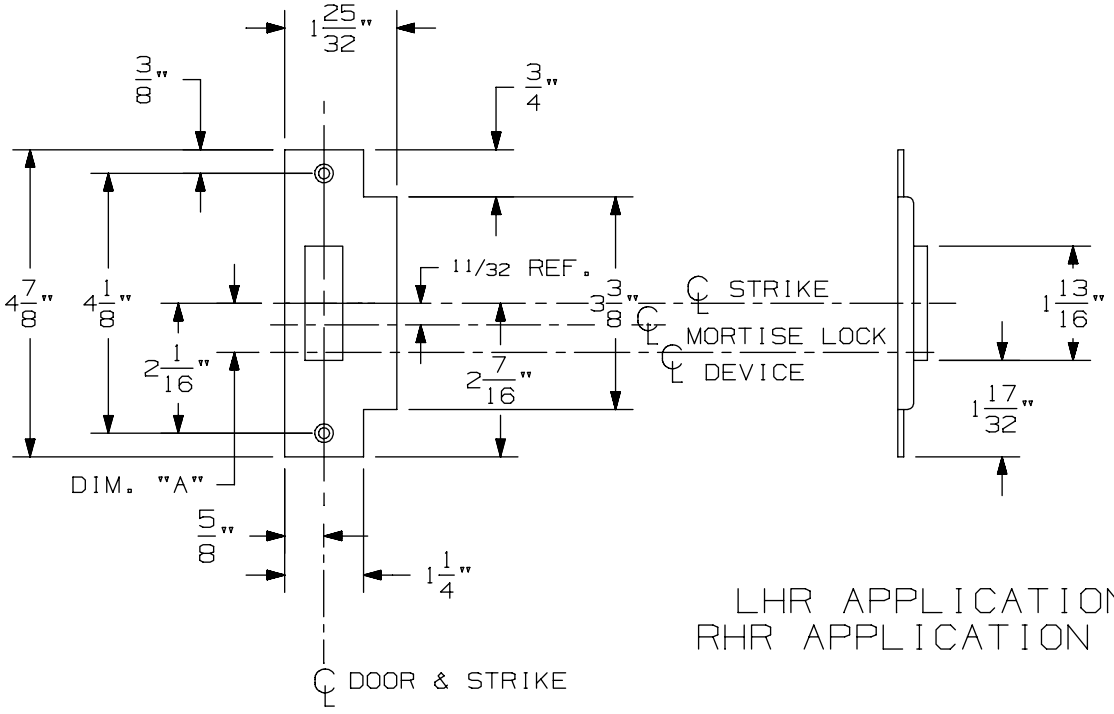

LHR APPLICATION SHOWN
RHR APPLICATION OPPOSITE

575 Mortise Strike (Single Door) for 7500 Mortise Lock

VON DUPRIN®

NOTES: SEE MASTER SHEET #10001 FOR SUGGESTED REINFORCING

TEMPLATE NUMBER: 30210_b

DATE: 07-22-13

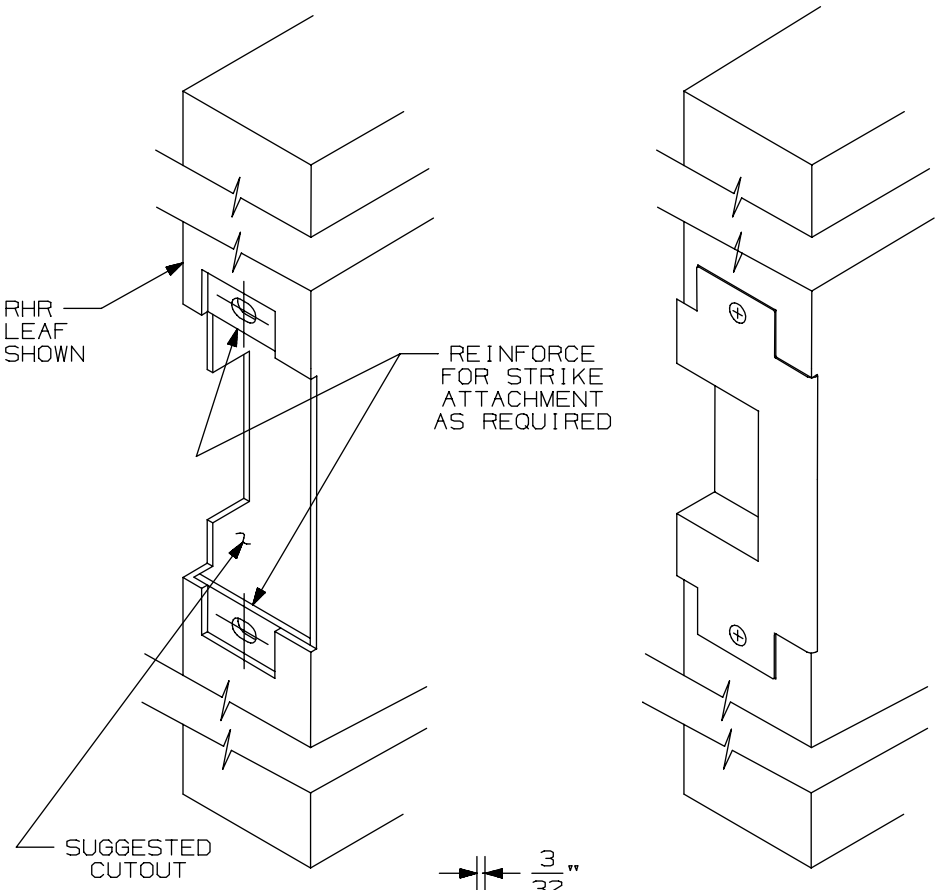

APPLICATION SCHEDULE	
DEVICE	DIM."A"
9875 & 9875-F	11/16
9975 & 9975-F	11/16
8875 & 8875-F	1/2
5575 & 5575-F	1/2

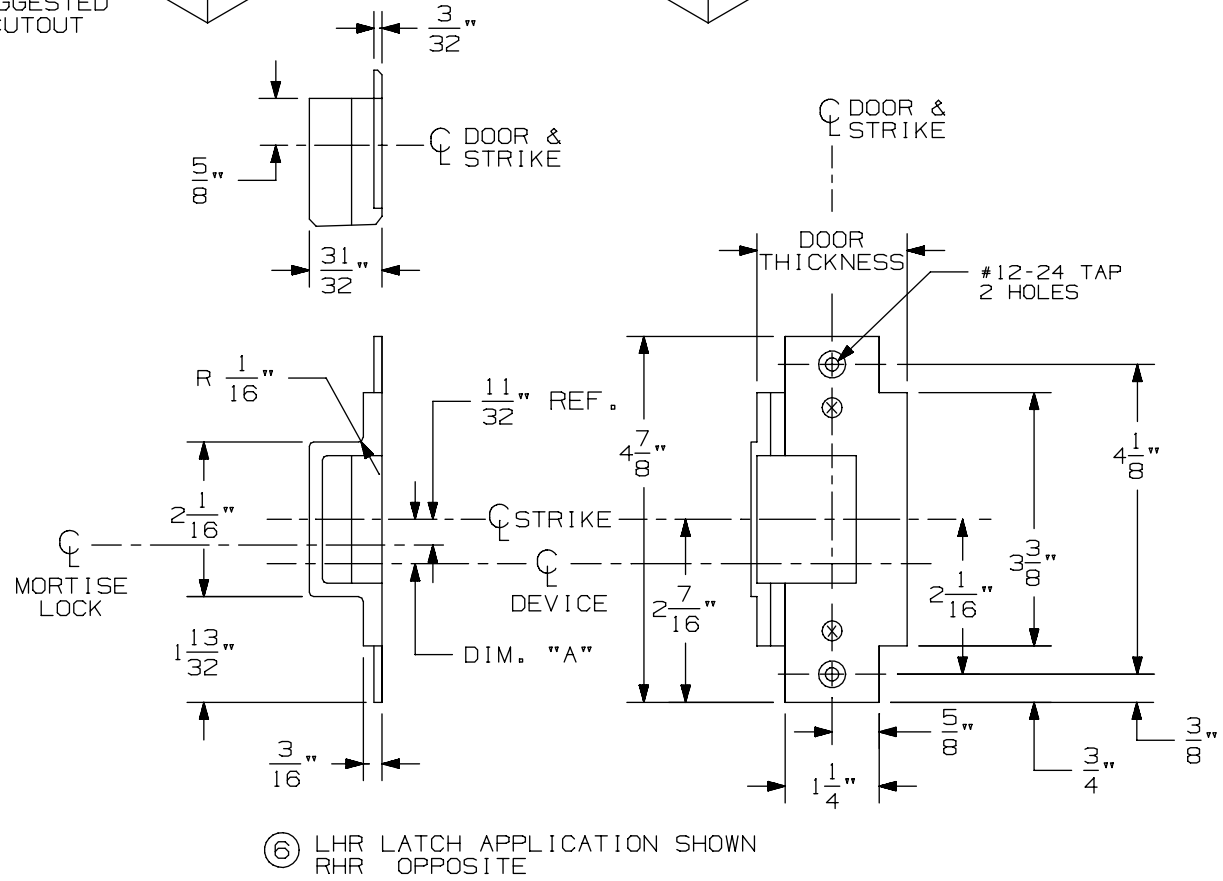

⑥ LHR LATCH APPLICATION SHOWN
RHR OPPOSITE

576A & 576B Mortise Strike for 7500 Mortise Lock

VON DUPRIN®

NOTES: SEE MASTER SHEET #10001 FOR SUGGESTED REINFORCING

TEMPLATE NUMBER: 30211_a

DATE: 05-28-13

98 / 99 Series Chex-it® Exit Devices

-

CX9875-F/ CX9975-F Mortise Fire

CX9875/9975 Series Mortise Lock Devices

NOTES: SEE MASTER SHEET #10001 FOR SUGGESTED REINFORCING

TEMPLATE NUMBER: 10358_a

DATE: 05-22-13

VON DUPRIN®

NOTES:
1. THESE FOUR HOLES TO BE PREPARED FOR SURFACE APPLICATION WHEN USING 696/697 TRIM. DO NOT PREPARE FOR SEX BOLTS.
2. FOR STOCK HOLLOW METAL DOORS SEE TEMPLATE NUMBER 10312 FOR TYPE '86' CUTOUT.
3. GLASS BEAD KIT AVAILABLE WHEN REQUIRED.
4. WIRING TO SS7500 & E7500 LOCKS GO THROUGH DOOR NOT DEVICE.
5. FOR OUTSIDE TRIM PREPARATION, WHEN REQUIRED, SEE TRIM TEMPLATE.
6. CX DEVICE WIRES EXIT DEVICE NEAR HINGE SIDE.

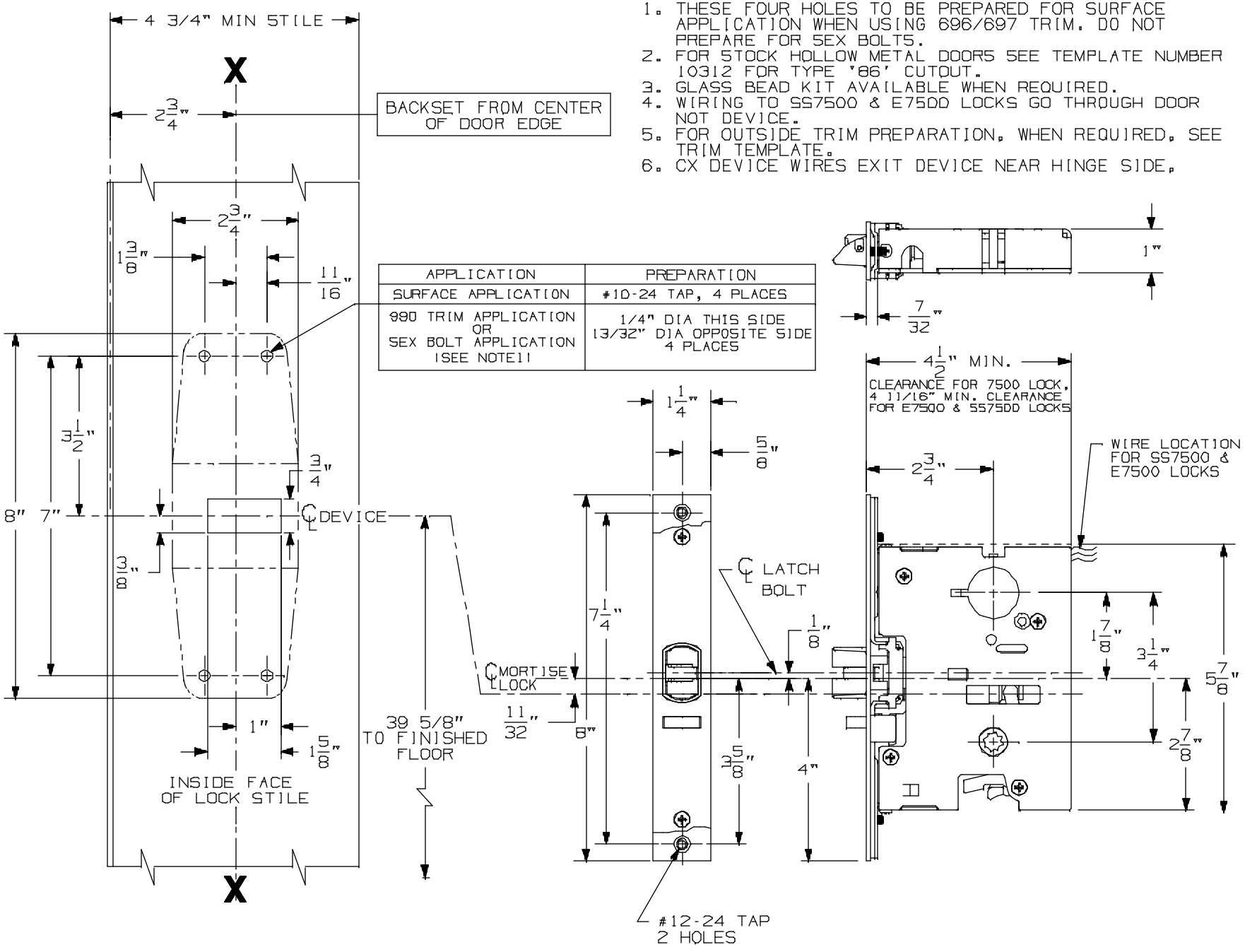

APPLICATION	PREPARATION
SURFACE APPLICATION	#10-24 TAP, 4 PLACES
990 TRIM APPLICATION OR SEX BOLT APPLICATION (SEE NOTE11	1/4" DIA THIS SIDE 13/32" DIA OPPOSITE SIDE 4 PLACES

LHR APPLICATION SHOWN,
RHR APPLICATION OPPOSITE

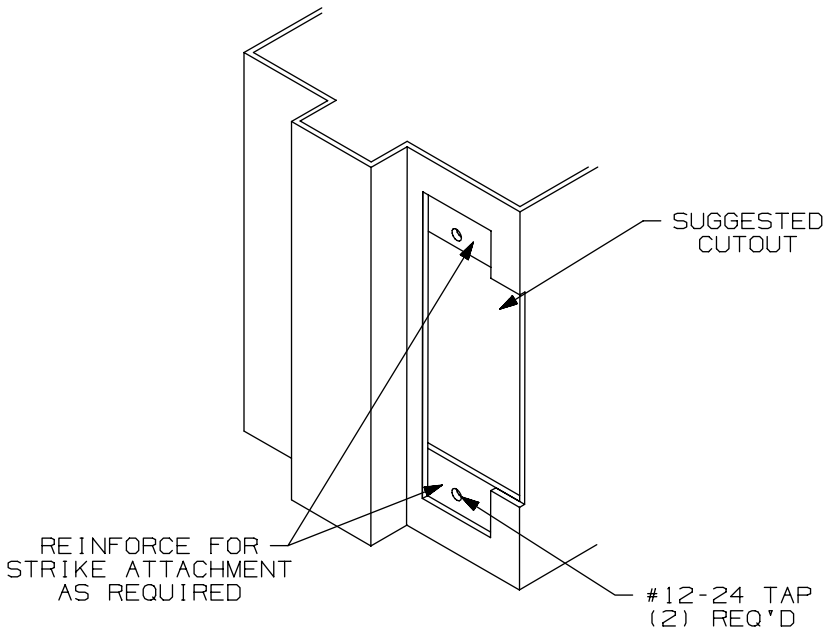

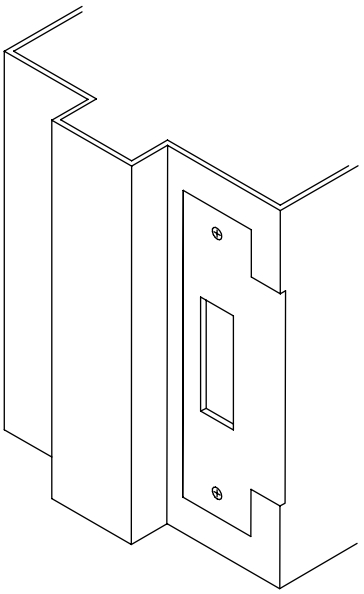

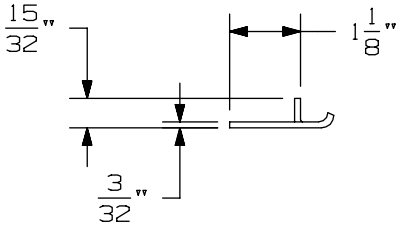

APPLICATION SCHEDULE	
DEVICE	DIM. "A"
9875 & 9875-F	11/16
9975 & 9975-F	11/16
8875 & 8875-F	1/2
5575 & 5575-F	1/2

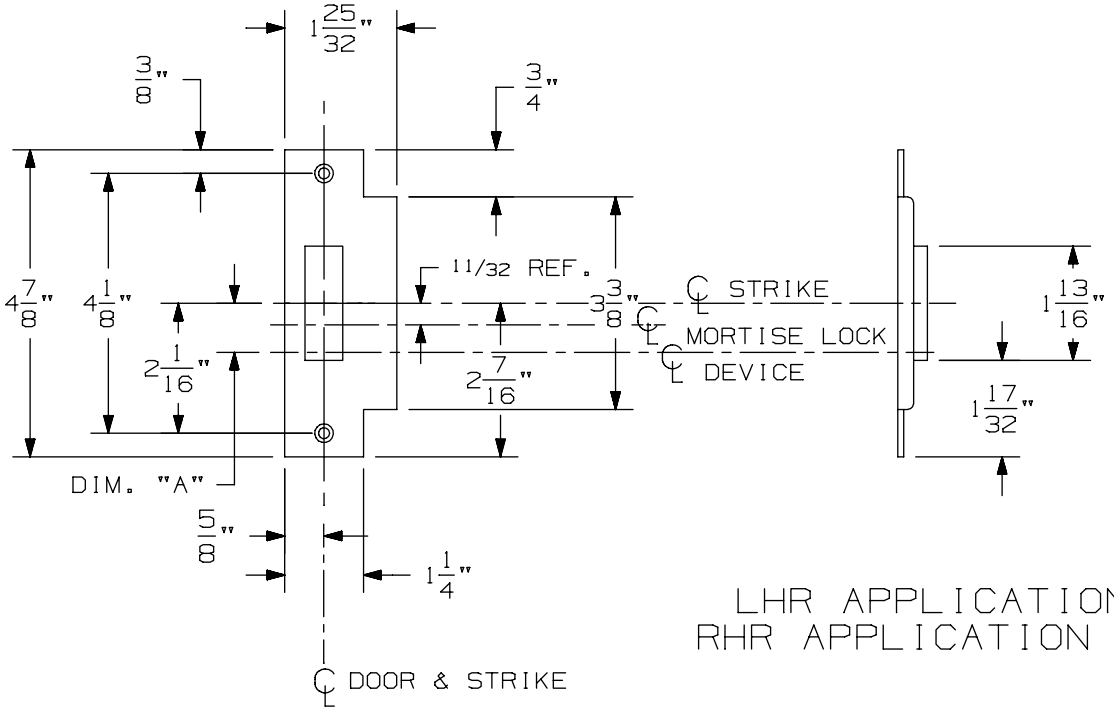

LHR APPLICATION SHOWN
RHR APPLICATION OPPOSITE

575 Mortise Strike (Single Door) for 7500 Mortise Lock

VON DUPRIN®

NOTES: SEE MASTER SHEET #10001 FOR SUGGESTED REINFORCING

TEMPLATE NUMBER: 30210_b

DATE: 07-22-13

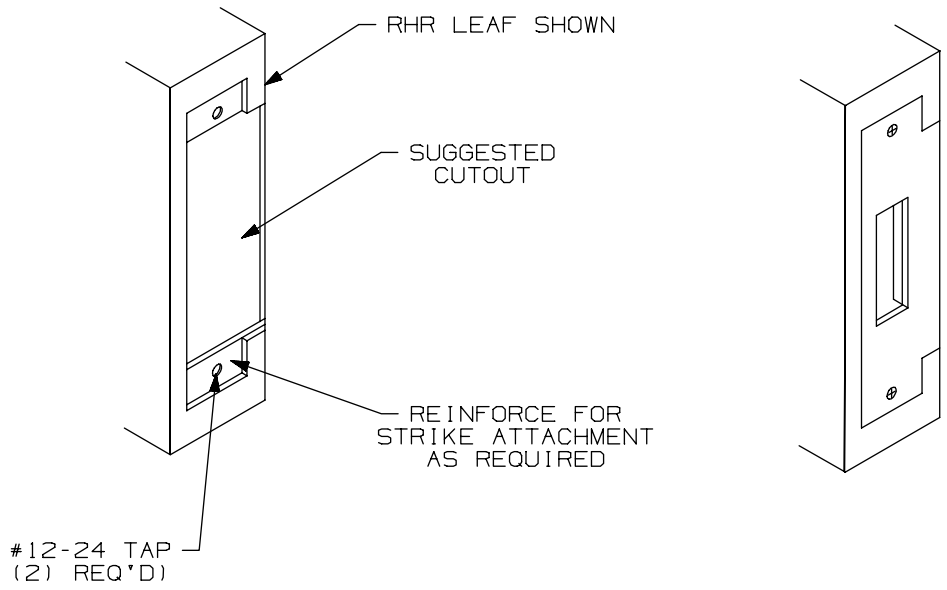

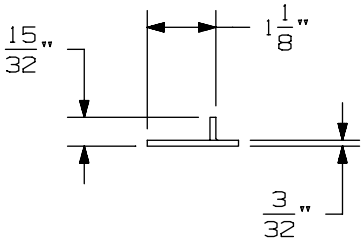

APPLICATION SCHEDULE	
DEVICE	DIM. "A"
9875 & 9875-F	11/16
9975 & 9975-F	11/16
8875 & 8875-F	1/2
5575 & 5575-F	1/2

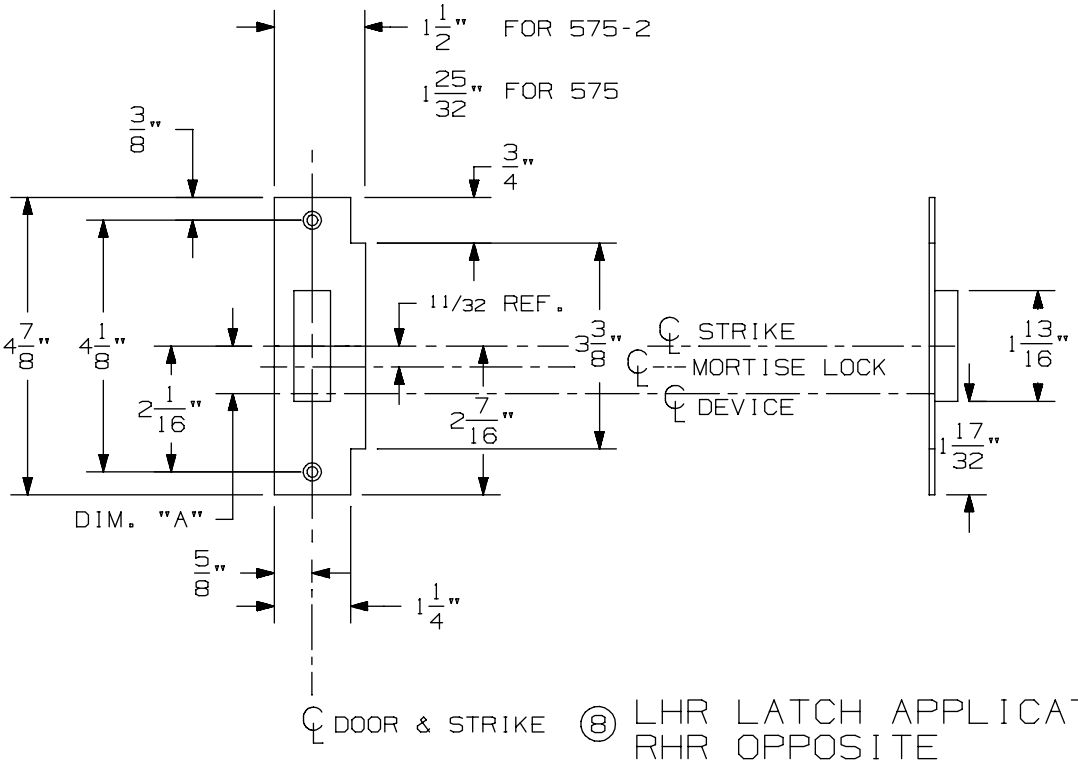

⑧ LHR LATCH APPLICATION SHOWN
RHR OPPOSITE

575-2 Mortise Strike (Double Doors) for 7500 Mortise Lock

VON DUPRIN®

NOTES: SEE MASTER SHEET #10001 FOR SUGGESTED REINFORCING

TEMPLATE NUMBER: 30212_b

DATE: 07-22-13

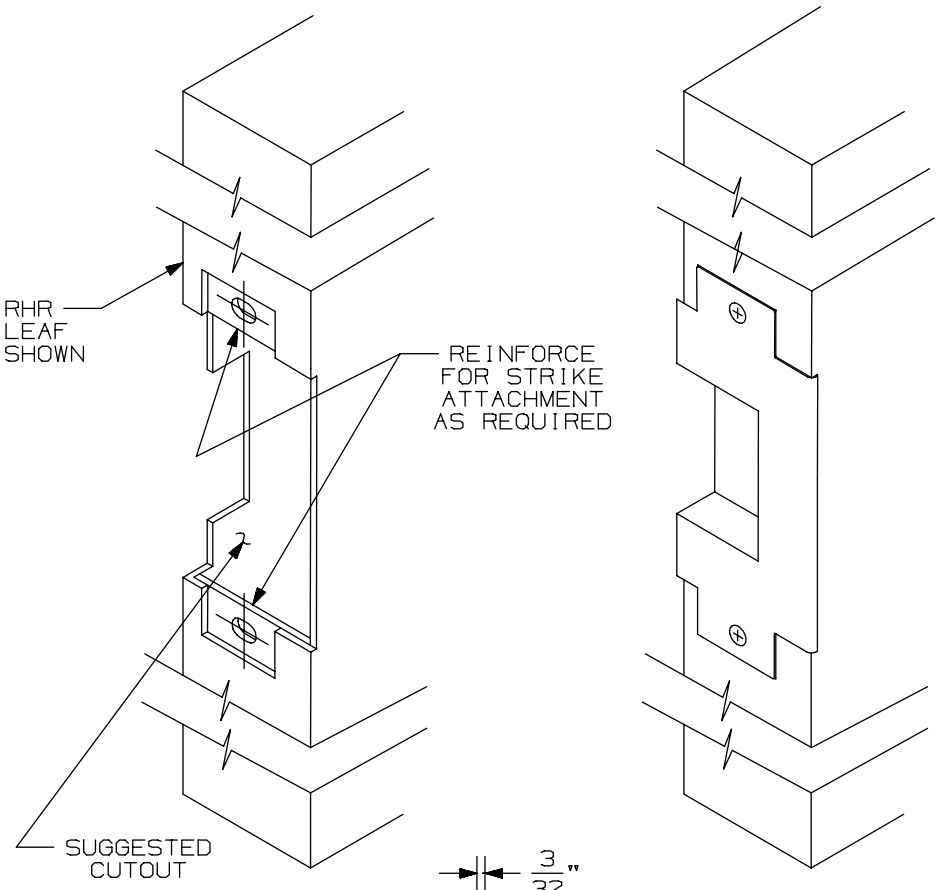

APPLICATION SCHEDULE	
DEVICE	DIM."A"
9875 & 9875-F	11/16
9975 & 9975-F	11/16
8875 & 8875-F	1/2
5575 & 5575-F	1/2

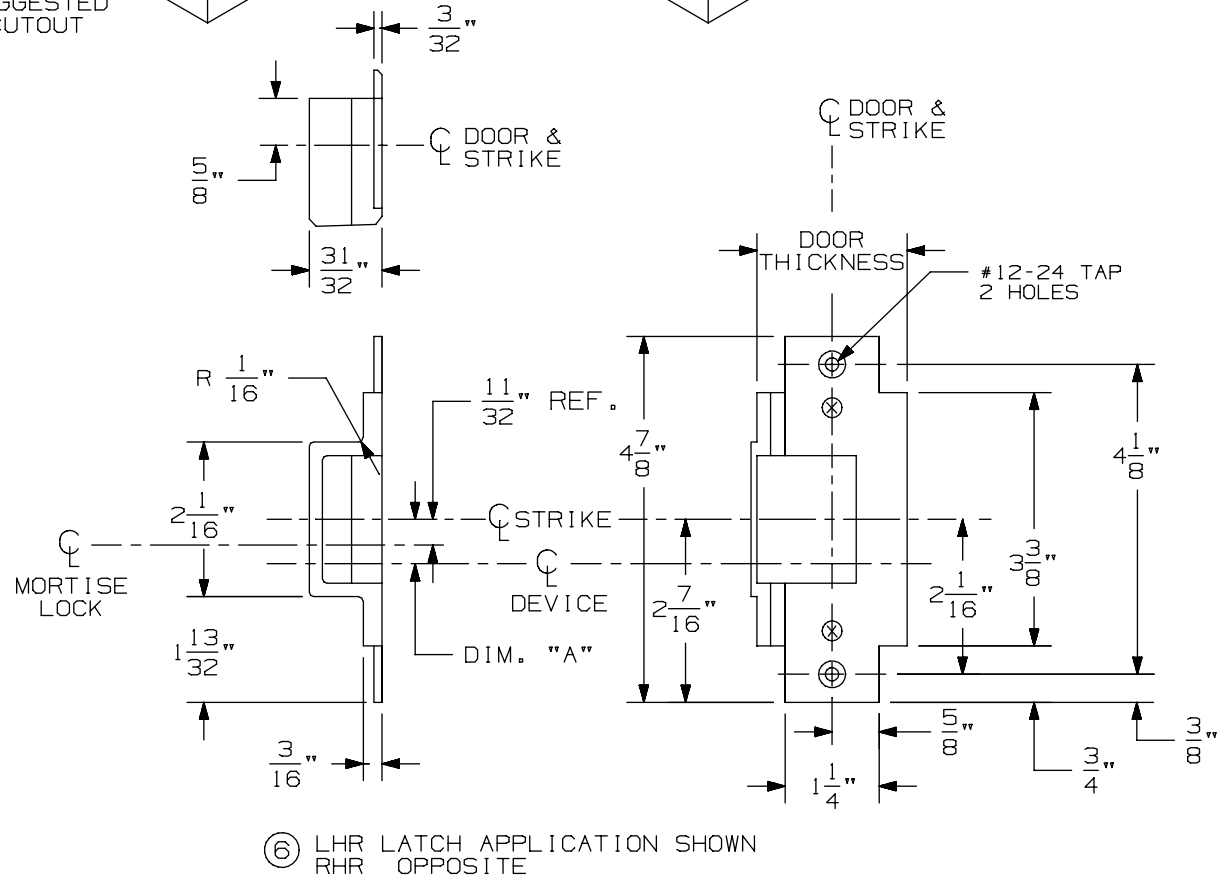

⑥ LHR LATCH APPLICATION SHOWN
RHR OPPOSITE

576A & 576B Mortise Strike for 7500 Mortise Lock

VON DUPRIN®

NOTES: SEE MASTER SHEET #10001 FOR SUGGESTED REINFORCING

TEMPLATE NUMBER: 30211_a

DATE: 05-28-13

CX9875/9975 Series Mortise Lock Devices

NOTES: SEE MASTER SHEET #10001 FOR SUGGESTED REINFORCING

TEMPLATE NUMBER: 10358_a

DATE: 05-22-13

VON DUPRIN®

NOTES:
1. THESE FOUR HOLES TO BE PREPARED FOR SURFACE APPLICATION WHEN USING 696/697 TRIM. DO NOT PREPARE FOR SEX BOLTS.
2. FOR STOCK HOLLOW METAL DOORS SEE TEMPLATE NUMBER 10312 FOR TYPE '86' CUTOUT.
3. GLASS BEAD KIT AVAILABLE WHEN REQUIRED.
4. WIRING TO SS7500 & E7500 LOCKS GO THROUGH DOOR NOT DEVICE.
5. FOR OUTSIDE TRIM PREPARATION, WHEN REQUIRED, SEE TRIM TEMPLATE.
6. CX DEVICE WIRES EXIT DEVICE NEAR HINGE SIDE.

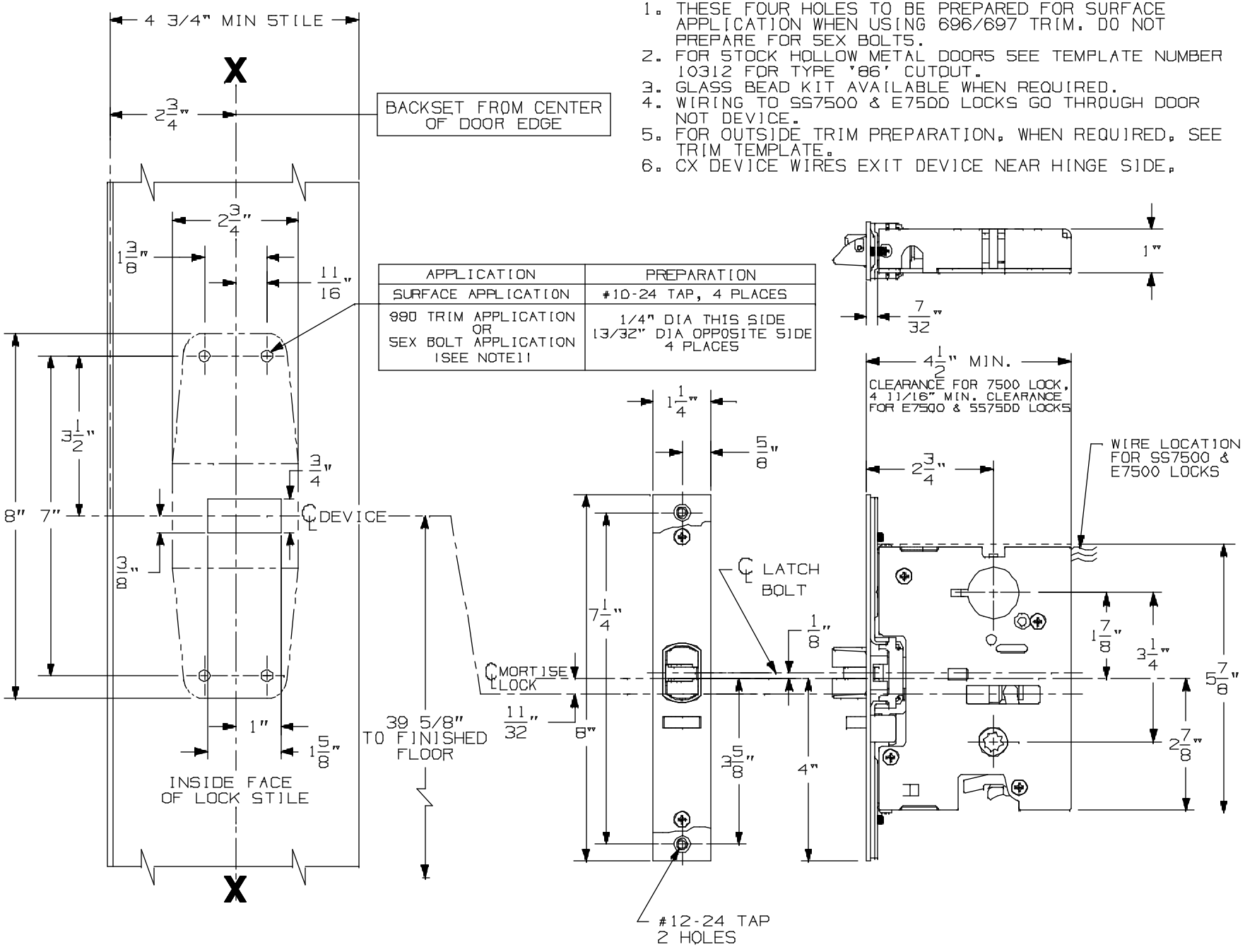

APPLICATION	PREPARATION
SURFACE APPLICATION	#10-24 TAP, 4 PLACES
990 TRIM APPLICATION OR SEX BOLT APPLICATION (SEE NOTE11	1/4" DIA THIS SIDE 13/32" DIA OPPOSITE SIDE 4 PLACES

LHR APPLICATION SHOWN,
RHR APPLICATION OPPOSITE

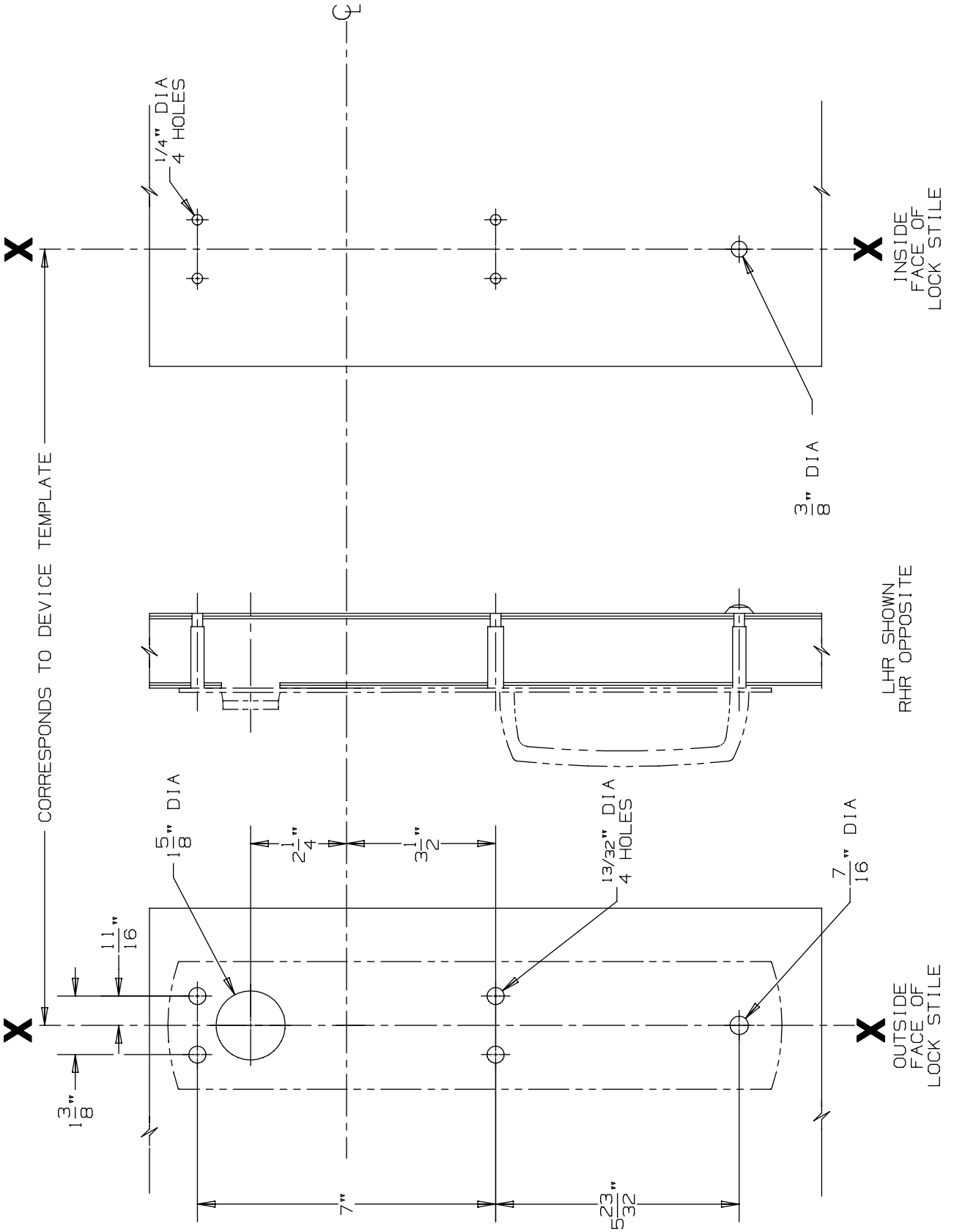

DEVICE APPLICATION SCHEDULE
9875/9975 SERIES DEVICE

990 NL Trim

VON DUPRIN®

NOTES: SEE MASTER SHEET #10001 FOR SUGGESTED REINFORCING

TEMPLATE NUMBER: 20271_a

DATE: 05-23-13

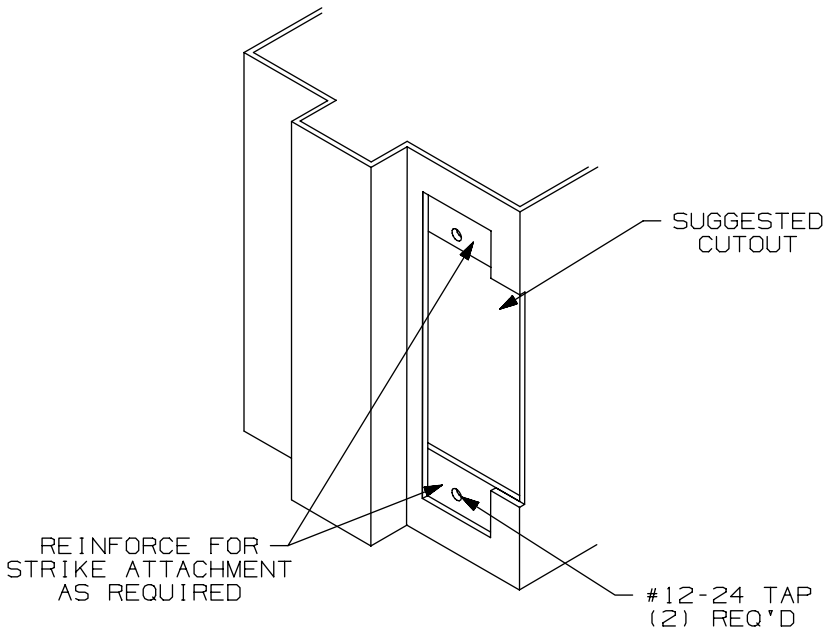

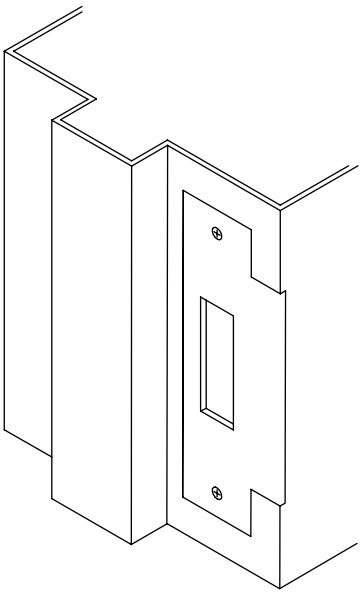

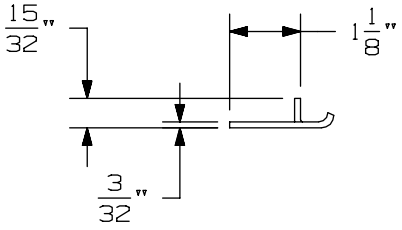

APPLICATION SCHEDULE	
DEVICE	DIM. "A"
9875 & 9875-F	11/16
9975 & 9975-F	11/16
8875 & 8875-F	1/2
5575 & 5575-F	1/2

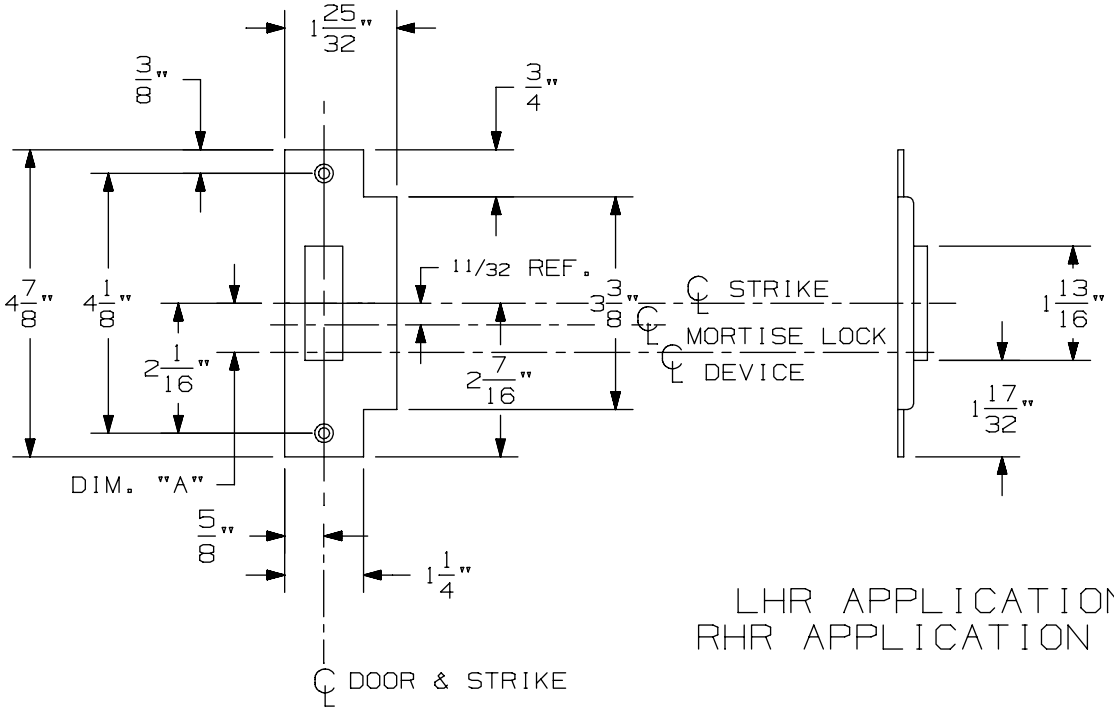

LHR APPLICATION SHOWN
RHR APPLICATION OPPOSITE

575 Mortise Strike (Single Door) for 7500 Mortise Lock

VON DUPRIN®

NOTES: SEE MASTER SHEET #10001 FOR SUGGESTED REINFORCING

TEMPLATE NUMBER: 30210_b

DATE: 07-22-13

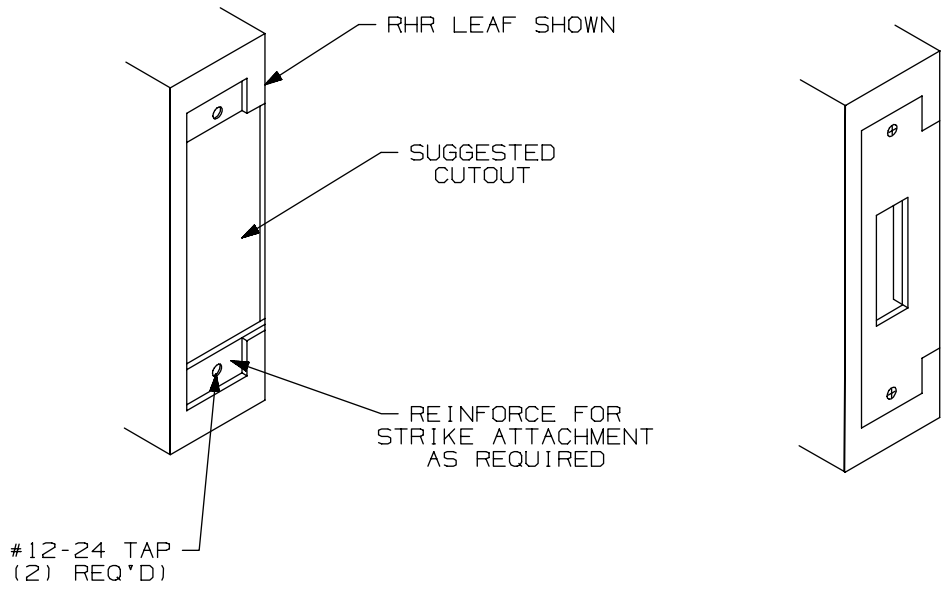

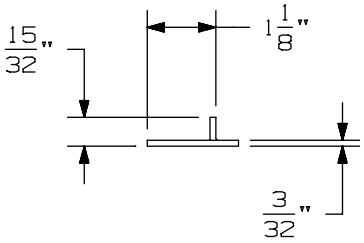

APPLICATION SCHEDULE	
DEVICE	DIM. "A"
9875 & 9875-F	11/16
9975 & 9975-F	11/16
8875 & 8875-F	1/2
5575 & 5575-F	1/2

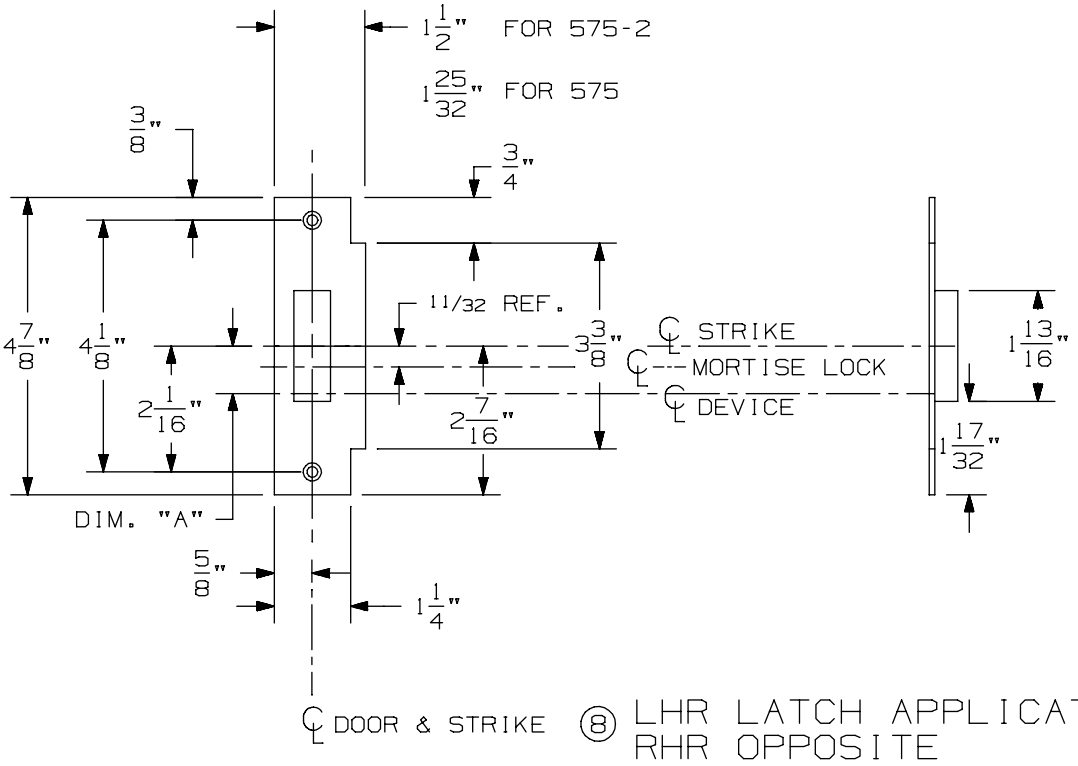

⑧ LHR LATCH APPLICATION SHOWN
RHR OPPOSITE

575-2 Mortise Strike (Double Doors) for 7500 Mortise Lock

VON DUPRIN®

NOTES: SEE MASTER SHEET #10001 FOR SUGGESTED REINFORCING

TEMPLATE NUMBER: 30212_b

DATE: 07-22-13

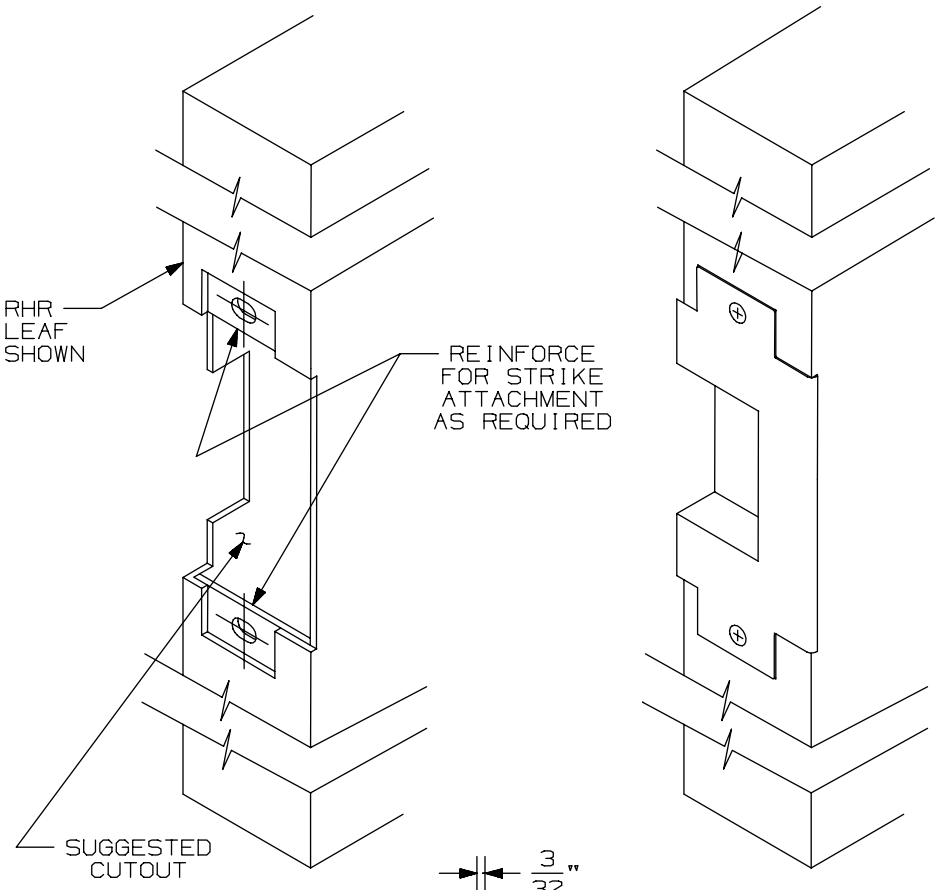

APPLICATION SCHEDULE	
DEVICE	DIM."A"
9875 & 9875-F	11/16
9975 & 9975-F	11/16
8875 & 8875-F	1/2
5575 & 5575-F	1/2

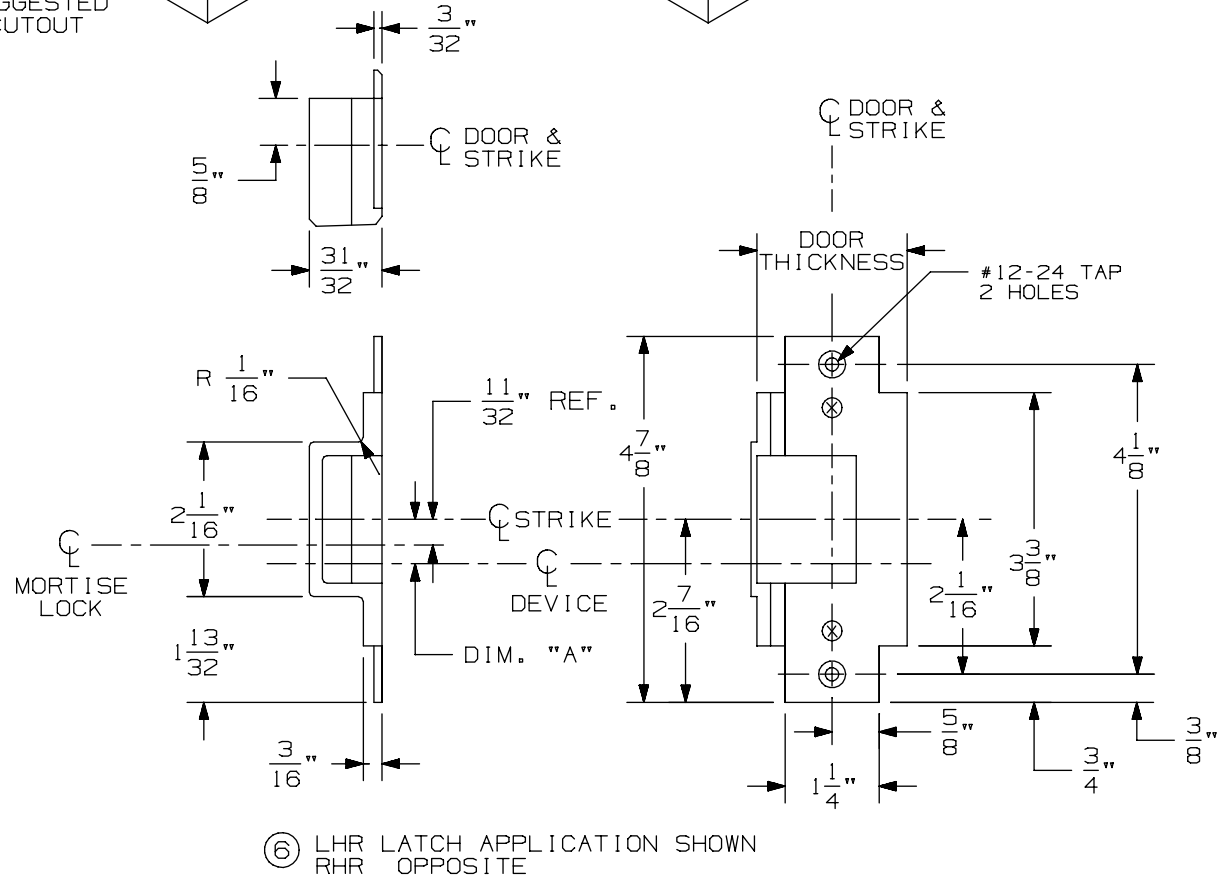

⑥ LHR LATCH APPLICATION SHOWN
RHR OPPOSITE

576A & 576B Mortise Strike for 7500 Mortise Lock

VON DUPRIN®

NOTES: SEE MASTER SHEET #10001 FOR SUGGESTED REINFORCING

TEMPLATE NUMBER: 30211_a

DATE: 05-28-13

CX9875/9975 Series Mortise Lock Devices

NOTES: SEE MASTER SHEET #10001 FOR SUGGESTED REINFORCING

TEMPLATE NUMBER: 10358_a

DATE: 05-22-13

VON DUPRIN®

NOTES:
1. THESE FOUR HOLES TO BE PREPARED FOR SURFACE APPLICATION WHEN USING 696/697 TRIM. DO NOT PREPARE FOR SEX BOLTS.
2. FOR STOCK HOLLOW METAL DOORS SEE TEMPLATE NUMBER 10312 FOR TYPE '86' CUTOUT.
3. GLASS BEAD KIT AVAILABLE WHEN REQUIRED.
4. WIRING TO SS7500 & E7500 LOCKS GO THROUGH DOOR NOT DEVICE.
5. FOR OUTSIDE TRIM PREPARATION, WHEN REQUIRED, SEE TRIM TEMPLATE.
6. CX DEVICE WIRES EXIT DEVICE NEAR HINGE SIDE.

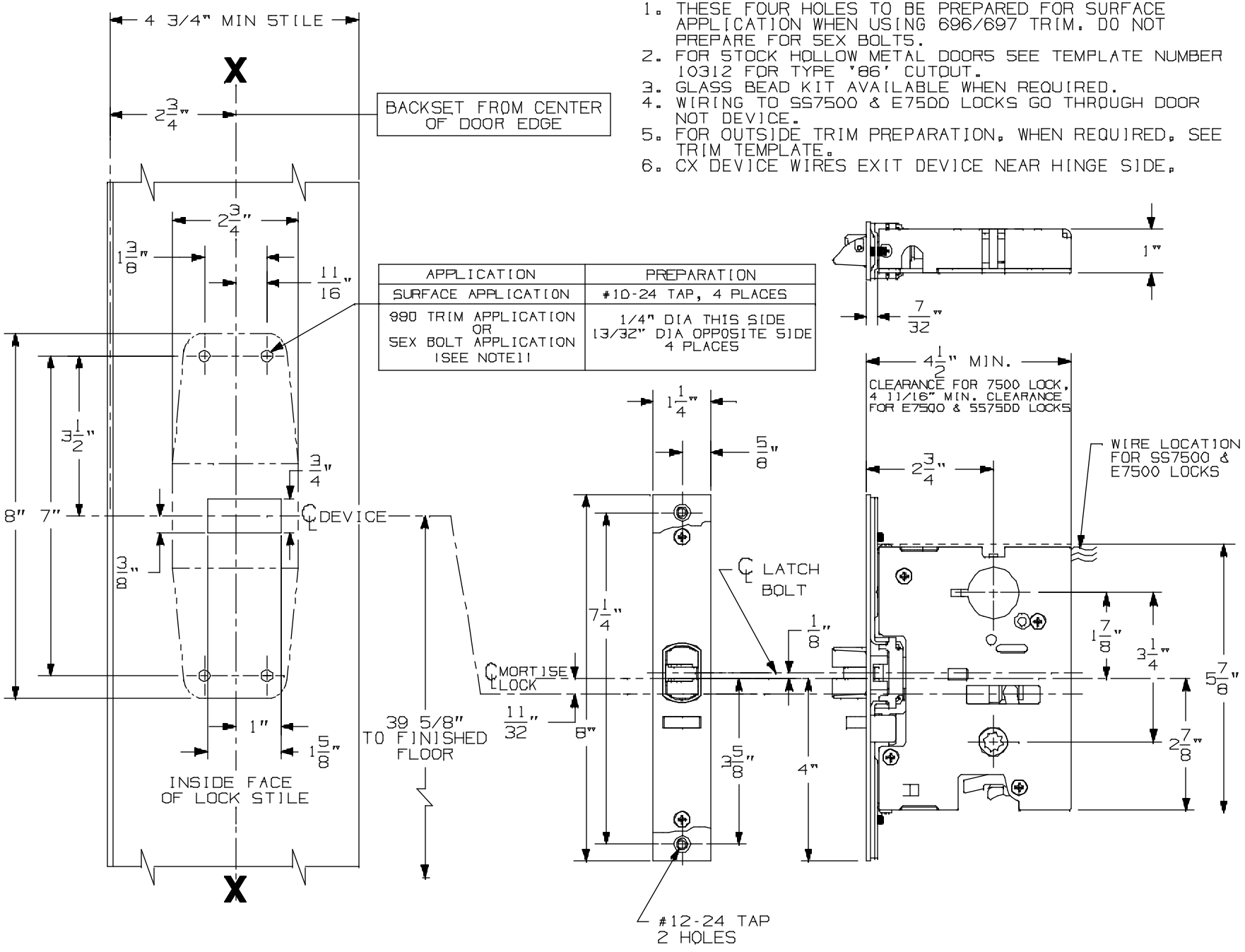

APPLICATION	PREPARATION
SURFACE APPLICATION	#10-24 TAP, 4 PLACES
990 TRIM APPLICATION OR SEX BOLT APPLICATION (SEE NOTE11	1/4" DIA THIS SIDE 13/32" DIA OPPOSITE SIDE 4 PLACES

LHR APPLICATION SHOWN,
RHR APPLICATION OPPOSITE

991 K & 992 L Trim for Mortise Device

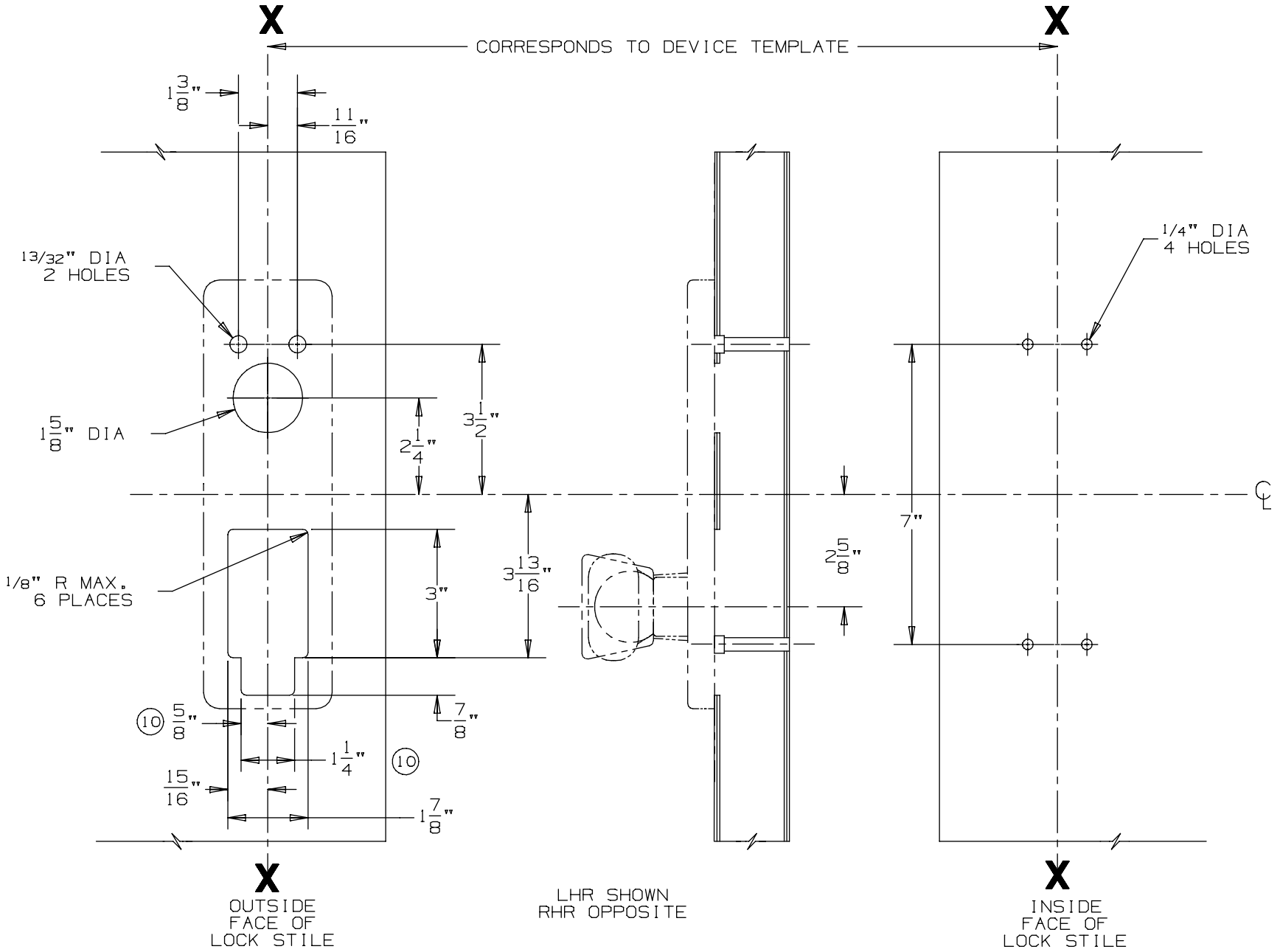

DEVICE APPLICATION SCHEDULE
9875/9975 SERIES DEVICE

NOTES: SEE MASTER SHEET #10001 FOR SUGGESTED REINFORCING

TEMPLATE NUMBER: 20280_a

DATE: 05-23-13

VON DUPRIN®

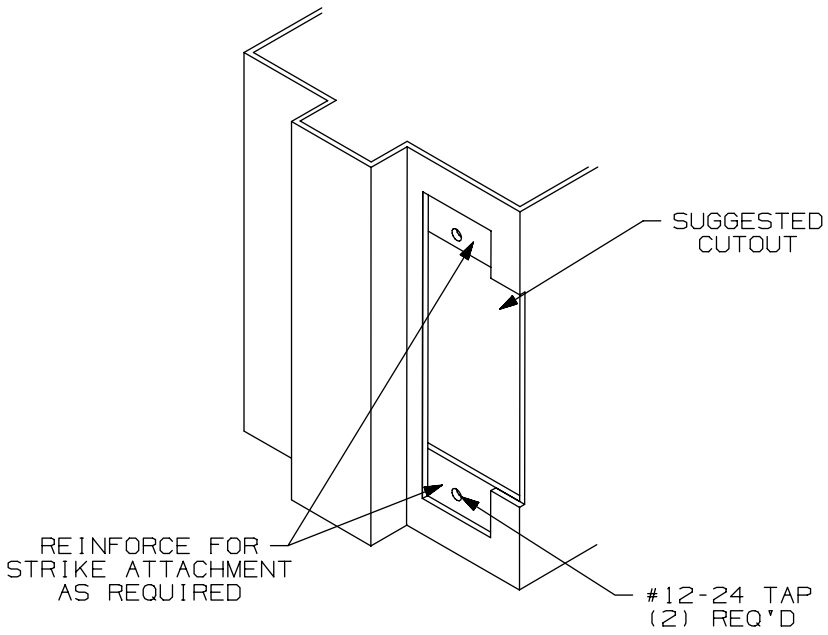

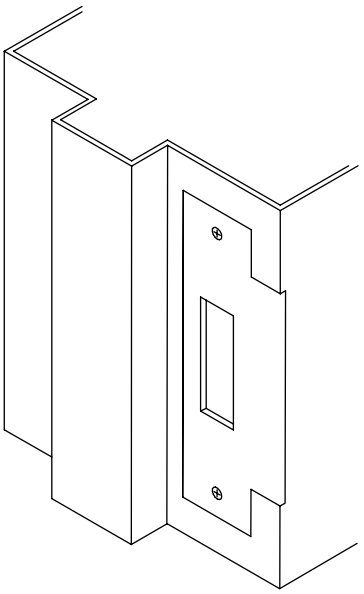

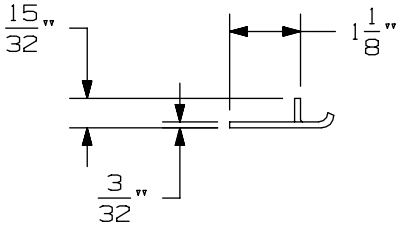

APPLICATION SCHEDULE	
DEVICE	DIM. "A"
9875 & 9875-F	11/16
9975 & 9975-F	11/16
8875 & 8875-F	1/2
5575 & 5575-F	1/2

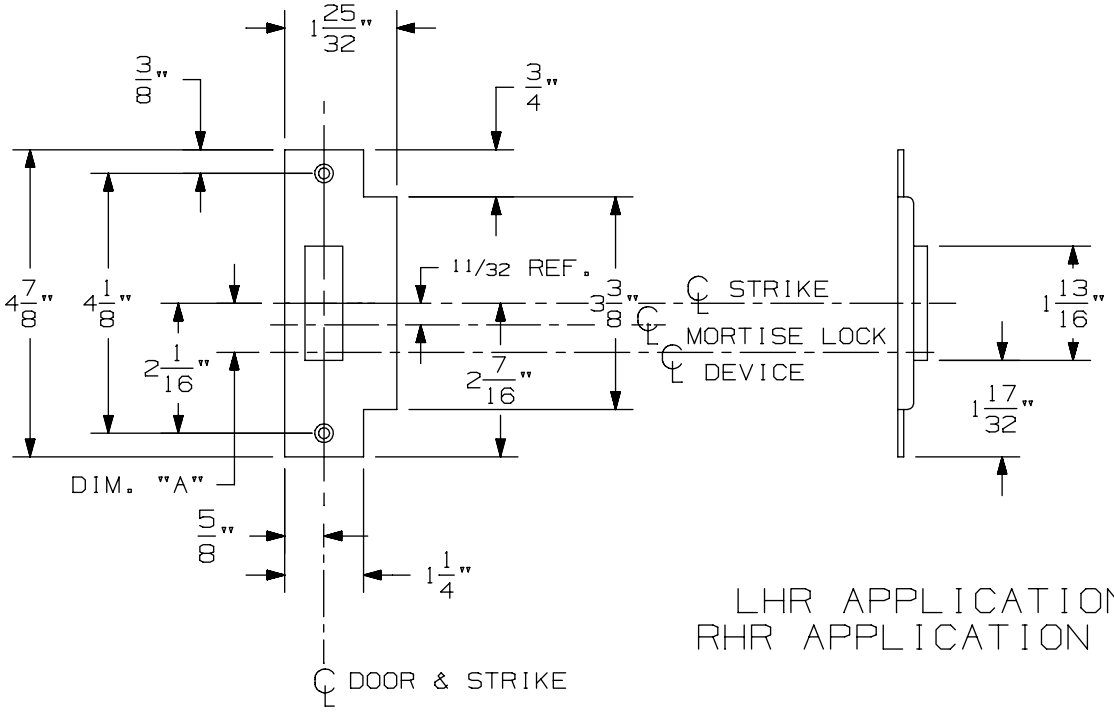

LHR APPLICATION SHOWN
RHR APPLICATION OPPOSITE

575 Mortise Strike (Single Door) for 7500 Mortise Lock

VON DUPRIN®

NOTES: SEE MASTER SHEET #10001 FOR SUGGESTED REINFORCING

TEMPLATE NUMBER: 30210_b

DATE: 07-22-13

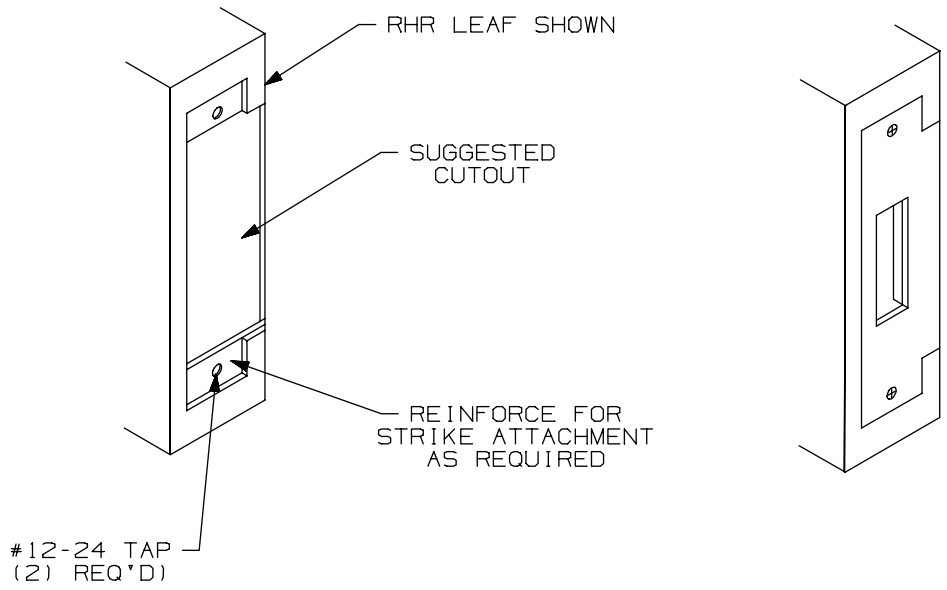

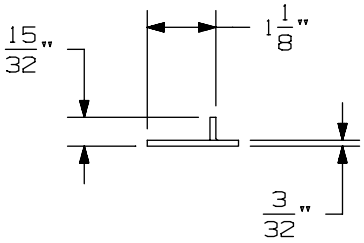

APPLICATION SCHEDULE	
DEVICE	DIM. "A"
9875 & 9875-F	11/16
9975 & 9975-F	11/16
8875 & 8875-F	1/2
5575 & 5575-F	1/2

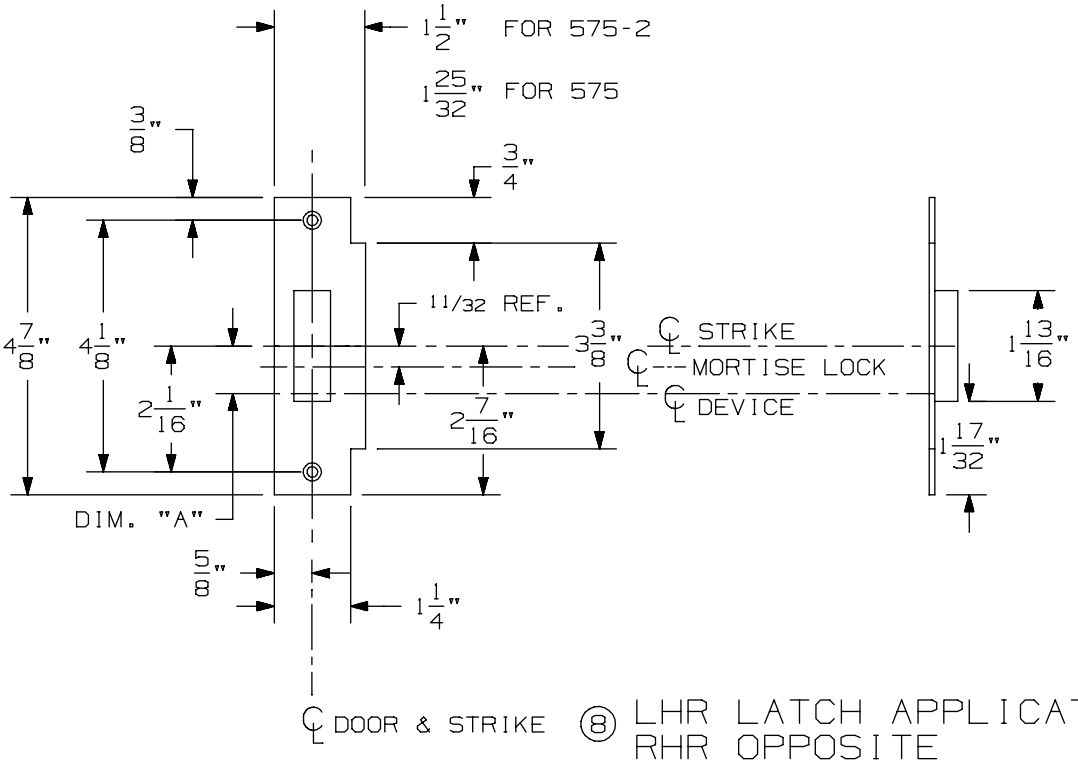

⑧ LHR LATCH APPLICATION SHOWN
RHR OPPOSITE

575-2 Mortise Strike (Double Doors) for 7500 Mortise Lock

VON DUPRIN®

NOTES: SEE MASTER SHEET #10001 FOR SUGGESTED REINFORCING

TEMPLATE NUMBER: 30212_b

DATE: 07-22-13

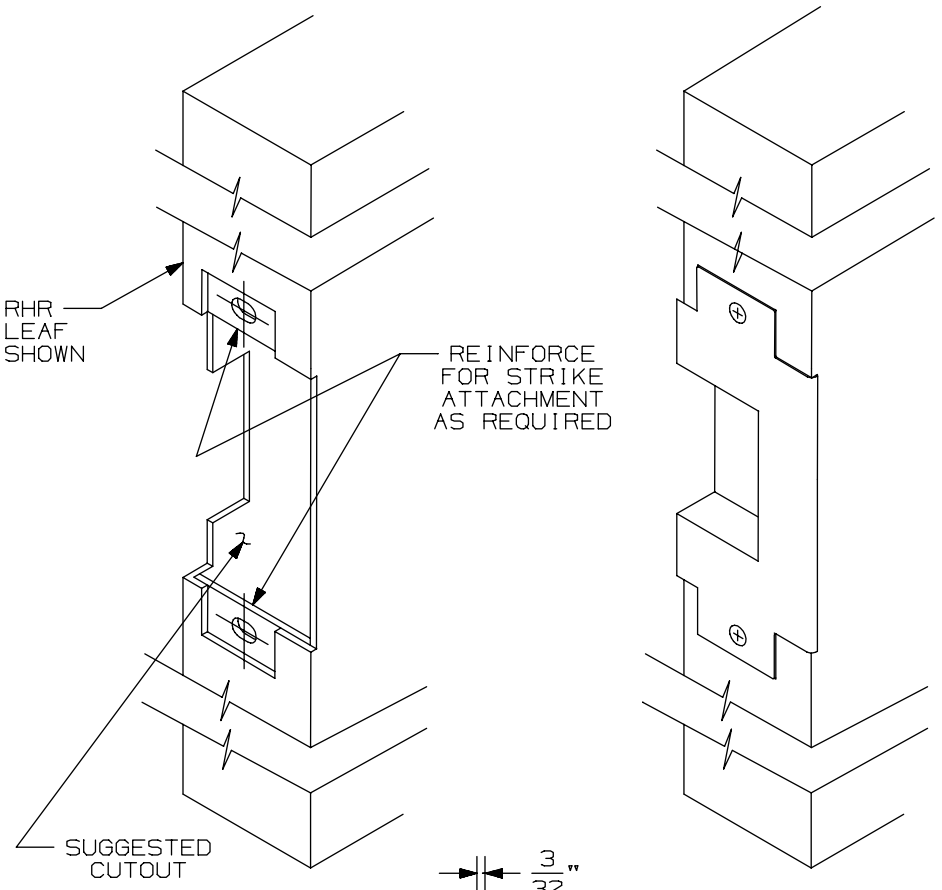

APPLICATION SCHEDULE	
DEVICE	DIM."A"
9875 & 9875-F	11/16
9975 & 9975-F	11/16
8875 & 8875-F	1/2
5575 & 5575-F	1/2

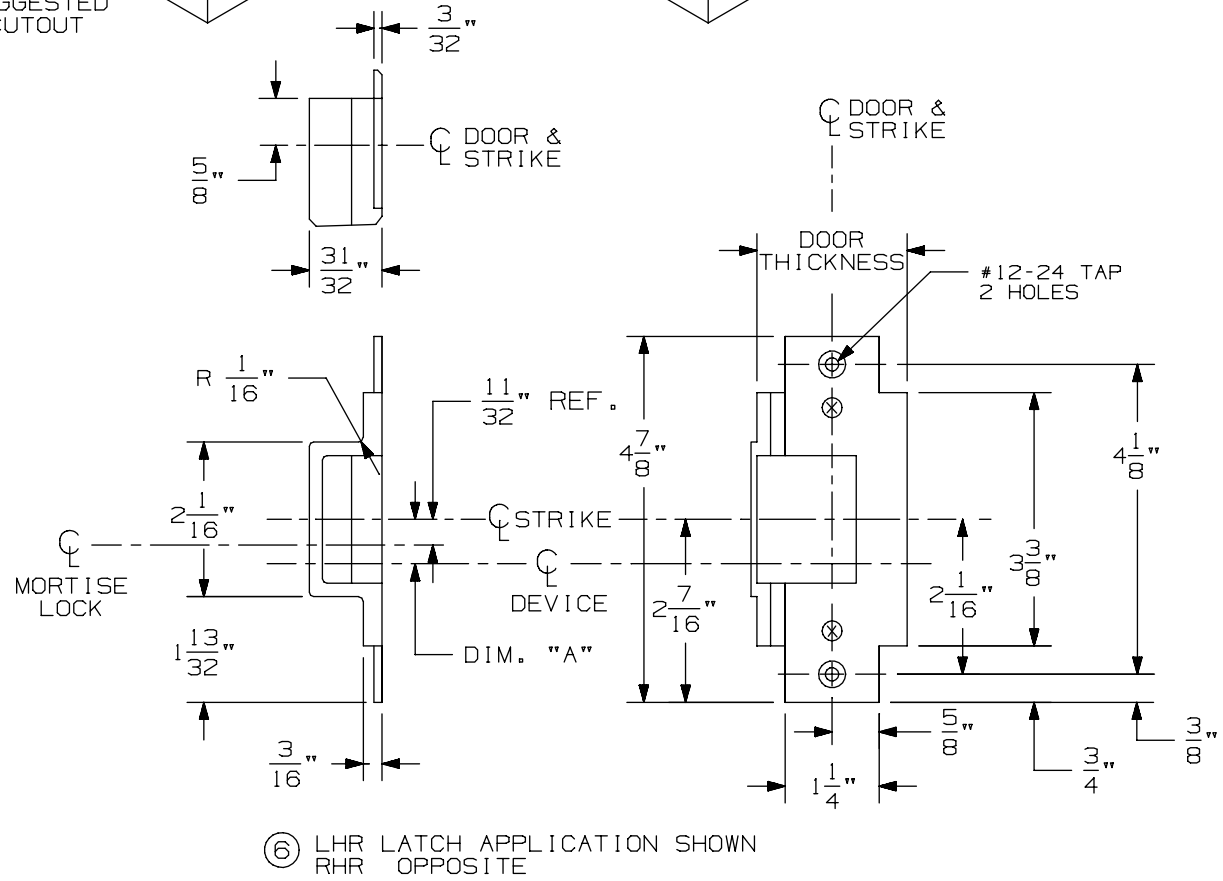

⑥ LHR LATCH APPLICATION SHOWN
RHR OPPOSITE

576A & 576B Mortise Strike for 7500 Mortise Lock

VON DUPRIN®

NOTES: SEE MASTER SHEET #10001 FOR SUGGESTED REINFORCING

TEMPLATE NUMBER: 30211_a

DATE: 05-28-13

CX9875/9975 Series Mortise Lock Devices

NOTES: SEE MASTER SHEET #10001 FOR SUGGESTED REINFORCING

TEMPLATE NUMBER: 10358_a

DATE: 05-22-13

VON DUPRIN®

NOTES:
1. THESE FOUR HOLES TO BE PREPARED FOR SURFACE APPLICATION WHEN USING 696/697 TRIM. DO NOT PREPARE FOR SEX BOLTS.
2. FOR STOCK HOLLOW METAL DOORS SEE TEMPLATE NUMBER 10312 FOR TYPE '86' CUTOUT.
3. GLASS BEAD KIT AVAILABLE WHEN REQUIRED.
4. WIRING TO SS7500 & E7500 LOCKS GO THROUGH DOOR NOT DEVICE.
5. FOR OUTSIDE TRIM PREPARATION, WHEN REQUIRED, SEE TRIM TEMPLATE.
6. CX DEVICE WIRES EXIT DEVICE NEAR HINGE SIDE.

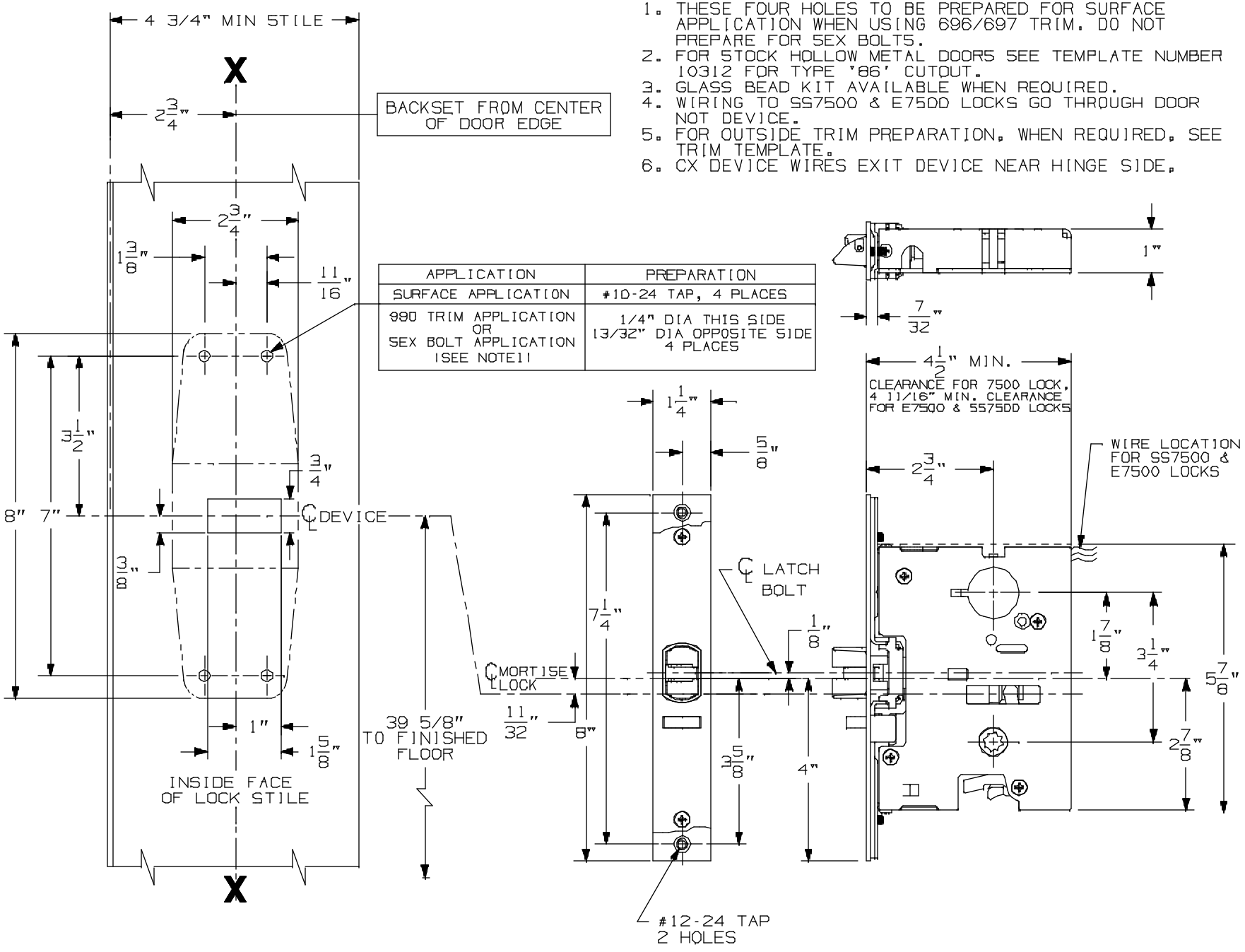

APPLICATION	PREPARATION
SURFACE APPLICATION	#10-24 TAP, 4 PLACES
990 TRIM APPLICATION OR SEX BOLT APPLICATION (SEE NOTE11	1/4" DIA THIS SIDE 13/32" DIA OPPOSITE SIDE 4 PLACES

LHR APPLICATION SHOWN,
RHR APPLICATION OPPOSITE

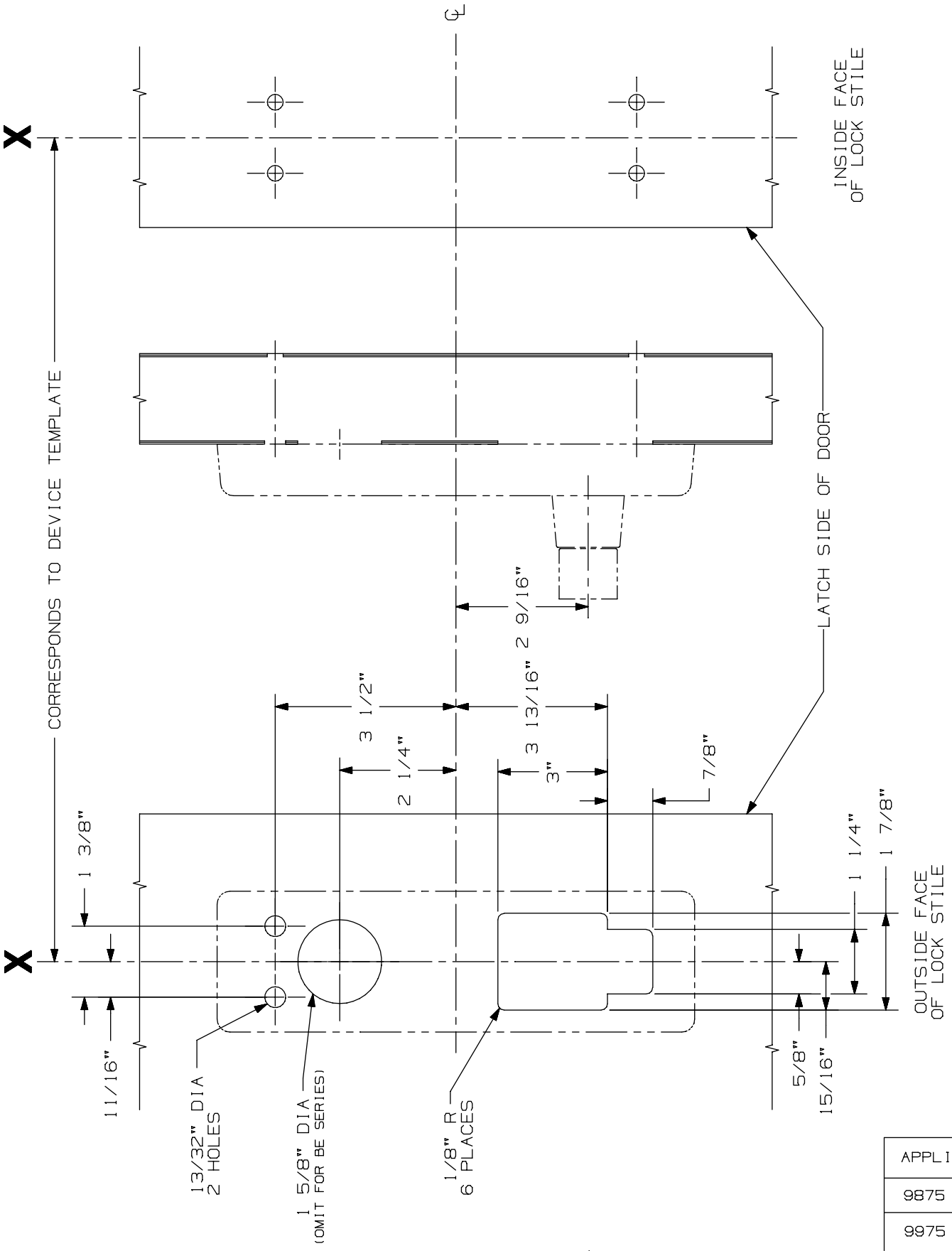

APPLICATIONS
9875 SERIES
9975 SERIES

996L, E996L, 996L-BE, & E996L-BE
Mortise Series
Trim Metal Door Application

VON DUPRIN®

NOTES: See Master Sheet #10001 For Suggested Reinforcing

TEMPLATE NUMBER: 20006_b

DATE: 10-30-14

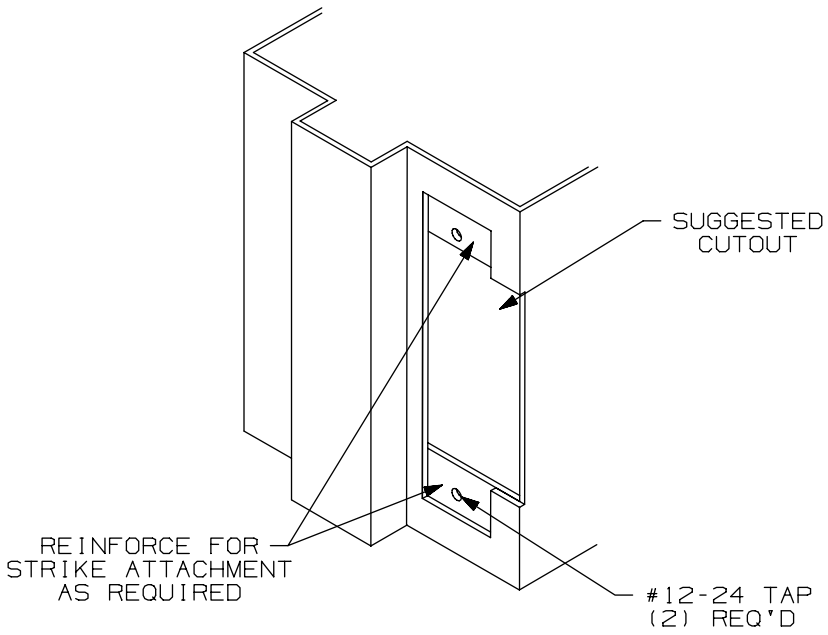

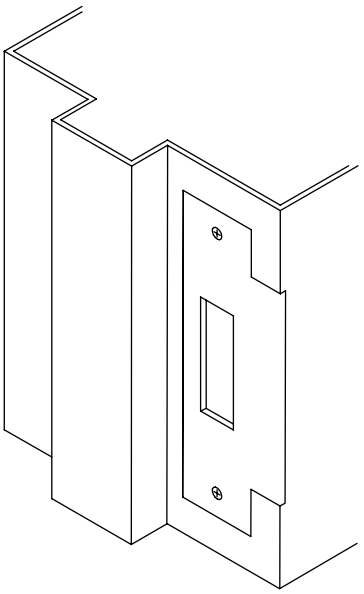

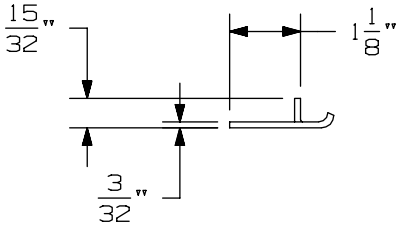

APPLICATION SCHEDULE	
DEVICE	DIM. "A"
9875 & 9875-F	11/16
9975 & 9975-F	11/16
8875 & 8875-F	1/2
5575 & 5575-F	1/2

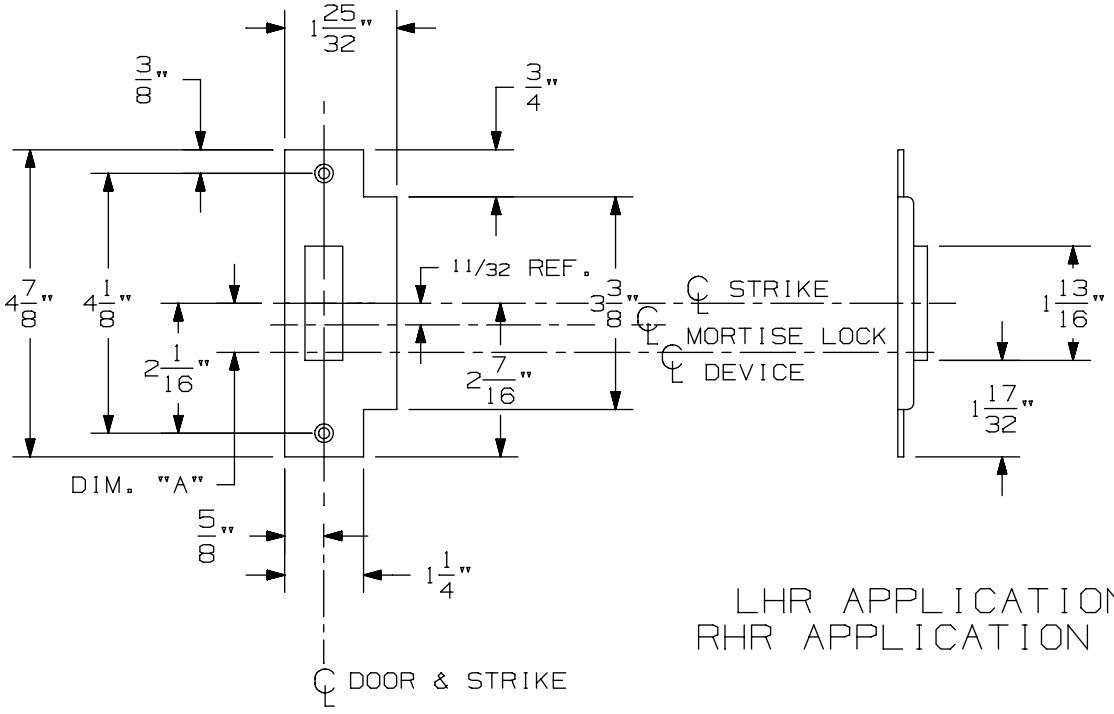

LHR APPLICATION SHOWN
RHR APPLICATION OPPOSITE

575 Mortise Strike (Single Door) for 7500 Mortise Lock

VON DUPRIN®

NOTES: SEE MASTER SHEET #10001 FOR SUGGESTED REINFORCING

TEMPLATE NUMBER: 30210_b

DATE: 07-22-13

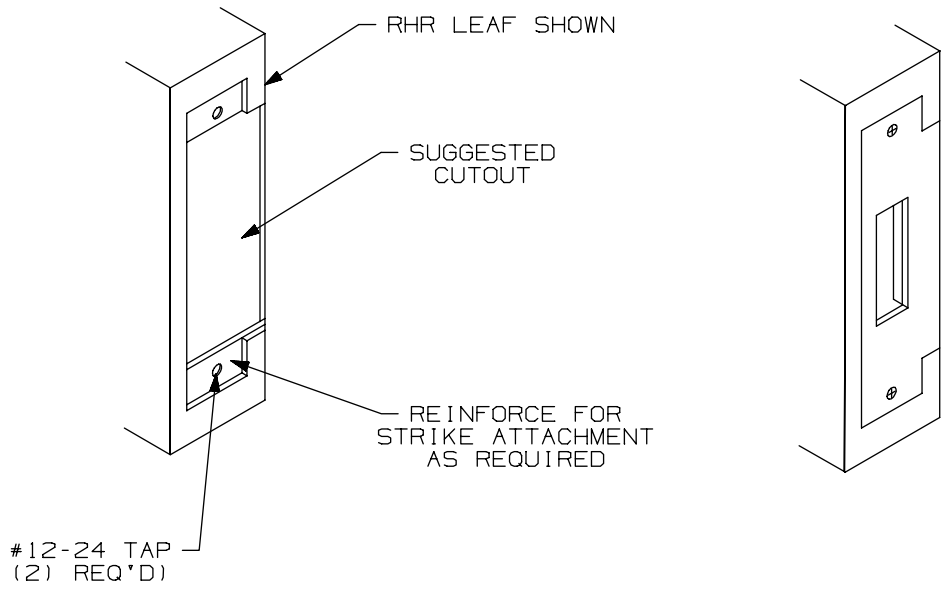

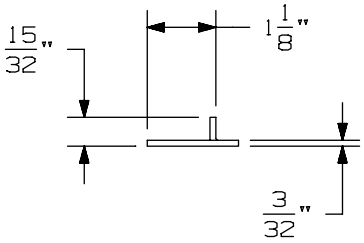

APPLICATION SCHEDULE	
DEVICE	DIM. "A"
9875 & 9875-F	11/16
9975 & 9975-F	11/16
8875 & 8875-F	1/2
5575 & 5575-F	1/2

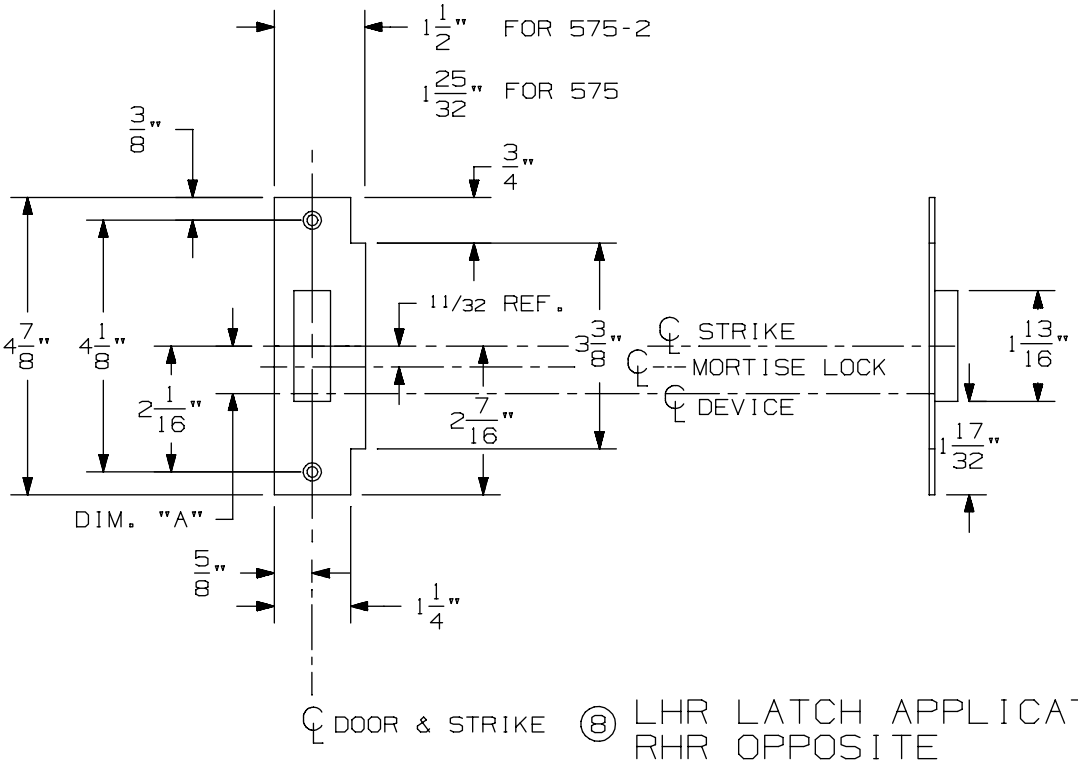

⑧ LHR LATCH APPLICATION SHOWN
RHR OPPOSITE

575-2 Mortise Strike (Double Doors) for 7500 Mortise Lock

VON DUPRIN®

NOTES: SEE MASTER SHEET #10001 FOR SUGGESTED REINFORCING

TEMPLATE NUMBER: 30212_b

DATE: 07-22-13

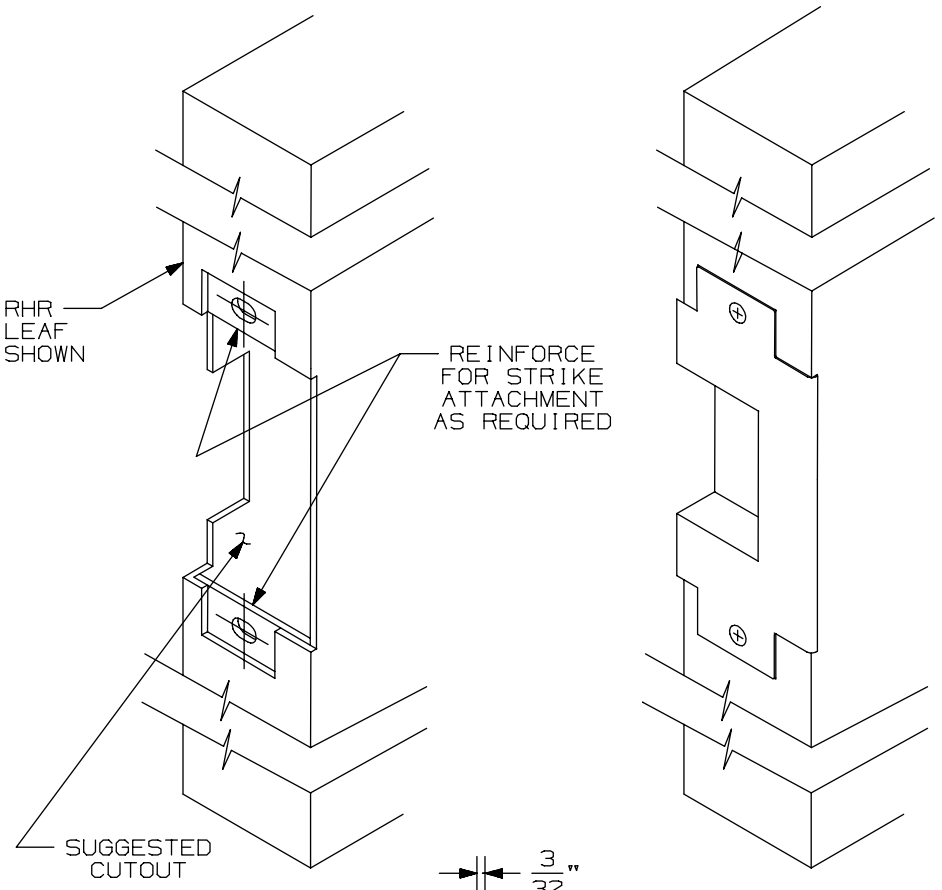

APPLICATION SCHEDULE	
DEVICE	DIM."A"
9875 & 9875-F	11/16
9975 & 9975-F	11/16
8875 & 8875-F	1/2
5575 & 5575-F	1/2

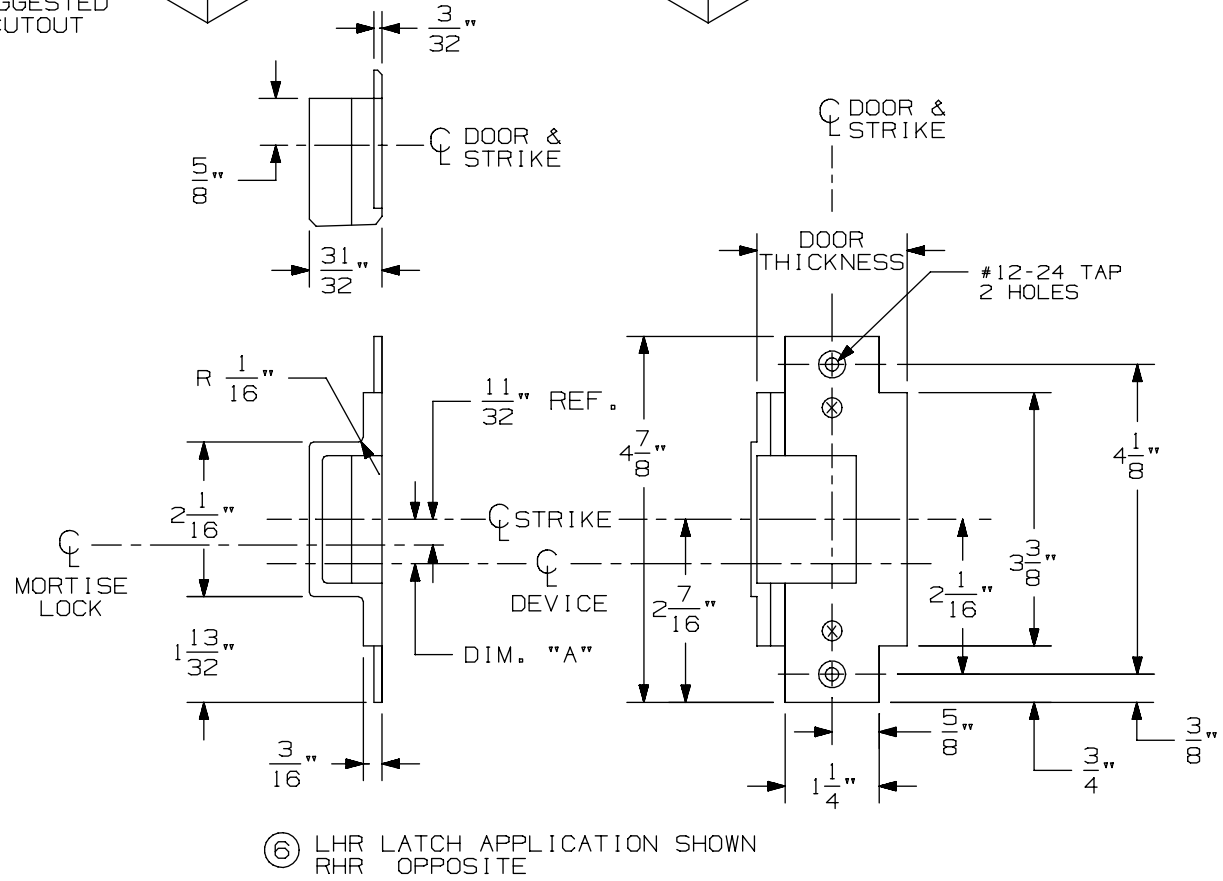

⑥ LHR LATCH APPLICATION SHOWN
RHR OPPOSITE

576A & 576B Mortise Strike for 7500 Mortise Lock

VON DUPRIN®

NOTES: SEE MASTER SHEET #10001 FOR SUGGESTED REINFORCING

TEMPLATE NUMBER: 30211_a

DATE: 05-28-13

CX9875/9975 Series Mortise Lock Devices

NOTES: SEE MASTER SHEET #10001 FOR SUGGESTED REINFORCING

TEMPLATE NUMBER: 10358_a

DATE: 05-22-13

VON DUPRIN®

NOTES:
1. THESE FOUR HOLES TO BE PREPARED FOR SURFACE APPLICATION WHEN USING 696/697 TRIM. DO NOT PREPARE FOR SEX BOLTS.
2. FOR STOCK HOLLOW METAL DOORS SEE TEMPLATE NUMBER 10312 FOR TYPE '86' CUTOUT.
3. GLASS BEAD KIT AVAILABLE WHEN REQUIRED.
4. WIRING TO SS7500 & E7500 LOCKS GO THROUGH DOOR NOT DEVICE.
5. FOR OUTSIDE TRIM PREPARATION, WHEN REQUIRED, SEE TRIM TEMPLATE.
6. CX DEVICE WIRES EXIT DEVICE NEAR HINGE SIDE.

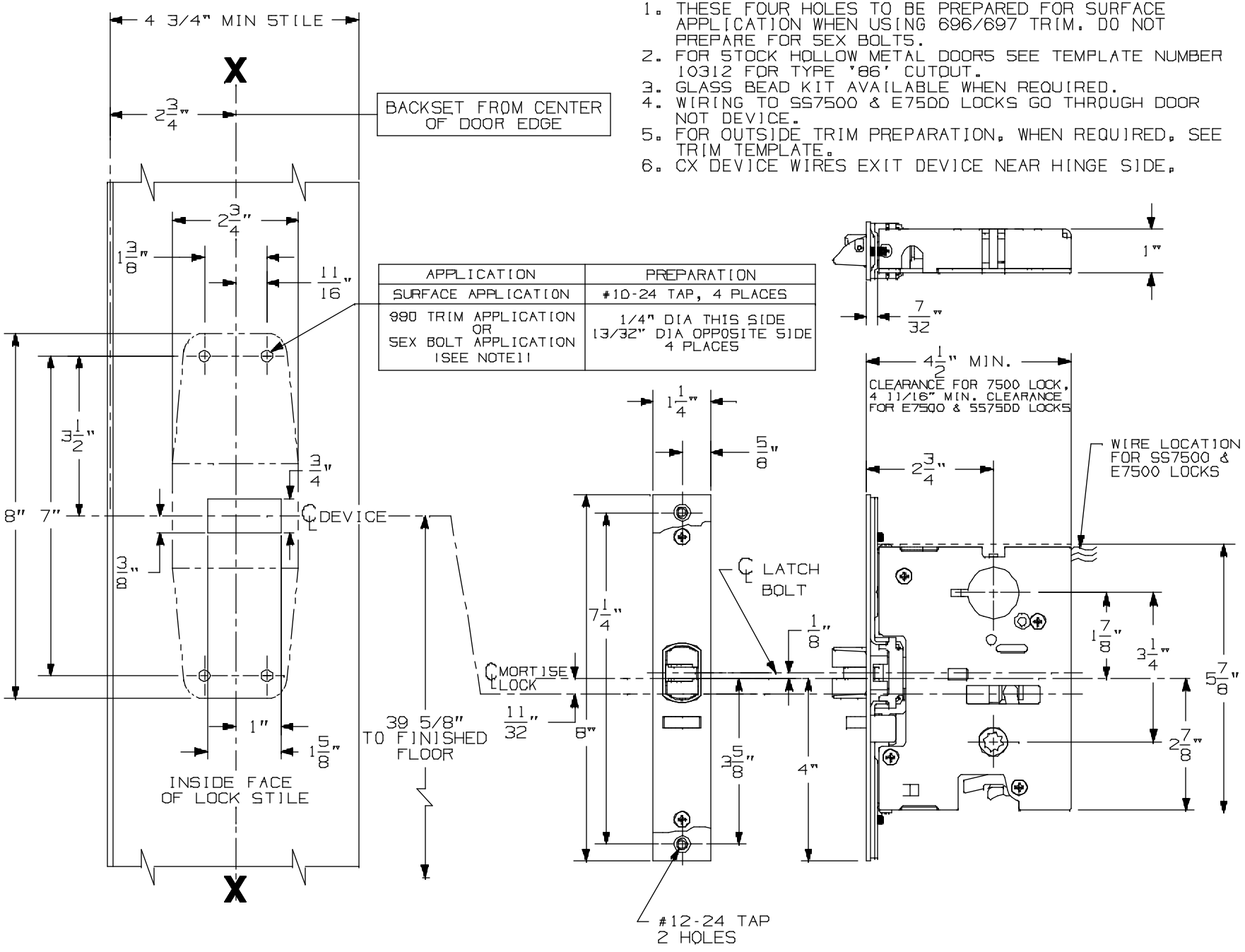

APPLICATION	PREPARATION
SURFACE APPLICATION	#10-24 TAP, 4 PLACES
990 TRIM APPLICATION OR SEX BOLT APPLICATION (SEE NOTE11	1/4" DIA THIS SIDE 13/32" DIA OPPOSITE SIDE 4 PLACES

LHR APPLICATION SHOWN,
RHR APPLICATION OPPOSITE

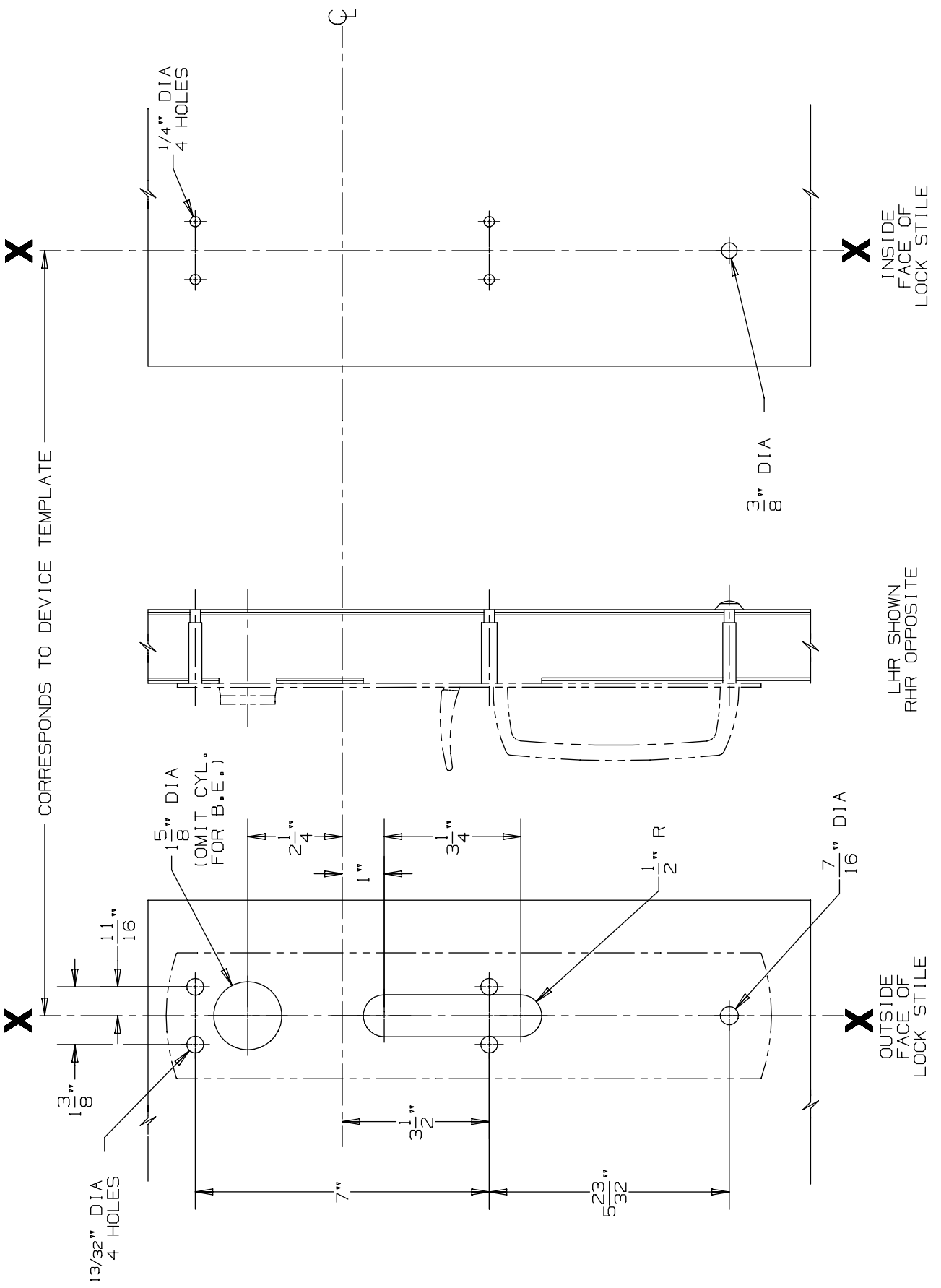

DEVICE APPLICATION SCHEDULE
9875/9975 SERIES DEVICE

990 TP & 990 TP-BE Trim

VON DUPRIN®

NOTES: SEE MASTER SHEET #10001 FOR SUGGESTED REINFORCING

TEMPLATE NUMBER: 20270_a

DATE: 05-23-13

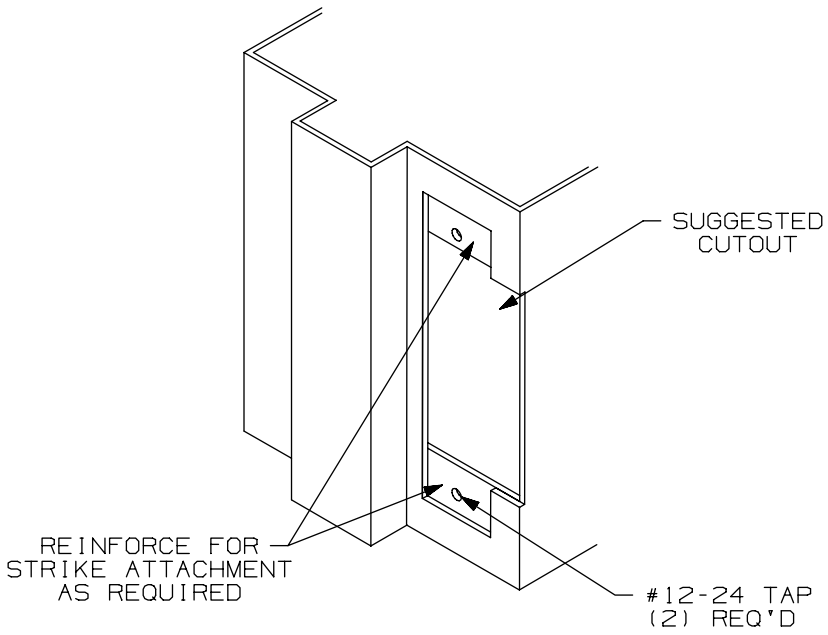

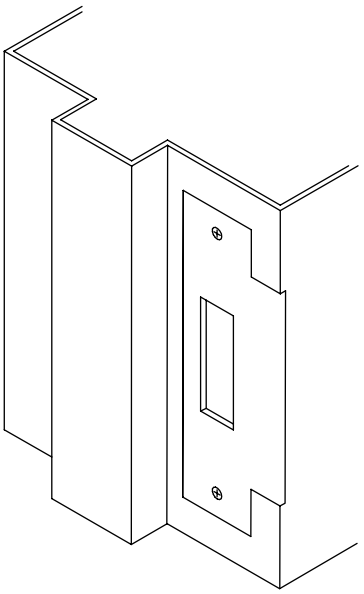

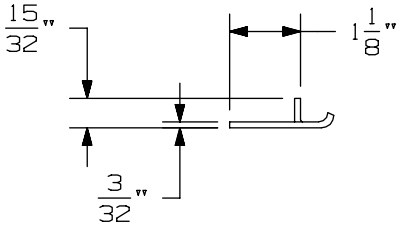

APPLICATION SCHEDULE	
DEVICE	DIM. "A"
9875 & 9875-F	11/16
9975 & 9975-F	11/16
8875 & 8875-F	1/2
5575 & 5575-F	1/2

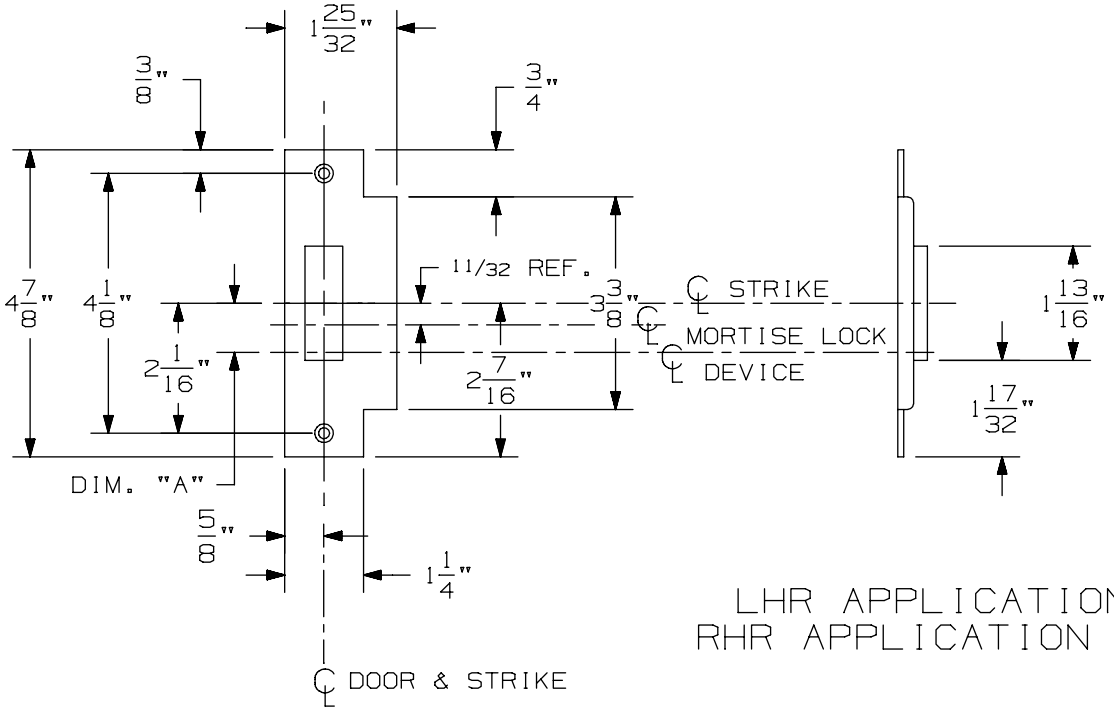

LHR APPLICATION SHOWN
RHR APPLICATION OPPOSITE

575 Mortise Strike (Single Door) for 7500 Mortise Lock

VON DUPRIN®

NOTES: SEE MASTER SHEET #10001 FOR SUGGESTED REINFORCING

TEMPLATE NUMBER: 30210_b

DATE: 07-22-13

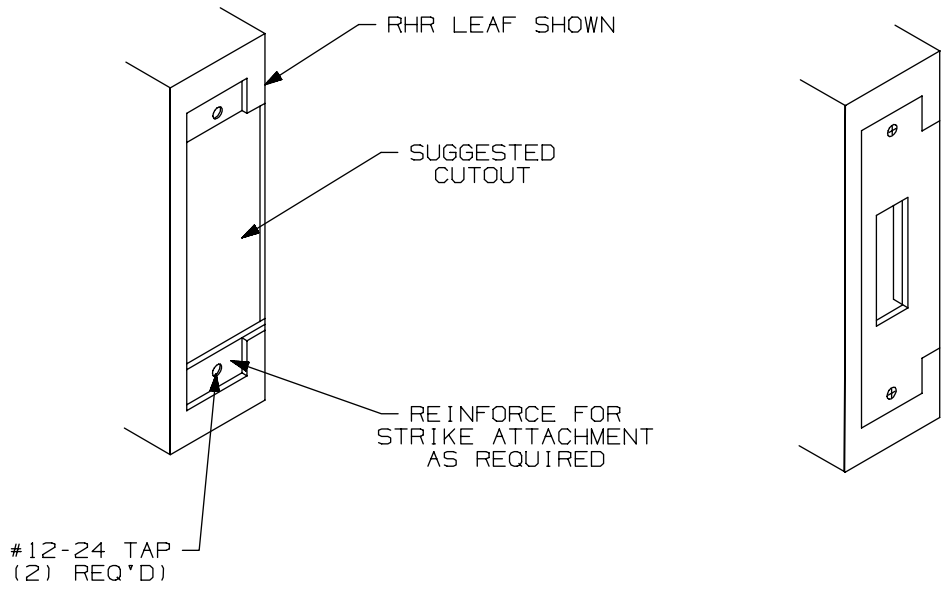

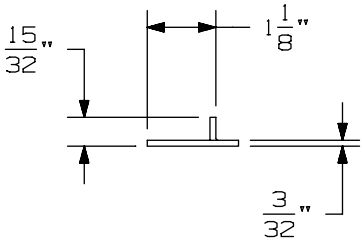

APPLICATION SCHEDULE	
DEVICE	DIM. "A"
9875 & 9875-F	11/16
9975 & 9975-F	11/16
8875 & 8875-F	1/2
5575 & 5575-F	1/2

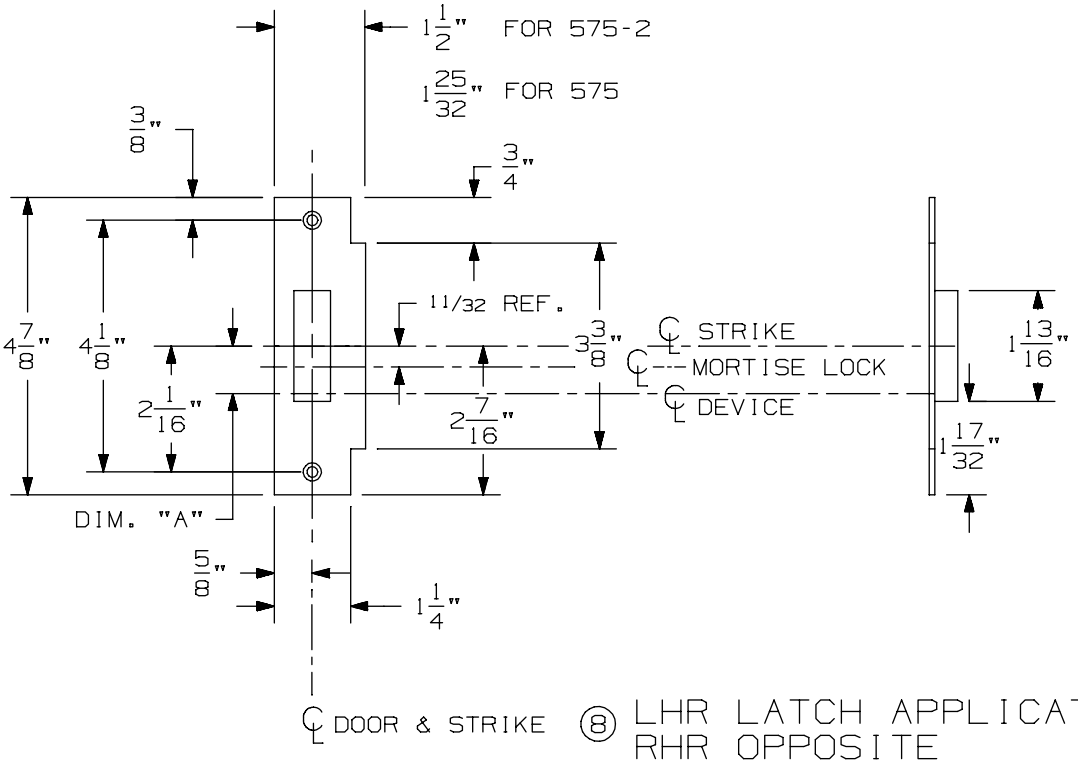

⑧ LHR LATCH APPLICATION SHOWN
RHR OPPOSITE

575-2 Mortise Strike (Double Doors) for 7500 Mortise Lock

VON DUPRIN®

NOTES: SEE MASTER SHEET #10001 FOR SUGGESTED REINFORCING

TEMPLATE NUMBER: 30212_b

DATE: 07-22-13

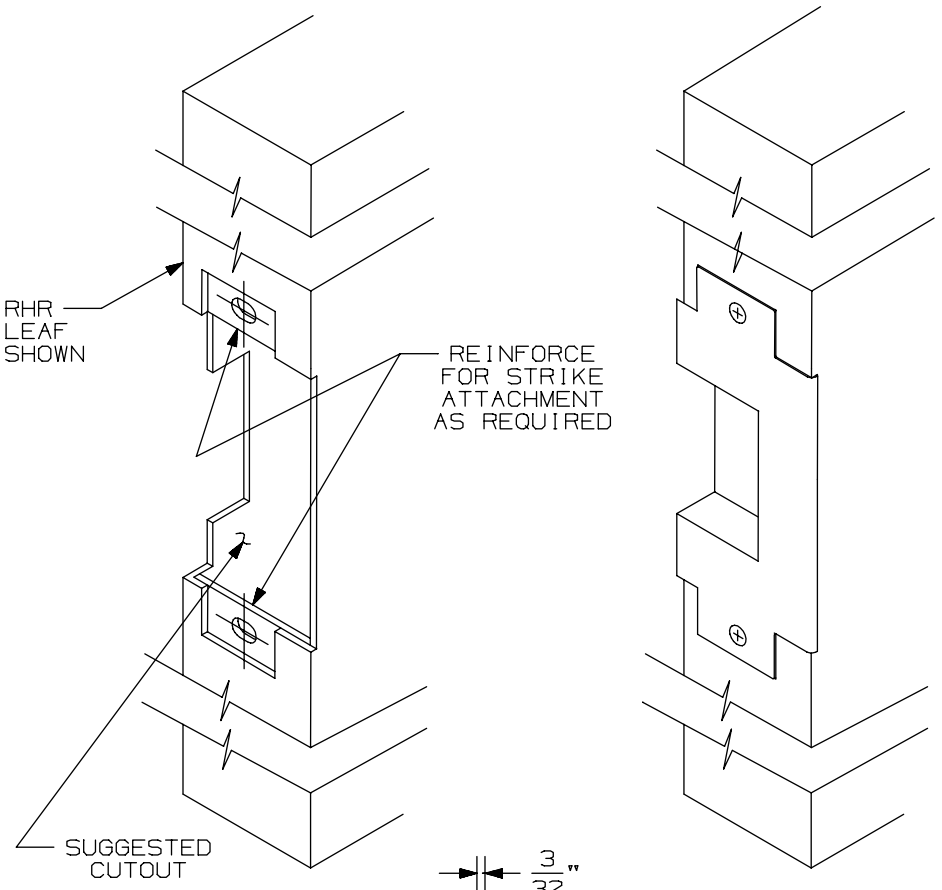

APPLICATION SCHEDULE	
DEVICE	DIM."A"
9875 & 9875-F	11/16
9975 & 9975-F	11/16
8875 & 8875-F	1/2
5575 & 5575-F	1/2

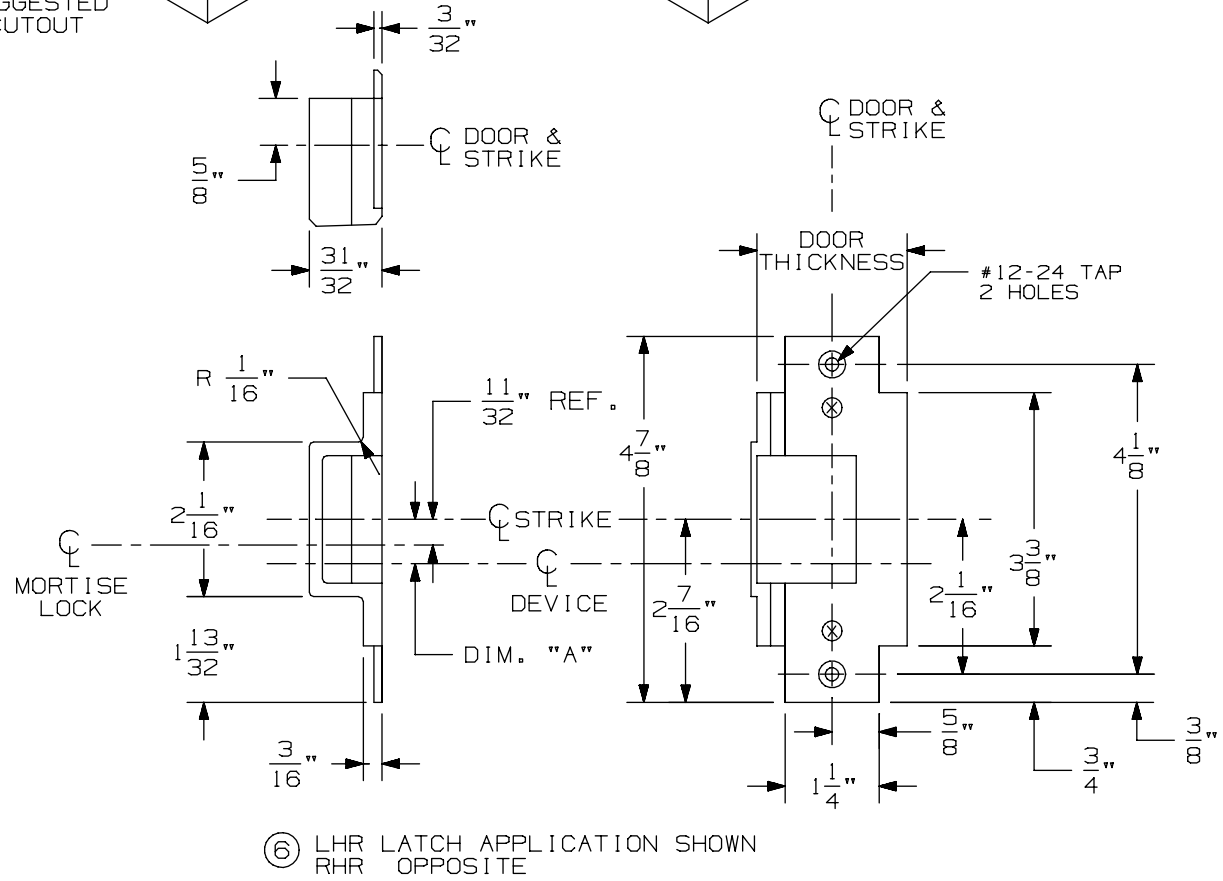

⑥ LHR LATCH APPLICATION SHOWN
RHR OPPOSITE

576A & 576B Mortise Strike for 7500 Mortise Lock

VON DUPRIN®

NOTES: SEE MASTER SHEET #10001 FOR SUGGESTED REINFORCING

TEMPLATE NUMBER: 30211_a

DATE: 05-28-13

99 Series Trims, Controls & Strikes

99 Series Trims, Controls & Strikes

-

98/99 Series Trims

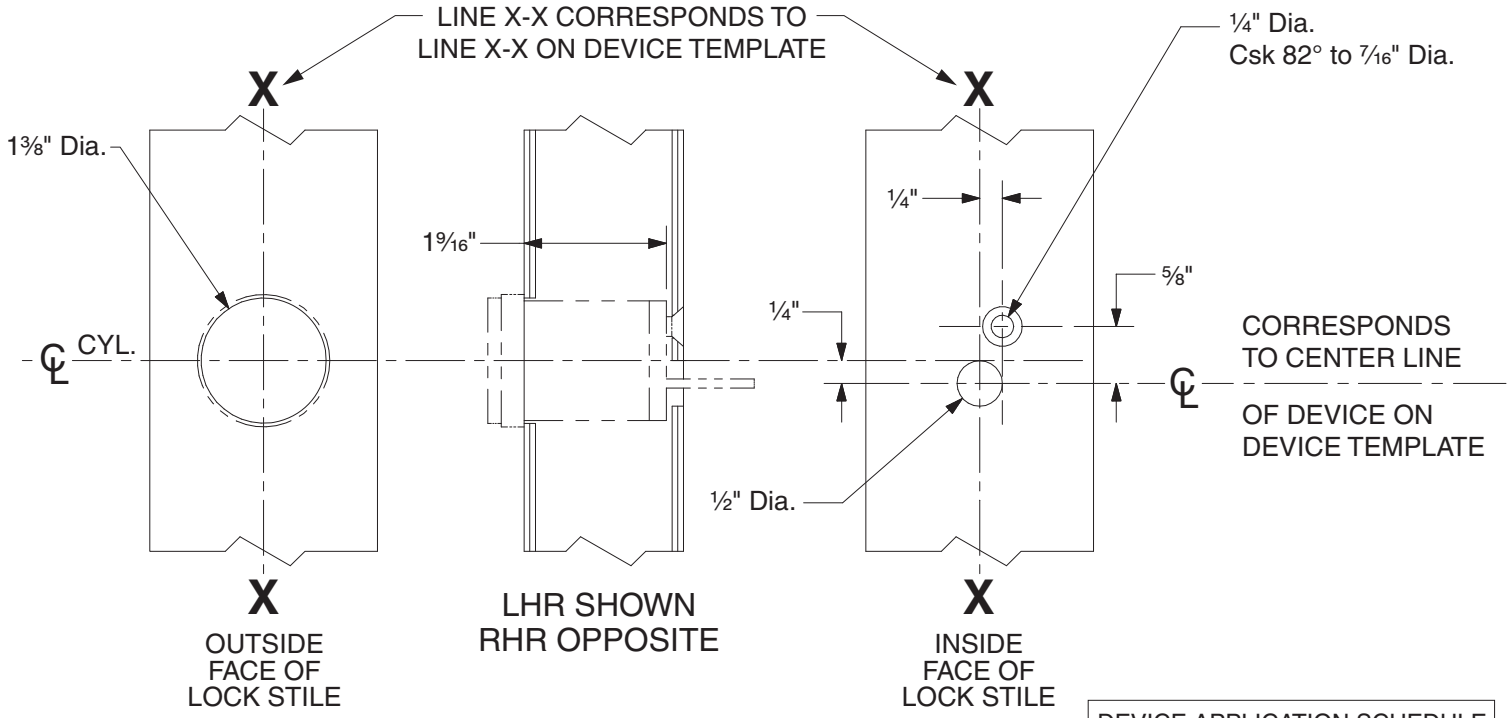

DEVICE APPLICATION SCHEDULE	
98 RIM SERIES	99 RIM SERIES
9827 SERIES	9927 SERIES
9847 SERIES	9947 SERIES
22 RIM SERIES	2227 SERIES

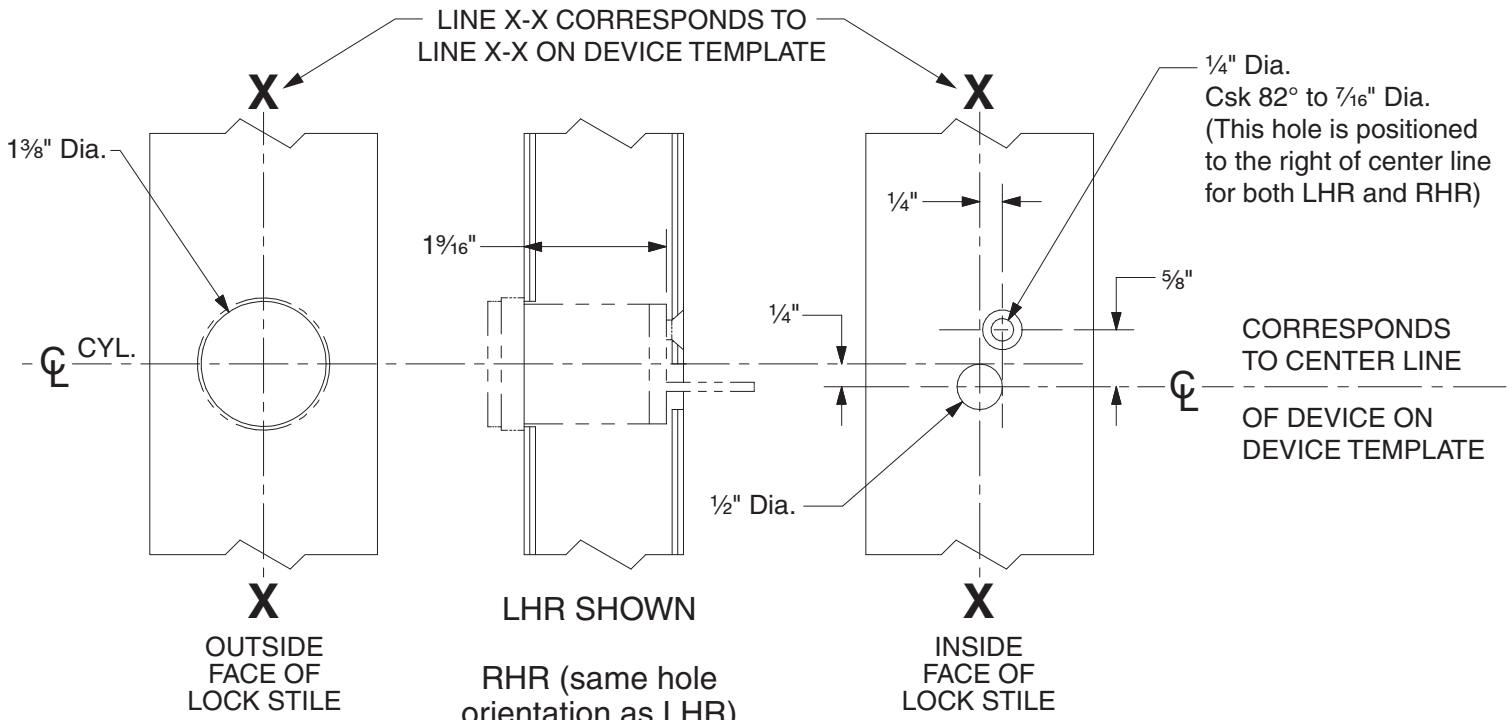

DEVICE APPLICATION SCHEDULE	
9849 SERIES	9949 SERIES

110NL Cylinder Preparation

VON DUPRIN®

NOTES: SEE MASTER SHEET #10001 FOR SUGGESTED REINFORCING

TEMPLATE NUMBER: 40022_c

DATE: 05-28-13

392-7 (PULL BELOW CENTER)

FOR NL, TL OR DT APPLICATIONS

DRILL 1/4" DIA. C'SINK TO 82° FOR 88 & 55 SERIES DEVICES
DRILL 1/4" DIA. THRU FOR 99 SERIES DEVICES
SCREW THRU BOLT TO 99 DEVICE CHASSIS

③

DEVICE APPLICATION SCHEDULE	DIM "A"
98/99 SERIES RIM	3 1/2"
98/99 SERIES SURFACE VERTICAL	3 1/2"
98/99 SERIES MORTISE	3 1/2"
88 SERIES RIM	3 11/16"
88 SERIES SURFACE VERTICAL	3 11/16"
88 SERIES MORTISE	3 11/16"
55 SERIES RIM	13/16"

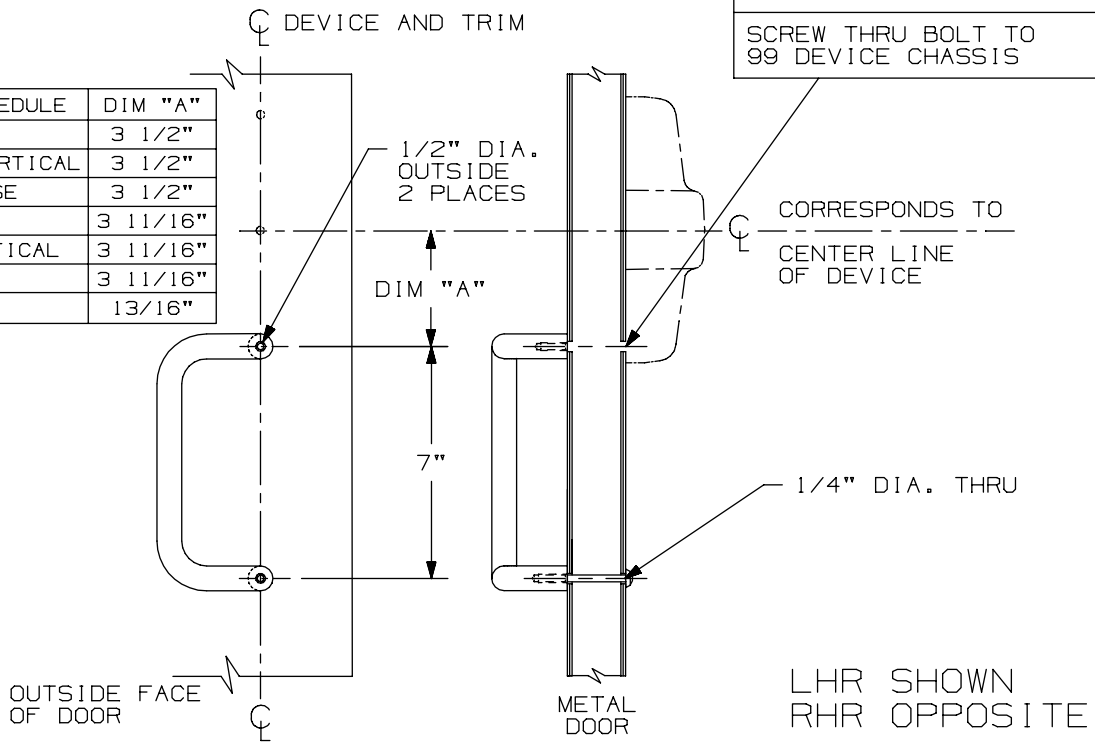

LHR SHOWN
RHR OPPOSITE

392-7 (PULL ON CENTER)

FOR NL, TL OR DT APPLICATIONS

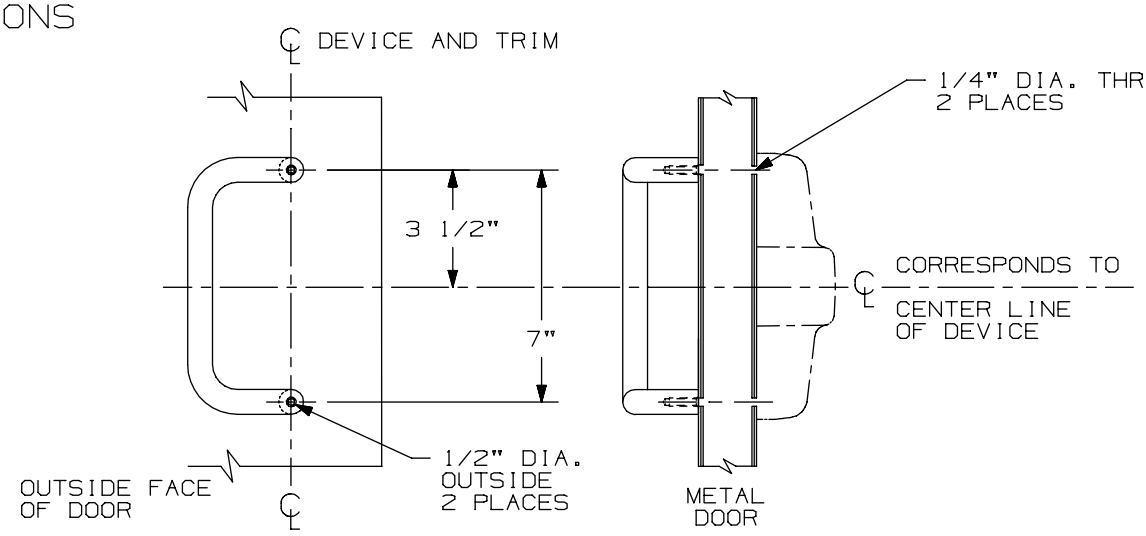

③

DEVICE APPLICATION SCHEDULE
98/99 SERIES RIM (DT OR NL)
98/99 SERIES SURFACE VERTICAL (DT, NL OR TL)
98/99 SERIES MORTISE (DT OR NL)
98/99 SERIES CONCEALED VERTICAL (DT, NL OR TL)

LHR SHOWN
RHR OPPOSITE

392-7 Pull

VON DUPRIN®

NOTES: SEE MASTER SHEET #10001 FOR SUGGESTED REINFORCING

TEMPLATE NUMBER: 20447_a

DATE: 05-23-13

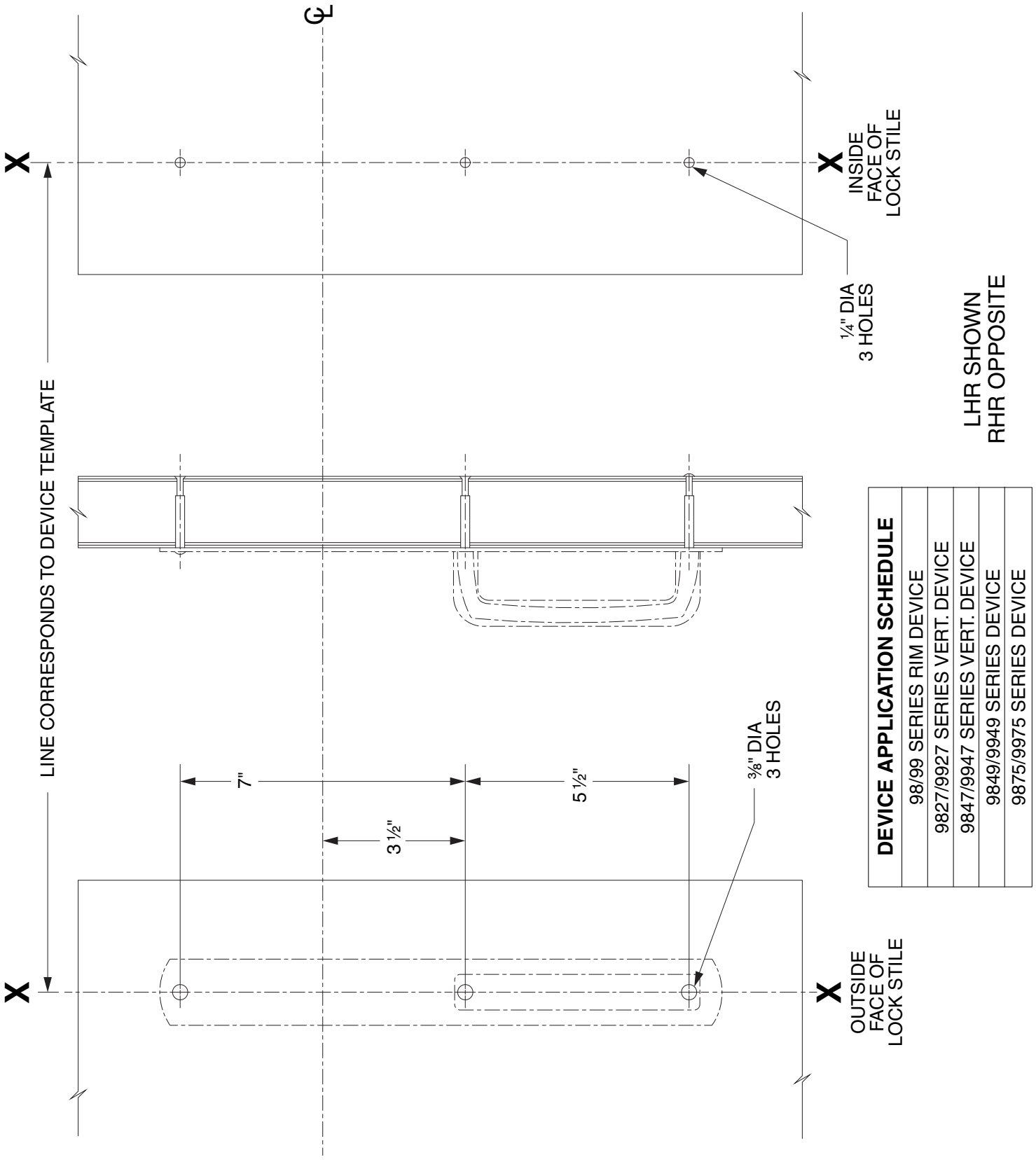

DEVICE APPLICATION SCHEDULE
98/99 SERIES RIM DEVICE
9827/9927 SERIES VERT. DEVICE
9847/9947 SERIES VERT. DEVICE
9849/9949 SERIES DEVICE
9875/9975 SERIES DEVICE

696 DT & 697 DT TRIM

VON DUPRIN®

NOTES: SEE MASTER SHEET #10001 FOR SUGGESTED REINFORCING

TEMPLATE NUMBER: 20101_c

DATE: 05-31-13

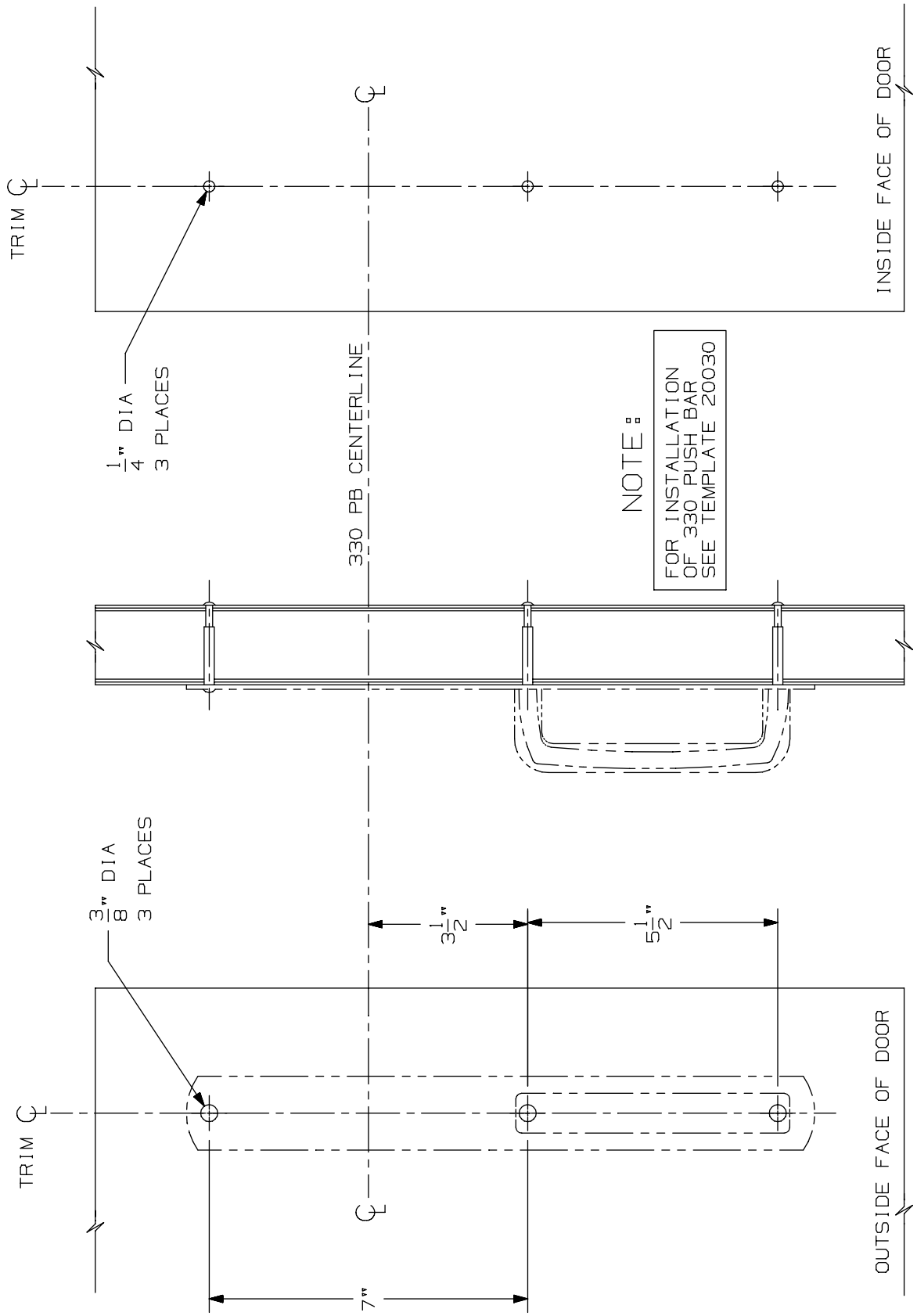

696/697 Mounting Back/Back w/ 330/350 Push Bar

VON DUPRIN®

NOTES: SEE MASTER SHEET #10001 FOR SUGGESTED REINFORCING

TEMPLATE NUMBER: 20105_a

DATE: 05-28-13

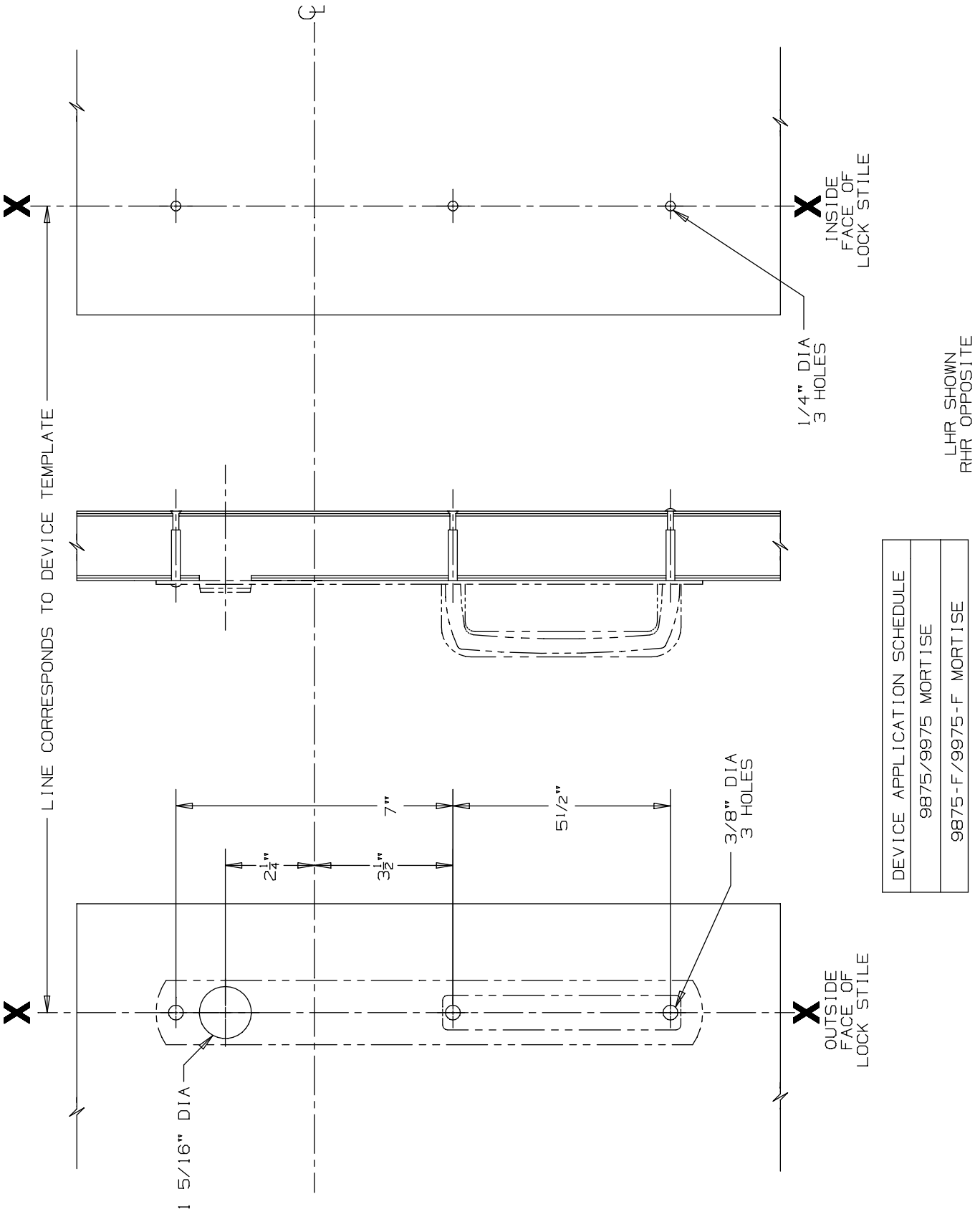

DEVICE APPLICATION SCHEDULE
9875/9975 MORTISE
9875-F/9975-F MORTISE

696NL & 697NL Trim

VON DUPRIN®

NOTES: SEE MASTER SHEET #10001 FOR SUGGESTED REINFORCING

TEMPLATE NUMBER: 20104_a

DATE: 05-23-13

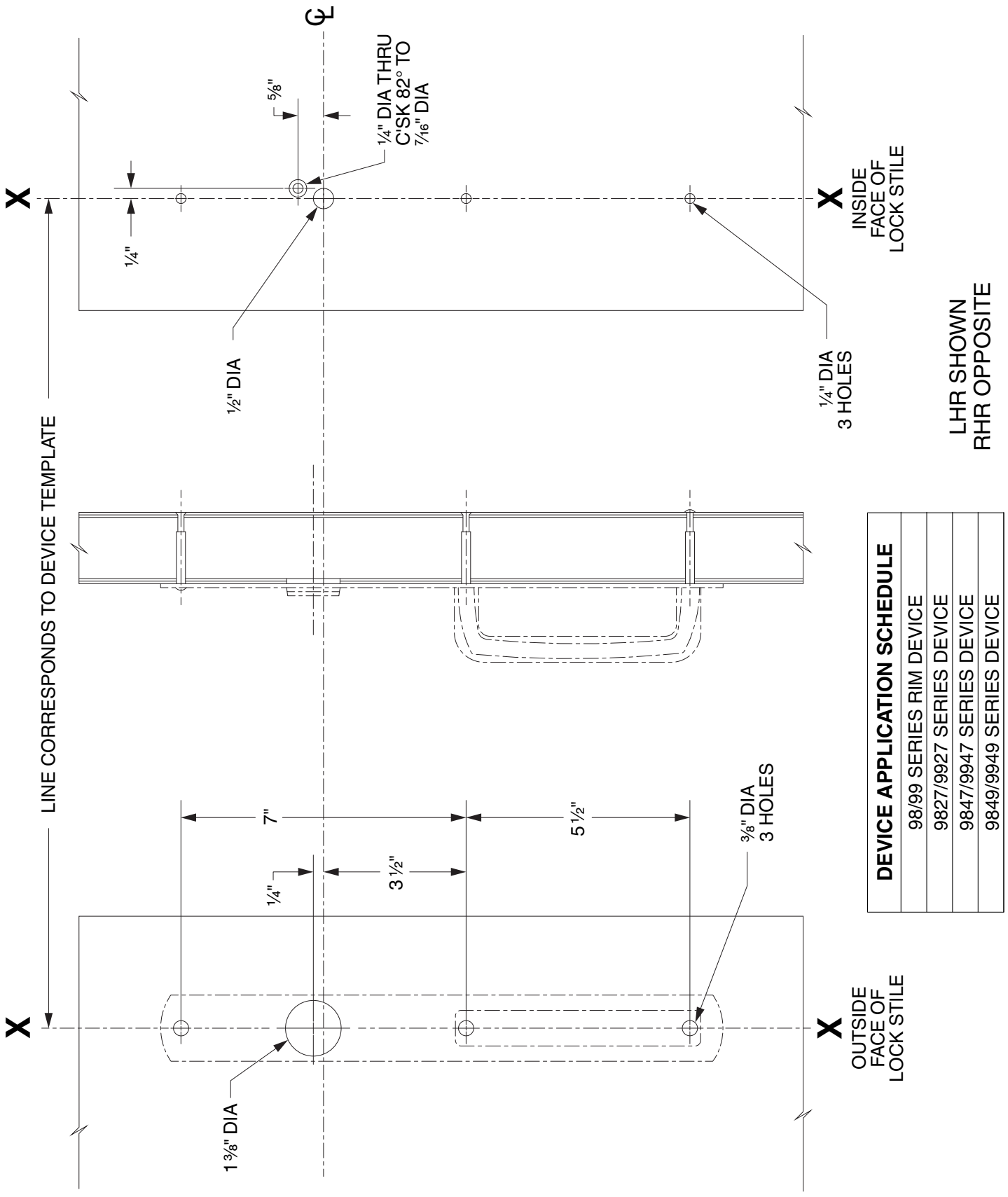

DEVICE APPLICATION SCHEDULE
98/99 SERIES RIM DEVICE
9827/9927 SERIES DEVICE
9847/9947 SERIES DEVICE
9849/9949 SERIES DEVICE

696NL & 697NL TRIM

VON DUPRIN®

NOTES: SEE MASTER SHEET #10001 FOR SUGGESTED REINFORCING

TEMPLATE NUMBER: 20102_c

DATE: 05-31-13

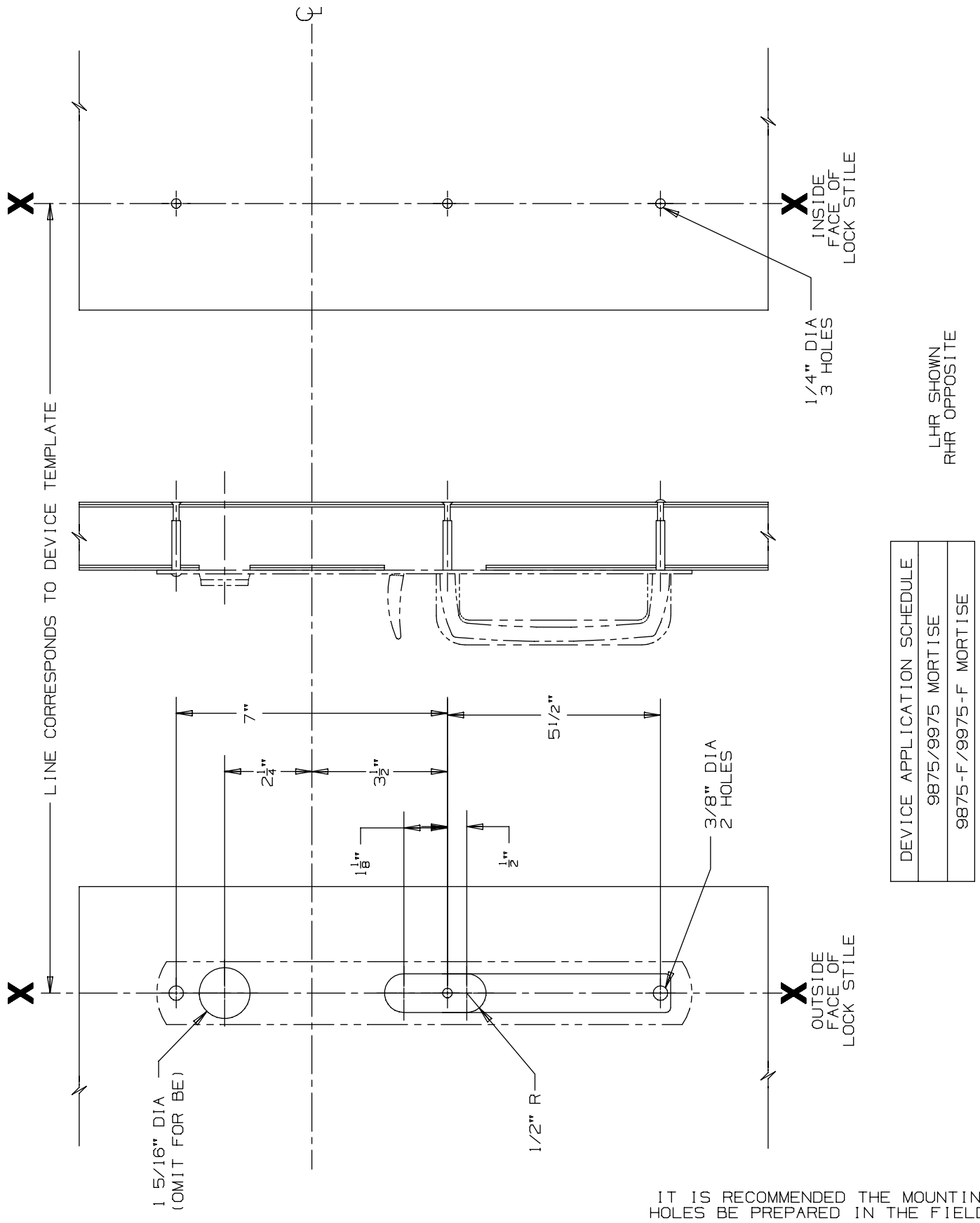

DEVICE APPLICATION SCHEDULE	
9875/9975 MORTISE	9875-F/9975-F MORTISE

IT IS RECOMMENDED THE MOUNTING HOLES BE PREPARED IN THE FIELD.

696 TP & 697 TP Trim
696 TP-BE & 697 TP-BE Trim

VON DUPRIN®

NOTES: SEE MASTER SHEET #10001 FOR SUGGESTED REINFORCING

TEMPLATE NUMBER: 20103_a

DATE: 05-23-13

696 TP & 697 TP TRIM
696 TP-BE & 697 TP-BE TRIM

NOTES: SEE MASTER SHEET #10001 FOR SUGGESTED REINFORCING

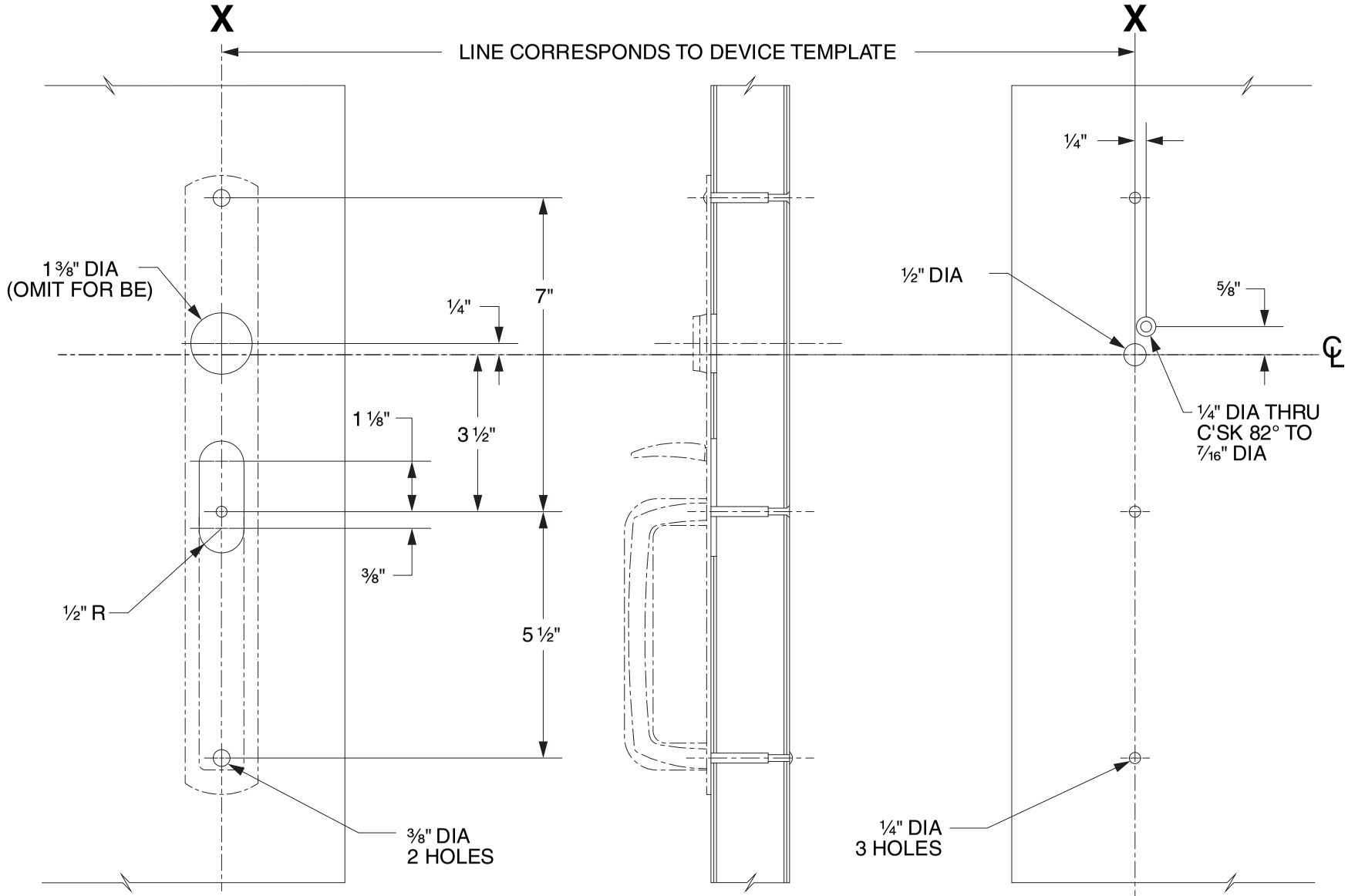

DEVICE APPLICATION SCHEDULE
98/99 SERIES RIM DEVICE
9827/9927 SERIES DEVICE
9847/9947 SERIES DEVICE
9849/9949 SERIES DEVICE

VON DUPRIN®

TEMPLATE NUMBER: 20100_C

DATE: 05-31-13

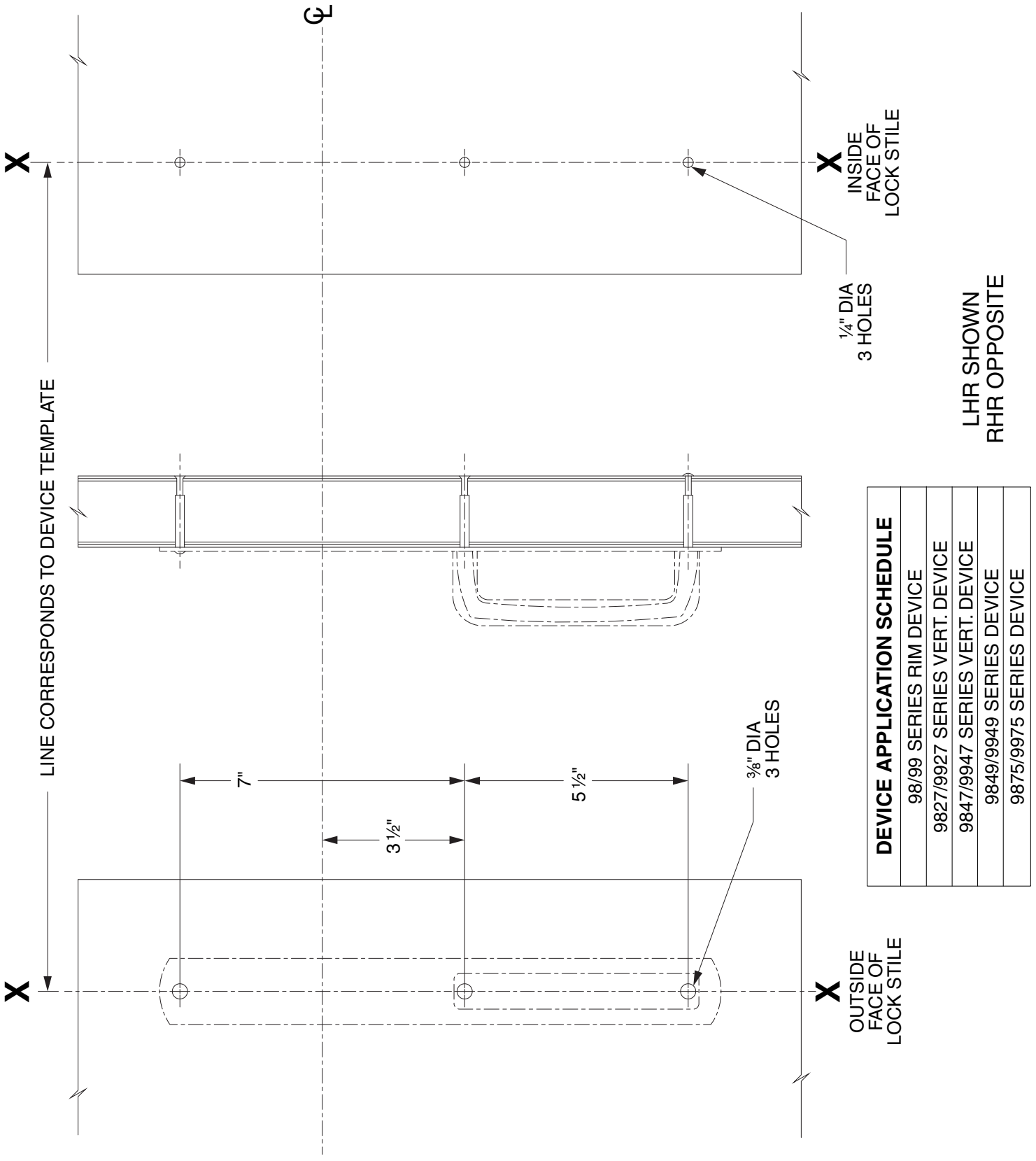

DEVICE APPLICATION SCHEDULE
98/99 SERIES RIM DEVICE
9827/9927 SERIES VERT. DEVICE
9847/9947 SERIES VERT. DEVICE
9849/9949 SERIES DEVICE
9875/9975 SERIES DEVICE

696 DT & 697 DT TRIM

VON DUPRIN®

NOTES: SEE MASTER SHEET #10001 FOR SUGGESTED REINFORCING

TEMPLATE NUMBER: 20101_c

DATE: 05-31-13

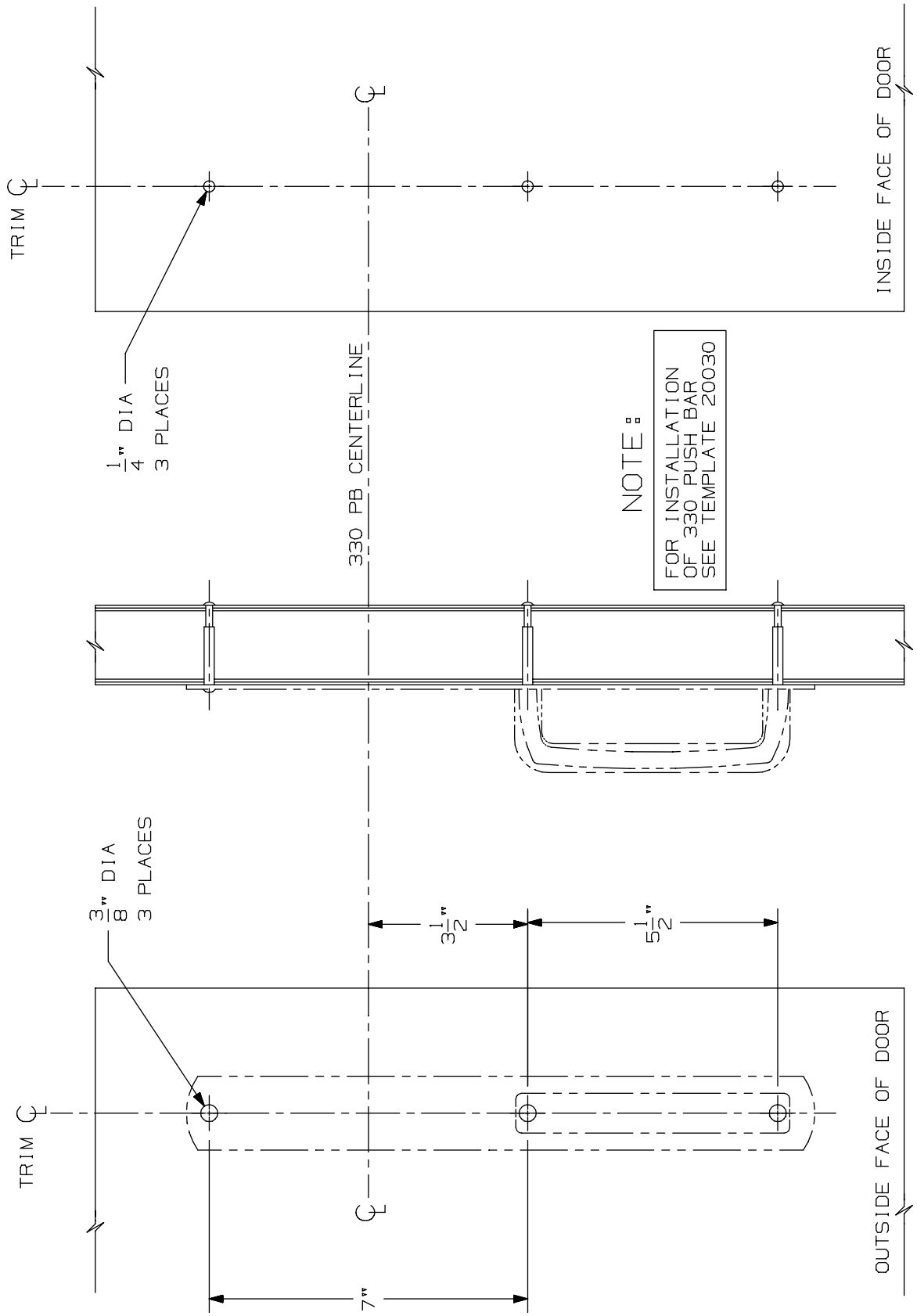

696/697 Mounting Back/Back w/ 330/350 Push Bar

VON DUPRIN®

NOTES: SEE MASTER SHEET #10001 FOR SUGGESTED REINFORCING

TEMPLATE NUMBER: 20105_a

DATE: 05-28-13

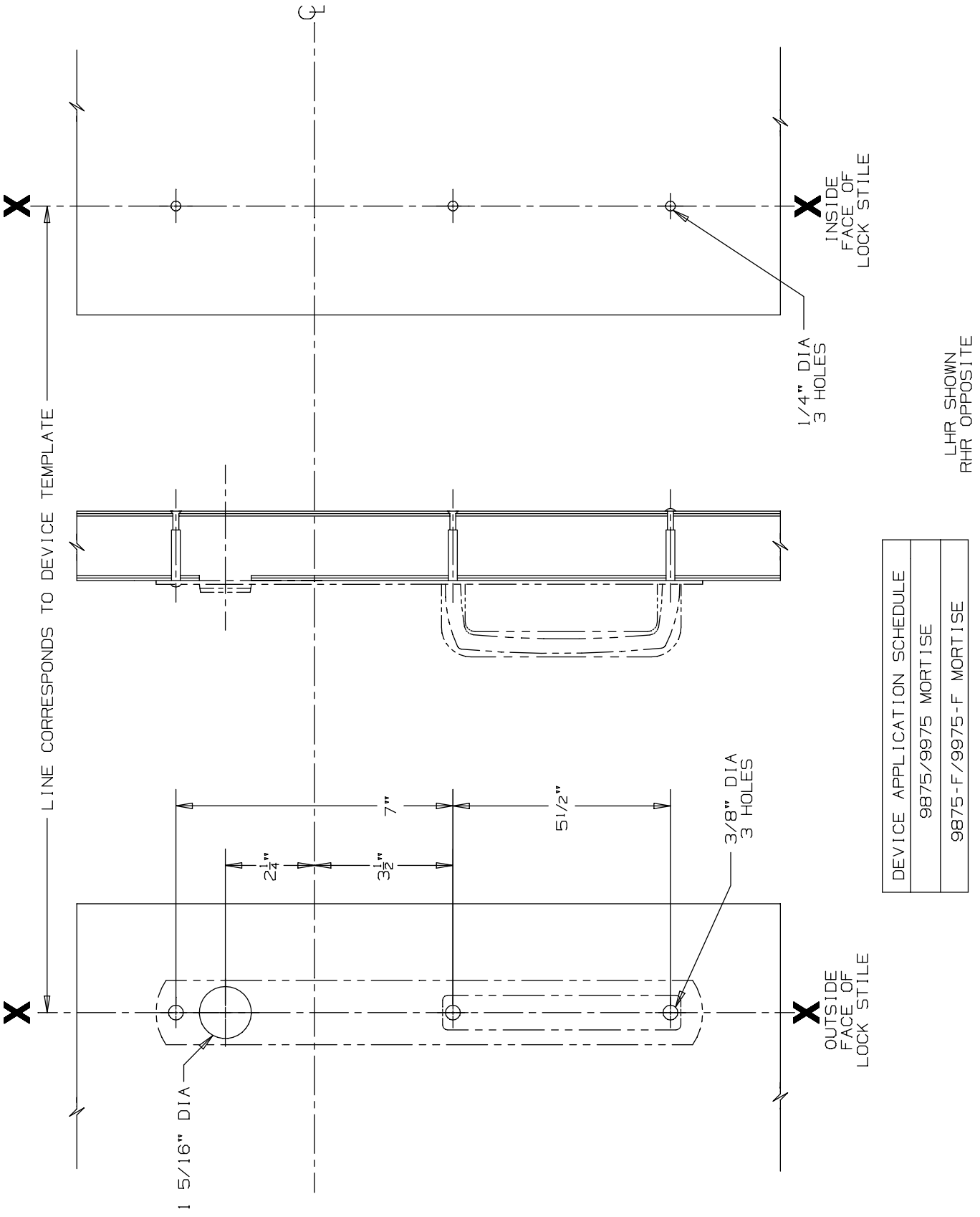

DEVICE APPLICATION SCHEDULE
9875/9975 MORTISE
9875-F/9975-F MORTISE

696NL & 697NL Trim

VON DUPRIN®

NOTES: SEE MASTER SHEET #10001 FOR SUGGESTED REINFORCING

TEMPLATE NUMBER: 20104_a

DATE: 05-23-13

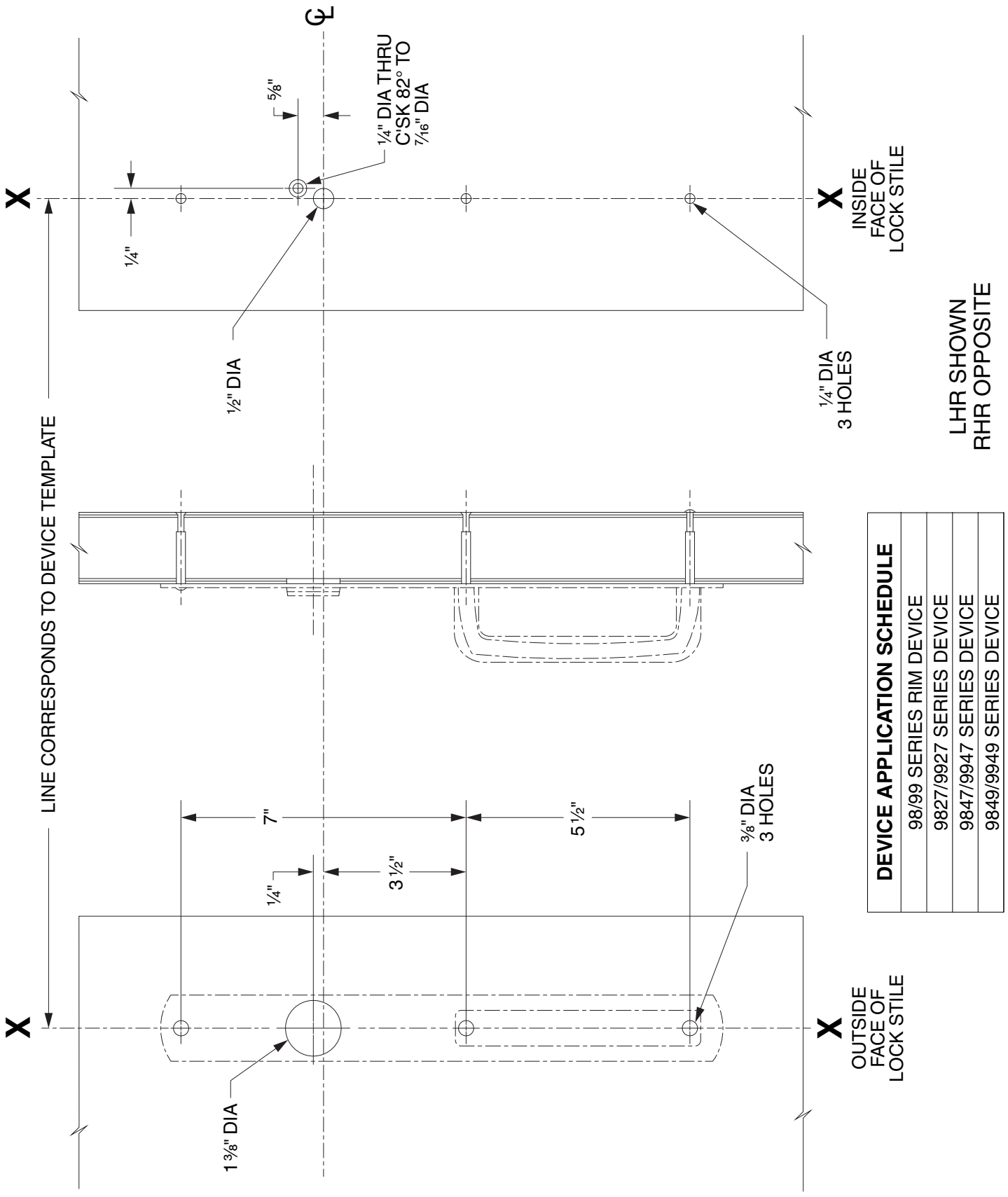

DEVICE APPLICATION SCHEDULE
98/99 SERIES RIM DEVICE
9827/9927 SERIES DEVICE
9847/9947 SERIES DEVICE
9849/9949 SERIES DEVICE

696NL & 697NL TRIM

VON DUPRIN®

NOTES: SEE MASTER SHEET #10001 FOR SUGGESTED REINFORCING

TEMPLATE NUMBER: 20102_c

DATE: 05-31-13

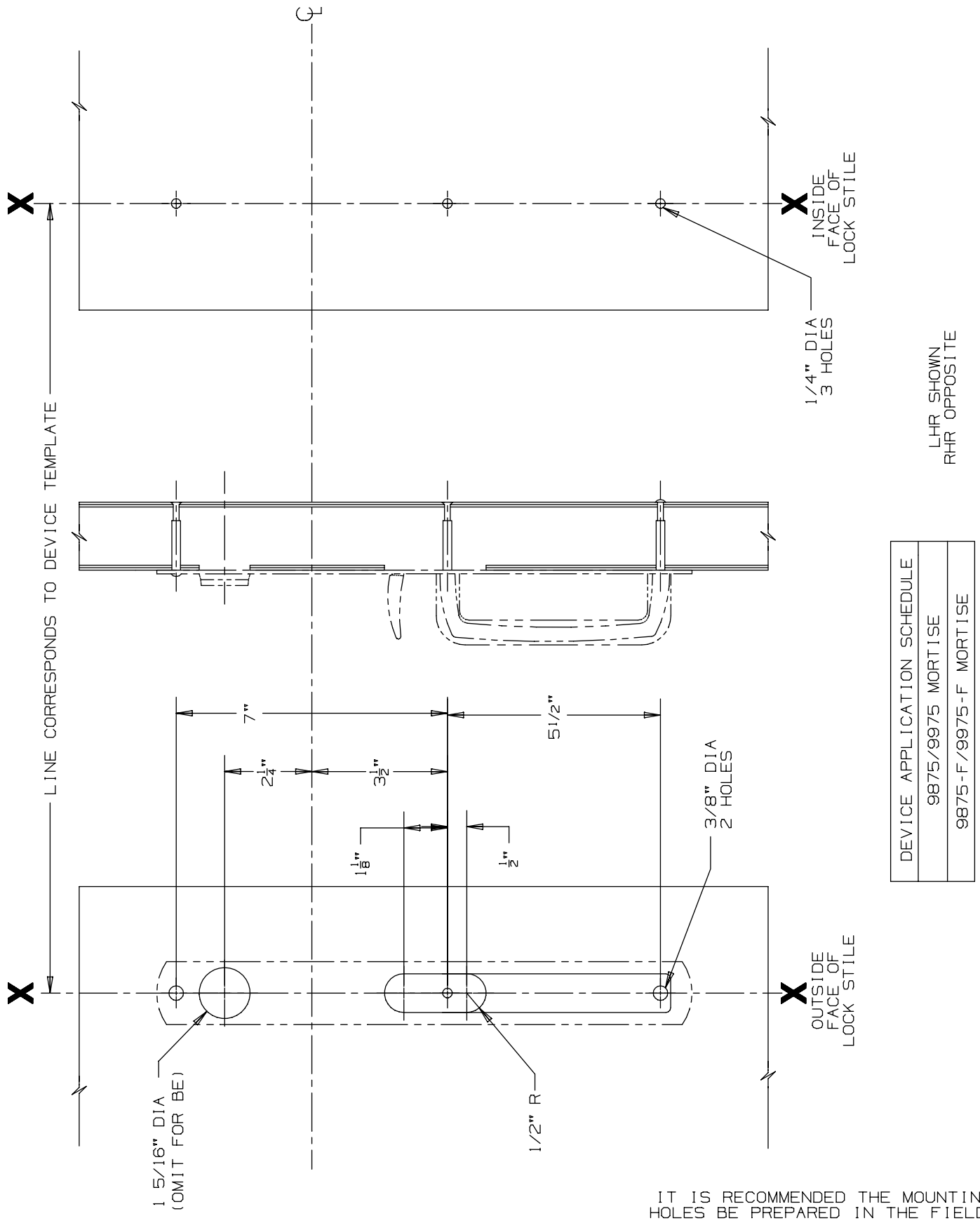

DEVICE APPLICATION SCHEDULE	
9875/9975 MORTISE	9875-F/9975-F MORTISE

IT IS RECOMMENDED THE MOUNTING HOLES BE PREPARED IN THE FIELD.

696 TP & 697 TP Trim
696 TP-BE & 697 TP-BE Trim

VON DUPRIN®

NOTES: SEE MASTER SHEET #10001 FOR SUGGESTED REINFORCING

TEMPLATE NUMBER: 20103_a

DATE: 05-23-13

696 TP & 697 TP TRIM
696 TP-BE & 697 TP-BE TRIM

NOTES: SEE MASTER SHEET #10001 FOR SUGGESTED REINFORCING

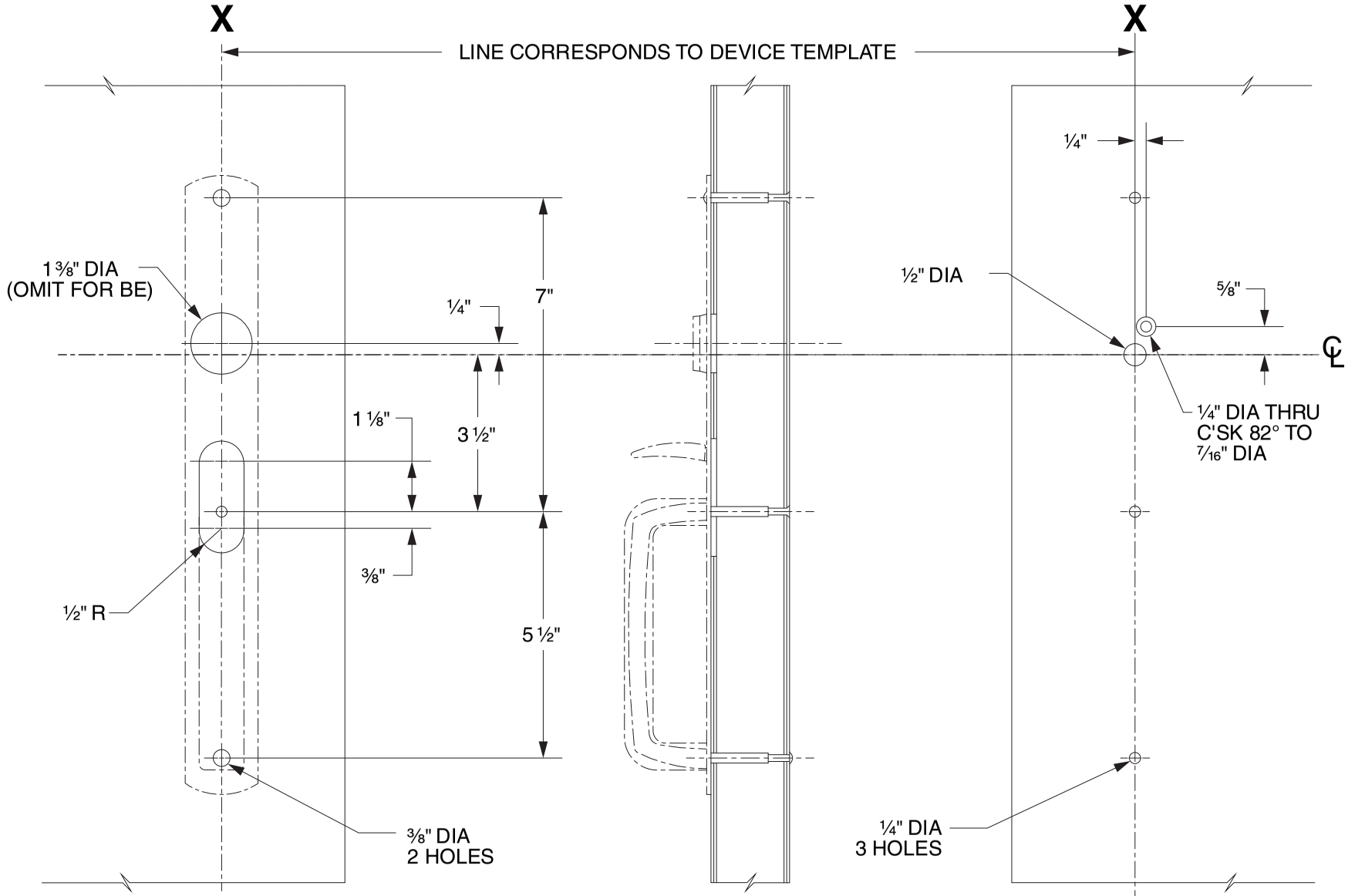

DEVICE APPLICATION SCHEDULE
98/99 SERIES RIM DEVICE
9827/9927 SERIES DEVICE
9847/9947 SERIES DEVICE
9849/9949 SERIES DEVICE

VON DUPRIN®

TEMPLATE NUMBER: 20100_C

DATE: 05-31-13

990 EO TRIM

NOTES: SEE MASTER SHEET #10001 FOR SUGGESTED REINFORCING

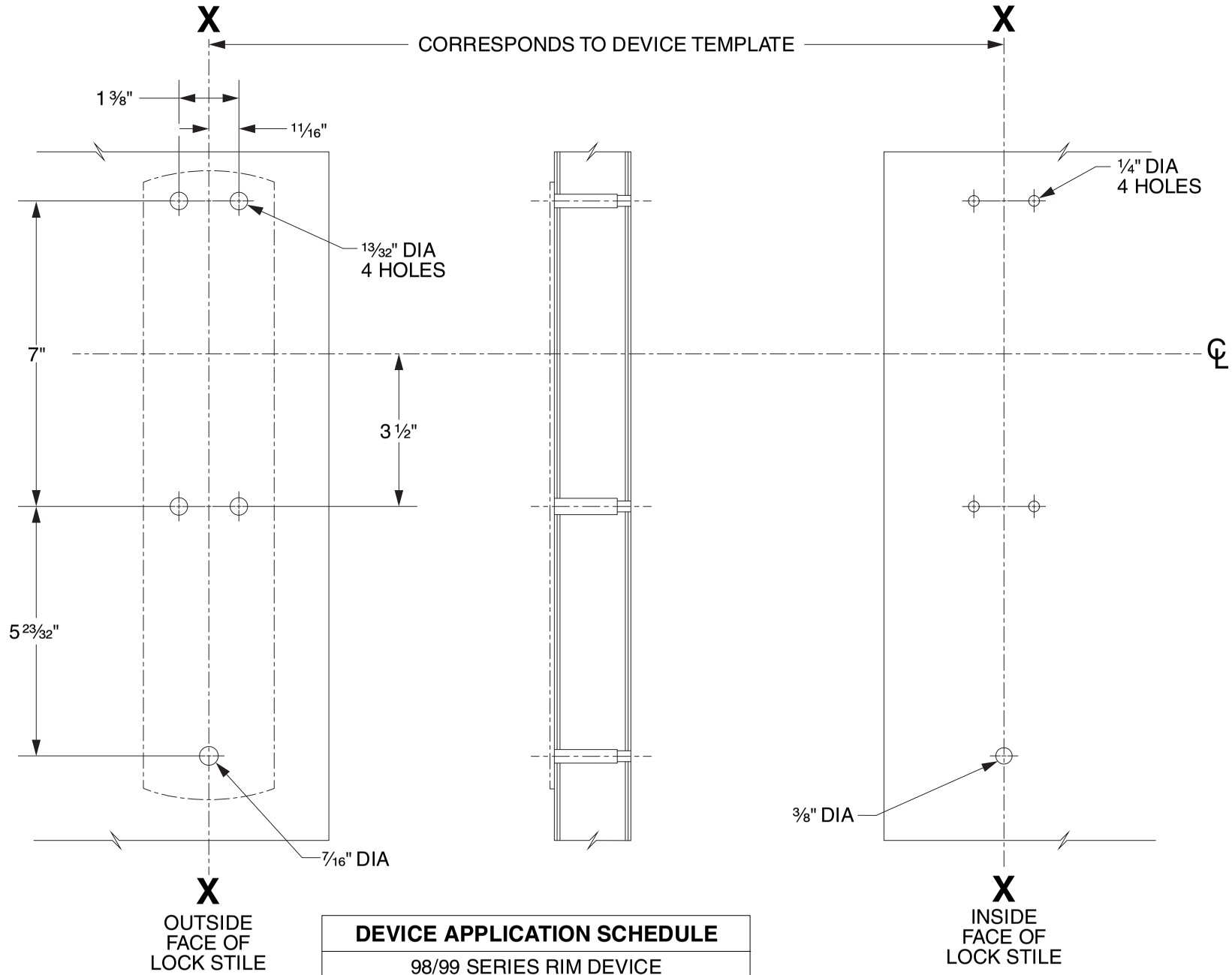

DEVICE APPLICATION SCHEDULE
98/99 SERIES RIM DEVICE
9827/9927 SERIES DEVICE
9847/9947 SERIES DEVICE
9849/9949 SERIES DEVICE
9875/9975 SERIES DEVICE

LHR SHOWN
RHR OPPOSITE

VON DUPRIN®

TEMPLATE NUMBER: 20269_C

DATE: 05-31-13

990 DT TRIM

NOTES: SEE MASTER SHEET #10001 FOR SUGGESTED REINFORCING

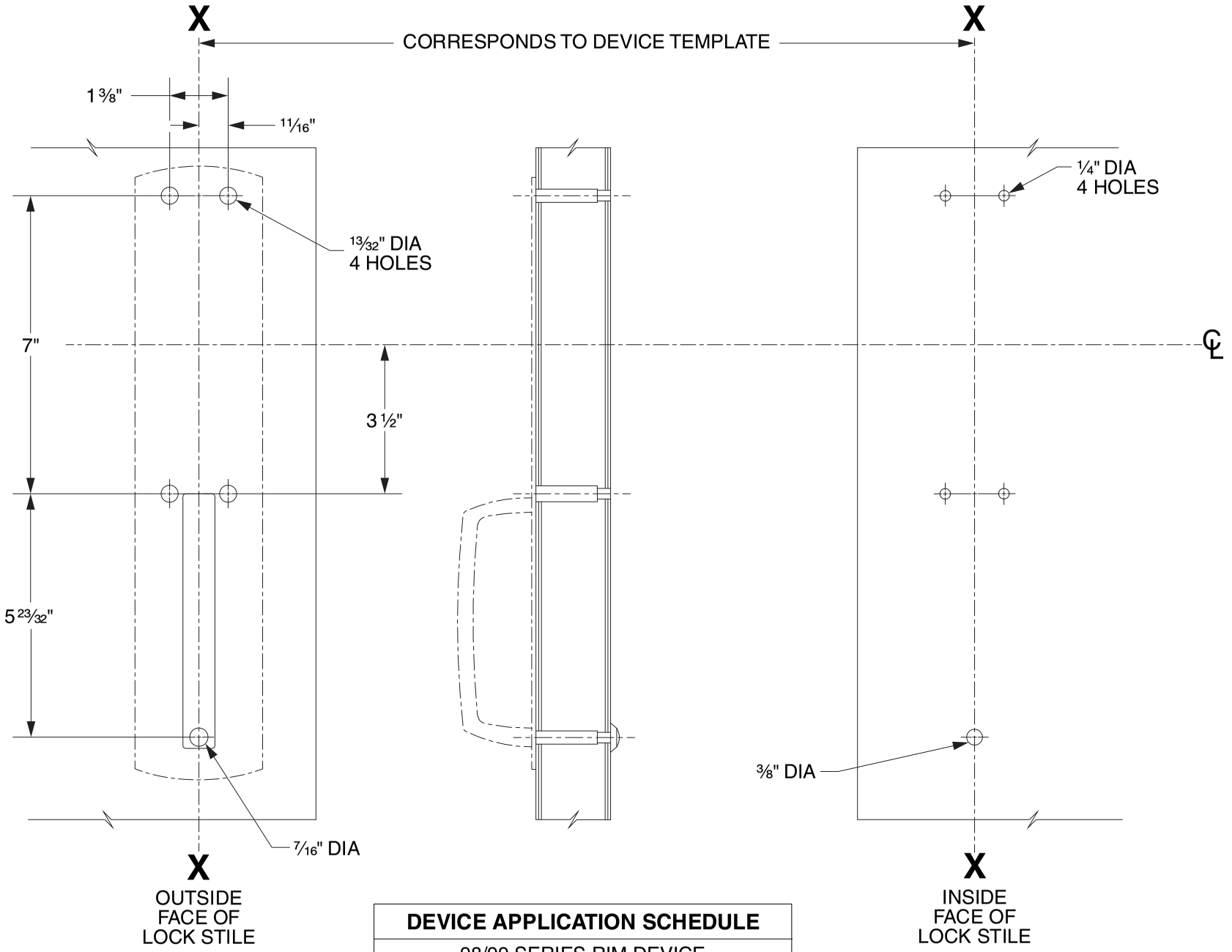

DEVICE APPLICATION SCHEDULE
98/99 SERIES RIM DEVICE
9827/9927 SERIES DEVICE
9847/9947 SERIES DEVICE
9849/9949 SERIES DEVICE
9875/9975 SERIES DEVICE

LHR SHOWN
RHR OPPOSITE

VON DUPRIN®

TEMPLATE NUMBER: 20268_C

DATE: 05-31-13

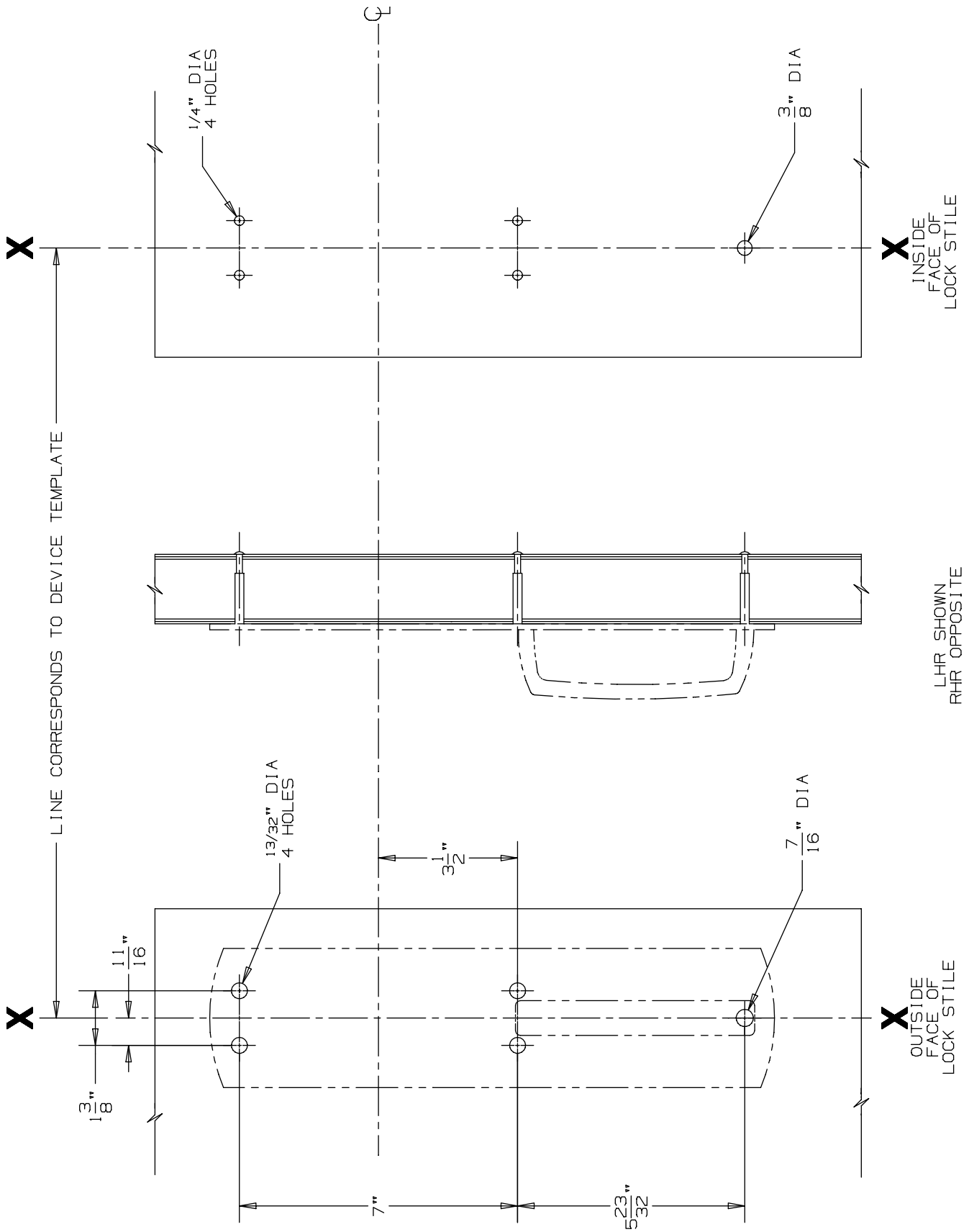

990 DT Trim for Back-to-Back Mounting w/ 330/350 Push Bar

VON DUPRIN®

NOTES: SEE MASTER SHEET #10001 FOR SUGGESTED REINFORCING

TEMPLATE NUMBER: 20285_a

DATE: 05-23-13

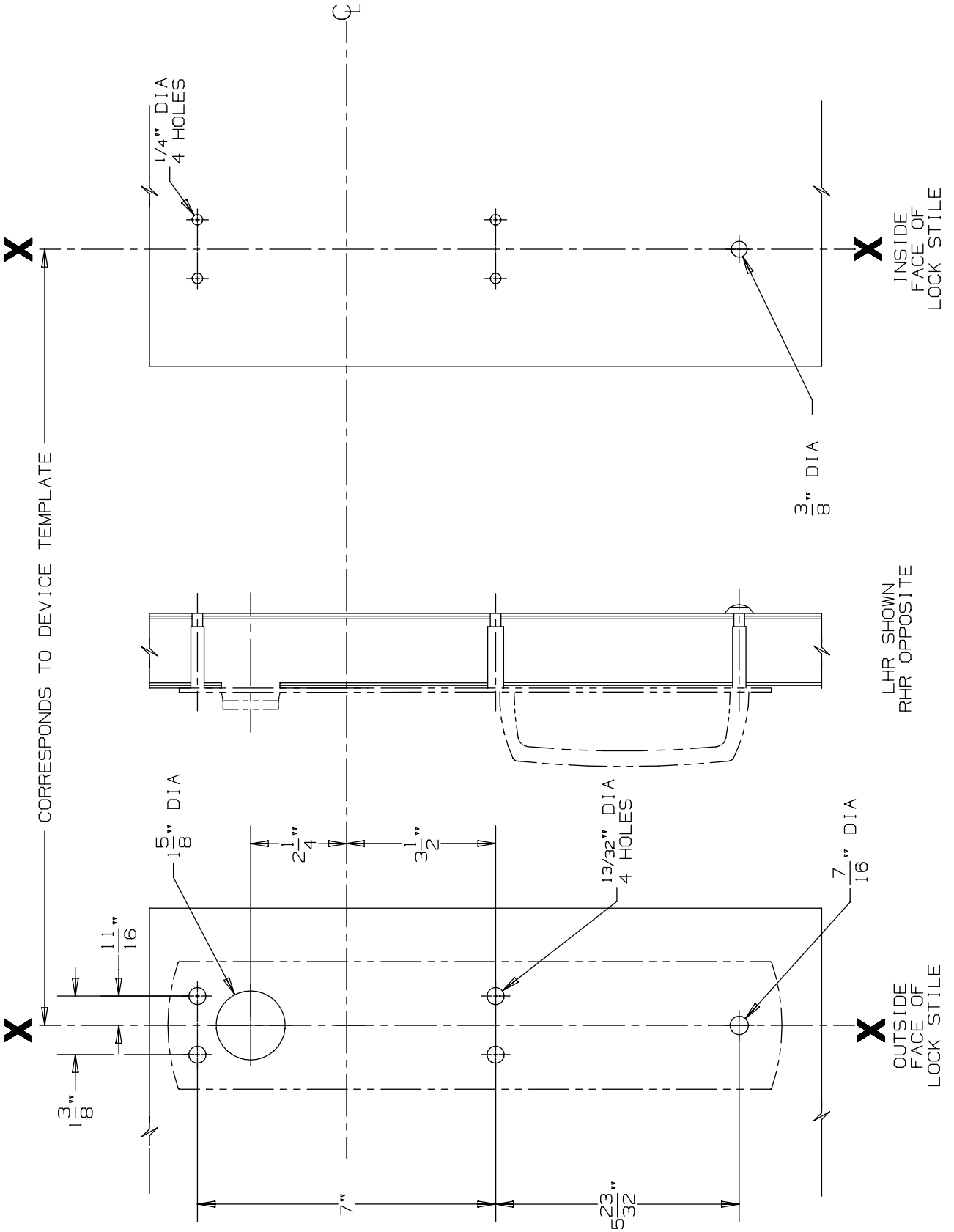

DEVICE APPLICATION SCHEDULE
9875/9975 SERIES DEVICE

990 NL Trim

VON DUPRIN®

NOTES: SEE MASTER SHEET #10001 FOR SUGGESTED REINFORCING

TEMPLATE NUMBER: 20271_a

DATE: 05-23-13

990 NL TRIM

NOTES: SEE MASTER SHEET #10001 FOR SUGGESTED REINFORCING

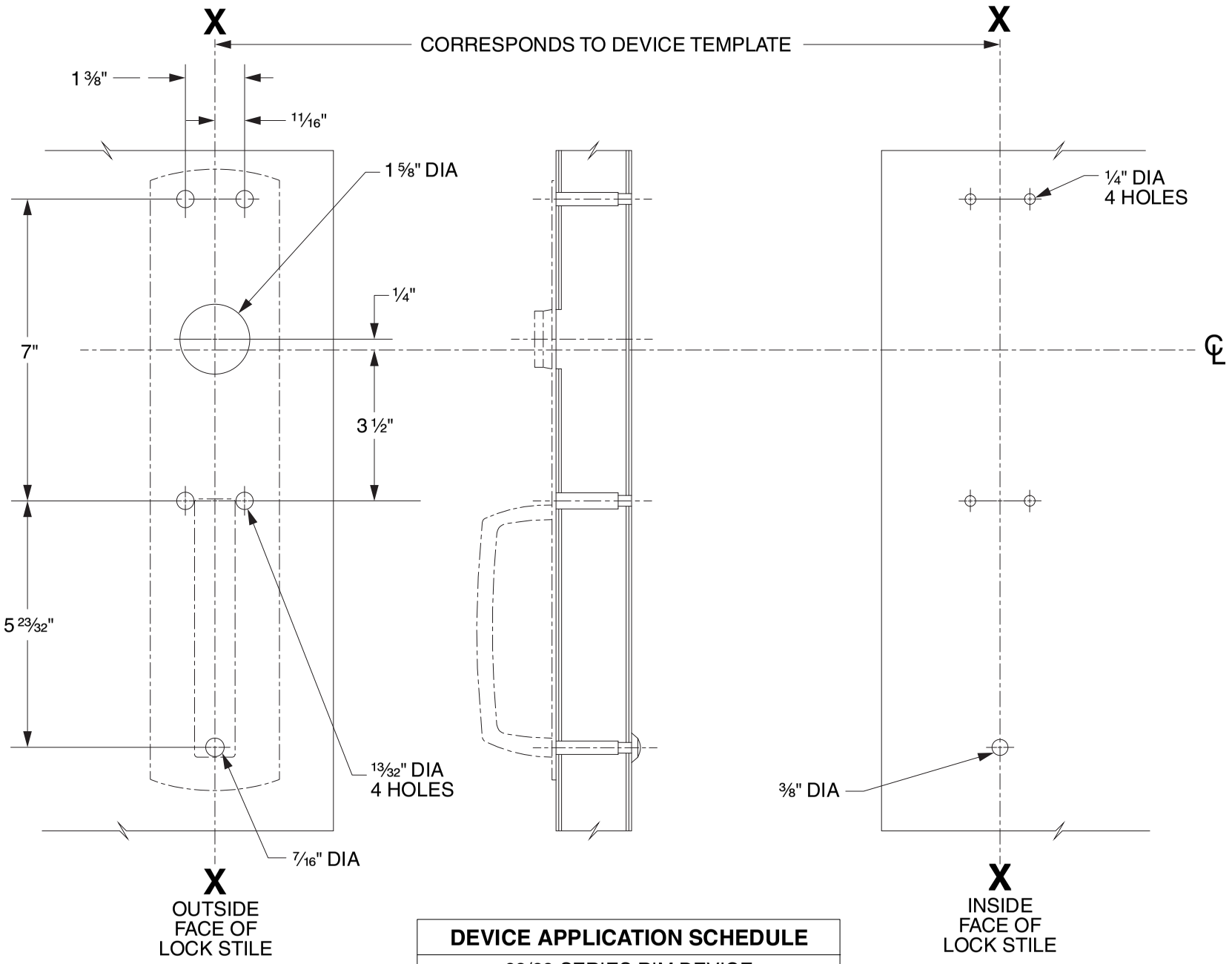

DEVICE APPLICATION SCHEDULE
98/99 SERIES RIM DEVICE
9827/9927 SERIES DEVICE
9847/9947 SERIES DEVICE
9849/9949 SERIES DEVICE

LHR SHOWN
RHR OPPOSITE

VON DUPRIN®

TEMPLATE NUMBER: 20267_C

DATE: 05-31-13

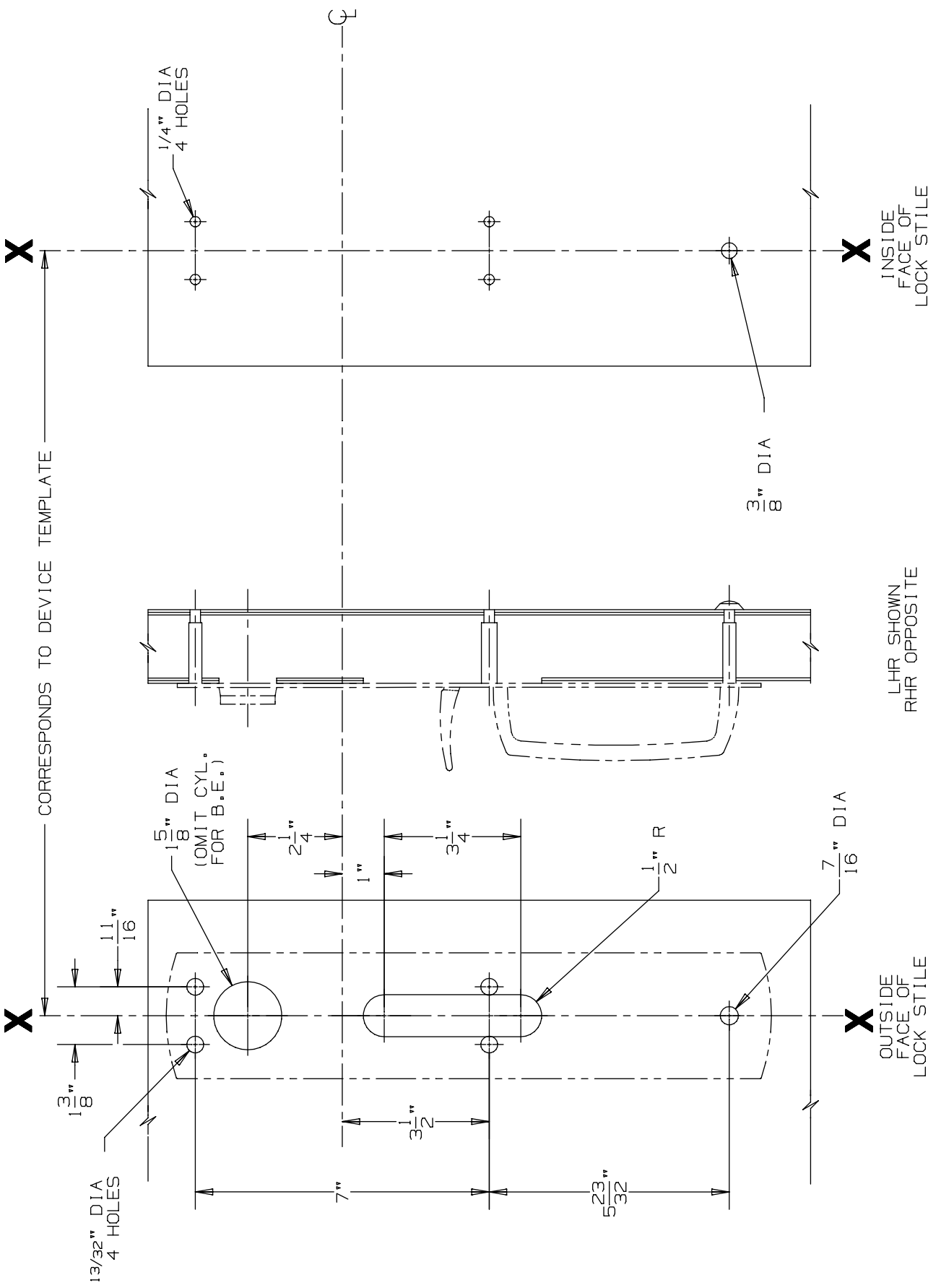

DEVICE APPLICATION SCHEDULE
9875/9975 SERIES DEVICE

990 TP & 990 TP-BE Trim

VON DUPRIN®

NOTES: SEE MASTER SHEET #10001 FOR SUGGESTED REINFORCING

TEMPLATE NUMBER: 20270_a

DATE: 05-23-13

990 TP & 990 TP-BE TRIM

NOTES: SEE MASTER SHEET #10001 FOR SUGGESTED REINFORCING

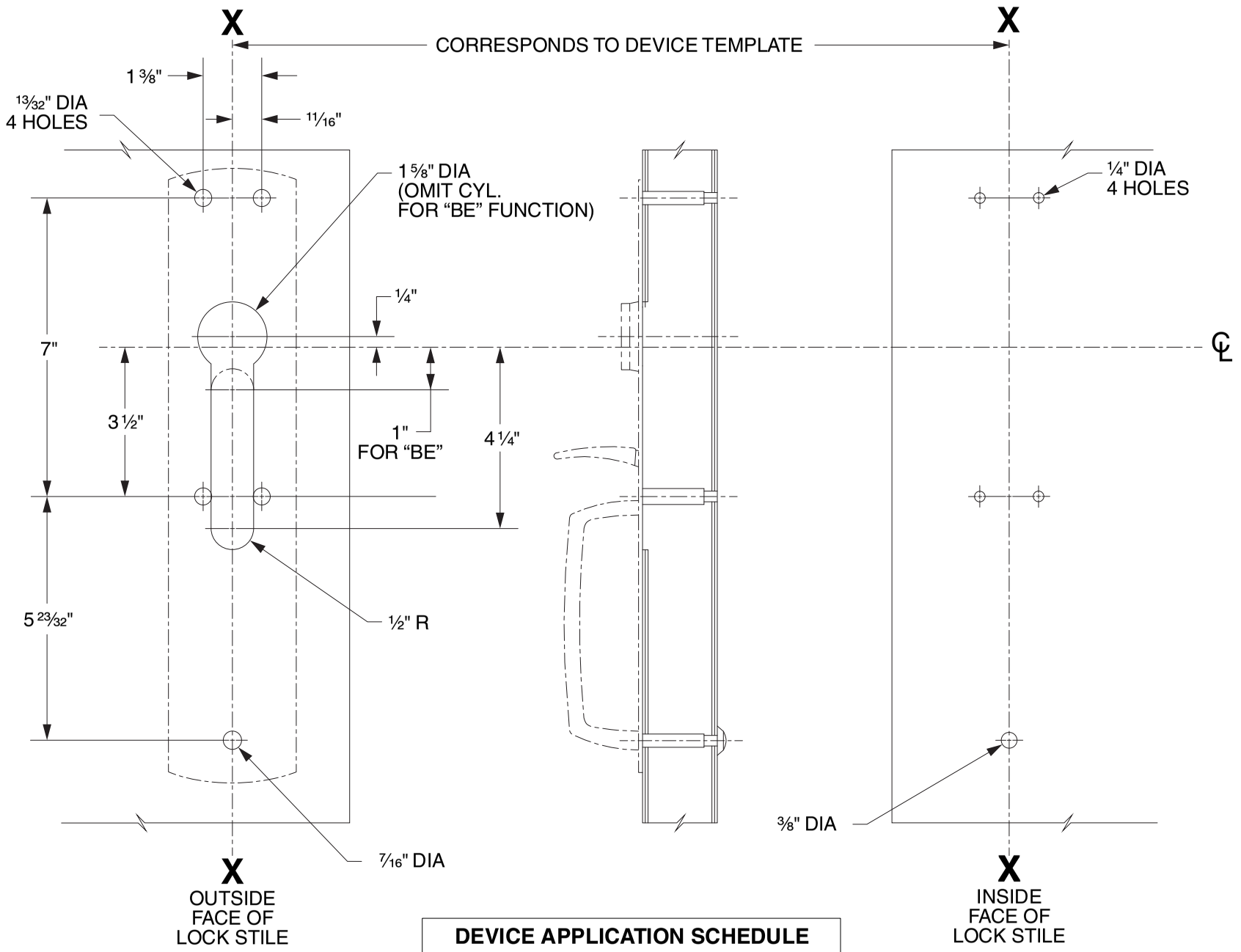

DEVICE APPLICATION SCHEDULE
98/99 SERIES RIM DEVICE
9827/9927 SERIES DEVICE
9847/9947 SERIES DEVICE
9849/9949 SERIES DEVICE

LHR SHOWN
RHR OPPOSITE

VON DUPRIN®

TEMPLATE NUMBER: 20265_C

DATE: 05-31-13

991 K & 992 L Trim for Mortise Device

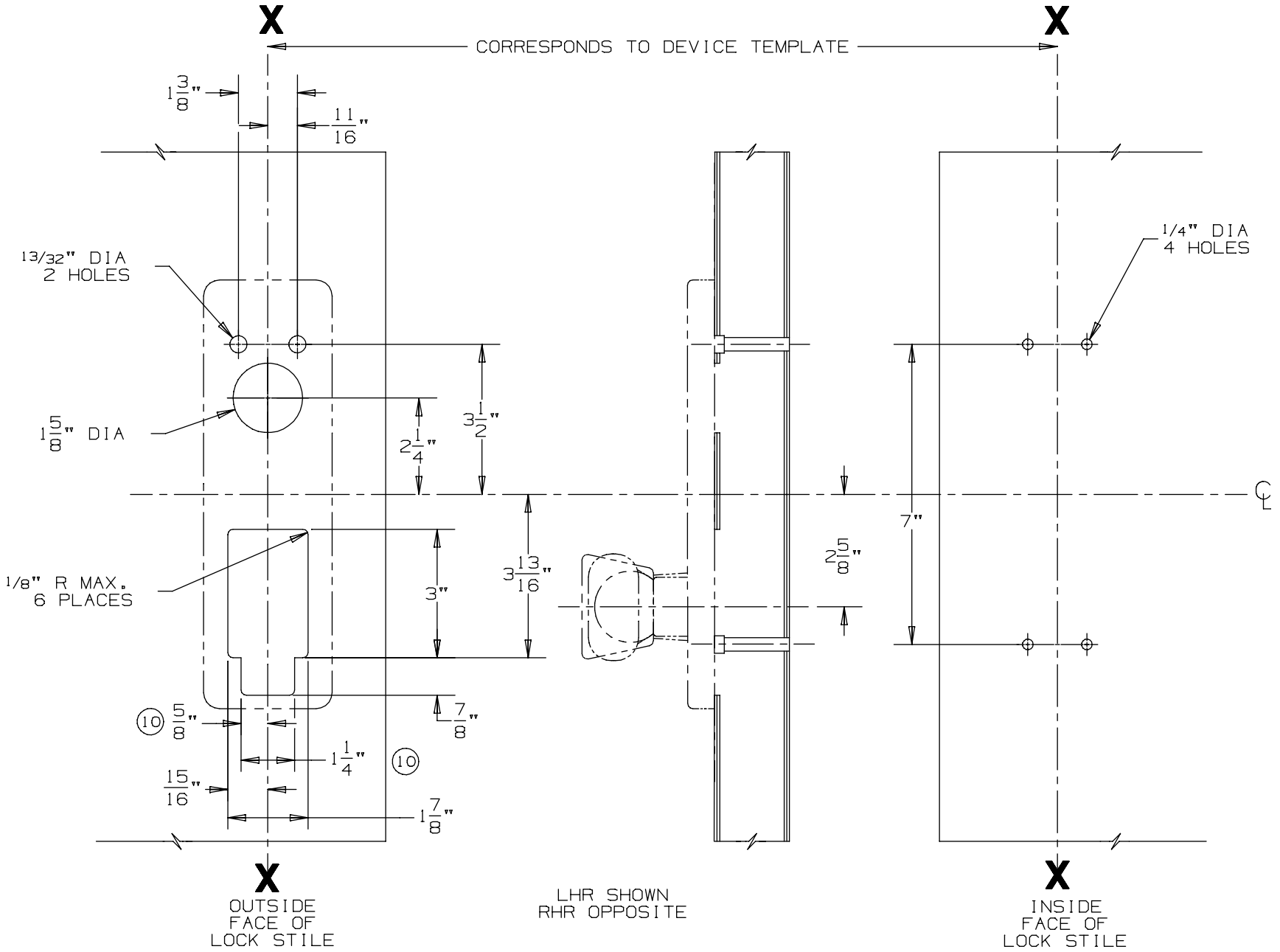

DEVICE APPLICATION SCHEDULE
9875/9975 SERIES DEVICE

NOTES: SEE MASTER SHEET #10001 FOR SUGGESTED REINFORCING

TEMPLATE NUMBER: 20280_a

DATE: 05-23-13

VON DUPRIN®

991 K-BE & 992 L-BE Trim

NOTES: SEE MASTER SHEET #10001 FOR SUGGESTED REINFORCING

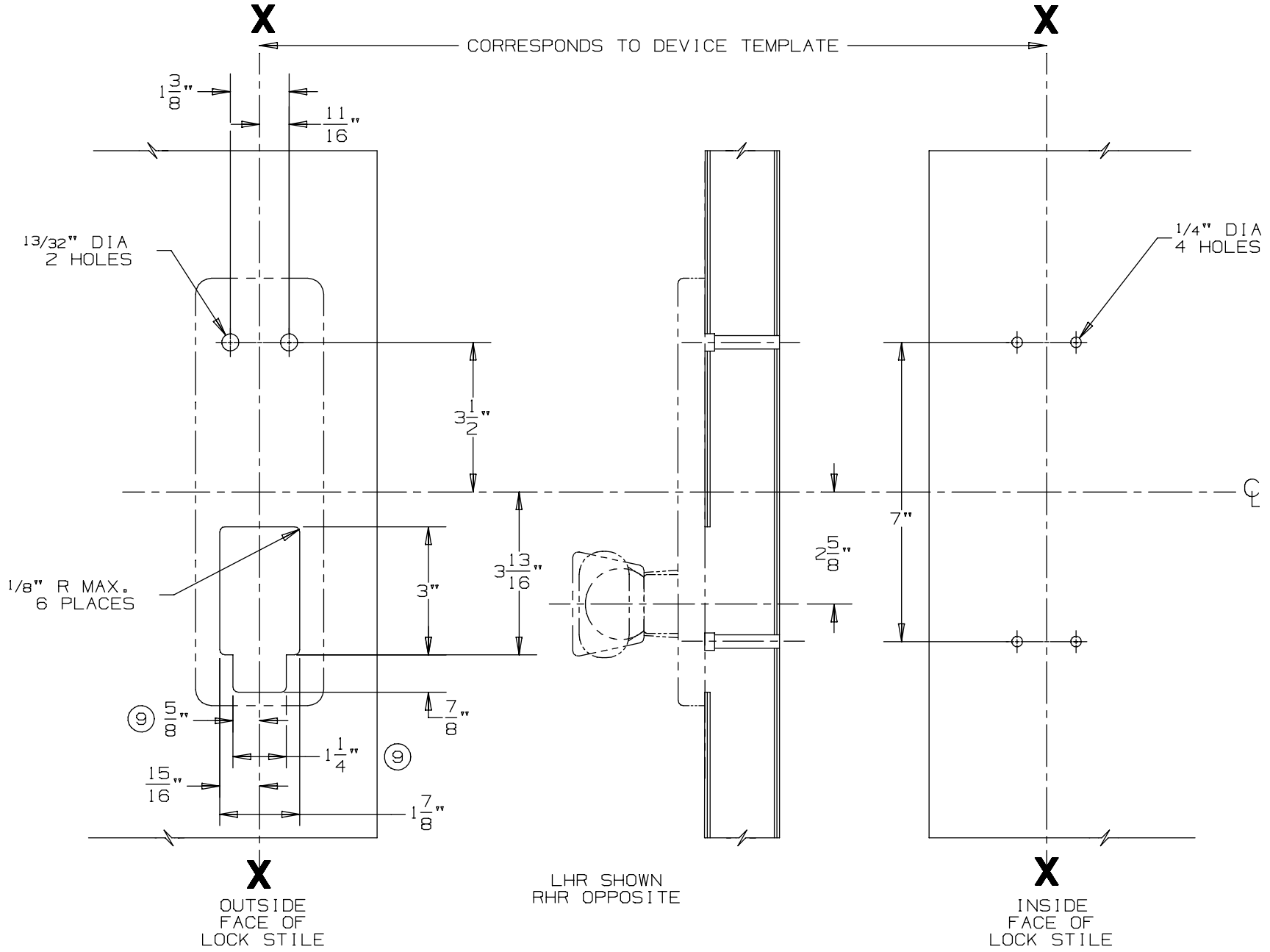

DEVICE APPLICATION SCHEDULE
98/99 SERIES RIM DEVICE
9827/9927 SERIES DEVICE
9847/9947 SERIES DEVICE
9875/9975 SERIES DEVICE

VON DUPRIN®

TEMPLATE NUMBER: 20273_a

DATE: 05-23-13

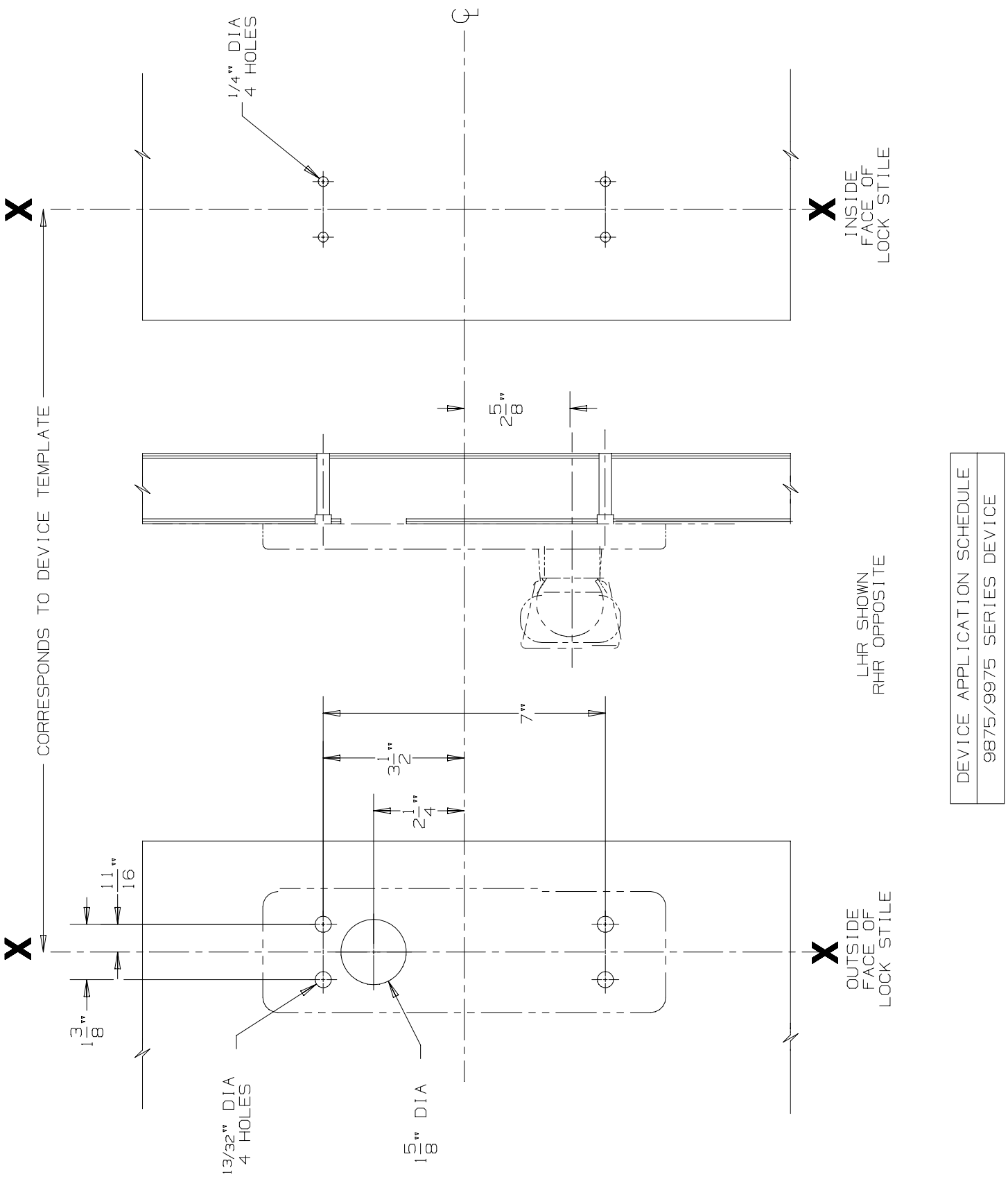

DEVICE APPLICATION SCHEDULE
9875/9975 SERIES DEVICE

991 KR & 992 LR Trim (Rigid) for Mortise Device

VON DUPRIN®

NOTES: SEE MASTER SHEET #10001 FOR SUGGESTED REINFORCING

TEMPLATE NUMBER: 20281_a

DATE: 05-23-13

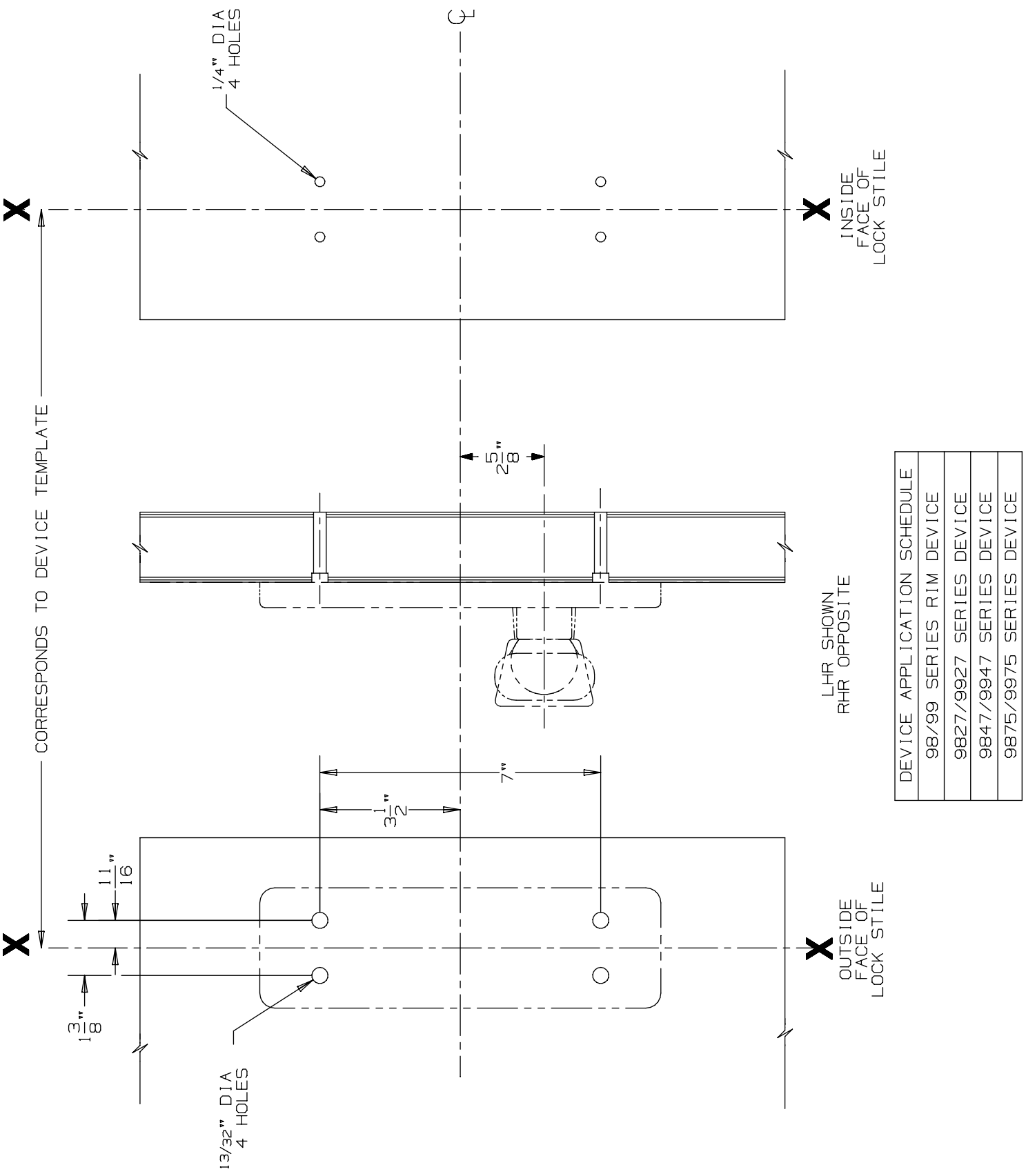

DEVICE APPLICATION SCHEDULE
98/99 SERIES RIM DEVICE
9827/9927 SERIES DEVICE
9847/9947 SERIES DEVICE
9875/9975 SERIES DEVICE

991 K-DT & 992 L-DT Trim

VON DUPRIN®

NOTES: SEE MASTER SHEET #10001 FOR SUGGESTED REINFORCING

TEMPLATE NUMBER: 20274_a

DATE: 05-23-13

991 K & 992 L Trim

NOTES: SEE MASTER SHEET #10001 FOR SUGGESTED REINFORCING

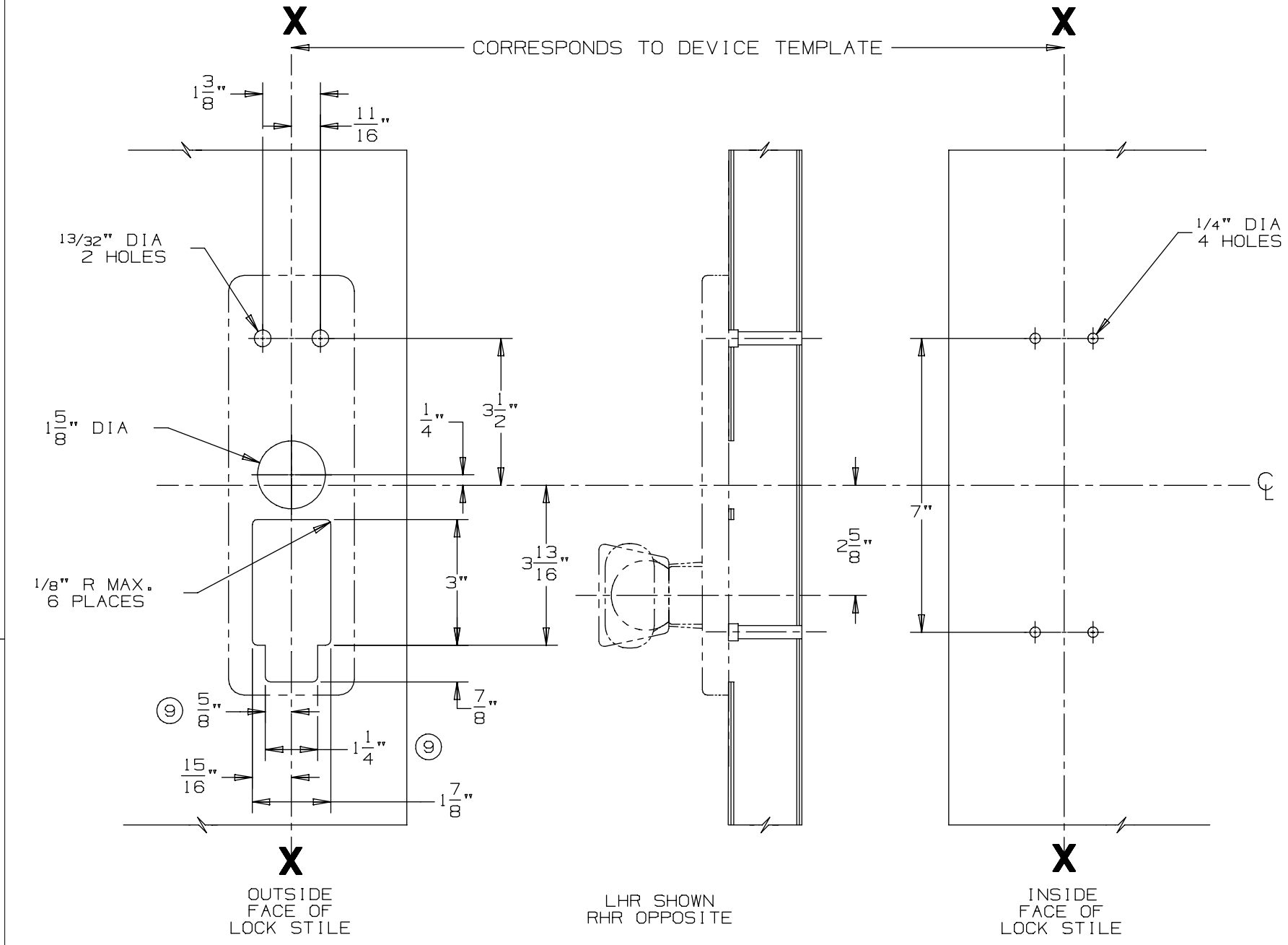

DEVICE APPLICATION SCHEDULE
98/99 SERIES RIM DEVICE
9827/9927 SERIES DEVICE
9847/9947 SERIES DEVICE

VON DUPRIN®

TEMPLATE NUMBER: 20272_a

DATE: 05-23-13

991 K-BE & 992 L-BE Trim

NOTES: SEE MASTER SHEET #10001 FOR SUGGESTED REINFORCING

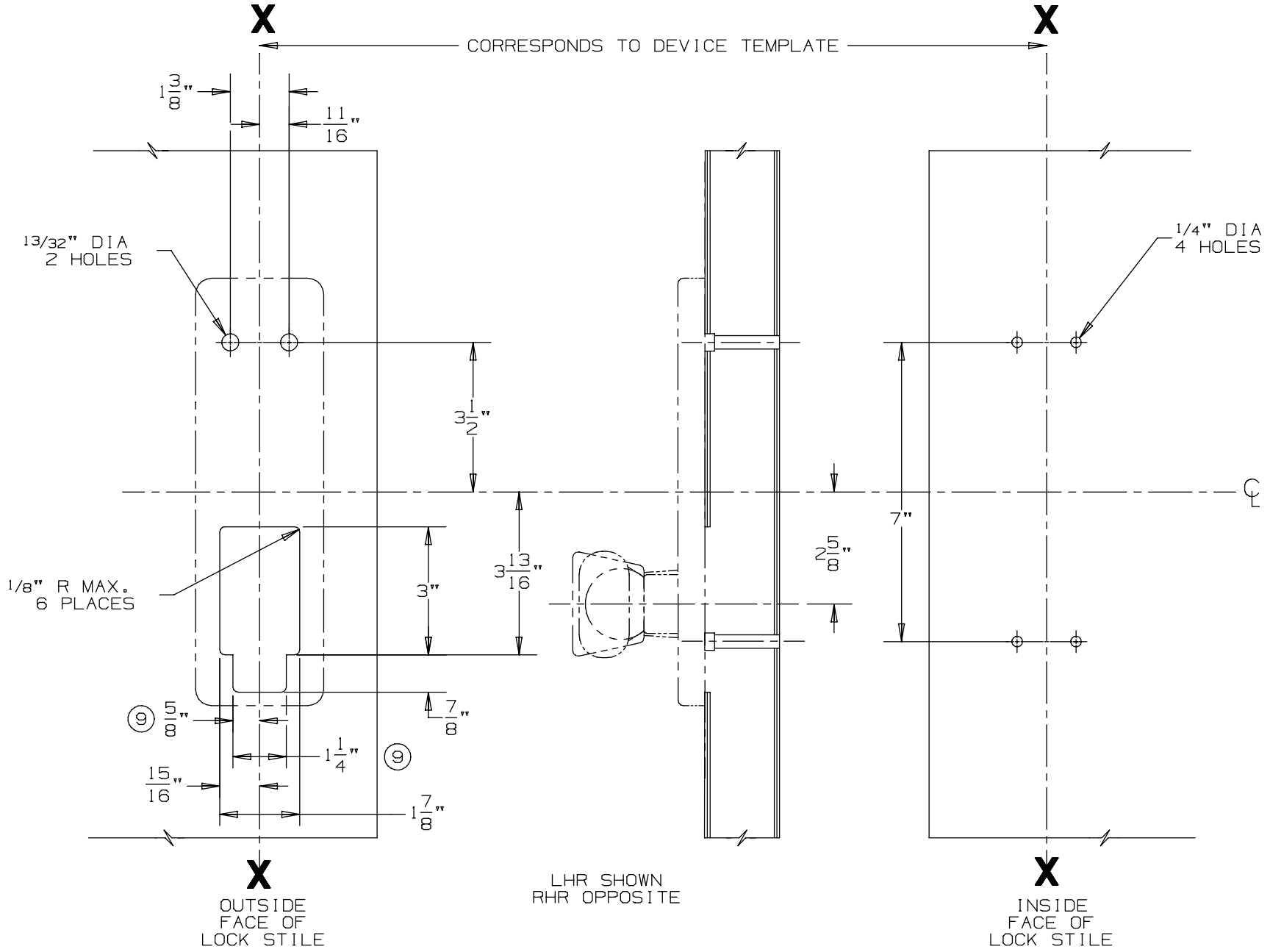

DEVICE APPLICATION SCHEDULE
98/99 SERIES RIM DEVICE
9827/9927 SERIES DEVICE
9847/9947 SERIES DEVICE
9875/9975 SERIES DEVICE

VON DUPRIN®

TEMPLATE NUMBER: 20273_a

DATE: 05-23-13

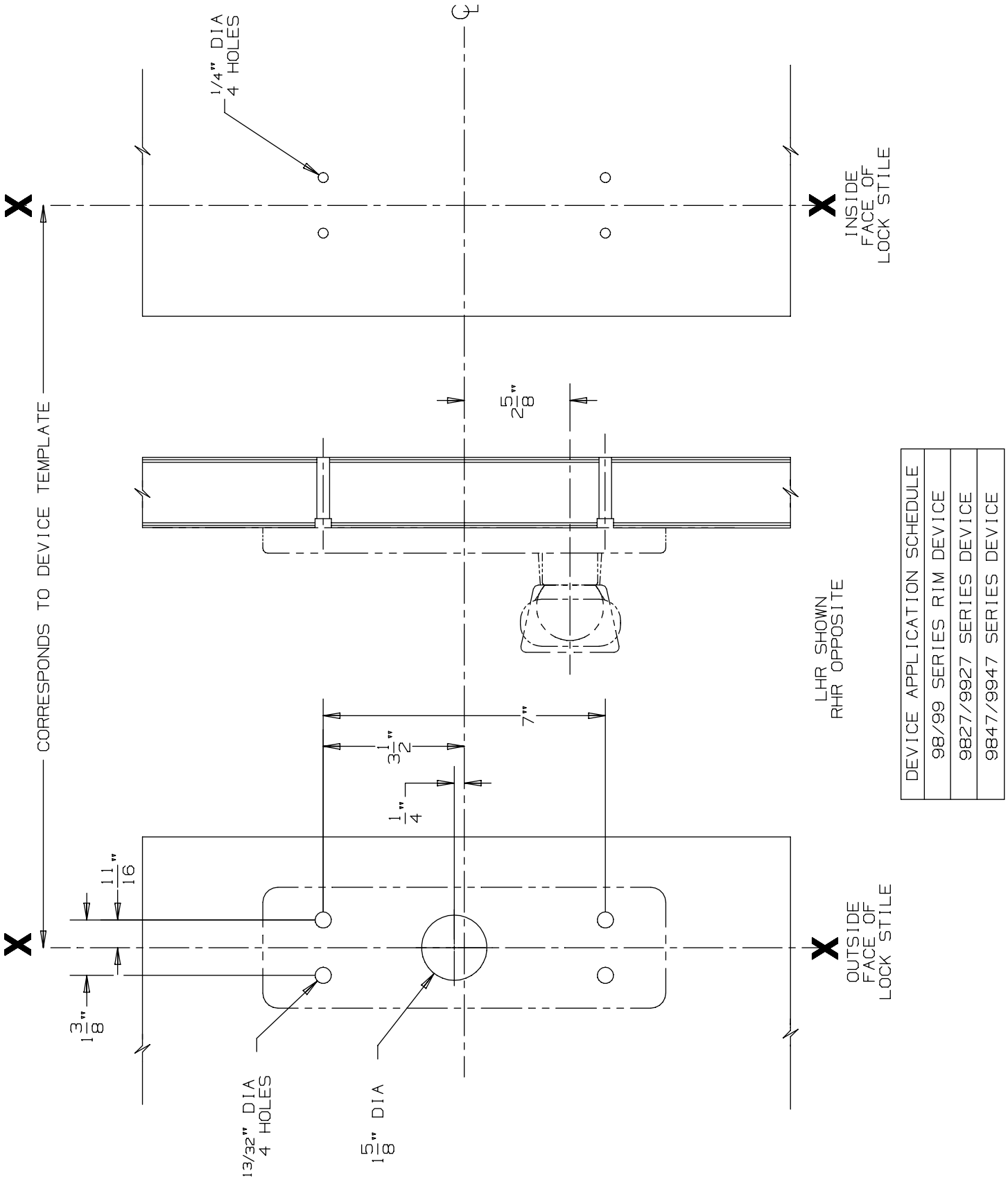

DEVICE APPLICATION SCHEDULE
98/99 SERIES RIM DEVICE
9827/9927 SERIES DEVICE
9847/9947 SERIES DEVICE

991 KR & 992 LR Trim (Rigid)

VON DUPRIN®

NOTES: SEE MASTER SHEET #10001 FOR SUGGESTED REINFORCING

TEMPLATE NUMBER: 20275_a

DATE: 05-23-13

99 Series Trims, Controls & Strikes

-

98/99 Series Trims - Continued

991 K & 992 L Trim for Mortise Device

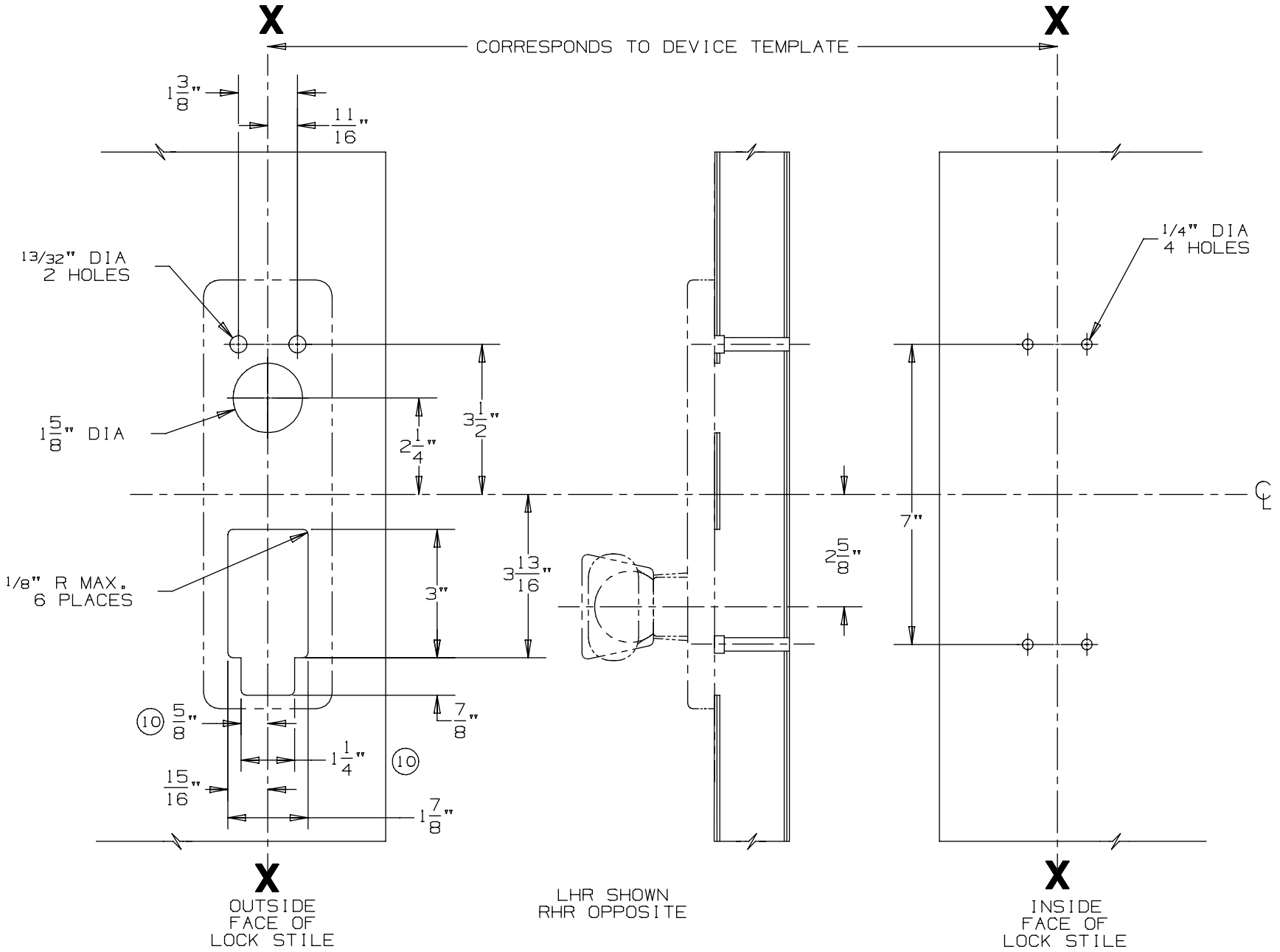

DEVICE APPLICATION SCHEDULE
9875/9975 SERIES DEVICE

NOTES: SEE MASTER SHEET #10001 FOR SUGGESTED REINFORCING

TEMPLATE NUMBER: 20280_a

DATE: 05-23-13

VON DUPRIN®

991 K-BE & 992 L-BE Trim

NOTES: SEE MASTER SHEET #10001 FOR SUGGESTED REINFORCING

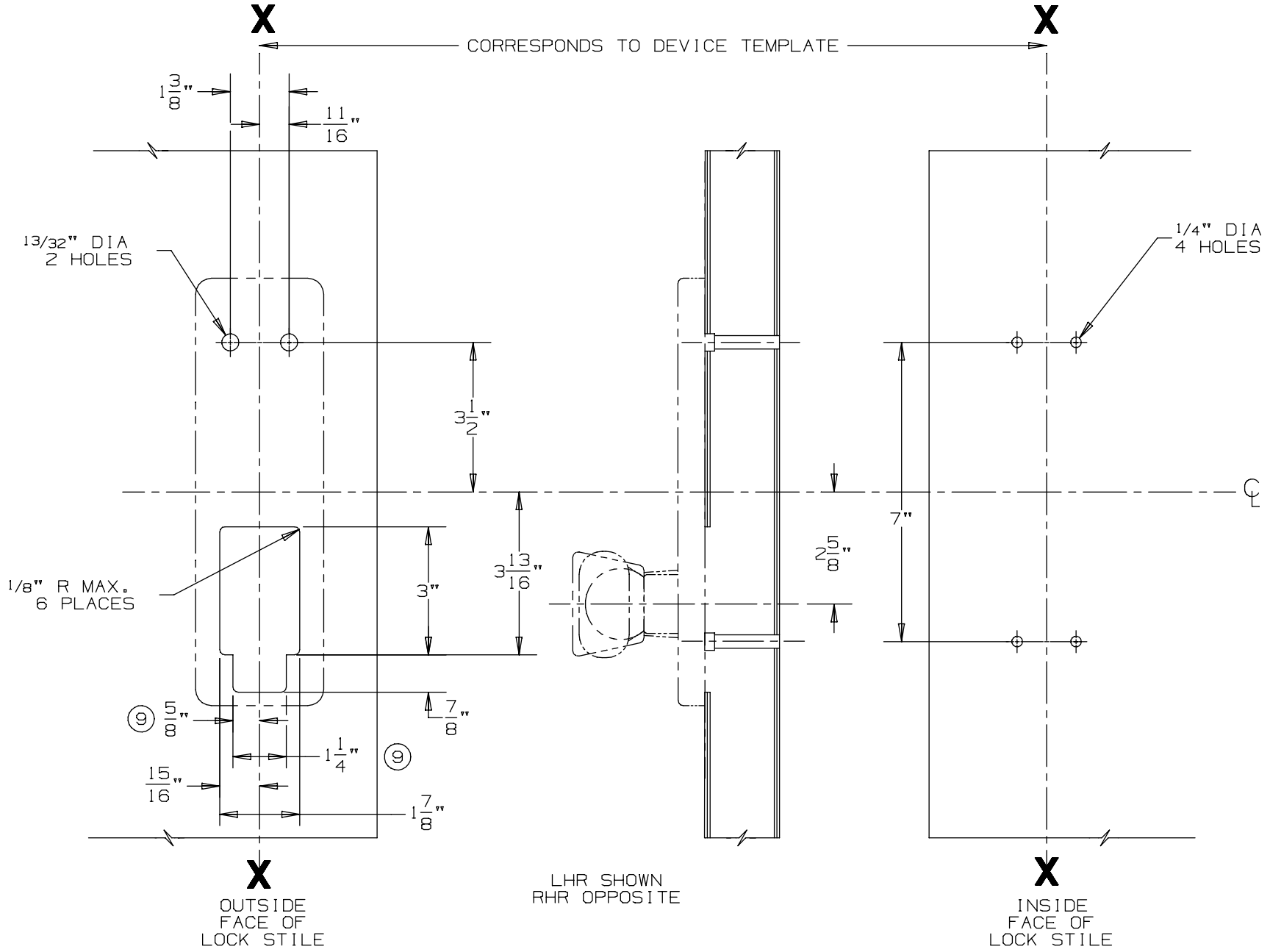

DEVICE APPLICATION SCHEDULE
98/99 SERIES RIM DEVICE
9827/9927 SERIES DEVICE
9847/9947 SERIES DEVICE
9875/9975 SERIES DEVICE

VON DUPRIN®

TEMPLATE NUMBER: 20273_a

DATE: 05-23-13

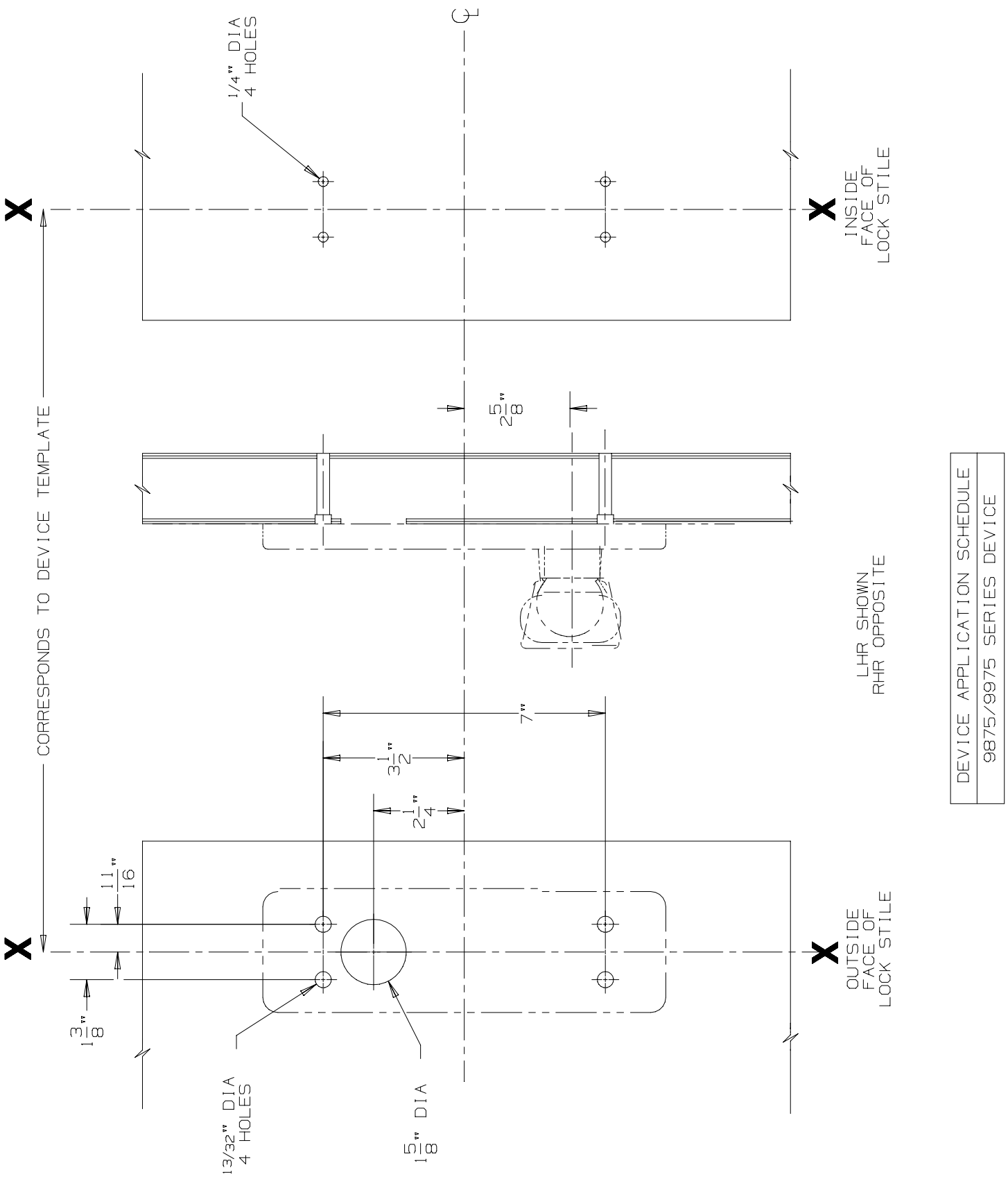

DEVICE APPLICATION SCHEDULE
9875/9975 SERIES DEVICE

991 KR & 992 LR Trim (Rigid) for Mortise Device

VON DUPRIN®

NOTES: SEE MASTER SHEET #10001 FOR SUGGESTED REINFORCING

TEMPLATE NUMBER: 20281_a

DATE: 05-23-13

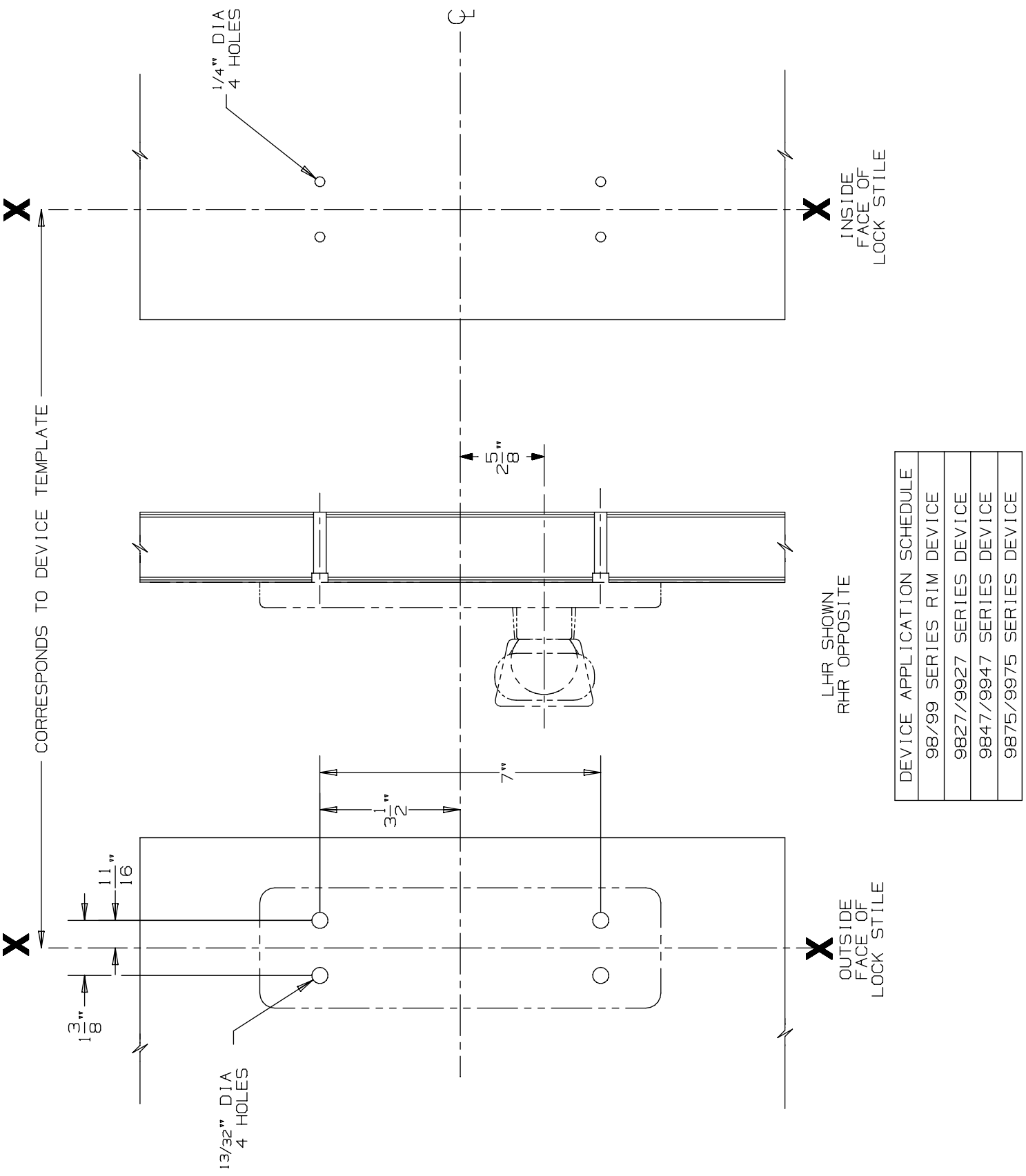

DEVICE APPLICATION SCHEDULE
98/99 SERIES RIM DEVICE
9827/9927 SERIES DEVICE
9847/9947 SERIES DEVICE
9875/9975 SERIES DEVICE

991 K-DT & 992 L-DT Trim

VON DUPRIN®

NOTES: SEE MASTER SHEET #10001 FOR SUGGESTED REINFORCING

TEMPLATE NUMBER: 20274_a

DATE: 05-23-13

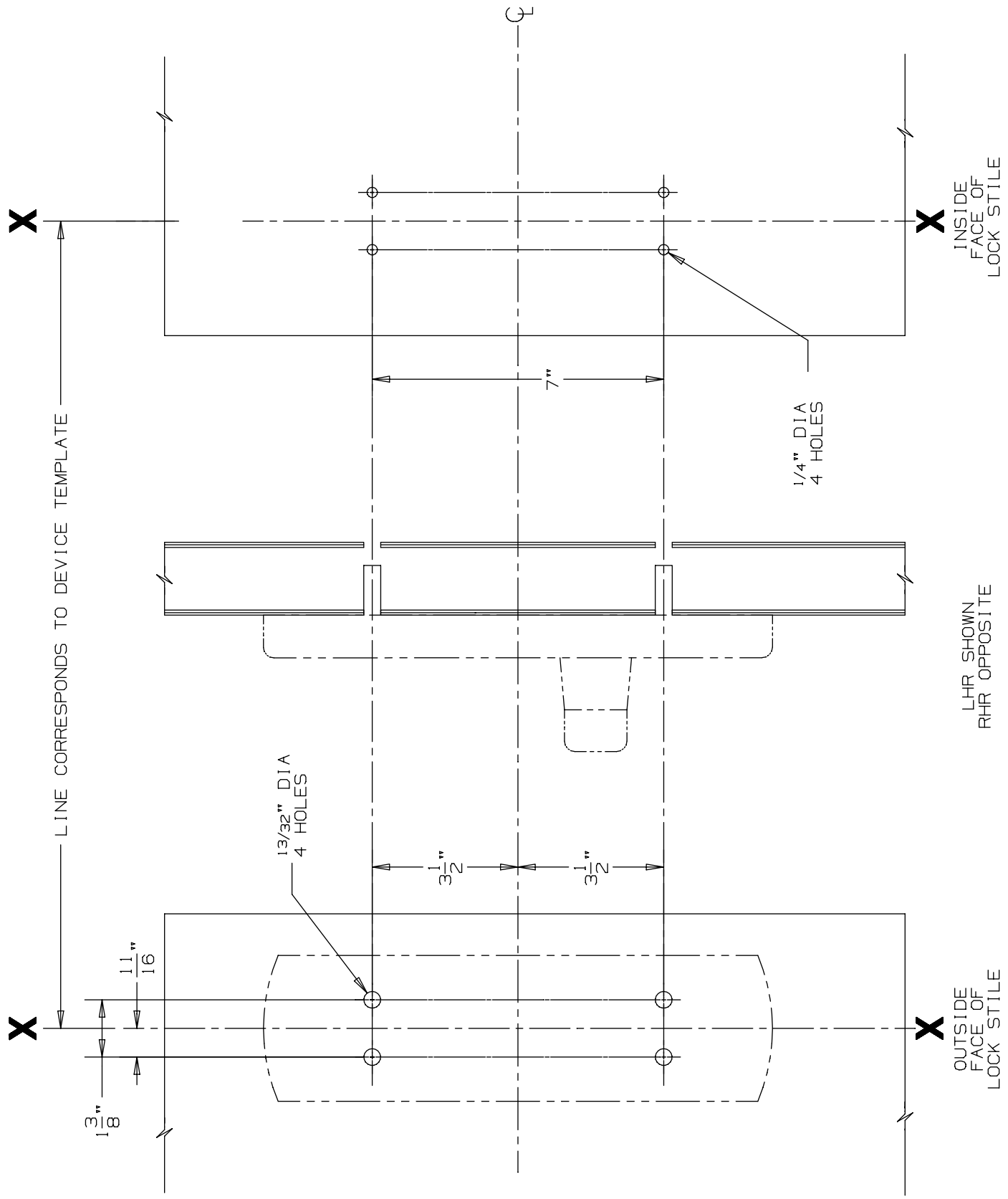

992 L-DT Mounting Back-to-Back w/ 330/350 Push Bar

VON DUPRIN®

NOTES: SEE MASTER SHEET #10001 FOR SUGGESTED REINFORCING

TEMPLATE NUMBER: 20293_a

DATE: 05-23-13

991 K & 992 L Trim

NOTES: SEE MASTER SHEET #10001 FOR SUGGESTED REINFORCING

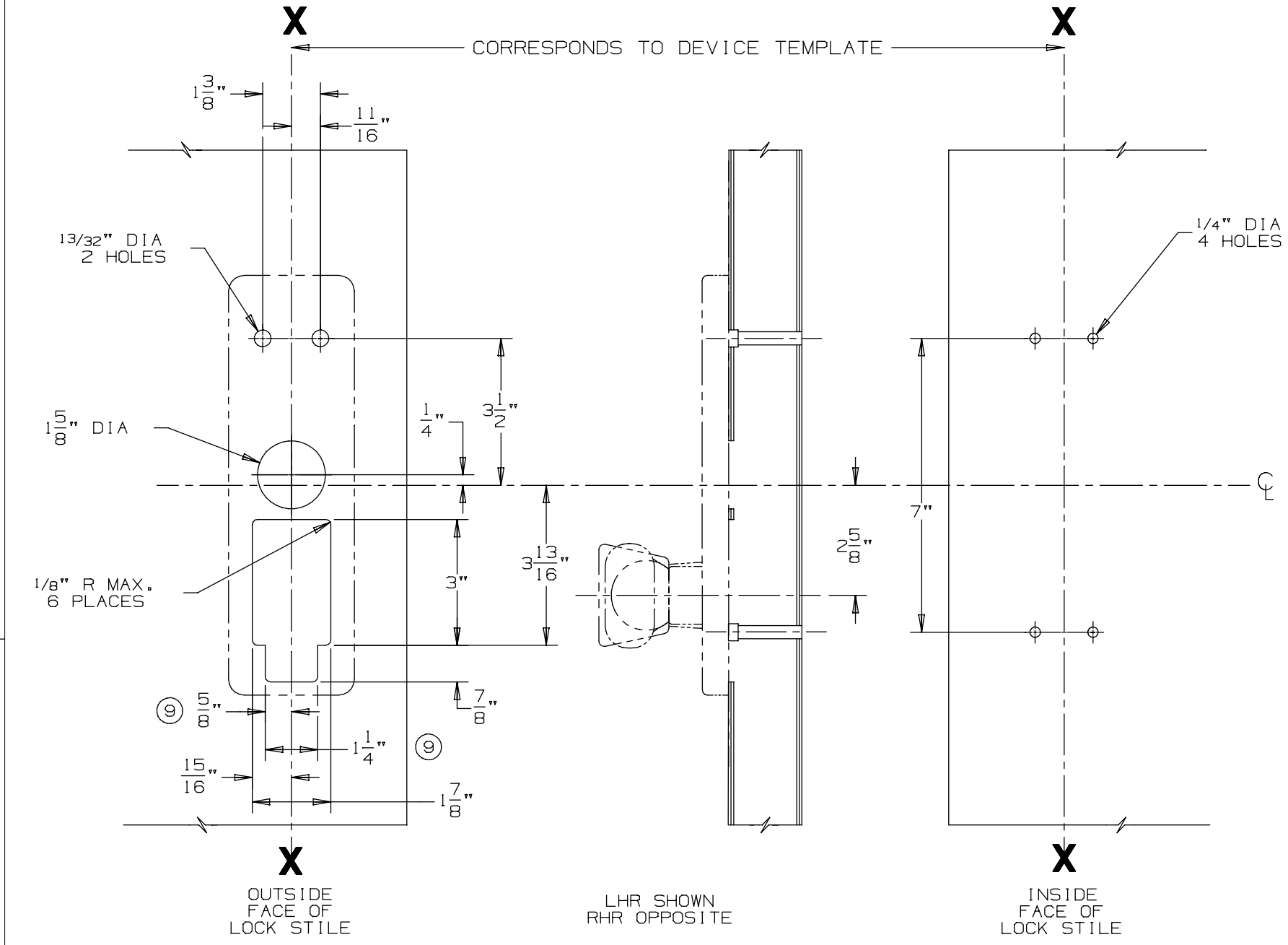

DEVICE APPLICATION SCHEDULE
98/99 SERIES RIM DEVICE
9827/9927 SERIES DEVICE
9847/9947 SERIES DEVICE

VON DUPRIN®

TEMPLATE NUMBER: 20272_a

DATE: 05-23-13

991 K-BE & 992 L-BE Trim

NOTES: SEE MASTER SHEET #10001 FOR SUGGESTED REINFORCING

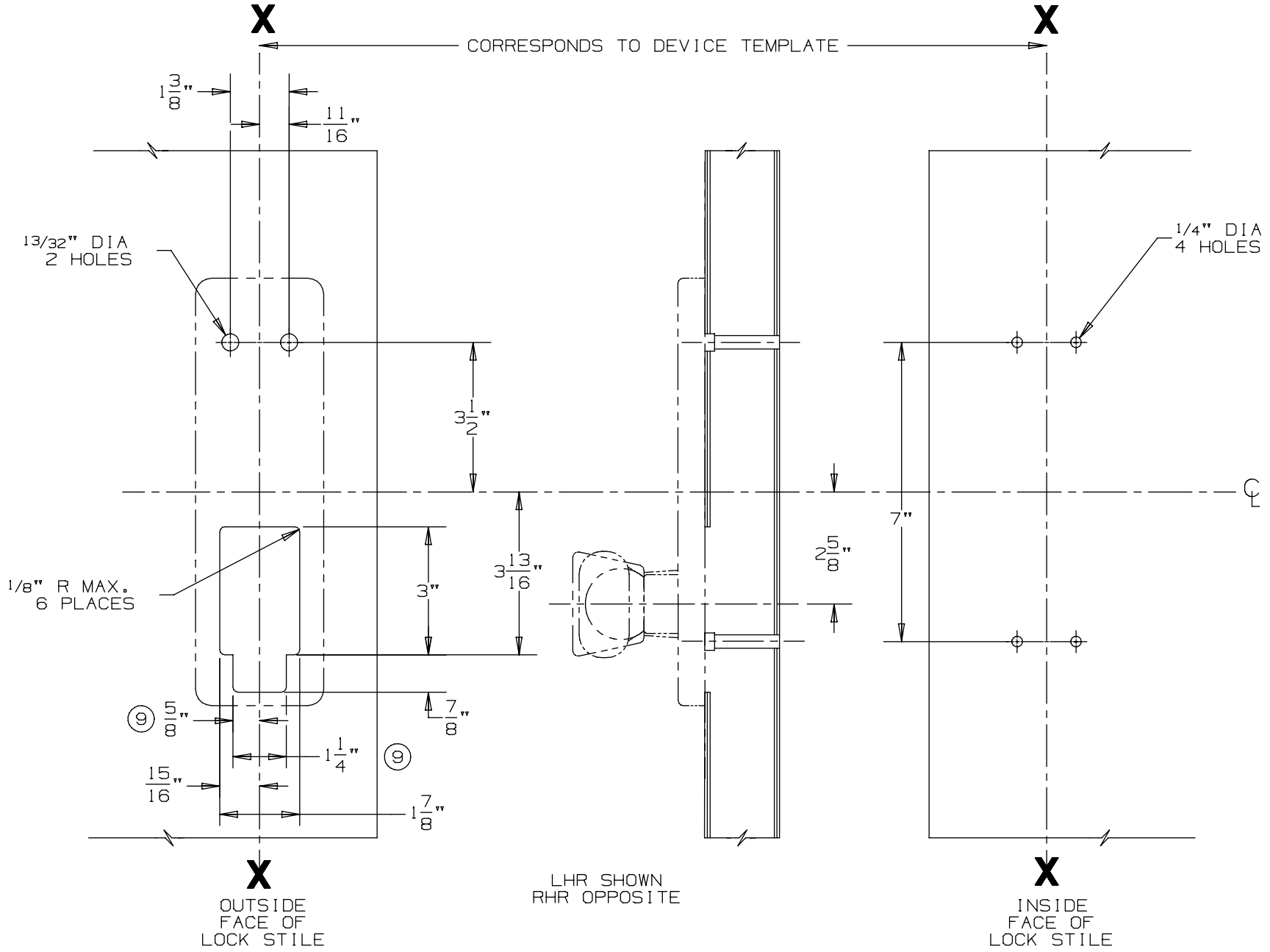

DEVICE APPLICATION SCHEDULE
98/99 SERIES RIM DEVICE
9827/9927 SERIES DEVICE
9847/9947 SERIES DEVICE
9875/9975 SERIES DEVICE

VON DUPRIN®

TEMPLATE NUMBER: 20273_a

DATE: 05-23-13

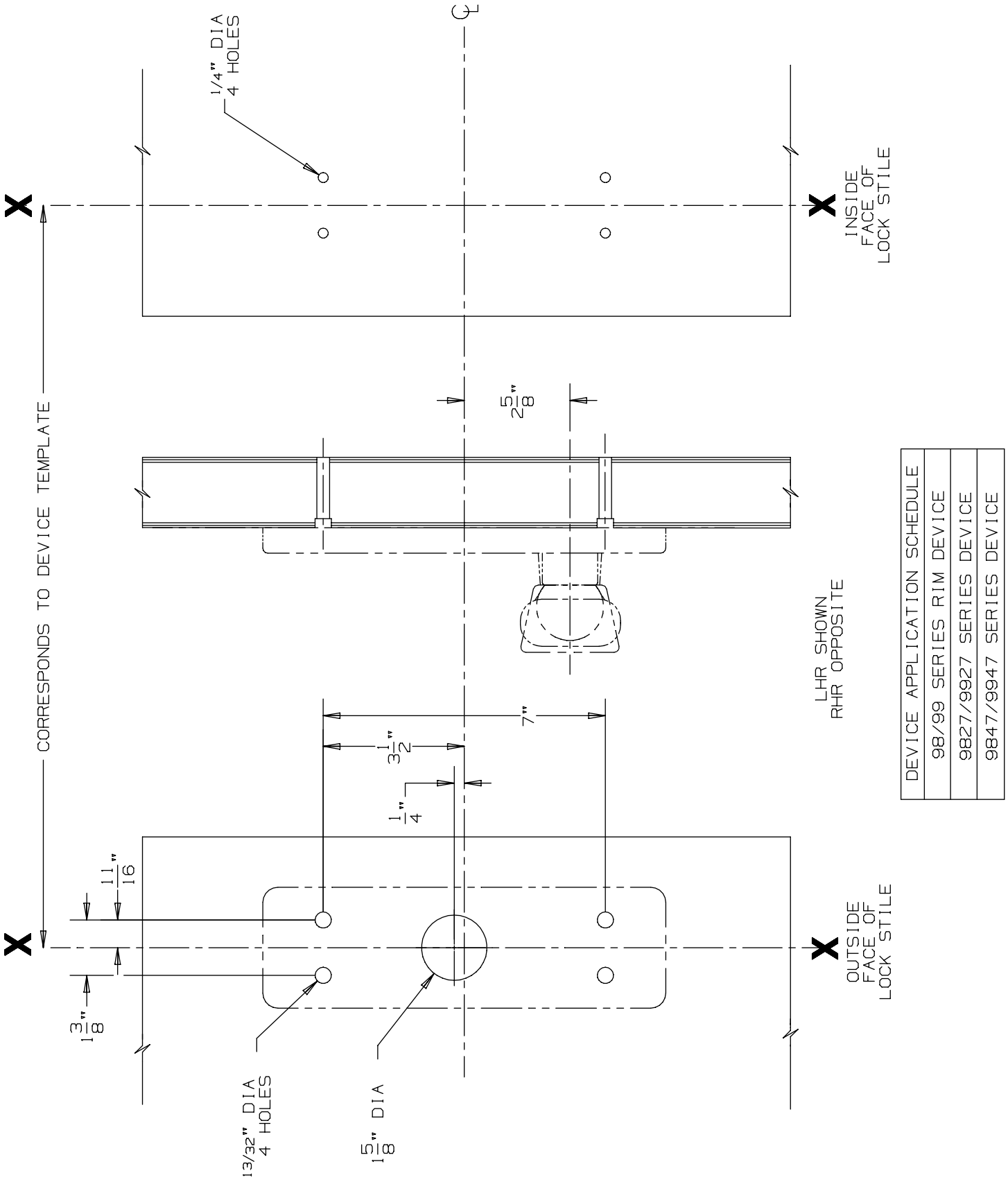

DEVICE APPLICATION SCHEDULE
98/99 SERIES RIM DEVICE
9827/9927 SERIES DEVICE
9847/9947 SERIES DEVICE

991 KR & 992 LR Trim (Rigid)

VON DUPRIN®

NOTES: SEE MASTER SHEET #10001 FOR SUGGESTED REINFORCING

TEMPLATE NUMBER: 20275_a

DATE: 05-23-13

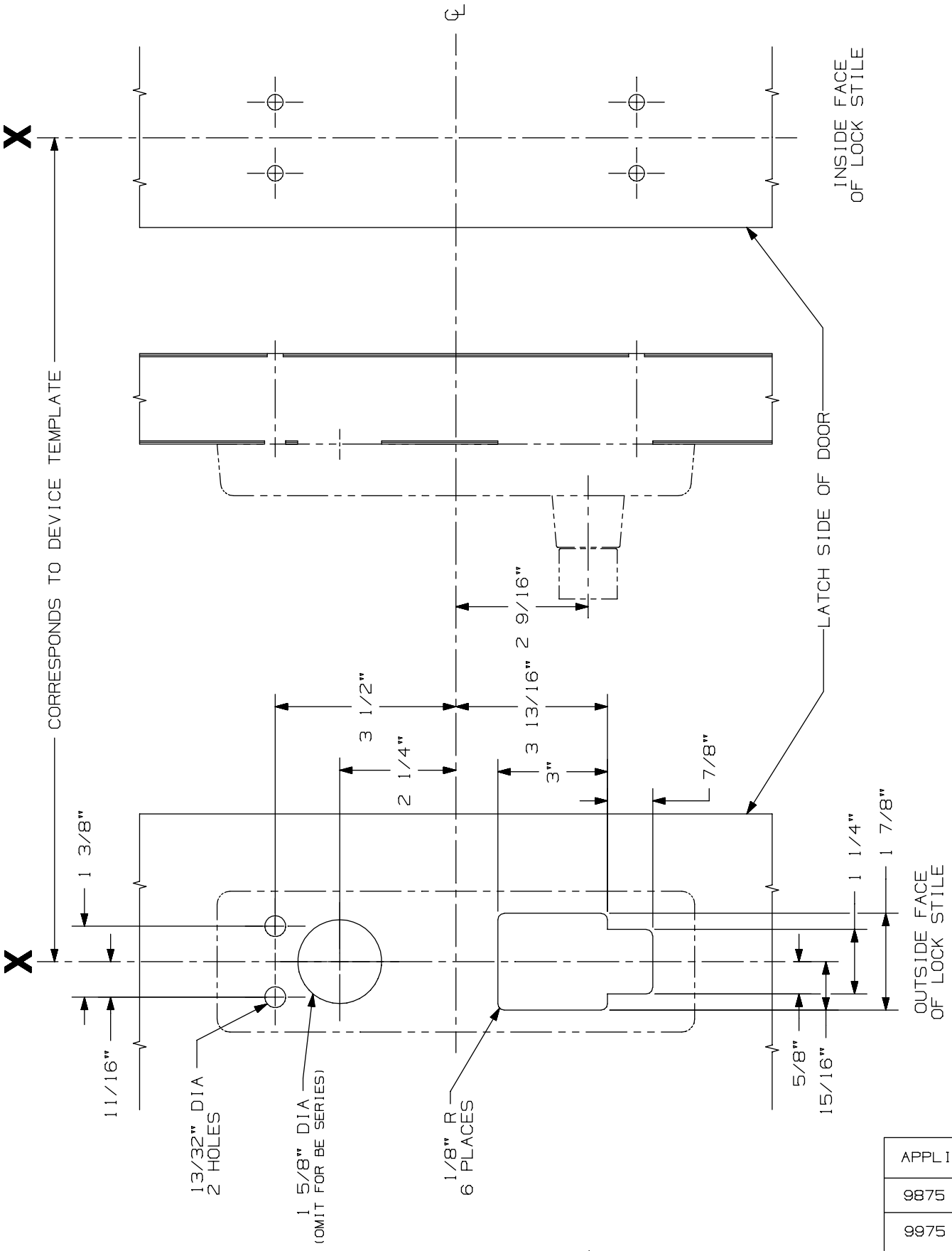

APPLICATIONS
9875 SERIES
9975 SERIES

996L, E996L, 996L-BE, & E996L-BE
Mortise Series
Trim Metal Door Application

VON DUPRIN®

NOTES: See Master Sheet #10001 For Suggested Reinforcing

TEMPLATE NUMBER: 20006_b

DATE: 10-30-14

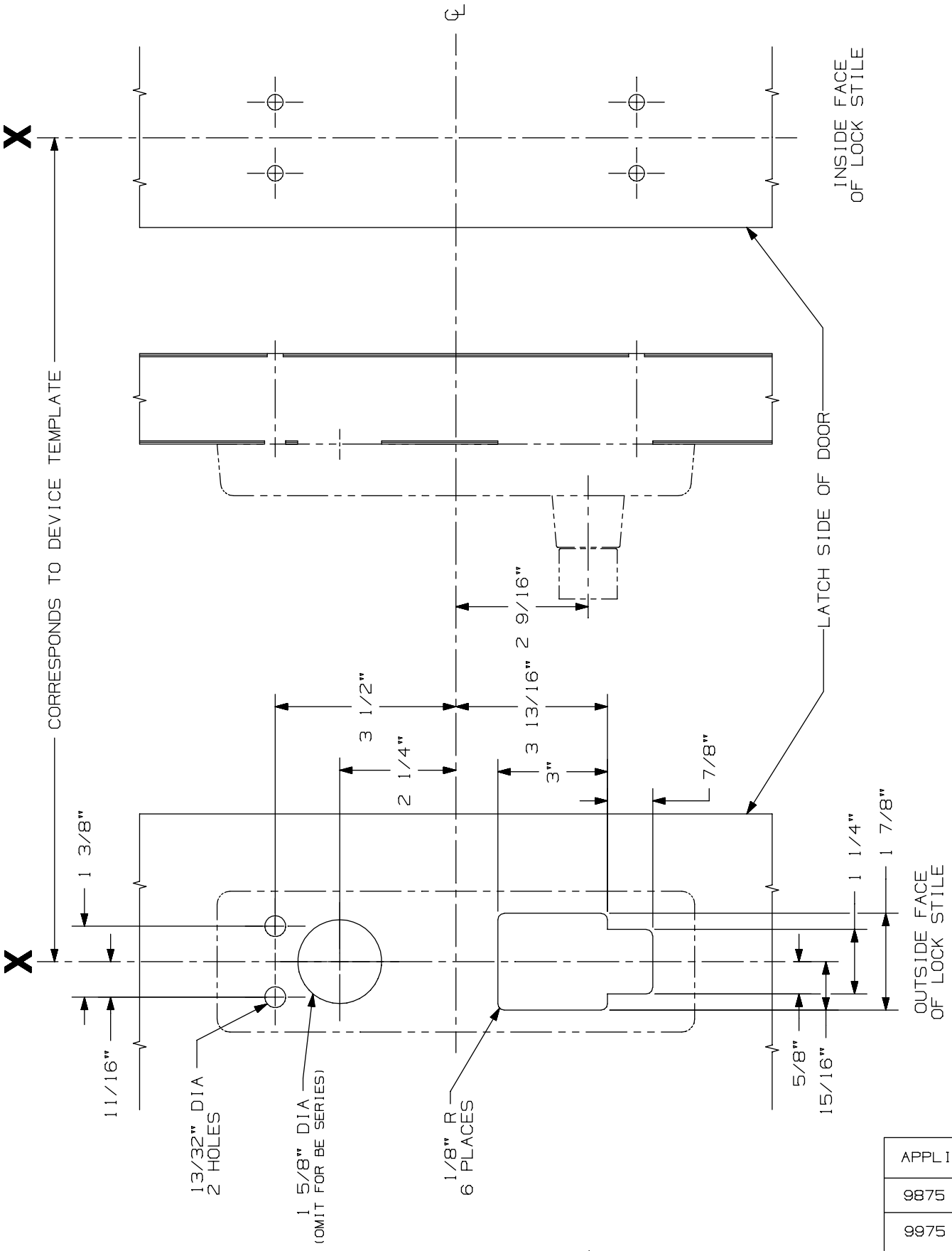

APPLICATIONS
9875 SERIES
9975 SERIES

996L, E996L, 996L-BE, & E996L-BE
Mortise Series
Trim Metal Door Application

VON DUPRIN®

NOTES: See Master Sheet #10001 For Suggested Reinforcing

TEMPLATE NUMBER: 20006_b

DATE: 10-30-14

996L-RIGID SERIES TRIM
METAL DOOR APPLICATION

NOTES: SEE MASTER SHEET #10001 FOR SUGGESTED REINFORCING

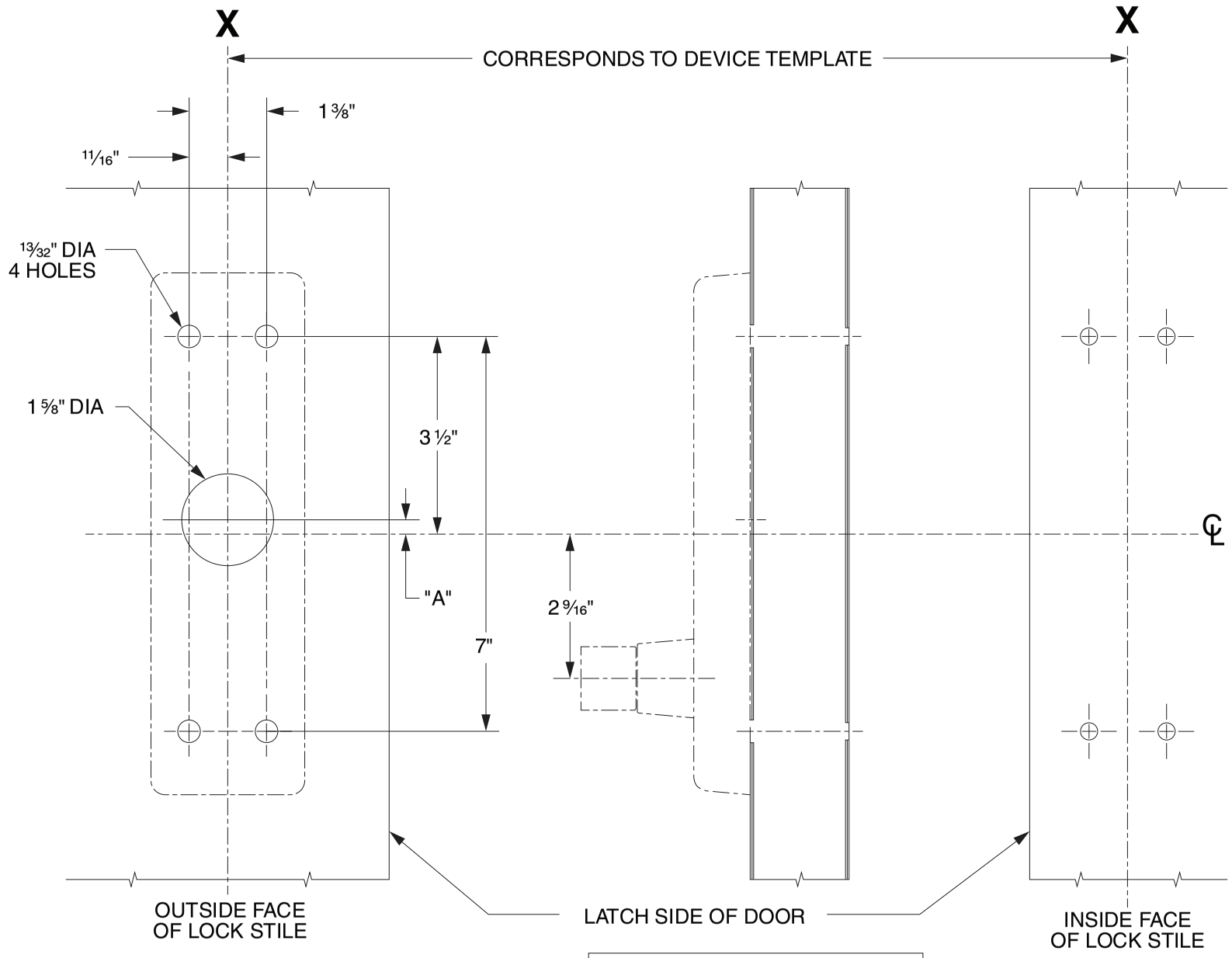

APPLICATION	DIM "A"
996L RIGID-R/V	1/4"
996L RIGID-M	2 1/4"

DEVICE APPLICATION SCHEDULE	
98 RIM SERIES	99 RIM SERIES
9827 SERIES	9927 SERIES
9847 SERIES	9947 SERIES
9849 SERIES	9949 SERIES
9875 SERIES	9975 SERIES

LHR SHOWN
RHR OPPOSITE

VON DUPRIN®

TEMPLATE NUMBER: 20005_d

DATE: 05-31-13

996L-DT SERIES TRIM
METAL DOOR APPLICATION

NOTES: SEE MASTER SHEET #10001 FOR SUGGESTED REINFORCING

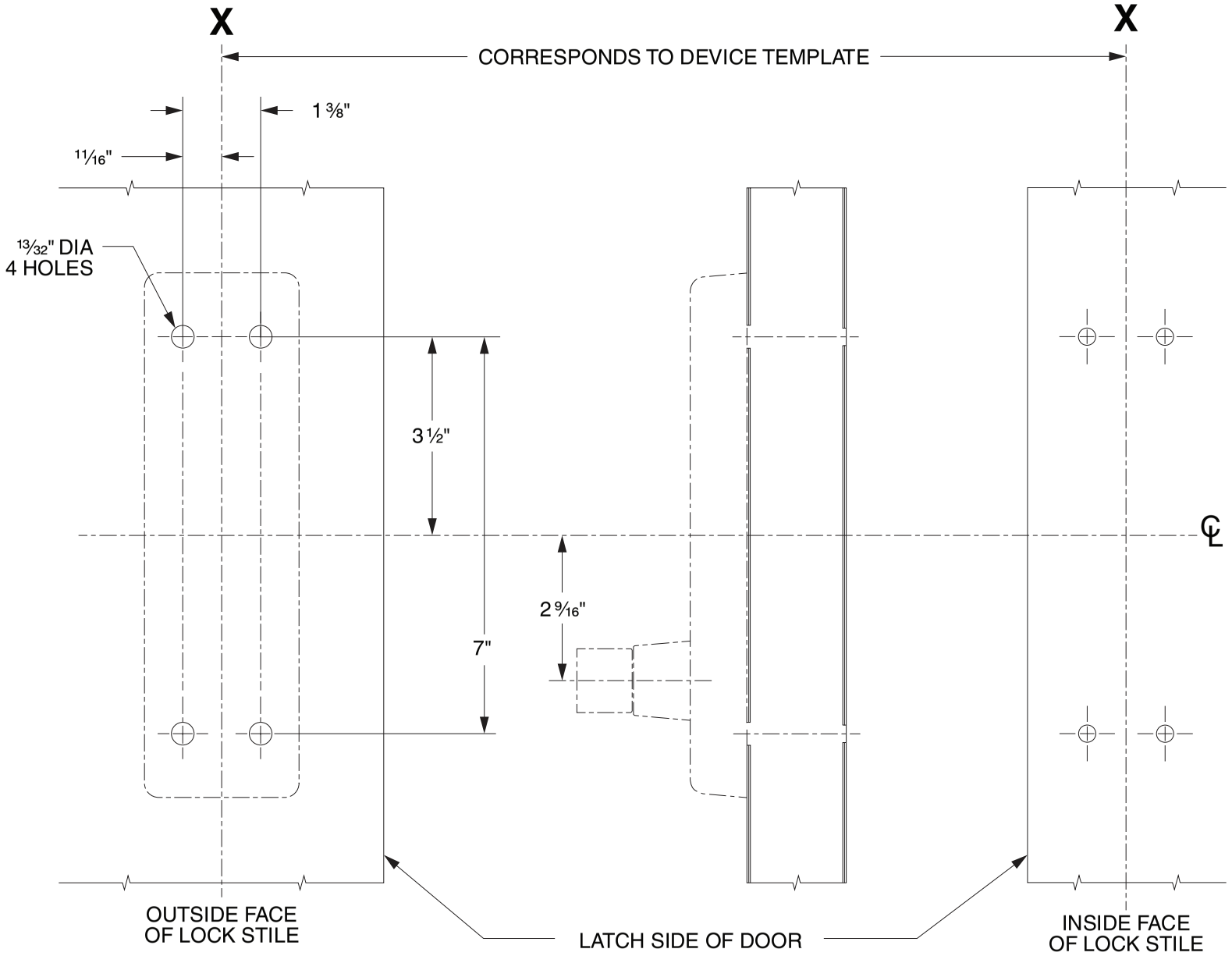

DEVICE APPLICATION SCHEDULE	
98 RIM SERIES	99 RIM SERIES
9827 SERIES	9927 SERIES
9847 SERIES	9947 SERIES
9849 SERIES	9949 SERIES
9875 SERIES	9975 SERIES

LHR SHOWN
RHR OPPOSITE

VON DUPRIN®

TEMPLATE NUMBER: 20004_d

DATE: 11-28-12

DEVICE APPLICATION SCHEDULE	
98 RIM SERIES	99 RIM SERIES
9827 SERIES	9927 SERIES
9847 SERIES	9947 SERIES
9849 SERIES	9949 SERIES

996L, E996L, 996L-BE, E996L-BE 996K, 996K-BE R/V SERIES
TRIM METAL DOOR APPLICATION

VON DUPRIN®

NOTES: SEE MASTER SHEET #10001 FOR SUGGESTED REINFORCING

TEMPLATE NUMBER: 20003_e

DATE: 10-30-14

DEVICE APPLICATION SCHEDULE	
98 RIM SERIES	99 RIM SERIES
9827 SERIES	9927 SERIES
9847 SERIES	9947 SERIES
9849 SERIES	9949 SERIES

996L, E996L, 996L-BE, E996L-BE 996K, 996K-BE R/V SERIES
TRIM METAL DOOR APPLICATION

VON DUPRIN®

NOTES: SEE MASTER SHEET #10001 FOR SUGGESTED REINFORCING

TEMPLATE NUMBER: 20003_e

DATE: 10-30-14

996L-RIGID SERIES TRIM
METAL DOOR APPLICATION

NOTES: SEE MASTER SHEET #10001 FOR SUGGESTED REINFORCING

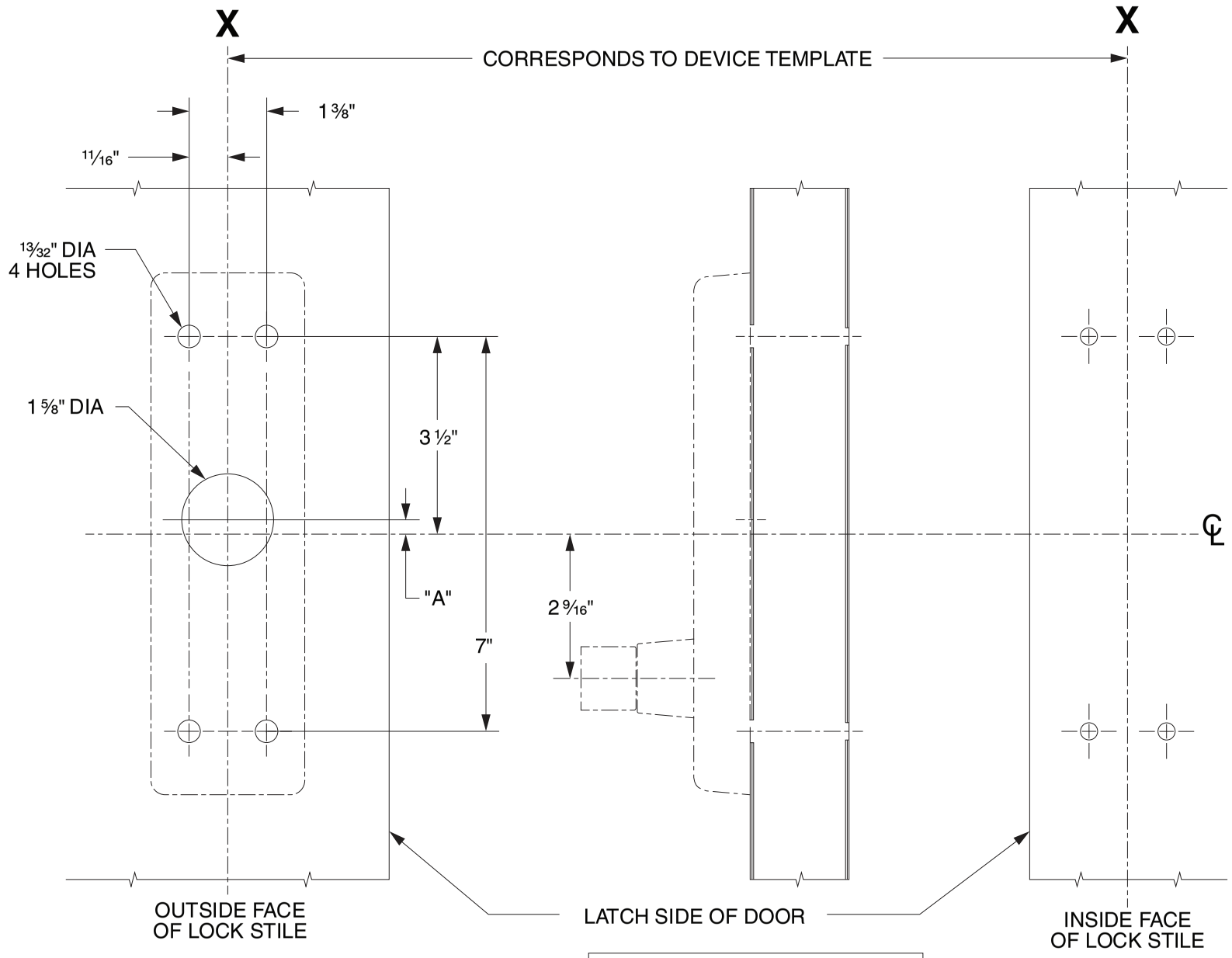

APPLICATION	DIM "A"
996L RIGID-R/V	1/4"
996L RIGID-M	2 1/4"

DEVICE APPLICATION SCHEDULE	
98 RIM SERIES	99 RIM SERIES
9827 SERIES	9927 SERIES
9847 SERIES	9947 SERIES
9849 SERIES	9949 SERIES
9875 SERIES	9975 SERIES

LHR SHOWN
RHR OPPOSITE

VON DUPRIN®

TEMPLATE NUMBER: 20005_d

DATE: 05-31-13

99 Series Trims, Controls & Strikes

-

98/88 Series Controls

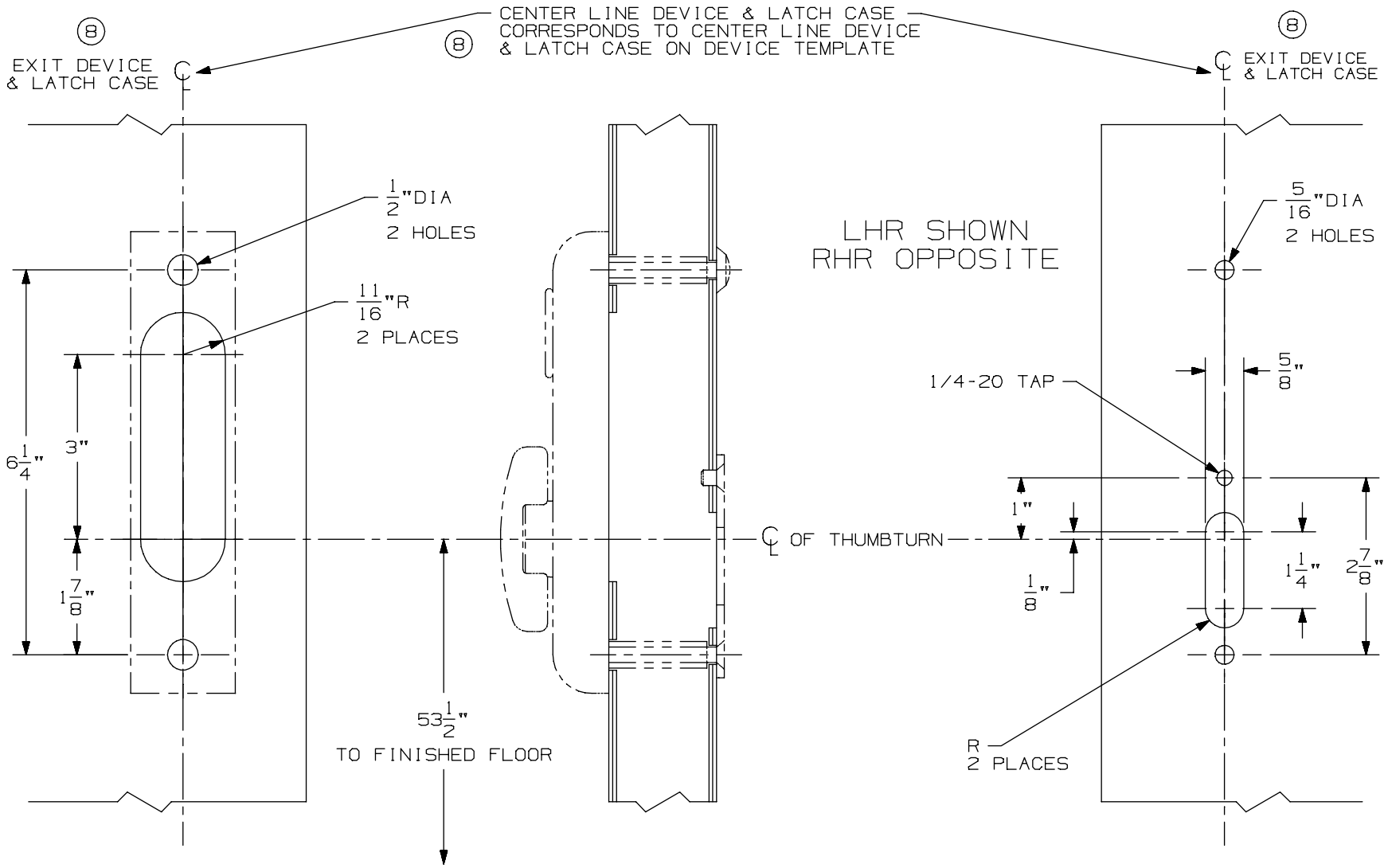

OUTSIDE
FACE OF
LOCK STILE

INSIDE
FACE OF
LOCK STILE

DEVICE APPLICATION SCHEDULE
2227 VERT. ROD DEVICE
2227-F VERT. ROD DEVICE
3327/3527 VERT. ROD DEVICE
8 3327A/3527A VERT. ROD DEVICE
8 3327A-F/3527A-F VERT. ROD DEVICE
9827/9927 VERT. ROD DEVICE
9827-F/9927-F VERT. ROD DEVICE

NOTES: SEE MASTER SHEET #10001 FOR SUGGESTED REINFORCING

374-T Control

VON DUPRIN®

TEMPLATE NUMBER: 40118_a

DATE: 05-28-13

374-T-BE Control

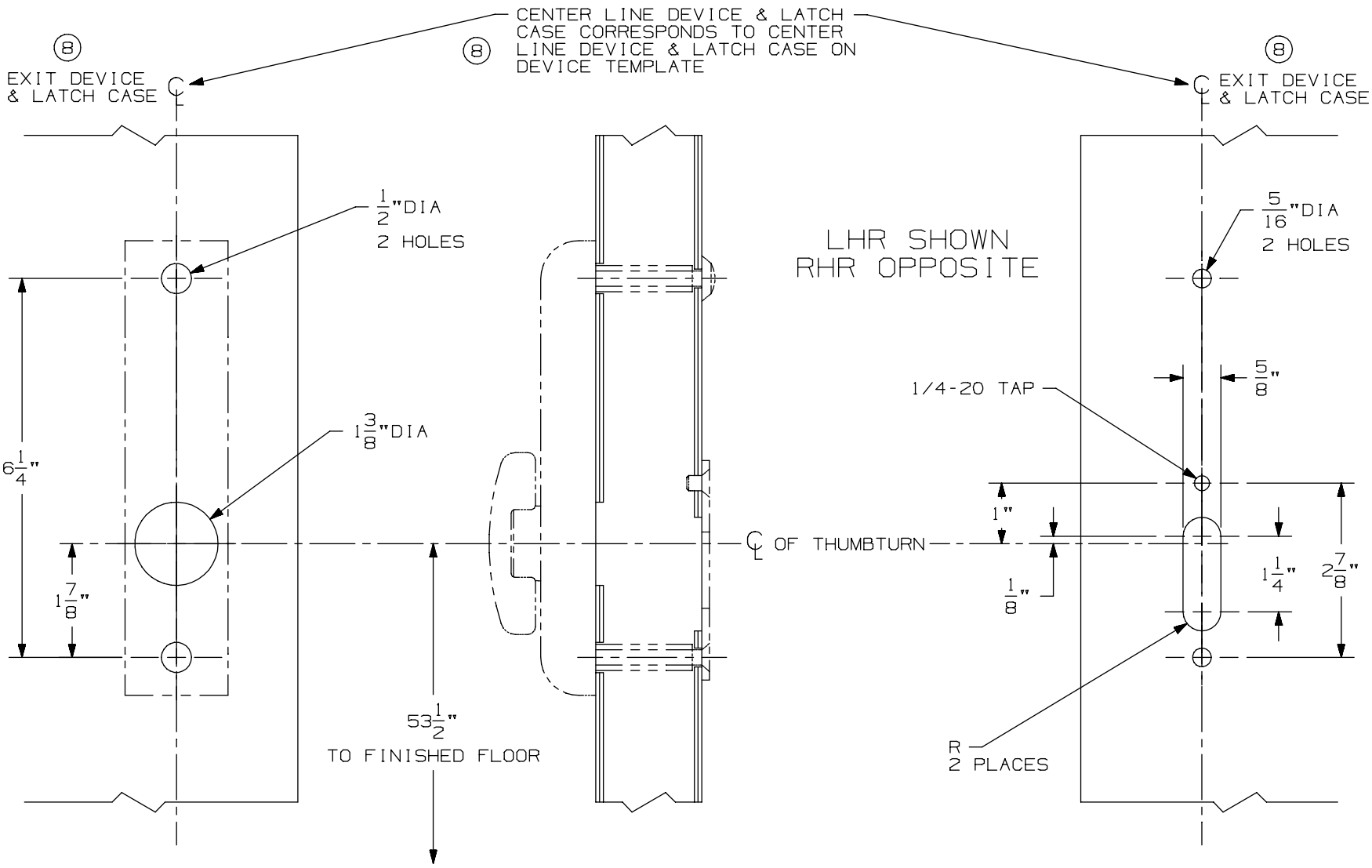

DEVICE APPLICATION SCHEDULE
2227 VERT. ROD DEVICE
2227-F VERT. ROD DEVICE
3327/3527 VERT. ROD DEVICE
(8) 3327A/3527A VERT. ROD DEVICE
(8) 3327A-F/3527A-F VERT. ROD DEVICE
9827/9927 VERT. ROD DEVICE
9827-F/9927-F VERT. ROD DEVICE

NOTES: SEE MASTER SHEET #10001 FOR SUGGESTED REINFORCING

TEMPLATE NUMBER: 40119_a

DATE: 05-28-13

VON DUPRIN®

376-T Control

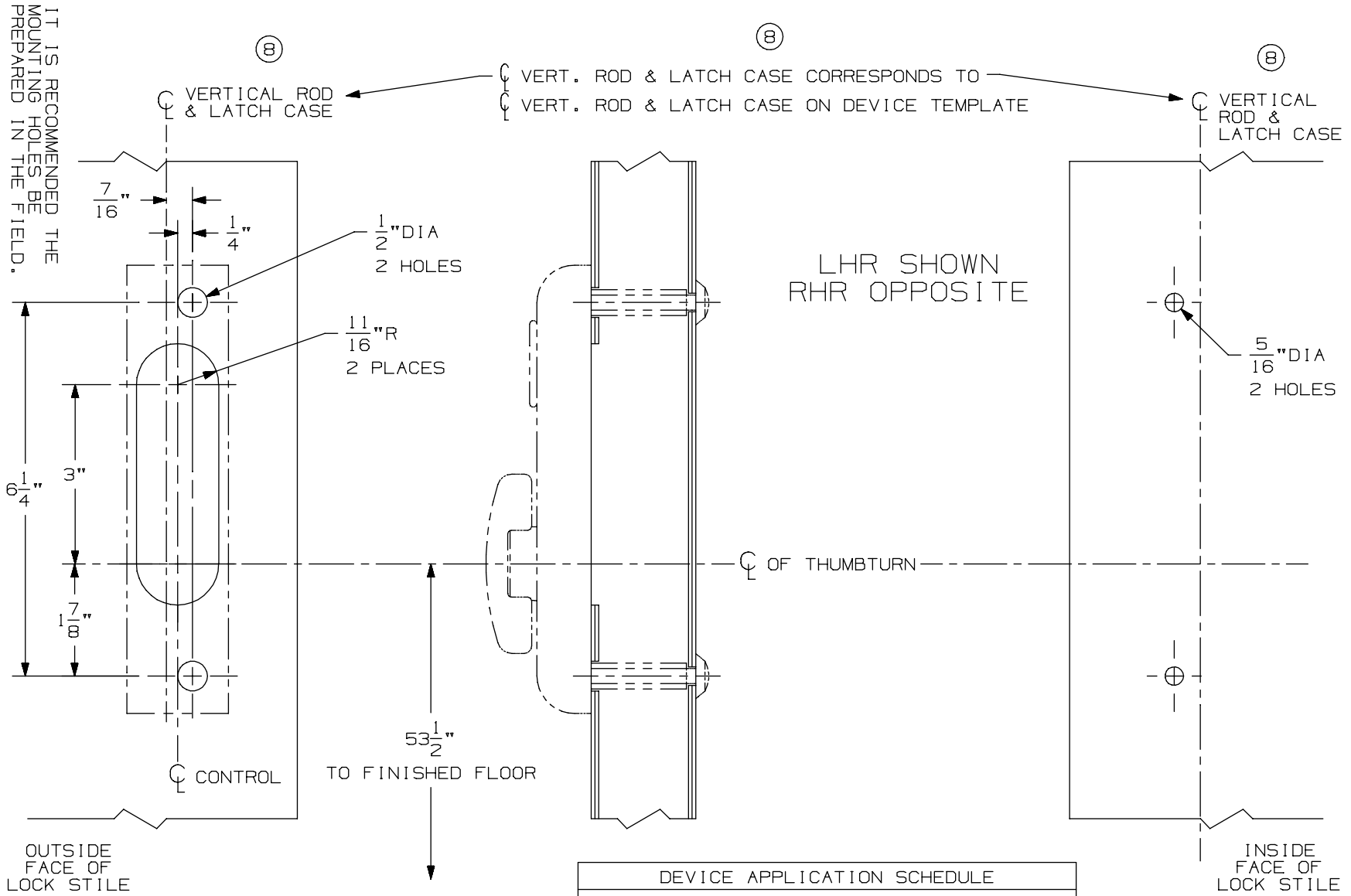

DEVICE APPLICATION SCHEDULE
5547/5547-F VERT. ROD DEVICE
8847-F VERT. ROD DEVICE
* 3347/3547 VERT. ROD DEVICE
3347-F/3547-F VERT. ROD DEVICE
⑧ * 3347A/3547A VERT. ROD DEVICE
⑧ 3347A-F/3547A-F VERT. ROD DEVICE
9847/9947 VERT. ROD DEVICE
9847-F/9947-F VERTICAL ROD DEVICE

⑧ * NOT TO BE USED WITH 1 1/16" LATCH CASE BACKSET ON BULLNOSE EDGE DOORS WITH WEATHERSTRIP CHANNEL.

NOTES: SEE MASTER SHEET #10001 FOR SUGGESTED REINFORCING

TEMPLATE NUMBER: 40114_a

DATE: 05-28-13

VON DUPRIN®

376-T-BE Control

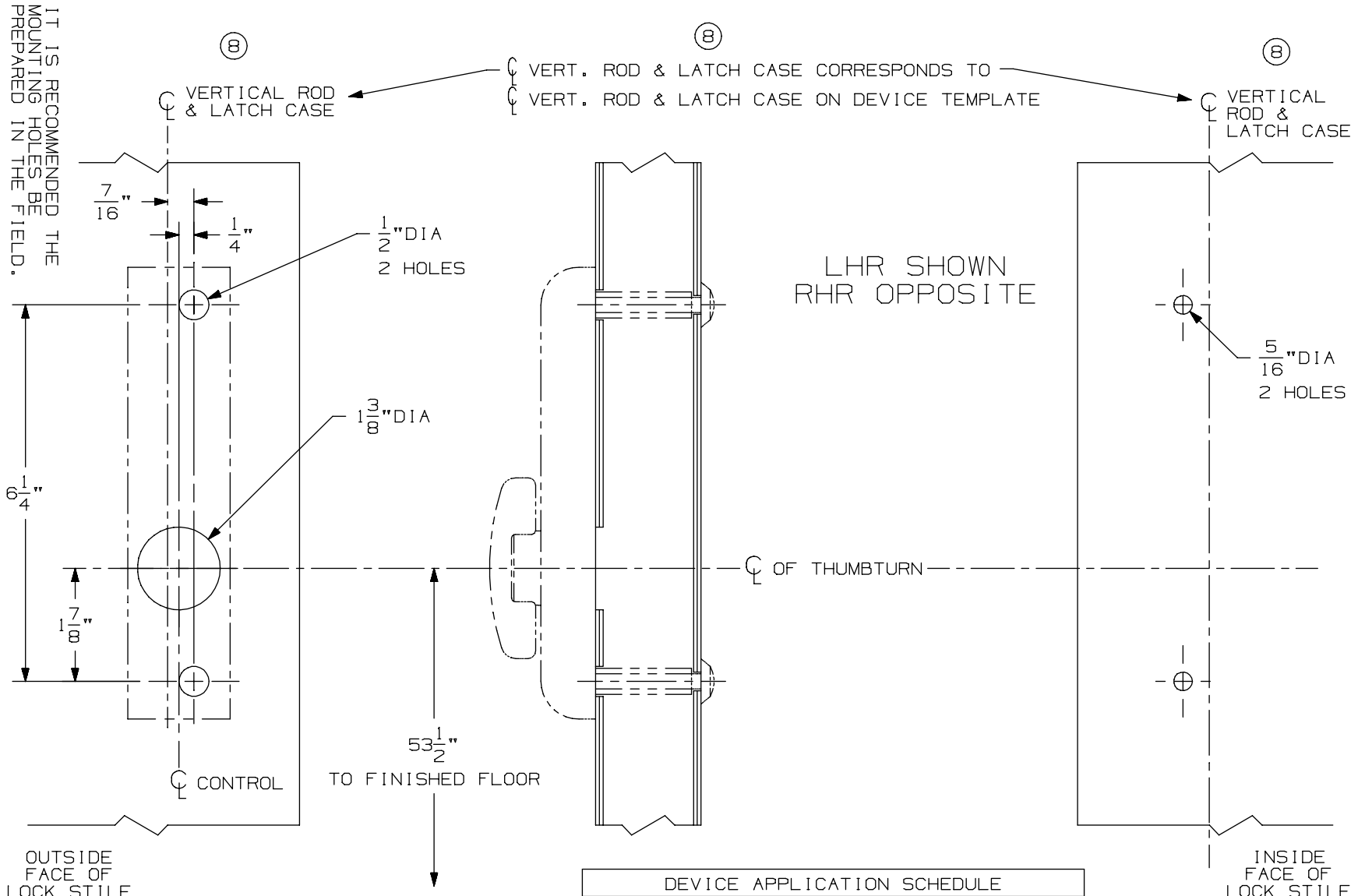

DEVICE APPLICATION SCHEDULE
5547/5547-F VERT. ROD DEVICE
8847-F VERT. ROD DEVICE
* 3347/3547 VERT. ROD DEVICE
3347-F/3547-F VERT. ROD DEVICE
⑧ * 3347A/3547A VERT. ROD DEVICE
⑧ 3347A-F/3547A-F VERT. ROD DEVICE
9847/9947 VERT. ROD DEVICE
9847-F/9947-F VERTICAL ROD DEVICE

* NOT TO BE USED WITH 1 1/16" ⑧ LATCH CASE BACKSET ON BULLNOSE EDGE DOORS WITH WEATHERSTRIP CHANNEL.

NOTES: SEE MASTER SHEET #10001 FOR SUGGESTED REINFORCING

TEMPLATE NUMBER: 40115_a

DATE: 05-28-13

VON DUPRIN®

99 Series Trims, Controls & Strikes

-

98/88 Series Strikes

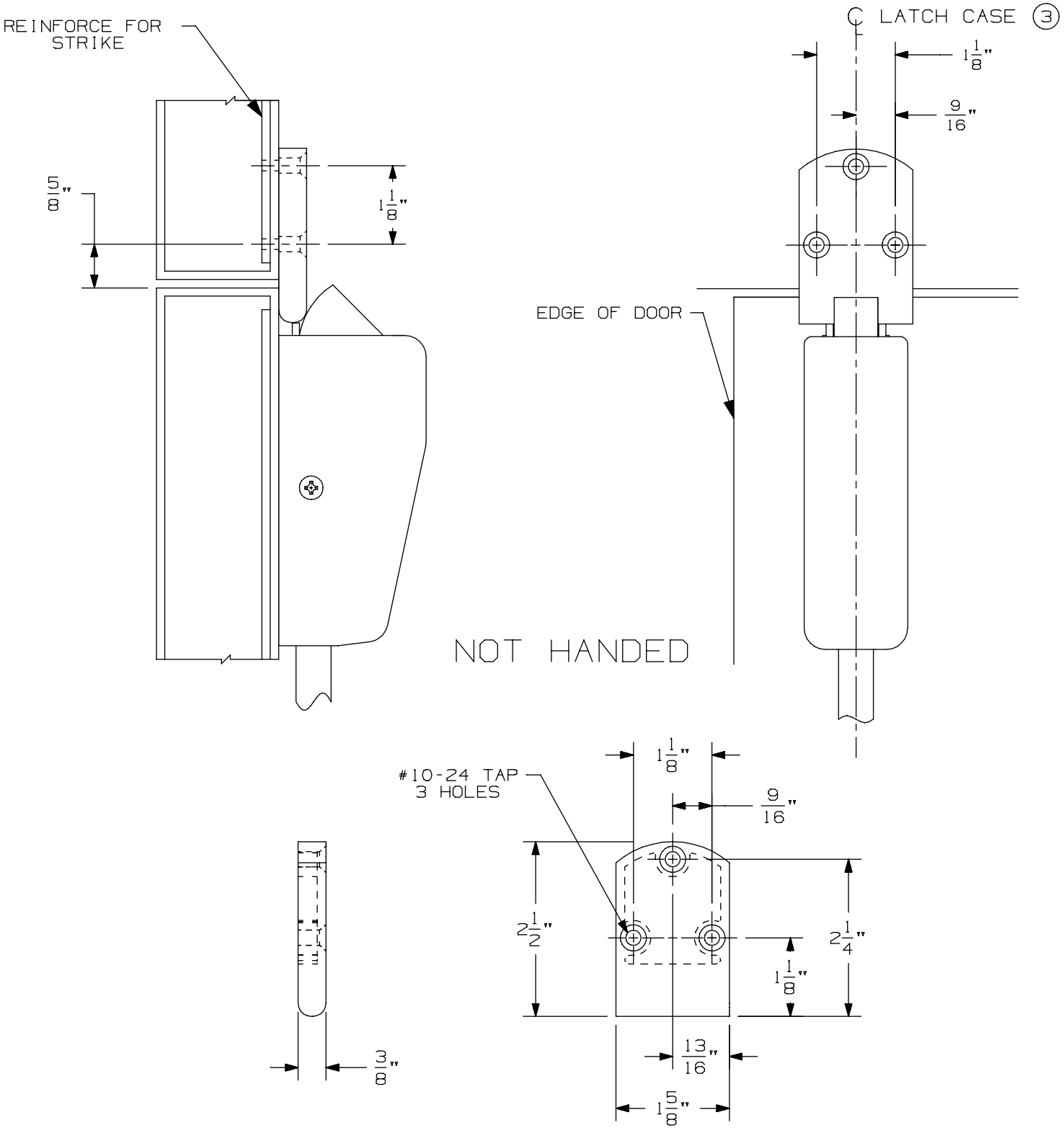

260U Vertical Strike

VON DUPRIN®

NOTES: Latch case mounting holes to be prepared at installation on door

TEMPLATE NUMBER: 30007_a

DATE: 05-23-13

RIM APPLICATION

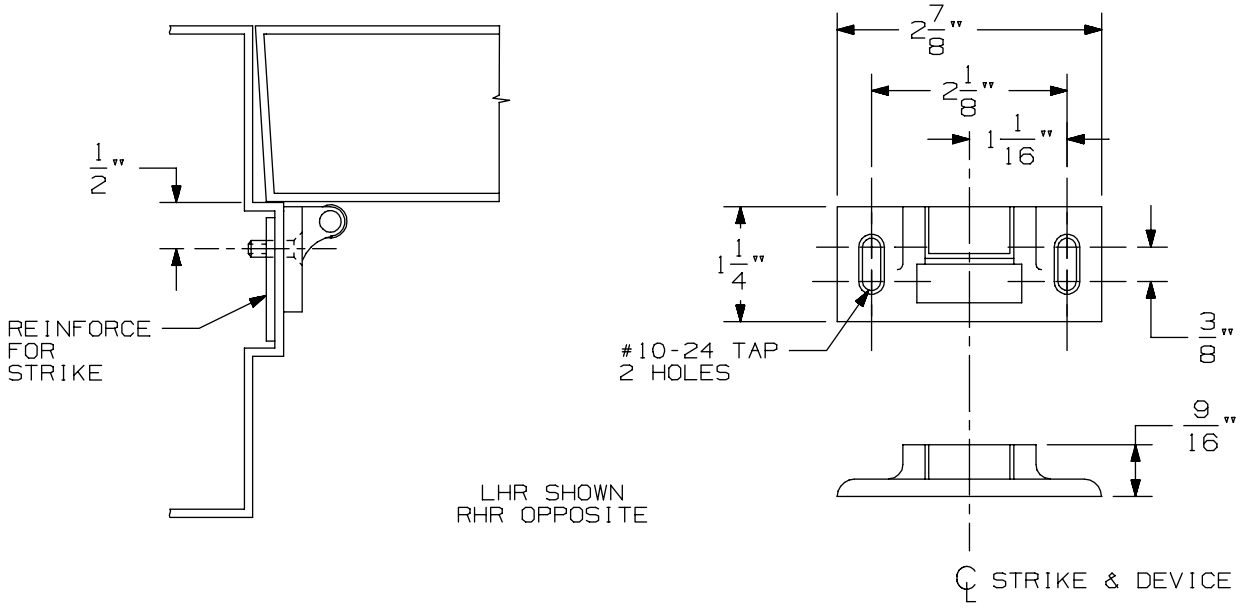

VERTICAL APPLICATION

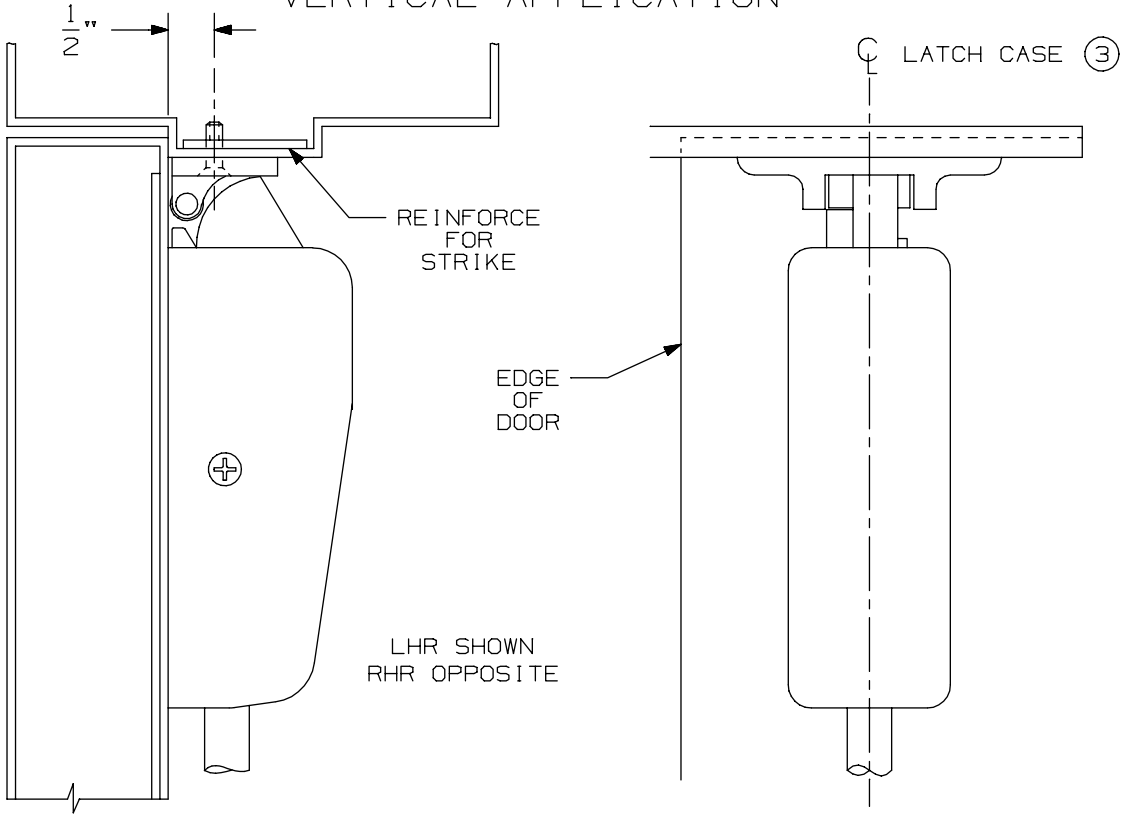

NOTE: LATCH CASE MOUNTING HOLES TO BE PREPARED AT INSTALLATION ON DOOR.

264 Strike

VON DUPRIN®

NOTES: SEE MASTER SHEET #10001 FOR SUGGESTED REINFORCING

TEMPLATE NUMBER: 30009_a

DATE: 05-23-13

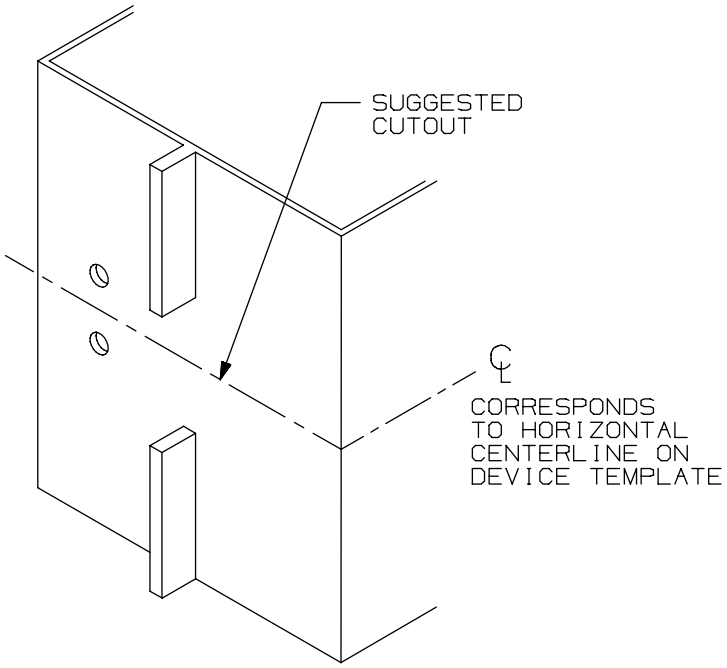

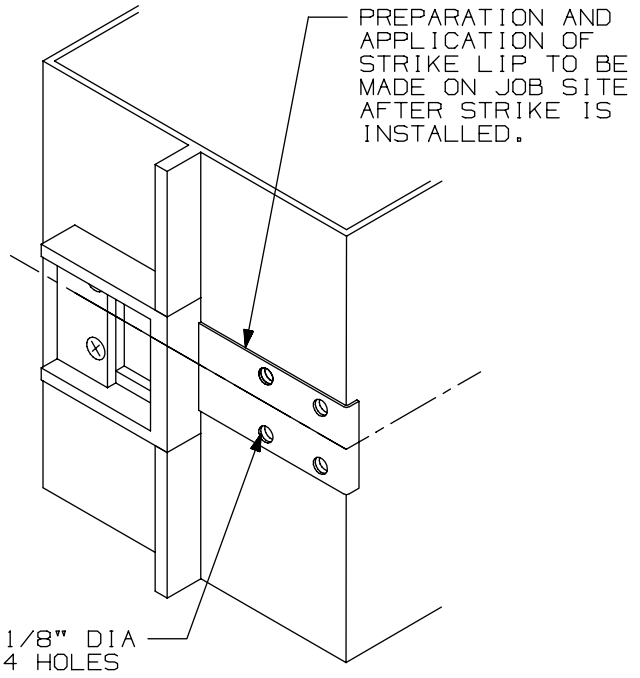

SINGLE DOOR INSTALLATION			
DEVICE	DIM "B"	DIM "C"	MIN STILE
33/35 RIM	19/32"	1 7/16"	1 3/4"
44 RIM EO,DT,NL,TP	1 11/16"	1 7/16"	3 3/8"
44 RIM K	1 9/16"	1 7/16"	3 3/8"
55 RIM	17/32"	1 7/16"	1 3/4"
22 RIM	1 9/16"	1 9/16"	3 13/16"
88 RIM EO,DT,NL,TP	1 11/16"	1 7/16"	3 3/8"
88 RIM K,L	1 9/16"	1 7/16"	3 3/8"
98/99 RIM	1 9/16"	1 9/16"	3 13/16"

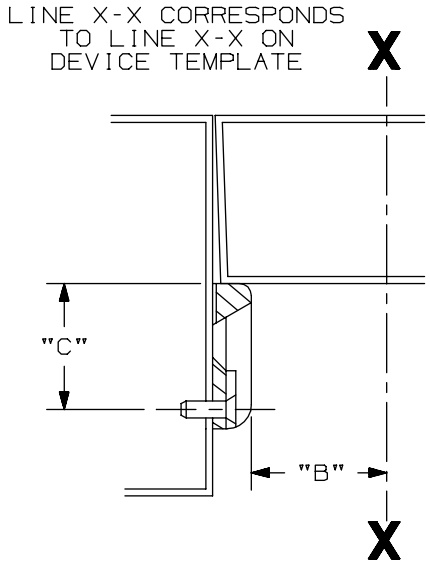

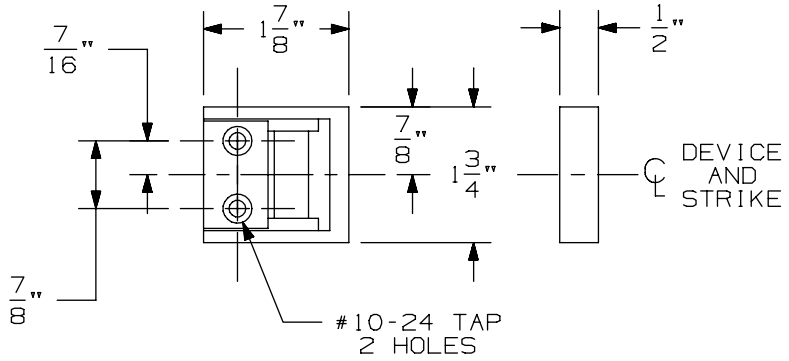

LHR APPLICATION SHOWN, RHR APPLICATION OPPOSITE

1409 Strike

VON DUPRIN®

NOTES: SEE MASTER SHEET #10001 FOR SUGGESTED REINFORCING

TEMPLATE NUMBER: 30022_a

DATE: 05-23-13

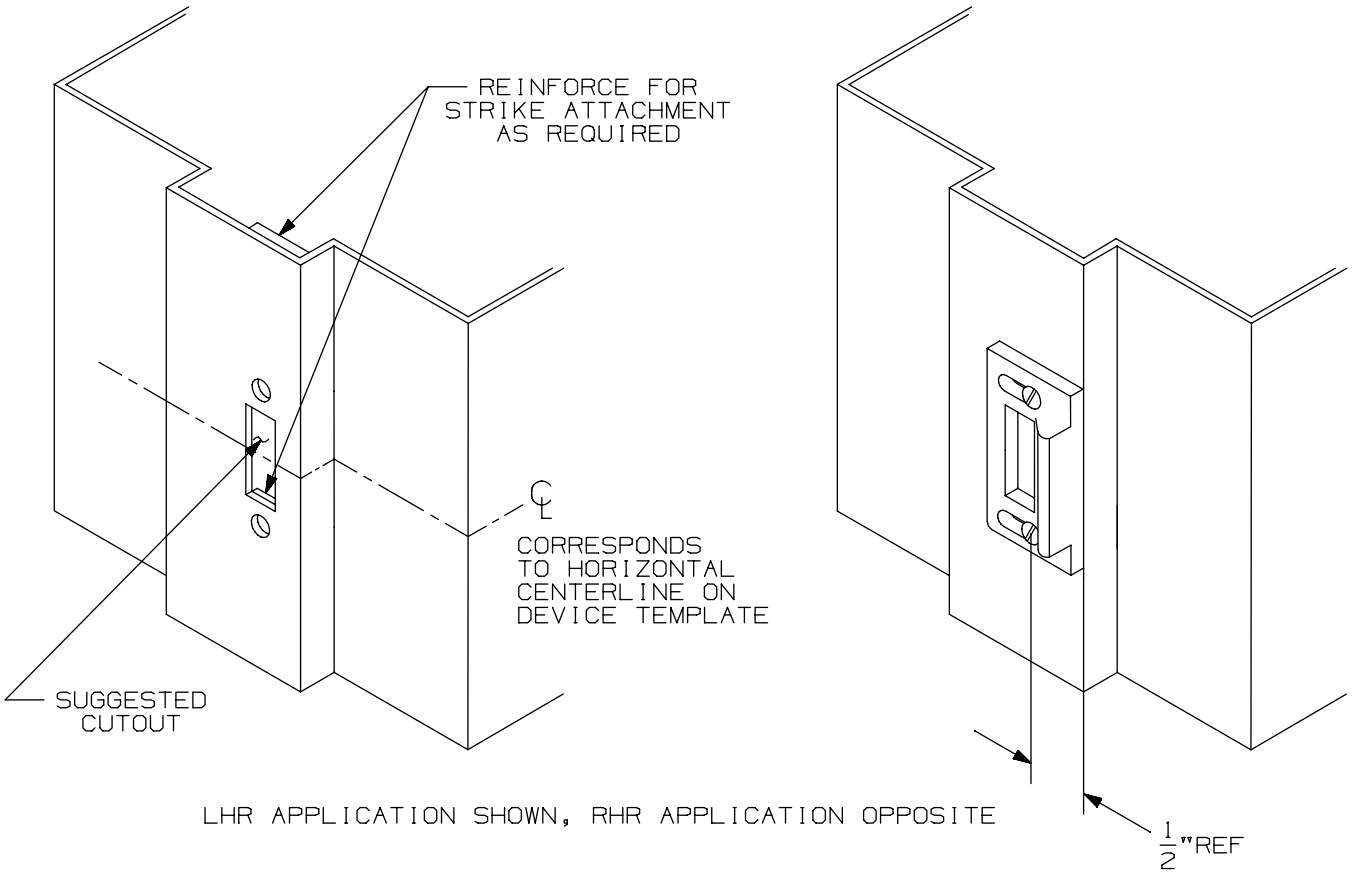

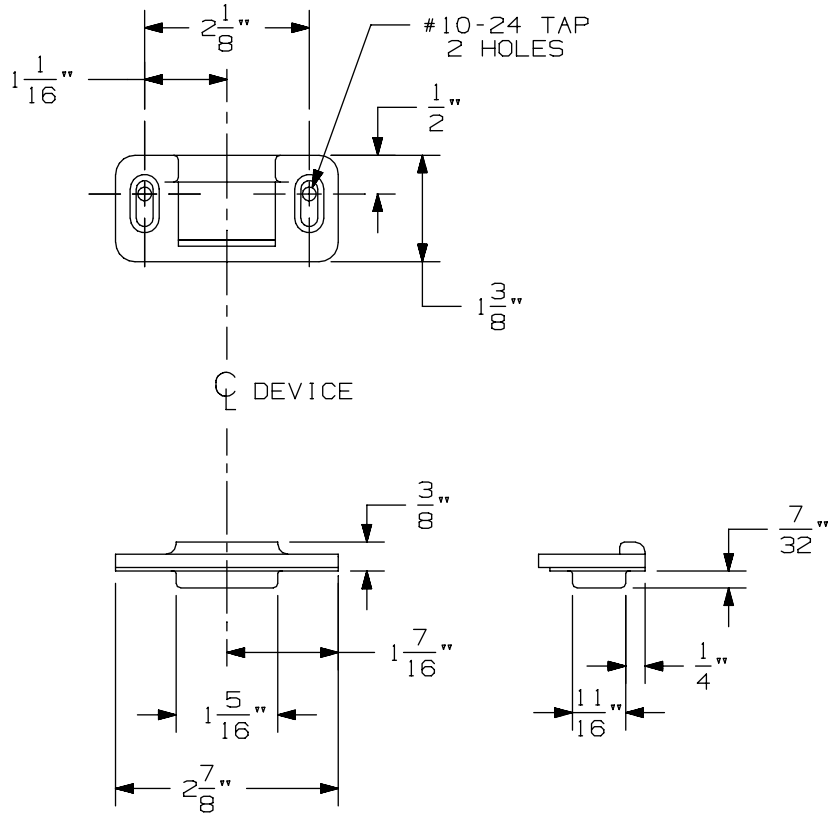

1606 Half Mortise Strike

VON DUPRIN®

NOTES: SEE MASTER SHEET #10001 FOR SUGGESTED REINFORCING

TEMPLATE NUMBER: 30024_a

DATE: 05-23-13

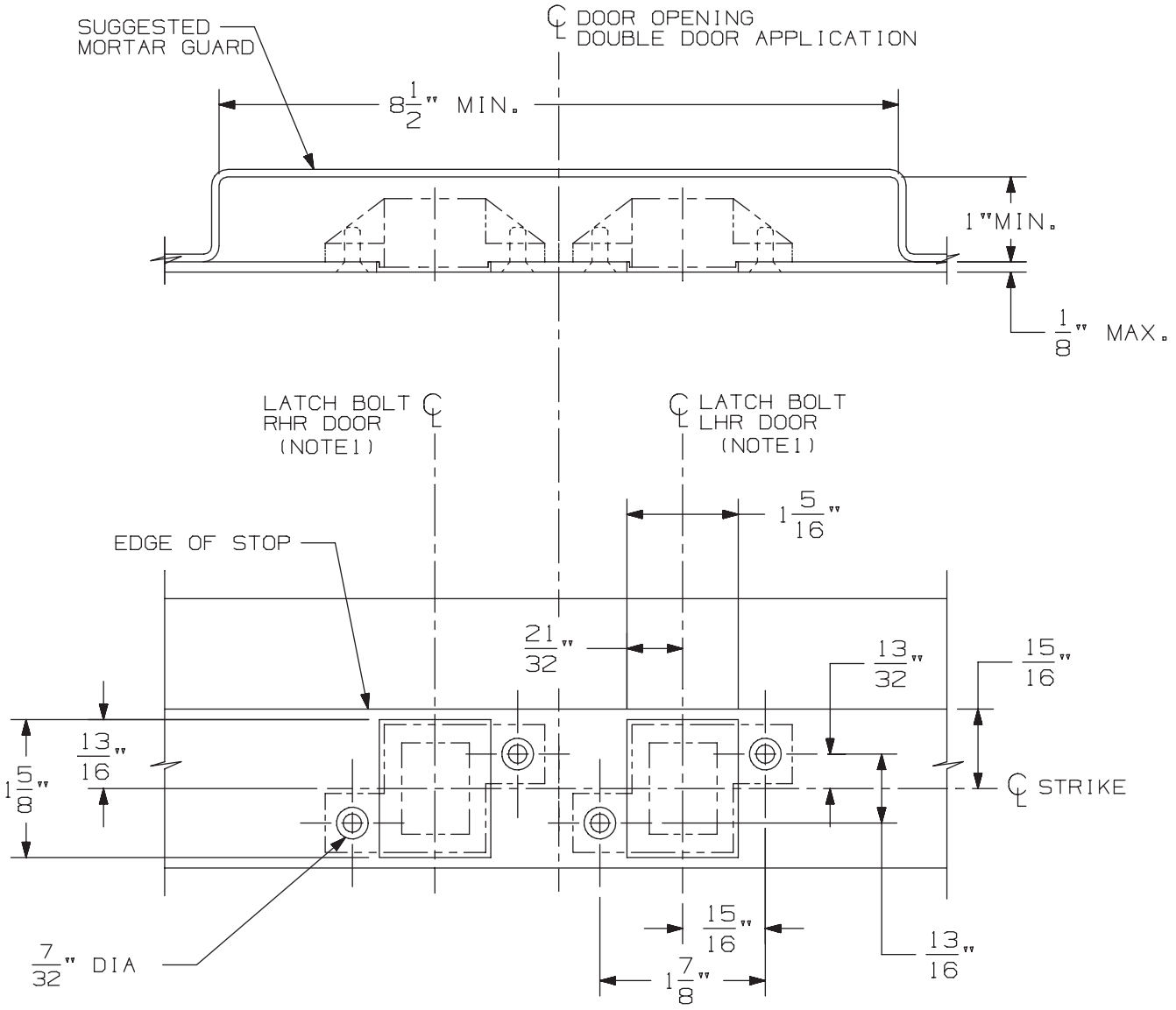

3/8" DIA X 82° C'SINK

IN FRAME
2 HOLES
EACH STRIKE

DOUBLE DOOR APPLICATION SHOWN.
FOR SINGLE DOOR APPLICATION USE
APPROPRIATE HANDING AS SHOWN.

DEVICE APPLICATION SCHEDULE
33/3547 & 33/3547-F SERIES DEVICE
98/99/47 & 98/99/47-F SERIES DEVICE
5547/5547 WDC SERIES
33/3547A & 33/3547A-F SERIES DEVICE
(9) 94/9547 SERIES DEVICE

NOTES: 1. SEE DEVICE TEMPLATE FOR LOCATION OF LATCH BOLT.

2. IF DEVICE IS TO BE MOUNTED ON WOOD DOORS, SEE WOOD DOOR TEMPLATE FOR LATCH BOLT LOCATION.

338 Strike for Hollow Metal Frame Preparation

VON DUPRIN®

NOTES: SEE MASTER SHEET #10001 FOR SUGGESTED REINFORCING

TEMPLATE NUMBER: 30038_a

DATE: 05-23-13

RIM APPLICATION

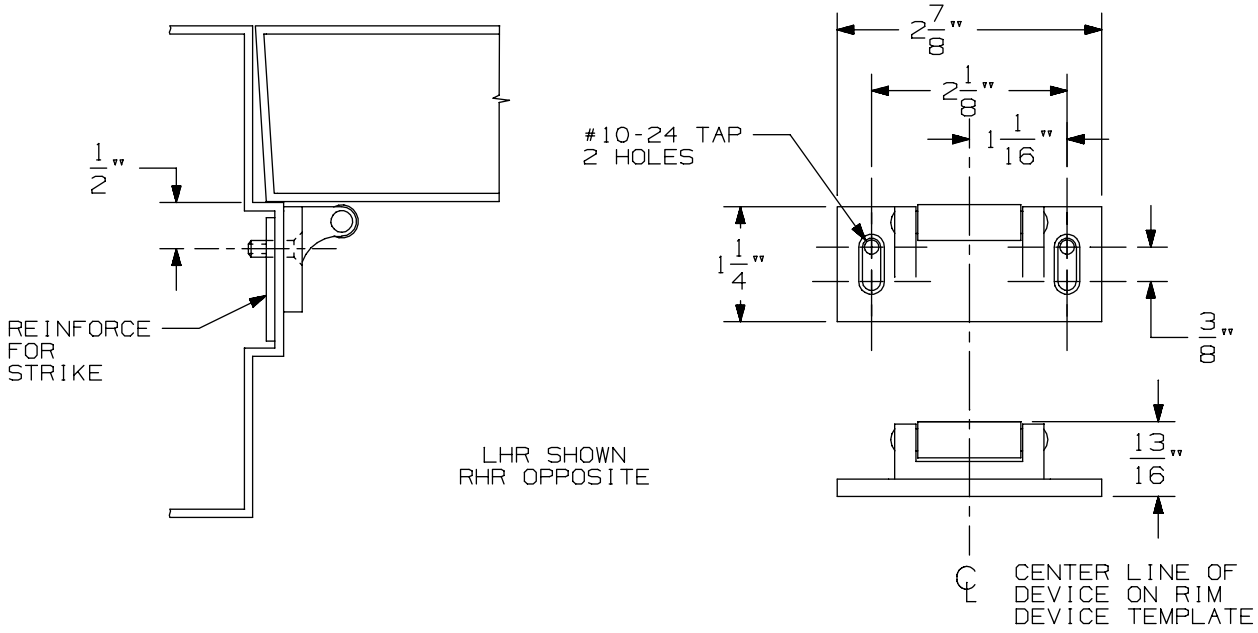

VERTICAL APPLICATION

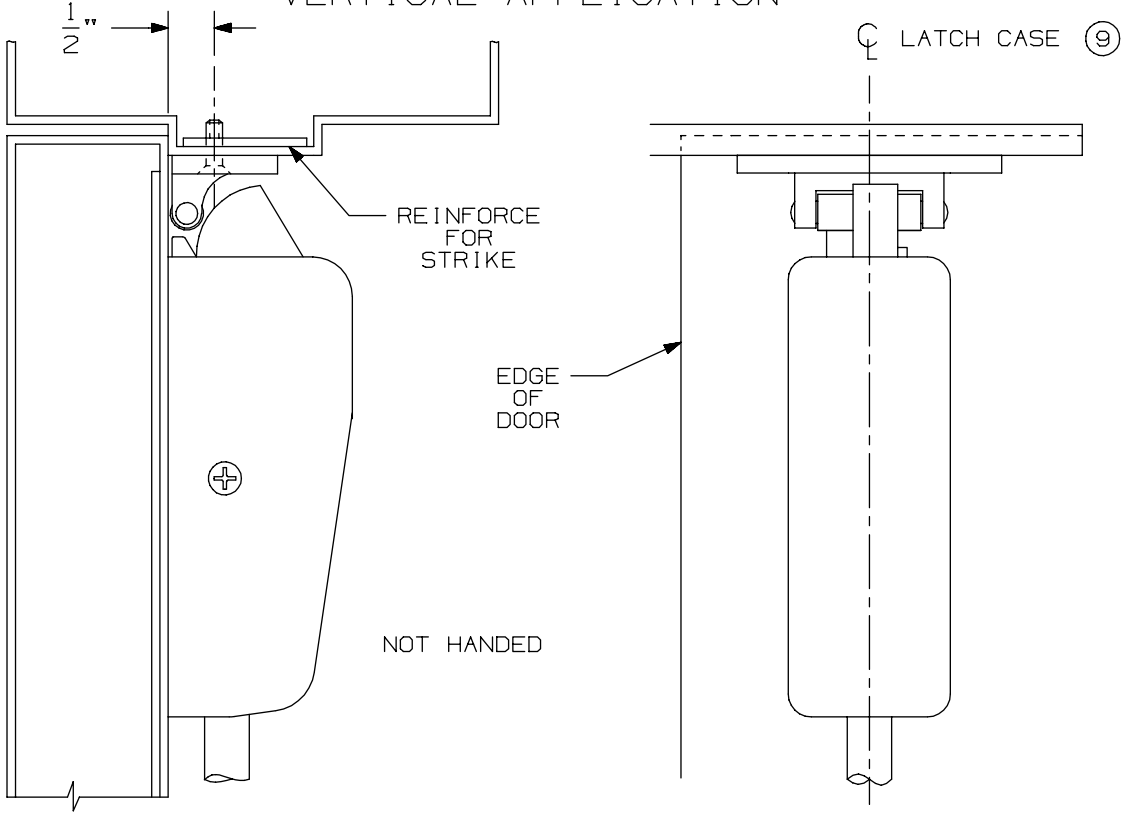

NOTE: LATCH CASE MOUNTING HOLES TO BE PREPARED AT INSTALLATION ON DOOR.

299 & 299F Strike

VON DUPRIN®

NOTES: SEE MASTER SHEET #10001 FOR SUGGESTED REINFORCING

TEMPLATE NUMBER: 30039_a

DATE: 05-23-13

RIM APPLICATION

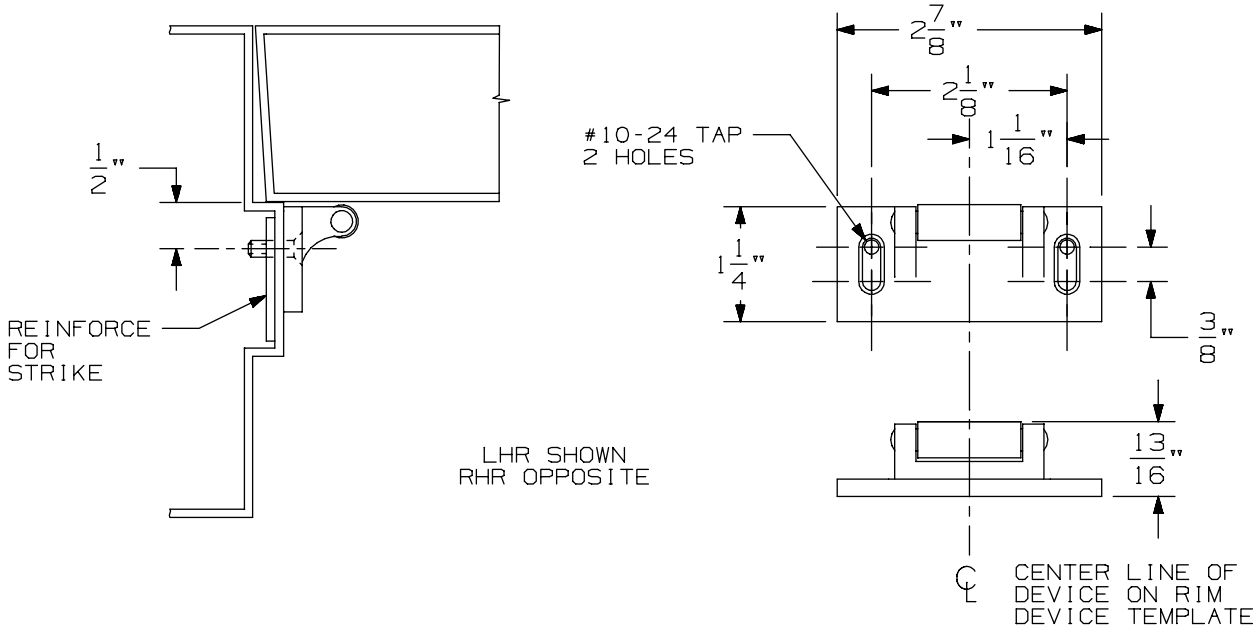

VERTICAL APPLICATION

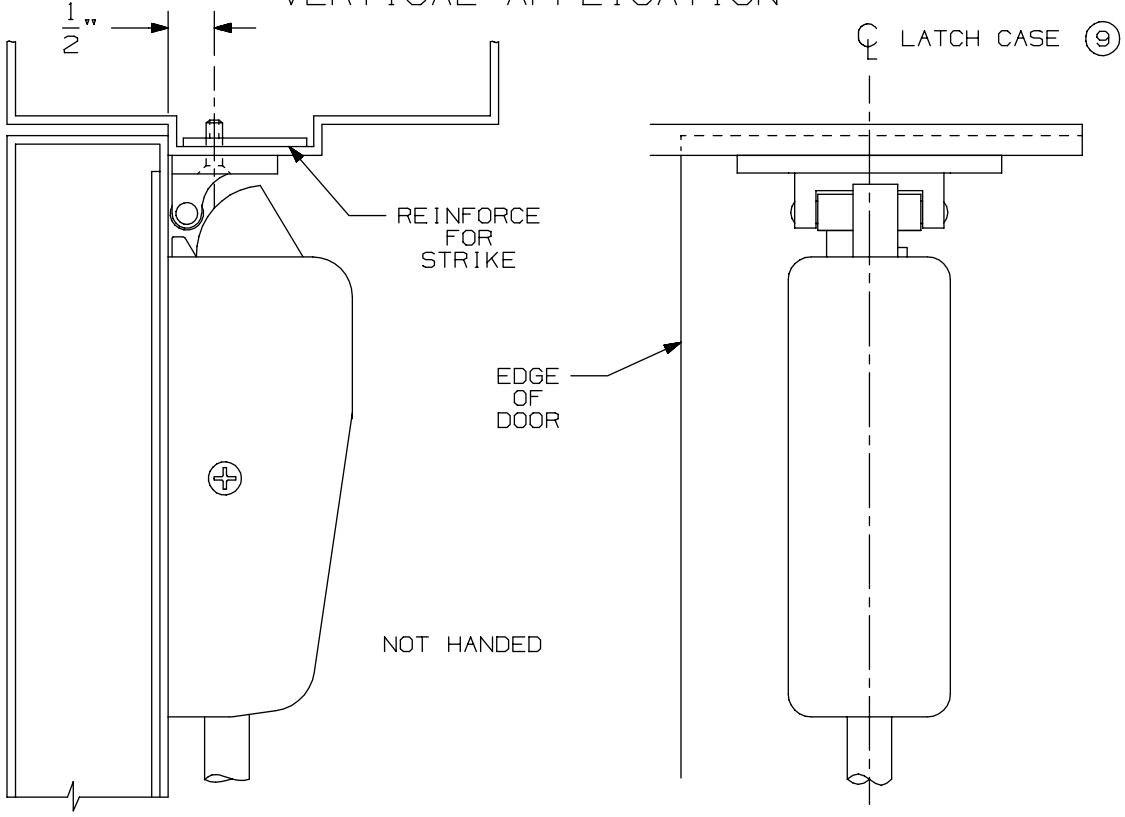

NOTE: LATCH CASE MOUNTING HOLES TO BE PREPARED AT INSTALLATION ON DOOR.

299 & 299F Strike

VON DUPRIN®

NOTES: SEE MASTER SHEET #10001 FOR SUGGESTED REINFORCING

TEMPLATE NUMBER: 30039_a

DATE: 05-23-13

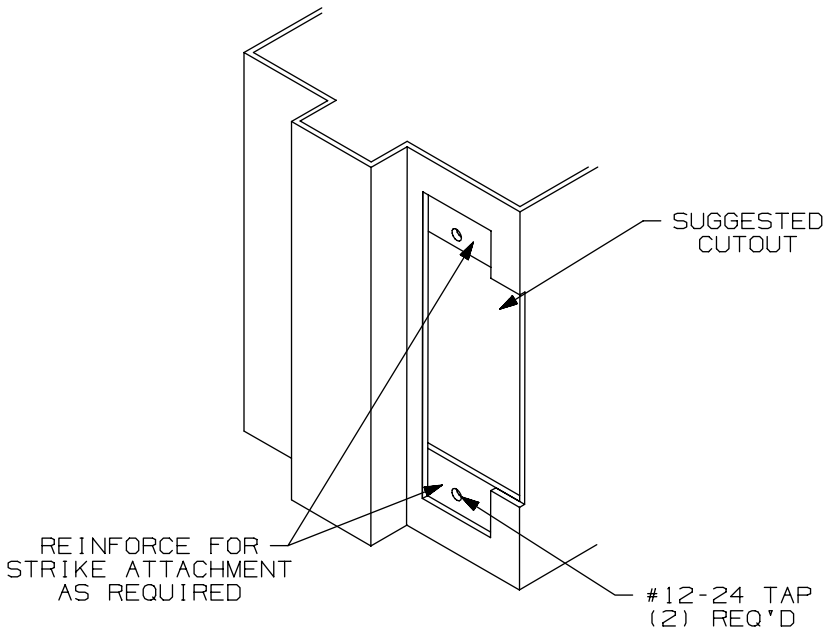

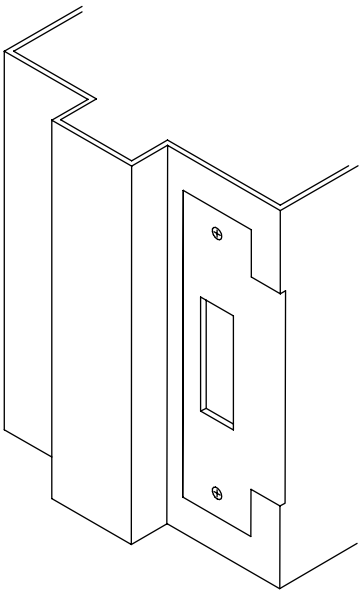

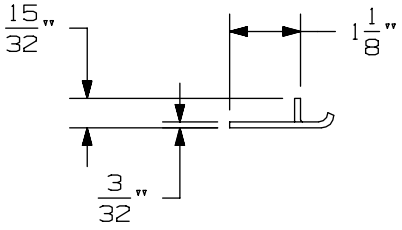

APPLICATION SCHEDULE	
DEVICE	DIM. "A"
9875 & 9875-F	11/16
9975 & 9975-F	11/16
8875 & 8875-F	1/2
5575 & 5575-F	1/2

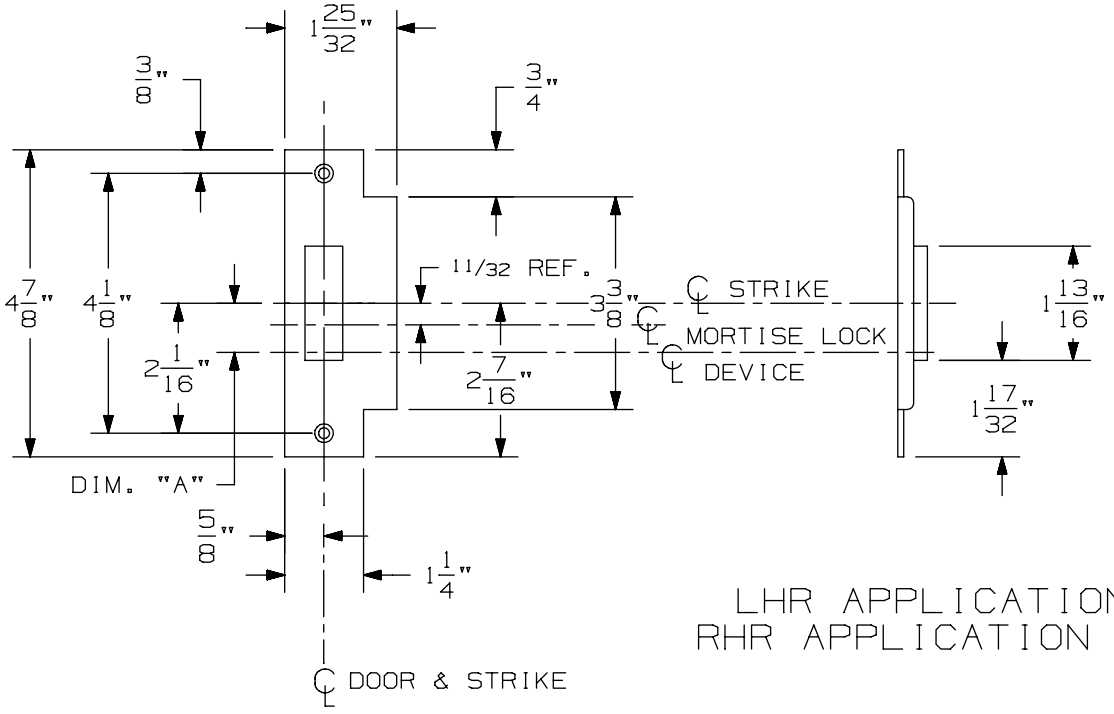

LHR APPLICATION SHOWN
RHR APPLICATION OPPOSITE

575 Mortise Strike (Single Door) for 7500 Mortise Lock

VON DUPRIN®

NOTES: SEE MASTER SHEET #10001 FOR SUGGESTED REINFORCING

TEMPLATE NUMBER: 30210_b

DATE: 07-22-13

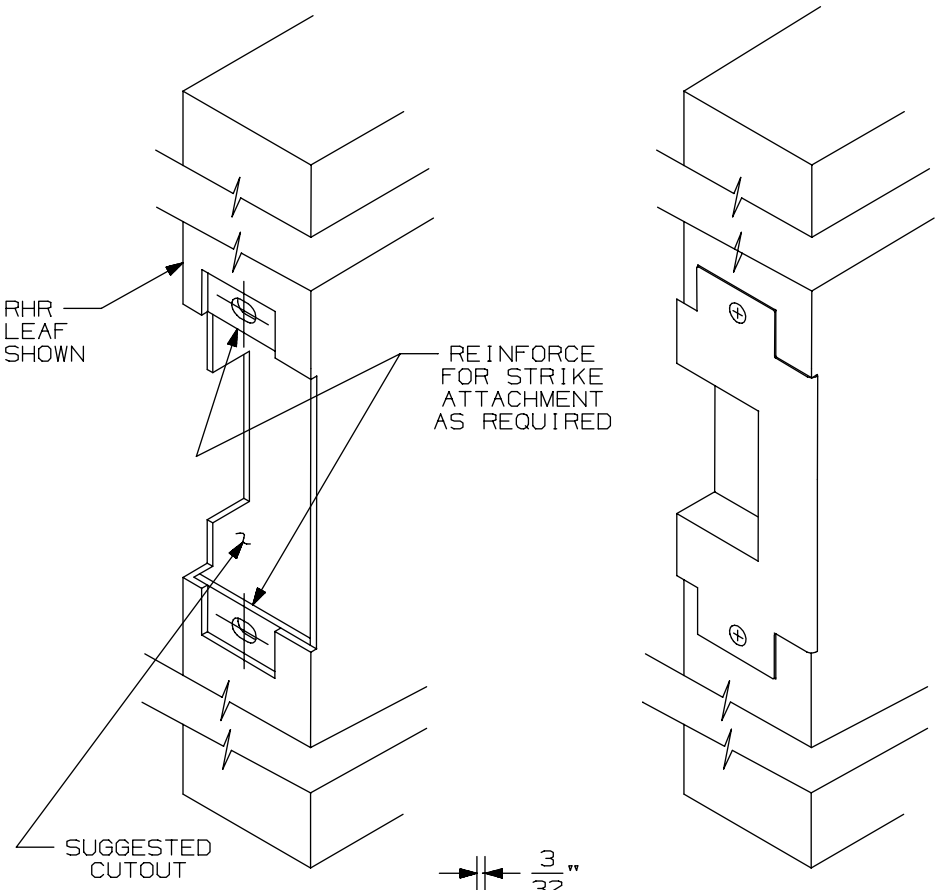

APPLICATION SCHEDULE	
DEVICE	DIM."A"
9875 & 9875-F	11/16
9975 & 9975-F	11/16
8875 & 8875-F	1/2
5575 & 5575-F	1/2

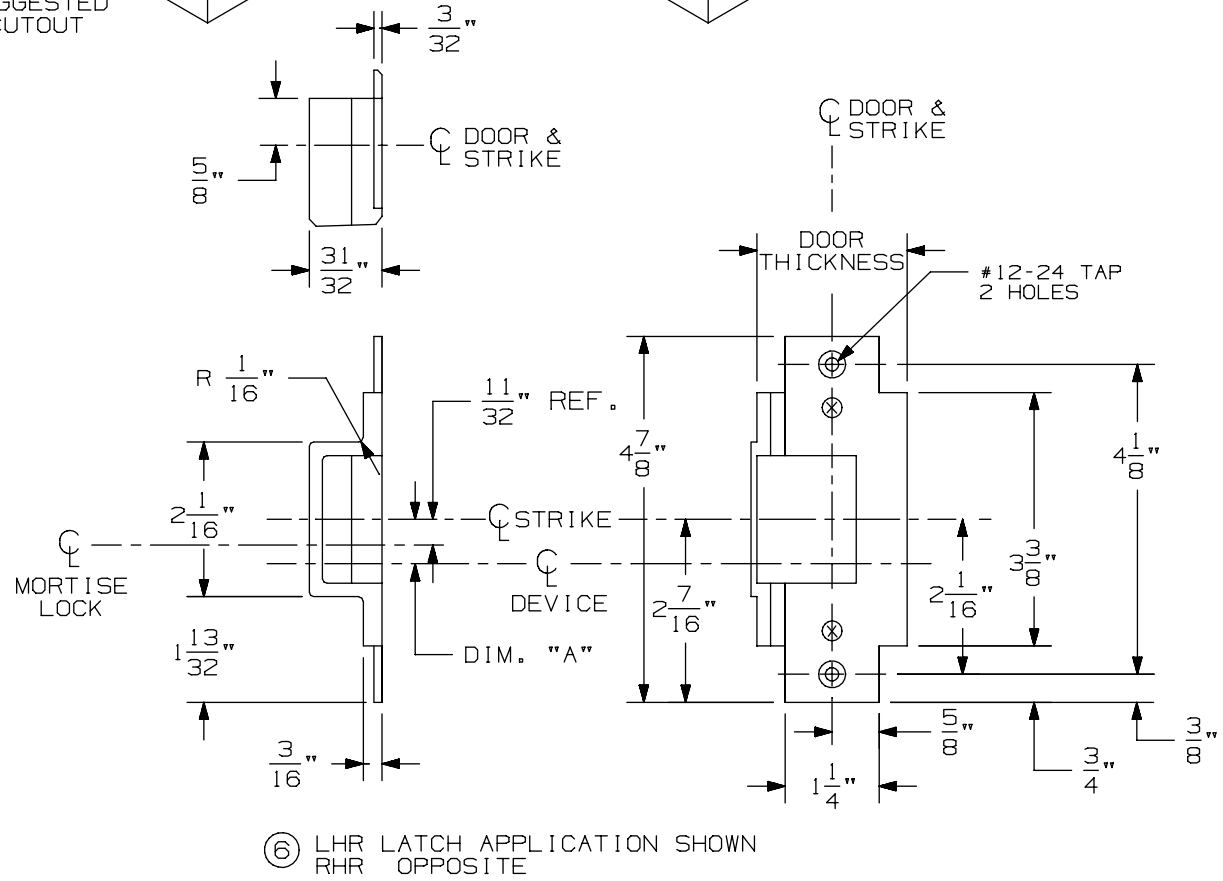

⑥ LHR LATCH APPLICATION SHOWN
RHR OPPOSITE

576A & 576B Mortise Strike for 7500 Mortise Lock

VON DUPRIN®

NOTES: SEE MASTER SHEET #10001 FOR SUGGESTED REINFORCING

TEMPLATE NUMBER: 30211_a

DATE: 05-28-13

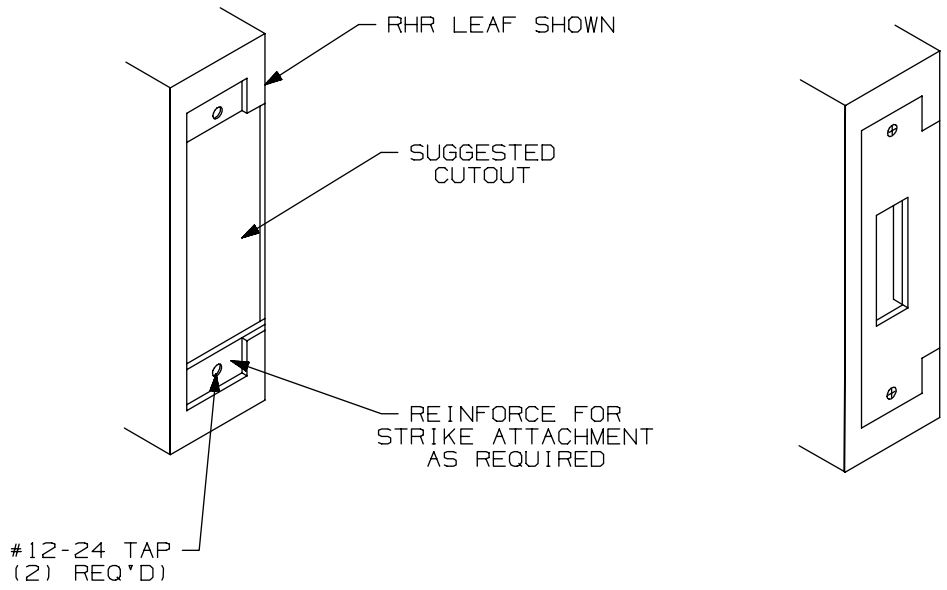

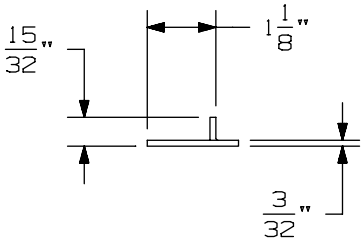

APPLICATION SCHEDULE	
DEVICE	DIM. "A"
9875 & 9875-F	11/16
9975 & 9975-F	11/16
8875 & 8875-F	1/2
5575 & 5575-F	1/2

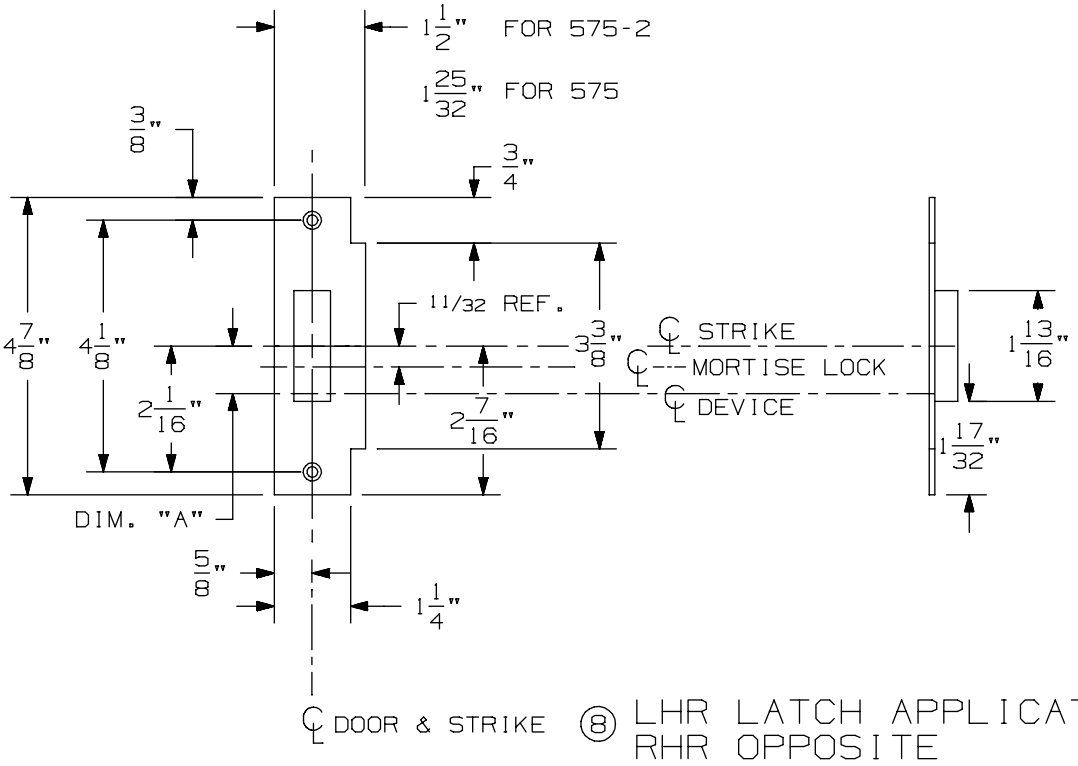

⑧ LHR LATCH APPLICATION SHOWN
RHR OPPOSITE

575-2 Mortise Strike (Double Doors) for 7500 Mortise Lock

VON DUPRIN®

NOTES: SEE MASTER SHEET #10001 FOR SUGGESTED REINFORCING

TEMPLATE NUMBER: 30212_b

DATE: 07-22-13

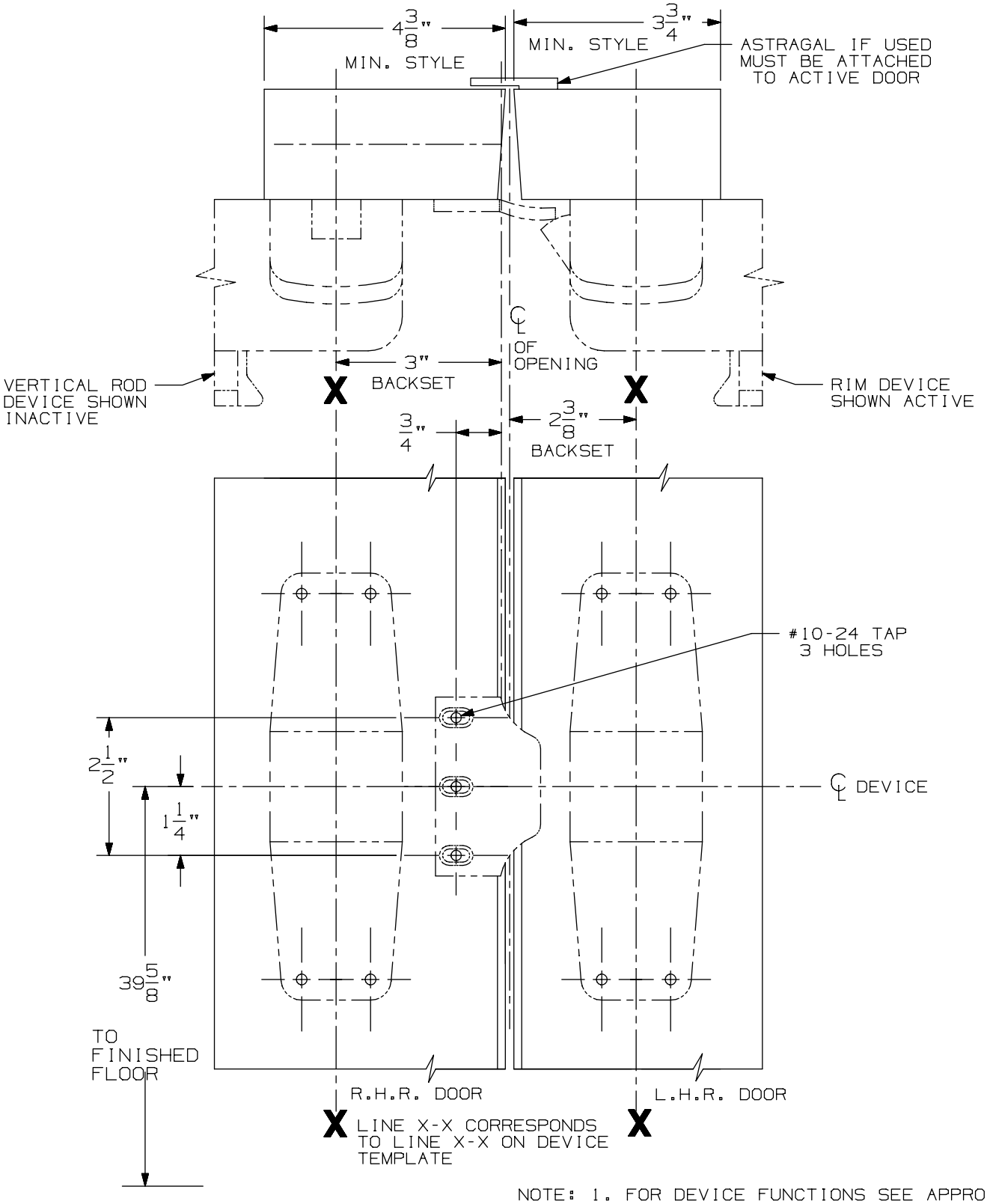

NOTE: 1. FOR DEVICE FUNCTIONS SEE APPROPRIATE DEVICE TEMPLATES.

2. SEE DEVICE TEMPLATE FOR MOUNTING HOLE LOCATIONS.

3. A COORDINATOR MUST BE USED ON THE INACTIVE DOOR.

1609 Strike Application for 98/99 Vertical Rod & 98/99 Rim Devices (Panic Device Only)

VON DUPRIN®

NOTES: SEE MASTER SHEET #10001 FOR SUGGESTED REINFORCING

TEMPLATE NUMBER: 30229_a

DATE: 05-28-13

RIM APPLICATION

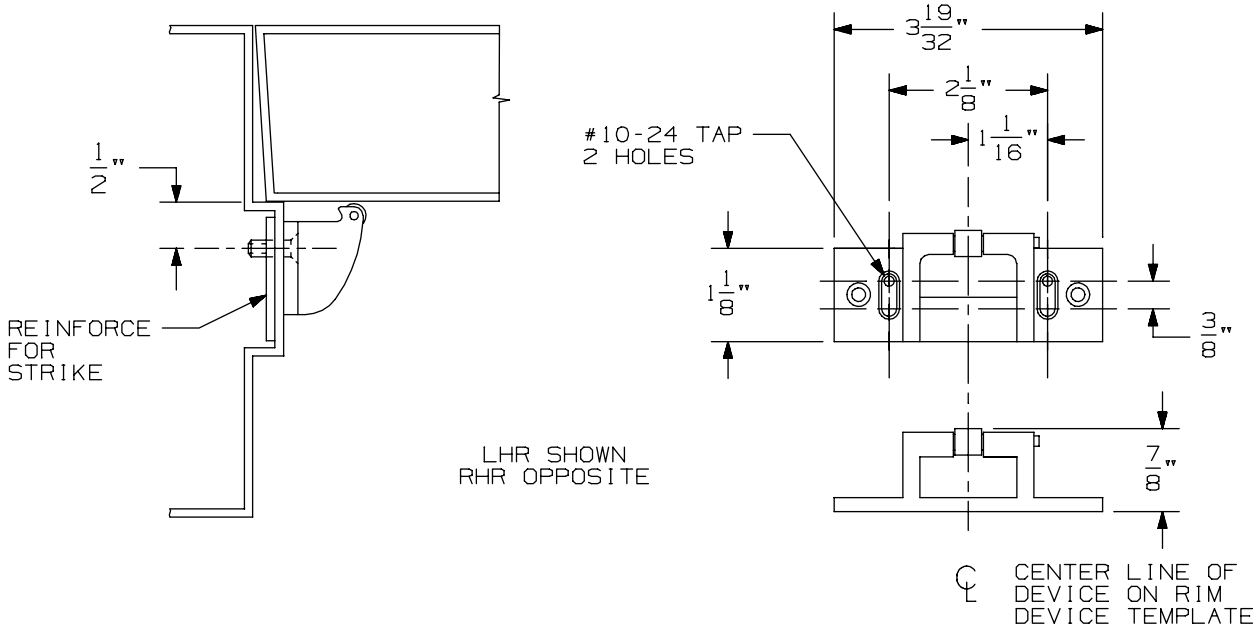

VERTICAL APPLICATION

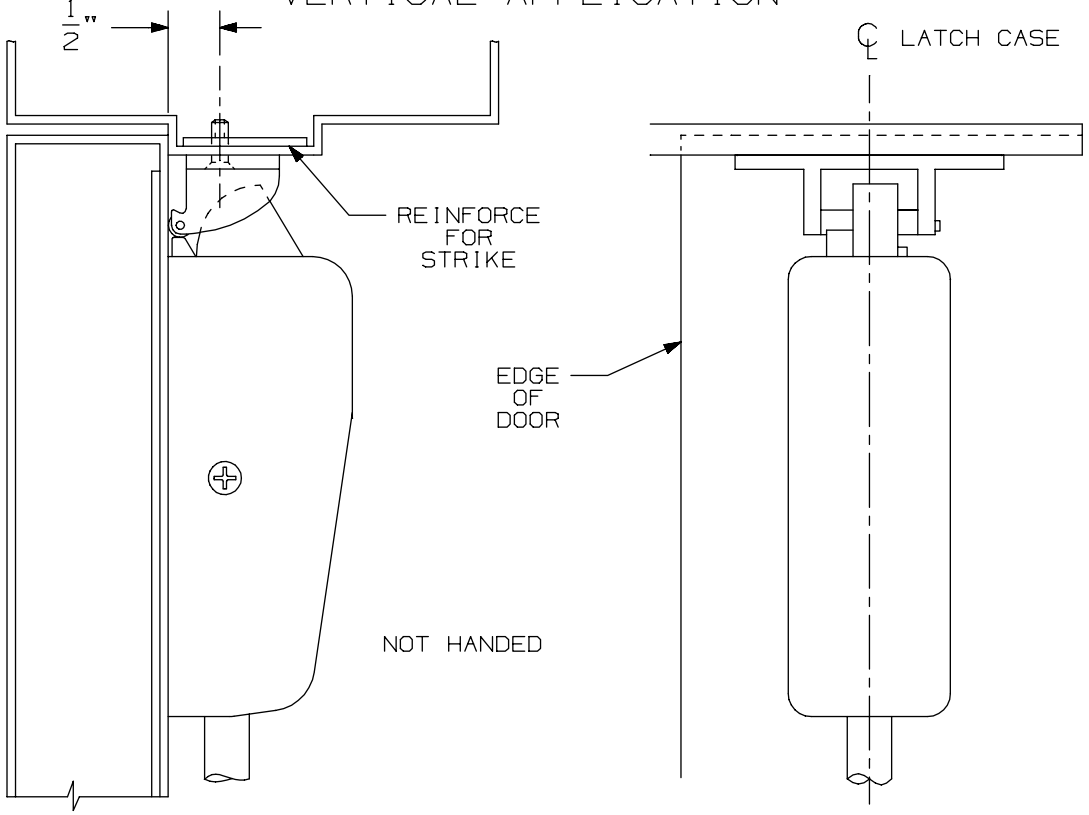

NOTE: LATCH CASE MOUNTING HOLES TO BE PREPARED AT INSTALLATION ON DOOR.

499-F Strike	VON DUPRIN®	
NOTES: SEE MASTER SHEET #10001 FOR SUGGESTED REINFORCING	TEMPLATE NUMBER: 30040_a	DATE: 05-23-13

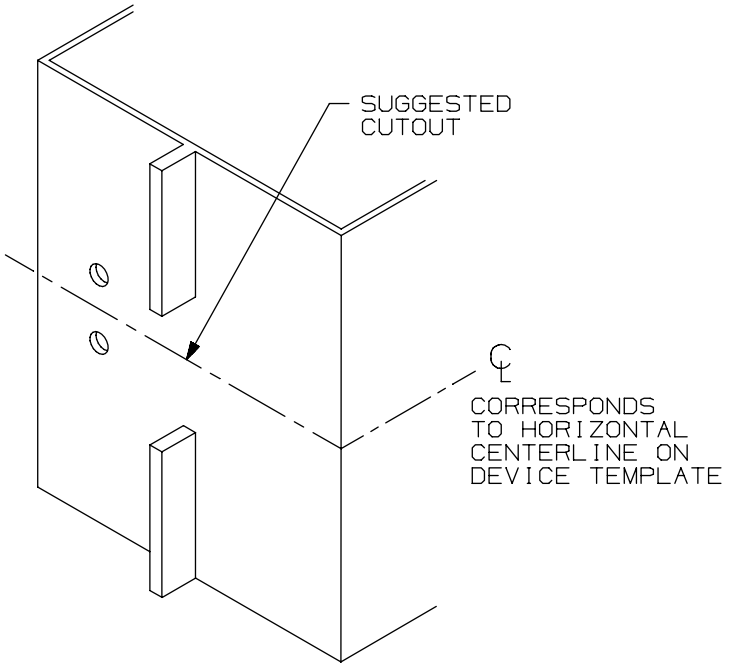

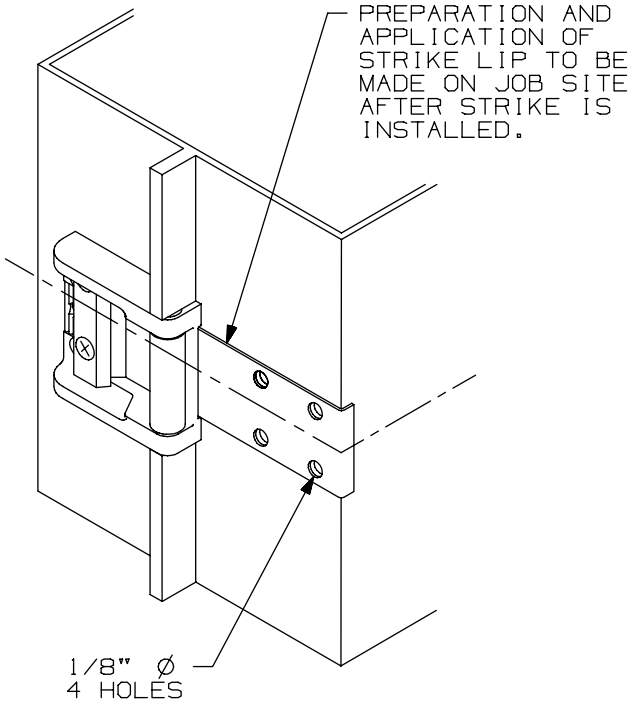

SINGLE DOOR INSTALLATION			
DEVICE	DIM "B"	DIM "C"	RECOMMENDED MIN STILE* (1)
33A/35A RIM	19/32"	1 9/16"	2"
44 RIM EO,DT,NL,TP	1 11/16"	1 9/16"	3 3/8"
44 RIM K	1 9/16"	1 9/16"	3 3/8"
55 RIM	17/32"	1 9/16"	1 3/4"
22 RIM	1 9/16"	1 9/16"	3 13/16"
88 RIM EO,DT,NL,TP	1 11/16"	1 9/16"	3 3/8"
44 RIM K,L	1 9/16"	1 9/16"	3 3/8"
98/99 RIM	1 9/16"	1 9/16"	3 13/16"

* CONSULT FACTORY FOR STILE WIDTHS LESS THAN
(1) MIN. RECOMMENDED TO ENSURE PROPER APPLICATION

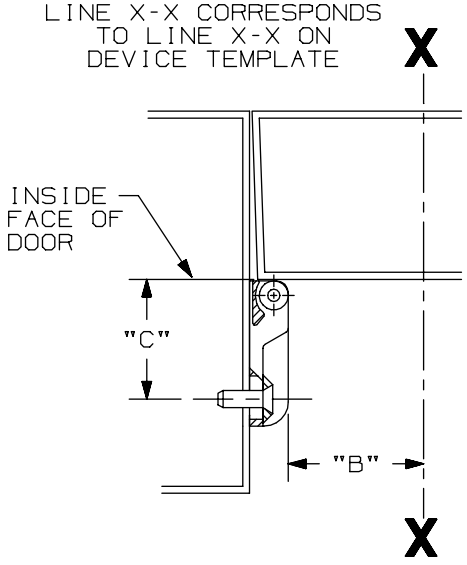

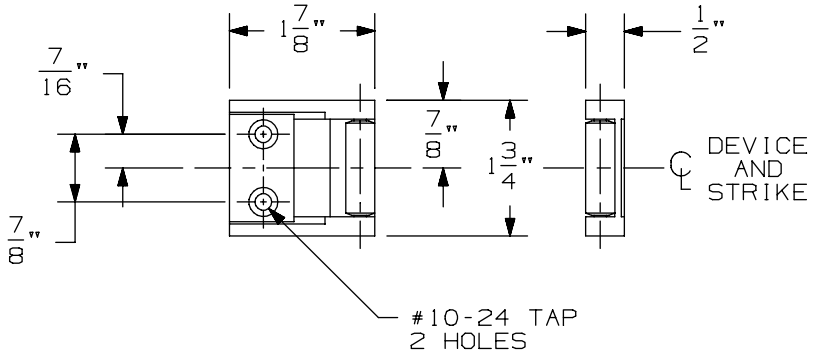

LHR APPLICATION SHOWN, RHR APPLICATION OPPOSITE

1439 Roller Strike

VON DUPRIN®

NOTES: SEE MASTER SHEET #10001 FOR SUGGESTED REINFORCING

TEMPLATE NUMBER: 30029_a

DATE: 05-23-13

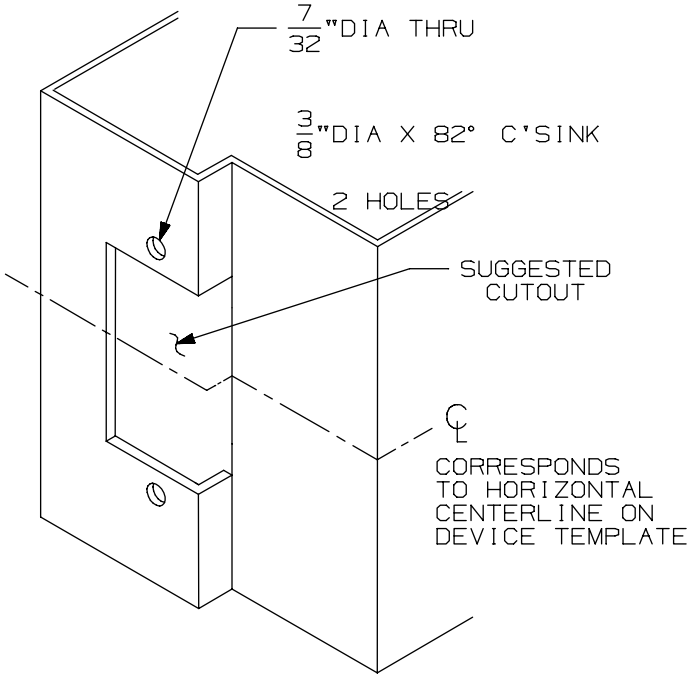

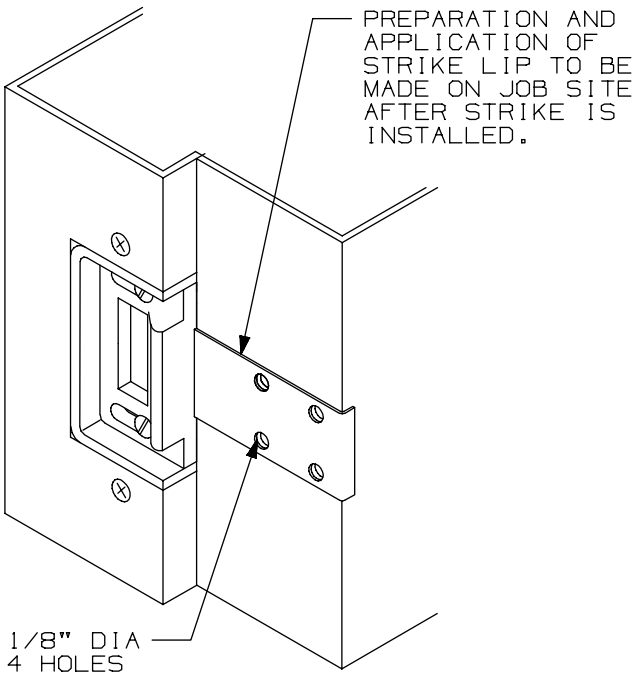

LHR APPLICATION SHOWN, RHR APPLICATION OPPOSITE.

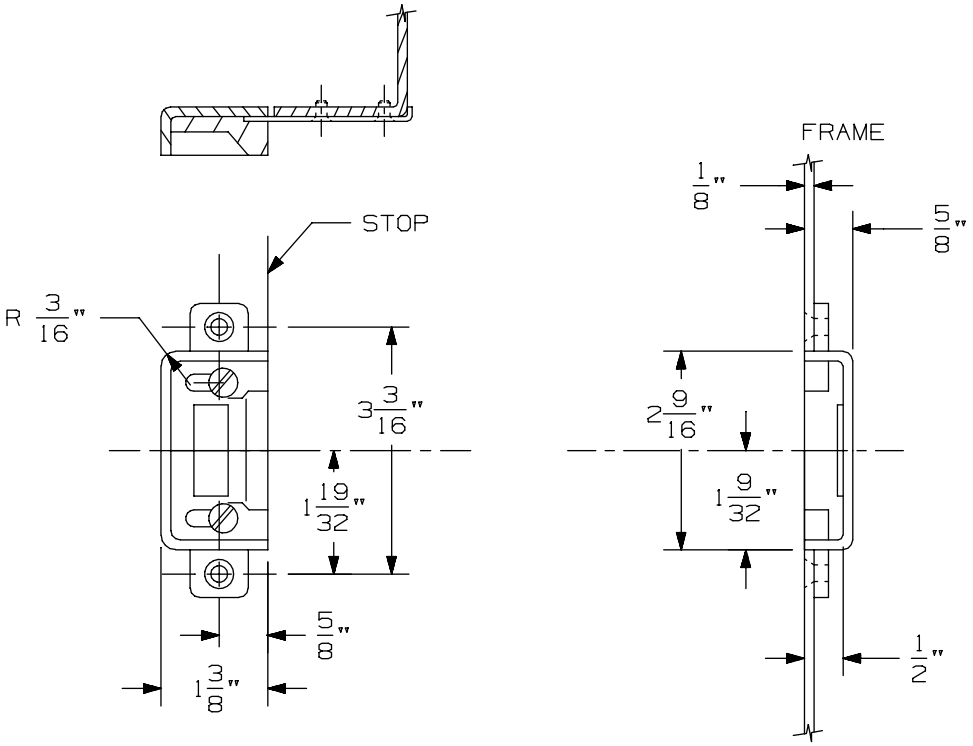

1410 Strike		VON DUPRIN®
NOTES: SEE MASTER SHEET #10001 FOR SUGGESTED REINFORCING	TEMPLATE NUMBER: 30023_a	DATE: 05-23-13

99 Series Trims, Controls & Strikes

-

330/350 Push Bar

330, 350, TBSK330, & TBSK350
Push Bar Trim

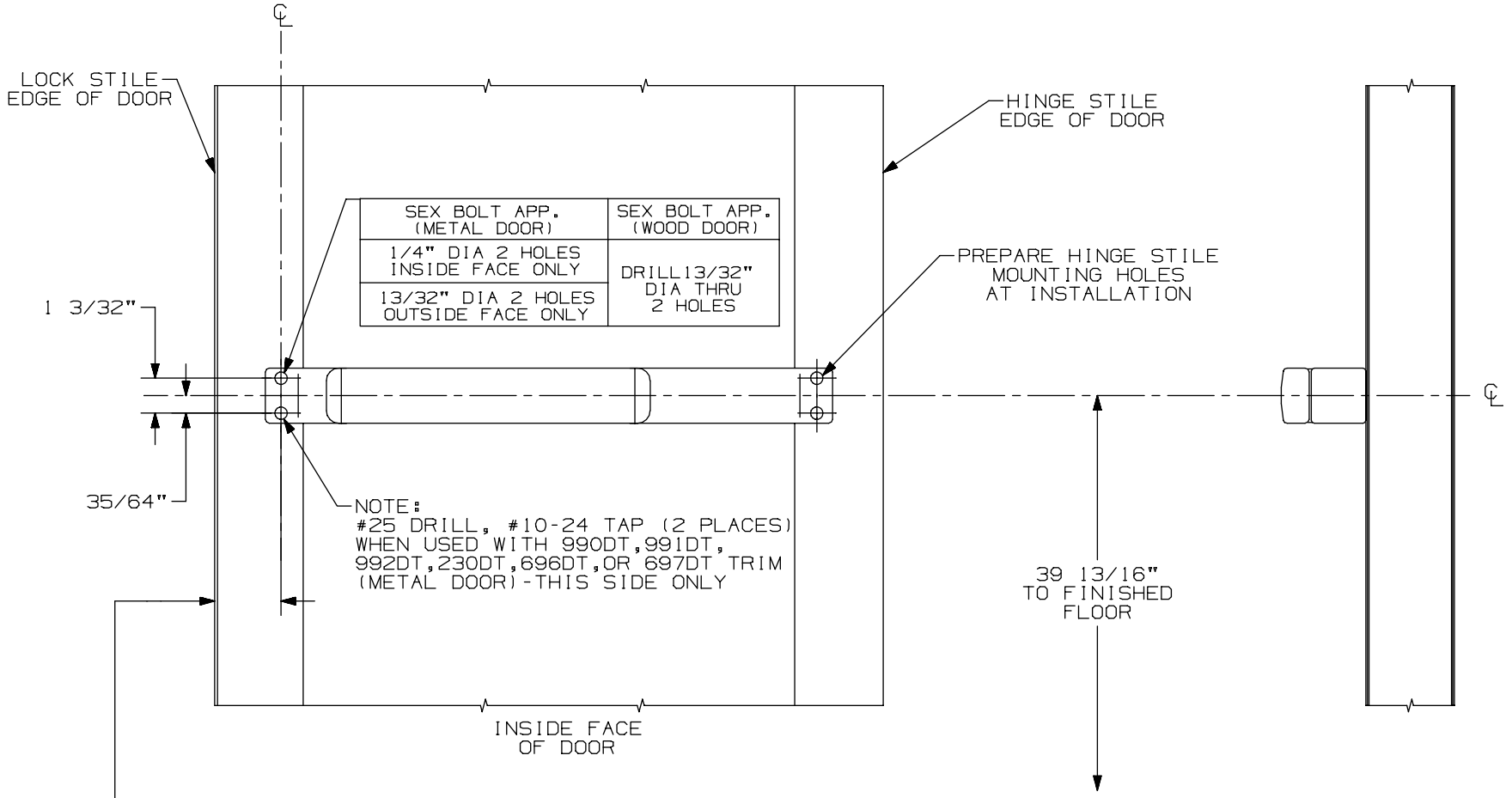

LHR SHOWN
RHR OPPOSITE

TRIM INSTALLATION SCHEDULE

	INSTALLATION	STILE SIZE	BACKSET
(4)	SINGLE DOOR 1/2" STOP & BACK TO BACK WITH 386DT, 337DT OR 696/697DT TRIM ON SINGLE DOOR 1/2" STOP	1 3/4"-3"	1 5/16"
(4)	SINGLE DOOR 5/8" STOP & BACK TO BACK WITH 386DT, 337DT OR 696/697DT TRIM ON SINGLE DOOR 5/8" STOP	1 7/8"-3"	1 7/16"
(4)	PAIR OF DOORS WITHOUT MULLION & BACK TO BACK WITH 386DT, 337DT OR 696/697DT TRIM ON PAIR OF DOORS WITHOUT MULLION	1 3/4"-3"	1 5/16"
	SINGLE DOOR PAIR OF DOORS WITHOUT MULLION BACK TO BACK WITH 990DT, 991DT, 992DT, OR 230DT	3"-FLUSH	1/2 OF STILE

NOTES: SEE MASTER SHEET #10001 FOR SUGGESTED REINFORCING

TEMPLATE NUMBER: 20030_a

DATE: 05-23-13

VON DUPRIN®

XP98 / XP99 Series Exit Devices

XP98 / XP99 Series Exit Devices

-

XP98/XP99 Rim (Standard, CD, EL, LX, & RX)

APPLICATION	PREPARATION
SURFACE APPLICATION	#10-24 TAP 4 PLACES
990 TRIM APPLICATION OR SEX BOLT APPLICATION (SEE NOTE 1)	1/4" DIA THIS SIDE 13/32" DIA OPPOSITE SIDE - 4 PLACES

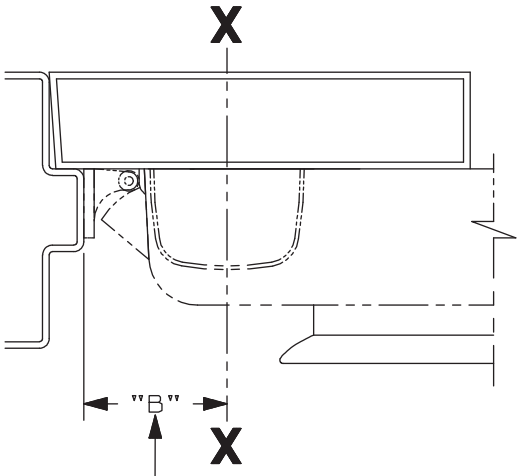

SINGLE DOOR INSTALLATION			
STRIKE	DIM. "B"	MIN. STILE 990/991/992 TRIM	MIN. STILE 696/697 TRIM
909	2 3/8"	4 1/2"	4 3/8"

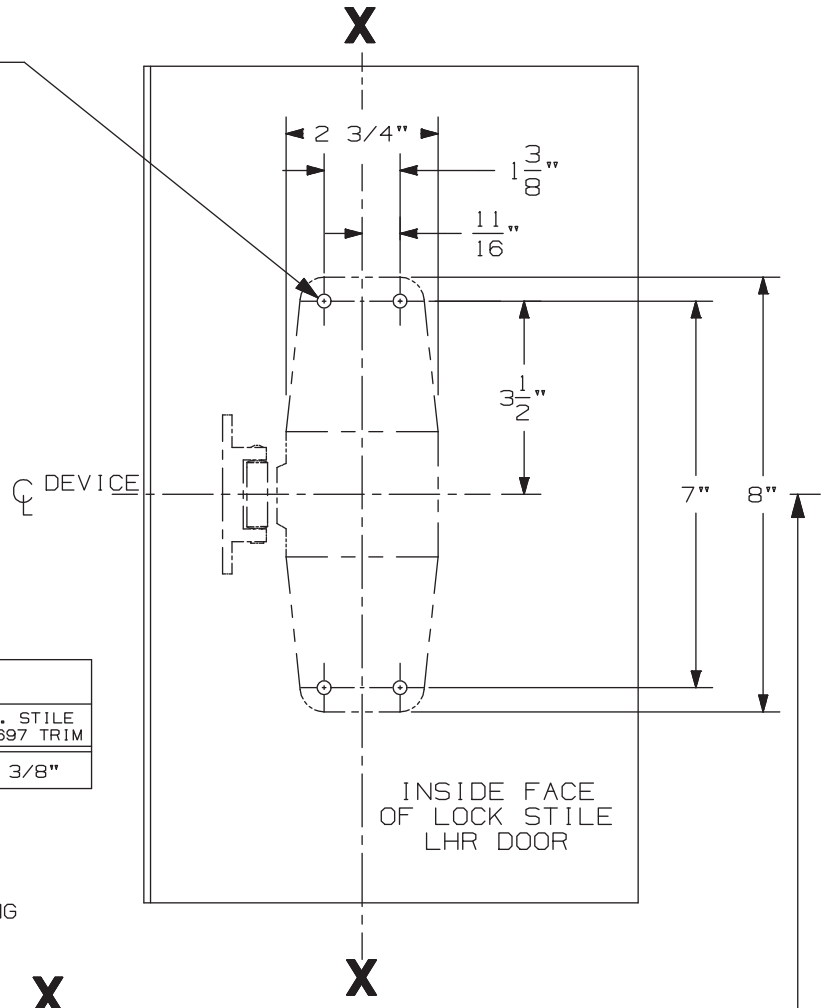

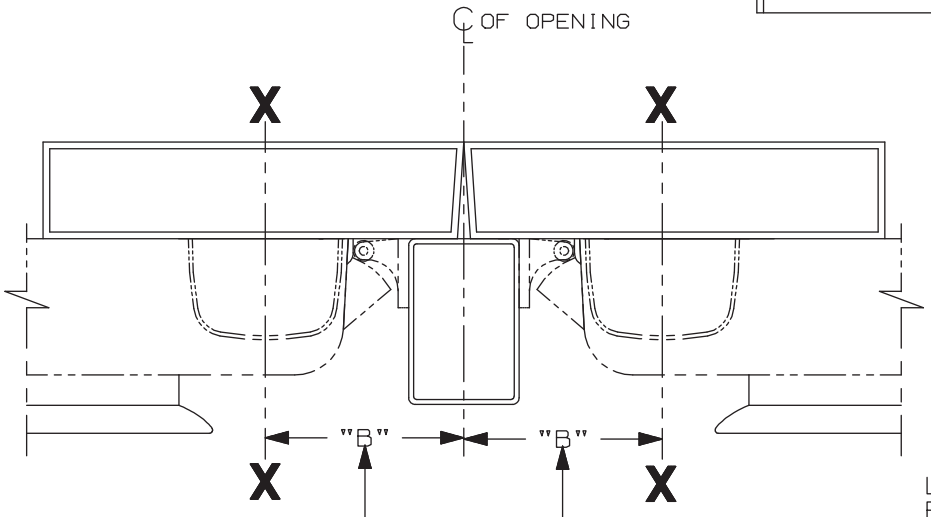

SINGLE DOOR OPENING
39 13/16" TO FINISHED FLOOR

DOUBLE DOOR OPENING
WITH VON DUPRIN MULLION
39 11/16"

LHR APPLICATION SHOWN
RHR APPLICATION OPPOSITE

DOUBLE DOOR INSTALLATION WITH VON DUPRIN MULLIONS				
MULLION	STRIKE	DIM. "B"	MIN. STILE 990/991/992 TRIM	MIN. STILE 696/697 TRIM
4954/9954	909	3 3/8"	4 7/8"	4 3/4"
9954	954	3 1/2"	5"	4 7/8"
5654	909	2 15/16"	4 3/8"	4 1/4"

NOTES:
1. THESE FOUR HOLES TO BE PREPARED FOR SURFACE APPLICATION WHEN USING 696/697 TRIM. DO NOT PREPARE FOR SEX BOLTS.
2. FOR STOCK HOLLOW METAL DOORS SEE TEMPLATE NO. 10619 FOR TYPE "161" CUTOUT AND 10620 FOR TYPE "86" CUTOUT.
3. GLASS BEAD KIT AVAILABLE WHEN REQUIRED.
4. FOR OUTSIDE TRIM PREPARATION, WHEN REQUIRED, SEE TRIM TEMPLATE.

XP98/XP99 & XP98-F/XP99-F EO, DT Rim Devices

VON DUPRIN®

NOTES: See Master Sheet #10001 For Suggested Reinforcing

TEMPLATE NUMBER: 10611_b

DATE: 05-22-13

RIM APPLICATION

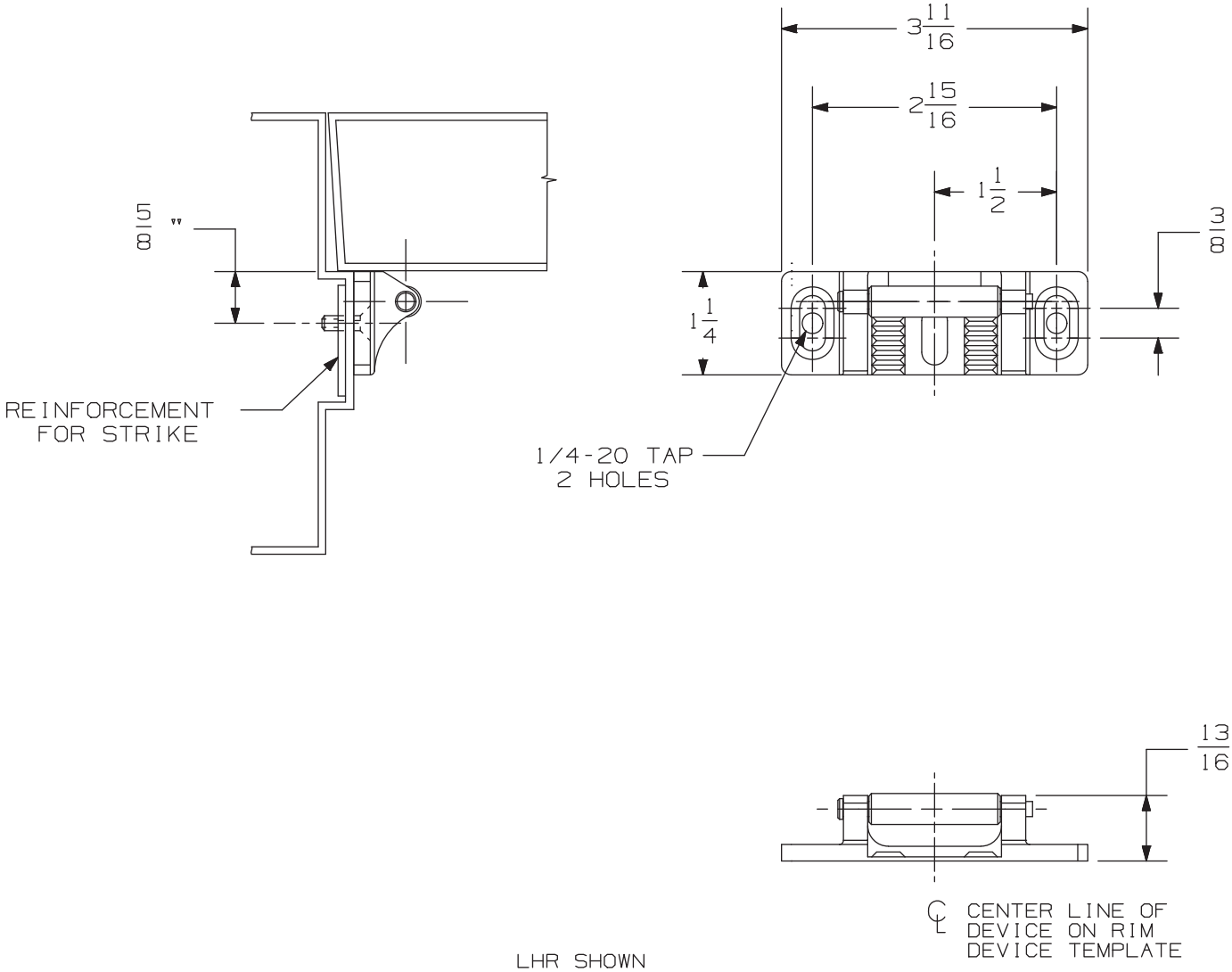

LHR SHOWN
RHR OPPOSITE

NOTE: DEVICE MOUNTING HOLES TO BE PREPARED AT INSTALLATION ON DOOR.

909 Strike	VON DUPRIN®	
NOTES: SEE MASTER SHEET #10001 FOR SUGGESTED REINFORCING	TEMPLATE NUMBER: 30042_b	DATE: 05-24-13

APPLICATION	PREPARATION
SURFACE APPLICATION	#10-24 TAP 4 PLACES
990 TRIM APPLICATION OR SEX BOLT APPLICATION (SEE NOTE 1)	1/4" DIA THIS SIDE 13/32" DIA OPPOSITE SIDE - 4 PLACES

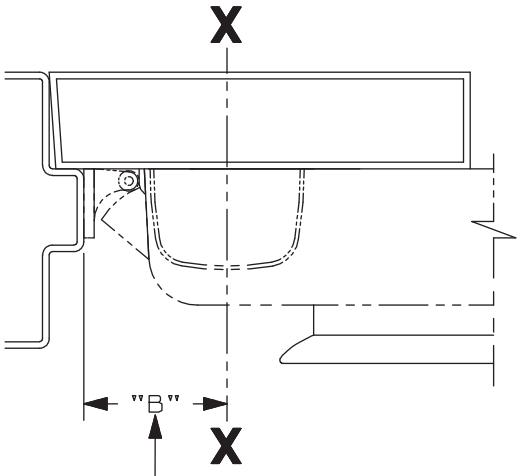

SINGLE DOOR INSTALLATION			
STRIKE	DIM. "B"	MIN. STILE 990/991/992 TRIM	MIN. STILE 696/697 TRIM
909	2 3/8"	4 1/2"	4 3/8"

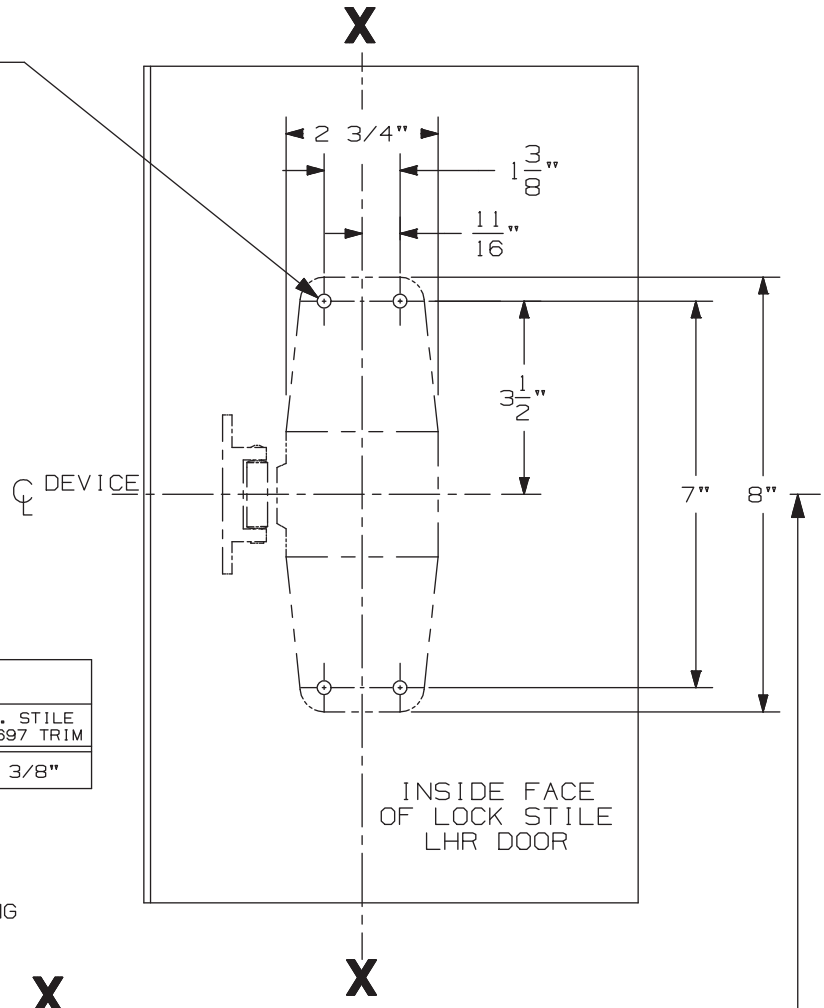

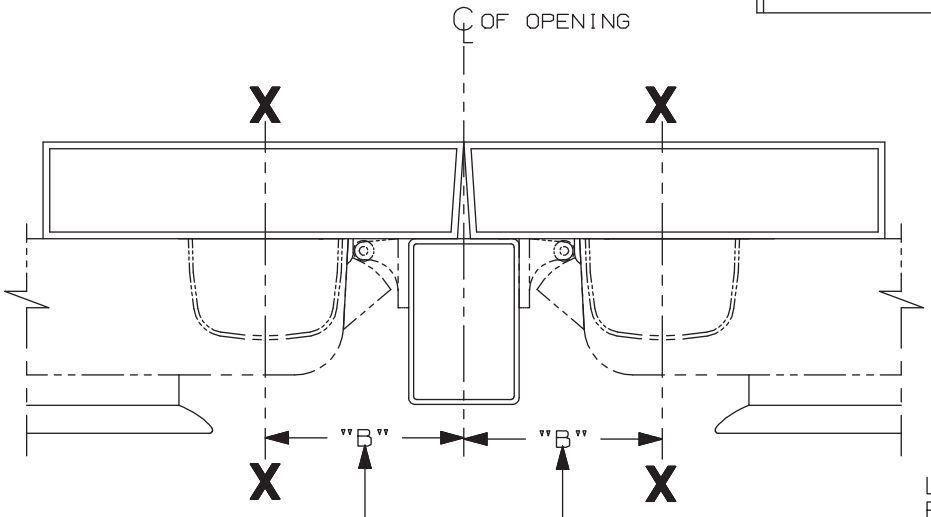

SINGLE DOOR OPENING
39 13/16" TO FINISHED FLOOR

DOUBLE DOOR OPENING
WITH VON DUPRIN MULLION
39 11/16"

LHR APPLICATION SHOWN
RHR APPLICATION OPPOSITE

DOUBLE DOOR INSTALLATION WITH VON DUPRIN MULLIONS				
MULLION	STRIKE	DIM. "B"	MIN. STILE 990/991/992 TRIM	MIN. STILE 696/697 TRIM
4954/9954	909	3 3/8"	4 7/8"	4 3/4"
9954	954	3 1/2"	5"	4 7/8"
5654	909	2 15/16"	4 3/8"	4 1/4"

NOTES:
1. THESE FOUR HOLES TO BE PREPARED FOR SURFACE APPLICATION WHEN USING 696/697 TRIM. DO NOT PREPARE FOR SEX BOLTS.
2. FOR STOCK HOLLOW METAL DOORS SEE TEMPLATE NO. 10619 FOR TYPE "161" CUTOUT AND 10620 FOR TYPE "86" CUTOUT.
3. GLASS BEAD KIT AVAILABLE WHEN REQUIRED.
4. FOR OUTSIDE TRIM PREPARATION, WHEN REQUIRED, SEE TRIM TEMPLATE.

XP98/XP99 & XP98-F/XP99-F EO, DT Rim Devices

VON DUPRIN®

NOTES: See Master Sheet #10001 For Suggested Reinforcing

TEMPLATE NUMBER: 10611_b

DATE: 05-22-13

RIM APPLICATION

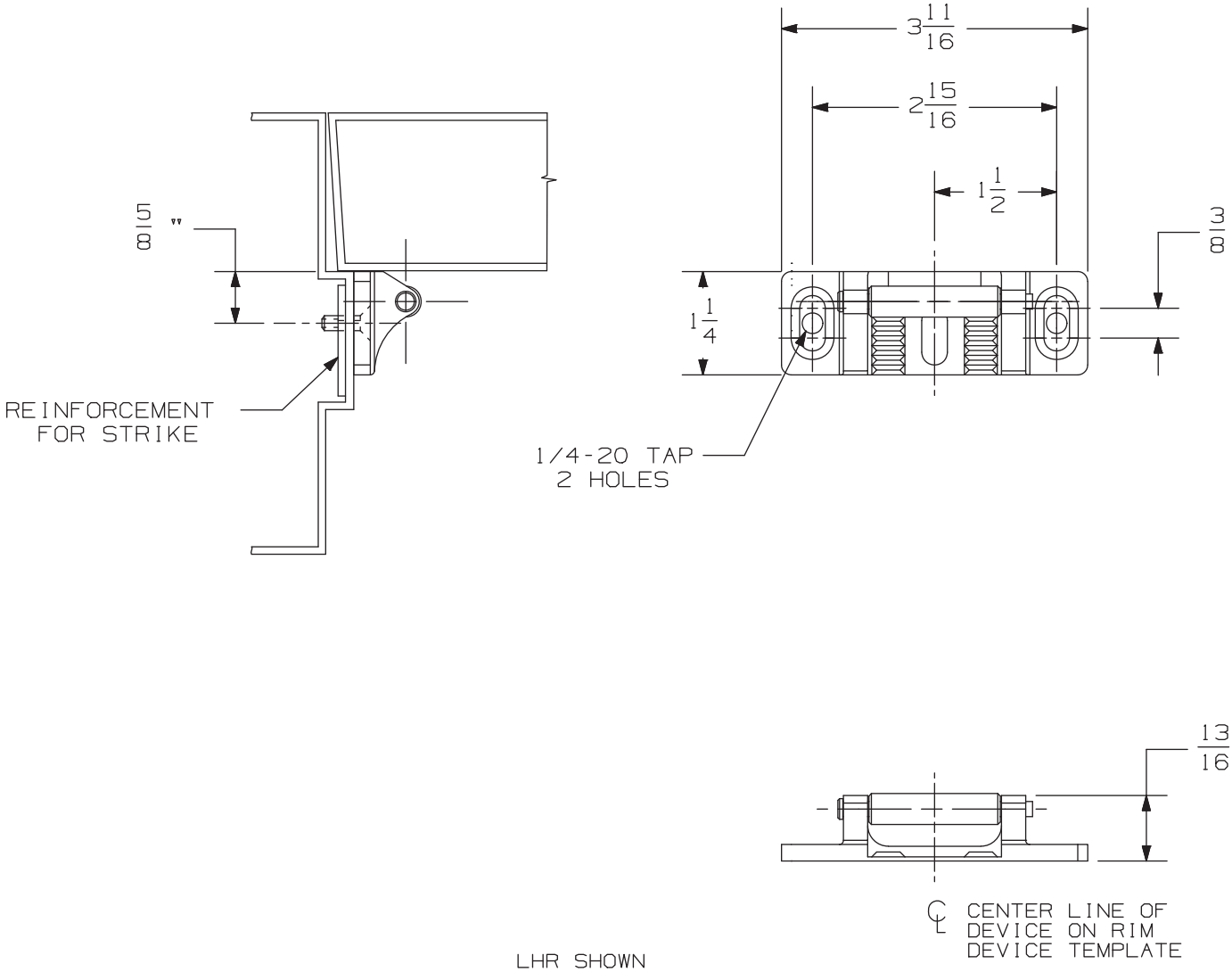

LHR SHOWN
RHR OPPOSITE

NOTE: DEVICE MOUNTING HOLES TO BE PREPARED AT INSTALLATION ON DOOR.

909 Strike	VON DUPRIN®	
NOTES: SEE MASTER SHEET #10001 FOR SUGGESTED REINFORCING	TEMPLATE NUMBER: 30042_b	DATE: 05-24-13

RIM APPLICATION

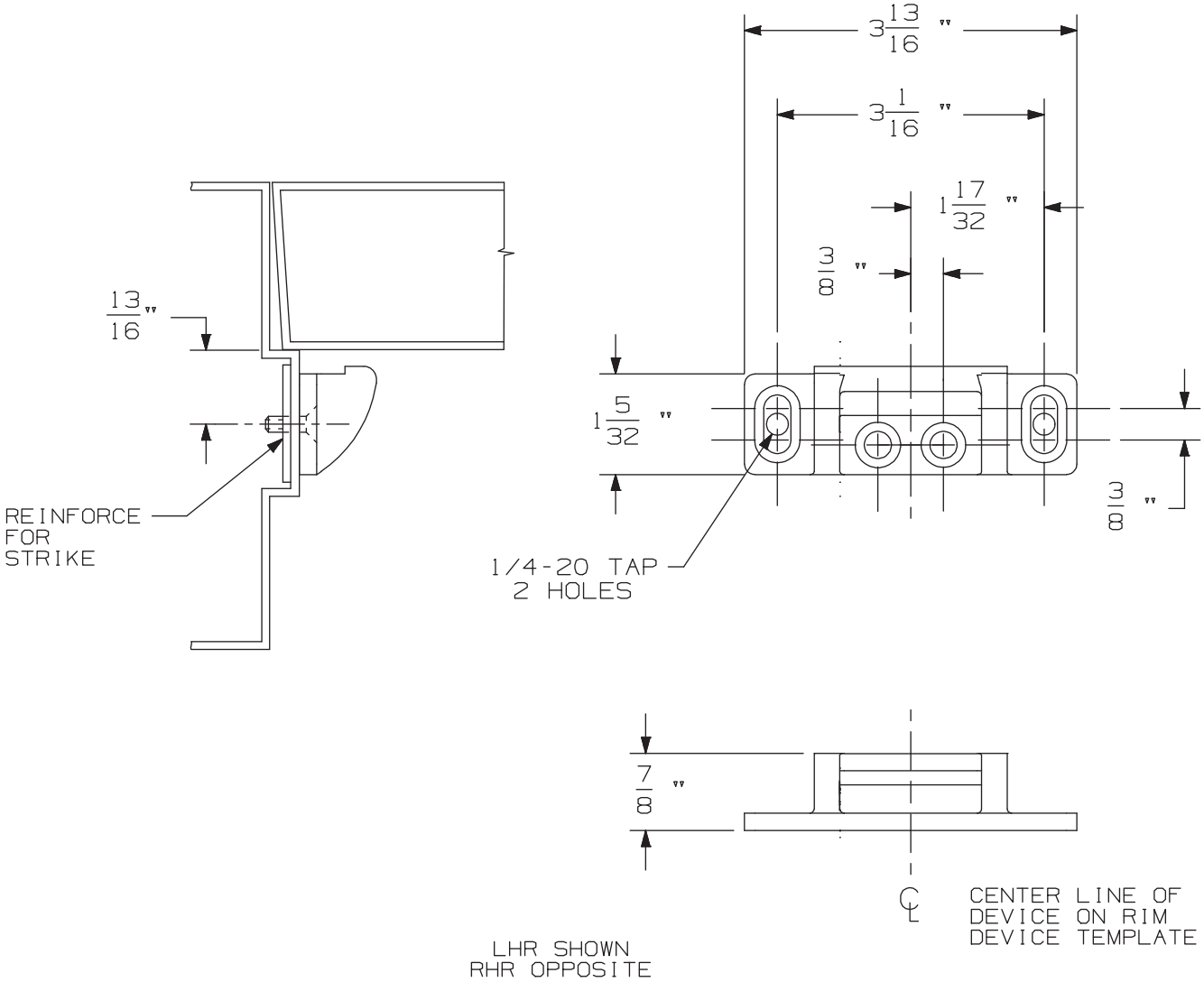

NOTE: DEVICE MOUNTING HOLES TO BE PREPARED AT INSTALLATION ON DOOR.

954 Strike	VON DUPRIN®	
NOTES: SEE MASTER SHEET #10001 FOR SUGGESTED REINFORCING	TEMPLATE NUMBER: 30041_b	DATE: 05-24-13

RIM APPLICATION

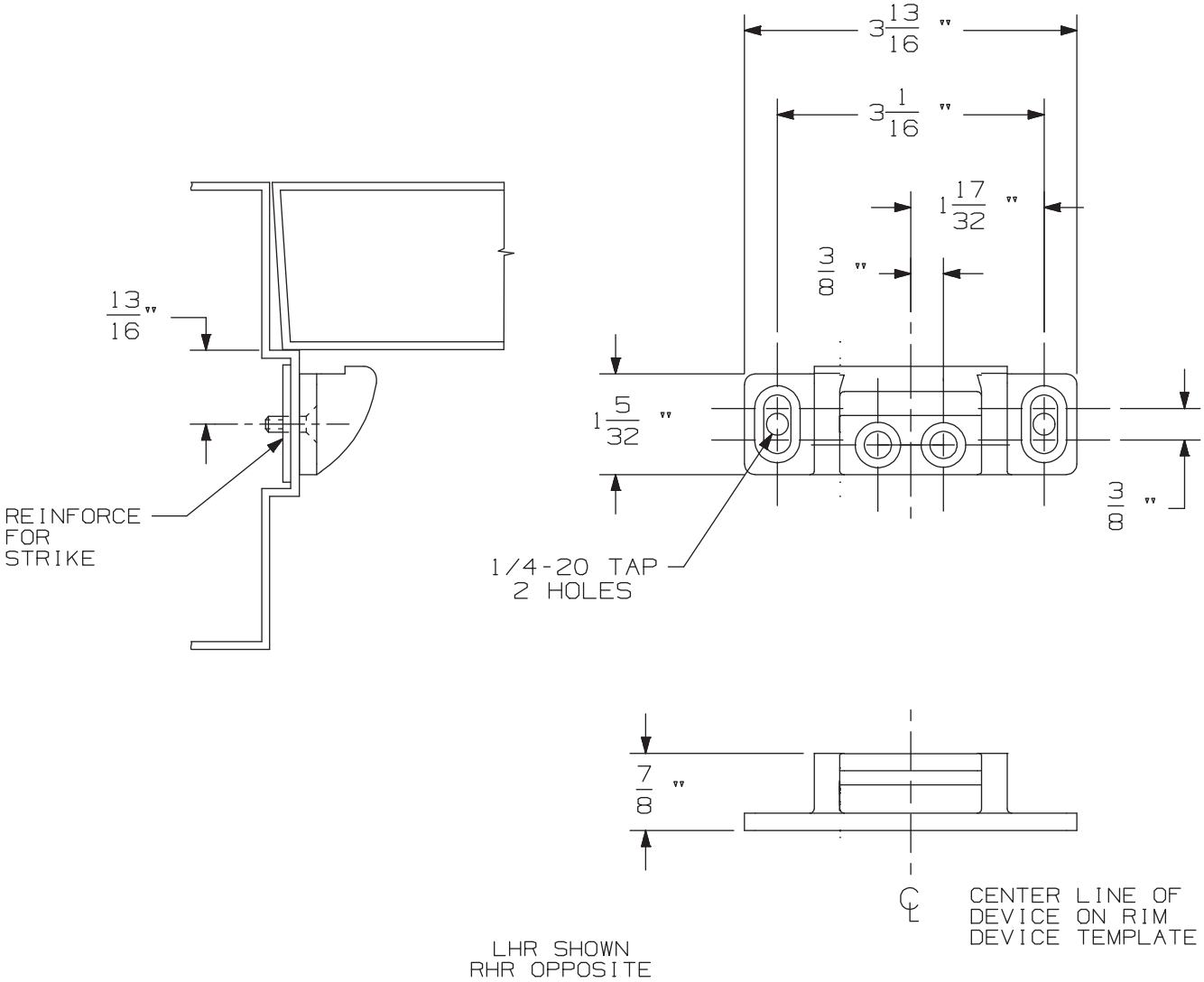

NOTE: DEVICE MOUNTING HOLES TO BE PREPARED AT INSTALLATION ON DOOR.

954 Strike	VON DUPRIN®	
NOTES: SEE MASTER SHEET #10001 FOR SUGGESTED REINFORCING	TEMPLATE NUMBER: 30041_b	DATE: 05-24-13

APPLICATION	PREPARATION
SURFACE APPLICATION	#10-24 TAP 4 PLACES
990 TRIM APPLICATION OR SEX BOLT APPLICATION (SEE NOTE 1)	1/4' DIA THIS SIDE 13/32" DIA OPPOSITE SIDE - 4 PLACES

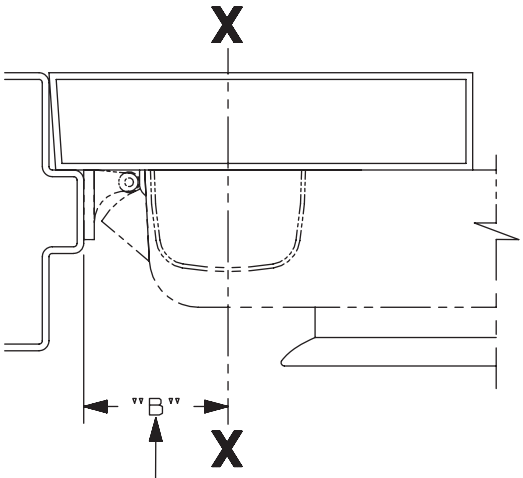

SINGLE DOOR INSTALLATION			
STRIKE	DIM. "B"	MIN. STILE 990/991/992 TRIM	MIN. STILE 696/697 TRIM
909	2 3/8"	4 1/2"	4 3/8"

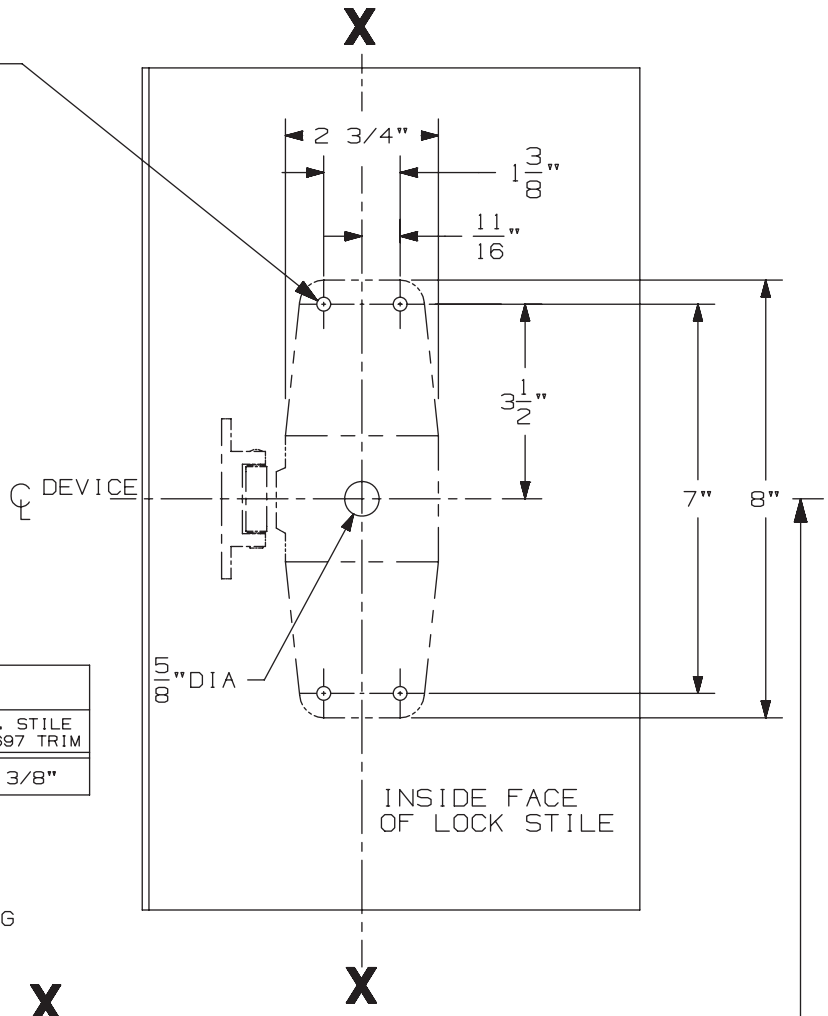

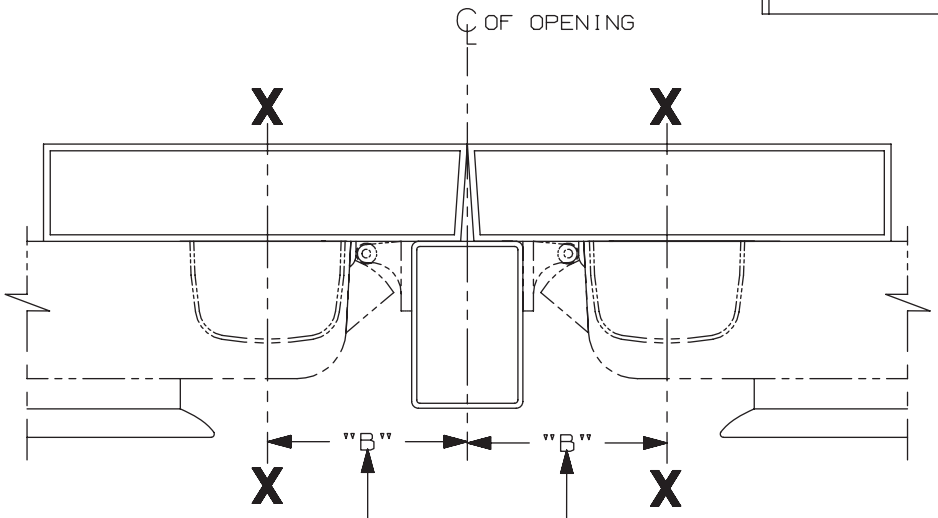

SINGLE DOOR OPENING
39 13/16" TO FINISHED FLOOR

DOUBLE DOOR OPENING
WITH VON DUPRIN MULLION
39 11/16"

LHR APPLICATION SHOWN,
RHR APPLICATION OPPOSITE

DOUBLE DOOR INSTALLATION WITH VON DUPRIN MULLIONS				
MULLION	STRIKE	DIM. "B"	MIN. STILE 990/991/992 TRIM	MIN. STILE 696/697 TRIM
4954/9954	909	3 3/8"	4 7/8"	4 3/4"
9954	954	3 1/2"	5"	4 7/8"
5654	909	2 15/16"	4 3/8"	4 1/4"

NOTES:
1. THESE FOUR HOLES TO BE PREPARED FOR SURFACE APPLICATION WHEN USING 696/697 TRIM. DO NOT PREPARE FOR SEX BOLTS.
2. FOR STOCK HOLLOW METAL DOORS SEE TEMPLATE NO. 10619 FOR TYPE "161" CUTOUT AND 10622 FOR TYPE "86" CUTOUT.
3. GLASS BEAD KIT AVAILABLE WHEN REQUIRED.
4. FOR OUTSIDE TRIM PREPARATION, WHEN REQUIRED, SEE TRIM TEMPLATE.

XP98/XP99 & XP98-F/XP99-F NL Series Rim Device

VON DUPRIN®

NOTES: See Master Sheet #10001 For Suggested Reinforcing

TEMPLATE NUMBER: 10612_b

DATE: 05-22-13

990 NL TRIM

NOTES: SEE MASTER SHEET #10001 FOR SUGGESTED REINFORCING

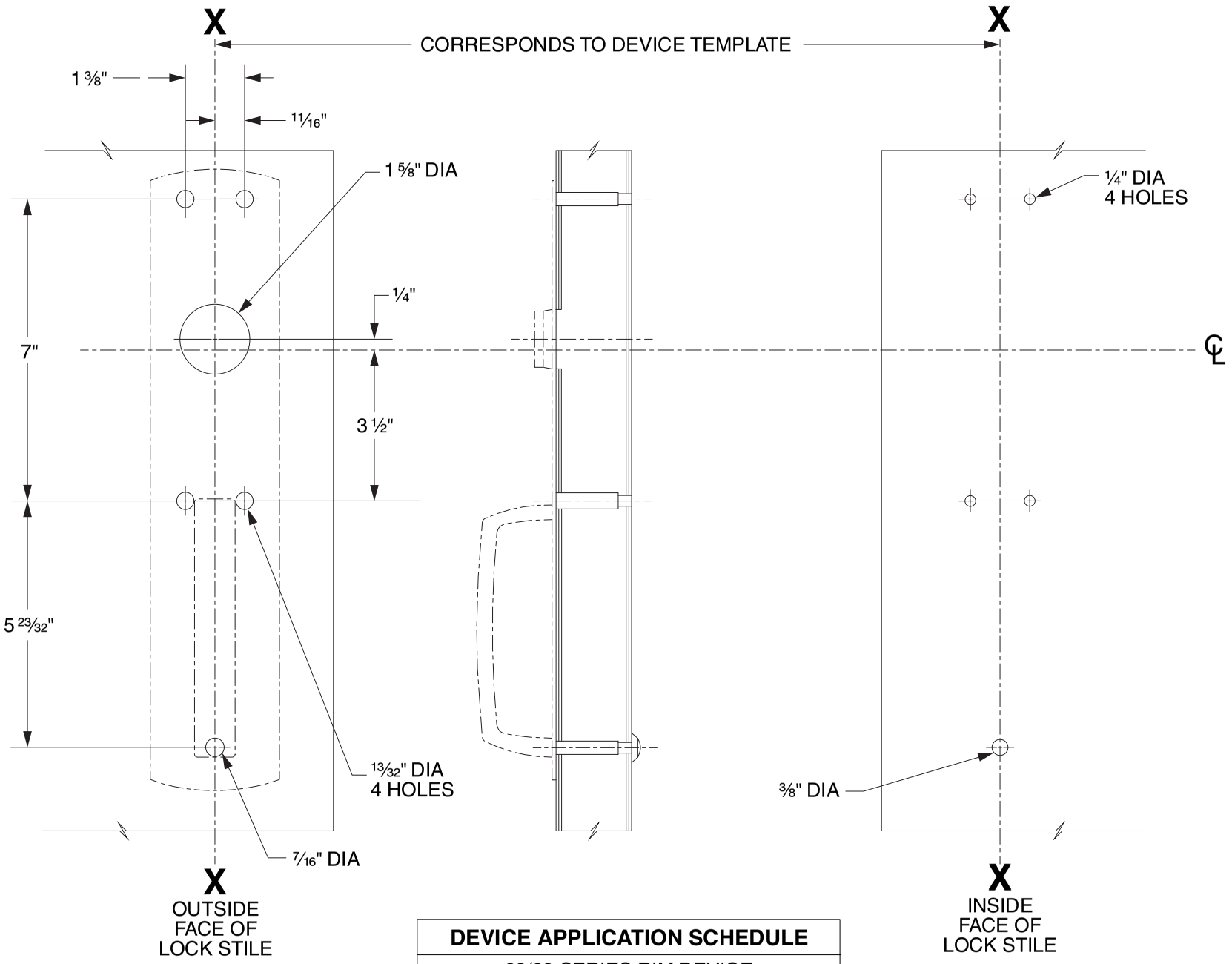

DEVICE APPLICATION SCHEDULE
98/99 SERIES RIM DEVICE
9827/9927 SERIES DEVICE
9847/9947 SERIES DEVICE
9849/9949 SERIES DEVICE

LHR SHOWN
RHR OPPOSITE

VON DUPRIN®

TEMPLATE NUMBER: 20267_C

DATE: 05-31-13

RIM APPLICATION

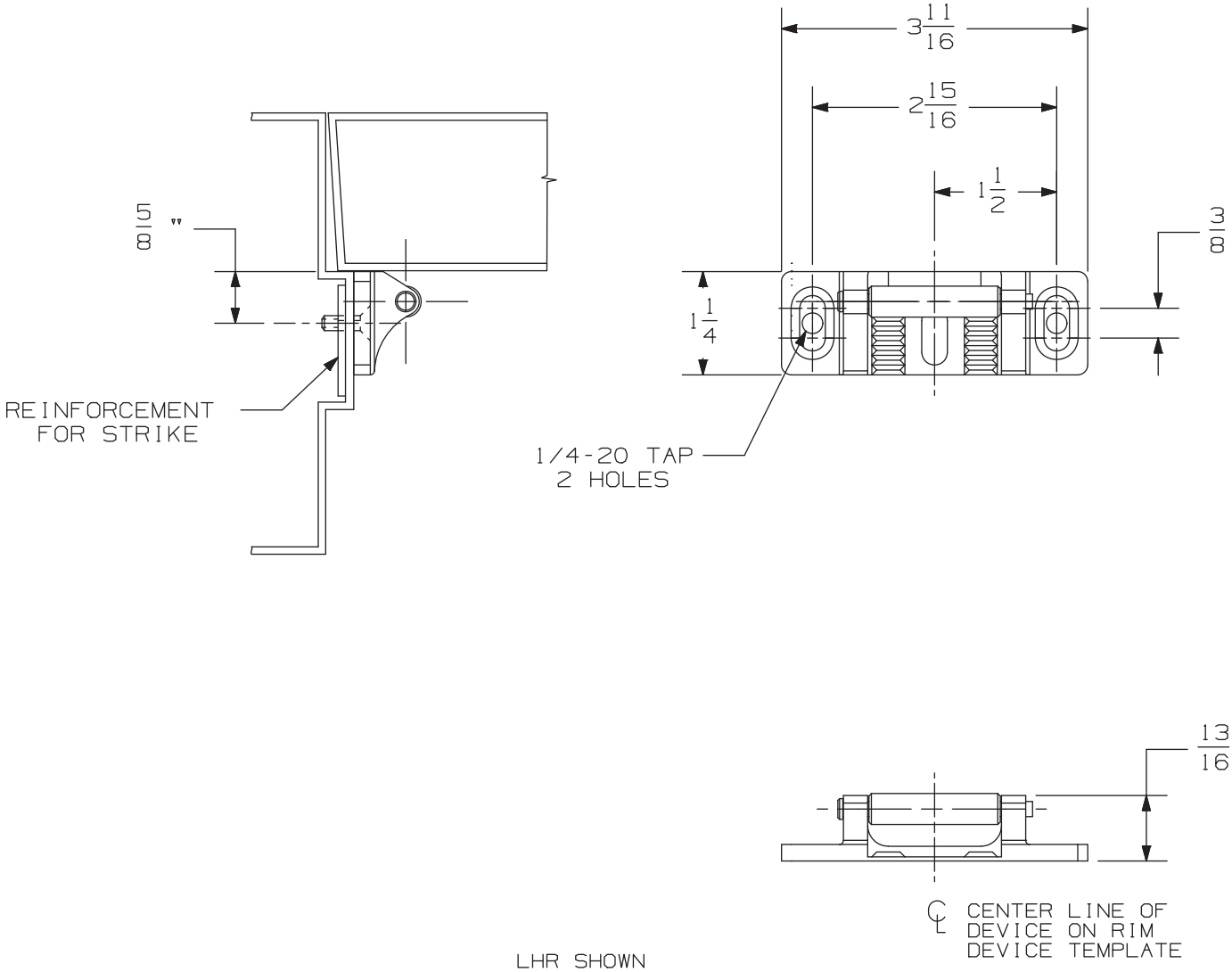

LHR SHOWN
RHR OPPOSITE

NOTE: DEVICE MOUNTING HOLES TO BE PREPARED AT INSTALLATION ON DOOR.

909 Strike	VON DUPRIN®	
NOTES: SEE MASTER SHEET #10001 FOR SUGGESTED REINFORCING	TEMPLATE NUMBER: 30042_b	DATE: 05-24-13

RIM APPLICATION

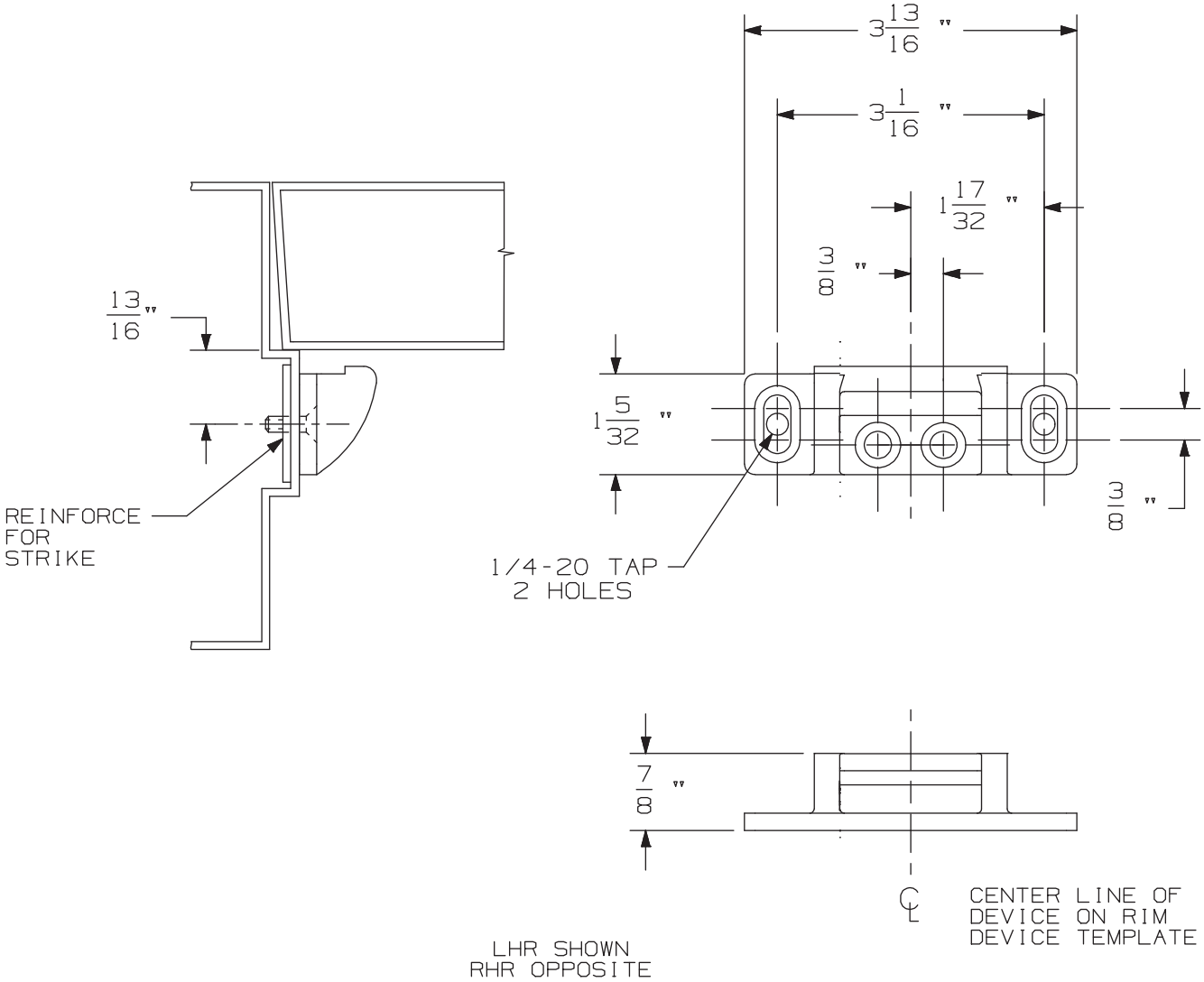

NOTE: DEVICE MOUNTING HOLES TO BE PREPARED AT INSTALLATION ON DOOR.

954 Strike	VON DUPRIN®	
NOTES: SEE MASTER SHEET #10001 FOR SUGGESTED REINFORCING	TEMPLATE NUMBER: 30041_b	DATE: 05-24-13

APPLICATION	PREPARATION
SURFACE APPLICATION	#10-24 TAP 4 PLACES
990 TRIM APPLICATION OR SEX BOLT APPLICATION (SEE NOTE 1)	1/4' DIA THIS SIDE 13/32" DIA OPPOSITE SIDE - 4 PLACES

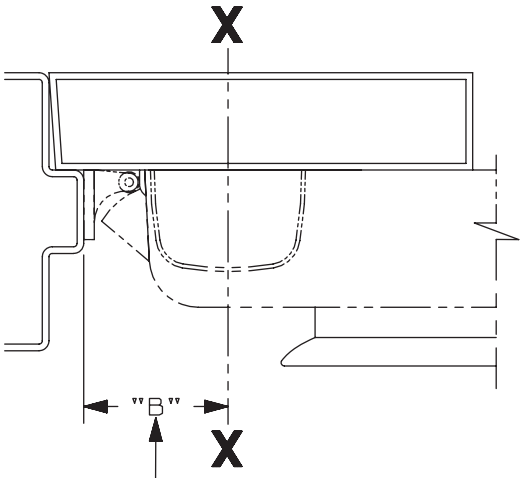

SINGLE DOOR INSTALLATION			
STRIKE	DIM. "B"	MIN. STILE 990/991/992 TRIM	MIN. STILE 696/697 TRIM
909	2 3/8"	4 1/2"	4 3/8"

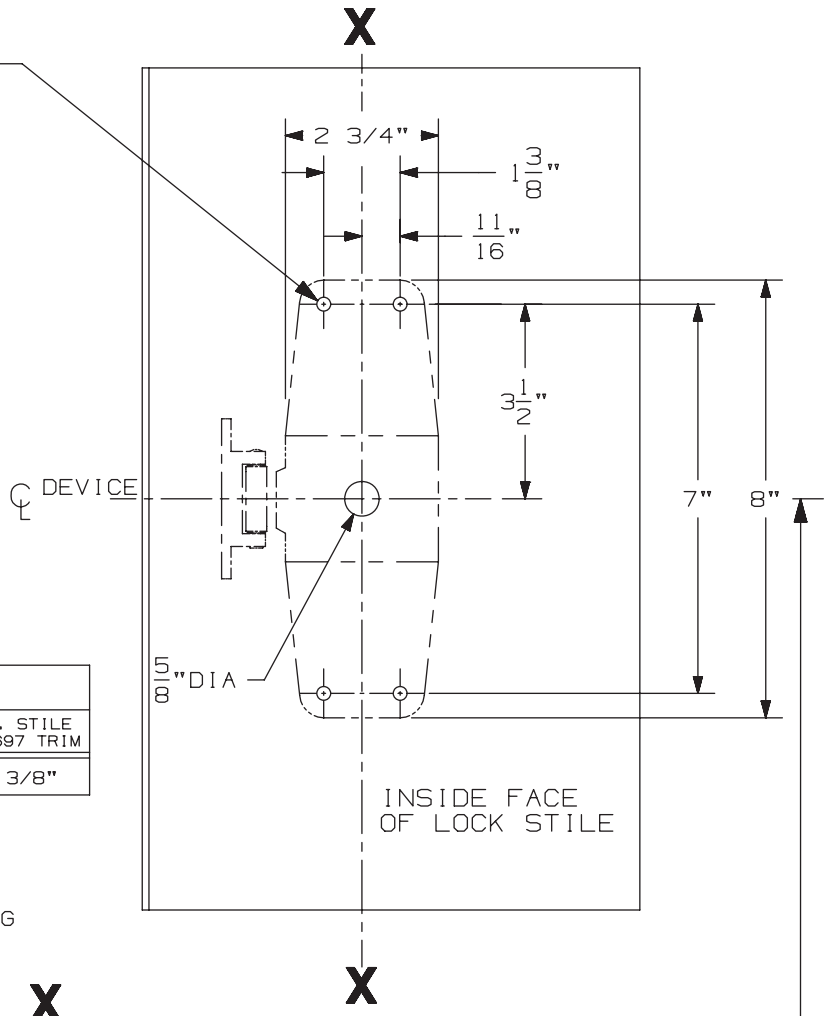

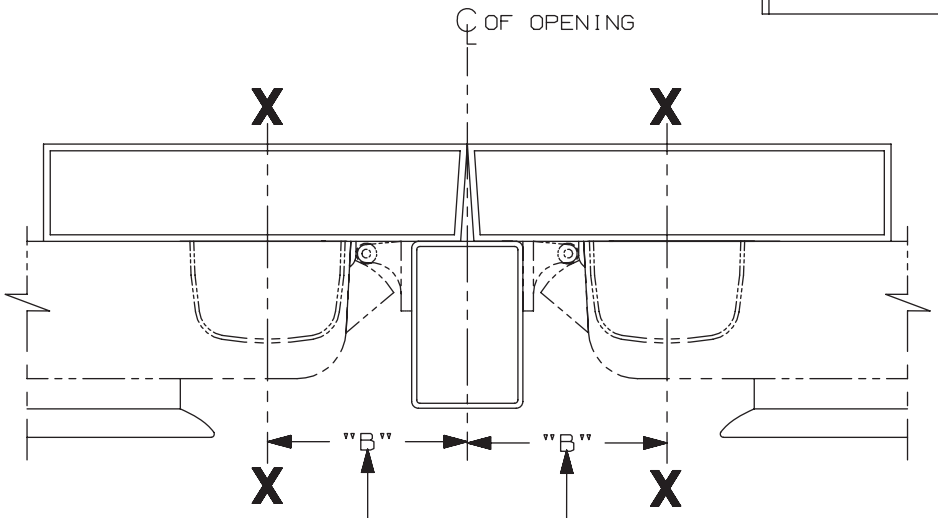

SINGLE DOOR OPENING
39 13/16" TO FINISHED FLOOR

DOUBLE DOOR OPENING
WITH VON DUPRIN MULLION
39 11/16"

LHR APPLICATION SHOWN,
RHR APPLICATION OPPOSITE

DOUBLE DOOR INSTALLATION WITH VON DUPRIN MULLIONS				
MULLION	STRIKE	DIM. "B"	MIN. STILE 990/991/992 TRIM	MIN. STILE 696/697 TRIM
4954/9954	909	3 3/8"	4 7/8"	4 3/4"
9954	954	3 1/2"	5"	4 7/8"
5654	909	2 15/16"	4 3/8"	4 1/4"

NOTES:
1. THESE FOUR HOLES TO BE PREPARED FOR SURFACE APPLICATION WHEN USING 696/697 TRIM. DO NOT PREPARE FOR SEX BOLTS.
2. FOR STOCK HOLLOW METAL DOORS SEE TEMPLATE NO. 10619 FOR TYPE "161" CUTOUT AND 10622 FOR TYPE "86" CUTOUT.
3. GLASS BEAD KIT AVAILABLE WHEN REQUIRED.
4. FOR OUTSIDE TRIM PREPARATION, WHEN REQUIRED, SEE TRIM TEMPLATE.

XP98/XP99 & XP98-F/XP99-F NL Series Rim Device

VON DUPRIN®

NOTES: See Master Sheet #10001 For Suggested Reinforcing

TEMPLATE NUMBER: 10612_b

DATE: 05-22-13

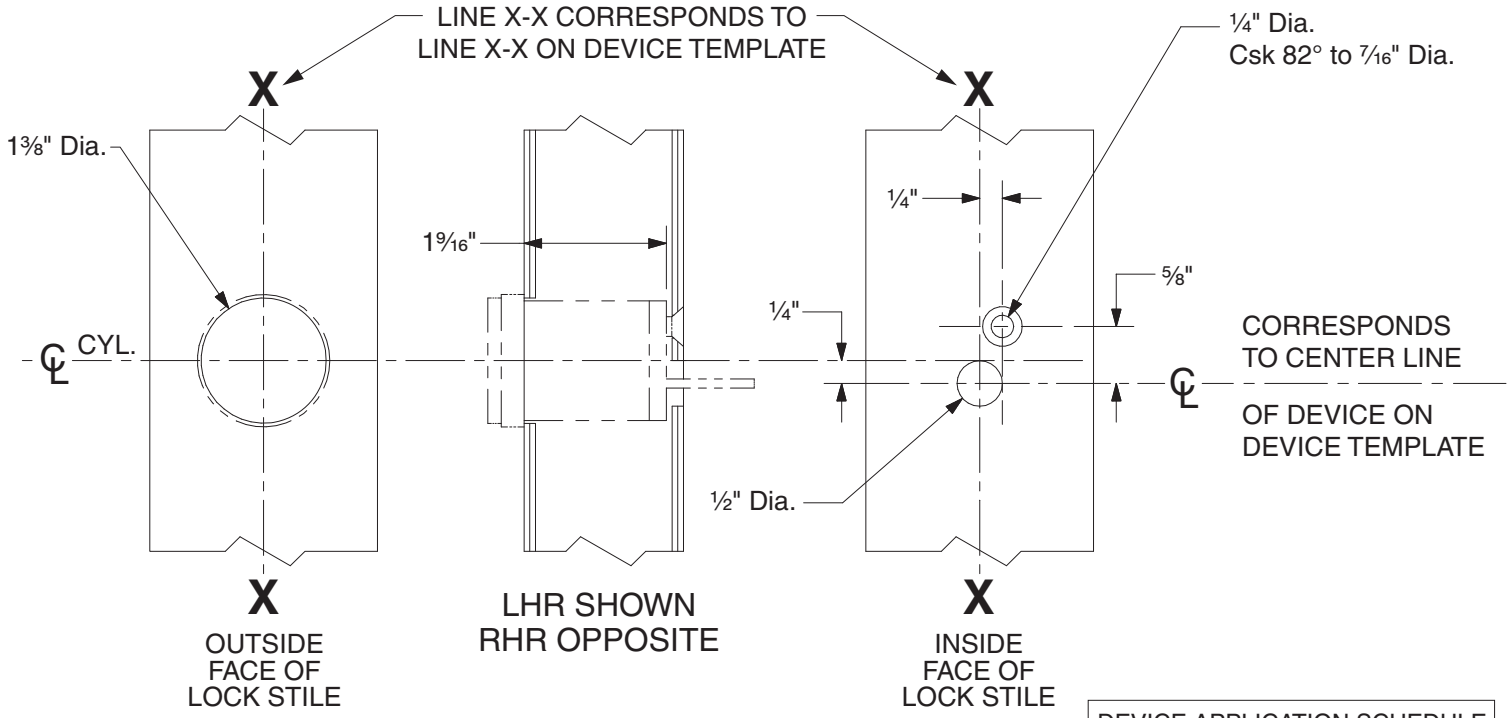

DEVICE APPLICATION SCHEDULE	
98 RIM SERIES	99 RIM SERIES
9827 SERIES	9927 SERIES
9847 SERIES	9947 SERIES
22 RIM SERIES	2227 SERIES

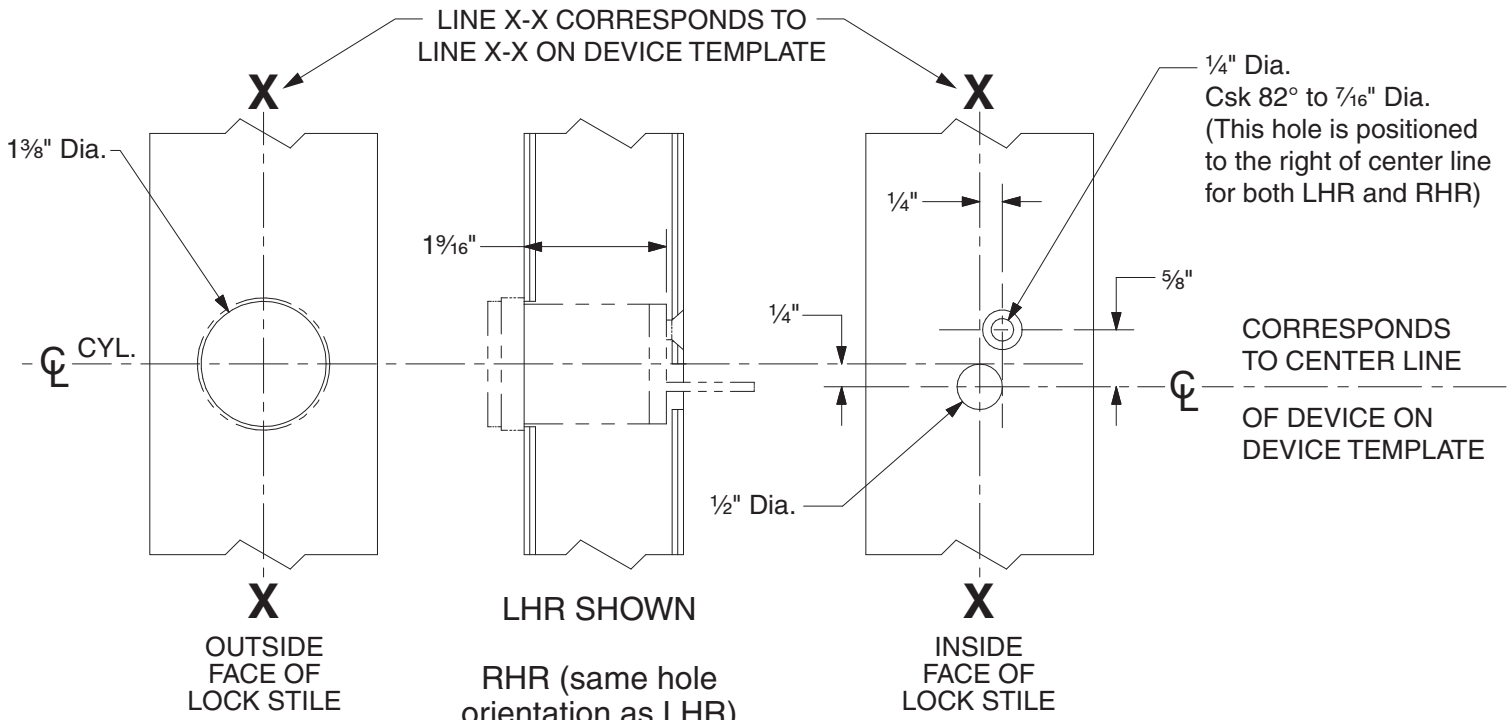

DEVICE APPLICATION SCHEDULE	
9849 SERIES	9949 SERIES

110NL Cylinder Preparation

VON DUPRIN®

NOTES: SEE MASTER SHEET #10001 FOR SUGGESTED REINFORCING

TEMPLATE NUMBER: 40022_c

DATE: 05-28-13

RIM APPLICATION

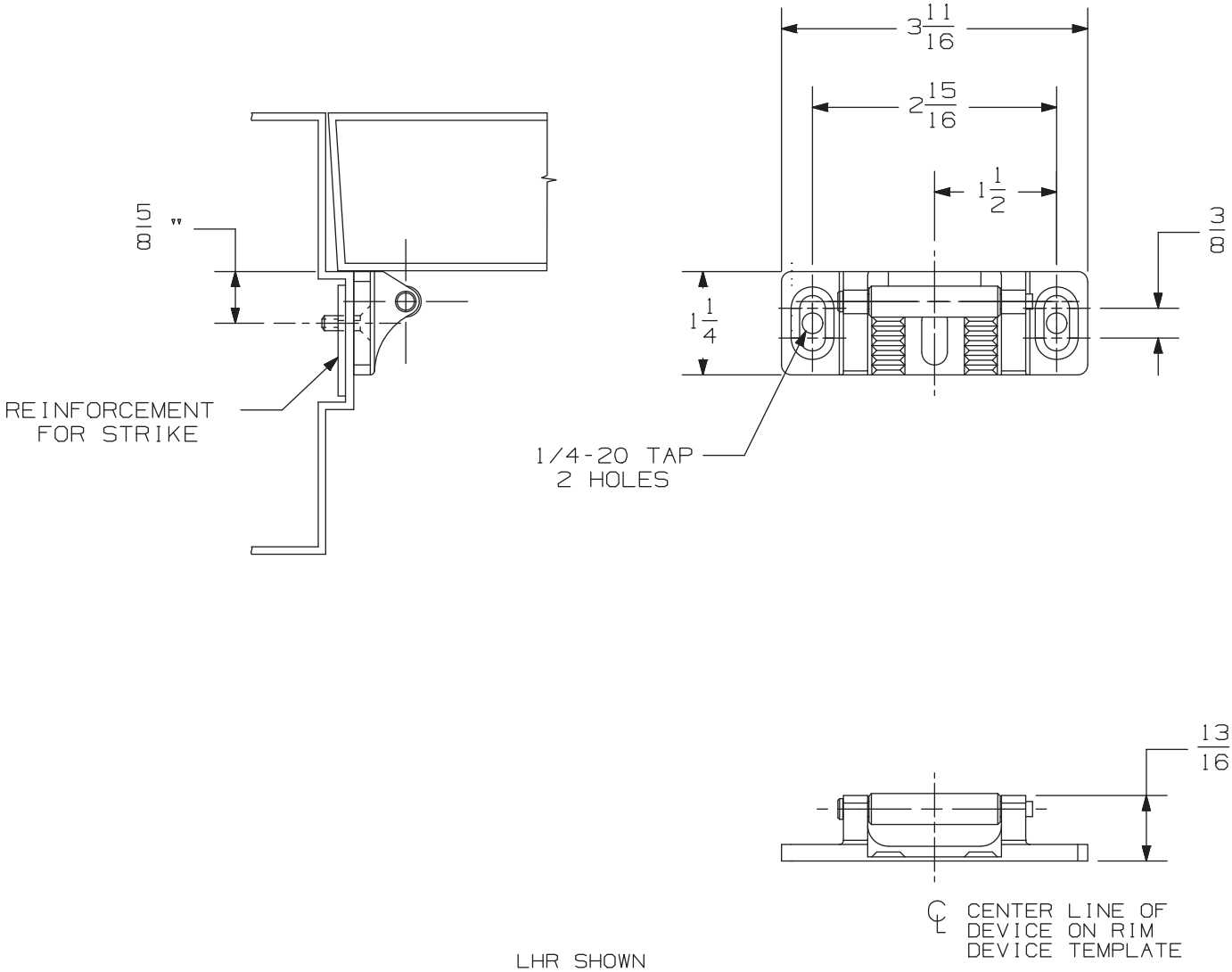

LHR SHOWN
RHR OPPOSITE

NOTE: DEVICE MOUNTING HOLES TO BE PREPARED AT INSTALLATION ON DOOR.

909 Strike	VON DUPRIN®	
NOTES: SEE MASTER SHEET #10001 FOR SUGGESTED REINFORCING	TEMPLATE NUMBER: 30042_b	DATE: 05-24-13

RIM APPLICATION

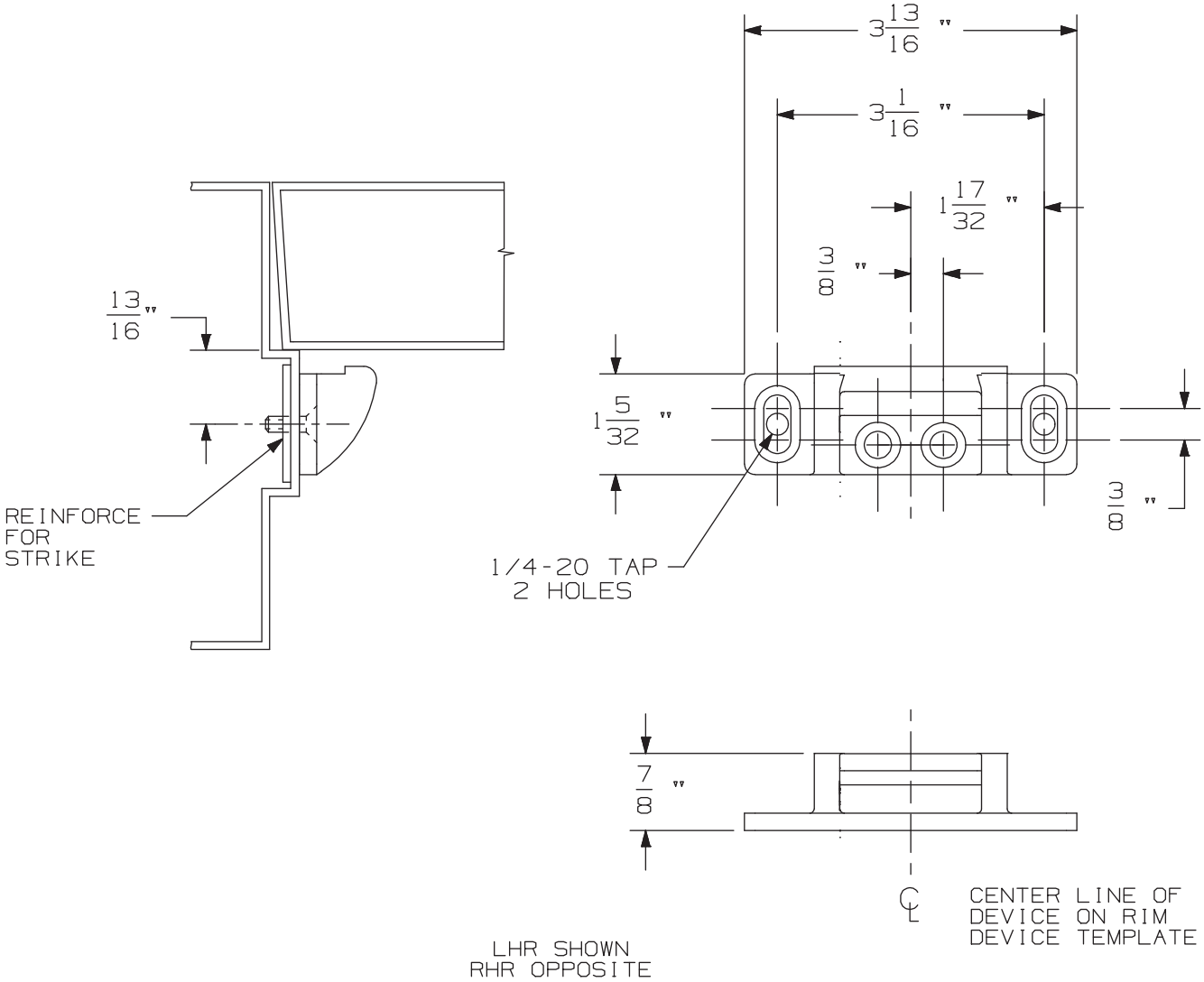

NOTE: DEVICE MOUNTING HOLES TO BE PREPARED AT INSTALLATION ON DOOR.

954 Strike	VON DUPRIN®	
NOTES: SEE MASTER SHEET #10001 FOR SUGGESTED REINFORCING	TEMPLATE NUMBER: 30041_b	DATE: 05-24-13

APPLICATION	PREPARATION
SURFACE APPLICATION	#10-24 TAP 4 PLACES
990 TRIM APPLICATION OR SEX BOLT APPLICATION (SEE NOTE 1)	1/4' DIA THIS SIDE 13/32" DIA OPPOSITE SIDE - 4 PLACES

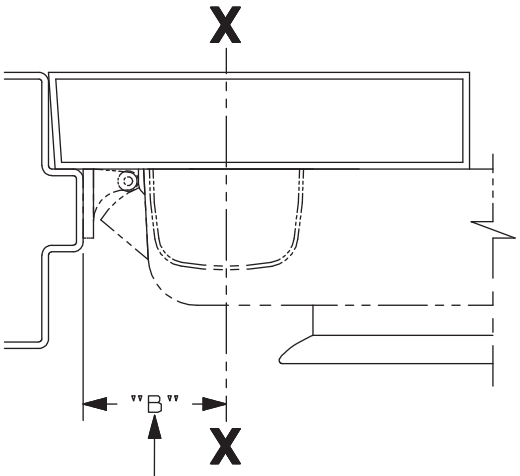

SINGLE DOOR INSTALLATION			
STRIKE	DIM. "B"	MIN. STILE 990/991/992 TRIM	MIN. STILE 696/697 TRIM
909	2 3/8"	4 1/2"	4 3/8"

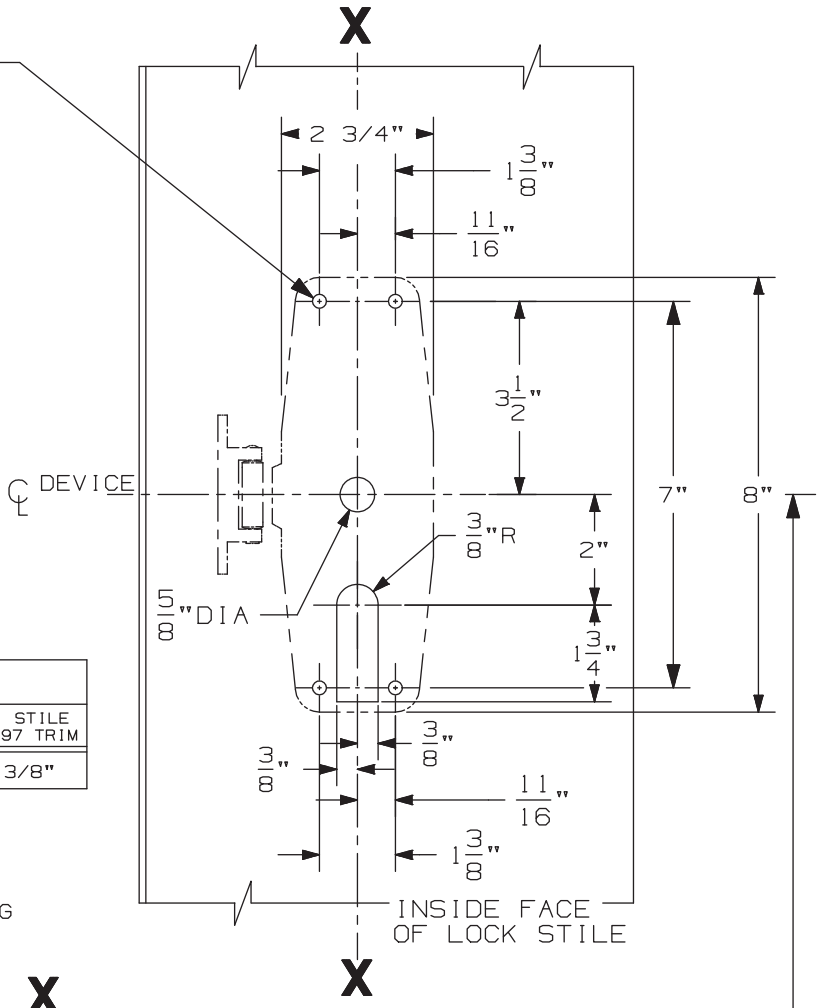

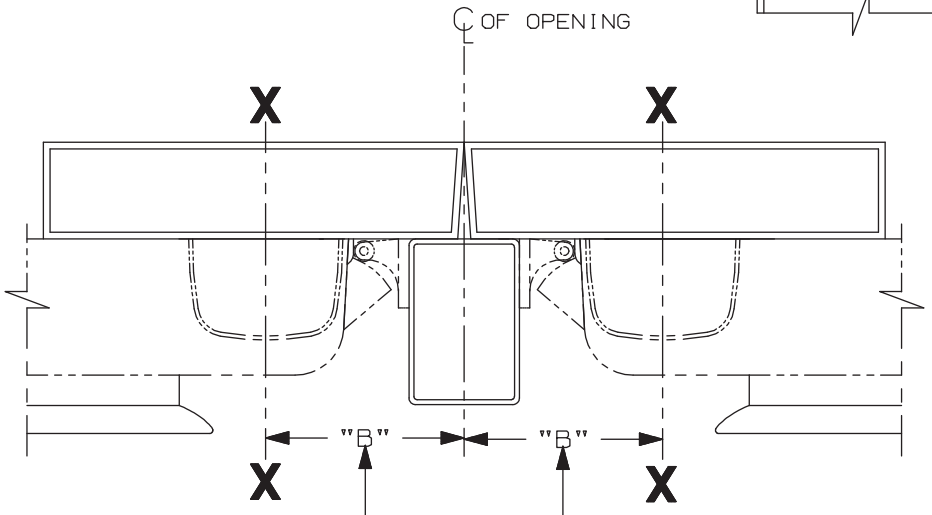

SINGLE DOOR OPENING
39 13/16" TO FINISHED FLOOR

DOUBLE DOOR OPENING
WITH VON DUPRIN MULLION
39 11/16"

LHR APPLICATION SHOWN
RHR APPLICATION OPPOSITE

DOUBLE DOOR INSTALLATION WITH VON DUPRIN MULLIONS				
MULLION	STRIKE	DIM. "B"	MIN. STILE 990/991/992 TRIM	MIN. STILE 696/697 TRIM
4954/9954	909	3 3/8"	4 7/8"	4 3/4"
9954	954	3 1/2"	5"	4 7/8"
5654	909	2 15/16"	4 3/8"	4 1/4"

NOTES:
1. THESE FOUR HOLES TO BE PREPARED FOR SURFACE APPLICATION WHEN USING 696/697 TRIM. DO NOT PREPARE FOR SEX BOLTS.
2. FOR STOCK HOLLOW METAL DOORS SEE TEMPLATE NO. 10621 FOR TYPE "161" CUTOUT AND 10623 FOR TYPE "86" CUTOUT.
3. GLASS BEAD KIT AVAILABLE WHEN REQUIRED.
4. FOR OUTSIDE TRIM PREPARATION, WHEN REQUIRED, SEE TRIM TEMPLATE.

XP98/XP99 & XP/98-F/XP99-F TP, K, & L Series Rim Devices

VON DUPRIN®

NOTES: See Master Sheet #10001 For Suggested Reinforcing

TEMPLATE NUMBER: 10613_b

DATE: 05-22-13

991 K & 992 L Trim

NOTES: SEE MASTER SHEET #10001 FOR SUGGESTED REINFORCING

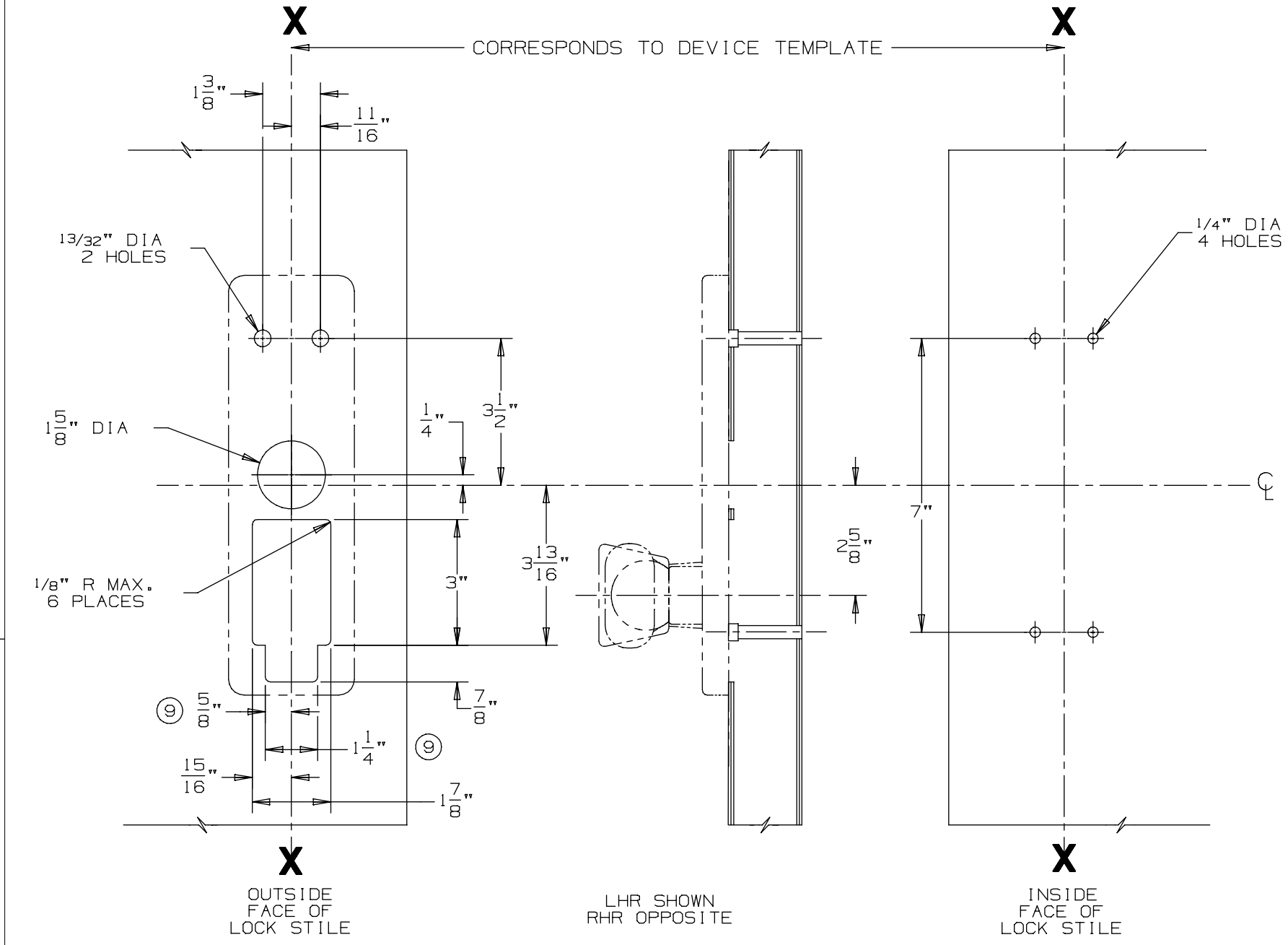

DEVICE APPLICATION SCHEDULE
98/99 SERIES RIM DEVICE
9827/9927 SERIES DEVICE
9847/9947 SERIES DEVICE

VON DUPRIN®

TEMPLATE NUMBER: 20272_a

DATE: 05-23-13

RIM APPLICATION

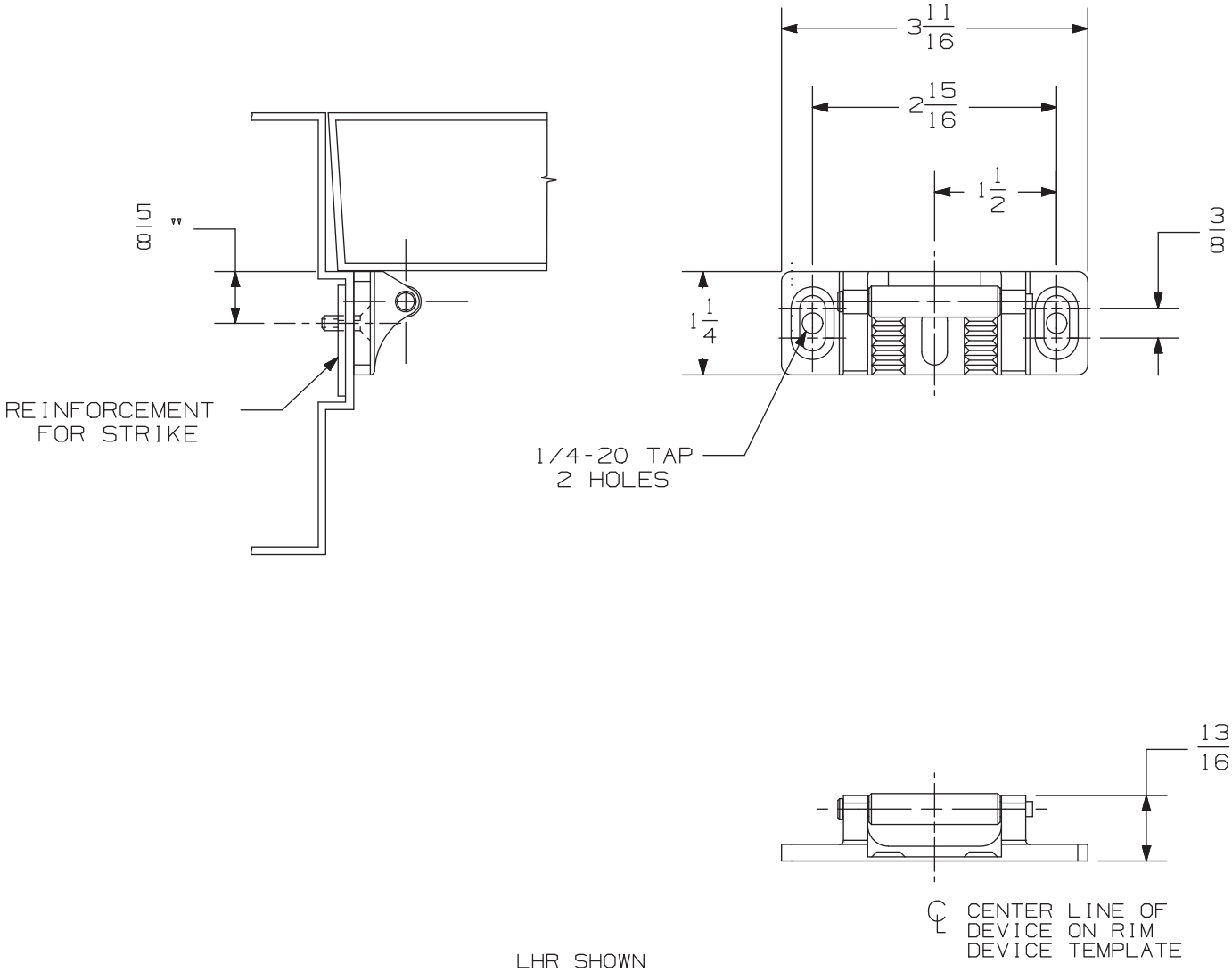

LHR SHOWN
RHR OPPOSITE

NOTE: DEVICE MOUNTING HOLES TO BE PREPARED AT INSTALLATION ON DOOR.

909 Strike	VON DUPRIN®	
NOTES: SEE MASTER SHEET #10001 FOR SUGGESTED REINFORCING	TEMPLATE NUMBER: 30042_b	DATE: 05-24-13

RIM APPLICATION

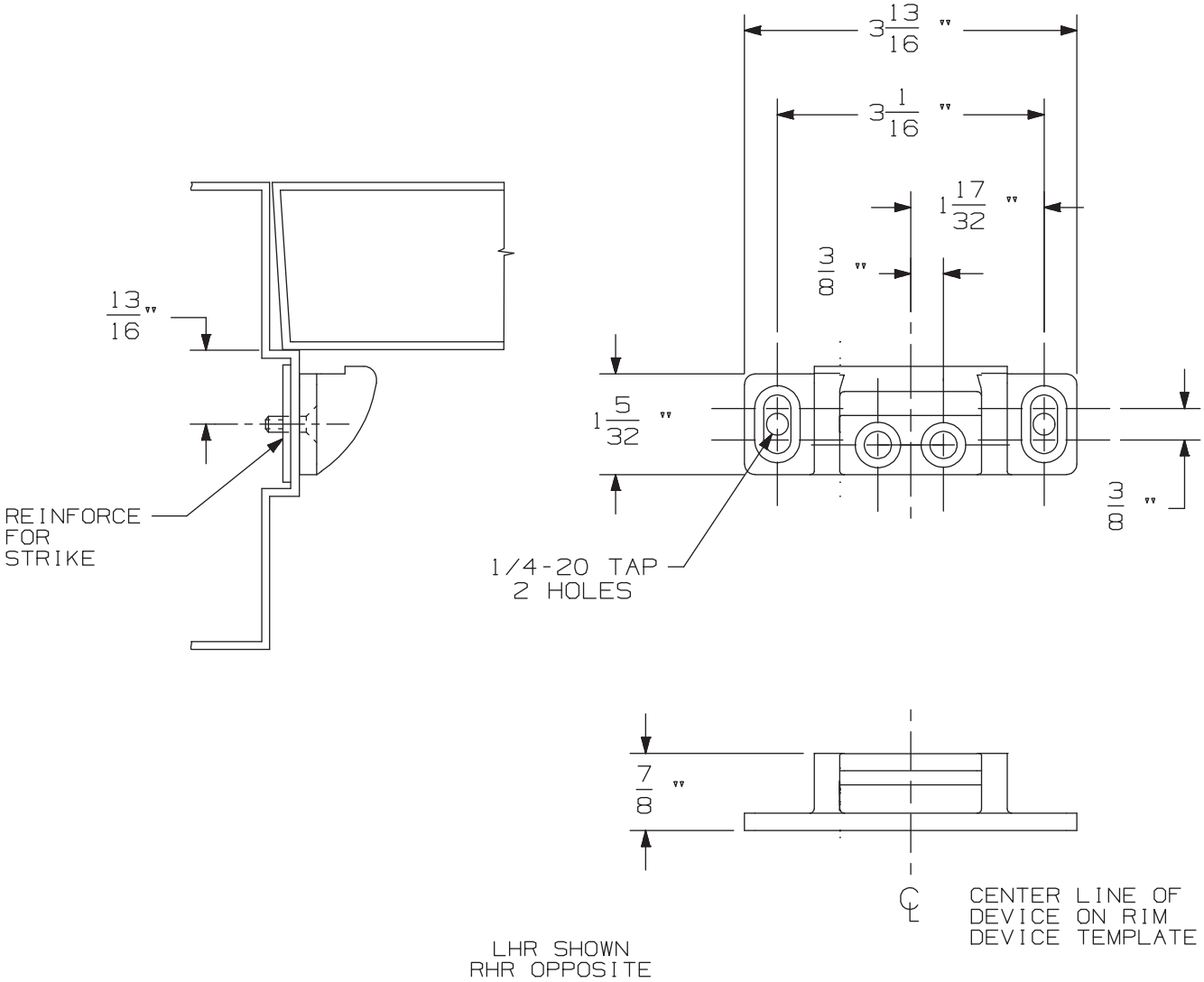

NOTE: DEVICE MOUNTING HOLES TO BE PREPARED AT INSTALLATION ON DOOR.

954 Strike	VON DUPRIN®	
NOTES: SEE MASTER SHEET #10001 FOR SUGGESTED REINFORCING	TEMPLATE NUMBER: 30041_b	DATE: 05-24-13

991 K & 992 L Trim

NOTES: SEE MASTER SHEET #10001 FOR SUGGESTED REINFORCING

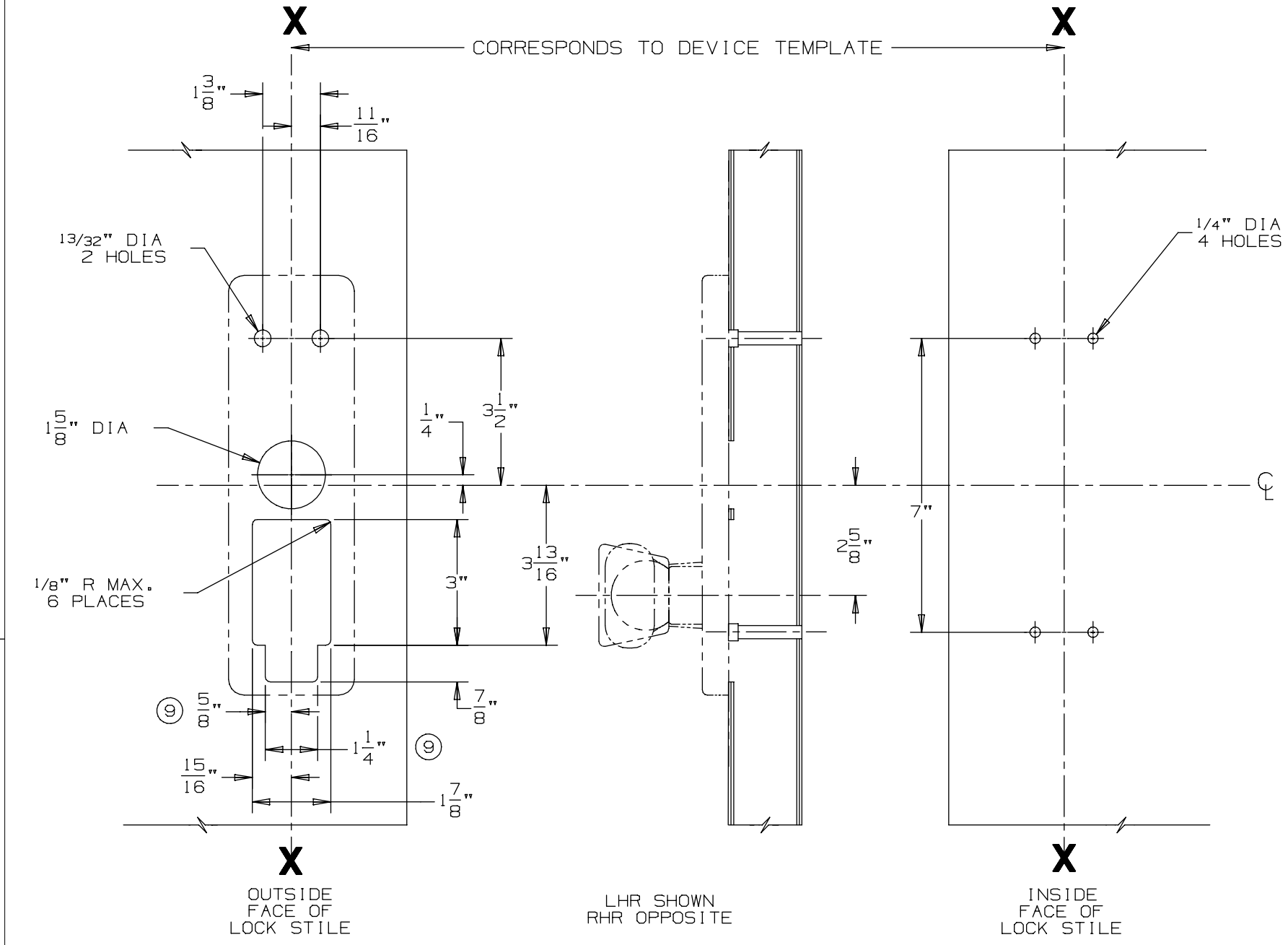

DEVICE APPLICATION SCHEDULE
98/99 SERIES RIM DEVICE
9827/9927 SERIES DEVICE
9847/9947 SERIES DEVICE

VON DUPRIN®

TEMPLATE NUMBER: 20272_a

DATE: 05-23-13

RIM APPLICATION

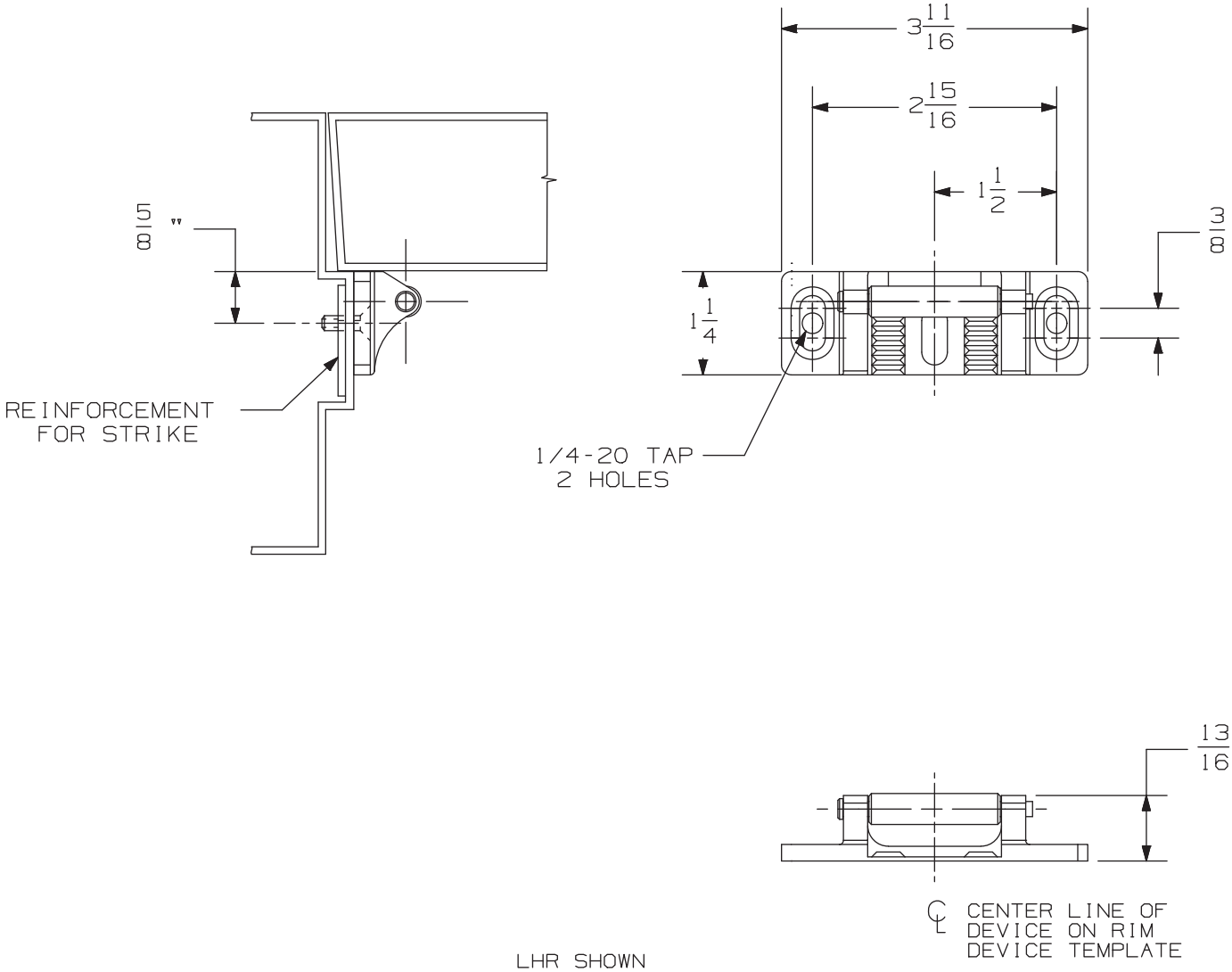

LHR SHOWN
RHR OPPOSITE

NOTE: DEVICE MOUNTING HOLES TO BE PREPARED AT INSTALLATION ON DOOR.

909 Strike	VON DUPRIN®	
NOTES: SEE MASTER SHEET #10001 FOR SUGGESTED REINFORCING	TEMPLATE NUMBER: 30042_b	DATE: 05-24-13

RIM APPLICATION

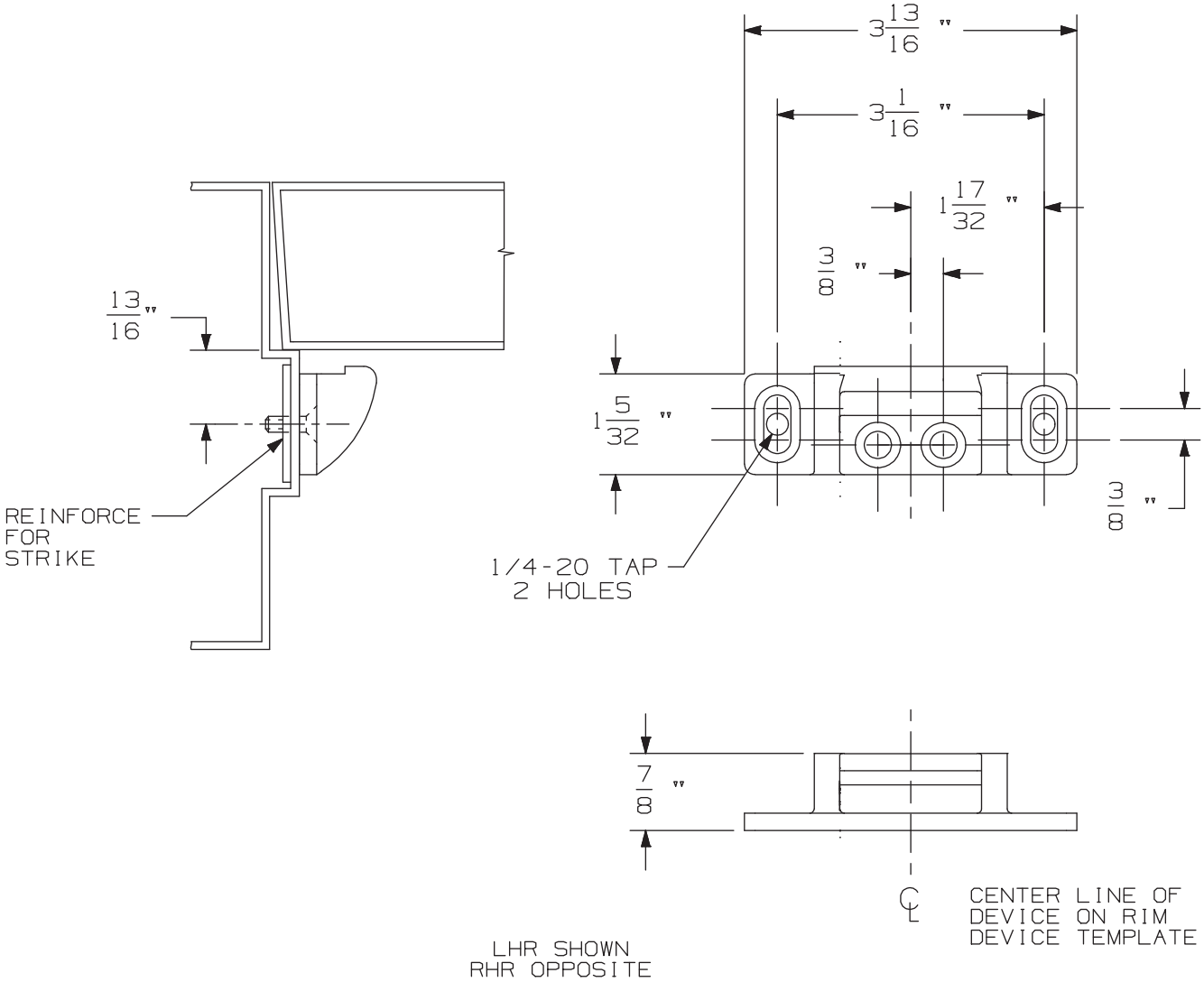

NOTE: DEVICE MOUNTING HOLES TO BE PREPARED AT INSTALLATION ON DOOR.

954 Strike	VON DUPRIN®	
NOTES: SEE MASTER SHEET #10001 FOR SUGGESTED REINFORCING	TEMPLATE NUMBER: 30041_b	DATE: 05-24-13

APPLICATION	PREPARATION
SURFACE APPLICATION	#10-24 TAP 4 PLACES
990 TRIM APPLICATION OR SEX BOLT APPLICATION (SEE NOTE 1)	1/4' DIA THIS SIDE 13/32" DIA OPPOSITE SIDE - 4 PLACES

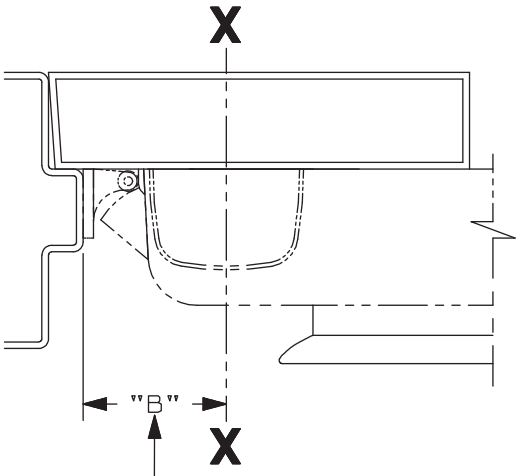

SINGLE DOOR INSTALLATION			
STRIKE	DIM. "B"	MIN. STILE 990/991/992 TRIM	MIN. STILE 696/697 TRIM
909	2 3/8"	4 1/2"	4 3/8"

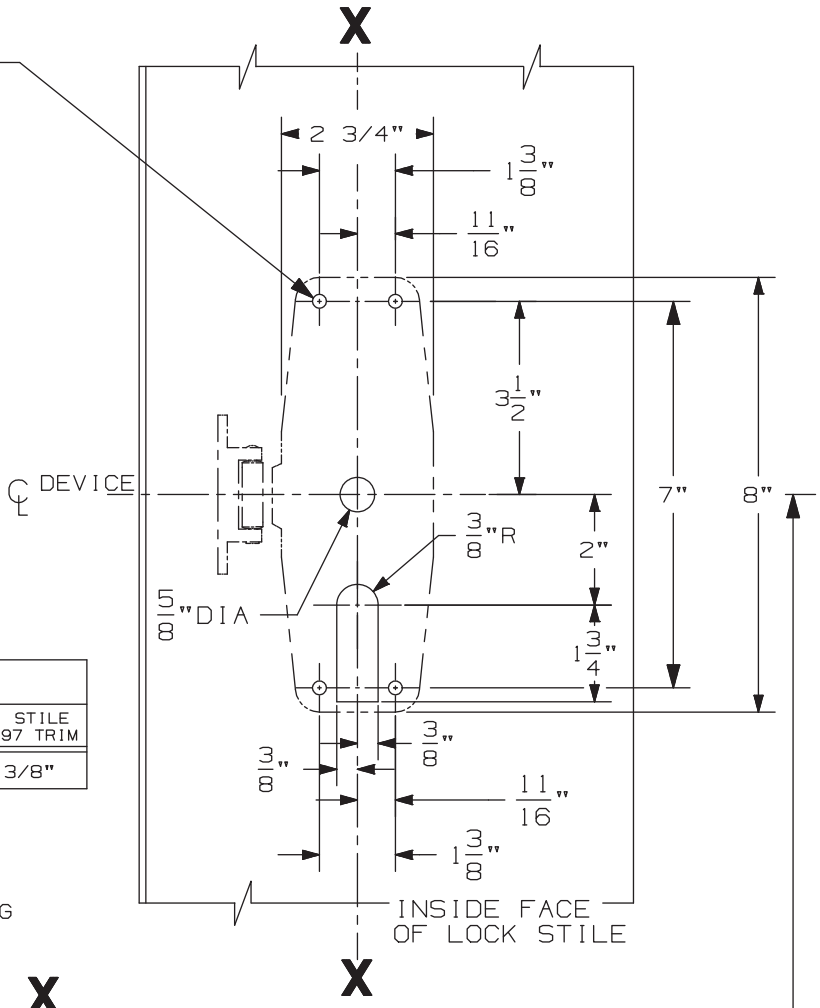

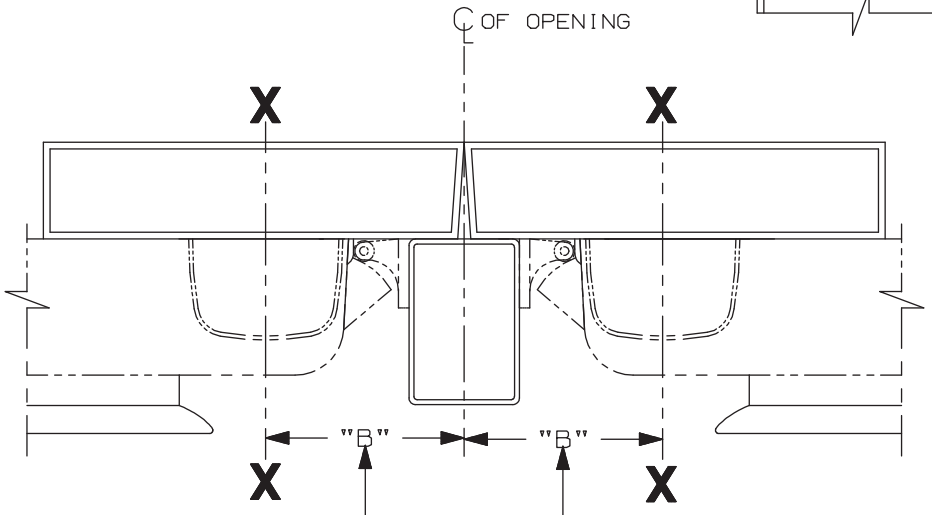

SINGLE DOOR OPENING
39 13/16" TO FINISHED FLOOR

DOUBLE DOOR OPENING
WITH VON DUPRIN MULLION
39 11/16"

LHR APPLICATION SHOWN
RHR APPLICATION OPPOSITE

DOUBLE DOOR INSTALLATION WITH VON DUPRIN MULLIONS				
MULLION	STRIKE	DIM. "B"	MIN. STILE 990/991/992 TRIM	MIN. STILE 696/697 TRIM
4954/9954	909	3 3/8"	4 7/8"	4 3/4"
9954	954	3 1/2"	5"	4 7/8"
5654	909	2 15/16"	4 3/8"	4 1/4"

NOTES:
1. THESE FOUR HOLES TO BE PREPARED FOR SURFACE APPLICATION WHEN USING 696/697 TRIM. DO NOT PREPARE FOR SEX BOLTS.
2. FOR STOCK HOLLOW METAL DOORS SEE TEMPLATE NO. 10621 FOR TYPE "161" CUTOUT AND 10623 FOR TYPE "86" CUTOUT.
3. GLASS BEAD KIT AVAILABLE WHEN REQUIRED.
4. FOR OUTSIDE TRIM PREPARATION, WHEN REQUIRED, SEE TRIM TEMPLATE.

XP98/XP99 & XP/98-F/XP99-F TP, K, & L Series Rim Devices

VON DUPRIN®

NOTES: See Master Sheet #10001 For Suggested Reinforcing

TEMPLATE NUMBER: 10613_b

DATE: 05-22-13

DEVICE APPLICATION SCHEDULE	
98 RIM SERIES	99 RIM SERIES
9827 SERIES	9927 SERIES
9847 SERIES	9947 SERIES
9849 SERIES	9949 SERIES

996L, E996L, 996L-BE, E996L-BE 996K, 996K-BE R/V SERIES
TRIM METAL DOOR APPLICATION

VON DUPRIN®

NOTES: SEE MASTER SHEET #10001 FOR SUGGESTED REINFORCING

TEMPLATE NUMBER: 20003_e

DATE: 10-30-14

RIM APPLICATION

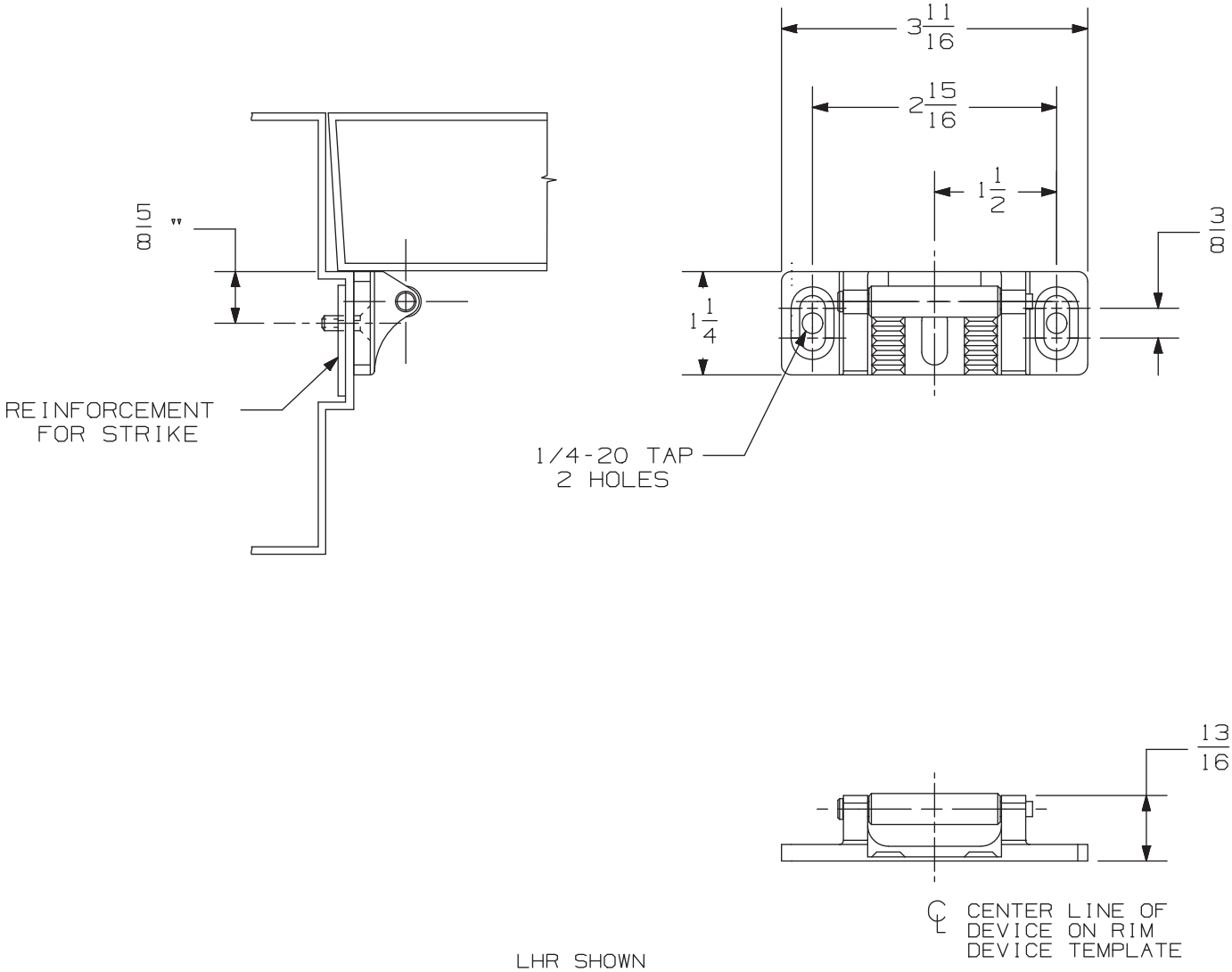

LHR SHOWN
RHR OPPOSITE

NOTE: DEVICE MOUNTING HOLES TO BE PREPARED AT INSTALLATION ON DOOR.

909 Strike	VON DUPRIN®	
NOTES: SEE MASTER SHEET #10001 FOR SUGGESTED REINFORCING	TEMPLATE NUMBER: 30042_b	DATE: 05-24-13

RIM APPLICATION

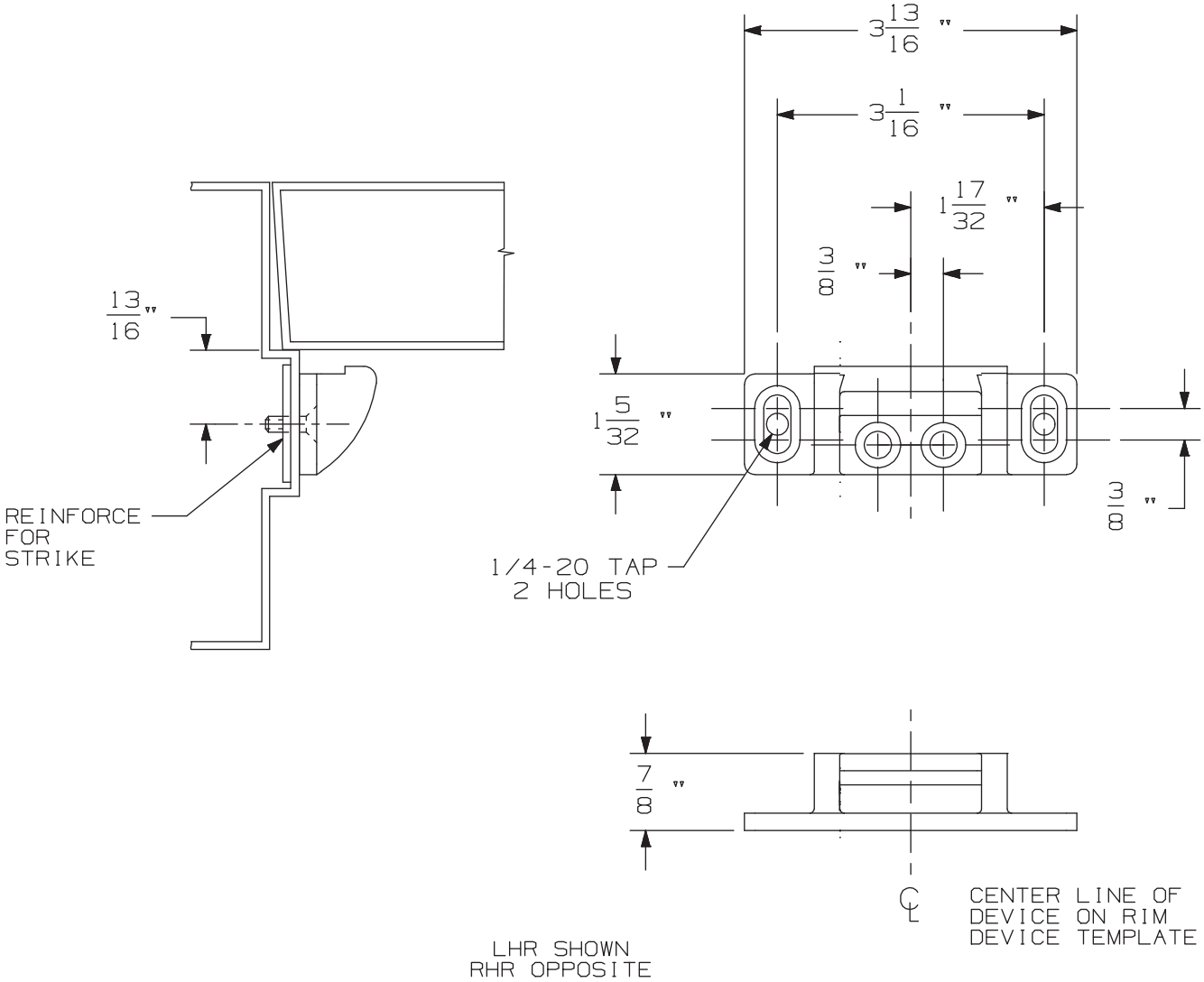

NOTE: DEVICE MOUNTING HOLES TO BE PREPARED AT INSTALLATION ON DOOR.

954 Strike	VON DUPRIN®	
NOTES: SEE MASTER SHEET #10001 FOR SUGGESTED REINFORCING	TEMPLATE NUMBER: 30041_b	DATE: 05-24-13

DEVICE APPLICATION SCHEDULE	
98 RIM SERIES	99 RIM SERIES
9827 SERIES	9927 SERIES
9847 SERIES	9947 SERIES
9849 SERIES	9949 SERIES

996L, E996L, 996L-BE, E996L-BE 996K, 996K-BE R/V SERIES
TRIM METAL DOOR APPLICATION

VON DUPRIN®

NOTES: SEE MASTER SHEET #10001 FOR SUGGESTED REINFORCING

TEMPLATE NUMBER: 20003_e

DATE: 10-30-14

RIM APPLICATION

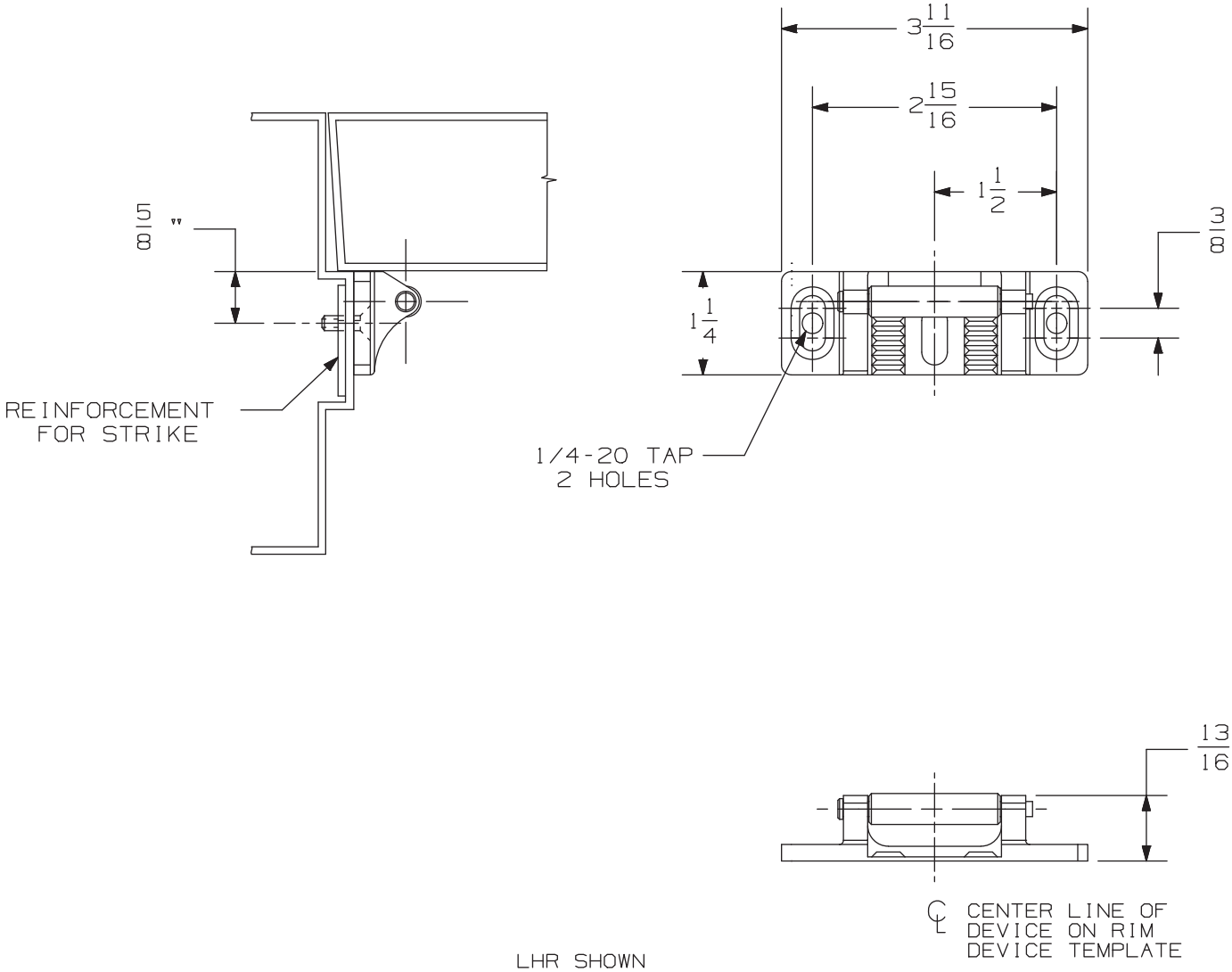

LHR SHOWN
RHR OPPOSITE

NOTE: DEVICE MOUNTING HOLES TO BE PREPARED AT INSTALLATION ON DOOR.

909 Strike	VON DUPRIN®	
NOTES: SEE MASTER SHEET #10001 FOR SUGGESTED REINFORCING	TEMPLATE NUMBER: 30042_b	DATE: 05-24-13

RIM APPLICATION

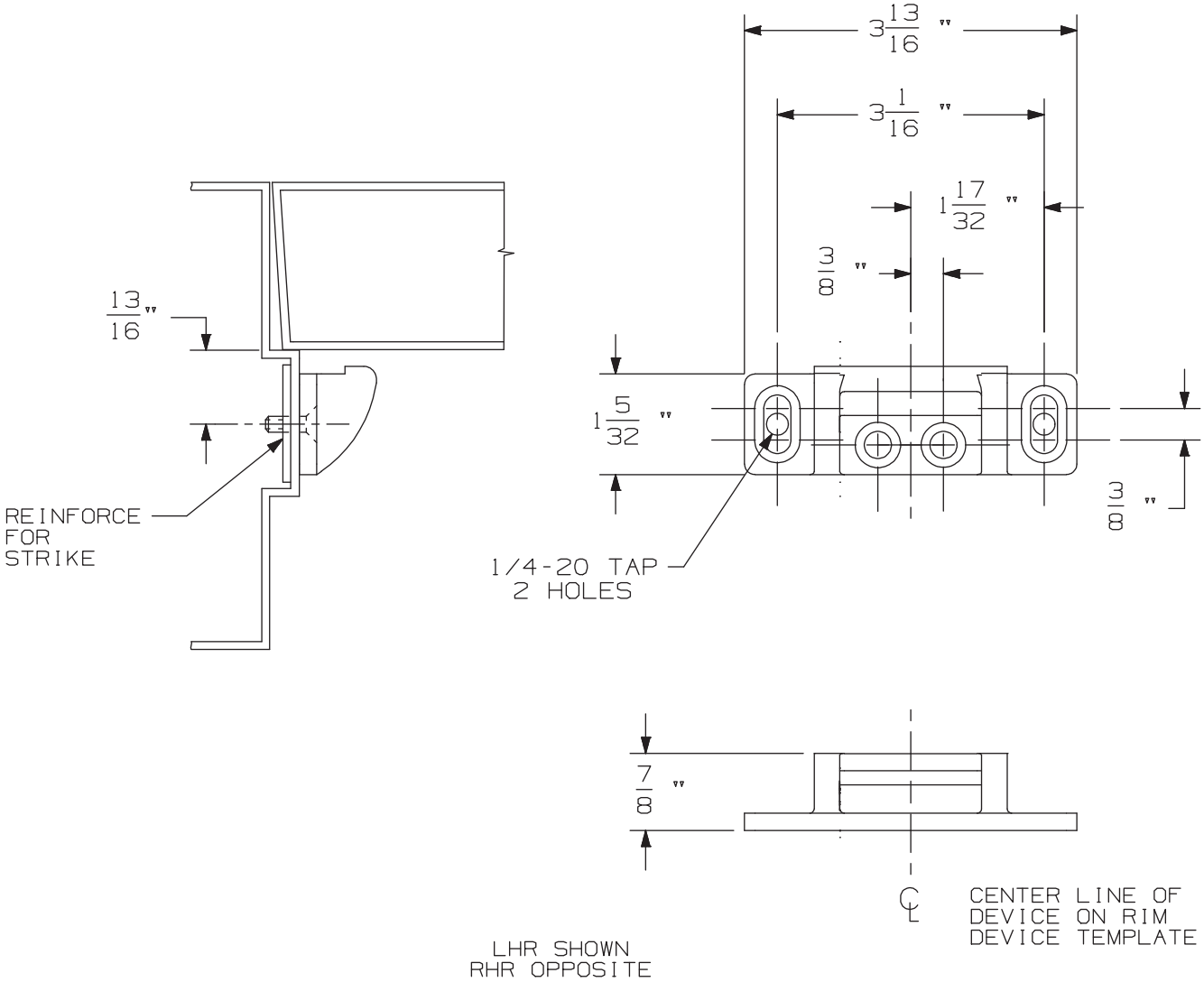

NOTE: DEVICE MOUNTING HOLES TO BE PREPARED AT INSTALLATION ON DOOR.

954 Strike	VON DUPRIN®	
NOTES: SEE MASTER SHEET #10001 FOR SUGGESTED REINFORCING	TEMPLATE NUMBER: 30041_b	DATE: 05-24-13

APPLICATION	PREPARATION
SURFACE APPLICATION	#10-24 TAP 4 PLACES
990 TRIM APPLICATION OR SEX BOLT APPLICATION (SEE NOTE 1)	1/4' DIA THIS SIDE 13/32" DIA OPPOSITE SIDE - 4 PLACES

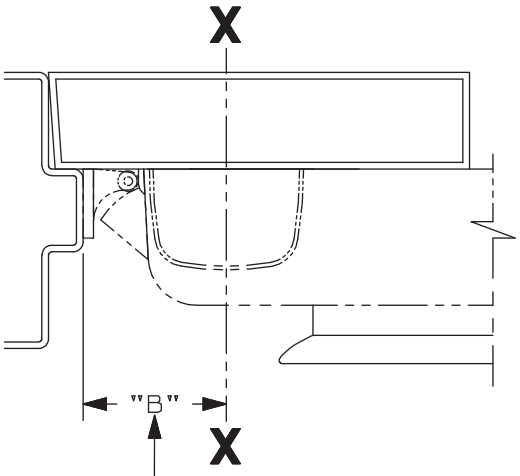

SINGLE DOOR INSTALLATION			
STRIKE	DIM. "B"	MIN. STILE 990/991/992 TRIM	MIN. STILE 696/697 TRIM
909	2 3/8"	4 1/2"	4 3/8"

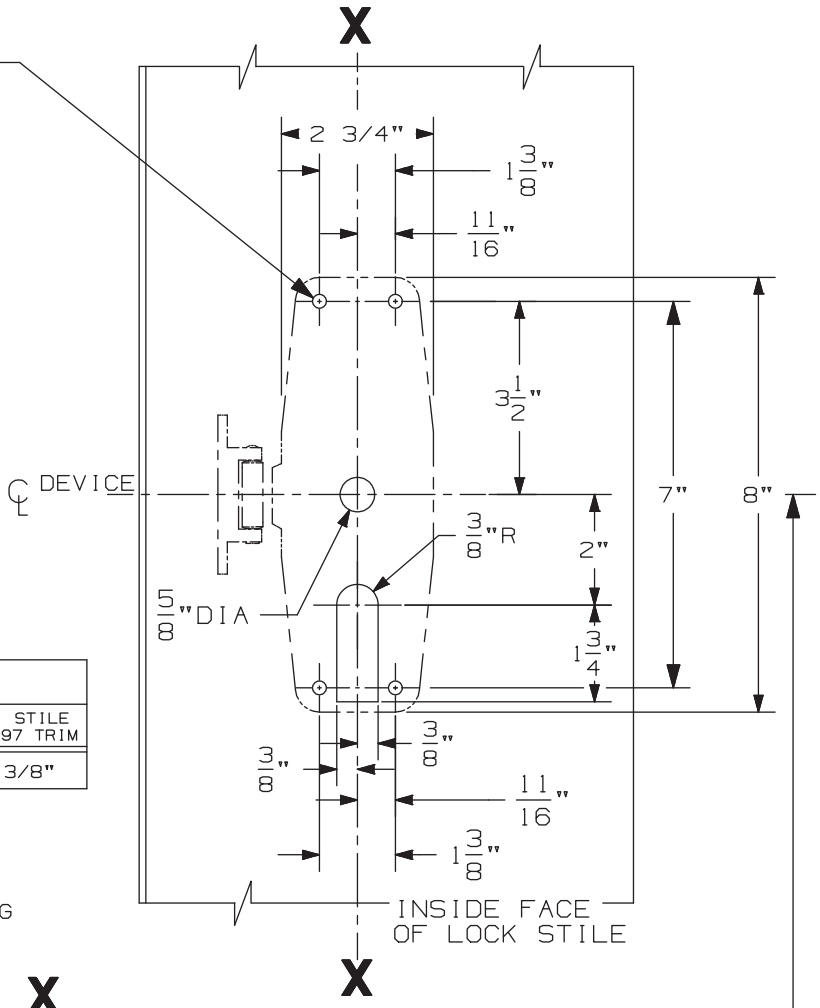

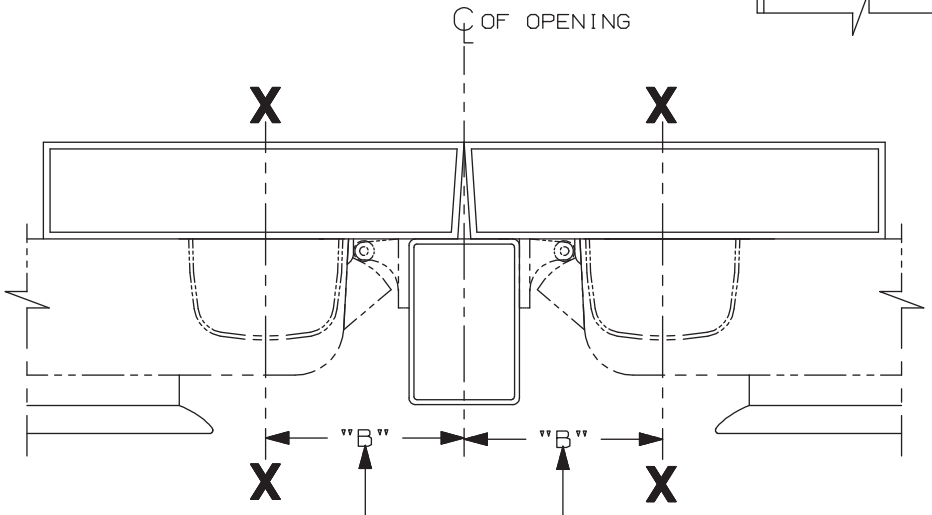

SINGLE DOOR OPENING
39 13/16" TO FINISHED FLOOR

DOUBLE DOOR OPENING
WITH VON DUPRIN MULLION
39 11/16"

LHR APPLICATION SHOWN
RHR APPLICATION OPPOSITE

DOUBLE DOOR INSTALLATION WITH VON DUPRIN MULLIONS				
MULLION	STRIKE	DIM. "B"	MIN. STILE 990/991/992 TRIM	MIN. STILE 696/697 TRIM
4954/9954	909	3 3/8"	4 7/8"	4 3/4"
9954	954	3 1/2"	5"	4 7/8"
5654	909	2 15/16"	4 3/8"	4 1/4"

NOTES:
1. THESE FOUR HOLES TO BE PREPARED FOR SURFACE APPLICATION WHEN USING 696/697 TRIM. DO NOT PREPARE FOR SEX BOLTS.
2. FOR STOCK HOLLOW METAL DOORS SEE TEMPLATE NO. 10621 FOR TYPE "161" CUTOUT AND 10623 FOR TYPE "86" CUTOUT.
3. GLASS BEAD KIT AVAILABLE WHEN REQUIRED.
4. FOR OUTSIDE TRIM PREPARATION, WHEN REQUIRED, SEE TRIM TEMPLATE.

XP98/XP99 & XP/98-F/XP99-F TP, K, & L Series Rim Devices

VON DUPRIN®

NOTES: See Master Sheet #10001 For Suggested Reinforcing

TEMPLATE NUMBER: 10613_b

DATE: 05-22-13

990 TP & 990 TP-BE TRIM

NOTES: SEE MASTER SHEET #10001 FOR SUGGESTED REINFORCING

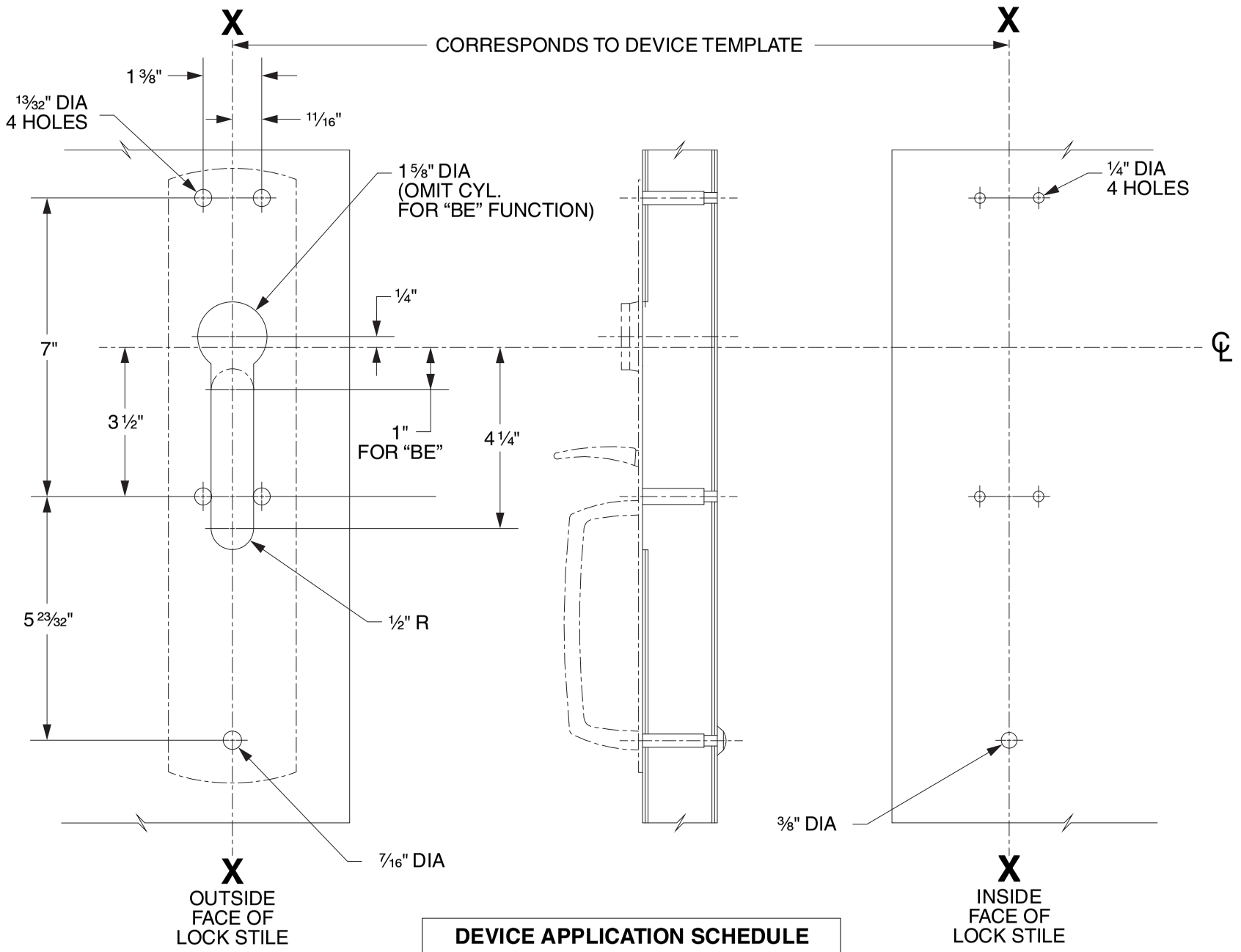

DEVICE APPLICATION SCHEDULE
98/99 SERIES RIM DEVICE
9827/9927 SERIES DEVICE
9847/9947 SERIES DEVICE
9849/9949 SERIES DEVICE

LHR SHOWN
RHR OPPOSITE

VON DUPRIN®

TEMPLATE NUMBER: 20265_C

DATE: 05-31-13

RIM APPLICATION

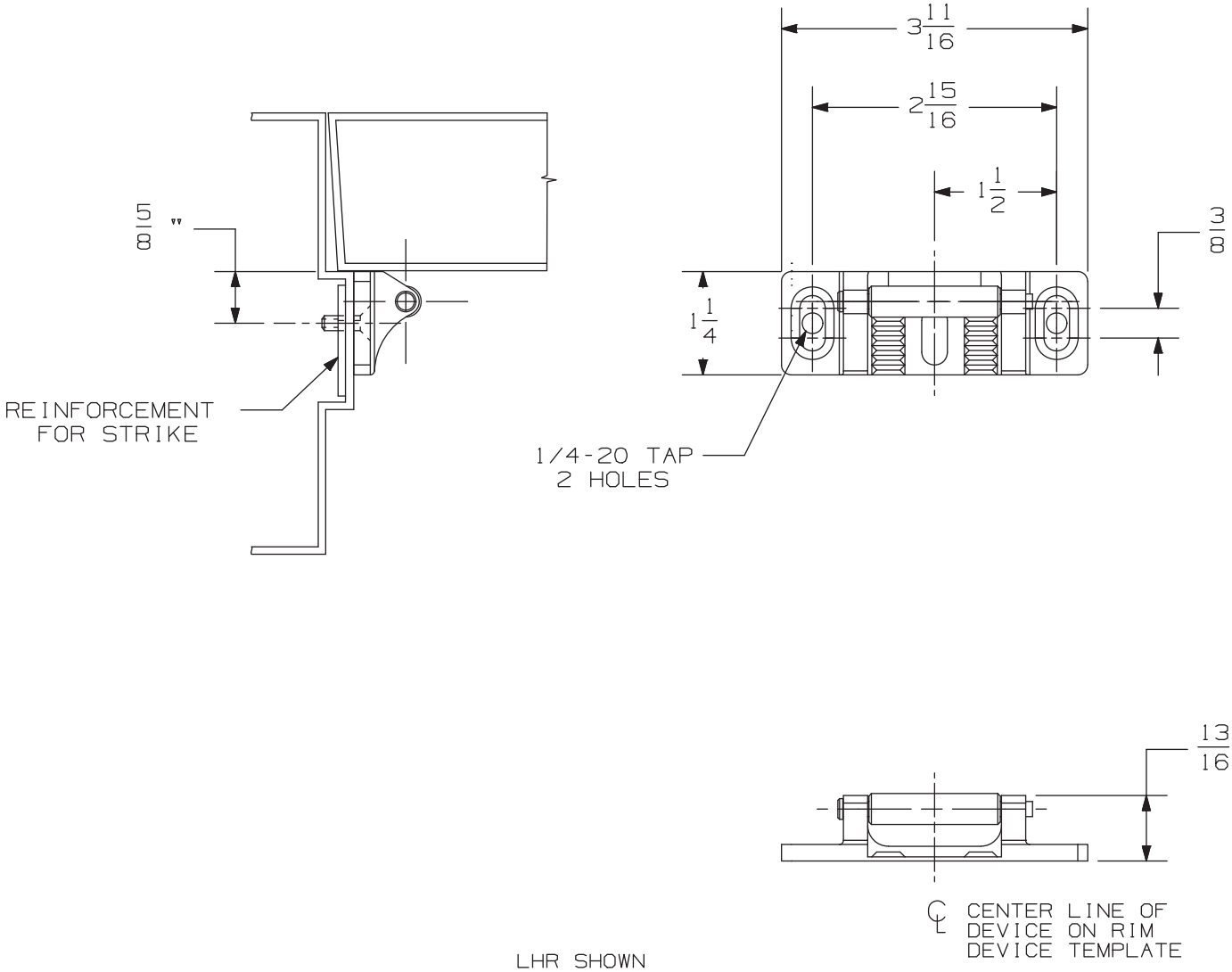

LHR SHOWN
RHR OPPOSITE

NOTE: DEVICE MOUNTING HOLES TO BE PREPARED AT INSTALLATION ON DOOR.

909 Strike	VON DUPRIN®	
NOTES: SEE MASTER SHEET #10001 FOR SUGGESTED REINFORCING	TEMPLATE NUMBER: 30042_b	DATE: 05-24-13

RIM APPLICATION

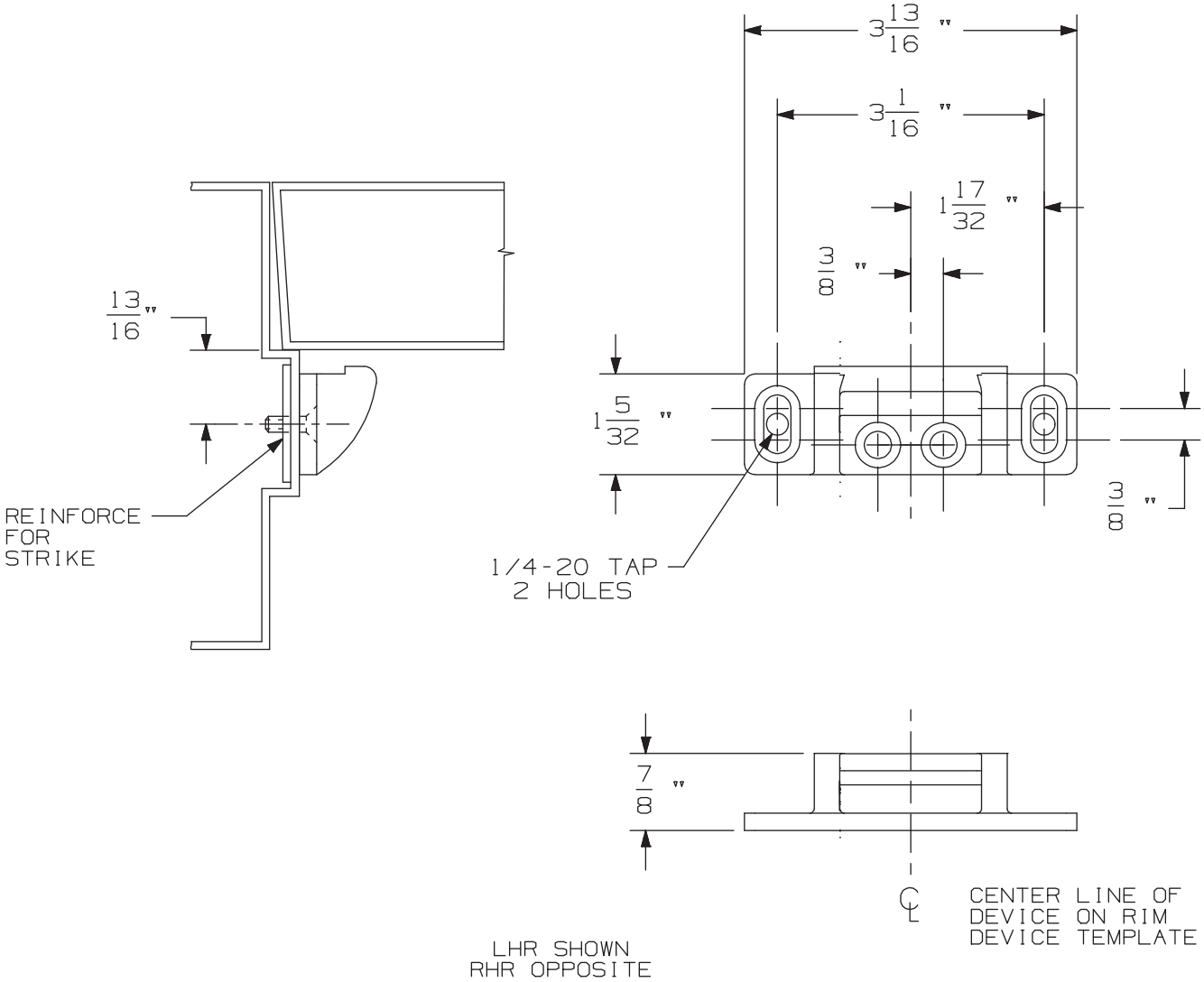

NOTE: DEVICE MOUNTING HOLES TO BE PREPARED AT INSTALLATION ON DOOR.

954 Strike	VON DUPRIN®	
NOTES: SEE MASTER SHEET #10001 FOR SUGGESTED REINFORCING	TEMPLATE NUMBER: 30041_b	DATE: 05-24-13

990 TP & 990 TP-BE TRIM

NOTES: SEE MASTER SHEET #10001 FOR SUGGESTED REINFORCING

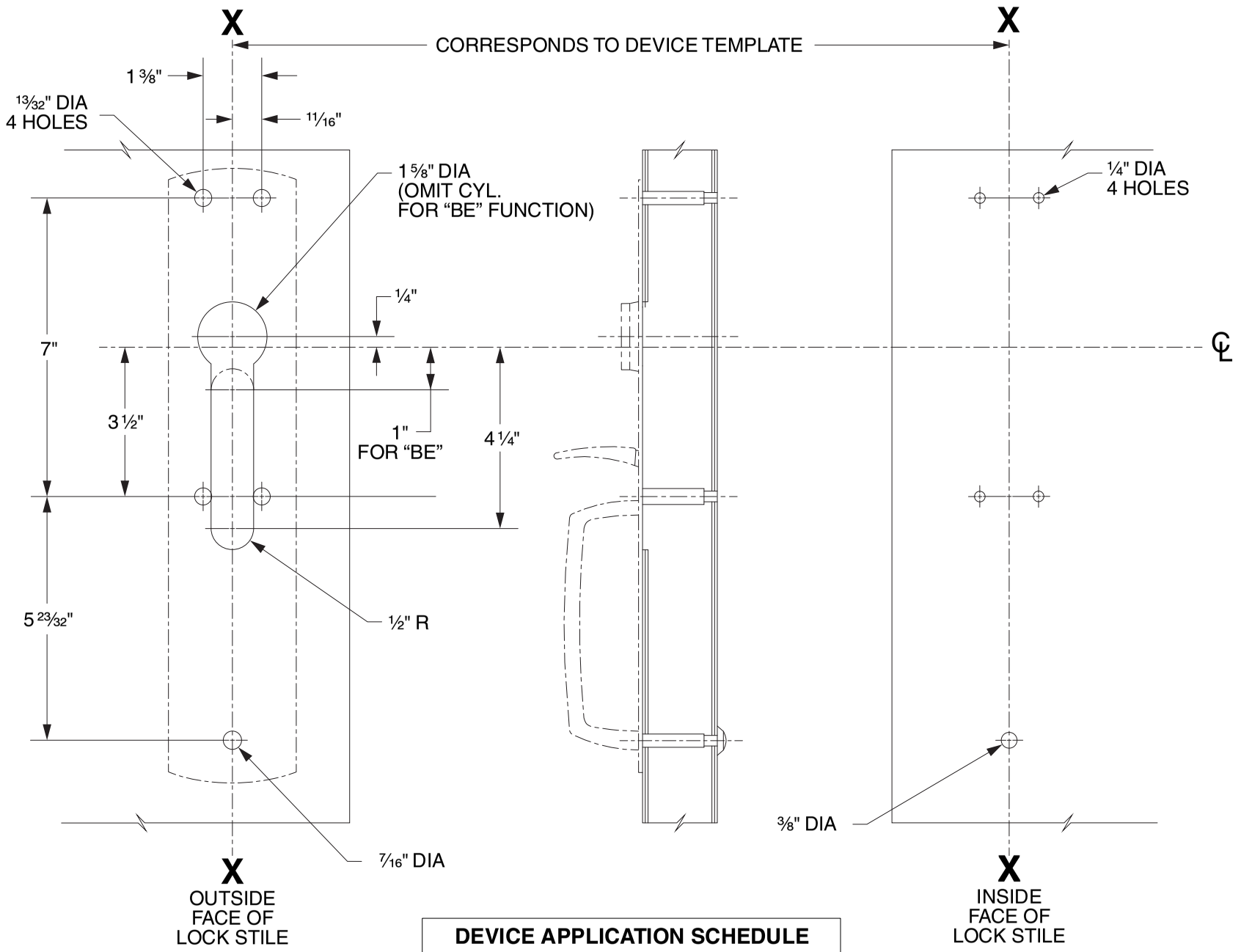

DEVICE APPLICATION SCHEDULE
98/99 SERIES RIM DEVICE
9827/9927 SERIES DEVICE
9847/9947 SERIES DEVICE
9849/9949 SERIES DEVICE

LHR SHOWN
RHR OPPOSITE

VON DUPRIN®

TEMPLATE NUMBER: 20265_C

DATE: 05-31-13

RIM APPLICATION

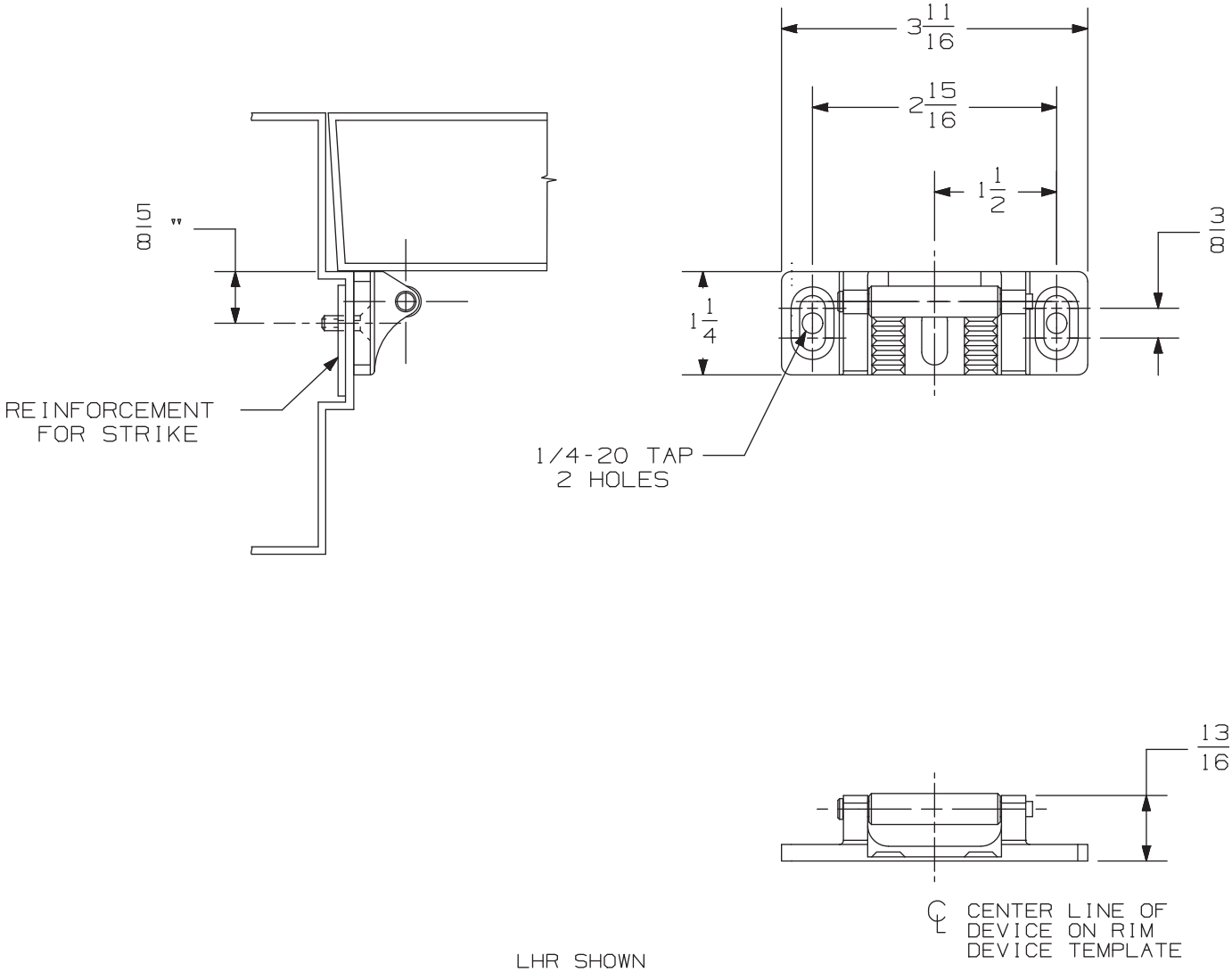

LHR SHOWN
RHR OPPOSITE

NOTE: DEVICE MOUNTING HOLES TO BE PREPARED AT INSTALLATION ON DOOR.

909 Strike	VON DUPRIN®	
NOTES: SEE MASTER SHEET #10001 FOR SUGGESTED REINFORCING	TEMPLATE NUMBER: 30042_b	DATE: 05-24-13

RIM APPLICATION

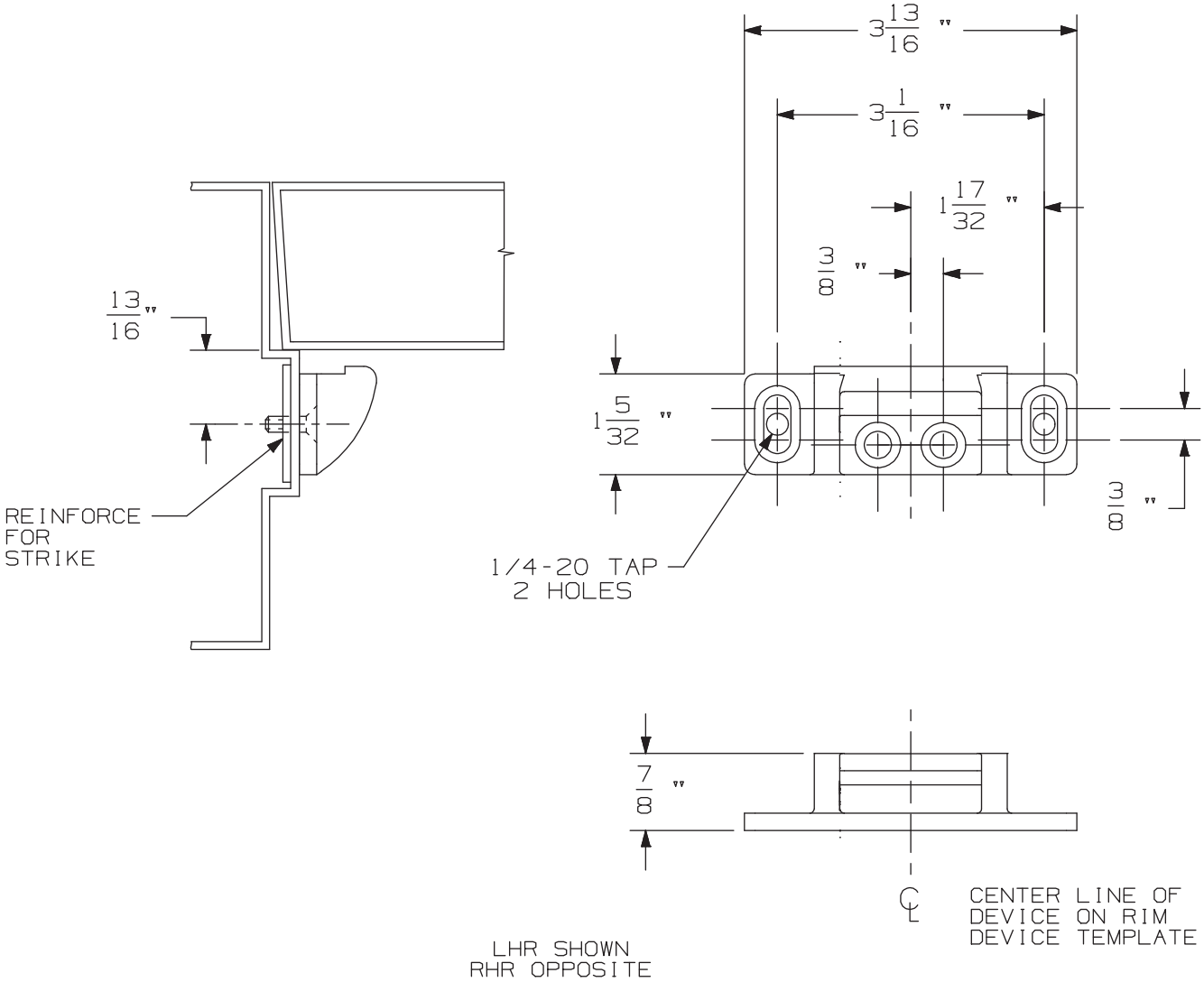

NOTE: DEVICE MOUNTING HOLES TO BE PREPARED AT INSTALLATION ON DOOR.

954 Strike	VON DUPRIN®	
NOTES: SEE MASTER SHEET #10001 FOR SUGGESTED REINFORCING	TEMPLATE NUMBER: 30041_b	DATE: 05-24-13

XP98 / XP99 Series Exit Devices

-

XP98-F/XP99-F Rim Fire (Standard, LX & RX)

APPLICATION	PREPARATION
SURFACE APPLICATION	#10-24 TAP 4 PLACES
990 TRIM APPLICATION OR SEX BOLT APPLICATION (SEE NOTE 1)	1/4" DIA THIS SIDE 13/32" DIA OPPOSITE SIDE - 4 PLACES

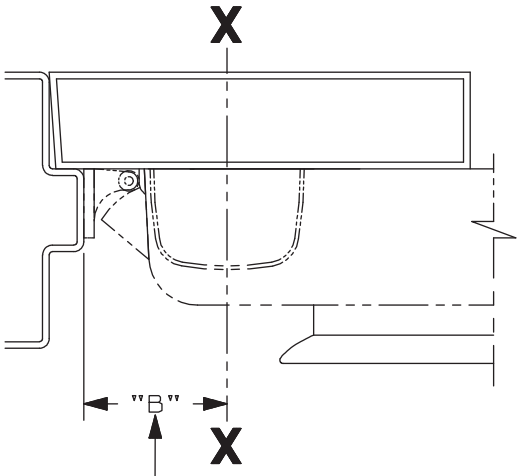

SINGLE DOOR INSTALLATION			
STRIKE	DIM. "B"	MIN. STILE 990/991/992 TRIM	MIN. STILE 696/697 TRIM
909	2 3/8"	4 1/2"	4 3/8"

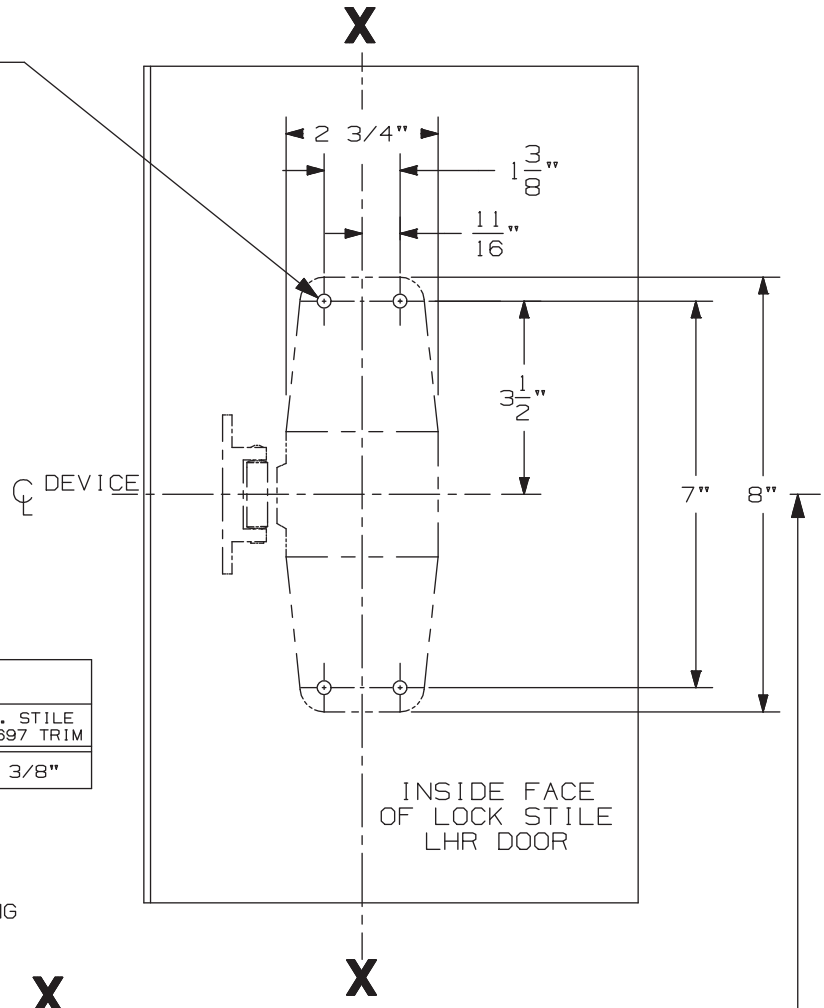

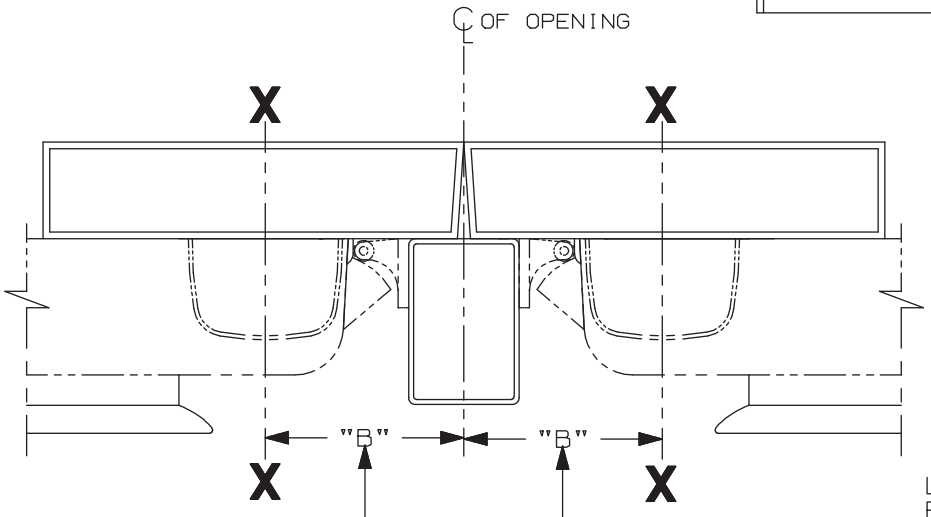

SINGLE DOOR OPENING
39 13/16" TO FINISHED FLOOR

DOUBLE DOOR OPENING
WITH VON DUPRIN MULLION
39 11/16"

LHR APPLICATION SHOWN
RHR APPLICATION OPPOSITE

DOUBLE DOOR INSTALLATION WITH VON DUPRIN MULLIONS				
MULLION	STRIKE	DIM. "B"	MIN. STILE 990/991/992 TRIM	MIN. STILE 696/697 TRIM
4954/9954	909	3 3/8"	4 7/8"	4 3/4"
9954	954	3 1/2"	5"	4 7/8"
5654	909	2 15/16"	4 3/8"	4 1/4"

NOTES:
1. THESE FOUR HOLES TO BE PREPARED FOR SURFACE APPLICATION WHEN USING 696/697 TRIM. DO NOT PREPARE FOR SEX BOLTS.
2. FOR STOCK HOLLOW METAL DOORS SEE TEMPLATE NO. 10619 FOR TYPE "161" CUTOUT AND 10620 FOR TYPE "86" CUTOUT.
3. GLASS BEAD KIT AVAILABLE WHEN REQUIRED.
4. FOR OUTSIDE TRIM PREPARATION, WHEN REQUIRED, SEE TRIM TEMPLATE.

XP98/XP99 & XP98-F/XP99-F EO, DT Rim Devices

VON DUPRIN®

NOTES: See Master Sheet #10001 For Suggested Reinforcing

TEMPLATE NUMBER: 10611_b

DATE: 05-22-13

RIM APPLICATION

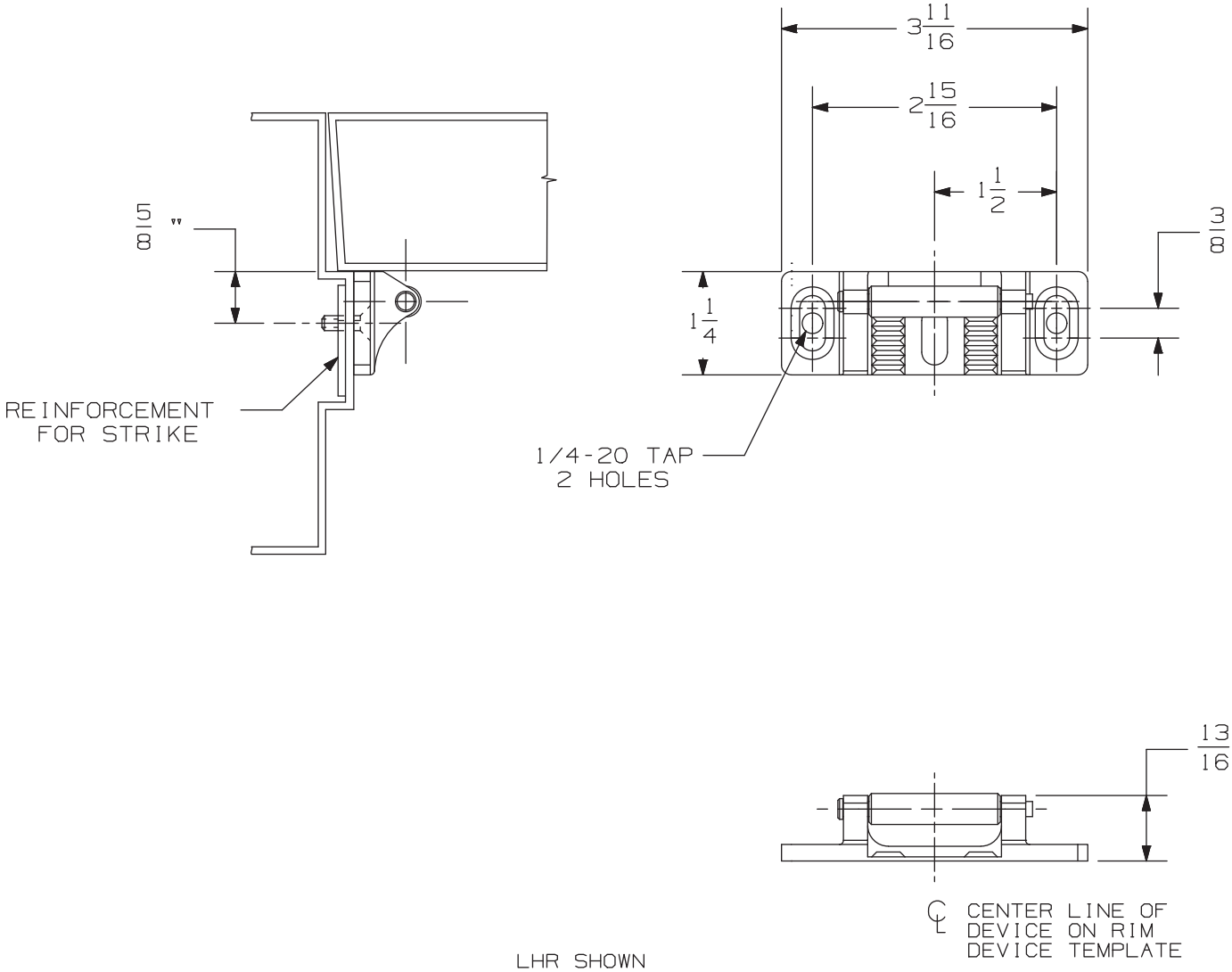

LHR SHOWN
RHR OPPOSITE

NOTE: DEVICE MOUNTING HOLES TO BE PREPARED AT INSTALLATION ON DOOR.

909 Strike	VON DUPRIN®	
NOTES: SEE MASTER SHEET #10001 FOR SUGGESTED REINFORCING	TEMPLATE NUMBER: 30042_b	DATE: 05-24-13

RIM APPLICATION

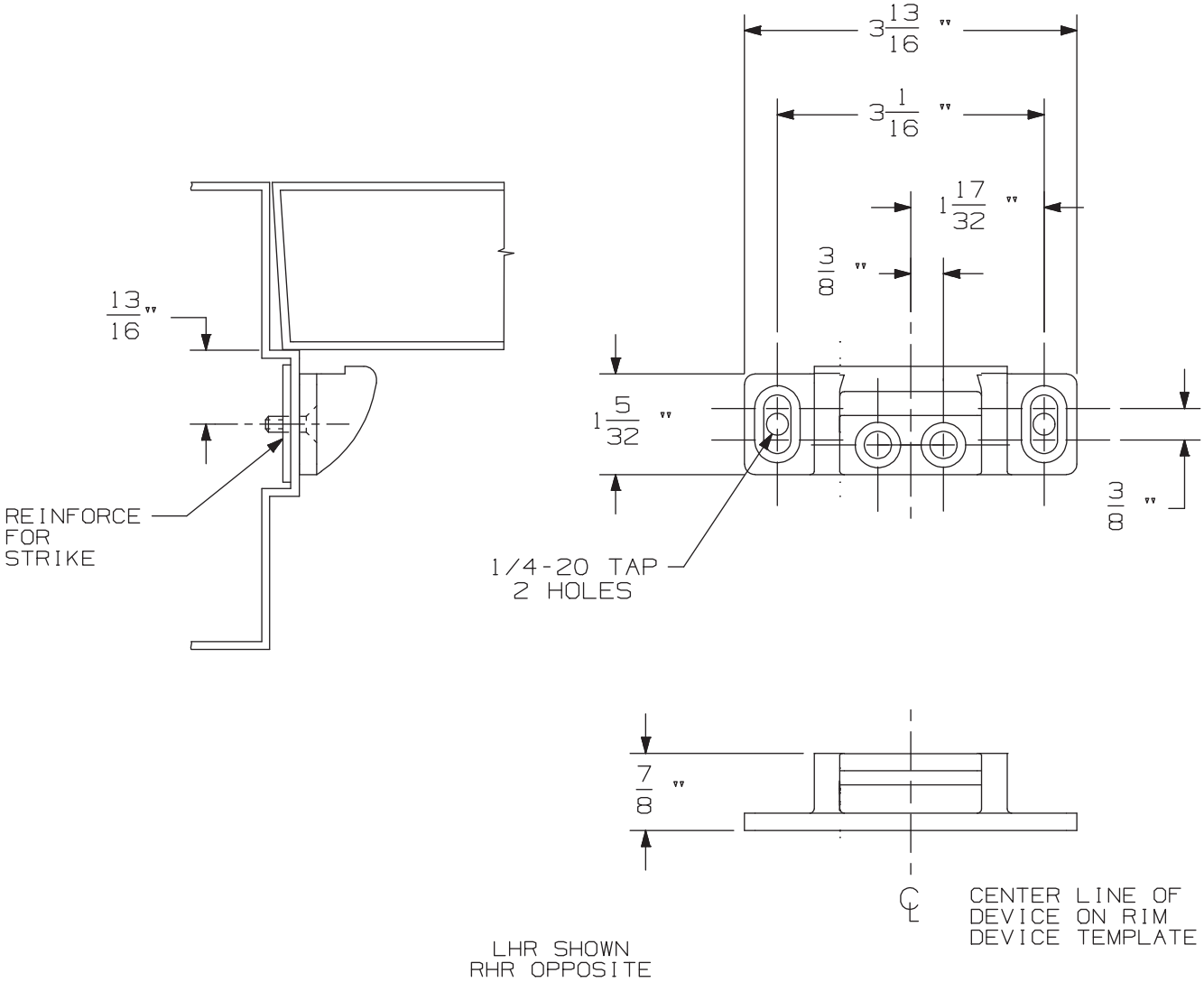

NOTE: DEVICE MOUNTING HOLES TO BE PREPARED AT INSTALLATION ON DOOR.

954 Strike	VON DUPRIN®	
NOTES: SEE MASTER SHEET #10001 FOR SUGGESTED REINFORCING	TEMPLATE NUMBER: 30041_b	DATE: 05-24-13

APPLICATION	PREPARATION
SURFACE APPLICATION	#10-24 TAP 4 PLACES
990 TRIM APPLICATION OR SEX BOLT APPLICATION (SEE NOTE 1)	1/4' DIA THIS SIDE 13/32" DIA OPPOSITE SIDE - 4 PLACES

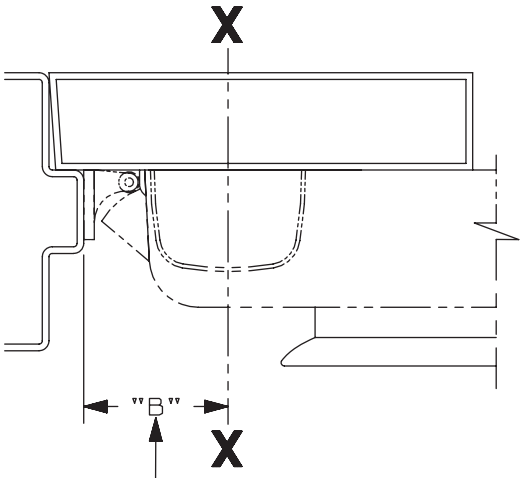

SINGLE DOOR INSTALLATION			
STRIKE	DIM. "B"	MIN. STILE 990/991/992 TRIM	MIN. STILE 696/697 TRIM
909	2 3/8"	4 1/2"	4 3/8"

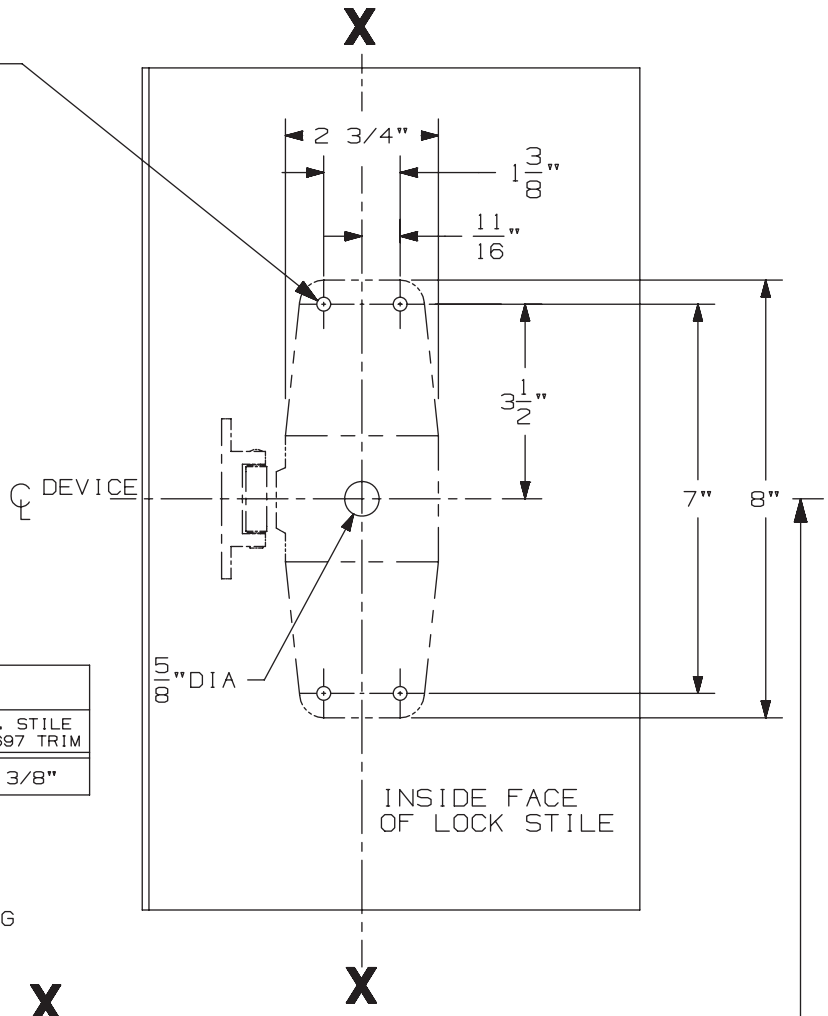

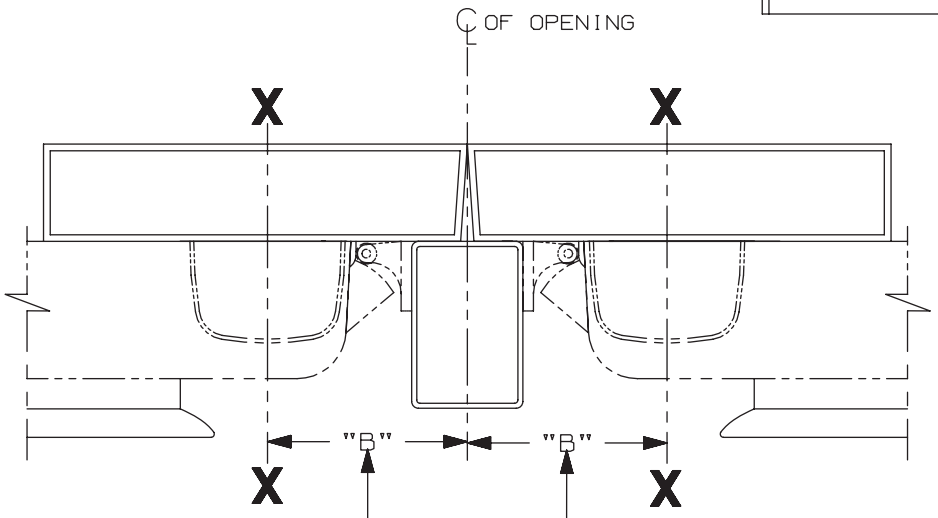

SINGLE DOOR OPENING
39 13/16" TO FINISHED FLOOR

DOUBLE DOOR OPENING
WITH VON DUPRIN MULLION
39 11/16"

LHR APPLICATION SHOWN,
RHR APPLICATION OPPOSITE

DOUBLE DOOR INSTALLATION WITH VON DUPRIN MULLIONS				
MULLION	STRIKE	DIM. "B"	MIN. STILE 990/991/992 TRIM	MIN. STILE 696/697 TRIM
4954/9954	909	3 3/8"	4 7/8"	4 3/4"
9954	954	3 1/2"	5"	4 7/8"
5654	909	2 15/16"	4 3/8"	4 1/4"

NOTES:
1. THESE FOUR HOLES TO BE PREPARED FOR SURFACE APPLICATION WHEN USING 696/697 TRIM. DO NOT PREPARE FOR SEX BOLTS.
2. FOR STOCK HOLLOW METAL DOORS SEE TEMPLATE NO. 10619 FOR TYPE "161" CUTOUT AND 10622 FOR TYPE "86" CUTOUT.
3. GLASS BEAD KIT AVAILABLE WHEN REQUIRED.
4. FOR OUTSIDE TRIM PREPARATION, WHEN REQUIRED, SEE TRIM TEMPLATE.

XP98/XP99 & XP98-F/XP99-F NL Series Rim Device

VON DUPRIN®

NOTES: See Master Sheet #10001 For Suggested Reinforcing

TEMPLATE NUMBER: 10612_b

DATE: 05-22-13

990 NL TRIM

NOTES: SEE MASTER SHEET #10001 FOR SUGGESTED REINFORCING

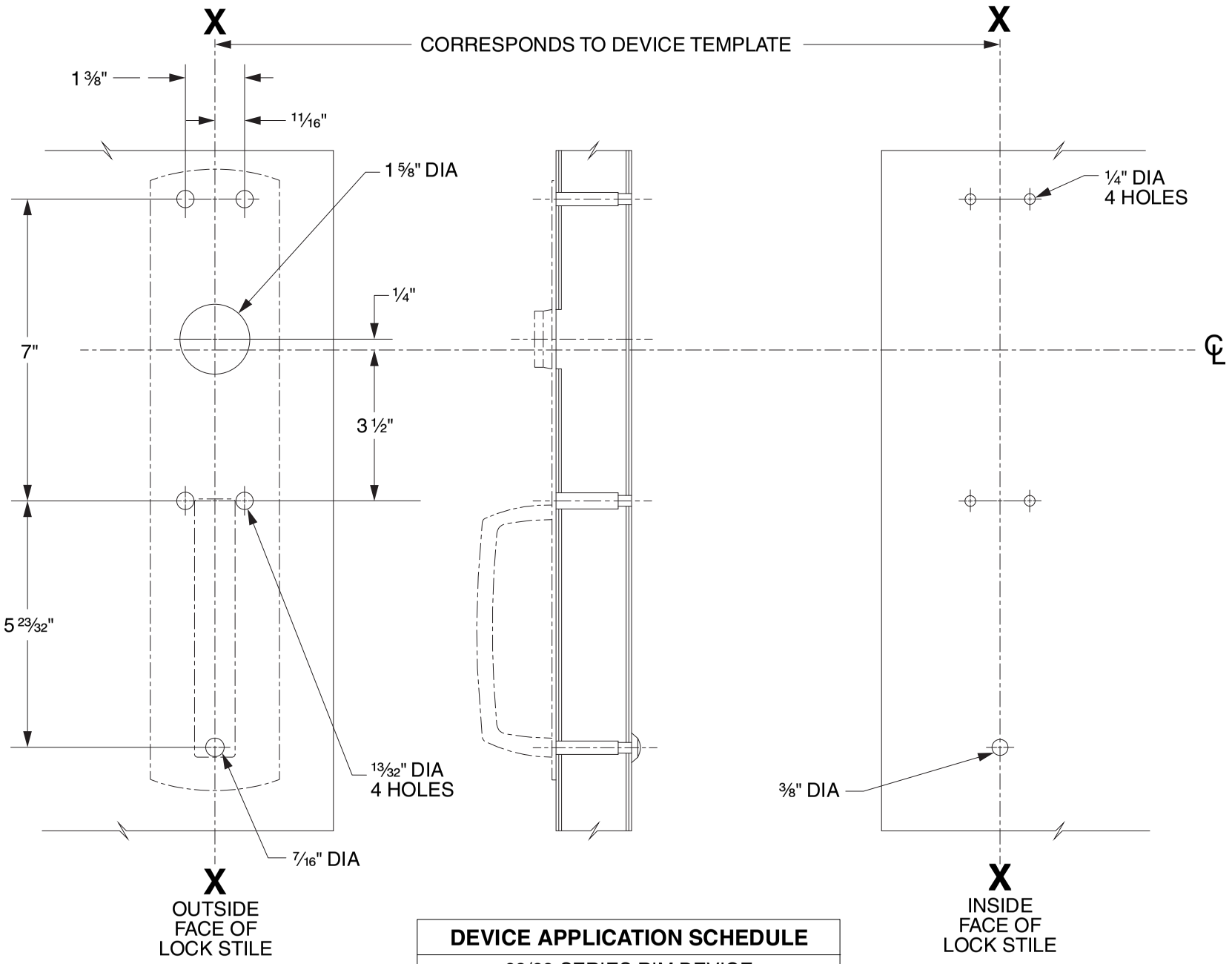

DEVICE APPLICATION SCHEDULE
98/99 SERIES RIM DEVICE
9827/9927 SERIES DEVICE
9847/9947 SERIES DEVICE
9849/9949 SERIES DEVICE

LHR SHOWN
RHR OPPOSITE

VON DUPRIN®

TEMPLATE NUMBER: 20267_C

DATE: 05-31-13

RIM APPLICATION

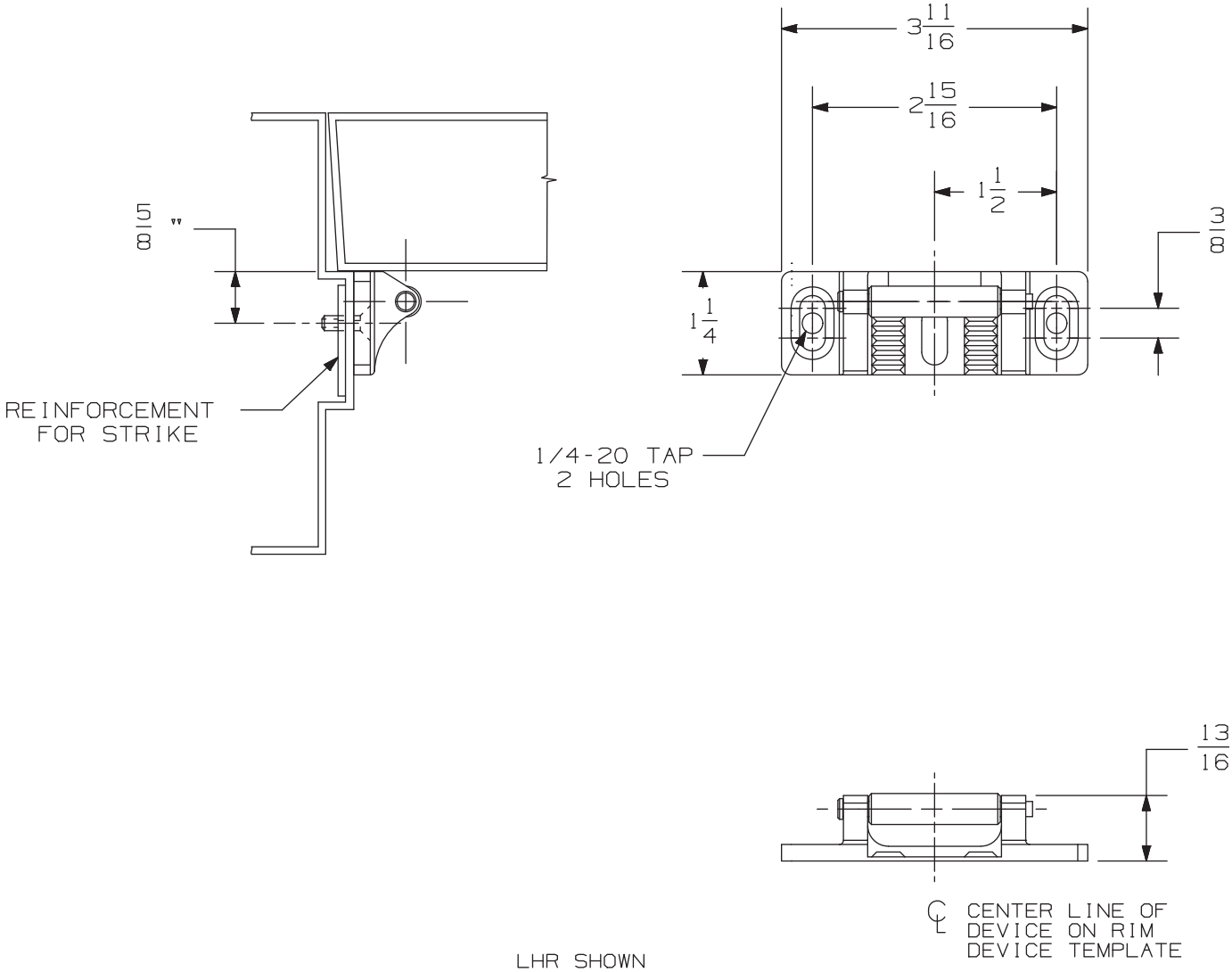

LHR SHOWN
RHR OPPOSITE

NOTE: DEVICE MOUNTING HOLES TO BE PREPARED AT INSTALLATION ON DOOR.

909 Strike	VON DUPRIN®	
NOTES: SEE MASTER SHEET #10001 FOR SUGGESTED REINFORCING	TEMPLATE NUMBER: 30042_b	DATE: 05-24-13

RIM APPLICATION

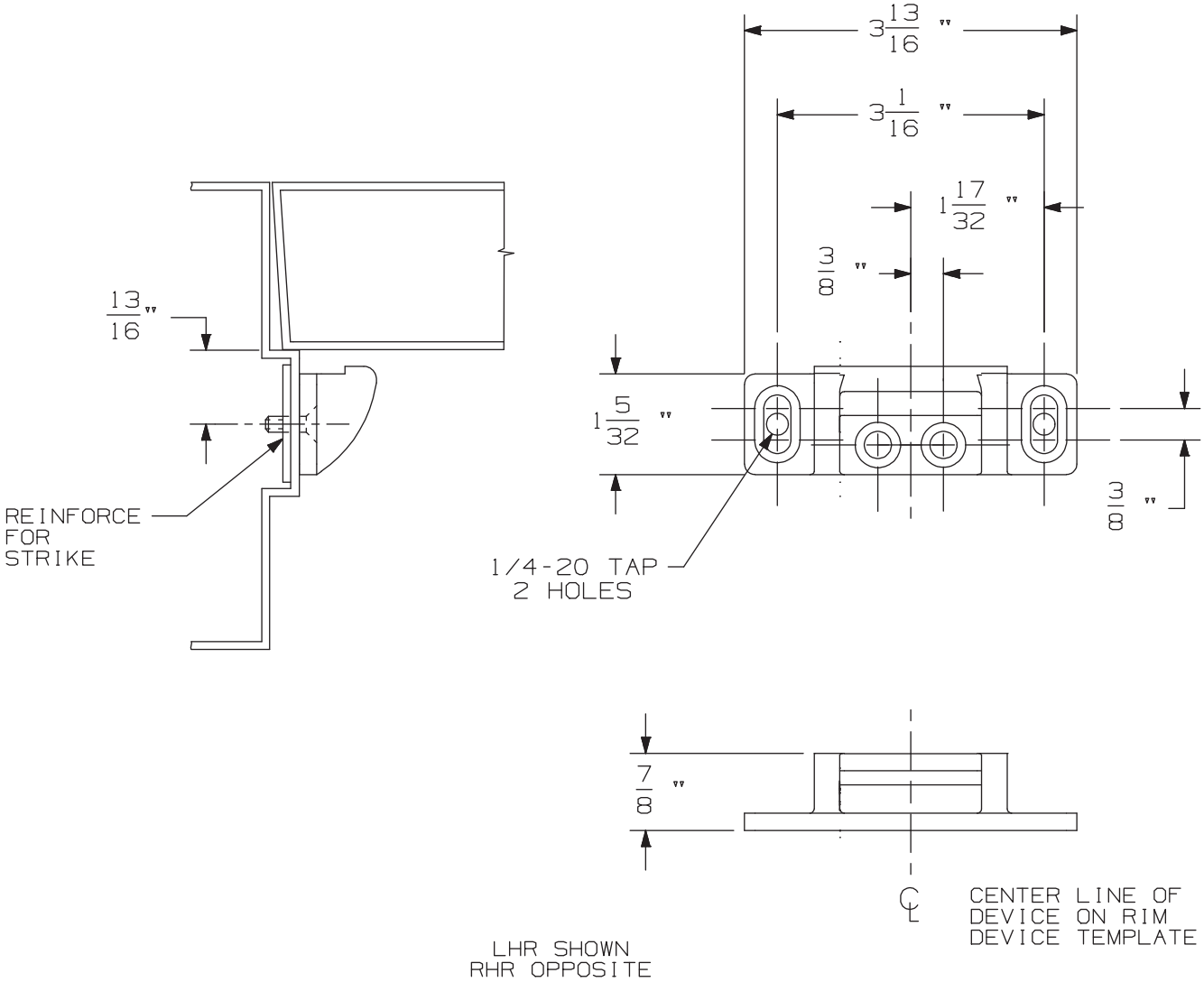

NOTE: DEVICE MOUNTING HOLES TO BE PREPARED AT INSTALLATION ON DOOR.

954 Strike	VON DUPRIN®	
NOTES: SEE MASTER SHEET #10001 FOR SUGGESTED REINFORCING	TEMPLATE NUMBER: 30041_b	DATE: 05-24-13

APPLICATION	PREPARATION
SURFACE APPLICATION	#10-24 TAP 4 PLACES
990 TRIM APPLICATION OR SEX BOLT APPLICATION (SEE NOTE 1)	1/4' DIA THIS SIDE 13/32" DIA OPPOSITE SIDE - 4 PLACES

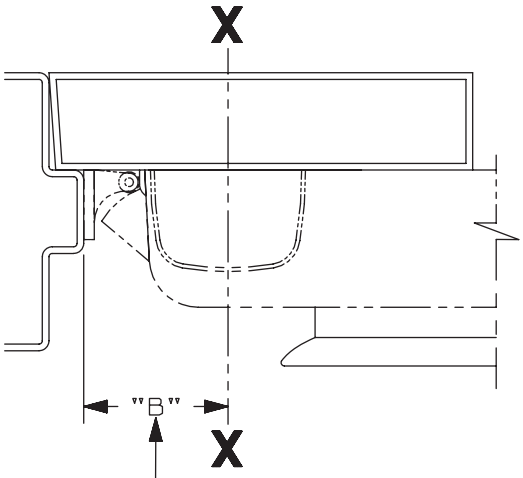

SINGLE DOOR INSTALLATION			
STRIKE	DIM. "B"	MIN. STILE 990/991/992 TRIM	MIN. STILE 696/697 TRIM
909	2 3/8"	4 1/2"	4 3/8"

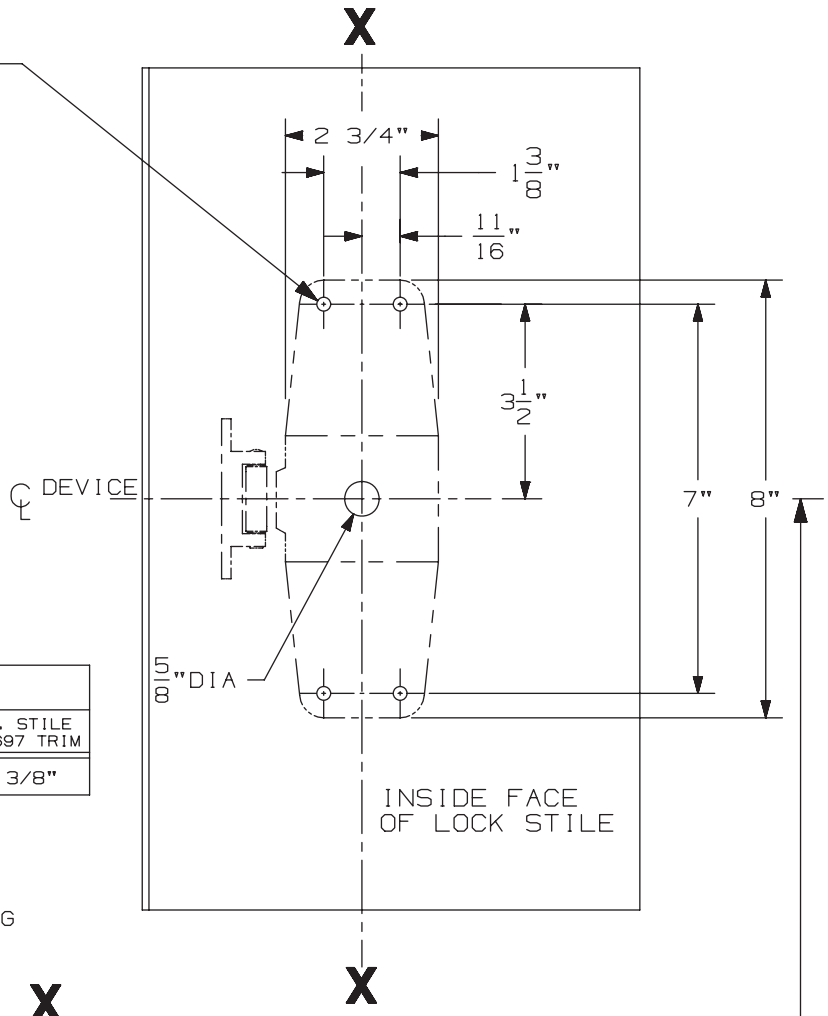

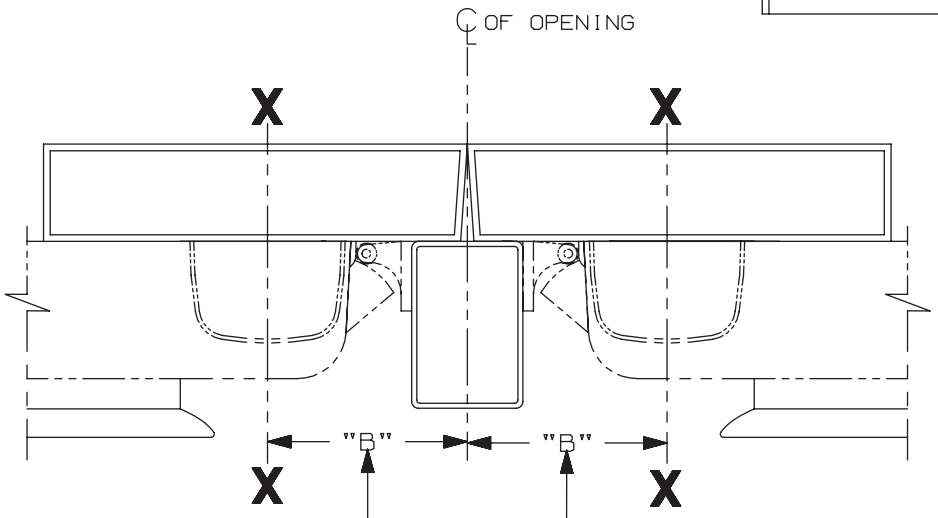

SINGLE DOOR OPENING
39 13/16" TO FINISHED FLOOR

DOUBLE DOOR OPENING
WITH VON DUPRIN MULLION
39 11/16"

LHR APPLICATION SHOWN,
RHR APPLICATION OPPOSITE

DOUBLE DOOR INSTALLATION WITH VON DUPRIN MULLIONS				
MULLION	STRIKE	DIM. "B"	MIN. STILE 990/991/992 TRIM	MIN. STILE 696/697 TRIM
4954/9954	909	3 3/8"	4 7/8"	4 3/4"
9954	954	3 1/2"	5"	4 7/8"
5654	909	2 15/16"	4 3/8"	4 1/4"

NOTES:
1. THESE FOUR HOLES TO BE PREPARED FOR SURFACE APPLICATION WHEN USING 696/697 TRIM. DO NOT PREPARE FOR SEX BOLTS.
2. FOR STOCK HOLLOW METAL DOORS SEE TEMPLATE NO. 10619 FOR TYPE "161" CUTOUT AND 10622 FOR TYPE "86" CUTOUT.
3. GLASS BEAD KIT AVAILABLE WHEN REQUIRED.
4. FOR OUTSIDE TRIM PREPARATION, WHEN REQUIRED, SEE TRIM TEMPLATE.

XP98/XP99 & XP98-F/XP99-F NL Series Rim Device

VON DUPRIN®

NOTES: See Master Sheet #10001 For Suggested Reinforcing

TEMPLATE NUMBER: 10612_b

DATE: 05-22-13

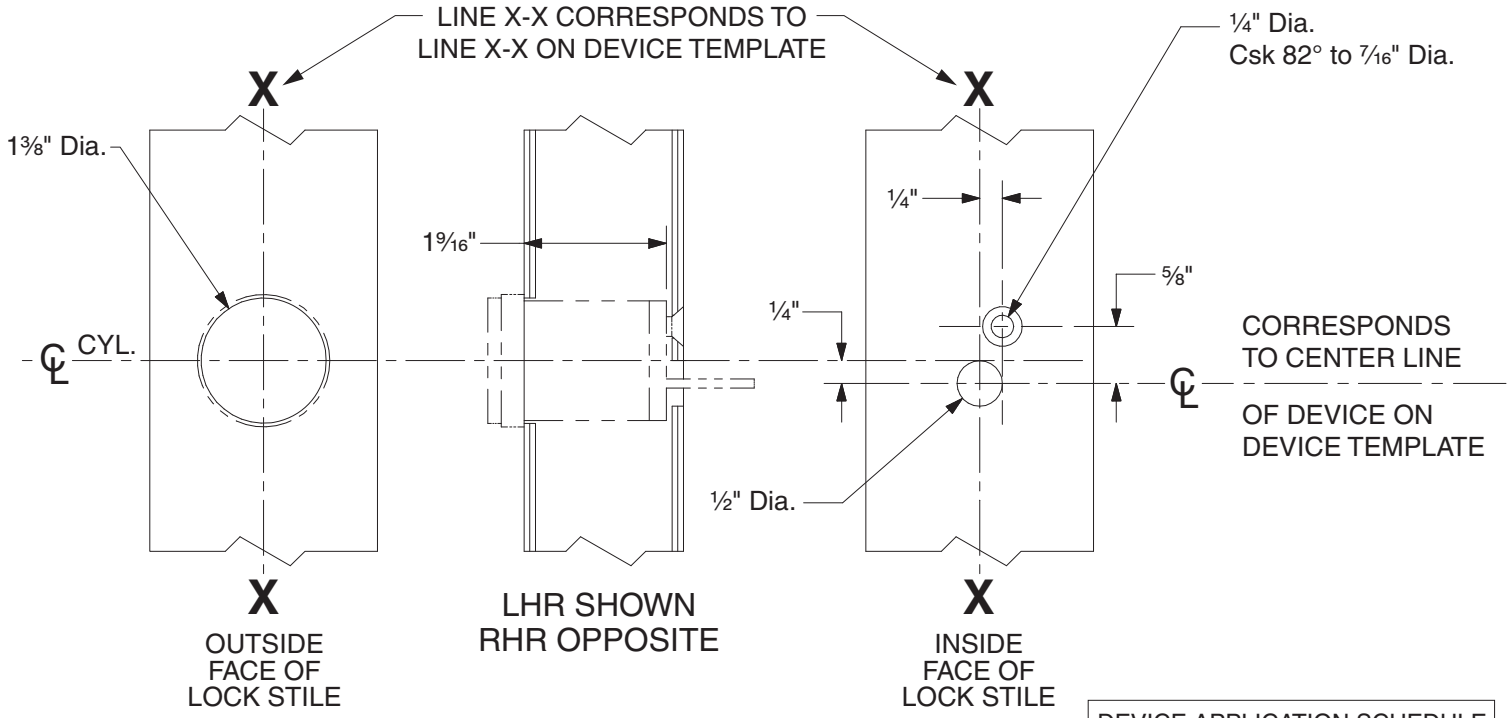

DEVICE APPLICATION SCHEDULE	
98 RIM SERIES	99 RIM SERIES
9827 SERIES	9927 SERIES
9847 SERIES	9947 SERIES
22 RIM SERIES	2227 SERIES

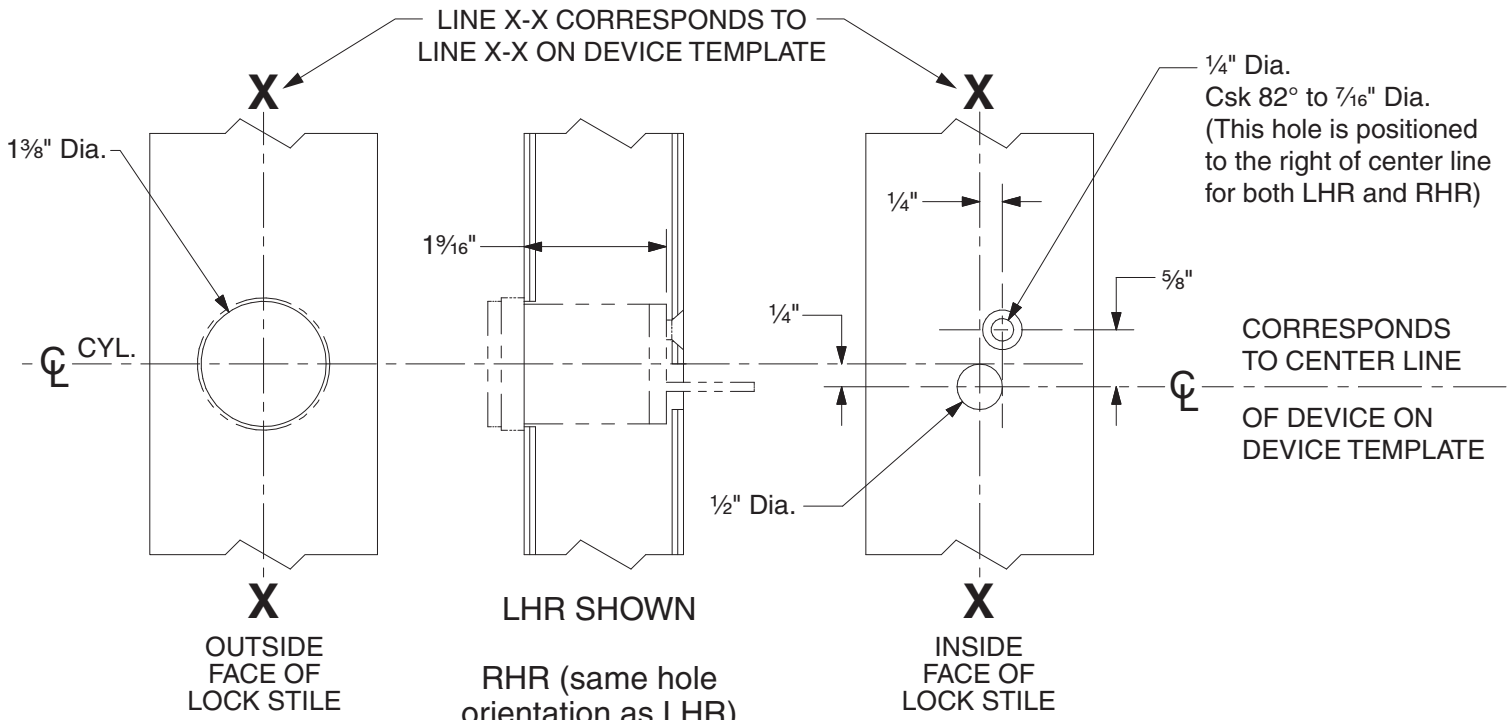

DEVICE APPLICATION SCHEDULE	
9849 SERIES	9949 SERIES

110NL Cylinder Preparation

VON DUPRIN®

NOTES: SEE MASTER SHEET #10001 FOR SUGGESTED REINFORCING

TEMPLATE NUMBER: 40022_c

DATE: 05-28-13

RIM APPLICATION

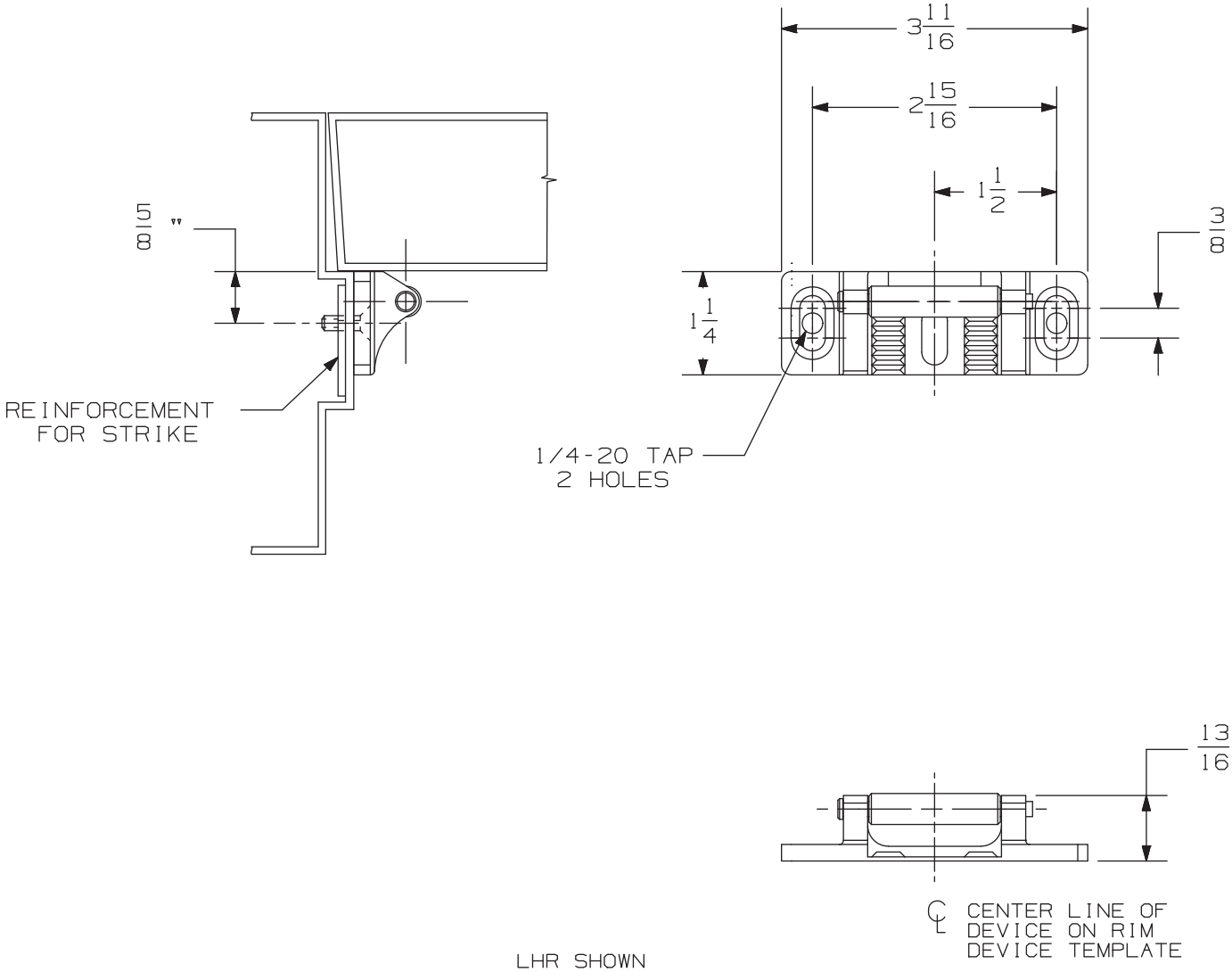

LHR SHOWN
RHR OPPOSITE

NOTE: DEVICE MOUNTING HOLES TO BE PREPARED AT INSTALLATION ON DOOR.

909 Strike	VON DUPRIN®	
NOTES: SEE MASTER SHEET #10001 FOR SUGGESTED REINFORCING	TEMPLATE NUMBER: 30042_b	DATE: 05-24-13

RIM APPLICATION

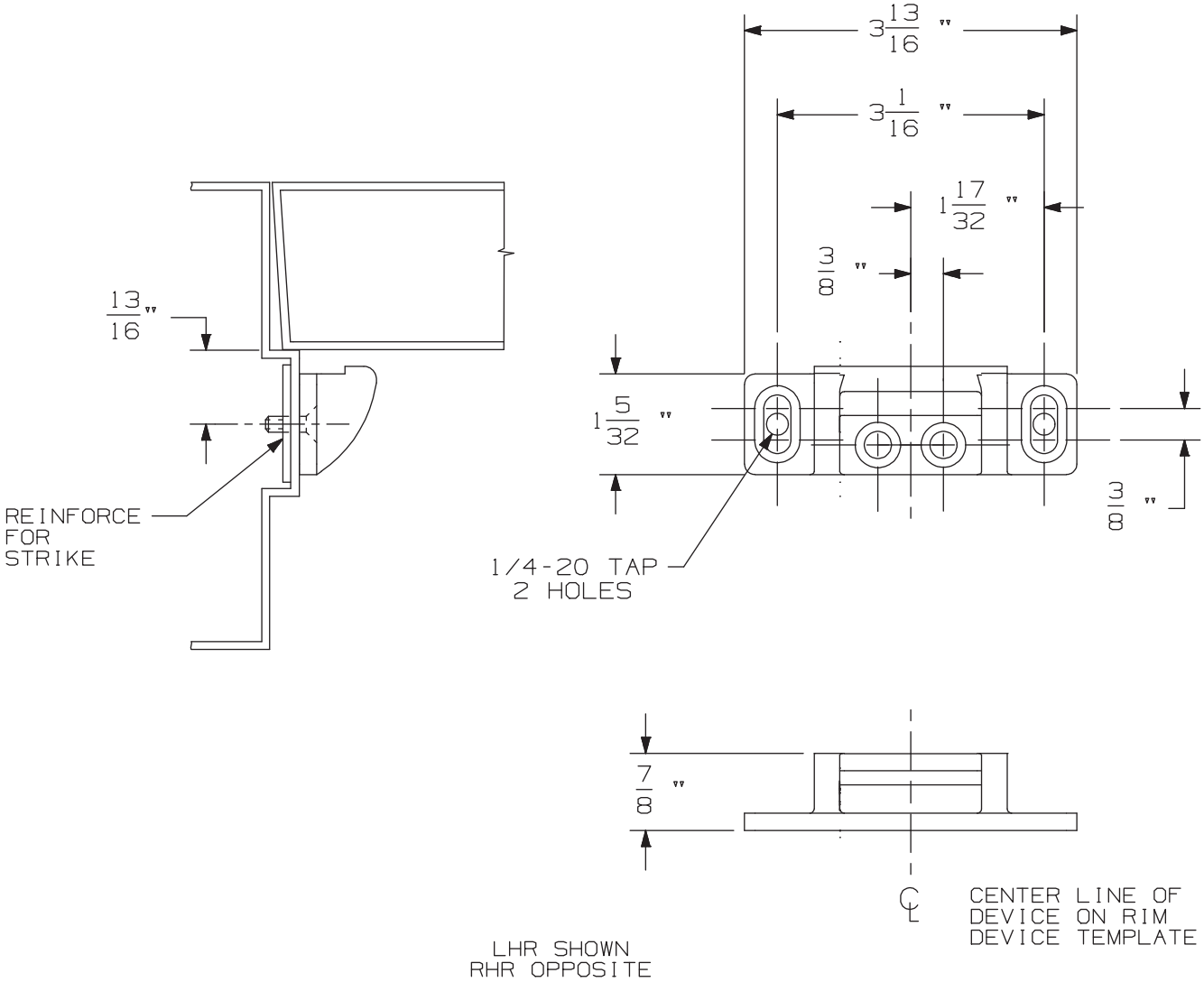

NOTE: DEVICE MOUNTING HOLES TO BE PREPARED AT INSTALLATION ON DOOR.

954 Strike	VON DUPRIN®	
NOTES: SEE MASTER SHEET #10001 FOR SUGGESTED REINFORCING	TEMPLATE NUMBER: 30041_b	DATE: 05-24-13

APPLICATION	PREPARATION
SURFACE APPLICATION	#10-24 TAP 4 PLACES
990 TRIM APPLICATION OR SEX BOLT APPLICATION (SEE NOTE 1)	1/4' DIA THIS SIDE 13/32" DIA OPPOSITE SIDE - 4 PLACES

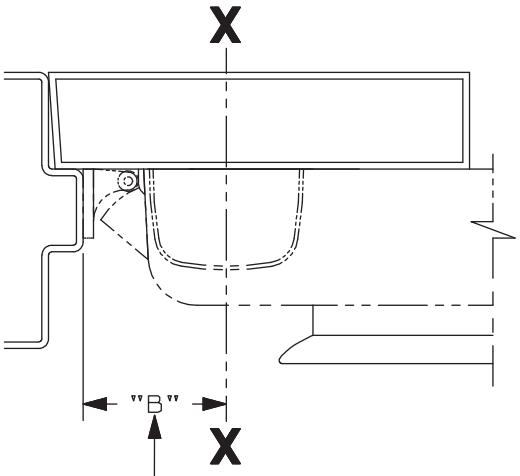

SINGLE DOOR INSTALLATION			
STRIKE	DIM. "B"	MIN. STILE 990/991/992 TRIM	MIN. STILE 696/697 TRIM
909	2 3/8"	4 1/2"	4 3/8"

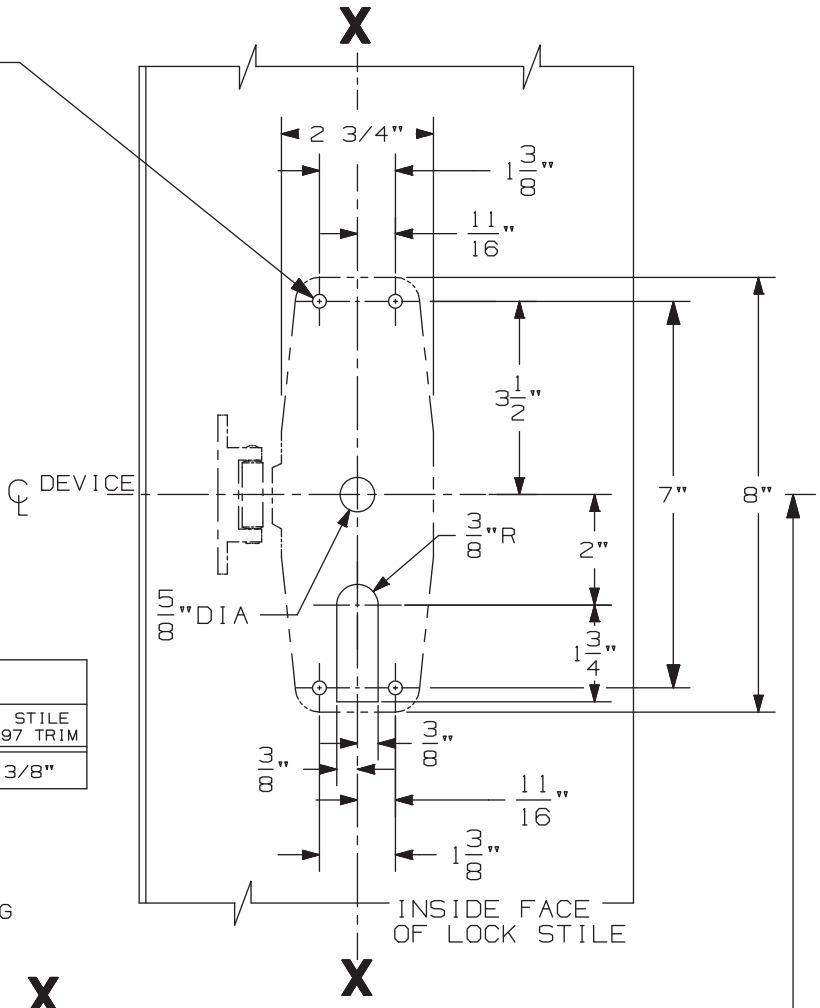

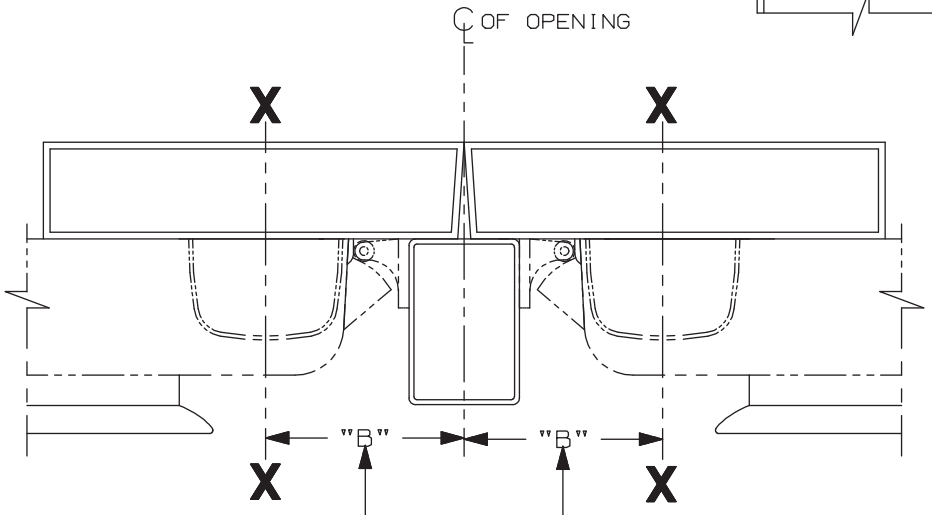

SINGLE DOOR OPENING
39 13/16" TO FINISHED FLOOR

DOUBLE DOOR OPENING
WITH VON DUPRIN MULLION
39 11/16"

LHR APPLICATION SHOWN
RHR APPLICATION OPPOSITE

DOUBLE DOOR INSTALLATION WITH VON DUPRIN MULLIONS				
MULLION	STRIKE	DIM. "B"	MIN. STILE 990/991/992 TRIM	MIN. STILE 696/697 TRIM
4954/9954	909	3 3/8"	4 7/8"	4 3/4"
9954	954	3 1/2"	5"	4 7/8"
5654	909	2 15/16"	4 3/8"	4 1/4"

NOTES:
1. THESE FOUR HOLES TO BE PREPARED FOR SURFACE APPLICATION WHEN USING 696/697 TRIM. DO NOT PREPARE FOR SEX BOLTS.
2. FOR STOCK HOLLOW METAL DOORS SEE TEMPLATE NO. 10621 FOR TYPE "161" CUTOUT AND 10623 FOR TYPE "86" CUTOUT.
3. GLASS BEAD KIT AVAILABLE WHEN REQUIRED.
4. FOR OUTSIDE TRIM PREPARATION, WHEN REQUIRED, SEE TRIM TEMPLATE.

XP98/XP99 & XP/98-F/XP99-F TP, K, & L Series Rim Devices

VON DUPRIN®

NOTES: See Master Sheet #10001 For Suggested Reinforcing

TEMPLATE NUMBER: 10613_b

DATE: 05-22-13

991 K & 992 L Trim

NOTES: SEE MASTER SHEET #10001 FOR SUGGESTED REINFORCING

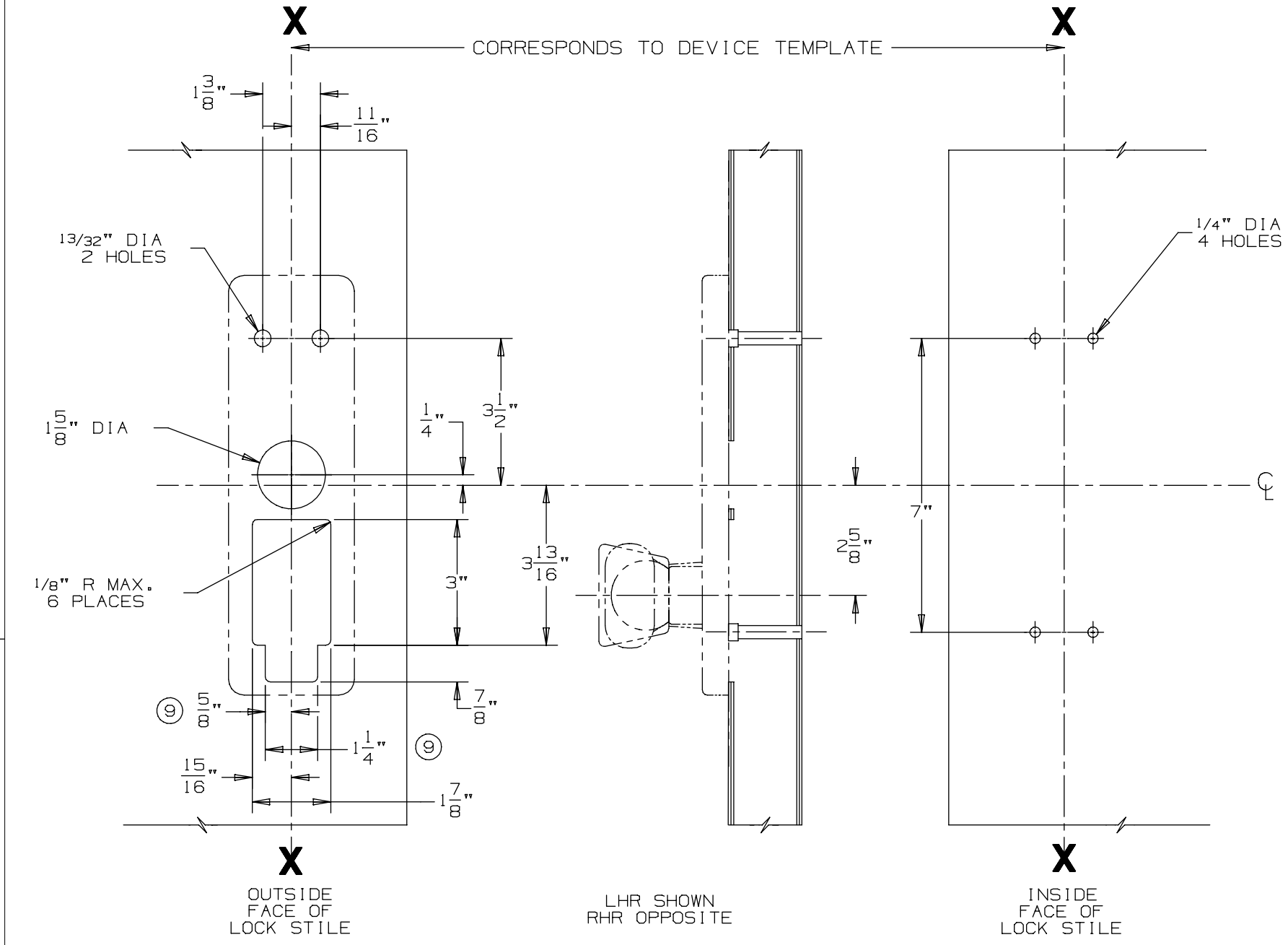

DEVICE APPLICATION SCHEDULE
98/99 SERIES RIM DEVICE
9827/9927 SERIES DEVICE
9847/9947 SERIES DEVICE

VON DUPRIN®

TEMPLATE NUMBER: 20272_a

DATE: 05-23-13

RIM APPLICATION

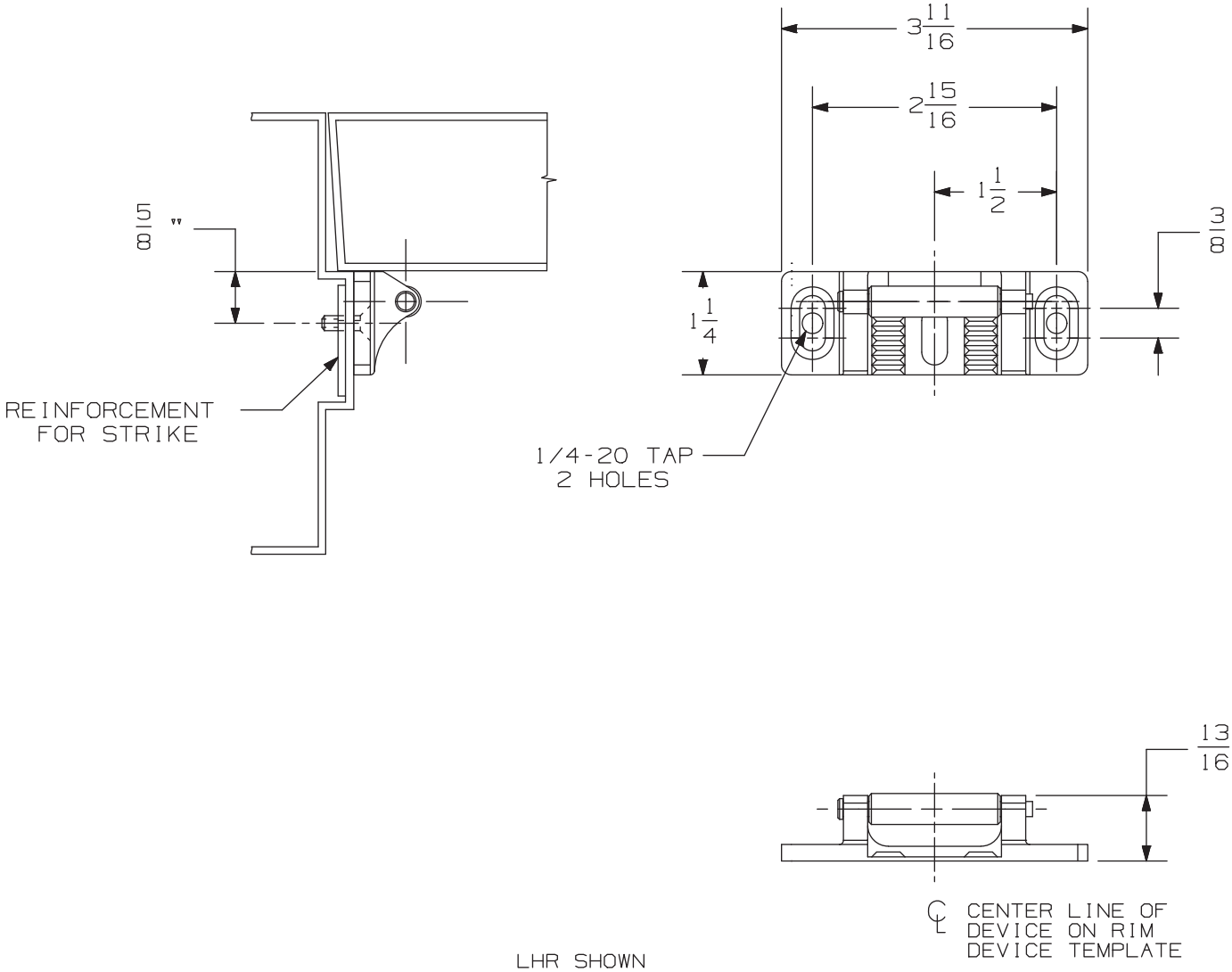

LHR SHOWN
RHR OPPOSITE

NOTE: DEVICE MOUNTING HOLES TO BE PREPARED AT INSTALLATION ON DOOR.

909 Strike	VON DUPRIN®	
NOTES: SEE MASTER SHEET #10001 FOR SUGGESTED REINFORCING	TEMPLATE NUMBER: 30042_b	DATE: 05-24-13

RIM APPLICATION

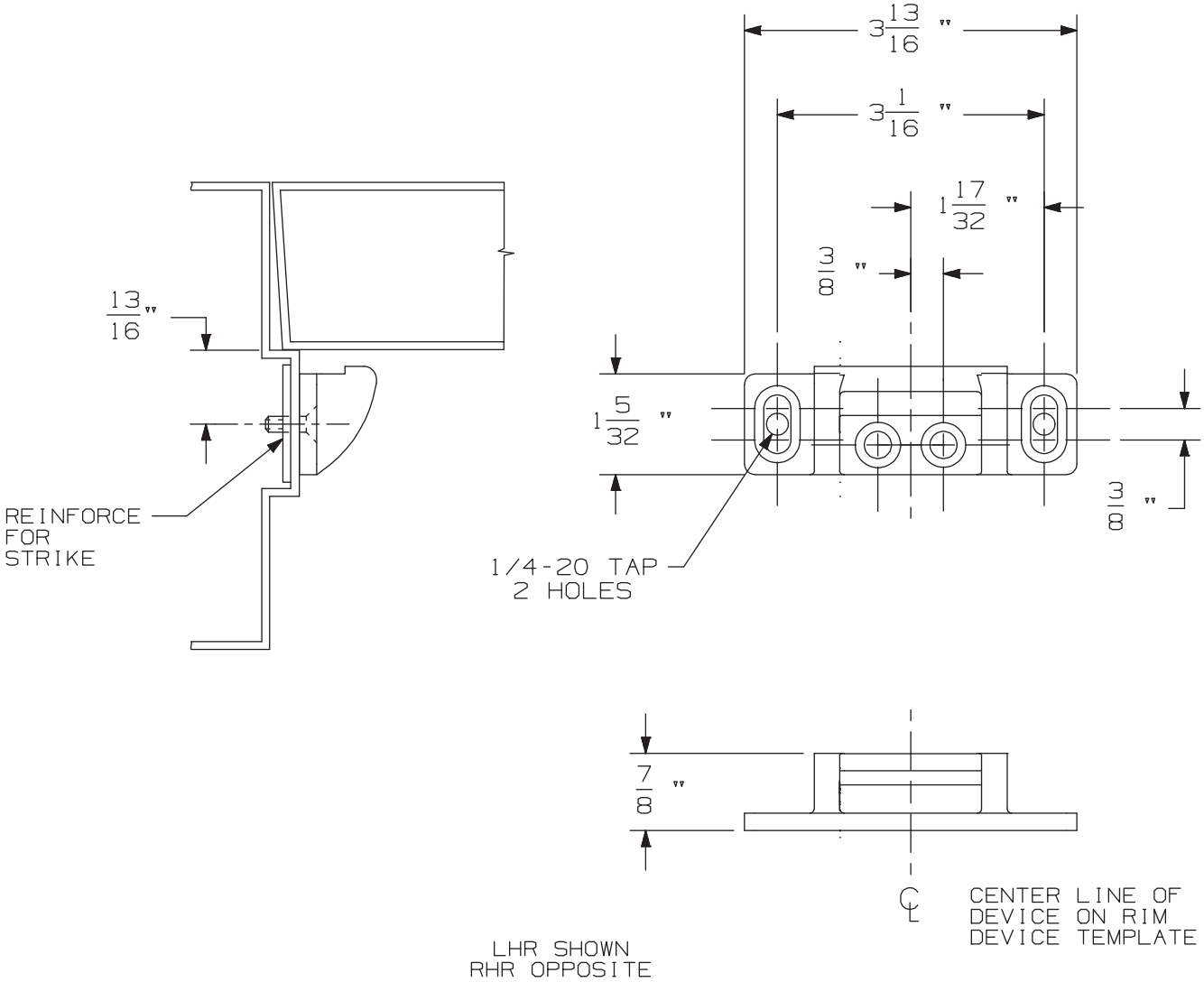

NOTE: DEVICE MOUNTING HOLES TO BE PREPARED AT INSTALLATION ON DOOR.

954 Strike	VON DUPRIN®	
NOTES: SEE MASTER SHEET #10001 FOR SUGGESTED REINFORCING	TEMPLATE NUMBER: 30041_b	DATE: 05-24-13

991 K & 992 L Trim

NOTES: SEE MASTER SHEET #10001 FOR SUGGESTED REINFORCING

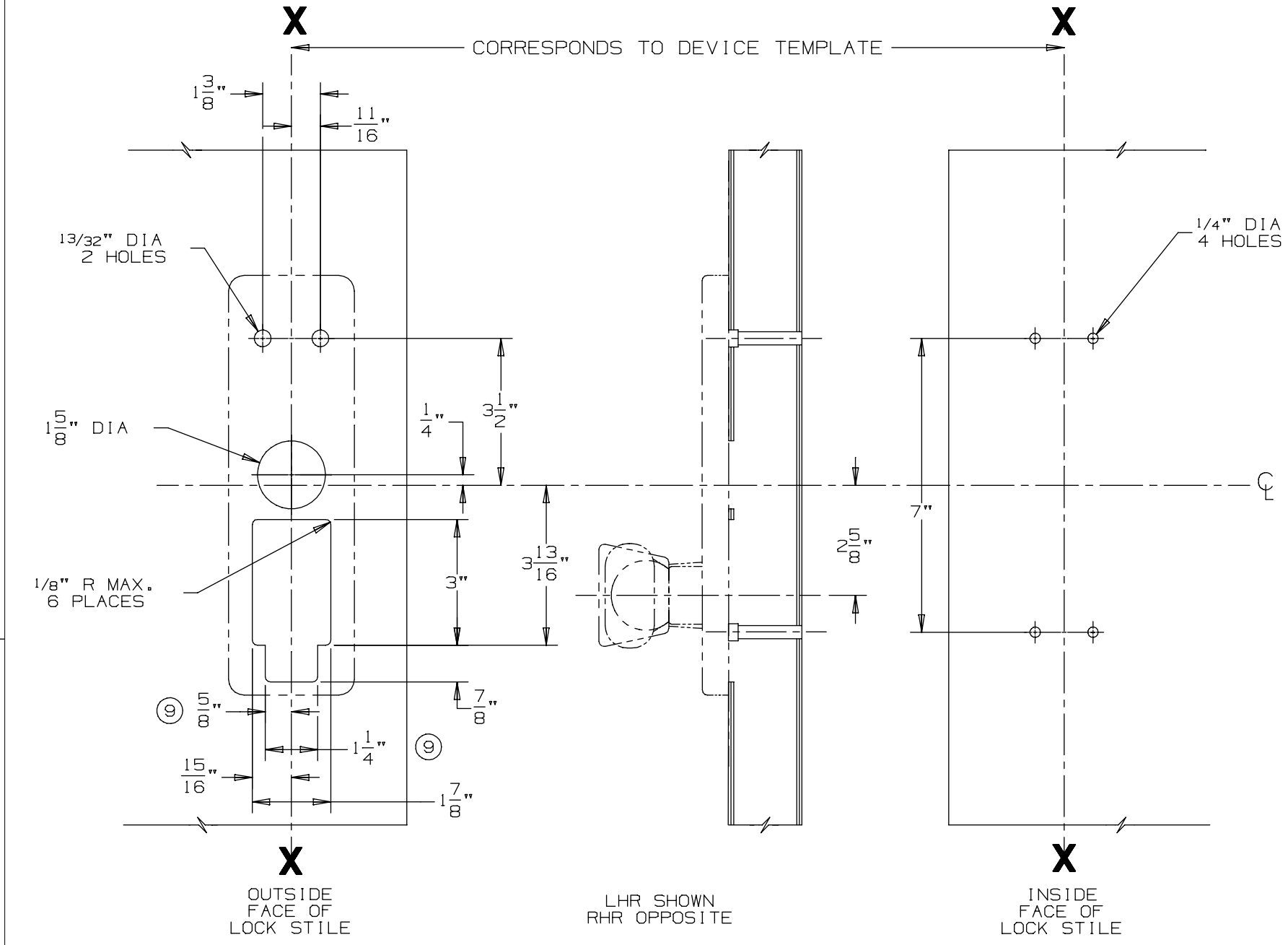

DEVICE APPLICATION SCHEDULE
98/99 SERIES RIM DEVICE
9827/9927 SERIES DEVICE
9847/9947 SERIES DEVICE

VON DUPRIN®

TEMPLATE NUMBER: 20272_a

DATE: 05-23-13

RIM APPLICATION

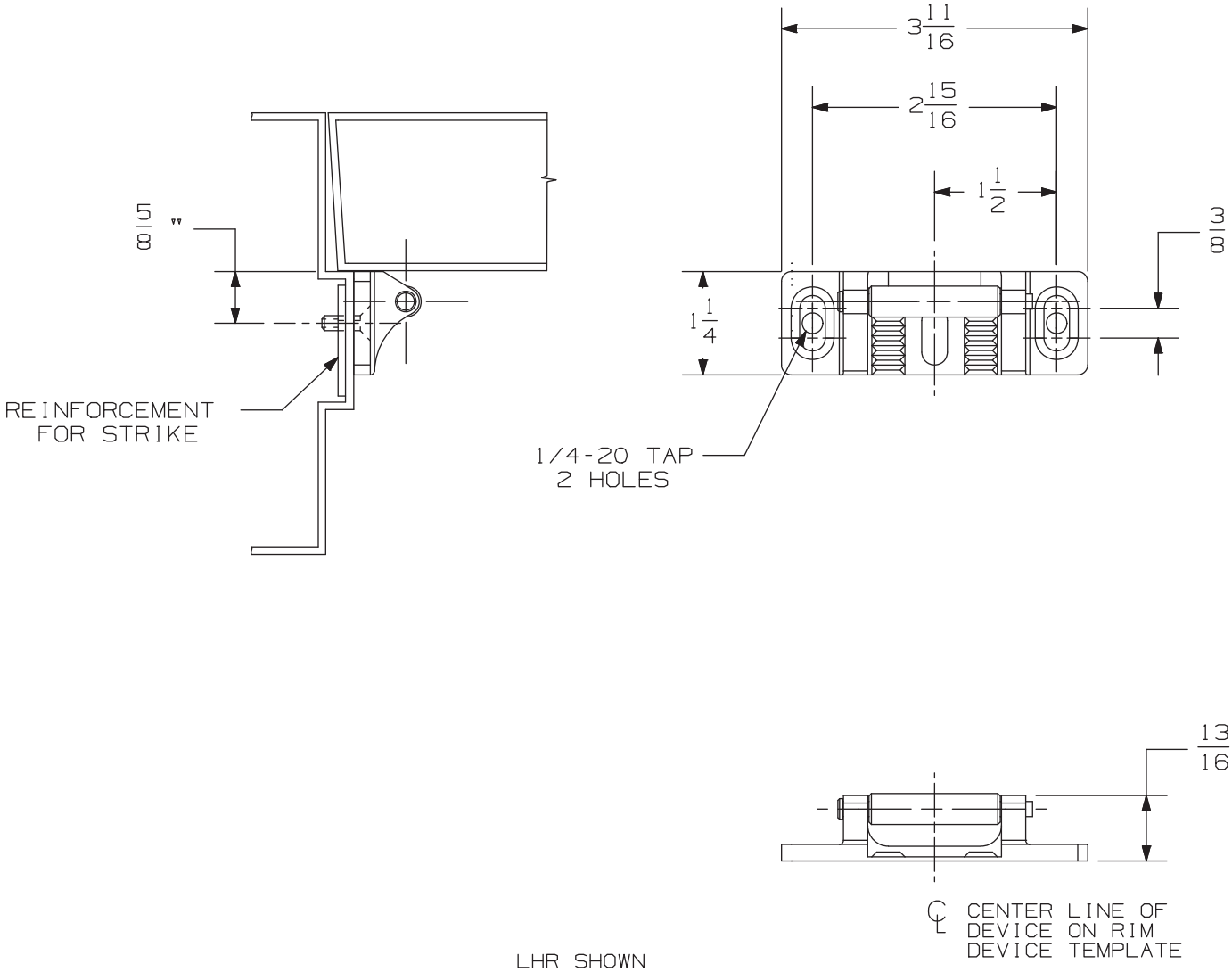

LHR SHOWN
RHR OPPOSITE

NOTE: DEVICE MOUNTING HOLES TO BE PREPARED AT INSTALLATION ON DOOR.

909 Strike	VON DUPRIN®	
NOTES: SEE MASTER SHEET #10001 FOR SUGGESTED REINFORCING	TEMPLATE NUMBER: 30042_b	DATE: 05-24-13

RIM APPLICATION

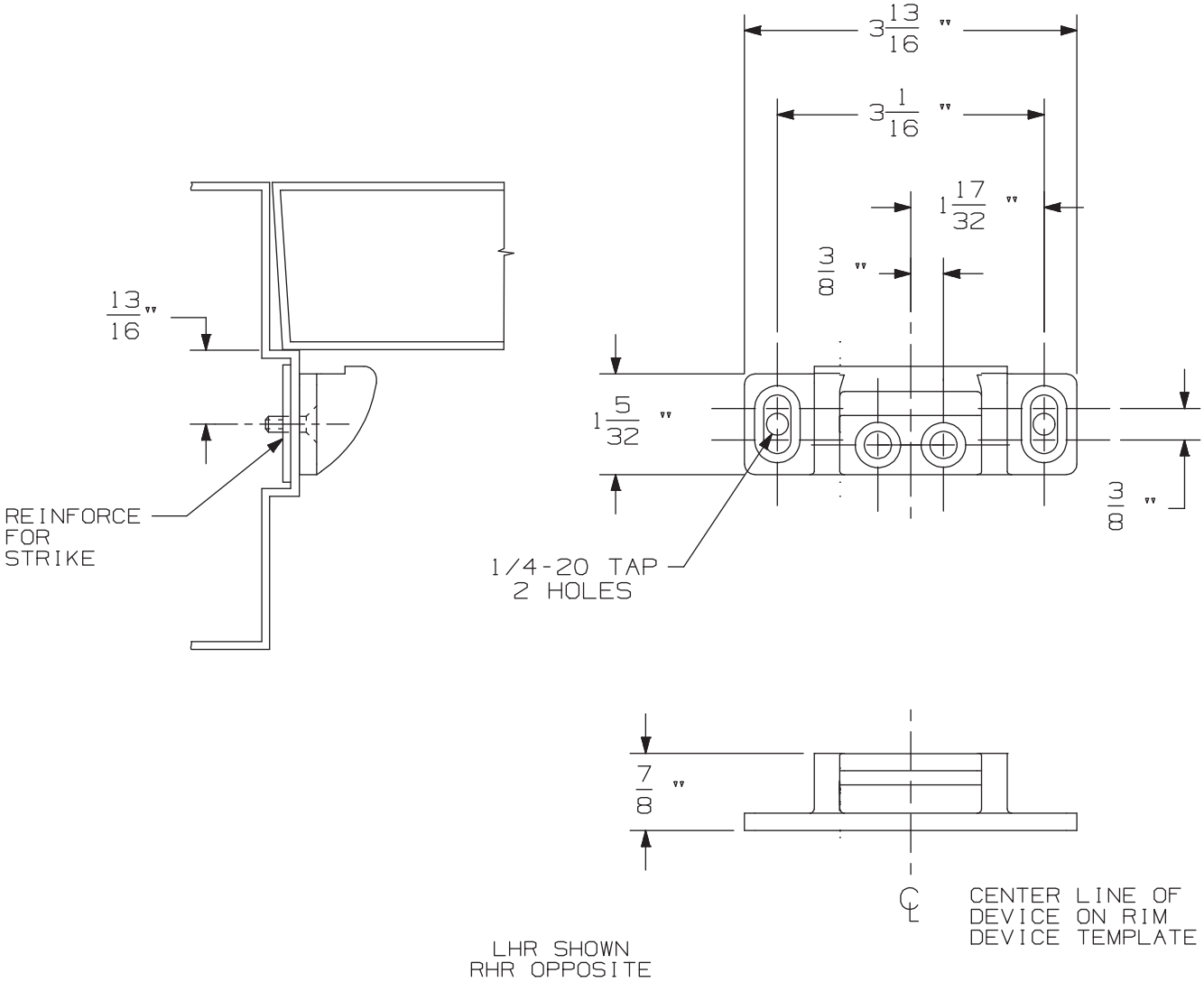

NOTE: DEVICE MOUNTING HOLES TO BE PREPARED AT INSTALLATION ON DOOR.

954 Strike	VON DUPRIN®	
NOTES: SEE MASTER SHEET #10001 FOR SUGGESTED REINFORCING	TEMPLATE NUMBER: 30041_b	DATE: 05-24-13

APPLICATION	PREPARATION
SURFACE APPLICATION	#10-24 TAP 4 PLACES
990 TRIM APPLICATION OR SEX BOLT APPLICATION (SEE NOTE 1)	1/4' DIA THIS SIDE 13/32" DIA OPPOSITE SIDE - 4 PLACES

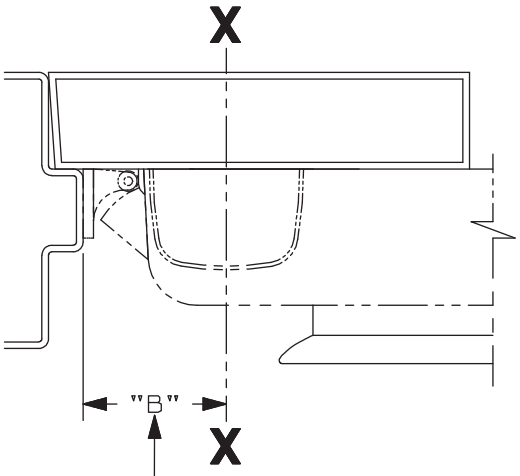

SINGLE DOOR INSTALLATION			
STRIKE	DIM. "B"	MIN. STILE 990/991/992 TRIM	MIN. STILE 696/697 TRIM
909	2 3/8"	4 1/2"	4 3/8"

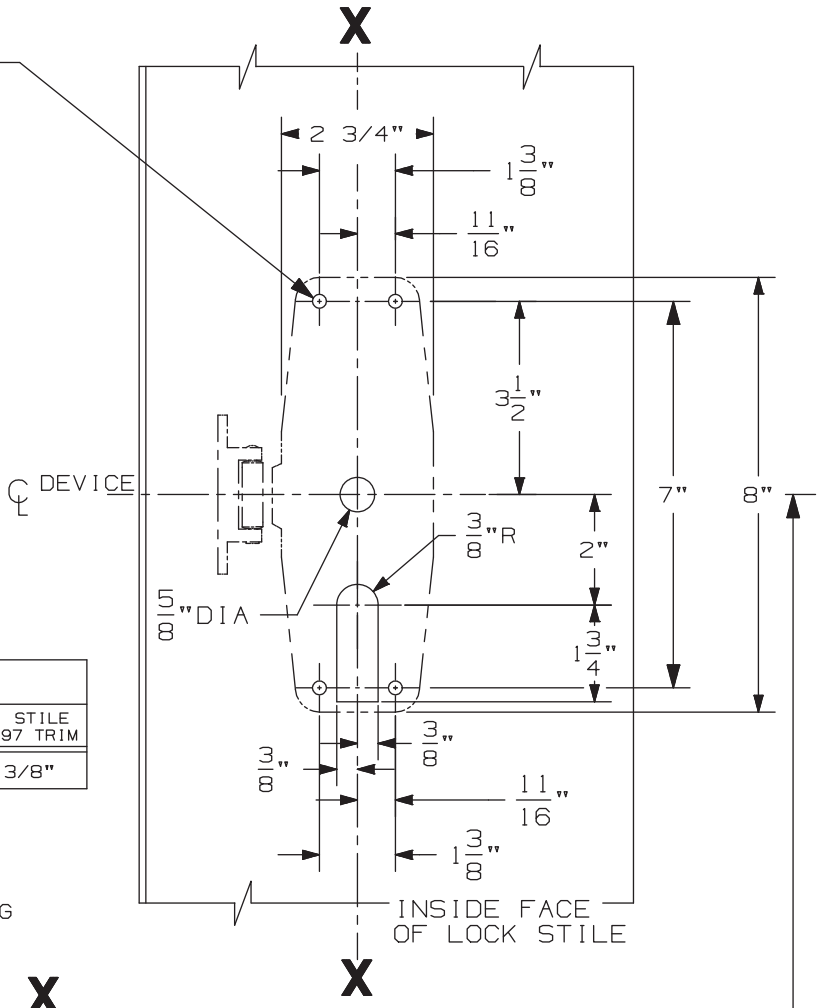

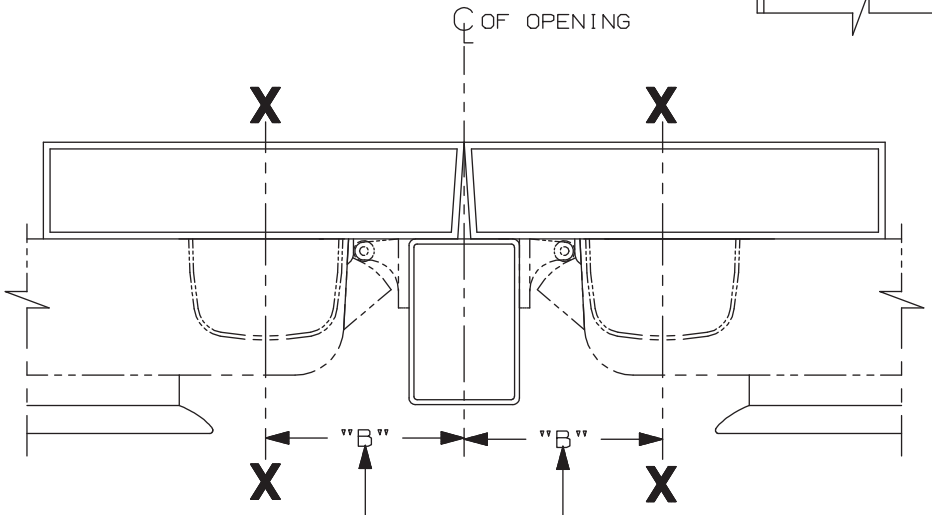

SINGLE DOOR OPENING
39 13/16" TO FINISHED FLOOR

DOUBLE DOOR OPENING
WITH VON DUPRIN MULLION
39 11/16"

LHR APPLICATION SHOWN
RHR APPLICATION OPPOSITE

DOUBLE DOOR INSTALLATION WITH VON DUPRIN MULLIONS				
MULLION	STRIKE	DIM. "B"	MIN. STILE 990/991/992 TRIM	MIN. STILE 696/697 TRIM
4954/9954	909	3 3/8"	4 7/8"	4 3/4"
9954	954	3 1/2"	5"	4 7/8"
5654	909	2 15/16"	4 3/8"	4 1/4"

NOTES:
1. THESE FOUR HOLES TO BE PREPARED FOR SURFACE APPLICATION WHEN USING 696/697 TRIM. DO NOT PREPARE FOR SEX BOLTS.
2. FOR STOCK HOLLOW METAL DOORS SEE TEMPLATE NO. 10621 FOR TYPE "161" CUTOUT AND 10623 FOR TYPE "86" CUTOUT.
3. GLASS BEAD KIT AVAILABLE WHEN REQUIRED.
4. FOR OUTSIDE TRIM PREPARATION, WHEN REQUIRED, SEE TRIM TEMPLATE.

XP98/XP99 & XP/98-F/XP99-F TP, K, & L Series Rim Devices

VON DUPRIN®

NOTES: See Master Sheet #10001 For Suggested Reinforcing

TEMPLATE NUMBER: 10613_b

DATE: 05-22-13

DEVICE APPLICATION SCHEDULE	
98 RIM SERIES	99 RIM SERIES
9827 SERIES	9927 SERIES
9847 SERIES	9947 SERIES
9849 SERIES	9949 SERIES

996L, E996L, 996L-BE, E996L-BE 996K, 996K-BE R/V SERIES
TRIM METAL DOOR APPLICATION

VON DUPRIN®

NOTES: SEE MASTER SHEET #10001 FOR SUGGESTED REINFORCING

TEMPLATE NUMBER: 20003_e

DATE: 10-30-14

RIM APPLICATION

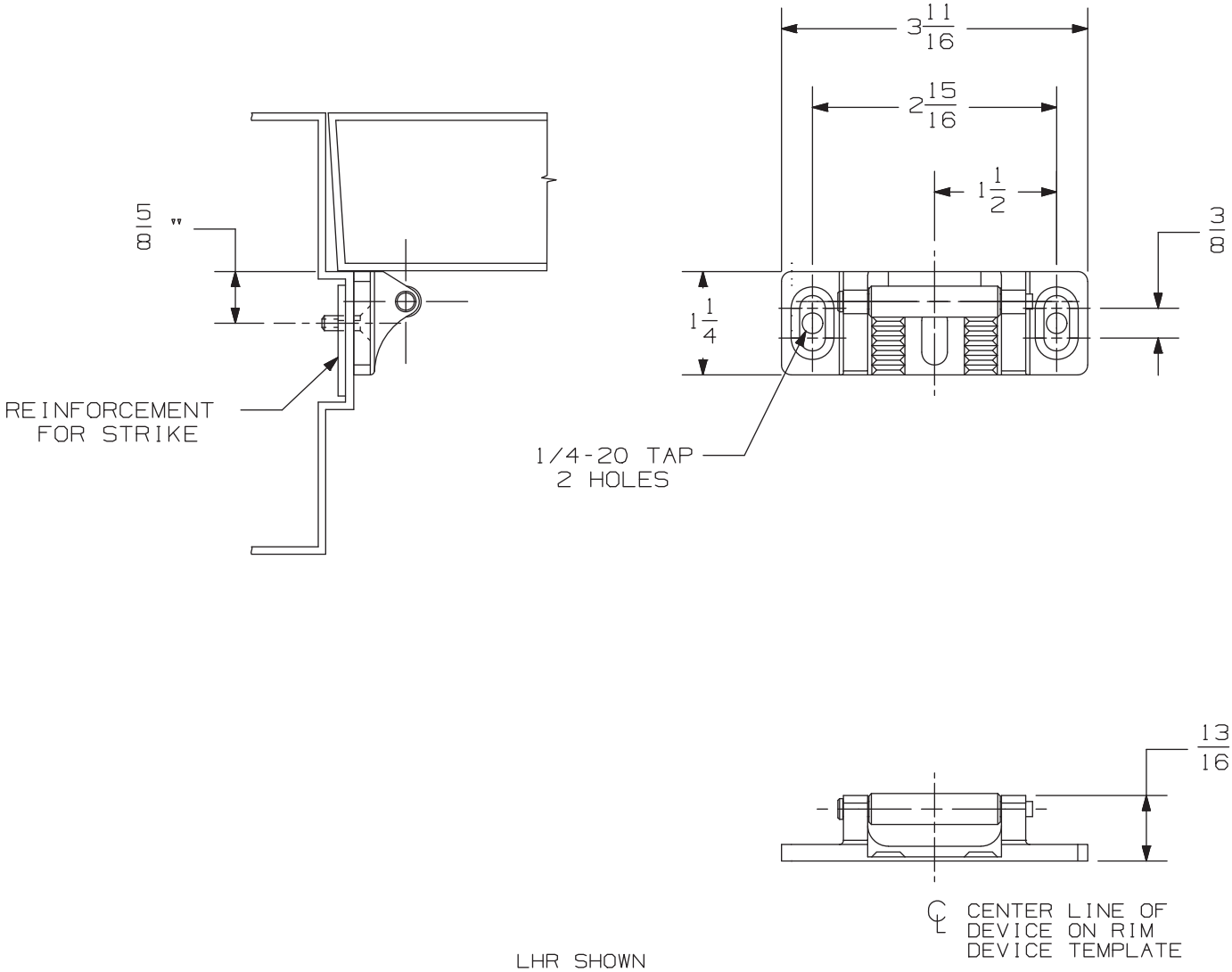

LHR SHOWN
RHR OPPOSITE

NOTE: DEVICE MOUNTING HOLES TO BE PREPARED AT INSTALLATION ON DOOR.

909 Strike	VON DUPRIN®	
NOTES: SEE MASTER SHEET #10001 FOR SUGGESTED REINFORCING	TEMPLATE NUMBER: 30042_b	DATE: 05-24-13

RIM APPLICATION

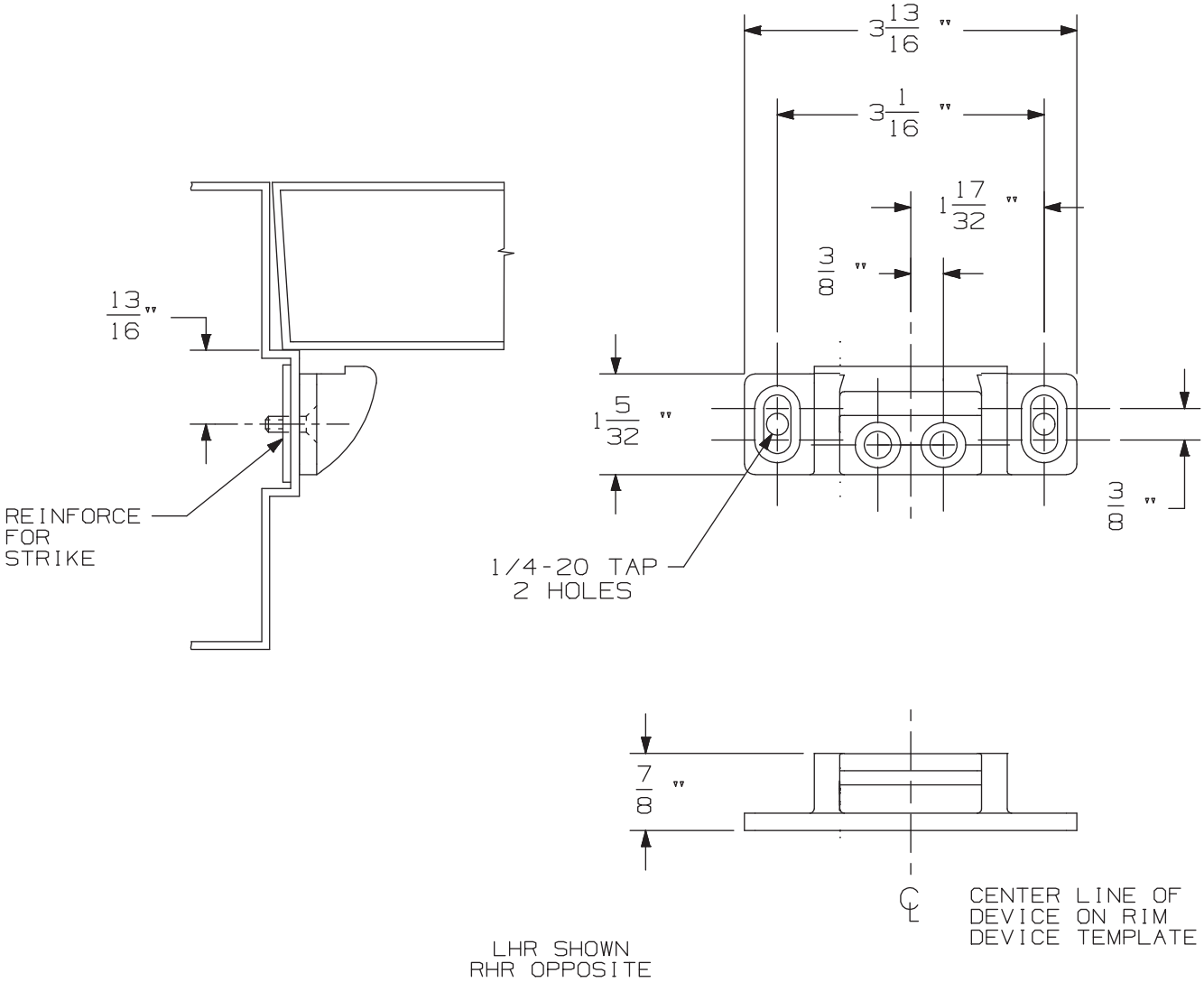

NOTE: DEVICE MOUNTING HOLES TO BE PREPARED AT INSTALLATION ON DOOR.

954 Strike	VON DUPRIN®	
NOTES: SEE MASTER SHEET #10001 FOR SUGGESTED REINFORCING	TEMPLATE NUMBER: 30041_b	DATE: 05-24-13

DEVICE APPLICATION SCHEDULE	
98 RIM SERIES	99 RIM SERIES
9827 SERIES	9927 SERIES
9847 SERIES	9947 SERIES
9849 SERIES	9949 SERIES

996L, E996L, 996L-BE, E996L-BE 996K, 996K-BE R/V SERIES
TRIM METAL DOOR APPLICATION

VON DUPRIN®

NOTES: SEE MASTER SHEET #10001 FOR SUGGESTED REINFORCING

TEMPLATE NUMBER: 20003_e

DATE: 10-30-14

RIM APPLICATION

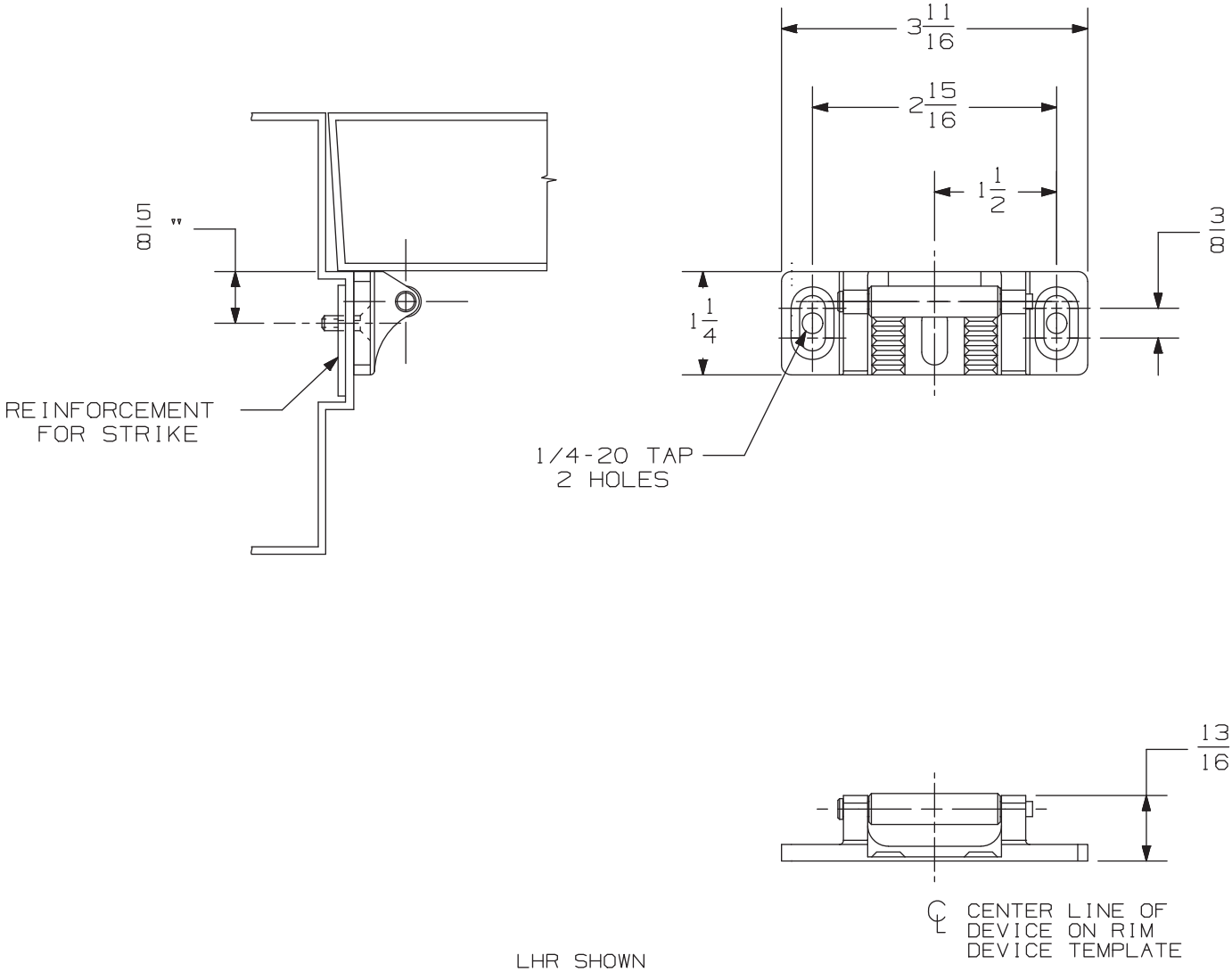

LHR SHOWN
RHR OPPOSITE

NOTE: DEVICE MOUNTING HOLES TO BE PREPARED AT INSTALLATION ON DOOR.

909 Strike	VON DUPRIN®	
NOTES: SEE MASTER SHEET #10001 FOR SUGGESTED REINFORCING	TEMPLATE NUMBER: 30042_b	DATE: 05-24-13

RIM APPLICATION

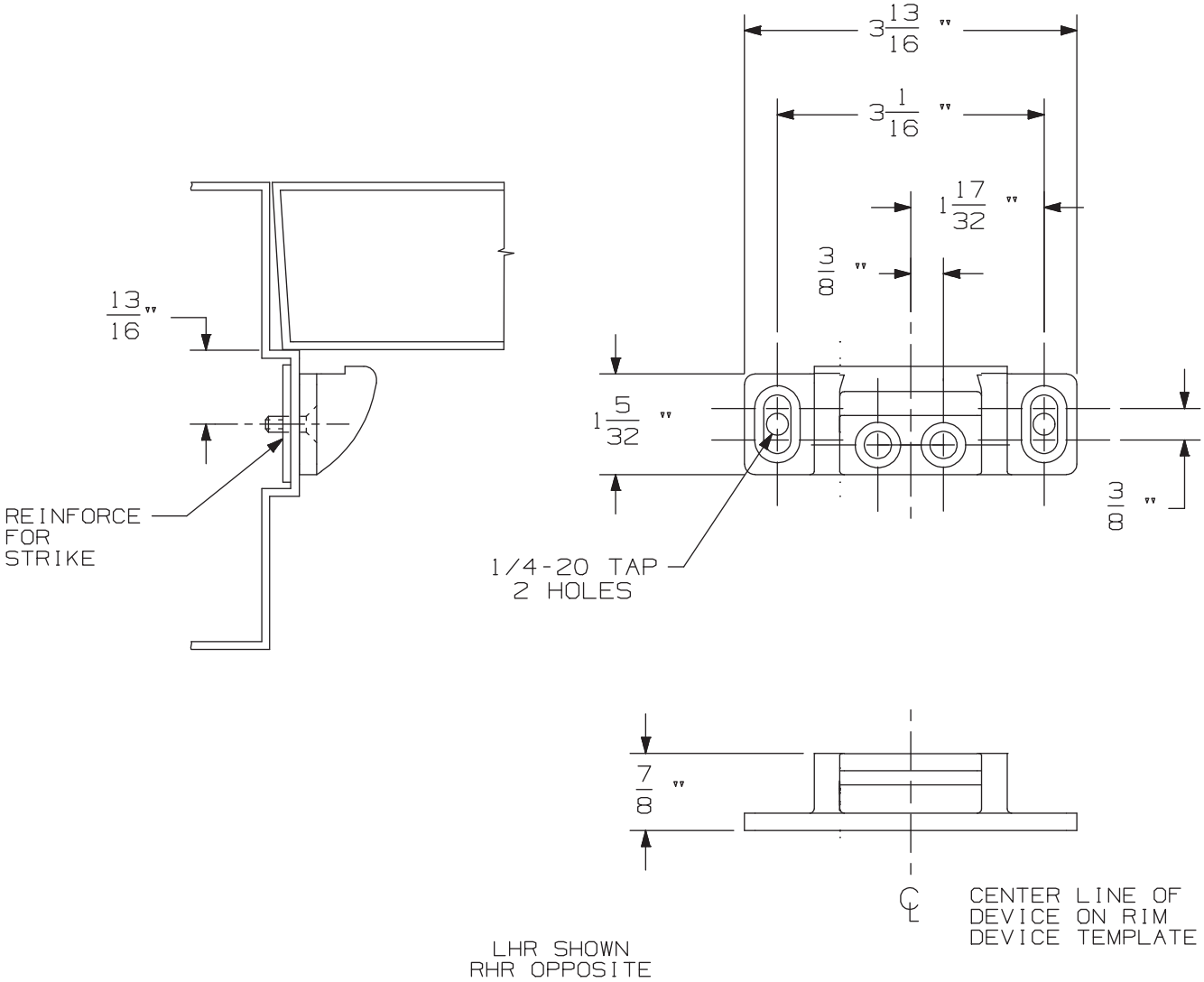

NOTE: DEVICE MOUNTING HOLES TO BE PREPARED AT INSTALLATION ON DOOR.

954 Strike	VON DUPRIN®	
NOTES: SEE MASTER SHEET #10001 FOR SUGGESTED REINFORCING	TEMPLATE NUMBER: 30041_b	DATE: 05-24-13

APPLICATION	PREPARATION
SURFACE APPLICATION	#10-24 TAP 4 PLACES
990 TRIM APPLICATION OR SEX BOLT APPLICATION (SEE NOTE 1)	1/4' DIA THIS SIDE 13/32" DIA OPPOSITE SIDE - 4 PLACES

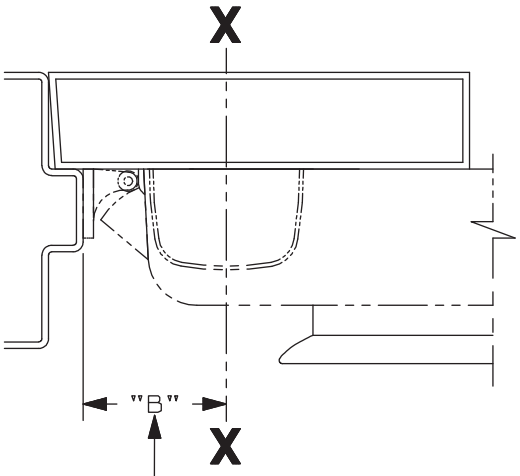

SINGLE DOOR INSTALLATION			
STRIKE	DIM. "B"	MIN. STILE 990/991/992 TRIM	MIN. STILE 696/697 TRIM
909	2 3/8"	4 1/2"	4 3/8"

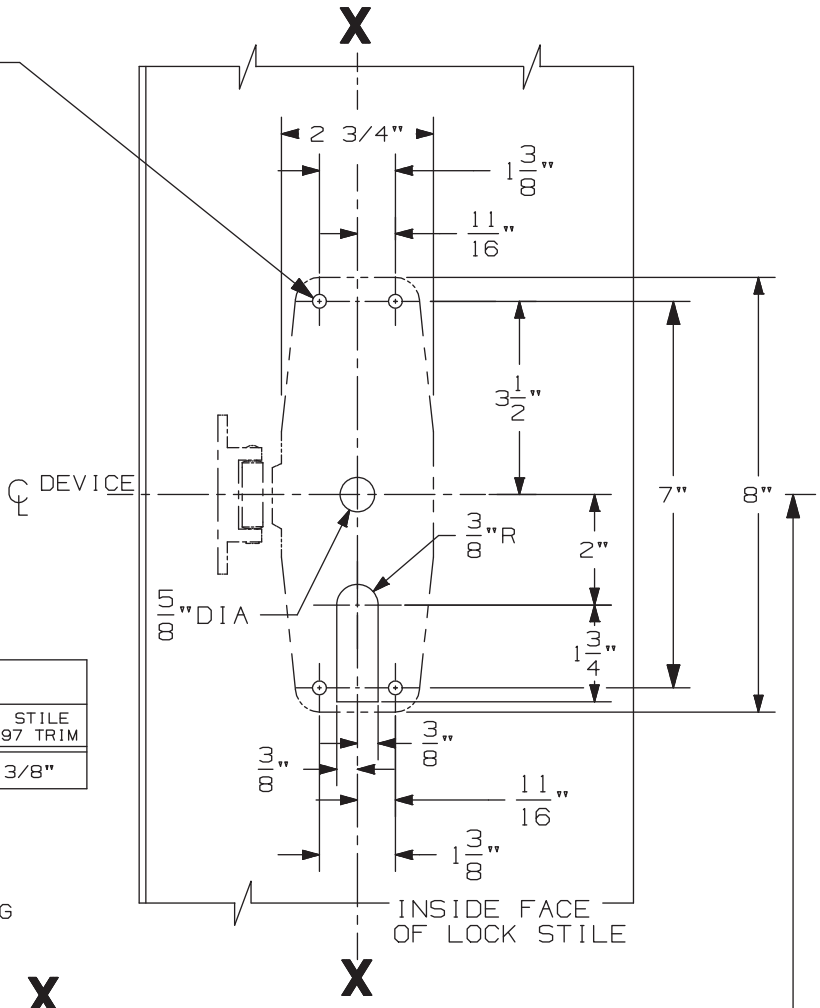

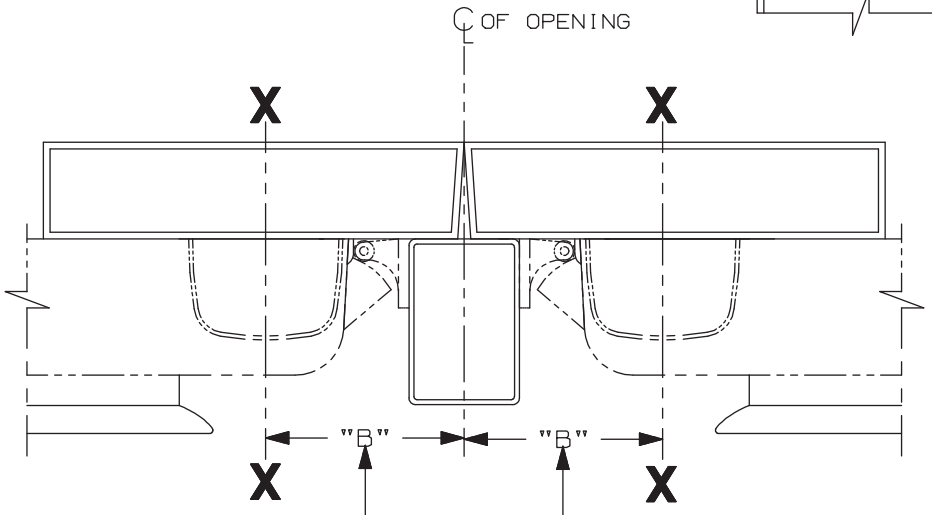

SINGLE DOOR OPENING
39 13/16" TO FINISHED FLOOR

DOUBLE DOOR OPENING
WITH VON DUPRIN MULLION
39 11/16"

LHR APPLICATION SHOWN
RHR APPLICATION OPPOSITE

DOUBLE DOOR INSTALLATION WITH VON DUPRIN MULLIONS				
MULLION	STRIKE	DIM. "B"	MIN. STILE 990/991/992 TRIM	MIN. STILE 696/697 TRIM
4954/9954	909	3 3/8"	4 7/8"	4 3/4"
9954	954	3 1/2"	5"	4 7/8"
5654	909	2 15/16"	4 3/8"	4 1/4"

NOTES:
1. THESE FOUR HOLES TO BE PREPARED FOR SURFACE APPLICATION WHEN USING 696/697 TRIM. DO NOT PREPARE FOR SEX BOLTS.
2. FOR STOCK HOLLOW METAL DOORS SEE TEMPLATE NO. 10621 FOR TYPE "161" CUTOUT AND 10623 FOR TYPE "86" CUTOUT.
3. GLASS BEAD KIT AVAILABLE WHEN REQUIRED.
4. FOR OUTSIDE TRIM PREPARATION, WHEN REQUIRED, SEE TRIM TEMPLATE.

XP98/XP99 & XP/98-F/XP99-F TP, K, & L Series Rim Devices

VON DUPRIN®

NOTES: See Master Sheet #10001 For Suggested Reinforcing

TEMPLATE NUMBER: 10613_b

DATE: 05-22-13

990 TP & 990 TP-BE TRIM

NOTES: SEE MASTER SHEET #10001 FOR SUGGESTED REINFORCING

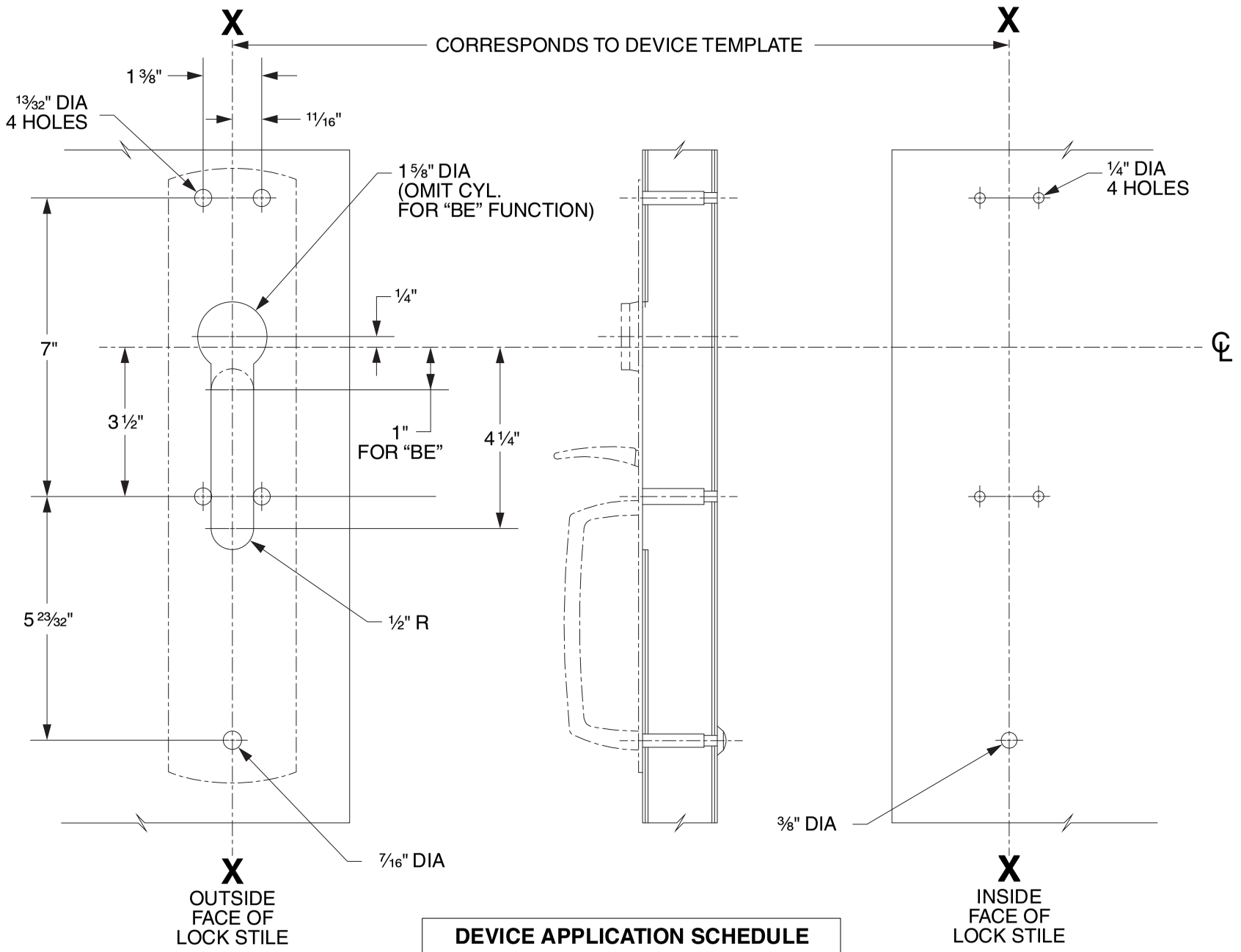

DEVICE APPLICATION SCHEDULE
98/99 SERIES RIM DEVICE
9827/9927 SERIES DEVICE
9847/9947 SERIES DEVICE
9849/9949 SERIES DEVICE

LHR SHOWN
RHR OPPOSITE

VON DUPRIN®

TEMPLATE NUMBER: 20265_C

DATE: 05-31-13

RIM APPLICATION

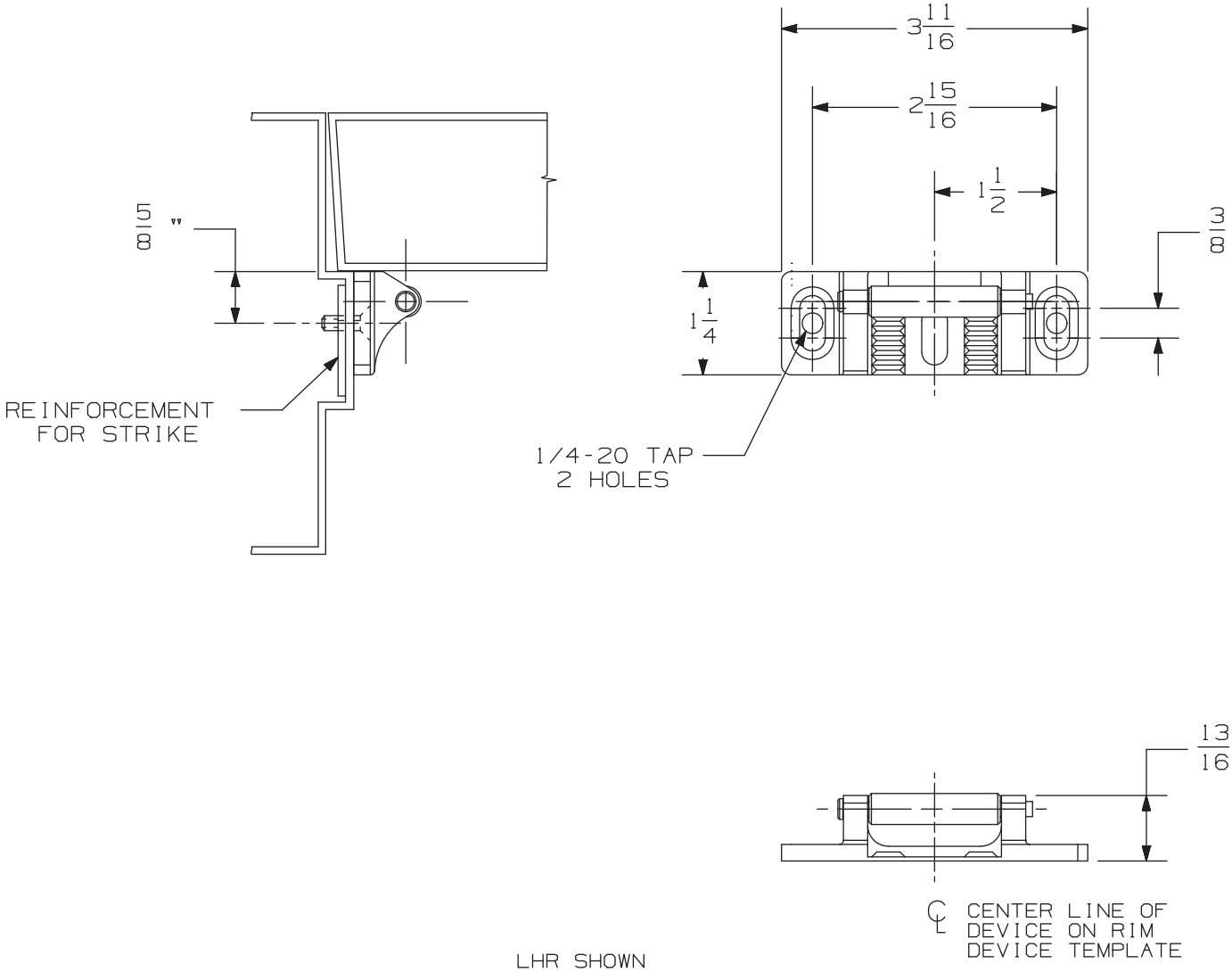

LHR SHOWN
RHR OPPOSITE

NOTE: DEVICE MOUNTING HOLES TO BE PREPARED AT INSTALLATION ON DOOR.

909 Strike	VON DUPRIN®	
NOTES: SEE MASTER SHEET #10001 FOR SUGGESTED REINFORCING	TEMPLATE NUMBER: 30042_b	DATE: 05-24-13

RIM APPLICATION

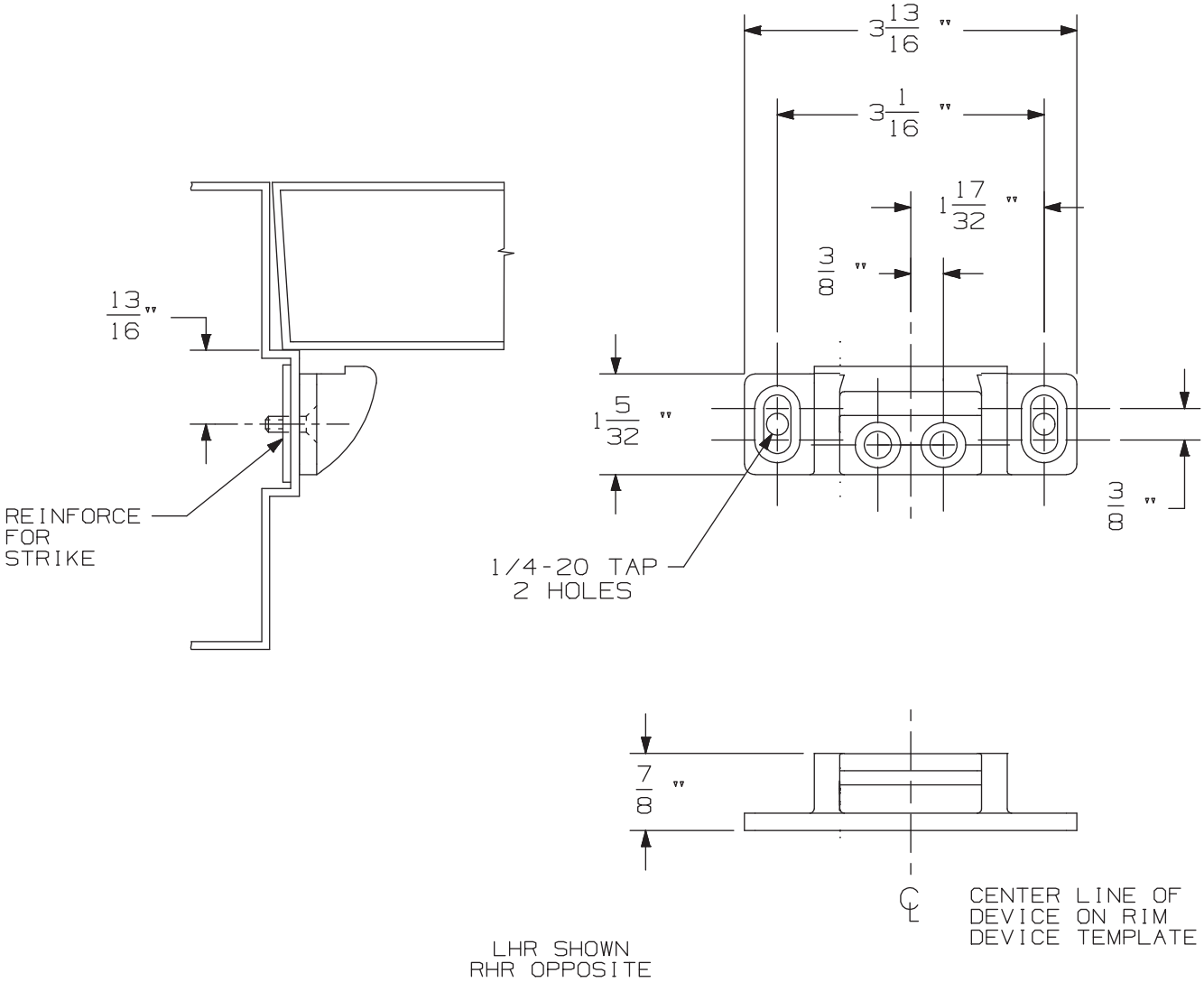

NOTE: DEVICE MOUNTING HOLES TO BE PREPARED AT INSTALLATION ON DOOR.

954 Strike	VON DUPRIN®	
NOTES: SEE MASTER SHEET #10001 FOR SUGGESTED REINFORCING	TEMPLATE NUMBER: 30041_b	DATE: 05-24-13

990 TP & 990 TP-BE TRIM

NOTES: SEE MASTER SHEET #10001 FOR SUGGESTED REINFORCING

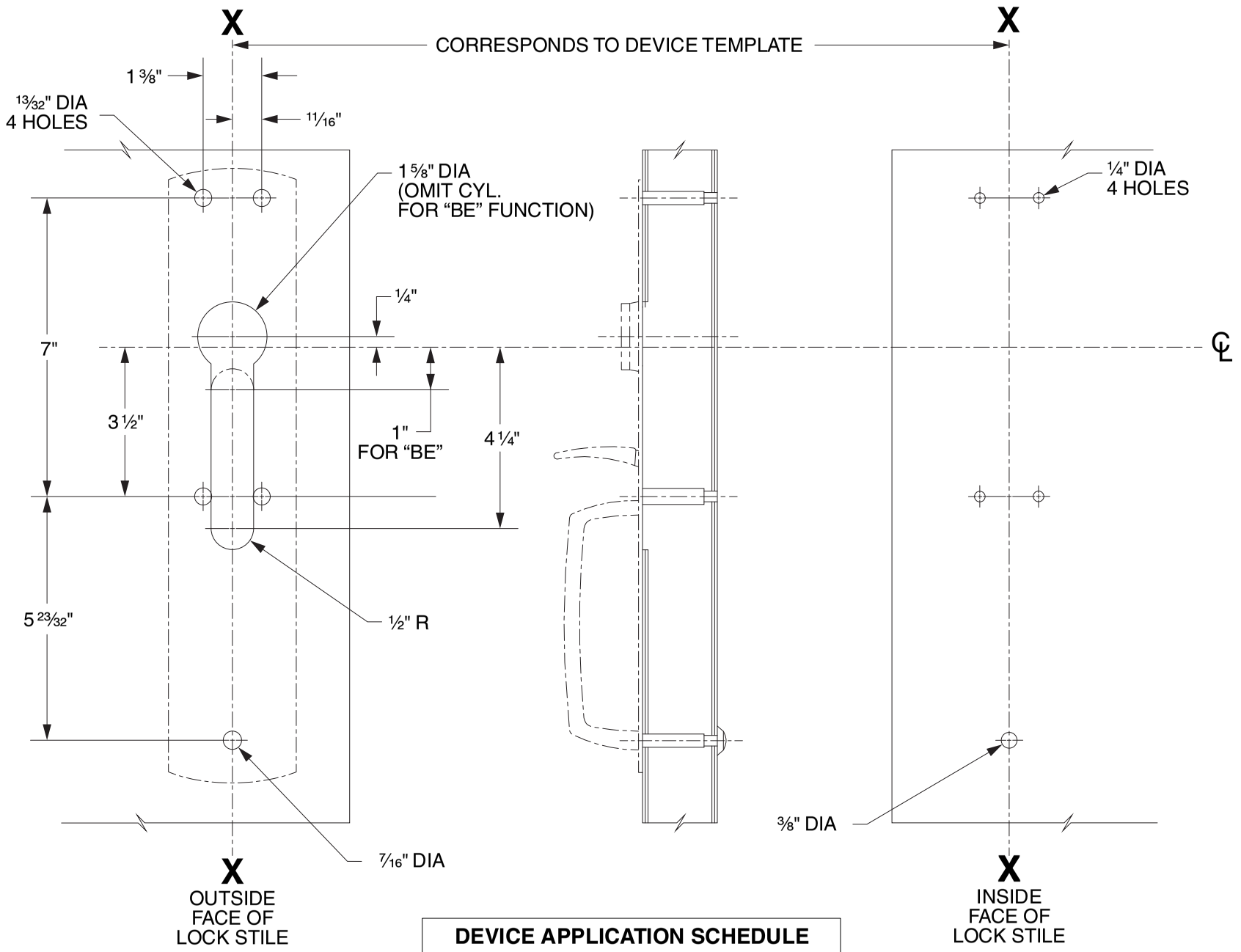

DEVICE APPLICATION SCHEDULE
98/99 SERIES RIM DEVICE
9827/9927 SERIES DEVICE
9847/9947 SERIES DEVICE
9849/9949 SERIES DEVICE

LHR SHOWN
RHR OPPOSITE

VON DUPRIN®

TEMPLATE NUMBER: 20265_C

DATE: 05-31-13

RIM APPLICATION

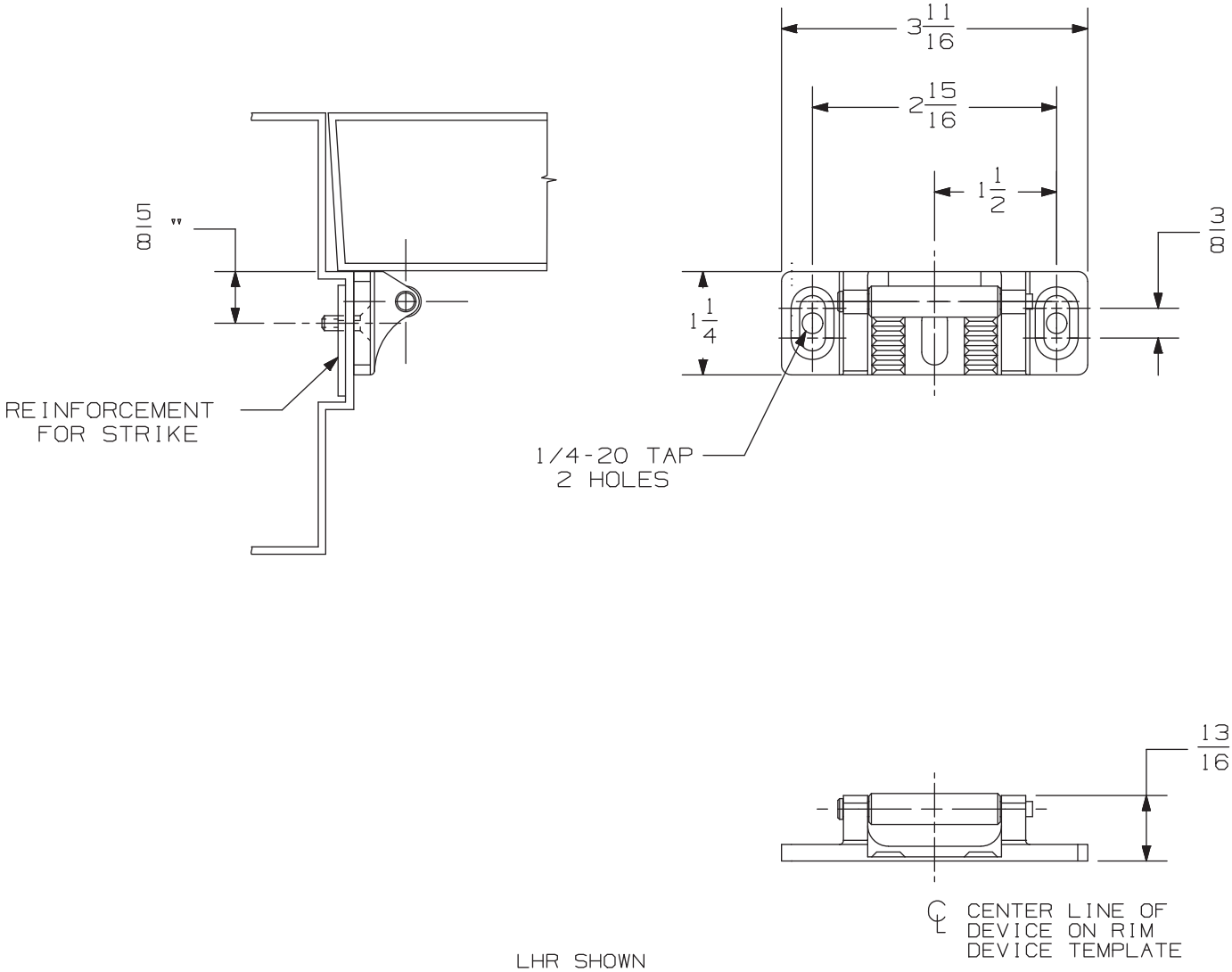

LHR SHOWN
RHR OPPOSITE

NOTE: DEVICE MOUNTING HOLES TO BE PREPARED AT INSTALLATION ON DOOR.

909 Strike	VON DUPRIN®	
NOTES: SEE MASTER SHEET #10001 FOR SUGGESTED REINFORCING	TEMPLATE NUMBER: 30042_b	DATE: 05-24-13

RIM APPLICATION

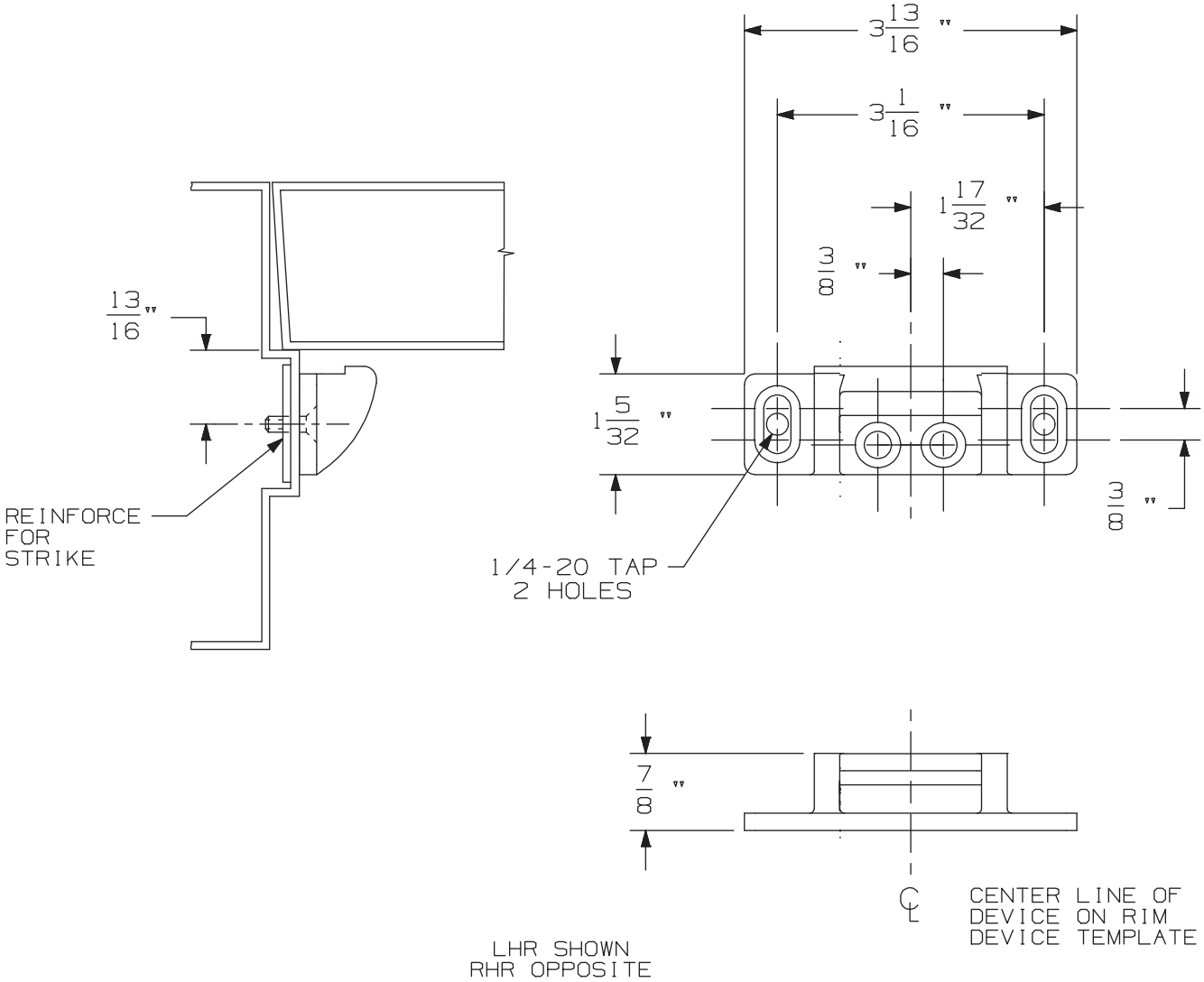

NOTE: DEVICE MOUNTING HOLES TO BE PREPARED AT INSTALLATION ON DOOR.

954 Strike	VON DUPRIN®	
NOTES: SEE MASTER SHEET #10001 FOR SUGGESTED REINFORCING	TEMPLATE NUMBER: 30041_b	DATE: 05-24-13

Guard-X® Exit Alarm Lock

Guard-X® Exit Alarm Lock - Exit Alarm Lock

APPLICATION	PREPARATION
SURFACE APPLICATION	1/4-20 TAP 4 PLACES
SEXBOLT APPLICATION	1/4" DIA THIS SIDE-13/32" DIA OPPOSITE SIDE 4 PLACES

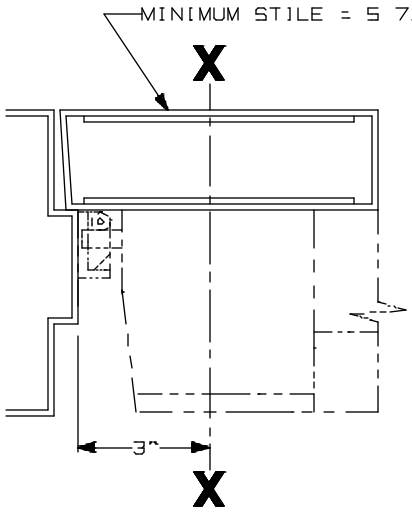

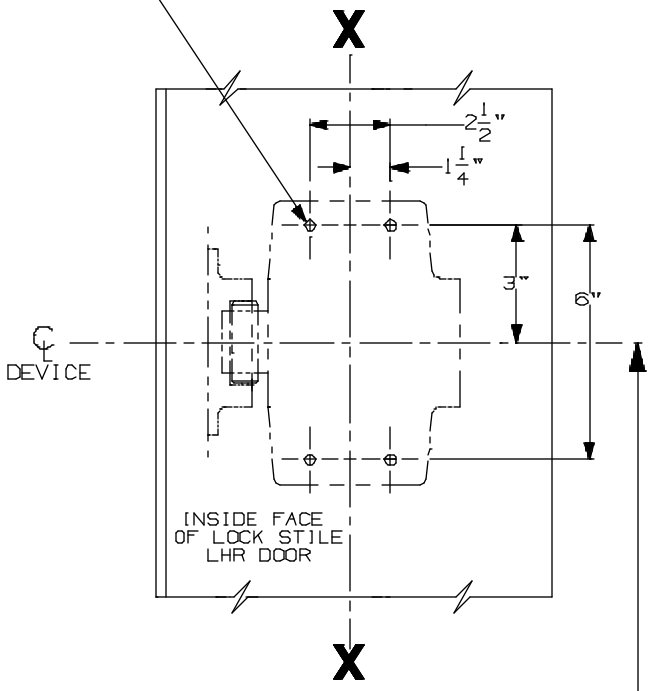

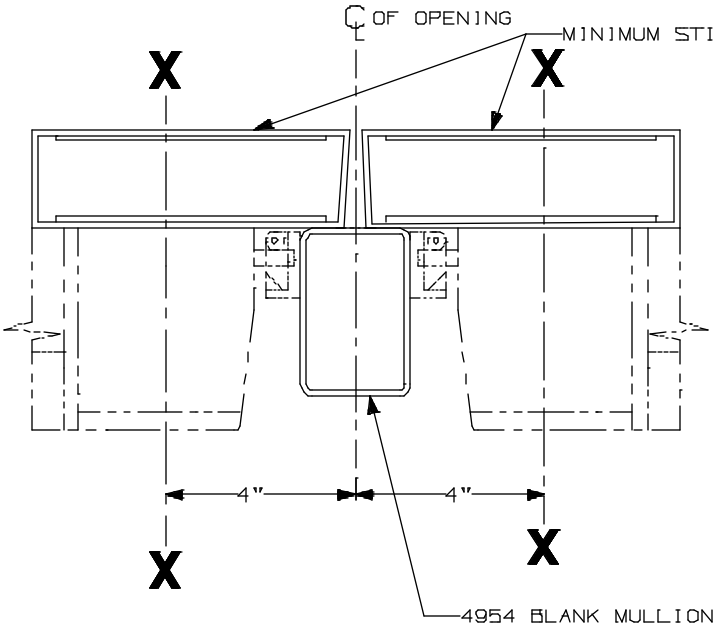

LHR SHOWN
RHR OPPOSITE

SINGLE DOOR OPENING
39 13/16" TO FINISHED FLOOR

IT IS RECOMMENDED THE MOUNTING HOLES BE PREPARED IN THE FIELD

2670EO/DT Exit Alarm Lock

VON DUPRIN®

NOTES: See Master Sheet #10001 For Suggested Reinforcing

TEMPLATE NUMBER: 10514_a

DATE: 05-22-13

APPLICATION	PREPARATION
SURFACE APPLICATION	1/4-20 TAP 4 PLACES
SEXBOLT APPLICATION	1/4" DIA THIS SIDE-13/32" DIA OPPOSITE SIDE 4 PLACES

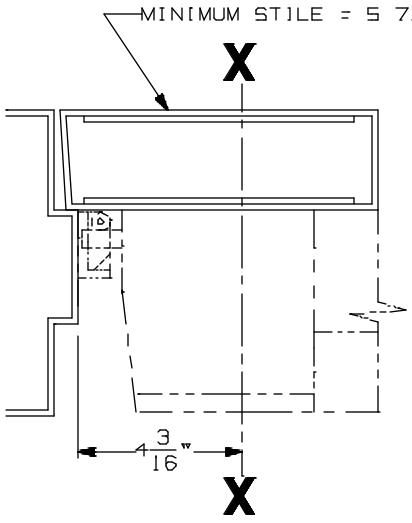

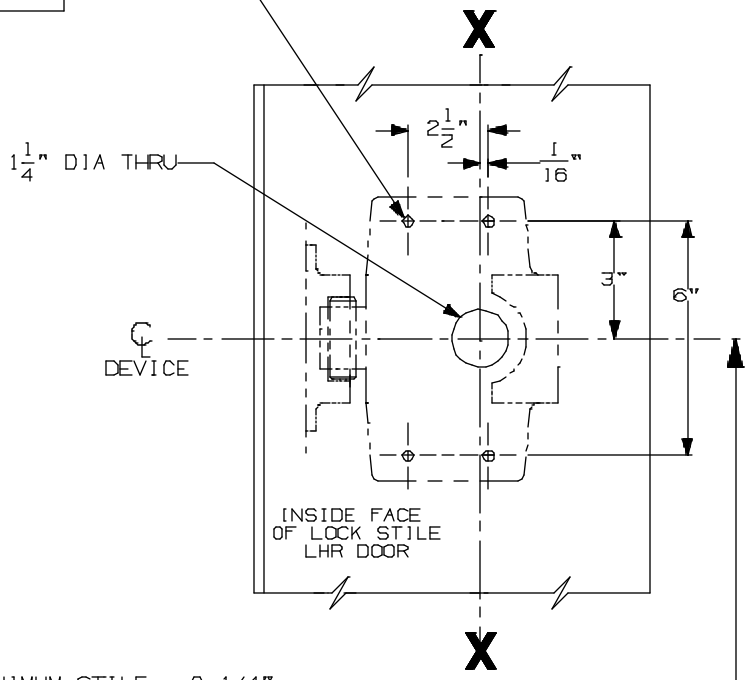

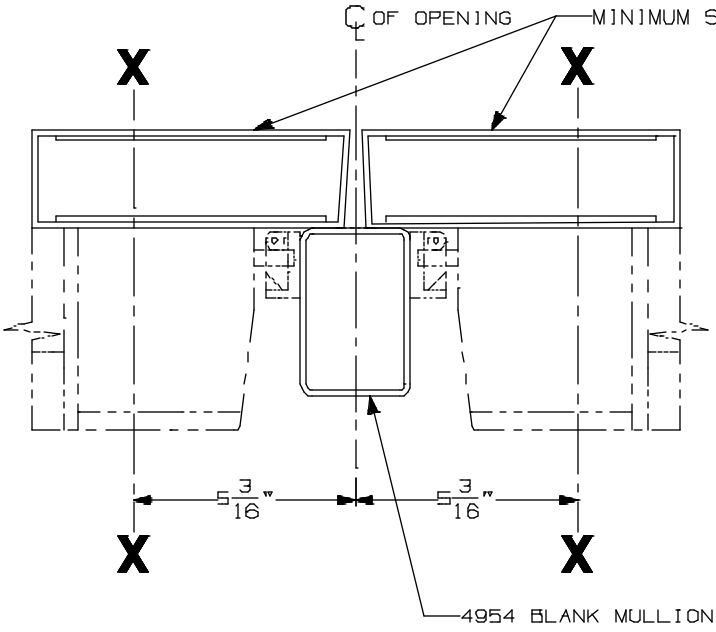

LHR SHOWN
RHR OPPOSITE

SINGLE DOOR OPENING
39 13/16" TO FINISHED FLOOR

IT IS RECOMMENDED THE MOUNTING HOLES BE PREPARED IN THE FIELD

2670NL Exit Alarm Lock

VON DUPRIN®

NOTES: See Master Sheet #10001 For Suggested Reinforcing

TEMPLATE NUMBER: 10513_a

DATE: 05-22-13

Accessory Items

Accessory Items

-

Cover Plates

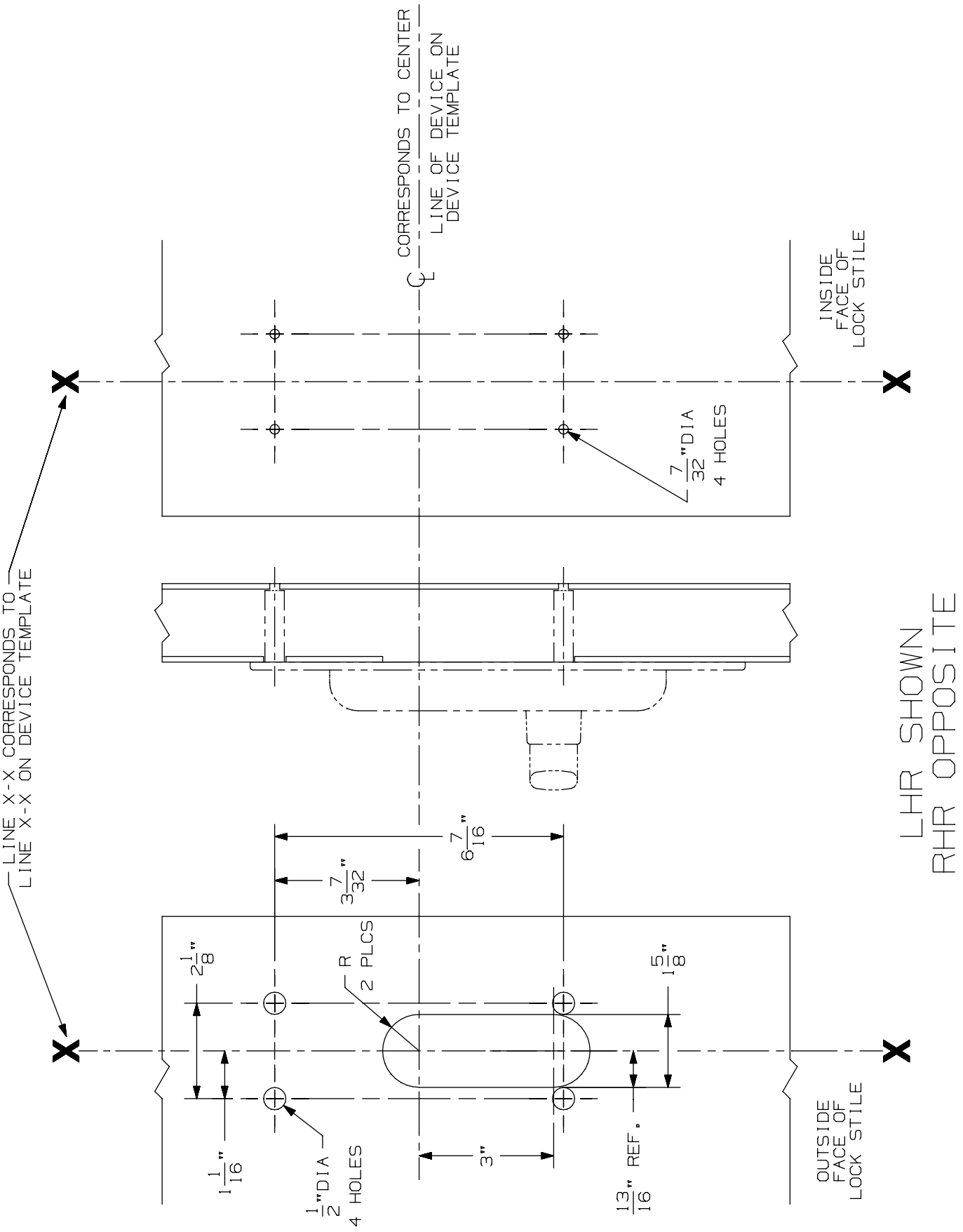

889 Control Plate for 44K & 88K Devices

VON DUPRIN®

NOTES: SEE MASTER SHEET #10001 FOR SUGGESTED REINFORCING

TEMPLATE NUMBER: 40006_a

DATE: 05-28-13

NOTES: SEE MASTER SHEET #10001 FOR SUGGESTED REINFORCING

889 Control Plate

VON DUPRIN®

TEMPLATE NUMBER: 40007_a

DATE: 05-28-13

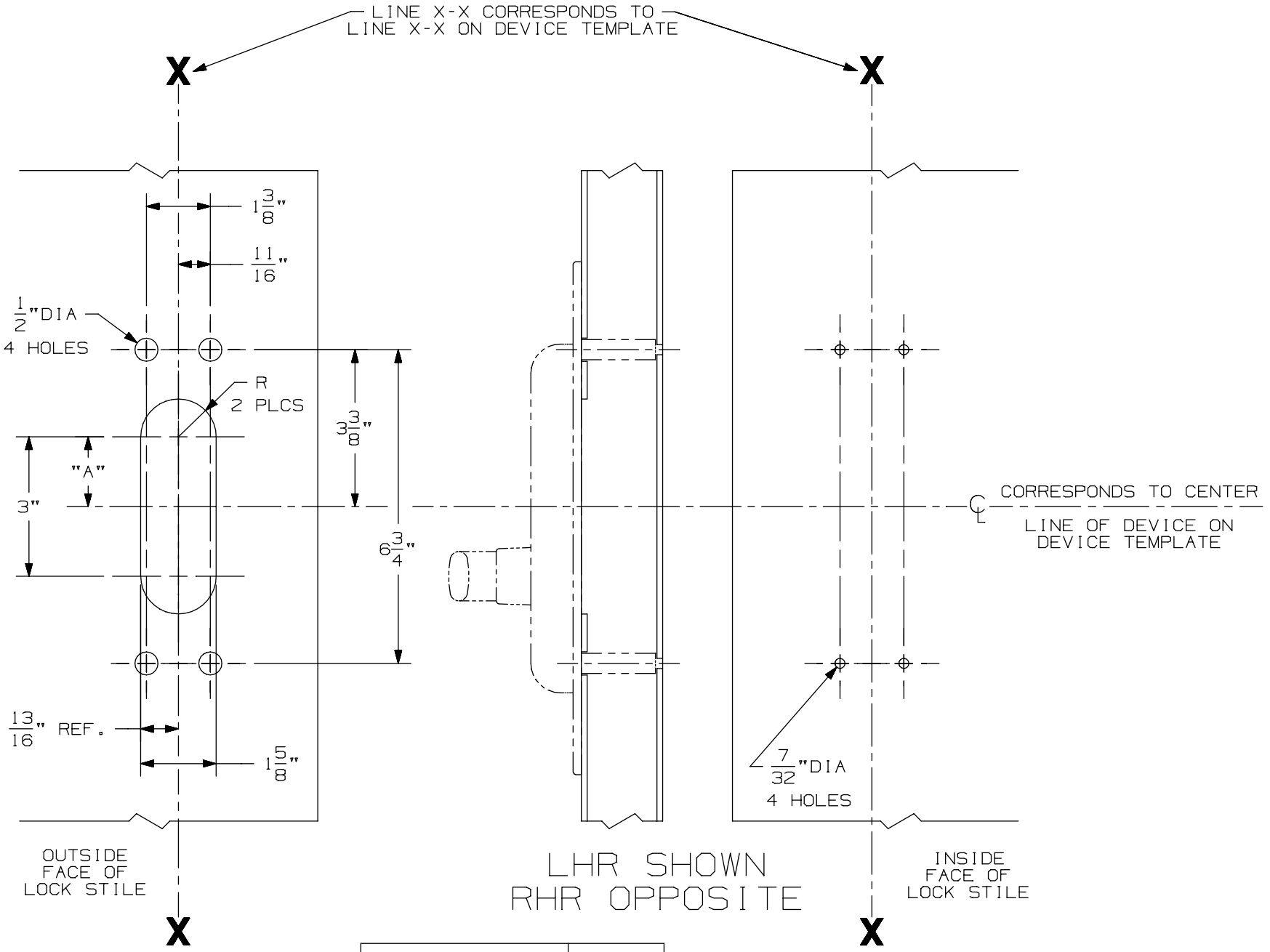

DEVICE	DIM A
8827K, 8827K-F	1 1/2"
8875	1 3/4"

Accessory Items

-

Cylinder Preparation

Cylinder Preparation Rim & Vertical Devices

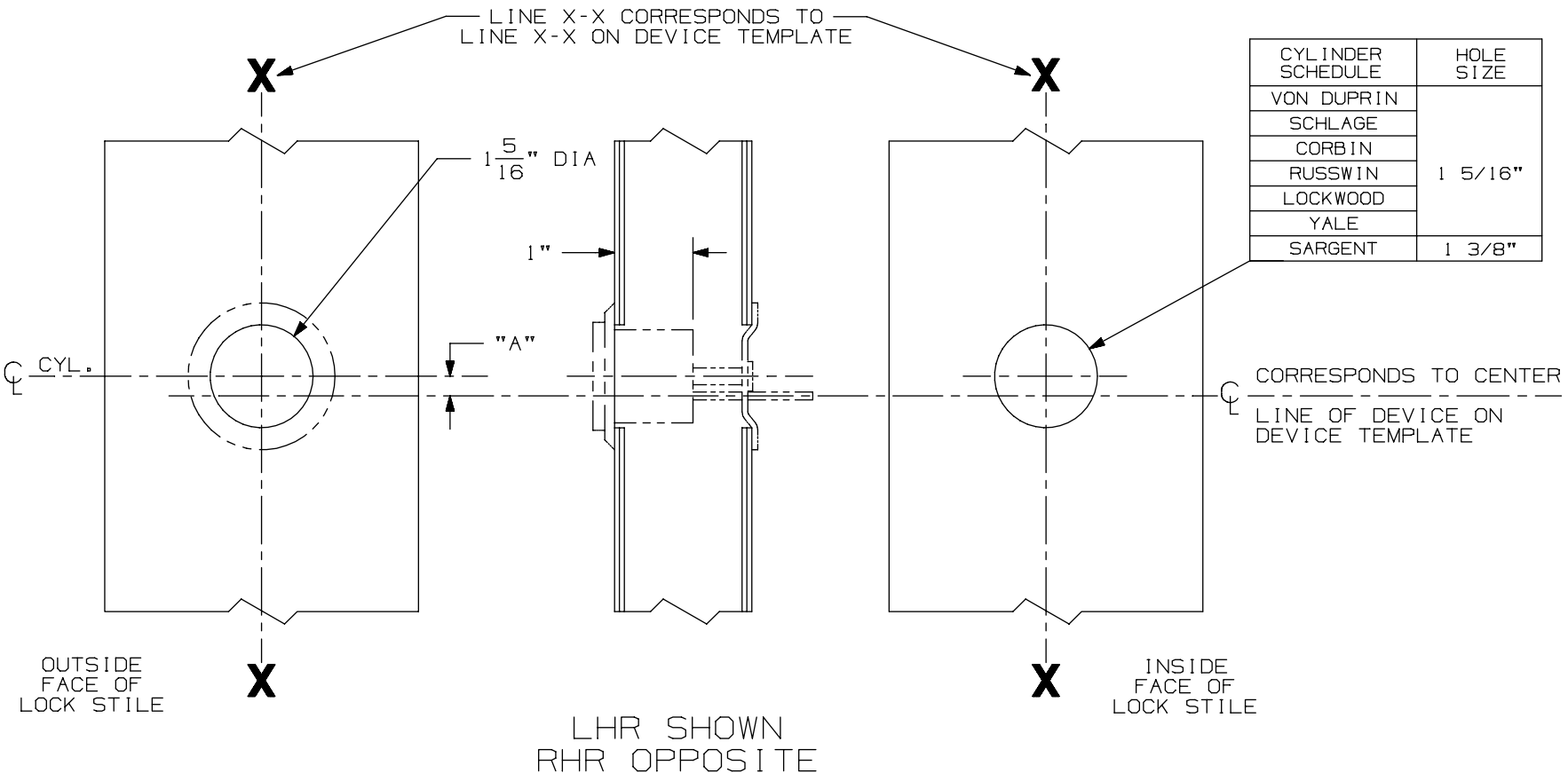

CYLINDER SCHEDULE	HOLE SIZE
VON DUPRIN	1 5/16"
SCHLAGE	
CORBIN	
RUSSWIN	
LOCKWOOD	
YALE	
SARGENT	1 3/8"

LHR SHOWN
RHR OPPOSITE

②

DEVICE APPLICATION SCHEDULE			
DEVICE	DIM. "A"	DEVICE	DIM. "A"
44 RIM	1/4"	88 VERT.	1 3/4"
88 RIM	1/4"		

NOTES: SEE MASTER SHEET #10001 FOR SUGGESTED REINFORCING

TEMPLATE NUMBER: 40015_a

DATE: 05-28-13

VON DUPRIN®

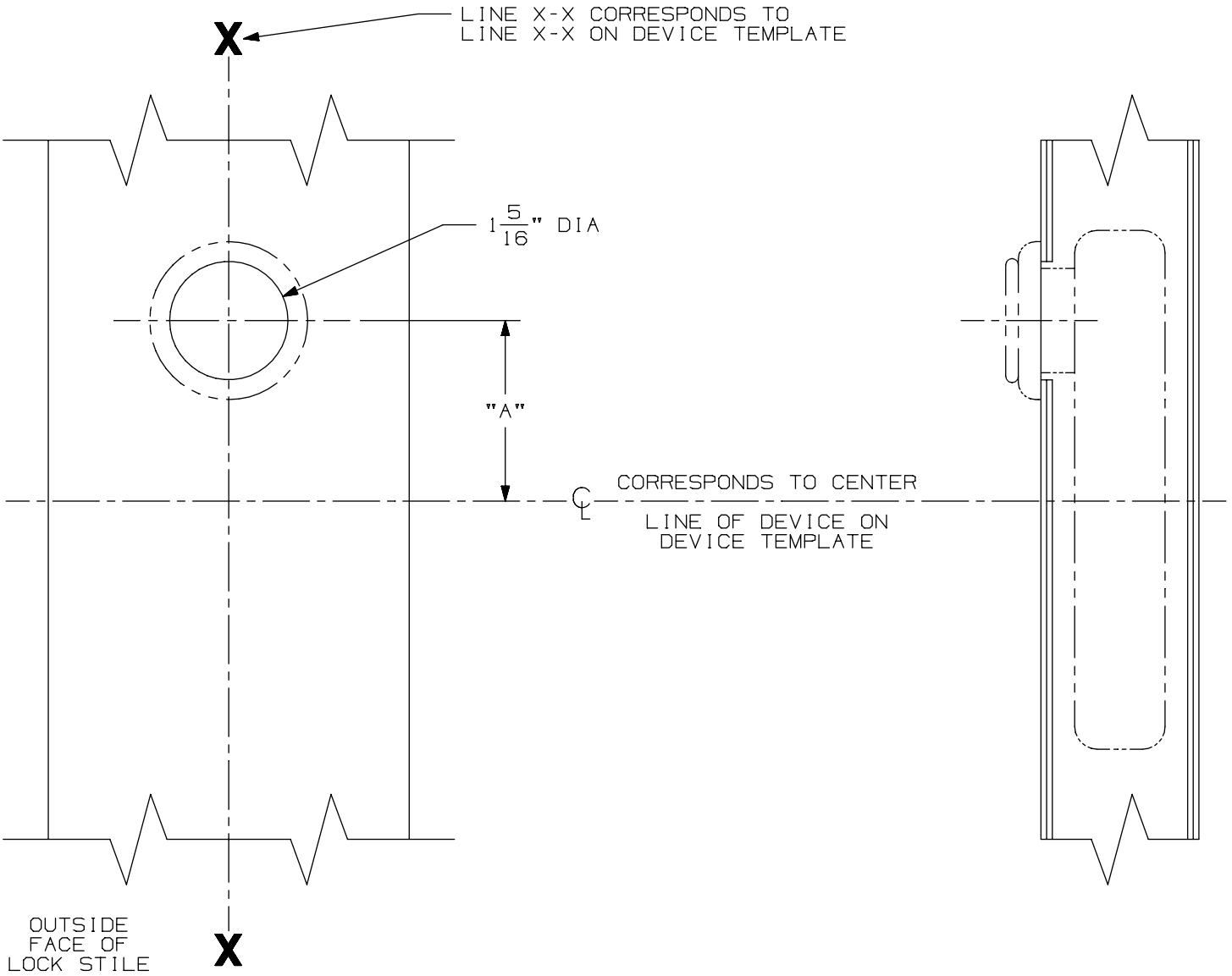

DEVICE APPLICATION SCHEDULE	
DEVICE	DIM. "A"
55 MORT.	2"
88 MORT.	2"
99 MORT.	2 7/32"

③

NOTE:
LHR APPLICATION SHOWN, RHR APPLICATION OPPOSITE

Cylinder Preparation Mortise Devices

VON DUPRIN®

NOTES: SEE MASTER SHEET #10001 FOR SUGGESTED REINFORCING

TEMPLATE NUMBER: 40018_a

DATE: 05-28-13

Accessory Items

-

Electric Power Transfer

Power Transfer Unit
EPT2, EPT10, & PNT 1

NOTES: SEE MASTER SHEET #10001 FOR SUGGESTED REINFORCING

TEMPLATE NUMBER: 40250_a

DATE: 05-28-13

VON DUPRIN®

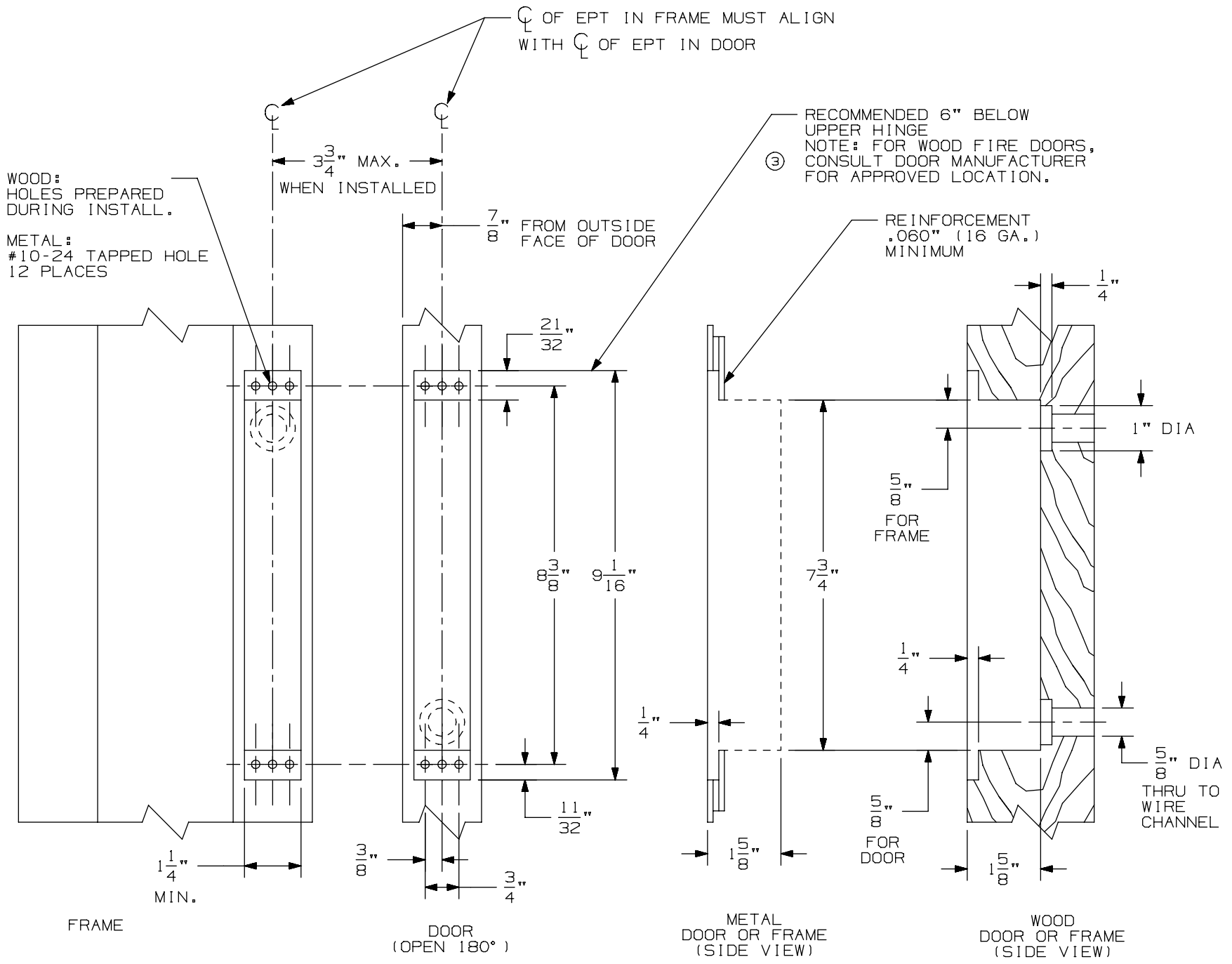

* ALL DIMENSIONS ARE TYPICAL

Power Transfer Unit
EPT2, EPT10, & PNT 1

NOTES: SEE MASTER SHEET #10001 FOR SUGGESTED REINFORCING

TEMPLATE NUMBER: 40250_a

DATE: 05-28-13

VON DUPRIN®

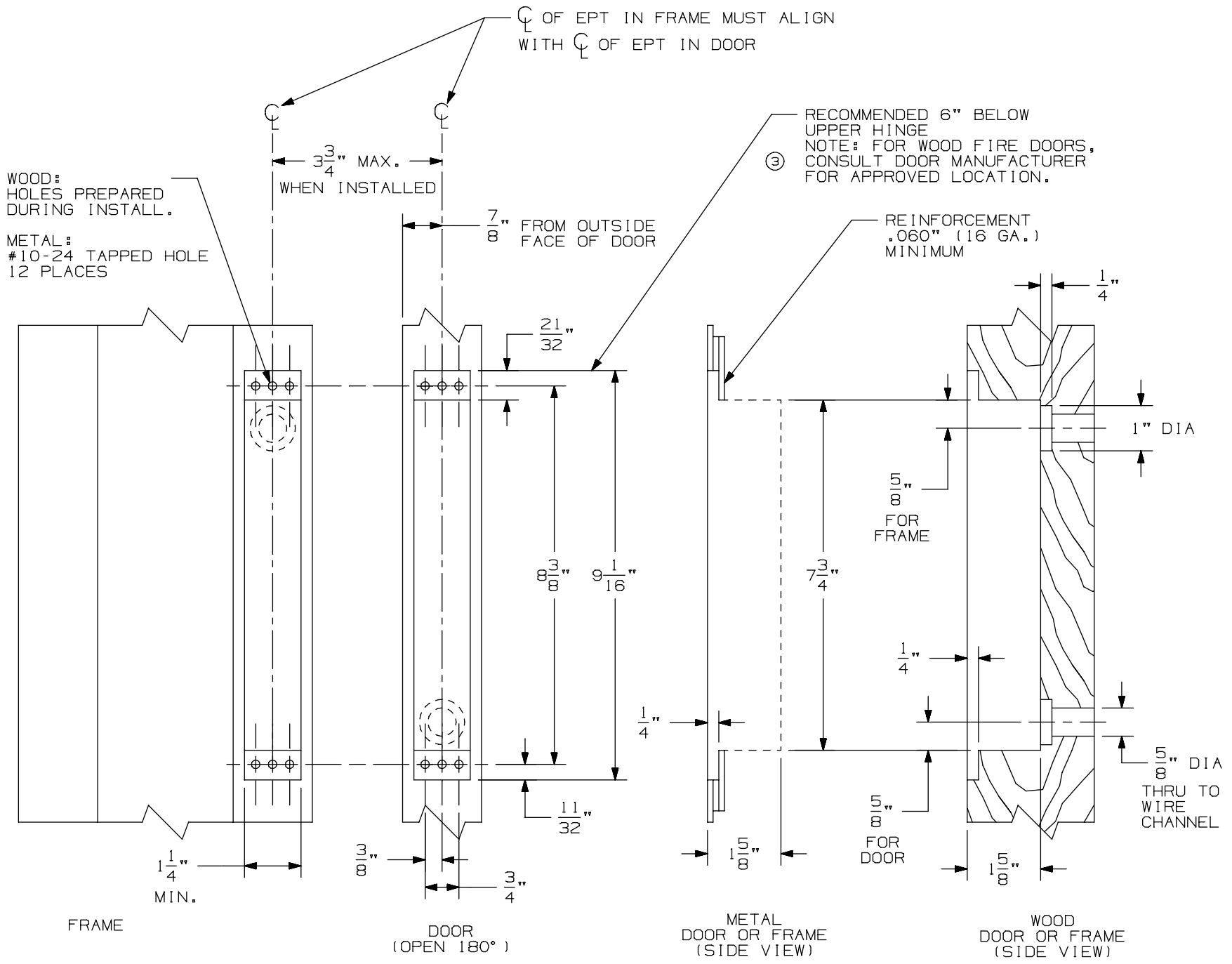

* ALL DIMENSIONS ARE TYPICAL

Accessory Items

-

Electric Strikes Application

LHR APPLICATION SHOWN
RHR OPPOSITE

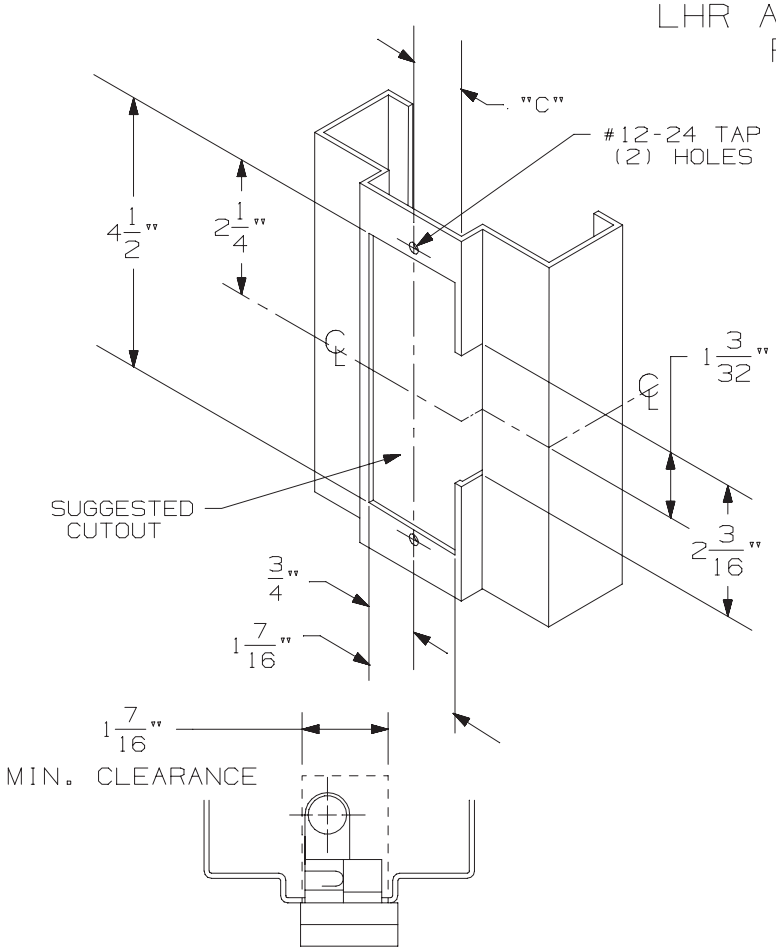

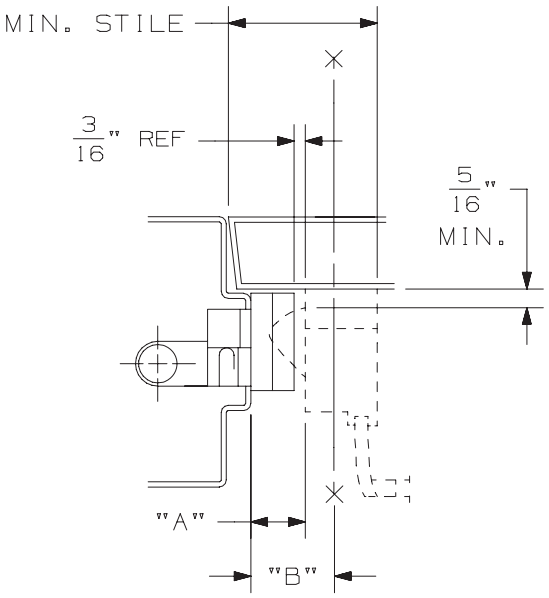

LINE X-X CORRESPONDS TO
LINE X-X ON DEVICE TEMPLATE

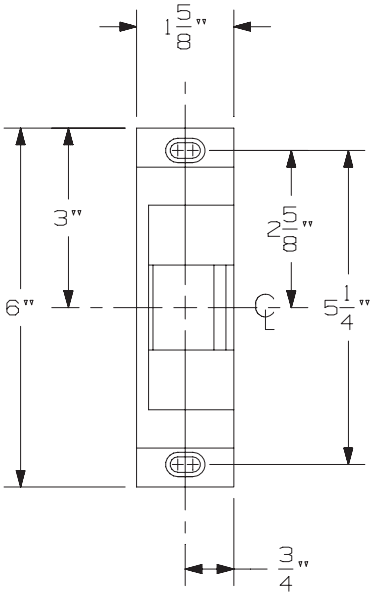

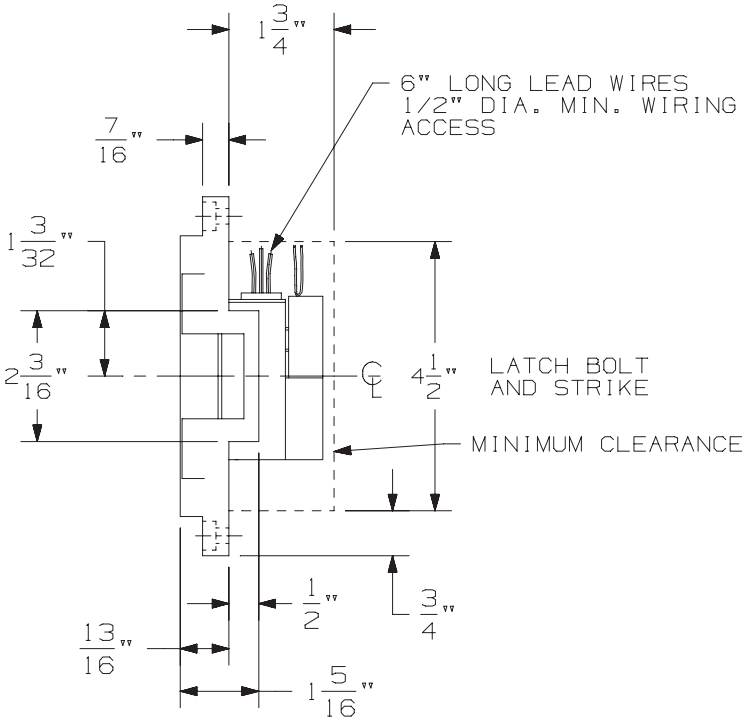

SEE SHEET #2 FOR
APPLICATION SCHEDULE

REPLACES 3031 STRIKE

6111 Electric Strike Rim - Single Door Application

VON DUPRIN®

NOTES: SEE MASTER SHEET #10001 FOR SUGGESTED REINFORCING

TEMPLATE NUMBER: 30219_c Sht 1

DATE: 05-28-13

6111 ELECTRIC STRIKE
SINGLE DOOR APPLICATION
RIM APPLICATION SCHEDULE
(PANIC & FIRE DEVICES)

	PRODUCT MANUFACTURER	PRODUCT APPLICATION	DIM "A"	DIM "B"	DIM "C"
	VON DUPRIN	22 RIM	----	2 7/16"	3/4"
	VON DUPRIN	33/35 RIM EO/DT/NL/TP	----	1 13/32"	3/4"
	VON DUPRIN	44 RIM EO/DT/NL/TP	----	2 1/2"	3/4"
	VON DUPRIN	44 RIM K	----	2 3/8"	3/4"
	VON DUPRIN	88 RIM EO/DT/NL/TP	----	2 1/2"	3/4"
	VON DUPRIN	88 RIM K	----	2 3/8"	3/4"
	VON DUPRIN	98/99 RIM	----	2 7/16"	3/4"
	VON DUPRIN	33A/35A RIM	----	1 15/32"	3/4"
	MAGNOCHROM	RIM	1 1/16"	----	3/4"
	MONARCH	11-R RIM	1"	----	3/4"
Ⓑ	MONARCH	XX-R RIM	1 1/16"		3/4"
Ⓑ	MONARCH *	18-R, F-18-R RIM	1 1/16"		7/8"
	MONARCH *	19-R, F-19-R RIM	1 1/16"	----	3/4"
	PRECISION **	1100 RIM	1"	----	1"
	PRECISION	810 RIM	1"	----	3/4"
	RUSSWIN	372, 472, 572 RIM	1"	----	3/4"
	SARGENT	2800, 6500, 9898 RIM	1 1/16"	----	3/4"
	SARGENT **	9800 RIM	1 1/16"	----	3/4"
	SARGENT	9500 RIM	1"	----	3/4"
	SARGENT	6800, 8500, 8800 RIM	1 1/8"	----	3/4"
	YALE	1500 RIM	1"	----	11/16"
Ⓑ	FALCON	25 RIM			13/16"

NOTES:
* NO DEADLATCHING
** PANIC DEVICES ONLY

REPLACES;
VON DUPRIN 3031 ELECTRIC STRIKE

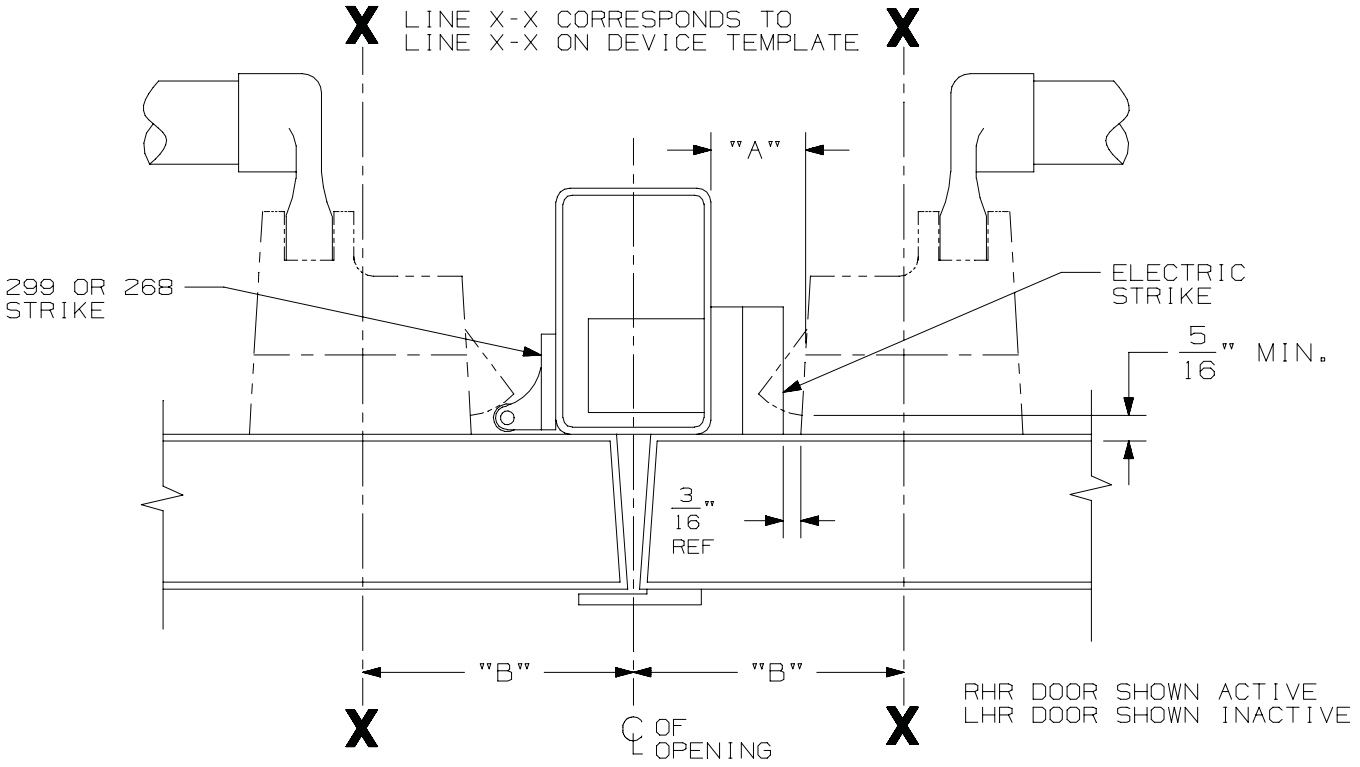

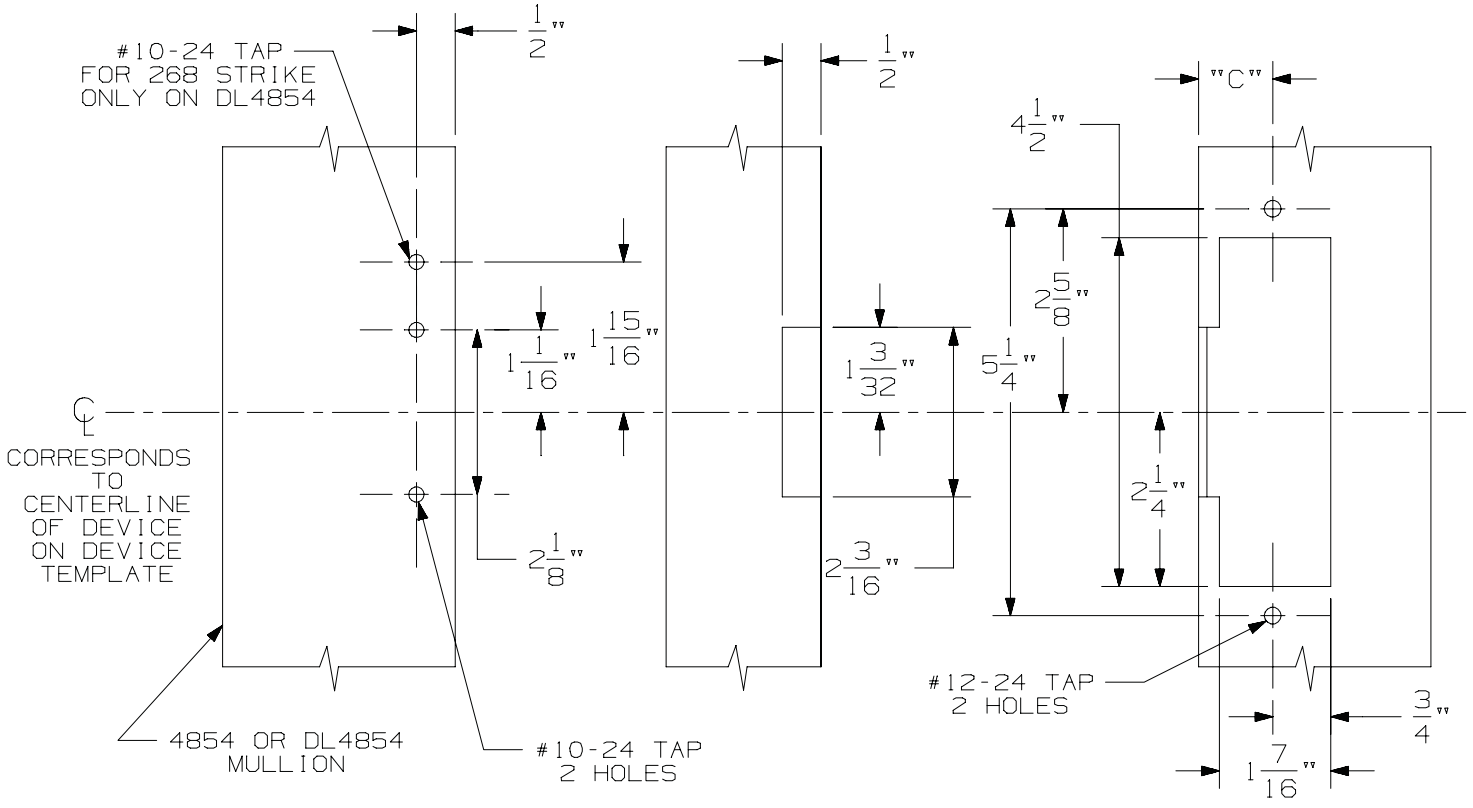

6111 Electric Strike
Double Door Application using 4854 Mullion

VON DUPRIN®

NOTES: SEE MASTER SHEET #10001 FOR SUGGESTED REINFORCING

TEMPLATE NUMBER: 30226_c

DATE: 05-28-13

6111 ELECTRIC STRIKE
DOUBLE DOOR APPLICATION W/MULLION
RIM APPLICATION SCHEDULE
(PANIC & FIRE DEVICES)

PRODUCT MANUFACTURER	PRODUCT APPLICATION	DIM "A"	DIM "B"	DIM "C"
VON DUPRIN	22 RIM	------	3 7/16"	3/4"
VON DUPRIN	33/35 RIM EO/DT/NL/TP	------	2 13/32"	3/4"
VON DUPRIN	44 RIM EO/DT/NL/TP	------	3 1/2"	3/4"
VON DUPRIN	44 RIM K	------	3 3/8"	3/4"
VON DUPRIN	88 RIM EO/DT/NL/TP	------	3 1/2"	3/4"
VON DUPRIN	88 RIM K	------	3 3/8"	3/4"
VON DUPRIN	98/99 RIM	------	3 7/16"	3/4"
VON DUPRIN	33A/35A RIM	------	2 15/32"	3/4"
MAGNOCHROM	RIM	1 1/16"	------	3/4"
MONARCH	11-R RIM	1"	------	3/4"
MONARCH	XX-R RIM	1 1/16"	------	3/4"
MONARCH *	18-R,F-18-R RIM	1 1/16"	------	7/8"
MONARCH *	19-R,F-19-R RIM	1 1/16"	------	3/4"
PRECISION	1100 RIM	1"	------	1"
PRECISION	810 RIM	1"	------	3/4"
RUSSWIN	372,472,572 RIM	1"	------	3/4"
SARGENT	2800,6500,9898	1 1/16"	------	3/4"
SARGENT **	9800 RIM	1 1/16"	------	3/4"
SARGENT	9500 RIM	1"	------	3/4"
SARGENT	6800,8500,8800 RIM	1 1/8"	------	3/4"
YALE	1500 RIM	1"	------	11/16"
MONARCH	25-R	------	3 1/4"	3/4"

NOTES:

1. TEMPLATE DIMENSIONS GIVEN ARE FOR BLANK MULLION PREP.
2. DIMENSION "C" PROVIDED ON VON DUPRIN MULLIONS IS 3/4".

* NO DEADLATCHING

** PANIC DEVICES ONLY.

REPLACES:

VON DUPRIN 3031 ELECTRIC STRIKE

6111 ELECTRIC STRIKE
DOUBLE DOOR APPLICATION
USING 4854 MULLION

VON DUPRIN®

NOTE: SEE MASTER NO. 10001 FOR SUGGESTED REINFORCING.

TEMPLATE NUMBER: 30226_C

DATE: 05-7-13

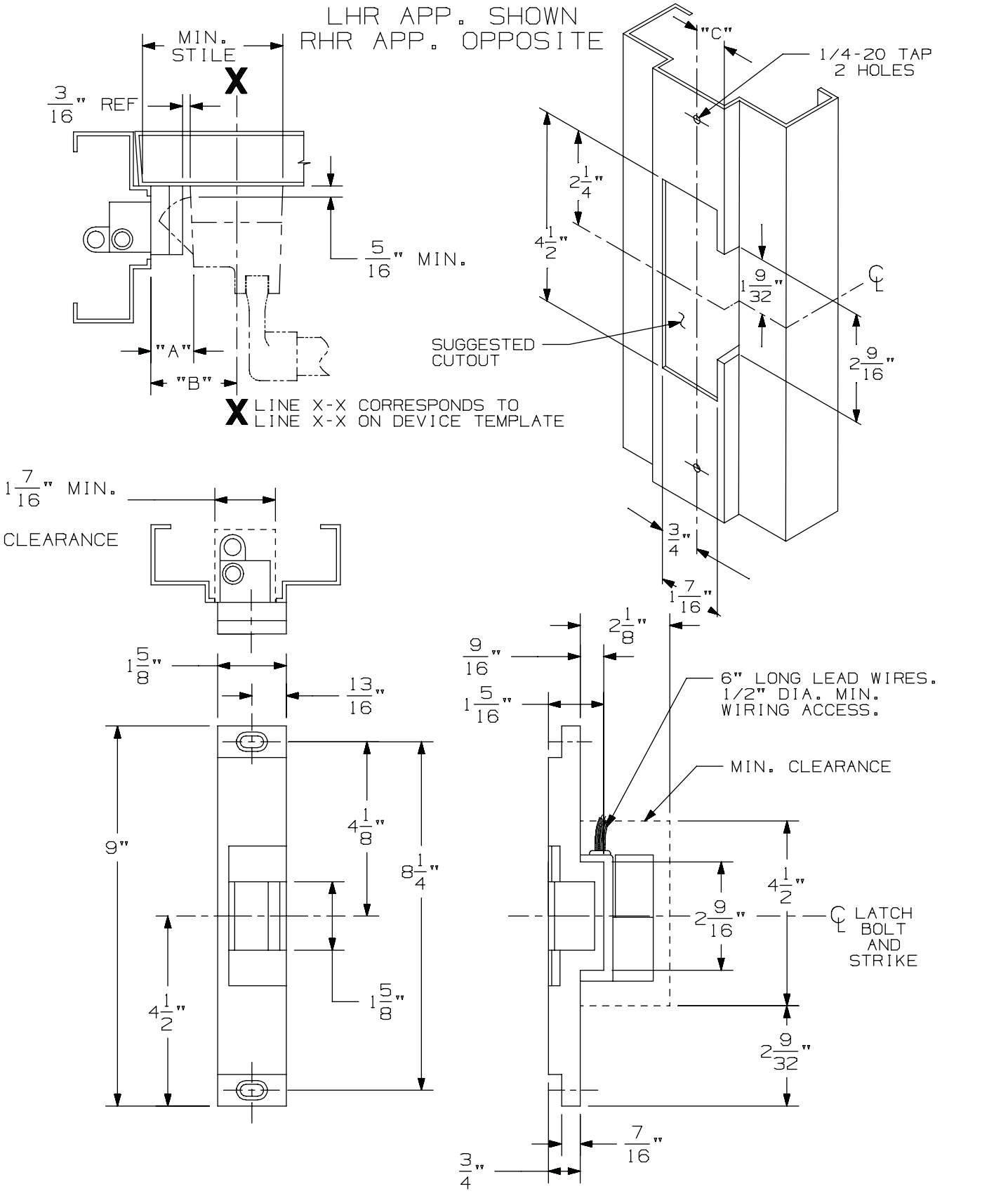

NOTE: 1. ACTUAL STRIKE DIMENSIONS SHOWN.

6112 Electric Strike Rim
Single Door Application

VON DUPRIN®

NOTES: SEE MASTER SHEET #10001 FOR SUGGESTED REINFORCING

TEMPLATE NUMBER: 30232_c Sht 1

DATE: 05-28-13

6112 ELECTRIC STRIKE
SINGLE DOOR APPLICATION
RIM APPLICATION SCHEDULE
(PANIC & FIRE DEVICES)

	PRODUCT MANUFACTURER	PRODUCT APPLICATION	DIM "A"	DIM "B"	DIM "C"
	VON DUPRIN	22 RIM	------	2 7/16"	13/16"
	VON DUPRIN	33/35 RIM EO/DT/NL/TP	------	1 13/32"	13/16"
	VON DUPRIN	44 RIM EO/DT/NL/TP	------	2 1/2"	13/16"
	VON DUPRIN	44 RIM K	------	2 3/8"	13/16"
	VON DUPRIN	88 RIM EO/DT/NL/TP	------	2 1/2"	13/16"
	VON DUPRIN	88 RIM K	------	2 3/8"	13/16"
	VON DUPRIN	98/99/900 RIM	------	2 7/16"	13/16"
	VON DUPRIN	33A/35A RIM	------	1 15/32"	13/16"
	MAGNOCHROM	RIM	1 1/16"	------	13/16"
	MONARCH	11-R RIM	1"	------	13/16"
	MONARCH	XX-R RIM	1 1/16"	------	13/16"
	MONARCH *	18-R,F-18-R	1"	------	15/16"
	MONARCH *	19-R,F-19-R	1"	------	13/16"
	PRECISION	1100 RIM	1"	------	1 1/16"
	PRECISION	810 RIM	1"	------	13/16"
	RUSSWIN	372,472,572 RIM	1"	------	13/16"
	SARGENT	2800,6500,9898	1 1/16"	------	13/16"
	SARGENT **	9800 RIM	1 1/16"	------	13/16"
	SARGENT	9500 RIM	1"	------	13/16"
	SARGENT	6800,8500,8800 RIM	1 1/16"	------	15/16"
	YALE	1500 RIM	1"	------	3/4"
Ⓑ	FALCON	25 RIM	------	2 3/16"	13/16"

NOTES:

* NO DEADLATCHING
** PANIC DEVICES ONLY.

REPLACES:
FOLGER ADAM 310-4

6112 Electric Strike Rim Single Door Application	VON DUPRIN®	
NOTES: SEE MASTER SHEET #10001 FOR SUGGESTED REINFORCING	TEMPLATE NUMBER: 30232_c Sht 2	DATE: 05-28-13

LHR APPLICATION SHOWN
RHR OPPOSITE

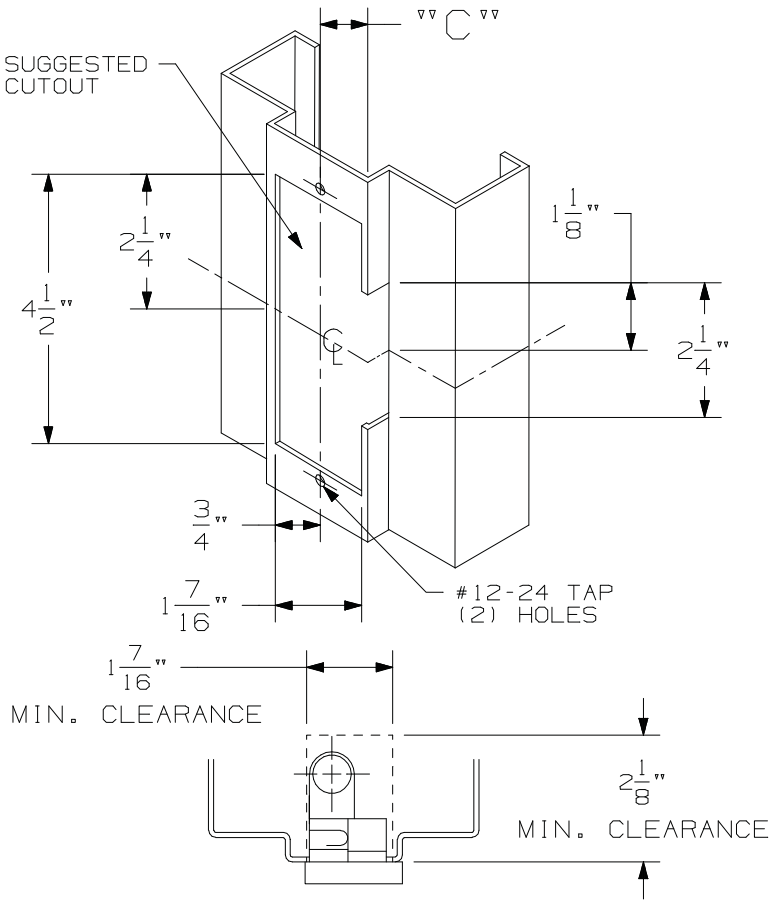

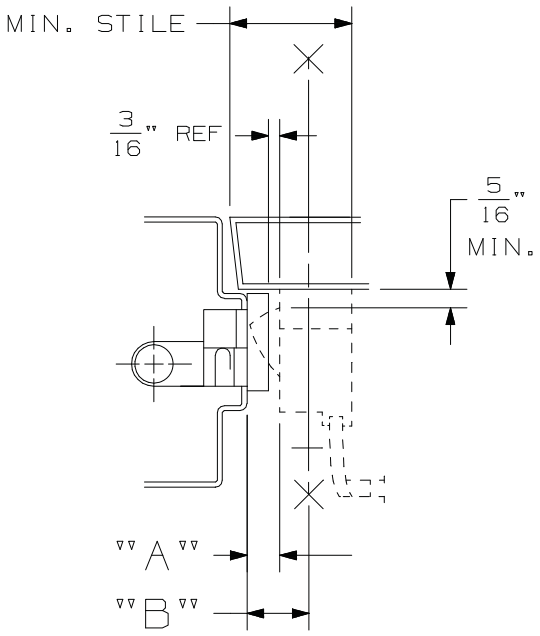

LINE X-X CORRESPONDS TO
LINE X-X ON DEVICE TEMPLATE

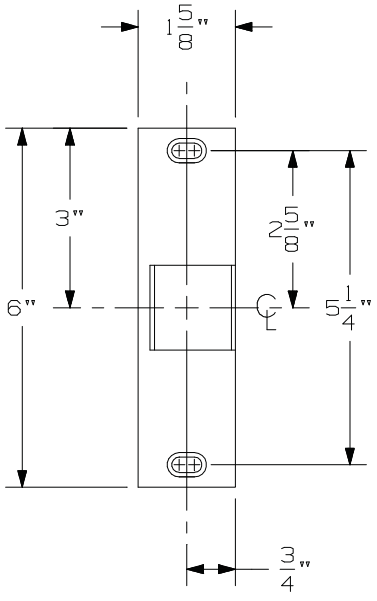

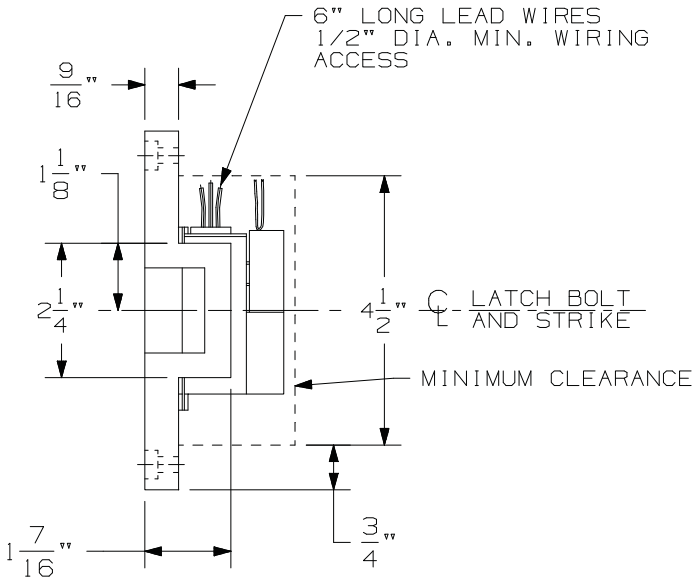

REPLACES 3011/3021 STRIKE

SEE SHEET #2 FOR
APPLICATION SCHEDULE

6113 Electric Strike Rim - Single Door Application

VON DUPRIN®

NOTES: SEE MASTER SHEET #10001 FOR SUGGESTED REINFORCING

TEMPLATE NUMBER: 30220_c Sht 1

DATE: 05-28-13

6113 ELECTRIC STRIKE
SINGLE DOOR APPLICATION
RIM APPLICATION SCHEDULE

(PANIC & FIRE DEVICES)
REPLACES VON DUPRIN 3011/3021 ELECTRIC STRIKE

	PRODUCT MANUFACTURER	PRODUCT APPLICATION	DIM "A"	DIM "B"	DIM "C"
	VON DUPRIN	22 RIM	- - - -	2 3/16"	3/4"
	VON DUPRIN	33/35 RIM EO/DT/NL/TP	- - - -	1 5/32"	3/4"
	VON DUPRIN	44 RIM EO/DT/NL/TP	- - - -	2 1/4"	3/4"
	VON DUPRIN	44 RIM K	- - - -	2 1/8"	3/4"
	VON DUPRIN *	88 RIM EO/DT/NL/TP	- - - -	2 1/4"	3/4"
	VON DUPRIN *	88 RIM K	- - - -	2 1/8"	3/4"
	VON DUPRIN	98/99 RIM	- - - -	2 3/16"	3/4"
	VON DUPRIN	33A/35A RIM	- - - -	1 7/32"	3/4"
	MAGNOCHROM	RIM	13/16"	- - - -	3/4"
	MONARCH	11-R RIM	3/4"	- - - -	3/4"
Ⓑ	MONARCH	XX-R RIM	13/16"	2 1/16"	3/4"
Ⓑ	MONARCH **	18-R, F-18-R RIM	3/4"	2 1/16"	7/8"
	MONARCH **	19-R, F-19-R RIM	3/4"	- - - -	3/4"
	PRECISION *	1100 RIM	3/4"	- - - -	1"
	PRECISION	810 RIM	3/4"	- - - -	3/4"
	SARGENT	2800, 6500, 9898 RIM	13/16"	- - - -	3/4"
	SARGENT *	9800 RIM	13/16"	- - - -	3/4"
	SARGENT	9500 RIM	3/4"	- - - -	3/4"
	SARGENT	6800, 8500, 8800	13/16"	- - - -	7/8"
	YALE	1500 RIM	3/4"	- - - -	11/16"
Ⓑ	FALCON			2"	13/16"

NOTES:
* PANIC DEVICES ONLY
** NO DEADLATCHING

6113 Electric Strike Rim
Single Door Application

VON DUPRIN®

NOTES: SEE MASTER SHEET #10001 FOR SUGGESTED REINFORCING

TEMPLATE NUMBER: 30220_c Sht 2

DATE: 05-28-13

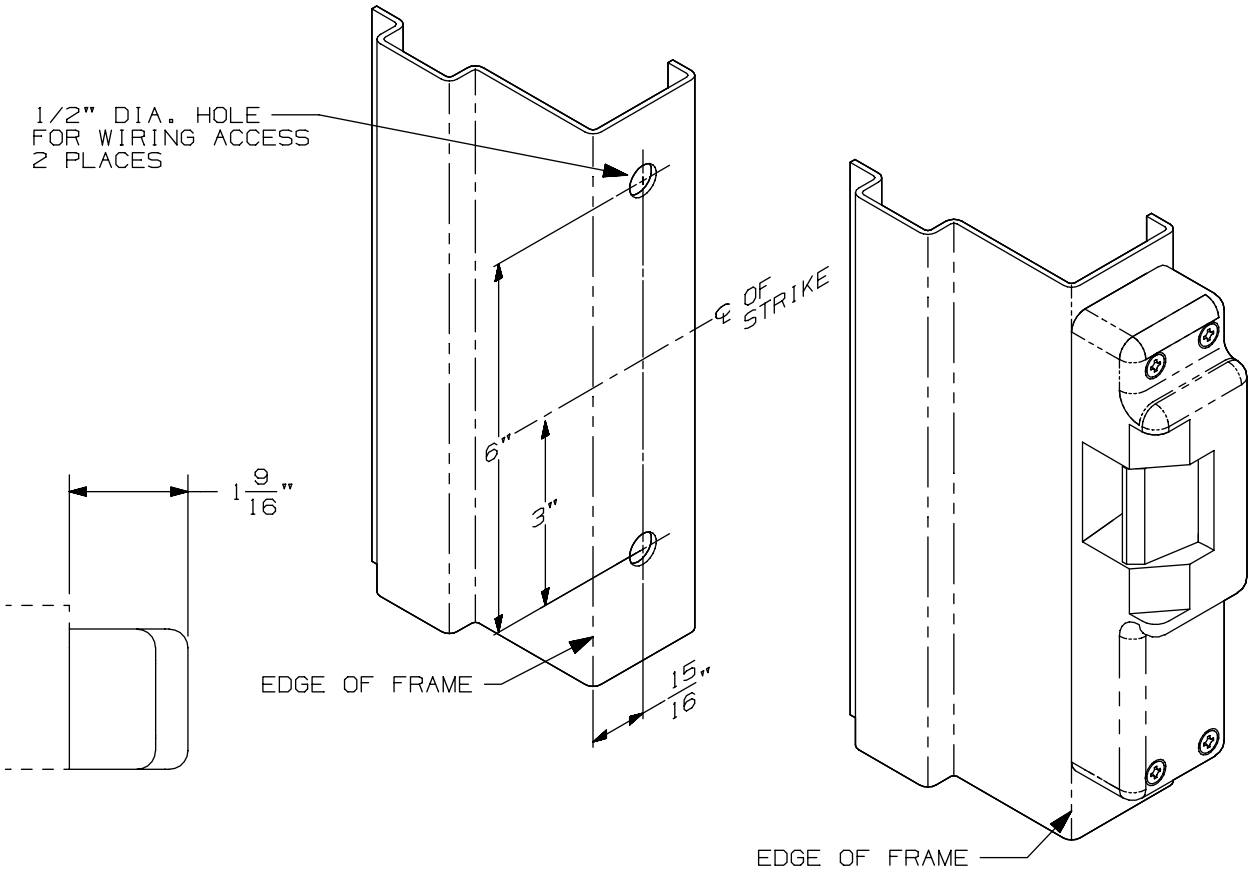

RH DOOR APPLICATION SHOWN

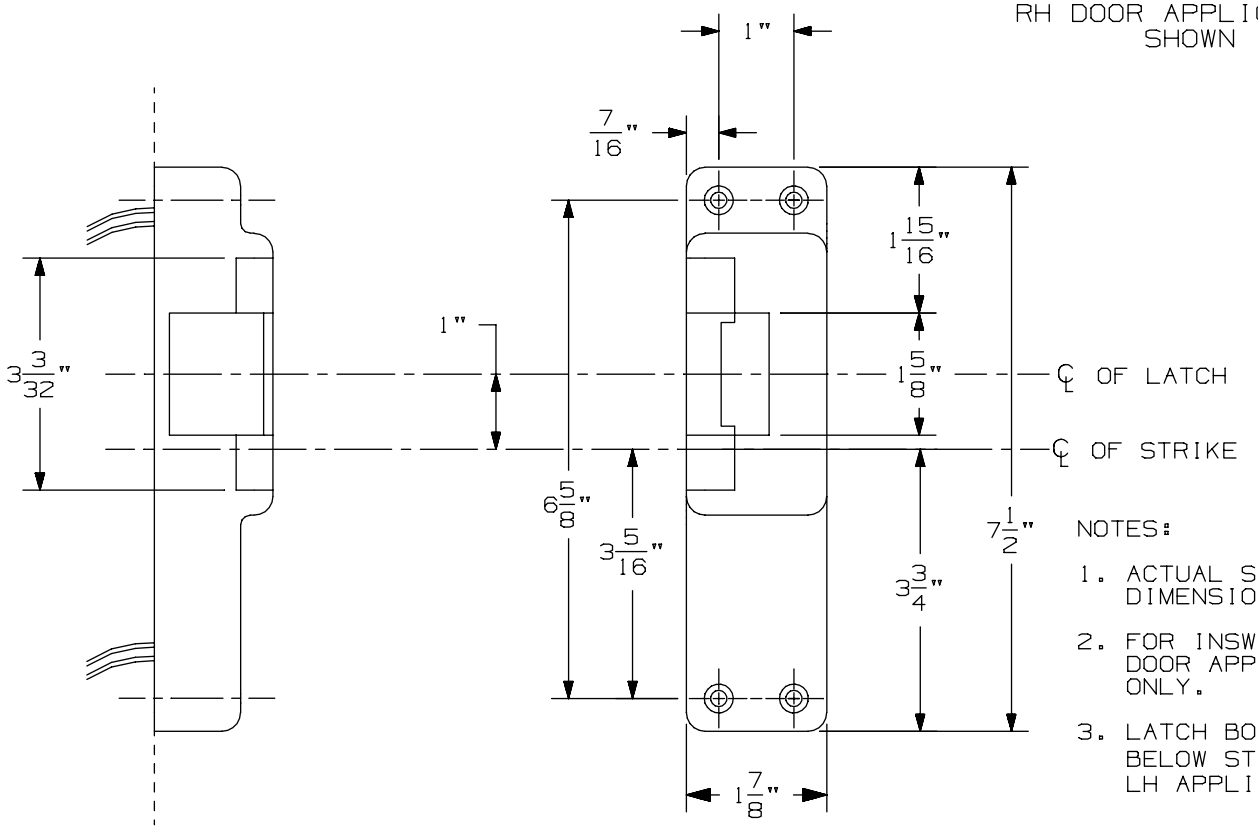

NOTES:

1. ACTUAL STRIKE DIMENSION SHOWN.
2. FOR INSWINGING DOOR APPLICATION ONLY.
3. LATCH BOLT IS BELOW STRIKE ℄ FOR LH APPLICATIONS.

6114 Electric Strike for Night Latch Application

VON DUPRIN®

NOTES: SEE MASTER SHEET #10001 FOR SUGGESTED REINFORCING

TEMPLATE NUMBER: 30243_a

DATE: 05-28-13

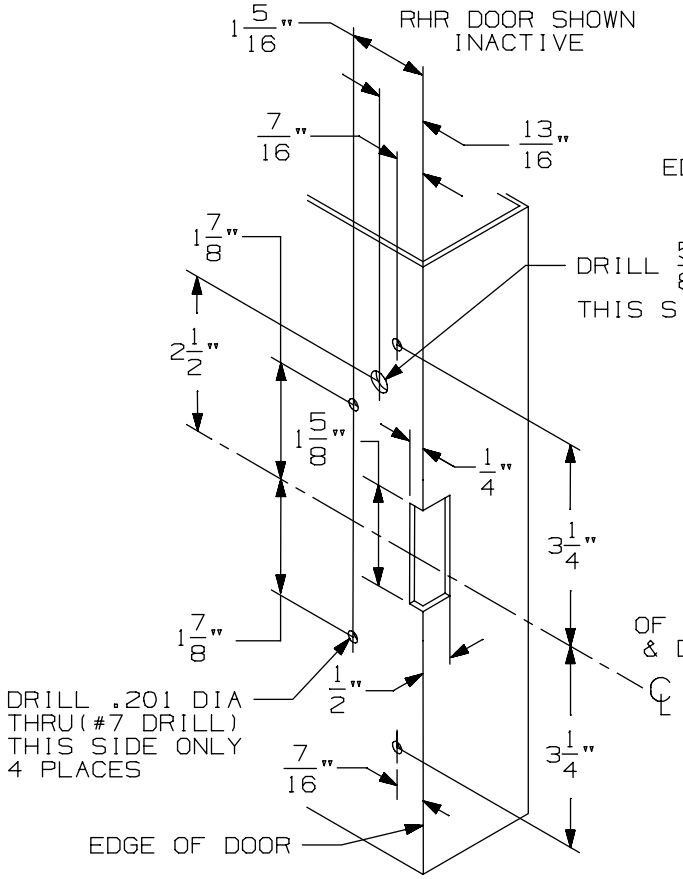

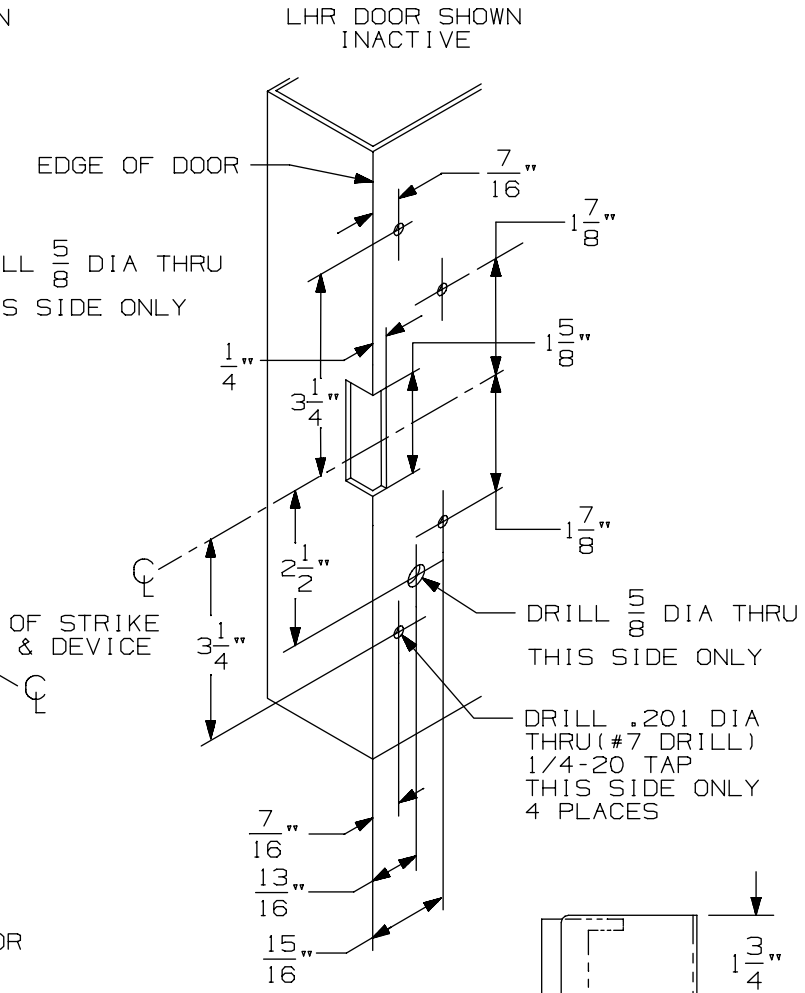

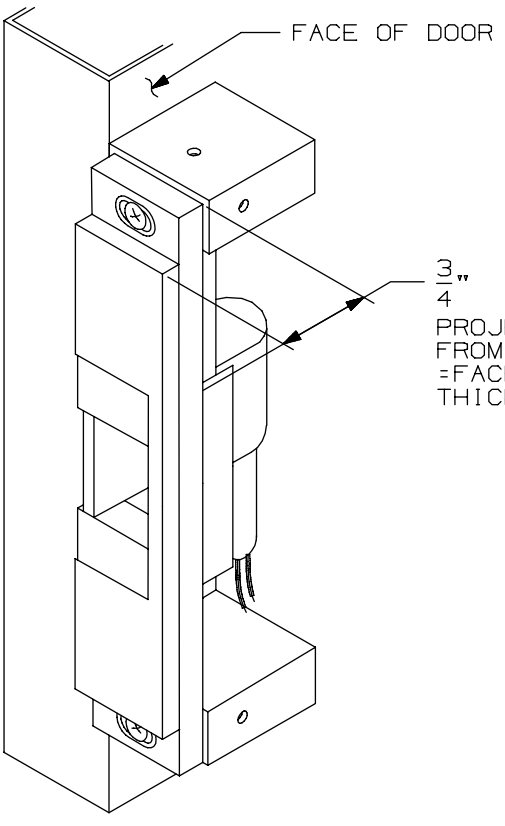

STRIKE SHOWN WITHOUT COVER

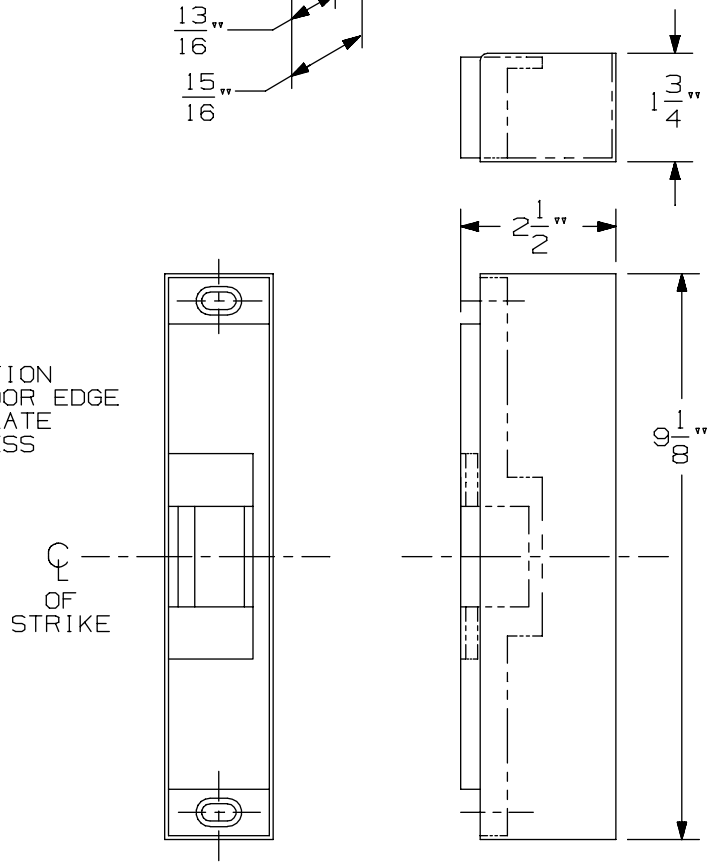

NOTE: 1. ACTUAL STRIKE DIMENSIONS SHOWN.

VON DUPRIN®

6121 ELECTRIC STRIKE
DOUBLE DOOR APPLICATION

Ingersoll Rand
Security Technologies

NOTE:

TEMPLATE NUMBER: 30239_8SHT1

DATE: 07-15-03

6121 ELECTRIC STRIKE
DOUBLE DOOR APPLICATION
RIM APPLICATION SCHEDULE

PRODUCT MANUFACTURER	PRODUCT APPLICATION	DIM "A"	DIM "B"
VON DUPRIN	22 RIM		2 7/16"
VON DUPRIN	33/35 RIM EO/DT/NL/TP		1 13/32"
VON DUPRIN	44 RIM EO/DT/NL/TP		2 1/2"
VON DUPRIN	44 RIM K		3 3/8"
VON DUPRIN	88 RIM EO/DT/NL/TP		2 1/2"
VON DUPRIN	88 RIM K		2 3/8"
VON DUPRIN	98/99 RIM		2 7/16"
VON DUPRIN	33A/35A RIM		1 15/32"
(8)			
MAGNOCHROM	RIM	1 1/16"	
MONARCH	11-R RIM	1"	
MONARCH	XX-R RIM	1 1/16"	
*MONARCH	18-R/F-18-R	1"	
*MONARCH	19-R/F-19-R	1"	
PRECISION	1100 RIM	1"	
PRECISION	810 RIM	1"	
RUSSWIN	372/472/572 RIM	1"	
SARGENT	2800/6500/9898	1 1/16"	
**SARGENT	9800 RIM	1 1/16"	
SARGENT	9500 RIM	1"	
SARGENT	6800/8500/8800 RIM	1 1/16"	
YALE	1500 RIM	1"	
(8)			

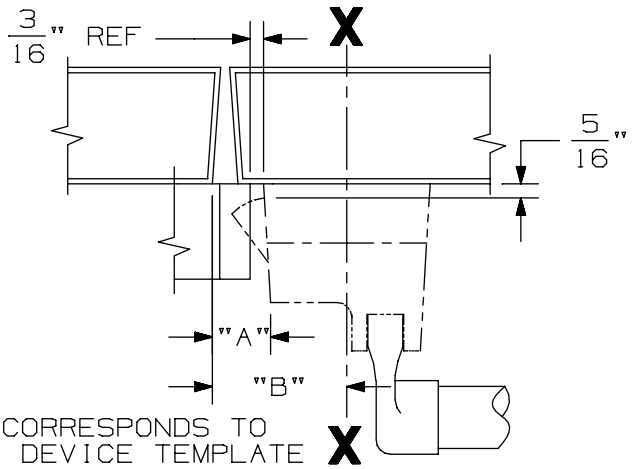

LINE X-X CORRESPONDS TO
LINE X-X ON DEVICE TEMPLATE

NOTES:
1. *NO DEADLATCHING.
2. **PANIC DEVICES ONLY.

VON DUPRIN®

6121 ELECTRIC STRIKE
DOUBLE DOOR APPLICATION

Ingersoll Rand
Security Technologies

NOTE: SEE MASTER SHEET NO. 10001 FOR SUGGESTED REINFORCING

TEMPLATE NUMBER: 30239_8SHT2

DATE: 07-15-03

6210 COMPATABLE WITH	
MANUFACTURER	MODEL#
CORBIN	765L-L9555
SARGENT	8104-LNL
BEST	30H
FALCON	LM521 DG
YALE	8705 F
SCHLAGE	L9000
VON DUPRIN	7500

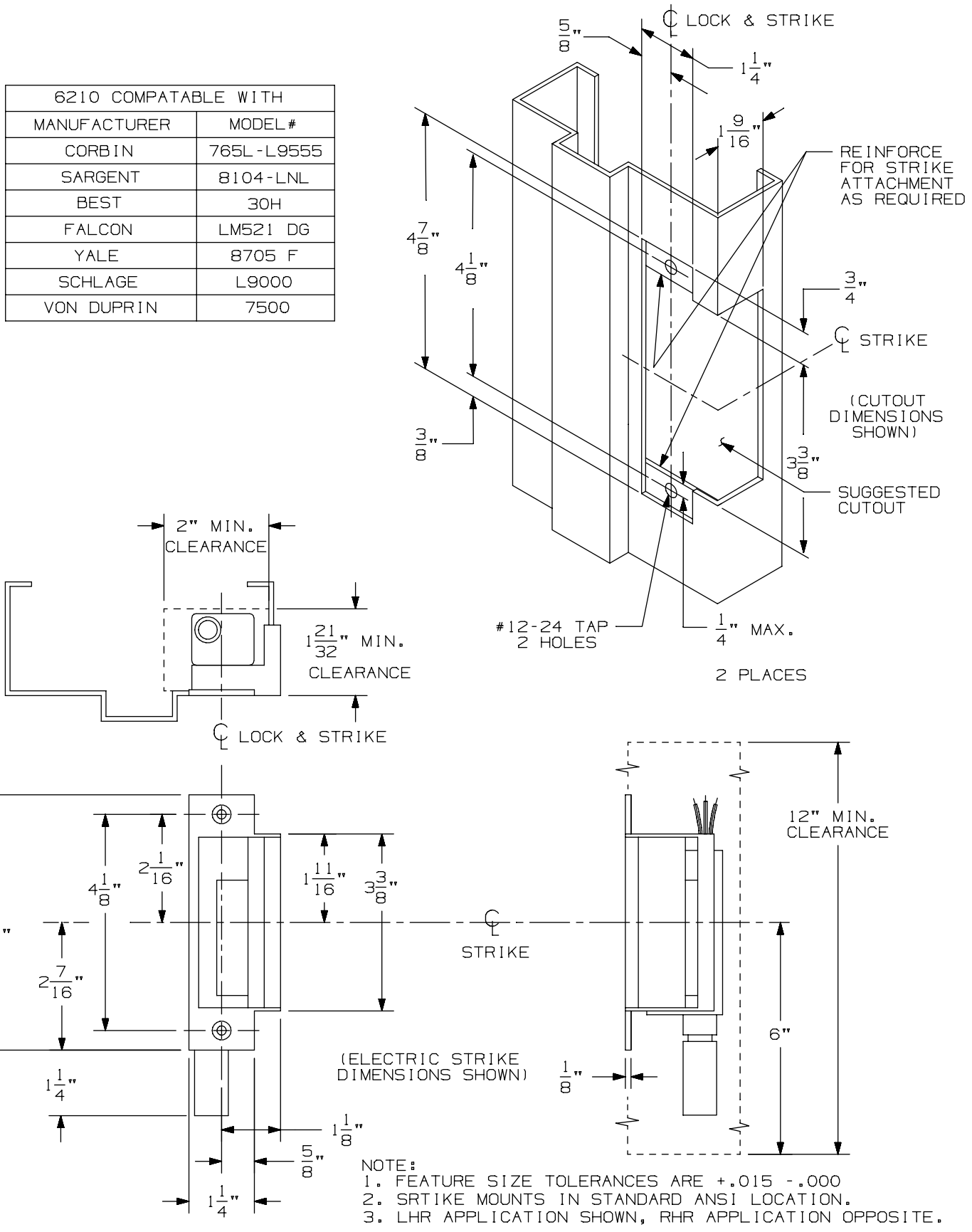

NOTE:
1. FEATURE SIZE TOLERANCES ARE +.015 -.000
2. SRTIKE MOUNTS IN STANDARD ANSI LOCATION.
3. LHR APPLICATION SHOWN, RHR APPLICATION OPPOSITE.

6210 Electronic Strike
Metal Frame Application

VON DUPRIN®

NOTES: SEE MASTER SHEET #10001 FOR SUGGESTED REINFORCING

TEMPLATE NUMBER: 30001_a

DATE: 05-23-13

NOTES:
1. SEE SHEETS 2 AND 3 FOR APPLICATION SCHEDULE.
2. REPLACES 3140 STRIKE.
3. FEATURE SIZE TOLERANCES ARE +.015 - .000

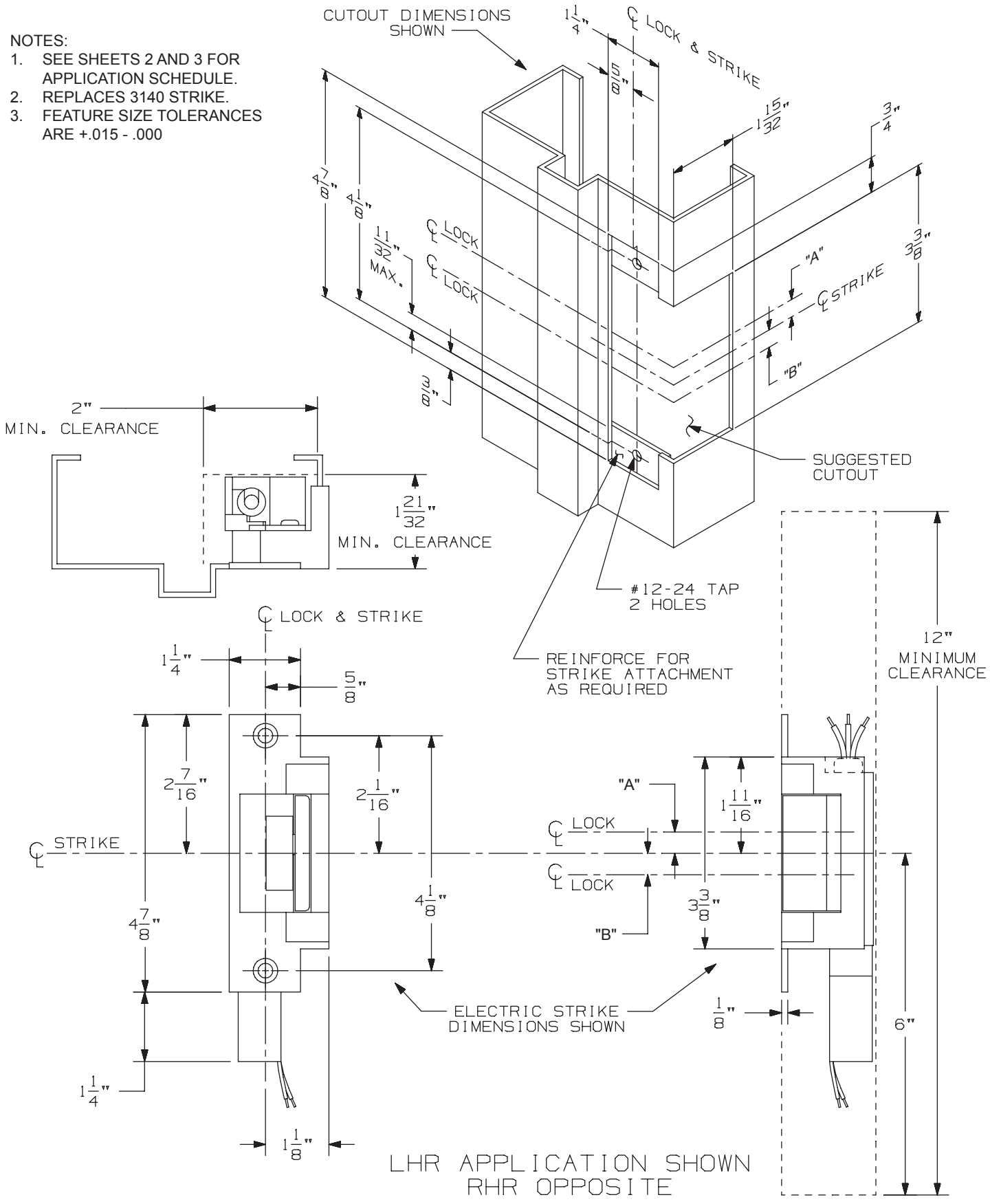

6211 Electric Strike
Mortise/Cylinder Single Door Application

VON DUPRIN®

NOTES: SEE MASTER SHEET #10001 FOR SUGGESTED REINFORCING

TEMPLATE NUMBER: 30215_b Sht 1

DATE: 08-29-16

6211 ELECTRIC STRIKE

SINGLE DOOR APPLICATION
MORTISE/CYLINDRICAL APPLICATION SCHEDULE
REPLACES: VON DUPRIN 3140 ELECTRIC STRIKE

PRODUCT MANUFACTURER	PRODUCT APPLICATION	THROW	DIM "A" (ABOVE)	DIM "B" (BELOW)
	MORTISE			
VON DUPRIN	7500 MORTISE	3/4"	- - -	3/8"
ABH	6600	3/4"	0"	0"
ACCURATE	9159	3/4"	- - -	1/8"
ADAMS RITE	4510, 4910	1/2"	- - -	3/8"
ADAMS RITE	4710	5/8"	- - -	3/8"
ARROW	A & B MORTISE	3/4"	3/8"	- - -
ARROW	BM	3/4"	- - -	1/8"
BALDWIN	6000 MORTISE	3/4"	11/16"	- - -
BEST	24H, 30 SERIES MORTISE	3/4"	3/8"	- - -
BEST	45H, 47H	3/4"	0"	0"
CORBIN	9000 SERIES MORTISE	3/4"	3/8"	- - -
CORBIN RUSSWIN	ED5600	3/4"	1"	- - -
CORBIN RUSSWIN	ML2000 SERIES MORTISE	3/4"	- - -	3/16"
CORBIN RUSSWIN	ML2200 SERIES MORTISE	3/4"	3/8"	- - -
DORMA	MK/ML9000	3/4"	3/8"	- - -
FALCON	M2300, M2500 MORTISE	3/4"	7/16"	- - -
FALCON	M2600 MORTISE	3/4"	- - -	7/16"
FALCON	M3300, M3500 MORTISE	5/8"	7/16"	- - -
FALCON	M3600 MORTISE	5/8"	- - -	7/16"
FALCON	M581	3/4"	- - -	1/8"
FALCON	MA SERIES	3/4"	- - -	1/16"
FALCON/MONARCH	8500	3/4"	- - -	3/16"
FSB	1035	3/4"	- - -	1/8"
GENERAL	MORTISE	3/4"	7/8"	- - -
MARKS	BE SERIES	3/4"	- - -	1/2"

NOTES:
1. DEADLATCH NOT GUARANTEED ON CYLINDRICAL APPLICATIONS.
2. MONITORING COULD BE AFFECTED BY DOOR/FRAME PREPARATION.
3. SIGNAL TRIPPER FUNCTION WITH 3/8" THROW BOLTS IS NOT RECOMMENDED.
4. NO DEADBOLT ACTION AVAILABLE FOR MORTISE APPLICATIONS.
5. OTHER MANUFACTURER'S DESIGNS MAY CHANGE WITHOUT NOTICE.

6211 ELECTRIC STRIKE

SINGLE DOOR APPLICATION
MORTISE/CYLINDRICAL APPLICATION SCHEDULE
REPLACES: VON DUPRIN 3140 ELECTRIC STRIKE

PRODUCT MANUFACTURER	PRODUCT APPLICATION	THROW	DIM "A" (ABOVE)	DIM "B" (BELOW)
	MORTISE (Continued)			
PRECISION	MORTISE	3/4"	7/16"	- - -
RUSSWIN	5000 MORTISE	3/4"	3/8"	- - -
SARGENT	18-77/81 MORTISE	3/4"	3/8"	- - -
SARGENT	77 MORTISE	5/8"	7/16"	- - -
SARGENT	7800, 8200 MORTISE	3/4"	- - -	1/8"
SARGENT	900 MORTISE, 8900	3/4"	7/16"	- - -
SCHLAGE	K30/40/50/60 MORTISE	3/4"	7/8"	- - -
SCHLAGE	L9000 MORTISE	3/4"	7/8"	- - -
SCHLAGE	PRO5596	3/4"	1/16"	- - -
SECURITECH	A4L	3/4"	0"	0"
YALE	7030, 7130, 8700 MORTISE	3/4"	3/8"	- - -
YALE	8600	5/8"	3/8"	- - -
YALE	8800	3/4"	0"	0"
	CYLINDRICAL			
GLYNN-JOHNSON	HL6/CYLINDRICAL	1/2"	0"	0"
BALDWIN	CYLINDRICAL	1/2" - 3/4"	0"	0"
BEST	CYLINDRICAL	3/8" - 3/4"	0"	0"
CORBIN RUSSWIN	CYLINDRICAL	1/2" - 3/4"	0"	0"
FALCON	CYLINDRICAL	1/2" - 3/4"	0"	0"
SARGENT	CYLINDRICAL	1/2" - 3/4"	0"	0"
SCHLAGE	CYLINDRICAL	3/8" - 3/4"	0"	0"
YALE	CYLINDRICAL	1/2" - 3/4"	0"	0"

NOTES:
1. DEADLATCH NOT GUARANTEED ON CYLINDRICAL APPLICATIONS.
2. MONITORING COULD BE AFFECTED BY DOOR/FRAME PREPARATION.
3. SIGNAL TRIPPER FUNCTION WITH 3/8" THROW BOLTS IS NOT RECOMMENDED.
4. NO DEADBOLT ACTION AVAILABLE FOR MORTISE APPLICATIONS.
5. OTHER MANUFACTURER'S DESIGNS MAY CHANGE WITHOUT NOTICE.

NOTES:
1. SEE SHEETS 2 AND 3 FOR APPLICATION SCHEDULE.
2. REPLACES 3140 STRIKE.
3. FEATURE SIZE TOLERANCES ARE +.015 - .000

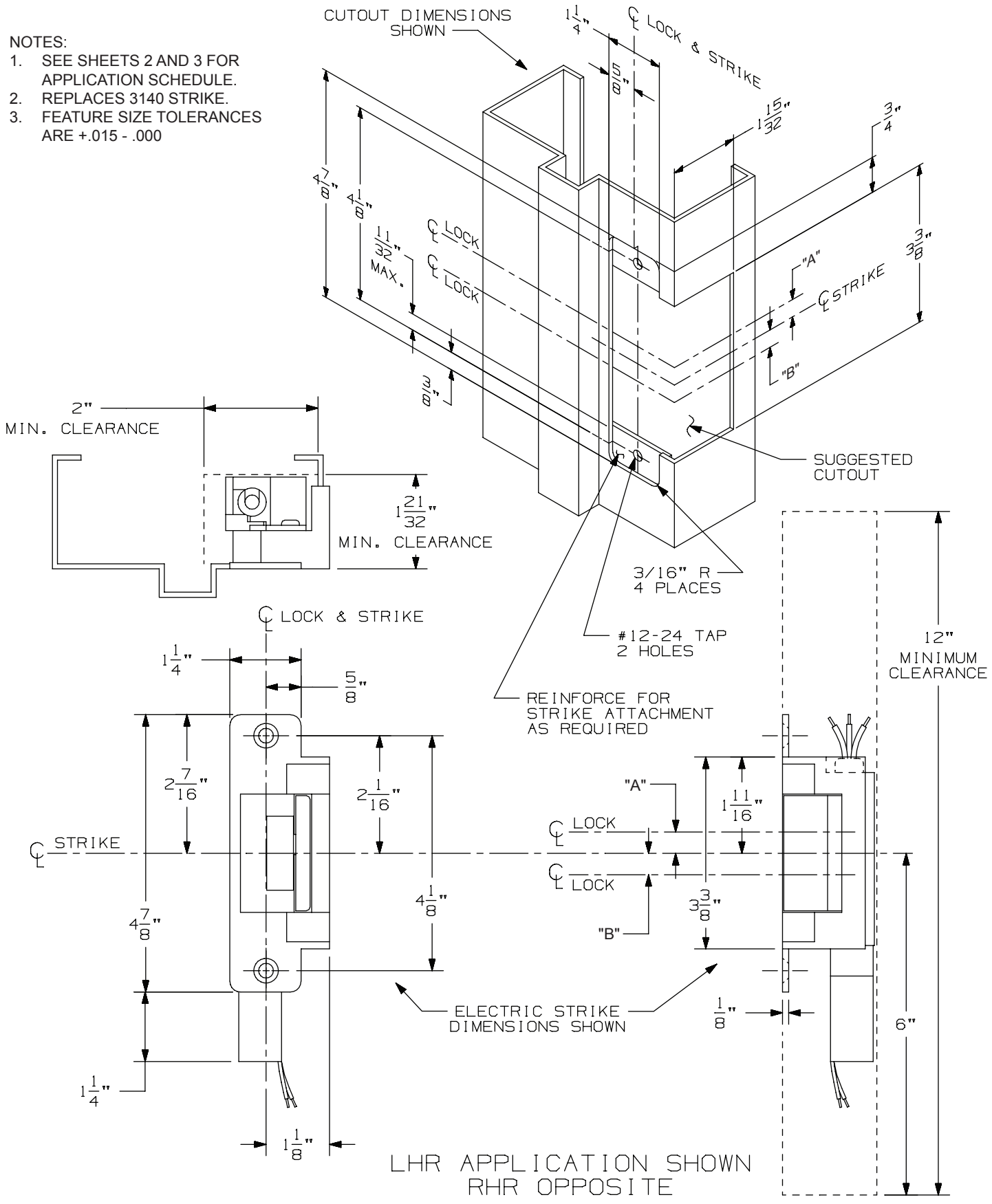

6211 Electric Strike
Aluminum Frame Application

VON DUPRIN®

NOTES: SEE MASTER SHEET #10001 FOR SUGGESTED REINFORCING

TEMPLATE NUMBER: 30221_b Sht 1

DATE: 08-29-16

6211 ELECTRIC STRIKE

ALUMINUM FRAME APPLICATION
MORTISE/CYLINDRICAL APPLICATION SCHEDULE
REPLACES: VON DUPRIN 3140 ELECTRIC STRIKE

PRODUCT MANUFACTURER	PRODUCT APPLICATION	THROW	DIM "A" (ABOVE)	DIM "B" (BELOW)
	MORTISE			
VON DUPRIN	7500 MORTISE	3/4"	- - -	3/8"
ABH	6600	3/4"	0"	0"
ACCURATE	9159	3/4"	- - -	1/8"
ADAMS RITE	4510, 4910	1/2"	- - -	3/8"
ADAMS RITE	4710	5/8"	- - -	3/8"
ARROW	A & B MORTISE	3/4"	3/8"	- - -
ARROW	BM	3/4"	- - -	1/8"
BALDWIN	6000 MORTISE	3/4"	11/16"	- - -
BEST	24H, 30 SERIES MORTISE	3/4"	3/8"	- - -
BEST	45H, 47H	3/4"	0"	0"
CORBIN	9000 SERIES MORTISE	3/4"	3/8"	- - -
CORBIN RUSSWIN	ED5600	3/4"	1"	- - -
CORBIN RUSSWIN	ML2000 SERIES MORTISE	3/4"	- - -	3/16"
CORBIN RUSSWIN	ML2200 SERIES MORTISE	3/4"	3/8"	- - -
DORMA	MK/ML9000	3/4"	3/8"	- - -
FALCON	M2300, M2500 MORTISE	3/4"	7/16"	- - -
FALCON	M2600 MORTISE	3/4"	- - -	7/16"
FALCON	M3300, M3500 MORTISE	5/8"	7/16"	- - -
FALCON	M3600 MORTISE	5/8"	- - -	7/16"
FALCON	M581	3/4"	- - -	1/8"
FALCON	MA SERIES	3/4"	- - -	1/16"
FALCON/MONARCH	8500	3/4"	- - -	3/16"
FSB	1035	3/4"	- - -	1/8"
GENERAL	MORTISE	3/4"	7/8"	- - -
MARKS	BE SERIES	3/4"	- - -	1/2"

NOTES:
1. DEADLATCH NOT GUARANTEED ON CYLINDRICAL APPLICATIONS.
2. MONITORING COULD BE AFFECTED BY DOOR/FRAME PREPARATION.
3. SIGNAL TRIPPER FUNCTION WITH 3/8" THROW BOLTS IS NOT RECOMMENDED.
4. NO DEADBOLT ACTION AVAILABLE FOR MORTISE APPLICATIONS.
5. OTHER MANUFACTURER'S DESIGNS MAY CHANGE WITHOUT NOTICE.

6211AL Electric Strike
Aluminum Frame Application

VON DUPRIN®

NOTES: SEE MASTER SHEET #10001 FOR SUGGESTED REINFORCING

TEMPLATE NUMBER: 30221_b Sht 2

DATE: 08-29-16

6211 ELECTRIC STRIKE

ALUMINUM FRAME APPLICATION
MORTISE/CYLINDRICAL APPLICATION SCHEDULE
REPLACES: VON DUPRIN 3140 ELECTRIC STRIKE

PRODUCT MANUFACTURER	PRODUCT APPLICATION	THROW	DIM "A" (ABOVE)	DIM "B" (BELOW)
	MORTISE (Continued)			
PRECISION	MORTISE	3/4"	7/16"	- - -
RUSSWIN	5000 MORTISE	3/4"	3/8"	- - -
SARGENT	18-77/81 MORTISE	3/4"	3/8"	- - -
SARGENT	77 MORTISE	5/8"	7/16"	- - -
SARGENT	7800, 8200 MORTISE	3/4"	- - -	1/8"
SARGENT	900 MORTISE, 8900	3/4"	7/16"	- - -
SCHLAGE	K30/40/50/60 MORTISE	3/4"	7/8"	- - -
SCHLAGE	L9000 MORTISE	3/4"	7/8"	- - -
SCHLAGE	PRO5596	3/4"	1/16"	- - -
SECURITECH	A4L	3/4"	0"	0"
YALE	7030, 7130, 8700 MORTISE	3/4"	3/8"	- - -
YALE	8600	5/8"	3/8"	- - -
YALE	8800	3/4"	0"	0"
	CYLINDRICAL			
GLYNN-JOHNSON	HL6/CYLINDRICAL	1/2"	0"	0"
BALDWIN	CYLINDRICAL	1/2" - 3/4"	0"	0"
BEST	CYLINDRICAL	3/8" - 3/4"	0"	0"
CORBIN RUSSWIN	CYLINDRICAL	1/2" - 3/4"	0"	0"
FALCON	CYLINDRICAL	1/2" - 3/4"	0"	0"
SARGENT	CYLINDRICAL	1/2" - 3/4"	0"	0"
SCHLAGE	CYLINDRICAL	3/8" - 3/4"	0"	0"
YALE	CYLINDRICAL	1/2" - 3/4"	0"	0"

NOTES:
1. DEADLATCH NOT GUARANTEED ON CYLINDRICAL APPLICATIONS.
2. MONITORING COULD BE AFFECTED BY DOOR/FRAME PREPARATION.
3. SIGNAL TRIPPER FUNCTION WITH 3/8" THROW BOLTS IS NOT RECOMMENDED.
4. NO DEADBOLT ACTION AVAILABLE FOR MORTISE APPLICATIONS.
5. OTHER MANUFACTURER'S DESIGNS MAY CHANGE WITHOUT NOTICE.

NOTES:
1. SEE SHEET 2 FOR APPLICATION SCHEDULE.
2. REPLACES 3140 STRIKE.
3. FEATURE SIZE TOLERANCES ARE +.015 -.000

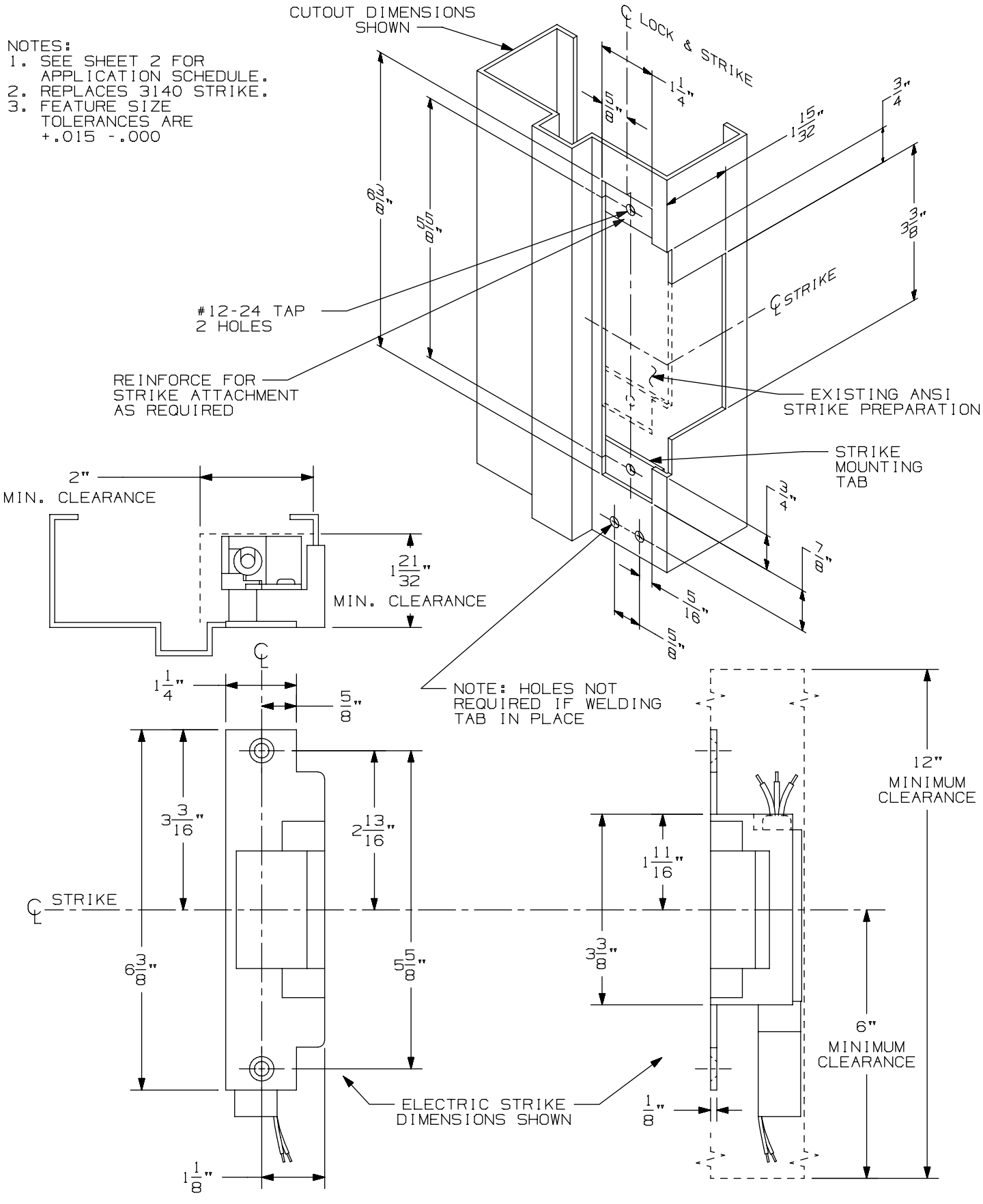

6212 Electric Strike

VON DUPRIN®

NOTES: SEE MASTER SHEET #10001 FOR SUGGESTED REINFORCING

TEMPLATE NUMBER: 30216_a Sht 1

DATE: 05-28-13

6212 ELECTRIC STRIKE

SINGLE DOOR APPLICATION
MORTISE APPLICATION SCHEDULE

PRODUCT MANUFACTURER	PRODUCT APPLICATION	INSERT LOCATION
VON DUPRIN	7500 MORTISE	BOTTOM
CORBIN	ALL MORTISE	NONE REQ'D
FALCON	M SERIES MORTISE	NONE REQ'D
RUSSWIN	ALL MORTISE	NONE REQ'D
SARGENT	7700/8100 MORTISE	NONE REQ'D
SCHLAGE	6400/L9000	NONE REQ'D
YALE	4600 MORTISE	NONE REQ'D
YALE	8600/8700 MORTISE	NONE REQ'D

NOTES:
1. THIS LOCK DESIGNED FOR RETROFIT APPLICATIONS.
2. MONITORING COULD BE AFFECTED BY DOOR/FRAME PREPARATION.
3. NO DEADBOLT ACTION AVAILABLE FOR MORTISE APPLICATIONS.

REPLACES:
VON DUPRIN 3146 ELECTRIC STRIKE

SEE SHEET #2 FOR
APPLICATION SCHEDULE

LHR APPLICATION SHOWN
RHR OPPOSITE

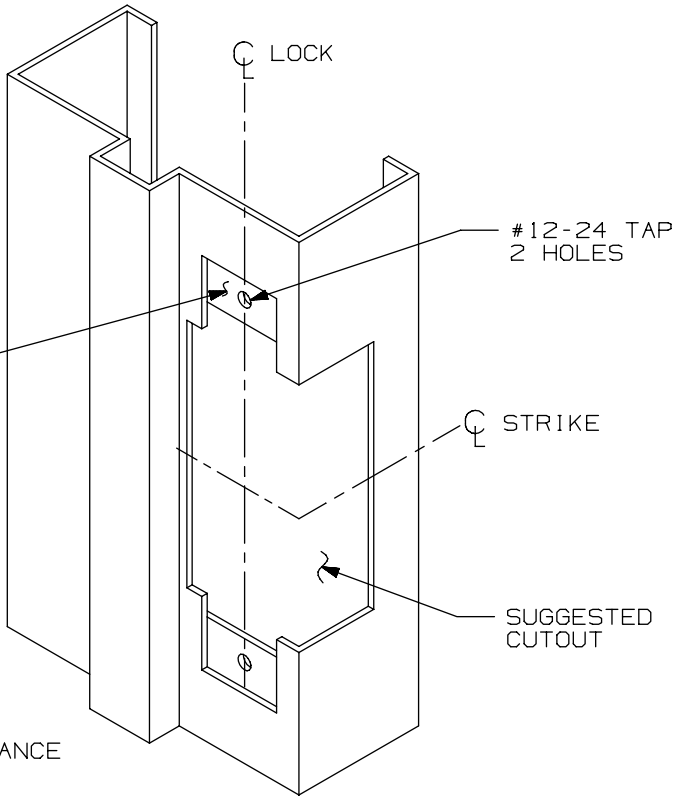

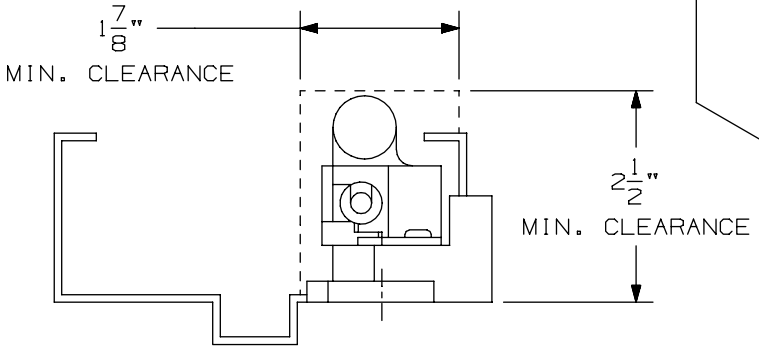

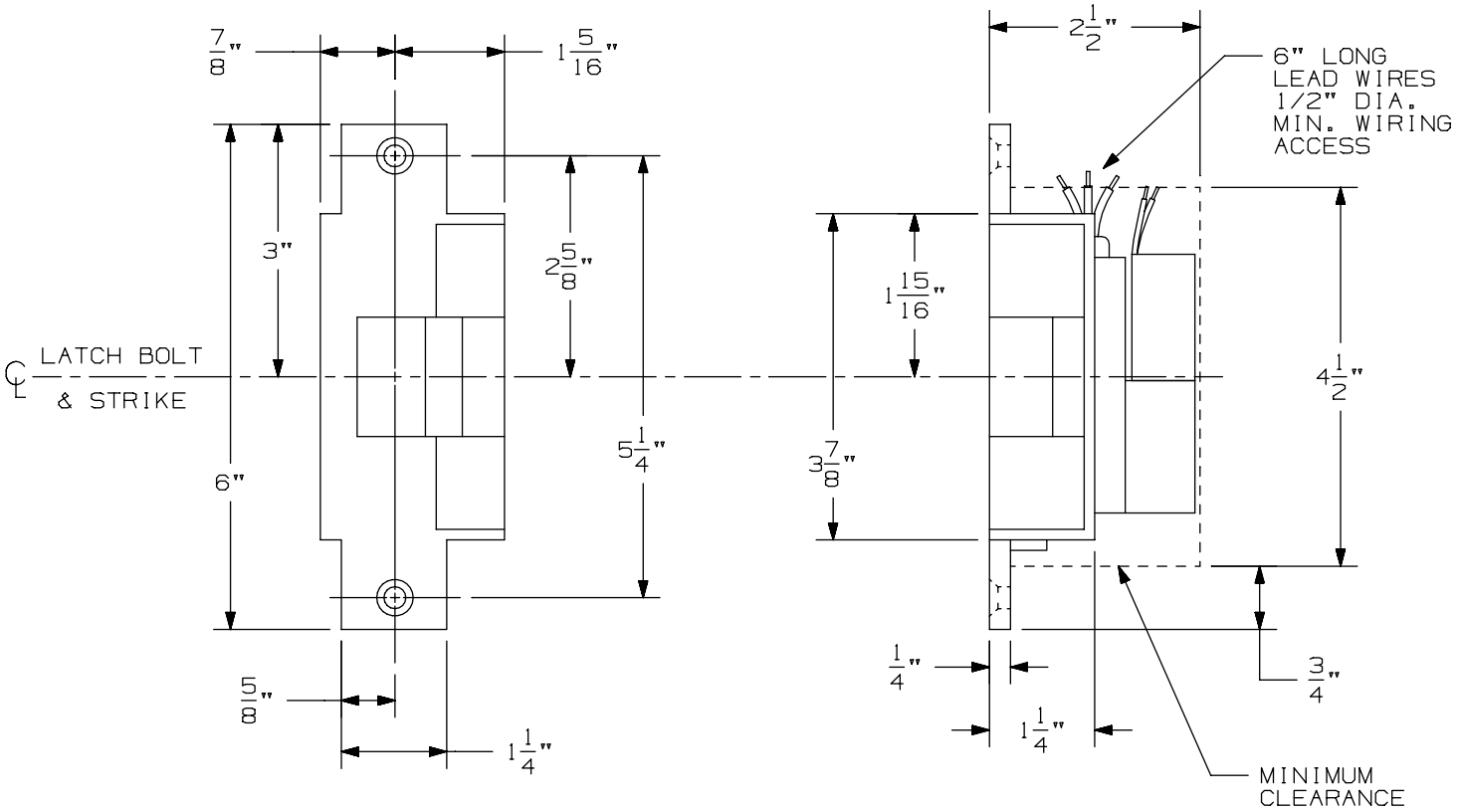

REPLACES 3041/42 & 3061/62 STRIKE

6213 Electric Strike
Mortise Cylinder Single Door Application

VON DUPRIN®

NOTES: SEE MASTER SHEET #10001 FOR SUGGESTED REINFORCING

TEMPLATE NUMBER: 30223_a Sht 1

DATE: 05-28-13

6213 ELECTRIC STRIKE

SINGLE DOOR APPLICATION
MORTISE/CYLINDRICAL APPLICATION SCHEDULE

PRODUCT MANUFACTURER	PRODUCT APPLICATION	THROW
VON DUPRIN	7500 MORTISE	3/4"
ADAMS RITE	4510	1/2"
ADAMS RITE	4710	5/8"
BALDWIN	6000 MORTISE	3/4"
BEST	24H, 30 SERIES MORTISE	3/4"
CORBIN/RUSSWIN	ML2200 SERIES MORTISE	3/4"
FALCON	M2300, M2500, M2600	3/4"
FALCON	M3300, M3500, M3600	5/8"
MONARCH	18-M MORTISE	3/4"
PRECISION	MORTISE	3/4"
SARGENT	7800/8200 MORTISE	3/4"
SARGENT	6500/8100 MORTISE	3/4"
SARGENT	900 MORTISE LOCK	3/4"
SCHLAGE	L9000 MORTISE	3/4"
YALE	8600 MORTISE	5/8"
YALE	8700 MORTISE	3/4"
BALDWIN	CYLINDRICAL	1/2"-3/4"
BEST	CYLINDRICAL	3/8"-3/4"
CORBIN	CYLINDRICAL	1/2"-3/4"
FALCON	CYLINDRICAL	1/2"-3/4"
RUSSWIN	CYLINDRICAL	1/2"-3/4"
SARGENT	CYLINDRICAL	1/2"-3/4"
SCHLAGE	CYLINDRICAL	3/8"-3/4"
YALE	CYLINDRICAL	1/2"-3/4"

NOTES:
1. DEADLATCH NOT GUARANTEED ON CYLINDRICAL APPLICATIONS.
2. MONITORING COULD BE AFFECTED BY DOOR/FRAME PREPARATION.
3. SIGNAL TRIPPER FUNCTION WITH 3/8" THROW BOLTS IS NOT RECOMMENDED.
4. NO DEADBOLT ACTION AVAILABLE FOR MORTISE APPLICATIONS.

REPLACES:
VON DUPRIN 3041/3042 & 3061/3062 ELECTRIC STRIKE

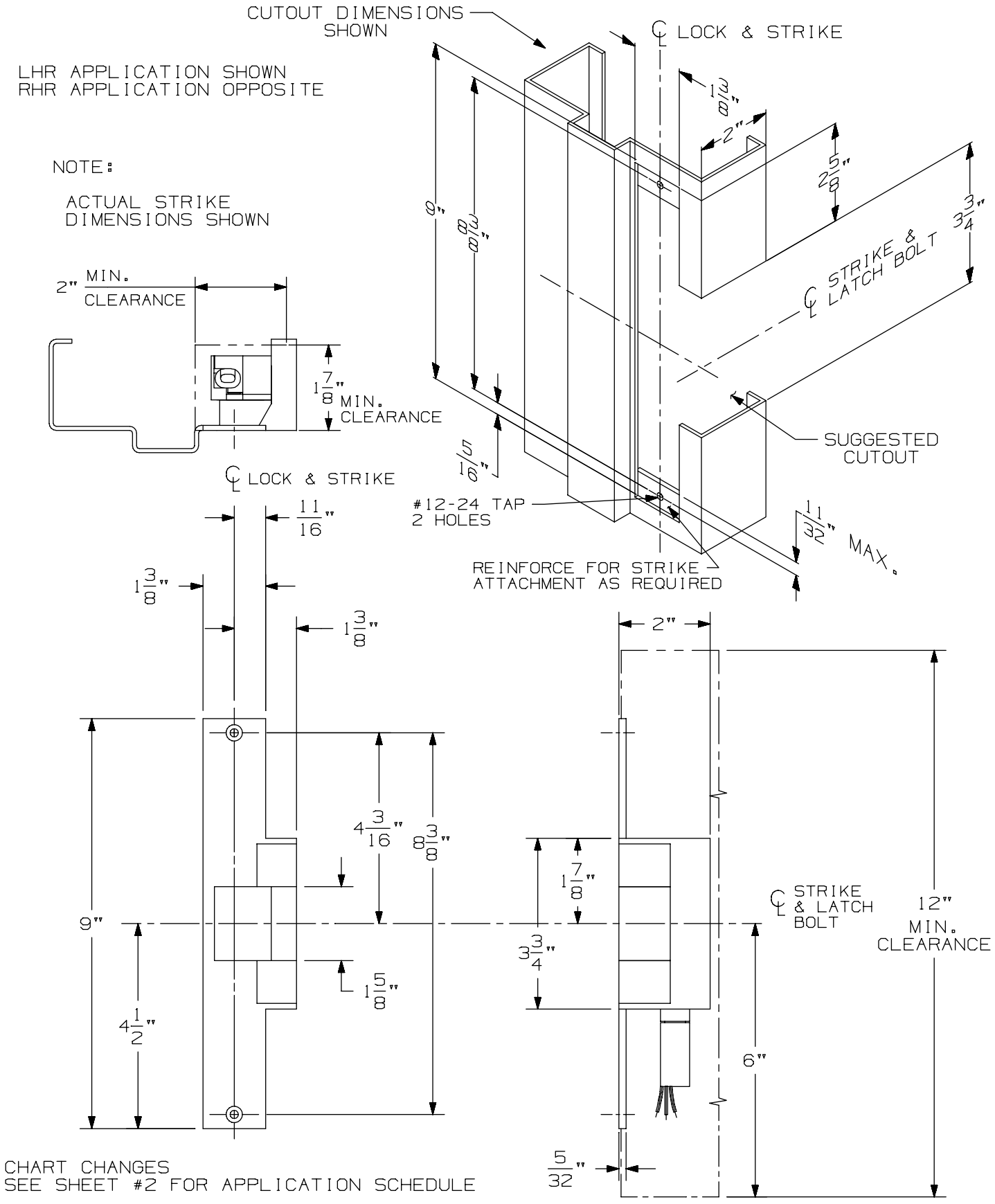

CHART CHANGES
SEE SHEET #2 FOR APPLICATION SCHEDULE

6214 Electric Strike

VON DUPRIN®

NOTES: SEE MASTER SHEET #10001 FOR SUGGESTED REINFORCING

TEMPLATE NUMBER: 30233_a Sht 1

DATE: 05-28-13

6214 ELECTRIC STRIKE
SINGLE DOOR APPLICATION
MORTISE/CYLINDRICAL APPLICATION SCHEDULE

PRODUCT MANUFACTURER	PRODUCT APPLICATION	THROW
VON DUPRIN	7500 MORTISE	3/4"
ADAMS RITE	4510 MORTISE	1/2"
ADAMS RITE	4710 MORTISE	5/8"
BALDWIN	6000 MORTISE	3/4"
BEST	24H, 30 SERIES MORTISE	3/4"
CORBIN/RUSSWIN	ML2200 SERIES MORTISE	3/4"
FALCON	M2300, M2500, M2600	3/4"
FALCON	M3300, M3500, M3600	5/8"
MONARCH	18-M MORTISE	3/4"
PRECISION	MORTISE	3/4"
SARGENT	7800/8200 MORTISE	3/4"
SARGENT	6500/8100 MORTISE	3/4"
SARGENT	900 MORTISE LOCK	3/4"
SCHLAGE	L9000 MORTISE	3/4"
YALE	8600 MORTISE	5/8"
YALE	8700 MORTISE	3/4"

PRODUCT MANUFACTURER	PRODUCT APPLICATION	THROW
BALDWIN	CYLINDRICAL	1/2" - 3/4"
BEST	CYLINDRICAL	3/8" - 3/4"
CORBIN	CYLINDRICAL	1/2" - 3/4"
FALCON	CYLINDRICAL	1/2" - 3/4"
RUSSWIN	CYLINDRICAL	1/2" - 3/4"
SARGENT	CYLINDRICAL	1/2" - 3/4"
SCHLAGE	CYLINDRICAL	3/8" - 3/4"
YALE	CYLINDRICAL	1/2" - 3/4"

NOTES:

1. DEADLATCH NOT GUARANTEED ON CYLINDRICAL APPLICATIONS.
2. MONITORING COULD BE AFFECTED BY DOOR/FRAME PREPARATION.
3. SIGNAL TRIPPER FUNCTION WITH 3/8" THROW BOLTS IS NOT RECOMMENDED.
4. NO DEADBOLT ACTION AVAILABLE FOR MORTISE APPLICATIONS.

REPLACES:

FOLGER-ADAM 310-2-3/4

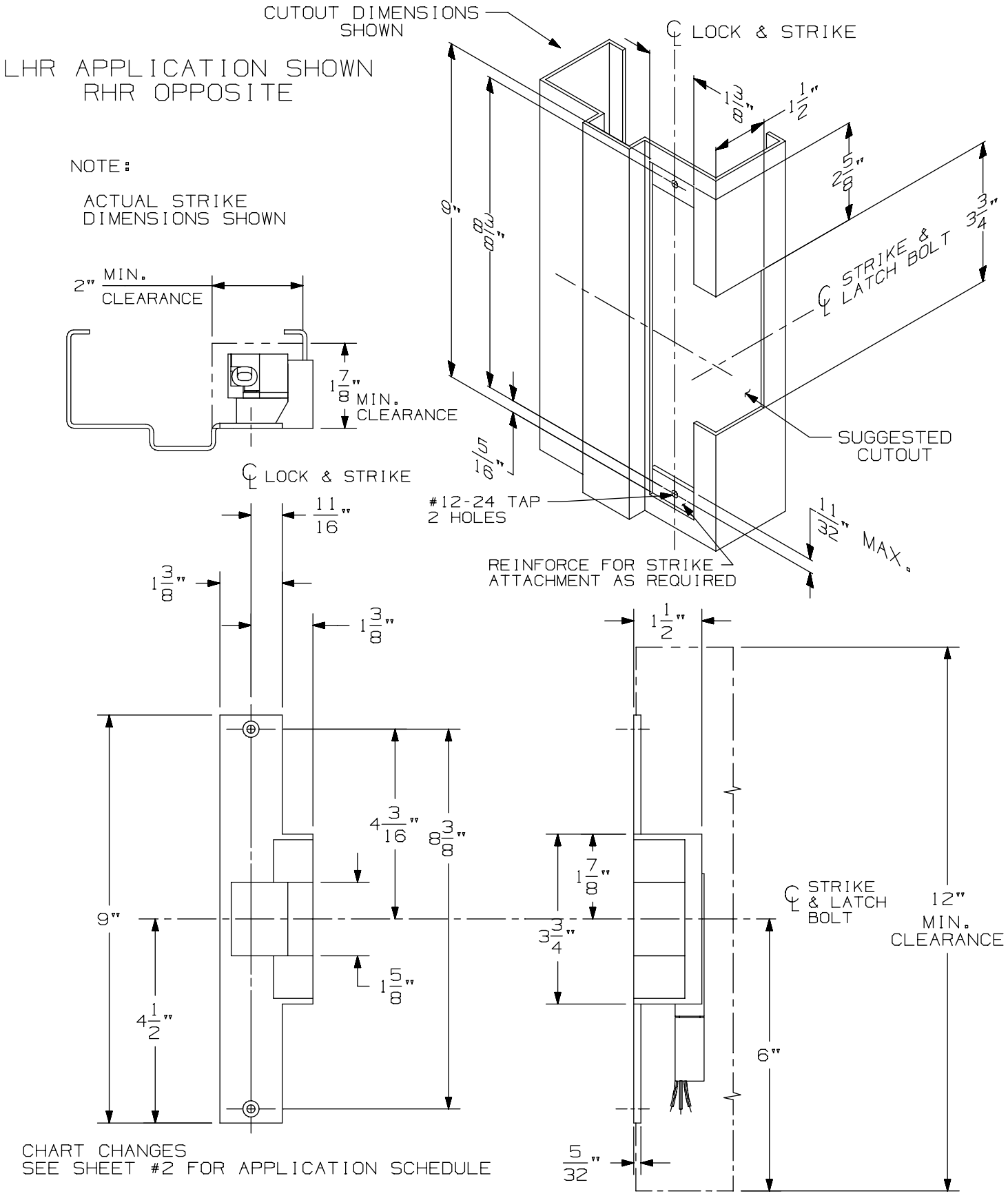

6215 Electric Strike

VON DUPRIN®

NOTES: SEE MASTER SHEET #10001 FOR SUGGESTED REINFORCING

TEMPLATE NUMBER: 30234_a Sht 1

DATE: 05-28-13

6215 ELECTRIC STRIKE
SINGLE DOOR APPLICATION
MORTISE/CYLINDRICAL APPLICATION SCHEDULE

PRODUCT MANUFACTURER	PRODUCT APPLICATION	THROW
VON DUPRIN	7500 MORTISE	3/4"
ADAMS RITE	4510 MORTISE	1/2"
ADAMS RITE	4710 MORTISE	5/8"
BALDWIN	6000 MORTISE	3/4"
BEST	24H, 30 SERIES MORTISE	3/4"
CORBIN/RUSSWIN	ML2200 SERIES MORTISE	3/4"
FALCON	M2300, M2500, M2600	3/4"
FALCON	M3300, M3500, M3600	5/8"
MONARCH	18-M MORTISE	3/4"
PRECISION	MORTISE	3/4"
SARGENT	7800/8200 MORTISE	3/4"
SARGENT	6500/8100 MORTISE	3/4"
SARGENT	900 MORTISE LOCK	3/4"
SCHLAGE	L9000 MORTISE	3/4"
YALE	8600 MORTISE	5/8"
YALE	8700 MORTISE	3/4"

PRODUCT MANUFACTURER	PRODUCT APPLICATION	THROW
BALDWIN	CYLINDRICAL	1/2" - 3/4"
BEST	CYLINDRICAL	3/8" - 3/4"
CORBIN	CYLINDRICAL	1/2" - 3/4"
FALCON	CYLINDRICAL	1/2" - 3/4"
RUSSWIN	CYLINDRICAL	1/2" - 3/4"
SARGENT	CYLINDRICAL	1/2" - 3/4"
SCHLAGE	CYLINDRICAL	3/8" - 3/4"
YALE	CYLINDRICAL	1/2" - 3/4"

NOTES:

1. DEADLATCH NOT GUARANTEED ON CYLINDRICAL APPLICATIONS.
2. MONITORING COULD BE AFFECTED BY DOOR/FRAME PREPARATION.
3. SIGNAL TRIPPER FUNCTION WITH 3/8" THROW BOLTS IS NOT RECOMMENDED.
4. NO DEADBOLT ACTION AVAILABLE FOR MORTISE APPLICATIONS.

REPLACES:
FOLGER-ADAM 310-2

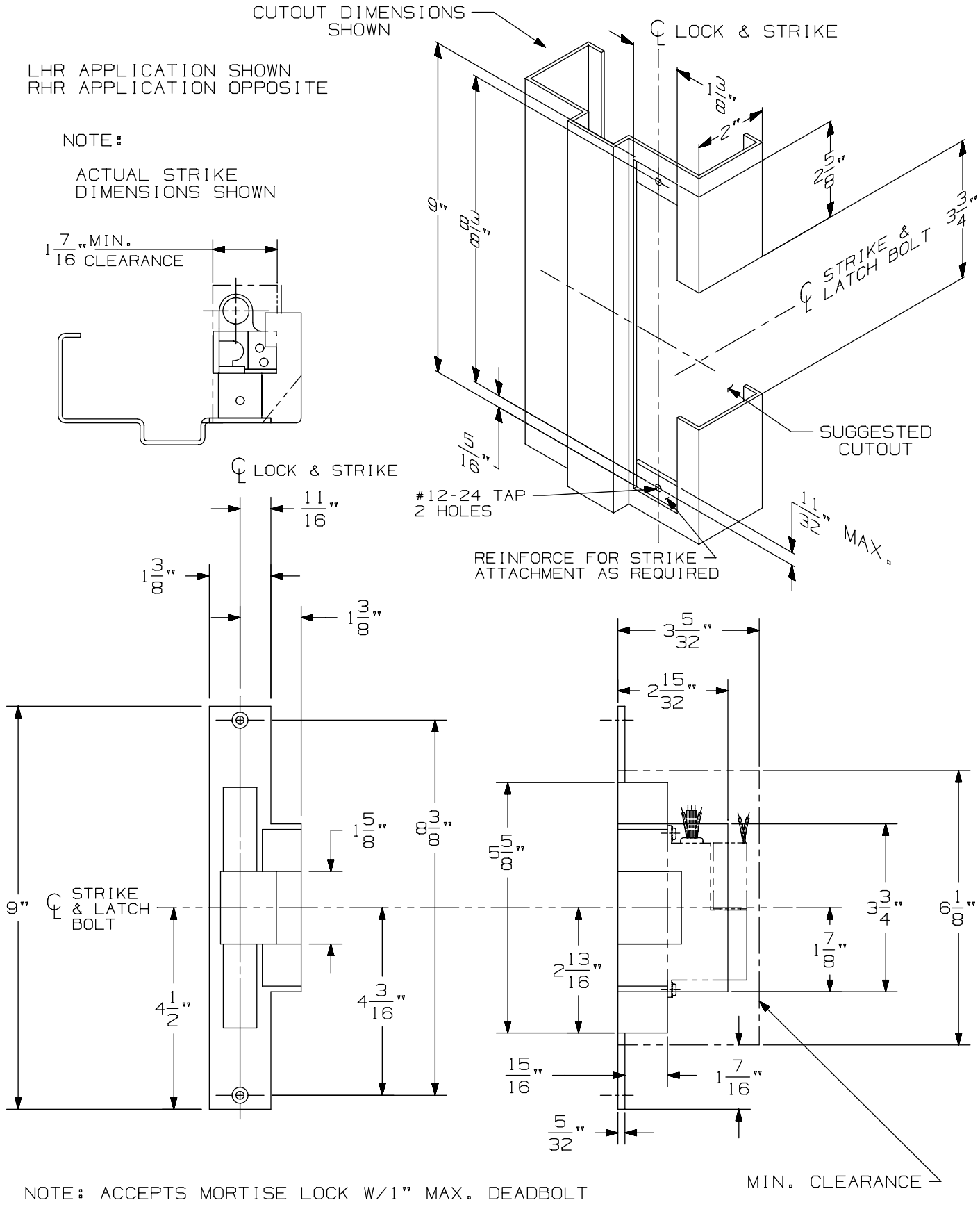

NOTE: ACCEPTS MORTISE LOCK W/1" MAX. DEADBOLT

6216 Electric Strike

VON DUPRIN®

NOTES: SEE MASTER SHEET #10001 FOR SUGGESTED REINFORCING

TEMPLATE NUMBER: 30235_a

DATE: 05-28-13

⑩

LHR LATCH APPLICATION SHOWN
RHR OPPOSITE

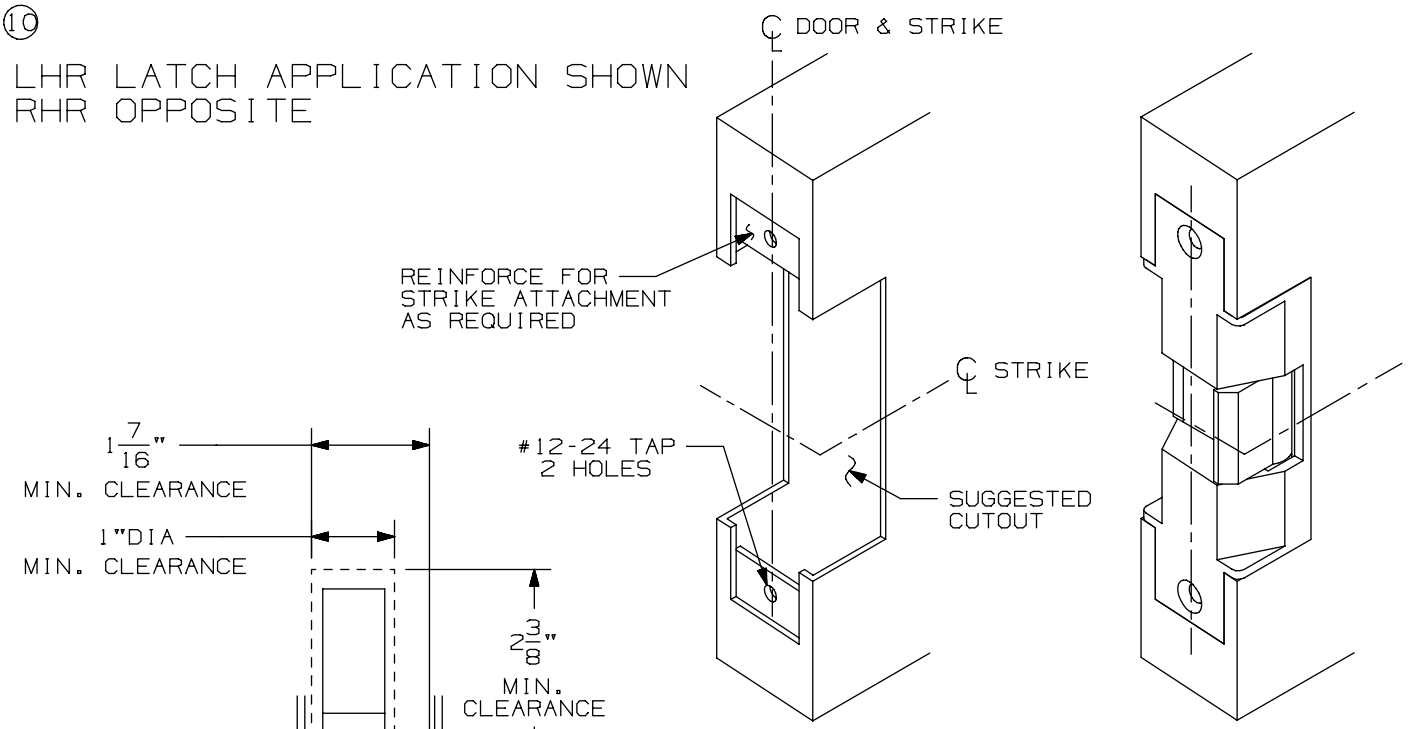

SEE SHEET #2 FOR APPLICATION SCHEDULE

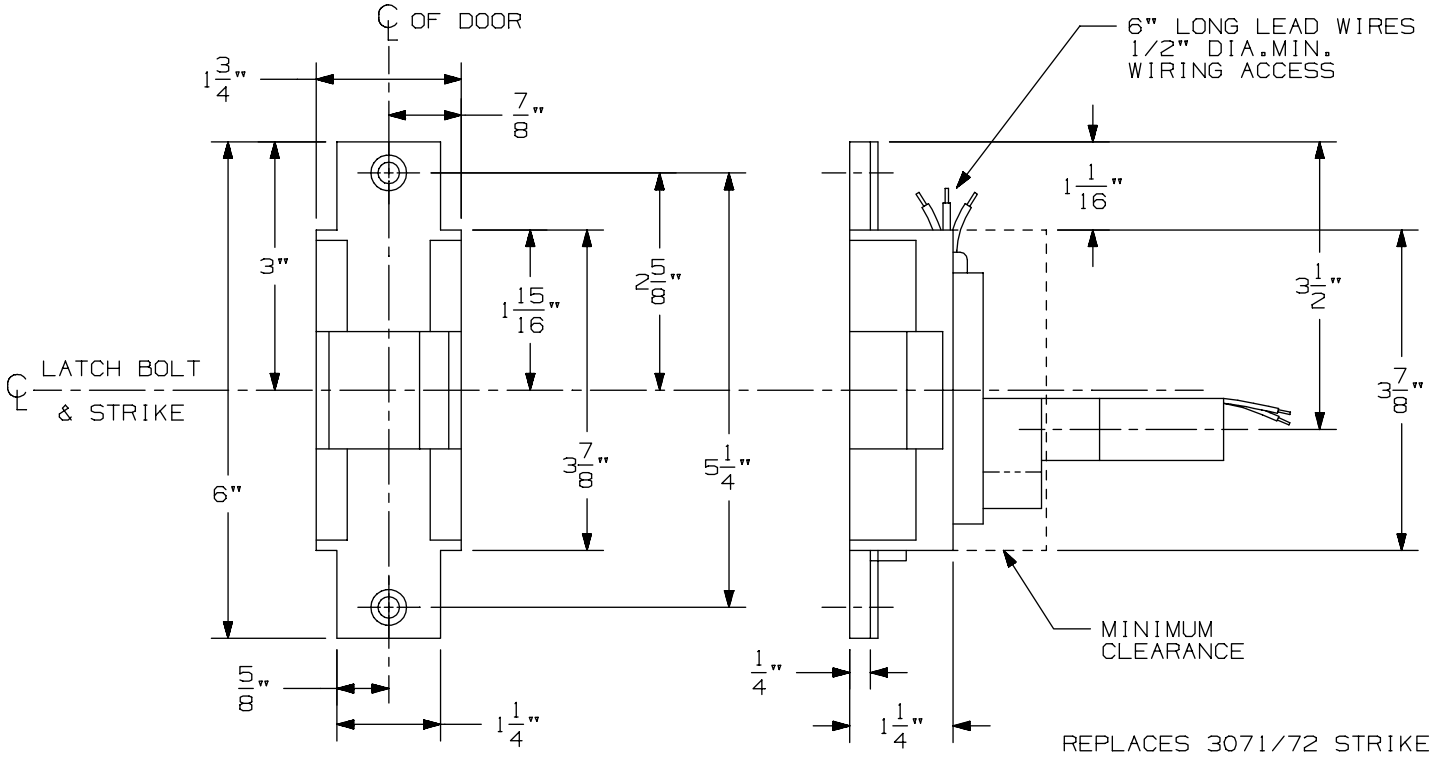

REPLACES 3071/72 STRIKE

6221 Electric Strike
Double Door Open Back Application

VON DUPRIN®

NOTES: SEE MASTER SHEET #10001 FOR SUGGESTED REINFORCING

TEMPLATE NUMBER: 30224_a Sht 1

DATE: 05-28-13

6221 ELECTRIC STRIKE

DOUBLE DOOR OPEN BACK APPLICATION
MORTISE/CYLINDRICAL APPLICATION SCHEDULE

PRODUCT MANUFACTURER	PRODUCT APPLICATION	THROW
VON DUPRIN	7500 MORTISE	3/4"
ADAMS RITE	4510 MORTISE	1/2"
ADAMS RITE	4710 MORTISE	5/8"
BALDWIN	6000 MORTISE	3/4"
BEST	24H, 30 SERIES MORTISE	3/4"
CORBIN/RUSSWIN	ML2200 SERIES MORTISE	3/4"
FALCON	M2300, M2500, M2600	3/4"
FALCON	M3300, M3500, M3600	5/8"
MONARCH	18-M MORTISE	3/4"
PRECISION	MORTISE	3/4"
SARGENT	7800/8200 MORTISE	3/4"
SARGENT	6500/8100 MORTISE	3/4"
SARGENT	900 MORTISE LOCK	3/4"
SCHLAGE	L9000 MORTISE	3/4"
YALE	8600 MORTISE	5/8"
YALE	8700 MORTISE	3/4"
BALDWIN	CYLINDRICAL	1/2"-3/4"
BEST	CYLINDRICAL	3/8"-3/4"
CORBIN	CYLINDRICAL	1/2"-3/4"
FALCON	CYLINDRICAL	1/2"-3/4"
RUSSWIN	CYLINDRICAL	1/2"-3/4"
SARGENT	CYLINDRICAL	1/2"-3/4"
SCHLAGE	CYLINDRICAL	3/8"-3/4"
YALE	CYLINDRICAL	1/2"-3/4"

NOTES:
1. DEADLATCH NOT GUARANTEED ON CYLINDRICAL APPLICATIONS.
2. MONITORING COULD BE AFFECTED BY DOOR/FRAME PREPARATION.
3. SIGNAL TRIPPER FUNCTION WITH 3/8" THROW BOLTS IS NOT RECOMMENDED.
4. NO DEADBOLT ACTION AVAILABLE FOR MORTISE APPLICATIONS.

REPLACES:
VON DUPRIN 3071/3072 ELECTRIC STRIKE

⑦ LHR LATCH PLICATION SHOWN
RHR OPPOSITE

SEE SHEET #2 FOR
APPLICATION SCHEDULE

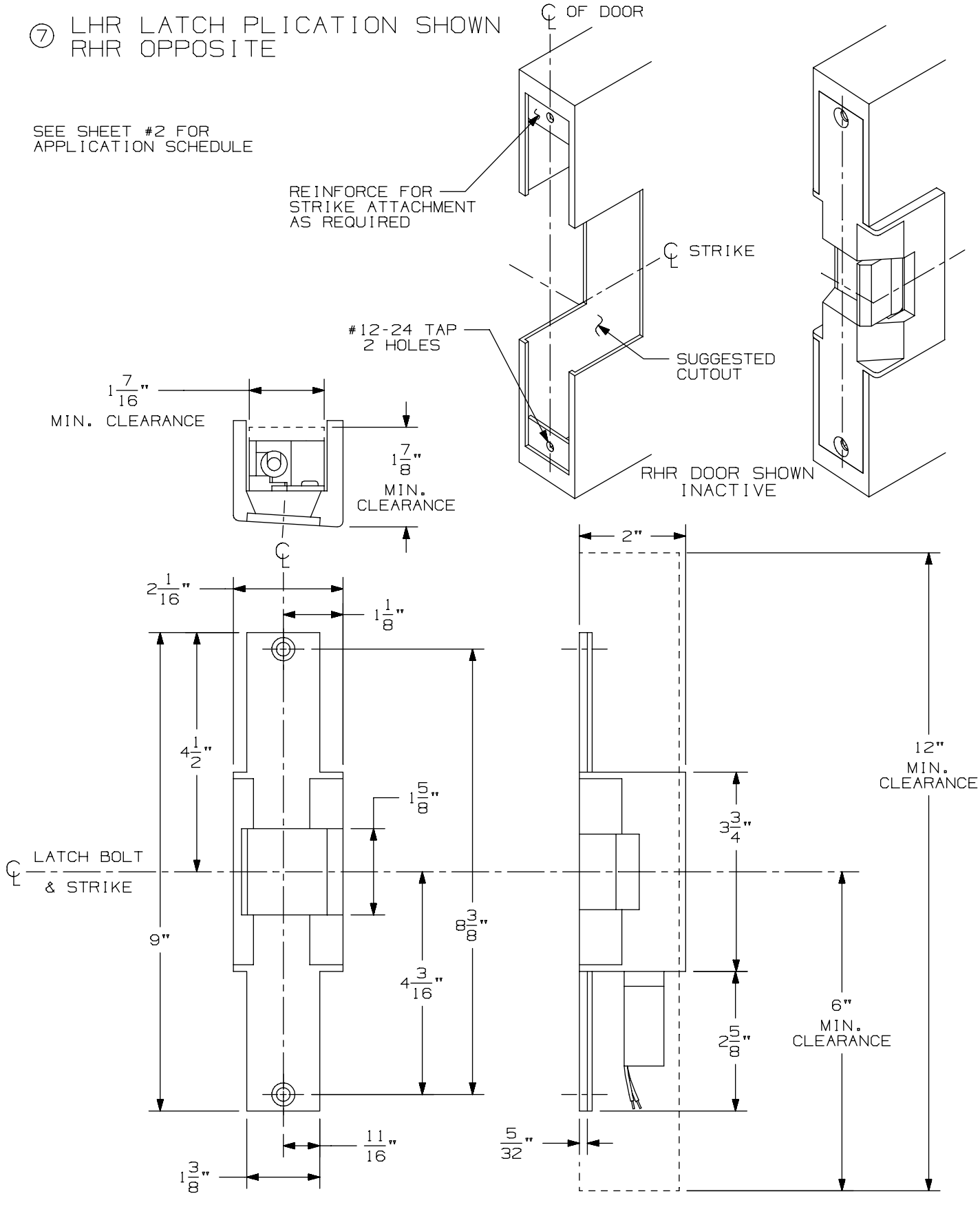

6222 Electric Strike
Double Door Open Back Application

VON DUPRIN®

NOTES: SEE MASTER SHEET #10001 FOR SUGGESTED REINFORCING

TEMPLATE NUMBER: 30237_a Sht 1

DATE: 05-28-13

6222 ELECTRIC STRIKE

DOUBLE DOOR OPEN BACK APPLICATION
MORTISE/CYLINDRICAL APPLICATION SCHEDULE

PRODUCT MANUFACTURER	PRODUCT APPLICATION	THROW
VON DUPRIN	7500 MORTISE	3/4"
ADAMS RITE	4510 MORTISE	1/2"
ADAMS RITE	4710 MORTISE	5/8"
BALDWIN	6000 MORTISE	3/4"
BEST	24H, 30 SERIES MORTISE	3/4"
CORBIN/RUSSWIN	ML2200 SERIES MORTISE	3/4"
FALCON	M2300, M2500, M2600	3/4"
FALCON	M3300, M3500, M3600	5/8"
MONARCH	18-M MORTISE	3/4"
PRECISION	MORTISE	3/4"
SARGENT	7800/8200 MORTISE	3/4"
SARGENT	6500/8100 MORTISE	3/4"
SARGENT	900 MORTISE LOCK	3/4"
SCHLAGE	L9000 MORTISE	3/4"
YALE	8600 MORTISE	5/8"
YALE	8700 MORTISE	3/4"
BALDWIN	CYLINDRICAL	1/2"-3/4"
BEST	CYLINDRICAL	3/8"-3/4"
CORBIN	CYLINDRICAL	1/2"-3/4"
FALCON	CYLINDRICAL	1/2"-3/4"
RUSSWIN	CYLINDRICAL	1/2"-3/4"
SARGENT	CYLINDRICAL	1/2"-3/4"
SCHLAGE	CYLINDRICAL	3/8"-3/4"
YALE	CYLINDRICAL	1/2"-3/4"

NOTES:
1. DEADLATCH NOT GUARANTEED ON CYLINDRICAL APPLICATIONS.
2. MONITORING COULD BE AFFECTED BY DOOR/FRAME PREPARATION.
3. SIGNAL TRIPPER FUNCTION WITH 3/8" THROW BOLTS IS NOT RECOMMENDED.
4. NO DEADBOLT ACTION AVAILABLE FOR MORTISE APPLICATIONS.

REPLACES:
FOLGER-ADAMS 310-2-3/4 OB

(10)

LHR LATCH APPLICATION SHOWN
RHR OPPOSITE

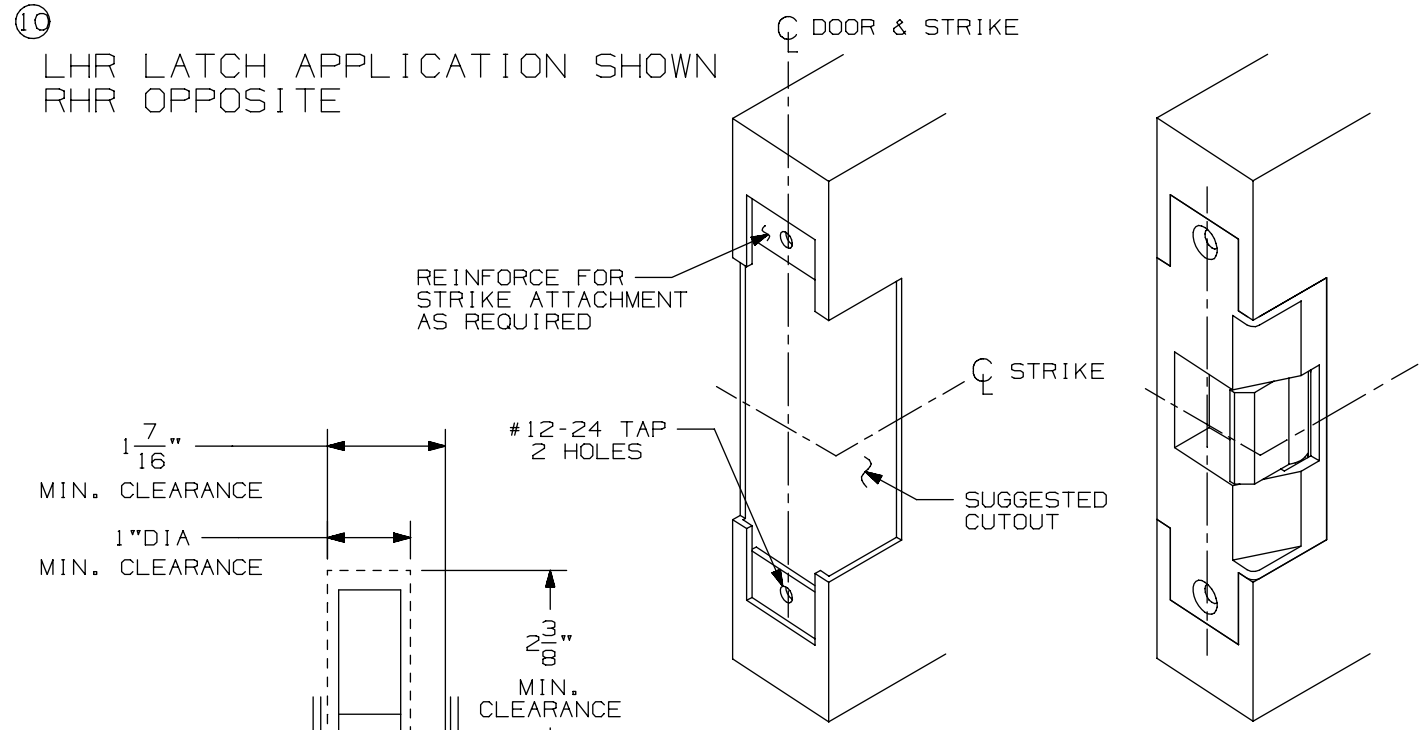

RHR DOOR SHOWN

SEE SHEET #2 FOR APPLICATION SCHEDULE

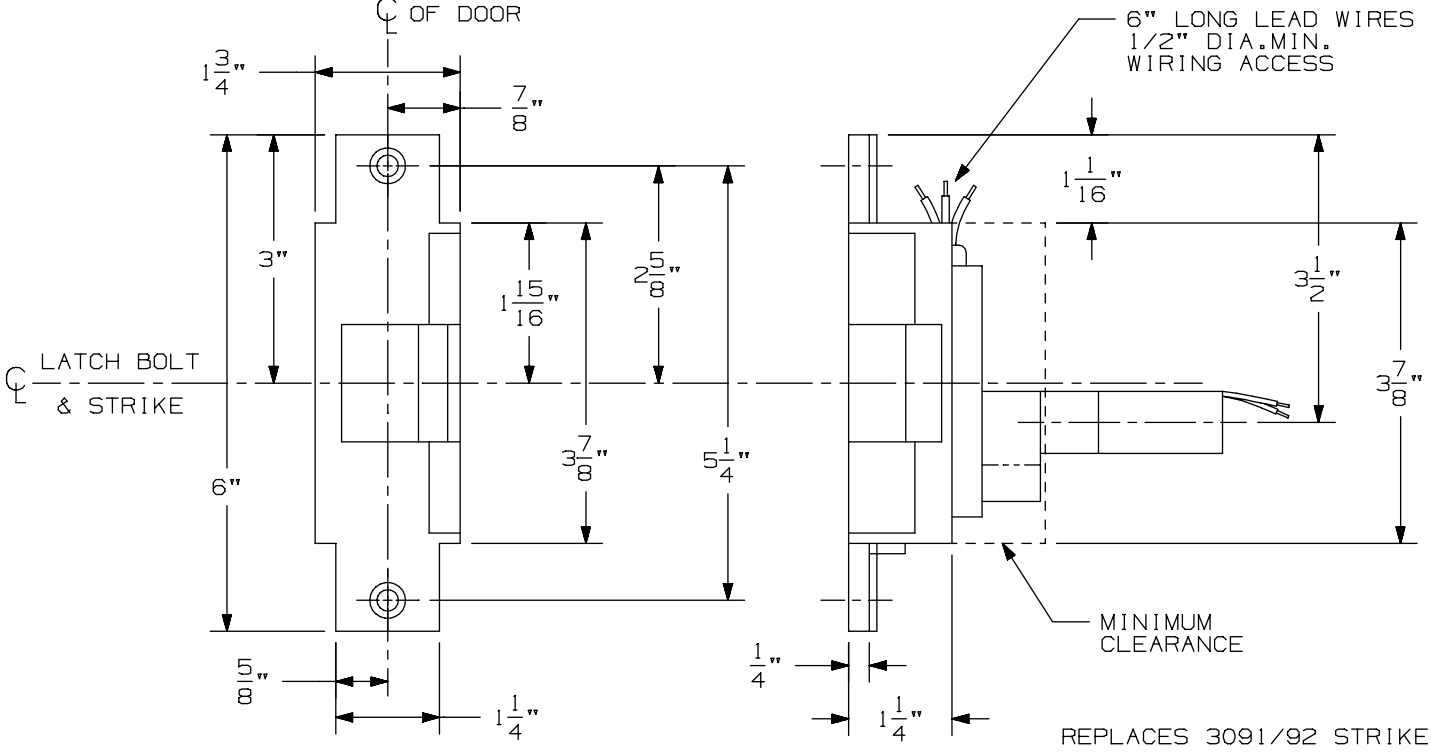

REPLACES 3091/92 STRIKE

6223 Electric Strike
Double Door Closed Back Application

VON DUPRIN®

NOTES: SEE MASTER SHEET #10001 FOR SUGGESTED REINFORCING

TEMPLATE NUMBER: 30225_a Sht 1

DATE: 05-28-13

6223 ELECTRIC STRIKE

DOUBLE DOOR CLOSED BACK APPLICATION
MORTISE/CYLINDRICAL APPLICATION SCHEDULE

PRODUCT MANUFACTURER	PRODUCT APPLICATION	THROW
VON DUPRIN	7500 MORTISE	3/4"
ADAMS RITE	4510 MORTISE	1/2"
ADAMS RITE	4710 MORTISE	5/8"
BALDWIN	6000 MORTISE	3/4"
BEST	24H, 30 SERIES MORTISE	3/4"
CORBIN/RUSSWIN	ML2200 SERIES MORTISE	3/4"
FALCON	M2300, M2500, M2600	3/4"
FALCON	M3300, M3500, M3600	5/8"
MONARCH	18-M MORTISE	3/4"
PRECISION	MORTISE	3/4"
SARGENT	7800/8200 MORTISE	3/4"
SARGENT	6500/8100 MORTISE	3/4"
SARGENT	900 MORTISE LOCK	3/4"
SCHLAGE	L9000 MORTISE	3/4"
YALE	8600 MORTISE	5/8"
YALE	8700 MORTISE	3/4"
BALDWIN	CYLINDRICAL	1/2"-3/4"
BEST	CYLINDRICAL	3/8"-3/4"
CORBIN	CYLINDRICAL	1/2"-3/4"
FALCON	CYLINDRICAL	1/2"-3/4"
RUSSWIN	CYLINDRICAL	1/2"-3/4"
SARGENT	CYLINDRICAL	1/2"-3/4"
SCHLAGE	CYLINDRICAL	3/8"-3/4"
YALE	CYLINDRICAL	1/2"-3/4"

NOTES:
1. DEADLATCH NOT GUARANTEED ON CYLINDRICAL APPLICATIONS.
2. MONITORING COULD BE AFFECTED BY DOOR/FRAME PREPARATION.
3. SIGNAL TRIPPER FUNCTION WITH 3/8" THROW BOLTS IS NOT RECOMMENDED.
4. NO DEADBOLT ACTION AVAILABLE FOR MORTISE APPLICATIONS.

REPLACES:
VON DUPRIN 3091/3092 ELECTRIC STRIKE

⑦ LHR LATCH APPLICATION SHOWN
RHR OPPOSITE

SEE SHEET #2 FOR
APPLICATION SCHEDULE

NOTE:
ACTUAL STRIKE
DIMENSIONS SHOWN

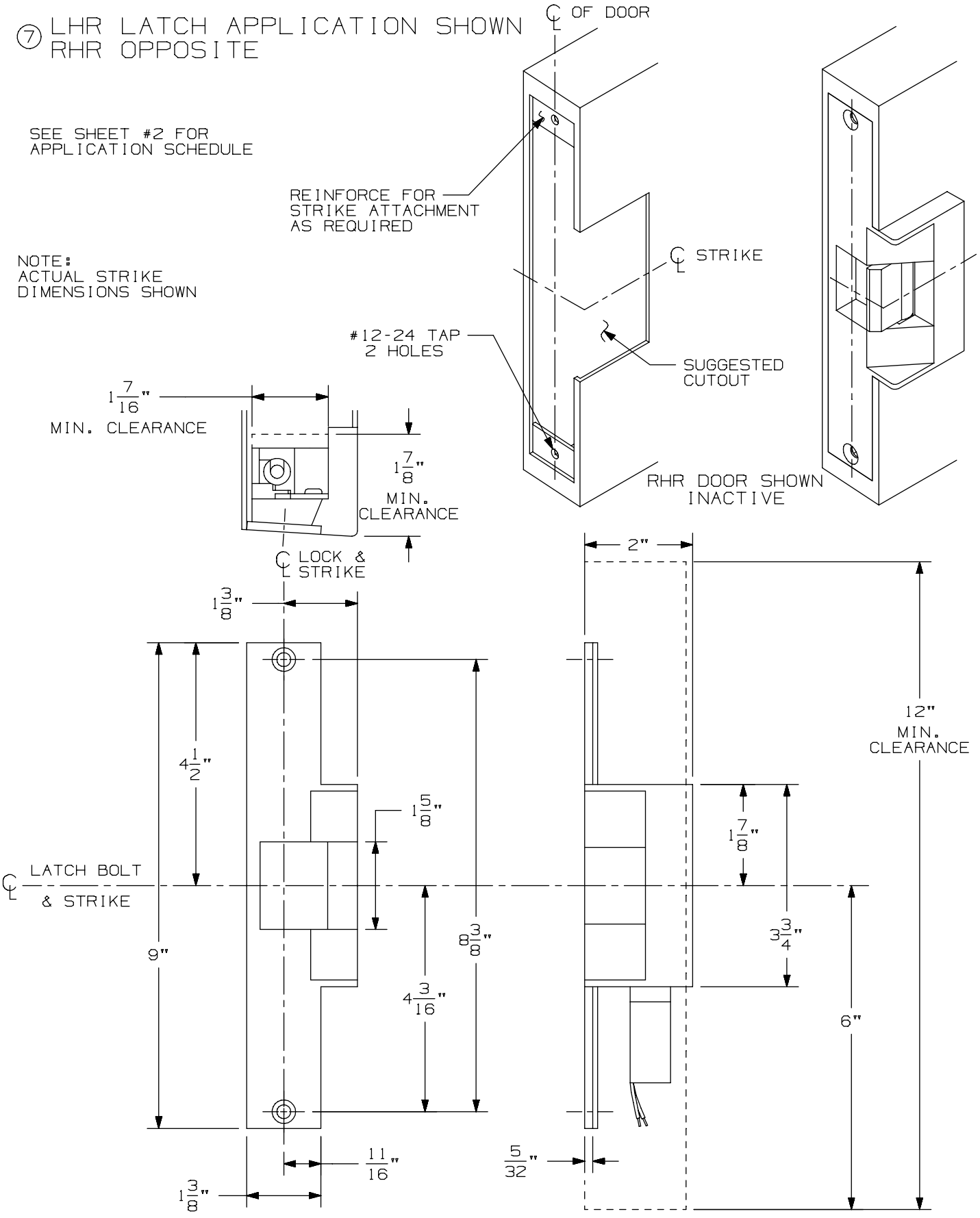

6224 Electric Strike
Double Door Closed Back Application

VON DUPRIN®

NOTES: SEE MASTER SHEET #10001 FOR SUGGESTED REINFORCING

TEMPLATE NUMBER: 30240_a Sht 1

DATE: 05-28-13

6224 ELECTRIC STRIKE

DOUBLE DOOR CLOSED BACK APPLICATION
MORTISE/CYLINDRICAL APPLICATION SCHEDULE

PRODUCT MANUFACTURER	PRODUCT APPLICATION	THROW
VON DUPRIN	7500 MORTISE	3/4"
ADAMS RITE	4510 MORTISE	1/2"
ADAMS RITE	4710 MORTISE	5/8"
BALDWIN	6000 MORTISE	3/4"
BEST	24H, 30 SERIES MORTISE	3/4"
CORBIN/RUSSWIN	ML2200 SERIES MORTISE	3/4"
FALCON	M2300, M2500, M2600	3/4"
FALCON	M3300, M3500, M3600	5/8"
MONARCH	18-M MORTISE	3/4"
PRECISION	MORTISE	3/4"
SARGENT	7800/8200 MORTISE	3/4"
SARGENT	6500/8100 MORTISE	3/4"
SARGENT	900 MORTISE LOCK	3/4"
SCHLAGE	L9000 MORTISE	3/4"
YALE	8600 MORTISE	5/8"
YALE	8700 MORTISE	3/4"
BALDWIN	CYLINDRICAL	1/2"-3/4"
BEST	CYLINDRICAL	3/8"-3/4"
CORBIN	CYLINDRICAL	1/2"-3/4"
FALCON	CYLINDRICAL	1/2"-3/4"
RUSSWIN	CYLINDRICAL	1/2"-3/4"
SARGENT	CYLINDRICAL	1/2"-3/4"
SCHLAGE	CYLINDRICAL	3/8"-3/4"
YALE	CYLINDRICAL	1/2"-3/4"

NOTES:
1. DEADLATCH NOT GUARANTEED ON CYLINDRICAL APPLICATIONS.
2. MONITORING COULD BE AFFECTED BY DOOR/FRAME PREPARATION.
3. SIGNAL TRIPPER FUNCTION WITH 3/8" THROW BOLTS IS NOT RECOMMENDED.
4. NO DEADBOLT ACTION AVAILABLE FOR MORTISE APPLICATIONS.

REPLACES:
FOLGER-ADAMS 310-2-3/4

6224 Electric Strike
Double Door Closed Back Application

VON DUPRIN®

NOTES: SEE MASTER SHEET #10001 FOR SUGGESTED REINFORCING

TEMPLATE NUMBER: 30240_a Sht 2

DATE: 05-28-13

⑥ LHR LATCH APPLICATION SHOWN
RHR OPPOSITE

SEE SHEET #2 FOR
APPLICATION SCHEDULE

NOTE:
ACTUAL STRIKE
DIMENSIONS SHOWN

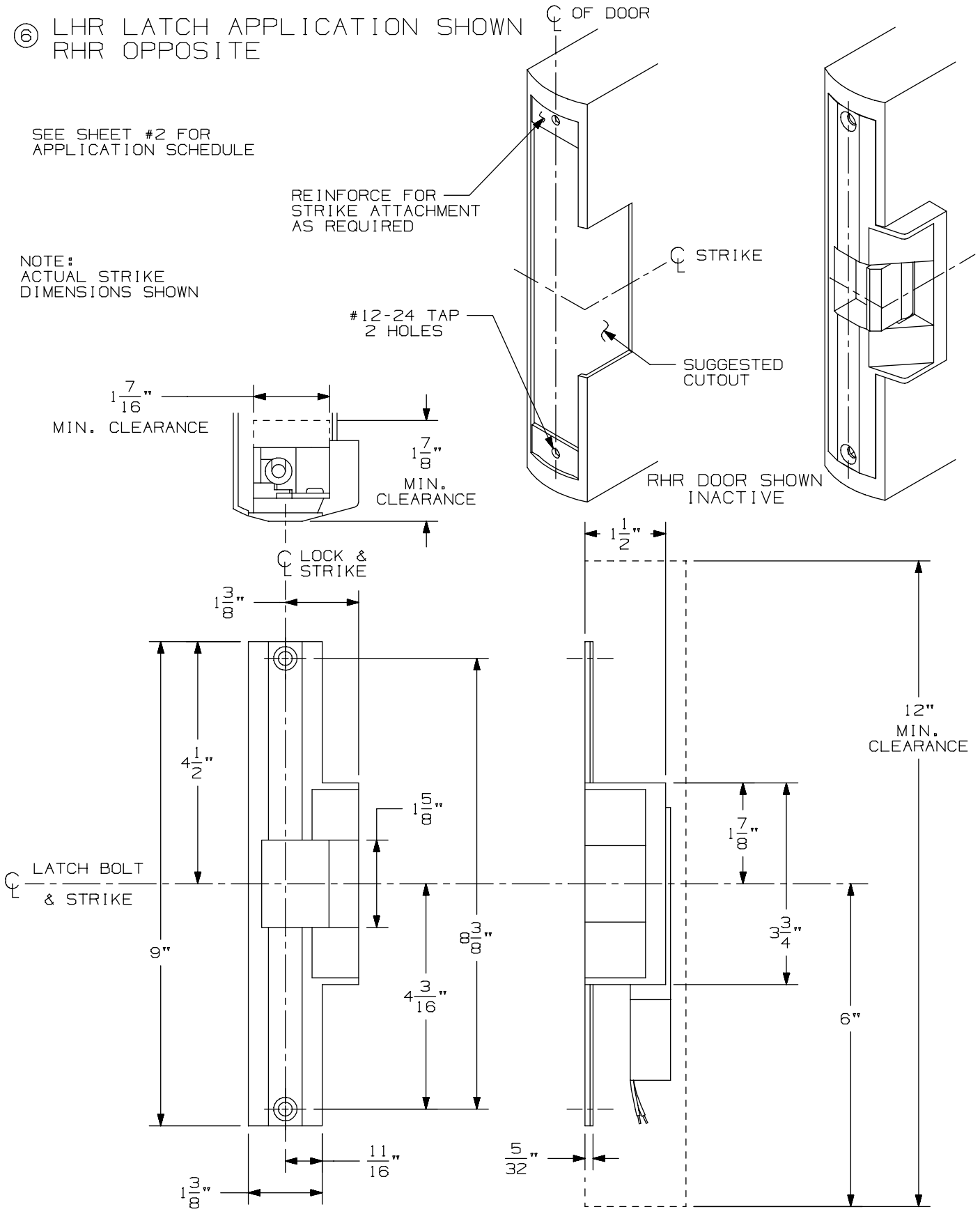

6224AL Electric Strike
Aluminum Double Door

VON DUPRIN®

NOTES: SEE MASTER SHEET #10001 FOR SUGGESTED REINFORCING

TEMPLATE NUMBER: 30242_a Sht 1

DATE: 05-28-13

6224AL ELECTRIC STRIKE

ALUMINUM DOUBLE DOOR APPLICATION
MORTISE/CYLINDRICAL APPLICATION SCHEDULE

PRODUCT MANUFACTURER	PRODUCT APPLICATION	THROW
VON DUPRIN	7500 MORTISE	3/4"
ADAMS RITE	4510 MORTISE	1/2"
ADAMS RITE	4710 MORTISE	5/8"
BALDWIN	6000 MORTISE	3/4"
BEST	24H, 30 SERIES MORTISE	3/4"
CORBIN/RUSSWIN	ML2200 SERIES MORTISE	3/4"
FALCON	M2300, M2500, M2600	3/4"
FALCON	M3300, M3500, M3600	5/8"
MONARCH	18-M MORTISE	3/4"
PRECISION	MORTISE	3/4"
SARGENT	7800/8200 MORTISE	3/4"
SARGENT	6500/8100 MORTISE	3/4"
SARGENT	900 MORTISE LOCK	3/4"
SCHLAGE	L9000 MORTISE	3/4"
YALE	8600 MORTISE	5/8"
YALE	8700 MORTISE	3/4"
BALDWIN	CYLINDRICAL	1/2"-3/4"
BEST	CYLINDRICAL	3/8"-3/4"
CORBIN	CYLINDRICAL	1/2"-3/4"
FALCON	CYLINDRICAL	1/2"-3/4"
RUSSWIN	CYLINDRICAL	1/2"-3/4"
SARGENT	CYLINDRICAL	1/2"-3/4"
SCHLAGE	CYLINDRICAL	3/8"-3/4"
YALE	CYLINDRICAL	1/2"-3/4"

NOTES:
1. DEADLATCH NOT GUARANTEED ON CYLINDRICAL APPLICATIONS.
2. MONITORING COULD BE AFFECTED BY DOOR/FRAME PREPARATION.
3. SIGNAL TRIPPER FUNCTION WITH 3/8" THROW BOLTS IS NOT RECOMMENDED.
4. NO DEADBOLT ACTION AVAILABLE FOR MORTISE APPLICATIONS.

REPLACES:
FOLGER-ADAMS 310-2 RF

⑦ LHR LATCH APPLICATION SHOWN
RHR OPPOSITE

SEE SHEET #2 FOR
APPLICATION SCHEDULE

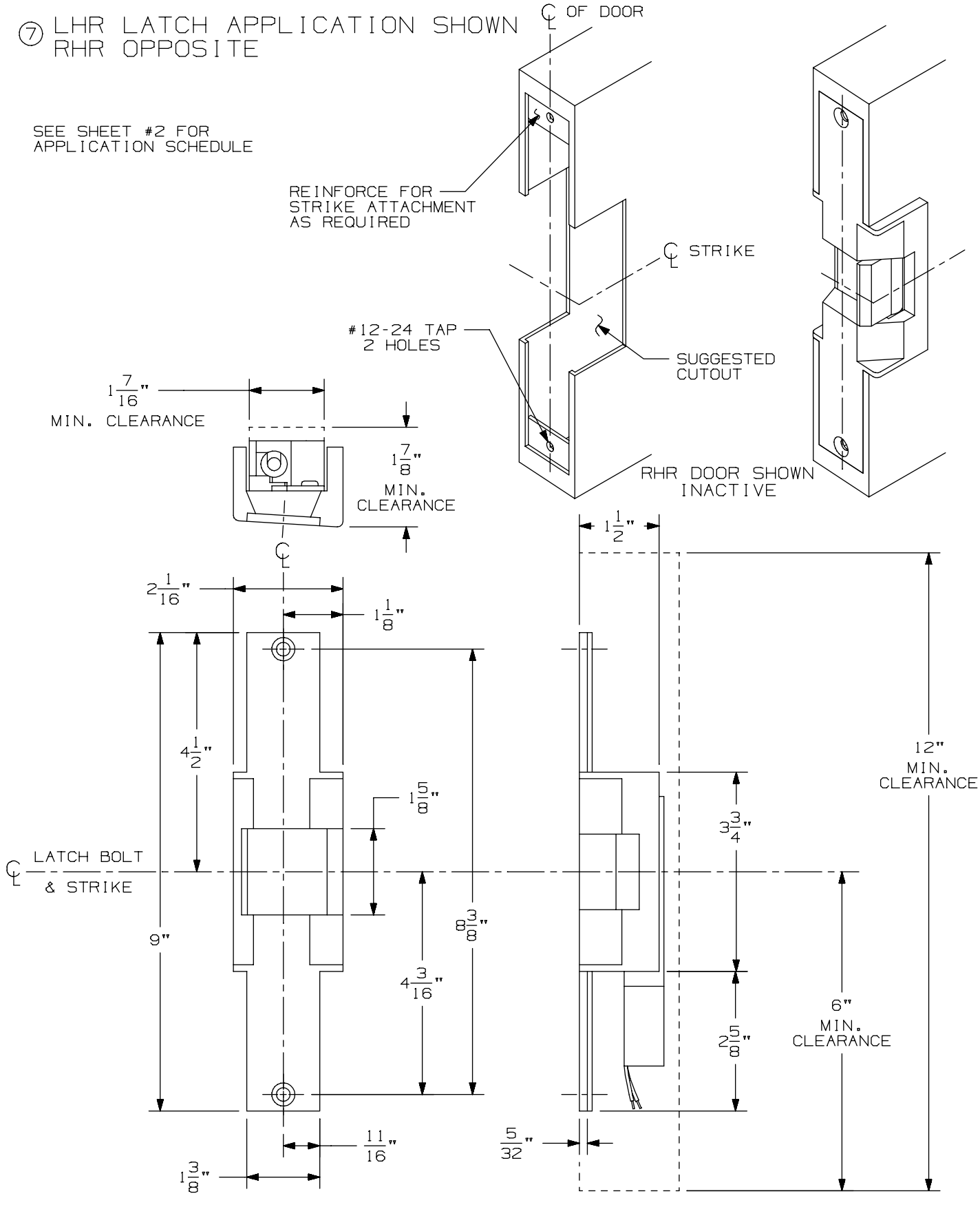

6225 Electric Strike
Double Door Open Back Application

VON DUPRIN®

NOTES: SEE MASTER SHEET #10001 FOR SUGGESTED REINFORCING

TEMPLATE NUMBER: 30238_a Sht 1

DATE: 05-28-13

6225 ELECTRIC STRIKE

DOUBLE DOOR OPEN BACK APPLICATION
MORTISE/CYLINDRICAL APPLICATION SCHEDULE

PRODUCT MANUFACTURER	PRODUCT APPLICATION	THROW
VON DUPRIN	7500 MORTISE	3/4"
ADAMS RITE	4510 MORTISE	1/2"
ADAMS RITE	4710 MORTISE	5/8"
BALDWIN	6000 MORTISE	3/4"
BEST	24H, 30 SERIES MORTISE	3/4"
CORBIN/RUSSWIN	ML2200 SERIES MORTISE	3/4"
FALCON	M2300, M2500, M2600	3/4"
FALCON	M3300, M3500, M3600	5/8"
MONARCH	18-M MORTISE	3/4"
PRECISION	MORTISE	3/4"
SARGENT	7800/8200 MORTISE	3/4"
SARGENT	6500/8100 MORTISE	3/4"
SARGENT	900 MORTISE LOCK	3/4"
SCHLAGE	L9000 MORTISE	3/4"
YALE	8600 MORTISE	5/8"
YALE	8700 MORTISE	3/4"
BALDWIN	CYLINDRICAL	1/2"-3/4"
BEST	CYLINDRICAL	3/8"-3/4"
CORBIN	CYLINDRICAL	1/2"-3/4"
FALCON	CYLINDRICAL	1/2"-3/4"
RUSSWIN	CYLINDRICAL	1/2"-3/4"
SARGENT	CYLINDRICAL	1/2"-3/4"
SCHLAGE	CYLINDRICAL	3/8"-3/4"
YALE	CYLINDRICAL	1/2"-3/4"

NOTES:
1. DEADLATCH NOT GUARANTEED ON CYLINDRICAL APPLICATIONS.
2. MONITORING COULD BE AFFECTED BY DOOR/FRAME PREPARATION.
3. SIGNAL TRIPPER FUNCTION WITH 3/8" THROW BOLTS IS NOT RECOMMENDED.
4. NO DEADBOLT ACTION AVAILABLE FOR MORTISE APPLICATIONS.

REPLACES:
FOLGER-ADAMS 310-2 OB

⑦ LHR LATCH APPLICATION SHOWN
RHR OPPOSITE

SEE SHEET #2 FOR
APPLICATION SCHEDULE

NOTE:
ACTUAL STRIKE
DIMENSIONS SHOWN

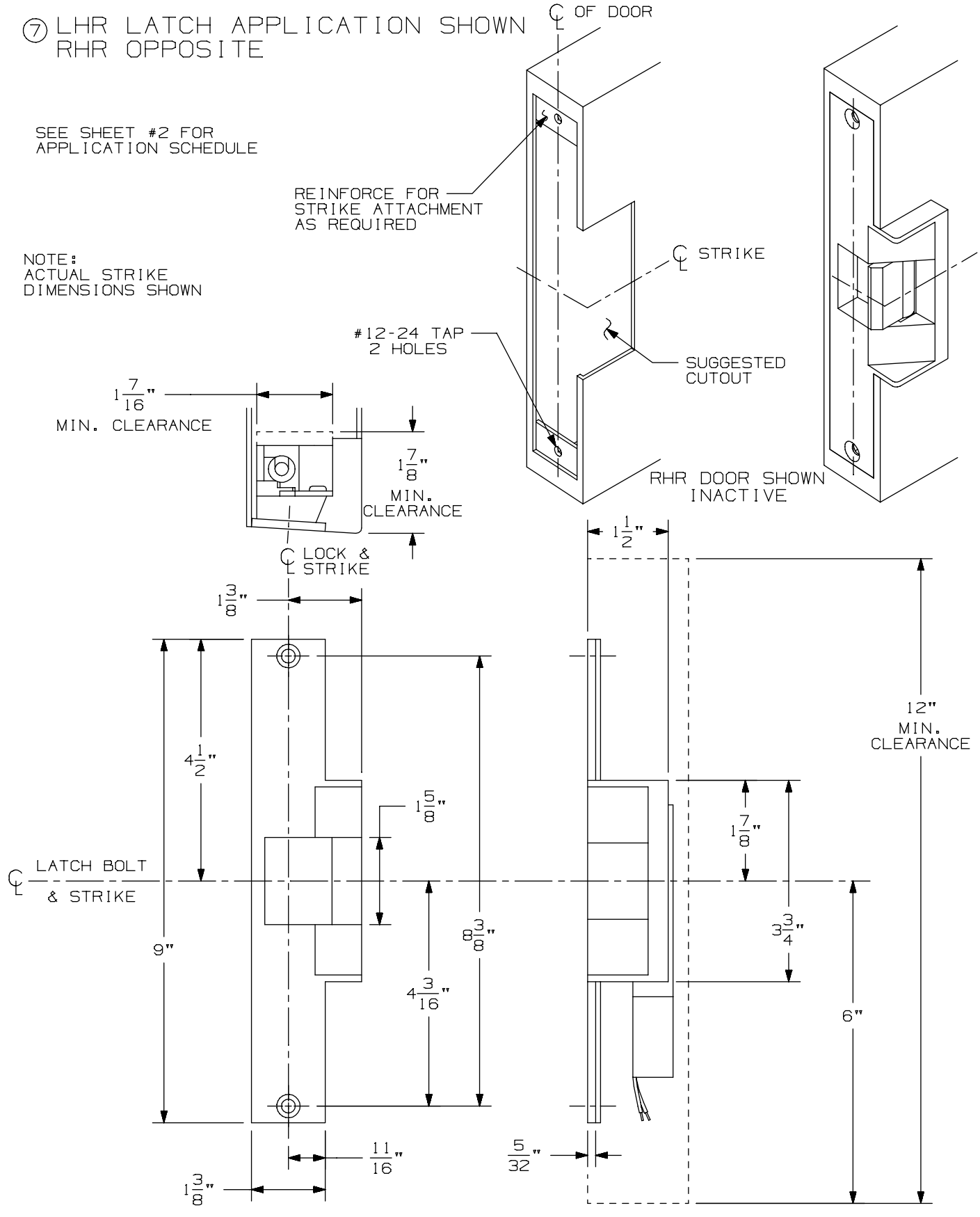

6226 Electric Strike
Double Door Closed Back Application

VON DUPRIN®

NOTES: SEE MASTER SHEET #10001 FOR SUGGESTED REINFORCING

TEMPLATE NUMBER: 30241_a Sht 1

DATE: 05-28-13

6226 ELECTRIC STRIKE

DOUBLE DOOR CLOSED BACK APPLICATION
MORTISE/CYLINDRICAL APPLICATION SCHEDULE

PRODUCT MANUFACTURER	PRODUCT APPLICATION	THROW
VON DUPRIN	7500 MORTISE	3/4"
ADAMS RITE	4510 MORTISE	1/2"
ADAMS RITE	4710 MORTISE	5/8"
BALDWIN	6000 MORTISE	3/4"
BEST	24H, 30 SERIES MORTISE	3/4"
CORBIN/RUSSWIN	ML2200 SERIES MORTISE	3/4"
FALCON	M2300, M2500, M2600	3/4"
FALCON	M3300, M3500, M3600	5/8"
MONARCH	18-M MORTISE	3/4"
PRECISION	MORTISE	3/4"
SARGENT	7800/8200 MORTISE	3/4"
SARGENT	6500/8100 MORTISE	3/4"
SARGENT	900 MORTISE LOCK	3/4"
SCHLAGE	L9000 MORTISE	3/4"
YALE	8600 MORTISE	5/8"
YALE	8700 MORTISE	3/4"
BALDWIN	CYLINDRICAL	1/2"-3/4"
BEST	CYLINDRICAL	3/8"-3/4"
CORBIN	CYLINDRICAL	1/2"-3/4"
FALCON	CYLINDRICAL	1/2"-3/4"
RUSSWIN	CYLINDRICAL	1/2"-3/4"
SARGENT	CYLINDRICAL	1/2"-3/4"
SCHLAGE	CYLINDRICAL	3/8"-3/4"
YALE	CYLINDRICAL	1/2"-3/4"

NOTES:
1. DEADLATCH NOT GUARANTEED ON CYLINDRICAL APPLICATIONS.
2. MONITORING COULD BE AFFECTED BY DOOR/FRAME PREPARATION.
3. SIGNAL TRIPPER FUNCTION WITH 3/8" THROW BOLTS IS NOT RECOMMENDED.
4. NO DEADBOLT ACTION AVAILABLE FOR MORTISE APPLICATIONS.

REPLACES:
FOLGER-ADAMS 310-2

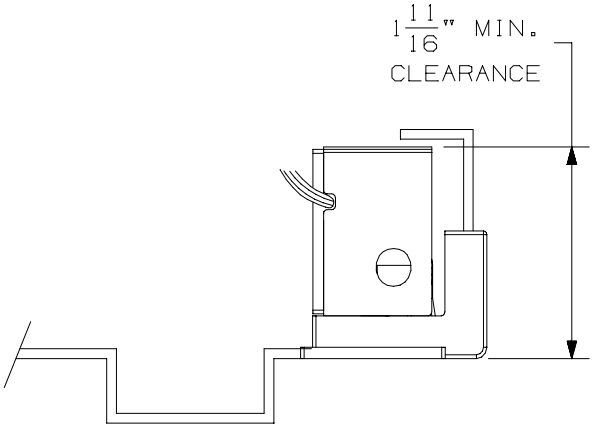

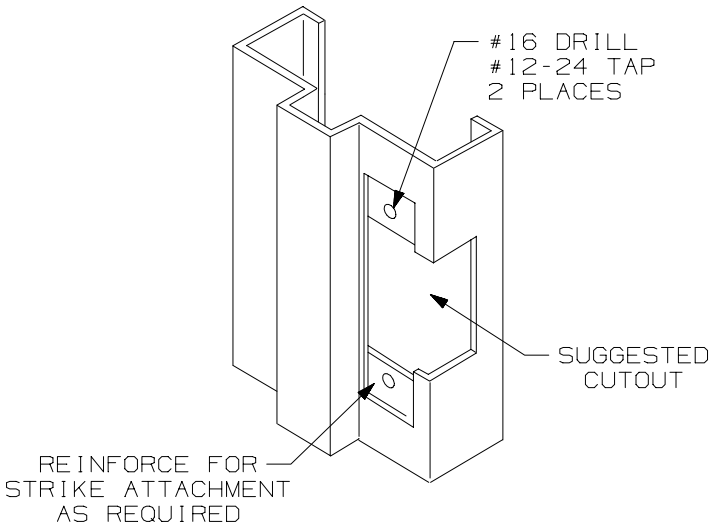

RIGHT HAND APPLICATION
LEFT HAND OPPOSITE

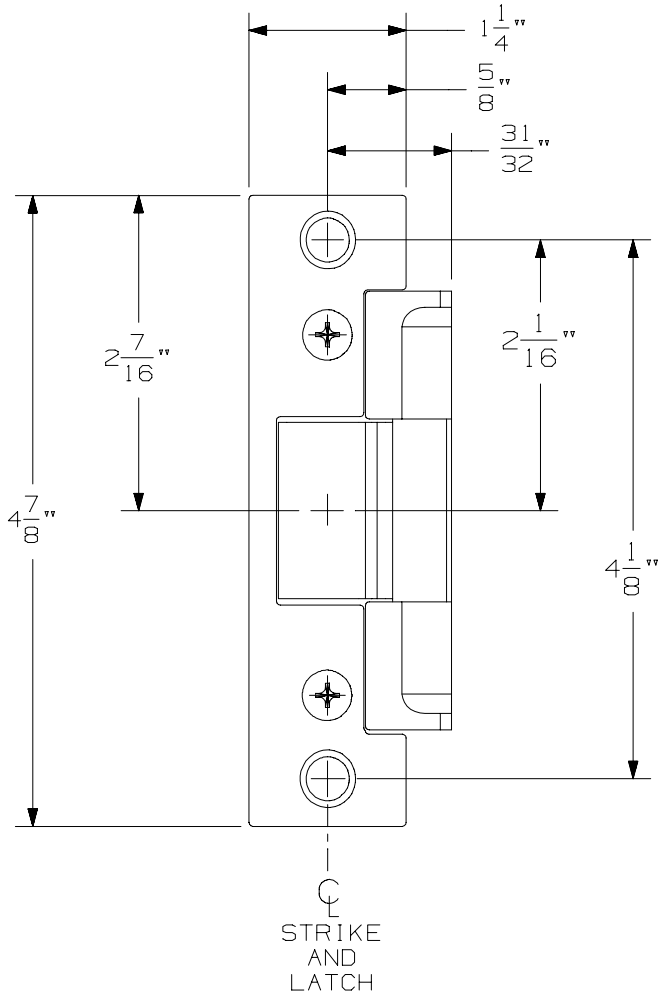

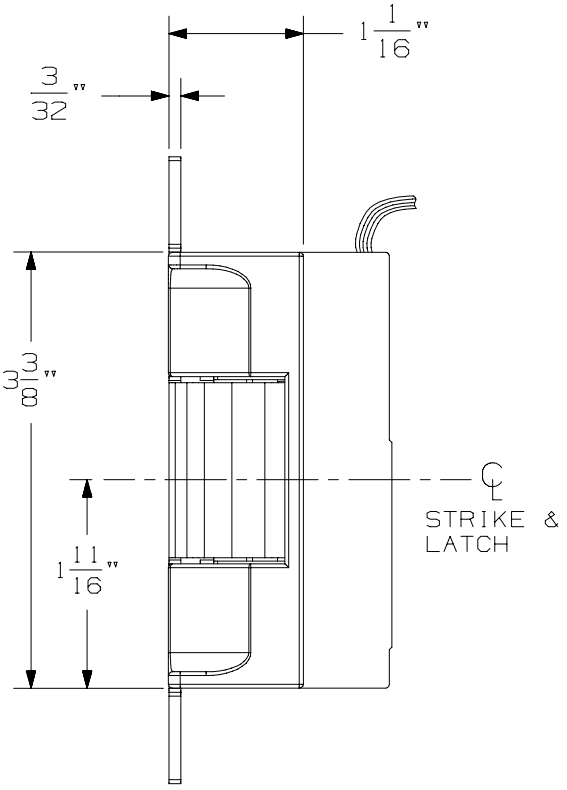

NOTES:
THIS STRIKE FOR USE WITH
5/8" MAX. THROW CYLINDRICAL
LATCHES OR DEAD LATCHES.

5100 Model Strike
Hollow Metal Frame Application

VON DUPRIN®

NOTES: SEE MASTER SHEET #10001 FOR SUGGESTED REINFORCING

TEMPLATE NUMBER: 30214_a Sht 1

DATE: 07-16-13

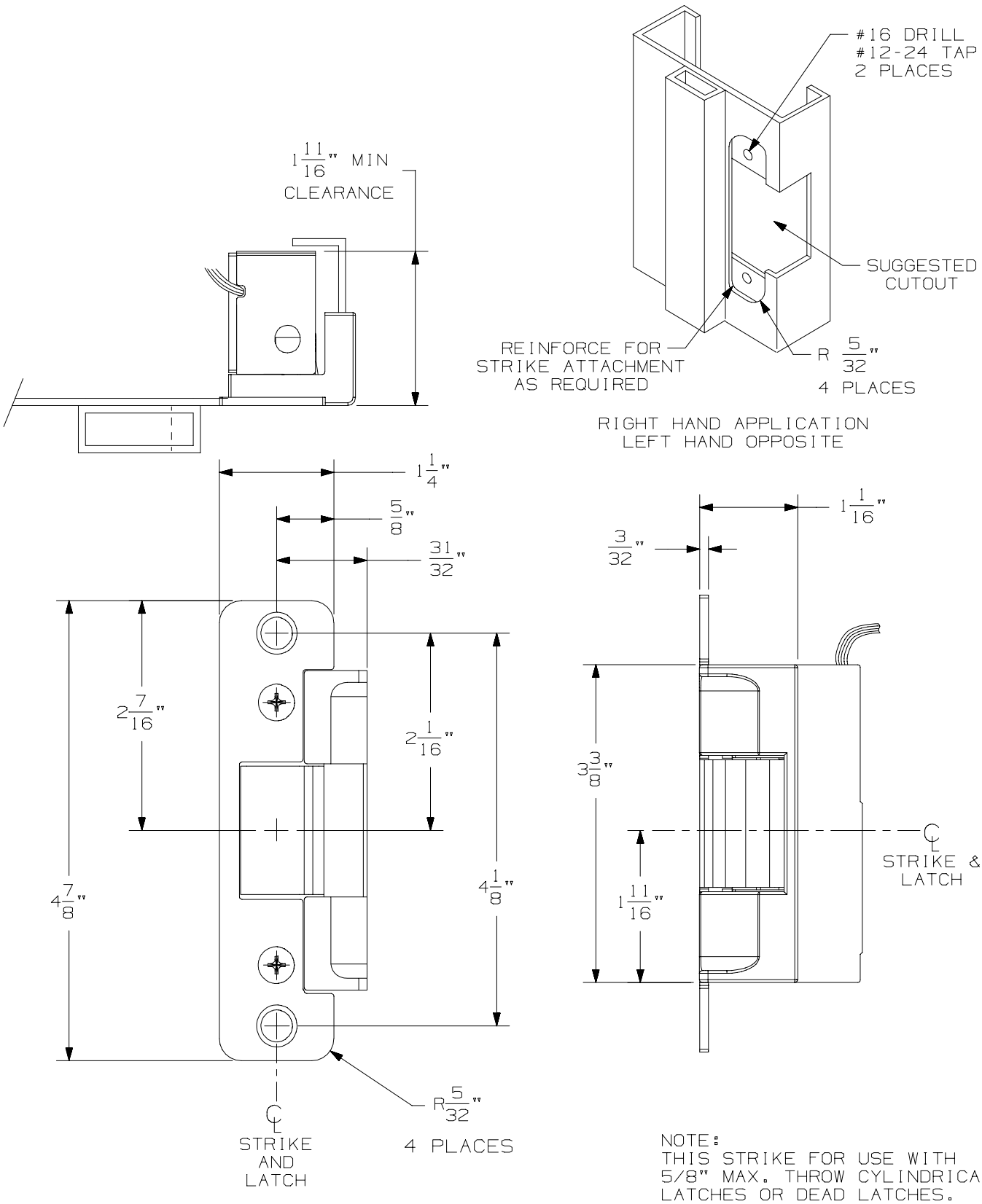

5100 Model Strike
Aluminum Frame Application

VON DUPRIN®

NOTES: SEE MASTER SHEET #10001 FOR SUGGESTED REINFORCING

TEMPLATE NUMBER: 30214_a Sht 2

DATE: 07-16-13

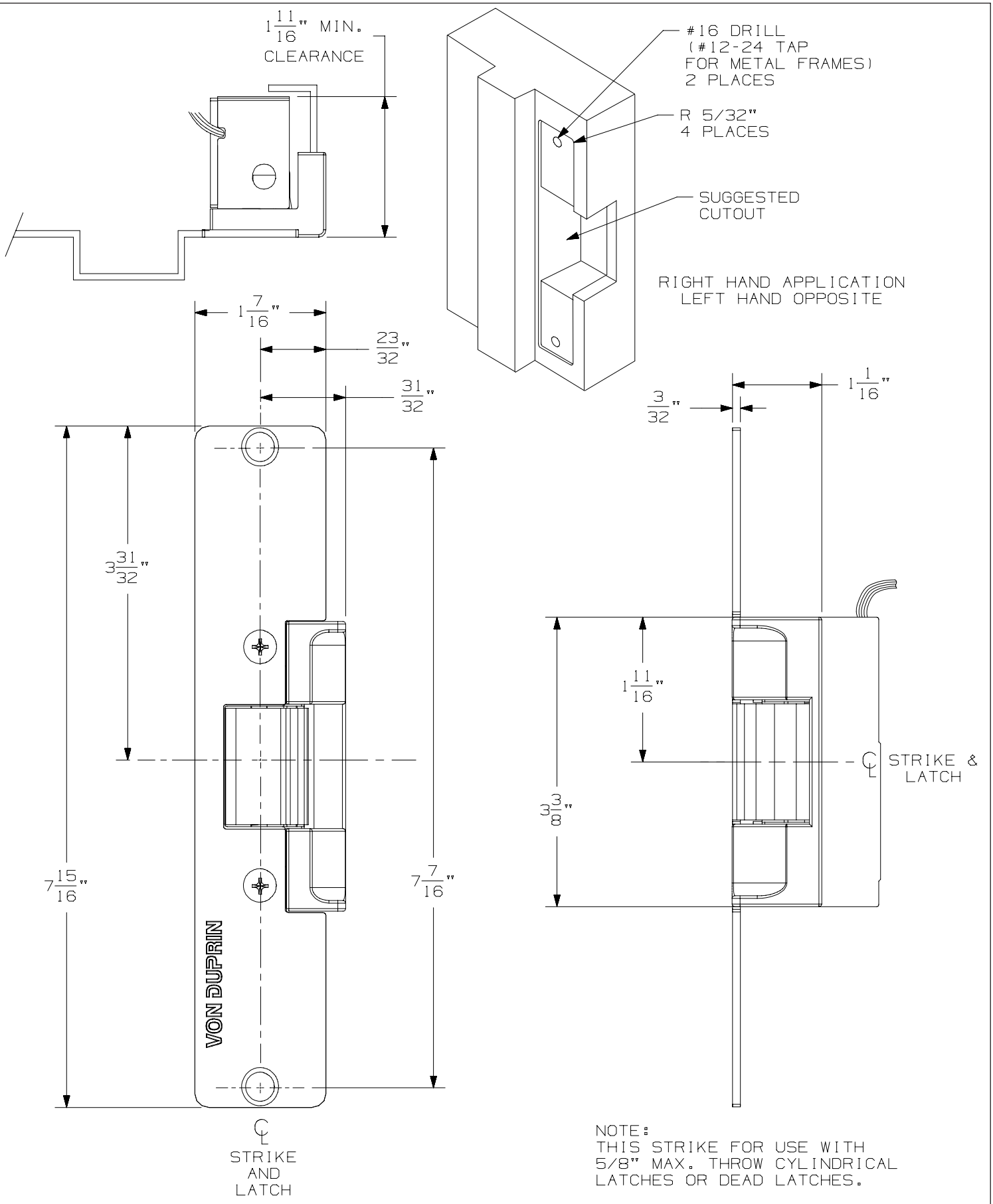

5100 Model Strike
Extended Faceplate Application

VON DUPRIN®

NOTES: SEE MASTER SHEET #10001 FOR SUGGESTED REINFORCING

TEMPLATE NUMBER: 30214_a Sht 3

DATE: 07-16-13

Accessory Items

-

Mullions (Frame preparation)

Frame Preparation
1654 & 4954 Removable Mullions

NOTES: SEE MASTER SHEET #10001 FOR SUGGESTED REINFORCING

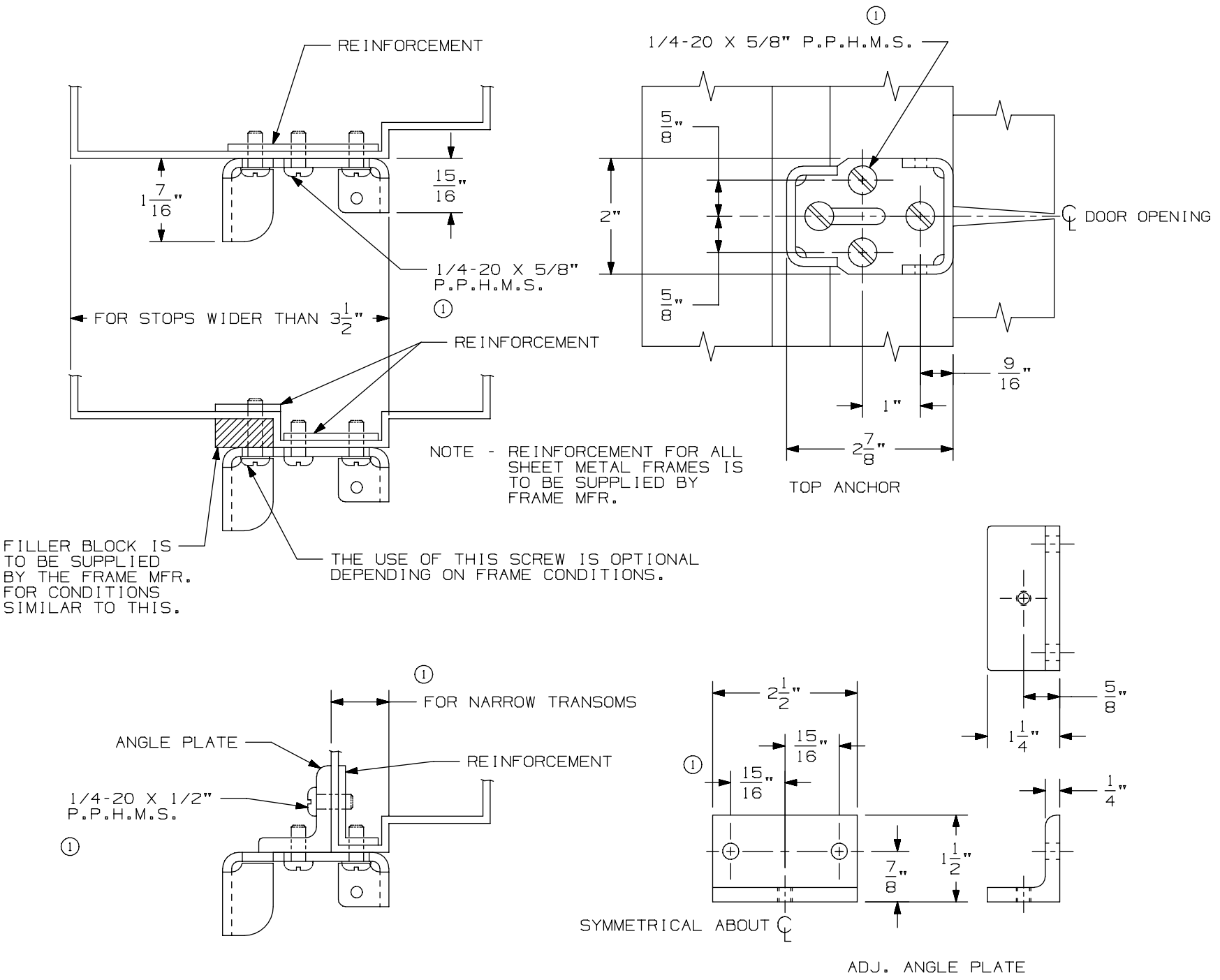

VON DUPRIN®

TEMPLATE NUMBER: 40030_a

DATE: 05-28-13

Frame Preparation
KR1654 & KR4954 Removable Mullions

NOTES: SEE MASTER SHEET #10001 FOR SUGGESTED REINFORCING

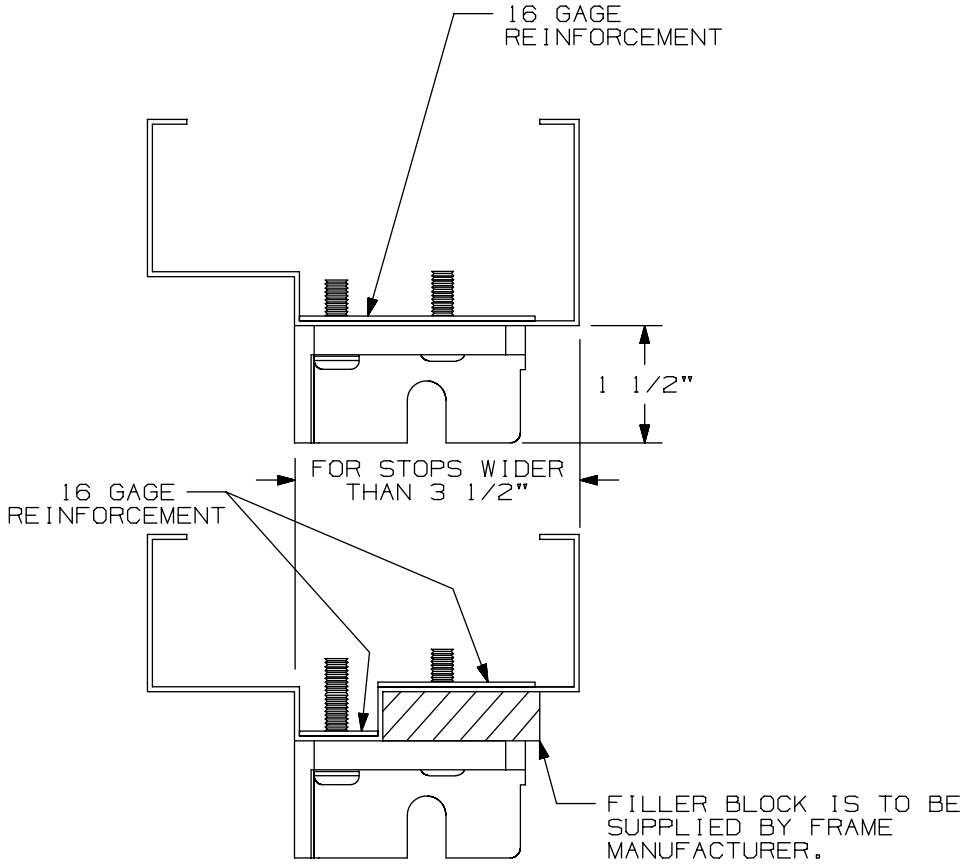

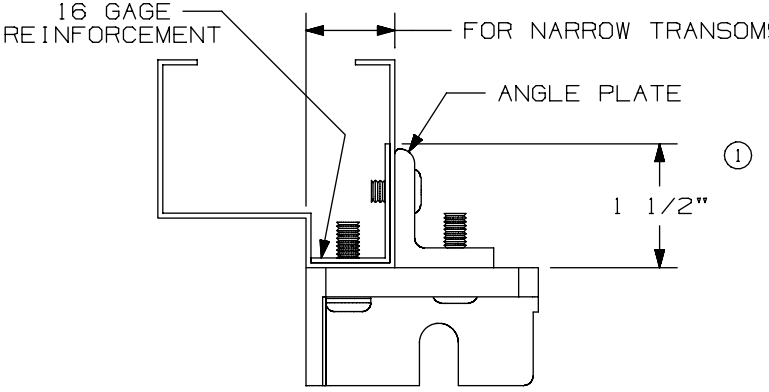

NOTE: REINFORCEMENT FOR ALL SHEET METAL FRAMES IS TO BE SUPPLIED BY FRAME MANUFACTURER.

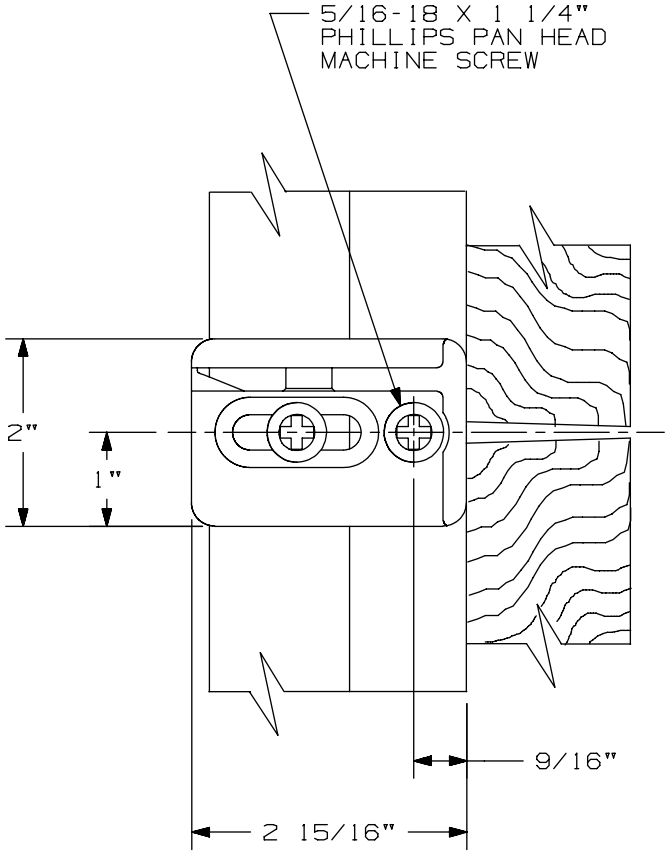

TOP ANCHOR

1

VON DUPRIN®

TEMPLATE NUMBER: 40043_a

DATE: 05-28-13

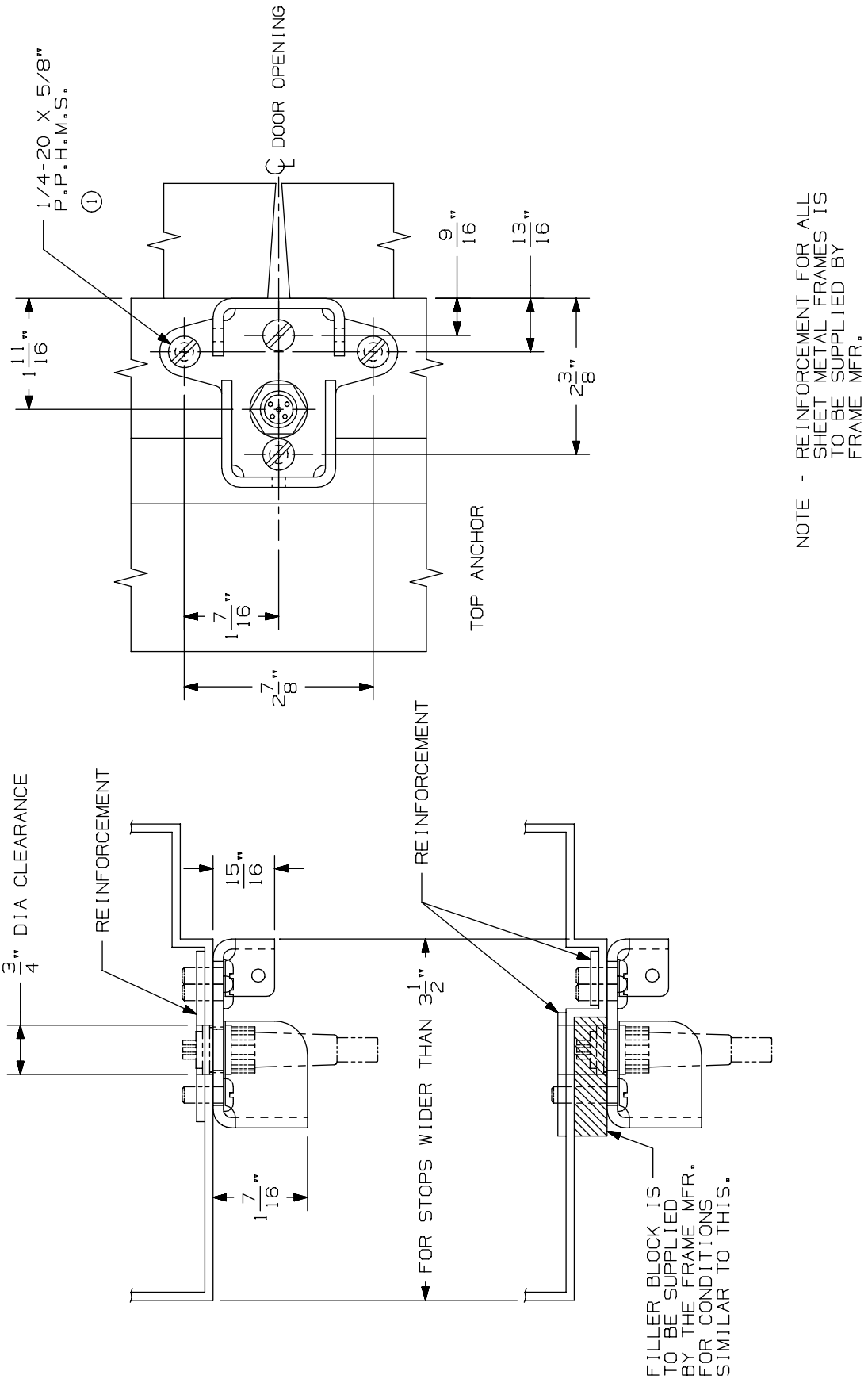

Frame Preparation - 4754 & 4854 Electric Disconnect Mullions

VON DUPRIN®

NOTES: SEE MASTER SHEET #10001 FOR SUGGESTED REINFORCING

TEMPLATE NUMBER: 40035_a

DATE: 05-28-13

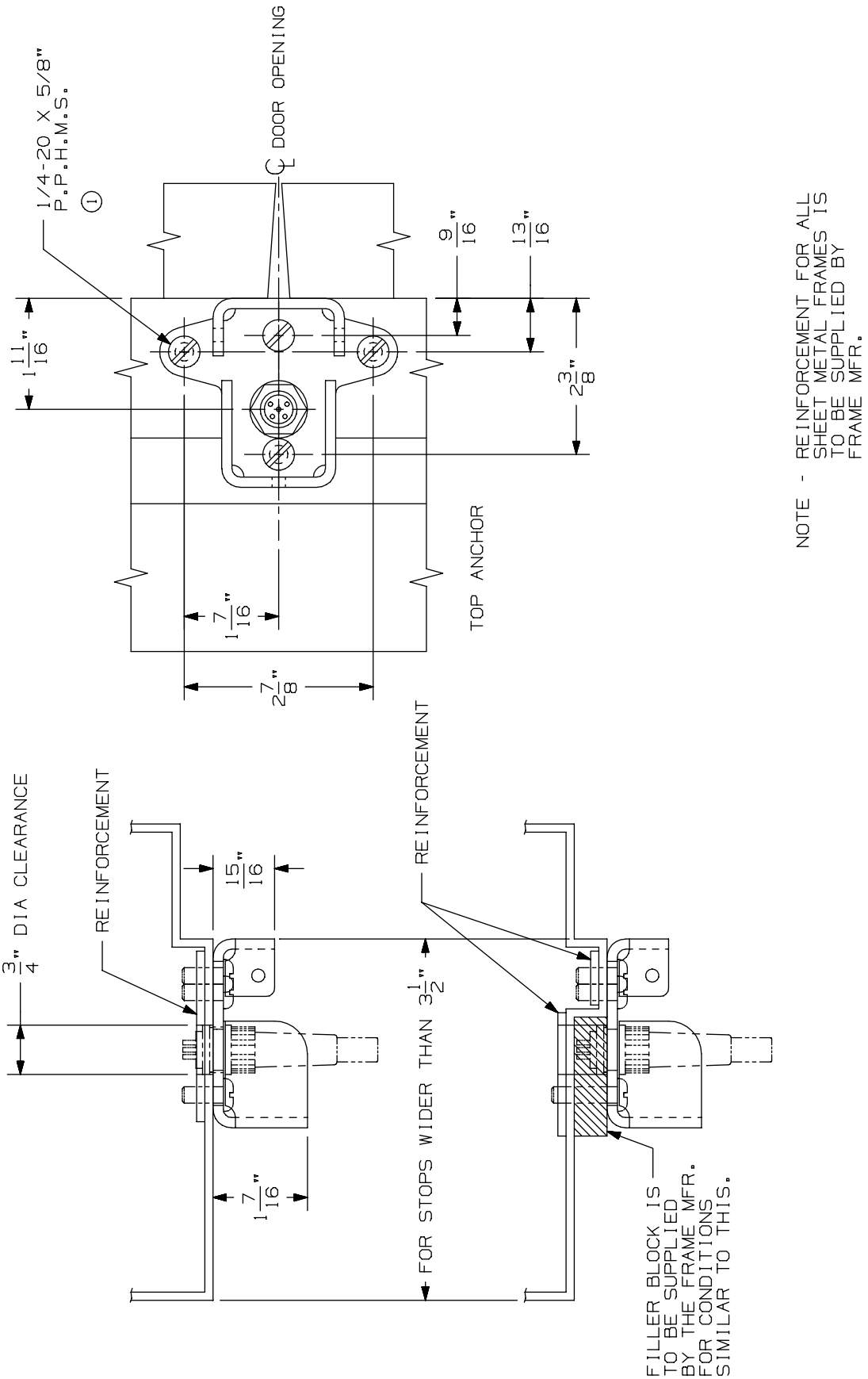

Frame Preparation - 4754 & 4854 Electric Disconnect Mullions

VON DUPRIN®

NOTES: SEE MASTER SHEET #10001 FOR SUGGESTED REINFORCING

TEMPLATE NUMBER: 40035_a

DATE: 05-28-13

Frame Preparation
1654 & 4954 Removable Mullions

NOTES: SEE MASTER SHEET #10001 FOR SUGGESTED REINFORCING

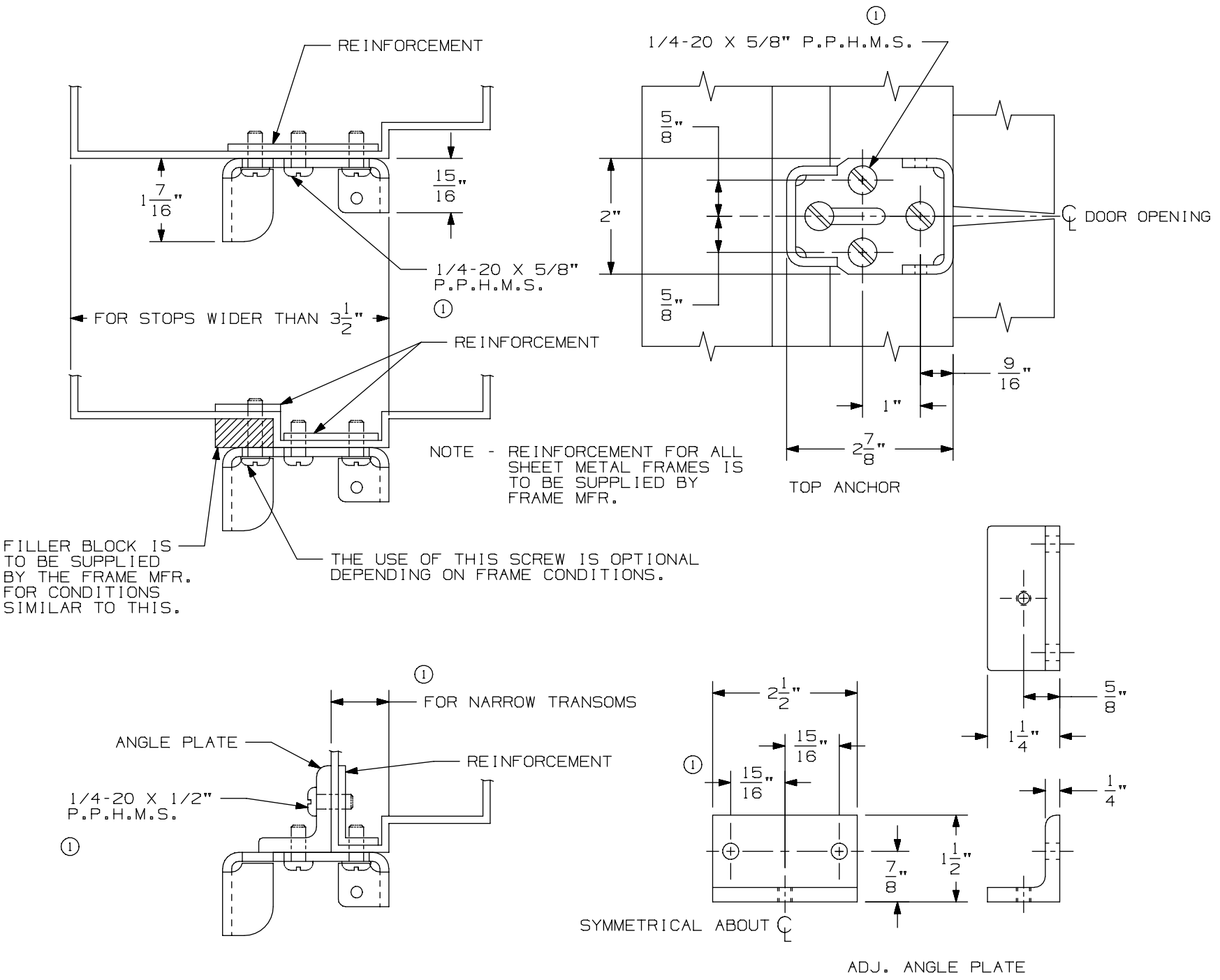

VON DUPRIN®

TEMPLATE NUMBER: 40030_a

DATE: 05-28-13

Frame Preparation
KR1654 & KR4954 Removable Mullions

NOTES: SEE MASTER SHEET #10001 FOR SUGGESTED REINFORCING

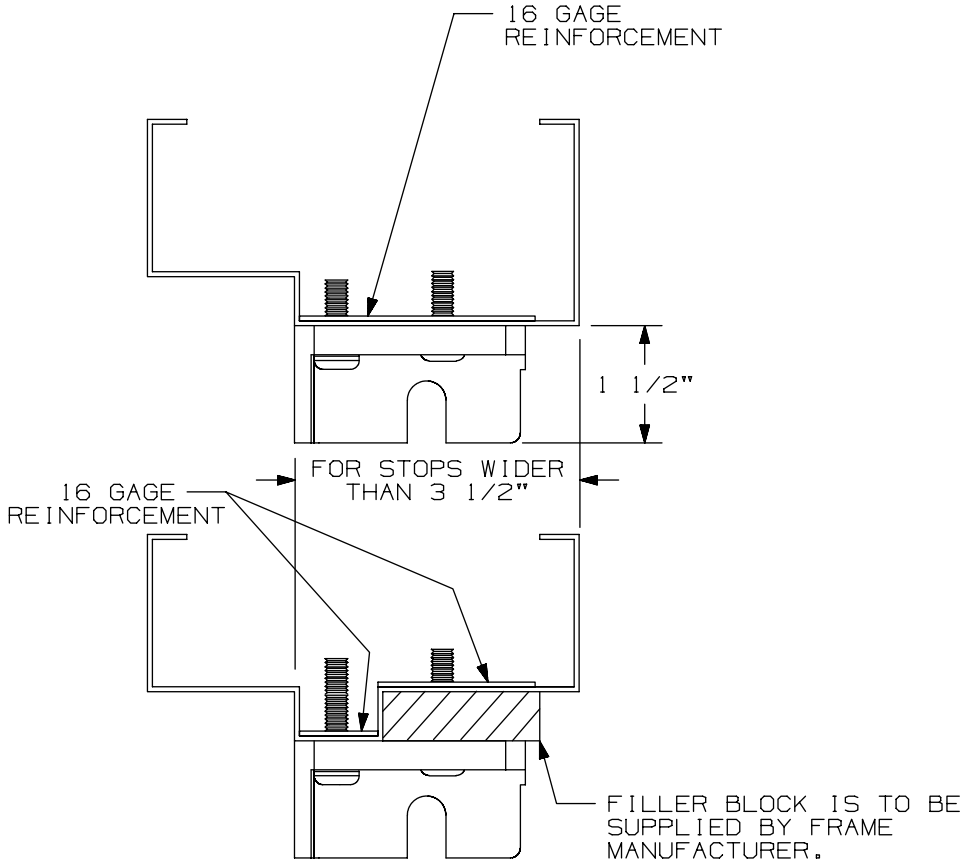

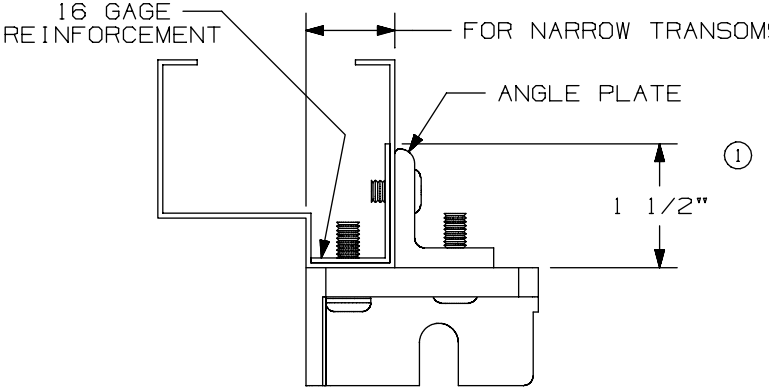

NOTE: REINFORCEMENT FOR ALL SHEET METAL FRAMES IS TO BE SUPPLIED BY FRAME MANUFACTURER.

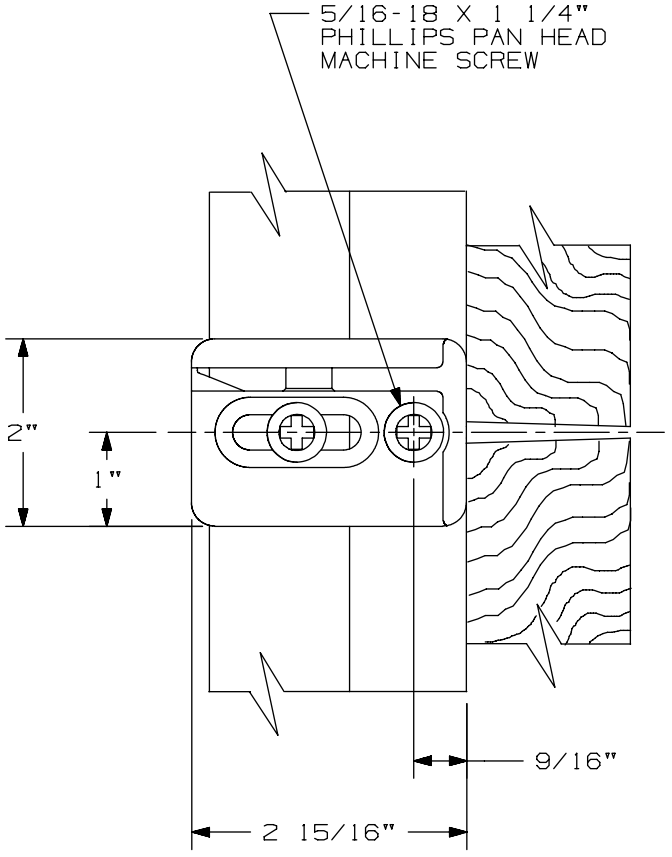

TOP ANCHOR

1

VON DUPRIN®

TEMPLATE NUMBER: 40043_a

DATE: 05-28-13

Frame Preparation
5654 & 5754 Removable Mullions

NOTES: SEE MASTER SHEET #10001 FOR SUGGESTED REINFORCING

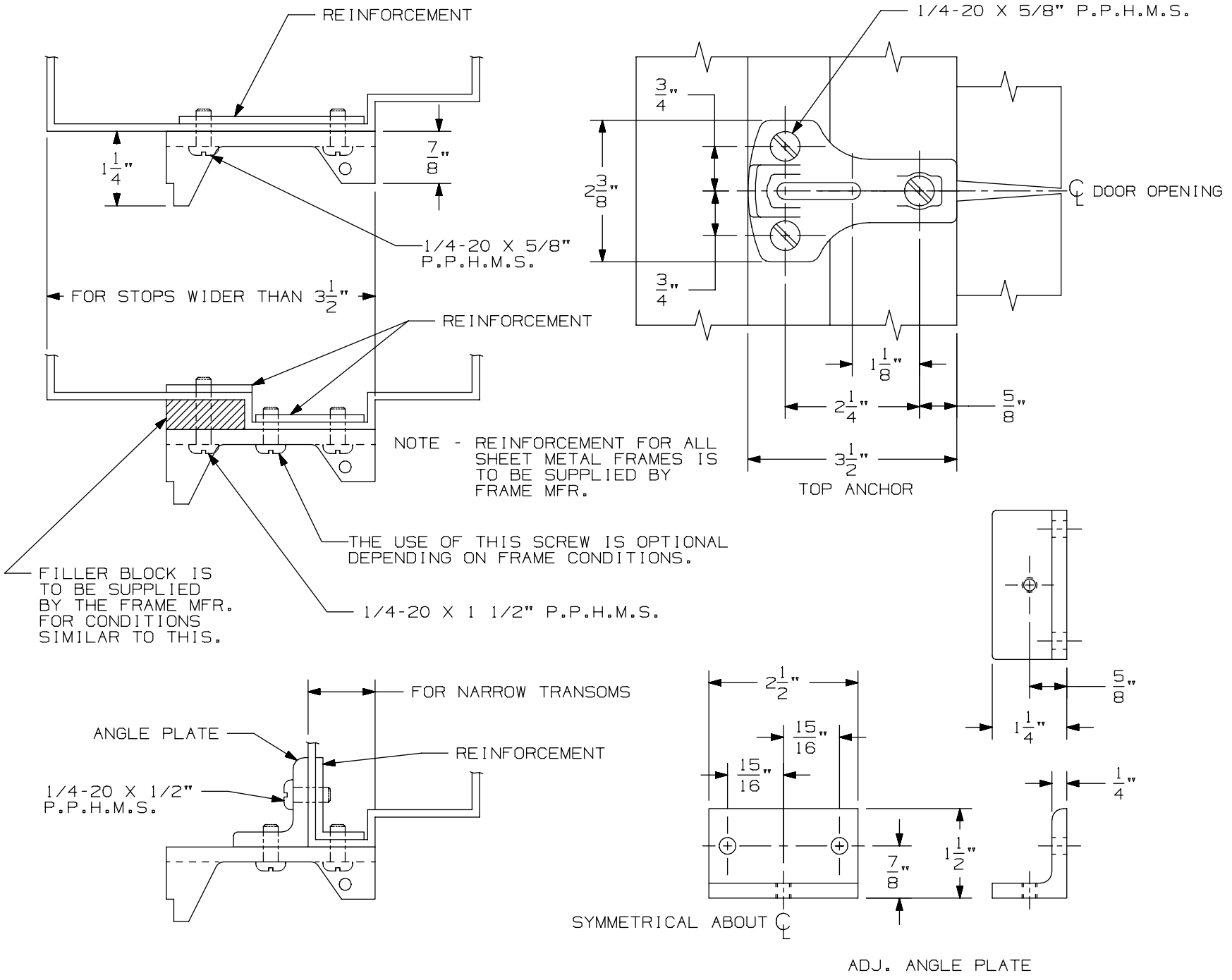

VON DUPRIN®

TEMPLATE NUMBER: 40031_a

DATE: 05-28-13

Frame Preparation
5654 & 5754 Removable Mullions

NOTES: SEE MASTER SHEET #10001 FOR SUGGESTED REINFORCING

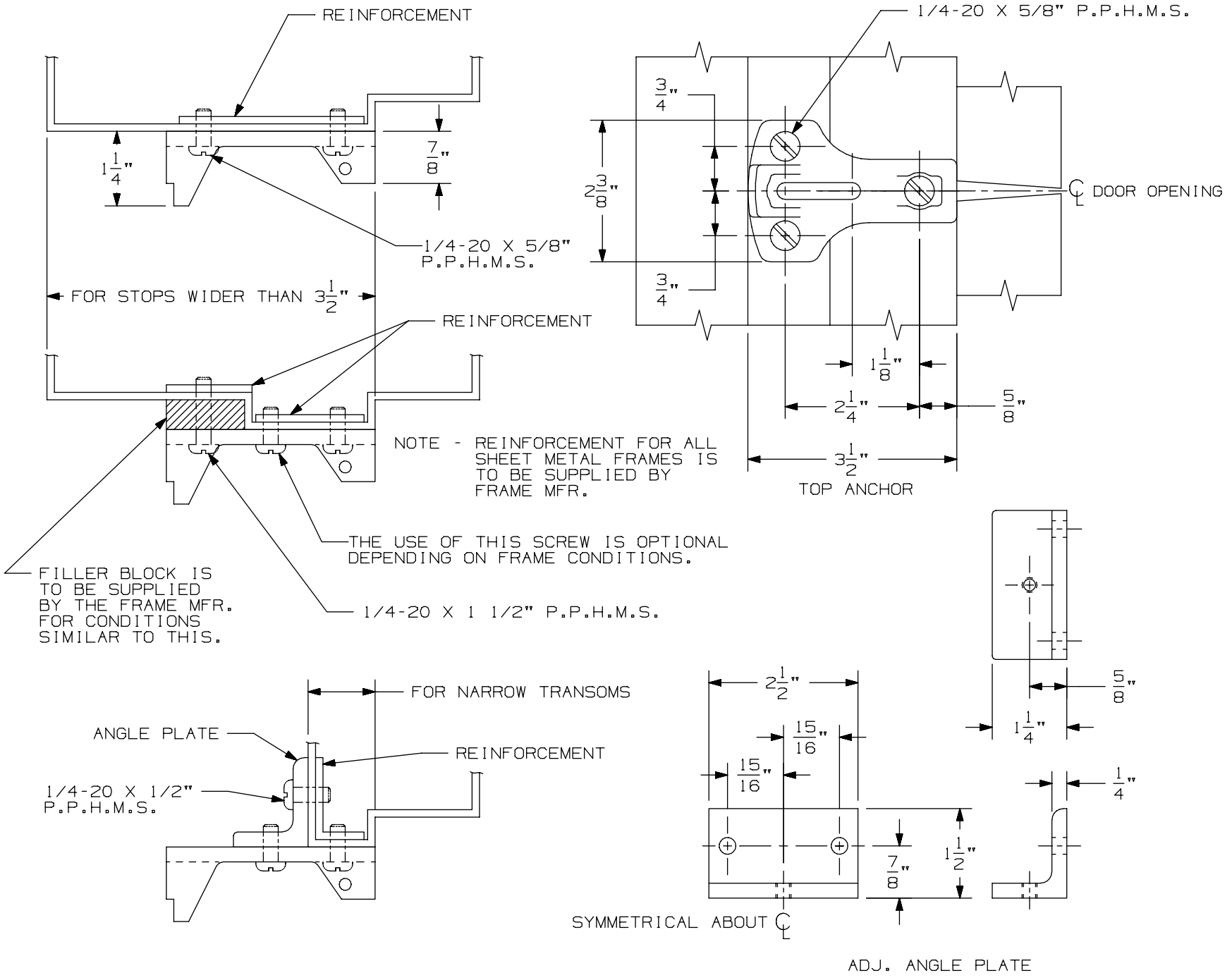

VON DUPRIN®

TEMPLATE NUMBER: 40031_a

DATE: 05-28-13

Frame Preparation
5654 & 5754 Removable Mullions

NOTES: SEE MASTER SHEET #10001 FOR SUGGESTED REINFORCING

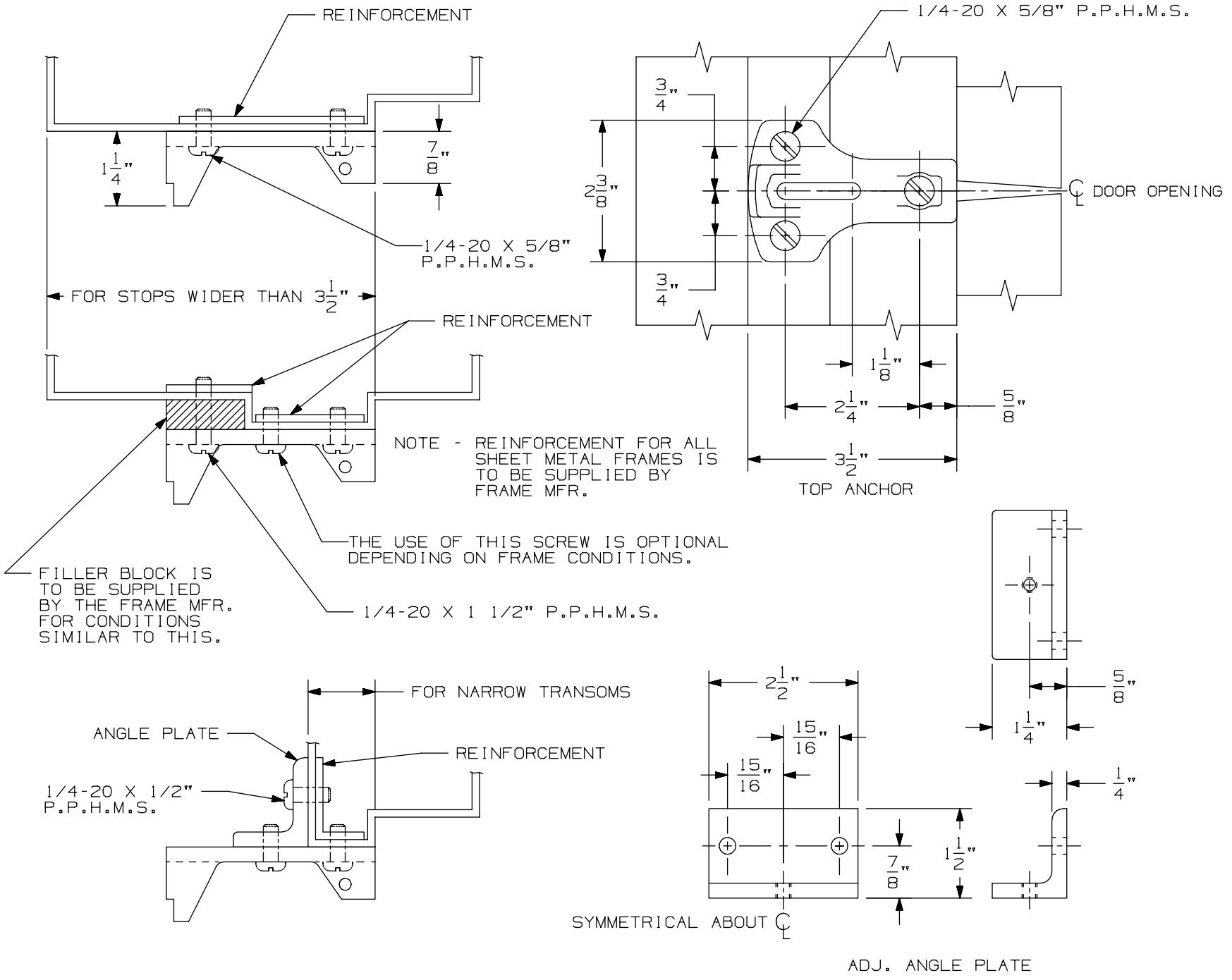

VON DUPRIN®

TEMPLATE NUMBER: 40031_a

DATE: 05-28-13

NOTE: SHEET METAL FRAME REINFORCEMENT IS TO BE SUPPLIED BY FRAME MFR.

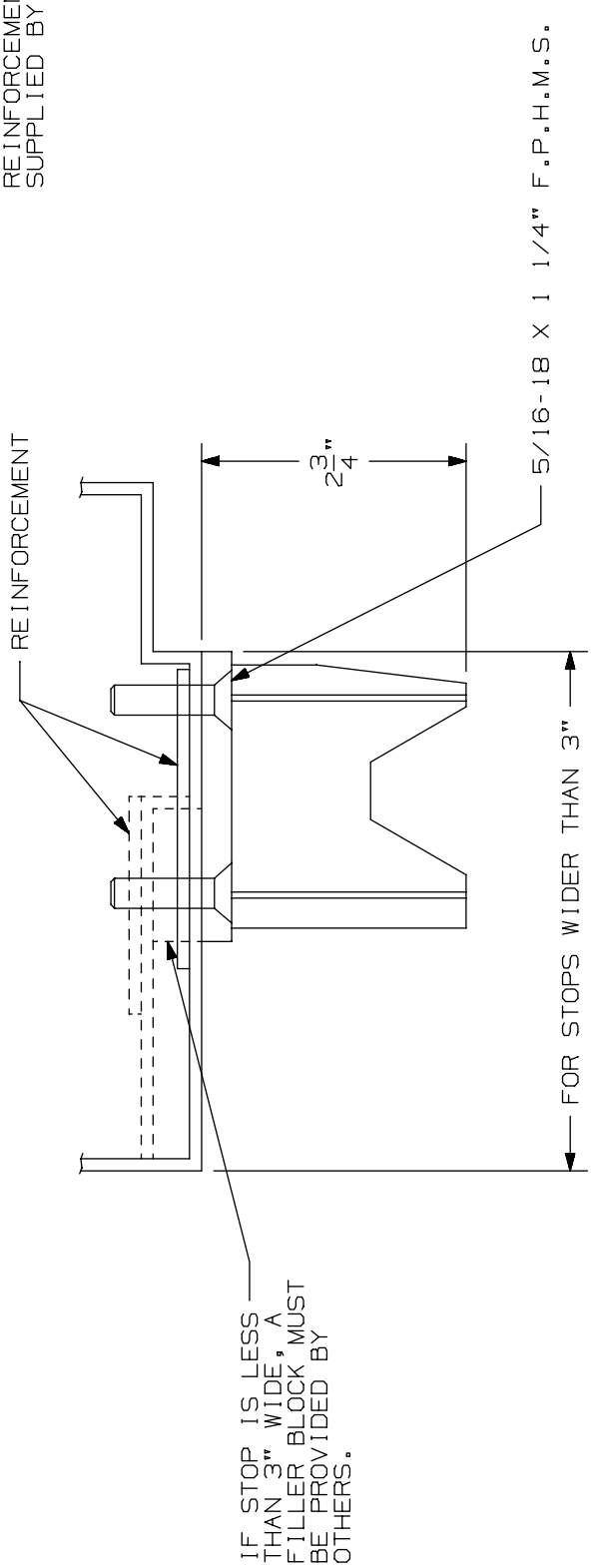

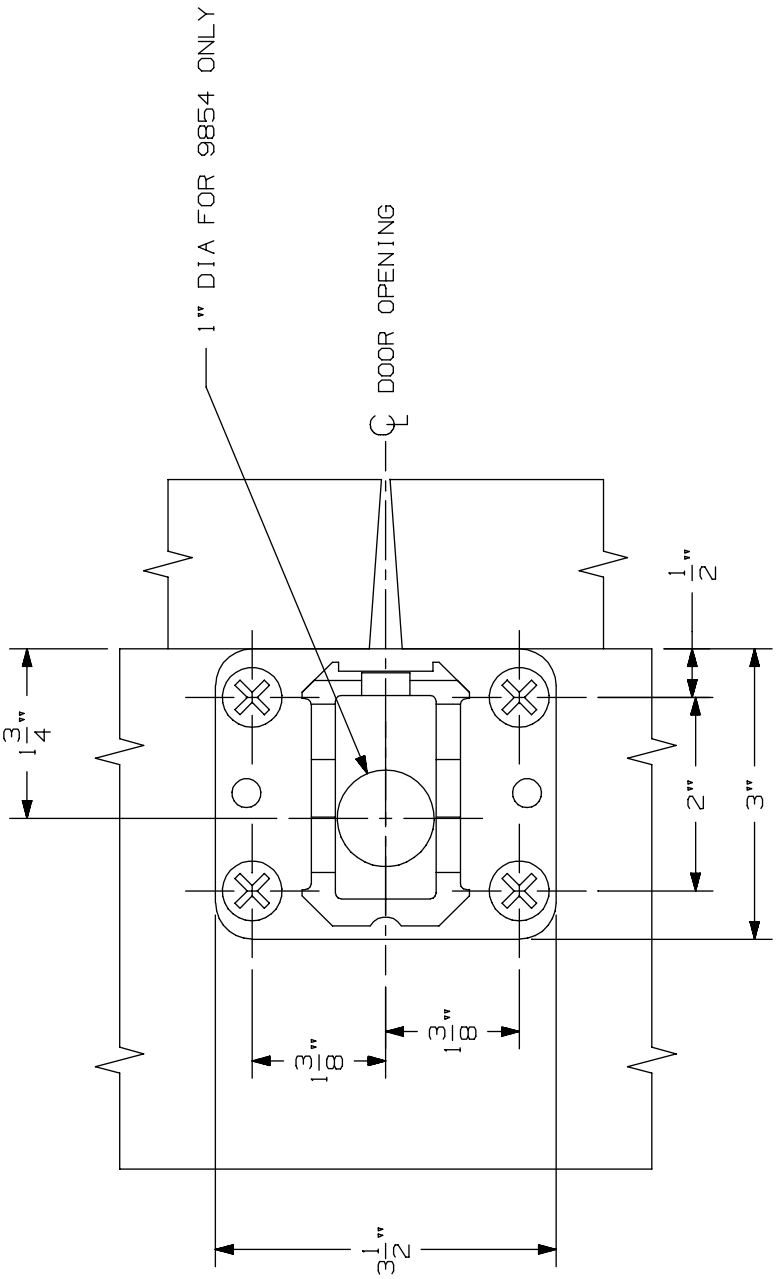

9854, 9954, HH54 Mullion

VON DUPRIN®

NOTES: SEE MASTER SHEET #10001 FOR SUGGESTED REINFORCING

TEMPLATE NUMBER: 40036_a

DATE: 05-28-13

NOTE: SHEET METAL FRAME REINFORCEMENT IS TO BE SUPPLIED BY FRAME MFR.

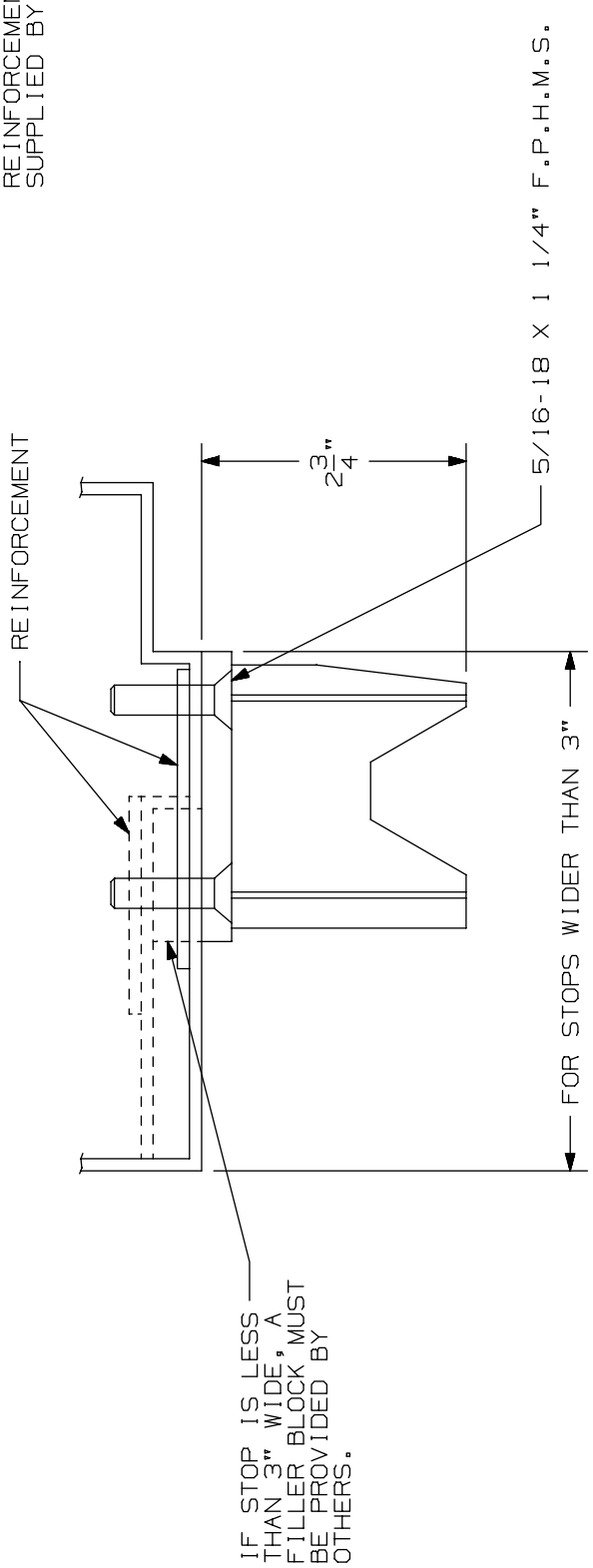

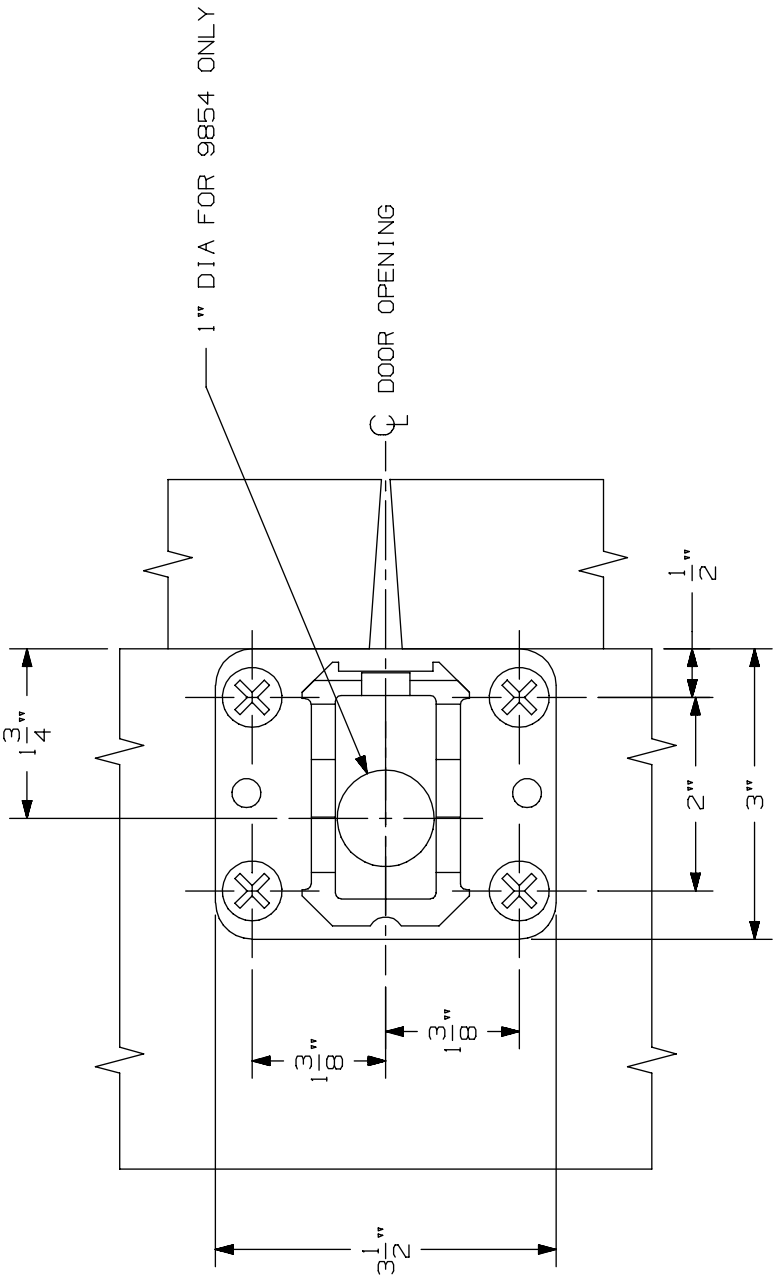

9854, 9954, HH54 Mullion

VON DUPRIN®

NOTES: SEE MASTER SHEET #10001 FOR SUGGESTED REINFORCING

TEMPLATE NUMBER: 40036_a

DATE: 05-28-13

NOTE: SHEET METAL FRAME REINFORCEMENT IS TO BE SUPPLIED BY FRAME MFR.

KR9854 & KR9954 Mullion

VON DUPRIN®

NOTES: SEE MASTER SHEET #10001 FOR SUGGESTED REINFORCING

TEMPLATE NUMBER: 40037_a

DATE: 05-28-13

NOTE: SHEET METAL FRAME REINFORCEMENT IS TO BE SUPPLIED BY FRAME MFR.

KR9854 & KR9954 Mullion

VON DUPRIN®

NOTES: SEE MASTER SHEET #10001 FOR SUGGESTED REINFORCING

TEMPLATE NUMBER: 40037_a

DATE: 05-28-13

Accessory Items

-

Monitor Strikes

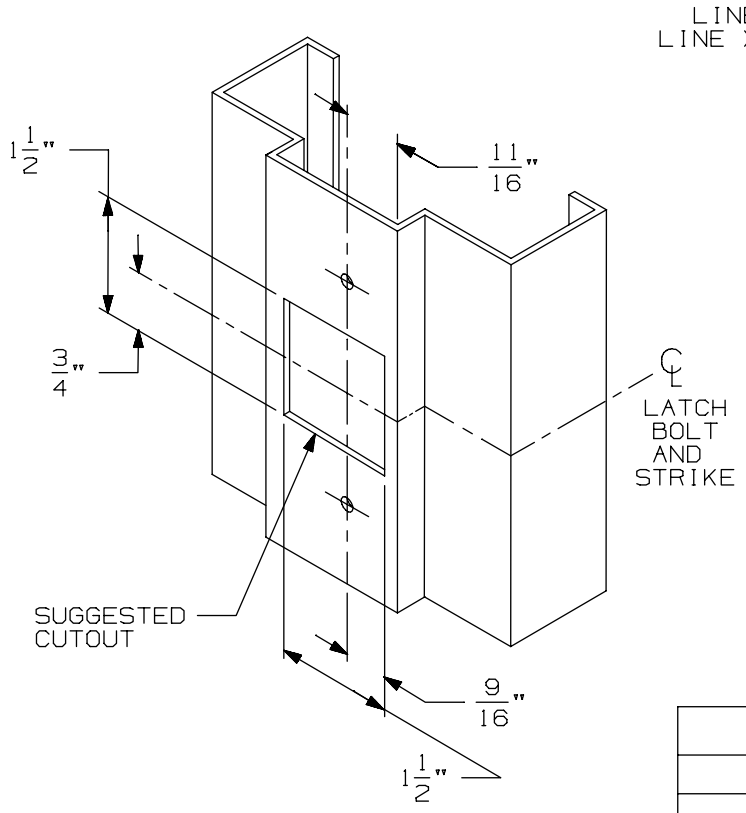

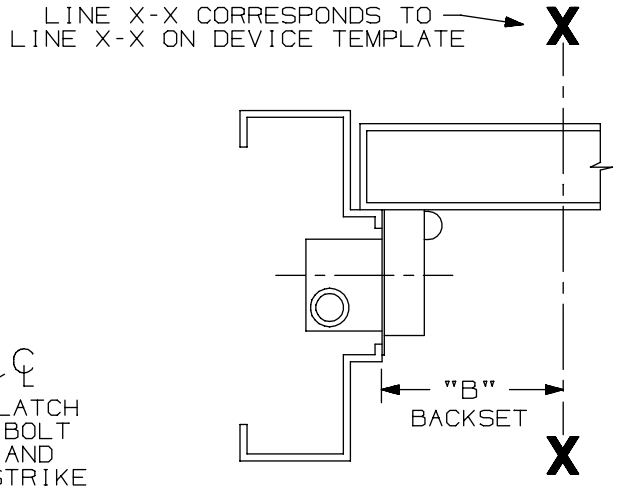

LHR APP. SHOWN
RHR APP. OPPOSITE

SINGLE DOOR INSTALLATION		
DEVICE	DIM "B"	MIN. STILE
33/35 RIM	1 13/32"	2 15/16"
44 RIM EO, DT, NL, TP	2 1/2"	4 3/8"
44 RIM K	2 3/8"	4 3/8"
55 RIM	1 11/32"	2 13/16"
88 RIM EO, DT, NL, TP	2 1/2"	4 3/8"
88 RIM K	2 3/8"	4 3/8"
98/99 RIM	2 3/8"	4 3/8"
22 RIM	2 3/8"	4 3/8"
(6) 33A/35A RIM	1 13/32"	2 7/8"

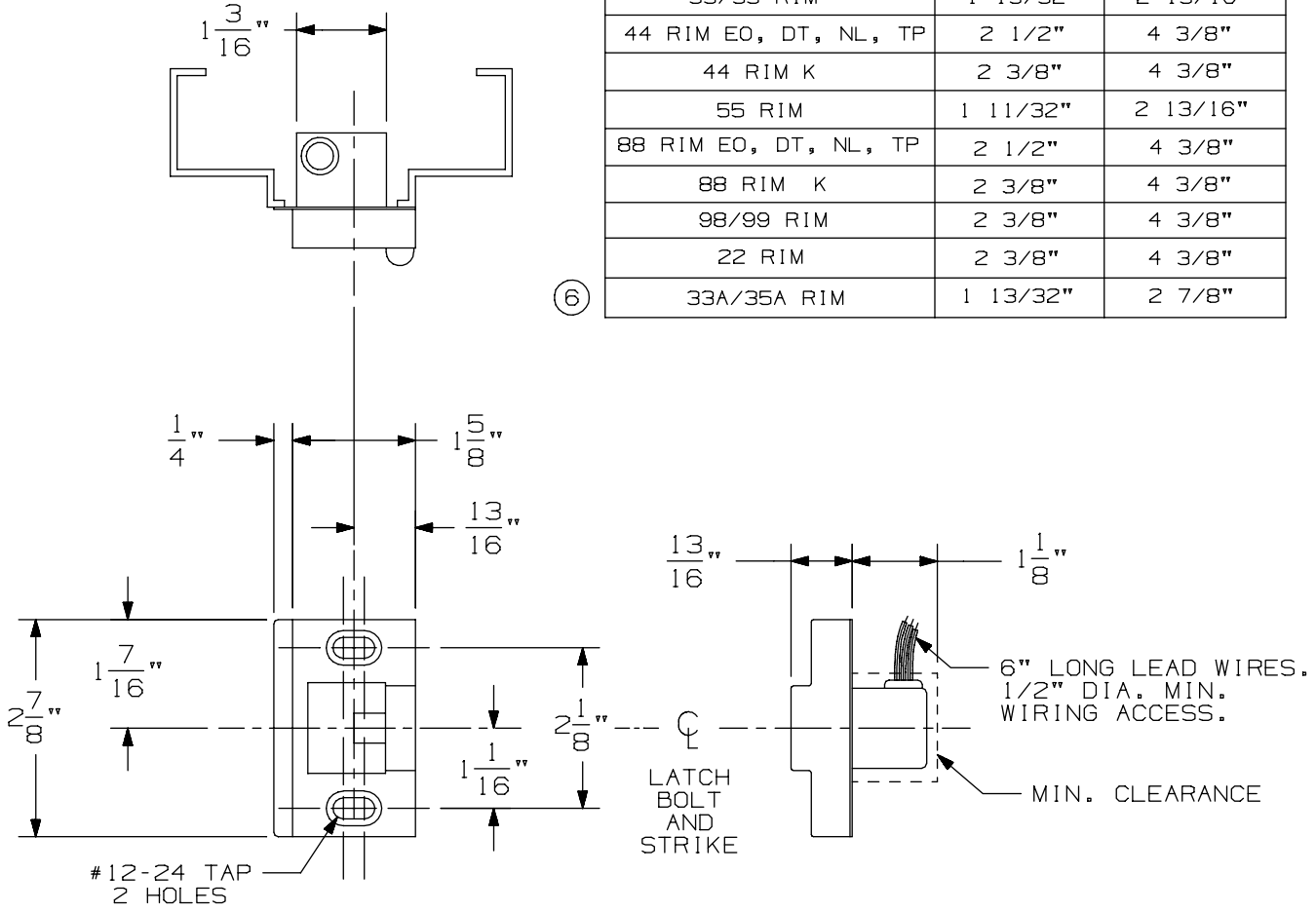

4263 Signal Strike

VON DUPRIN®

NOTES: SEE MASTER SHEET #10001 FOR SUGGESTED REINFORCING

TEMPLATE NUMBER: 30200_a

DATE: 05-24-13

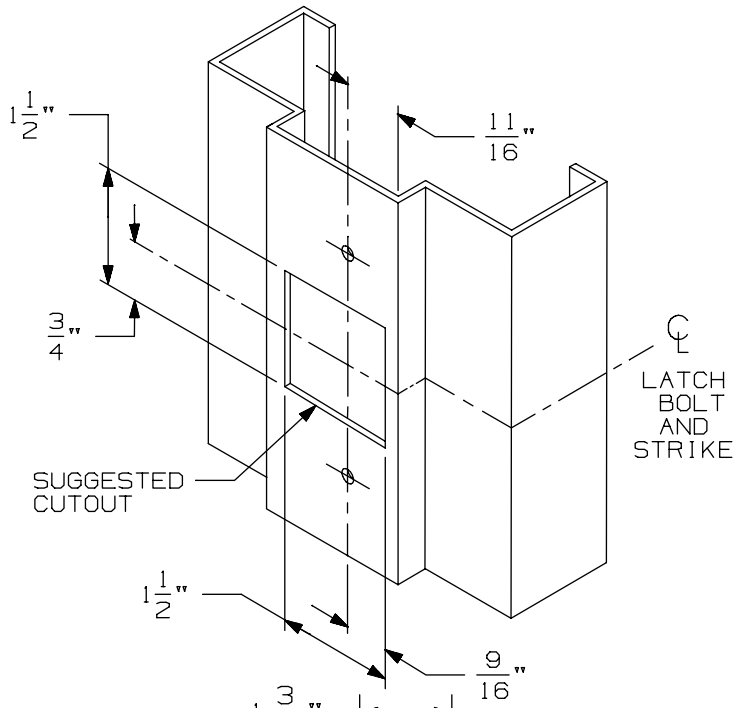

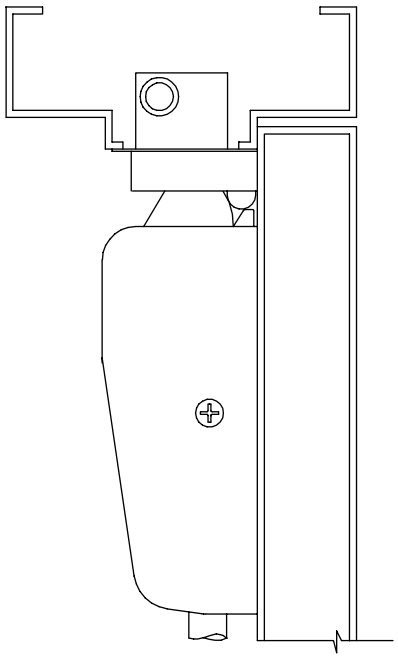

LATCH CASE MOUNTING HOLES TO BE PREPARED AT INSTALLATION ON DOOR

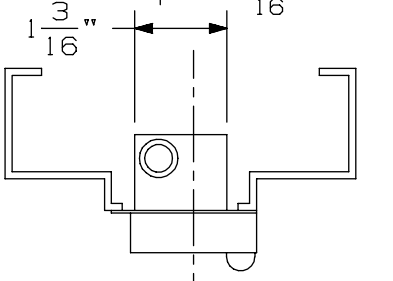

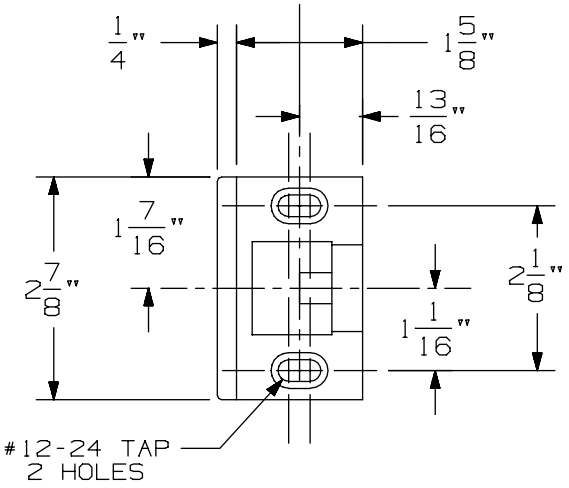

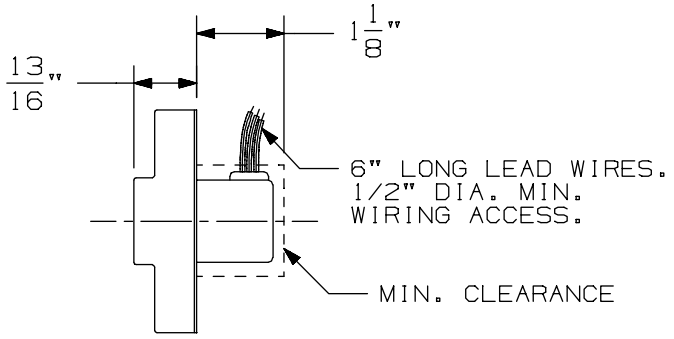

SINGLE DOOR INSTALLATION			TWO VERT. ROD DEVICES	
DEVICE	MIN. STILE	MIN. BACKSET	MIN. STILE	MIN. BACKSET
3327/3527	2 13/16"	2 1/16"	2 3/16"	1 7/16"
8827	3 1/16"	2 1/16"	2 7/16"	1 7/16"
9827/9927	3 5/8"	2 3/16"	3 5/8"	2 3/16"
2227	3 5/8"	2 3/16"	3 5/8"	2 3/16"
⑤ 3327A/3527A	2 15/16"	2 1/16"	2 5/16"	1 7/16"

4263 Signal Strike
Vertical Rod Device Application

VON DUPRIN®

NOTES: SEE MASTER SHEET #10001 FOR SUGGESTED REINFORCING

TEMPLATE NUMBER: 30209_a

DATE: 05-23-13

LHR APP. SHOWN
RHR APP. OPPOSITE

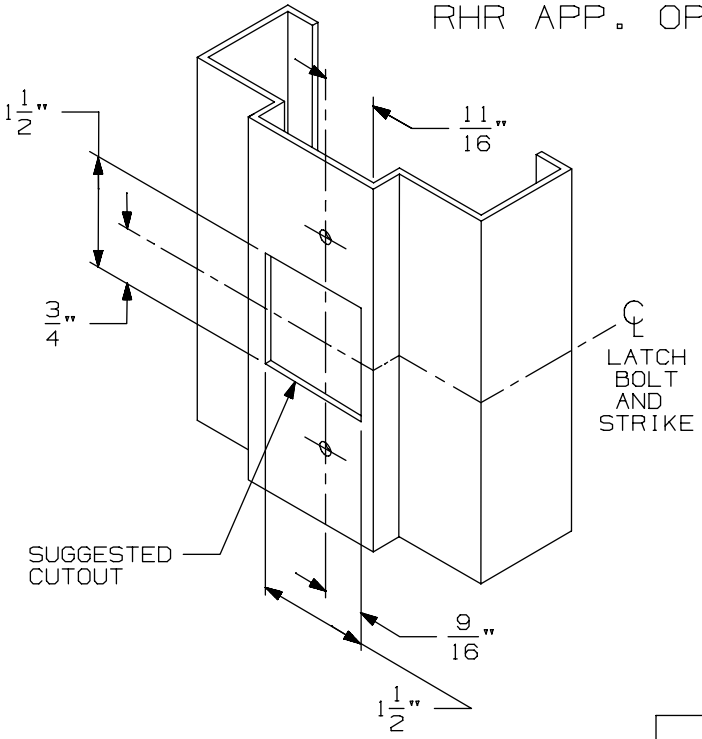

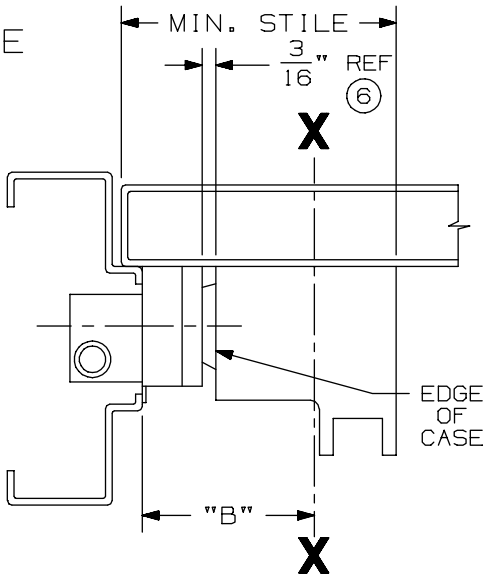

LINE X-X CORRESPONDS TO
LINE X-X ON DEVICE TEMPLATE

	DEVICE APPLICATION		
	APPLICATION	DIM "B"	MIN. STILE
⑥	22 SERIES RIM	2 7/16"	4 1/2"
	33/35 SERIES RIM	1 13/32"	2 3/4"
	88-F RIM EO,DT,NL,TP	2 1/2"	4 3/8"
	88-F RIM K	2 3/8"	4 3/8"
	98/99 SERIES RIM	2 7/16"	4 1/2"
⑥	33A/35A SERIES RIM	1 15/32"	2 15/16"

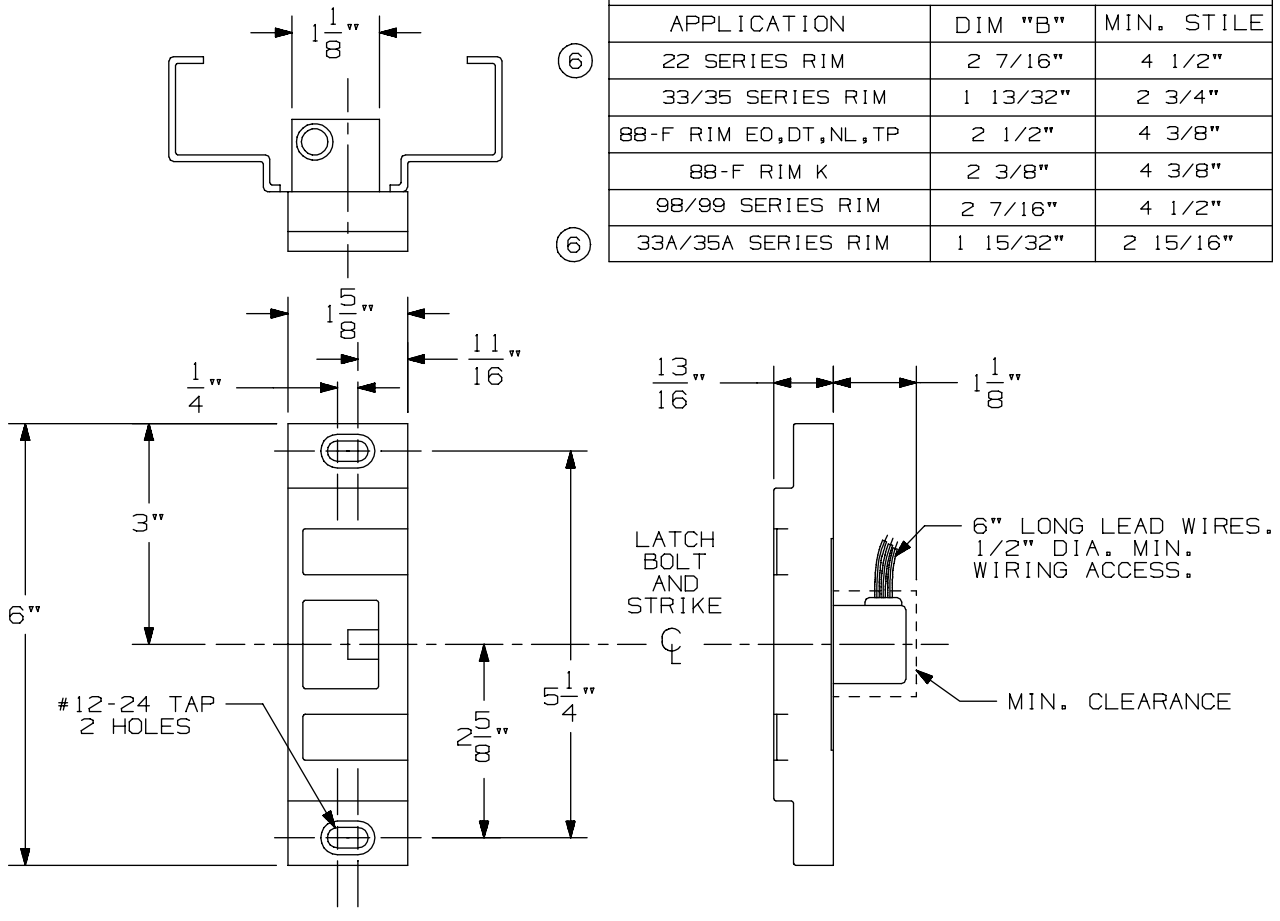

4268 Signal Strike

VON DUPRIN®

NOTES: SEE MASTER SHEET #10001 FOR SUGGESTED REINFORCING

TEMPLATE NUMBER: 30201_a

DATE: 05-24-13

LHR APP. SHOWN
RHR APP. OPPOSITE

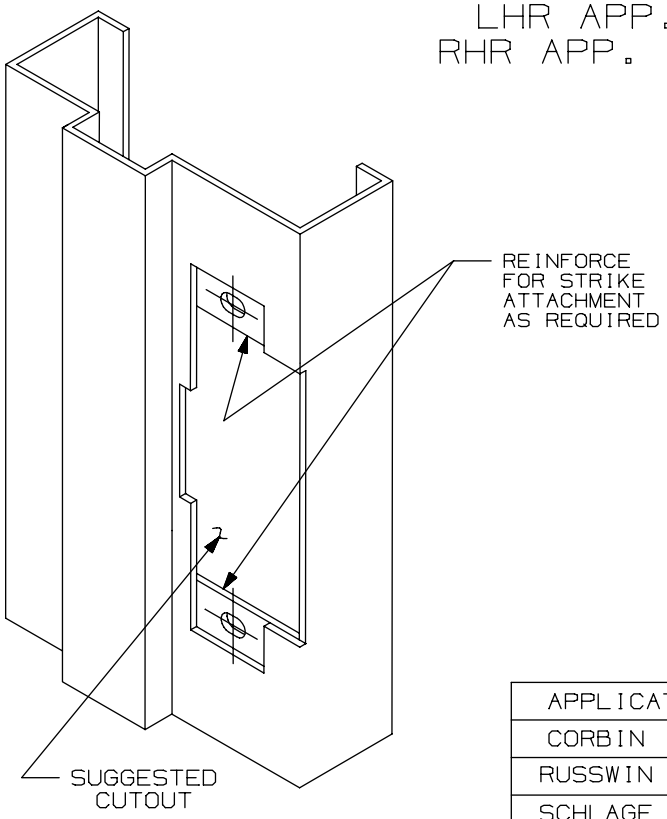

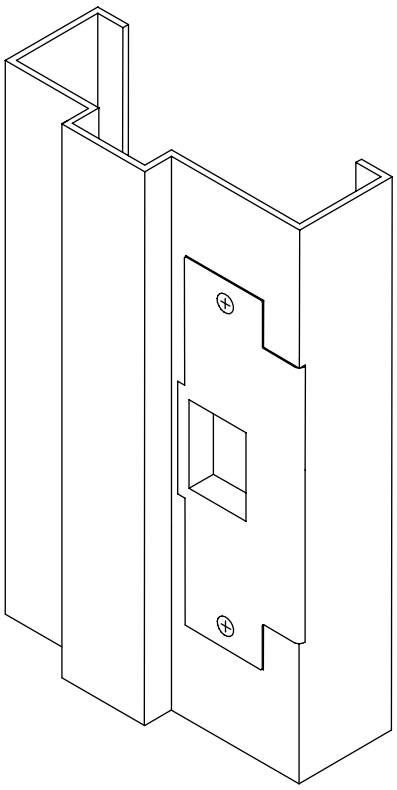

APPLICATION SCHEDULE	
CORBIN	5/8" CYLIND.
RUSSWIN	5/8" CYLIND.
SCHLAGE	5/8" CYLIND.
SCHLAGE	5/8" CYLIND.
ARROW	5/8" CYLIND.
DEXTER	5/8" CYLIND.
YALE	5/8" CYLIND.
LOCKWOOD	5/8" CYLIND.
SARGENT	5/8" CYLIND.

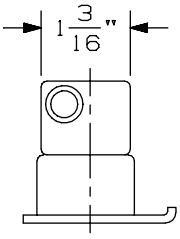

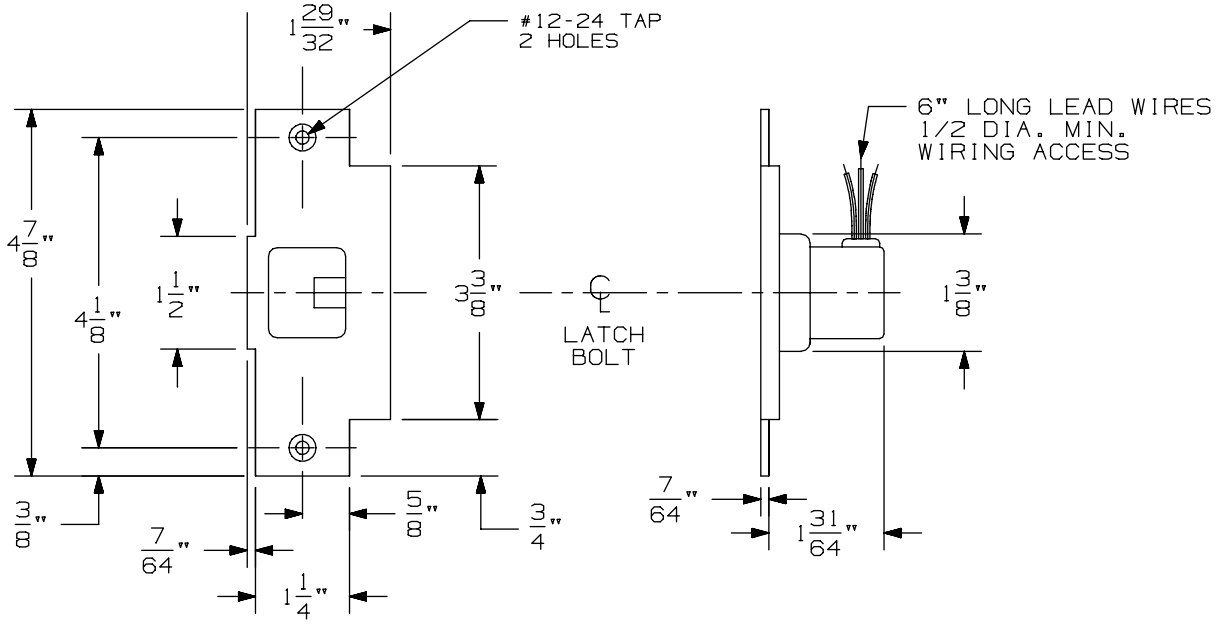

4570 Signal Strike for Cylindrical Lock

VON DUPRIN®

NOTES: SEE MASTER SHEET #10001 FOR SUGGESTED REINFORCING

TEMPLATE NUMBER: 30202_a

DATE: 05-24-13

4582 MORTISE LOCK APPLICATION SCHEDULE			
MANUFACTURER	MODEL	THROW (IN.)	DIM "B" (IN.)
CORBIN	9500 (T-2 TRIPPER)	3/4	15/16
RUSSWIN	5000 (T-2 TRIPPER)	3/4	15/16
VON DUPRIN	7500 (T-1 TRIPPER)	3/4	15/16

Ⓑ

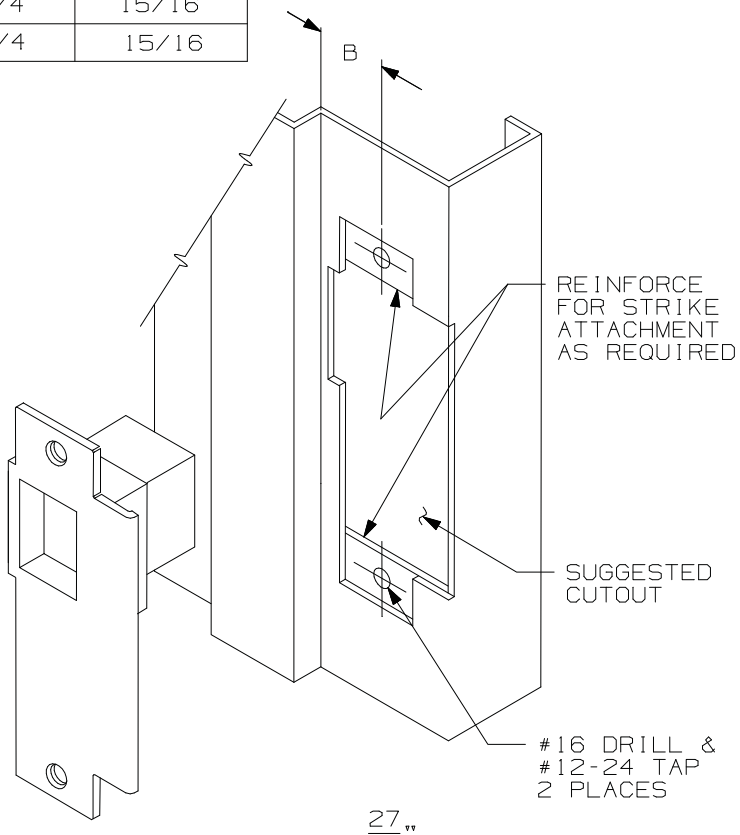

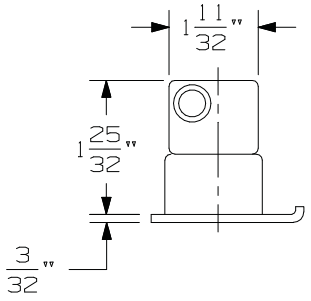

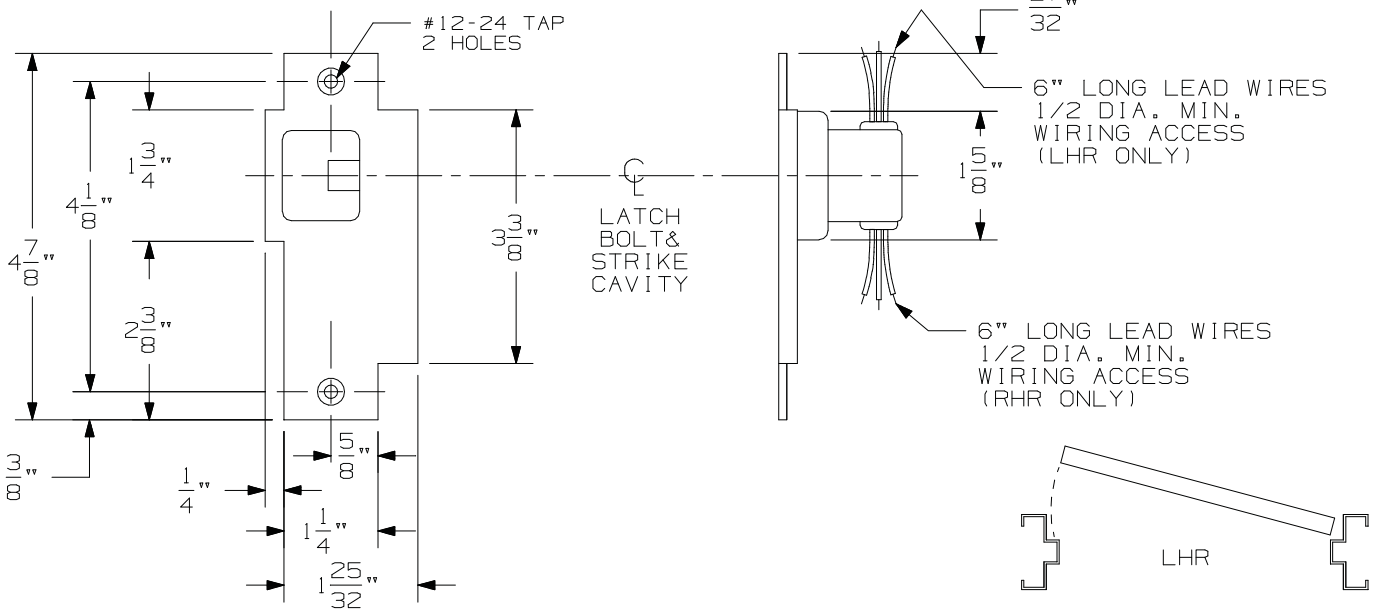

LHR SHOWN, RHR OPPOSITE

NOTE:
THIS TEMPLATE IS TO BE USED FOR MORTISE LOCKS WITH THE AUXILIARY BOLT LOCATED BELOW THE LATCH BOLT.

4582 Monitor Strike Metal Frame Application

VON DUPRIN®

NOTES: SEE MASTER SHEET #10001 FOR SUGGESTED REINFORCING

TEMPLATE NUMBER: 30213_a

DATE: 05-28-13

4582 MORTISE LOCK APPLICATION SCHEDULE T-2 TRIPPER			
MANUFACTURER	MODEL	THROW (IN.)	DIM "B" (IN.)
BLADWIN	6000	5/8	15/16
BEST	24H/25H/34H/35H	3/4	15/16
CORBIN	9500	3/4	15/16
RUSSWIN	5000	3/4	15/16
SARGENT	900	3/4	15/16
SARGENT	7700/8100	3/4	15/16
SCHLAGE	L9000	3/4	15/16

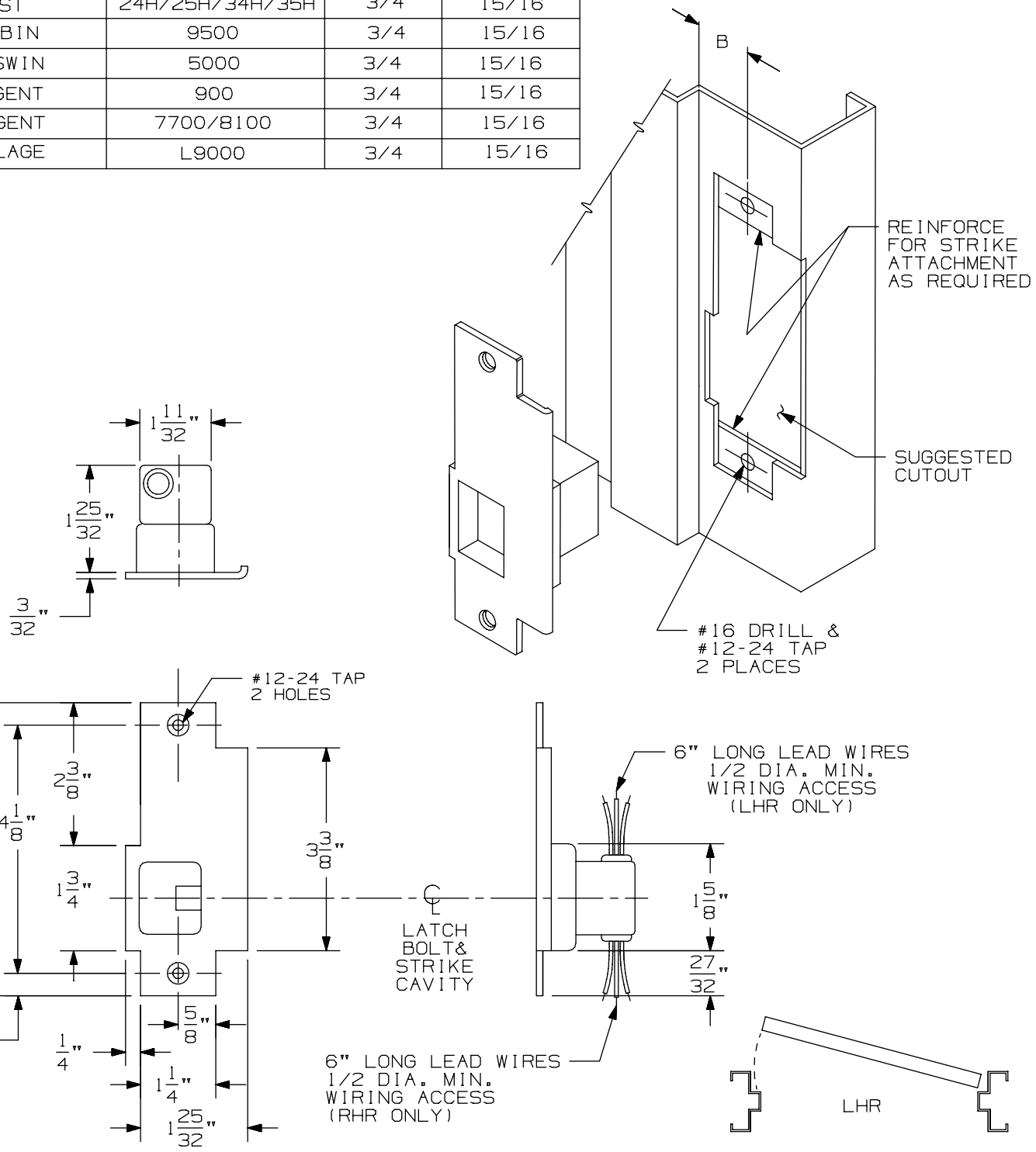

LHR SHOWN, RHR OPPOSITE

NOTE:
THIS TEMPLATE IS TO BE USED FOR MORTISE LOCKS WITH THE AUXILIARY BOLT LOCATED ABOVE THE LATCH BOLT.

4582 Monitor Strick
Metal Frame Application

VON DUPRIN®

NOTES: SEE MASTER SHEET #10001 FOR SUGGESTED REINFORCING

TEMPLATE NUMBER: 30203_a

DATE: 05-24-13

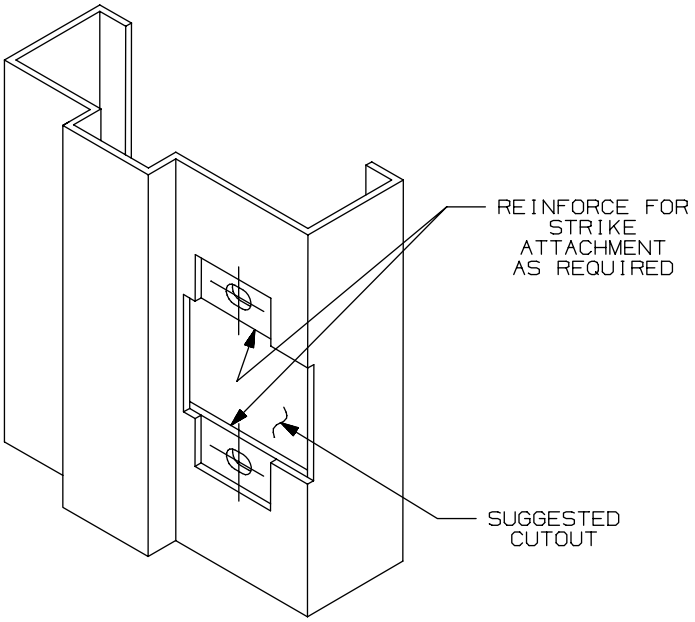

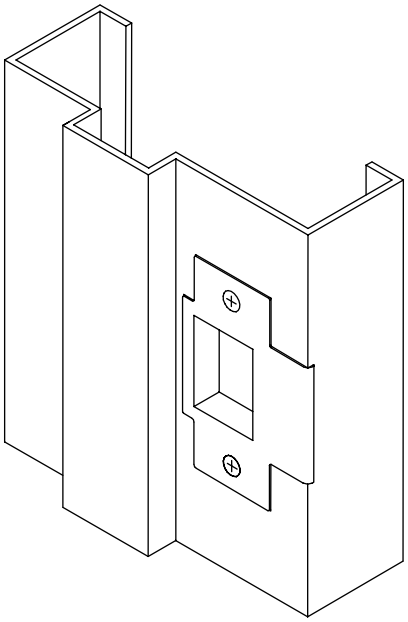

LHR APP. SHOWN
RHR APP. OPPOSITE

APPLICATION SCHEDULE		
CORBIN	5/8	CYLIND.
RUSSWIN	5/8	CYLIND.
SCHLAGE	1/2	CYLIND.
SCHLAGE	5/8	CYLIND.
ARROW	1/2	CYLIND.
DEXTER	7/16	CYLIND.
YALE	1/2	CYLIND.
LOCKWOOD	1/2	CYLIND.
FALCON	1/2	CYLIND.
SARGENT	1/2	CYLIND.

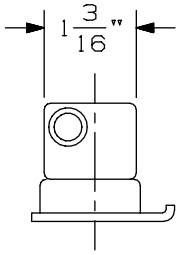

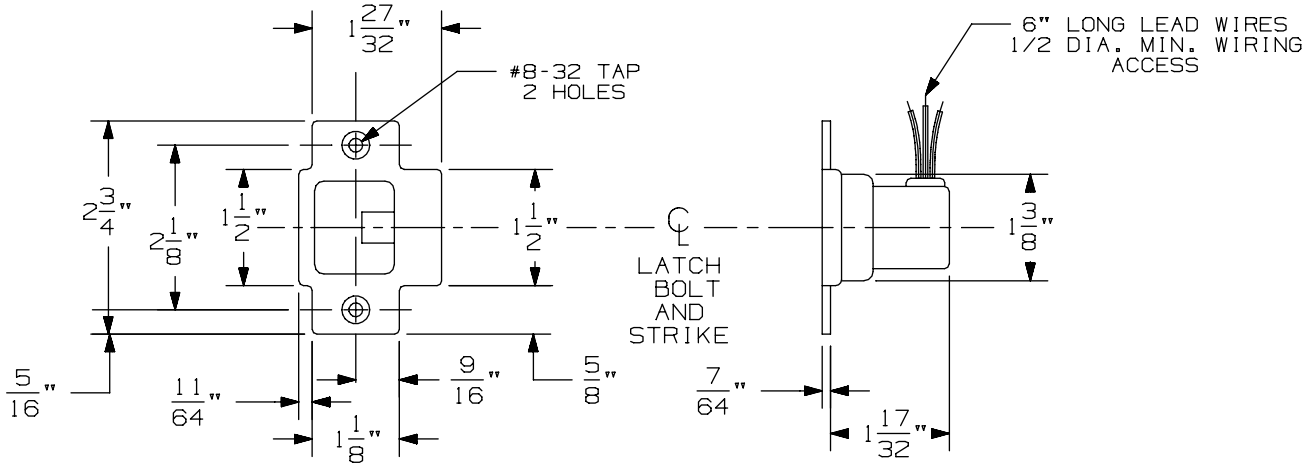

4670 Signal Strike for Cylindrical Lock

VON DUPRIN®

NOTES: SEE MASTER SHEET #10001 FOR SUGGESTED REINFORCING

TEMPLATE NUMBER: 30204_a

DATE: 05-24-13

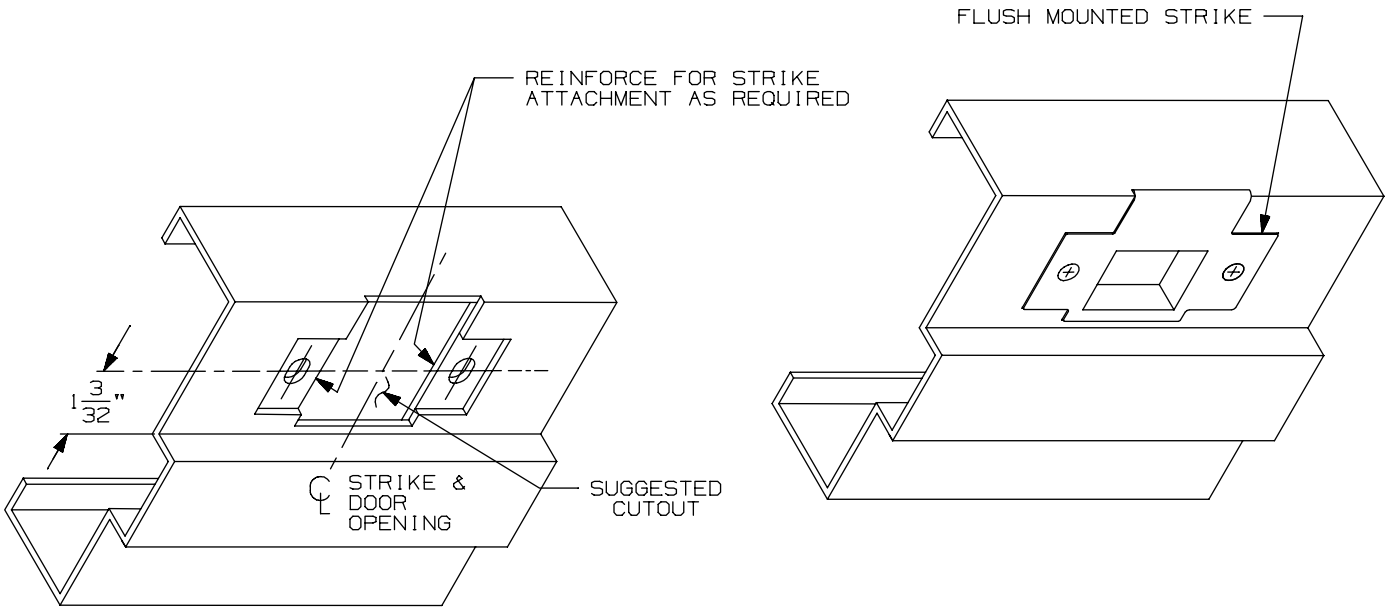

DEVICE APPLICATION SCHEDULE		
DEVICE	MIN. BACKSET	MIN. STYLE
3347/3547	1 5/8"	2 3/8"
3347-F/3547-F	2 3/4"	3 1/2"
9847/9947	2 3/16"	3 5/8"
9847-F/9947-F	2 3/4"	4 1/8"
(4) 3347A/3547A	1 5/8"	2 9/16"
3347A-F/3547A-F	2 3/4"	3 5/8"

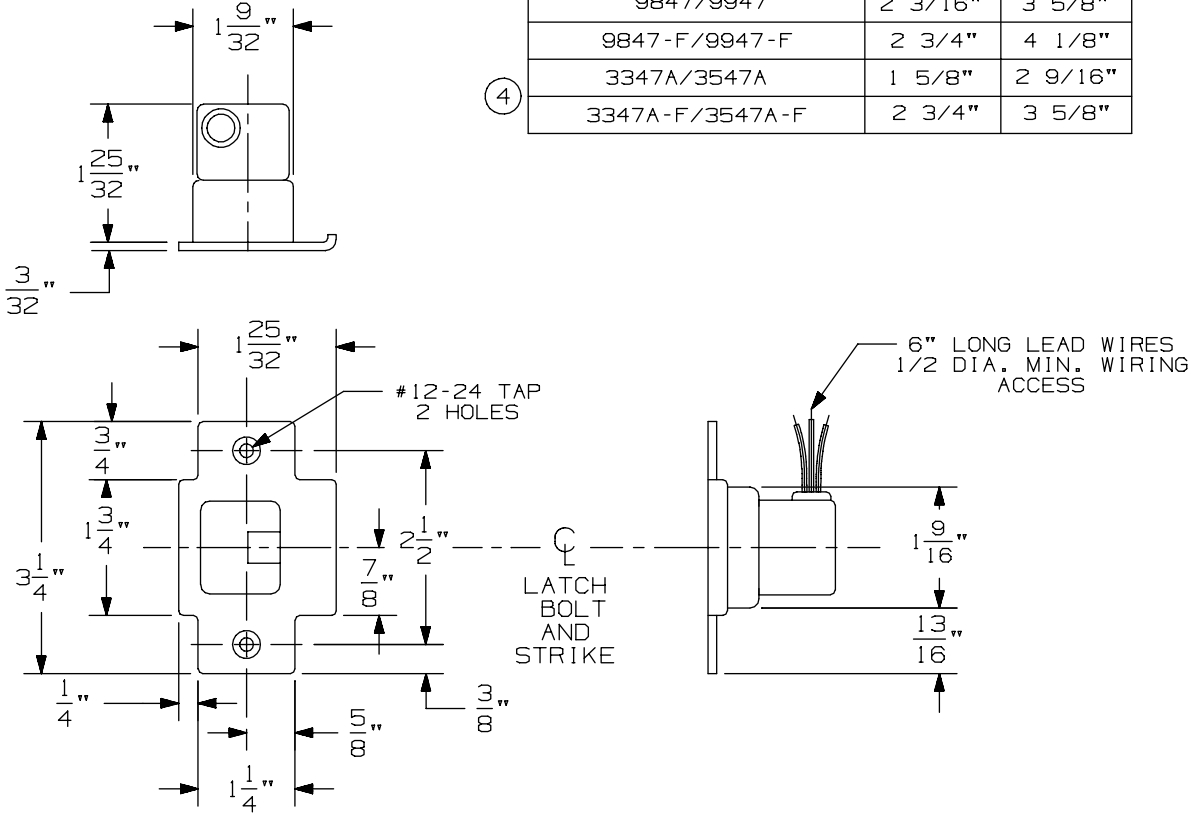

4690 Monitor Strike Concealed Vertical Rod Device Application

VON DUPRIN®

NOTES: SEE MASTER SHEET #10001 FOR SUGGESTED REINFORCING

TEMPLATE NUMBER: 30205_a

DATE: 05-23-13

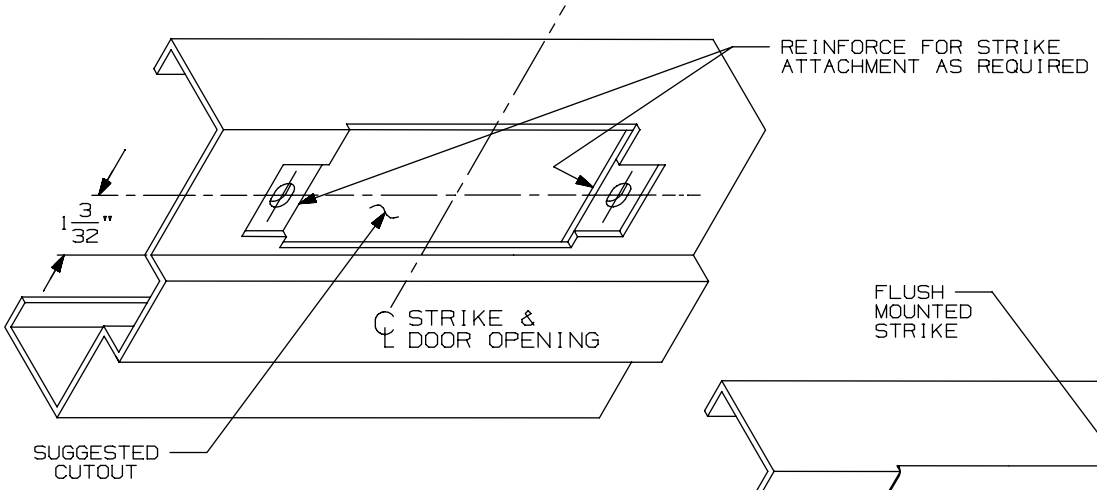

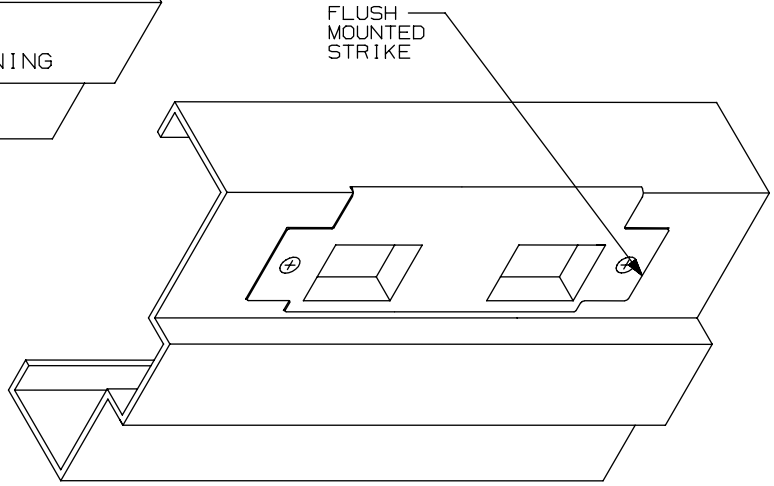

APPLICATION SCHEDULE	
DEVICE	RECOMMENDED MIN. STILE* ⑤
3347/3547	1 3/4"
3347A/3547A	2"

* CONSULT FACTORY FOR STILE WIDTHS
⑤ LESS THAN MIN. RECOMMENDED TO ENSURE PROPER APPLICATION

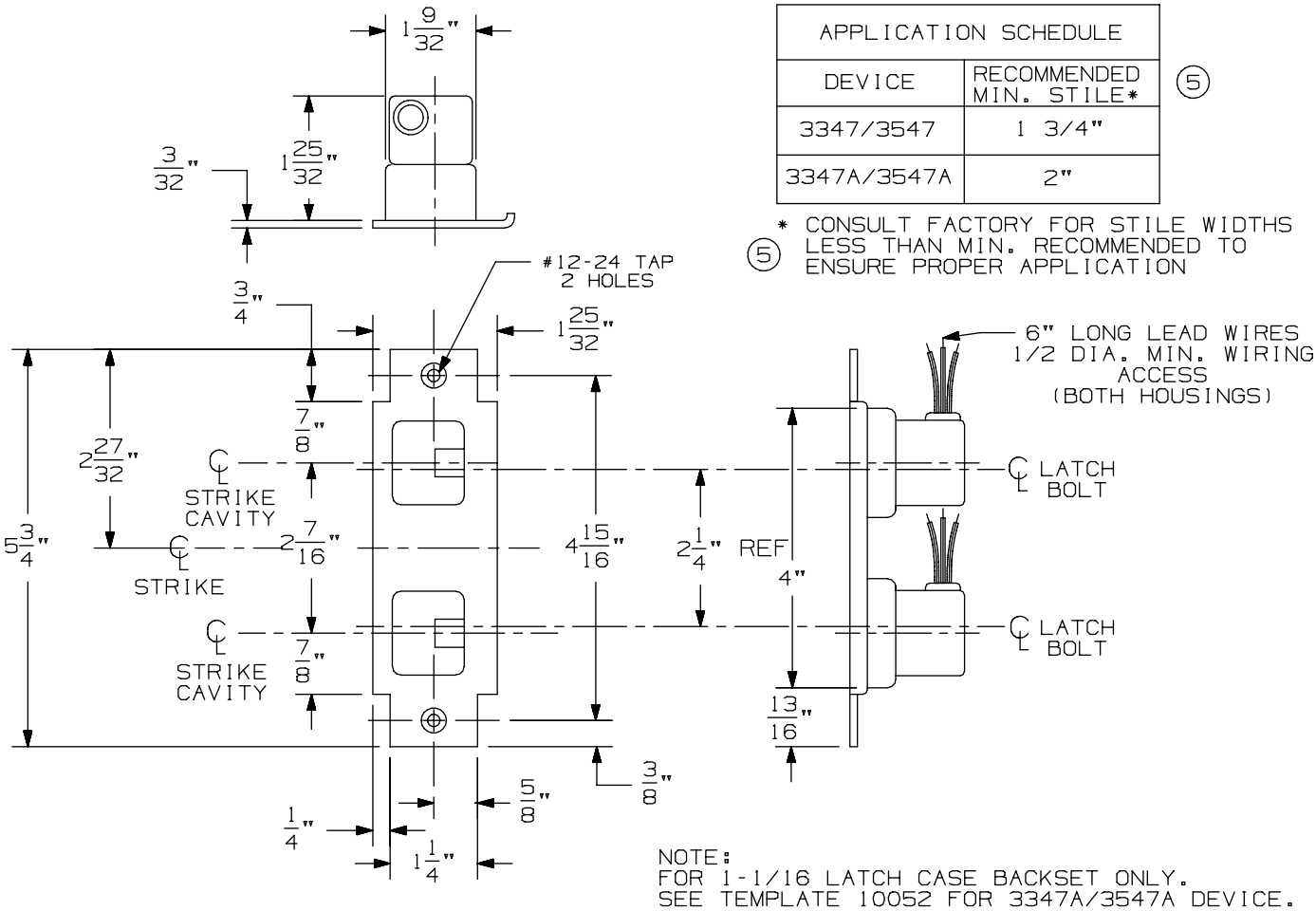

NOTE:
FOR 1-1/16 LATCH CASE BACKSET ONLY.
SEE TEMPLATE 10052 FOR 3347A/3547A DEVICE.

4690-1 Monitor Strike for 3347/3547 & 3347A/3547A

VON DUPRIN®

NOTES: SEE MASTER SHEET #10001 FOR SUGGESTED REINFORCING

TEMPLATE NUMBER: 30206_a

DATE: 05-23-13

Master Reinforcing Sheet

Master Reinforcing Sheet

NOTES: SEE MASTER SHEET #10001 FOR SUGGESTED REINFORCING

VON DUPRIN®

TEMPLATE NUMBER: 10001_a

DATE: 05-15-13

VERTICAL ROD DEVICE

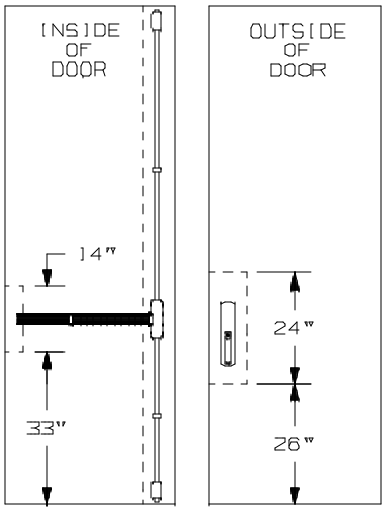

RIM OR MORTISE DEVICE

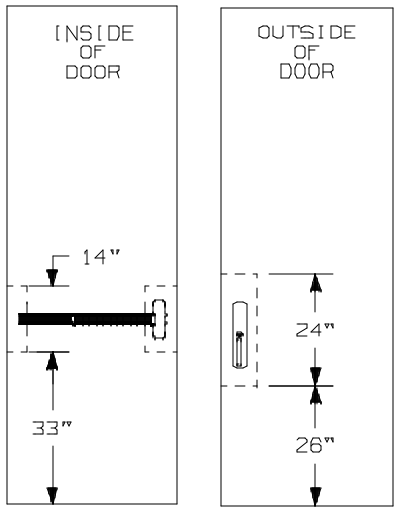

IMPORTANT INFORMATION:

1. PAY PARTICULAR ATTENTION TO HARDWARE HANDING REQUIREMENTS BEFORE PREPARING THE DOOR.
2. REINFORCEMENTS ON HOLLOW METAL DOORS TO BE 5" WIDE OR FULL WIDTH OF STILE.
3. IF NO OUTSIDE TRIM IS USED, REINFORCEMENT OF THE OUTSIDE DOOR SKIN IS NOT REQUIRED UNLESS THE DEVICE IS THRU BOLTED.
4. FOR MOUNTING CONCEALED VERTICAL ROD LATCHES ON ALUMINUM DOORS THE RECOMMENDED REINFORCING IS 3/8" MINIMUM THICK ALUMINUM OR 16 GAGE MINIMUM THICK STEEL.
5. HINGE STILE PREPARATION IS TO BE DONE AT INSTALLATION.

RECOMMENDED REINFORCING - HOLLOW METAL DOORS

PANIC DEVICES: 18 GAGE
FIRE EXIT HARDWARE DEVICES: 16 GAGE
STRIKES: 16 GAGE
ELECTROMAGNETIC LOCKS: 12 GAGE

CUSTOMER NAME: _____

JOB NAME: _____

CUSTOMER ORDER NUMBER: _____

DEVICE	TEMPLATE NUMBER	TRIM	TEMPLATE NUMBER	STRIKE	TEMPLATE NUMBER	MISCELLANEOUS	TEMPLATE NUMBER