computar

M1614

16mm F1.4
for 2/3 type Cameras, Fixed-focal
C-Mount

w/o Iris

Model No.		M1614		Effective Lens Aperture	Front	∅14.5mm	
Focal Length		16mm			Rear	∅10.8mm	
Max. Aperture Ratio		1:1.4		Back Focal Length		11.4mm	
Max. Image Format		8.8mm x 6.6mm(∅11mm)		Flange Back Length		17.526mm	
Operation Range	Iris	F1.4		Mount		C-Mount	
	Focus	0.25m - Inf.		Filter Size		—	
Control	Iris	—		Dimensions		∅31mm x 28.0mm	
	Focus	Manual		Weight		25g	
Object Dimension at M.O.D.		13.7cm x 10.3cm					
Angle of View	D	2/3 type	38.6°	1/2 type	28.0°	1/3 type	21.1°
	H		30.9°		23.3°		16.9°
	V		23.3°		16.9°		12.7°
Operating Temperature		−20°C - +50°C					

M.O.D : Minimum Object Distance

2/3 type

C
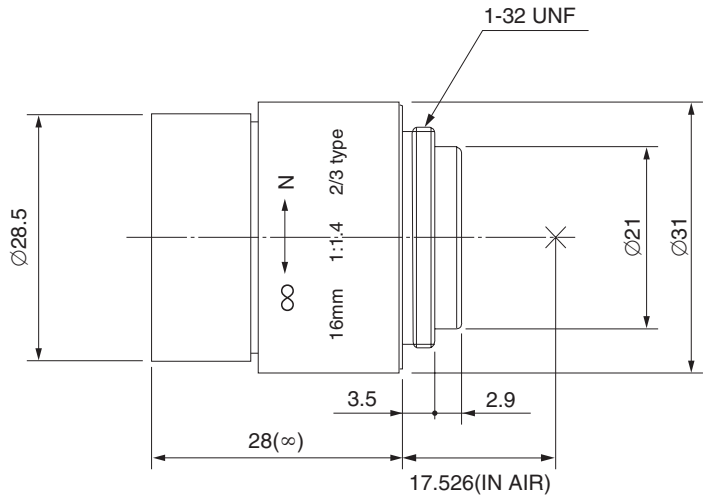
Dimensions