DWG. NO. 1993-77

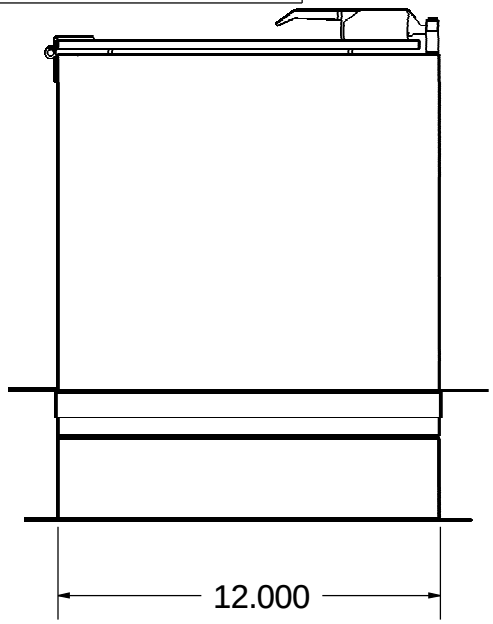

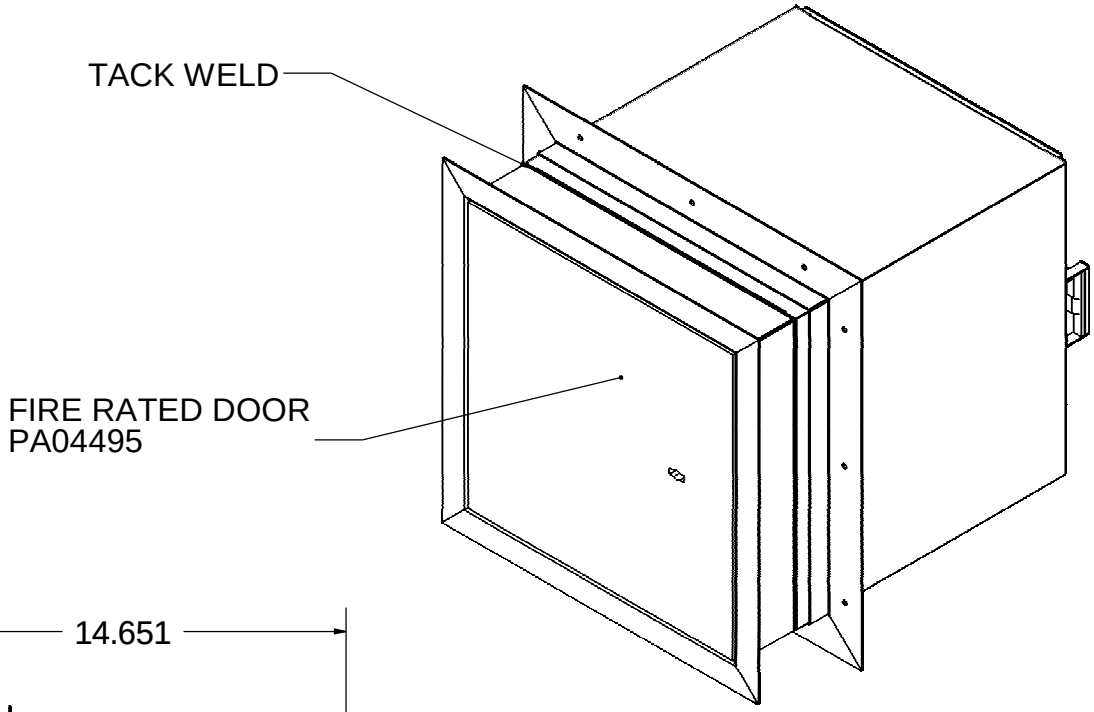

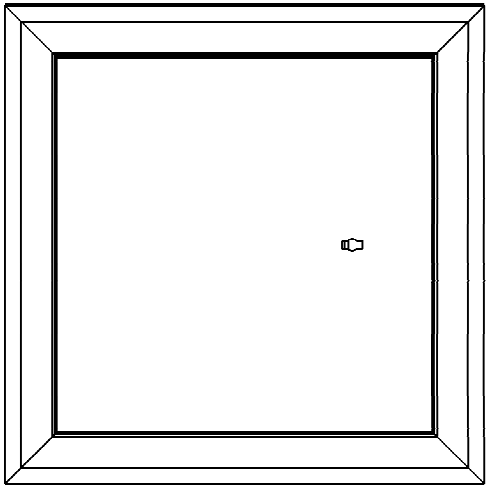

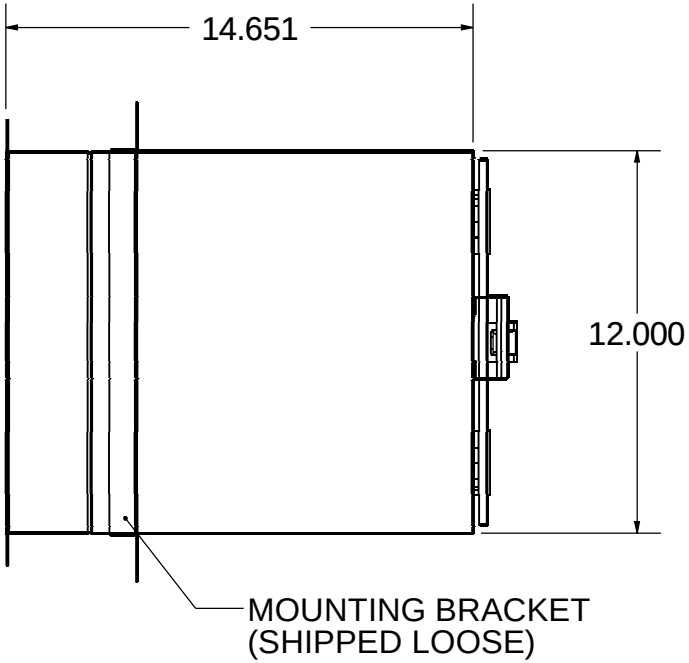

LTR	DESCRIPTION	DATE	APPD
NC	INITIAL RELEASE		

CONFIG	DESCRIPTION
MATERIAL SPEC.	FINISH SPEC.
304 SS SD PVC	

UNLESS OTHERWISE SPECIFIED, DIMENSIONS ARE IN INCHES

TOLERANCES ON:

.XX DECIMALS ±.03 X° ± 1°

.XXX DECIMALS ±.010 X/X ±1/64

SIGNATURES	DATE
DRAWN: JOSE REY	3/23/2009
ENGR:	

Terra Universal

Proprietary & Confidential
All rights reserved by
TERRA UNIVERSAL
Disclosure or Copying Prohibited

NEXT ASSY | USED ON

TITLE

PASS-THROUGH
FIRE RATED DOOR
12"W x 14.65"D x 12"H
"CLEAN SEAM"

A | 1993-77

SCALE | SHEET 1 OF 6