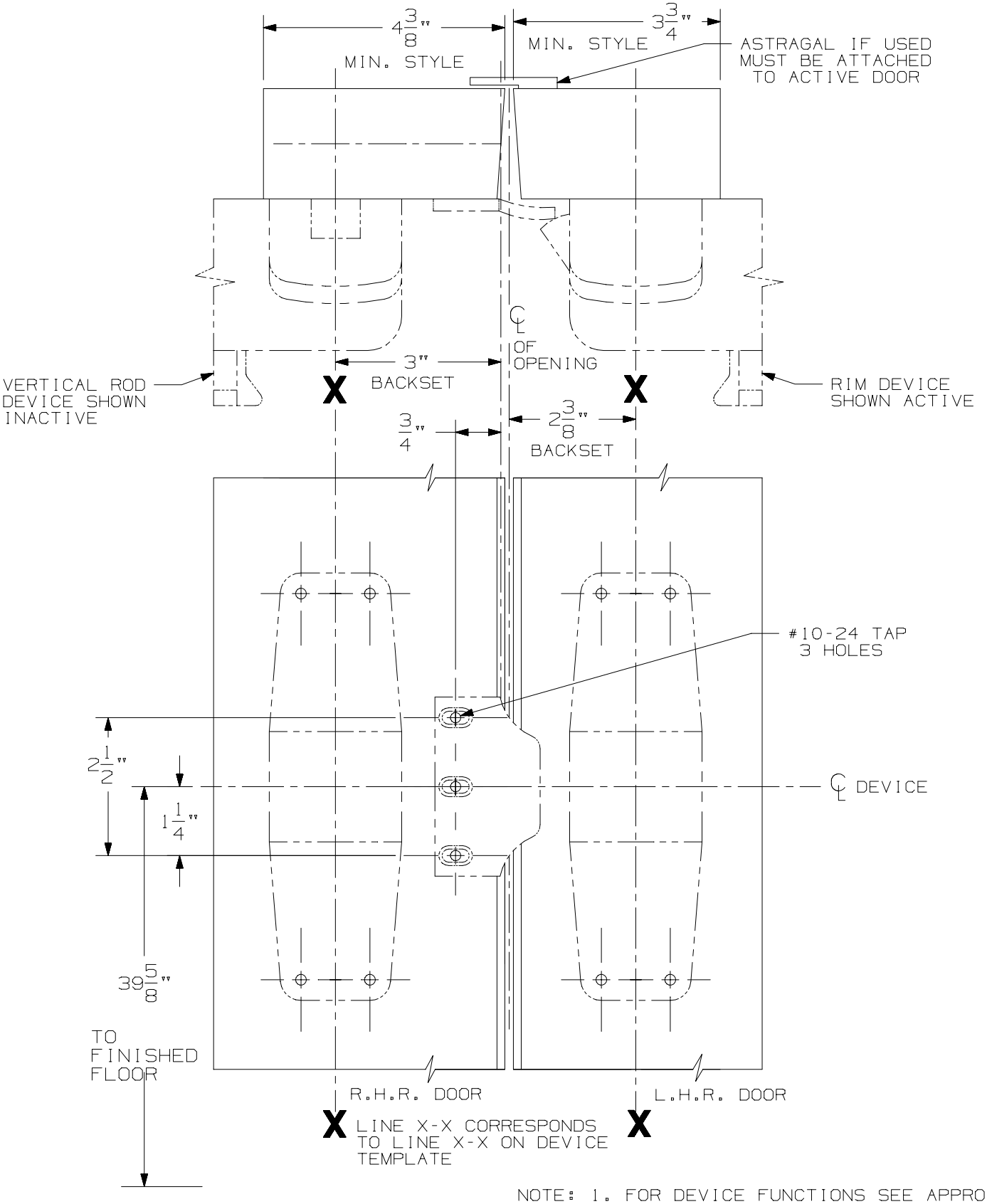

NOTE: 1. FOR DEVICE FUNCTIONS SEE APPROPRIATE DEVICE TEMPLATES.

2. SEE DEVICE TEMPLATE FOR MOUNTING HOLE LOCATIONS.

3. A COORDINATOR MUST BE USED ON THE INACTIVE DOOR.

1609 STRIKE APPLICATION FOR 98/99 VERTICAL ROD & 98/99 RIM DEVICES (PANIC DEVICE ONLY)	VON DUPRIN®	③
NOTE: SEE MASTER SHEET NO. 10001 FOR SUGGESTED REINFORCING	TEMPLATE NUMBER: 30229_3	DATE: 8-17-98