Standard Retaining Force

- Constructed of ABS plastic.
- Floating strike for easy alignment.
- Retaining force of 6.6 lbs.
- Touch latch allows door to pop out when door is pushed in.
- Allow 3mm (1/8") space for push in release.
- Screws, latch and catch included.

Packing: 40 each per box.

Sold In: Both broken and full box quantities.

Discount available for full box orders.

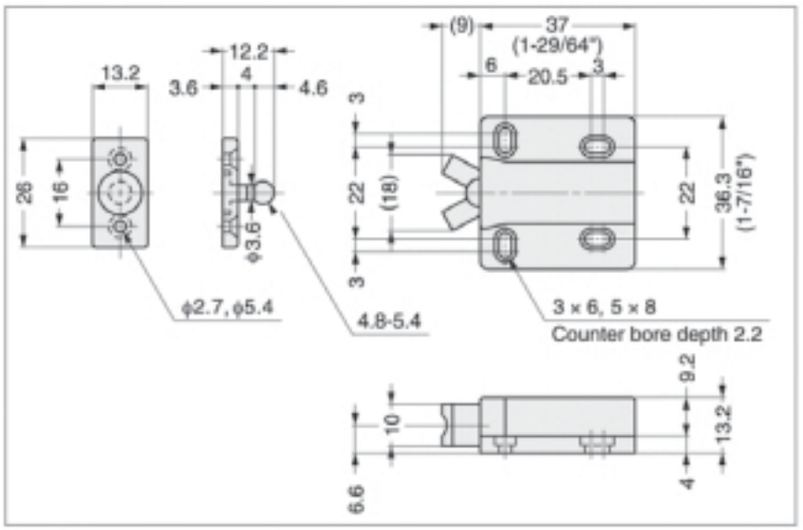

Item#	Color
SLMC28-BL	Black

Strong Retaining Force

- Constructed of ABS plastic.
- Strong retaining force of 17.6 lbs.
- Floating strike for easy alignment.
- Allow 3mm (1/8") space for push in release.
- Screws, latch and catch included

Packing: 30 each per box.

Sold In: Both broken and full box quantities.

Discount available for full box orders.

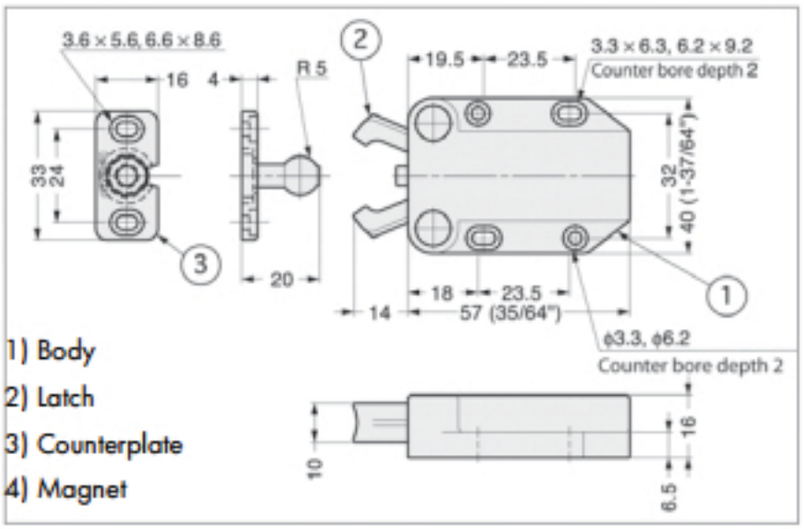

Item#	Color
SLMC37-BL	Black
SLMC37-BN	Brown
SLMC37-WH	White

Non-Magnetic Push/Touch Latches

- Can be used on overlay, flush, and inset doors.
- Mounts either horizontally or vertically.
- Individually polypagged with screws. Latch and strike sold together.

Packing: 50 each per box.

Sold in: Both broken and full box quantities. Discount available for full box orders.

Item#	Strike Finish	Latch Finish
FRPB944BP	Brown Plastic	Brass Plated
FRPB944NP	White Plastic	Nickel Plated