FOLDING BRACKET

LOAD CAPACITY 35~80 kg 77~176 lbs | NO SCREW | ALUMINUM

- Automatically locks when flap is in opened position.
- Press lever to release the lock.
- For panel thickness 15~35 mm (19/32"~1-3/8")
- Required Quantity:
  - Width up to 600 mm (23-5/8")---1 pc
  - Width 600~1300 mm (23-5/8"~51-3/16")---2 pcs

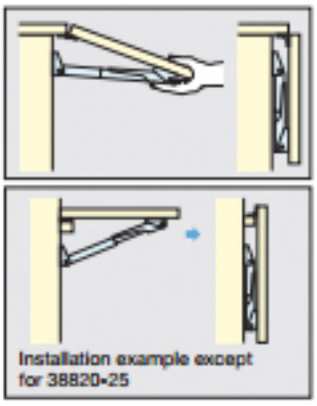

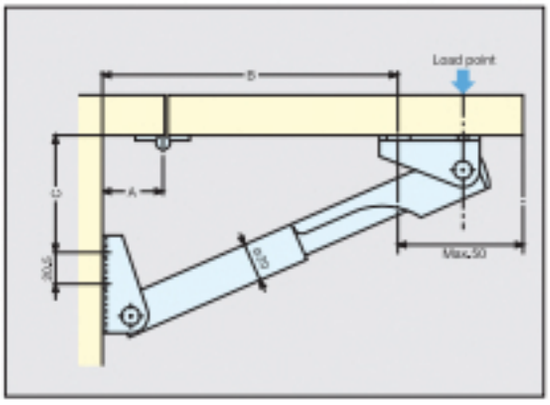

Installation

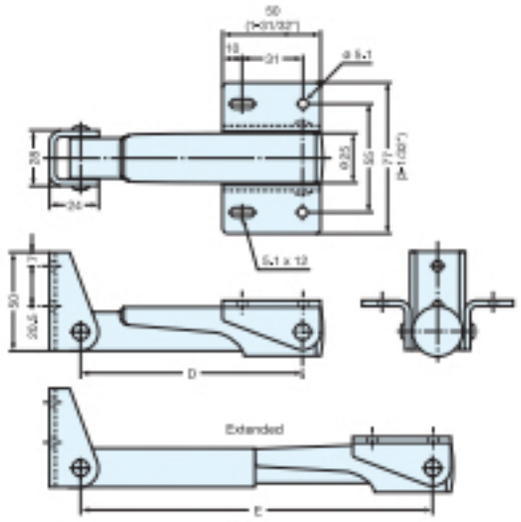

Material	Finish
Aluminum	Anodized

Item No.	A	B	C	D	E	Load Capacity (kg)/pc	Weight (g)	Box (pcs)	Carton (pcs)
38820-25	25~30	161	14	114	180	35 (77 lbs)	149	5	50
38830-25	25~39	252	45	168	275.9	55 (121 lbs)	187		
38845-25	25~50	402	87	258.5	430.8	60 (132 lbs)	266		30
38860-25	25~40	549	137	368.5	585.8	80 (176 lbs)	342		

SPRING LOADED BRACKET

LOAD CAPACITY 3 kg 6.6 lbs | NO SCREW | STAINLESS 304 STEEL

- Spring loaded for lift assist feature.
- Pull the knob to fold down.
- Max. depth of shelf is 450 mm (17-3/4")
- Max. width of shelf is 300 mm (11-13/16")

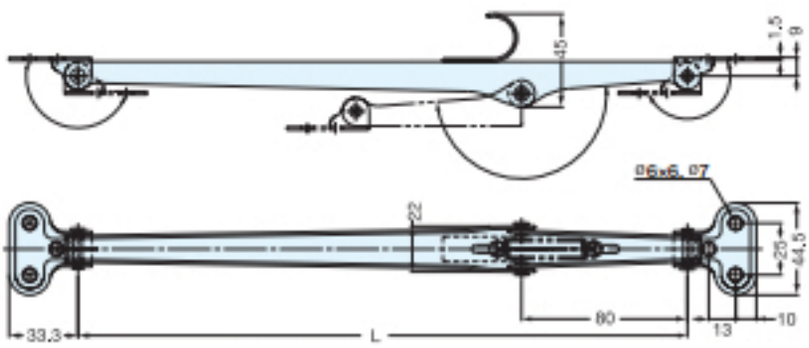

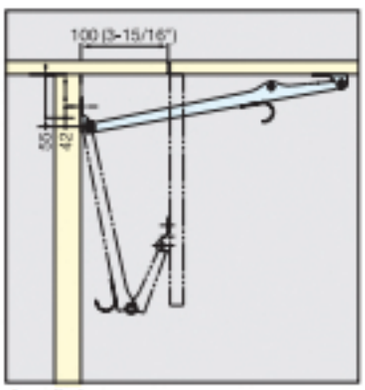

Installation

Material	Finish
304 Stainless Steel	Satin

Item No.	L	Load Capacity (kg)	Weight (g)	Box (pc)	Carton (pcs)
GTS-300	294 (11-37/64")	3 (6.6 lbs)/pc, 6 (13 lbs)/2pcs	190	12	96