FULL SIZE TEMPLATES

RIGHT HAND
MANO DERECHA
MAIN DROITE

120° TEMPLATE

(NHO)
REGULAR,
RÉGULIER

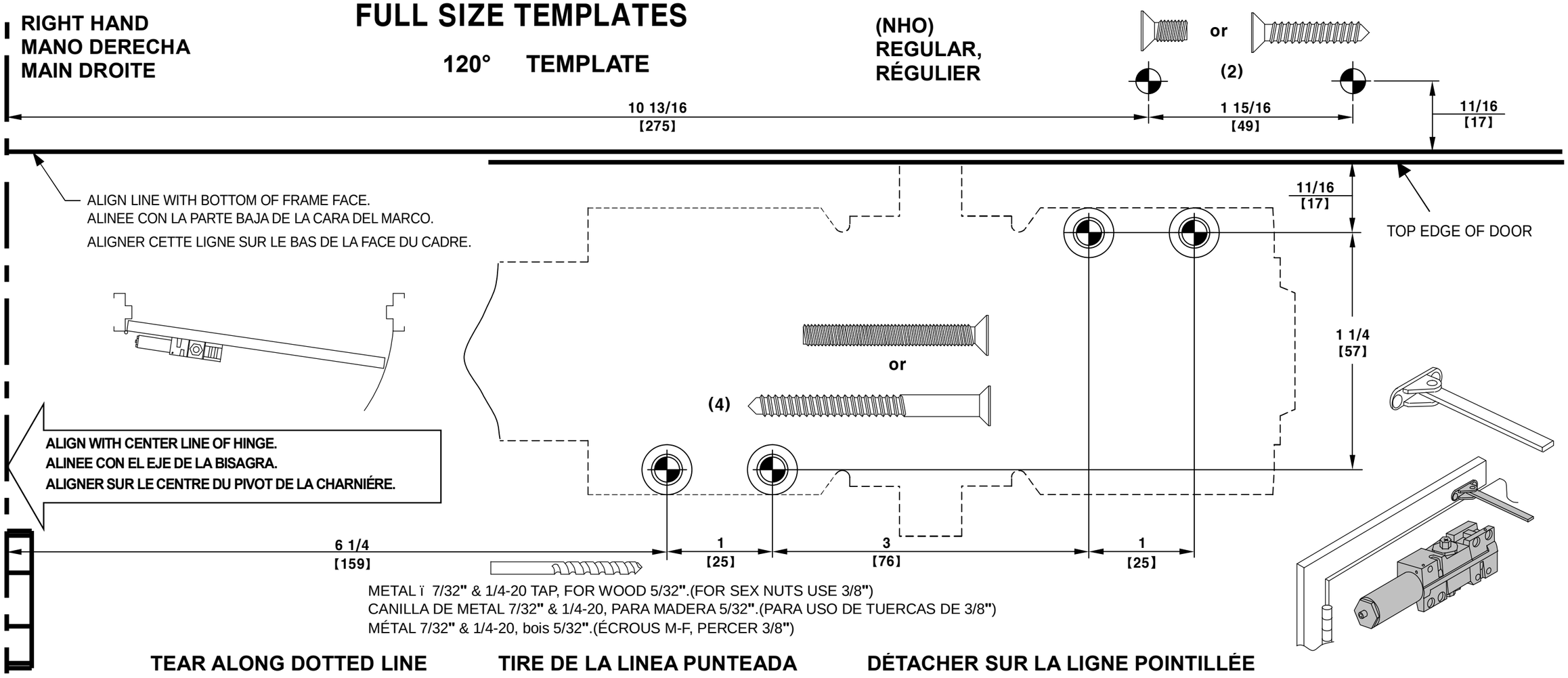

TEAR ALONG DOTTED LINE **TIRE DE LA LINEA PUNTEADA** **DÉTACHER SUR LA LIGNE POINTILLÉE**

RIGHT HAND
MANO DERECHA
MAIN DROITE

120° TEMPLATE

METAL ï 7/32" & 1/4-20 TAP, FOR WOOD 5/32".(FOR SEX NUTS USE 3/8")
CANILLA DE METAL 7/32" & 1/4-20, PARA MADERA 5/32".(PARA USO DE TUERCAS DE 3/8")
MÉTAL 7/32" & 1/4-20, bois 5/32".(ÉCROUS M-F, PERCER 3/8")

(NHO)
TOP JAMB
MARCO SUPERIOR,
LINTEAU SUPÉRIEUR

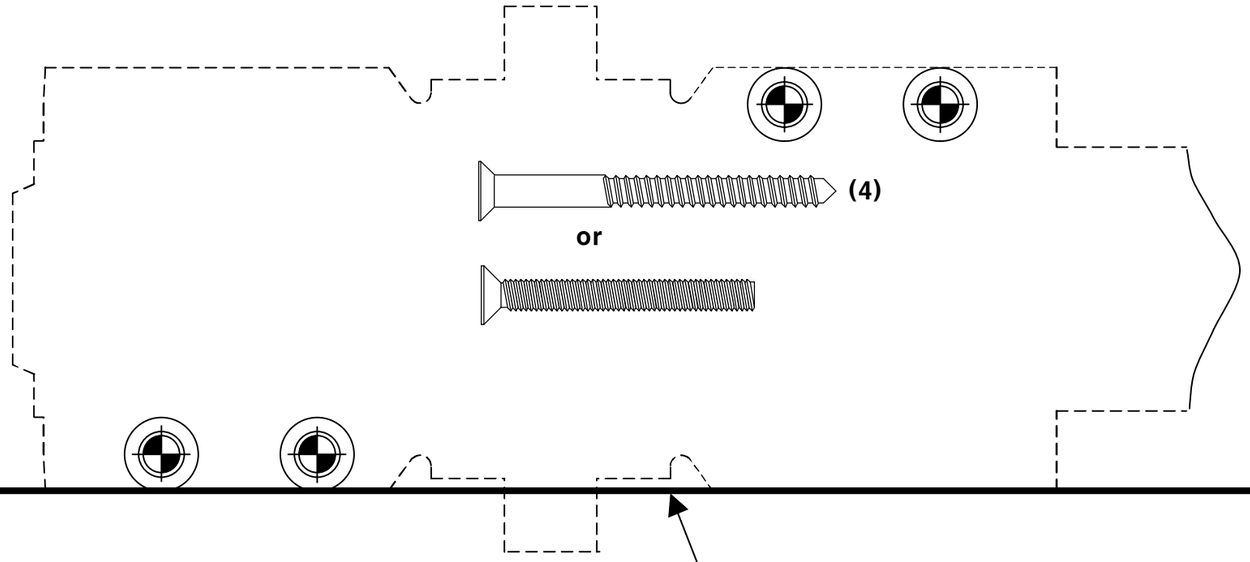

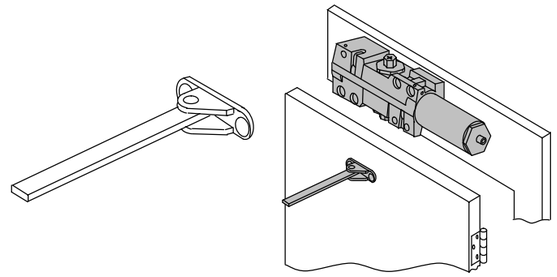

ALIGN WITH CENTER LINE OF HINGE.
ALINEE CON EL EJE DE LA BISAGRA.
ALIGNER SUR LE CENTRE DU PIVOT DE LA CHARNIÉRE.

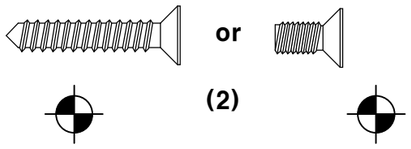

ALIGN LINE WITH BOTTOM OF FRAME FACE.
ALINEE CON LA PARTE BAJA DE LA CARA DEL MARCO.
ALIGNER CETTE LIGNE SUR LE BAS DE LA FACE DU CADRE.

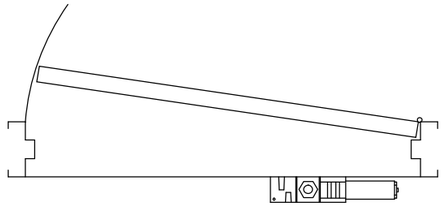

TEAR ALONG DOTTED LINE **TIRE DE LA LINEA PUNTEADA** **DÉTACHER SUR LA LIGNE POINTILLÉE**

RIGHT HAND
MANO DERECHA
MAIN DROITE
180° TEMPLATE

(NHO)
TOP JAMB
MARCO SUPERIOR,
LINTEAU SUPÉRIEUR

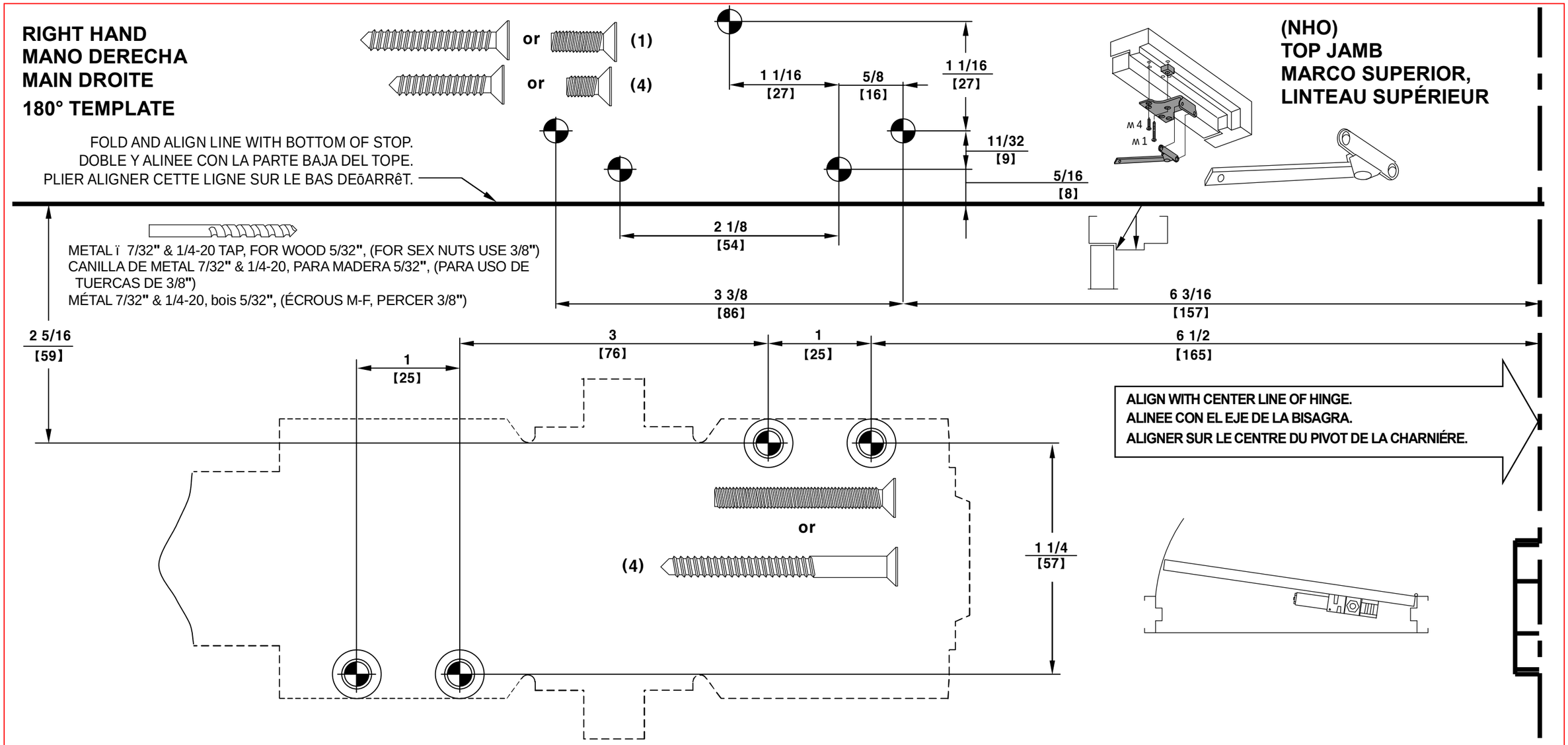

FULL SIZE TEMPLATES

120° TEMPLATE

LEFT HAND
MANO IZQUIERDA
MAIN GAUCHE

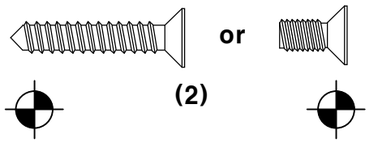

(NHO)
REGULAR,
RÉGULIER

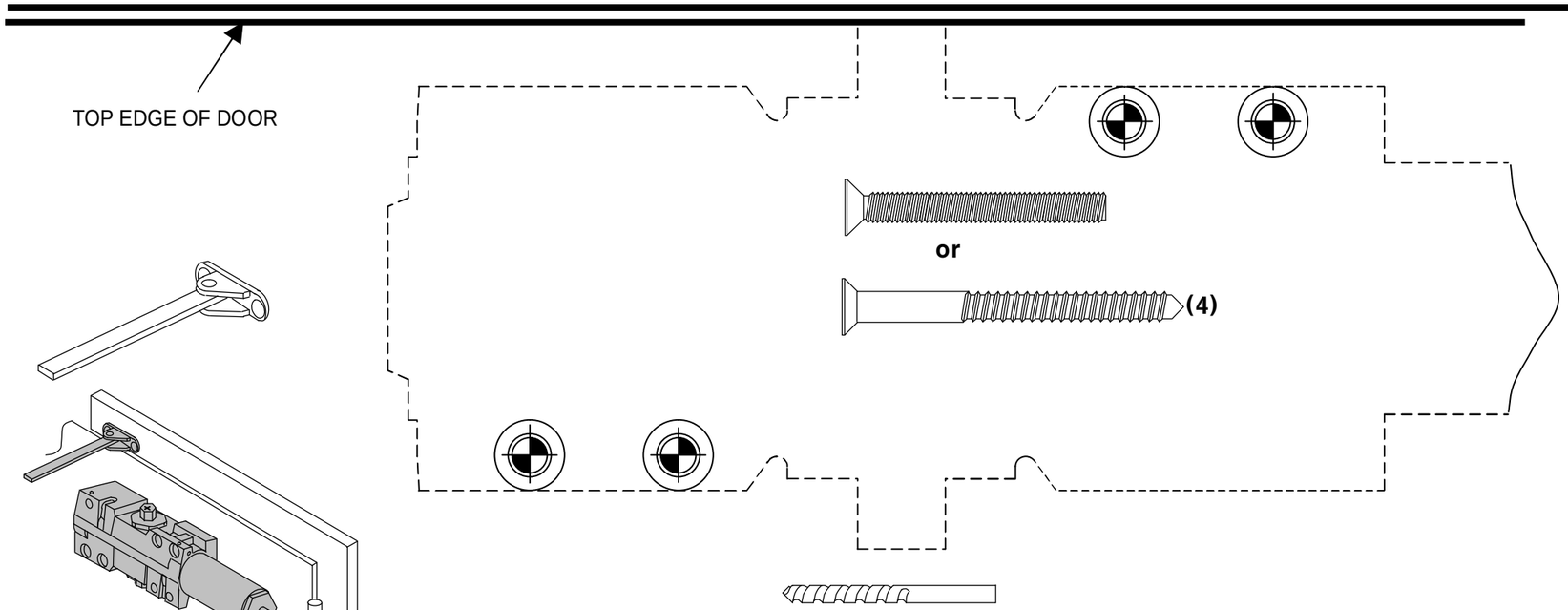

METAL ï 7/32" & 1/4-20 TAP, FOR WOOD 5/32".(FOR SEX NUTS USE 3/8")
CANILLA DE METAL 7/32" & 1/4-20, PARA MADERA 5/32".(PARA USO DE TUERCAS DE 3/8")
MÉTAL 7/32" & 1/4-20, bois 5/32".(ÉCROUS M-F, PERCER 3/8")

TEAR ALONG DOTTED LINE **TIRE DE LA LINEA PUNTEADA** **DÉTACHER SUR LA LIGNE POINTILLÉE**

LEFT HAND
MANO IZQUIERDA
MAIN GAUCHE

120° TEMPLATE

METAL ï 7/32" & 1/4-20 TAP, FOR WOOD 5/32".(FOR SEX NUTS USE 3/8")
CANILLA DE METAL 7/32" & 1/4-20, PARA MADERA 5/32".(PARA USO DE TUERCAS DE 3/8")
MÉTAL 7/32" & 1/4-20, bois 5/32".(ÉCROUS M-F, PERCER 3/8")

(NHO)
TOP JAMB
MARCO SUPERIOR,
LINTEAU SUPÉRIEUR

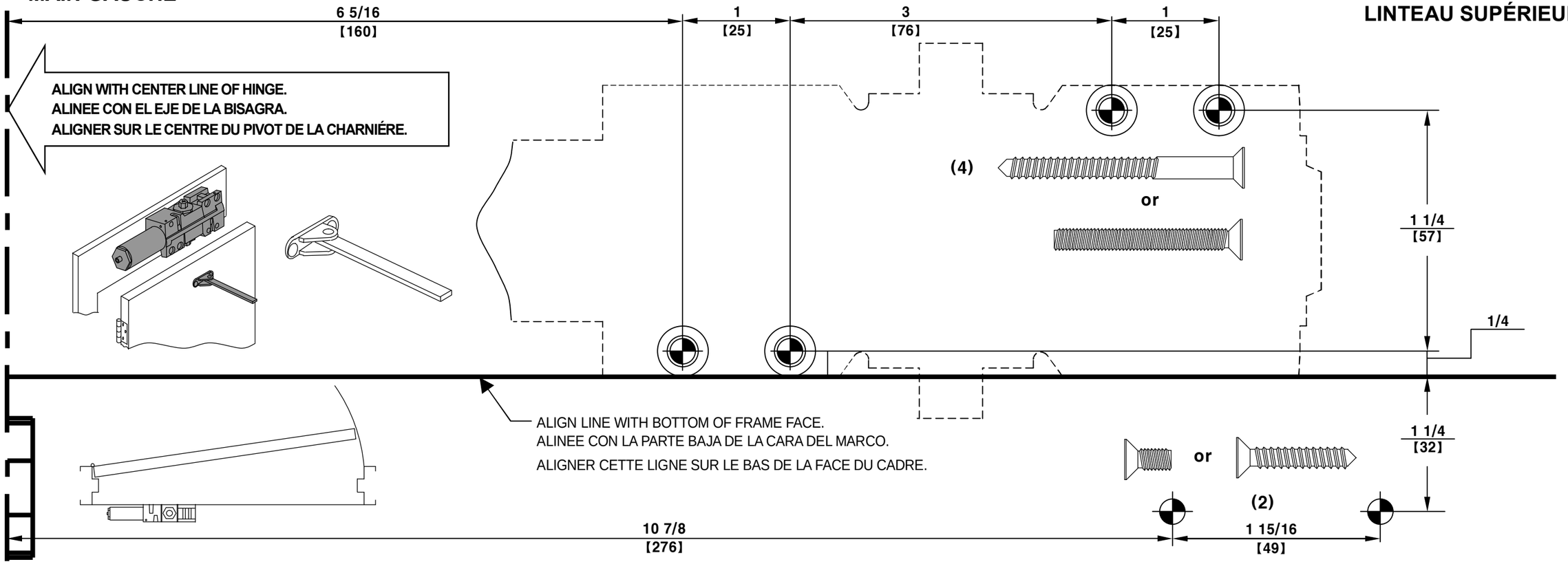

TEAR ALONG DOTTED LINE **TIRE DE LA LINEA PUNTEADA** **DÉTACHER SUR LA LIGNE POINTILLÉE**

LEFT HAND
MANO IZQUIERDA
MAIN GAUCHE

180° TEMPLATE

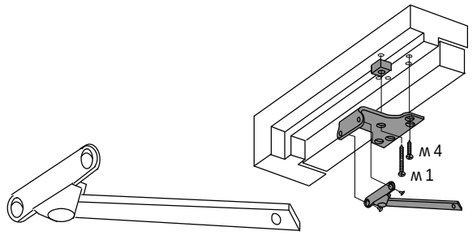

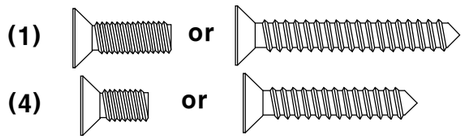

(NHO)
TOP JAMB
MARCO SUPERIOR,
LINTEAU SUPÉRIEUR

FOLD AND ALIGN LINE WITH BOTTOM OF STOP.
DOBLE Y ALINEE CON LA PARTE BAJA DEL TOPE.
PLIER ALIGNER CETTE LIGNE SUR LE BAS DEõARRêT.

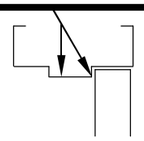

METAL ï 7/32" & 1/4-20 TAP, FOR WOOD 5/32", (FOR SEX NUTS USE 3/8")
CANILLA DE METAL 7/32" & 1/4-20, PARA MADERA 5/32", (PARA USO DE TUERCAS DE 3/8")
MÉTAL 7/32" & 1/4-20, bois 5/32", (ÉCROUS M-F, PERCER 3/8")

ALIGN WITH CENTER LINE OF HINGE.
ALINEE CON EL EJE DE LA BISAGRA.
ALIGNER SUR LE CENTRE DU PIVOT DE LA CHARNIÉRE.

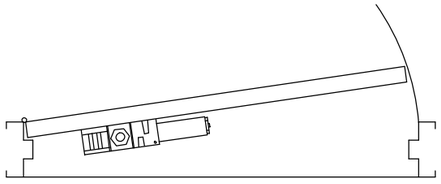

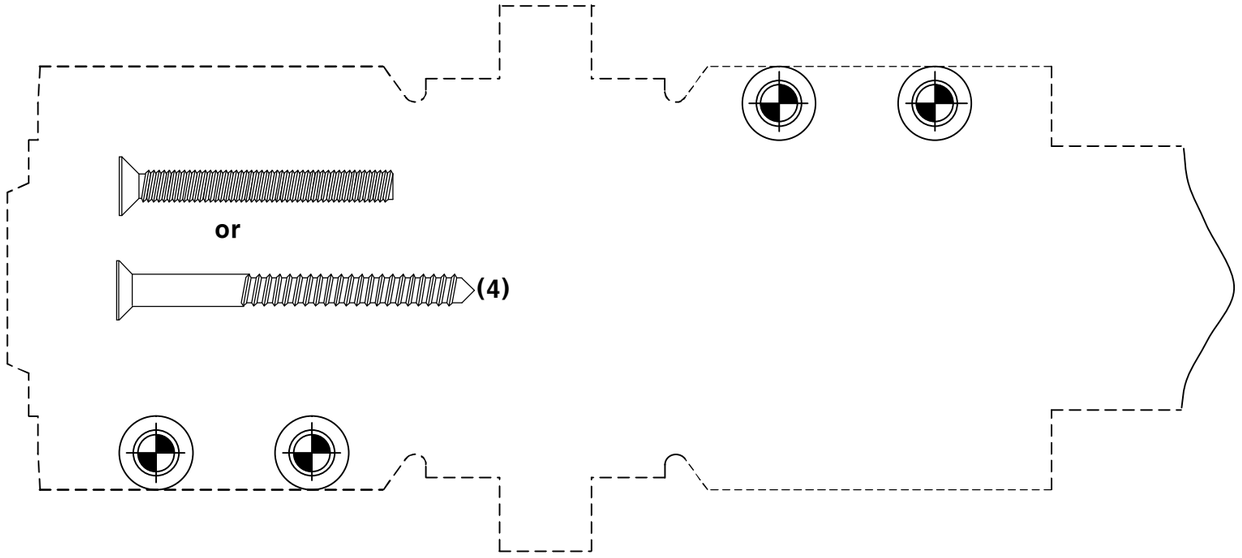

Since 1899···Great Value in Quality Hardware
Parker Hardware mfg. corp.
PARKER DRIVE, P.O. Box 9882, Englewood, NJ 07631-1127 • N J -(201)569-1600
In N.Y.C.-(212)925-6300 • FAX:(201)569-1082 •

MODEL No : 900BC
BF900
CB900

DOOR CLOSER

Template for

ANTI-CLOCKWISE 'PUSH' OPENING

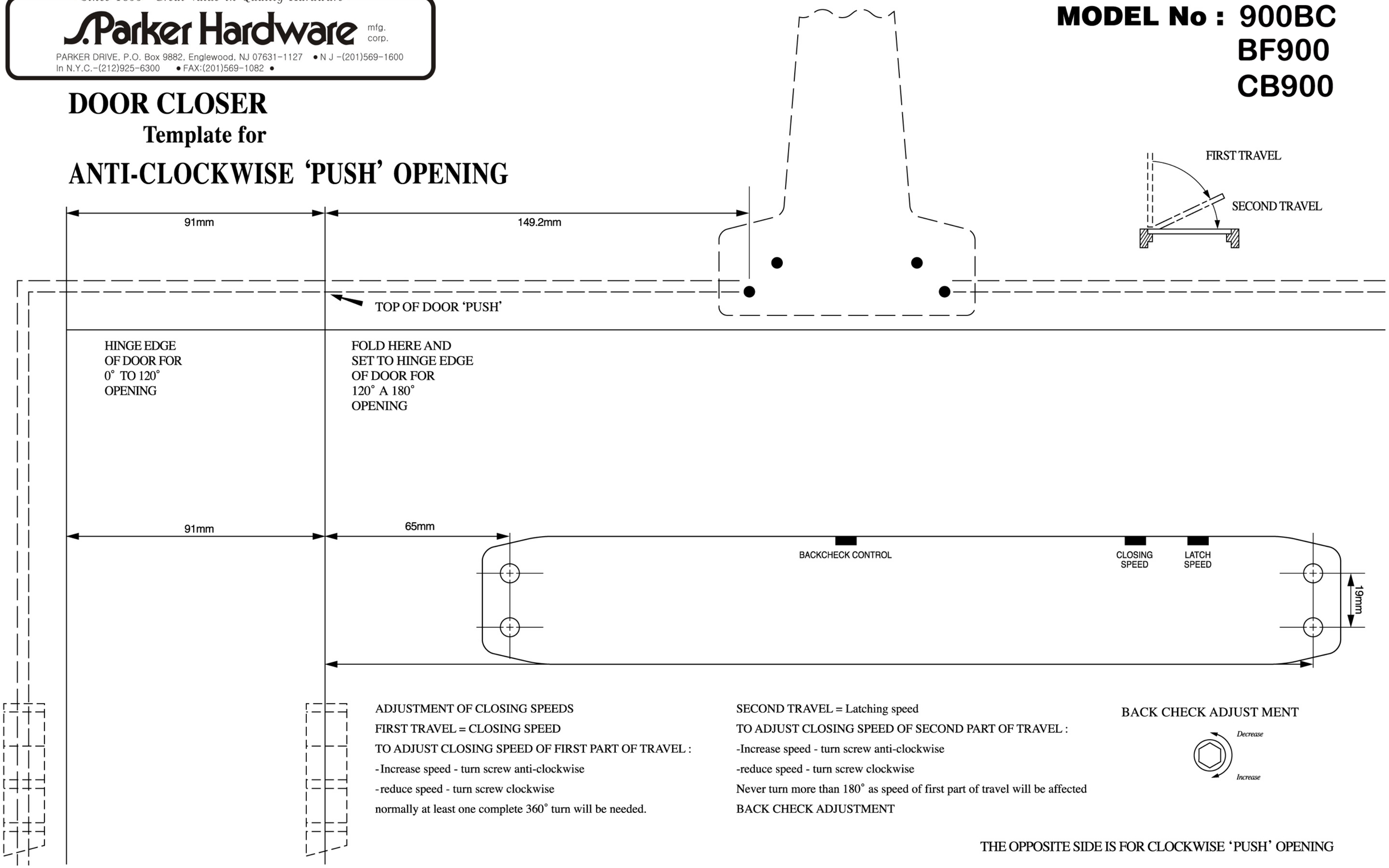

ADJUSTMENT OF CLOSING SPEEDS
FIRST TRAVEL = CLOSING SPEED
TO ADJUST CLOSING SPEED OF FIRST PART OF TRAVEL :
-Increase speed - turn screw anti-clockwise
-reduce speed - turn screw clockwise
normally at least one complete 360° turn will be needed.

SECOND TRAVEL = Latching speed
TO ADJUST CLOSING SPEED OF SECOND PART OF TRAVEL :
-Increase speed - turn screw anti-clockwise
-reduce speed - turn screw clockwise
Never turn more than 180° as speed of first part of travel will be affected
BACK CHECK ADJUSTMENT

BACK CHECK ADJUST MENT

THE OPPOSITE SIDE IS FOR CLOCKWISE 'PUSH' OPENING

Since 1899···Great Value in Quality Hardware
Parker Hardware mfg. corp.
PARKER DRIVE, P.O. Box 9882, Englewood, NJ 07631-1127 • N J -(201)569-1600
In N.Y.C.-(212)925-6300 • FAX:(201)569-1082 •

MODEL No : 900BC
BF900
CB900

DOOR CLOSER

Template for

ANTI-CLOCKWISE 'PUSH' OPENING

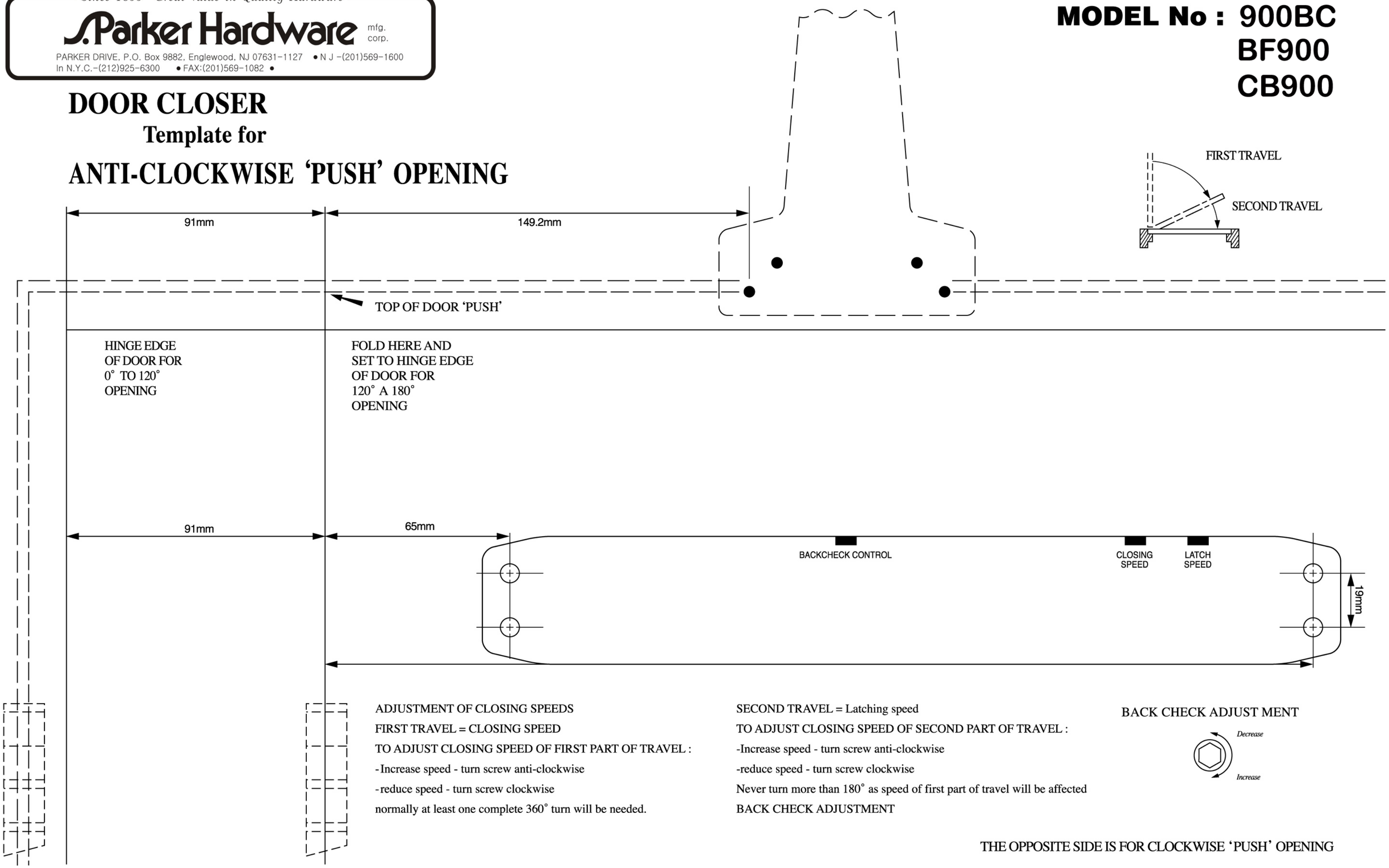

ADJUSTMENT OF CLOSING SPEEDS
FIRST TRAVEL = CLOSING SPEED
TO ADJUST CLOSING SPEED OF FIRST PART OF TRAVEL :
-Increase speed - turn screw anti-clockwise
-reduce speed - turn screw clockwise
normally at least one complete 360° turn will be needed.

SECOND TRAVEL = Latching speed
TO ADJUST CLOSING SPEED OF SECOND PART OF TRAVEL :
-Increase speed - turn screw anti-clockwise
-reduce speed - turn screw clockwise
Never turn more than 180° as speed of first part of travel will be affected
BACK CHECK ADJUSTMENT

BACK CHECK ADJUST MENT

THE OPPOSITE SIDE IS FOR CLOCKWISE 'PUSH' OPENING

DOOR CLOSER · *FERME-PORTE*

Template for · *Gabarit pour*

ANTI-CLOCKWISE 'PUSH' OPENING

'PUSH' OUVERTURE DANS LE SENS DES AIGUILLES D'UNE MONTRE

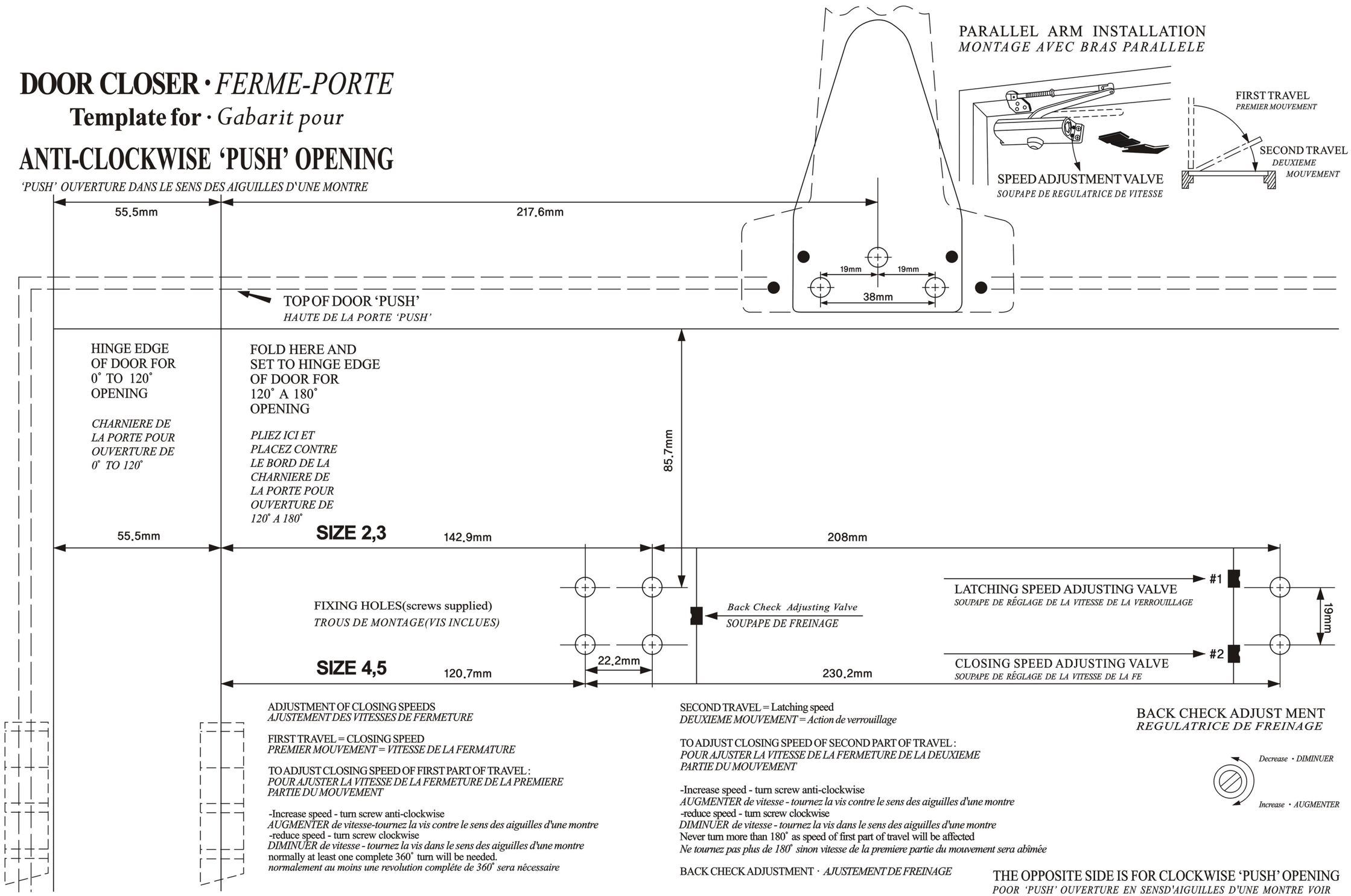

ADJUSTMENT OF CLOSING SPEEDS
AJUSTEMENT DES VITESSES DE FERMETURE

FIRST TRAVEL = CLOSING SPEED
PREMIER MOUVEMENT = VITESSE DE LA FERMATURE

TO ADJUST CLOSING SPEED OF FIRST PART OF TRAVEL :
POUR AJUSTER LA VITESSE DE LA FERMETURE DE LA PREMIERE PARTIE DU MOUVEMENT

-Increase speed - turn screw anti-clockwise
AUGMENTER de vitesse-tournez la vis contre le sens des aiguilles d'une montre
-reduce speed - turn screw clockwise
DIMINUER de vitesse - tournez la vis dans le sens des aiguilles d'une montre
normally at least one complete 360˚ turn will be needed.
normalement au moins une revolution compléte de 360˚ sera nécessaire

SECOND TRAVEL = Latching speed
DEUXIEME MOUVEMENT = Action de verrouillage

TO ADJUST CLOSING SPEED OF SECOND PART OF TRAVEL :
POUR AJUSTER LA VITESSE DE LA FERMETURE DE LA DEUXIEME PARTIE DU MOUVEMENT

-Increase speed - turn screw anti-clockwise
AUGMENTER de vitesse - tournez la vis contre le sens des aiguilles d'une montre
-reduce speed - turn screw clockwise
DIMINUER de vitesse - tournez la vis dans le sens des aiguilles d'une montre
Never turn more than 180˚ as speed of first part of travel will be affected
Ne tournez pas plus de 180˚ sinon vitesse de la premiere partie du mouvement sera abîmée

BACK CHECK ADJUSTMENT · *AJUSTEMENT DE FREINAGE*

BACK CHECK ADJUST MENT
REGULATRICE DE FREINAGE

Decrease · DIMINUER
Increase · AUGMENTER

THE OPPOSITE SIDE IS FOR CLOCKWISE 'PUSH' OPENING
POOR 'PUSH' OUVERTURE EN SENSD'AIGUILLES D'UNE MONTRE VOIR

DOOR CLOSER · *FERME-PORTE*

Template for · *Gabarit pour*

CLOCKWISE 'PUSH' OPENING

'PUSH' OUVERTURE DANS LE SENS DES AIGUILLES D'UNE MONTRE

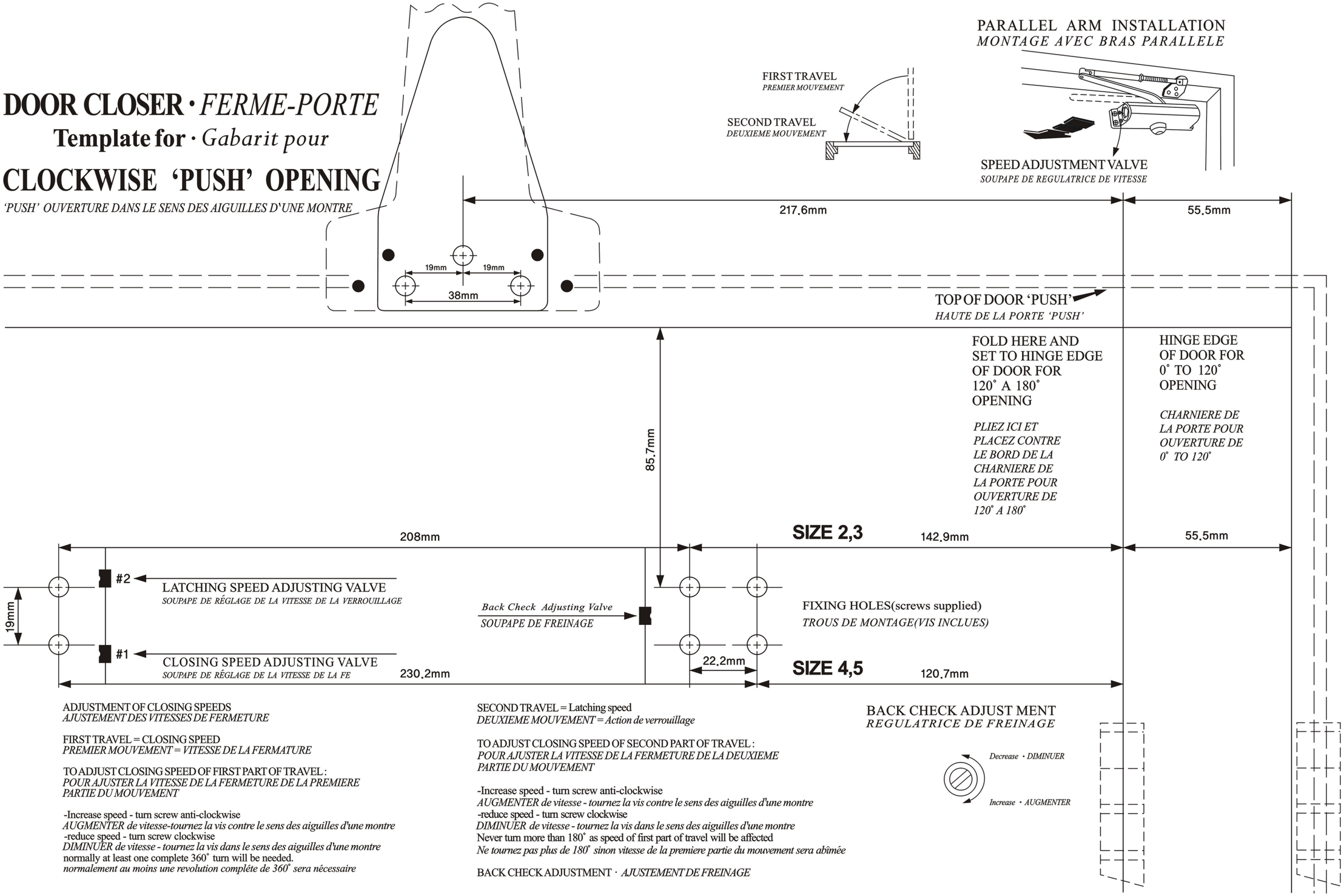

ADJUSTMENT OF CLOSING SPEEDS
AJUSTEMENT DES VITESSES DE FERMETURE

FIRST TRAVEL = CLOSING SPEED
PREMIER MOUVEMENT = VITESSE DE LA FERMATURE

TO ADJUST CLOSING SPEED OF FIRST PART OF TRAVEL :
POUR AJUSTER LA VITESSE DE LA FERMETURE DE LA PREMIERE PARTIE DU MOUVEMENT

-Increase speed - turn screw anti-clockwise
AUGMENTER de vitesse-tournez la vis contre le sens des aiguilles d'une montre
-reduce speed - turn screw clockwise
DIMINUER de vitesse - tournez la vis dans le sens des aiguilles d'une montre
normally at least one complete 360˚ turn will be needed.
normalement au moins une revolution compléte de 360˚ sera nécessaire

SECOND TRAVEL = Latching speed
DEUXIEME MOUVEMENT = Action de verrouillage

TO ADJUST CLOSING SPEED OF SECOND PART OF TRAVEL :
POUR AJUSTER LA VITESSE DE LA FERMETURE DE LA DEUXIEME PARTIE DU MOUVEMENT

-Increase speed - turn screw anti-clockwise
AUGMENTER de vitesse - tournez la vis contre le sens des aiguilles d'une montre
-reduce speed - turn screw clockwise
DIMINUER de vitesse - tournez la vis dans le sens des aiguilles d'une montre
Never turn more than 180˚ as speed of first part of travel will be affected
Ne tournez pas plus de 180˚ sinon vitesse de la premiere partie du mouvement sera abîmée

BACK CHECK ADJUSTMENT · *AJUSTEMENT DE FREINAGE*

DOOR CLOSER · *FERME-PORTE*

Template for · *Gabarit pour*

ANTI-CLOCKWISE 'PUSH' OPENING

'PUSH' OUVERTURE DANS LE SENS DES AIGUILLES D'UNE MONTRE

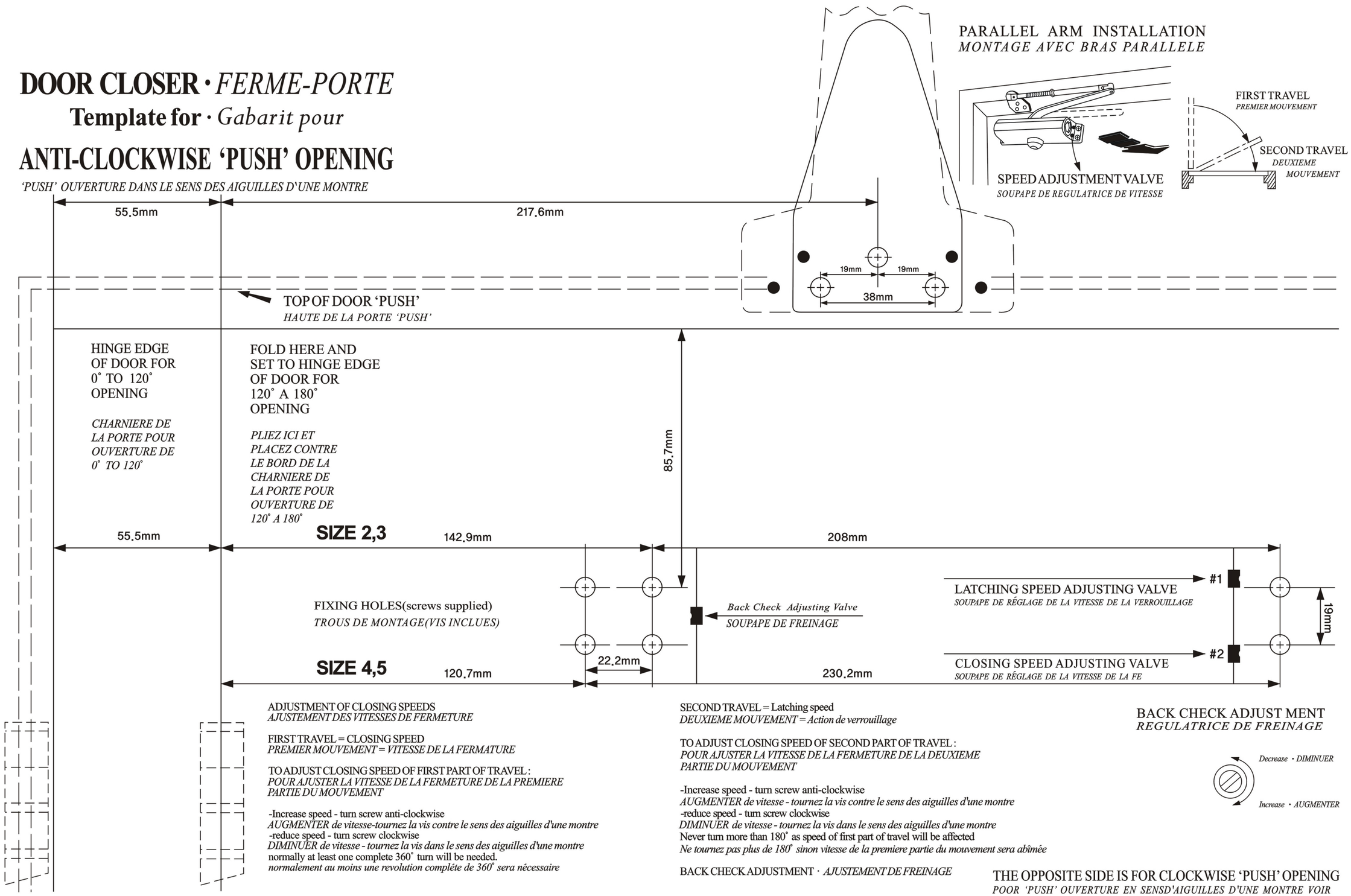

ADJUSTMENT OF CLOSING SPEEDS
AJUSTEMENT DES VITESSES DE FERMETURE

FIRST TRAVEL = CLOSING SPEED
PREMIER MOUVEMENT = VITESSE DE LA FERMATURE

TO ADJUST CLOSING SPEED OF FIRST PART OF TRAVEL :
POUR AJUSTER LA VITESSE DE LA FERMETURE DE LA PREMIERE PARTIE DU MOUVEMENT

-Increase speed - turn screw anti-clockwise
AUGMENTER de vitesse-tournez la vis contre le sens des aiguilles d'une montre
-reduce speed - turn screw clockwise
DIMINUER de vitesse - tournez la vis dans le sens des aiguilles d'une montre
normally at least one complete 360˚ turn will be needed.
normalement au moins une revolution compléte de 360˚ sera nécessaire

SECOND TRAVEL = Latching speed
DEUXIEME MOUVEMENT = Action de verrouillage

TO ADJUST CLOSING SPEED OF SECOND PART OF TRAVEL :
POUR AJUSTER LA VITESSE DE LA FERMETURE DE LA DEUXIEME PARTIE DU MOUVEMENT

-Increase speed - turn screw anti-clockwise
AUGMENTER de vitesse - tournez la vis contre le sens des aiguilles d'une montre
-reduce speed - turn screw clockwise
DIMINUER de vitesse - tournez la vis dans le sens des aiguilles d'une montre
Never turn more than 180˚ as speed of first part of travel will be affected
Ne tournez pas plus de 180˚ sinon vitesse de la premiere partie du mouvement sera abîmée

BACK CHECK ADJUSTMENT · *AJUSTEMENT DE FREINAGE*

BACK CHECK ADJUST MENT
REGULATRICE DE FREINAGE

Decrease · DIMINUER
Increase · AUGMENTER

THE OPPOSITE SIDE IS FOR CLOCKWISE 'PUSH' OPENING
POOR 'PUSH' OUVERTURE EN SENSD'AIGUILLES D'UNE MONTRE VOIR

DOOR CLOSER · *FERME-PORTE*

Template for · *Gabarit pour*

CLOCKWISE 'PUSH' OPENING

'PUSH' OUVERTURE DANS LE SENS DES AIGUILLES D'UNE MONTRE

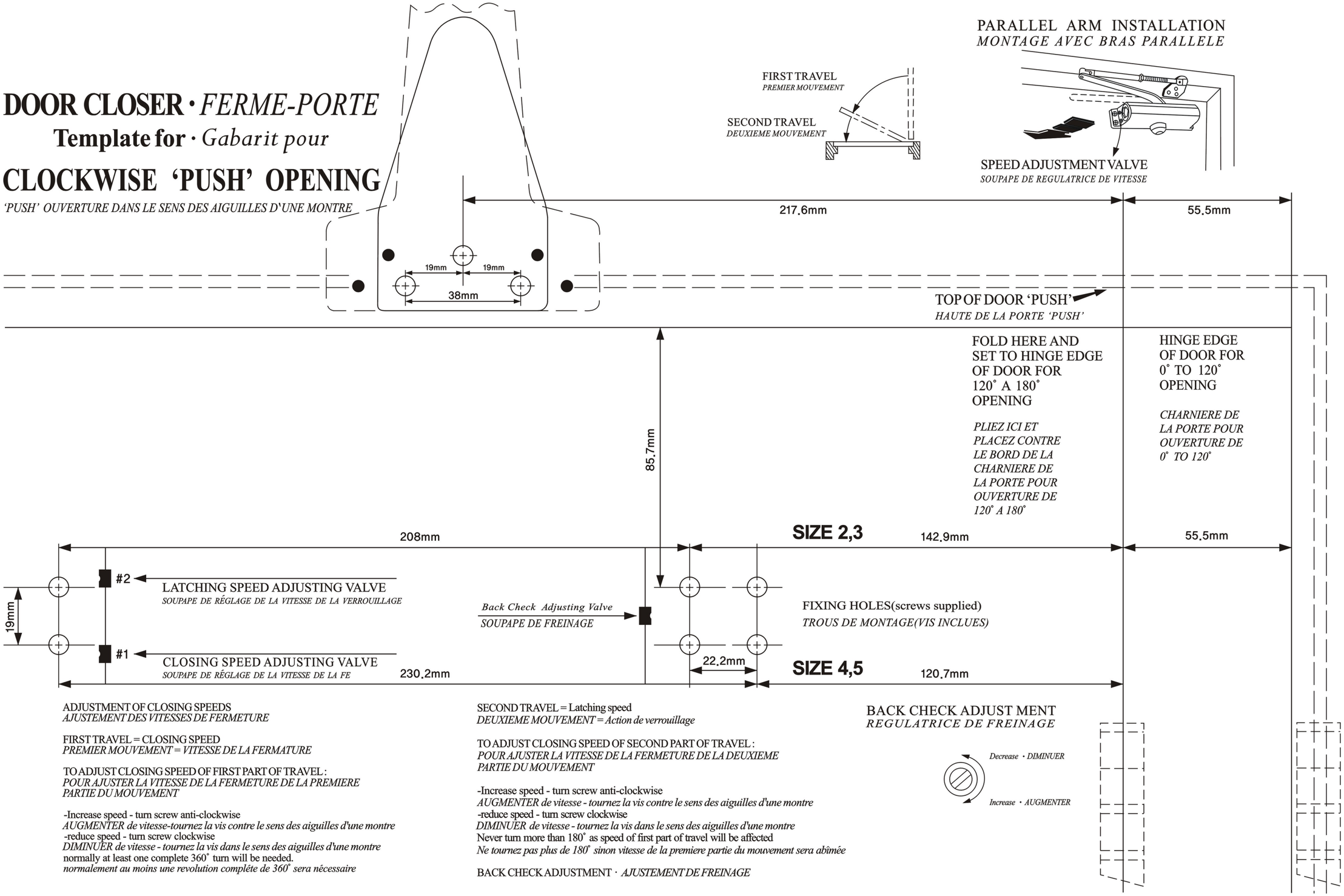

ADJUSTMENT OF CLOSING SPEEDS
AJUSTEMENT DES VITESSES DE FERMETURE

FIRST TRAVEL = CLOSING SPEED
PREMIER MOUVEMENT = VITESSE DE LA FERMATURE

TO ADJUST CLOSING SPEED OF FIRST PART OF TRAVEL :
POUR AJUSTER LA VITESSE DE LA FERMETURE DE LA PREMIERE PARTIE DU MOUVEMENT

-Increase speed - turn screw anti-clockwise
AUGMENTER de vitesse-tournez la vis contre le sens des aiguilles d'une montre
-reduce speed - turn screw clockwise
DIMINUER de vitesse - tournez la vis dans le sens des aiguilles d'une montre
normally at least one complete 360˚ turn will be needed.
normalement au moins une revolution compléte de 360˚ sera nécessaire

SECOND TRAVEL = Latching speed
DEUXIEME MOUVEMENT = Action de verrouillage

TO ADJUST CLOSING SPEED OF SECOND PART OF TRAVEL :
POUR AJUSTER LA VITESSE DE LA FERMETURE DE LA DEUXIEME PARTIE DU MOUVEMENT

-Increase speed - turn screw anti-clockwise
AUGMENTER de vitesse - tournez la vis contre le sens des aiguilles d'une montre
-reduce speed - turn screw clockwise
DIMINUER de vitesse - tournez la vis dans le sens des aiguilles d'une montre
Never turn more than 180˚ as speed of first part of travel will be affected
Ne tournez pas plus de 180˚ sinon vitesse de la premiere partie du mouvement sera abîmée

BACK CHECK ADJUSTMENT · *AJUSTEMENT DE FREINAGE*

Offset Arm for OHC Aluminum Door & Frame

Installation Instructions

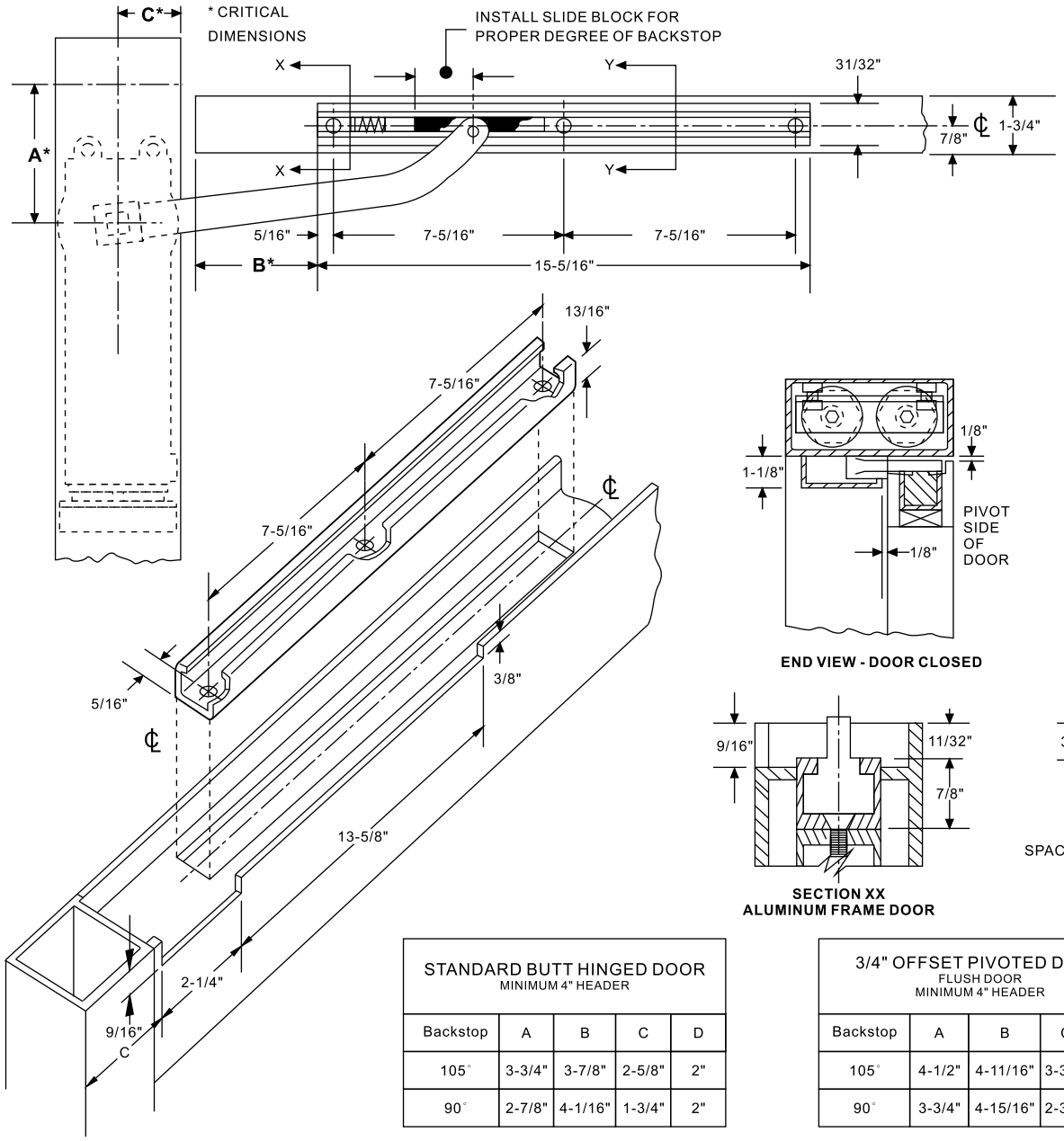

END VIEW - DOOR CLOSED

SECTION XX
ALUMINUM FRAME DOOR

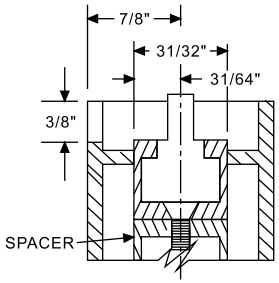

SECTION YY

DETERMINE HOW DOOR IS HUMG AND DEGREE OF CLOSER BACKSTOP AND USE APPLICABLE CHART

HEADER PREP ARATION:

1. DIMENSION 'A' , face of jamb to center line of spindle must be maintained.
2. DIMENSION 'D' , pivot of hinge side of header to center line of spindle must be maintained regardless of header width.
3. All spacers and/or anchors other than standard 'F' clip package by others.

DOOR PREPARATION:

1. Rout out web of top rail as shown for side channel spacers as required to be furnished by door manufacturer.
2. Rout inside face of top rail as shown for arm.
3. Offset pivots or butts by others.

INSTALLATION:

1. Install closer in prepared header.
2. Install slide channel in top rail.
3. Insert slide in slide channel with end marked 90° toward hinge edge of door if 90° backstop closer is used or with end marked 105° toward hinge edge of door if 105° backstop closer is used.
4. Place arm on spindle and tighten 1/4-20 socket head screw securely. Rotate arm from center as if door were open. Place hole in arm over pin in the slide and secure with the 'C' clip.

STANDARD BUTT HINGED DOOR
MINIMUM 4" HEADER

Backstop	A	B	C	D
105°	3-3/4"	3-7/8"	2-5/8"	2"
90°	2-7/8"	4-1/16"	1-3/4"	2"

3/4" OFFSET PIVOTED DOOR
FLUSH DOOR
MINIMUM 4" HEADER

Backstop	A	B	C	D
105°	4-1/2"	4-11/16"	3-3/2"	2"
90°	3-3/4"	4-15/16"	2-3/8"	2"

5/8" OFFSET PIVOTED DOOR
1/8" RECESSED DOOR
MINIMUM 4" HEADER

Backstop	A	B	C	D
105°	4-1/2"	4-11/16"	3-3/8"	2-1/8"
90°	3-3/4"	4-15/16"	2-3/8"	2-1/8"

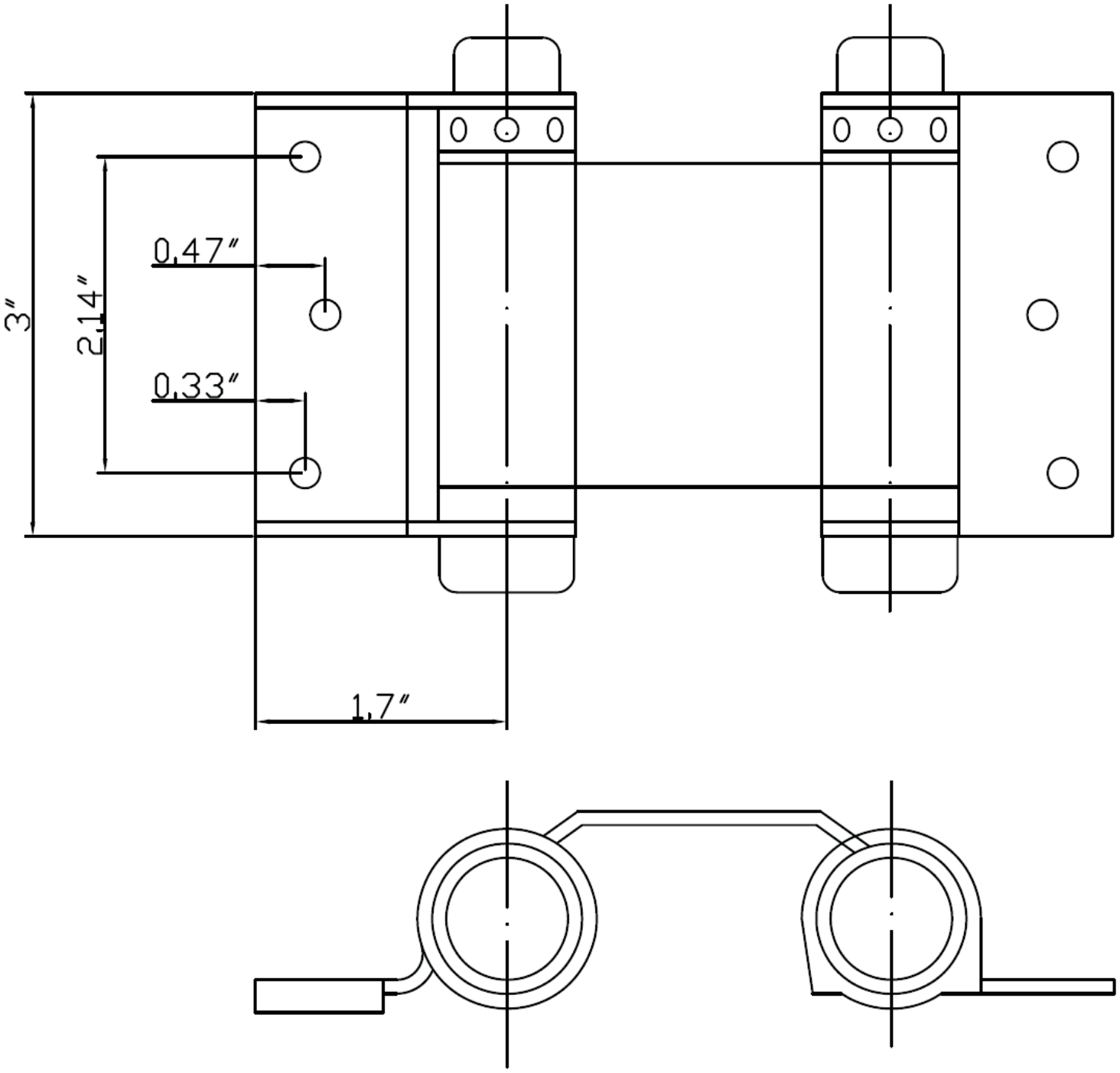

Since 1899 Great Value in Quality Hardware
S.Parker Hardware mfg corp
PARKER DRIVE PO Box9882. EnglewoodNJ07631-1127 •NU (201)569 1600
In NYC (212)925-6300 • FAX(201)569 1082 •
Website.www.sparker.com
Email:hardware@sparker.com

ITEM NO:	DESCRIPTION:		SCALE:
070 SERIES	Double Action Spring Hinge 3″		1:1
ANSI:	UNIT:	VERSION:	BY:
A156.1	inches	ver 1.0	C.C Chen

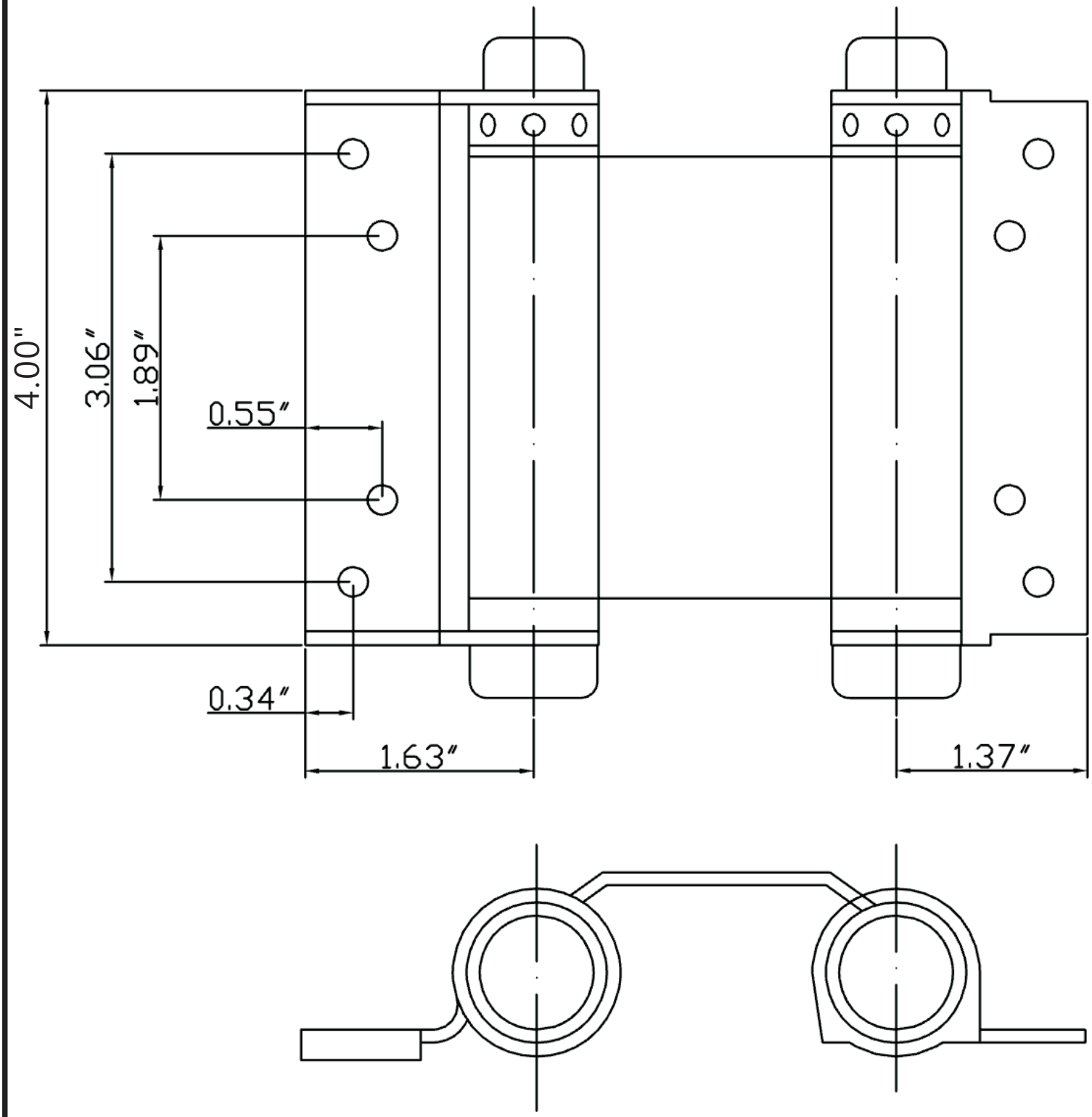

Since 1899 Great Value in Quality Hardware
S.Parker Hardware mfg corp
PARKER DRIVE PO Box9882. EnglewoodNJ07631-1127 •NU (201)569 1600
In NYC (212)925-6300 • FAX(201)569 1082 •
Website.www.sparker.com
Email:hardware@sparker.com

ITEM NO:	DESCRIPTION:		SCALE:
070 SERIES	Double Action Spring Hinge 4"		1:1
ANSI:	UNIT:	VERSION:	BY:
A156.1	inches	ver 1.0	C.C Chen

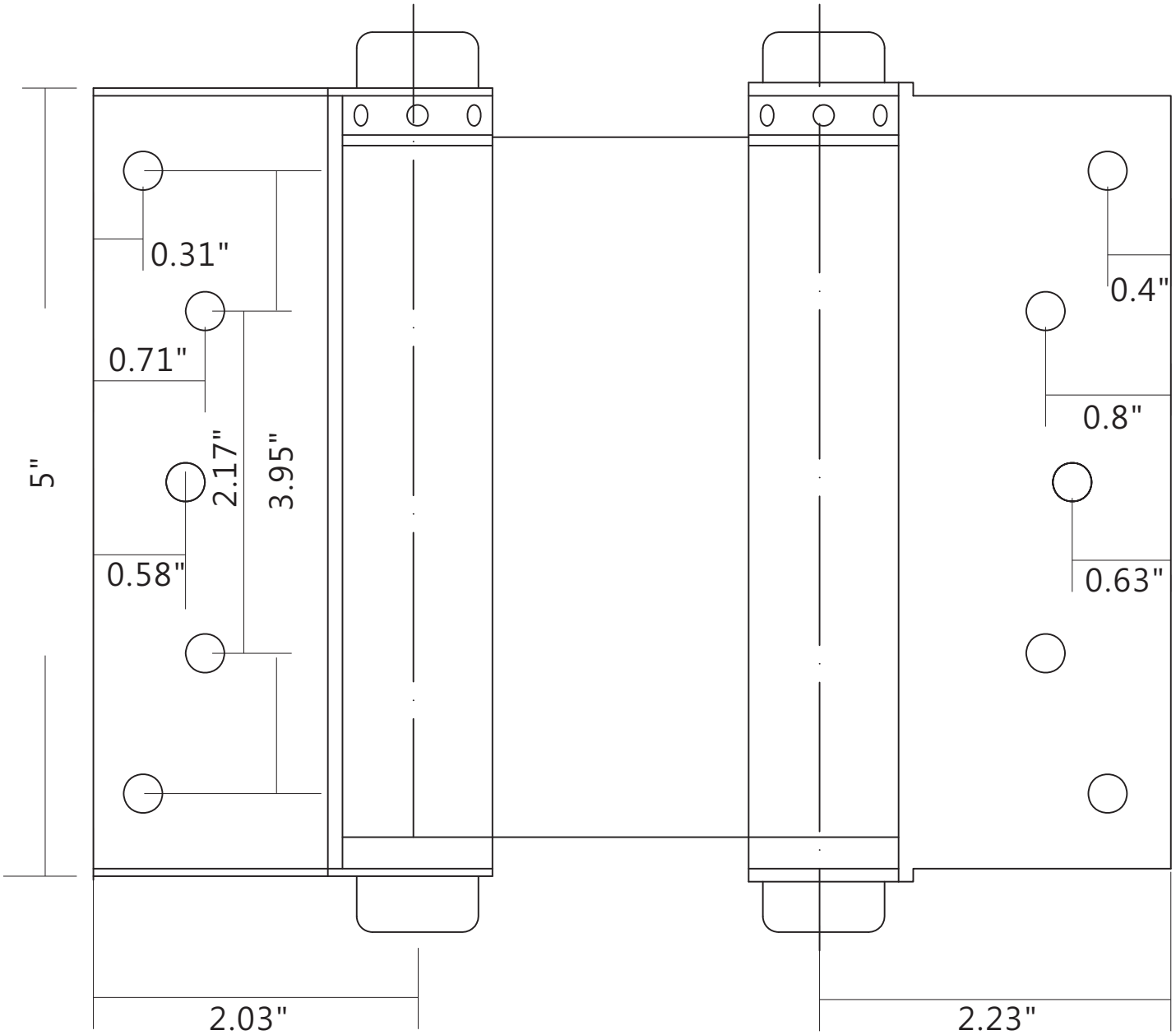

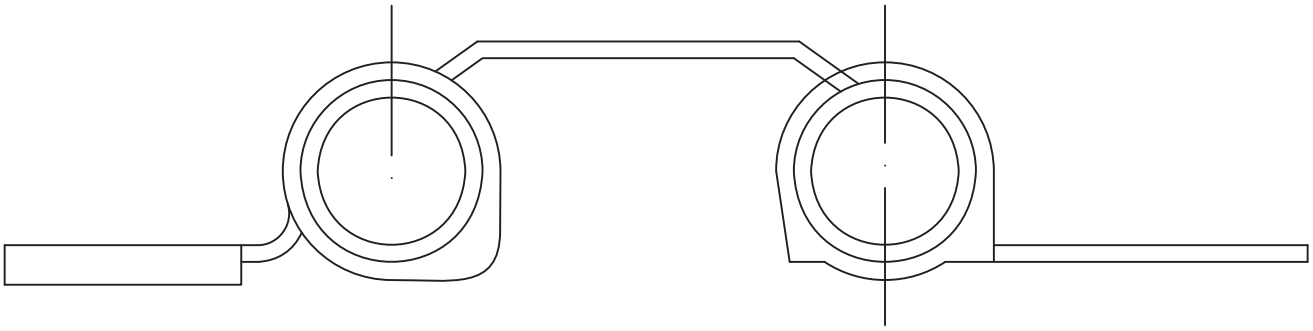

Since 1899 Great Value in Quality Hardware
S.Parker Hardware mfg corp
PARKER DRIVE PO Box9882. EnglewoodNJ07631-1127 •NU (201)569 1600
In NYC (212)925-6300 • FAX(201)569 1082 •
Website.www.sparker.com
Email:hardware@sparker.com

ITEM NO:	DESCRIPTION:		SCALE:
070 SERIES	Double Action Spring Hinge 5"		1:1
ANSI:	UNIT:	VERSION:	BY:
A156.1	inches	ver 1.0	C.C Chen

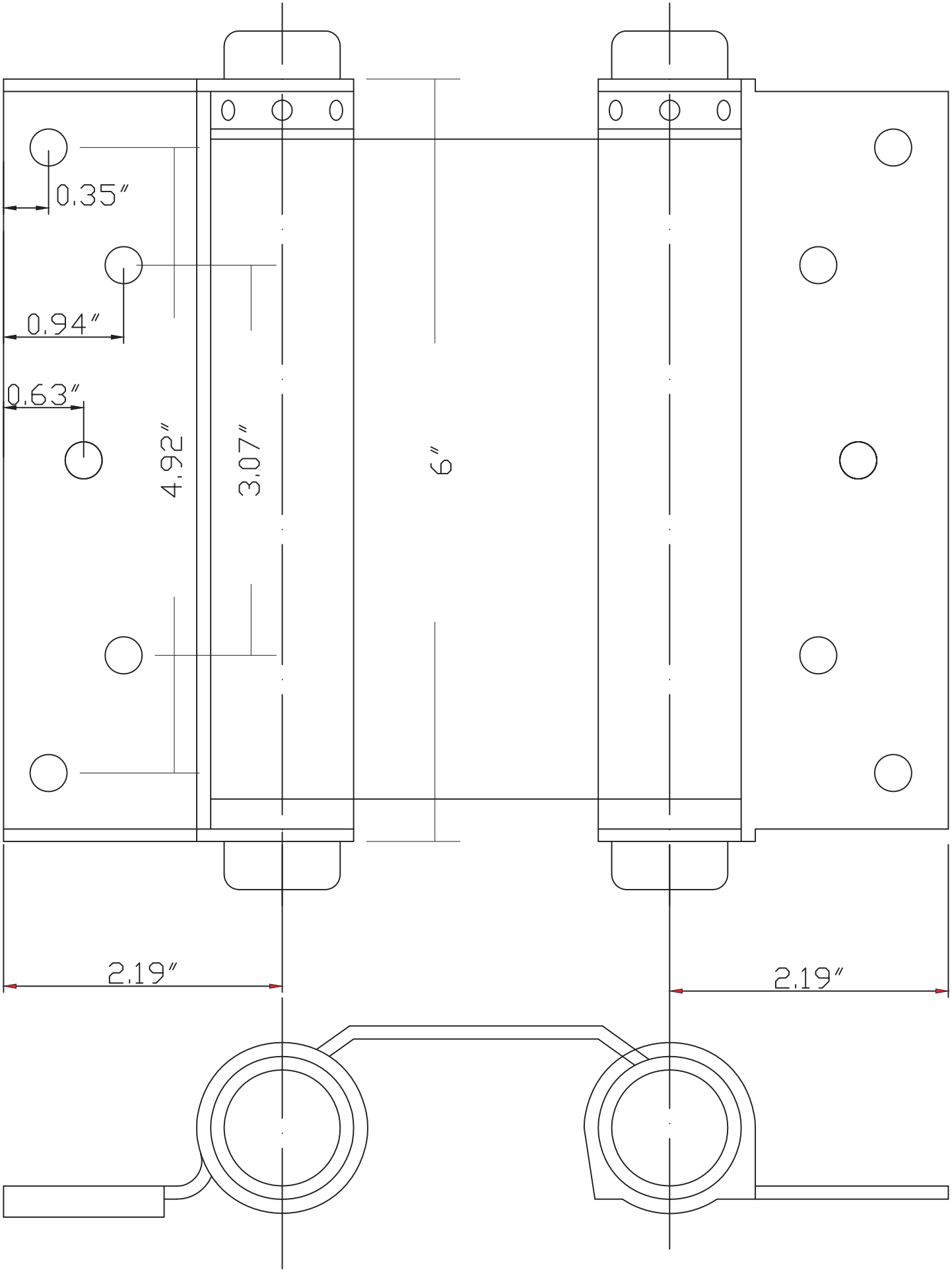

Since 1899 Great Value in Quality Hardware
S.Parker Hardware mfg corp
PARKER DRIVE PO Box9882. EnglewoodNJ07631-1127 •NU (201)569 1600
In NYC (212)925-6300 • FAX(201)569 1082 •
Website.www.sparker.com
Email:hardware@sparker.com

ITEM NO:	DESCRIPTION:		SCALE:
070 SERIES	Double Action Spring Hinge 6″		1:1
ANSI:	UNIT:	VERSION:	BY:
A156.1	inches	ver 1.0	C.C Chen

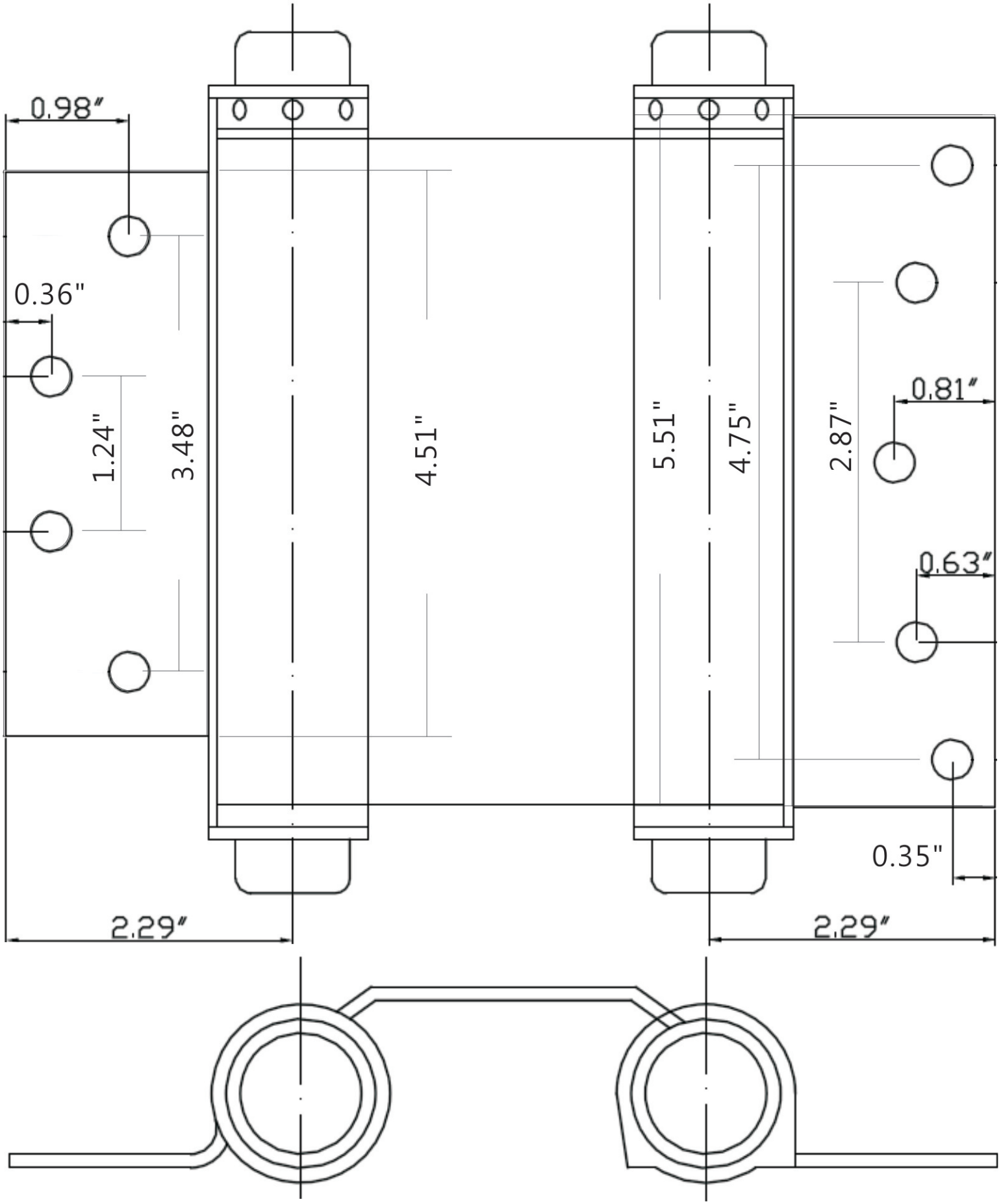

Since 1899 Great Value in Quality Hardware
S.Parker Hardware mfg corp
PARKER DRIVE PO Box9882. EnglewoodNJ07631-1127 •NU (201)569 1600
In NYC (212)925-6300 • FAX(201)569 1082 •
Website.www.sparker.com
Email:hardware@sparker.com

ITEM NO:	DESCRIPTION:		SCALE:
070 PC645	Double Action Spring Hinge 6" x4-1/2"		1:1
ANSI:	UNIT:	VERSION:	BY:
A156.1	inches	ver 1.0	C.C Chen

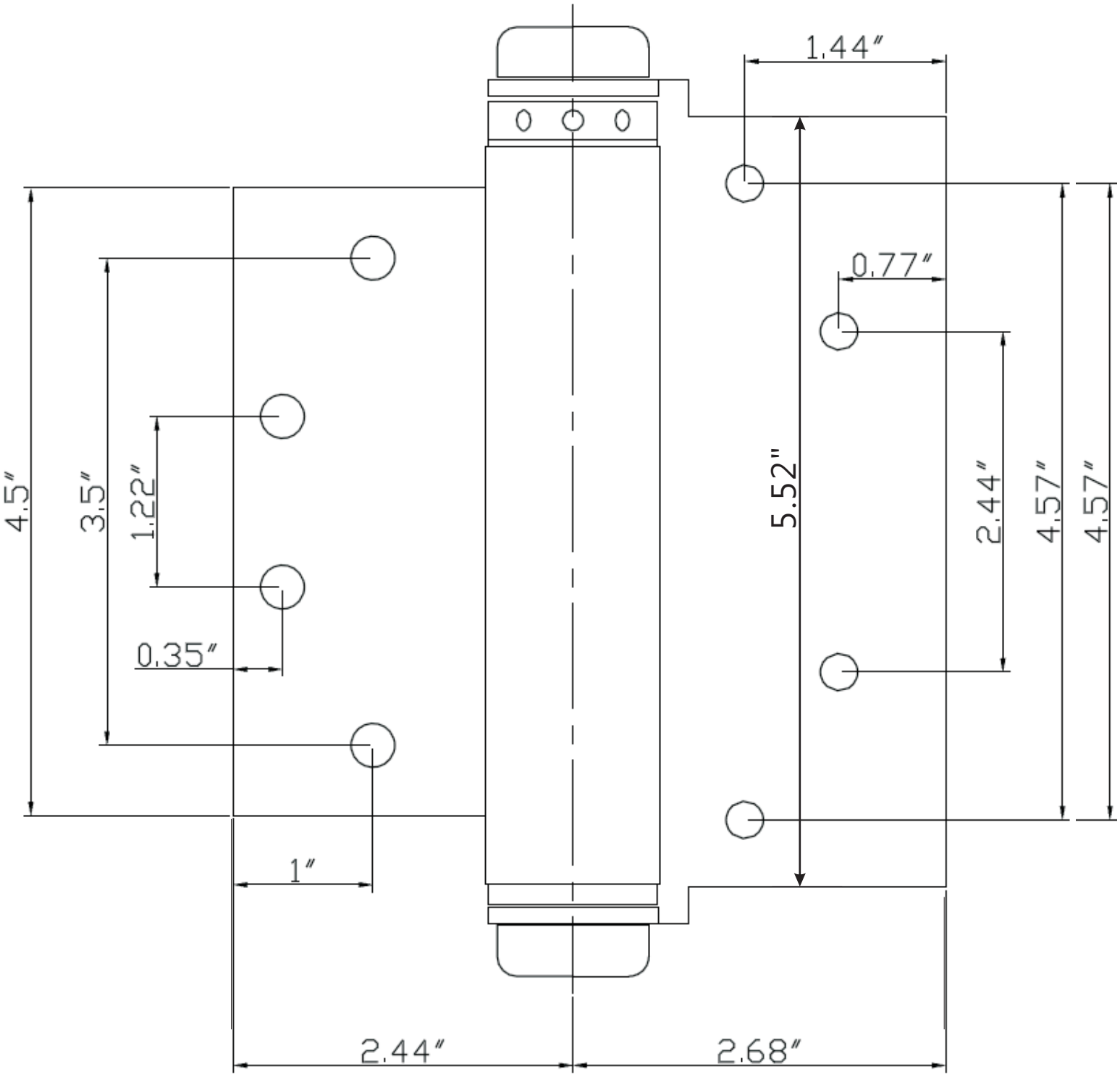

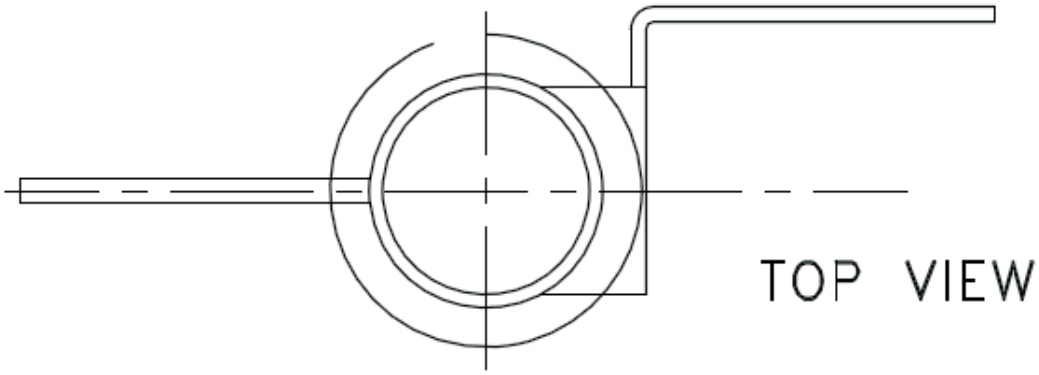

Since 1899 Great Value in Quality Hardware
S.Parker Hardware mfg corp
PARKER DRIVE PO Box9882. EnglewoodNJ07631-1127 •NU (201)569 1600
In NYC (212)925-6300 • FAX(201)569 1082 •
Website.www.sparker.com
Email:hardware@sparker.com

ITEM NO:	DESCRIPTION:		SCALE:
2019	Half Surface Template 4-1/2″		1:1
ANSI:	UNIT:	VERSION:	BY:
A156.1	inches	ver 1.0	C.C Chen

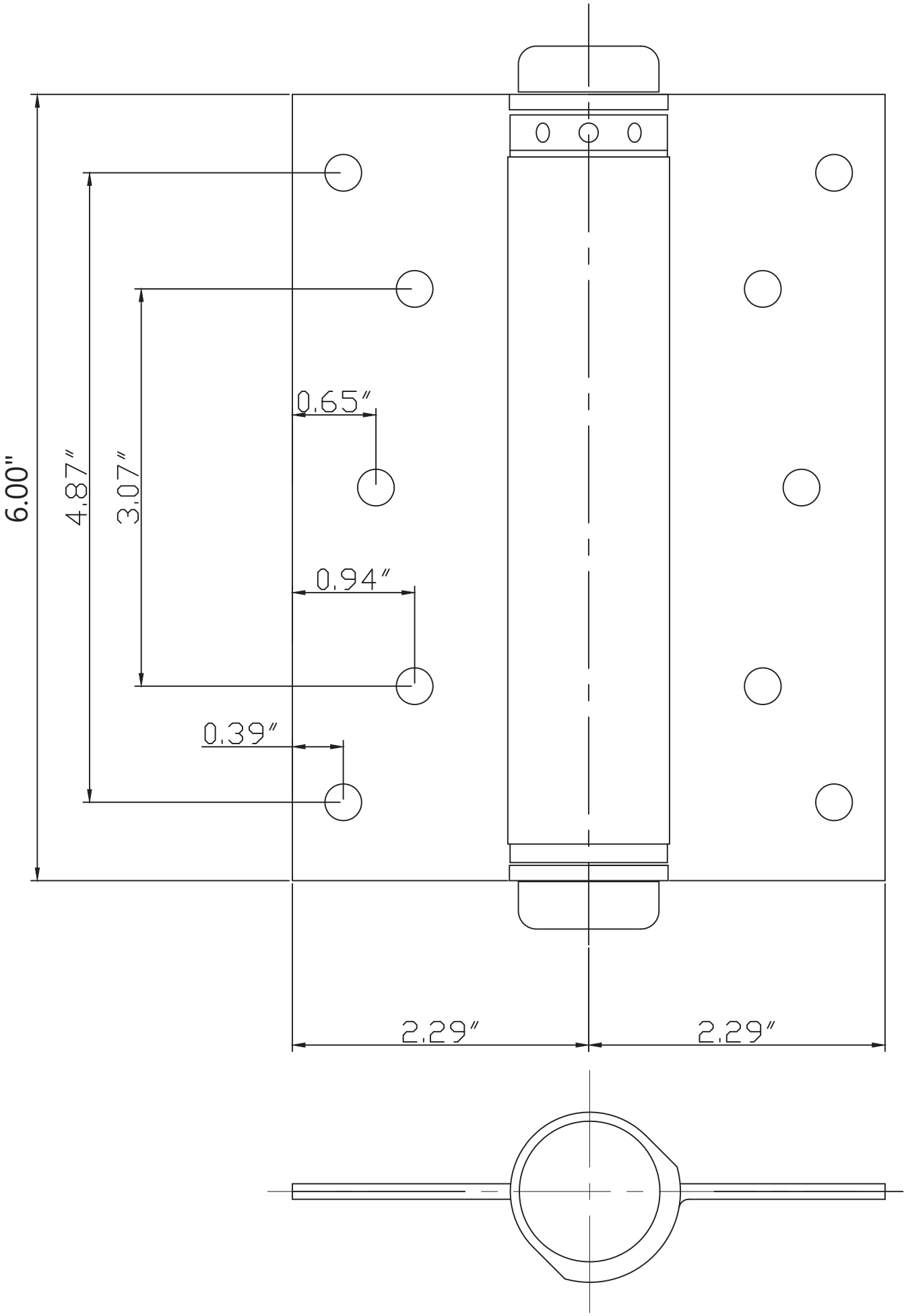

Since 1899 Great Value in Quality Hardware
S.Parker Hardware mfg corp
PARKER DRIVE PO Box9882. EnglewoodNJ07631-1127 •NU (201)569 1600
In NYC (212)925-6300 • FAX(201)569 1082 •
Website.www.sparker.com
Email:hardware@sparker.com

ITEM NO:	DESCRIPTION:		SCALE:
2029TH6	Single Action Spring Non-template Hinge 6″		1:1
ANSI:	UNIT:	VERSION:	BY:
A156.1	inches	ver 1.0	C.C Chen

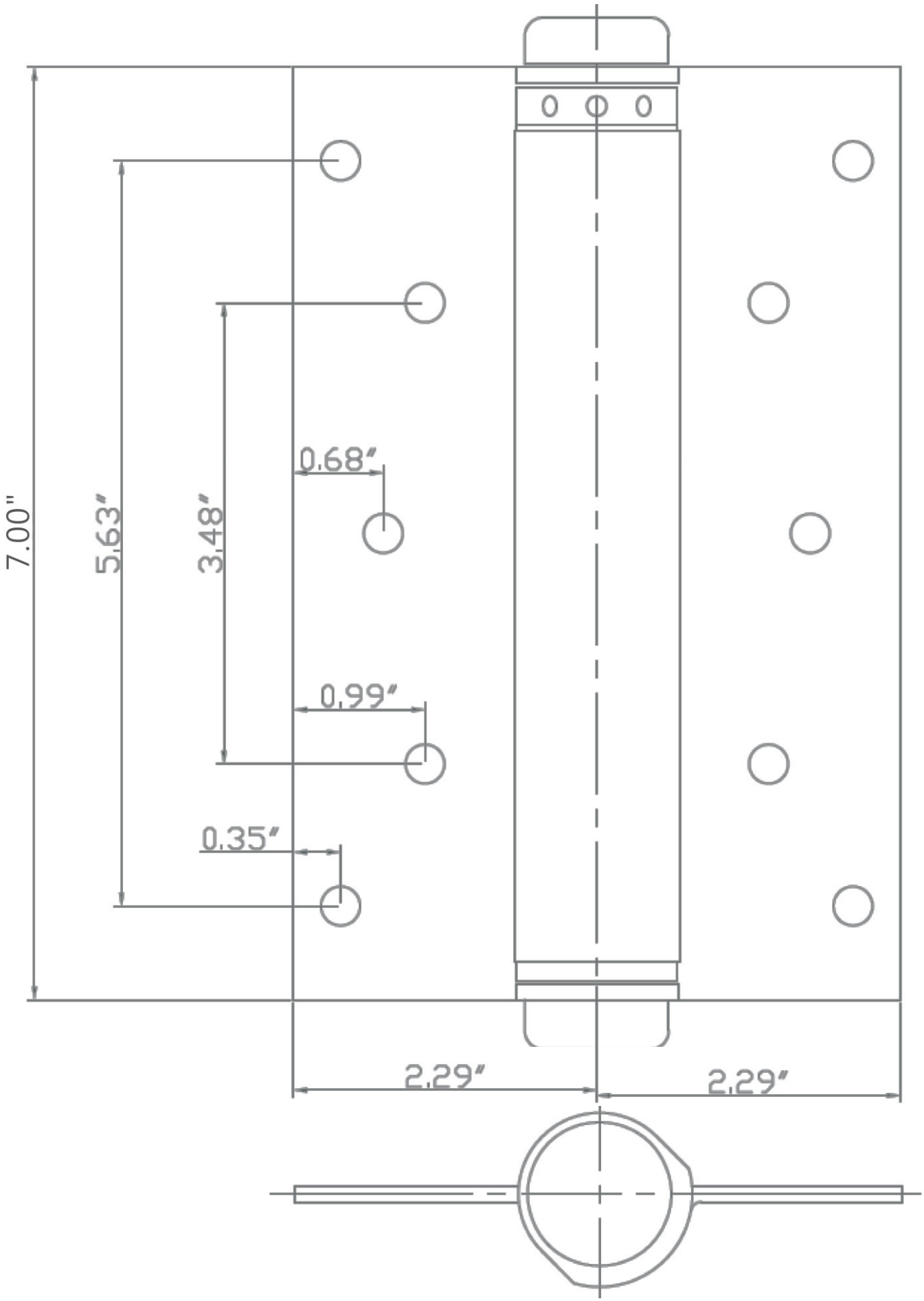

Since 1899 Great Value in Quality Hardware
S.Parker Hardware mfg corp
PARKER DRIVE PO Box9882. EnglewoodNJ07631-1127 •NU (201)569 1600
In NYC (212)925-6300 • FAX(201)569 1082 •
Website.www.sparker.com
Email:hardware@sparker.com

ITEM NO:	DESCRIPTION:		SCALE:
2029TH7	Single Action Spring Non-template Hinge 7″		1:1
ANSI:	UNIT:	VERSION:	BY:
A156.1	inches	ver 1.0	C.C Chen

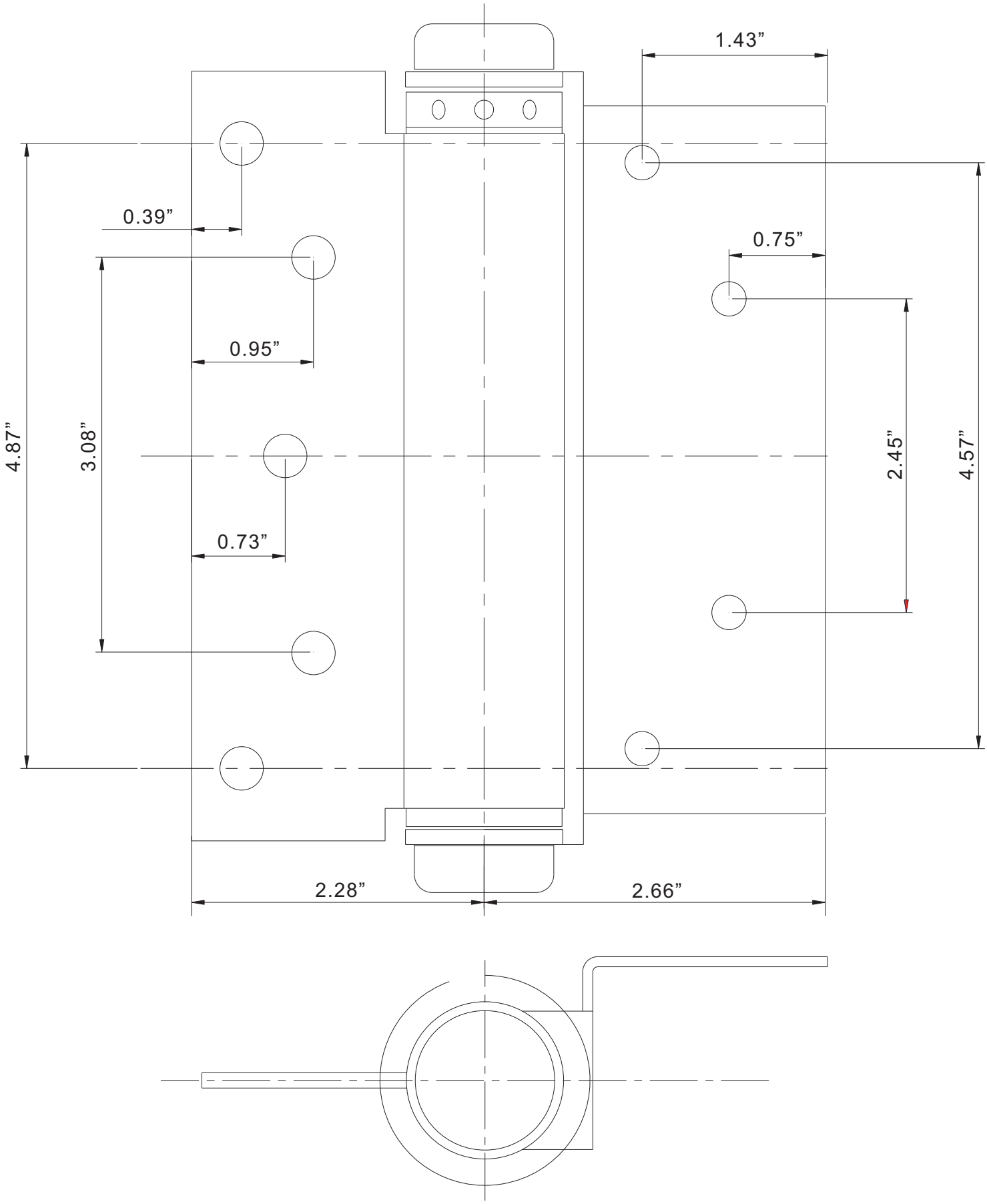

Since 1899 Great Value in Quality Hardware
S.Parker Hardware mfg corp
PARKER DRIVE PO Box9882. EnglewoodNJ07631-1127 •NU (201)569 1600
In NYC (212)925-6300 • FAX(201)569 1082 •
Website.www.sparker.com
Email:hardware@sparker.com

ITEM NO:	DESCRIPTION:		SCALE:
20206	Half Surface Template 6”		1:1
ANSI:	UNIT:	VERSION:	BY:
A156.1	inches	ver 1.1	C.C Chen

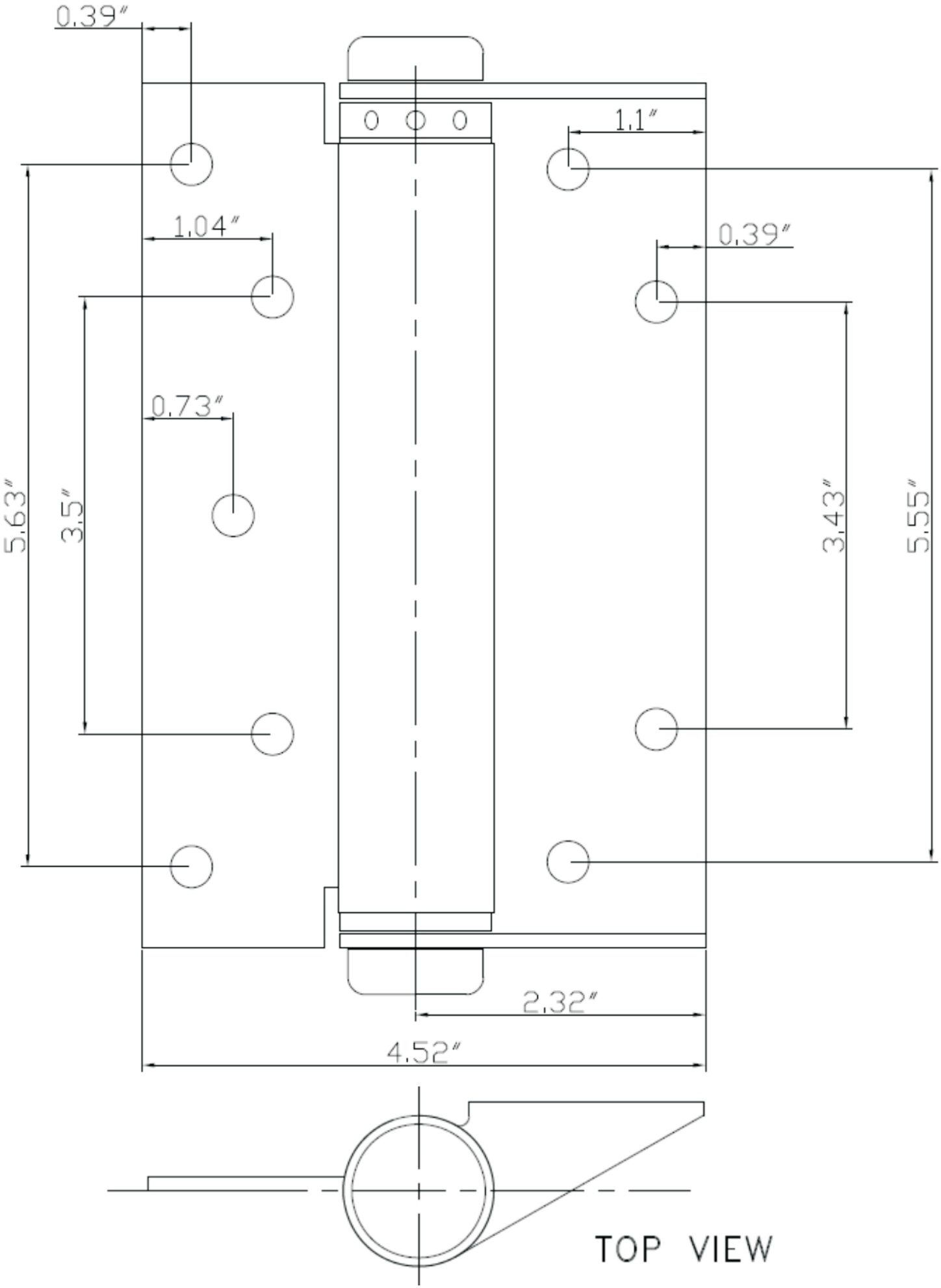

Since 1899 Great Value in Quality Hardware
S.Parker Hardware mfg corp
PARKER DRIVE PO Box9882. EnglewoodNJ07631-1127 •NU (201)569 1600
In NYC (212)925-6300 • FAX(201)569 1082 •
Website.www.sparker.com
Email:hardware@sparker.com

ITEM NO:	DESCRIPTION:		SCALE:
20207	Half Surface Template 7″		1:1
ANSI:	UNIT:	VERSION:	BY:
A156.1	inches	ver 1.0	C.C Chen

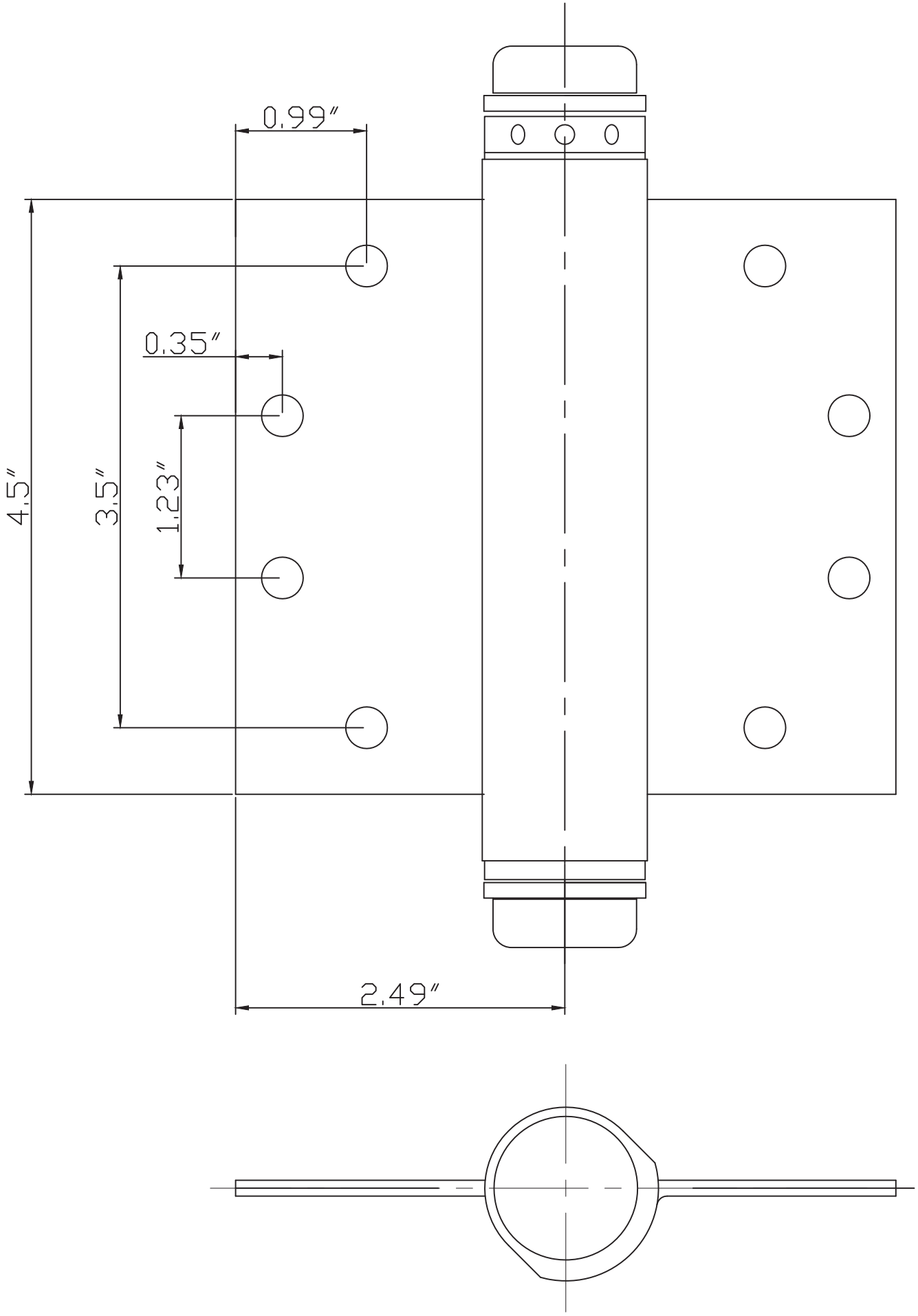

Since 1899 Great Value in Quality Hardware
S.Parker Hardware mfg corp
PARKER DRIVE PO Box9882. EnglewoodNJ07631-1127 •NU (201)569 1600
In NYC (212)925-6300 • FAX(201)569 1082 •
Website.www.sparker.com
Email:hardware@sparker.com

ITEM NO:	DESCRIPTION:		SCALE:
20284H	Single Action Spring Template Hinge 4-1/2″		1:1
ANSI:	UNIT:	VERSION:	BY:
A156.1	inches	ver 1.0	C.C Chen

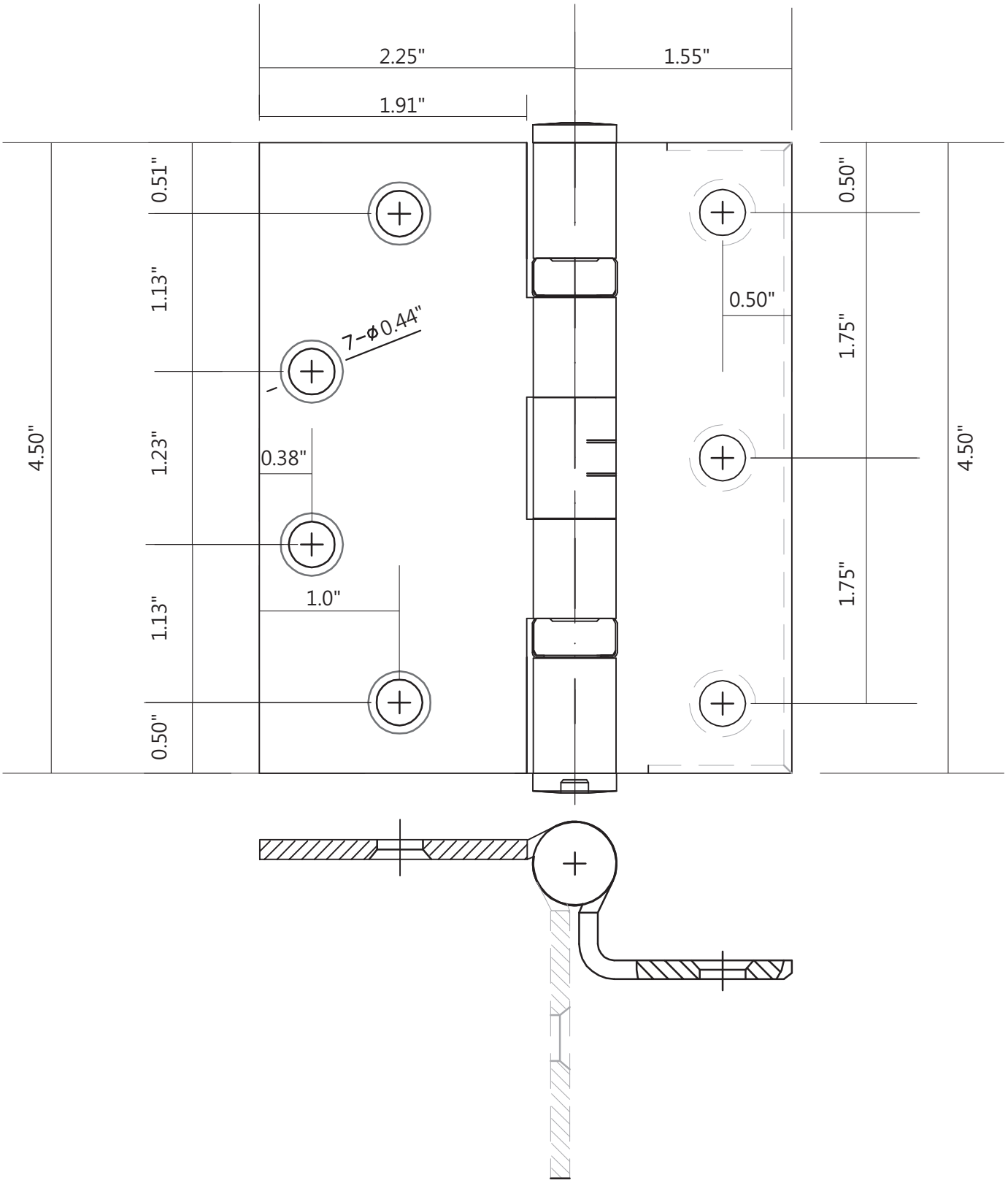

Since 1899 Great Value in Quality Hardware
S.Parker Hardware mfg corp
PARKER DRIVE PO Box9882. EnglewoodNJ07631-1127 •NU (201)569 1600
In NYC (212)925-6300 • FAX(201)569 1082 •
Website.www.sparker.com
Email:hardware@sparker.com

ITEM NO:	DESCRIPTION:		SCALE:
B1130	Ball Bearing Half Mortise Hinge 4-1/2"		1:1
ANSI:	UNIT:	VERSION:	BY:
A156.1	inches	ver 1.0	C.C Chen

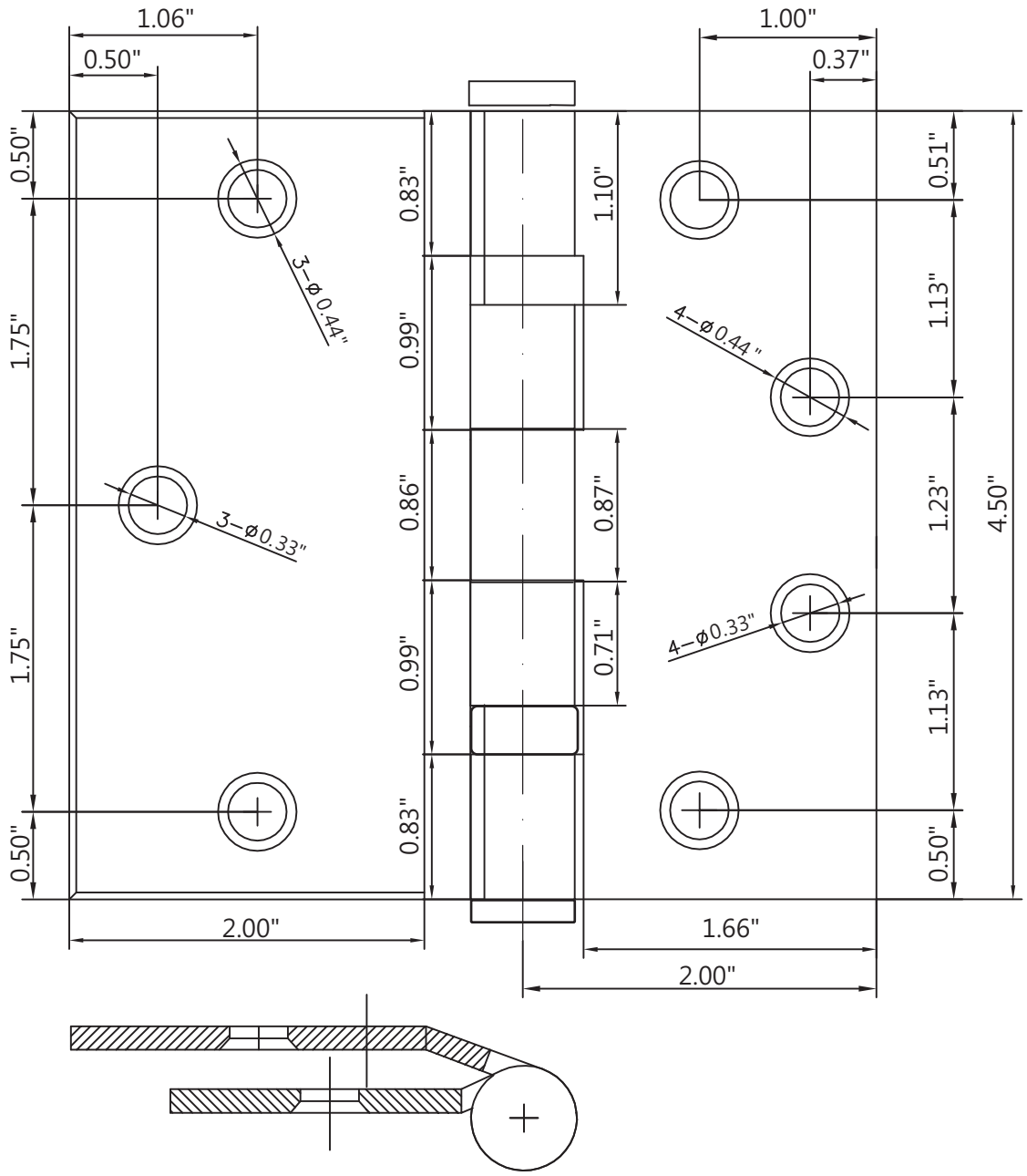

Since 1899 Great Value in Quality Hardware
S.Parker Hardware mfg corp
PARKER DRIVE PO Box9882. EnglewoodNJ07631-1127 •NU (201)569 1600
In NYC (212)925-6300 • FAX(201)569 1082 •
Website.www.sparker.com
Email:hardware@sparker.com

ITEM NO:	DESCRIPTION:		SCALE:
B1138	Ball Bearing Half Surface Hinge 4-1/2"		1:1
ANSI:	UNIT:	VERSION:	BY:
A156.1	inches	ver 1.0	C.C Chen

Template No. B 1 2 7 9 R D C H 4 H 4

SIZES: 4 1/2 x 4 (114.30x101.60)

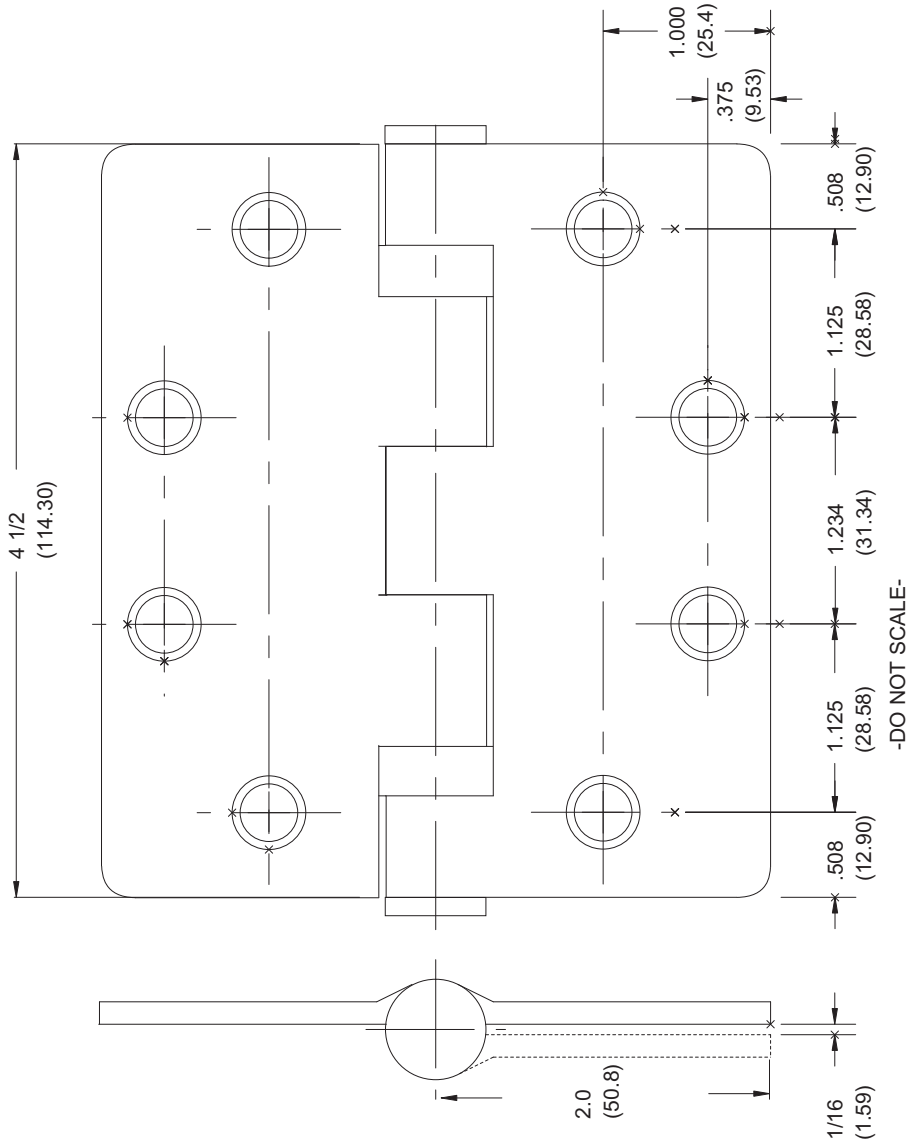

DISTANCE FROM EDGE OF LEAF TO SWAGE LINE
4 1/2 x 4 (114.30x101.60)
1 5/8 (41.28)

ALL NON-BRACKETED DIMENSIONS ARE IN INCHES, ALL BRACKETED DIMENSIONS ARE IN MILLIMETERS.

Machine Screw Size- 12-24 x 1/2" F.H.
Wood Screw Size- No. 12 x 1 1/4" F.H.

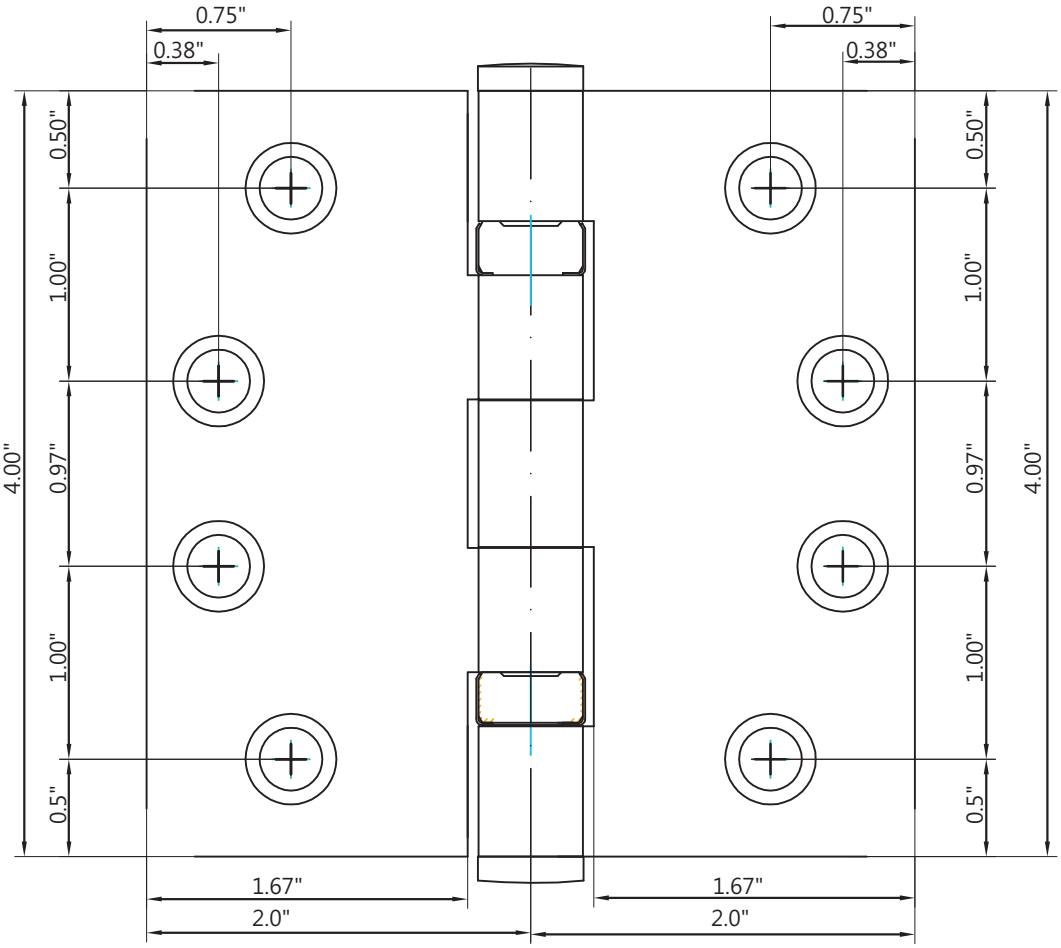

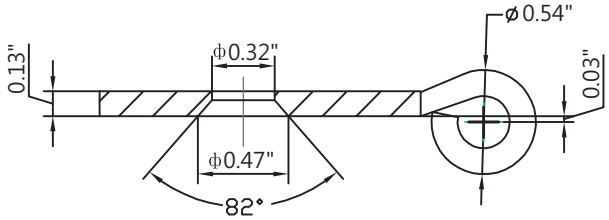

Since 1899 Great Value in Quality Hardware
S.Parker Hardware mfg corp
PARKER DRIVE PO Box9882. EnglewoodNJ07631-1127 •NU (201)569 1600
In NYC (212)925-6300 • FAX(201)569 1082 •
Website.www.sparker.com
Email:hardware@sparker.com

ITEM NO:	DESCRIPTION:		SCALE:
B1279	Ball Bearing Template Hinge 4" x 4"		1:1
ANSI:	UNIT:	VERSION:	BY:
A156.1	inches	ver 1.0	C.C Chen

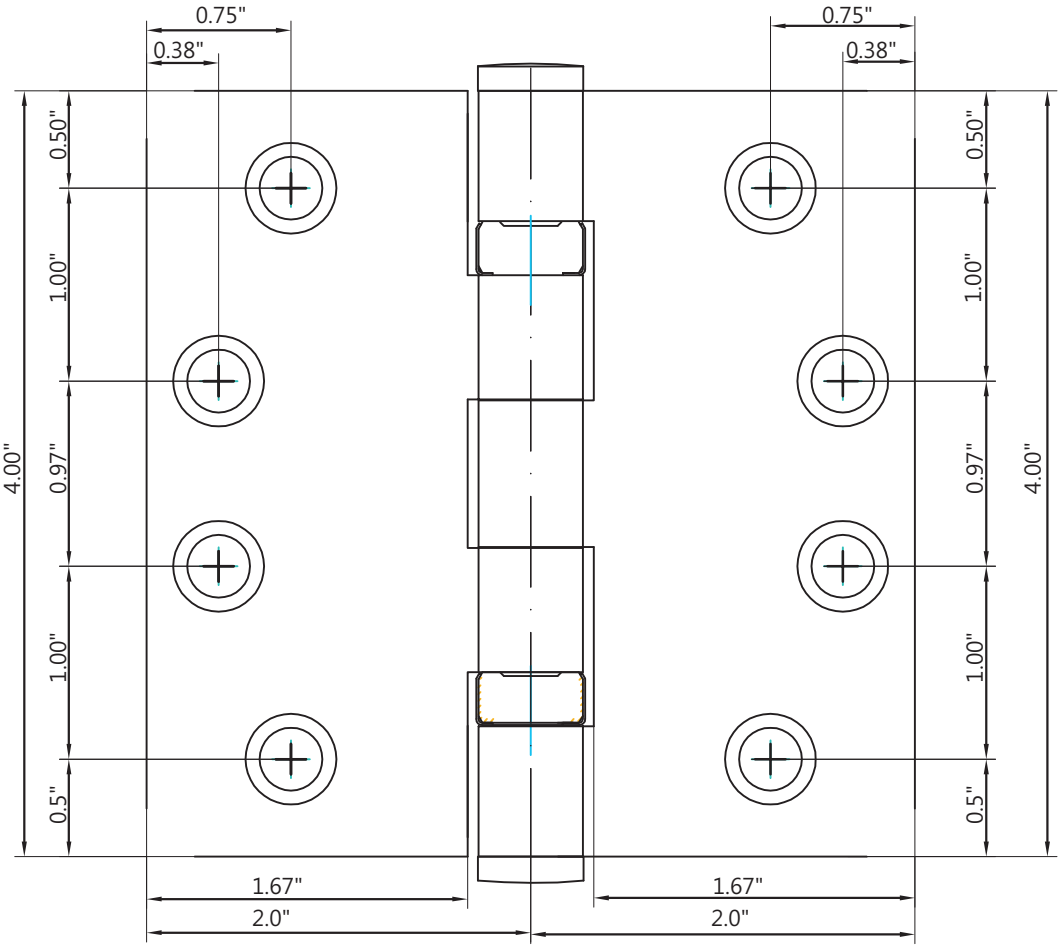

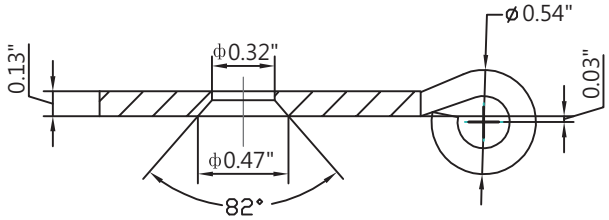

Since 1899 Great Value in Quality Hardware
S.Parker Hardware mfg corp
PARKER DRIVE PO Box9882. EnglewoodNJ07631-1127 •NU (201)569 1600
In NYC (212)925-6300 • FAX(201)569 1082 •
Website.www.sparker.com
Email:hardware@sparker.com

ITEM NO:	DESCRIPTION:		SCALE:
B1279	Ball Bearing Template Hinge 4" x 4"		1:1
ANSI:	UNIT:	VERSION:	BY:
A156.1	inches	ver 1.0	C.C Chen

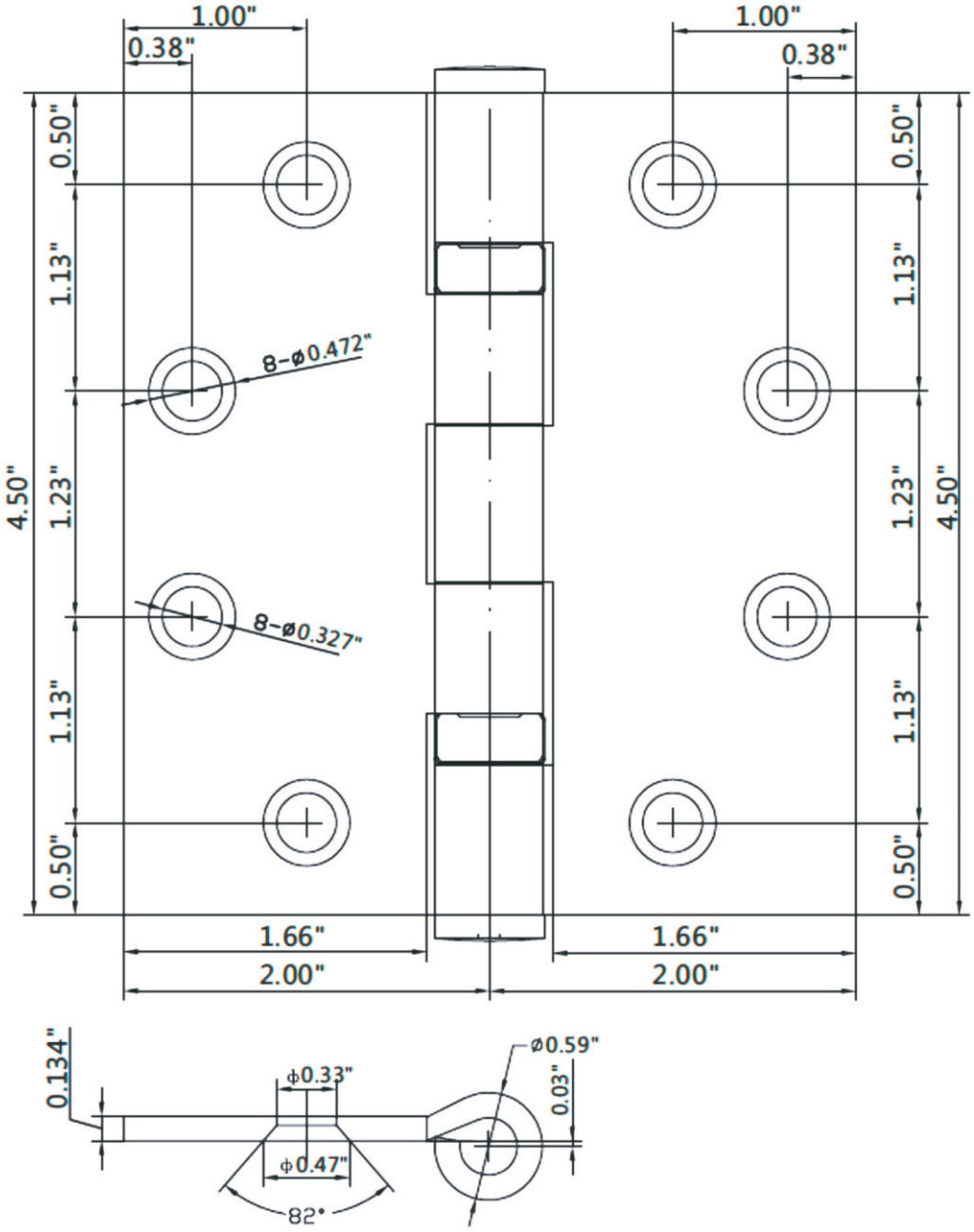

Since 1899 Great Value in Quality Hardware
S.Parker Hardware mfg corp
PARKER DRIVE PO Box9882. EnglewoodNJ07631-1127 •NU (201)569 1600
In NYC (212)925-6300 • FAX(201)569 1082 •
Website.www.sparker.com
Email:hardware@sparker.com

ITEM NO:	DESCRIPTION:		SCALE:
B1279	Ball Bearing Template Hinge 4-1/2" x 4"		1:1
ANSI:	UNIT:	VERSION:	BY:
A156.1	inches	ver 1.0	C.C Chen

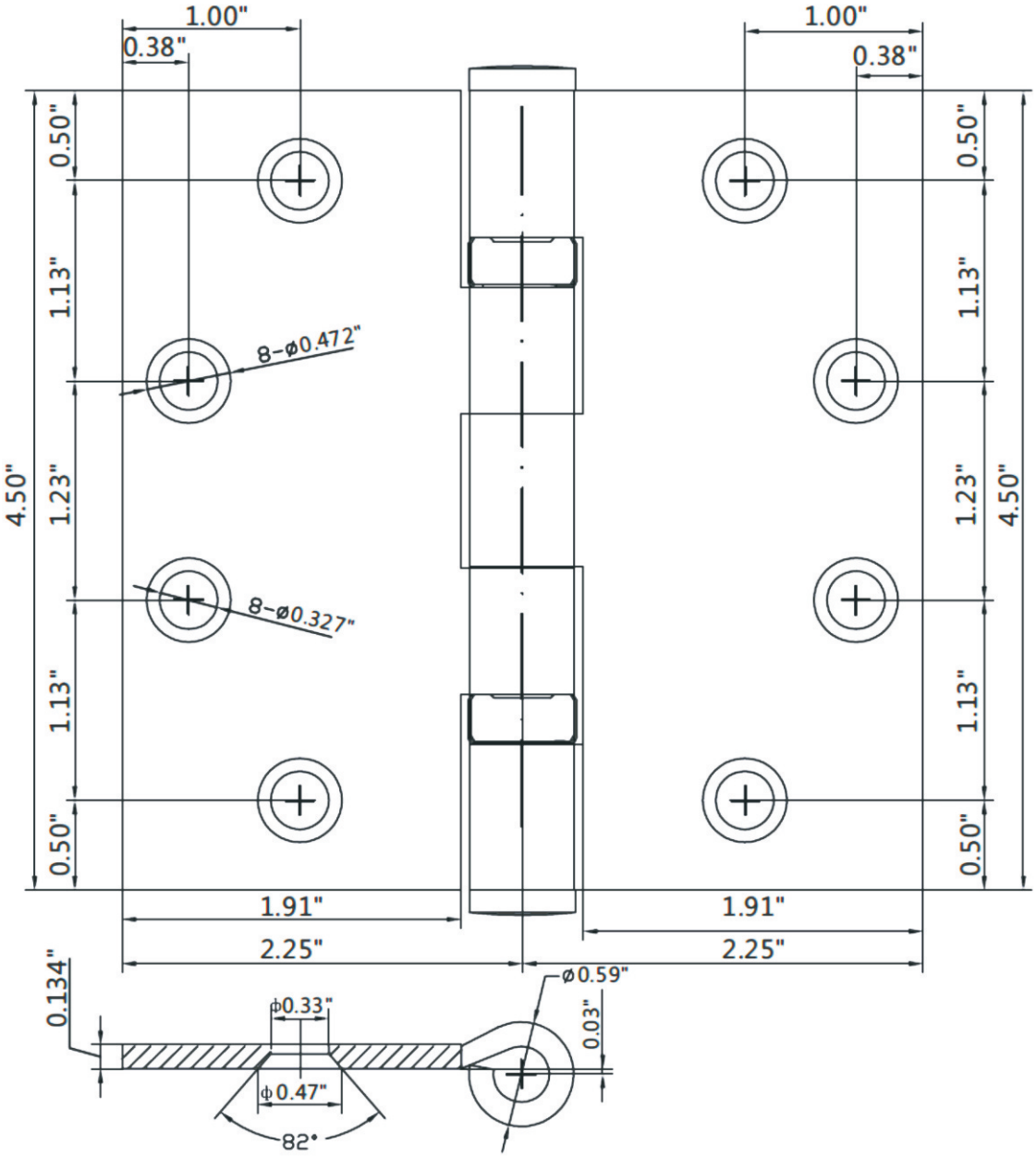

Since 1899 Great Value in Quality Hardware
S.Parker Hardware mfg corp
PARKER DRIVE PO Box9882. EnglewoodNJ07631-1127 •NU (201)569 1600
In NYC (212)925-6300 • FAX(201)569 1082 •
Website.www.sparker.com
Email:hardware@sparker.com

ITEM NO:	DESCRIPTION:		SCALE:
B1279	Ball Bearing Template Hinge 4-1/2" x 4-1/2"		1:1
ANSI:	UNIT:	VERSION:	BY:
A156.1	inches	ver 1.0	C.C Chen

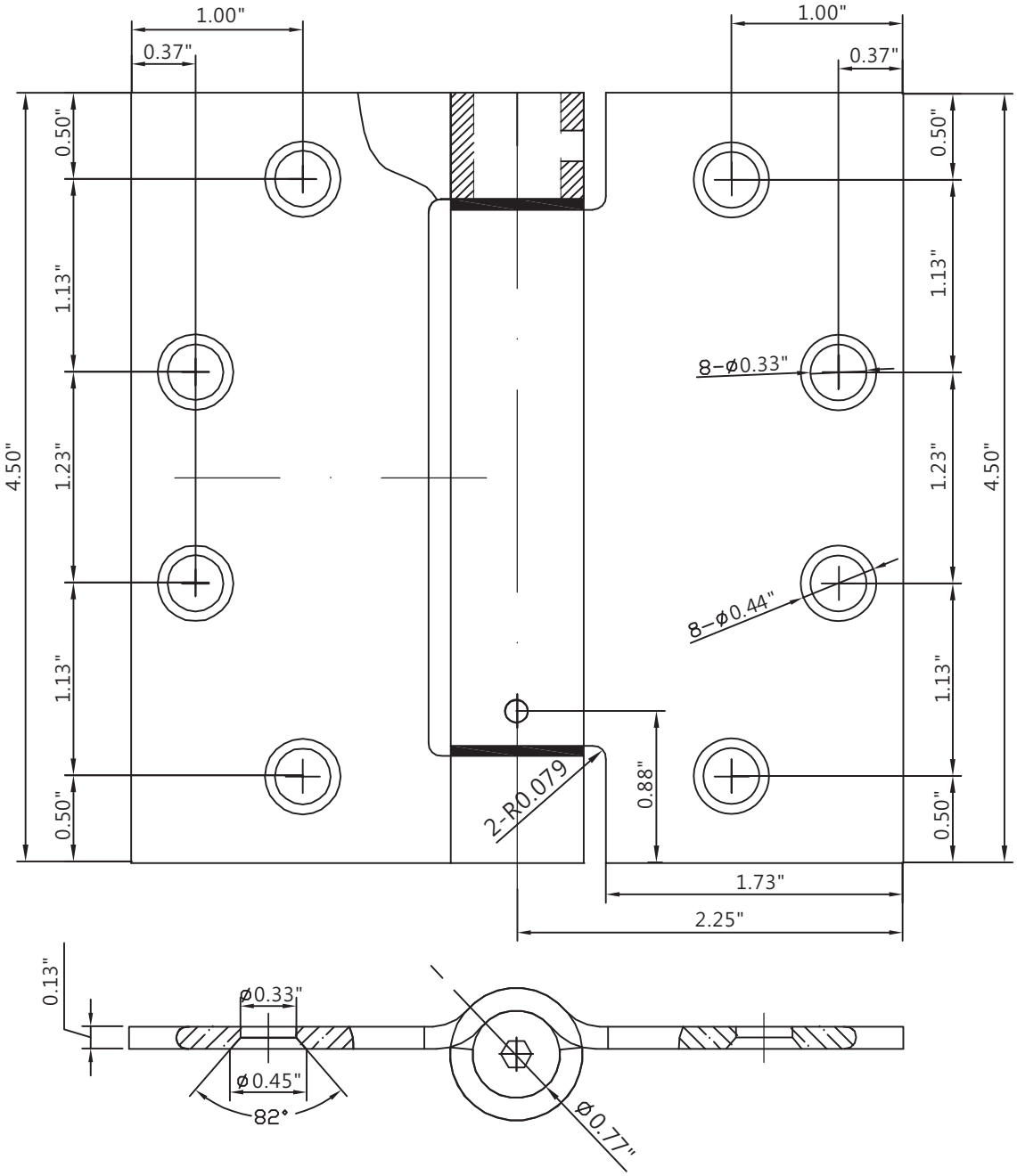

Since 1899 Great Value in Quality Hardware
S.Parker Hardware mfg corp
PARKER DRIVE PO Box9882. EnglewoodNJ07631-1127 •NU (201)569 1600
In NYC (212)925-6300 • FAX(201)569 1082 •
Website.www.sparker.com
Email:hardware@sparker.com

ITEM NO:	DESCRIPTION:		SCALE:
UL1278	UL1278 Spring Hinges 4-1/2" x4-1/2"		1:1
ANSI:	UNIT:	VERSION:	BY:
A156.1	inches	ver 1.0	C.C Chen

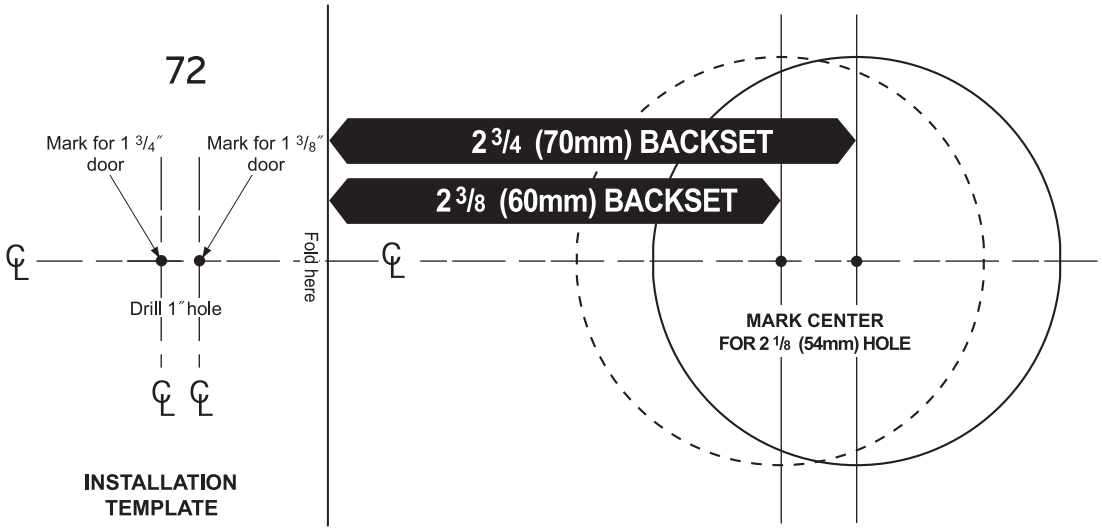
72
Mark for 1 3/4″ door
Mark for 1 3/8″ door
2 3/4 (70mm) BACKSET
2 3/8 (60mm) BACKSET
Fold here
Drill 1″ hole
MARK CENTER FOR 2 1/8 (54mm) HOLE
INSTALLATION TEMPLATE

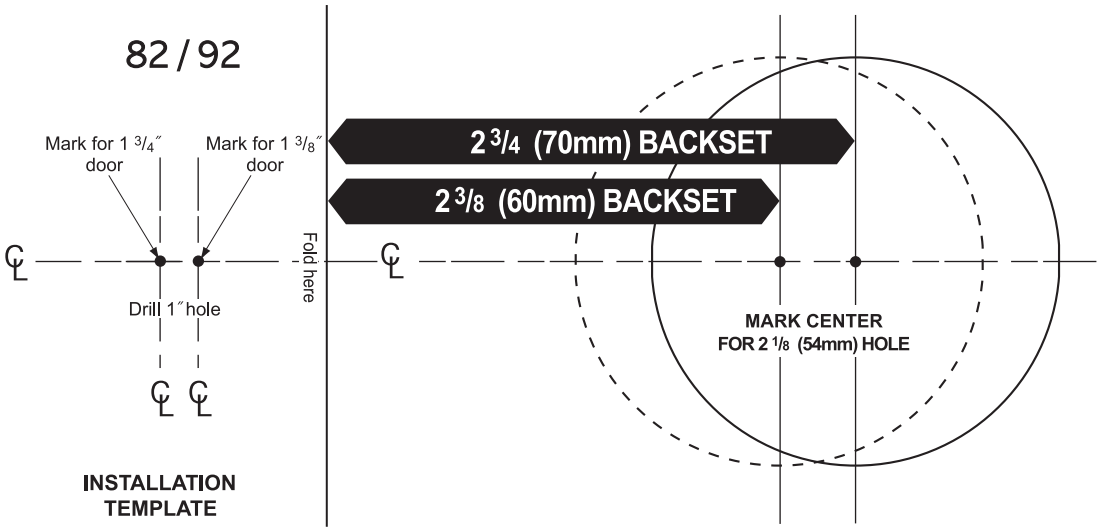
82 / 92
Mark for 1 3/4″ door
Mark for 1 3/8″ door
2 3/4 (70mm) BACKSET
2 3/8 (60mm) BACKSET
Fold here
Drill 1″ hole
MARK CENTER FOR 2 1/8 (54mm) HOLE
INSTALLATION TEMPLATE

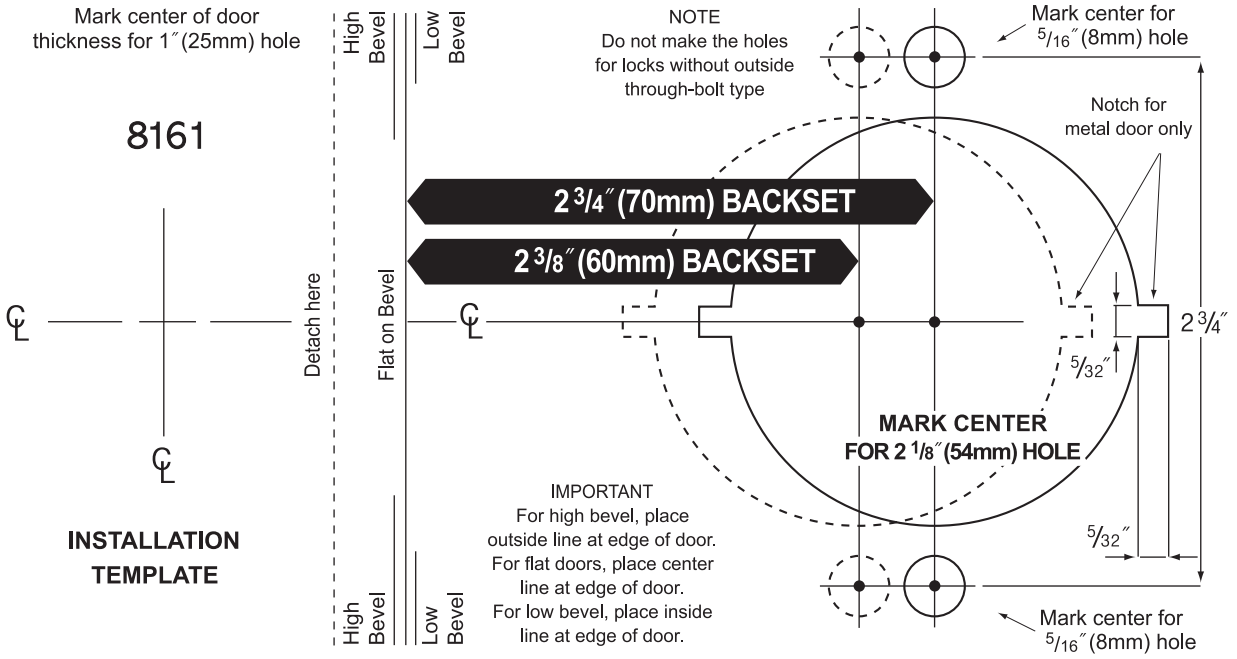
Mark center of door thickness for 1″ (25mm) hole
8161
INSTALLATION TEMPLATE
Detach here
High Bevel
Low Bevel
Flat on Bevel
High Bevel
Low Bevel
NOTE
Do not make the holes for locks without outside through-bolt type
2 3/4″ (70mm) BACKSET
2 3/8″ (60mm) BACKSET
IMPORTANT
For high bevel, place outside line at edge of door.
For flat doors, place center line at edge of door.
For low bevel, place inside line at edge of door.
Mark center for 5/16″ (8mm) hole
Notch for metal door only
2 3/4″
5/32″
MARK CENTER FOR 2 1/8″ (54mm) HOLE
5/32″
Mark center for 5/16″ (8mm) hole

B26

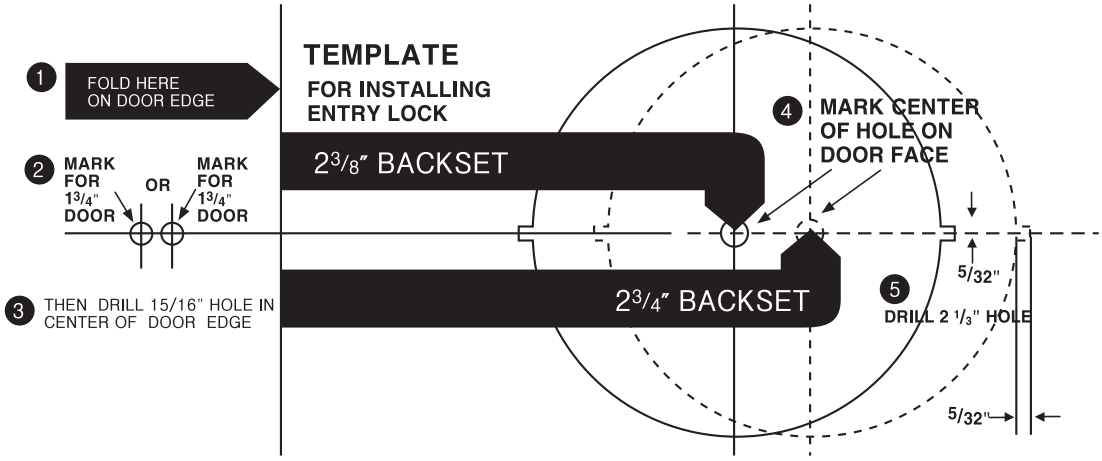
TEMPLATE
FOR INSTALLING
ENTRY LOCK
1 FOLD HERE
ON DOOR EDGE
2 MARK
FOR
1 3/4"
DOOR
OR
MARK
FOR
1 3/4"
DOOR
3 THEN DRILL 15/16" HOLE IN
CENTER OF DOOR EDGE
2 3/8" BACKSET
2 3/4" BACKSET
4 MARK CENTER
OF HOLE ON
DOOR FACE
5/32"
5 DRILL 2 1/3" HOLE
5/32"

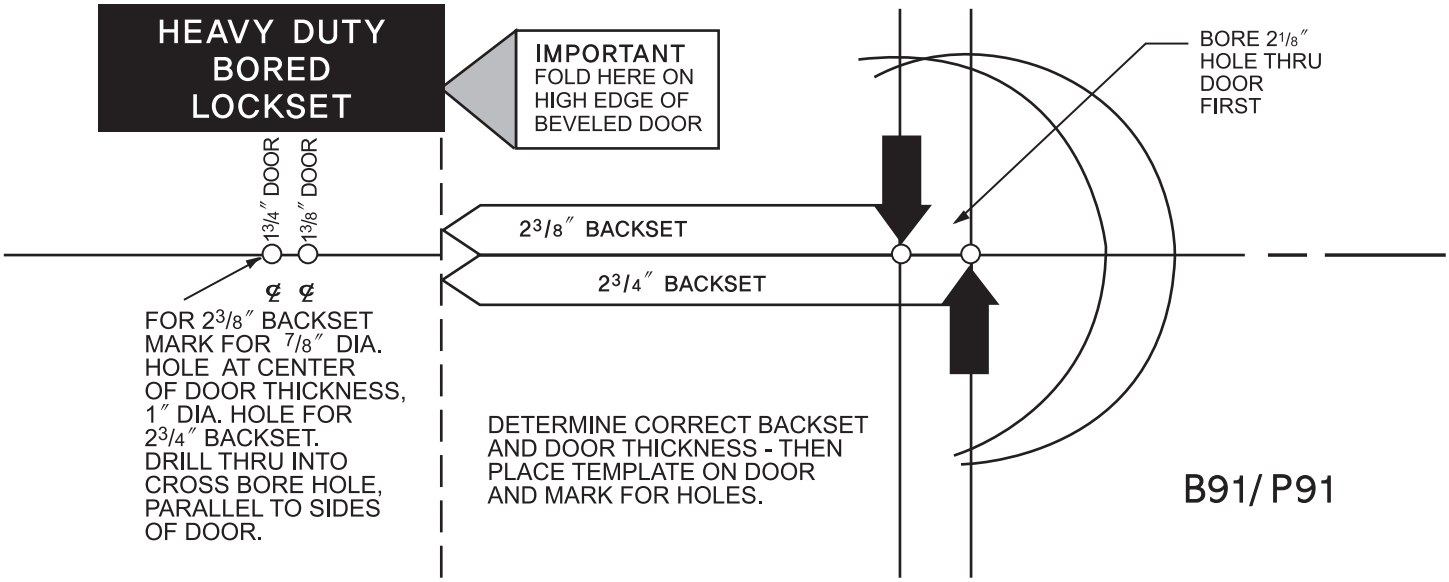
HEAVY DUTY BORED LOCKSET
IMPORTANT
FOLD HERE ON HIGH EDGE OF BEVELED DOOR
BORE 2 1/8″ HOLE THRU DOOR FIRST
1 3/4″ DOOR
1 3/8″ DOOR
2 3/8″ BACKSET
2 3/4″ BACKSET
FOR 2 3/8″ BACKSET MARK FOR 7/8″ DIA. HOLE AT CENTER OF DOOR THICKNESS, 1″ DIA. HOLE FOR 2 3/4″ BACKSET. DRILL THRU INTO CROSS BORE HOLE, PARALLEL TO SIDES OF DOOR.
DETERMINE CORRECT BACKSET AND DOOR THICKNESS - THEN PLACE TEMPLATE ON DOOR AND MARK FOR HOLES.
B91/ P91

HEAVY DUTY BORED LOCKSET

B8161

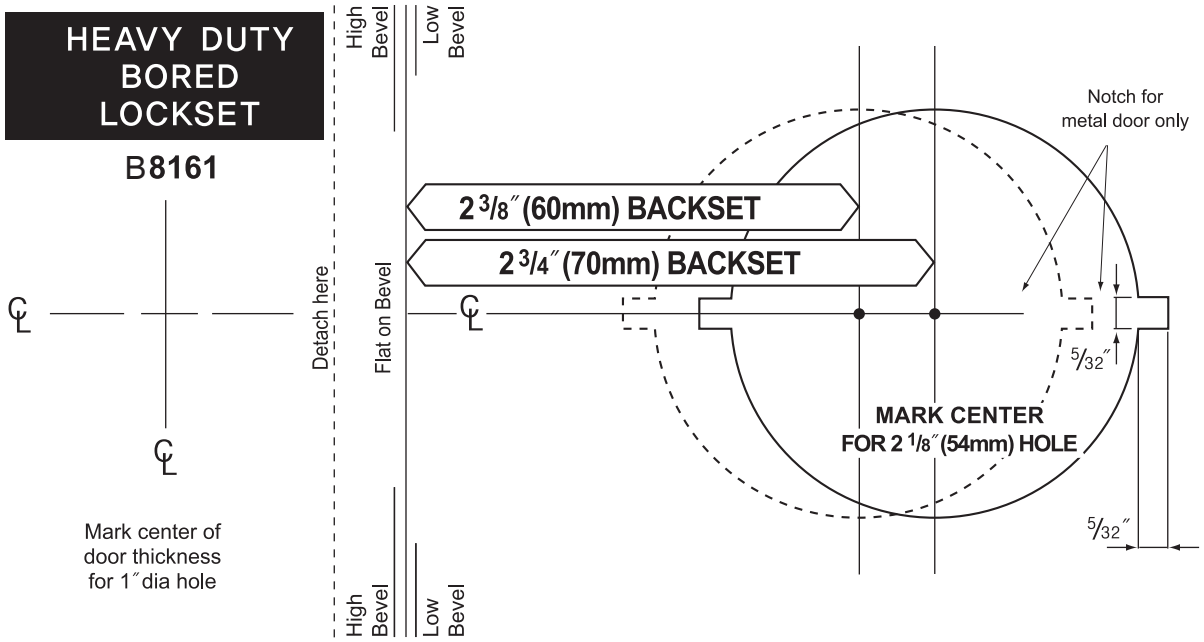

SMART PLUS

Touchpad Access Cylindrical Lock

Installation and Programming Instructions

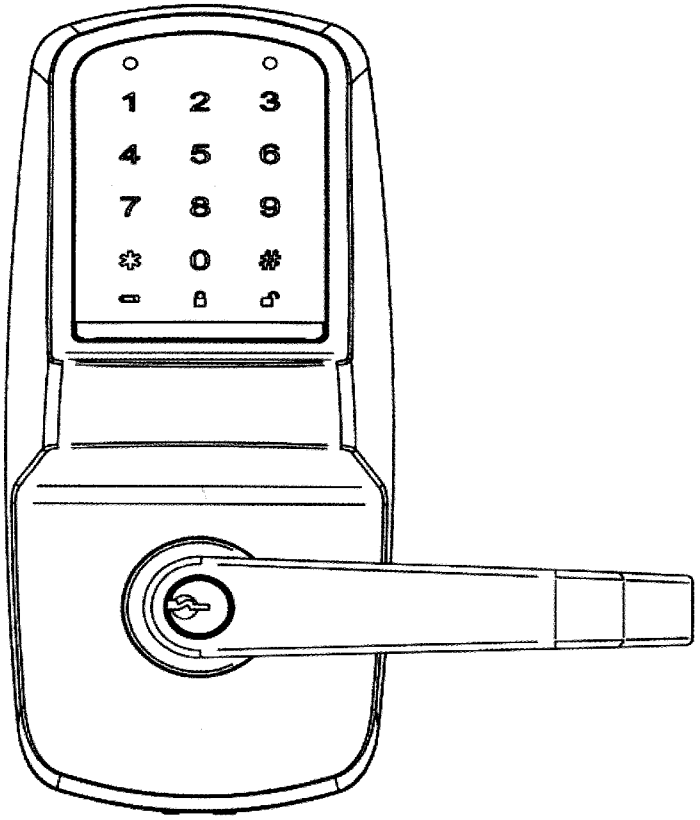

Please read these instructions carefully to prevent missing important Steps.

Please Note: Improper installations may result in damage to the lock and void the factory warranty.

INSTALLATION GUIDE

TABLE OF CONTENTS

WARNINGS

Warning: *Changes or modifications to this unit not expressly approved by the party responsible for compliance could void the user's authority to operate the equipment.*

- Change your PIN code regularly to ensure the security of your PIN code.
- Keep lock away from wet environments, including wet hands and direct contact with liquids.
- Do not exert excessive force or use sharp instruments to press the buttons on the lock.
- Ensure that the door is properly locked when going outside.
- Ensure the batteries have been installed according to the correct polarity.
- When the battery life expiration warning sounds, replace all batteries with new batteries within one week.
- Do not mix old batteries with new batteries.
- Do not hang on the lock or pull on it with excessive force.
- Use a soft, dry cloth to clean the lock and avoid cleaning with water, benzene or alcohol, etc.

INTRODUCTION

Congratulations on the purchase of your Touchpad Access Cylindrical Lock! Your lock combines a touch-sensitive number display pad and a robust cylindrical lock. You can program up to 1,000 users to open the lock with unique PIN codes and registered RF card.
This product is engineered for quick & easy installation and fits into the standard ANSI/BHMA A156.115 cylindrical locks with lever door prep with additional two (1" and 3/8") hole and 11 screws including latchbolt and strike.
This product is operated by four (4) “AA” alkaline batteries.

SPECIFICATIONS

- Latch brass - 1/2"(13mm) throw standard
- Deadlocking latch
- Outside lever controlled by touchpad, or key retracts latch
- Inside lever retracts latch
- Locks furnished for 1-3/8"(35mm) to 2"(51mm) doors.
- U.L. Listed

PARTS BREAKDOWN

Confirming the Box Contents The following items should be included in the box:

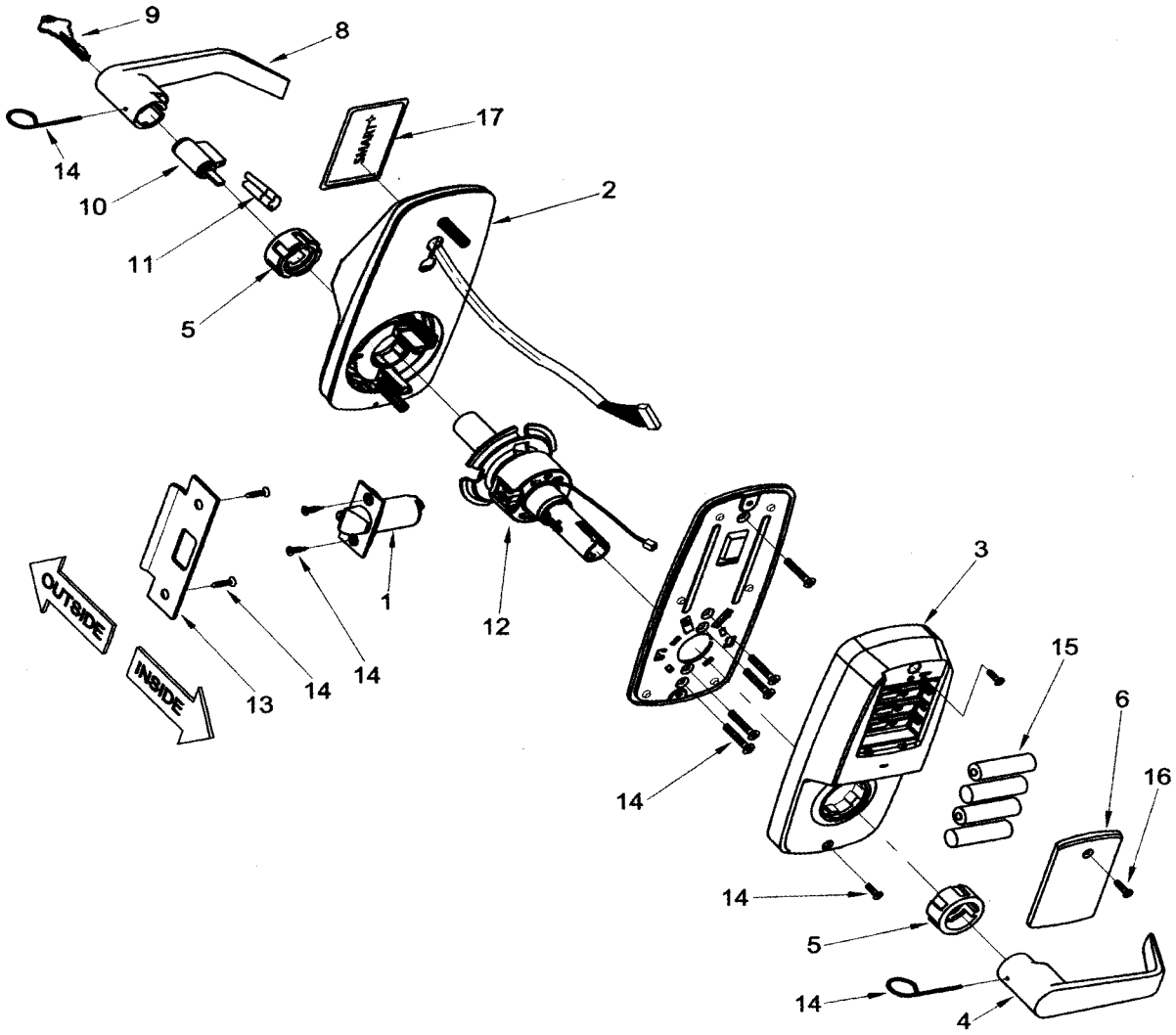

DOCUMENTS INCLUDED IN BOX:
(Installation Instructions / Programming Instructions / 1 Full Size Template)

PARTS BREAKDOWN (Continued)

ITEM NO.	DESCRIPTION	QTY.
1	Latch (2-3/4"(70mm) Backset (Standard))	1
2	Outside Assembly	1
3	Inside Escutcheon	1
4	Inside Lever	1
5	Spacer Bushing	2
6	Battery Cover	1
7	Mounting Plate Assembly	1
8	Outside Lever	1
9	Key (Provided with Cylinder)	2
10	Cylinder	1
11	Cylinder Retainer	2
12	Lock Body	1
13	Strike	1
14	Screw Pack ▪ (2) 12-24×3/4"(19mm) FL HD Combination Screws for Strike ▪ (2) 8-32×3/4"(19mm) FL HD Combination Screws for Latch ▪ (5) 10-32×1-1/5"(30mm) FL HD Machine Screws for Mounting Plate ▪ (2) M5.0xP0.8-3/4"(19mm) FL HD Machine Screws for Inside Escutcheon ▪ (1) Lever removal tool	1
15	AA Alkaline Batteries	4
16	Battery Cover Screw	1
17	RF Card	2

TOOLS FOR INSTALLATION

Door Prep

- Pencil
- Center punch
- Hammer
- Wood chisel
- Drill with 3/8" or 1/2" chuck
- 2-1/8"(54mm) hole saw
- 1"(25mm) boring bit
- 3/8"(9.5mm) & 7/64"(2.5mm) drill bit

Lock Installation

- #2 phillips screw driver
- Lever removal tool (supplied)

INSTALLATION INSTRUCTIONS

Step #1 Verify Hand and Bevel of Door

Stand on outside/locked side of the door when determining the door hand.
Note: *This lock is non-handed and the lever can be flipped around to the desirable hand.*

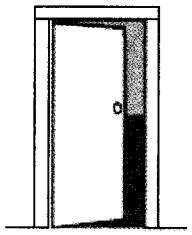

Left Hand
Hinges Left
Open Inward
"LH"

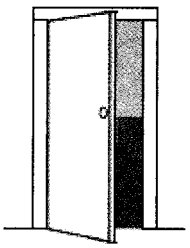

Left Hand
Reverse Bevel
Hinges Left
Open Outward
"LHRB"

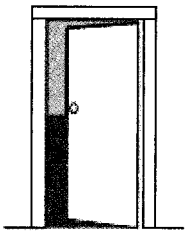

Right Hand
Hinges Right
Open Inward
"RH"

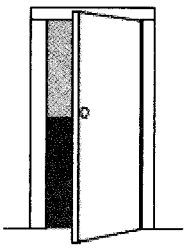

Right Hand
Reverse Bevel
Hinges Right
Open Outward
"RHRB"

Step #2 Door & Frame Preparation

IMPORTANT: *The accuracy of the door preparation is critical for the proper functioning and security of this lever handle lock. Misalignment can cause premature wear and tear and a lessening of security.*

For uncut Doors and Frames

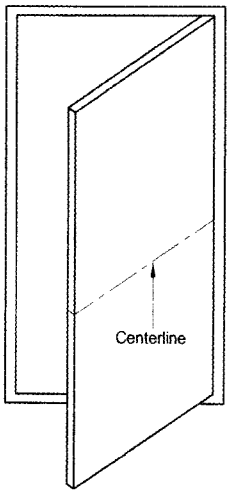

A. Mark Centerline

Draw a horizontal centerline for the lever (the centerline for the lock body hole) on the edge and on both sides of the door at the desired height above the finished floor.

Note 1: *The recommended height from the floor to the lock is 38"(97cm).*
Note 2: *If strike mortice already exist in frame, locate the horizontal centerline of the lock using strike mortice as reference.*

B. **Position Template and Mark Drill Points** Be sure to verify backset before marking and drilling door.

1. Fold and Place template on high edge of door at the horizontal centerline.
2. Mark centers of holes at proper backset. For beveled and square edge doors, mark both sides of the door.

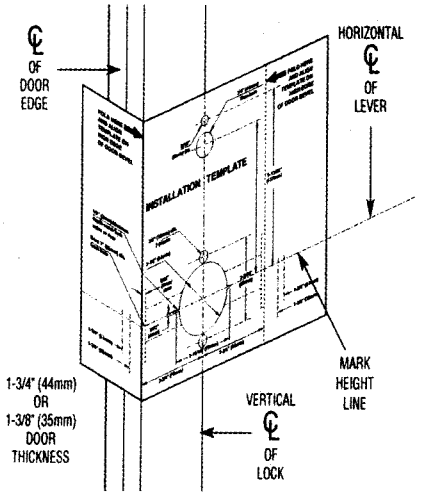

C. Drill Holes and Mortise for Latch face

1. Drill 2-1/8"(54mm) diameter hole through the door. Cut notches as shown on template.
2. Drill 1"(25mm) diameter hole through the door according to template.
3. Drill 1"(25mm) diameter hole in edge of door. Mortise for latch front 5/32"(4mm) deep 1-1/8" (29mm) wide × 2-1/4"(57mm) high.
4. Drill three (3) 3/8"(9.5mm) diameter holes through door.
5. Drill the holes for the screws used to install the latch. 7/64"(2.5mm)

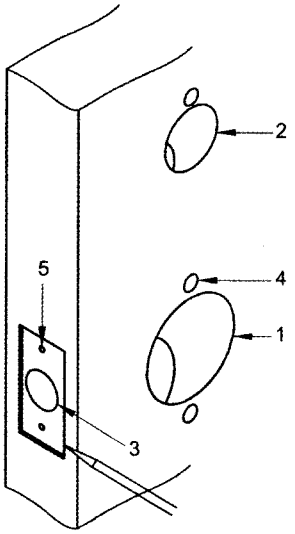

Note: *To avoid splintering wood doors, drill holes from both sides of the door.*

D. Prepare and Install Strike (Wood Frames Only)

1. Mark vertical line and centerline on frame exactly opposite center of latch hole.
2. Drill two (2) 1"(25mm) holes 5/16"(8mm) above and below centerline.
3. Mortise a cutout for strike. Use strike as a pattern for mortise. (Strike should fit flush with frame.)
4. Drill the holes for the screws used to install the strike. 7/64"(2.5mm)

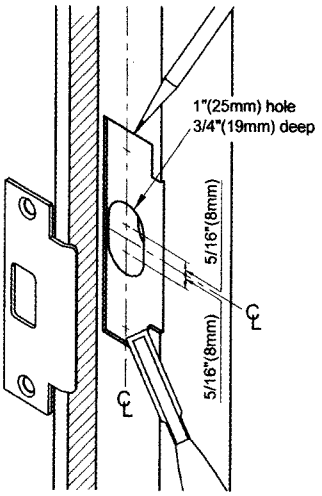

Step #3 Prepare Lock for Installation

A. Unpack the Lock

The lock is packed in such a way to represent how it will install on the door.

Before installation:

1. Disassemble the inside escutcheon.
   1) Remove the inside lever and spacer bushing with the lever removal tool provided.
   2) Separate the mounting plate assembly from the inside escutcheon.
2. Remove the battery cover
   1) Unscrew the battery cover screw using the #2 phillips screw driver.
   2) Take the battery cover off.

The outside assembly stays assembled.

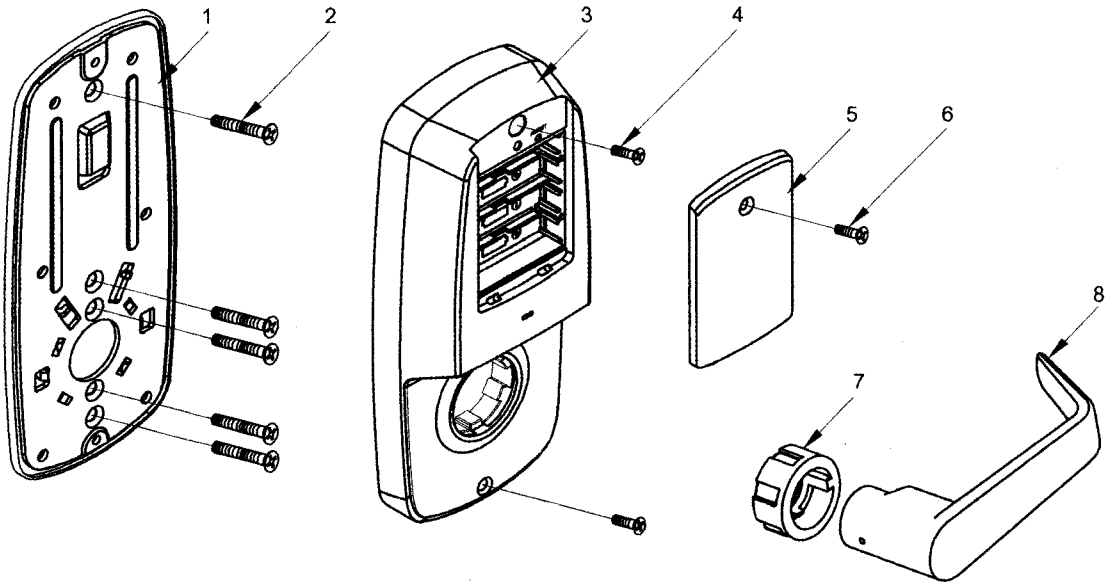

1. Mounting Plate Assembly
2. Mounting Plate Screws
3. Inside Escutcheon
4. Inside Escutcheon Screw
5. Battery Cover
6. Battery Cover Screw
7. Spacer Bushing
8. Inside Lever

B. Adjust for Door Thickness (If Necessary)

☞ Lock is factory-assembled for 1-3/4"(45mm) thick doors.

☞ It can be adjusted for door thickness range from 1-3/8"(35mm) to 2"(51mm).

Adjustment for different door thickness:

1. Remove outside lever, spacer bushing and outside assembly (See C below).
2. Rotate outside mounting rose plate for proper door thickness as shown below.
3. Position of bent taps as shown below must match (ensure the bent taps are horizontally crossed).
4. Reassemble outside assembly, spacer bushing and outside lever by reversing procedures.

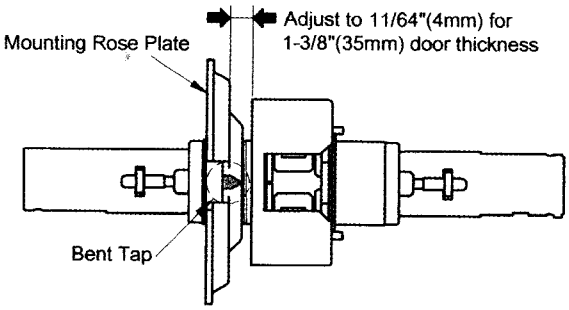

In case of 1-3/8"(35mm) thick door

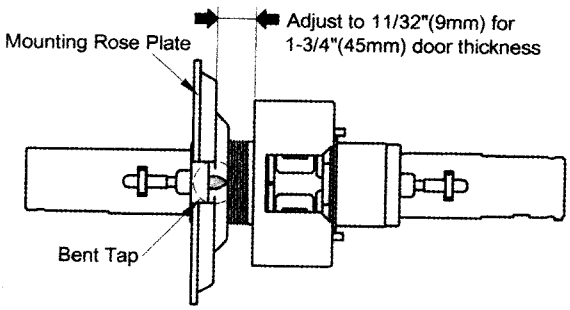

In case of 1-3/4"(45mm) thick door

C. How to Replace, Re-Key or Install Cylinder (If Required)

1. Remove outside lever
   1) Insert key, rotate 45° clockwise and hold.
   2) Depress lever retainer with lever removal tool (provided).
   3) Slide lever off lock.
2. With outside lever in hand, use standard pliers to pull out cylinder retainer.
3. Remove key and cylinder from outside lever.
4. Insert new cylinder.
5. Secure by pressing cylinder retainer flush with the lever.
6. Insert key into cylinder.
   Important: Make sure the key-cut side of key lines up facing towards the end of the lever. If the key is inserted incorrectly, the lock will reassemble and might appear to properly work; however, when the key is removed, the latchbolt will remain retracted.
7. Rotate key 45° counterclockwise.
   Push the lever onto the spindle until fully seated.
   Pull on lever to insure properly seated.

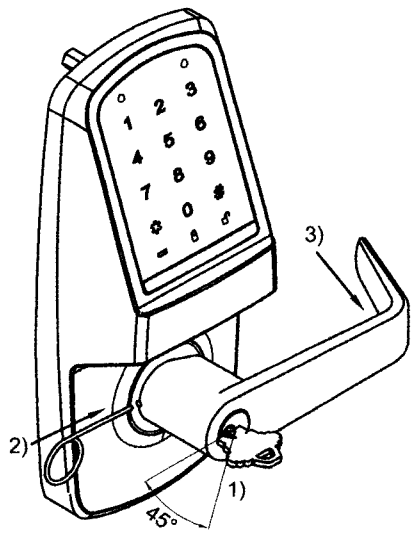

Step #4 Lock Installation

Outside Assembly

Inside Assembly

No	Designation
4	(5) 10-32 x 1-1/5"(30.5mm
5	Spacer Bushing
6	(2) M5 x P0.8 , 3/4"(19mm)

No	Designation
1	Spindle
2	Touchpad Cable
3	Motor Cable

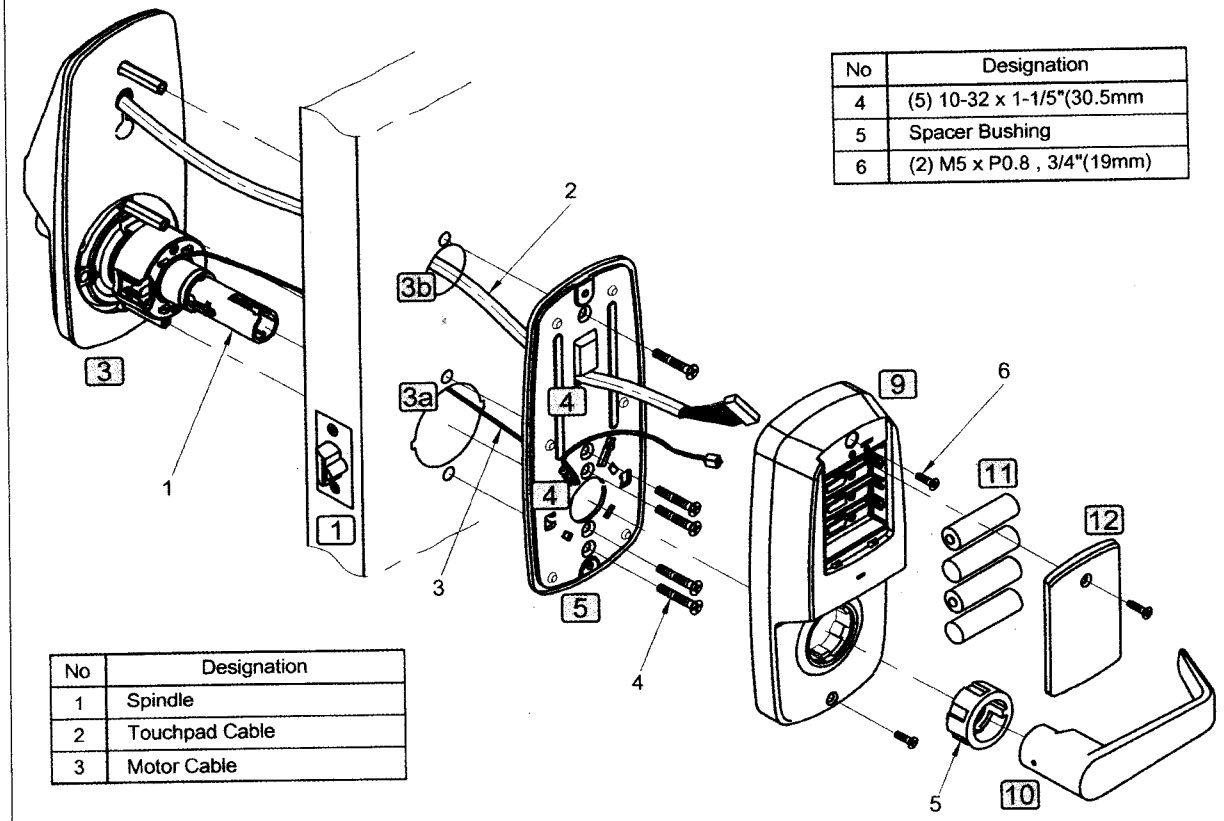

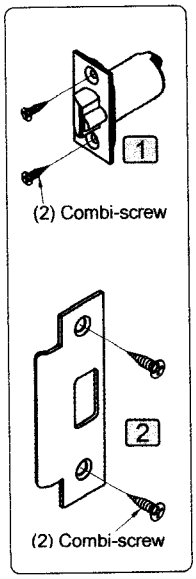

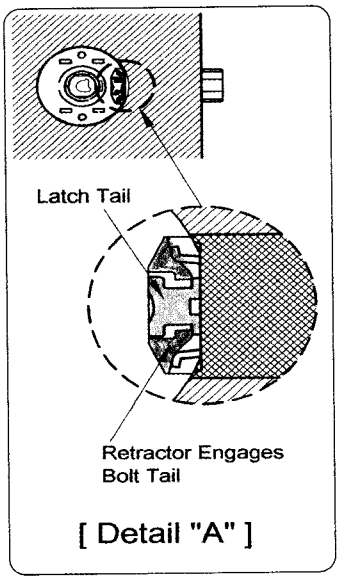

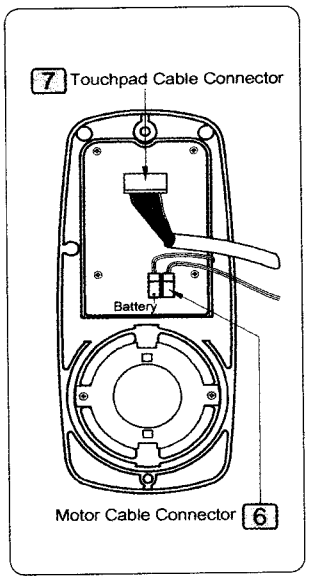

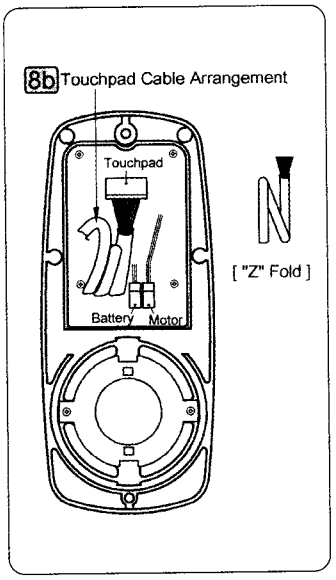

PROCEDURES

1. Install latch in door. Be sure that bevel edge of bolt faces strike. Attach with two screws supplied.

2. Install strike on the door frame.

3. Insert outside assembly through door, making sure that the lock body frame hooks latch case and retractor engages bolt tail(s). DO NOT FORCE (See Detail A above). If lock body does not engage latch easily, check door preparation for errors.

   3a. Guide motor cable (red and black wires) through 2-1/8"(54mm) diameter hole.
   3b. Guide touchpad cable through 1"(25mm) diameter upper hole.

4. Guide motor cable and touchpad cable through rectangular holes on mounting plate assembly (motor cable - below rectangular hole / touchpad cable - above rectangular hole).

5. Slide mounting plate assembly over outside assembly, lining up top and bottom screw guides with holes in door. Secure both assemblies with (5) 10-32x2-9/16" (35mm) mounting plate assembly screws. Do not over-tighten.

6. Attach motor cable connector to the inside escutcheon PC board lower header.

7. Attach the touchpad cable connector to the inside escutcheon PC board header as illustrated.

8. Slide inside escutcheon over mounting plate assembly.
   CAUTION :
   8a. Position motor cable against mounting plate assembly. Avoid pinching wires against spindle and any sharp metal part of the assembly.
   8b. "Z" fold touchpad wire cable and lay against the back recessed area of the inside escutcheon. Position and bend wires to prevent binding when installing the inside escutcheon over the mounting plate assembly.

9. Install and secure inside escutcheon with the (2) M5xP0.8-3/4"(19mm) screws through inside escutcheon and into the mounting plate assembly.

10. Slide inside lever onto spindle and push in to attach.

11. Install (4) AA alkaline batteries into controller compartment being careful to align +/- polarity properly.

12. Install battery cover and tighten screw.

Step #5 Test Lock Operation

If you encounter problems while performing any of the following tests, review the installation instructions and this guide and correct any problems.
CAUTION : DOOR MUST REMAIN OPEN DURING INSTALLATION. USE DOOR STOP.

Mechanical Test

A. Rotate the inside lever. Operation should be smooth, and the latch should retract.
B. Insert the key into keyway and rotate the key to open the door. Operation should be smooth, and the latch should retract.

Electronic Test

A. To unlock outside lever.
   1. Press the [**Wake Up**] button to illuminate the number pad with beep.
   2. Enter factory defaults Master Code [**123456**] and press the [*] button.
   3. Outside lever will retract the latch
B. In case of use with RF Card - refer to Programming Guide.

HARDWARE TROUBLESHOOTING

Test the Operation of the Mechanical Lockset

Cycle the lock in both the locked and the unlocked positions. If problems are found:

Symptom	Suggested Action
Door is binding	• Check that door and frame are properly aligned and door is free swinging. • Check hinges: They should not be loose or have excessive wear on knuckles.
Latchbolt will not deadlock	• Either strike is out of alignment or the gap between the door and frame is too great. • Realign strike or shim strike out towards flat area of latchbolt.
Latchbolt does not retract or extend properly	• Latchbolt tail and retractor are not properly positioned: ☞ Remove lockset. Look though 2-1/8" hole and verify latchbolt tail is centered between top and bottom of hole. ☞ Remove latchbolt and insert lockset. Look though latchbolt hole and verify retractor mouth centered in hole. If not, adjust outside mounting rose plate. ☞ If necessary, rebore holes to line up retractor and tail.

PROGRAMMING GUIDE

Take the time to read through this guide to familiarize yourself with the features and operation of the lock, and its quick and easy programming procedures.

TABLE OF CONTENTS

OVERVIEW

The SMART PLUS® Series Stand-Alone Access Control System is a series of State-of-the-Art Microprocessor-Based programmable Touchpad-Entry and Proximity Security Locks.

- User Access Methods
  - ☞ Touchpad Entered User PIN Codes.
  - ☞ RF Card.
  - ☞ Metal Key cylinder.
- User Features
  - ☞ 1000 users.
  - ☞ User code length from 3-6 digits.
- Preparing to Program your Lock
  - ☞ At first glance, your new lock may look complicated, but it is in fact designed in a very straightforward way. The keypad contains 12 buttons: numbers 1 through 9 plus zero, a star button [*] and a pound button [#].
  - ☞ These 12 buttons are all you need to program your lock.
  - ☞ All features can be programmed manually through the touchpad.
  - ☞ This guide will show you how to program your lock manually.
- The lock can be programmed for Passage mode, Lockout mode settings. Auto re-lock time and Beep volume are adjustable and can be changed from factory default.

OPERATION OF LOCK

Opening the door with a PIN Code

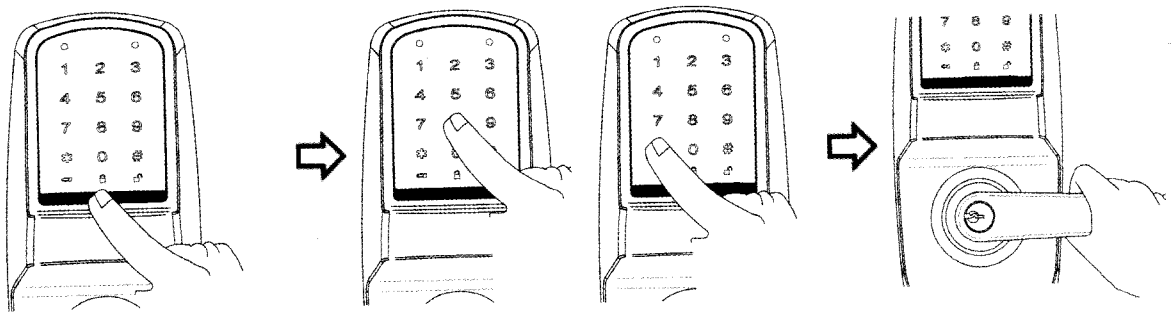

Press the **[Wake Up]** button to illuminate the number pad with beep.

Enter a registered PIN Code and press [*] button.

Turn lever to open door.

Opening the door with a RF Card

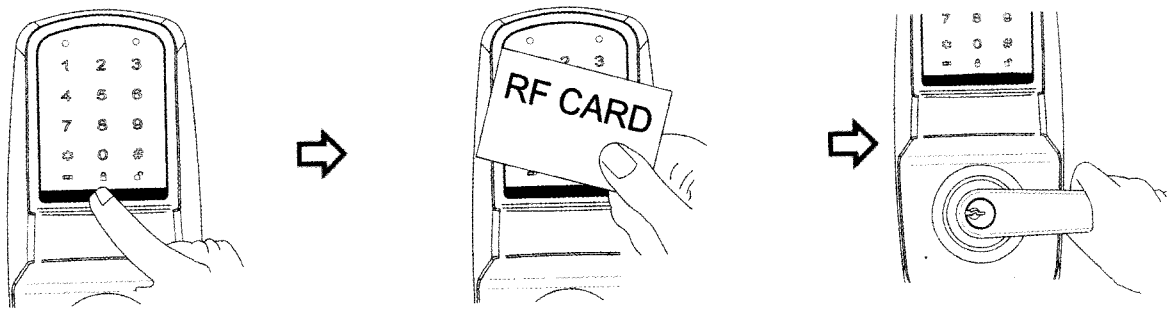

Press the **[Wake Up]** button to illuminate the number pad with beep.

Place a registered RF Card in front of the touchpad like above figure.

Turn lever to open door.

Opening the door with a Metal Key

A. Insert the key into keyway.
B. Rotate the key to open the door.

Factory Defaults

Settings	Factory Defaults
Master PIN Code	123456
Lockout Mode	Unprogrammed
Passage Mode	Unprogrammed
Re-lock Time	5 seconds
Wrong Code Entry Limit	5 times
Shut Down Time	60 seconds
Beep Volume	2 levels

Scope of Master, Manager, User Settings

Settings	Master	Manager	User
Entrance Authorization	√	√	√
Register/Change Master PIN Code	√		
Register/Delete Manager PIN Code	√		
Register/Delete User PIN Code	√		
Register/Delete RF Card	√		
Registering One-time User PIN Code	√		
Setting Up/Releasing User Lockout Mode	√	√	
Entrance Authorization at Lockout Mode	√	√	
Setting Up/Releasing Passage Mode	√	√	
Setting Up the Sound Volume	√	√	
Setting Up the Re-lock Time	√	√	

PROGRAMMING FEATURES

Outside

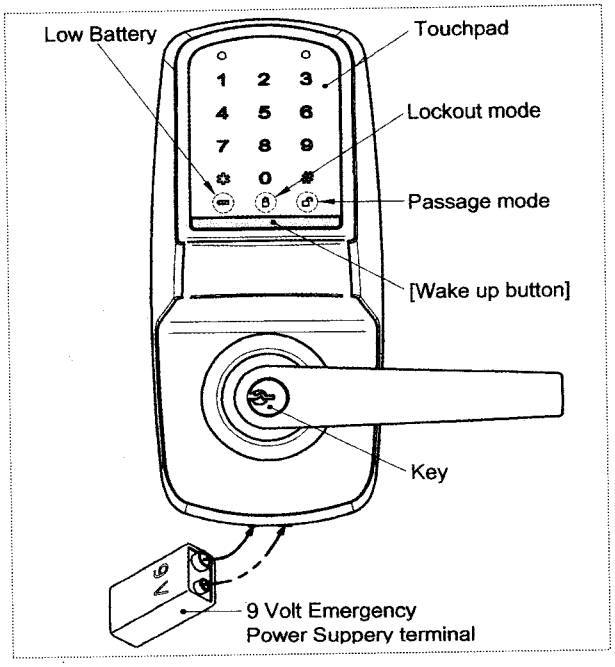

Inside

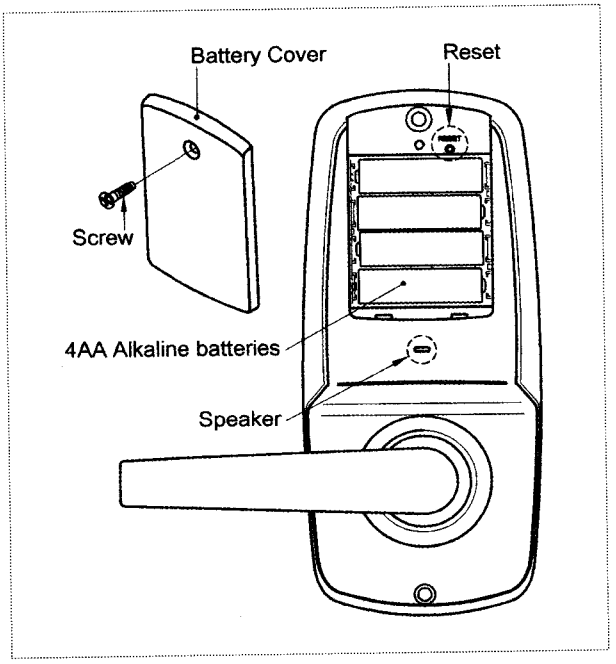

Menu and Icons

Symbols	Description
W	Press the **[Wake Up]** button on the outside assembly. It is used to start inputting or to exit the Program mode.
0 ~ 9	Press the indicated number buttons.
*	Press the [*] button. It is used to complete an input process.
#	Press the the [#] button. It is used to enter Programming mode.
Mstr PIN	Enter the Master PIN Code (3~6 digits in length). **[Factory Default: 123456]**
Mgr PIN	Enter the Master PIN Code (3~6 digits in length).
U PIN	Enter the User PIN Code (3~6 digits in length).
	Low Battery Icon. When battery power is low, the low battery icon will begin blinking.
	Passage Mode Icon.
	Lockout Mode Icon

To Begin Programming:

The Lock is preset at the factory with Master PIN Code [123456].

A. Press the W button to illuminate the number pad with beep.
B. Entering 1 2 3 4 5 6 * will unlock the lock allowing the outside lever to retract the latchbolt.

Note: *The Master Code must be changed (i.e., "Forced Change") from the factory default prior to adding users.*

Feature Programming Through Master Code

Procedure Description

Press the Wake Up W button to activate.
Step 1. Enter the Master PIN Code and press the # button.
Step 2. Enter Program Code and press the # button.
Step 3. Enter digit corresponding to the function to be performed and press the # button.
Step 4. Press the # button to confirm.
Step 5. Press the * button to complete the process and conclude the Programming session.

Change Default Master Code Before Programming

① ② ③ ④ ⑤

W → Default Mstr PIN # → 1 # → Enter New Mstr PIN # → Enter New Mstr PIN # → *

Register User PIN Code

W → Mstr PIN # → 2 # → Enter U PIN # → # → *

Delete registered PIN Code except Master PIN Code

W → Mstr PIN # → 3 # → Registered U PIN # → # → *
Registered Mgr PIN # → # → *

Register One-Time User PIN Code

W→ Mstr PIN #→4 #→ One-Time U PIN #→ # →*

Register Manager PIN Code

W→ Mstr PIN #→6 #→ Enter Mgr PIN #→ # →*

Register RF Card

W→ Mstr PIN #→8 #→ Enter the Card Register No. (1~999) # → Place the RF Card on Touchpad # →*

Delete RF Card

W→ Mstr PIN #→9 #→ Enter the Card Registered No. # → # →*

Setting Up/Releasing Passage Mode

W→ Mstr PIN or Mgr PIN #→5 #→1 Enable *
→3 Disable *

☞ **Another method to disable Passage Mode**: Press the W button for 3seconds, will disable Passage Mode.

Setting Up/Releasing Lockout Mode

W→ Mstr PIN or Mgr PIN # →7 #→1 Enable *
→3 Disable *

Setting Up the Sound Volume or Re-lock Time

W→ Mstr PIN or Mgr PIN #→0 #→1 Volume #→1~4 *
→2 Re=lock Time #→1~9 *

☞ **Sound Volume**: 1 minimum volume ~ 3 maximum volume, 4 mute.
☞ **Re-lock Time**: 1 to 9 seconds through feature settings. (factory default 5 five seconds)

PROGRAMMING

Change Default Master Code Before Programming

Note: The factory default Master Code must be changed prior to adding users.

W → Default Mstr PIN # → 1 # → Enter New Mstr PIN # → Enter New Mstr PIN # → *

Press the W button to activate.

1. Enter the default Master PIN Code 1 2 3 4 5 6 and press the # button.
   Green and Red LED blinks.
2. Enter the Program Code 1 and press the # button.
   Green and Red LED blinks.
3. Enter the new Master PIN Code and press the # button.
   Beep melody with Green LED blinks.
4. Enter the new Master PIN Code again and press the # button.
   Beep melody and Number pad blink one time.
5. Press the * button.
   Completes with beep sound.

[**For example**, if you want your new Master PIN Code to be "2580".
Press: W → 1 2 3 4 5 6 # → 1 # → 2 5 8 0 # → 2 5 8 0 # → *]

Now that the Master Code has been changed, there is no need to change it again (unless you want to).

Register User PIN Code

W → Mstr PIN # → 2 # → Enter U PIN # → # → *

Press the W button to activate.

1. Enter the Master PIN Code and press the # button.
   Green and Red LED blinks.
2. Enter the Program Code 2 and press the # button.
   Green and Red LED blinks.
3. Enter the new User PIN Code and press the # button.
   Beep melody with Green LED blinks.

4. Press the # button.
   Beep melody and Number pad blink one time.
   ☞ [Repeat steps 3 and 4 for each new user (if necessary).]
5. Press the * button.
   Completes with beep sound.

[**For example**, John Smith and Jessica are users. You want to register their User PIN Codes "111222" and "223344".
Program the lock by pressing: W→MstrPIN #→2 #→1 1 1 2 2 2 #→# →2 2 3 3 4 4 #→#→*]

Delete registered PIN Code except Master PIN Code

W→ MstrPIN #→3 #→ Registered U PIN #→ # → *

Press the W button to activate.

1. Enter the Master PIN Code and press the # button.
   Green and Red LED blinks.
2. Enter the Program Code 3 and press the # button.
   Green and Red LED blinks.
3. Enter the registered PIN Code and press the # button.
   Beep melody with Green LED blinks.
4. Press the # button.
   Beep melody and Number pad blink one time.
   ☞ [Repeat step 3 and 4 for delete of another registered PIN Code (if necessary).]
5. Press the * button again.
   Completes with beep sound.

[**For example**, You want to delete registered PIN Codes "111222" and "223344".
Program the lock by pressing: W→MstrPIN #→3 #→1 1 1 2 2 2 #→# →2 2 3 3 4 4 #→#→*]

Register One-Time User PIN Code

W→ MstrPIN #→4 #→ One-Time U PIN #→ # → *

Press the W button to activate.

1. Enter the Master PIN Code and press the # button.
   Green and Red LED blinks.
2. Enter the Program Code 4 and press the # button.
   Green and Red LED blinks.
3. Enter the One-Time User PIN Code and press the # button.
   Beep melody with Green LED blinks.
4. Press the # button.
   Beep melody and Number pad blink one time.
   ☞ [Repeat steps 3 and 4 for each new one-time user (if necessary).]
   ☞ You may register up to 3 One-Time User PIN Codes.
5. Press the * button.
   Completes with beep sound.

Register RF Card

W→ MstrPIN #→8 #→ Enter the Card Register No. (1~999) #→ Place the Card in front of the Touchpad # → *

Press the W button to activate.

1. Enter the Master PIN Code and press the # button.
   Green and Red LED blinks.
2. Enter the Program Code 8 and press the # button.
   Green and Red LED blinks.
3. Enter the new RF Card Register Number(1~999) and press the # button.
   Green and Red LED blinks.
4. Place a RF Card about 2 seconds in front of the touchpad (hear beep melody and Green LED blinks.) and press the # button.
   Beep melody and Number pad blink one time.
   ☞ [Repeat step 3 and 4 for each new RF Card Register (if necessary)].
5. Press the * button.
   Completes with beep sound.

[**For example**, you wish to register two RF Cards for User 11 and User 12 respectively.
Press: W→MstrPIN #→8 #→11 #→place the first card in front of the touchpad (hear beep melody and Number pad blink one time) # and then within 20 seconds, 12 #→place the second card in front of the touchpad (hear beep melody and Number pad blink one time) #→*]

Delete RF Card

W→ MstrPIN #→9 #→ Enter the Card Registered No. #→#→ *

Press the W button to activate.

1. Enter the Master PIN Code and press the # button.
   Green and Red LED blinks.
2. Enter the Program Code 9 and press the # button.
   Green and Red LED blinks.
3. Enter the delete card number (registered number) and press the # button.
   Beep melody and Green LED blinks.
4. Press the # button.
   Beep melody and Number pad blink one time.
   ☞ [Repeat steps 3 and 4 for delete of another card number(if necessary)].
5. Press the * button.
   Completes with beep sound.

[**For example**, you wish to delete two RF Cards for User 11 and User 12 respectively.
Press: W→MstrPIN #→9 #→11 #→#→12 #→#→*]

Setting Up/Releasing Passage Mode

W→ MstrPIN or MgrPIN #→5 #→1 Enable *
→3 Disable *

Press the W button to activate.

1. Enter the Master PIN Code or Manager PIN Code and press the # button.
   Green and Red LED blinks.
2. Enter the Program Code 5 and press the # button.
   Green and Red LED blinks.
3. Enter the Enable Code 1 or Disable Code 3 and press the * button.
   Completes with beep sound.

Another method to disable Passage Mode: Press the W button for 3seconds, will disable Passage Mode.

Setting Up/Releasing Lockout Mode

W → Mstr PIN or Mgr PIN # → 7 # → 1 Enable *
→ 3 Disable *

Press the W button to activate.

1. Enter the Master PIN Code or Manager PIN Code and press the # button.
   Green and Red LED blinks.
2. Enter the Program Code 7 and press the # button.
   Green and Red LED blinks.
3. Enter the Enable Code 1 or Disable Code 3 and press the * button.
   Completes with beep sound.

Register Manager PIN Code

W → Mstr PIN # → 6 # → Enter Mgr PIN # → # → *

Press the W button to activate.

1. Enter the Master PIN Code and press the # button.
   Green and Red LED blinks.
2. Enter the Program Code 6 and press the # button.
   Green and Red LED blinks.
3. Enter the Manager PIN Code and press the # button.
   Beep melody with Green LED blinks.
4. Press the # button.
   Beep melody and Number pad blink one time.
   ☞ Repeat steps 3 and 4 for another manager PIN Code (if necessary).
   ☞ You may register up to 3 Manager PIN Codes.
5. Press the * button again.
   Completes with beep sound.

MISCELLANEOUS INFORMATION

Returning the Lock to Factory Defaults

1. Remove battery cover using #2 phillips screw driver.
2. Push and hold the Reset Button with the lever removal tool provided for 10 seconds.
3. After beep, all numbers of touchpad will blink about 20 seconds. Please wait until the blinks stop.

Note:
All registered Master, Manager and User PIN Code data, etc., will be deleted, and the lock will reset to the factory default.

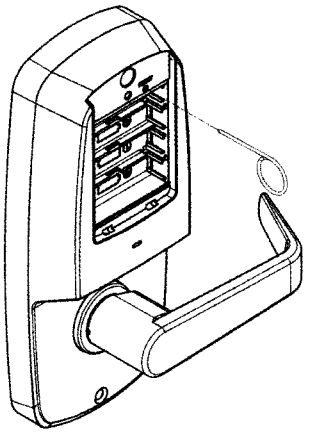

9V Battery Emergency Power

9V battery connections are located under the front of the outside assembly.
In the case that the 4 AA alkaline batteries are completely discharged, a 9V battery can be used to supply power to the lock.
While connecting the 9V battery, the lock can be operated as normal, thus granting access so the 4 AA alkaline batteries can be replaced.
Discharged batteries should be replaced right away.

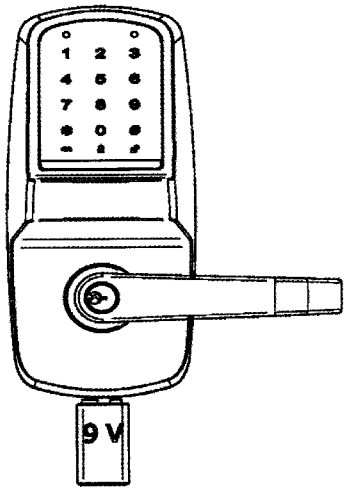

Battery Replacement

When battery power is low, the low battery icon will begin blinking with beep sound. Always replace weak batteries as soon as possible. The locks use four (4) AA-size 1.5 volt alkaline batteries.

GLOSSARY

Wake Up Button: Pressing this button activates the number pad. Enter the PIN Code while the number pad is illuminated, and when not illuminated press the [Wake Up] button to illuminate the pad, It is also used to quit the Program mode.

Master PIN Code: The Master PIN Code is used for programming User codes and feature settings. The Master PIN Code will operate the lock. The Master PIN Code is a factory default setting.

Manager PIN Code: The Manager PIN Code is used for programming Passage Mode, Lockout Mode and Sound Volume and Auto re-lock time settings. The Manager PIN Code will operate the lock. User can program in up to 3 different Manager PIN Codes.

User PIN Code: The User PIN code is used for operating the lock.

One-Time User PIN Code: This PIN Code can only be used once and the PIN information is deleted automatically after use. User can program in up to 3 different One-Time User PIN Codes.

Passage Mode: Enabling Passage Mode allows continuous entry for non-restricted traffic. Passage Mode is enabled or disabled through feature programming by either the Master or Manager PIN Code. When the unit is in Passage Mode, the unlocked padlock icon will appear on the screen.

Lockout Mode: This feature is enabled by either the Master or Manager PIN Codes. When enabled, it restricts all User PIN Code access except Master and Manager PIN Codes. When the unit is in Lockout, the padlock icon will appear on the screen.

Low Battery: When battery power is low, the low battery icon will begin blinking. If battery power is completely lost, the key and cylinder can be used.

Re-lock Time: After successful code entry and the unit unlocks, it will automatically re-lock after a default of five (5) seconds. Re-lock time is adjustable from one (1) to ten (10) seconds through feature settings.

Beep Volume: It sets the volume of sound emitted during the inputting of numbers and opening or locking the door. (Level 1 ~ Level 4) The sound is muted at Level 4, and is at the maximum volume at Level 3. The factory default is Level 2.

Shut Down Time: The unit will shut down for a default of sixty (60) seconds and not allow operation after the wrong code entry limit has been met. Shut down time is factory default settings. When the unit is in Shut Down, the padlock icon will be flashing.

Wrong Code Entry Limit: After a default of five (5) unsuccessful attempts at entering a valid PIN Code the unit will shut down and not allow operation. Wrong code entry limit is a factory default setting.

TROUBLESHOOTING

Symptom	Suggested Action
There is no power.	• Check if the batteries are faulty or in the correct polarity. • Check if the batteries are inserted properly or completely discharged.
I can't change the Master PIN Code.	• There was a delay while entering the new Master PIN Code. The number pad must be illuminated while the new Master PIN Code is being entered. Also, after entering the first digit the next digit must be entered within 10 seconds. • If batteries are discharged, try again after replacing the batteries. • Refer to the changing the Master PIN Code section in the programming instructions and try changing again.
I can't change the User PIN Code.	• Another PIN Code is already registered. • If the PIN Code is less than 3 digits or over 6 digits in length, change it to be within 3~6 digits and register again.
I entered registered PIN Code and pressed the [*] button, but the door won't open.	• Check that the registered PIN Code was entered correctly. • If the number pad illumination is turned off while entering the PIN Code, the button input is not registered. Press the [Wake Up] button to illuminate the number pad and enter PIN Code again. (The number pad illumination is turned off automatically if there is no input within 10 seconds.)
The door won't lock automatically when I close it.	• Check if Passage mode is set. If the door opens just by turning the handle on the inside assembly down without any input on the lock, it means the Passage mode is enabled. • If the door doesn't lock automatically when Passage mode is disabled, then the lock has been installed incorrectly. Contact a digital lock outlet and have the lock reinstalled.
The lock issues the low voltage warning sound when I activate the lock.	• The sound indicates that it is time to replace the batteries. Replace with new batteries within a week.
Lock does not respond – door is locked and inaccessible.	• Batteries may be completely discharged. • Use mechanical key to gain entry and replace batteries. • Connect a 9-volt battery to the emergency power supply terminal which is located on the outside escutcheon, under the lever. With the 9-volt battery connected, press the wake up button and enter PIN code. Replace batteries.
The unit is on for a while, and then shows no reaction. Lights dim.	• The batteries do not have enough power. Replace the batteries.

USER CODE RECORD SHEET

User Number	User Name	User PIN Code (3~6 digits)						RF Card registered No.

※ We recommend placing this record sheet in a safe and secure place.

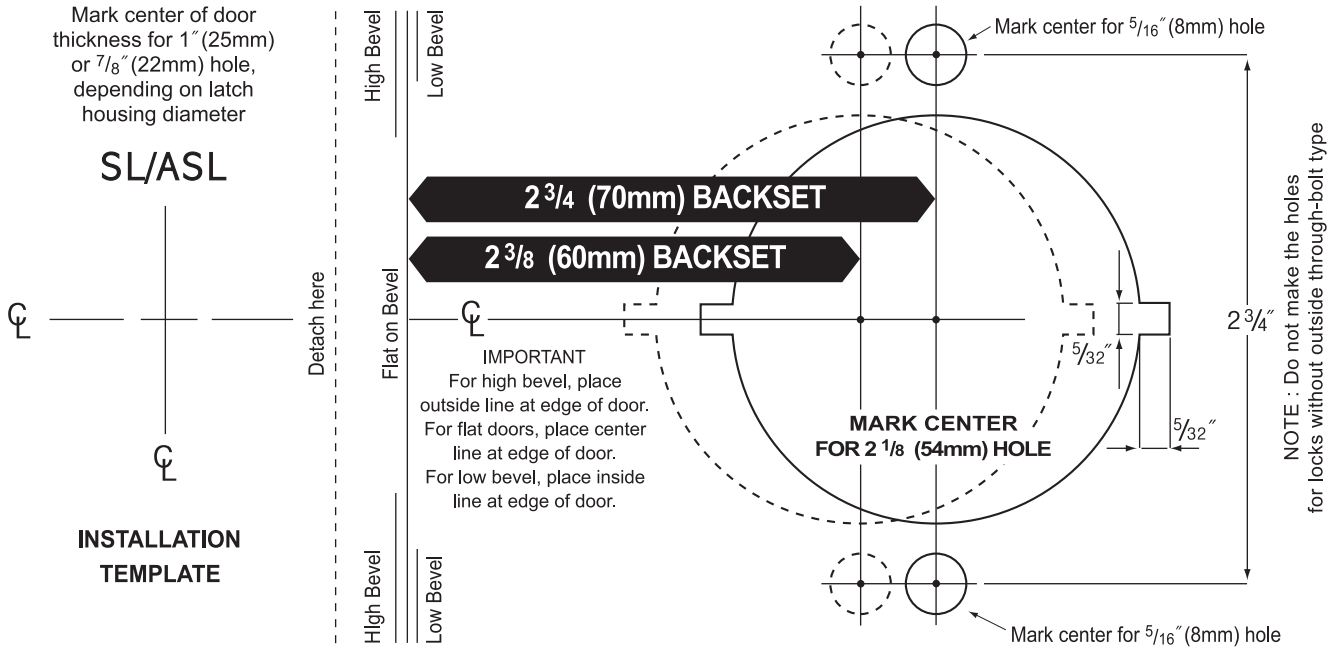
Mark center of door thickness for 1″(25mm) or 7/8″(22mm) hole, depending on latch housing diameter
SL/ASL
INSTALLATION TEMPLATE
Detach here
High Bevel
Low Bevel
Flat on Bevel
High Bevel
Low Bevel
2 3/4 (70mm) BACKSET
2 3/8 (60mm) BACKSET
IMPORTANT
For high bevel, place outside line at edge of door.
For flat doors, place center line at edge of door.
For low bevel, place inside line at edge of door.
MARK CENTER FOR 2 1/8 (54mm) HOLE
Mark center for 5/16″(8mm) hole
Mark center for 5/16″(8mm) hole
5/32″
5/32″
2 3/4″
NOTE : Do not make the holes for locks without outside through-bolt type

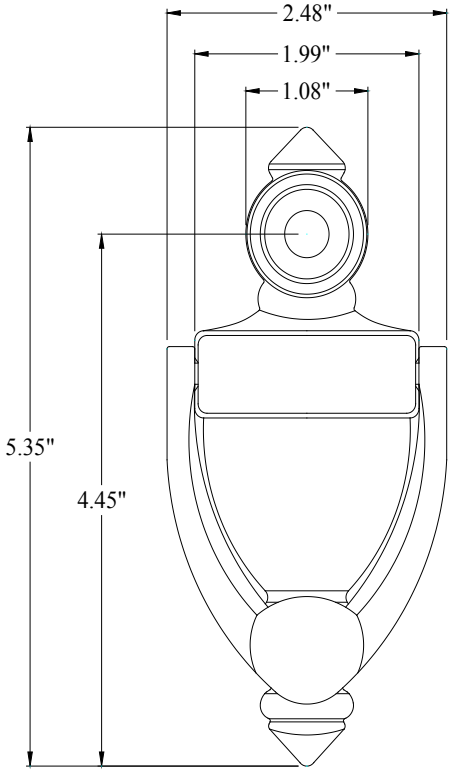

BIN81810

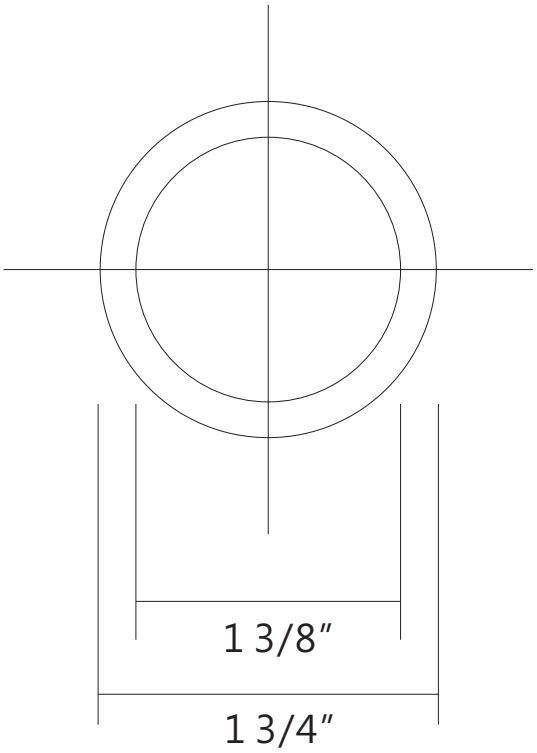

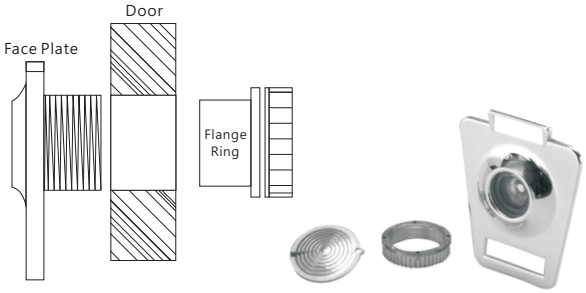

Since 1899 Great Value in Quality Hardware
S.Parker Hardware mfg corp
PARKER DRIVE PO Box9882. EnglewoodNJ07631-1127 •NU (201)569 1600
In NYC (212)925-6300 • FAX(201)569 1082 •
Website.www.sparker.com
Email:hardware@sparker.com

ITEM NO:	DESCRIPTION:		SCALE:
1601	Door Knockers and Viewers without Knocker		1:1
ANSI:	UNIT:	VERSION:	BY:
	inches	ver 1.0	C.C Chen

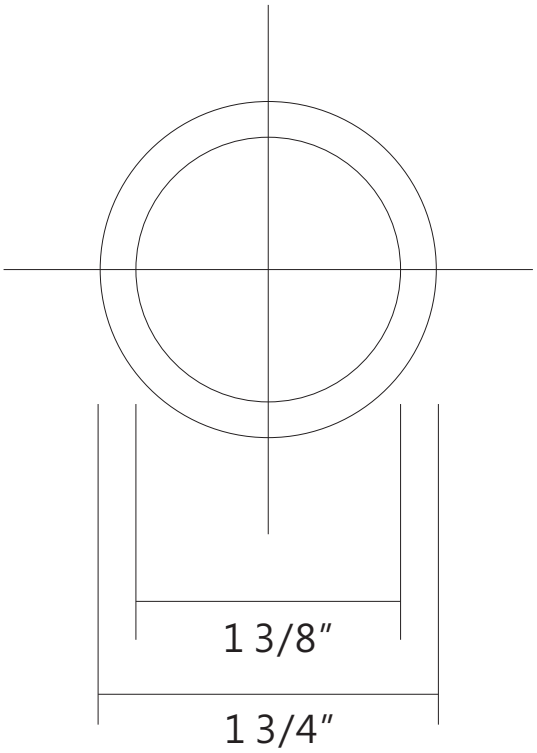

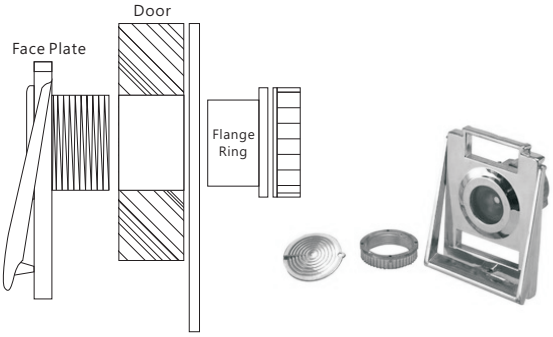

Since 1899 Great Value in Quality Hardware
S.Parker Hardware mfg corp
PARKER DRIVE PO Box9882. EnglewoodNJ07631-1127 •NU (201)569 1600
In NYC (212)925-6300 • FAX(201)569 1082 •
Website.www.sparker.com
Email:hardware@sparker.com

ITEM NO:	DESCRIPTION:		SCALE:
1601VK	Door Viewer W/ Knocker		1:1
ANSI:	UNIT:	VERSION:	BY:
	inches	ver 1.0	C.C Chen

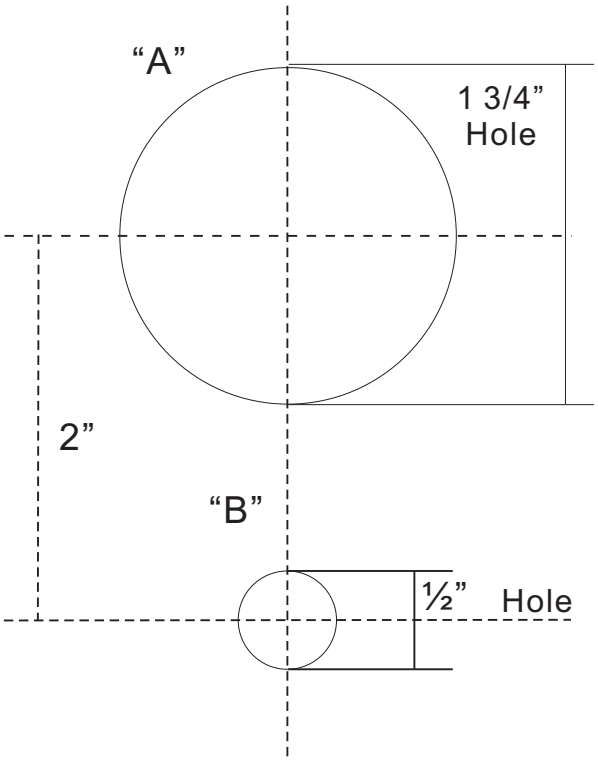

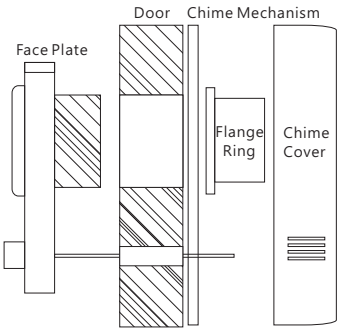

Since 1899 Great Value in Quality Hardware
S.Parker Hardware mfg corp
PARKER DRIVE PO Box9882. EnglewoodNJ07631-1127 •NU (201)569 1600
In NYC (212)925-6300 • FAX(201)569 1082 •
Website.www.sparker.com
Email:hardware@sparker.com

ITEM NO:	DESCRIPTION:		SCALE:
1602	Combination Door Chime&Viewer Non-Electric Chime		1:1
ANSI:	UNIT:	VERSION:	BY:
	inches	ver 1.0	C.C Chen

Parker Hardware mfg. corp.

197 AL Flushbolt

HOLLOW METAL DOOR & FRAME TEMPLATE

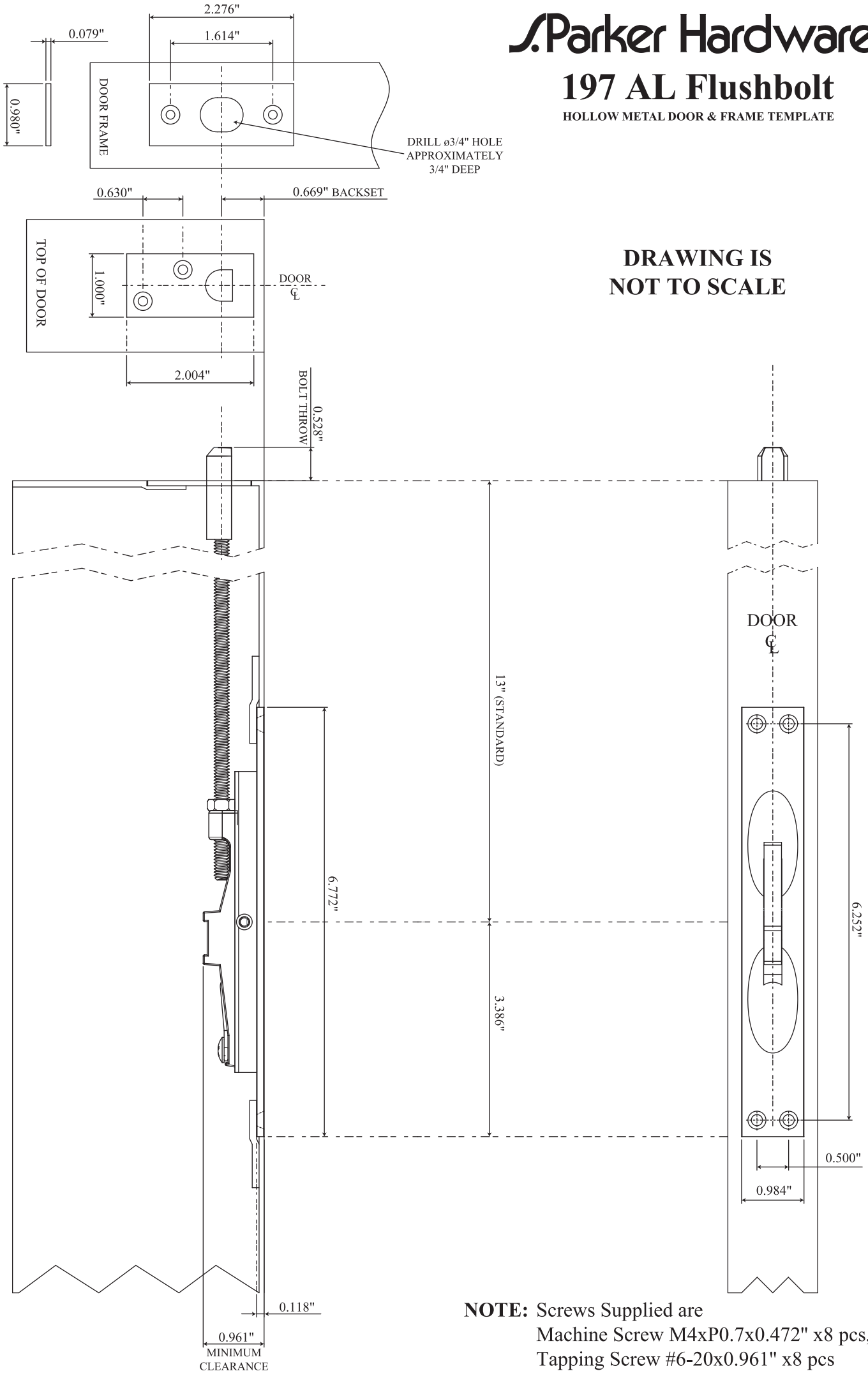

DRAWING IS NOT TO SCALE

NOTE: Screws Supplied are
Machine Screw M4xP0.7x0.472" x8 pcs,
Tapping Screw #6-20x0.961" x8 pcs

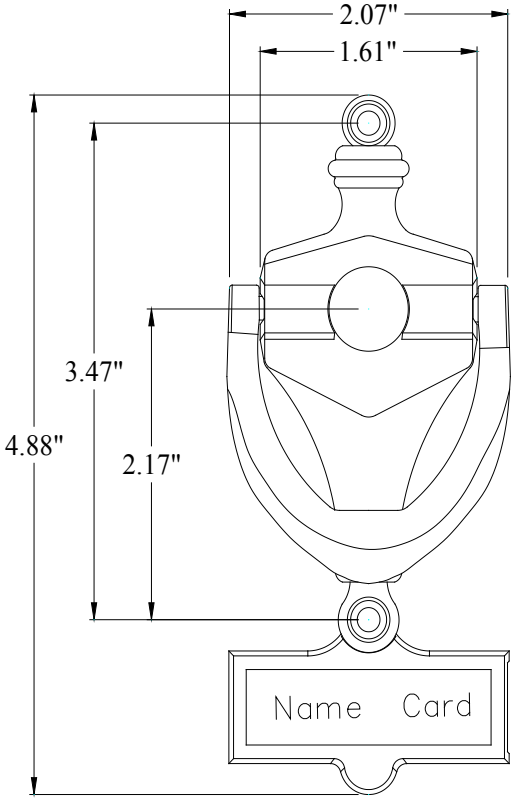

B05330

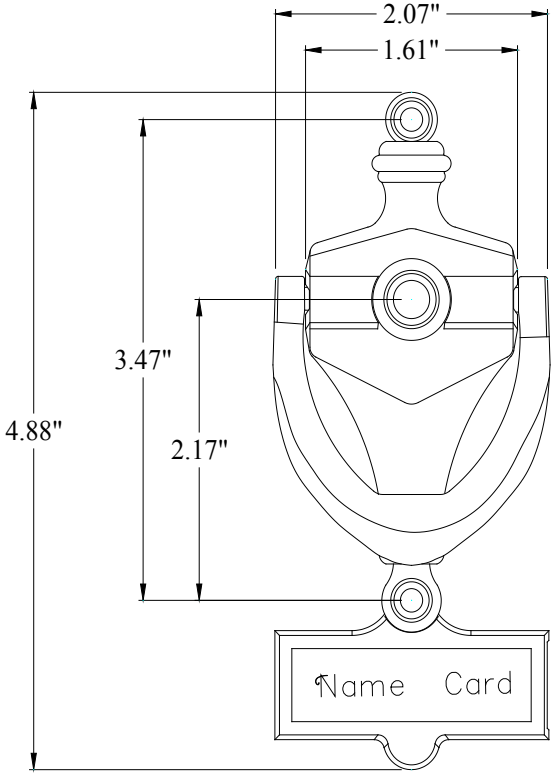

B05331

INSTALLATION INSTRUCTIONS

1. Remove backplate from door stop.
2. Place in desired location and mark.
3. Drill 1/8” pilot hole and insert anchor into hole.
4. Fasten backplate with screw.
5. Put door stop over backplate and turn to lock into place.
6. Clean with mild soap, water, and a soft cloth.

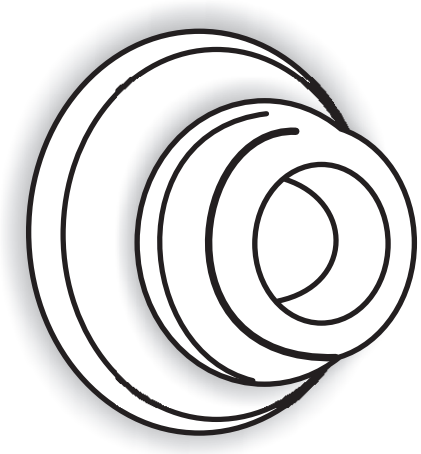

Tools Needed:
A. Drill
B. 1/8” Drill bit
C. Phillips screwdriver
D. Pencil
E. Safety goggles

Since 1899 Great Value in Quality Hardware
S.Parker Hardware mfg corp
PARKER DRIVE PO Box9882. EnglewoodNJ07631-1127 •NU (201)569 1600
In NYC (212)925-6300 • FAX(201)569 1082 •
Website.www.sparker.com
Email:hardware@sparker.com

ITEM NO:	DESCRIPTION:		SCALE:
636UAL	DOOR STOP - CONCAVE		N/A
	UNIT:	VERSION:	BY:
	inches	ver 1.0	C.C Chen

INSTALLATION INSTRUCTIONS

1.Remove backplate from door stop.
2.Place in desired location and mark.
3.Drill 1/8” pilot hole and insert anchor into hole.
4.Fasten backplate with screw.
5.Put door stop over backplate and turn to lock into place.
6.Clean with mild soap, water, and a soft cloth.

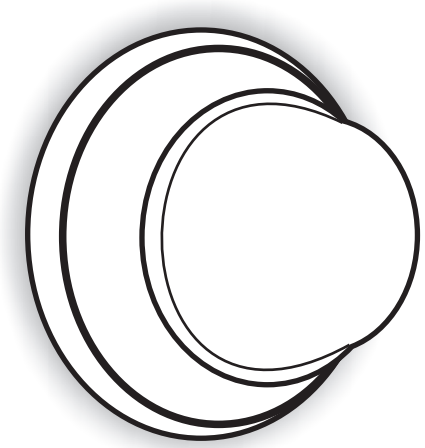

Tools Needed:
A. Drill
B. 1/8” Drill bit
C. Phillips screwdriver
D. Pencil
E. Safety goggles

Since 1899 Great Value in Quality Hardware
S.Parker Hardware mfg corp
PARKER DRIVE PO Box9882. EnglewoodNJ07631-1127 •NU (201)569 1600
In NYC (212)925-6300 • FAX(201)569 1082 •
Website.www.sparker.com
Email:hardware@sparker.com

ITEM NO:	DESCRIPTION:		SCALE:
636AL	DOOR STOP - CONVEX		N/A
	UNIT:	VERSION:	BY:
	inches	ver 1.0	C.C Chen

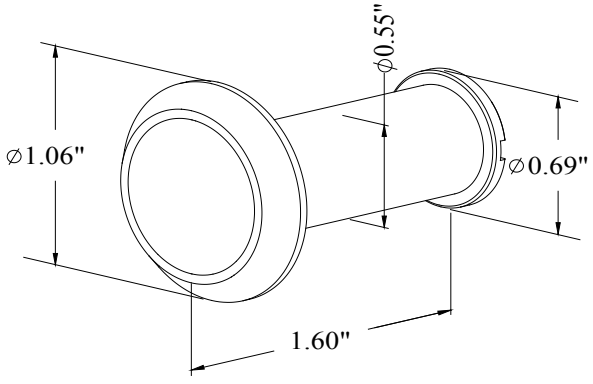

B05334

INSTALLATION INSTRUCTIONS

Hole Dia.	Door Thickness	Lens Angle
13mm (1 /2”)	33mm - 50mm (1-3/8”~2”)	160°

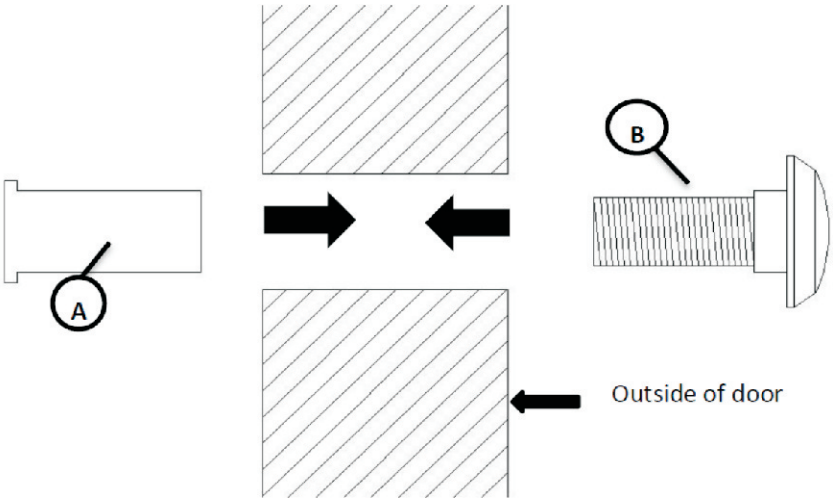

Door :1-3/8”~2”

1. Position at eye level center of door. Mark and drill 1/2” (13mm) diameter hole completely through door.
2. Place receiver tube section (A)insert through the hole from inside of door.
3. Insert section (B)from outside of door and secure into section (A)

Since 1899 Great Value in Quality Hardware
S.Parker Hardware mfg corp
PARKER DRIVE PO Box9882. EnglewoodNJ07631-1127 •NU (201)569 1600
In NYC (212)925-6300 • FAX(201)569 1082 •
Website.www.sparker.com
Email:hardware@sparker.com

ITEM NO:	DESCRIPTION:		SCALE:
1606PCH	DOOR VIEWER		N/A
	UNIT:	VERSION:	BY:
	inches	ver 1.0	C.C Chen

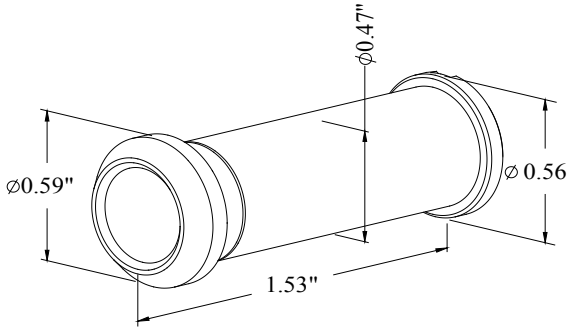

R1606

UL520V SERIES

SURFACE VERTICAL ROD EXIT DEVICE-REVERSIBLE
INSTALLATION INSTRUCTION
(TEMPLATE ON BACK PAGE)

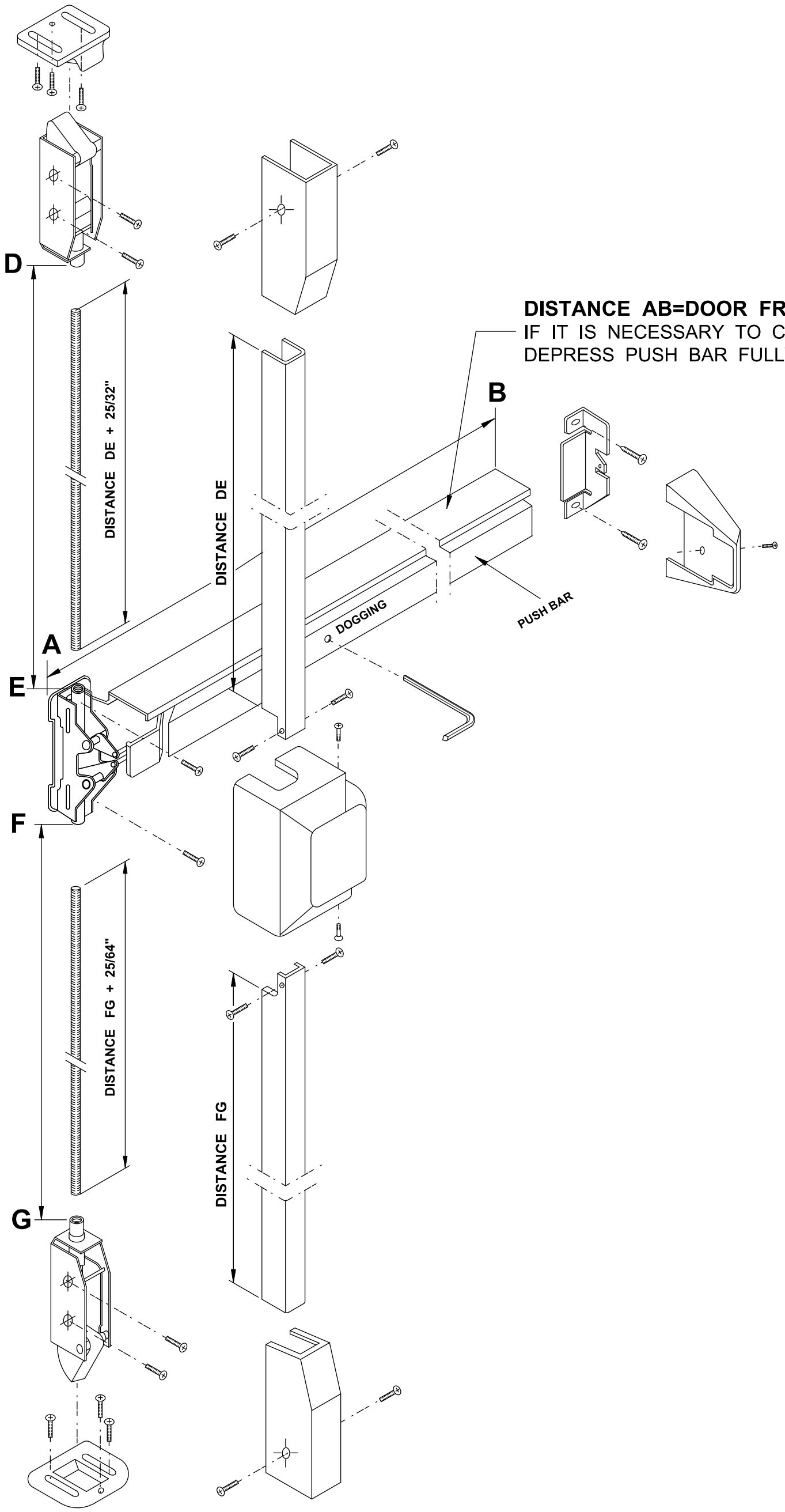

DISTANCE AB=DOOR FRAME WIDTH MINUS 2-3/16"
IF IT IS NECESSARY TO CUT A SHORTER LENGTH, DEPRESS PUSH BAR FULLY BEFORE CUTTING.

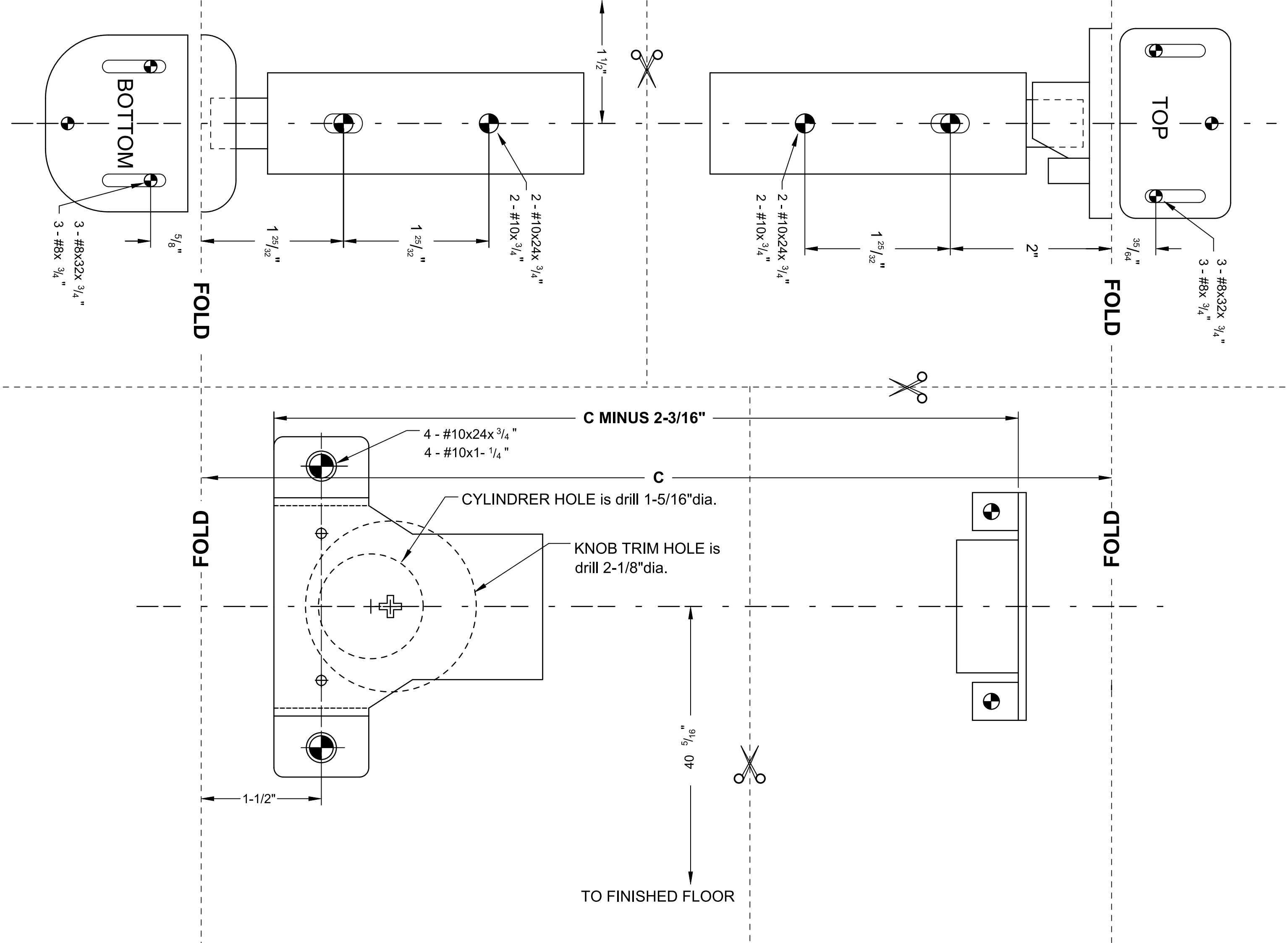
TOP
BOTTOM
3 - #8x32x 3/4 "
3 - #8x 3/4 "
35/64 "
2"
1 25/32 "
2 - #10x24x 3/4 "
2 - #10x 3/4 "
FOLD
1 1/2"
1 25/32 "
1 25/32 "
2 - #10x24x 3/4 "
2 - #10x 3/4 "
3 - #8x32x 3/4 "
3 - #8x 3/4 "
5/8 "
FOLD
C MINUS 2-3/16"
4 - #10x24x 3/4 "
4 - #10x1- 1/4 "
C
CYLINDRER HOLE is drill 1-5/16"dia.
KNOB TRIM HOLE is
drill 2-1/8"dia.
FOLD
FOLD
40 5/16 "
1-1/2"
TO FINISHED FLOOR

5000V VERTICAL EXIT DEVICE-REVERSIBLE INSTALLTION INSTRUCTION
LHR door shown, RHR door opposite

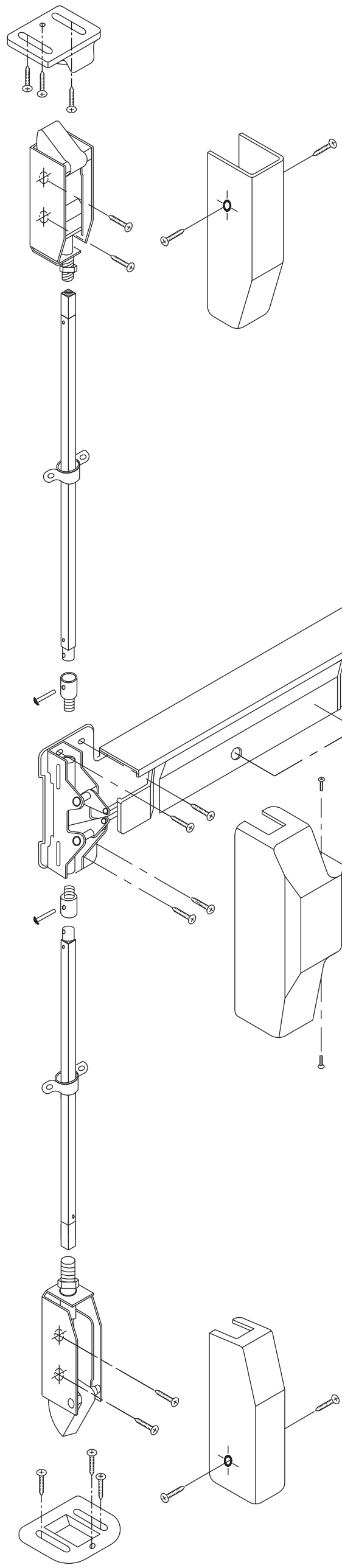

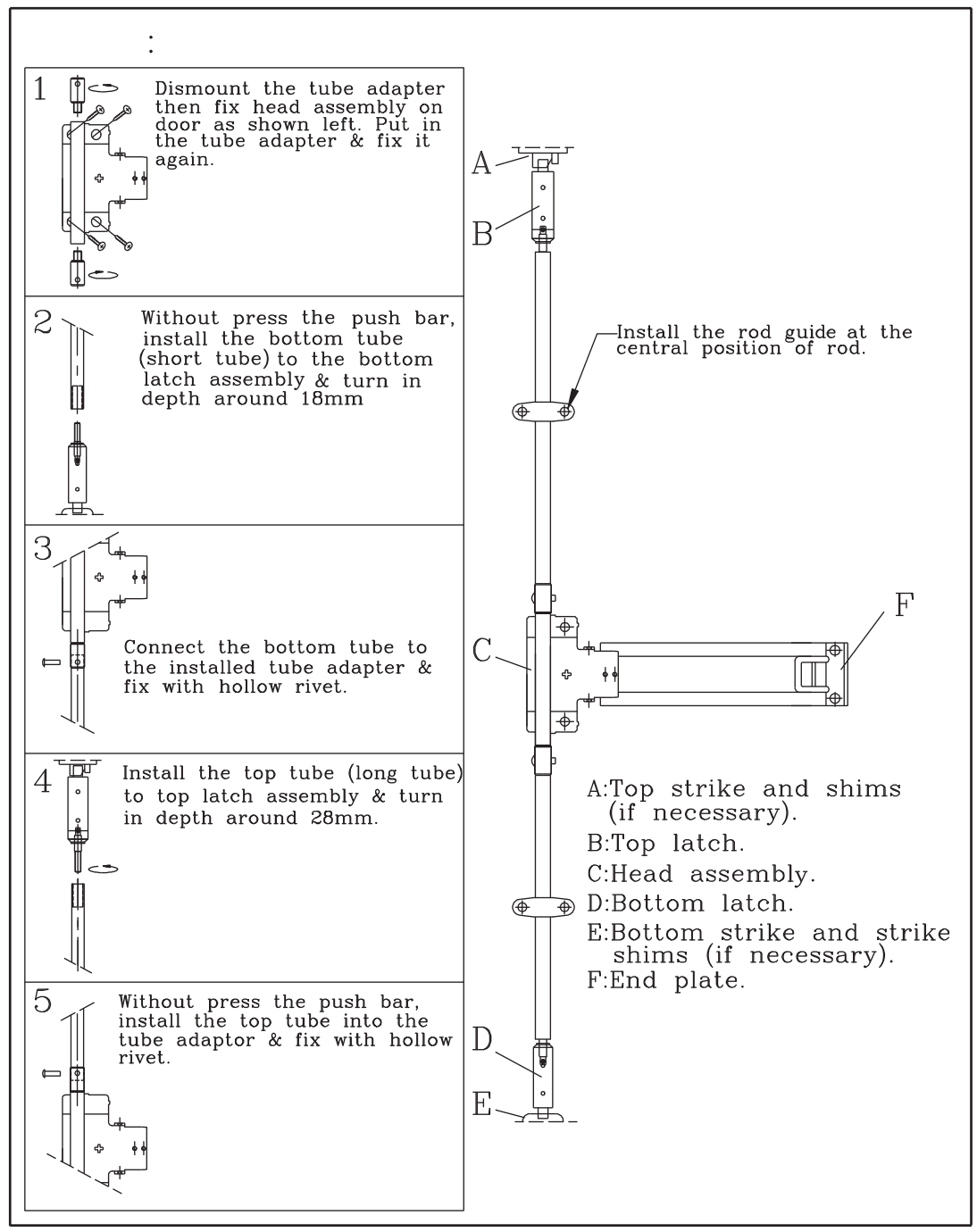

5000V TEMPLATE

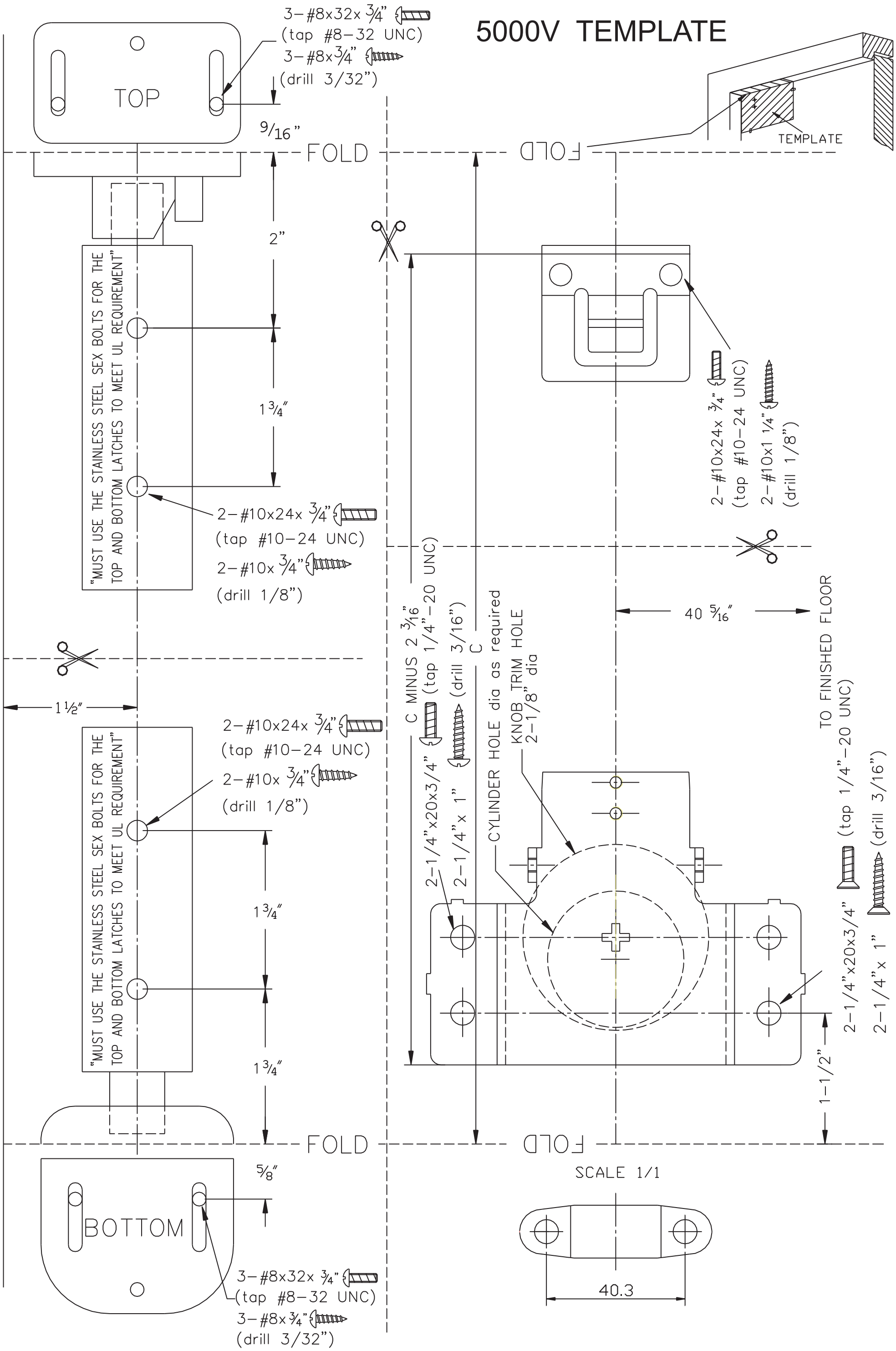

CYLINDER MOUNTING PAD

LOCK STILE OUTSIDE FACE

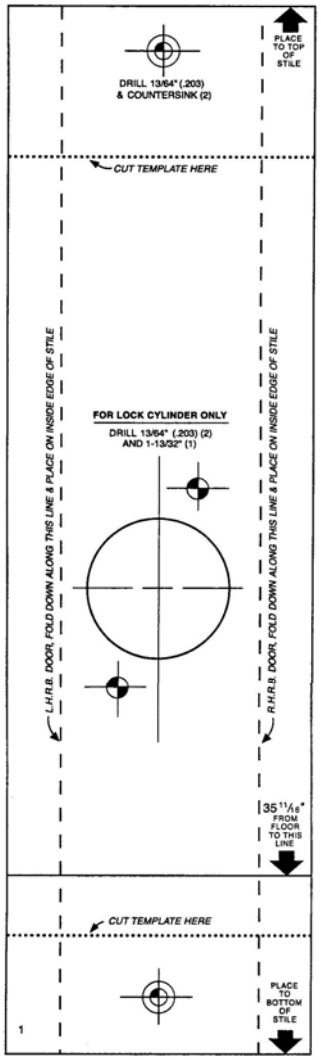

EXIT DEVICES

LOCK STILE INSIDE FACE

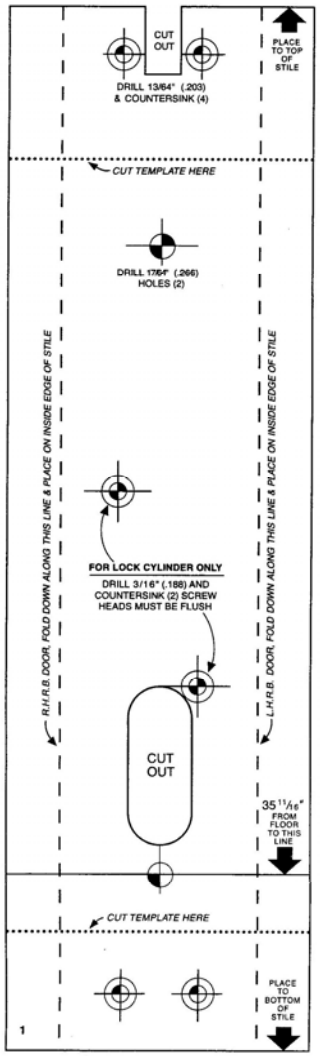

EXIT DEVICES

HINGE STILE INSIDE FACE

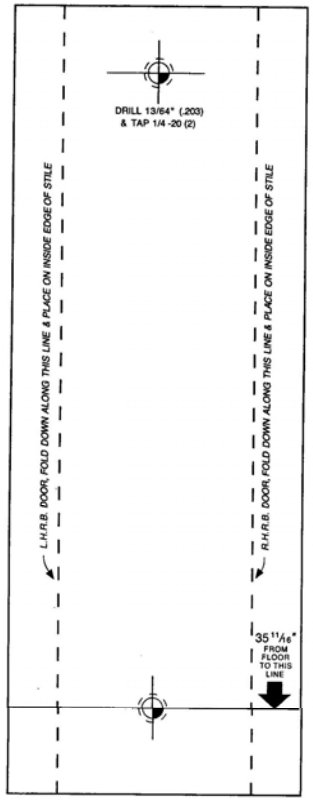

Parker Hardware mfg. corp.

INSTALLATION INSTRUCTIONS

(TEMPLATE)

540V

Cross Bar Panic Devices

Concealed Vertical Rod ; Non-handed (201408-W)

52029 SERIES RIM EXIT DEVICE - REVERSIBLE
INSTALLATION INSTRUCTIONS FOR LHR DOOR

10107 ZINS-R8042-45

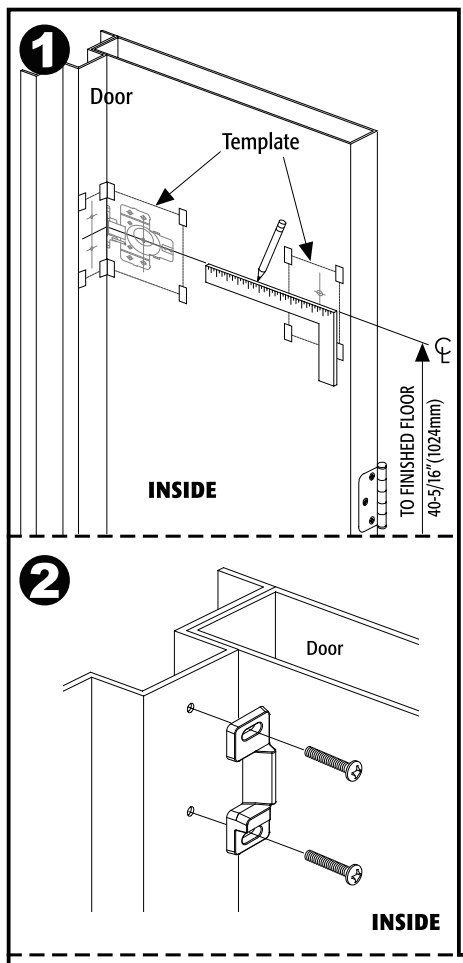

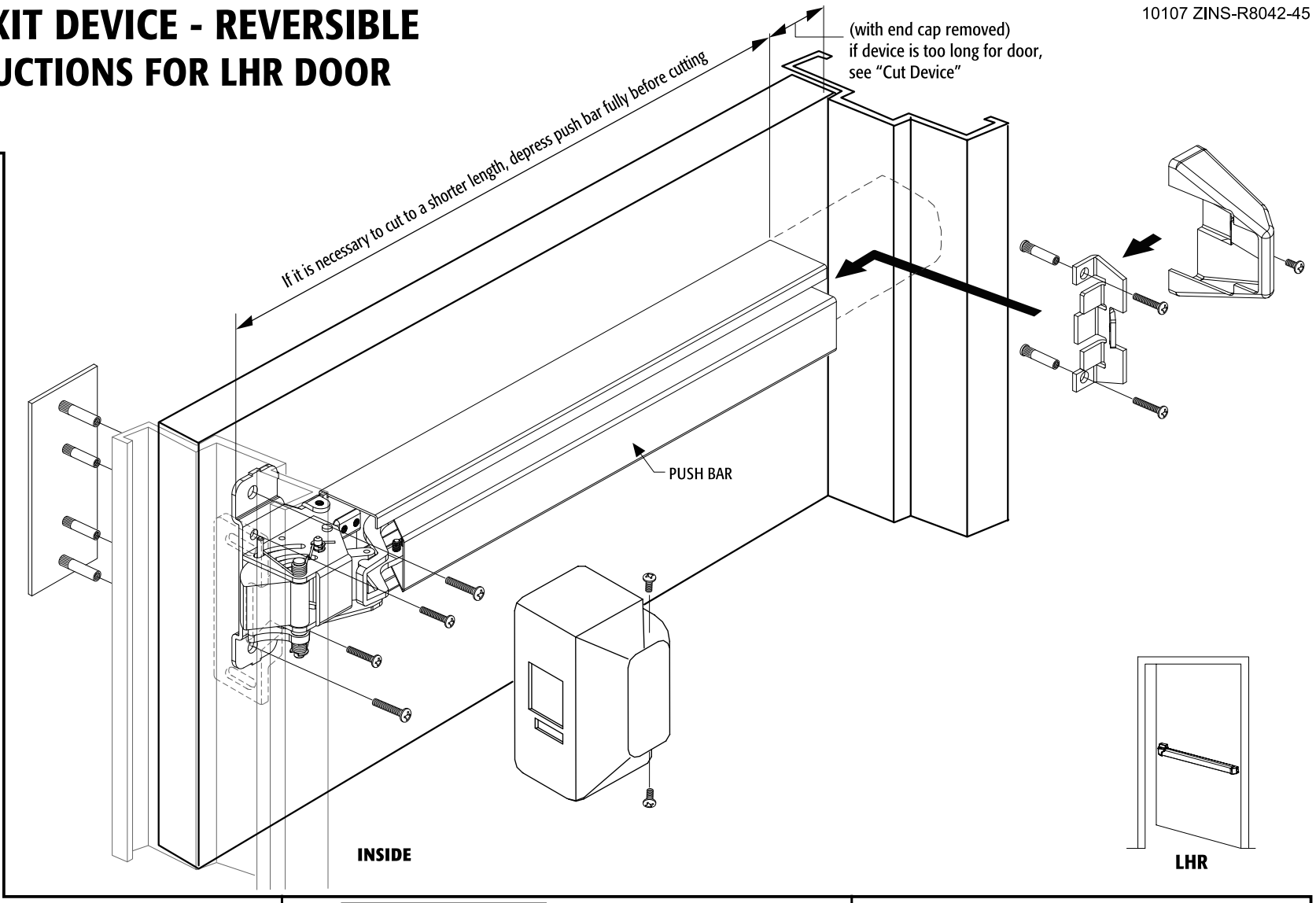

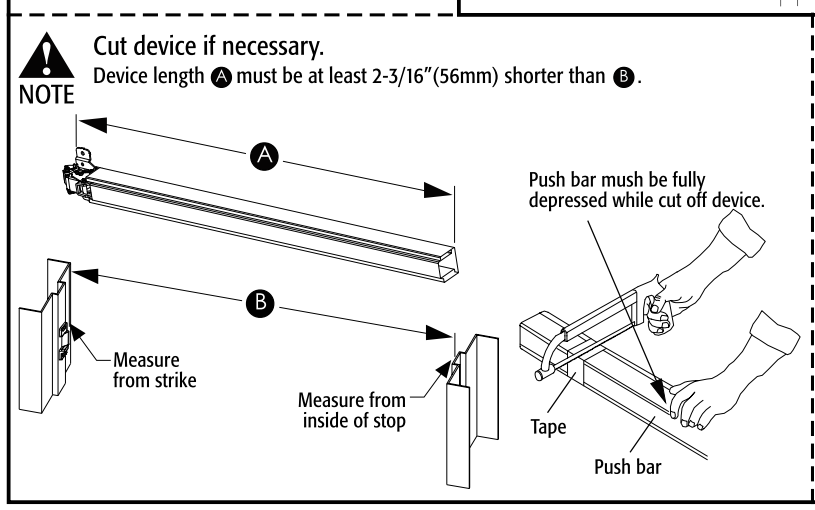

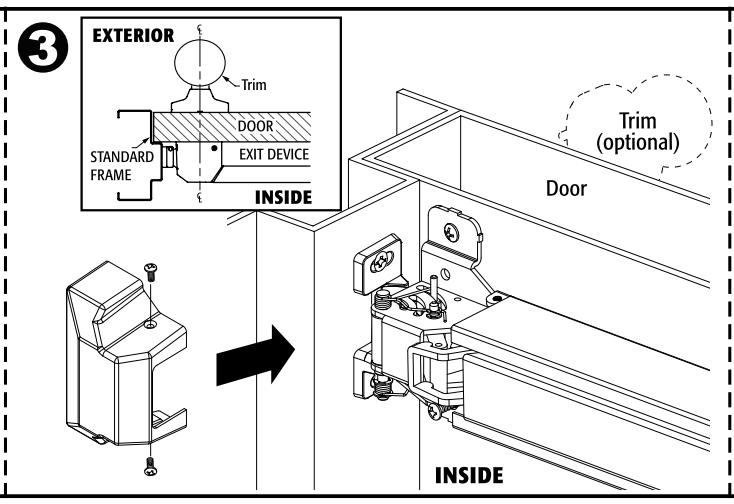

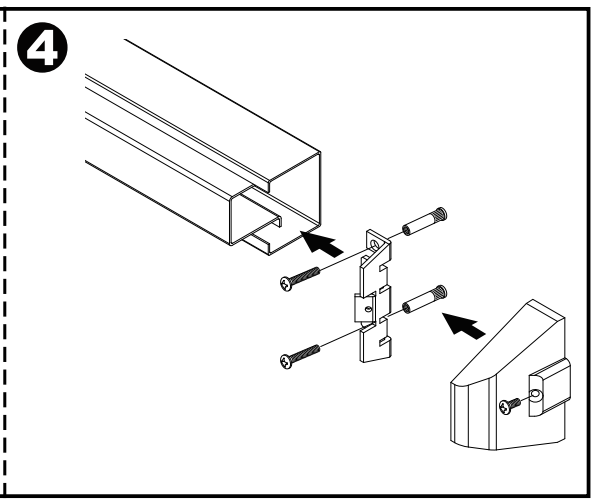

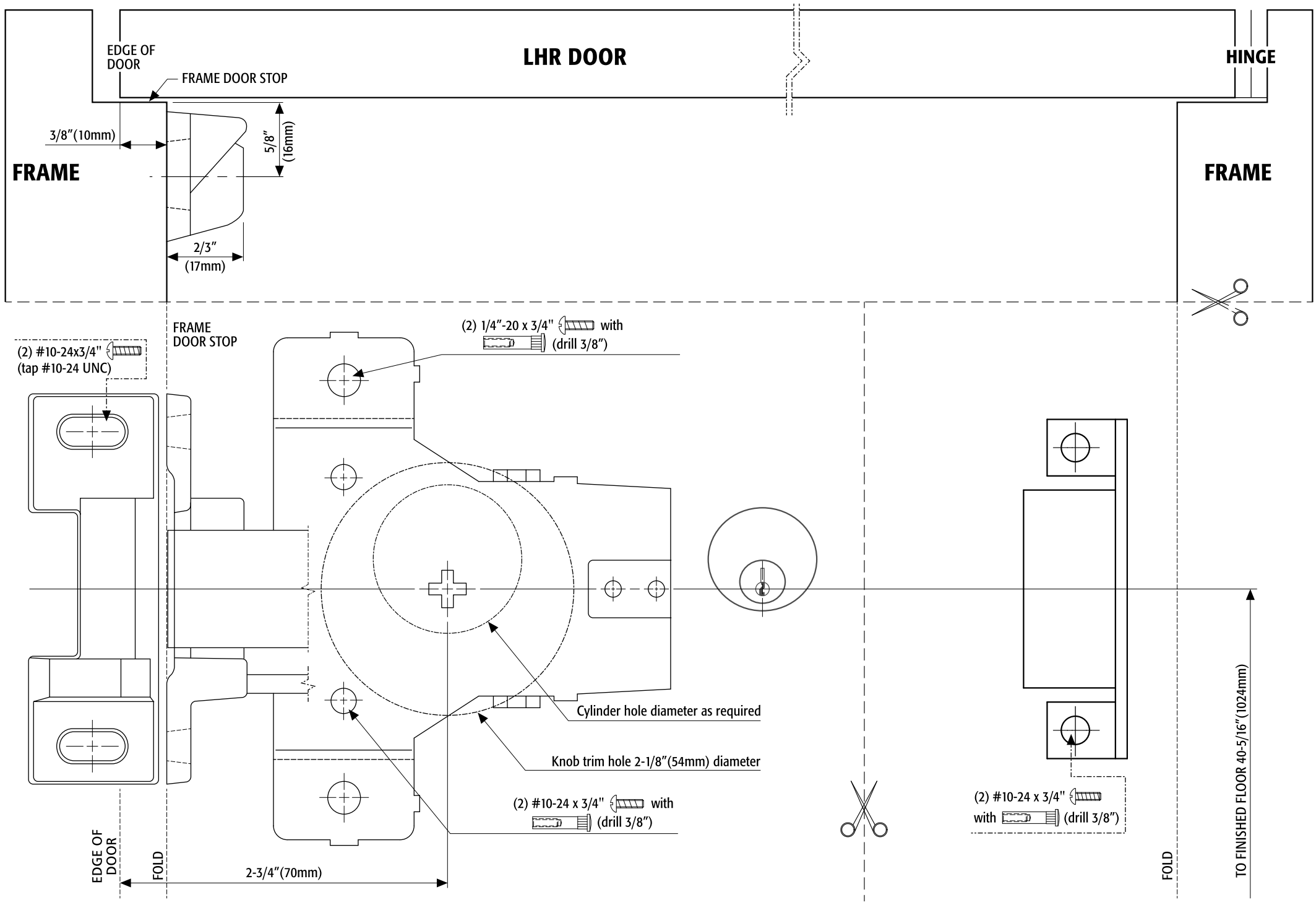

52029 SERIES RIM EXIT DEVICE - REVERSIBLE
INSTALLATION INSTRUCTIONS FOR RHR DOOR

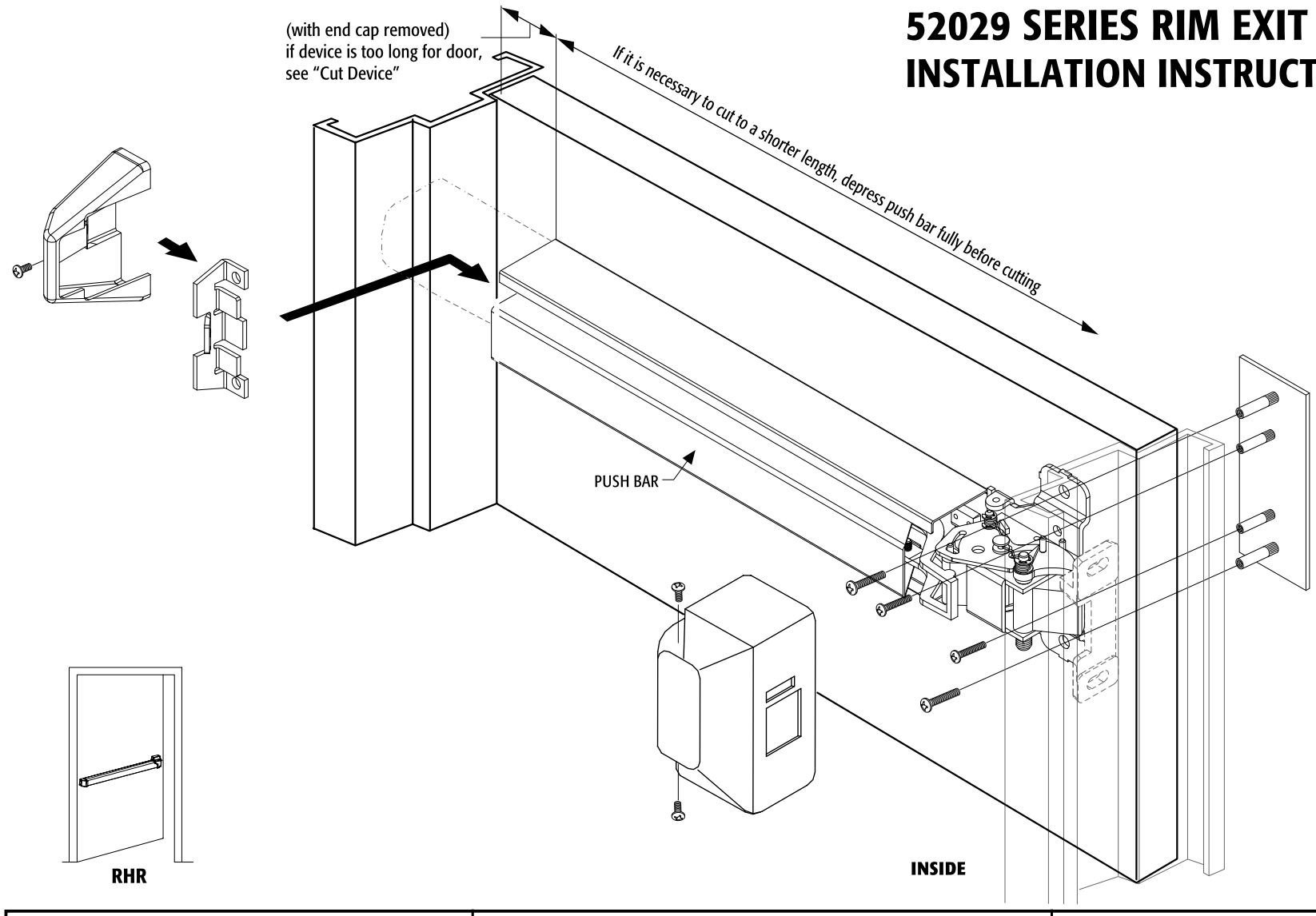

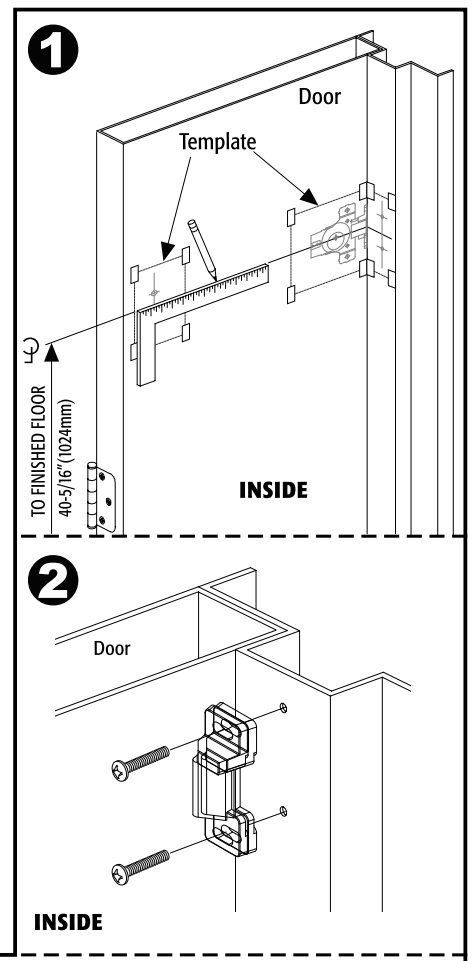

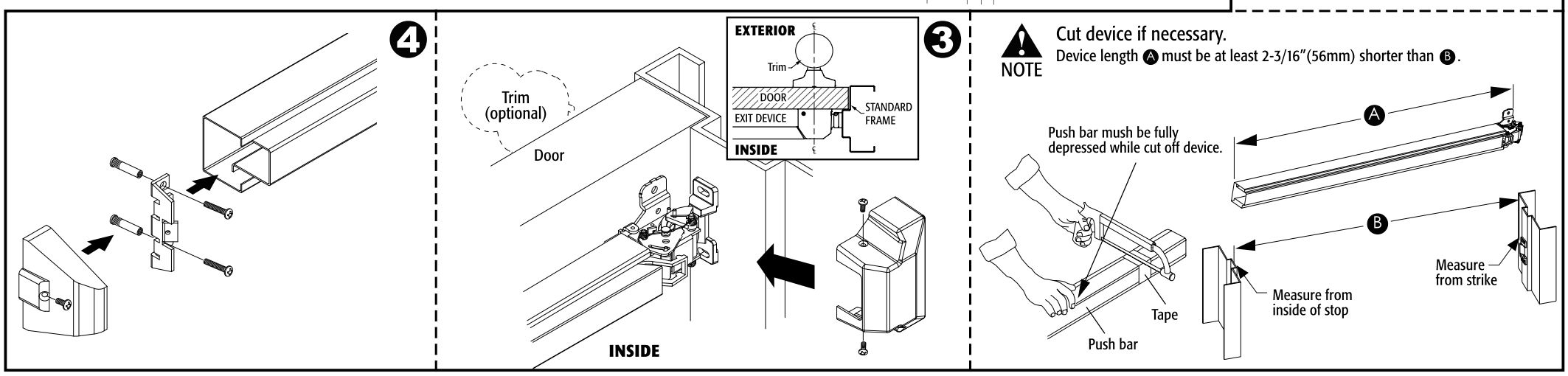

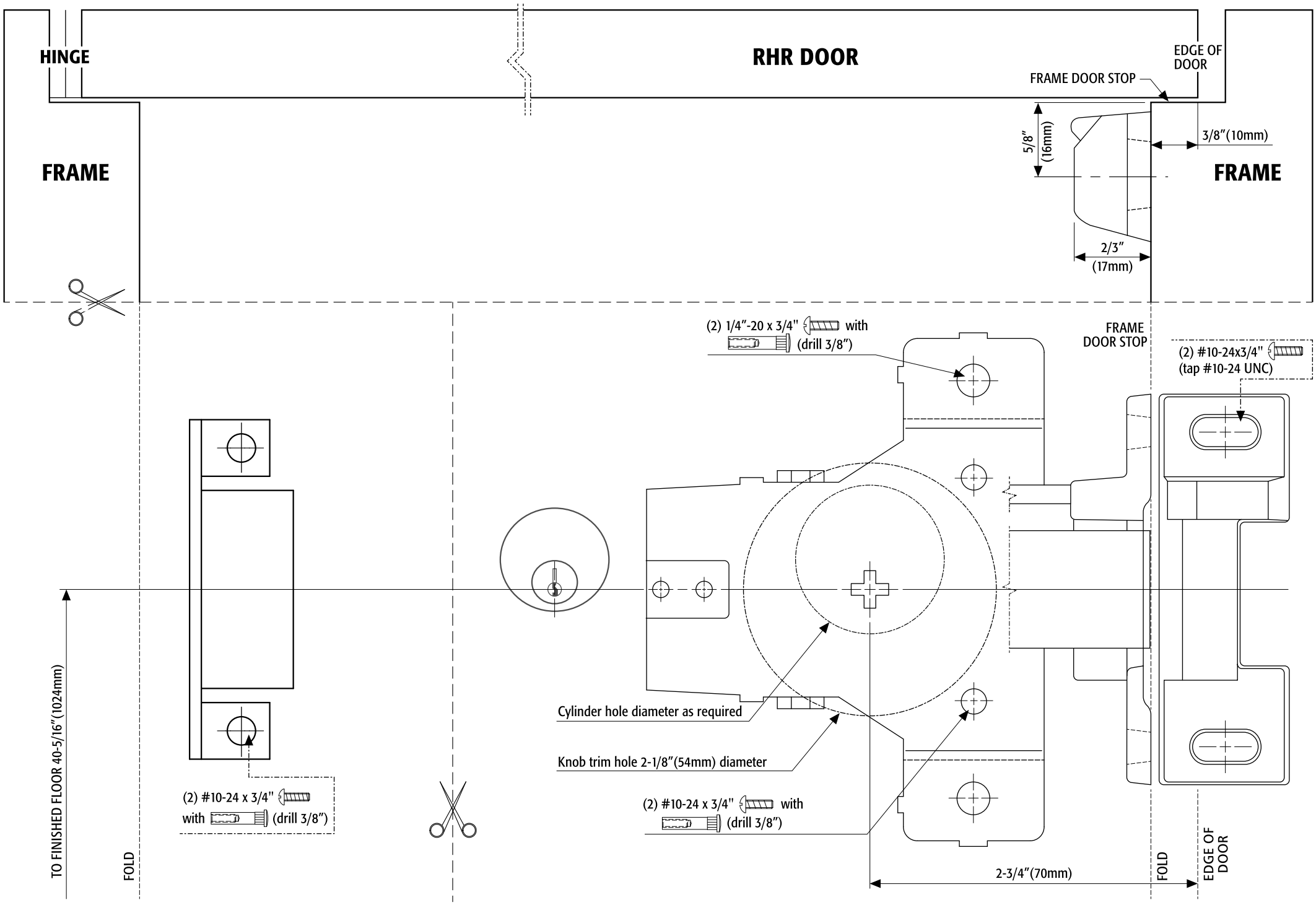

SERIES
SURFACE VERTICAL ROD EXIT DEVICE
INSTALLATION INSTRUCTION
REVERSIBLE
(TEMPLATE ON BACK PAGE)

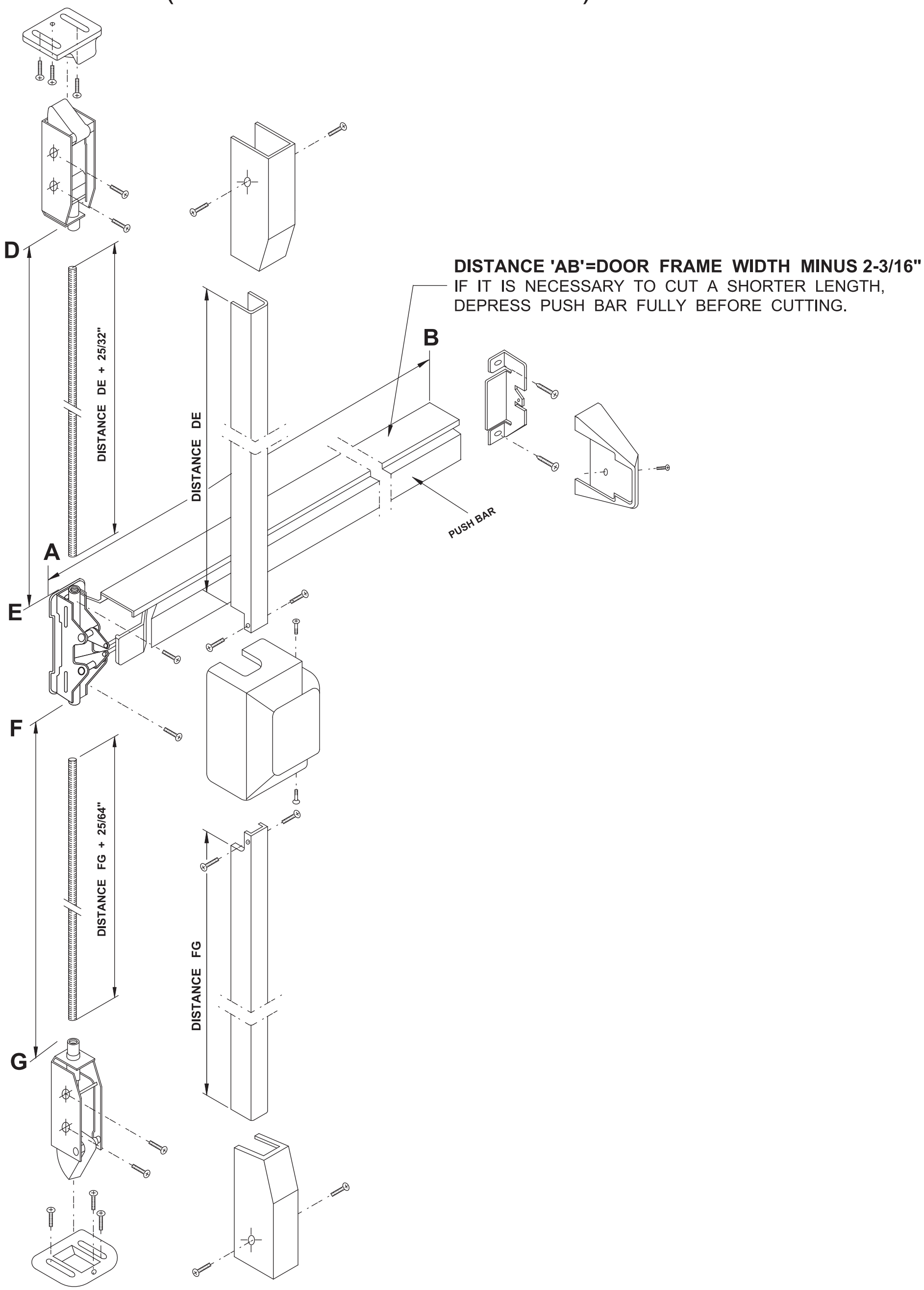

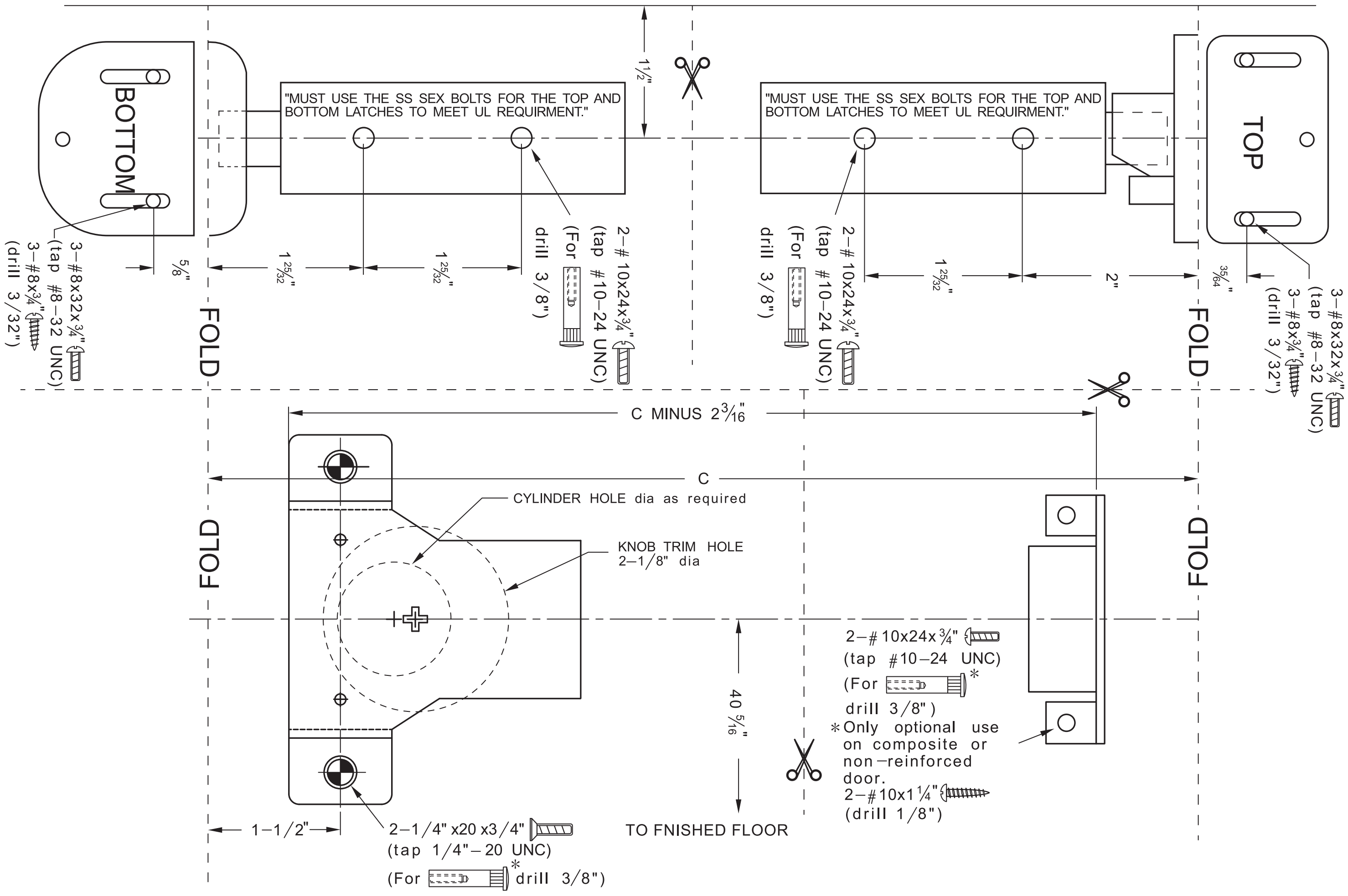
TOP
BOTTOM
FOLD
FOLD
FOLD
FOLD
"MUST USE THE SS SEX BOLTS FOR THE TOP AND BOTTOM LATCHES TO MEET UL REQUIRMENT."
"MUST USE THE SS SEX BOLTS FOR THE TOP AND BOTTOM LATCHES TO MEET UL REQUIRMENT."
3−#8x32x3/4" (tap #8−32 UNC)
3−#8x3/4" (drill 3/32")
35/64"
2"
1 25/32"
2−#10x24x3/4" (tap #10−24 UNC) (For drill 3/8")
1 1/2"
2−#10x24x3/4" (tap #10−24 UNC) (For drill 3/8")
1 25/32"
1 25/32"
5/8"
3−#8x32x3/4" (tap #8−32 UNC)
3−#8x3/4" (drill 3/32")
C MINUS 2 3/16"
C
CYLINDER HOLE dia as required
KNOB TRIM HOLE 2−1/8" dia
40 5/16"
TO FNISHED FLOOR
1−1/2"
2−1/4" x20 x3/4" (tap 1/4"−20 UNC) (For * drill 3/8")
2−#10x24x3/4" (tap #10−24 UNC) (For * drill 3/8")
*Only optional use on composite or non−reinforced door.
2−#10x1 1/4" (drill 1/8")

F5000V VERTICAL EXIT DEVICE-REVERSIBLE INSTALLTION INSTRUCTION
LHR door shown, RHR door opposite

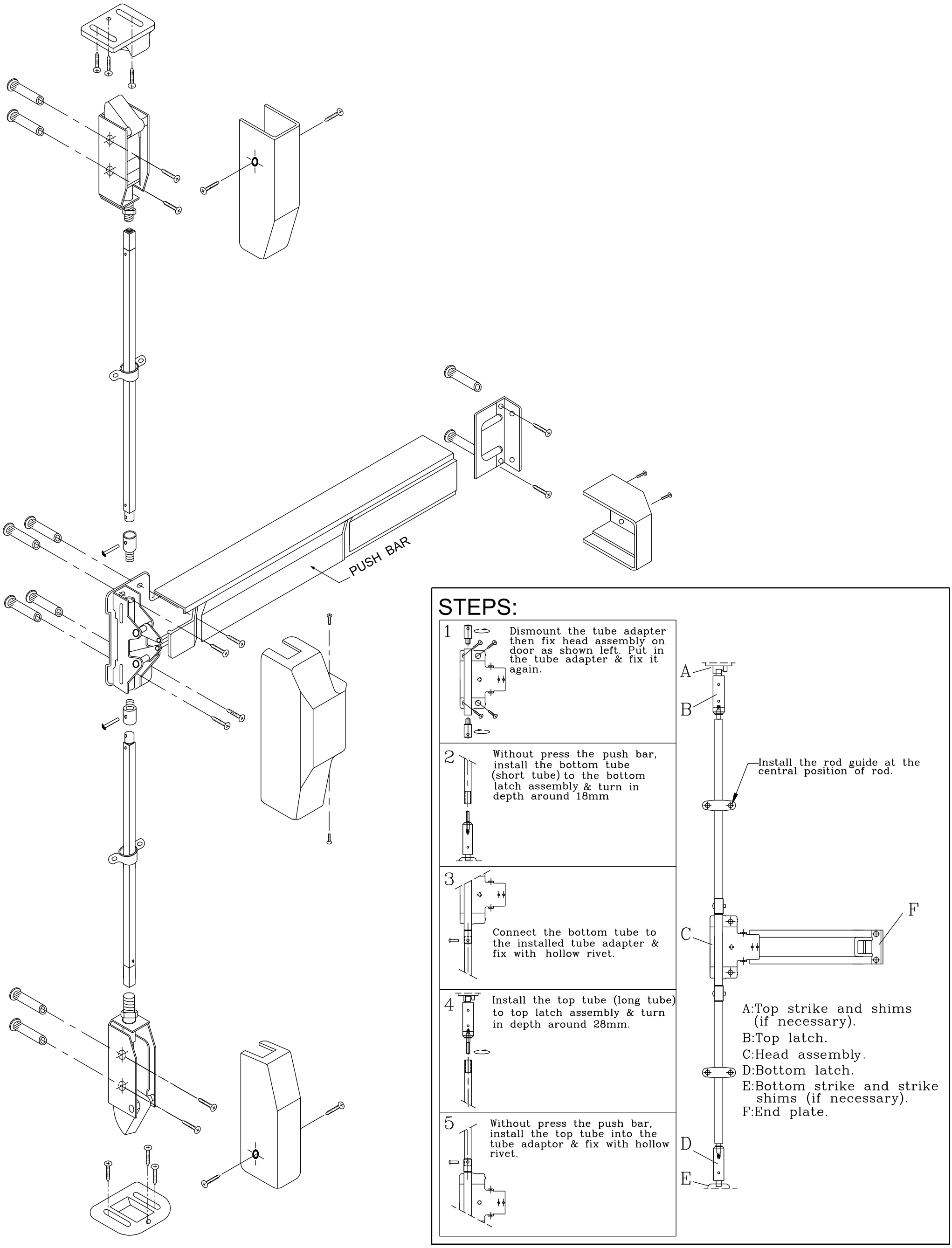

F5000V TEMPLATE

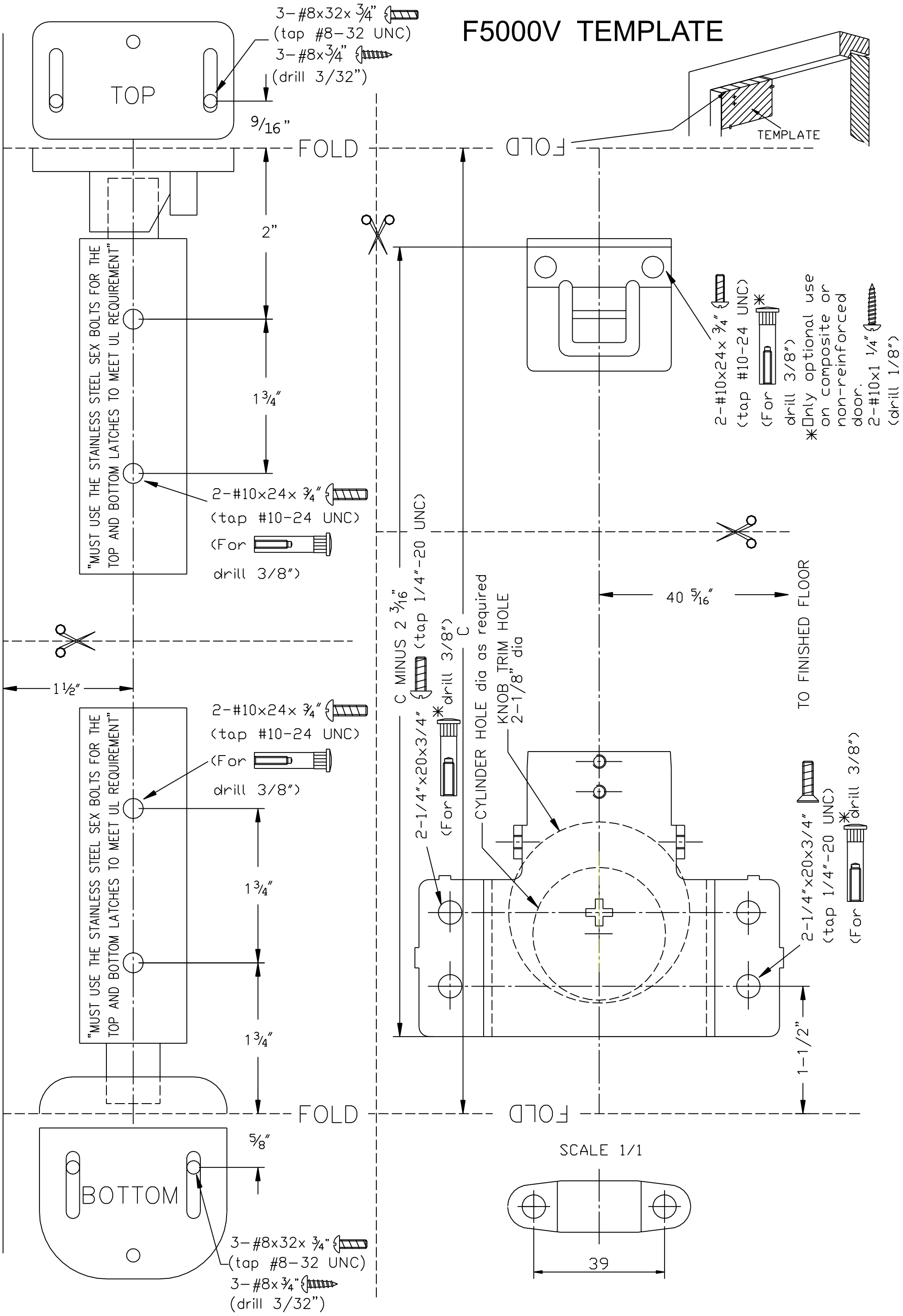

OUTSIDE KNOB(LEVER) INSTALLATION INSTRUCTIONS

1. Follow the drilling instructions on template. Drill 2-1/8"(54mm) holes on inside and outside door faces.
2. Follow the drilling instructions on template. Drill (2) 5/16"(8mm) holes on outside door face for lever only.
3. Insert knob (or lever) tail piece through 2-1/8"(54mm) hole on outside door face.
4. Cut off tail piece,if necessary, to have 3/16"(4.5mm) projection beyond inside door face.
5. Place inside mounting plate on inside door face and tighten 2 installation screws securely.
6. Install push bar.

Notice: Do not remove the stud of the lever when connected with Exit Panic Device.

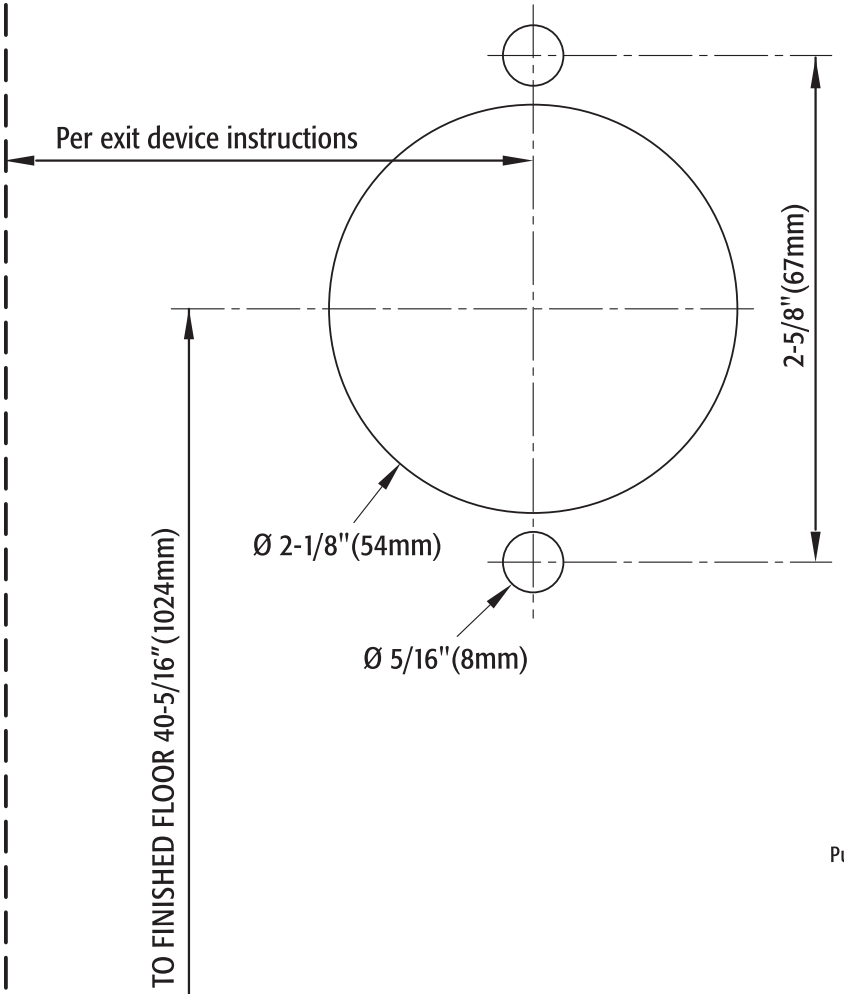

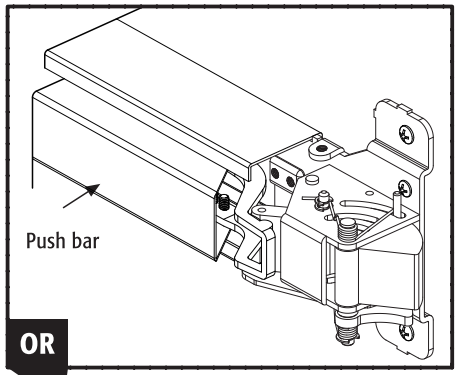

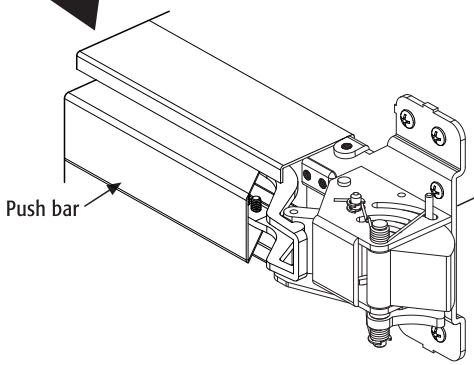

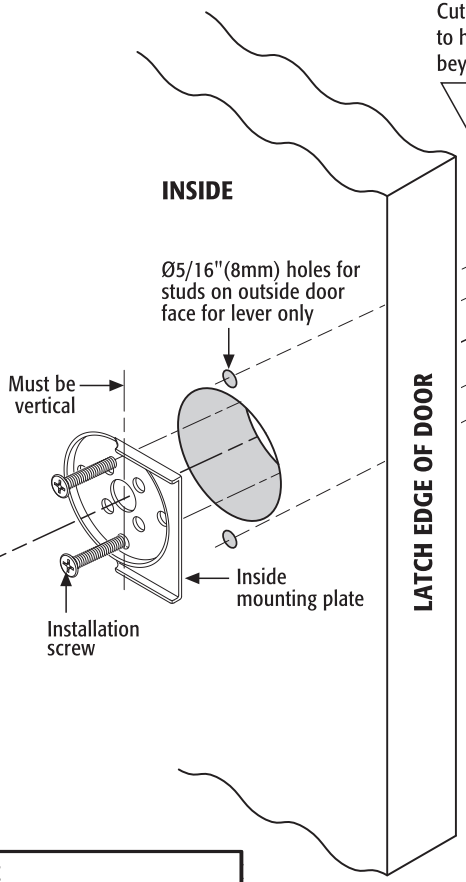

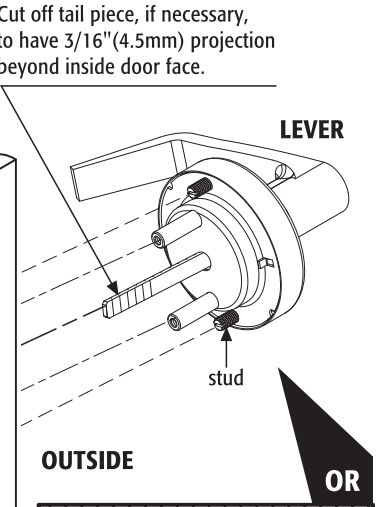

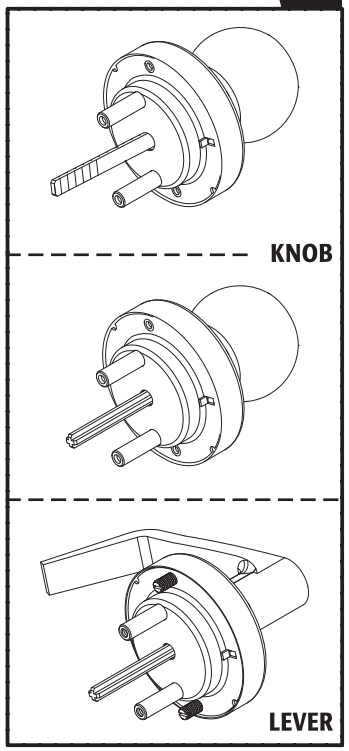

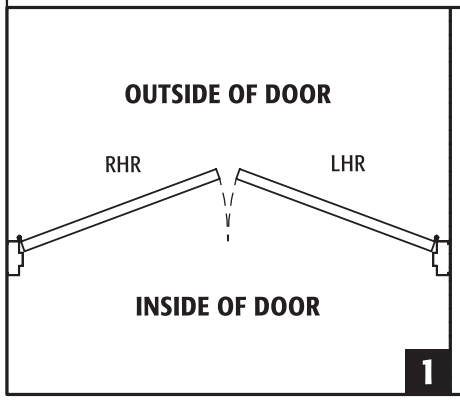

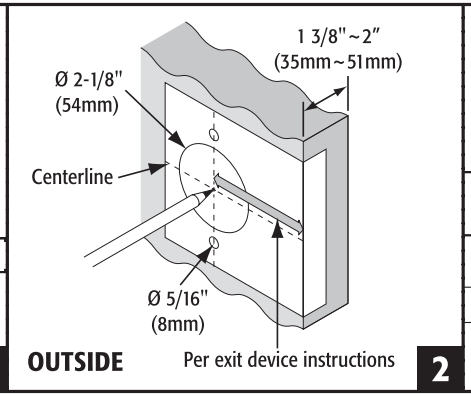

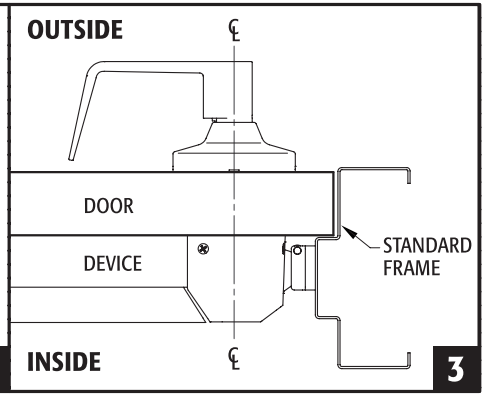

Parker Hardware mfg. corp.

INSTALLATION INSTRUCTIONS

WHEN YOUR DOOR HAS CYLINDRICAL LOCK CUT-OUT

CUT OFF LENGTH OF CYL. CONNECTING BAR SO THAT 3/16" PROJECTS BEYOND INSIDE FACE OF DOOR.

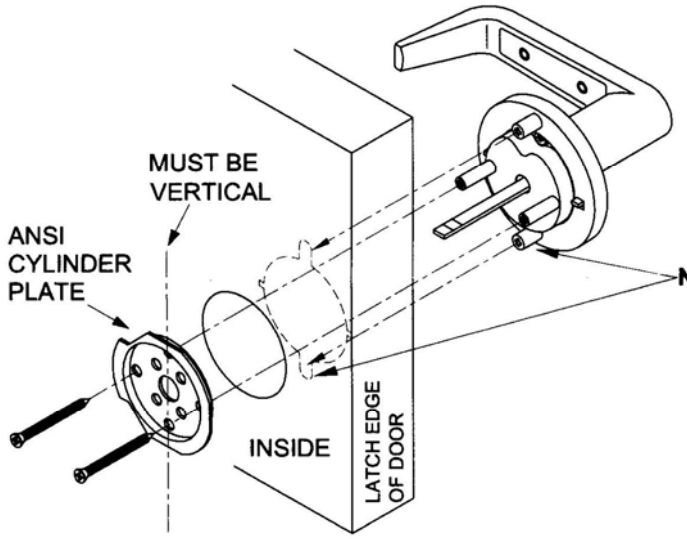

IMPORTANT!

NOTE: ALIGNMENT STUDS **MUST** ENTER INTO (2) 5/16" FIELD DRILLED HOLES ON OUTSIDE OF DOOR (EXISTING SLOTS CAN BE ELONGATED WITH A FILE).

FOLD AND ALIGN TEMPLATE ON EDGE OF DOOR

TEMPLATE

FOR WOOD OR METAL DOOR

Drill two 5/16" (8 mm) holes on vertical center line from outside of door.

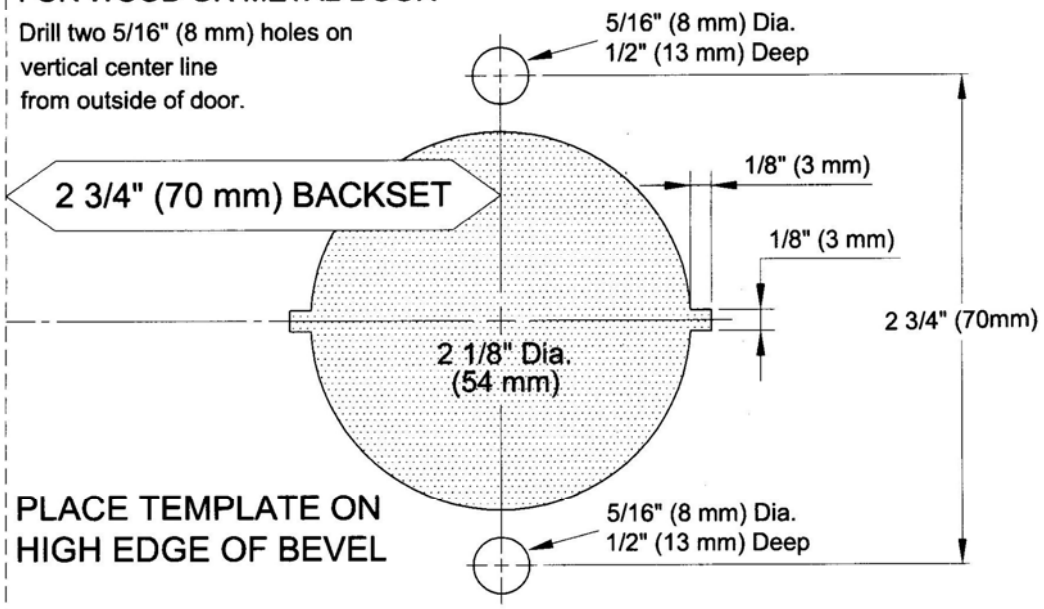

PLACE TEMPLATE ON HIGH EDGE OF BEVEL

WD-OD002(185)

Parker Hardware mfg. corp. INSTALLATION INSTRUCTIONS	**LL520DCH3H**
	LL520 Lever Keyed Locks for Exit Devices; 3-1/2" Rose (201409-W)

Parker Hardware mfg. corp.

INSTALLATION INSTRUCTIONS

WHEN YOUR DOOR HAS CYLINDRICAL LOCK CUT-OUT

CUT OFF LENGTH OF CYL. CONNECTING BAR SO THAT 3/16" PROJECTS BEYOND INSIDE FACE OF DOOR.

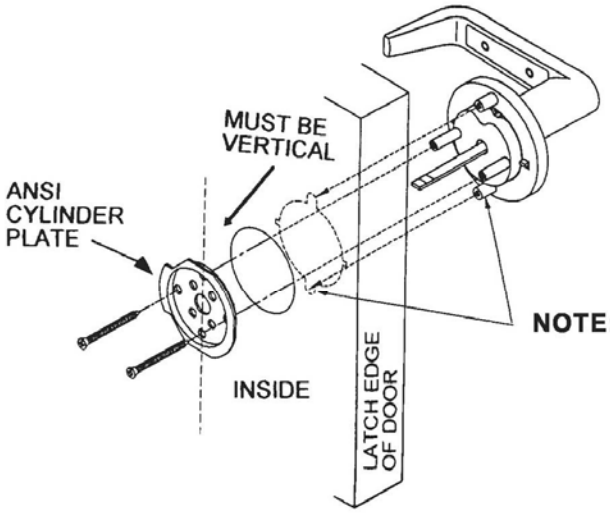

IMPORTANT!

NOTE: ALIGNMENT STUDS MUST ENTER INTO (2) 5/16" FIELD DRILLED HOLES ON OUTSIDE OF DOOR (EXISTING SLOTS CAN BE ELONGATED WITH A FILE).

TEMPLATE

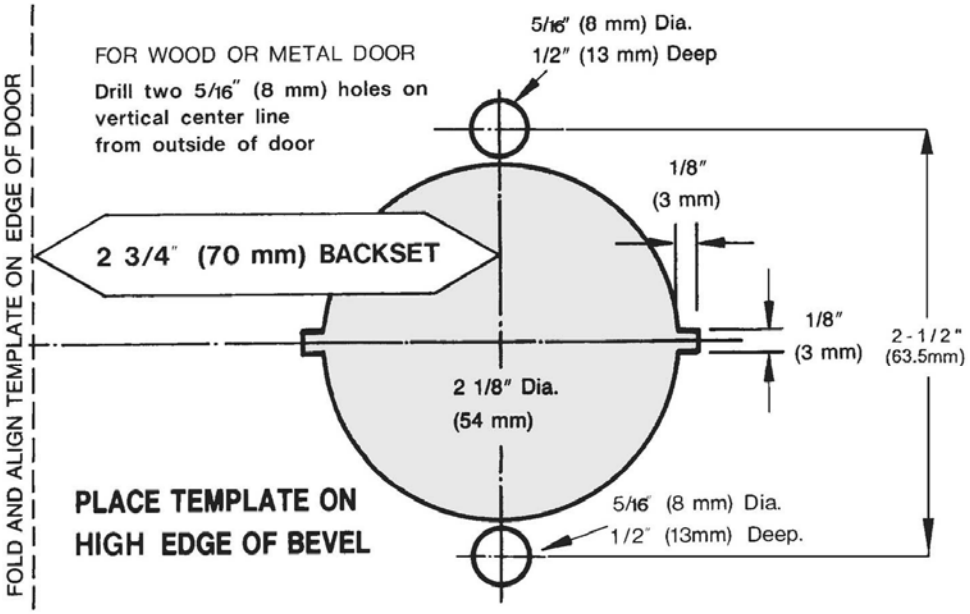

Parker Hardware mfg. corp. INSTALLATION INSTRUCTIONS	**LL520 / DLL520 / NLL520**
	LL520 Lever Keyed Locks for Exit Devices (201408-W)

LHR

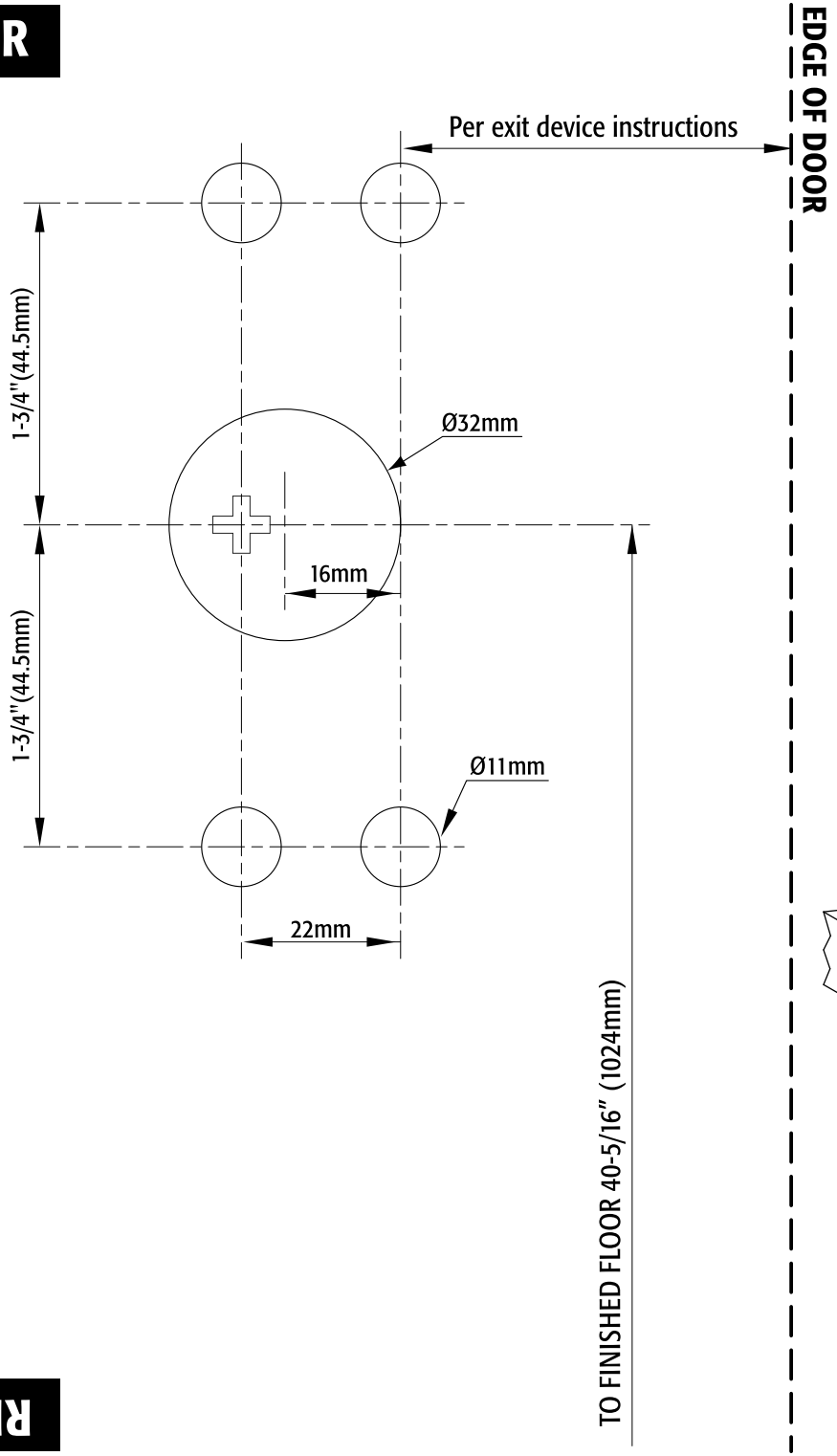
EDGE OF DOOR
Per exit device instructions
1-3/4"(44.5mm)
Ø32mm
16mm
1-3/4"(44.5mm)
Ø11mm
22mm
TO FINISHED FLOOR 40-5/16" (1024mm)

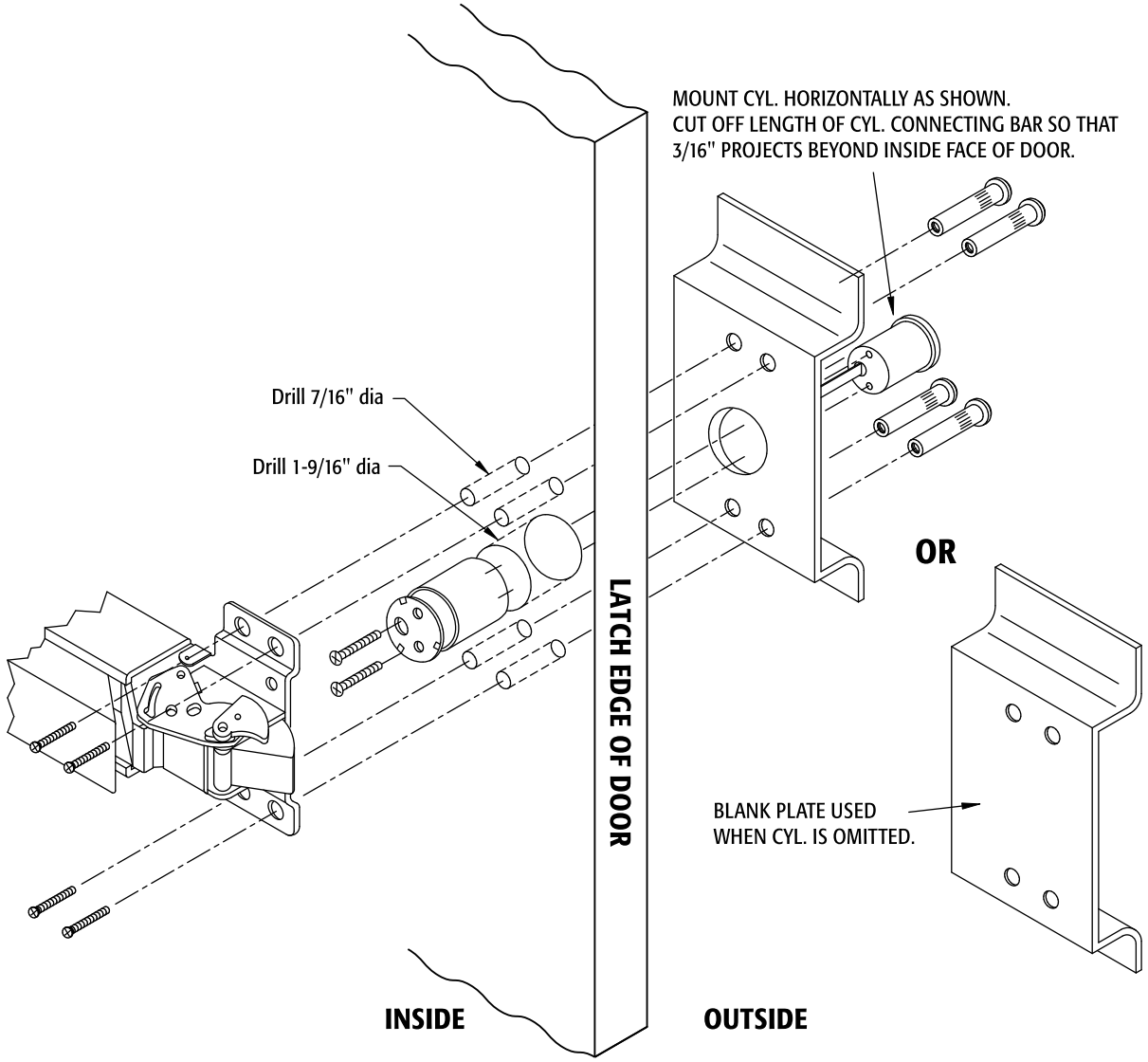
MOUNT CYL. HORIZONTALLY AS SHOWN.
CUT OFF LENGTH OF CYL. CONNECTING BAR SO THAT
3/16" PROJECTS BEYOND INSIDE FACE OF DOOR.
Drill 7/16" dia
Drill 1-9/16" dia
LATCH EDGE OF DOOR
OR
BLANK PLATE USED
WHEN CYL. IS OMITTED.
INSIDE
OUTSIDE

RHR

LHR

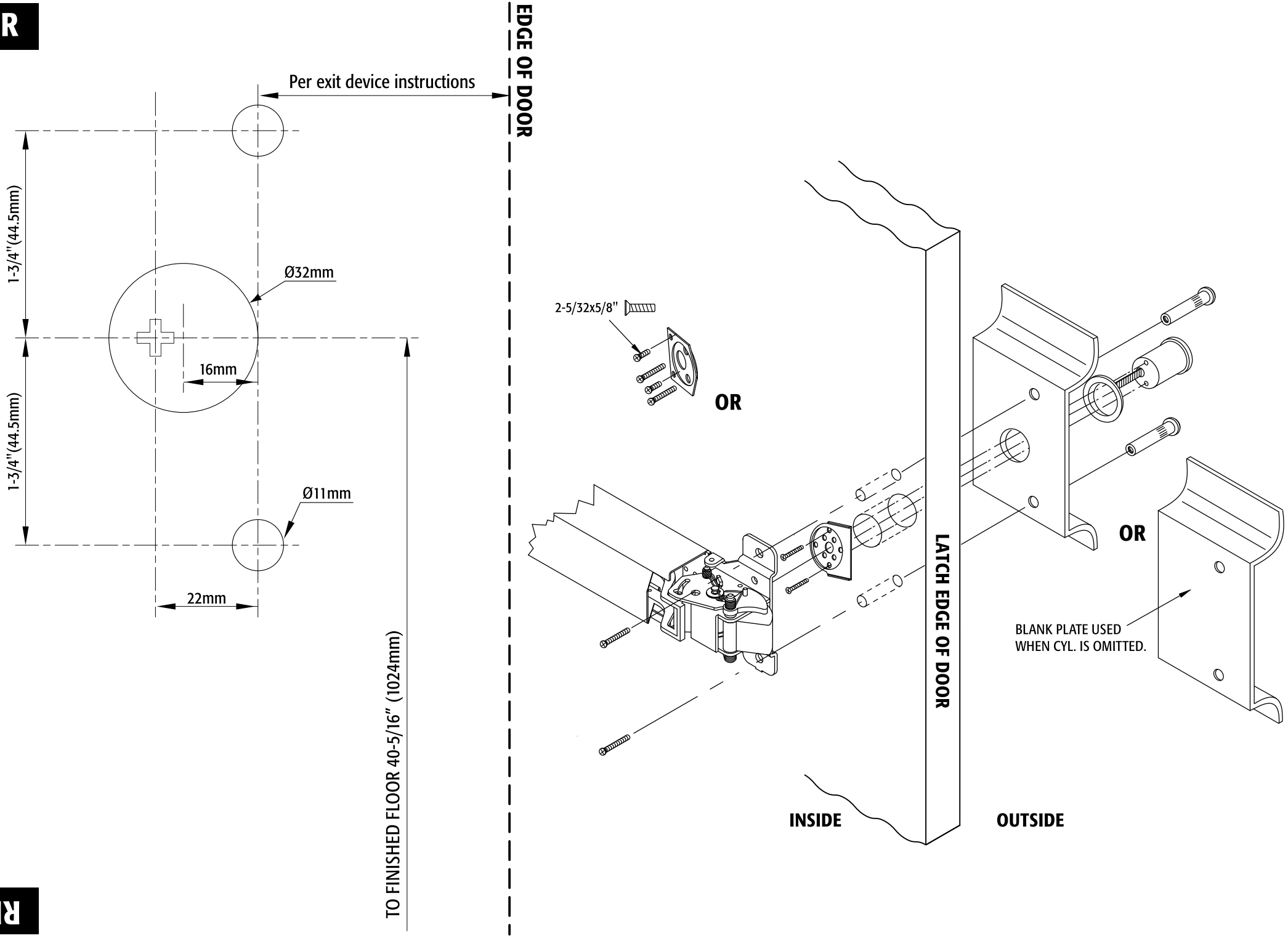
Per exit device instructions
EDGE OF DOOR
1-3/4"(44.5mm)
Ø32mm
16mm
1-3/4"(44.5mm)
Ø11mm
22mm
TO FINISHED FLOOR 40-5/16" (1024mm)
2-5/32x5/8"
OR
LATCH EDGE OF DOOR
OR
BLANK PLATE USED
WHEN CYL. IS OMITTED.
INSIDE
OUTSIDE

RHR

Parker Hardware mfg. corp.

INSTALLATION INSTRUCTIONS

WHEN YOUR DOOR HAS CYLINDRICAL LOCK CUT-OUT

CUT OFF LENGTH OF CYL. CONNECTING BAR SO THAT 3/16" PROJECTS BEYOND INSIDE FACE OF DOOR.

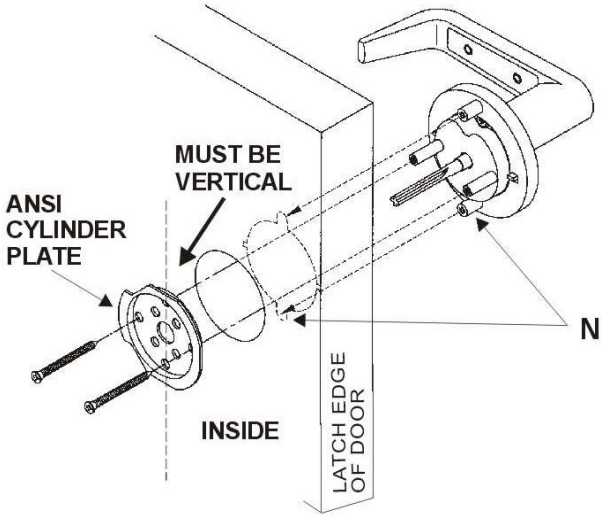

IMPORTANT!

NOTE: ALIGNMENT STUDS MUST ENTER INTO (2) 5/16" FIELD DRILLED HOLES ON OUTSIDE OF DOOR (EXISTING SLOTS CAN BE ELONGATED WITH A FILE).

TEMPLATE

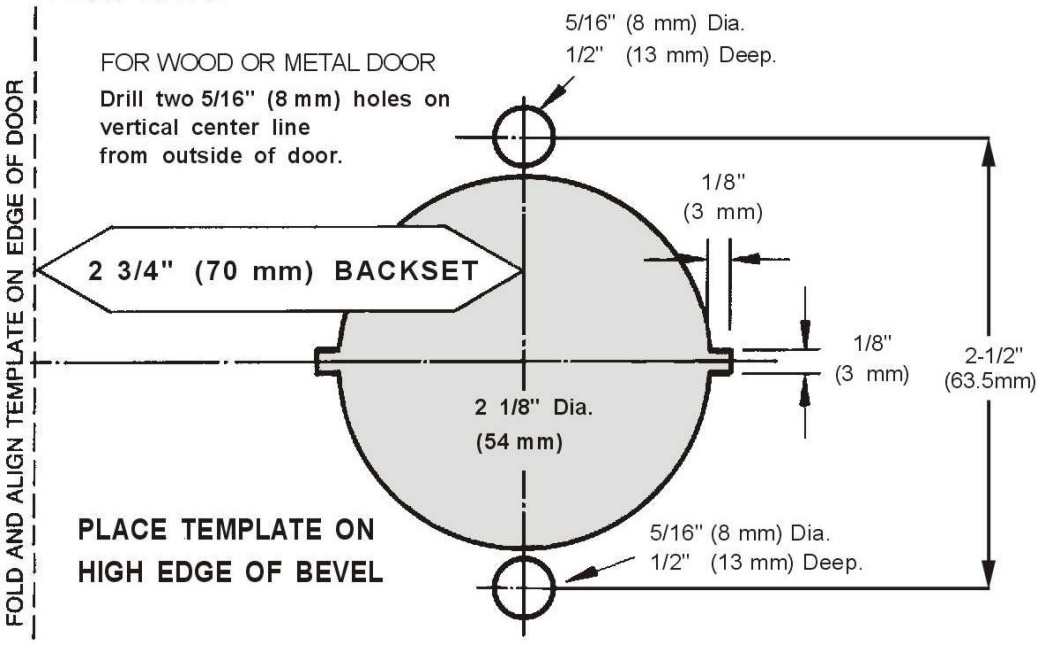

Parker Hardware mfg. corp.
INSTALLATION INSTRUCTIONS

SLL520 / SDLL520 / SNLL520 / CSLL520

LL520 Lever Keyed Locks
for Exit Devices

(201409-W-R1)

10102 ZINS-9T004-00

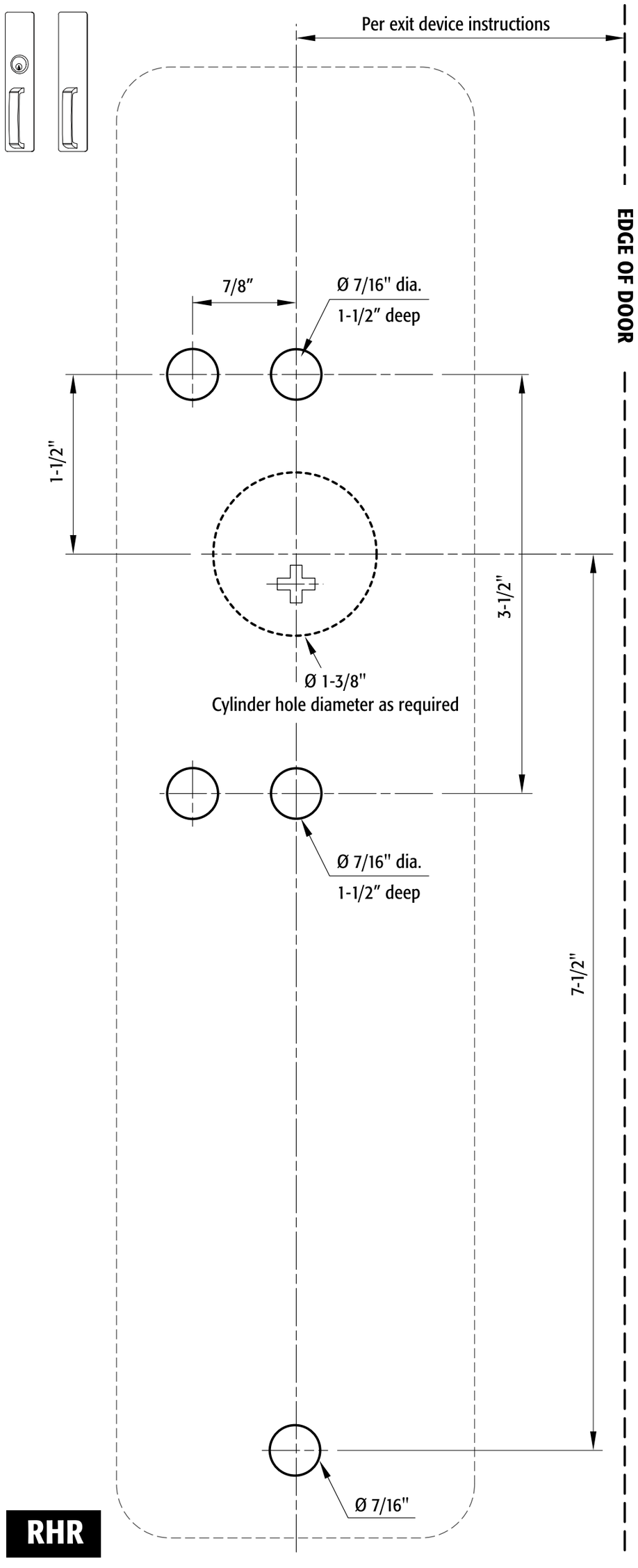

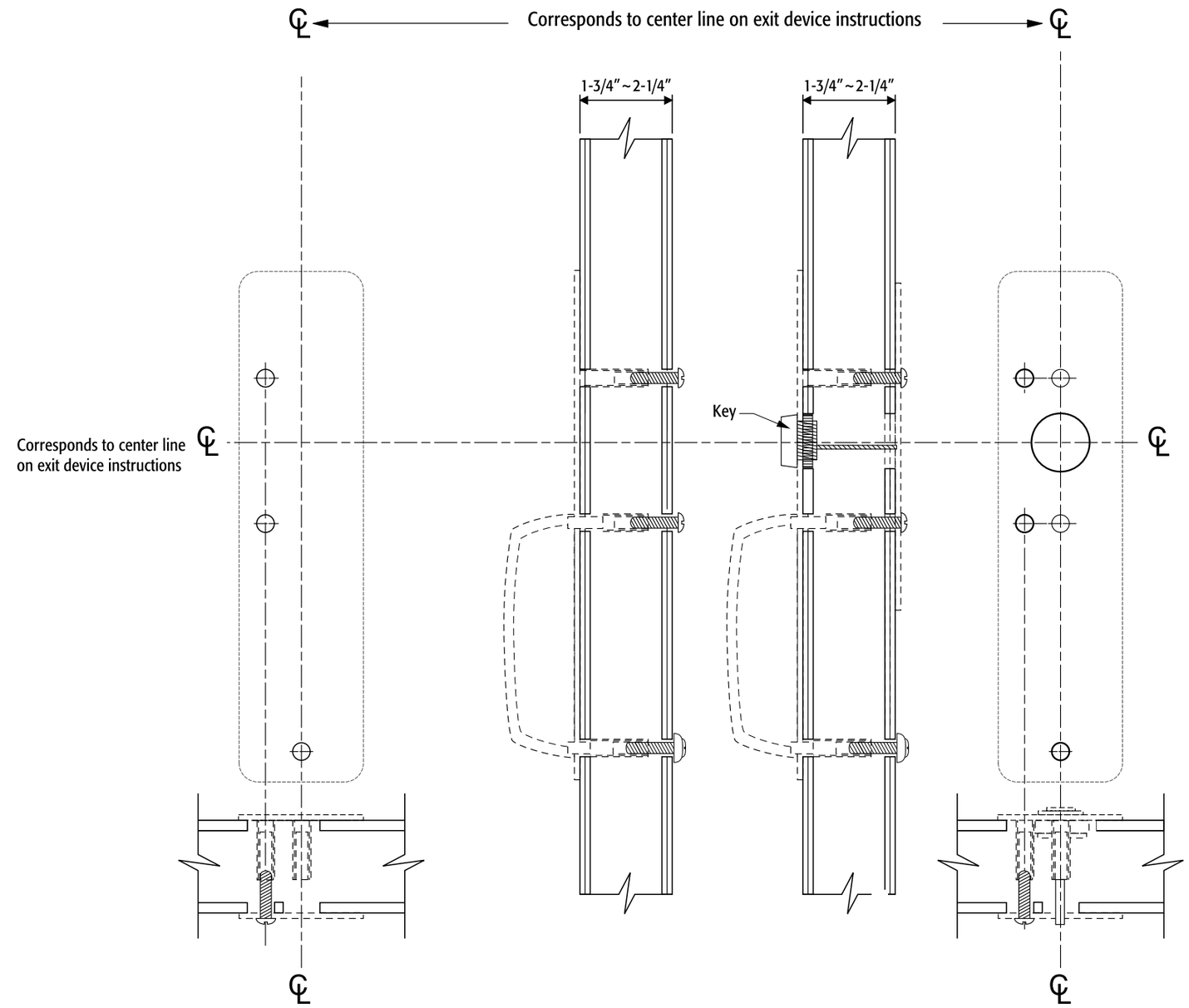

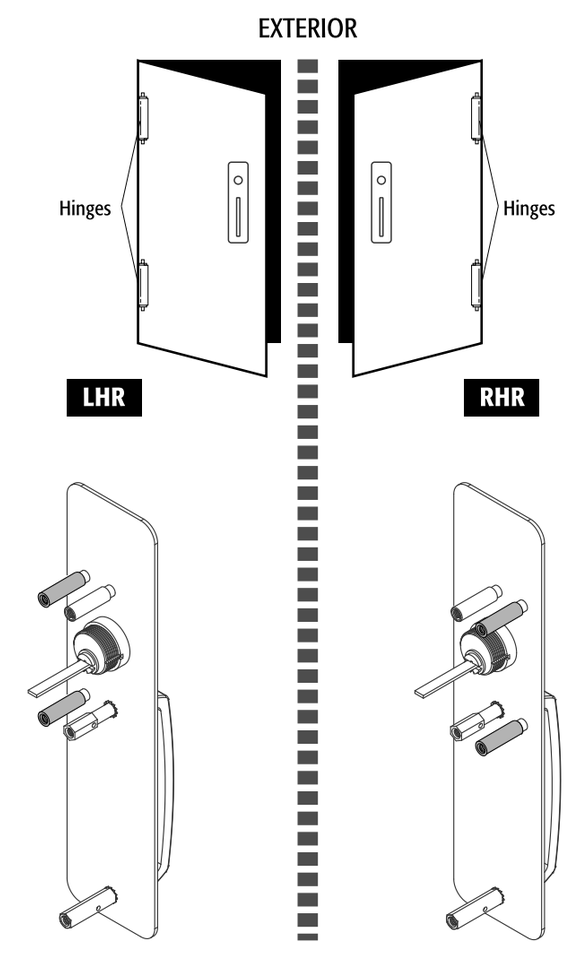

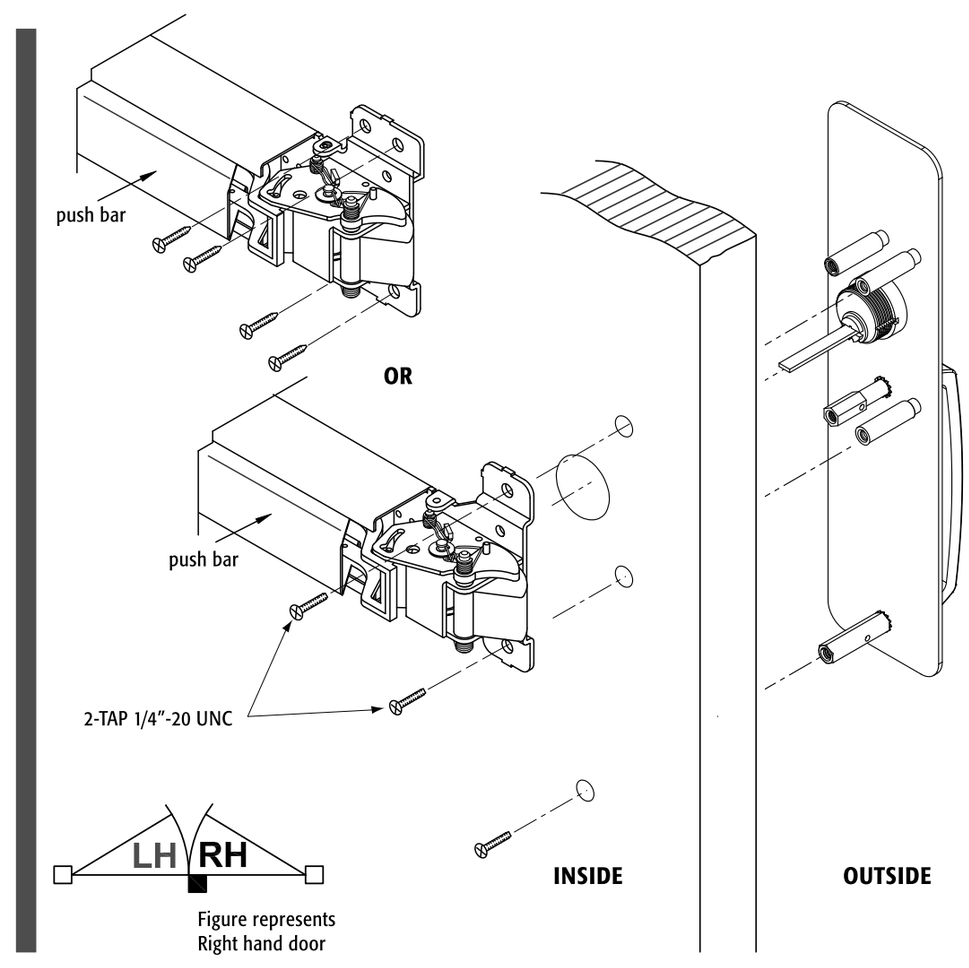

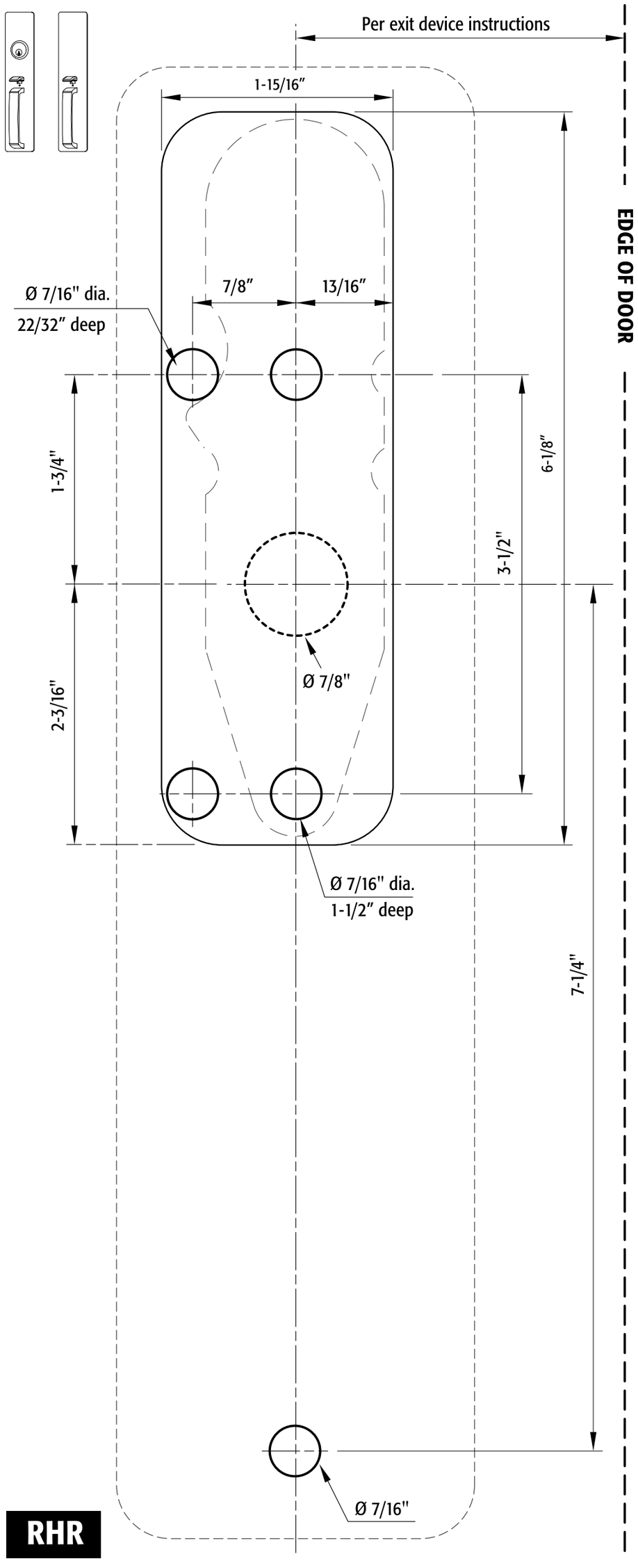
Per exit device instructions
1-15/16"
EDGE OF DOOR
Ø 7/16" dia.
22/32" deep
7/8"
13/16"
1-3/4"
6-1/8"
3-1/2"
2-3/16"
Ø 7/8"
Ø 7/16" dia.
1-1/2" deep
7-1/4"
Ø 7/16"
RHR

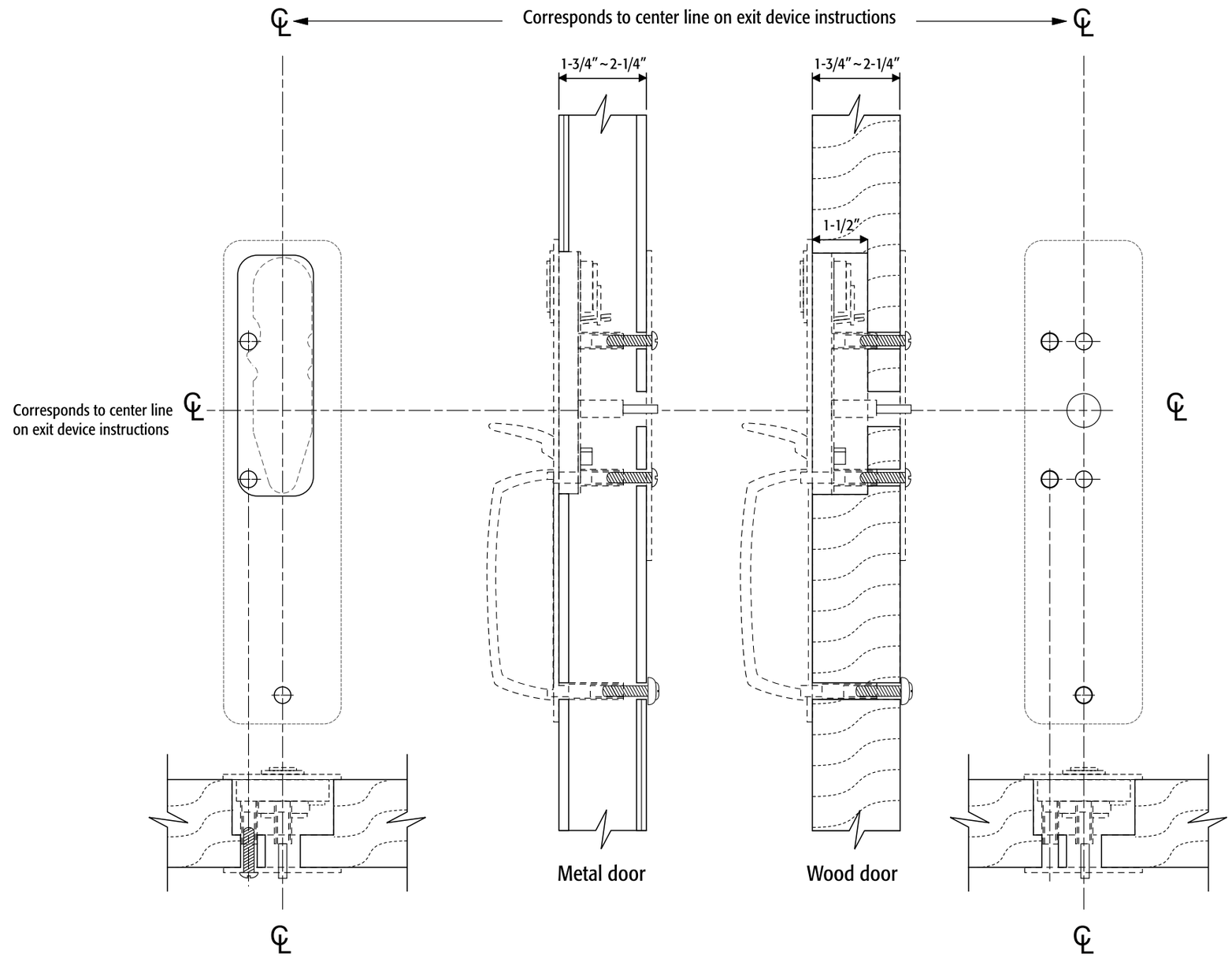
Corresponds to center line on exit device instructions
1-3/4"~2-1/4"
1-3/4"~2-1/4"
1-1/2"
Corresponds to center line
on exit device instructions
Metal door
Wood door

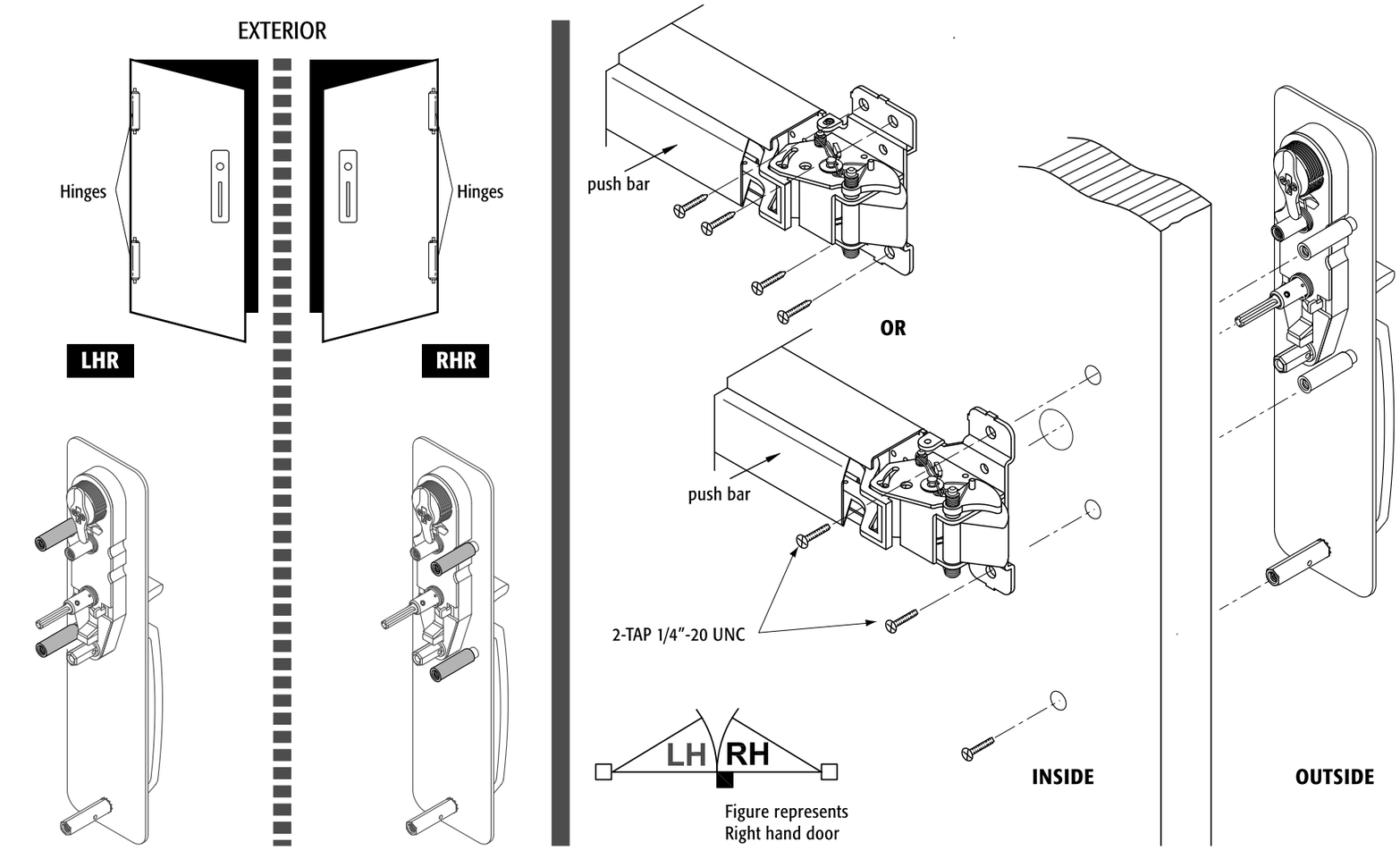
EXTERIOR
Hinges
Hinges
LHR
RHR
push bar
OR
push bar
2-TAP 1/4"-20 UNC
LH
RH
Figure represents
Right hand door
INSIDE
OUTSIDE

UL520 SERIES RIM EXIT DEVICE - REVERSIBLE
INSTALLATION INSTRUCTIONS FOR LHR DOOR

10107 ZINS-R8041-45

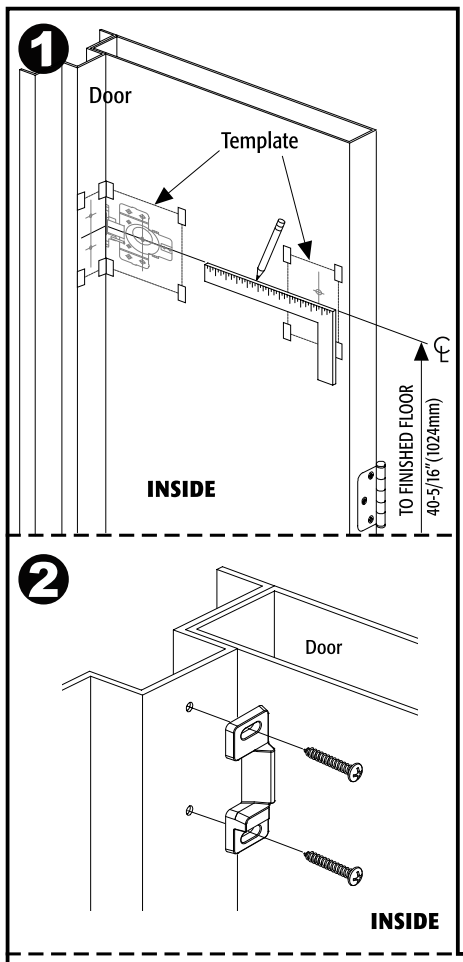

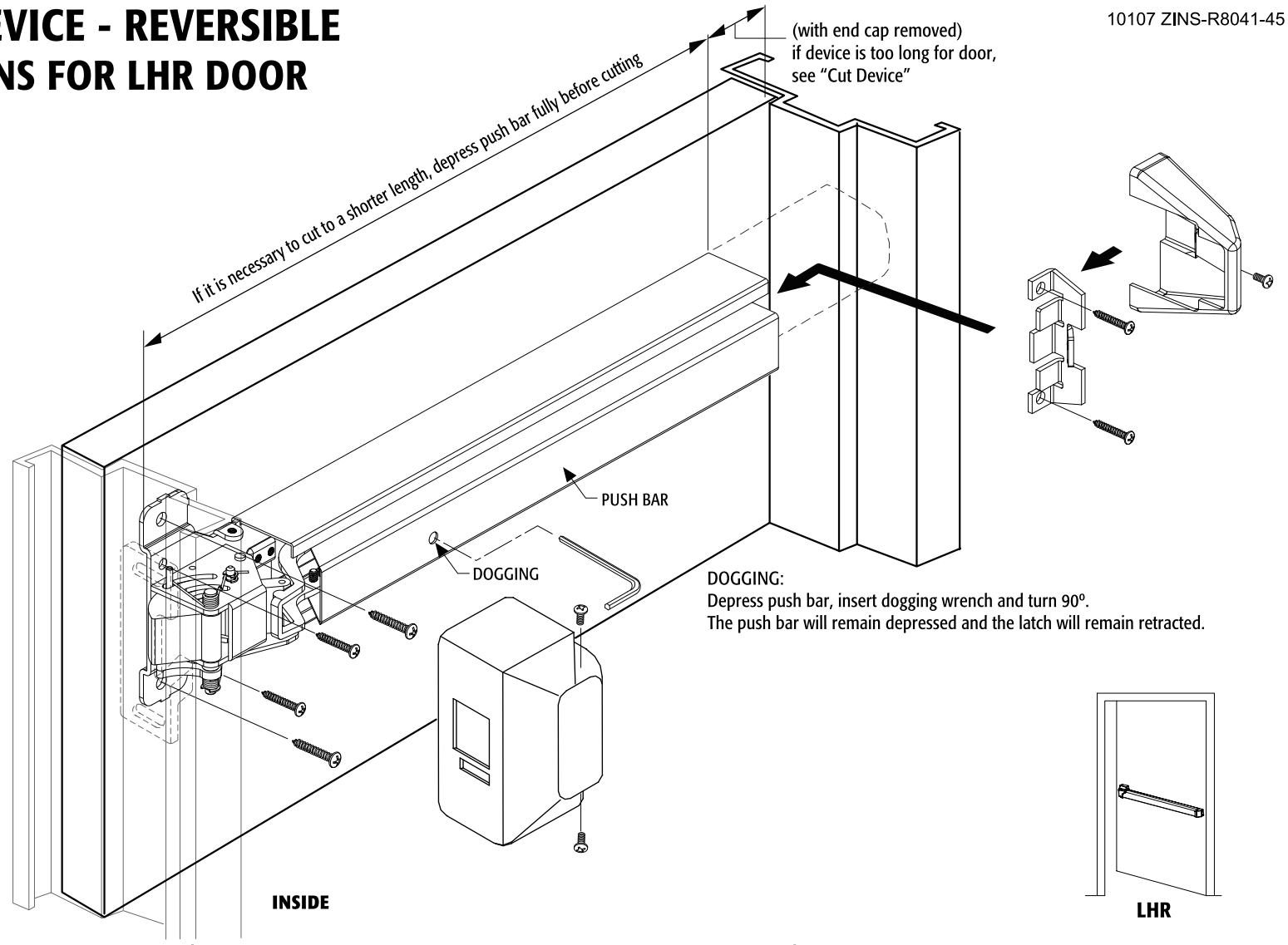

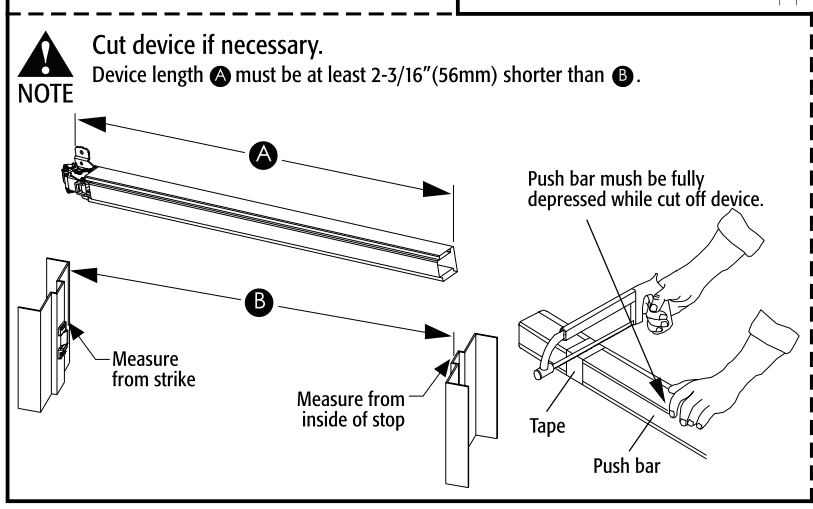

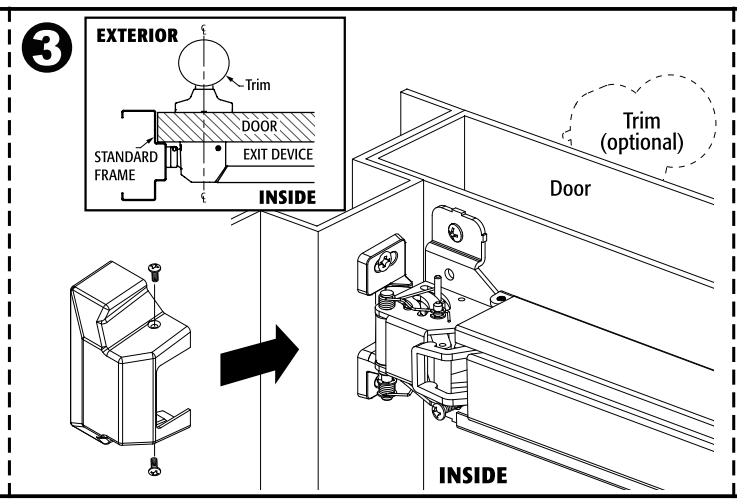

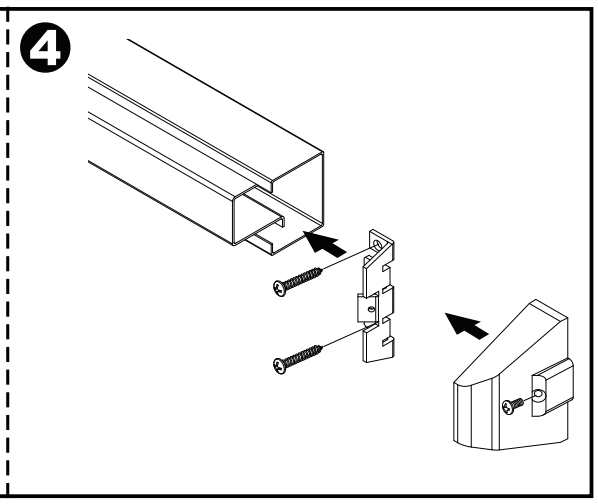

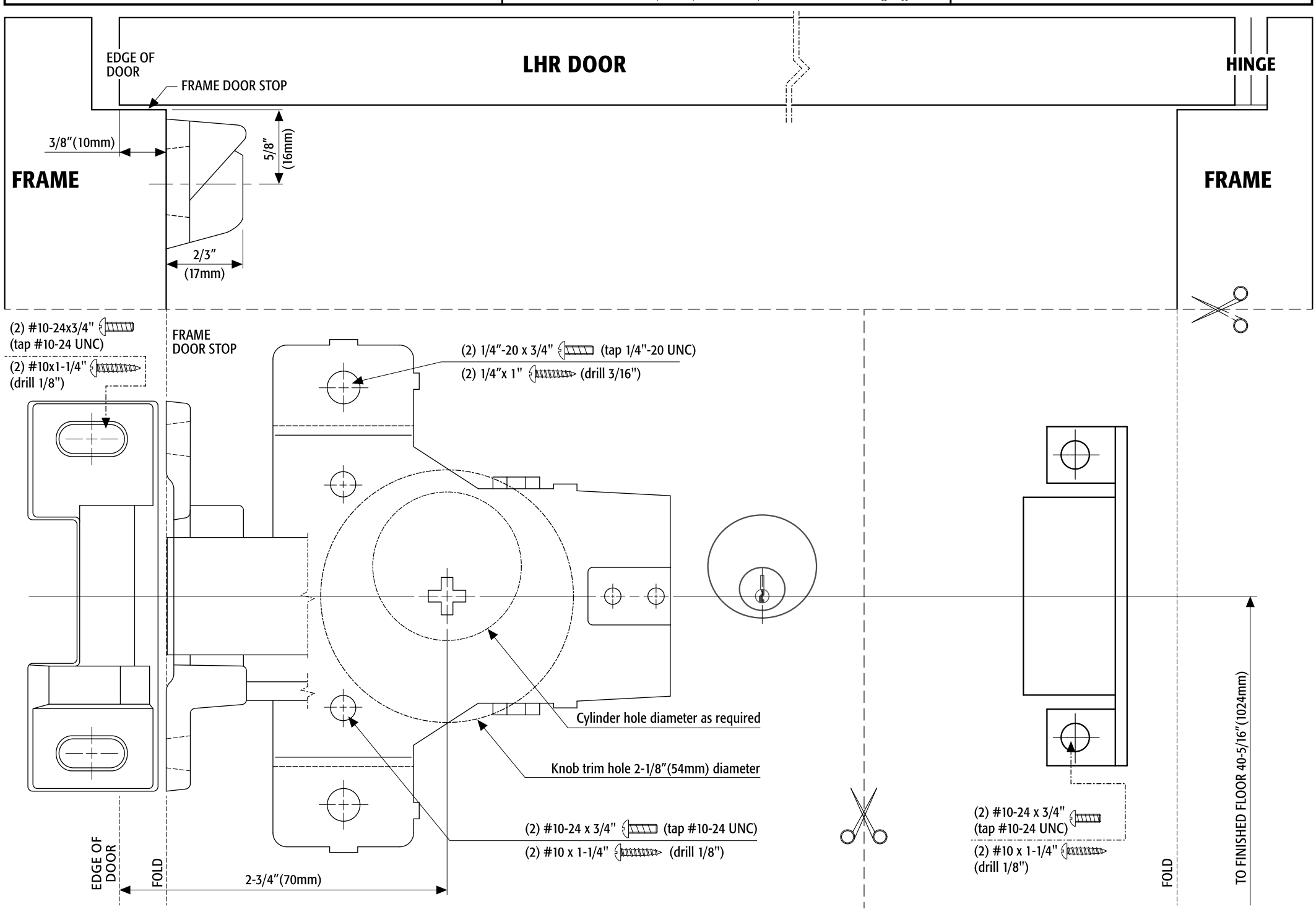

UL520 SERIES RIM EXIT DEVICE - REVERSIBLE
INSTALLATION INSTRUCTIONS FOR RHR DOOR

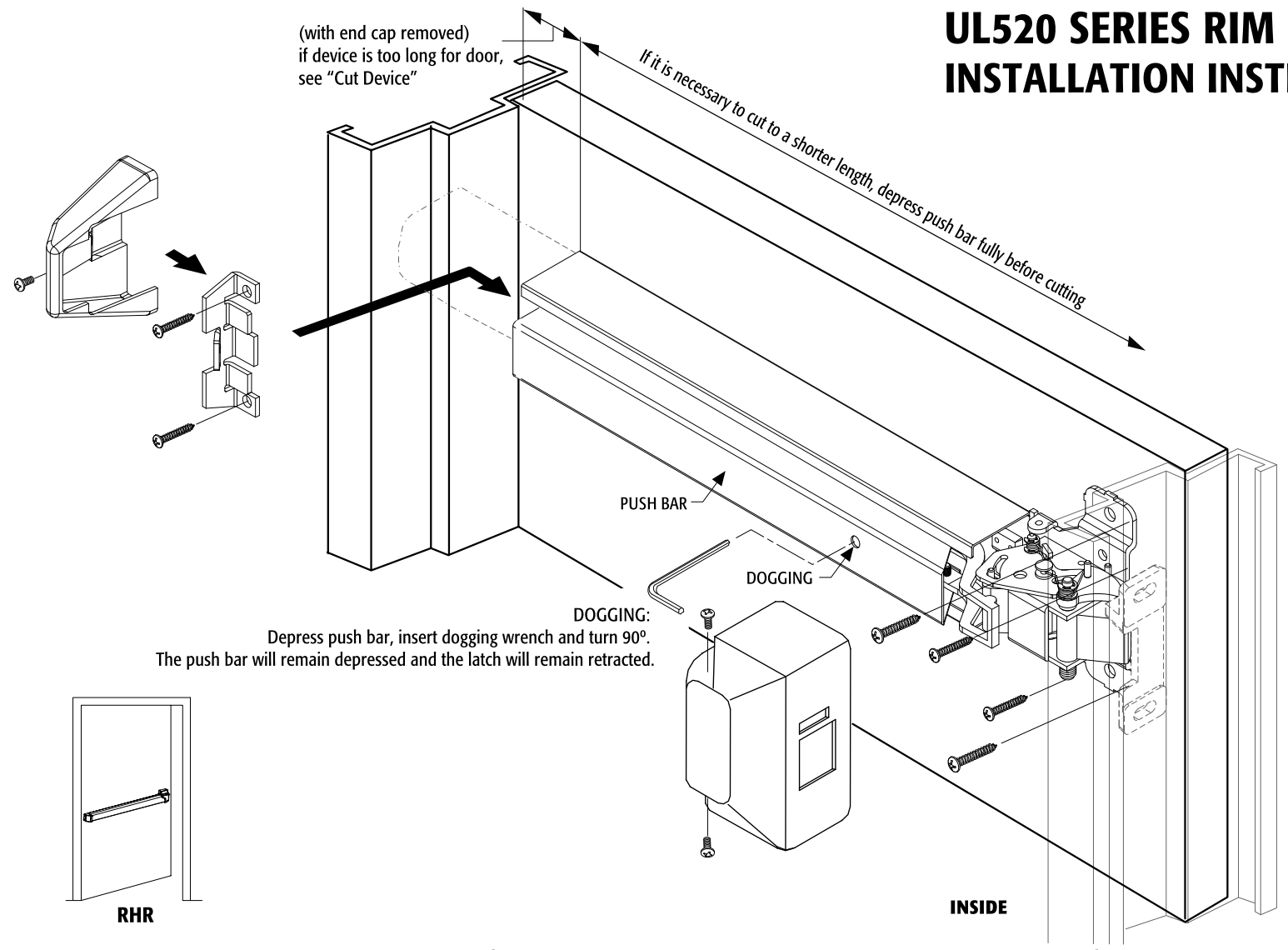

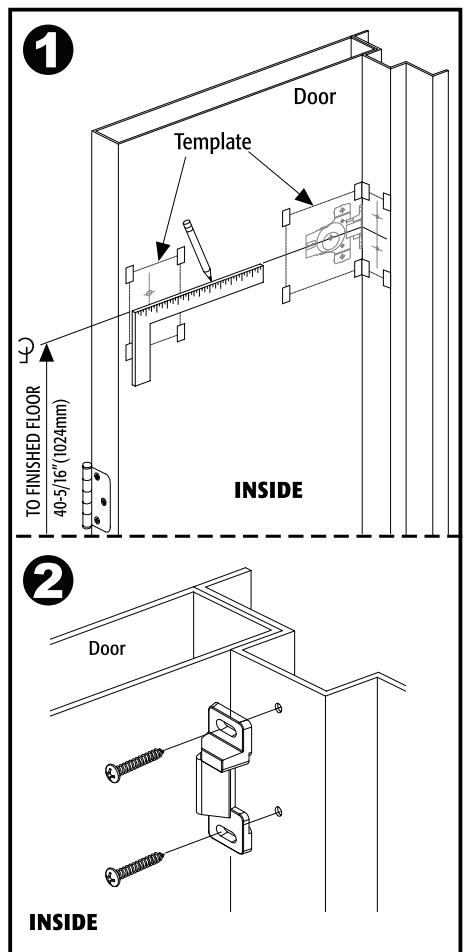

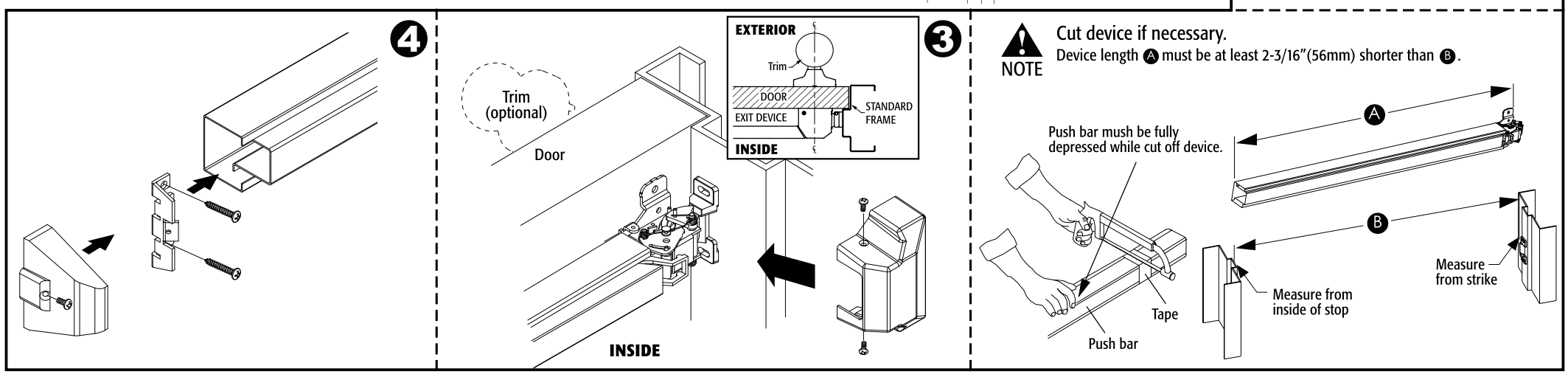

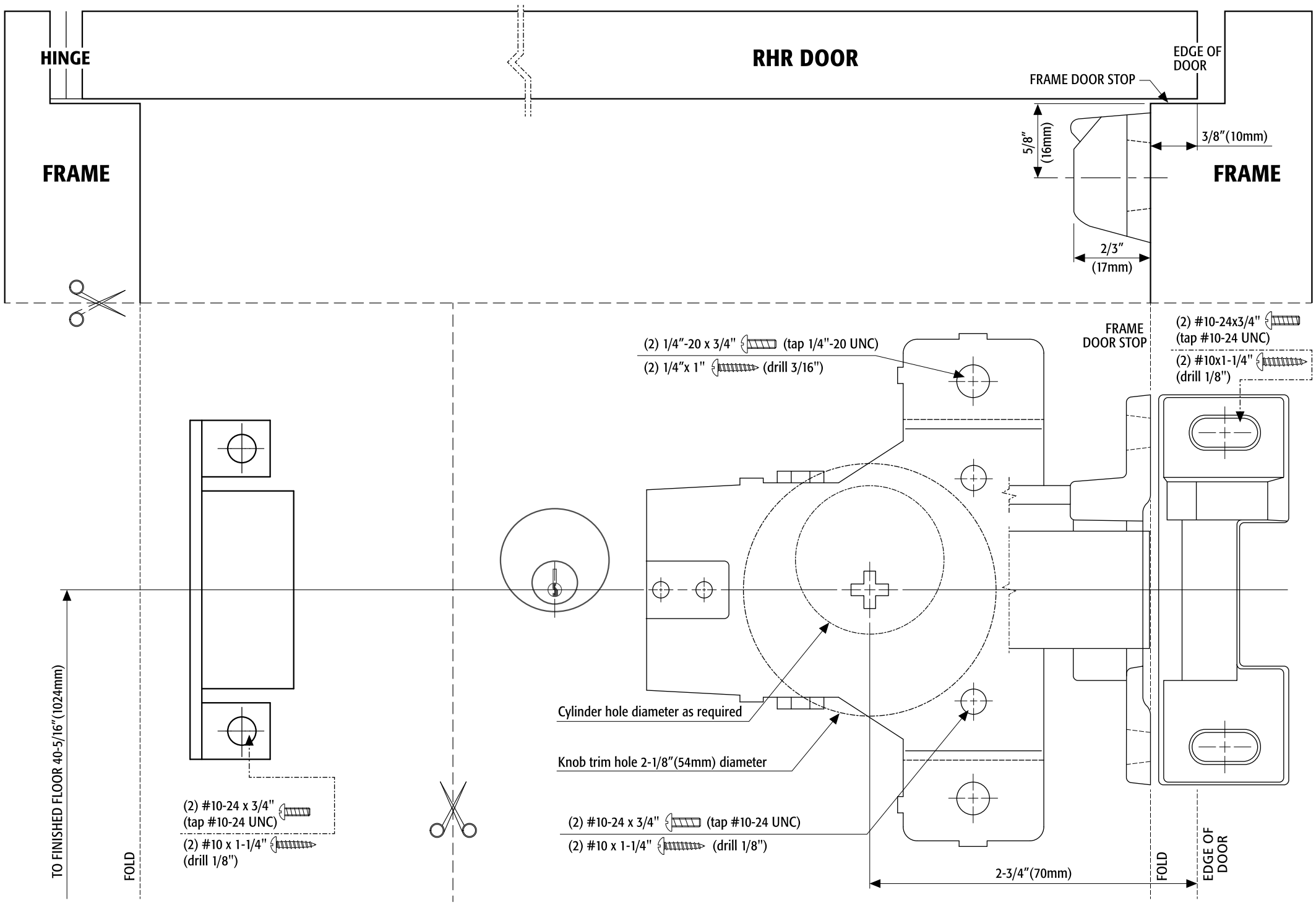

TEMPLATE (For Panic Rim Device use)

FOR LHR DOOR

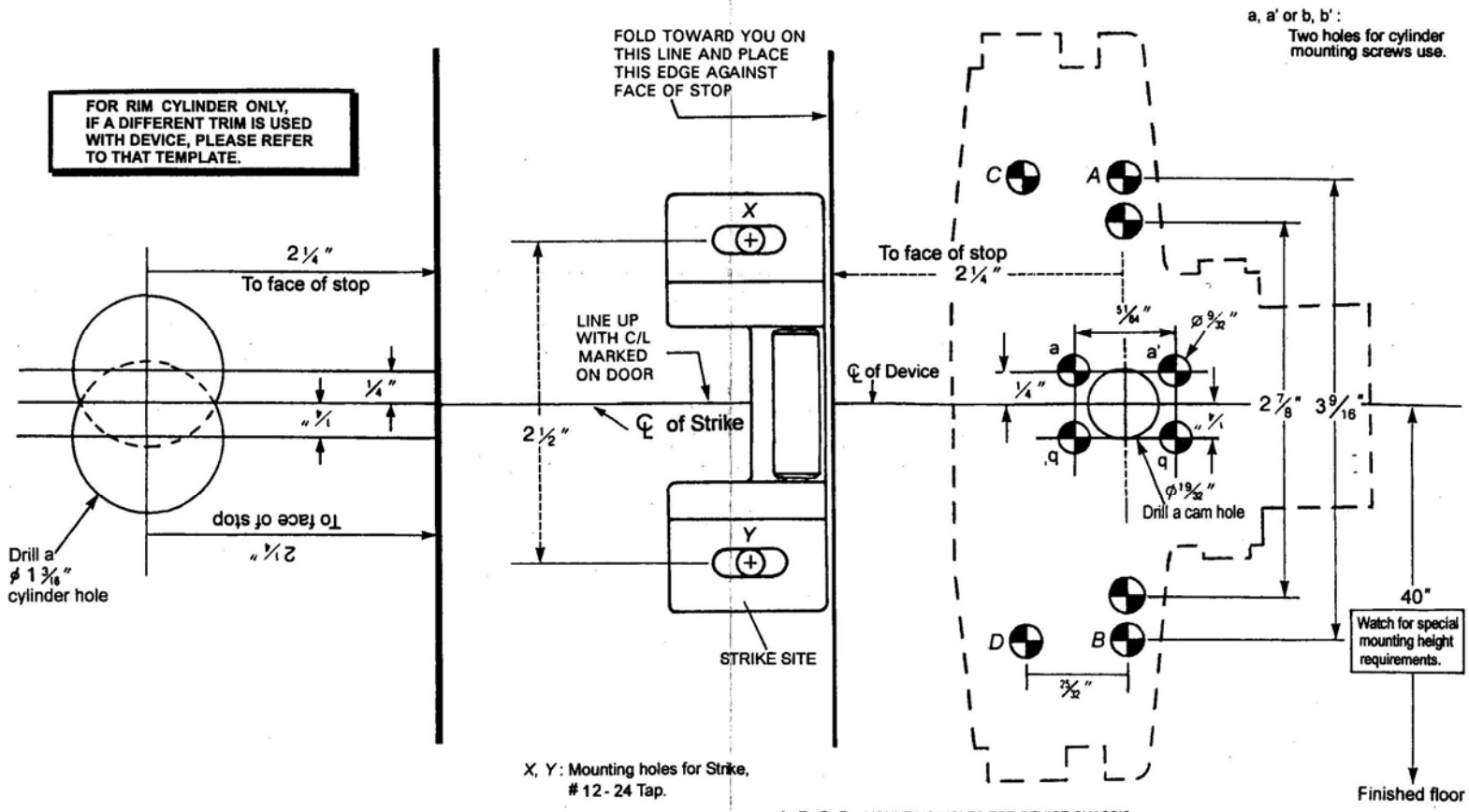

Parker Hardware mfg. corp.

INSTALLATION INSTRUCTIONS

(TEMPLATE)

UL523 / UL524

Touch Bar Panic Devices

Rim, Reversible

(201408-W)

UL525 SERIES RIM EXIT DEVICE - REVERSIBLE
INSTALLATION INSTRUCTIONS FOR LHR DOOR

10012 ZINS-R5019-45

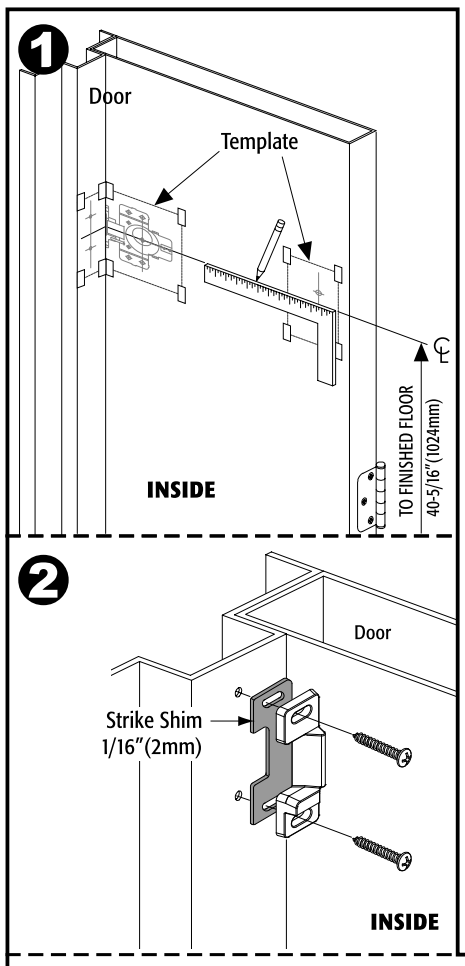

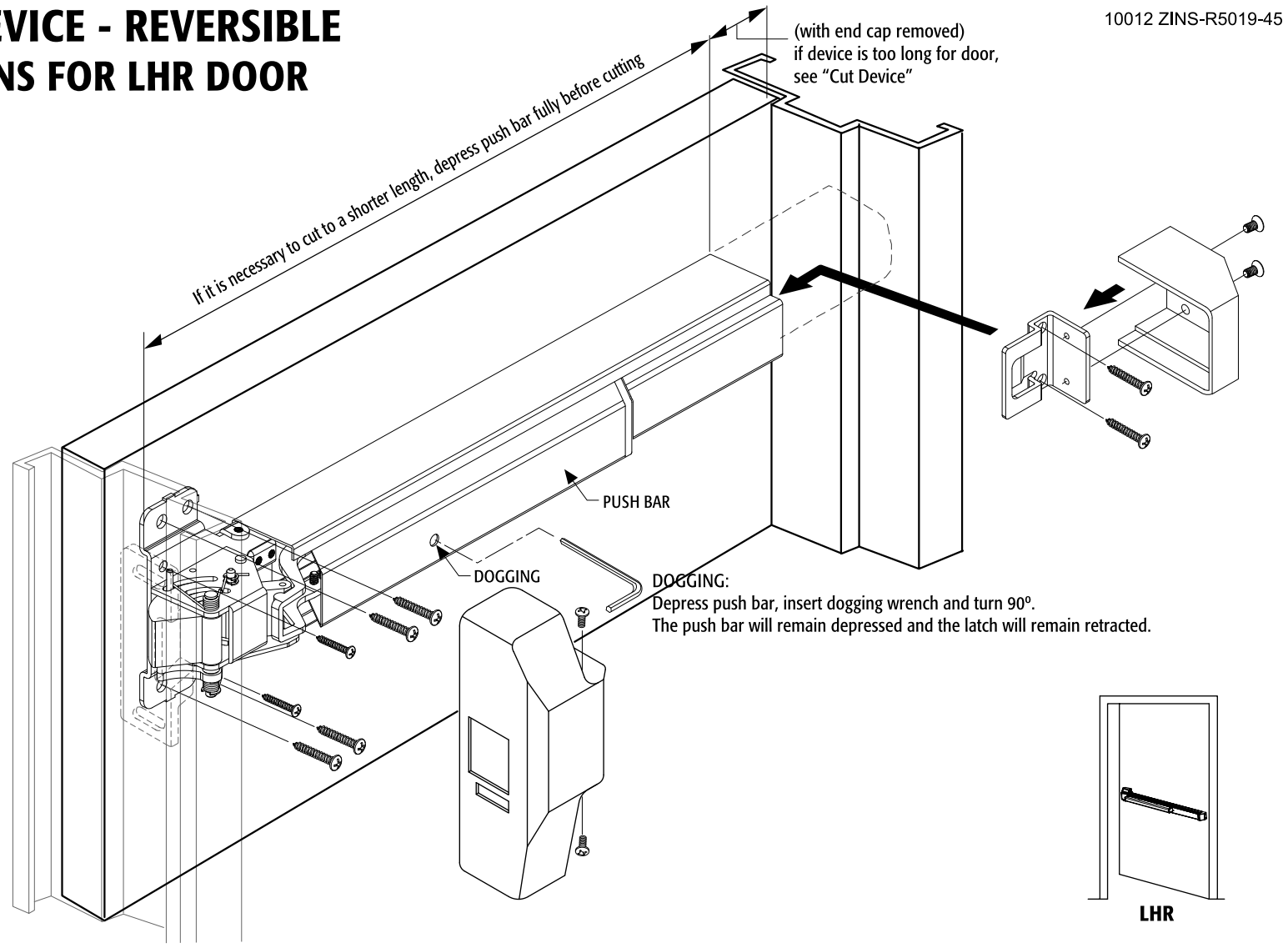

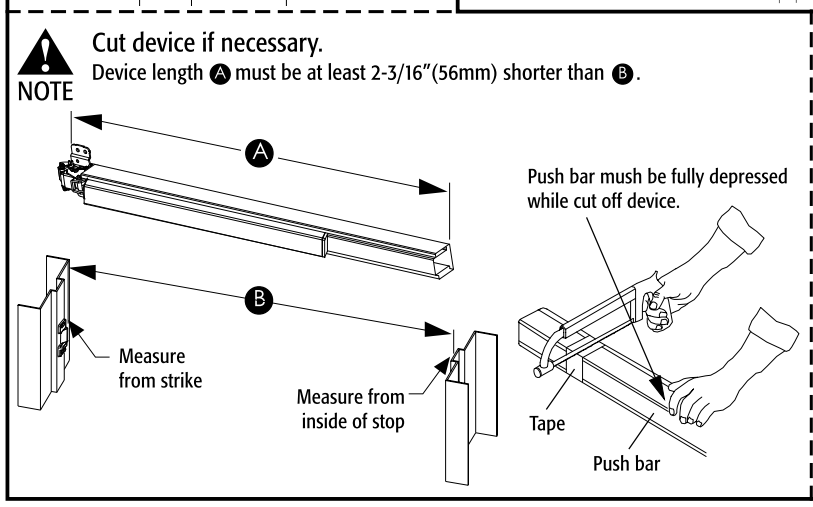

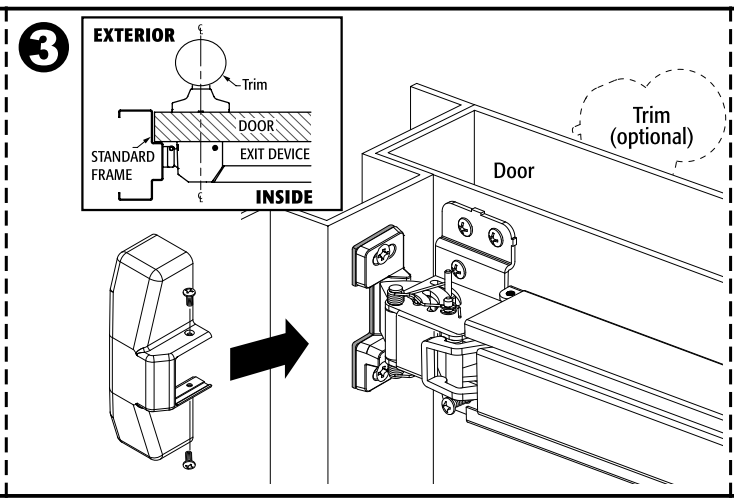

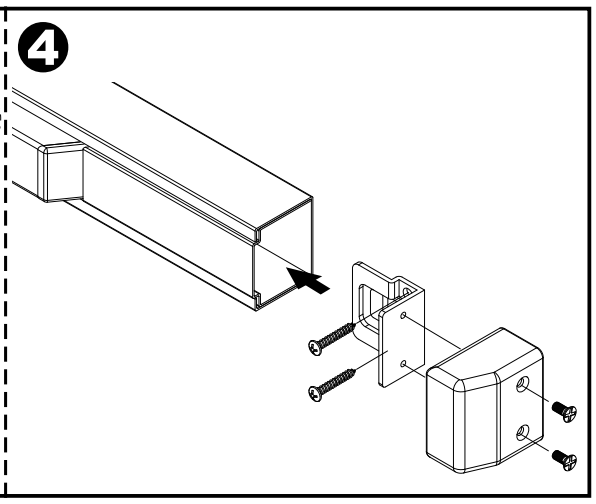

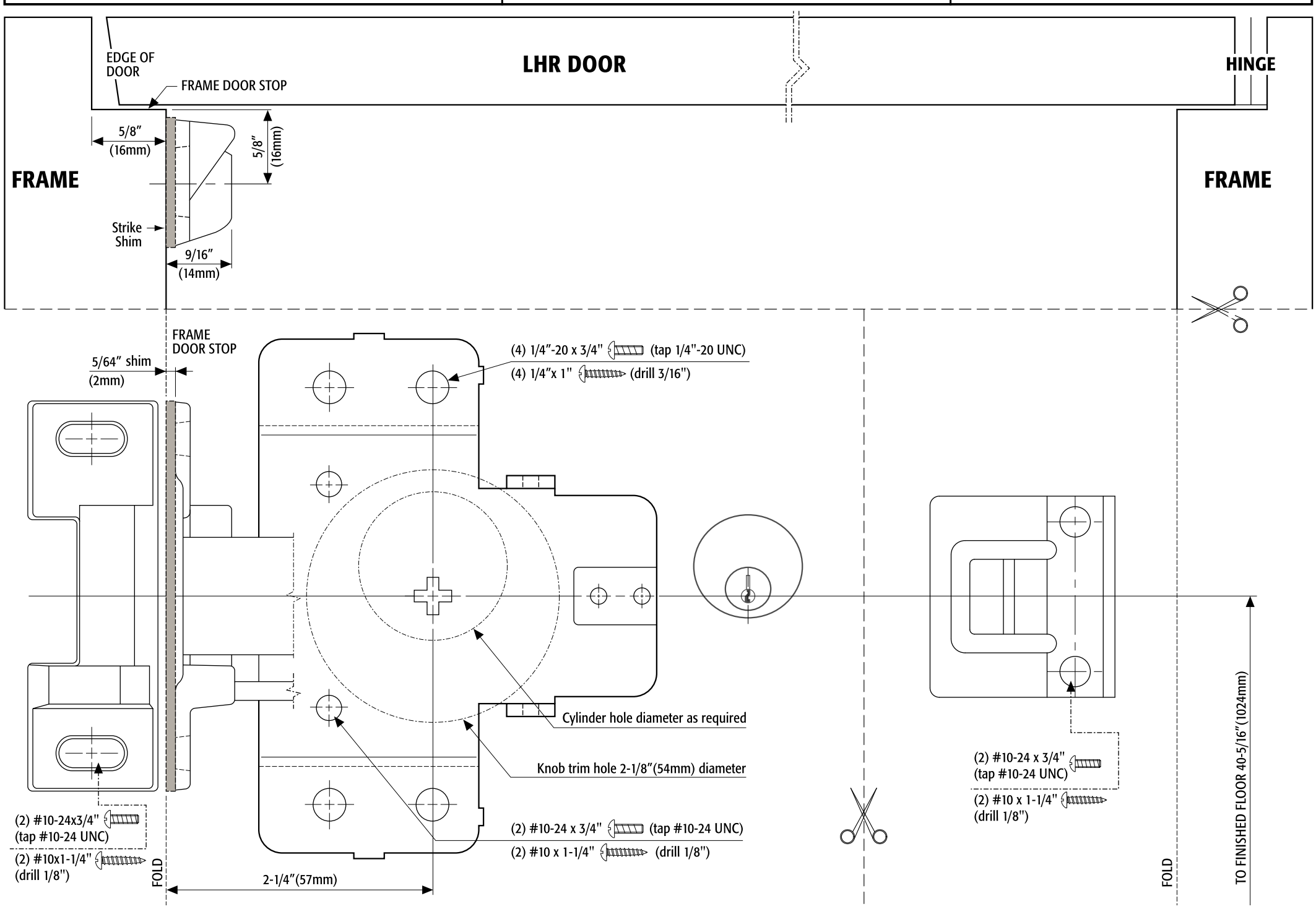

UL525 SERIES RIM EXIT DEVICE - REVERSIBLE
INSTALLATION INSTRUCTIONS FOR RHR DOOR

(with end cap removed)
if device is too long for door,
see "Cut Device"

If it is necessary to cut to a shorter length, depress push bar fully before cutting

PUSH BAR

DOGGING

DOGGING:
Depress push bar, insert dogging wrench and turn 90º.
The push bar will remain depressed and the latch will remain retracted.

RHR

1

Door

Template

TO FINISHED FLOOR
40-5/16"(1024mm)

INSIDE

2

Door

Strike Shim
1/16"(2mm)

INSIDE

4

Trim
(optional)

Door

3

EXTERIOR

Trim

DOOR

EXIT DEVICE

STANDARD
FRAME

INSIDE

NOTE

Cut device if necessary.
Device length Ⓐ must be at least 2-3/16"(56mm) shorter than Ⓑ.

Push bar mush be fully depressed
while cut off device.

Tape

Push bar

Measure from
inside of stop

Measure
from strike

HINGE

RHR DOOR

EDGE OF
DOOR

FRAME DOOR STOP

5/8"
(16mm)

5/8"
(16mm)

FRAME

FRAME

Strike
Shim

9/16"
(14mm)

FRAME
DOOR STOP

5/64" shim
(2mm)

(4) 1/4"-20 x 3/4" (tap 1/4"-20 UNC)

(4) 1/4"x 1" (drill 3/16")

TO FINISHED FLOOR 40-5/16"(1024mm)

(2) #10-24 x 3/4"
(tap #10-24 UNC)

(2) #10 x 1-1/4"
(drill 1/8")

Cylinder hole diameter as required

Knob trim hole 2-1/8"(54mm) diameter

(2) #10-24 x 3/4" (tap #10-24 UNC)

(2) #10 x 1-1/4" (drill 1/8")

2-1/4"(57mm)

(2) #10-24x3/4"
(tap #10-24 UNC)

(2) #10x1-1/4"
(drill 1/8")

FOLD

FOLD

EXIT DEVICES

LOCK STILE INSIDE FACE

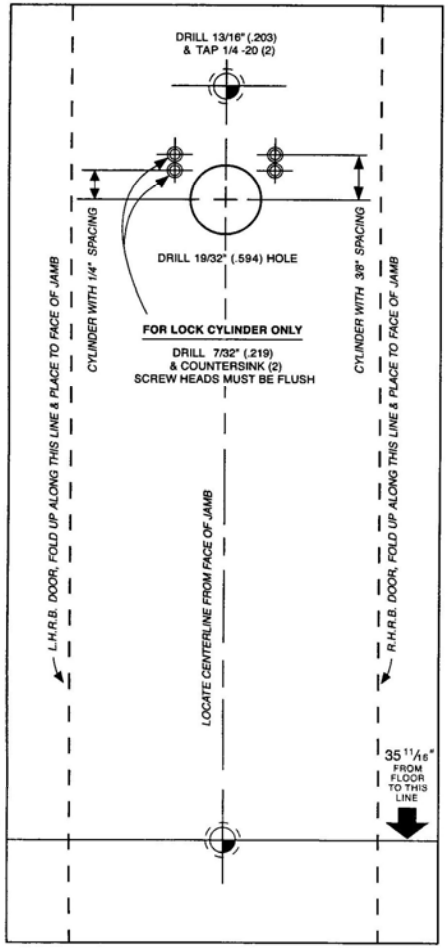

EXIT DEVICES

HINGE STILE INSIDE FACE

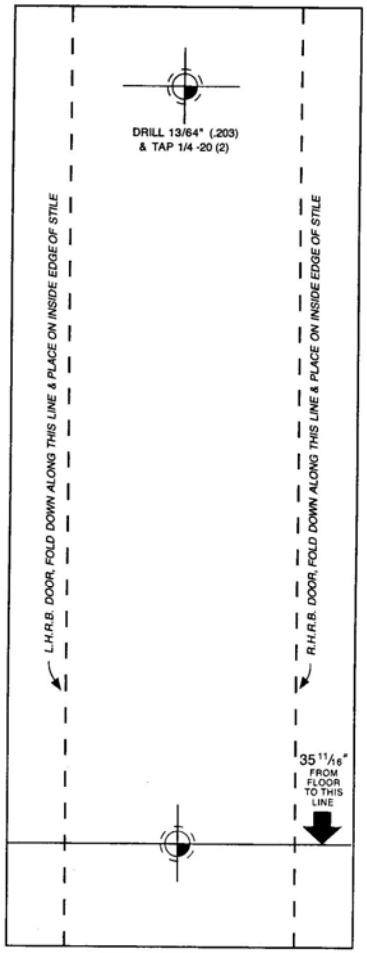

Parker Hardware mfg. corp.

INSTALLATION INSTRUCTIONS

(TEMPLATE)

UL540

Cross Bar Panic Devices

Rim ; Handed

(201408-W)