Copyright © 1996, 2011, 2022, ASSA ABLOY Accessories and Door Controls Group, Inc. All rights reserved.
Reproduction in whole or in part without the express written permission of ASSA ABLOY Accessories and Door Controls Group, Inc. is prohibited.

Jamb Installation

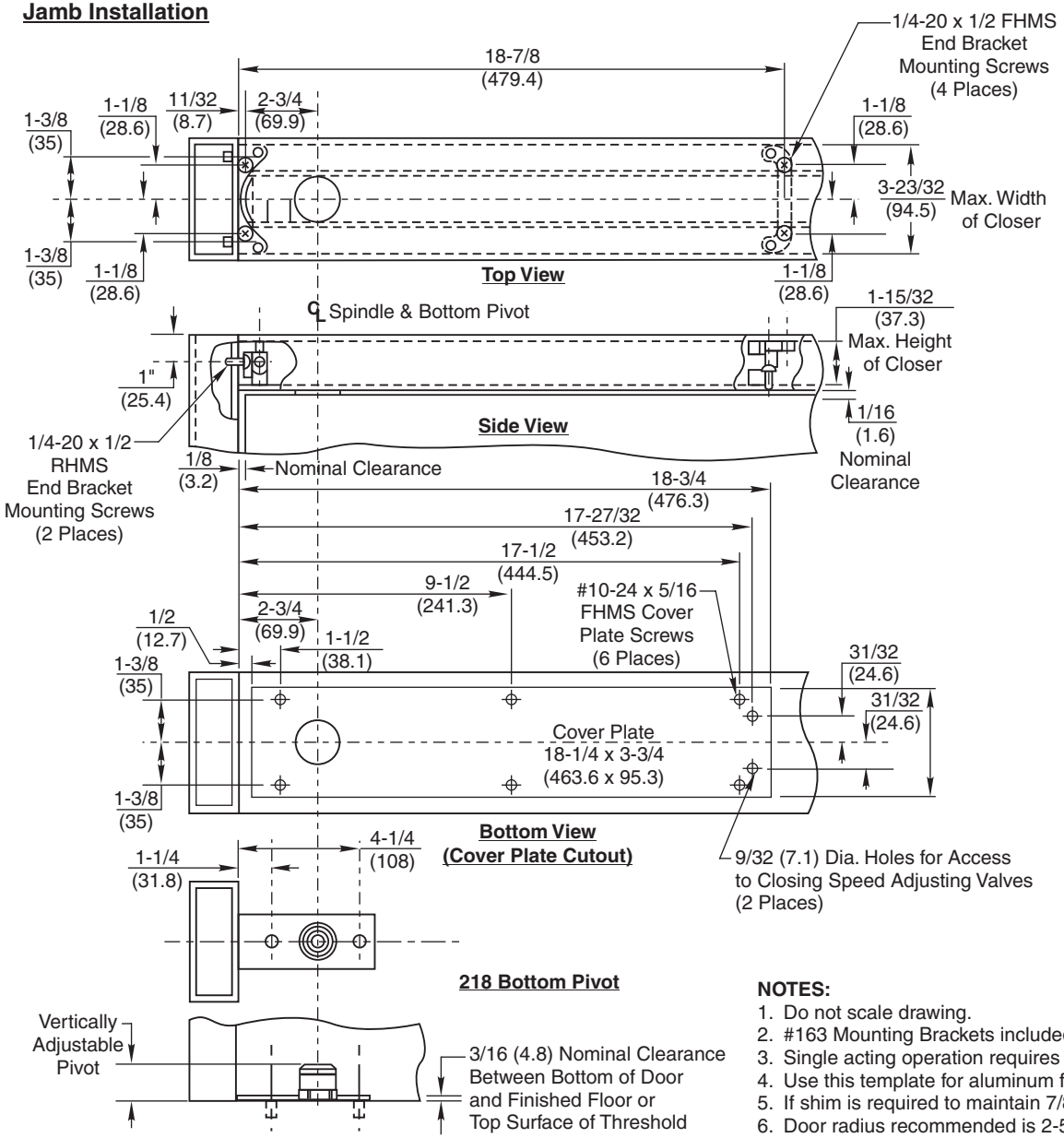

Door Installation

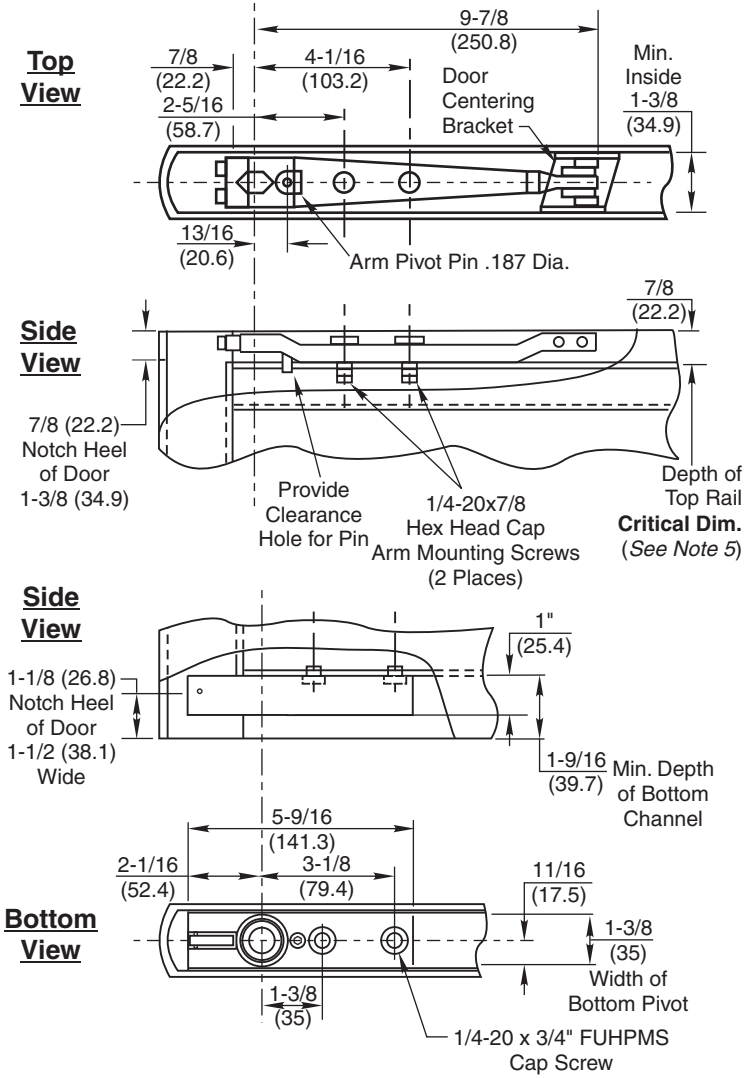

NOTES:

1. Do not scale drawing.
2. #163 Mounting Brackets included.
3. Single acting operation requires a door stop on the underside of frame.
4. Use this template for aluminum frames and doors having 7/8" (22.2) depth top rail.
5. If shim is required to maintain 7/8" (22.2) rail depth, shim should be full length of arm.
6. Door radius recommended is 2-5/8" (66.7).
7. All dimensions given in inches (mm).

700 Single Acting & 800 Double Acting Overhead Concealed Door Closer Center Hung for Aluminum Doors and Frames

NORTON RIXSON
ASSA ABLOY

TEMPLATE NUMBER	REV	DATE
OC60100	3	01/22

Approved 2023-12-15