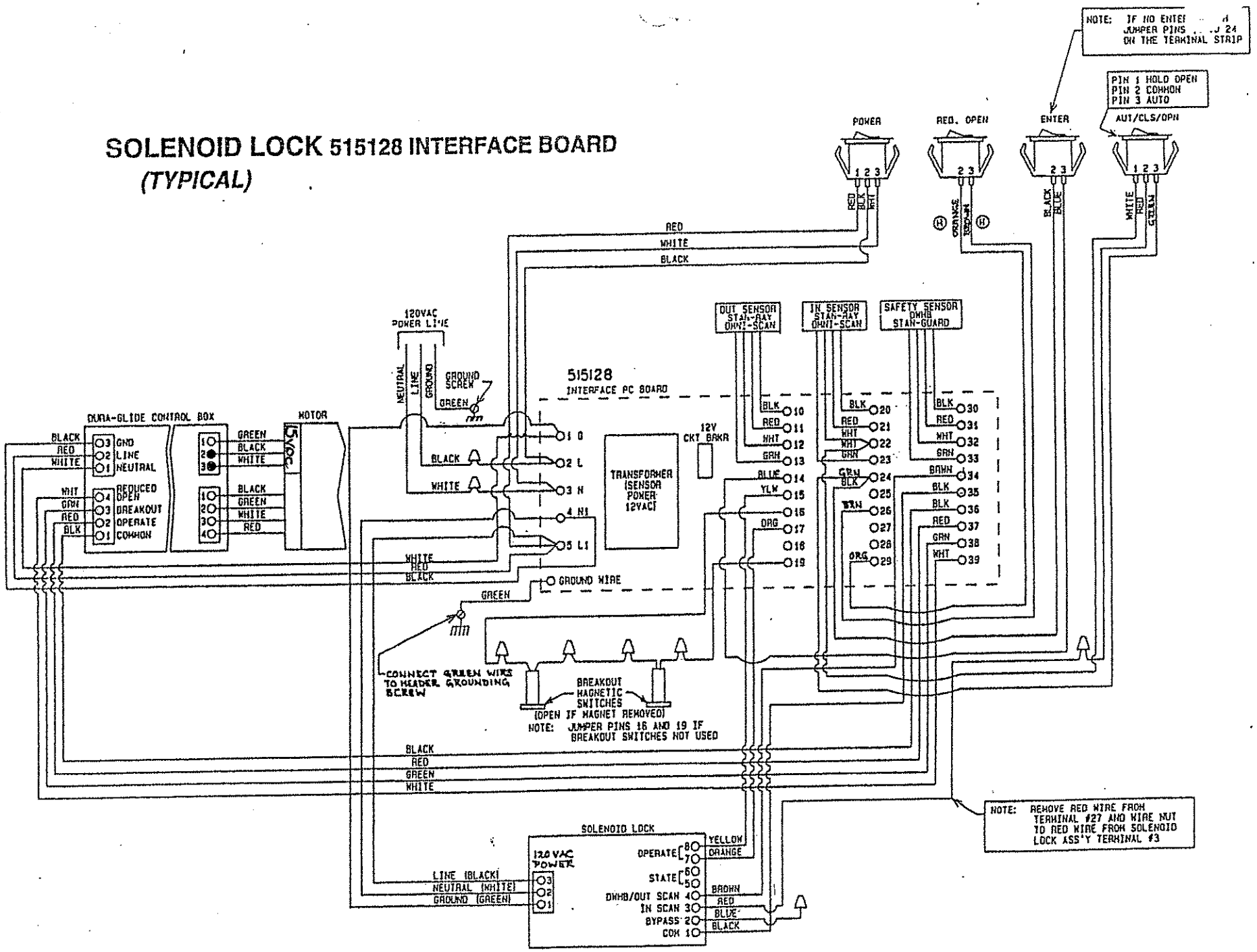SOLENOID LOCK 515128 INTERFACE BOARD
(TYPICAL)