REV.	DESCRIPTION	DATE

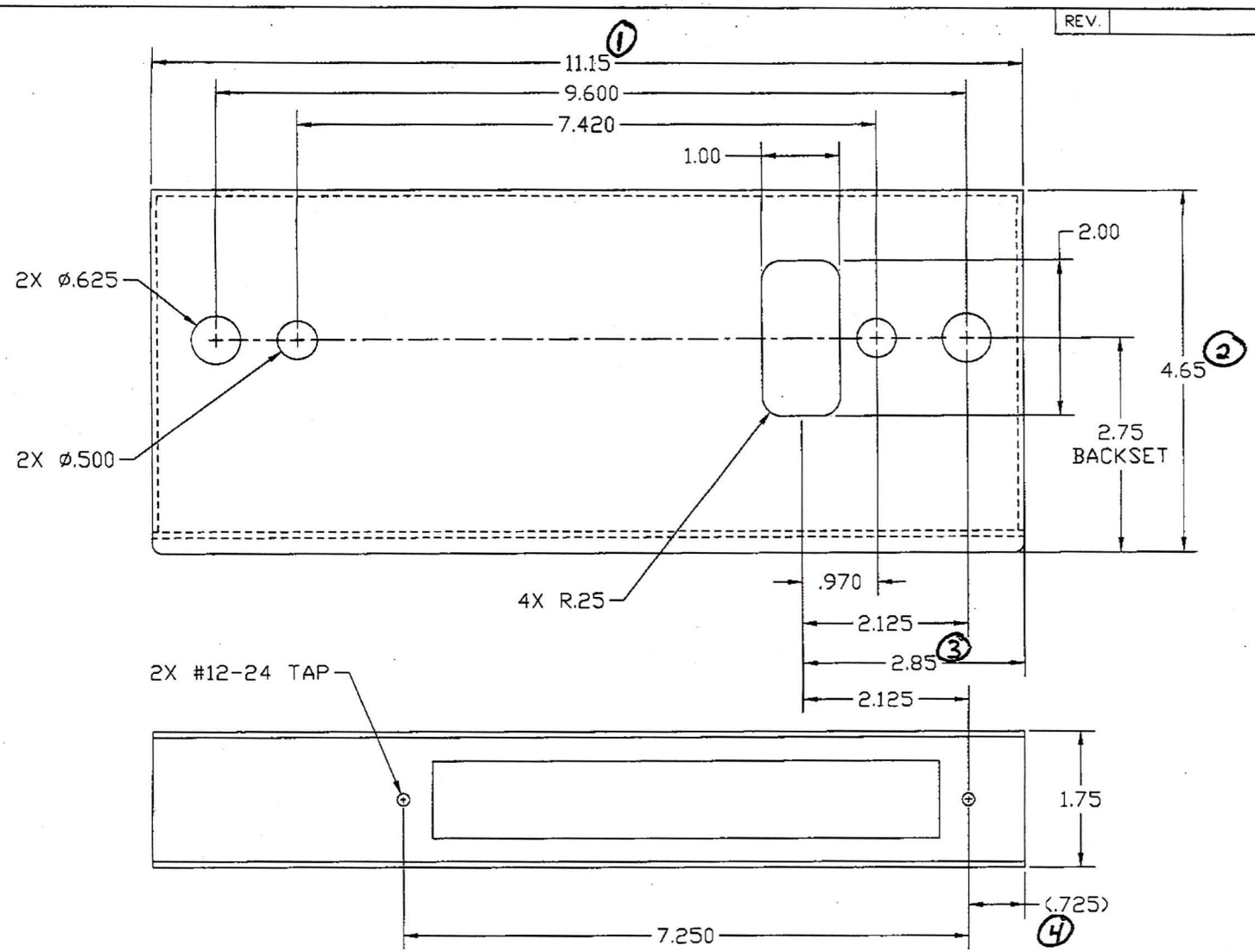

RELEASED

DATE: 03/15/05

INITIAL: SW

1. ALL UNSPECIFIED DIMENSIONS EQUIVALENT TO KEEDEX P/N K-BXSAF-2500A

NOTES:

Saflok

1950 AUSTIN, TROY, MI 48083

(248) 680-8484 FAX: (248) 680-8468

DRAFT UNLESS OTHERWISE SPECIFIED: 1° MAX

A

DRAWN BY: EM

DATE: 12.03.04

DO NOT SCALE PRINT
TOLERANCES UNLESS OTHERWISE SPECIFIED:
.X = ±.04
.XX = ±.03
.XXX = ±.015
X.X (METRIC) = ±0.4
X.XX (METRIC) = ±0.15
FRACTIONS = ±.015
ANGLES = ±1/2°
© .005
MACHINED SURFACES 125

MATERIAL: HRP&O ASTM-A569

HEAT TREAT: N/A

FINISH: N/A

TITLE: GATEBOX, WELDABLE, DUAL CONFIDANT

PART#: C80470

THIS DRAWING AND THE INFORMATION CONTAINED THEREON OR DERIVED THEREFROM ARE THE CONFIDENTIAL PROPERTY OF COMPUTERIZED SECURITY SYSTEMS, INC. IT IS NOT TO BE REPRODUCED, OR DISCLOSED TO OTHERS, AND MAY BE USED ONLY FOR THE PURPOSE OF ENABLING THE PARTY TO WHOM IT HAS BEEN LOANED TO QUOTE ON OR FILL AN ORDER FOR COMPUTERIZED SECURITY SYSTEMS, INC., OR AS MAY BE OTHERWISE AUTHORIZED BY COMPUTERIZED SECURITY SYSTEMS, INC. IN WRITING.