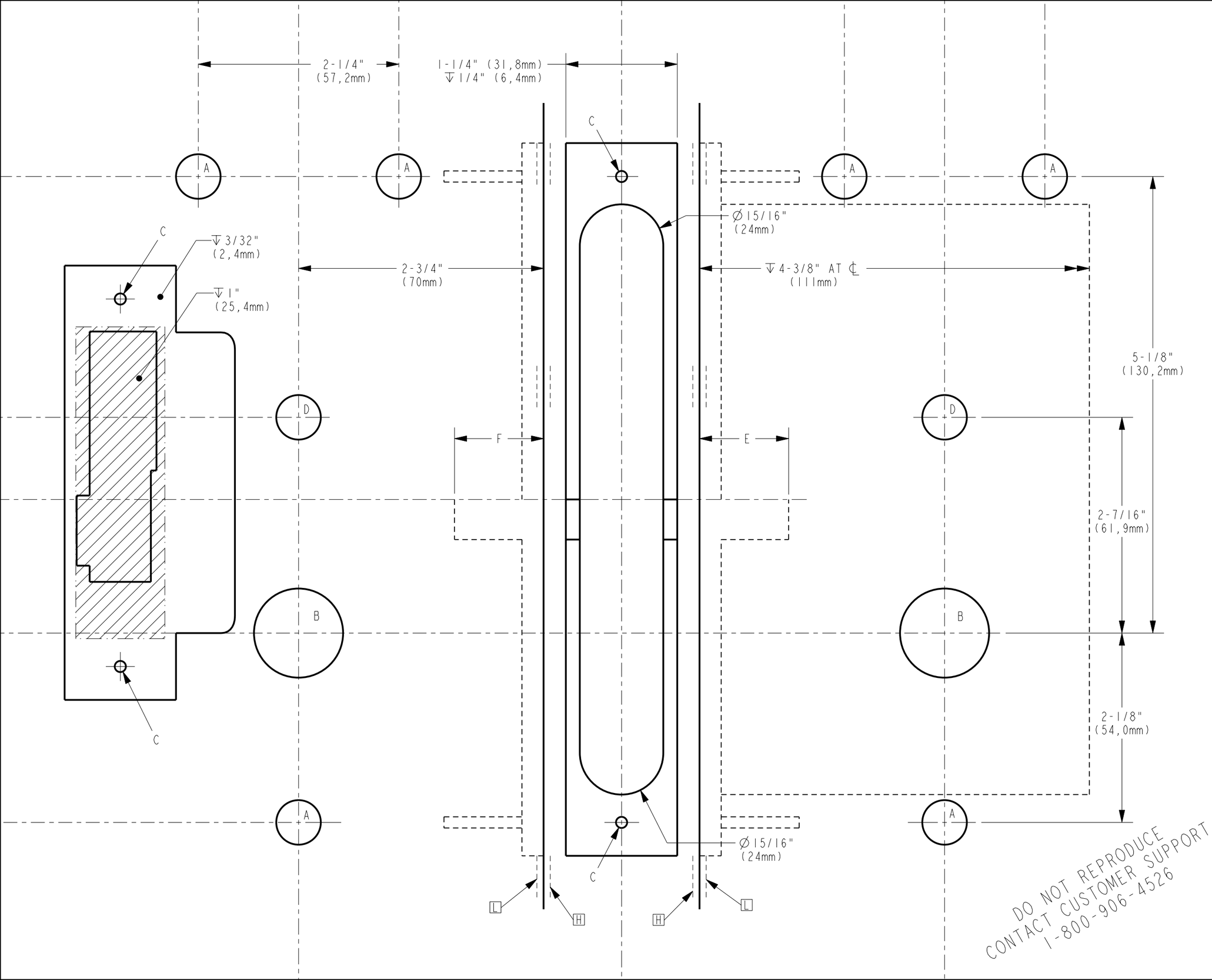


NOTES:
1- FOR DIMENSIONS AND TOLERANCES REFER TO: DOOR PREPARATION DRAWING #IP-510151
2- HIGH AND LOW BEVEL EDGE, H AND L SHOWN FOR DOOR WITH 3° BEVEL ANGLE
4- SYMBOLS: - ↧ DEEP
- ℄ CENTER LINE OF DOOR
- Ø DIAMETER
- ◁▷ NOT TO SCALE

| HOLE ID | DIM INCH | DIM mm | COMMENTS |
|---|---|---|---|
| A | Ø 1/2 | Ø 12,5 | - |
| B | Ø 1 | Ø 25,5 | - |
| C | Ø 1/8 | Ø 3,0 | ↧ 7/8" (22mm) |
| D | Ø 1/2 | Ø 12,5 | ONLY IF THUMB TURN |
| E | ↧ 1 | ↧ 25,4 | ONLY IF RH OR LHR |
| F | ↧ 1 | ↧ 25,4 | ONLY IF LH OR RHR |

UNLESS OTHERWISE NOTED, DRILL HALF DOOR THICKNESS ON BOTH SIDES.

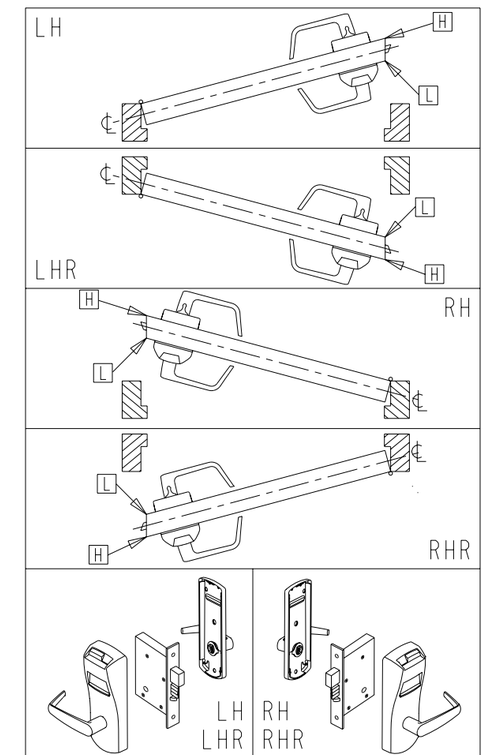


DRILLING TEMPLATE 660, 760, 770, 790 AND 76M LOCK SERIES

AMERICAN MORTISE - 1 1/4 FRONT PLATE
LEFT HAND (LH) - LEFT HAND REVERSE (LHR)
RIGHT HAND (RH) - RIGHT HAND REVERSE (RHR)
BACKSET OF 2-3/4 (70mm)

KABA®
7301, Decarie Boul
Montreal, QC Canada
H4P 2G7
www.kaba-ilco.com

| SHEET | DATE 240C07 | UNE VERSION FRANCAISE DE CE DOCUMENT EST DISPONIBLE SUR DEMANDE. | |
|---|---|---|---|
| 1 OF 1 | ECN 12610 | DT-510151 | REV-7 |

DO NOT REPRODUCE
CONTACT CUSTOMER SUPPORT
1-800-906-4526