Sterling HARDWARE

DOOR HARDWARE PROGRAM DHP-0811

August 2011

John Sterling

PRODUCTS

MADE BY

KV

KNAPE & VOGT

2700 OAK INDUSTRIAL DRIVE NE, GRAND RAPIDS, MI 49505
800 253-1561 • FAX: 877-636-3290
CUSTOMER.SERVICE@KV.COM • WWW.JOHNSTERLING.COM • WWW.KV.COM

Door Hardware Program
Selection Chart

SERIES	MAXIMUM DOOR WEIGHT	DESCRIPTION
BIFOLD		
1570	50 lbs.	Steel Box Track, 4-Wheel Hangers
1880	125 lbs.	Aluminum Box Track, 4-Wheel Hangers
2080	75/125 lbs.	Aluminum Box Track, 4-Wheel Hangers w/Quick Release Mount
BYPASS		
1574	100/125/150 lbs.	Steel Box Track, 4-Wheel Hangers
1602	100/125/150 lbs.	Aluminum Box Track, 4-Wheel Hangers
1876	250 lbs.	Aluminum Box Track, 4-Wheel Hangers
2000	250 lbs.	Aluminum Box Track, 4-Wheel Hangers w/Quick Release Mount
3800	50 lbs.	Steel Non-Fascia Track
5950	60/75 lbs.	Aluminum Fascia Wide Track
7810	60/75 lbs.	Aluminum Non-Fascia Track
7820	60/75 lbs.	Aluminum 1-3/4" Fascia Track
7830	60/75 lbs.	Aluminum 3" Fascia Track
7840	60/75 lbs.	Steel Wide Track
POCKET DOOR		
1599	100/125/150 lbs.	Steel Box Track, 4-Wheel Hangers
1601	100/125/150 lbs.	Aluminum Box Track, 4-Wheel Hangers
1801	250 lbs.	Aluminum Box Track, 4-Wheel Hangers
2078	125/150 lbs.	Aluminum Box Track, 4-Wheel Hangers w/Quick Release Mount
UNIVERSAL POCKET DOOR FRAME		
1430	125/150 lbs.	3'0" x 6'8"
1630	125/150 lbs.	3'0" x 6'8"
1840	250 lbs.	4'0" x 8'0"

DHP-0811

John Sterling

PRODUCTS
MADE BY

KNAPE & VOGT

2700 OAK INDUSTRIAL DRIVE NE, GRAND RAPIDS, MI 49505
800 253-1561 • FAX: 877-636-3290 • CUSTOMER.SERVICE@KV.COM • WWW.JOHNSTERLING.COM • WWW.KV.COM

August 2011

1570 Series

Heavy Duty Bi-Fold Sets

- For 1-3/8" to 1-3/4" Thick Doors
- 7/8" Diameter Wheels
- Up to 50 lbs. per panel Bi-Fold
- Up to 30 lbs. per panel Multi-Fold

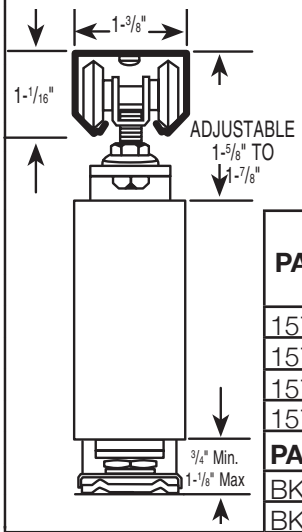

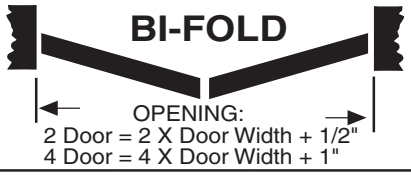

COMPARES TO:
Stanley, BF50, Johnson 111
Grant 1600 Series

PACKAGED SETS Contents: 1599 - Z Track, PB-1570-2 Parts Bag						Standard Pack Qty/lbs	LIST PRICE
1570-36S	3' 2 Door (18" Doors)					6/16	28.07
1570-48S	4' 4 Door (12" Doors)					6/23	50.43
1570-72S	6' 4 Door (18" Doors)					6/30	53.03
1570-96S	8' 4 Door (24" Doors)					6/35	54.59
PART NO.	**LENGTH**	**DESCRIPTION**					
BK-1599-Z35	35"	Zinc Finished Steel Track				20/20	4.77
BK-1599-Z47	47"	Zinc Finished Steel Track				20/27	4.77
BK-1599-Z55	55"	Zinc Finished Steel Track				20/38	5.71
BK-1599-Z59	59"	Zinc Finished Steel Track				20/40	6.23
BK-1599-Z63	63"	Zinc Finished Steel Track				20/44	6.65
BK-1599-Z71	71"	Zinc Finished Steel Track				20/49	7.27
BK-1599-Z95	95"	Zinc Finished Steel Track				10/32	9.87
BK-1599-Z119	119"	Zinc Finished Steel Track				10/40	12.47
BK-1599-Z143	143"	Zinc Finished Steel Track				10/48	15.07
BK-1601-35	35"	Aluminum Track				10/8	10.91
BK-1601-47	47"	Aluminum Track				10/11	10.91
BK-1601-55	55"	Aluminum Track				10/13	12.99
BK-1601-59	59"	Aluminum Track				10/14	13.51
BK-1601-71	71"	Aluminum Track				10/17	16.11
BK-1601-96	96"	Aluminum Track				10/22	22.87
BK-1601-120	120"	Aluminum Track				10/28	27.03
BK-1601-144	144"	Aluminum Track				10/32	31.71
BK-1601-192	192"	Aluminum Track				10/42	36.91
PARTS BAGS	**1572-TM Hanger**	**1618 Pivot Set**	**1559 Aligner**	**1558 Knob**	**8220 Hinge**		
PB-1570-2NH	1	1	1	1	---	20/16	13.44
PB-1570-2	1	1	1	1	3	10/11	18.19
PART NO.	**DESCRIPTION**						
PB-1572-TM	Heavy Duty Top Mount Hanger					20/6	4.57
PB-1618	Pivot Set for Doors up to 50 lbs. each					10/5	8.83
PB-1921	Roller Guide					20/5	8.21
BK-1922-96	Bottom Track					5/10	20.79
BK-1922-144	Bottom Track					5/15	27.34
BK-1558	Wood Knob w/Screw					100/3	0.72
PB-1559	Aligner (1 pair)					20/7	1.13
BK-8220-ZC	Hinge w/Screws (Bright Zinc)					600/54	1.03
BK-1605	4 Wheel Carrier for 125 lb. Doors					40/9	3.84
BK-1606	4 Wheel Ball Bearing Carrier for 150 lb. Doors					20/4	6.85

BULK TRACK ONLY

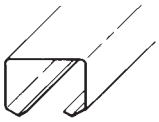

.030" Thick Galvanized Steel

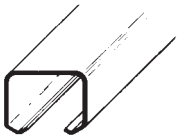

.050" Thick Aluminum

BOTTOM TRACK (Optional)

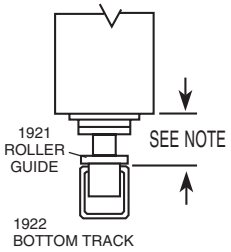

INSTALLATION NOTE: Clearance between door bottom and top of 1922 track must be 5/8" minimum to 1" maximum.

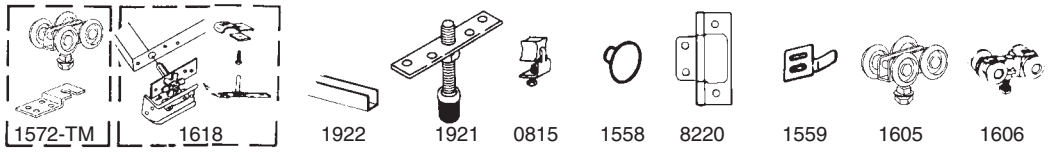

Conforms to ANSI A156.14/Type: D8621, D8642, D8652, D8662

1570 Series Bi-Fold- Bi-fold door hardware is manufactured for panels 1-3/8" to 1-3/4" thick and weighing up to 50 lbs. each (30 lbs. each for multifold applications). Track to be zinc finish steel box style. Hangers to use four 7/8" lubricated wheels made of high performance celcon. Bottom pivot and jamb bracket to provide vertical and horizontal adjustment.

DHP-1570-0811

John Sterling **Brand Products** Made By KNAPE & VOGT

2700 OAK INDUSTRIAL DRIVE NE, GRAND RAPIDS, MI 49505 • 800 253-1561 • FAX: 877-636-3290
CUSTOMER.SERVICE@KV.COM • WWW.JOHNSTERLING.COM • WWW.KV.COM

© 2012

1570-SERIES HEAVY DUTY HARDWARE

FOLDING DOOR INSTALLATION INSTRUCTIONS

·FOR BIFOLD DOORS WEIGHING UP TO 50 LBS. (22.72 kg) EACH
·FOR MULTIPLE FOLD DOORS WEIGHING UP TO 30 LBS. (13.64 kg) EACH

BI-FOLD INSTALLATIONS

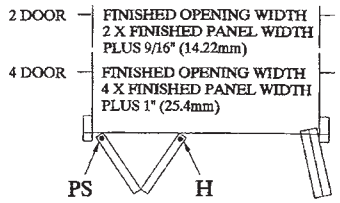

PS = PIVOT SET H = HANGER

MULTIPLE FOLD INSTALLATIONS

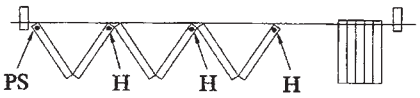

MULTIPLE FOLDING DOORS
EDGE HUNG

Finished opening width = Door Panel total width plus 9/16" (14.22mm) for pivot pair, plus 3/8" (9.525mm) for each additional pair.

Mount hangers on every other door as shown by H

For covenience in hanging doors, heavy duty loose pin hinges should be used. (Included)

DOORWAY HEIGHT

Door Height plus:
Minimum of 2-1/2" (63.5mm)
Maximum of 3-1/2" (88.9mm)

NOTE: When using Optional Roller Guide & Bottom Guide Channel, use doorway height plus 3-1/2" (88.9 mm) when Bottom Guide Channel is mounted recessed, flush with finished floor. Use doorway height plus 4-1/8" (105mm) if Bottom Guide Channel is surface mounted.

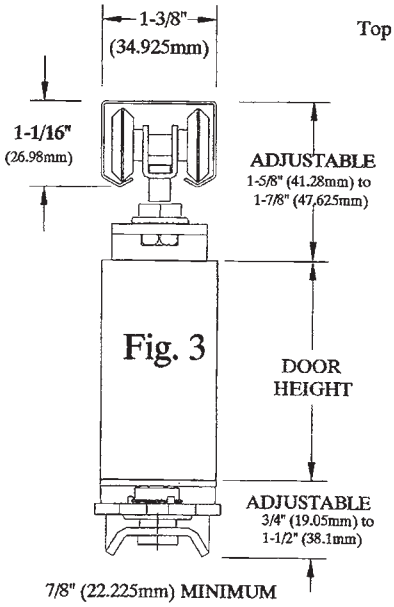

Fig. 3

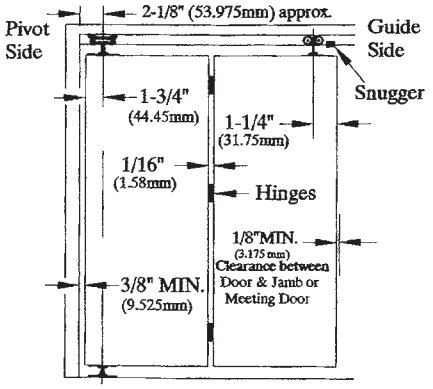

Fig. 1 2 OR 4 PANEL BI-FOLD

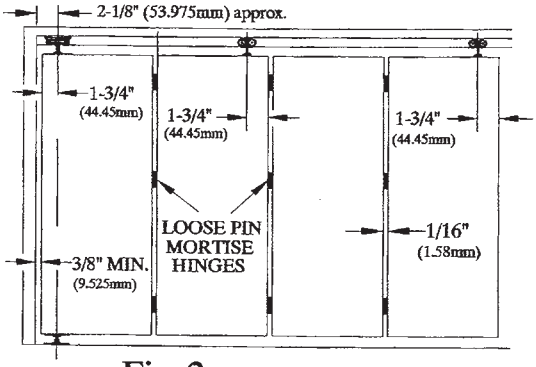

Fig. 2 MULTI-FOLD

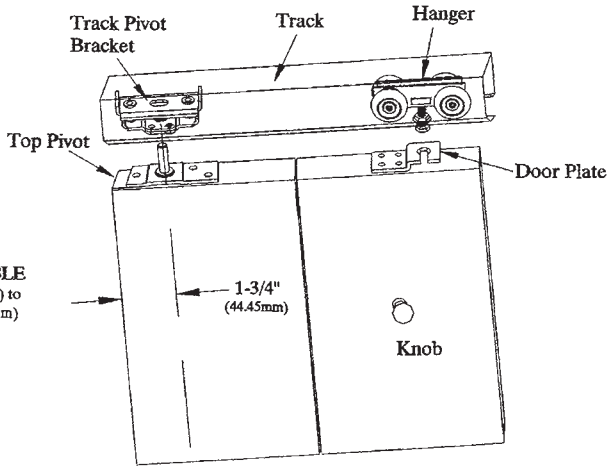

Fig. 4

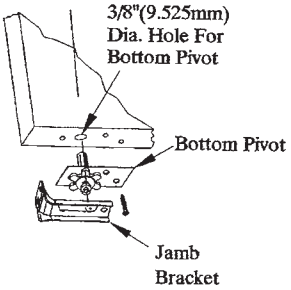

INSTALLATION INSTRUCTIONS:

TRACK MOUNTING:

1. Insert Hanger Trolleys in Track.
2. FOR 2 PANEL DOORWAY

   Mount Track flush against Jamb at Guide Side, not Pivot Side. (see Fig 1.)

   FOR 4 OR MULIPLE PANEL DOORWAY

   Center Track in opening.
3. Track Pivot Bracket should be placed so center of the Pivot Slot is approximately 2-1/2" (53.975mm) from Jamb as shown (Fig.1)

HARDWARE INSTALLATION:

4. Mount Pivots 1-3/4" (44.45mm) from door edge as shown in Fig.4 Mount Hanger Door Plates and Hinges as shown in Fig's 1, 2 or 5, so that CENTER OF HANGER BOLT is in correct location:

BI-FOLD: 1-1/4" from Door edge
MULTI-FOLD: 1-3/4" from Door edge

5. Install Pivot Door by inserting Top Pivot into Track Pivot Bracket, then dropping door down so Bottom Pivot engages Jamb Bracket Assembly. Hang Guide Door by engaging Door Plate Assembly to center bolt of Hanger Trolley.

X = 1-1/4" for Bi-fold
X = 1-3/4" for Multi-fold

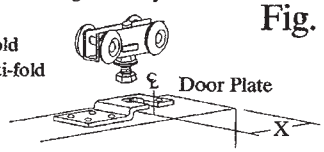

Fig. 5

ADJUSTMENTS:

6. Adust Track Pivot Bracket and Jamb Bracket to establish desired Jamb clearance. Tighten both securely.
7. Adjust height by turning Bottom Pivot Adjusting Bolt.
8. With doors in closed position, adjust Hanger Adjusting Bolt so weight is evenly distributed across the top of the track for smooth and even folding action.(Fig.6) Tighten Jam Nut.

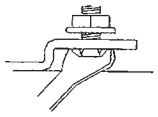

Fig. 6

9. Install Snugger by backing out screw until flush. Hook assembly over lip at end of track, next to Hanger. (Fig. 7.) Adjust so wheels contact Snugger when doors are in closed position. Tighten securely.

Fig. 7

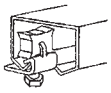

10. Install Aligners on 4-Door Sets approximately 12" from bottom backside of doors. Adjust in or out until doors "snap" closed, then tighten scews. (Fig. 8.)

Fig. 8

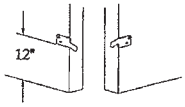

John Sterling Corporation
Richmond, Illinois 60071, U.S.A.

8652-S
Rev'd 6-21-06

August 2011

1880 Series

Heavy-Duty Aluminum Bi-Fold Track & Hardware and Packaged Sets

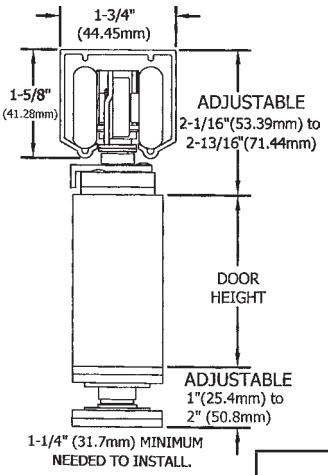

- For 1-1/8" to 1-3/4" Panels
- 1-1/4" Diameter Wheels mounted on Ball Bearing Shafts
- Up to 75 lbs. per panel, Multi-Fold
- Up to 125 lbs. per panel, Bi-Fold

Note: 1880 Series requires loose pin hinges not included.

OPENING:
2 Door = 2 X Door Width + 1/2"
4 Door = 4 X Door With + 1"

COMPARES TO:
Grant 1260 Series
Johnson 100FD Series

Stanley 2916-R, 58, 2711
BF125

PACKAGED SETS Contents: 1801 Track, 1827-TM Hanger(s), 1828 Pivot(s)		Standard Pack Qty/lbs	LIST PRICE
1880-30	30" Opening 2 Door	6/26	70.71
1880-36	36" Opening 2 Door	6/27	73.83
1880-48-2	48" Opening 2 Door	6/31	83.19
1880-48-4	48" Opening 4 Door	6/46	124.27
1880-60	60" Opening 4 Door	6/50	131.55
1880-72	72" Opening 4 Door	6/53	141.95
1880-96	96" Opening 4 Door	6/60	157.55

BULK TRACK ONLY

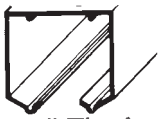

.075" Thick Aluminum

TRACK PART NO.	DESCRIPTION		
BK-1801-48	48" Track Only - Heavy Duty Aluminum	5/9	24.74
BK-1801-60	60" Track Only - Heavy Duty Aluminum	5/12	32.24
BK-1801-72	72" Track Only - Heavy Duty Aluminum	5/14	35.35
BK-1801-96	96" Track Only - Heavy Duty Aluminum	5/19	49.39
BK-1801-120	120" Track Only - Heavy Duty Aluminum	5/23	58.02
BK-1801-144	144" Track Only - Heavy Duty Aluminum	5/28	76.43
BK-1801-192	192" Track Only - Heavy Duty Aluminum	5/37	101.60

BOTTOM TRACK (Optional)

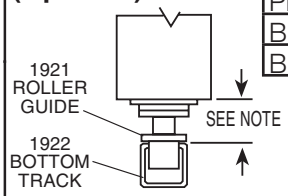

PART NO.	DESCRIPTION		
PB-1921	Roller Guide	20/5	8.21
BK-1922-96	Bottom Track	5/10	20.79
BK-1922-144	Bottom Track	5/15	27.34

Installation Note: Clearance between door bottom and top of 1922 track must be 5/8" minimum to 1" maximum.

1922

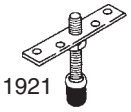
1921

COMPONENTS

1827-TM

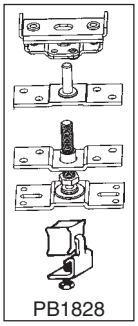
PB1828

PB-1827-TM	Ball Bearing Hanger w/Top Mount Plate	10/5	21.31
PB-1828	H.D. Pivot Set w/0815 Snugger	10/9	20.79
BK-1558	Wood Knob	100/3	0.72
PB-1559	Aligner (1 pair)	20/7	1.13
BK-0815	Center Stop/Snugger	20/2	3.01
BN-1566-US3	Door Knob w/ Screws 1-1/8" dia. – Bright Brass	100/20	2.49
BN-1567-US3	Backplate for 1566 1-3/4" dia. – Bright Brass	100/7	1.24

0815
1558

1559

BN-1566

BN-1567

Conforms to ANSI A156.14/Type: D8621, D8641, D8651, D8661

1880 Series Bi-Fold- Bi-fold door hardware is manufactured for panels 1-1/8" to 1-3/4" thick and weighing up to 125 lbs. each (75 lbs. each in multifold applications). Track to be of extruded aluminium jump-proof box style with "V" shaped rails. Hangers to use four 1-1/4" heavy duty celcon wheels on steel shafts mounted on ball bearings. Top and bottom pivots to be heavy duty, with ball bearing bottom socket assembly for smooth long lasting operation.

DHP-1880-0811

John Sterling **Brand Products** Made By KNAPE & VOGT

2700 OAK INDUSTRIAL DRIVE NE, GRAND RAPIDS, MI 49505 • 800 253-1561 • FAX: 877-636-3290
CUSTOMER.SERVICE@KV.COM • WWW.JOHNSTERLING.COM • WWW.KV.COM

© 2012

1827-TM HANGER ASSEMBLY and 1828 PIVOT PACKAGE

FOLDING DOOR INSTALLATION INSTRUCTIONS

HEAVY DUTY HARDWARE

·FOR BIFOLD DOORS WEIGHING UP TO 125 LBS. (56.3 kg) EACH
·FOR MULTIPLE FOLD DOORS WEIGHING UP TO 75 LBS. (33.7 kg) EACH

BI-FOLD INSTALLATIONS

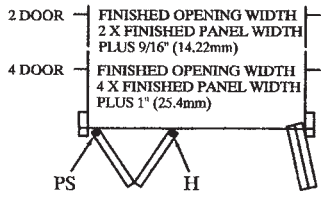

PS = PIVOT SET H = HANGER

MULTIPLE FOLD INSTALLATIONS

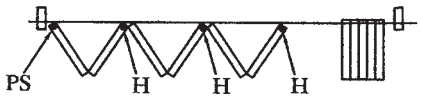

MULTIPLE FOLDING DOORS
EDGE HUNG

Finished opening width = Door Panel total width plus 9/16" (14.22mm) for pivot pair, plus 3/8" (9.525mm) for each additional pair.

Mount hangers on every other door as shown by H

For covenience in hanging doors, heavy duty loose pin hinges should be used. (Not included)

DOORWAY HEIGHT

Door Height plus:
Minimum of 3-1/2" (88.9mm)
Maximum of 4-1/2" (114.3mm)

NOTE: When using Optional Roller Guide & Bottom Guide Channel, use doorway height plus 4" (101.6 mm) when Bottom Guide Channel is mounted recessed, flush with finished floor. Use doorway height plus 4-5/8" (117.5mm) if Bottom Guide Channel is surface mounted.

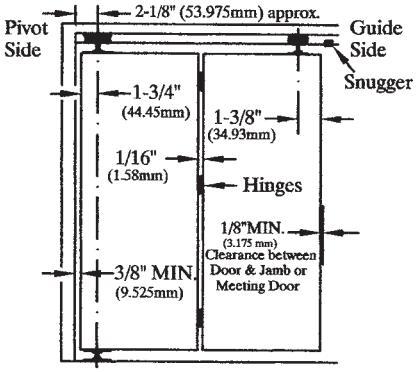

Fig. 1 2 OR 4 PANEL BI-FOLD

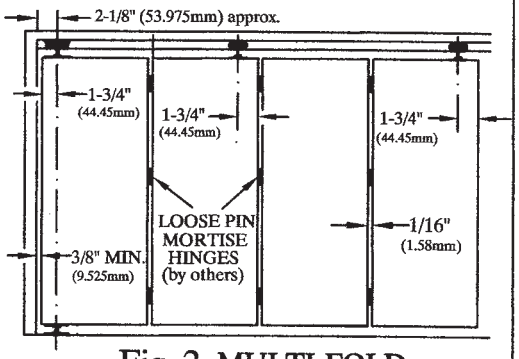

Fig. 2 MULTI-FOLD

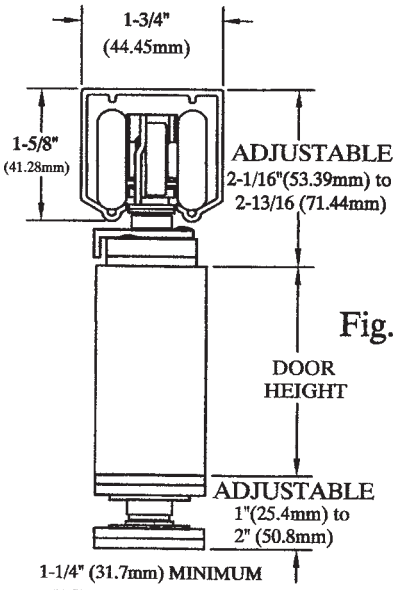

Fig. 3

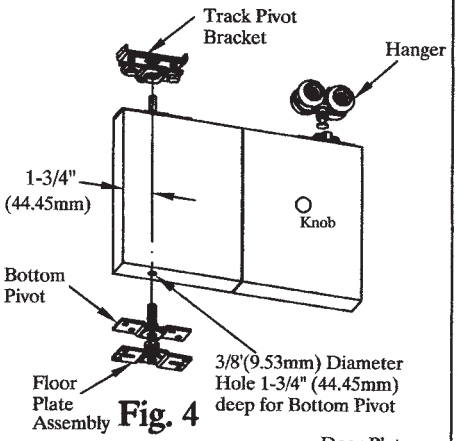

Fig. 4

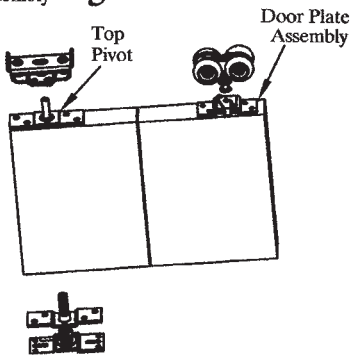

INSTALLATION INSTRUCTIONS:

TRACK MOUNTING:

1. Insert Hanger Trolleys in Track.
2. FOR 2 PANEL DOORWAY
   Mount Track flush against Jamb at Guide Side, not Pivot Side. (see Fig 1.)
   FOR 4 OR MULIPLE PANEL DOORWAY
   Center Track in opening.
3. Track Pivot Bracket should be placed so center of the Pivot Slot is approximately 2-1/8" (53.975mm) from Jamb as shown (Fig.1)

HARDWARE INSTALLATION:

4. Mount Pivots 1-3/4" (44.45mm) from door edge as shown in Fig.4 Mount Hinges and Door Plate Assy's as shown in Fig's 1, 2 or 5, so that CENTER OF HANGER BOLT is in correct location:

BI-FOLD: 1-3/8" from Door edge
MULTI-FOLD: 1-3/4" from Door edge

5. Install Pivot Door by inserting Top Pivot into Track Pivot Bracket, then dropping door down so Bottom Pivot engages Floor Plate Assembly. Hang Guide Door by engaging Door Plate Assembly to center bolt of Hanger , then swing Hanger Lock into place. (Fig. 5)

X = 1-3/8" for Bi-fold
X = 1-3/4" for Multi-fold

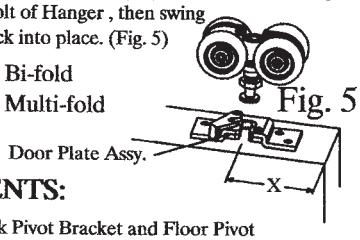

Fig. 5

ADJUSTMENTS:

6. Move Track Pivot Bracket and Floor Pivot Assembly to establish desired Jamb clearance. Tighten both securely.
7. Adjust height by turning Bottom Pivot adjusting bolt.
8. With doors in closed position, adjust Hanger Adjusting Bolt using a 1/2" wrench so weight across the top of the Track for smooth and even folding action.
9. Install Snugger by backing out screw until flush. Hook Snugger over lip of Track at Track end, next to Hanger. (Fig. 6.)
   Adjust so wheels contact Snugger when doors are in closed position. Tighten securely.

Fig. 6

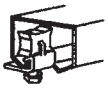

10. Install Aligners on 4-Door Sets approximately 12" from bottom backside of doors. Adjust in or out until doors "snap" closed, then tighten scews. (Fig. 6.)

Fig. 7

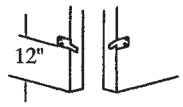

© Copyright 2005
John Sterling Corp.
Richmond, Il 60071

1828-INST
Rev'd 1-15-07

August 2011

2080 Series

Heavy-Duty Aluminum Box Track & Hardware and Packaged Sets

- For 1-3/8" to 1-3/4" Thick Doors
- Hangers have 1" diameter wheels
- Up to 125 lbs. per door - Bi-Fold
- Up to 75 lbs. per door - Multi-Fold

FINISHED OPENING
2 Door = 2 x Door Width + 1/2"
4 Door = 4 x Door Width + 1"

INTERCHANGES WITH:
Stanley BF125N
Johnson 100 FD/RD

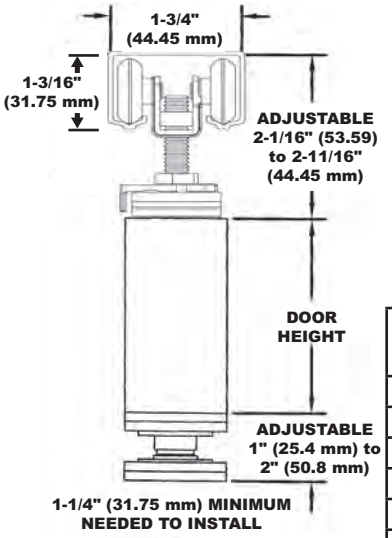

PACKAGED SET Contents: 2001 Track, PB-2004-BB Hangers and 1828 Pivot Set		QTY/LBS.	LIST PRICE
2080-36	36" Opening for 2 Doors up to 125 lbs. each	6/27	47.79
2080-48-4	48" Opening for 4 Doors up to 125 lbs. each	6/31	80.34
2080-60-4	60" Opening for 4 Doors up to 125 lbs. each	6/50	80.86
2080-72-4	72" Opening for 4 Doors up to 125 lbs. each	6/53	89.18
2080-96-4	96" Opening for 4 Doors up to 125 lbs. each	6/60	100.83
TRA CK			
BK-2001-35	35" Aluminum Box Track	10/10	15.55
BK-2001-47	47" Aluminum Box Track	10/14	18.46
BK-2001-59	59" (1499 mm) Aluminum Box Track	10/17	20.75
BK-2001-71	71" (1803 mm) Aluminum Box Track	10/20	26.78
BK-2001-96	96" (2438 mm) Aluminum Box Track	10/28	34.06
BK-2001-144	144" (3658 mm) Aluminum Box Track	10/42	51.95
PARTS BAG			
PB-2070-2	For Bi-Fold Doors up to 75 lbs. Contains (1) 2004, (1) 0815, (1) 1828, (1) 1559	10/11	18.46
PB-2080-2	For Bi-Fold Doors up to 125 lbs. Contains (1) 2004-BB, (1) 0815, (1) 1828, (1) 1559	10/12	28.08
COMPONENTS			
PB-1921	Roller Guide	20/5	8.21
BK-1922-96	Bottom Track, 5/8" High x 3/4" Wide x 96" Long	5/10	20.79
BK-1922-144	Bottom Track, 5/8" High x 3/4" Wide x 144" Long	5/15	27.34
BK-0815	Center Stop Snugger	20/2	3.01
BK-1558	Wood Knob w/screw	100/3	0.72
PB-1559	Aligner (1 Pair)	20/7	1.13
BK-8220-ZC	Hinge with screws (Zinc Finish)	600/54	1.03
BN-1566-US3	Knob w/screws, 1-1/8" diameter – Bright Brass	100/20	2.49
BN-1567-US3	Backplate for 1566, 1-3/4" diameter – Bright Brass	100/7	1.24
PB-1828	Heavy Duty Pivot Set	10/9	20.79
PB-2004	4-Wheel Hanger w/Quick Release Top Mount Plate	20/6	5.14
PB-2004-BB	4-Wheel Ball Bearing Hanger w/Quick Release Top Mount Plate	10/3	12.84

Hinges supplied by others

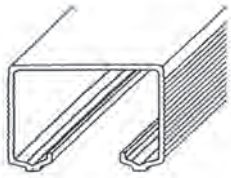

2001 Track

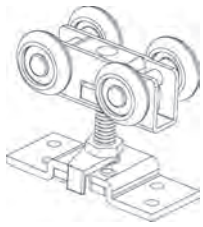

PB-2004
75 Lb Bi-Fold Doors
50 Lb Multi-Fold Doors

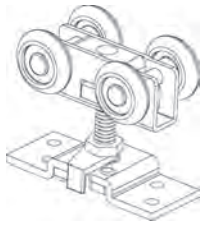

PB-2004-BB
125 Lb Bi-Fold Doors
75 Lb Multi-Fold Doors

2080 Series Heavy Duty Bi-Fold Door - Heavy-duty Bi-fold door hardware is manufactured for doors 1-1/8" to 1-3/4" thick, weighing up to 125 lbs. each (75 lb. each in multifold applications). Track to be of extruded aluminum, jump-proof box stlye track. Hangers to use four 1" diameter heavy duty celcon wheels on steel shafts mounted on ball bearings. Top and bottom pivots to be heavy duty, with ball bearing bottom socket assembly for smooth long lasting operation.

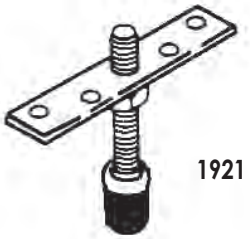

1921

1922

1558

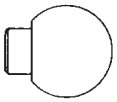

1566

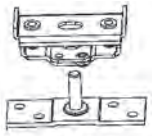

0815

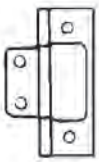

8220

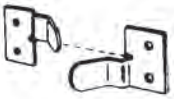

1559

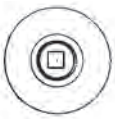

1567

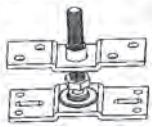

1828

INSTALLATION NOTE:
Clearance between door bottom and top of 1922 track must be 5/8" minimum to 1" maximum

DHP-2080-0811

John Sterling **Brand Products** Made By
2700 Oak Industrial Drive NE Grand Rapids, MI 49505
800-253-1561 • Fax: 877-636-3290
customer.service @kv.com
www.johnsterling.com • www.kv.com
KNAPE & VOGT

© 2012

SERIES HEAVY DUTY HARDWARE

FOLDING DOOR INSTALLATION INSTRUCTIONS

·FOR BIFOLD DOORS WEIGHING UP TO 50 LBS. (22.72 kg) EACH
·FOR MULTIPLE FOLD DOORS WEIGHING UP TO 30 LBS. (13.64 kg) EACH

BI-FOLD INSTALLATIONS

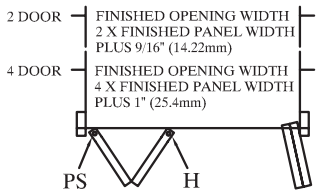

PS = PIVOT SET H = HANGER

MULTIPLE FOLD INSTALLATIONS

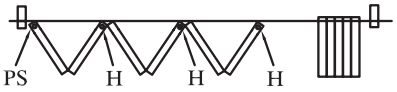

MULTIPLE FOLDING DOORS
EDGE HUNG

Finished opening width = Door Panel total width plus 9/16" (14.22mm) for pivot pair, plus 3/8" (9.525mm) for each additional pair.

Mount hangers on every other door as shown by H

For covenience in hanging doors, heavy duty loose pin hinges should be used. (Included)

DOORWAY HEIGHT

Door Height plus:
Minimum of 3-5/16" (81.12mm)
Maximum of 4-1/2" (114.3mm)

NOTE: When using Optional Roller Guide & Bottom Guide Channel, use doorway height plus 4-1/2" (114.3mm) when Bottom Guide Channel is mounted recessed, flush with finished floor. Use doorway height plus 5-1/8" (130.18mm) if Bottom Guide Channel is surface mounted.

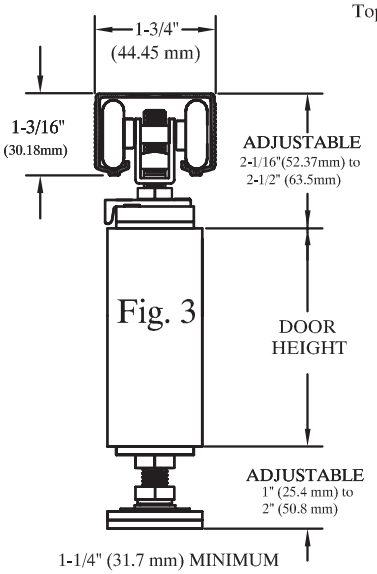

Fig. 3

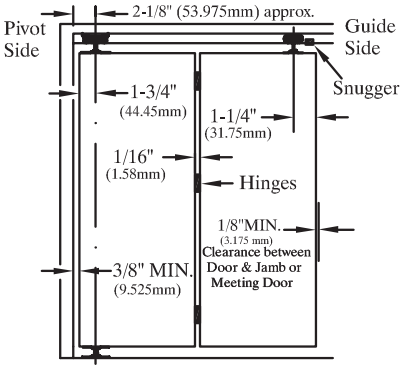

Fig. 1 2 OR 4 PANEL **BI-FOLD**

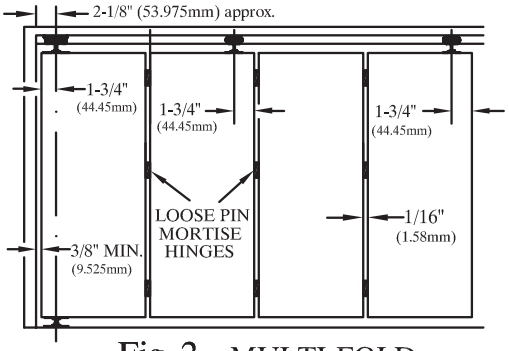

Fig. 2 MULTI-FOLD

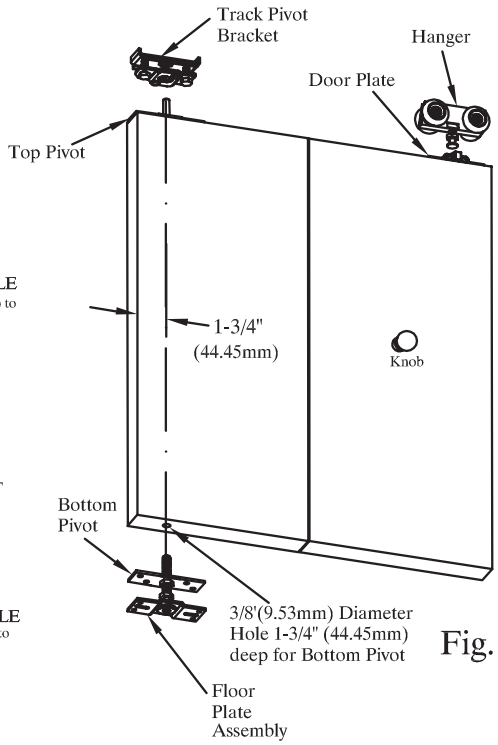

Fig. 4

INSTALLATION INSTRUCTIONS:

TRACK MOUNTING:

1. Insert Hanger Trolleys in Track.
2. FOR 2 PANEL DOORWAY
   Mount Track flush against Jamb at Guide Side, not Pivot Side. (see Fig 1.)
   FOR 4 OR MULIPLE PANEL DOORWAY
   Center Track in opening.
3. Track Pivot Bracket should be placed so center of the Pivot Slot is approximately 2-1/8" (53.975mm) from Jamb as shown (Fig.1)

HARDWARE INSTALLATION:

4. Mount Pivots 1-3/4" (44.45mm) from door edge as shown in Fig.4 Mount Hanger Door Plates and Hinges as shown in Fig's 1, 2 or 5, so that **CENTER OF HANGER BOLT** is in correct location:

BI-FOLD: 1-1/4" from Door edge MULTI-FOLD: 1-3/4" from Door edge

5. Install Pivot Door by inserting Top Pivot into Track Pivot Bracket, then lower door so Bottom Pivot engages Bottom Pivot Assembly. Hang Guide Door by engaging Door Plate Assembly to center bolt of Hanger Trolley.

X = 1-1/4" for Bi-fold
X = 1-3/4" for Multi-fold

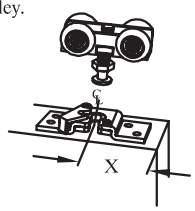

Fig. 5

ADJUSTMENTS:

6. Move Track Pivot Bracket and Bottom Pivot Assembly to establish desired Jamb clearance. Tighten both securely.
7. Adjust height by turning Bottom Pivot Adjusting Bolt. Then tighten lock nut.
8. With doors in closed position, adjust Hanger Adjusting Bolt so weight is evenly distributed across the top of the track for smooth and even folding action.(Fig.6)

Fig. 6

9. Install Snugger by backing out screw until flush. Hook assembly over lip of Track on end of track, next to Hanger. (Fig. 7.)
   Adjust so wheels contact Snugger when doors are in closed position. Tighten securely.

Fig. 7

10. Install Aligners on 4-Door Sets approximately 12" from bottom backside of doors. Adjust in or out until doors "snap" closed, then tighten scews. (Fig. 8.)

Fig. 8

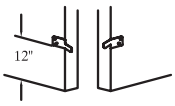

January 2012

8000 Series

High Profile Steel Track

- For 7/8” to 1-3/8” Door Panels
- Up to 20 lbs. per panel with 8000-TP solid pivot and guide

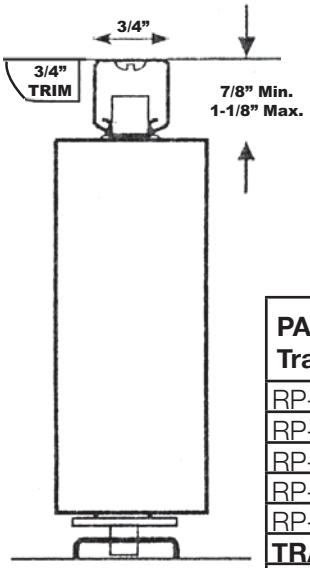

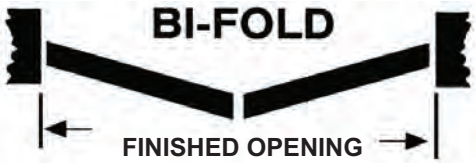

2 Door = 2 x Door Width + 1/2”
4 Door = 4 x Door Width + 1”

INTERCHANGES WITH:
Stanley 2800 & BF20
COMPARES TO:
Johnson 1800

PACKAGED SETS, Contents: Track, Pivot, Hinges and Knobs			Standard Pack Qty/lbs	LIST PRICE
RP-1532	3 foot - 2 Panels		5/7	16.11
RP-1534-48	4 foot - 4 Panels		5/12	23.91
RP-1534-60	5 foot - 4 Panels		5/13	25.99
RP-1534-72	6 foot - 4 Panels		5/14	27.03
RP-1534-96	8 foot - 4 Panels		5/15	41.59
TRACK PART NO.	**LENGTH**	**DESCRIPTION**		
BK-8001-36	35-3/4"	Track	30/20	2.49
BK-8001-48	47-3/4"	Track	30/25	3.94
BK-8001-60	59-3/4"	Track	30/30	4.57
BK-8001-72	71-3/4"	Track	30/36	5.19
COMPONENTS	**DESCRIPTION**			
8681	Track Pivot Assembly		/.05	1.13
8000-TP	Solid Top Pivot/Guide (2 per bag)		/.02	1.24
8816-21	Snugger		/.01	0.51
BK-1558	Wood Knob w/Screws		100/3	0.72
1559	Aligner		200/10	0.51
8267	Jamb Bracket		/.13	1.03
7767	Bottom Pivot		100/26	0.78
BK-8220-ZC	Hinge w/o Screws (Bright Zinc)		600/48	0.72
5994-DP	Drill Point Screws			0.09
BN-1566-US3	Knob w/Screws - 1-3/4" dia. (Bright Brass)		100/20	2.49
BN-1567-US3	Backplate for 1566 - 1-3/4" dia. (Bright Brass)		100/7	1.24

BULK TRACK ONLY

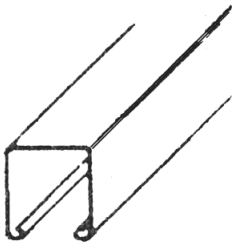

Pre-finished Steel
With Track Pivot

8000 Series Bi-Fold - Bi-fold door hardware shall be manufactured by John Sterling Corporation for panels 7/8” to 1-3/8” thick and weighing up to 20 lbs. each. Track to be pre-finished steel and have factory installed pivot assembly and snugger. Hardware to fit 3/8” diameter holes and allow for symmetrical drilling of holes. Bottom pivot and jamb bracket to provide vertical and horizontal adjustment. Bottom pivot to keep adjustment when door opens and closes

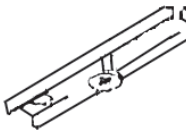

8681

8816

8000-TP

1558

8267

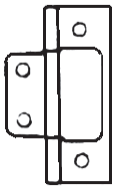

8220

1559

7767

BN-1567

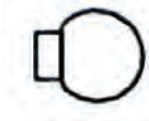

BN-1566

John Sterling **Brand Products** Made By KNAPE & VOGT
2700 OAK INDUSTRIAL DRIVE NE, GRAND RAPIDS, MI 49505 • 800 253-1561 • FAX: 877-636-3290
CUSTOMER.SERVICE@KV.COM • WWW.JOHNSTERLING.COM • WWW.KV.COM

© 2012

8000 SERIES BI-FOLD DOOR HARDWARE

• 1530 Series Package Sets

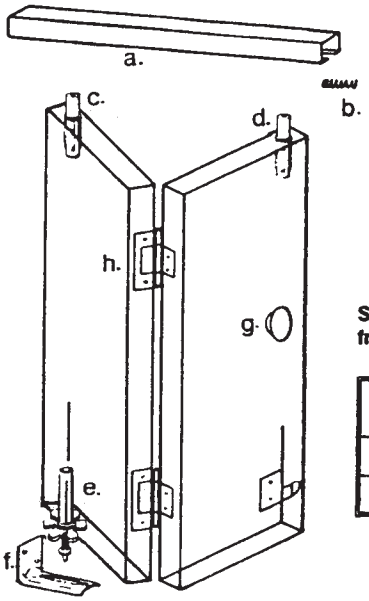

a. Track
b. Snugger Spring
c. Top Pivot
d. Top Guide
e. Bottom Pivot
f. Jamb Bracket
g. Wood Knob
h. Hinges

SNUGGER CHART - Equal drilling dimension from door edge to hole center.

Drill Distance	2-Door (Qty) Part No.	4-Door (Qty) Part No.
7/8"	(1) 8816-21	(2) 8816-21
1"	(1) 8816-21	(2) 8816-21

8000 Series HIGH PROFILE TRACK

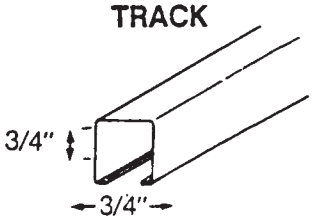

Painted Steel track.

BOTTOM PIVOT AND JAMB BRACKET

New Design– Will not lose adjustment in use!

Easy Vertical Adjustment

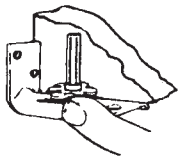

Rotate thumbwheel on bottom pivot: Left to lower, Right to raise.

Adjusting wheel is locked by its unique design so doors cannot work down and fall out.

Vertical Adjustment DOES NOT CHANGE when door opens or closes.

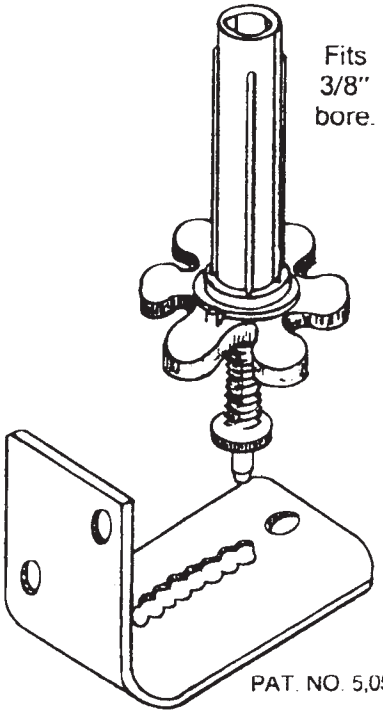

PAT. NO. 5,054,163

Easy Horizontal Adjustment

Just lift and set down.

Horizontal adjustment is not disturbed by vertical adjustment.

Straight-sided pivot pin provides secure engagement into jamb bracket, gives three times the "jump" protection of "cone " style pivots.

Once in place, it STAYS IN PLACE!

Newly designed Bottom Pivot System makes this the least expensive high performance Bifold hardware available! A Builder's delight – easy to install and no callbacks caused by "out of adjustment" failures.

Now you can start using Bifold doors again with confidence!

SOLID TOP PIVOT/GUIDE

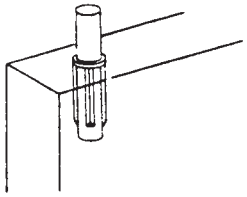

Fits ⅜" hole. Economical, simple and effective.

FORM NO.
LP-8000

January 2012

9000 Series

Low Profile Steel Track

- For 7/8” to 1-3/8” Thick Door Panels
- Up to 30 lbs. per panel

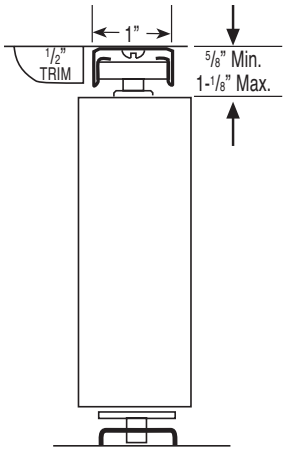

INTERCHANGES WITH:
Stanley 2400 Series (BF30), 2007 Track
COMPARES TO:
Johnson 1800 Series
Grant 2600 Series

PACKAGED SETS, Contents: Track, Pivot, Hinges and Knobs			Standard Pack Qty/lbs	LIST PRICE
BX-1542-3	3 foot set for 2 Panels		5/9	16.11
BX-1544-4	4 foot set for 4 Panels		5/16	23.91
BX-1544-5	5 foot set for 4 Panels		5/17	25.99
BX-1544-6	6 foot set for 4 Panels		5/18	27.03
BX-1544-8	8 foot set for 4 Panels		5/20	41.59
TRACK PART NO.	**LENGTH**	**DESCRIPTION**		
BK-9002-24	23-3/4"	Two Door Track Assembly	32/15	2.69
BK-9002-28	27-3/4"	Two Door Track Assembly	32/18	3.11
BK-9002-30	29-3/4"	Two Door Track Assembly	32/19	3.32
BK-9002-36	35-3/4"	Two Door Track Assembly	32/23	3.63
BK-9004-36	35-3/4"	Four Door Track Assembly	32/24	3.84
BK-9004-48	47-3/4"	Four Door Track Assembly	32/31	4.51
BK-9004-60	59-3/4"	Four Door Track Assembly	32/38	5.50
BK-9004-72	71-3/4"	Four Door Track Assembly	32/46	6.33
BK-9004-84	83-3/4"	Four Door Track Assembly	32/54	7.58
BK-9004-96	95-3/4"	Four Door Track Assembly	32/61	8.10

BULK TRACK ONLY

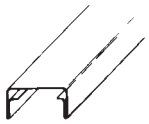

Pre-finished Steel With Track Pivot Assembly Installed

PARTS BAGS	Jamb Brk.	Bottom Pivot	Top Pivot/ Guide	2 Dr. Snuggler	4 Dr. Snuggler	Knob	Aligner		
PB-9005-2WAS	1	1	1	1		1	1	100/28	4.25
PB-9005-4WAS	2	2	2		1	2	2	60/31	7.48

COMPONENTS

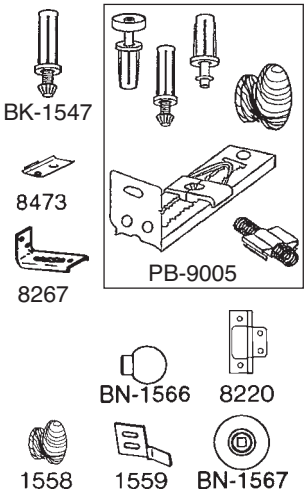

PART NO.	DESCRIPTION		
8473	Track Pivot Assembly		1.24
BK-1558	Wood Knob w/ Screws	100/3	0.72
BK-1559	Aligner (1 pair)	20/7	1.13
BK-1547	Jamb Bracket/Bottom Pivot	50/26	1.65
8267	Jamb Bracket	/.13	1.03
BK-8220-LS	Hinge w/o Screws	600/48	0.72
BK-8220	Hinge w/ Screws	600/54	1.03
5994	Drill Point Screws		0.09
BN-1566-US3	Knob w/Screws 1-1/8" dia. (Bright Brass)	100/20	2.49
BN-1567-US3	Backplate for 1566 1-3/4" dia. (Bright Brass)	100/7	1.24

Conforms to ANSI: A156.14/Type D8622

9000 Series Bi-Fold- Bi-fold door hardware shall be manufactured by John Sterling Corporation for panels 7/8” to 1-3/8” thick and weighing up to 30 lbs. each. Track to be pre-finished steel and have factory installed top pivot bracket. Hardware to fit 3/8” diameter holes. Bottom pivot and jamb bracket to provide vertical and horizontal adjustments. Bottom pivot to keep adjustment when door is operated

DHP-9000-0112

John Sterling Brand Products Made By KNAPE & VOGT
2700 OAK INDUSTRIAL DRIVE NE, GRAND RAPIDS, MI 49505 • 800 253-1561 • FAX: 877-636-3290
CUSTOMER.SERVICE@KV.COM • WWW.JOHNSTERLING.COM • WWW.KV.COM

© 2012

9000 SERIES BI-FOLD DOOR HARDWARE

• 1540 Series Package Sets

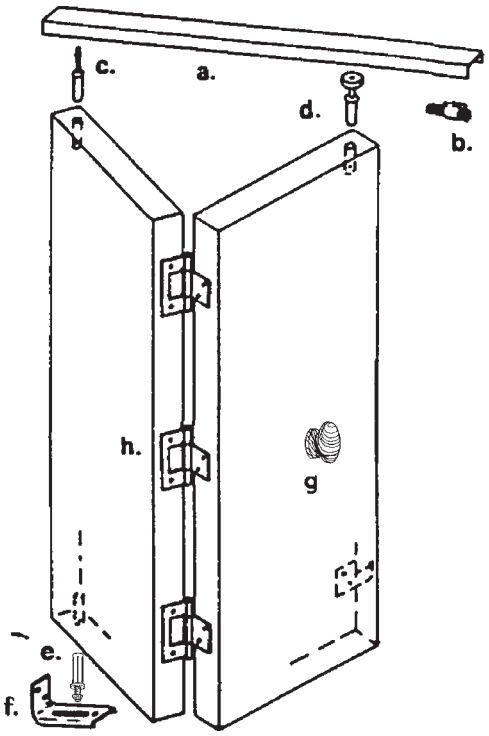

a. Track
b. Snugger
c. Top Pivot
d. Top Guide
e. Bottom Pivot
f. Jamb Bracket
g. Wood Knob
h. Hinges

9000 Series LOW PROFILE TRACK

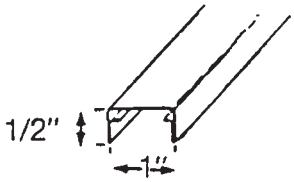

Painted Steel track with low ½" profile.

SPRING LOADED TOP PIVOT

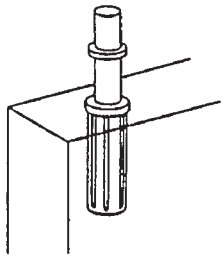

Fits ⅜" hole

Spring Loaded-- makes installation a breeze.

SPRING LOADED TOP GUIDE

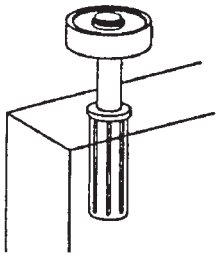

Fits ⅜" hole

Spring Loaded-- makes constant and positive contact with guide track.

FORM NO.
LP-9000

August 2011

1574-Series

Steel Track & Hardware

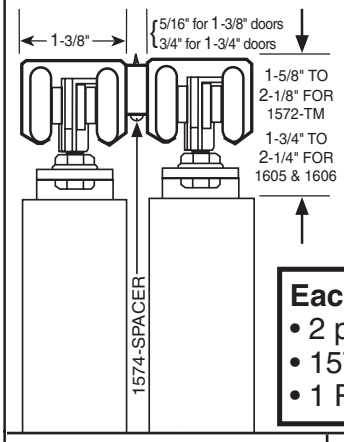

- 4-Wheel hangers with 7/8" wheels
- For doors 1-3/8" to 1-3/4" thick
- Up to 125 lbs. per panel with 1605 celcon bearing hangers
- Up to 150 lbs. per panel with 1606 ball bearing hangers

Each Opening Requires:
- 2 pieces of BK-1599-Z box track
- 1574-SPACER Kit for 1-3/8" & 1-3/4" Doors
- 1 Parts Bag including hangers and door guides

BY-PASS

ALTERNATIVE TO:
Sterling 1602 Series

COMPARES TO:
Stanley BP 250
Johnson 134F/138F
Grant 7000 Series
Cox 15-220 Series

BULK TRACK ONLY

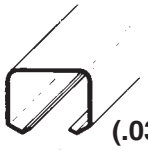

23 gauge (.030" thick) Galvanized Steel

Use two pieces for by-pass (With 1574-SPACER)

PART NO.	LENGTH	DESCRIPTION	Standard Pack Qty/lbs	LIST PRICE
BK-1599-Z47	47"	Zinc Finish Steel Box Track	20/20	4.77
BK-1599-Z55	55"	Zinc Finish Steel Box Track	20/38	5.71
BK-1599-Z59	59"	Zinc Finish Steel Box Track	20/40	6.23
BK-1599-Z63	63"	Zinc Finish Steel Box Track	20/44	6.65
BK-1599-Z71	71"	Zinc Finish Steel Box Track	20/49	7.27
BK-1599-Z95	95"	Zinc Finish Steel Box Track	10/32	9.87
BK-1599-Z119	119"	Zinc Finish Steel Box Track	10/40	12.47
BK-1599-Z143	143"	Zinc Finish Steel Box Track	10/48	15.07

PARTS BAGS	Max Door Weight	1572-TM Hanger	1605 Carrier	1606 Carrier	1807- TM Plate	0909 Guide		
PB-1575-TM	100 lb.	4				1	5/6	17.77
PB-1675-TM	125 lb.		4		4	1	5/7	21.62
PB-1676-TM	150 lb.			4	4	1	5/8	36.39

COMPONENTS

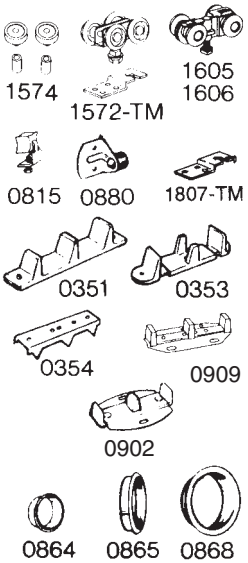

PART NO.	DESCRIPTION		
1574-SPACER	Contains spacers for two 1-3/8" or 1-3/4" doors in one by-pass opening. Use with 2 pcs. BK-1599-Z track.	5/1	1.65 set
PB-1572-TM	4 Wheel Carrier and Door Plate for 100 lb. Door	20/6	4.57
BK-1605	4 Wheel Carrier Only for 125 lb. Doors	40/9	3.84
BK-1606	4 Wheel Ball Bearing Carrier for 150 lb. Door	20/4	6.85
BK-1807-TM	Top Mount Plate for 1605 & 1606	40/5	0.93
BK-0815	Center Stop/Snugger	20/2	3.01
BN-0880	Door Stop	100/6	1.55
BK-0351	Non-Adjustable Door Guide for 1-3/8" Doors	50/3	1.13
BN-0353	Adjustable Door Guide – 3/4" to 1-3/8"	100/4	1.86
BK-0354	3/4" Riser – Fits 0351 & 0353	50/6	1.34
PB-0902	Guide for 3/4" Doors – Steel Base/Celcon Posts	20/2	2.38
PB-0909	Heavy Duty Adjustable Door Guide for 3/4" to 1-3/4" thick Doors	20/3	3.42
BK-0864-US3	3/4" Finger Pull – Bright Brass Finish	100/2	0.30
BK-0865-WT	1-3/4" Plastic Pull – White	100/2	0.41
BN-0868-US3*	2-1/8" Flush Pull – Bright Brass Finish	150/7	1.34

* Also available in US5-Antique Brass, US15-Satin Nickel, US26-Bright Chrome and US10B-Oil Rubbed Bronze

Conforms to ANSI A156.14/Type: D8741, D8731

1574 Series By-Pass- Heavy duty by-passing door hardware is manufactured for doors weighing up to 100 lbs. each (1572 hangers) or 125 lbs. each (1605 hangers) or 150 lbs. each (1606 hangers). Installation to consist of two pieces of zinc finish steel box track, separated by spacers. By-passing applications for doors 1" to 1-3/4" thick doors. Hangers to consist of four 7/8" heavy duty lubricated celcon wheels (1606 hanger wheels mounted on ball bearing shafts).

DHP-1574-0811

John Sterling **Brand Products** Made By KNAPE & VOGT
2700 OAK INDUSTRIAL DRIVE NE, GRAND RAPIDS, MI 49505 • 800 253-1561 • FAX: 877-636-3290
CUSTOMER.SERVICE@KV.COM • WWW.JOHNSTERLING.COM • WWW.KV.COM

© 2012

August 2011

1602 Series

Heavy Duty Aluminum Track and Hardware

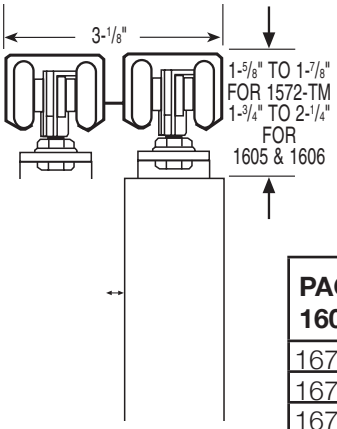

- 4-Wheel hangers with 7/8" wheels
- For doors 1-3/8" to 1-3/4" thick
- Up to 125 lbs. per panel with 1605 celcon bearing hangers
- Up to 150 lbs. per panel with 1606 ball bearing hangers

BY-PASS

COMPARES TO:
Stanley BP 250
Johnson 134F/138F
Grant 7000 Series
Cox 15-220 Series

1602 TRACK

.050" thick aluminum

1709 FASCIA

.062" thick aluminum

5/8" Lip 2-3/4" High

PACKAGED SETS, Contents: 1602 Track, PB-1676-TM Parts Bag, 0864 Pulls, 0880 Stop			Standard Pack Qty/lbs	LIST PRICE
1676-4	By-Pass Set for two 24" doors		6/18	63.95
1676-5	By-Pass Set for two 30" doors		6/24	70.19
1676-6	By-Pass Set for two 36" doors		6/30	76.43
1676-8	By-Pass Set for two 48" doors		6/36	90.47
PART NO.	**LENGTH**	**DESCRIPTION**		
BK-1602-46	46"	Aluminum By-Pass Box Track	5/10	22.77
BK-1602-58	58"	Aluminum By-Pass Box Track	5/12	28.07
BK-1602-70	70"	Aluminum By-Pass Box Track	5/15	32.54
BK-1602-94	94"	Aluminum By-Pass Box Track	5/20	44.19
BK-1602-118	118"	Aluminum By-Pass Box Track	5/23	51.47
BK-1602-142	142"	Aluminum By-Pass Box Track	5/30	62.70
BK-1709-72	72"	Aluminum Fascia Only, Unanodized	10/17	35.87
BK-1709-96	96"	Aluminum Fascia Only, Unanodized	10/22	46.89

PARTS BAGS	Max Door Weight	1572-TM Hanger	1605 Carrier	1606 Carrier	1807- TM Plate	0909 Guide		
PB-1575-TM	100 lb.	4				1	5/6	17.77
PB-1675-TM	125 lb.		4		4	1	5/7	21.62
PB-1676-TM	150 lb.			4	4	1	5/8	36.39

COMPONENTS

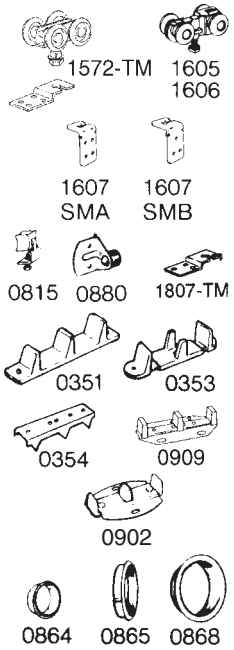

PART NO.	DESCRIPTI ON							
PB-1572-TM	4 Wheel Hanger & TM Bracket						20/6	4.57
BK-1605	4 Wheel Carrier Only for 125 lb. Doors						40/9	3.84
BK-1606	4 Wheel Ball Bearing Carrier Only for 150 lb. Doors						20/4	6.85
BK-1807-TM	Top Mount Plate for 1605/1606 – Fits Doors 1-3/8" +						40/5	0.93
BK-1607-SMA	Side Mount Plate – 3/8" Offset – for 1605 & 1606						40/4	0.93
BK-1607-SMB	Side Mount Plate – 11/16" Offset – for 1605 & 1606						40/4	0.93
Side Mount Plate Selection Chart	Door Thickness	3/4"	1"	1-1/8"	1-3/8"	1-3/4"		
	Front Door Plate: 1607-	SMB	SMB	SMB	SMB	SMA		
	Rear Door Plate: 1607-	SMA	SMA	SMA	SMB	SMB		
BK-0815	Center Stop/Snugger						20/2	3.01
BN-0880	Door Stop						100/6	1.55
BK-0351	Non-Adjustable Door Guide for 1-3/8" Doors						50/3	1.13
BK-0351-WT	Same as above, white						50/3	1.13
BN-0353	Adjustable Door Guide - 3/4" to 1-3/8"						100/4	1.86
BK-0354	3/4" Riser – Fits 0351 & 0353						50/6	1.34
PB-0902	Guide for 3/4" Doors – Steel Base/Celon Posts						20/2	2.38
PB-0909	Hvy. Duty Adj. Door Guide for 3/4" to 1-3/4" thick Doors						20/3	3.42
BK-0864-US3	3/4" Finger Pull – Bright Brass Finish						100/2	0.30
BK-0865-WT	1-3/4" Plastic Pull, White						100/2	0.41
BN-0868-US3*	2-1/8" Flush Pull – Bright Brass Finish						150/7	1.34

* Also available in US5-Antique Brass, US15-Satin Nickel, US26-Bright Chrome and US10B-Oil Rubbed Bronze

Conforms to ANSI A156.14/Type: D8731, D8741,

1602 Series By-Pass- Heavy duty by-passing door hardware is manufactured for doors 3/4" to 1-3/4" thick and weighing up to 100 lbs. with 1572 hanger or 125 lbs. with 1605 hangers or 150 lbs. with 1606 hangers. Track to be of extruded aluminum with "V" shaped rails. Four wheel hangers with jump-proof box design, 7/8" lubricated celcon wheels mounted on steel shafts (1606 hangers with ball bearings)

DHP-1602-0811

John Sterling **Brand Products** Made By
2700 OAK INDUSTRIAL DRIVE NE, GRAND RAPIDS, MI 49505 • 800 253-1561 • FAX: 877-636-3290
CUSTOMER.SERVICE@KV.COM • WWW.JOHNSTERLING.COM • WWW.KV.COM
KNAPE & VOGT

© 2012

August 2011

1876 Series

Heavy-Duty Aluminum By-Pass Track & Hardware and Packaged Sets

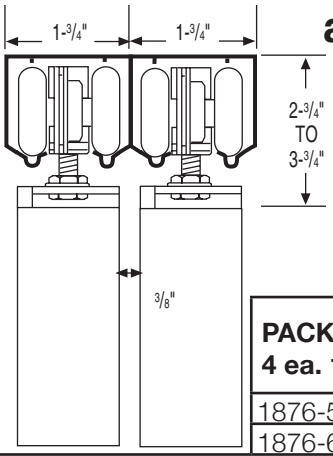

- For 1-3/8" to 1-3/4" Thick Doors
- 1-1/4" Wheels Mounted on Ball Bearing Shafts
- Up to 250 lbs. per panel

NOTE: For 1-3/4" Doors, Tracks are spaced 3/8" apart using 1574-SPACER.

BY-PASS

INTERCHANGES WITH:
Stanley 57/58

COMPARES TO:
Home Decor BP 250
Grant 1200 Series

BULK TRACK
Use 2 Pieces for By-pass

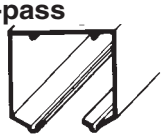

.075" Thick aluminum

FASCIA ONLY
3-7/8" High
1-3/4" Lip
.072" Thick

PACKAGED SETS Contents: 2 ea. 1801 Track, 4 ea. 1816-TM Hangers, 0909 and Guides, 1574-SPACER			Standard Pack Qty/lbs	LIST PRICE
1876-5	5' Opening - 2 Door		6/54	155.26
1876-6	6' Opening - 2 Door		6/61	164.00
1876-8	8' Opening - 2 Door		6/89	183.76
TRACK PART NO.	**LENGTH**	**DESCRIPTION**		
BK-1801-48	48"	Aluminum Box Track	5/9	24.74
BK-1801-60	60"	Aluminum Box Track	5/12	32.24
BK-1801-72	72"	Aluminum Box Track	5/14	35.35
BK-1801-96	96"	Aluminum Box Track	5/19	49.39
BK-1801-120	120"	Aluminum Box Track	5/23	58.02
BK-1801-144	144"	Aluminum Box Track	5/28	76.43
BK-1801-192	192"	Aluminum Box Track	5/37	101.60
BK-1809-72	72"	Aluminum Fascia Only	10/30	57.24
BK-1809-96	96"	Aluminum Fascia Only	10/41	75.39
PART NO.	**DESCRIPTION**			
PB-1816-TM	4 Wheel Ball Bearing Hanger w/Top Mt. Bracket		10/6	21.31
BK-0815	Center Stop/Snugger		20/2	3.01
BN-0880	Door Stop		100/6	1.55
BK-0351	Non-Adjustable Door Guide for 1-3/8" Door		50/3	1.13
BN-0353	Adjustable Door Guide – 3/4" to 1-3/8"		100/4	1.86
BK-0354	3/4" Riser – Fits 0351 & 0353		50/6	1.34
PB-0902	Guide for 3/4" Doors – Steel Base/Celon Posts		20/2	2.38
PB-0909	Heavy Duty Adjustable Door Guide for 3/4" to 1-3/4" Thick Doors		20/3	3.42
BK-0864-US3	3/4" Finger Pull – Bright Brass Finish		100/2	0.30
BK-0865-WT	1-3/4" Plastic Pull, White		100/2	0.41
BN-0868-US3*	2-1/8" Flush Pull – Bright Brass Finish		150/7	1.34
*Also available in US5-Antique Brass, US15-Satin Nickel, US26-Bright Chrome and US10B-Oil Rubbed Bronze				
1574-SPACER	Spacer Kit for use with 1-3/4" Doors		5/1	1.65 set
PB-1921	Roller Guide		20/5	8.21
BK-1922-96	Bottom Track		5/10	20.79
BK-1922-144	Bottom Track		5/15	27.34
PB-3126	Sidewall Bracket		6/3	5.54

COMPONENTS

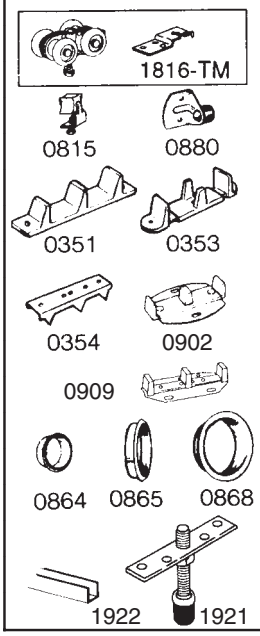

Conforms to ANSI A156.14/Type: D8731, D8751

1875 Series By-Pass- Heavy duty By-pass door hardware is manufactured for doors 1-3/8" to 1-3/4" thick weighing up to 250 lbs. each. Installation shall consist of two pieces of extruded aluminum jump-proof box style track with "V" shaped rails. Hardware to include hangers with four 1-1/4" diameter heavy duty celcon wheels mounted on steel shafts with ball bearings.

DHP-1876-0811

John Sterling **Brand Products** Made By KNAPE & VOGT

2700 OAK INDUSTRIAL DRIVE NE, GRAND RAPIDS, MI 49505 • 800 253-1561 • FAX: 877-636-3290
CUSTOMER.SERVICE@KV.COM • WWW.JOHNSTERLING.COM • WWW.KV.COM

© 2012

August 2011

2000 Series

Heavy-Duty Aluminum By-Pass Track & Hardware

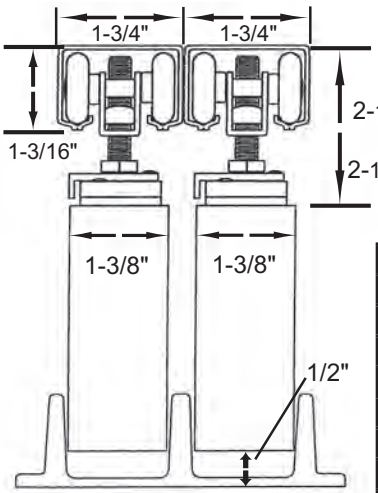

- For 1-3/8" to 1-3/4" Thick Doors
- Hangers have 1" diameter wheels
- Up to 250 lbs. per door

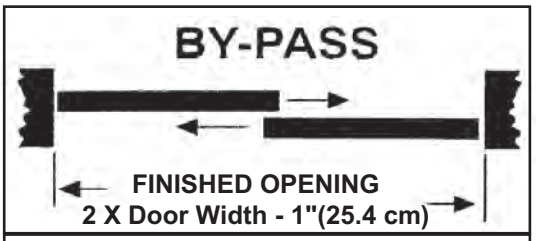

INTERCHANGES WITH:
Stanley/ BP150 / BP250
Johnson 100 / 134F / 138F

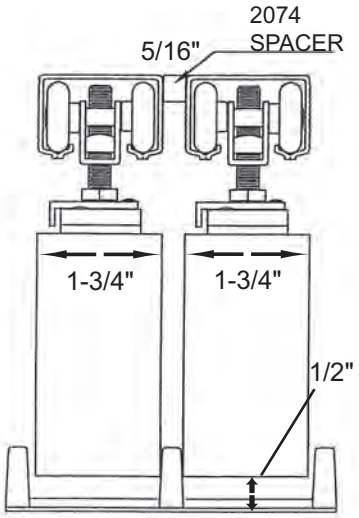

BULK TRACK ONLY	DESCRIPTION (use 2 pcs. per opening)	Qty/lbs.	List Price
BK-2001-47	47" (1194 mm) Aluminum Box Track	10/14	18.46
BK-2001-59	59" (1499 mm) Aluminum Box Track	10/17	20.75
BK-2001-71	71" (1803 mm) Aluminum Box Track	10/20	26.78
BK-2001-96	96" (2438 mm) Aluminum Box Track	10/28	34.06
BK-2001-144	144" (3658 mm) Aluminum Box Track	10/42	51.95
ALUMINUM FASCIA			
BK-1709-72	72" Aluminum Fascia	10/17	35.87
BK-1709-96	96" Aluminum Fascia	10/22	46.89
PARTS BAG			
PB-2075	4 each 2004 4-Wheel Hanger for 150 lbs. doors, 1 each 0909 Door Guide, 1 each 2074 Spacer Kit	5/8	26.97
PB-2076	4 each 2004-BB 4-Wheel Hanger for 250 lbs. doors, 1 each 0909 Door Guide, 1 each 2074 Spacer Kit	5/9	56.49
COMPONENTS			
2074-SPACER	Spacer Kit (For 1-3/4" Doors)	20/1	1.15
BK-0815	Center Stop/Snugger	20/1	3.01
BN-0880	Door Stop	100/6	1.55
BK-0351	Non-adj. Door Guide for 1-3/8" (35 mm) Doors – Tan	50/3	1.13
BK-0351-WT	Non-adj. Door Guide for 1-3/8" (35 mm) Doors – White	50/3	1.13
BN-0353	Adj. Door Guide – 3/4" (19 mm) to 1-3/8" (35 mm) Doors – Tan	100/4	1.86
BK-0354	3/4" (19 mm) Riser – Fits 0351 & 0353	50/6	1.34
PB-0909	Adj. Guide 3/4" to 1-3/4" (44 mm) Doors – Steel Base/Nylon Posts	20/3	3.42
BK-0864-US3	3/4" (19 mm) Finger Pull – Bright Brass Finish	100/2	0.30
BN-0868*	2-1/8" (54 mm) Flush Pull – US3, US5, US10B, US15, US26	150/7	1.34
BK-0865-WT	1-3/4" (45 mm) White Plastic Pull	100/2	0.41
PB-2004	4-Wheel Hanger w/QR Top Mount Plate (150 lb. Doors)	20/6	5.14
PB-2004-BB	4-Wheel Ball Bearing Hanger w/QR Top Mount Plate (150 lb. Doors)	10/3	12.84
PB-3126	Side Wall Bracket	6/3	5.54

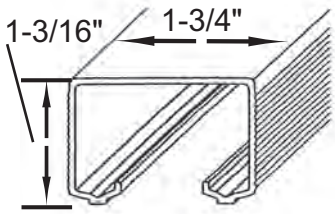

Uses two pieces for By-Pass

2000 Series Heavy Duty By-Pass Door - Heavy duty By-pass door hardware is manufactured for doors 1-3/8" to 1-3/4" thick, weighing up to 150/250 lbs. each. Installation shall consist of two pieces of extruded aluminum, jump-proof box style track. Hardware to include hangers with four 1" diameter heavy-duty celcon wheels mounted on steel shafts (150 lb. doors) with steel ball bearings (250 lb doors).

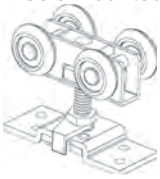

PB-2004
150 Lb
By-Pass Doors

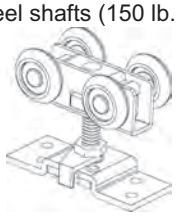

PB-2004-BB
250 Lb
By-Pass Doors

0351

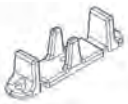

0353

0354

0864

Bulk Fascia-1709
2-3/4" High,
5/8" Lip
0.62" thick

0868

0815

0880

0909
Heavy Duty

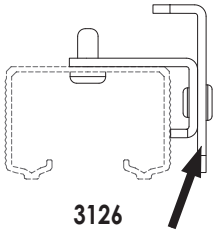

3126
Sidewall Bracket

Conforms to ANSI A156-14/Type: D8731, D8751

John Sterling Brand Products Made By
2700 Oak Industrial Drive NE Grand Rapids, MI 49505
800-253-1561 • Fax: 877-636-3290
customer.service @kv.com
www.johnsterling.com • www.kv.com
KNAPE & VOGT

DHP-2000-0811

© 2012

INSTALLATION INSTRUCTIONS

1. Prepare Finished Opening

2. Install Track & Rollers

Fascia track should be installed with no gap.
Rollers must be inserted before track is mounted.

3. Mount Door Plates

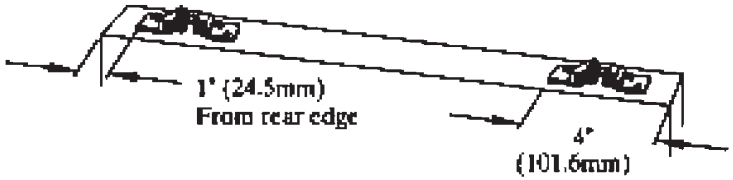

4. Hang and Adjust Door:

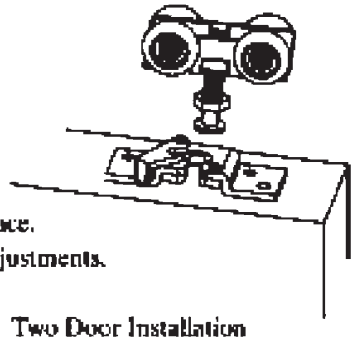

Attach door to rollers, Swing hanger into place.
Turn adjusting bolt for height and plumb adjustments.

5. Install Door Guide, Stops and Pulls.

2076-INST
Rev'd 4-16-07

1-3/8"(34.93mm) THICK DOORS

Two tracks
with 1" Dia.
(25.4 mm)
Wheels

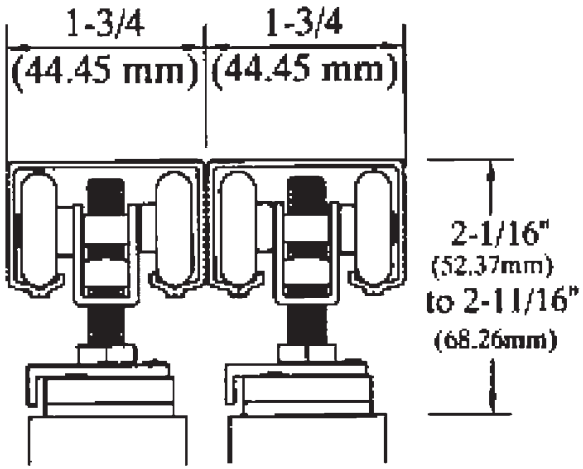

FLOOR CLEARANCE: Allow 1/2" (12.7mm) between door and finished floor.

1-3/4"(44.45mm) THICK DOORS

Two tracks
with 1" Dia.
(25.4 mm)
Wheels

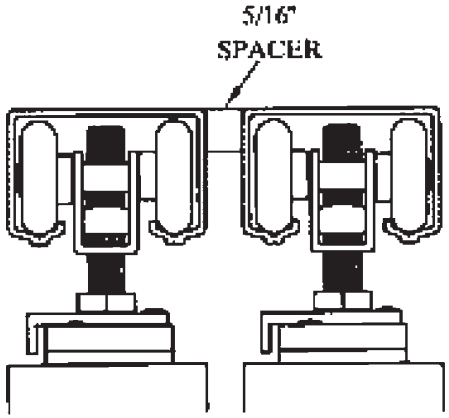

FLOOR CLEARANCE: Allow 1/2" (12.7mm) between door and finished floor.

August 2011

3800 Series
Non-Fascia Steel Track

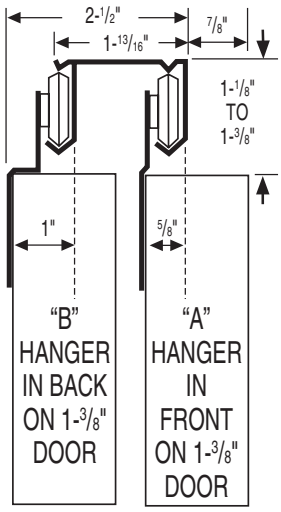

- For 3/4" to 1-3/8" Thick Doors
- 3/4" Diameter Wheels
- Up to 50 lbs. per door

Door Size	Front Hanger	Rear Hanger
3/4"	"B"	"A"
1" to 1-1/8"	"A" or "B"	Same as Front
1-3/8"	"A"	"B"

BY-PASS

INTERCHANGES WITH:
National V771D Series

COMPARES TO:
Stanley 8800 Series / BP 60
Cox 12-100 Series
Johnson 1166 Series
Grant 6000/8000 Series

PACKAGED SETS Contents: 3800-Z Track, PB-0206 Parts		Standard Pack Qty/lbs	LIST PRICE
0206-V47	For two 2'0" Doors	10/23	13.51
0206-V59	For two 2'6" Doors	10/27	15.59
0206-V71	For two 3'0" Doors	10/28	17.67
0206-V94-2	For two 4'0" Doors	10/38	22.87

BULK TRACK ONLY

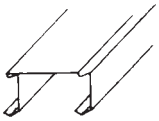

23 gauge .030" Thick steel

TRACK PART NO.	LENGTH	DESCRIPTION		
BK-3800-Z47	46-7/8"	Zinc Finished Steel Track	20/42	5.29
BK-3800-Z59	58-7/8"	Zinc Finished Steel Track	20/52	6.54
BK-3800-Z71	70-7/8"	Zinc Finished Steel Track	20/56	7.79
BK-3800-Z94	93-7/8"	Zinc Finished Steel Track	10/41	10.29
BK-3800-Z120	119-7/8"	Zinc Finished Steel Track	10/43	15.59
BK-3800-G47	46-7/8"	Gold Enameled Steel Track	20/37	6.44
BK-3800-G59	58-7/8"	Gold Enameled Steel Track	20/46	8.10
BK-3800-G71	70-7/8"	Gold Enameled Steel Track	20/57	9.66
BK-3800-G94	93-7/8"	Gold Enameled Steel Track	10/38	12.89

TRACK MOUNTING SCREWS: 1-1/4" Packed in Parts Bags – 5/8". Packed with Bulk Hangers

PARTS BAG	0200-A Hanger	0200-B Hanger	0353 Guide	0864 Pull			
PB-0206	2	2	1	2		20/10	4.77

COMPONENTS

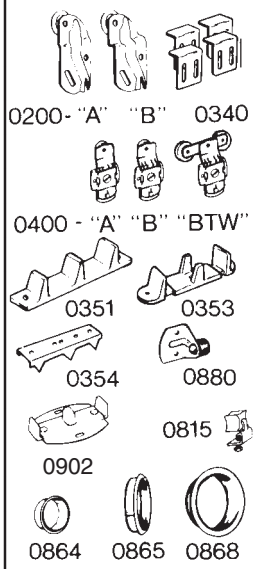

PART NO.	DESCRIPTION		
BK-0200-A	Hanger, 3/4" Wheels, A Offset	100/8	0.93
BK-0200-B	Hanger, 3/4" Wheels, B Offset	100/8	0.93
PB-0340	Jump-proof Guard (4 per bag)	50/25	2.01
BK-0351	Non-Adj. Door Guide – 1-3/8" Doors	50/3	1.13
BK-0351-WT	Non-Adj. Door Guide – 1-3/8" Doors, White	50/3	1.13
BK-0353	Adj. Door Guide – 3/4" to 1-3/8" Doors	100/4	1.86
BK-0354	3/4" Riser, fits 0351 & 0353	50/6	1.34
BK-0400-A	Hanger, Dial Adjustment, 3/4" Wheel, A Offset	100/11	1.65
BK-0400-B	Hanger, Dial Adjustment, 3/4" Wheel, B Offset	100/11	1.65
BK-0815	Cener Stop/Snugger	20/1	3.01
BK-0864-US3	3/4" Finger Pull – Bright Brass Finish	100/1	0.30
BK-0865-WT	1-3/4" Plastic Pull, White	100/2	0.41
BN-0868-US3*	2-1/8" Flush Pull – Bright Brass Finish	150/7	1.34
* Also available in US5-Antique Brass, US15-Satin Nickel, US26-Bright Chrome and US10B-Oil Rubbed Bronze			
BN-0880	Door Stop	100/6	1.55
PB-0902	Guide for 3/4" Doors – Steel Base/Celcon Posts	20/2	2.38

Conforms to ANSI A156.14/Type: D8742

3800 Series By-Pass - By-passing door hardware is manufactured for doors 3/4" to 1-3/4" thick and weighing up to 50 lbs. each. Track shall be of zinc finish or enameled steel. Hangers shall have a side mounted 3/4" diameter lubricated wheel made of celcon. Hangers shall be adjustable to plumb and level doors.

DHP-3800-0811

John Sterling **Brand Products** Made By

2700 OAK INDUSTRIAL DRIVE NE, GRAND RAPIDS, MI 49505 • 800 253-1561 • FAX: 877-636-3290
CUSTOMER.SERVICE@KV.COM • WWW.JOHNSTERLING.COM • WWW.KV.COM

© 2012

KNAPE & VOGT

August 2011

5950 Series

Fascia Aluminum Wide Track

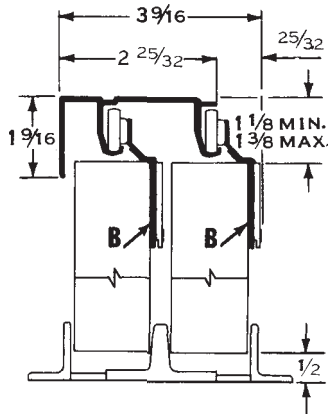

- For 1-3/8" Thick Doors

Maximum Door Weight

- 60 lbs. with Single Wheel Hangers
- 75 lbs. with Two-Wheel Hangers

Uses: All "B" Hangers with 3/4" Wheels

BY-PASS

INTERCHANGES WITH:
National 782D

COMPARES TO:
Johnson 2200F
Home Decor BP60

BULK TRACK ONLY

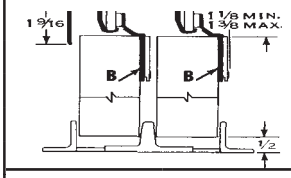

TRACK PART NO.	LENGTH	DESCRIPTION	Standard Pack Qty/lbs	LIST PRICE
BK-5950-48	48"	Aluminum Fascia Wide Track	10/18	13.93
BK-5950-60	60"	Aluminum Fascia Wide Track	10/23	18.29
BK-5950-72	72"	Aluminum Fascia Wide Track	10/27	20.69
BK-5950-96	96"	Aluminum Fascia Wide Track	10/36	28.17

PARTS BAGS	0200-B Hanger	0351 Guide	0868 Pull	0865-WT Pull	TRACK MOUNTING SCREWS: 1-1/4" packed in Parts Bag – 5/8" packed with Bulk Hangers	
PB-0279-0865	4	1		2	50/25	4.77
PB-0279	4	1	2		50/27	4.57

COMPONENTS

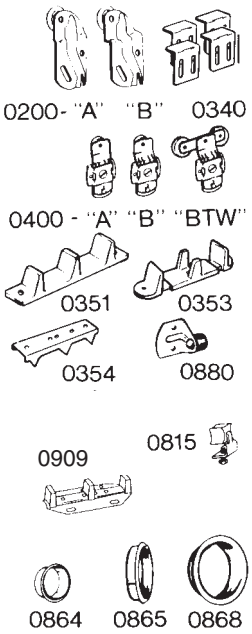

PART NO.	DESCRIPTION		
BK-0200-A	Hanger, 3/4" Wheels, A Offset	100/8	0.93
BK-0200-B	Hanger, 3/4" Wheels, B Offset	100/8	0.93
PB-0340	Jump-proof Guard (4 per bag)	50/25	2.01
BK-0351	Non-Adj. Door Guide – 1-3/8" Doors	50/3	1.13
BK-0351-WT	Non-Adj. Door Guide – 1-3/8" Doors, White	50/3	1.13
BN-0353	Adj. Door Guide – 3/4" to 1-3/8" Doors	100/4	1.86
BK-0354	3/4" Riser, fits 0351 & 0353	50/6	1.34
BK-0400-A	Hanger, Dial Adjustable, 3/4" Wheel, A Offset	100/11	1.65
BK-0400-B	Hanger, Dial Adjustable, 3/4" Wheel, B Offset	100/11	1.65
BK-0815	Center Stop/Snugger	20/1	3.01
BK-0864-US3	3/4" Finger Pull – Bright Brass Finish	100/1	0.30
BK-0865-WT	1-3/4" Plastic Pull, White	100/2	0.41
BN-0868-US3*	2-1/8" Flush Pull – Bright Brass Finish	150/7	1.34
* Also available in US5-Antique Brass, US15-Satin Nickel, US26-Bright Chrome and US10B-Oil Rubbed Bronze			
BN-0880	Door Stop	100/6	1.55
PB-0909	Guide for Doors up to 1-3/4" – Steel/Nylon	20/8	3.42
PB-0400-ATW	Hanger Twin Wheel	20/4	3.11
PB-0400-BTW	Hanger Twin Wheel	20/4	3.11

Conforms to ANSI A156.14/Type: D8742

5950 Series By-Pass- By-passing door hardware is manufactured for doors 1-3/8" (34.925mm) thick weighing up to 60 lbs. (single wheel) or 75 lbs. (two wheel) hanger. Track shall be of extruded aluminum and include an integral 1-9/16" fascia. Hangers shall have a side mounted 3/4" diameter lubricated wheel made of celcon. Hangers shall be adjustable to plumb and level doors.

John Sterling **Brand Products** Made By
2700 OAK INDUSTRIAL DRIVE NE, GRAND RAPIDS, MI 49505 • 800 253-1561 • FAX: 877-636-3290
CUSTOMER.SERVICE@KV.COM • WWW.JOHNSTERLING.COM • WWW.KV.COM
KNAPE & VOGT

© 2012

August 2011

7810 Series

Non-Fascia Aluminum Track

- Up to 60 lbs. per door with Single Wheel Hanger
- Up to 75 lbs. per door with Twin Wheel Hanger
- 7/8" Diameter Wheels

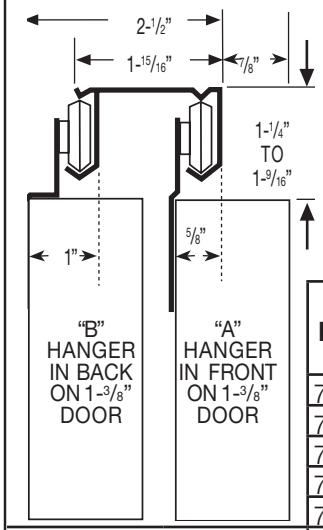

Hanger Selection Chart

Door Size	Front Hanger	Rear Hanger
3/4"	"B"	"A"
1" to 1-1/8	"A" or "B"	Same as Front
1-3/8"	"A"	"B"

BY-PASS

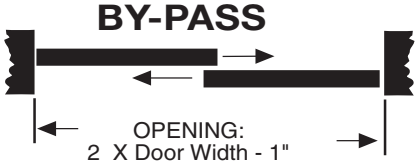

INTERCHANGES WITH:
Stanley / Home Decor BP 60
Cox 12-200 Series

COMPARES TO:
Johnson 2200 Series
Grant 6000 / 8000 Series

PACKAGED SETS Contents: 7810 Track, PB-7812 Parts		Standard Pack Qty/lbs	LIST PRICE
7812-4	4' 2 Door (24" Doors 3/4" or 1-3/8" Thick)	5/9	17.98
7812-5	5' 2 Door (30" Doors 3/4" or 1-3/8" Thick)	5/10	19.75
7812-6	6' 2 Door (36" Doors 3/4" or 1-3/8" Thick)	5/12	22.66
7812-8-2	8' 2 Door (48" Doors 3/4" or 1-3/8" Thick)	5/16	34.21
7812-8-3	8' 3 Door (32" Doors 3/4" or 1-3/8" Thick)	5/17	39.20

BULK TRACK ONLY

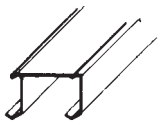

.050" Thick aluminum

TRACK PART NO.	LENGTH	DESCRIPTION		
BK-7810-46	46-3/8"	Non-Fascia Aluminum Track	10/11	10.91
BK-7810-58	58-3/8"	Non-Fascia Aluminum Track	10/14	13.51
BK-7810-70	70-3/8"	Non-Fascia Aluminum Track	10/17	16.32
BK-7810-93	93-3/8"	Non-Fascia Aluminum Track	10/22	21.62
BK-7810-120	120"	Non-Fascia Aluminum Track	10/39	27.03
BK-7810-144	144"	Non-Fascia Aluminum Track	10/47	35.04

TRACK MOUNTING SCREWS: 1-1/4" Packed in Parts Bags – 5/8". Packed with Bulk Hangers

PARTS BAG	7200-A Hanger	7200-B Hanger	0353 Door Guide	0351-WT Guide	0865-WT Pull		
PB-7812-0865	2	2	1		2	10/5	5.50
PB-7812	2	2		1		10/4	5.09

COMPONENTS

7200- "A" & "B"

7200- "ATW" & "BTW"

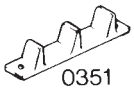

0351

0353

0354

0880

0864

0865

0868

7400

0815

PART NO.	DESCRIPTION		
BK-7200-A	Hanger – "A" Offset	100/10	1.03
BK-7200-ATW	"A" Offset Twin Wheel Hanger	100/14	1.76
BK-7200-B	Hanger – "B" Offset	100/10	1.03
BK-7200-BTW	"B" Offset Twin Wheel Hanger	100/14	1.76
BK-7400-A	Hanger – Micro-Cam "A" Offset	100/12	1.65
BK-7400-B	Hanger – Micro-Cam "B" Offset	100/12	1.65
BK-0351	Guide – 1-3/8" Door	50/3	1.13
BN-0353	Guide – Adjustable – 3/4" to 1-3/8"	100/4	1.86
BK-0354	3/4" Riser Fits 0351 & 0353	50/6	1.34
BN-0880	Angle Stop	100/6	1.55
BK-0864-US3	3/4" Finger Pull – Bright Brass Finish	100/1	0.30
BK-0865-WT	1-3/4" Plastic Pull, White	100/2	0.41
BN-0868-US3*	2-1/8" Flush Pull – Bright Brass Finish	150/7	1.34
* Also available in US5-Antique Brass, US15-Satin Nickel, US26-Bright Chrome and US10B-Oil Rubbed Bronze			
BK-0815	Center Stop/Snugger	20/1	3.01
9990	Track Cutting Charge		1.55

Conforms to ANSI A156.14/Type: D8742

7810 Series By-Pass- By-passing door hardware is manufactured for doors 3/4" to 1-3/4" thick weighing up to 60 lbs. each. Track shall be of extruded aluminum and have "V" shaped rails. Hangers shall have 7/8" diameter celcon wheels and be adjustable to plumb and level doors.

DHP-7810-0811

John Sterling **Brand Products** Made By

2700 OAK INDUSTRIAL DRIVE NE, GRAND RAPIDS, MI 49505 • 800 253-1561 • FAX: 877-636-3290
CUSTOMER.SERVICE@KV.COM • WWW.JOHNSTERLING.COM • WWW.KV.COM

© 2012

KNAPE & VOGT

August 2011

7820 Series

1-3/4" Fascia Aluminum Wide Track

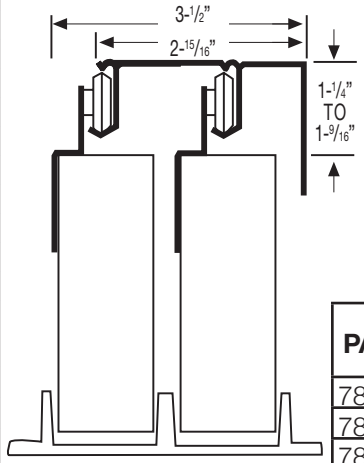

- For 1-3/8" Thick Doors
- Uses "B" Hangers with 7/8" Wheels
- Up to 60 lbs. with Single Wheel Hangers
- Up to 75 lbs. with Two Wheel Hangers

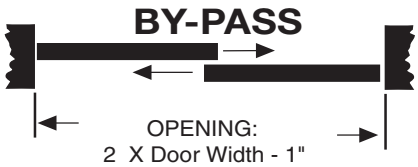

INTERCHANGES WITH:
Stanley / Home Decor BP 60
Cox 12-400 Series

COMPARES TO:
Johnson 2200F Series
Grant 6036 Series

PACKAGED SETS Contents: 7820 Track, PB-7842-0865 Parts		Standard Pack Qty/lbs	LIST PRICE
7822-4	4' 2 Door (24" Doors)	5/13	24.01
7822-5	5' 2 Door (30" Doors)	5/15	27.97
7822-6	6' 2 Door (36" Doors)	5/17	31.71
7822-8-3	8' 3 Door (32" Doors)	5/22	52.30

BULK TRACK ONLY

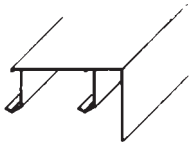

.050" Thick aluminum

TRACK PART NO.	LENGTH	DESCRIPTION		
BK-7820-48 R	48"	1-3/4" Fascia Aluminum Track	5/10	14.34
BK-7820-60 R	60"	1-3/4" Fascia Aluminum Track	5/12	18.81
BK-7820-72 R	72"	1-3/4" Fascia Aluminum Track	5/15	21.21
BK-7820-96 R	96"	1-3/4" Fascia Aluminum Track	5/19	28.90
BK-7820-120 R	120"	1-3/4" Fascia Aluminum Track	5/24	36.18
BK-7820-144 R	144"	1-3/4" Fascia Aluminum Track	5/29	43.05

TRACK MOUNTING SCREWS: 1-1/4" Packed in Parts Bags – 5/8". Packed with Bulk Hangers

PARTS BAG	7200-B Hanger	7200-BTW Hanger	0351 Guide	0865-WT Pull	0868-US3 Pull	0864 Pull		
PB-7842-0865	4		1	2			10/4	6.33
PB-7843-0865		4	1	2			10/4	8.83
PB-7842-0868	4		1		2		10/4	7.79
PB-7843-0868		4	1		2		10/8	10.29
PB-7842-0864	4		1			2	10/5	6.65
PB-7842-8WT	4		1 (WT)		2		10/5	7.79

COMPONENTS

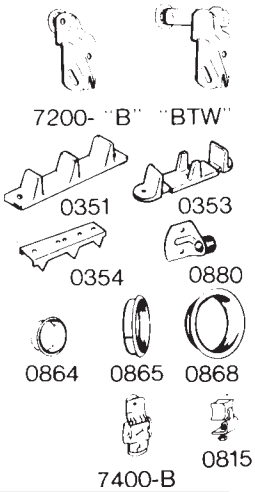

PART NO.	DESCRIPTION		
BK-7200-B	Hanger – "B" Offset	100/10	1.03
BK-7200-BTW	Hanger – 2 Wheel "B" Offset	100/14	1.76
BK-0351	Guide – 1-3/8" Door	50/3	1.13
BN-0353	Guide – Adjustable – 3/4" to 1-3/8"	100/4	1.86
BK-0354	3/4" Riser – Fits 0351 & 0353	50/6	1.34
BN-0880	Angle Stop	100/6	1.55
BK-0864-US3	3/4" Finger Pull – Bright Brass Finish	100/1	0.30
BK-0865-WT	1-3/4" Plastic Pull – White	100/2	0.41
BN-0868-US3*	2-1/8" Flush Pull – Bright Brass Finish	150/7	1.34
* Also available in US5-Antique Brass, US15-Satin Nickel, US26-Bright Chrome and US10B-Oil Rubbed Bronze			
BK-0815	Center Stop/Snugger	20/1	3.01
BK-7400-B	Hanger – Micro-Cam "B" Offset	100/12	1.65
9990	Track Cutting Charge		1.55

Conforms to ANSI A156.14/Type: D8752

7820 Series By-Pass- By-passing door hardware is manufactured for doors 1-3/8" thick weighing up to 60 lbs. (single wheel) or 75 lbs. (twin wheel) hanger. Track shall be of extruded aluminum and include an integral 1-3/4" fascia. Hangers shall have one or two side mounted 7/8" lubricated wheels made of celcon. Hangers shall be adjustable to plumb and level doors.

DHP-7820-0811

© 2012

John Sterling **Brand Products** Made By
2700 OAK INDUSTRIAL DRIVE NE, GRAND RAPIDS, MI 49505 • 800 253-1561 • FAX: 877-636-3290
CUSTOMER.SERVICE@KV.COM • WWW.JOHNSTERLING.COM • WWW.KV.COM
KNAPE & VOGT

August 2011

7830 Series

3" Fascia Aluminum Wide Track

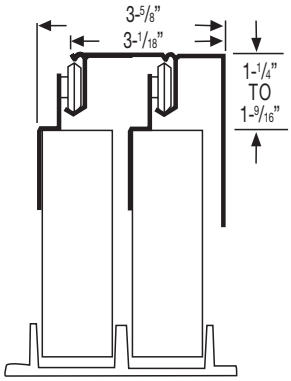

- For 1-3/8" Thick Doors
- All "B" Hangers with 7/8" Wheels
- Up to 60 lbs. with Single Wheel Hangers
- Up to 75 lbs. with Two Wheel Hangers

INTERCHANGES WITH:
Stanley / Home Decor BP 60
Cox 12-600 Series

COMPARES TO:
Johnson 2400

BULK TRACK ONLY

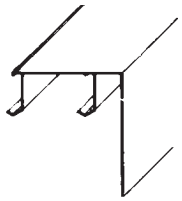

.060" Thick aluminum

TRACK PART NO.	LENGTH	DESCRIPTION	Standard Pack Qty/lbs	LIST PRICE
BK-7830-48	48"	3" Fascia Aluminum Track	10/15	25.47
BK-7830-60	60"	3" Fascia Aluminum Track	10/30	31.09
BK-7830-72	72"	3" Fascia Aluminum Track	10/50	37.12
BK-7830-84	84"	3" Fascia Aluminum Track	10/54	44.71
BK-7830-96	96"	3" Fascia Aluminum Track	10/62	49.18
BK-7830-120	120"	3" Fascia Aluminum Track	10/66	60.93
BK-7830-144	144"	3" Fascia Aluminum Track	10/80	79.65

TRACK MOUNTING SCREWS: 1-1/4" Packed in Parts Bags – 5/8". Packed with Bulk Hangers

PARTS BAG	7200-B Hanger	7200-BTW Hanger	0351 Guide	0865-WT Pull	0868-US3 Pull	0864 Pull		
PB-7842-0865	4		1	2			10/4	6.33
PB-7843-0865		4	1	2			10/4	8.83
PB-7842-0868	4		1		2		10/4	7.79
PB-7843-0868		4	1		2		10/8	10.29
PB-7842-0864	4		1			2	10/5	6.65
PB-7842-8WT	4		1 (WT)		2		10/5	7.79

COMPONENTS

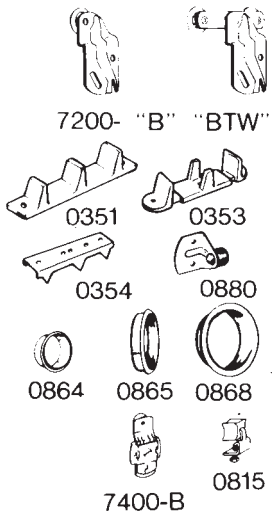

PART NO.	DESCRIPTION		
BK-7200-B	Hanger – "B" Offset	100/10	1.03
BK-7200-BTW	Hanger – 2 Wheel "B" Offset	100/14	1.76
BK-0351	Guide – 1-3/8" Door	50/13	1.13
BN-0353	Guide – Adjustable – 3/4" to 1-3/8"	100/4	1.86
BK-0354	3/4" Riser – Fits 0351 & 0353	50/6	1.34
BN-0880	Angle Stop	100/6	1.55
BK-0864-US3	3/4" Finger Pull – Bright Brass Finish	100/1	0.30
BK-0865-WT	1-3/4" Plastic Pull – White	100/2	0.41
BN-0868-US3*	2-1/8" Flush Pull – Bright Brass Finish	150/7	1.34

* Also available in US5-Antique Brass, US15-Satin Nickel, US26-Bright Chrome and US10B-Oil Rubbed Bronze

BK-0815	Center Stop/Snugger	20/1	3.01
BK-7400-B	Hanger – Dial Adjust "B" Offset	100/12	1.65
9990	Track Cutting Charge		1.55

Conforms to ANSI A156.14/Type: D8752

7830 Series By-Pass- By-pass door hardware is manufactured for doors 1-3/8" thick weighing up to 60 lbs. (single wheel) or 75 lbs. (twin wheel) hanger. Track shall be of extruded aluminum and include an integral 3" fascia. Hangers shall have one or two side mounted 7/8" lubricated wheels made of celcon. Hangers shall be adjustable to plumb and level doors.

DHP-7830-0811

John Sterling **Brand Products** Made By

2700 OAK INDUSTRIAL DRIVE NE, GRAND RAPIDS, MI 49505 • 800 253-1561 • FAX: 877-636-3290
CUSTOMER.SERVICE@KV.COM • WWW.JOHNSTERLING.COM • WWW.KV.COM

© 2012

KNAPE & VOGT

August 2011

7840 Series

Non-Fascia Steel Wide Track
Bright Zinc Finish

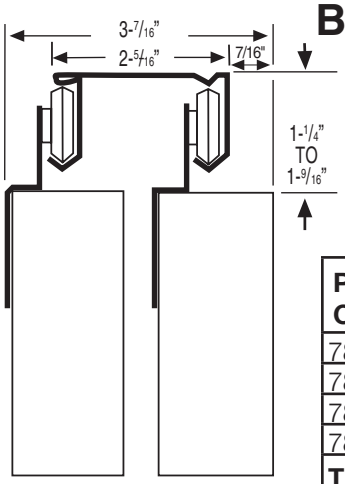

- For 1-3/8" - 1-3/4" Thick Doors
- All "B" Hangers with 7/8" Wheels
- Up to 60 lbs. with One Wheel Hangers
- Up to 75 lbs. with Two Wheel Hangers

DOOR SIZE	FRONT HANGER	REAR HANGER
1-3/8"	B	B
1-3/4"	A	B

BY-PASS

INTERCHANGES WITH:
Stanley / Home Decor BP60
Cox 12-300 Series

COMPARES TO:
Johnson 1138 Series
Grant 6000/8000 Series

PACKAGED SETS for 1-3/8" Doors Contents: 7840 Track, PB-7842-0864 Parts			Standard Pack Qty/lbs	LIST PRICE
7842-4	4' 2 Door (24" Doors)		5/13	13.82
7842-5	5' 2 Door (30" Doors)		5/16	16.11
7842-6	6' 2 Door (36" Doors)		5/19	18.50
7842-8-3	8' 3 Door (32" Doors)		5/26	31.09
TRACK PART NO.	**LENGTH**	**DESCRIPTION**		
BK-7840-46	46-1/2"	Non-Fascia Steel Track	10/21	6.44
BK-7840-58	58-1/2"	Non-Fascia Steel Track	10/26	8.10
BK-7840-70	70-1/2"	Non-Fascia Steel Track	10/31	9.35
BK-7840-81	81-1/2"	Non-Fascia Steel Track	5/17	11.33
BK-7840-95	95-1/2"	Non-Fascia Steel Track	5/21	12.37
BK-7840-120	120"	Non-Fascia Steel Track	5/25	16.11
BK-7840-144	144"	Non-Fascia Steel Track	5/30	21.10

BULK TRACK ONLY

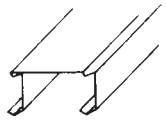

23 gauge (.030" thick) galvanized steel

TRACK MOUNTING SCREWS: 1-1/4" Packed in Parts Bags – 5/8". Packed with Bulk Hangers

PARTS BAG	7200-B Hanger	7200-BTW Hanger	0351 Guide	0865-WT Pull	0868-US3 Pull	0864 Pull		
PB-7842	4		1				10/8	4.98
PB-7843		4	1			2	10/4	7.79
PB-7842-0865	4		1	2			10/4	6.33
PB-7843-0865		4	1	2			10/4	8.83
PB-7842-0868	4		1		2		10/4	7.79
PB-7843-0868		4	1		2		10/8	10.29
PB-7842-0864	4		1			2	10/5	6.65
PB-7842-8WT	4		1 (WT)		2		10/5	7.79

COMPONENTS

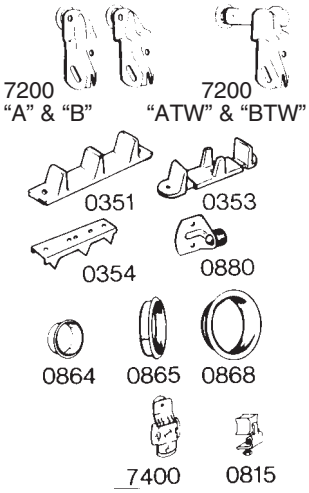

PART NO.	DESCRIPTION		
BK-7200-A	Hanger – "A" Offset	100/10	1.03
BK-7200-ATW	Hanger – 2 Wheel "A" Offset	100/14	1.76
BK-7200-B	Hanger – "B" Offset	100/10	1.03
BK-7200-BTW	Hanger – 2 Wheel "B" Offset	100/14	1.76
BK-0351	Guide – 1-3/8" Door	50/3	1.13
BK-0351-WT	Guide – 1-3/8" Door, White	50/3	1.13
BN-0353	Guide – Adjustable – 3/4" to 1-3/8"	100/4	1.86
BK-0354	3/4" Riser – Fits 0351 & 0353	50/6	1.34
BN-0880	Angle Stop	100/6	1.55
BK-0864-US3	3/4" Finger Pull – Bright Brass Finish	100/1	0.30
BK-0865-WT	1-3/4" Plastic Pull, White	100/2	0.41
BN-0868-US3*	2-1/8" Flush Pull – Bright Brass Finish	150/7	1.34
* Also available in US5-Antique Brass, US15-Satin Nickel, US26-Bright Chrome and US10B-Oil Rubbed Bronze			
BK-0815	Center Stop/Snugger	20/1	3.01
BK-7400-B	Hanger – Micro-Cam "B" Offset	100/12	1.65

Conforms to ANSI A156.14/Type: D8742

7840 Series By-Pass- By-passing door hardware is manufactured for doors 1-3/8" thick weighing up to 60 lbs. (single wheel) or 75 lbs. (twin wheel) hanger. Track shall be of zinc finish steel. Hangers shall have one or two side-mounted 7/8" lubricated wheels made of celcon. Hangers shall be adjustable to plumb and level doors.

DHP-7840-0811

John Sterling **Brand Products** Made By KNAPE & VOGT

2700 OAK INDUSTRIAL DRIVE NE, GRAND RAPIDS, MI 49505 • 800 253-1561 • FAX: 877-636-3290
CUSTOMER.SERVICE@KV.COM • WWW.JOHNSTERLING.COM • WWW.KV.COM

© 2012

August 2011

1599 Series Galvanized Steel
Heavy Duty Pocket Door Track

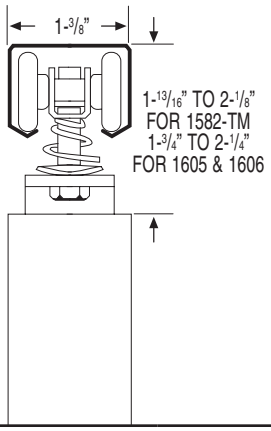

- 7/8" Diameter Wheels

MAXIMUM DOOR WEIGHT:

- 100 lbs. per panel with PB-1582-TM Hanger
- 125 lbs. per panel with BK-1605 Hanger
- 150 lbs. per panel with BK-1606 Hanger

POCKET

COMPARES TO:
Stanley /Home Decor PD 75/150
Johnson 100/111 Series
Grant 7000 Series
Interchanges with Cox 32

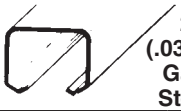

23 Guage (.030" Thick) Galvanized Steel

PART NO.	LENGTH	DESCRIPTION	Standard Pack Qty/lbs	LIST PRICE
BK-1599-Z47	47"	Zinc Finished Steel Track	20/27	4.77
BK-1599-Z55	55"	Zinc Finished Steel Track	20/38	5.71
BK-1599-Z59	59"	Zinc Finished Steel Track	20/40	6.23
BK-1599-Z63	63"	Zinc Finished Steel Track	20/44	6.65
BK-1599-Z71	71"	Zinc Finished Steel Track	20/49	7.27
BK-1599-Z95	95"	Zinc Finished Steel Track	10/32	9.87
BK-1599-Z119	119"	Zinc Finished Steel Track	10/40	12.47
BK-1599-Z143	143"	Zinc Finished Steel Track	10/48	15.07

PARTS BAGS	Max Door Weight	1582-TM Hanger	1605 Carrier	1606 Carrier	1807-TM Plate	0889 Guide	0883 Guide	0881 Bumper	NOTE:		
PB-1441	100 lbs.	2				1		1	Bumpers & track screws packed loose in carton.	40/21	8.00
PB-1631	125 lbs.		2		2	1		1		40/23	9.66
PB-1631-BB	150 lbs.			2	2	1		1		10/7	16.53
PB-1632	125 lbs.		2		2		2	1		40/24	9.66
PB-1632-BB	150 lbs.			2	2		2	1		10/9	16.53

COMPONENTS

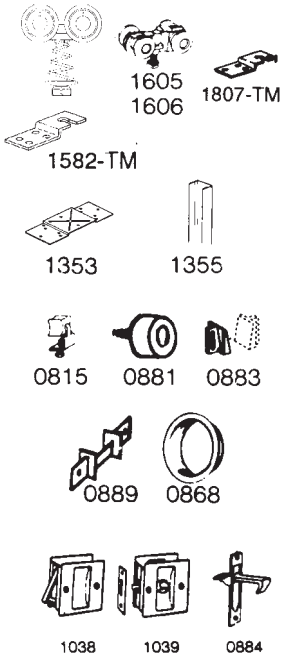

PART NO.	DESCRIPTION		
PB-1582-TM	4 Wheel Carrier & Dr. Plate for 100 lb. Doors	20/6	4.25
BK-1605	4 Wheel Carrier for 125 lb. Doors	40/9	3.84
BK-1606	4 Wheel Ball Bearing Carrier /150 lb. Doors	20/4	6.85
BK-1807-TM	Top Mount Door Plate for 1605 & 1606	40/5	0.93
BK-1353-3.5	Floor Plate/Jamb Spacer – 3-1/2" W. Overall	300/18	0.51
BK-1353-4.5	Floor Plate/Jamb Spacer – 4-1/2" W. Overall	300/21	0.51
BK-1355	Jamb Stiffener, Galv. Steel 81-3/4"	30/23	3.32
BK-1355-85	Jamb Stiffener, Galv. Steel 85-3/4"	30/26	4.98
BK-1355-97	Jamb Stiffener, Galv. Steel 97-3/4"	30/30	5.71
BK-0815	Center Stop/Snugger	20/1	3.01
BK-0881	Bumper	80/1	0.41
BK-0882	Plastic Door Bumper	100/6	0.51
BK-0883	Pocket Door Guides – Use 2 per Door	100/2	0.73
PB-0889	Pocket Door Guides – Use 1 per Door	20/1	1.65
BN-0868-US3*	2-1/8" Flush Pull – Bright Brass Finish	150/8	1.34
* Also available in US5-Antique Brass, US15-Satin Nickel, US26-Bright Chrome and US10B-Oil Rubbed Bronze			
CD-1038-US3	Passage Pull – Bright Brass Finish	6/2	11.95
CD-1038-US5	Passage Pull – Antique Brass Finish	6/2	11.95
CD-1038-US15	Passage Pull – Satin Nickel	6/2	11.95
CD-1039-US3	Privacy Lock – Bright Brass Finish	6/3	16.63
CD-1039-US5	Privacy Lock – Antique Brass Finish	6/3	16.63
CD-1039-US15	Passage Pull – Satin Nickel	6/3	16.63
CD-0884-US*	Edge Pull – Bright Brass Finish *Also available in US15, Satin Nickel Finish	10/2	4.98
CD-1639	Double Pocket Door Kit	6/4	14.03

Conforms to ANSI A156.14/Type: D8691, D8681

1599 Series Heavy Duty Pocket Door- Heavy duty pocket door hardware is manufactured for doors 1-1/8" to 1-3/4" thick and weighing up to 100 lbs. (1582 Hanger) or 125 lbs. (1605 Hanger) or 150 lbs. (1606 hanger). Track to be of zinc finish steel, jump-proof box style with "V" shaped rails. Hangers to have four 7/8" diameter lubricated celcon wheels (1606 Hanger wheels mounted on ball bearing shafts).

DHP-1599-0811

John Sterling **Brand Products** Made By
2700 OAK INDUSTRIAL DRIVE NE, GRAND RAPIDS, MI 49505 • 800 253-1561 • FAX: 877-636-3290
CUSTOMER.SERVICE@KV.COM • WWW.JOHNSTERLING.COM • WWW.KV.COM
KNAPE & VOGT

© 2012

RECOMMENDED HEADER DIMENSIONS

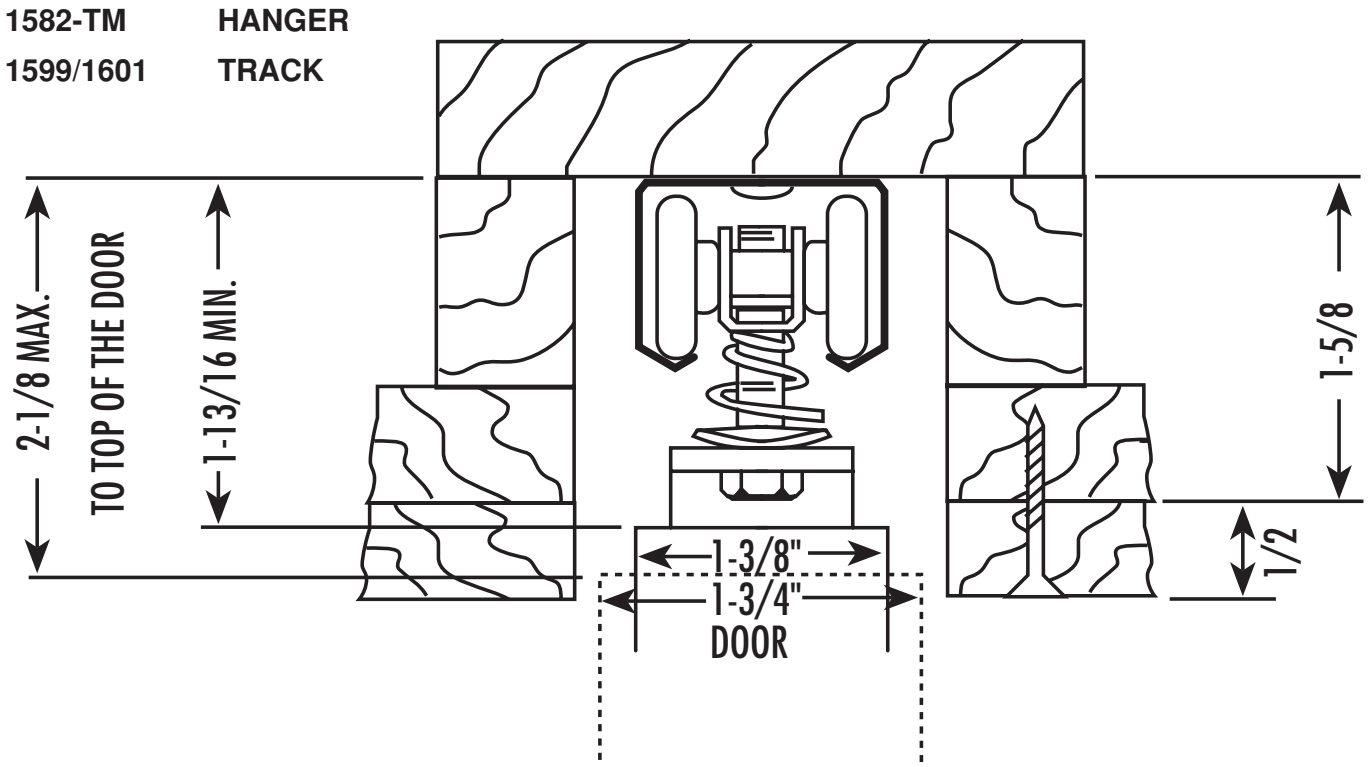

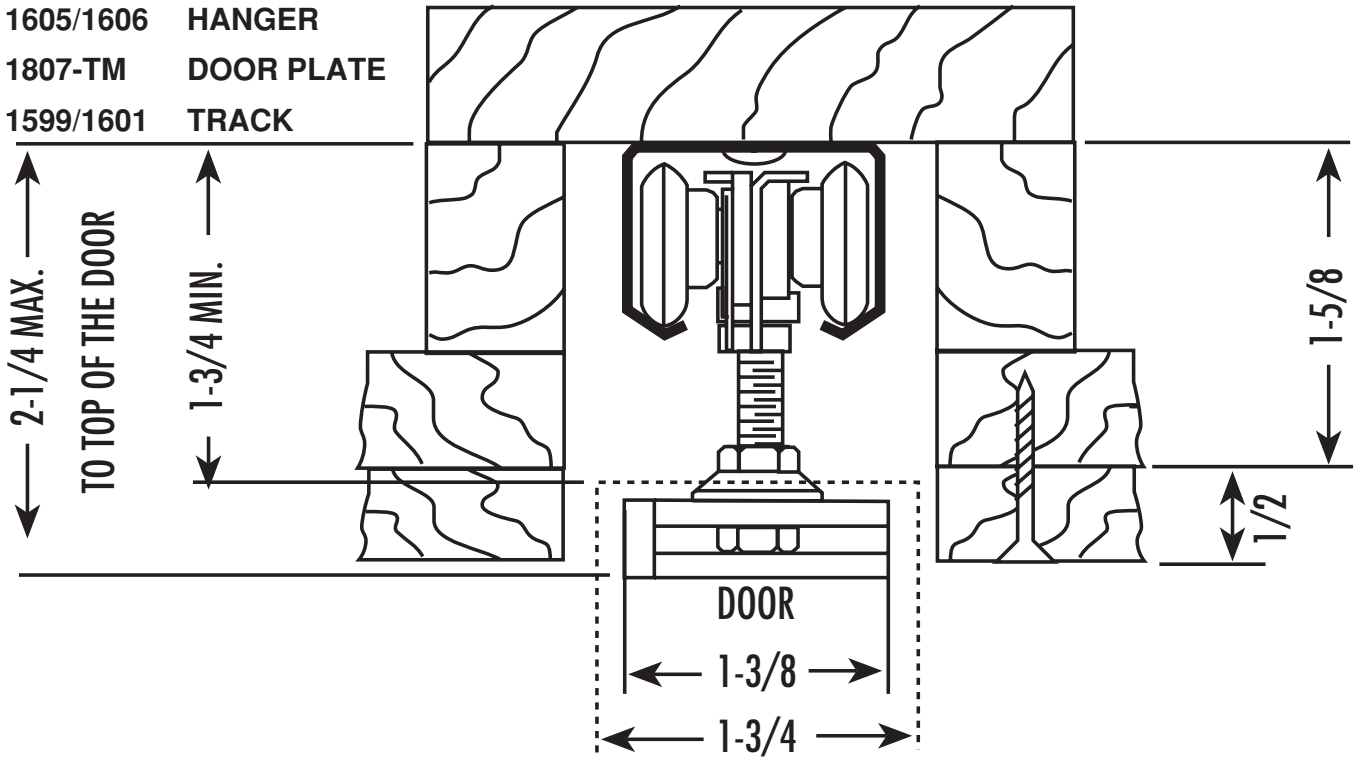

August 2011

1601 Series Aluminum
Heavy Duty Pocket Door Track

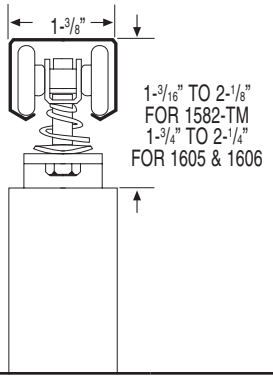

- 7/8" Diameter Wheels

MAXIMUM DOOR WEIGHT:

- 100 lbs. per panel with PB-1582-TM Hanger
- 125 lbs. per panel with BK-1605 Hanger
- 150 lbs. per panel with BK-1606 Hanger

POCKET

COMPARES TO:
Stanley / Home Decor PD 75/150
Johnson 100/111 Series
Grant 7000 Series
Interchanges with COX 32

PART NO.	LENGTH	DESCRIPTION	Standard Pack Qty/lbs	5LIST PRICE
BK-1601-47	47"	Aluminum Track	10/11	10.91
BK-1601-55	55"	Aluminum Track	10/13	12.99
BK-1601-59	59"	Aluminum Track	10/14	13.51
BK-1601-63	63"	Aluminum Track	10/15	15.07
BK-1601-71	71"	Aluminum Track	10/17	16.11
BK-1601-96	96"	Aluminum Track	10/22	22.87
BK-1601-120	120"	Aluminum Track	10/28	27.03
BK-1601-144	144"	Aluminum Track	10/32	31.71

BULK TRACK ONLY

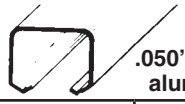

.050" Thick aluminum

PARTS BAGS	Max Door Weight	1582-TM Hanger	1605 Carrier	1606 Carrier	1807-TM Plate	0889 Guide	0883 Guide	0881 Bumper	NOTE: Bumpers & track screws packed loose in carton.		
PB-1441	100 lbs.	2				1		1		40/21	8.00
PB-1631	125 lbs.		2		2	1		1		40/23	9.66
PB-1631-BB	150 lbs.			2	2	1		1		10/7	16.53
PB-1632	125 lbs.		2		2		2	1		40/24	9.66
PB-1632-BB	150 lbs.			2	2		2	1		10/9	16.53

COMPONENTS

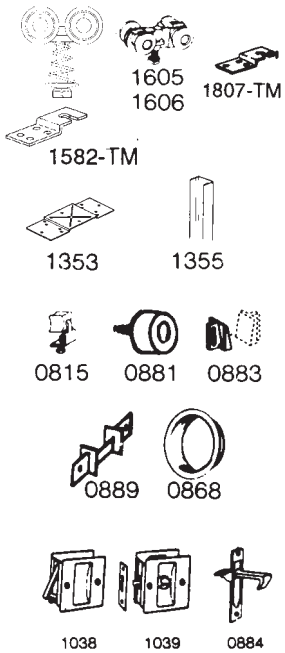

PART NO.	DESCRIPTION		
PB-1582-TM	4 Wheel Carrier & Dr. Plate for 100 lb. Doors	20/6	4.25
BK-1605	4 Wheel Carrier for 125 lb. Doors	40/9	3.84
BK-1606	4 Wheel Ball Bearing Carrier /150 lb. Doors	20/4	6.85
BK-1807-TM	Top Mount Door Plate for 1605 & 1606	40/5	0.93
BK-1353-3.5	Floor Plate/Jamb Spacer – 3-1/2" W. Overall	300/18	0.51
BK-1353-4.5	Floor Plate/Jamb Spacer – 4-1/2" W. Overall	300/21	0.51
BK-1355	Jamb Stiffener, Galv. Steel 81-3/4"	30/23	3.32
BK-1355-85	Jamb Stiffener, Galv. Steel 85-3/4"	30/26	4.98
BK-1355-97	Jamb Stiffener, Galv. Steel 97-3/4"	30/30	5.71
BK-0815	Center Stop/Snugger	20/1	3.01
BK-0881	Bumper	80/1	0.41
BK-0883	Pocket Door Guides – Use 2 per Door	100/2	0.72
PB-0889	Pocket Door Guides – Use 1 per Door	20/1	1.65
BN-0868-US3*	2-1/8" Flush Pull – Bright Brass Finish	150/8	1.34
* Also available in US5-Antique Brass, US15-Satin Nickel, US26-Bright Chrome and US10B-Oil Rubbed Bronze			
CD-1038-US3	Passage Pull – Bright Brass Finish	6/2	11.95
CD-1038-US15	Passage Pull – Satin Nickel	6/2	11.95
CD-1039-US3	Privacy Lock – Bright Brass Finish	6/3	16.63
CD-1039-US15	Passage Pull – Satin Nickel	6/3	16.63
CD-0884-US*	Edge Pull – Bright Brass Finish *Also available in US15, Satin Nickel Finish	10/2	4.98
CD-1639	Double Pocket Door Kit	6/4	14.03

Conforms to ANSI A156.14/Type: D8681, D8691

1601 Series Pocket Door- Heavy duty pocket door hardware is manufactured for doors 1-1/8" to 1-3/4" thick and weighing up to 100 lbs. (1582 hanger) or 125 lbs. (1605 hanger) or 150 lbs. (1606 hanger). Track to be of extruded aluminum, jump-proof box style with "V" shaped rails. Hangers to have four 7/8" diameter lubricated celcon wheels (1606 hanger wheels mounted on ball bearing shafts).

DHP-1601-0811

John Sterling **Brand Products** Made By

2700 OAK INDUSTRIAL DRIVE NE, GRAND RAPIDS, MI 49505 • 800 253-1561 • FAX: 877-636-3290
CUSTOMER.SERVICE@KV.COM • WWW.JOHNSTERLING.COM • WWW.KV.COM

© 2012

KNAPE & VOGT

RECOMMENDED HEADER DIMENSIONS

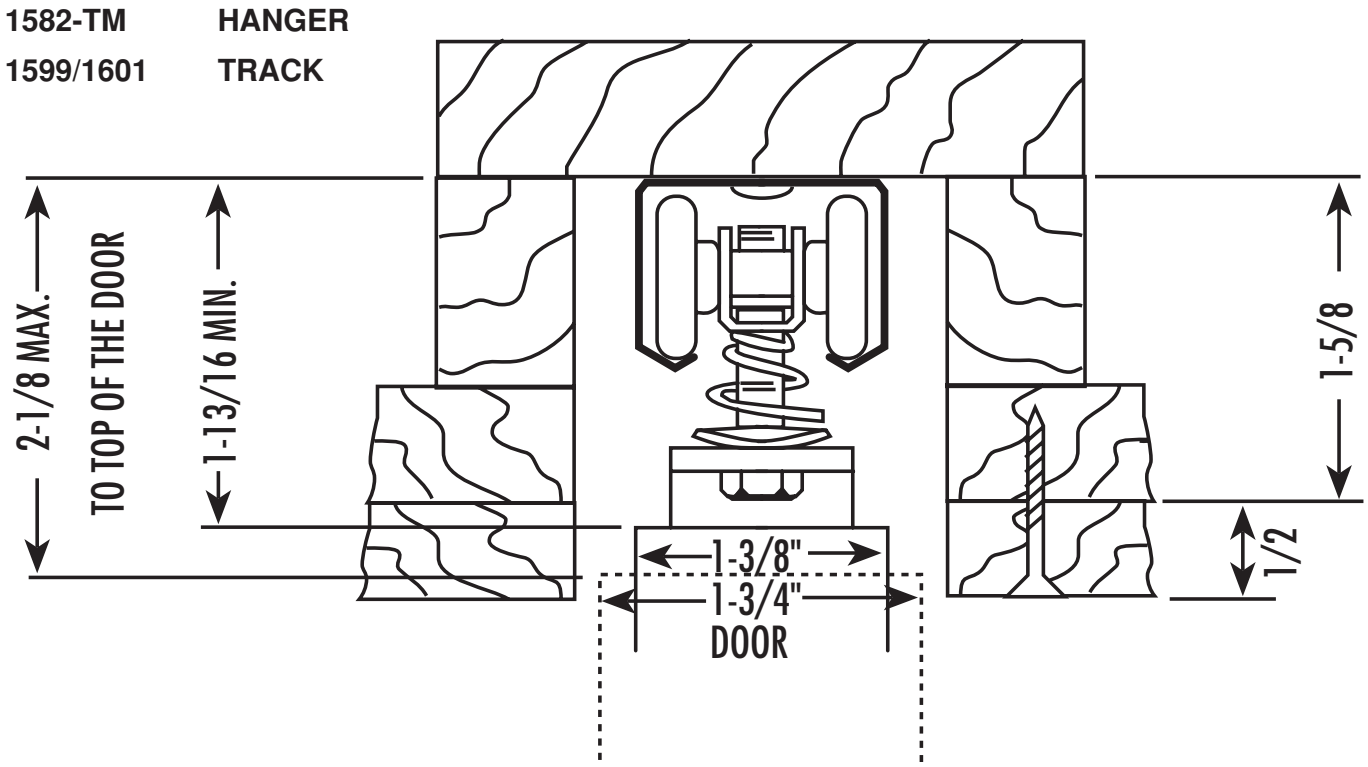

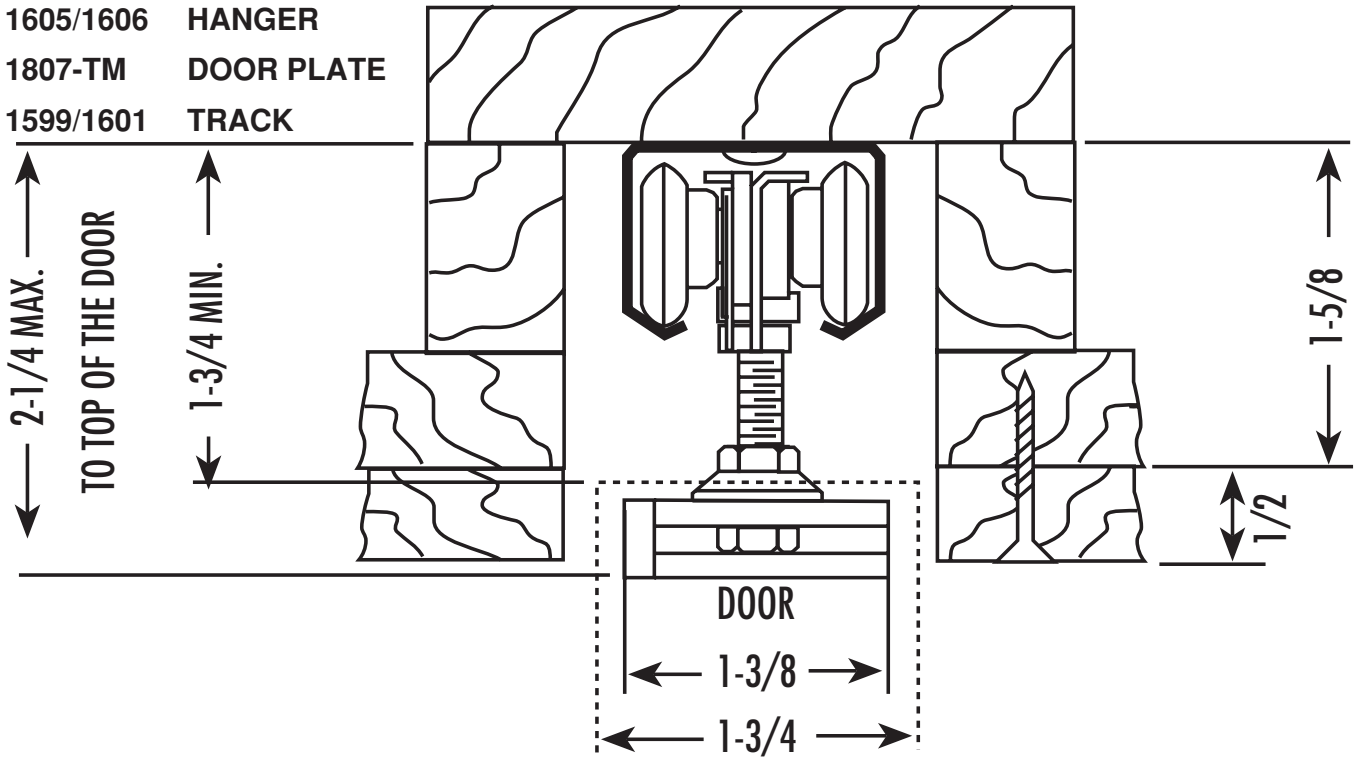

August 2011

1801 Series

Extra Heavy Duty Aluminum Box Track

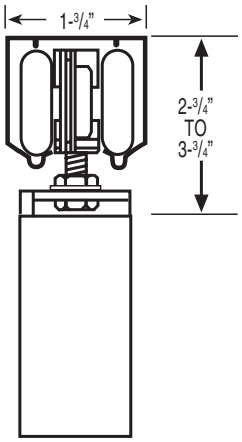

- For Doors 1-3/8" or Thicker
- 1-1/4" Diameter Wheels Mounted on Ball Bearing Shafts
- Up to 250 lbs. per door

POCKET

ROUGH OPENING:
2 X Door Width + 1"

INTERCHANGES WITH:
Stanley 57/58

COMPARES TO:
Grant 1200 Series

PACKAGED SETS Contents: 1801 Track, PB-1842-BB Parts Bag		Standard Pack Qty/lbs	LIST PRICE
1878-6	72" Track Set for 3' Opening	6/30	78.82
1878-8	96" Track Set for 4' Opening	6/44	89.95

BULK TRACK ONLY

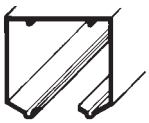

.075" Thick aluminum

TRACK PART NO.	LENGTH	DESCRIPTION		
BK-1801-72	72"	Aluminum Box Track	5/14	35.35
BK-1801-96	96"	Aluminum Box Track	5/19	49.39
BK-1801-120	120"	Aluminum Box Track	5/23	58.02
BK-1801-144	144"	Aluminum Box Track	5/28	76.43
BK-1801-192	192"	Aluminum Box Track	5/37	101.60

PARTS BAG	1816-TM Hangers	0889 Guide	0883 Guide	0881 Bumper	NOTE: Bumpers & track screws packed loose in carton.		
PB-1841-BB	2	1		1		10/5	43.88
PB-1842-BB	2		2	1		10/11	43.67

COMPONENTS

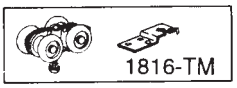

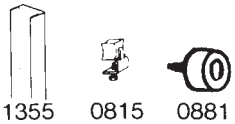

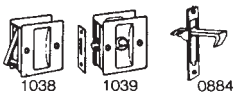

PART NO.	DESCRIPTION		
PB-1816-TM	4 Wheel Ball Bearing Hanger with Top Mount Bracket 1807-TM	10/6	21.31
BK-1353-3.5	Floor Plate/Jamb Spacer 3-1/2" W. Overall	300/18	0.51
BK-1353-4.5	Floor Plate/Jamb Spacer 4-1/2" W. Overall	300/21	0.51
BK-1355	Jamb Stiffener, Galv. Steel 81-3/4"	30/23	3.32
BK-1355-85	Jamb Stiffener, Galv. Steel 85-3/4"	30/26	4.98
BK-1355-97	Jamb Stiffener, Galv. Steel 97-3/4"	30/30	5.71
BK-0815	Center Stop/Snugger	20/1	3.01
BK-0881	Bumper	80/1	0.41
BK-0883	Pocket Door Guide – Use 2 per Door	100/2	0.72
PB-0889	Pocket Door Guide – User 1 per Door	20/1	1.65
BN-0868-US3*	2-1/8" Flush Pull – Bright Brass Finish	150/8	1.34
* Also available in US5-Antique Brass, US15-Satin Nickel, US26-Bright Chrome and US10B-Oil Rubbed Bronze			
CD-1038-US3	Passage Pull – Bright Brass Finish	6/2	11.95
CD-1038-US5	Passage Pull – Antique Brass Finish	6/2	11.95
CD-1038-US15	Passage Pull – Satin Nickel	6/2	11.95
CD-1039-US3	Privacy Lock – Bright Brass Finish	6/3	16.63
CD-1039-US5	Privacy Lock – Antique Brass Finish	6/3	16.63
CD-1039-US15	Passage Pull – Satin Nickel	6/3	16.63
CD-0884-US3*	Edge Pull – Satin Nickel	10/2	4.98
*Also available in US15, Satin Nickel Finish			
CD-1639	Double Pocket Door Kit	6/4	14.03

Conforms to ANSI A156.14/Type: D8681

1801 Heavy Duty Pocket Door- Heavy duty pocket door hardware is manufactured for doors 1-3/8" to 1-3/4" thick and weighing up to 250 lbs. each. Track shall be extruded aluminum box style with "V" shaped rails. Hardware to include hangers with four 1-1/4" diameter heavy duty celcon wheels mounted on steel shafts with steel ball bearings.

DHP-1801-0811

John Sterling **Brand Products** Made By

2700 OAK INDUSTRIAL DRIVE NE, GRAND RAPIDS, MI 49505 • 800 253-1561 • FAX: 877-636-3290
CUSTOMER.SERVICE@KV.COM • WWW.JOHNSTERLING.COM • WWW.KV.COM

© 2012

KNAPE & VOGT

August 2011

2078 Series

Extra Heavy-Duty Aluminum Pocket Door Track and Hardware

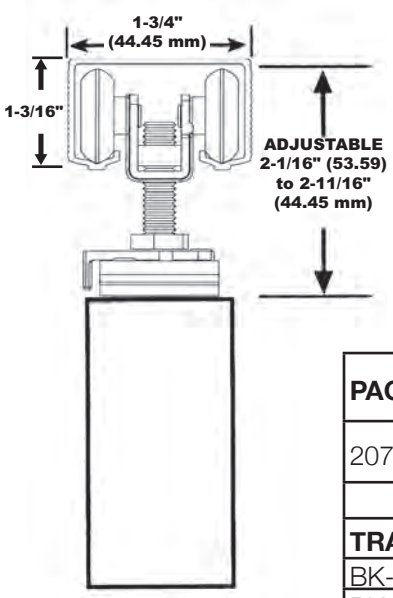

- For 1-3/8" to 1-3/4" Thick Doors
- Hangers have 1" diameter wheels
- Up to 125/250 lbs. per door
- Quick release hangers allow easy door hanging and removal
- Hangers interchange with Johnson and Stanley track and hangers

INTERCHANGES WITH:
Stanley PD150N
Johnson 100 PD

PACKAGED POCKET DOOR SET		QTY/LBS.	LIST PRICE
2078-72	For one door up to 150 lbs. Set includes 2001-71 Door Track, (2) PB-2004, (1) 0889, screws and instructions	10	43.84
TRACK			
BK-2001-59	59" (1499 mm) Aluminum Box Track	10/17	20.75
BK-2001-71	71" (1803 mm) Aluminum Box Track	10/22	26.78
BK-2001-96	96" (2438 mm) Aluminum Box Track	10/17	34.06
BK-2001-144	144" (3658 mm) Aluminum Box Track	10/42	51.95
PARTS BAG			
PB-2032	For Doors up to 125 lbs. Contains (2) 2004 4-wheel hangers, (2) 0883 Door Guides, screws and instructions	5/2	12.69
PB-2032-BB	For Doors up to 250 lbs. Contains (4) 2004-BB 4-wheel ball bearing hangers, (2) 0883 Door Guides, screws and instructions	5/2	25.68
COMPONENTS			
BK-0815	Center Stop Snugger	20/1	3.01
BK-0881	Bumper	80/1	0.41
BK-0883	Pocket Door Guide – Use 2 per Door	100/2	0.72
CD-1038-US15	Passage Pull – Satin Nickel Finish	6/2	11.95
CD-1038-US3	Passage Pull – Bright Brass Finish	6/2	11.95
CD-1039-US15	Privacy Lock – Satin Nickel Finish	6/2	16.63
CD-1039-US3	Privacy Lock – Bright Brass Finish	6/2	16.63
PB-0889	Pocket Door Guide –Use 1 per Door	20/1	1.65
PB-2004	4-Wheel Hanger w/Quick Release Top Mount Plate	20/6	5.14
PB-2004-BB	4-Wheel Ball Bearing Hanger w/Quick Release Top Mount Plate	10/3	12.84
PB-3126	Side Wall Bracket	6/1	5.54

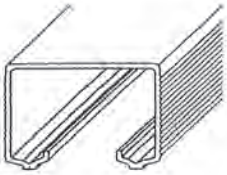

2001 Track

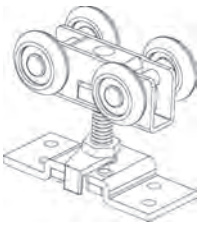

PB-2004
125 Lb
Pocket Doors

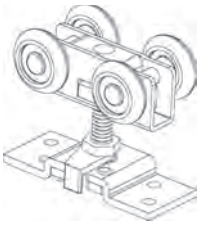

PB-2004-BB
250 Lb
Pocket Doors

2078 Series Heavy Duty Pocket Door - Heavy-duty pocket door hardware is manufactured for doors 1-3/8" to 1-3/4" thick, weighing up to 250 lbs. each. Track shall be extruded aluminum box style. Hardware to include hangers with four 1" diameter heavy duty celcon wheels mounted on steel shafts with steel ball bearings.

0815

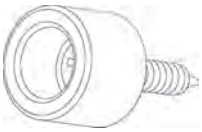

0881

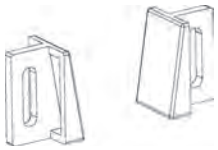

0883

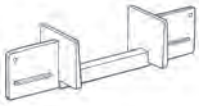

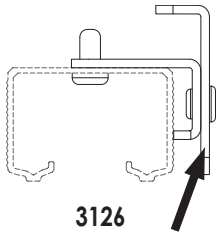

3126
Sidewall Bracket

1038

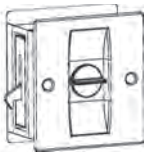

1039

DHP-2078-0811

John Sterling **Brand Products** Made By
2700 Oak Industrial Drive NE Grand Rapids, MI 49505
800-253-1561 • Fax: 877-636-3290
customer.service @kv.com
www.johnsterling.com • www.kv.com
KNAPE & VOGT

© 2012

August 2011

Series 1430

For Doors 1-3/8" to 1-3/4" thick, up to 3'0" wide

Model	Max. Door Weight	Door Height	Bearings
1430	125 lbs.	6'8"	molded celcon
RP-1430	Same as above, retail pack		

Pocket Door Kit

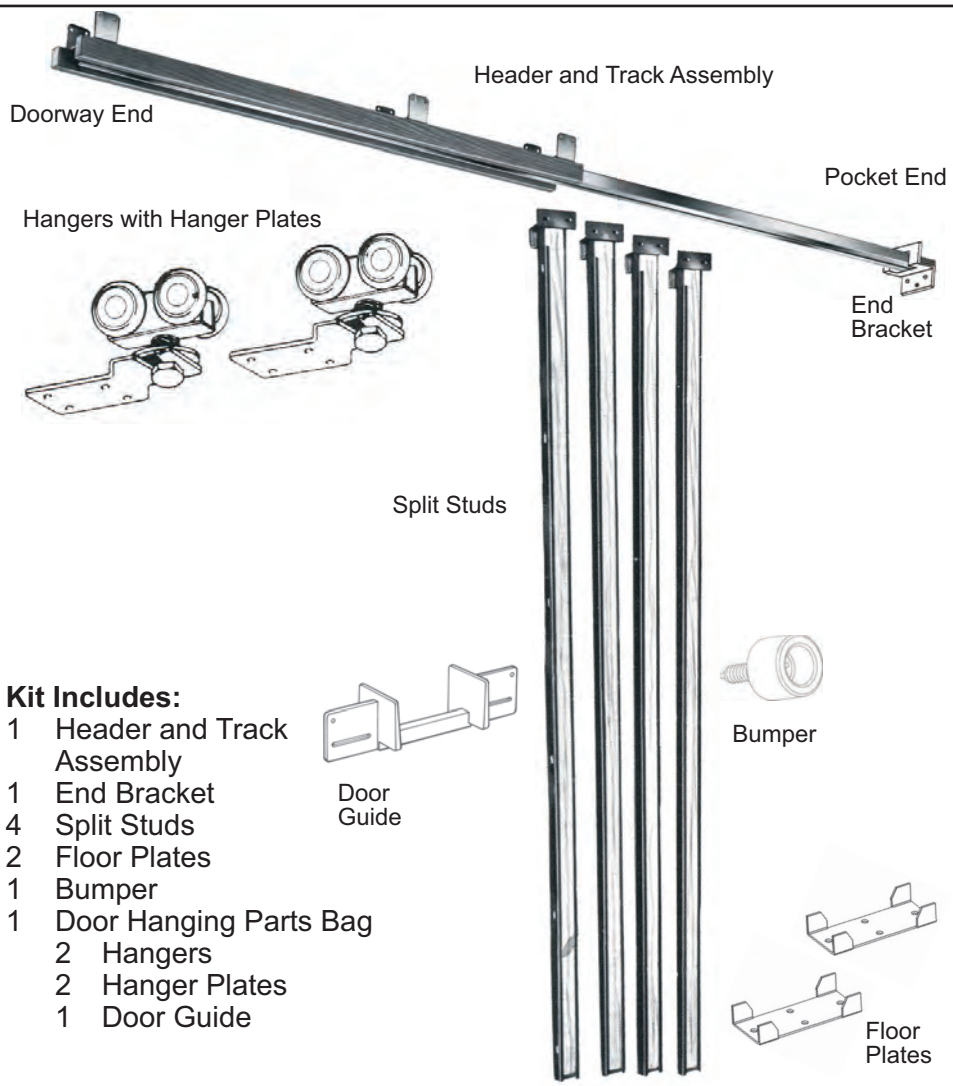

Kit Includes:

1 Header and Track Assembly
1 End Bracket
4 Split Studs
2 Floor Plates
1 Bumper
1 Door Hanging Parts Bag
  2 Hangers
  2 Hanger Plates
  1 Door Guide

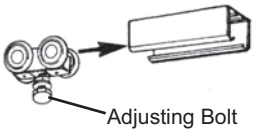

- Jump proof track and rollers.

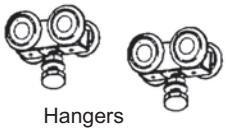

- Galvanized steel box track, removable even after wall is finished.

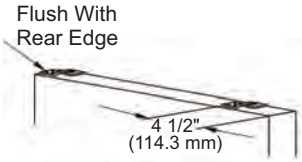

- Easy door installation and removal for painting and repair.

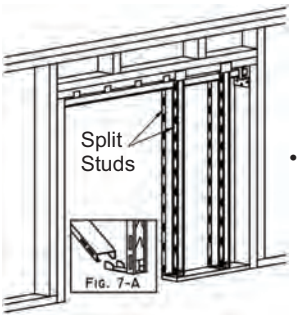

- Real wood split studs, steel encased for rigidity and to prevent faster penetration into the pocket.
- Floor plates designed to allow for floor settling without disturbing header alignment.

Part Number:	Ctn Qty:	List Price:
1430	1	$108.15
RP-1430	1	$109.71
BX-1431 (Hanger Replacement Set)	1	$15.07
CD-1437	5	$7.79
CD-1634	10	$7.79
BX-1062-US3 BX-1062-US26D (Pocket Door Lock)	6	$24.43

Accessories:

CD-1634
Adapter Kit for 1-3/4" Door

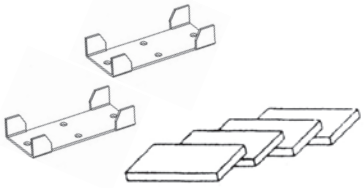

When properly installed, Sterling pocket door frames allow 2" for doors between split truds of 1/8" on each side for a 1-3/4" thick door. If more clearance is desired the CD-1634 can be used.

CD-1437
Bi-Parting Double Door

Uses 2 Pocket Door Frames to Make One Large Doorway

1 Rough opening width changes to 4 times one door width
2 Cut wood nailing strips flush with end of track
3 Install hangers and mount track assemblies with ends of nailing strips butted together
4 Install center stop bumpers included in Double Door Accessory Kit No. CD-1437. Position in track at center of opening to stop doors at center

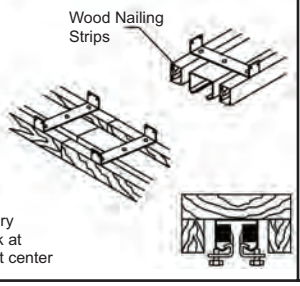

Specifications: Pocket door frame and hardware is manufactured for doors up to 1-3/4" thick and weighing up to 125 lbs. (150 lbs. with Ball Bearing hangers). Hardware to include header assembly with removable steel box track, steel-encased split studs, 1 pr. steel floor plates, two top-mounting, heavy-duty, two-piece hangers, end bracket, door guides, and bumper stop.

© 2012

John Sterling Brand Products Made By
2700 Oak Industrial Drive NE Grand Rapids, MI 49505
800-253-1561 • Fax: 877-636-3290
customer.service @kv.com
www.johnsterling.com • www.kv.com
KNAPE & VOGT

August 2011

Series 1630

For Doors 1-3/8" to 1-3/4" thick, up to 3'0" wide

Model	Max. Door Weight	Door Height	Bearings
1630	125 lbs.	6'8"	molded celcon
1630-BB	150 lbs.	6'8"	steel ball bearing
1630-BB7	150 lbs.	7'0"	steel ball bearing
1630-BB8	150 lbs.	8'0"	steel ball bearing
1636	150 lbs. (for 6" walls)	6'8"	molded celcon

Pocket Door Kit

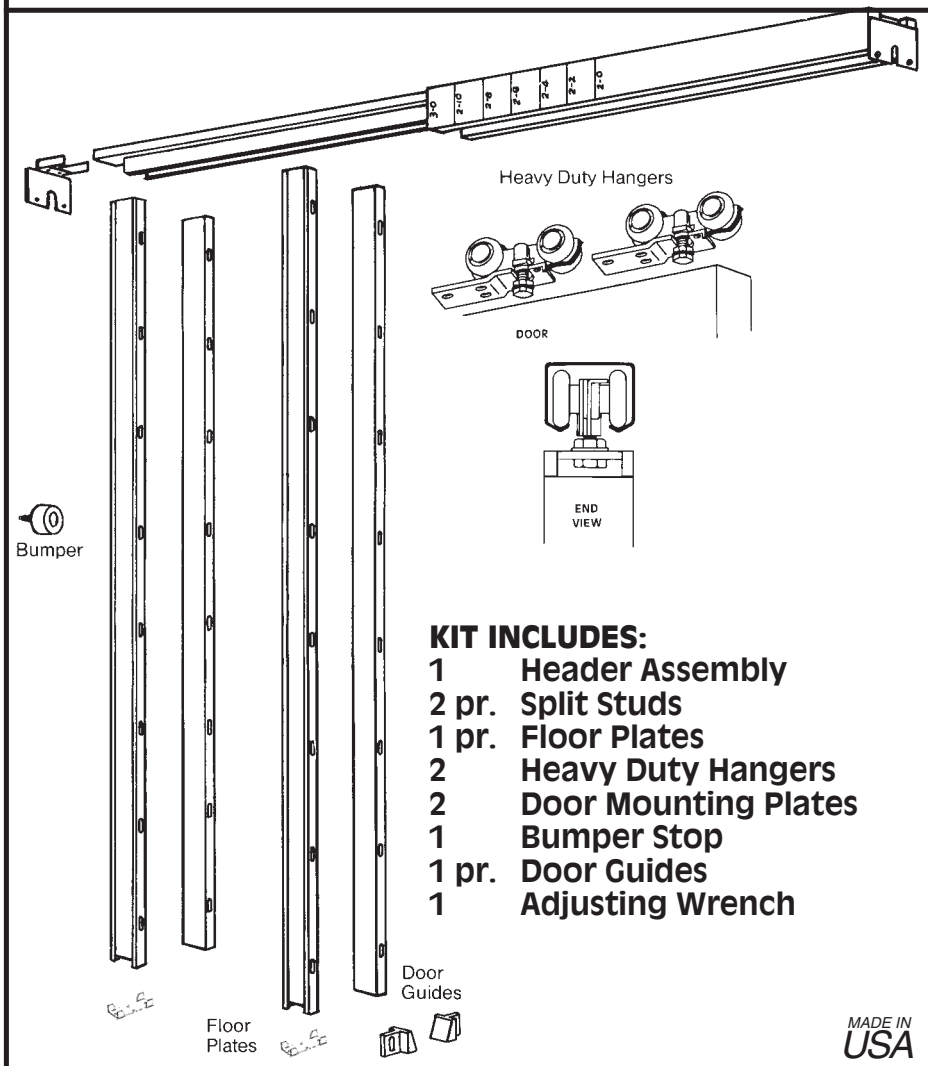

KIT INCLUDES:

- 1 Header Assembly
- 2 pr. Split Studs
- 1 pr. Floor Plates
- 2 Heavy Duty Hangers
- 2 Door Mounting Plates
- 1 Bumper Stop
- 1 pr. Door Guides
- 1 Adjusting Wrench

MADE IN USA

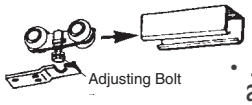

- Jump proof track and rollers.

- Galvanized steel box track, removable even after wall is finished.

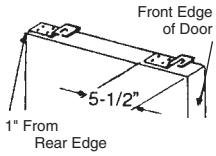

- Easy door installation and removal for painting and repair.

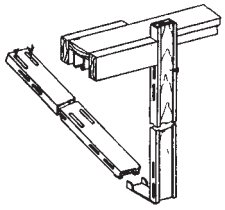

- Real wood split studs, steel encased for rigidity and to prevent faster penetration into the pocket.
- Floor plates designed to allow for floor settling without disturbing header alignment.

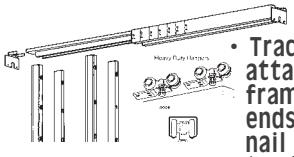

- Track header unit attaches to rough framing at both ends. Split studs nail or screw to track header. No connections to rough header.

Part No.	Ctn. Qty.	List Price
1630	1	$108.15
RP-1630-BB	1	111.27
1630-BB7	1	133.63
1630-BB8	1	147.67
1636	1	132.59
BX-1632 *(Hanger Replacement Set)*	1	14.55
CD-1634	10	7.79
CD-1639	6	14.03

ACCESSORIES:

CD-1634
Adapter Kit for 1-3/4" Door

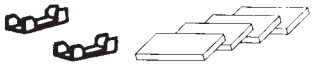

CD-1639
Bi-Parting Double Door

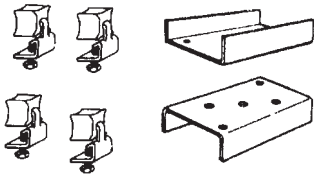

When properly installed, Sterling pocket door frames allow 2" for doors between split studs or 1/8" on each side for a 1 3/4" thick door. If more clearance is desired the CD-1634 Can be used.

Specifications: Pocket door frame and hardware is manufactured for doors up to 1-3/4" thick and weighing up to 125 lbs. (150 bs. with Ball Bearing Hangers). Hardware to include header assembly with removable steel box track, steel-encased split studs, 1 pr. steel floor plates, two top mounting heavy duty two piece hangers, end bracket door guides and bumper stop.

© 2012

John Sterling Brand Products Made By
2700 Oak Industrial Drive NE Grand Rapids, MI 49505
800-253-1561 • Fax: 877-636-3290
customer.service @kv.com
www.johnsterling.com • www.kv.com
KNAPE & VOGT

August 2011

Series I840 Heavy Duty

For Doors
- 1-3/8" to 1-3/4" thick
- Up to 4'0" wide
- Up to 8 ft. high
- Weighing up to 250 lbs.

Pocket Door Kit

Pre-assembled Header Assembly goes up quickly.

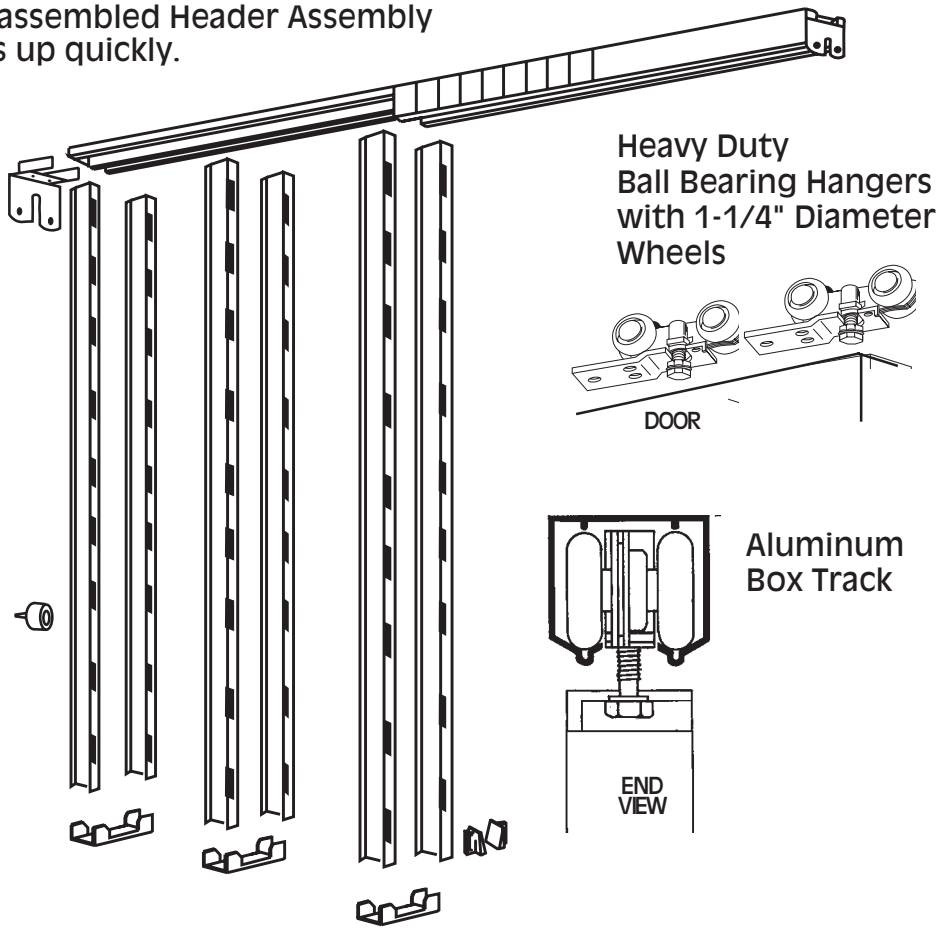

For doors sliding into a wall

Saves floor space

KIT INCLUDES:

1 Header Assembly
3 pr. Split Studs
3 Floor Plates
2 Heavy Duty Hangers with 1-1/4" wheels
2 Door Mounting Plates
1 Bumper Stop
1 pr. Door Guides
1 Adjusting Wrench

PART NO.	DESCRIPTION	Standard Pack Qty/lbs	LIST PRICE
CD-1639	Double Pocket Door Kit	6/4	14.03
PB-1842-BB	Hardware Set for 250 lb. Doors	10/11	43.67

FEATURES:

MADE IN USA

- Jump-proof track and rollers
- Heavy Duty Aluminum box track.
- Easy door installation and removal for painting and repair.
- Real wood split studs, steel encased for rigidity and to prevent faster penetration into the pocket.
- Track header unit attaches to rough framing at both ends. Split studs nail or screw to track header. No connections to rough header.

Part No.	I840
Ctn. Qty.	1
List Price	$309.91

Specifications: Pocket door frame and hardware is manufactured for doors from 1-3/8" to 1-3/4" thick and weighing up to 250 lbs. Hardware to include header assembly with removable aluminum box track, three pairs of steel-encased split studs, three steel floor plates, two top-mounting, heavy-duty, two-piece hangers, end bracket, door guides and bumper stop.

John Sterling Brand Products Made By
2700 Oak Industrial Drive NE Grand Rapids, MI 49505
800-253-1561 • Fax: 877-636-3290
customer.service @kv.com
www.johnsterling.com • www.kv.com
KNAPE & VOGT

© 2012

John Sterling

PRODUCTS
MADE BY

KNAPE & VOGT

2700 OAK INDUSTRIAL DRIVE NE, GRAND RAPIDS, MI 49505
800 253-1561 • FAX: 877-636-3290 • CUSTOMER.SERVICE@KV.COM • WWW.JOHNSTERLING.COM • WWW.KV.COM

DOOR HARDWARE PROGRAM DISCOUNT SCHEDULE

LIST PRICE	DISCOUNT	MULTIPLIER
Under $600	40%	.60
Over $600	50-10%	.45
Over $1200	50-10-5%	.4275
Over $2400	50-10-10%	.405

FREIGHT PREPAID ON ALL ORDERS OVER $100 LIST

Special bagging charge ..... $ .89 List
Special track cutting charge ..... $ 1.49 List

Packaging Code Prefixes:		
	BK	Bulk Pack - not poly wrap
	BX	Boxed individually
	BN	Bin Box - poly-bagged
	PB	Poly-bagged