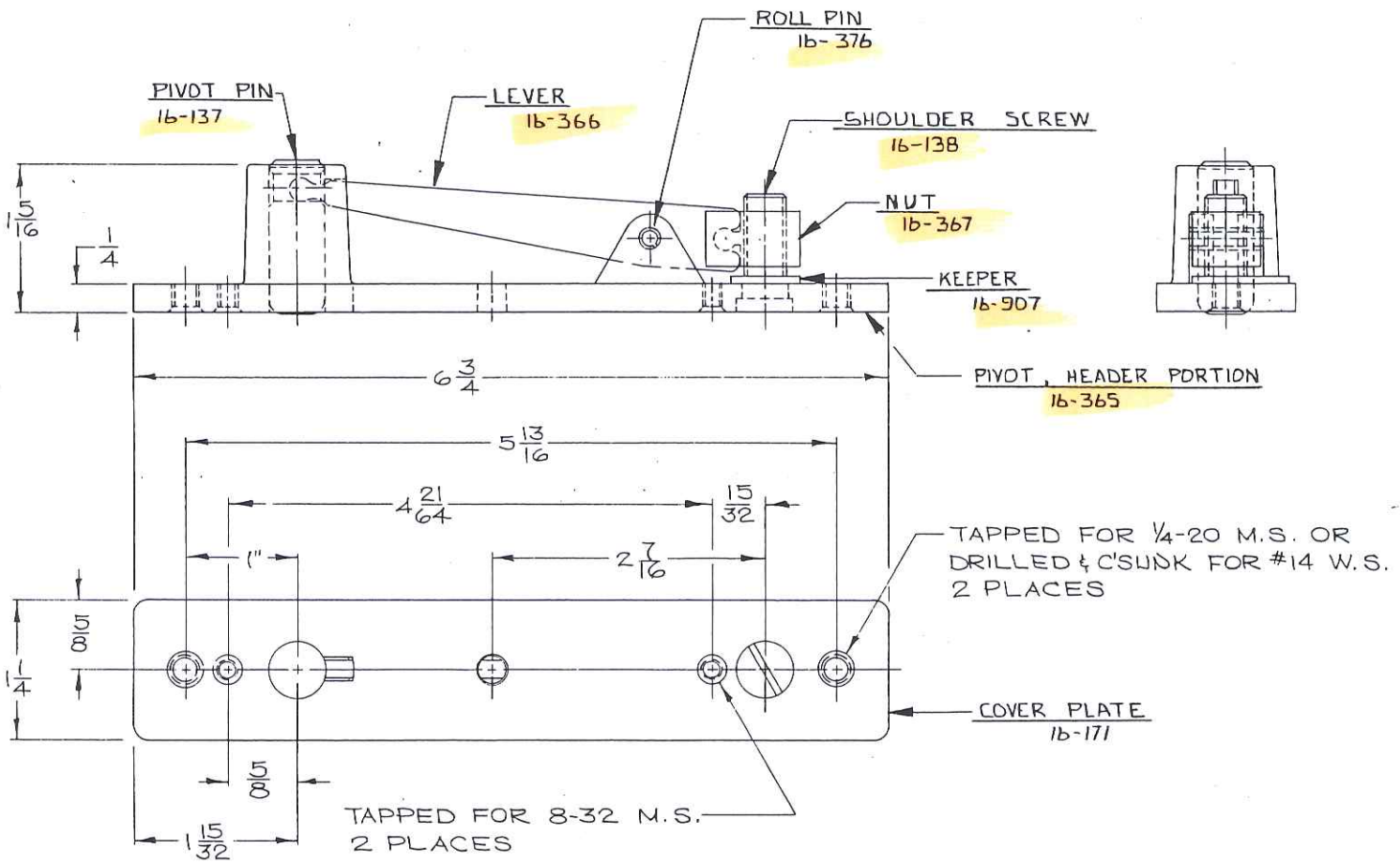

USAGE

PIVOT 213	ALUM. HEADER
PIVOT 213K	WOOD OR H.M. HEADER WITH 16-171 COVER PLATE

A	1-9-86	ADD PT. NO.'s	GT / MG

BUILDERS BRASS WORKS CORP.
3474 UNION PACIFIC AVE., L.A. 23, CALIF.

NAME OF PART: TOP PIVOT 213 & 213K

DRAWN	DATE	SCALE	DWG. NO.
JEY	6-25-71	FULL	15-294
CHECKED			