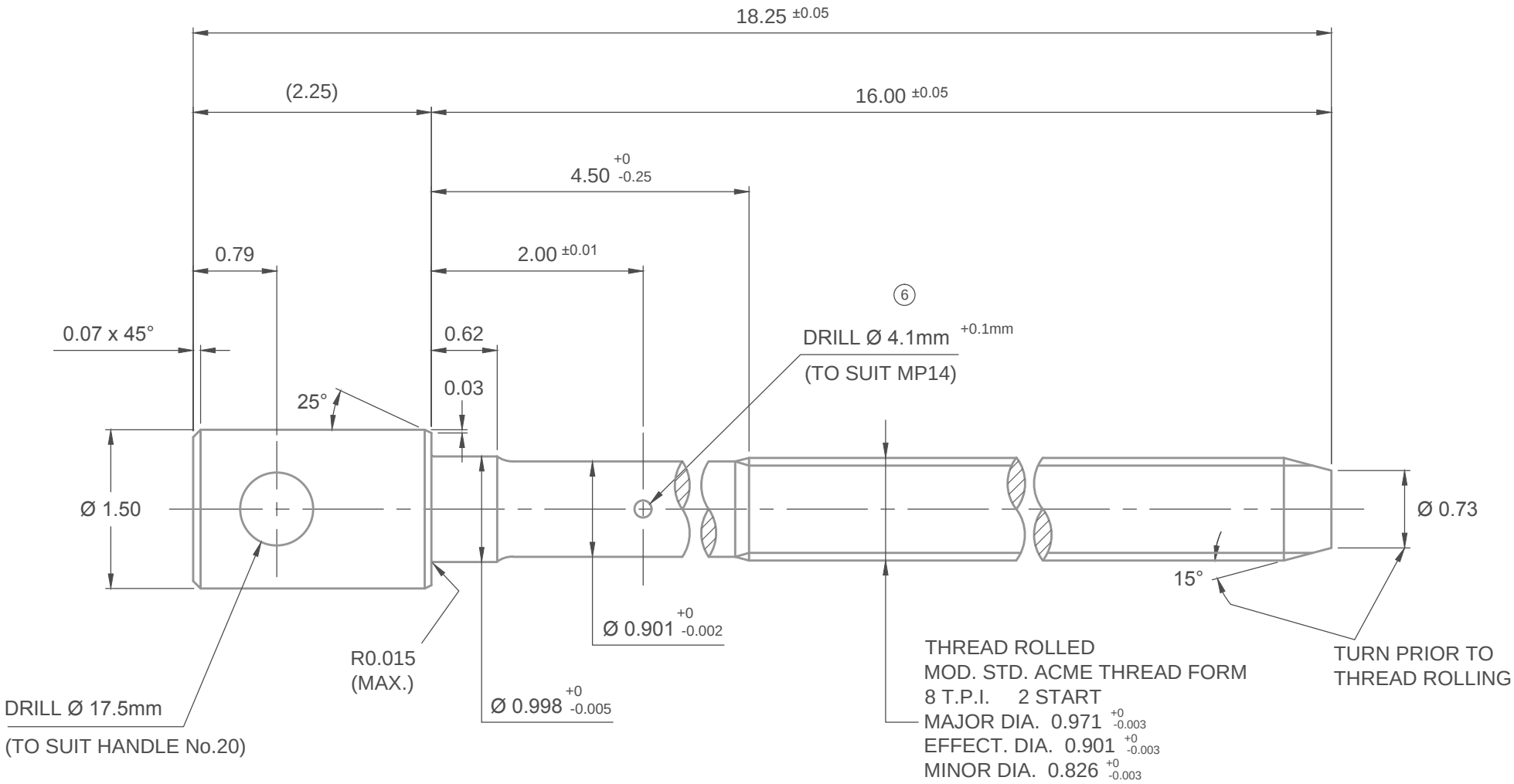

Iss. 6 REDRAWN
06.12.00 DPS
DCR 150
Hole Ø4.1mm +0.1mm
was Ø4.0mm +0.1mm
In line with current prod'n.

1 : 1

DPS

06.12.00

No. 6 MAINSCREW
MACHINING DIMENSIONS

220 M07 BS970 Pt 1: 1983
(CODE BF)

SMOOTH & BRIGHT FINISH
THREAD FORM AS DRG.No. MS 0 - 8 F1

MS_6_F 6

Xref C:\Cad1files\Drg. Frames\A3-Imp.dwg