21. PARTS LIST
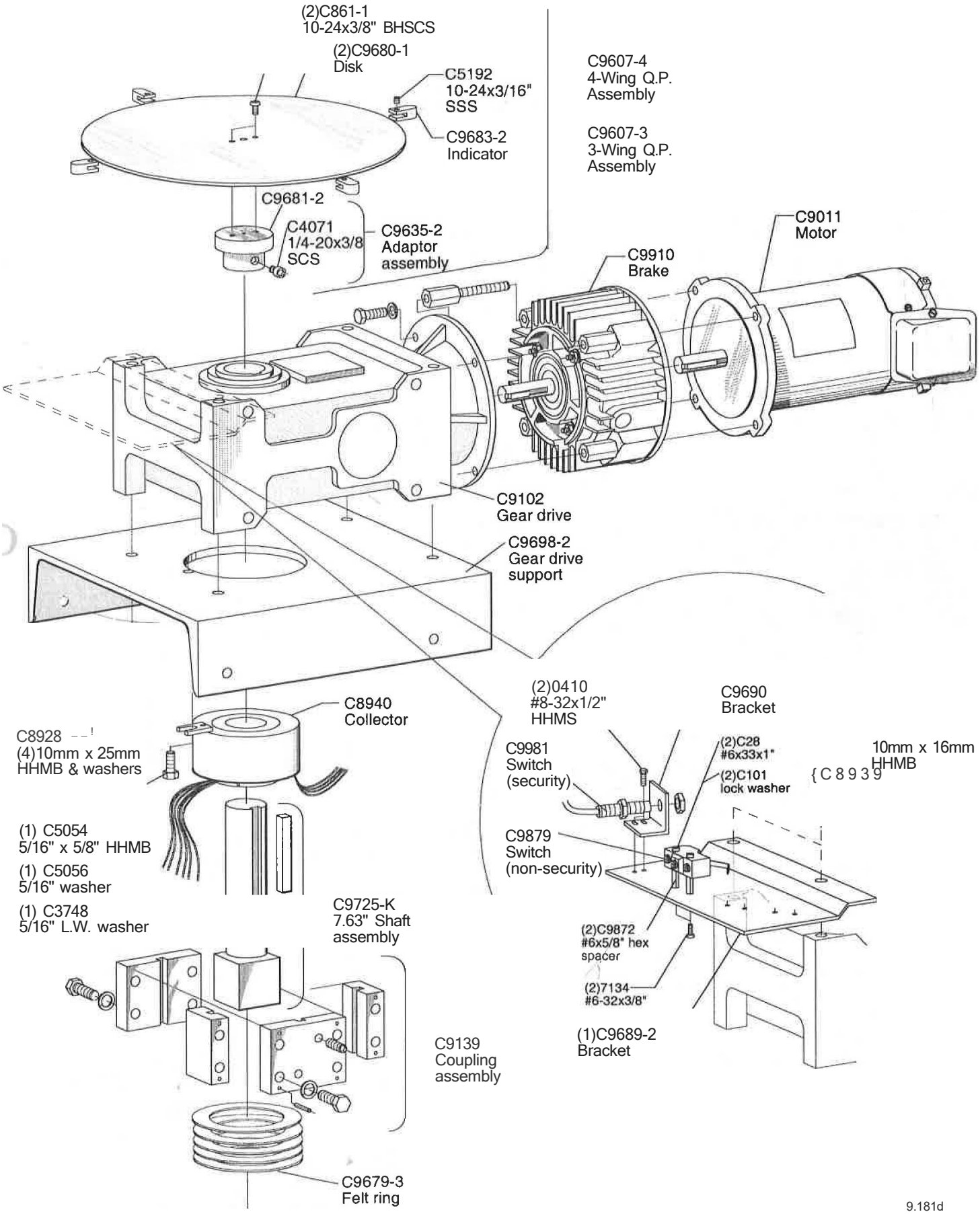
The parts shown are for security and non-security 3 & 4 wing revolvers.