REVISIONS			
REV.	DESCRIPTION	DATE	APPROVED
A	FOR COMPUTER	03/02/06	

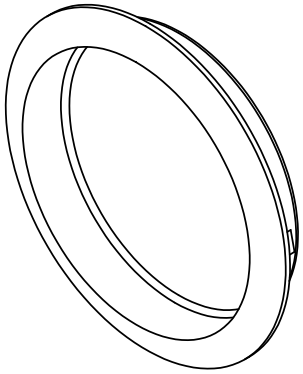

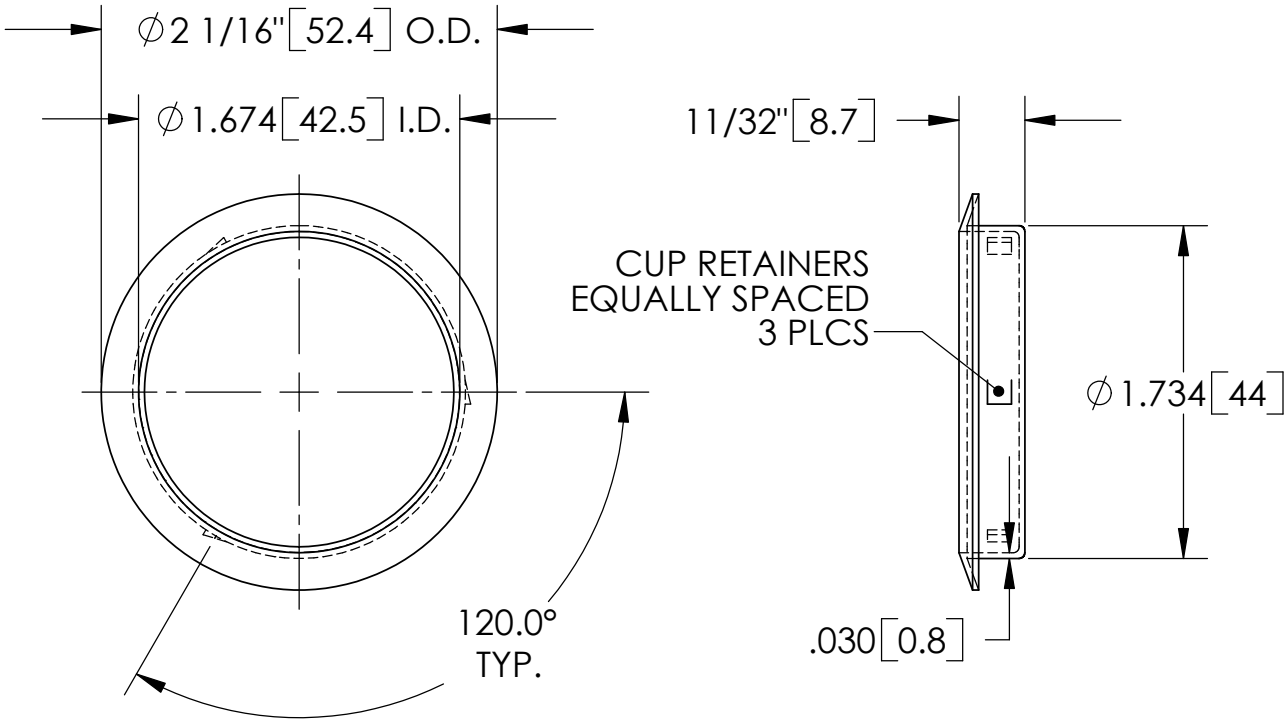

NOTE: MOUNTING HOLE IS ∅1-3/4"

HAGER COMPANIES ST. LOUIS, MISSOURI

HAGER RESERVES THE RIGHT TO MAKE DESIGN CHANGES WITHOUT NOTICE. CALL HAGER ENGINEERING AT 1-800-325-9995 FOR THE LATEST REVISION DATE OF TEMPLATE.

PRIMARY DIMENSIONS SHOWN IN INCHES, DIMENSIONS IN [ ] ARE MILLIMETERS.

MATERIAL: ABS

FINISH: N/A

DO NOT SCALE DRAWING

DRAWN	DMH	03/01/06
ENG. APPR.		
Q.A.		

TOLERANCES:
FRACTIONAL: ±0.015"
ANGULAR: MACH:± 1° BEND:±1°
TWO PLACE DECIMAL: ±0.01"
THREE PLACE DECIMAL: ±0.004"

9865
FLUSH CUP PULL

SIZE A | DWG. NO. T9865 | REV. A

SCALE:1:1 | WEIGHT: 0.01 | SHEET 1 OF 1