REV.	DESCRIPTION	ECO NO.	DATE
-		-	4/19/2012

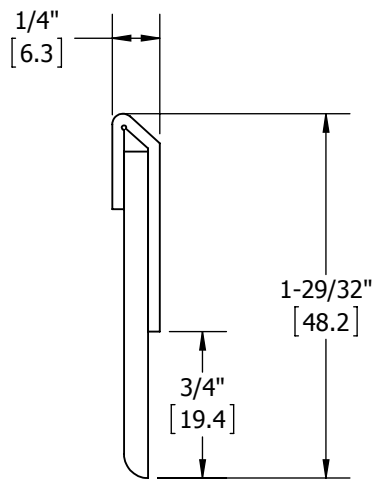

#6 x 5/8" PAN HEAD SHEET METAL SCREWS (FACTORY PROVIDED)

PROPRIETARY & CONFIDENTIAL

THE INFORMATION CONTAINED IN THIS DRAWING IS THE SOLE PROPERTY OF HAGER COMPANIES. ANY REPRODUCTION INPART OR AS A WHOLE WITHOUT THE WRITTEN PERMISSION OF HAGER COMPANIES IS PROHIBITED.

HAGER COMPANIES ST. LOUIS, MISSOURI

HAGER RESERVES THE RIGHT TO MAKE DESIGN CHANGES WITHOUT NOTICE. CALL HAGER ENGINEERING AT 1-800-325-9995 FOR THE LATEST REVISION DATE OF TEMPLATE.

MATERIAL: Material <not specified>

FINISH: -

DO NOT SCALE DRAWING

DRAWN	RCT	4/18/2012
ENG. APPR.	-	-
Q.A.		

TOLERANCES:
FRACTIONAL: 0.015"
ANGULAR: MACH: 1 BEND: 1
TWO PLACE DECIMAL: 0.01"
THREE PLACE DECIMAL: 0.004"

752S
DOOR SWEEP

SIZE: A
DWG. NO.: S-TW00162
REV.: -
SCALE:1:2
WEIGHT: 0.04
SHEET 1 OF 1