FULL SURFACE REINFORCING PIVOT TEMPLATE HINGES

TEMPLATE NO. T-250
REV. 3

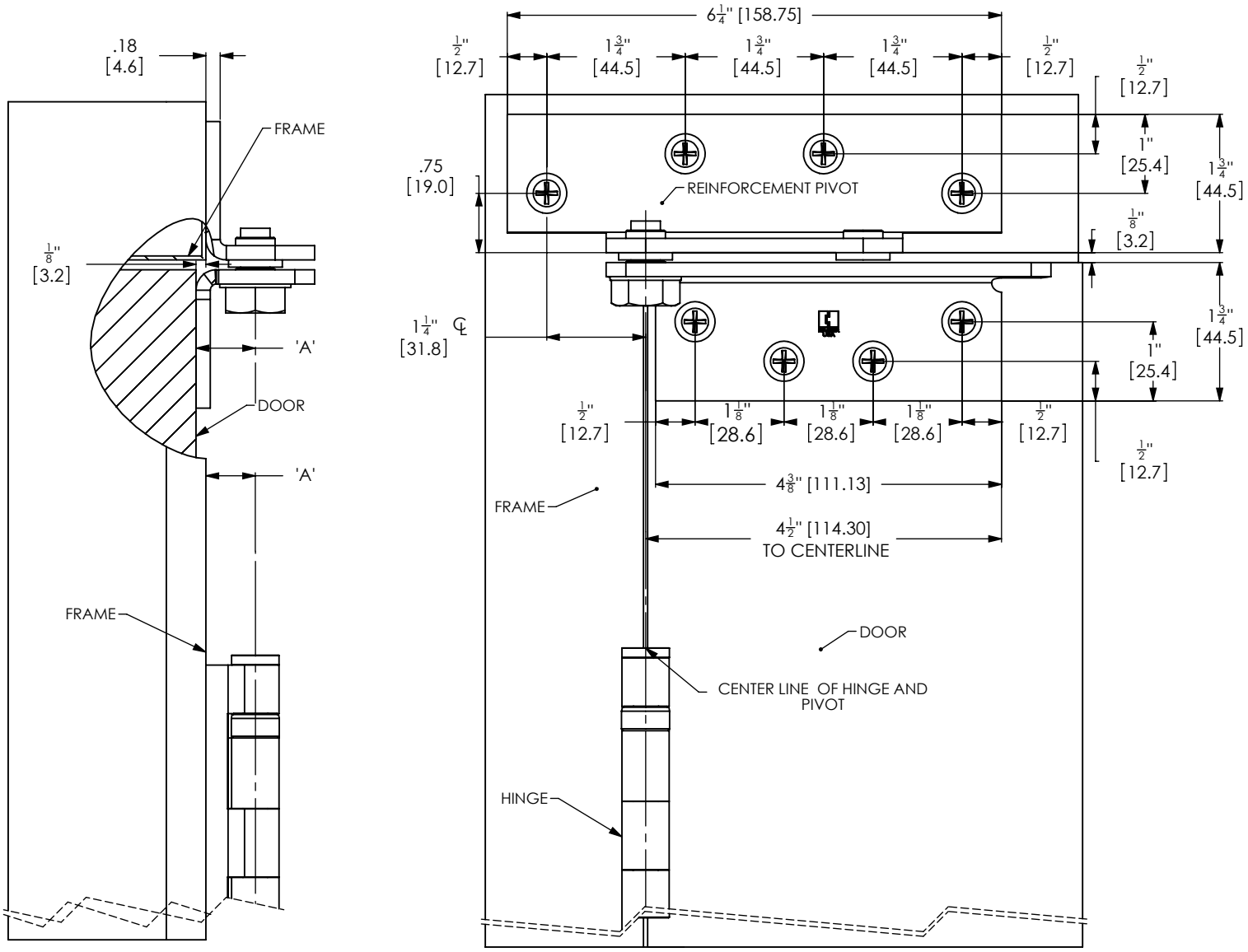

CATALOG NUMBER	DIMENSION 'A' DISTANCE TO PIVOT CENTERLINE	HINGE SIZES		
251	5/8(15.88)	3 1/2 x 3 1/2 (88.90 x 88.90)	---	
252	1/2 (12.70)	4 x 4 (101.60 x101.60)	4 1/2 x 4 (114.3 x101.60)	5 x 4 (127.00 x101.60)
253	3/4 (19.05)	4 1/2 x 4 1/2 (114.3 x 114.3)	5 x 4 1/2 (127.0 x 114.3)	---
254	1 (25.40)	5.0 x 5.0 (127.00 x 127.00)	6.0 x 5.0 (152.40 x 127.00)	

FASTENERS	QTY
MACHINE SCREWS - 1/4-20 X 3/4 FLAT HEAD	8
WOOD SCREWS - 14 X 1 1/4 FLAT HEAD	8
1/4-20 SEX BOLT	2

NOTES:
1. DIMENSIONS IN ( ) ARE MILLIMETERS

REVISION			
REV	ECO NO	BY	DATE
1	ECO CT08014	KKJ	04/15/09
2	ECO CT10001	KKJ	06/22/10
3	ADDED TABLE	KKJ	12/16/10

REFERENCE PART NUMBER: 737-0011

HAGER RESERVES THE RIGHT TO MAKE DESIGN CHANGES WITHOUT NOTICE. CALL HAGER ENGINEERING AT 1-800-325-9995 FOR THE LATEST REVISION DATE OF TEMPLATE.

TEMPLATE NO. T-250

HAGER COMPANIES • 139 VICTOR STREET, ST. LOUIS, MISSOURI 63104 • PHONE (800)325-9995 • FAX (800) 782-0149

SCALE 1:2 | REV. 3