TAG HARDWARE

SLIDING FULL ROTATION MIRROR INSTALLATION

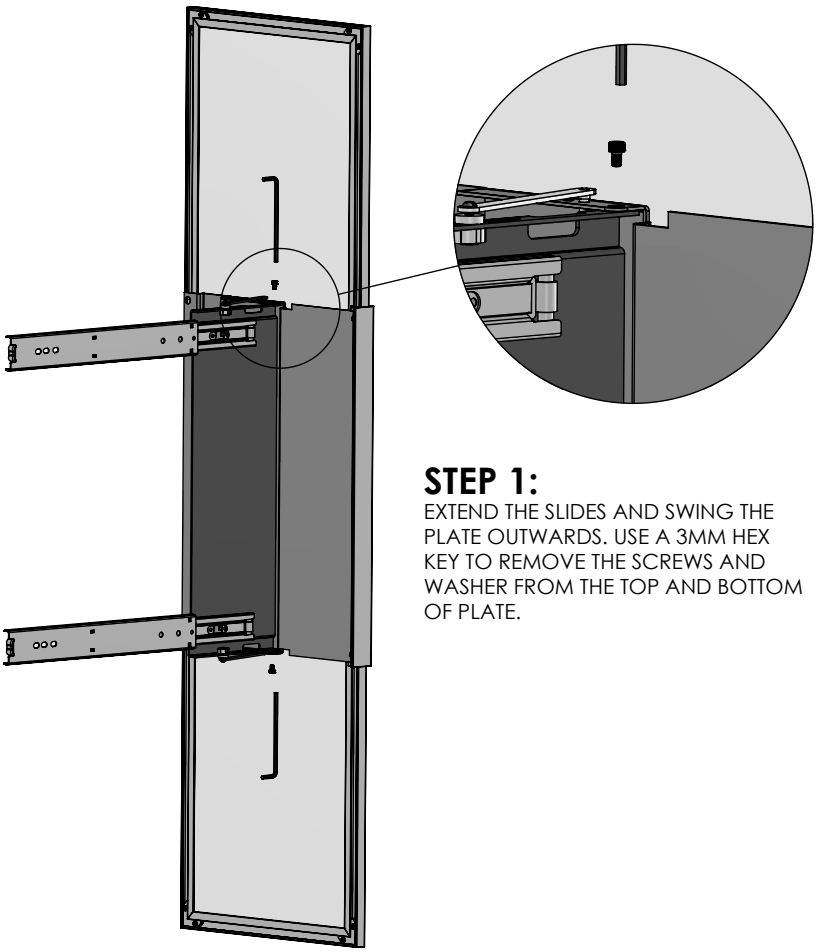

STEP 1:

EXTEND THE SLIDES AND SWING THE PLATE OUTWARDS. USE A 3MM HEX KEY TO REMOVE THE SCREWS AND WASHER FROM THE TOP AND BOTTOM OF PLATE.

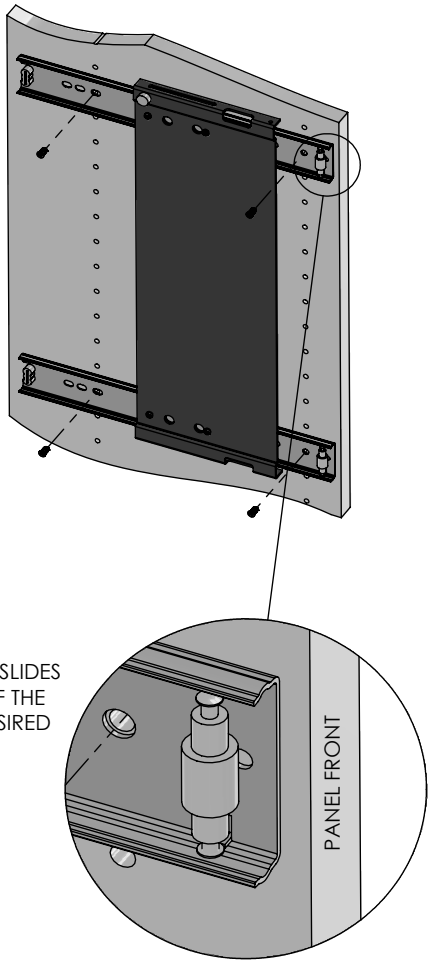

STEP 2:

ENSURE ROLLERS ON THE END OF SLIDES ARE FACING TOWARDS FRONT OF THE PANEL, AND MOUNT PLATE AT DESIRED HEIGHT USING TABLE BELOW

TOP SLIDE MOUNTING HEIGHT	
CUSTOMER HEIGHT	TOP SLIDE HEIGHT
6' 2"	58"
6'	56"
5' 10"	54"
5' 8"	52"

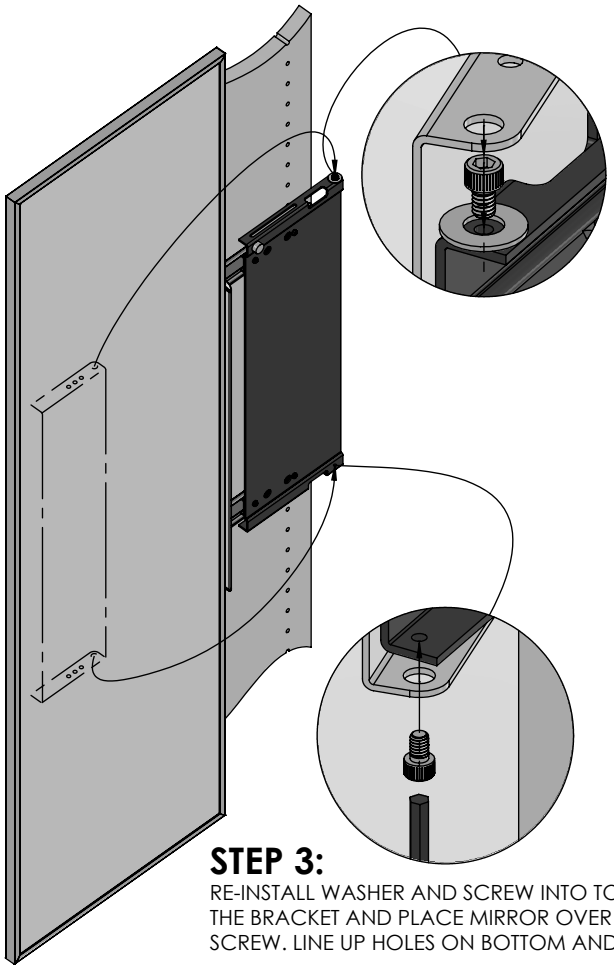

STEP 3:

RE-INSTALL WASHER AND SCREW INTO TOP LOCATION OF THE BRACKET AND PLACE MIRROR OVER TOP OF THE SCREW. LINE UP HOLES ON BOTTOM AND INSTALL SCREW.

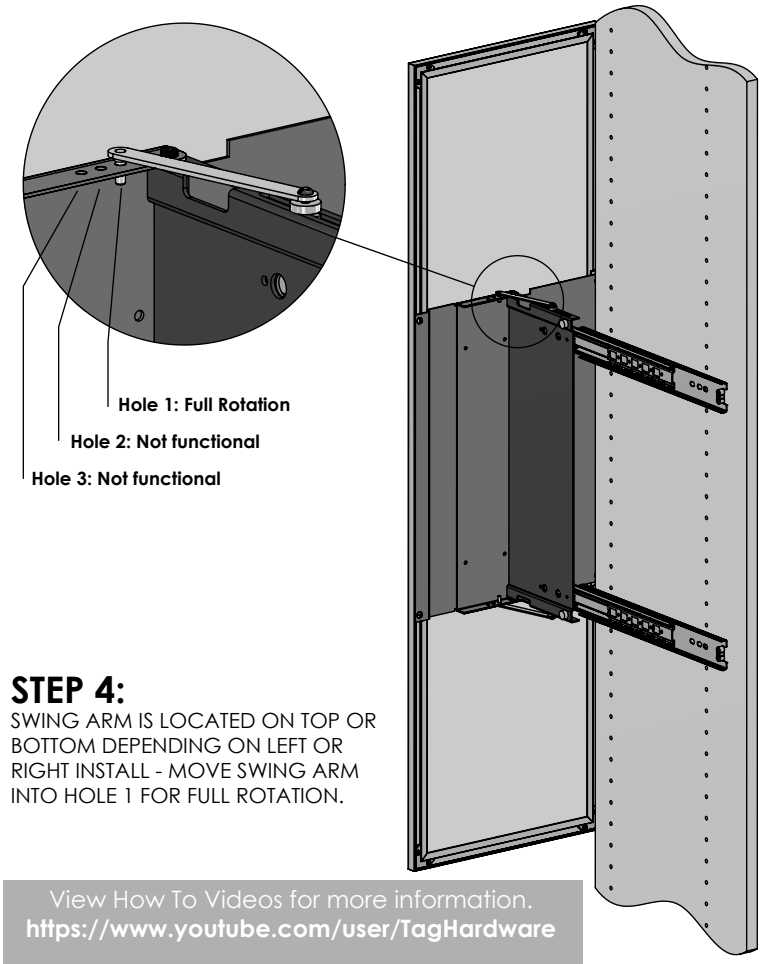

STEP 4:

SWING ARM IS LOCATED ON TOP OR BOTTOM DEPENDING ON LEFT OR RIGHT INSTALL - MOVE SWING ARM INTO HOLE 1 FOR FULL ROTATION.

View How To Videos for more information.
https://www.youtube.com/user/TagHardware