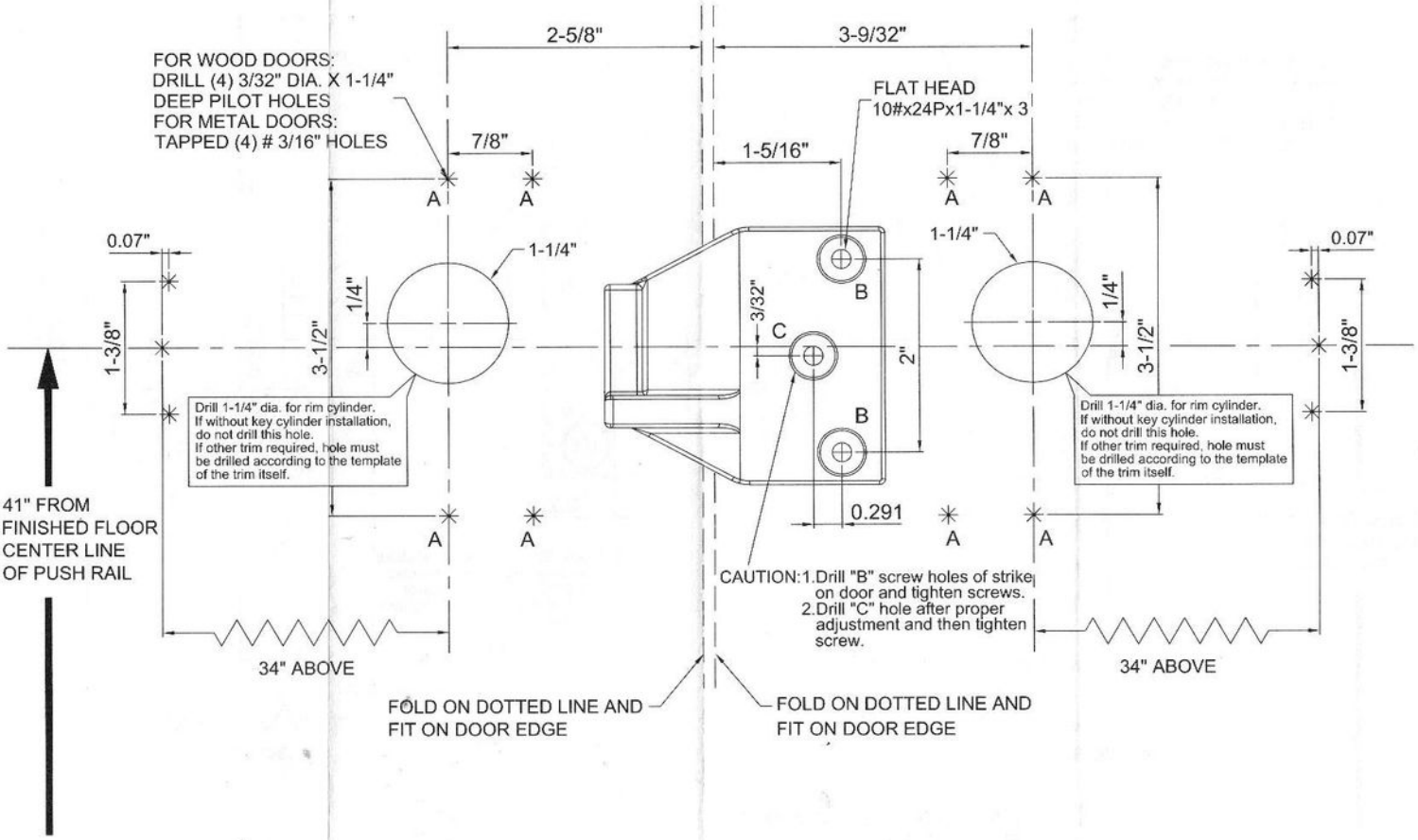
2-5/8"
3-9/32"
FOR WOOD DOORS:
DRILL (4) 3/32" DIA. X 1-1/4"
DEEP PILOT HOLES
FOR METAL DOORS:
TAPPED (4) # 3/16" HOLES
FLAT HEAD
10#x24Px1-1/4"x 3
7/8"
1-5/16"
7/8"
A
A
A
A
0.07"
1-1/4"
1-1/4"
0.07"
1/4"
3/32"
1/4"
1-3/8"
3-1/2"
C
B
2"
3-1/2"
1-3/8"
B
Drill 1-1/4" dia. for rim cylinder.
If without key cylinder installation,
do not drill this hole.
If other trim required, hole must
be drilled according to the template
of the trim itself.
Drill 1-1/4" dia. for rim cylinder.
If without key cylinder installation,
do not drill this hole.
If other trim required, hole must
be drilled according to the template
of the trim itself.
41" FROM
FINISHED FLOOR
CENTER LINE
OF PUSH RAIL
0.291
A
A
A
A
CAUTION: 1. Drill "B" screw holes of strike
on door and tighten screws.
2. Drill "C" hole after proper
adjustment and then tighten
screw.
34" ABOVE
34" ABOVE
FOLD ON DOTTED LINE AND
FIT ON DOOR EDGE
FOLD ON DOTTED LINE AND
FIT ON DOOR EDGE

5000 329

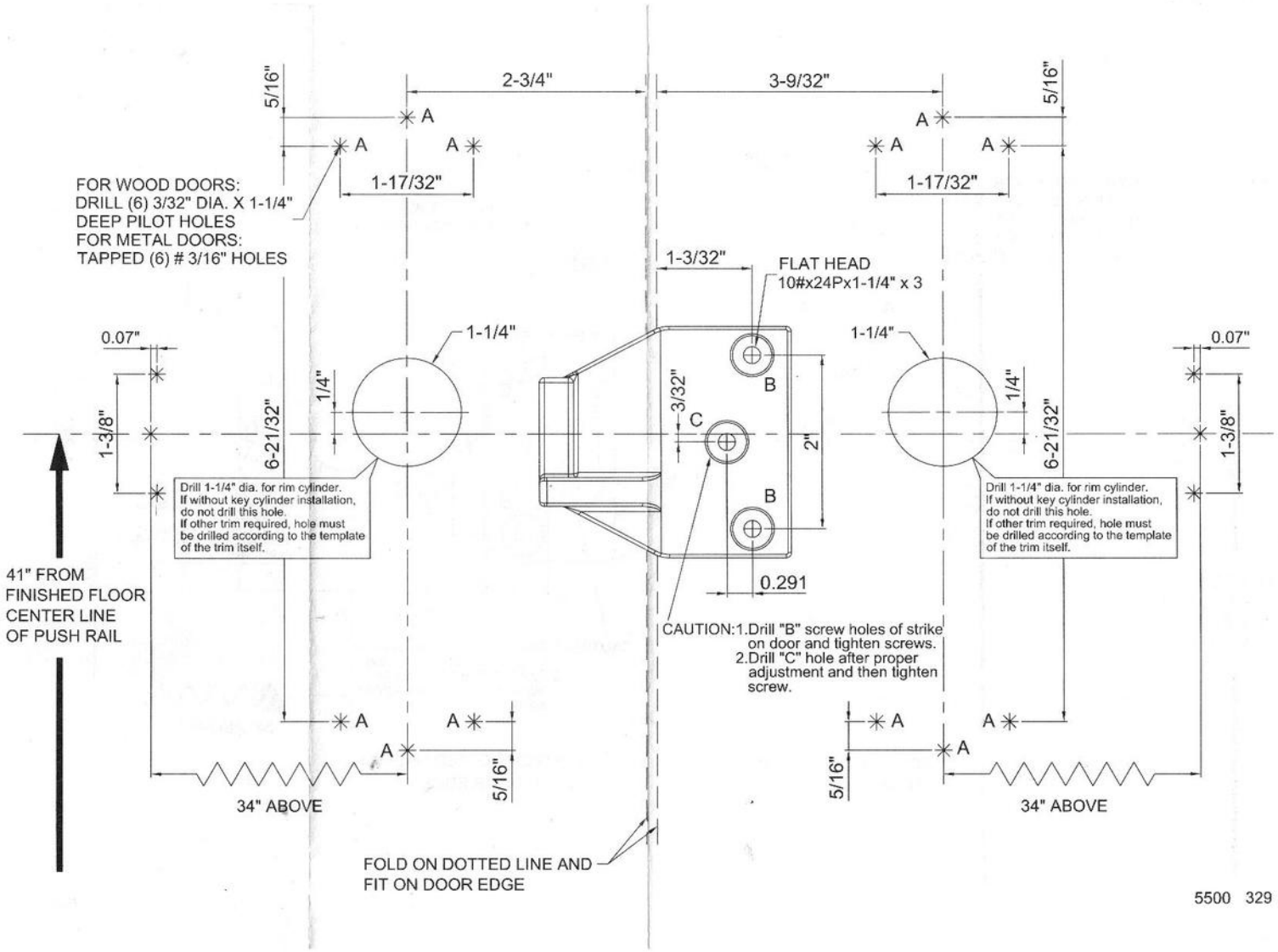
5/16"
2-3/4"
3-9/32"
5/16"
A
A
A
A
A
A
1-17/32"
1-17/32"
FOR WOOD DOORS:
DRILL (6) 3/32" DIA. X 1-1/4"
DEEP PILOT HOLES
FOR METAL DOORS:
TAPPED (6) # 3/16" HOLES
1-3/32"
FLAT HEAD
10#x24Px1-1/4" x 3
0.07"
1-1/4"
1-1/4"
0.07"
1/4"
3/32"
1/4"
1-3/8"
6-21/32"
C
B
2"
6-21/32"
1-3/8"
B
Drill 1-1/4" dia. for rim cylinder.
If without key cylinder installation,
do not drill this hole.
If other trim required, hole must
be drilled according to the template
of the trim itself.
Drill 1-1/4" dia. for rim cylinder.
If without key cylinder installation,
do not drill this hole.
If other trim required, hole must
be drilled according to the template
of the trim itself.
41" FROM
FINISHED FLOOR
CENTER LINE
OF PUSH RAIL
0.291
CAUTION:1.Drill "B" screw holes of strike
on door and tighten screws.
2.Drill "C" hole after proper
adjustment and then tighten
screw.
A
A
A
A
A
A
5/16"
5/16"
34" ABOVE
34" ABOVE
FOLD ON DOTTED LINE AND
FIT ON DOOR EDGE

5500 329