DWG NO	SH	REV

REVISIONS

ZONE	REV	FINISHES: 605, 613, 626	GAUGE:

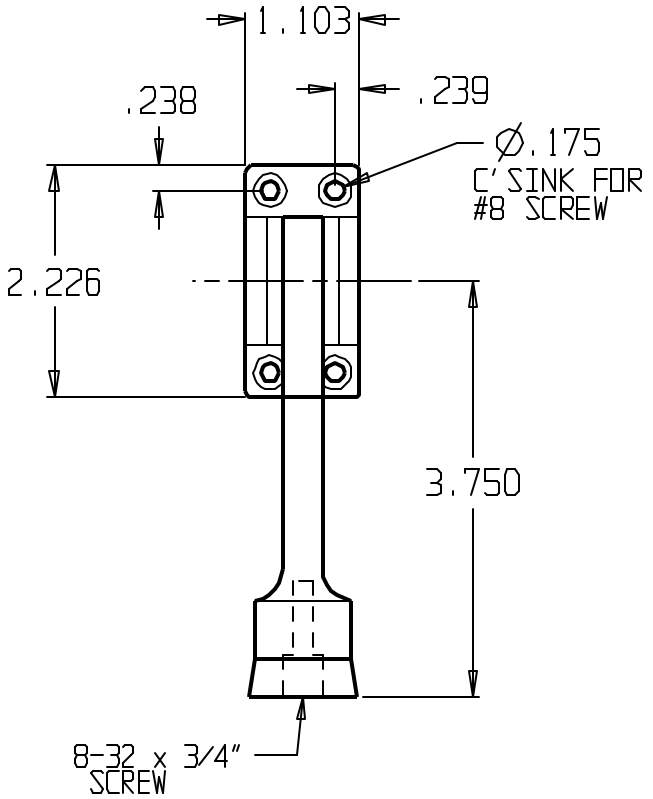

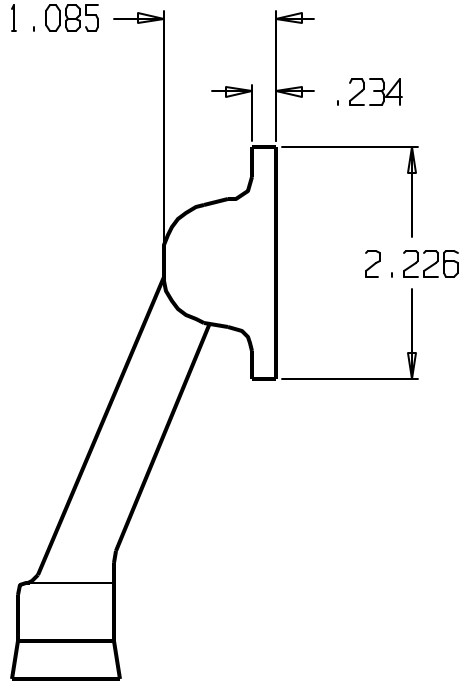

DON-JO MFG. INC.

DESIGNER	SIZE	DATE:	PART NO.	REV
D.R.	A	2/6/09	#1464	

SCALE	RELEASE DATE	WEIGHT	SHEET