PC160

Pendant Cap for Dome Camera

Features:

- Aluminum alloy material with surface spray treatment
- Better waterproof design

Order Model:

PC160

Dimension:

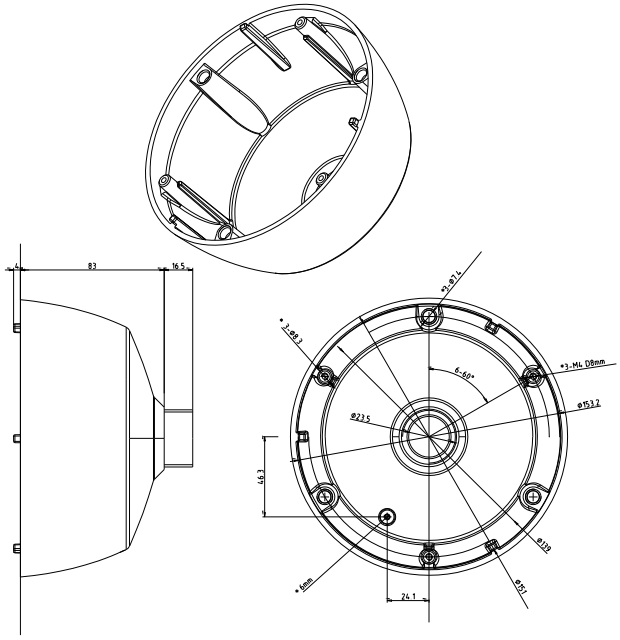

Parameter:

Model / Parameters	PC160
	Pendant Cap for Dome Camera
Appearance	Hikvision White
Range of Application	Pendant Cap for Dome Camera
Material	Aluminum Alloy
Dimension	160mmX99.5mm
Weight	

Note:

- Pay attention to color matching
- The bracket should be installed on flat wall
- The wall must be capable of supporting over 3 times as much as the total weight of the camera and the mount.
- The maximum load capacity of the bracket is 5KG

Model Suitable:

DS-2CD72xx

DS-2CD43xx

Note: The actual bracket may vary from the picture above.