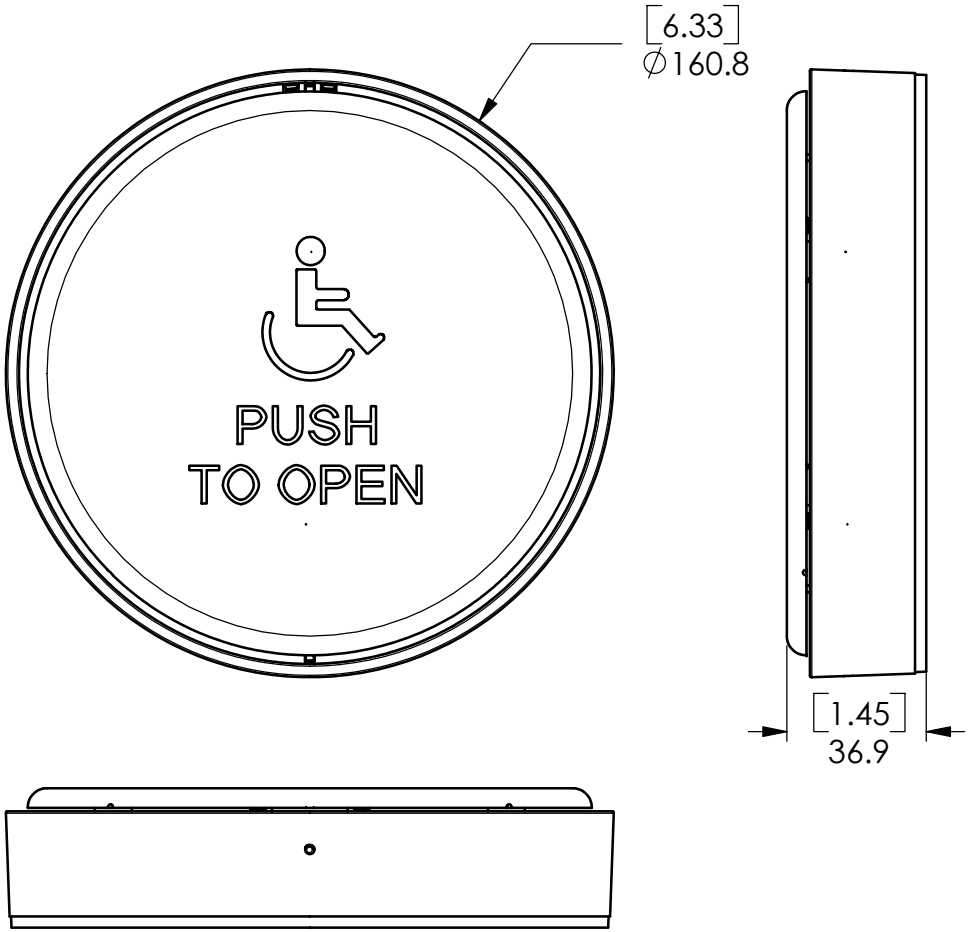

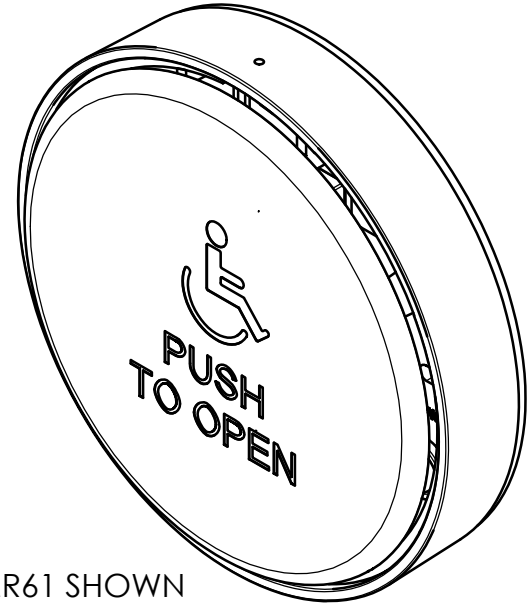

10EMR61 SHOWN

PROPRIETARY AND CONFIDENTIAL

THE INFORMATION CONTANIED IN THIS DRAWING IS THE SOLE PROPERTY OF BEA INC. ANY REPRODUCTION IN PART OR AS A WHOLE WITHOUT THE WRITTEN PERMISSION OF BEA, INC. PROHIBITED.

MATERIAL:

FINISH:

VENDOR:

UNLESS OTHERWISE SPECIFIED:
DIMENSIONS ARE IN MILLIMETERS.
DO NOT SCALE DRAWING.
CAD GENERATED DRAWING.
DO NOT MANUALLY UPDATE.

Dimensional Tolerances										
Dimension in mm	>0.5 to 3	> 3 to 6	> 6 to 30	> 30 to 120	> 120 to 400	>400 to 1000	> 1000 to 2000	> 2000 to 4000	> 4000 to 8000	> 8000 to 12000
Tolerance	± 0.1	± 0.1	± 0.2	± 0.3	± 0.5	± 0.8	± 1.2	± 2	± 3	± 4
Angular Tolerance										
Angle	… 10	> 10 to 50	>50 to 120	> 120 to 400						
Tolerance	± 1°	± 30'	± 20'	± 10'						

APPROVALS	DATE
DRAWN	
CHECKED	-- --
RESP ENG	
MFG ENG	
QUAL ENG	

BEA, INC.
100 Enterprise Drive
Pittsburgh, PA 15275
(412)249-4100
www.beainc.com

TITLE:

Panther 6"R

SIZE	DWG. NO.	REV.
A	10EMR6x	00

SCALE 1:1 | CAD FILE: Panther_6R SM Assy_091304 | SHEET 1 OF 1