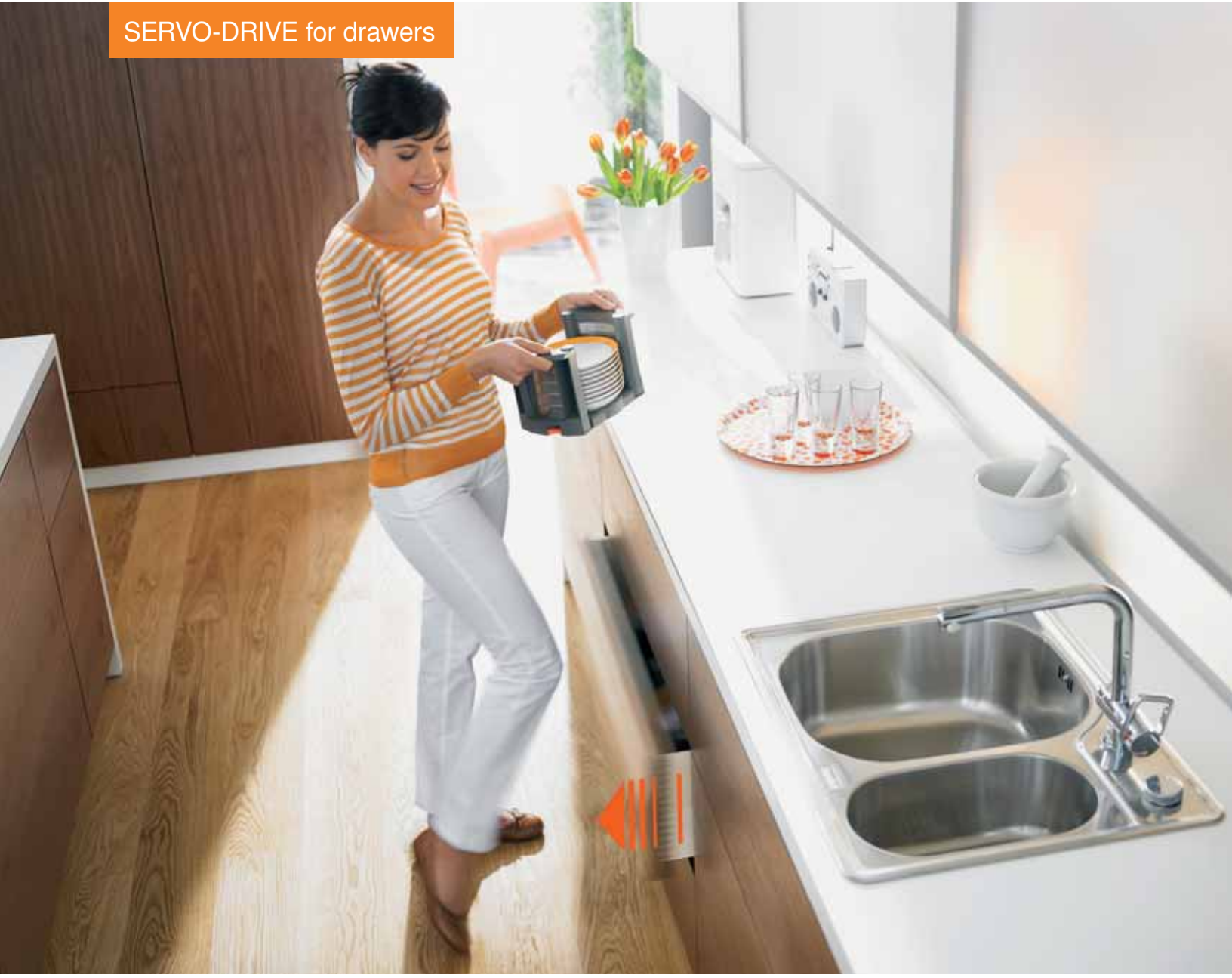

SERVO-DRIVE for drawers

Opening feature for TANDEM and TANDEMBOX

blum.com

More comfort for your customers

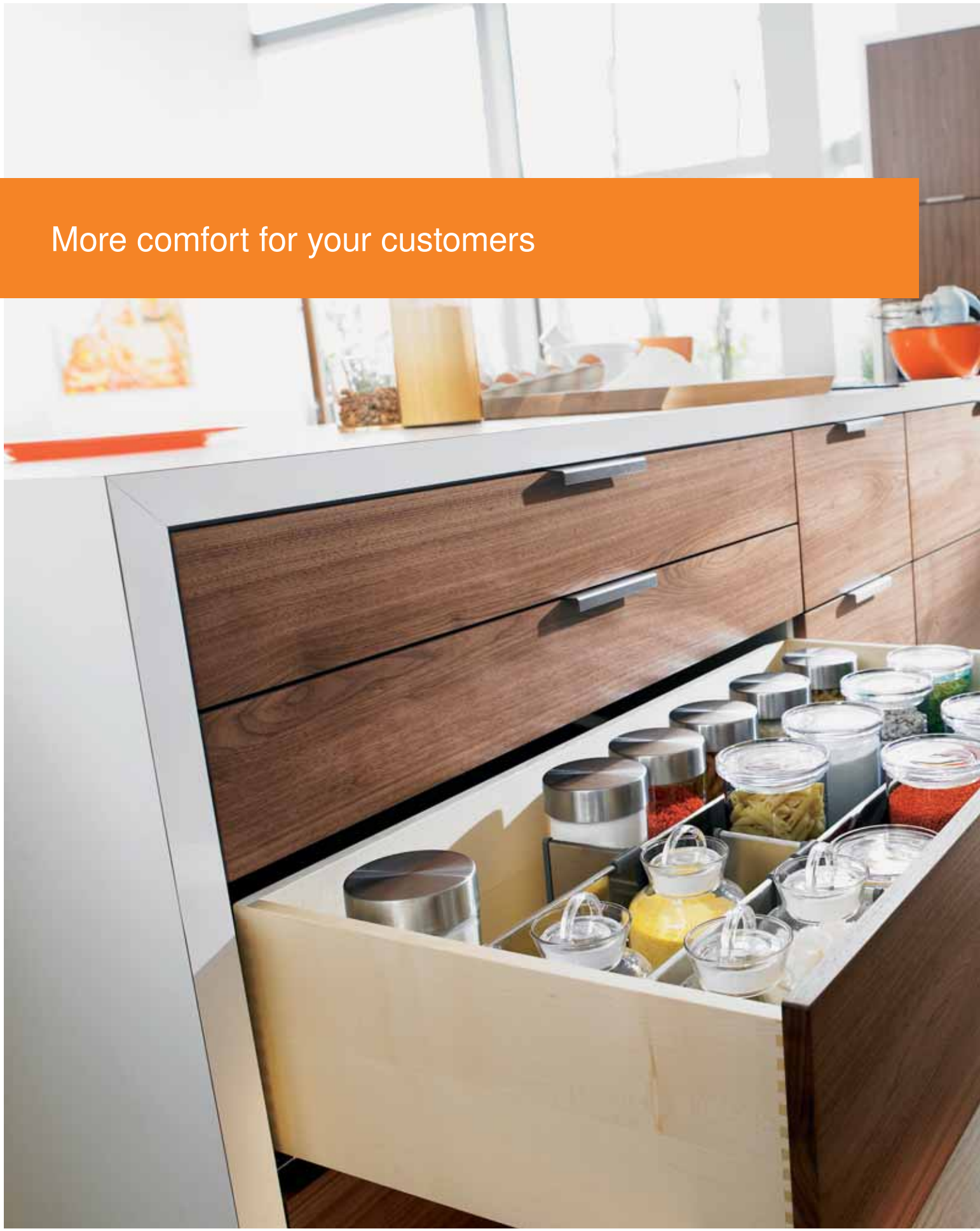

Easy opening silent and effortless closing

SERVO-DRIVE is a low voltage electronic opening feature for TANDEM and TANDEMBOX drawers. By combining this feature with the silent and effortless closing action of BLUMOTION, we have taken perfecting motion to a new level. Customers will be amazed by the quality and ease of use.

Contents

4 Using the SERVO-DRIVE catalog
6 SERVO-DRIVE program overview
8 TANDEM plus BLUMOTION
40 TANDEMBOX
56 Waste/recycle set
57 Power supply set
58 Electrical components
60 Distance bumpers
61 Wiring options
62 Assembly/removal
66 Assembly aids
68 Accessories
69 Part number index

Using the SERVO-DRIVE catalog

Step 1

Determine application

Based on either TANDEM or TANDEMBOX, choose the application that best fits your design. Then proceed to the corresponding catalog page for specific information.

TANDEM plus BLUMOTION

TANDEMBOX

Step 2

Select parts

Choose the parts needed from the first two pages of each application

Step 3

Prepare cabinet

Refer to the boring location requirements chart to obtain the minimum inside cabinet depth and boring locations.

Using the location from the chart, pre-bore holes and install adapters or bracket.

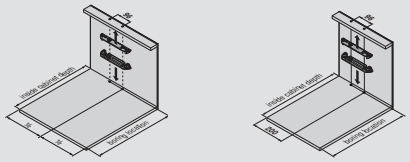

boring location requirements								
profile length	**229** (9")	**305** (12")	**381** (15")	**457** (18")	**533** (21")	**610** (24")	**686** (27")	**762** (30")
boring location	**253** (9-15/16")	**329** (12-15/16")	**405** (15-15/16")	**481** (18-15/16")	**557** (21-15/16")	**634** (24-15/16")	**710** (27-15/16")	**786** (30-15/16")
minimum inside cabinet depth	**270** (10-5/8")	**346** (13-5/8")	**422** (16-5/8")	**498** (19-5/8")	**574** (22-5/8")	**651** (25-5/8")	**727** (28-5/8")	**803** (31-5/8")

Step 4

Install profile

Install profile into adapters or bracket

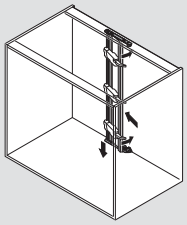

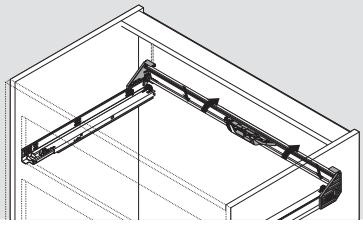

Step 5

Attach drive units

Attach the necessary number of drive units to the profile or bracket and ensure the arm contacts the center of the drawer back

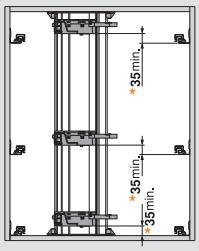

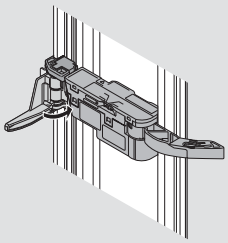

© 2017 Blum, Inc. Subject to technical modifications without notice

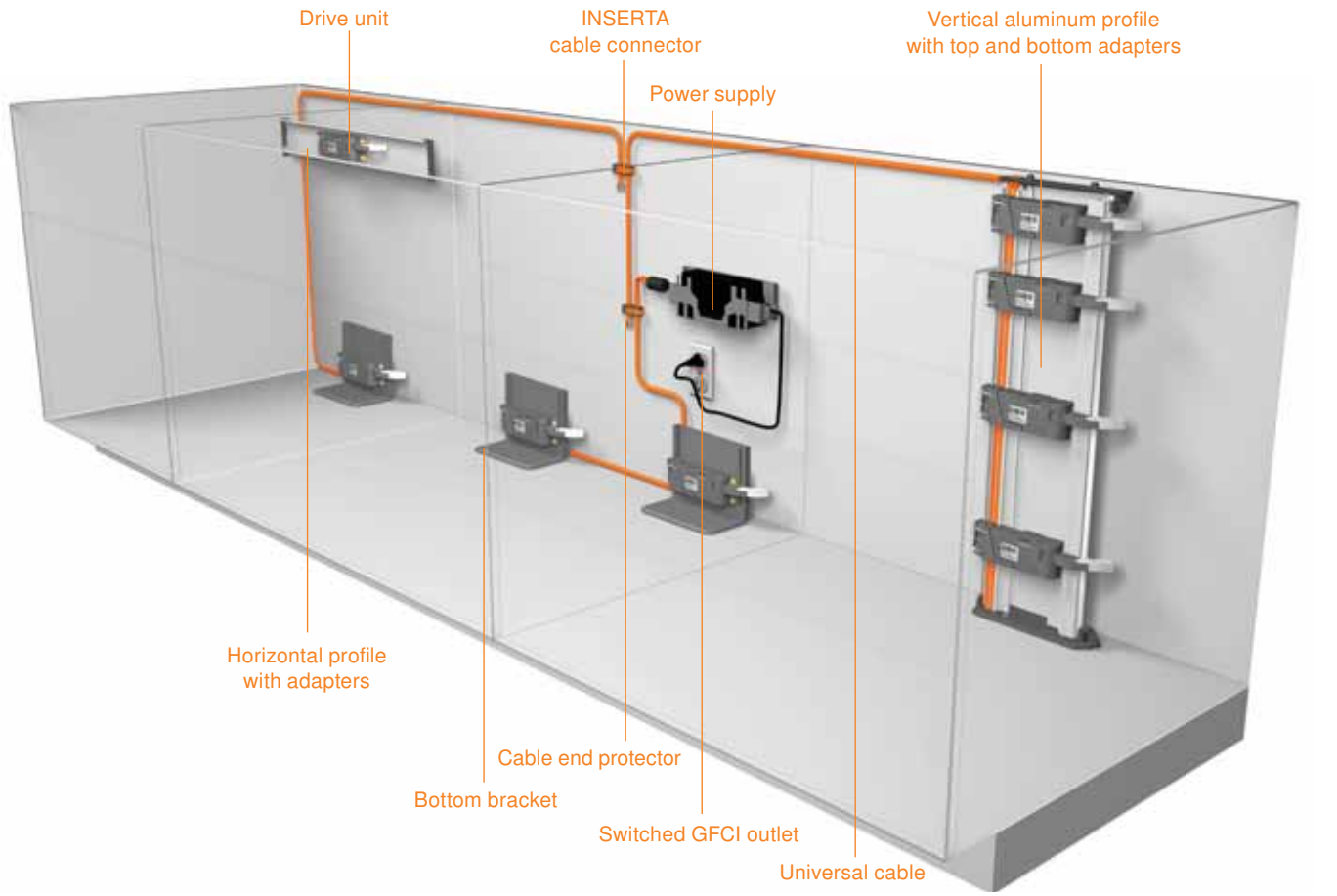

Step 6

Wire the cabinet

Connect necessary cable with INSERTA cable connectors and cap off with cable end protectors

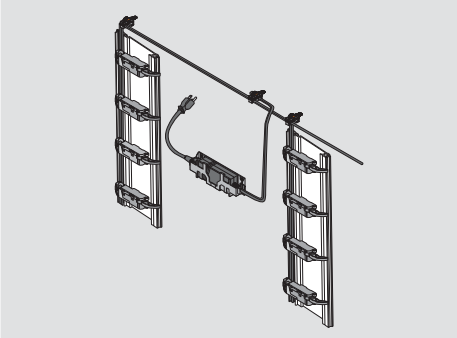

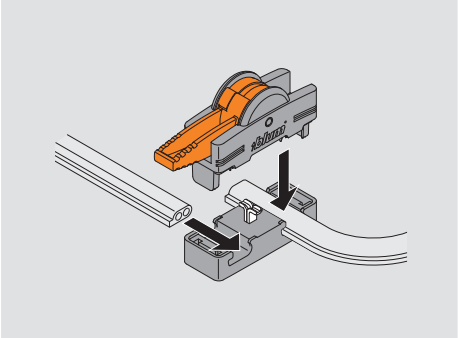

Step 7

Connect power supply

Attach wall mount bracket and insert power supply. Plug three-prong power cord into switched GFCI outlet.

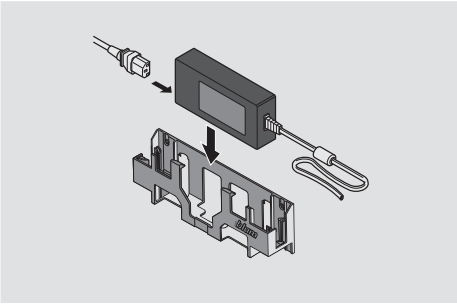

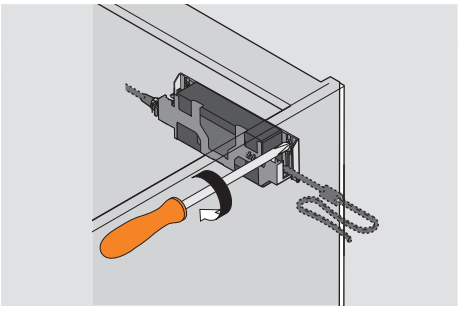

© 2017 Blum, Inc.

SERVO-DRIVE program overview

Vertical aluminum profile

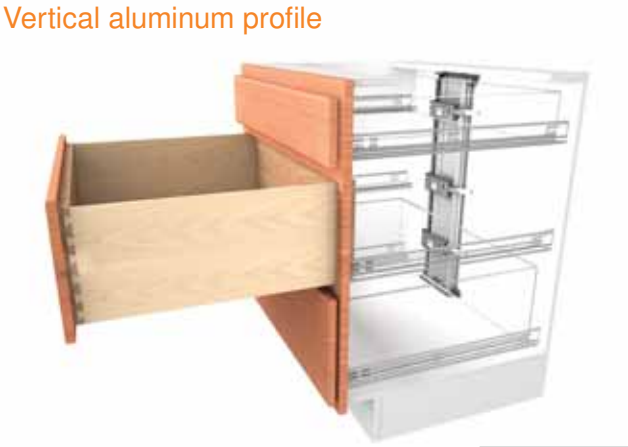

TANDEM page 8
TANDEM inset page 12
TANDEMBOX page 40

Horizontal aluminum profile

TANDEM page 16
TANDEM inset page 20
TANDEMBOX page 44

Top bracket

TANDEM page 24
TANDEM inset page 28
TANDEMBOX page 48

© 2017 Blum, Inc. Subject to technical modifications without notice

Bottom bracket

TANDEM page 32

TANDEM inset page 36

TANDEMBOX page 52

Waste/recycle set

TANDEM Waste/recycle set page 56

TANDEMBOX Waste/recycle set page 56

Power supply set

Power supply set page 57

© 2017 Blum, Inc.

TANDEM plus BLUMOTION

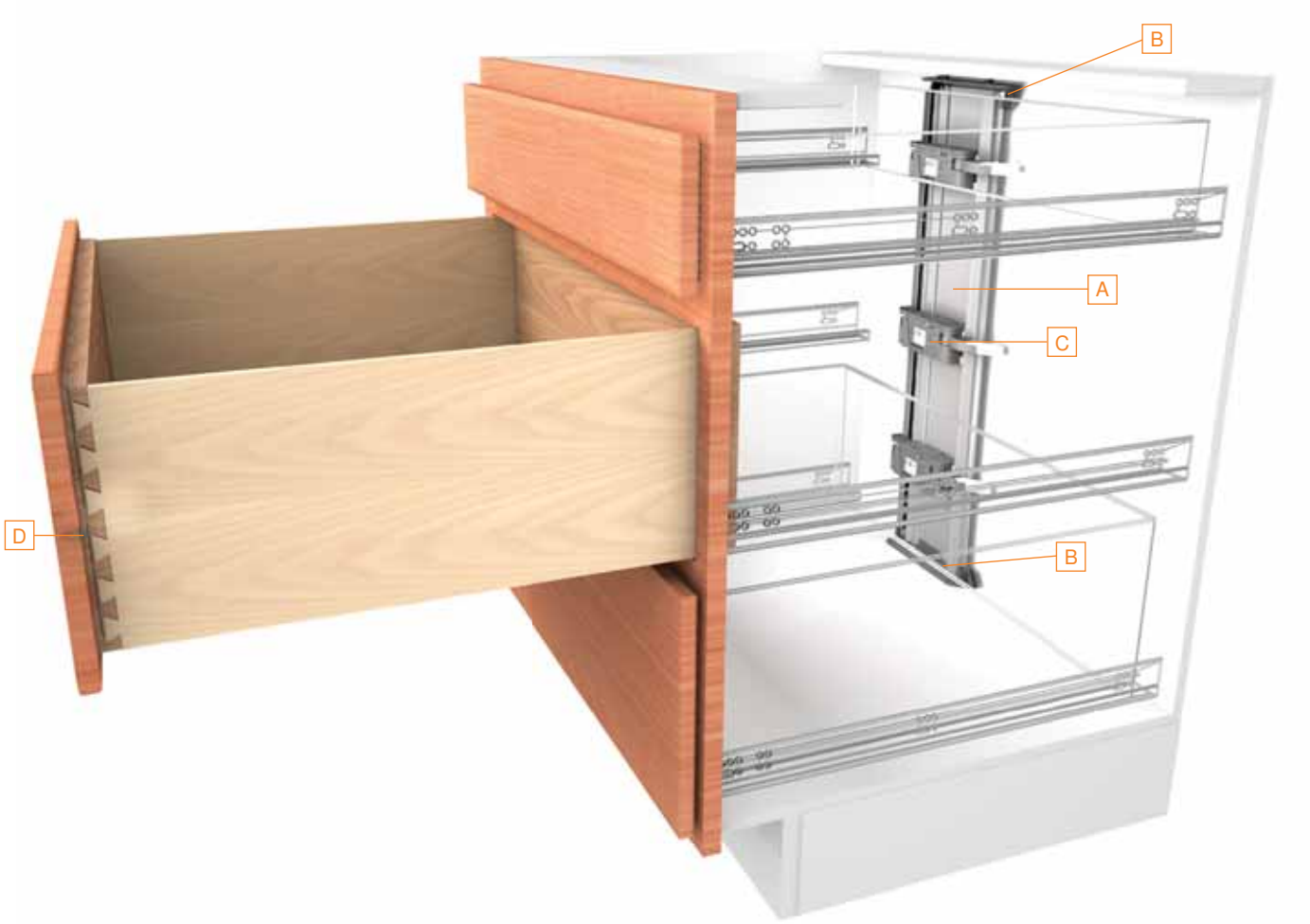

Vertical aluminum profile

A Profile can be cut to size

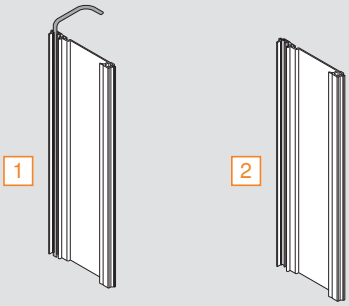

*cable length **800** (31-1/2")	Part no.
1 Profile with cable, length **720** (28-3/8")*	**Z10T720AB**
2 Profile without cable, length **1170** (46")	**Z10T1170A**

Top and bottom adapter set

B For use with horizontal stretcher rail

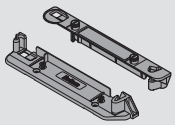

	Part no.
Top and bottom adapter set	**Z10D01E0.01**

Back and bottom adapter set

B For use with back stretcher rail

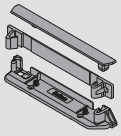

	Part no.
Back and bottom adapter set with cover cap	**Z10D01EA.01**

© 2017 Blum, Inc. Subject to technical modifications without notice

Vertical aluminum profile

Drive unit

C

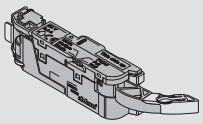

		Part no.
Installation pg 63	Drive unit	Z10A3000.03

Blum distance bumper

D Provides **3** (1/8") gap

1 2

		Part no.
	1 Ø5 mm bumper	993.0531
Specifications pg 60	2 Screw-on bumper	993.1220

Power supply set

Set includes:

- 19 ft universal cable
- 24 watt power supply
- Wall mount bracket
- Three-prong power cord
- Cable end protector (qty 3)
- INSERTA cable connector
- Cable clips (qty 10)
- Technical information

		Part no.
Details pg 57	Power supply set	Z10NE03UG10

 © 2017 Blum, Inc.

Vertical aluminum profile top and bottom adapter

Specifications

Space requirements

For opening widths **340** (13-3/8") and wider

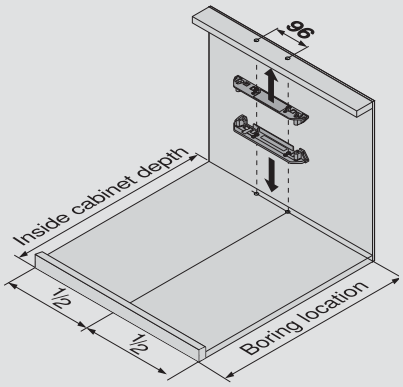

For opening widths **275** to **339** (10-13/16" – 13-3/8")

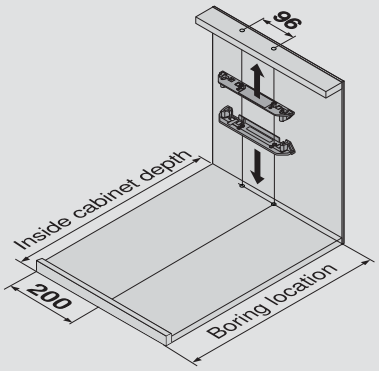

boring location requirements								
drawer length	**229** (9")	**305** (12")	**381** (15")	**457** (18")	**533** (21")	**610** (24")	**686** (27")	**762** (30")
boring location	**253** (9-15/16")	**329** (12-15/16")	**405** (15-15/16")	**481** (18-15/16")	**557** (21-15/16")	**634** (24-15/16")	**710** (27-15/16")	**786** (30-15/16")
min. inside cabinet depth	**270** (10-5/8")	**346** (13-5/8")	**422** (16-5/8")	**498** (19-5/8")	**574** (22-5/8")	**651** (25-5/8")	**727** (28-5/8")	**803** (31-5/8")

NOTE: 41 (1-5/8") is required between drawer back and back panel

Boring specifications

Top and bottom boring pattern

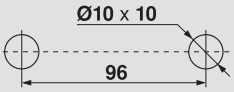

Calculating vertical profile length

Profile length = inside cabinet height minus **19** (3/4")

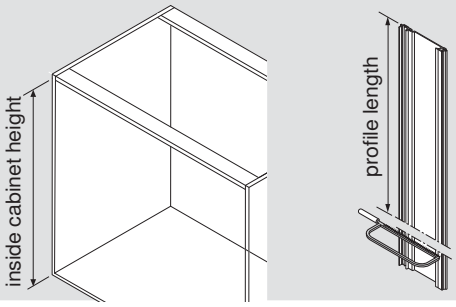

Installing vertical aluminum profile

1 Set profile onto bottom adapter
2 Push profile toward left side while engaging top
3 Push back on right side and snap into place

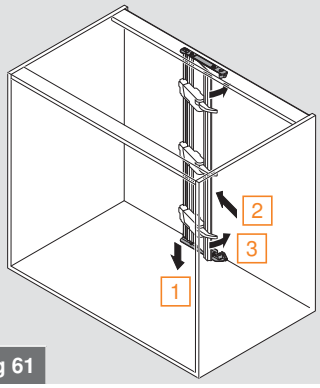

Wiring options **pg 61**

Positioning the drive unit

Lever arm should contact center of drawer back

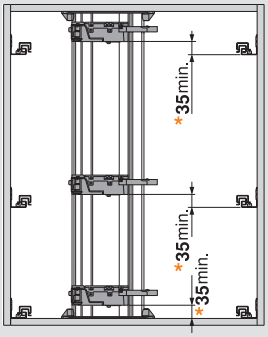

* If opening width is less than **420** (16-9/16"), drive unit should be mounted **50** (1-15/16") minimum from bottom of runner

© 2017 Blum, Inc. Subject to technical modifications without notice

Vertical aluminum profile back and bottom adapter

Specifications

Space requirements

For opening widths **340** (13-3/8") and wider

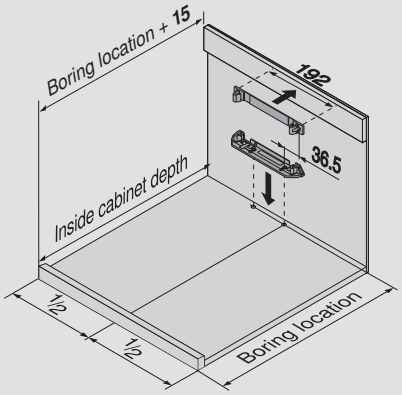

For opening widths **275** to **339** (10-13/16" – 13-3/8")

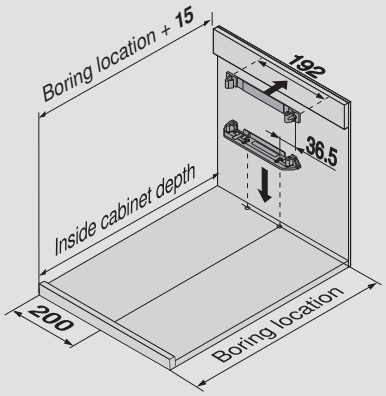

boring location requirements								
drawer length	**229** (9")	**305** (12")	**381** (15")	**457** (18")	**533** (21")	**610** (24")	**686** (27")	**762** (30")
boring location	**253** (9-15/16")	**329** (12-15/16")	**405** (15-15/16")	**481** (18-15/16")	**557** (21-15/16")	**634** (24-15/16")	**710** (27-15/16")	**786** (30-15/16")
min. inside cabinet depth	**270** (10-5/8")	**346** (13-5/8")	**422** (16-5/8")	**498** (19-5/8")	**574** (22-5/8")	**651** (25-5/8")	**727** (28-5/8")	**803** (31-5/8")

NOTE: 41 (1-5/8") is required between drawer back and back panel

Boring specifications

Back screw positioning

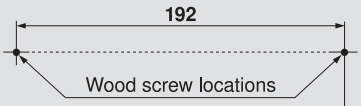

Bottom boring pattern

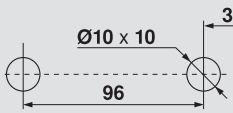

Determining vertical profile length

Profile length is dependent upon back adapter location.

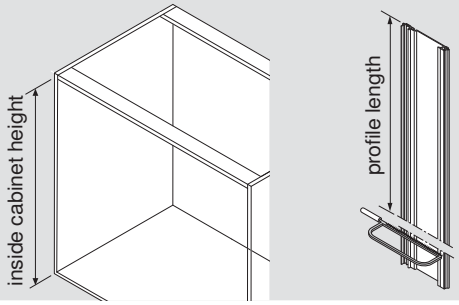

Installing vertical aluminum profile

1. Set profile onto bottom adapter
2. Push profile toward back while engaging adapter
3. Snap cover cap onto top of profile

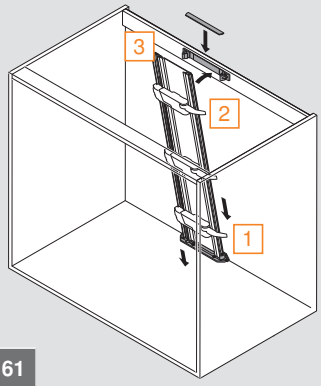

Wiring options **pg 61**

Positioning the drive unit

Lever arm should contact center of drawer back

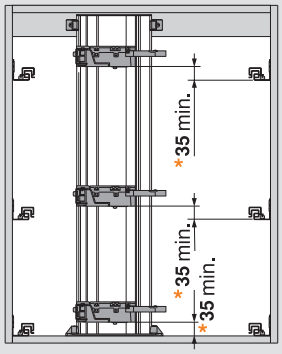

* If opening width is less than **420** (16-9/16"), drive unit should be mounted **50** (1-15/16") minimum from bottom of runner

© 2017 Blum, Inc.

TANDEM plus BLUMOTION

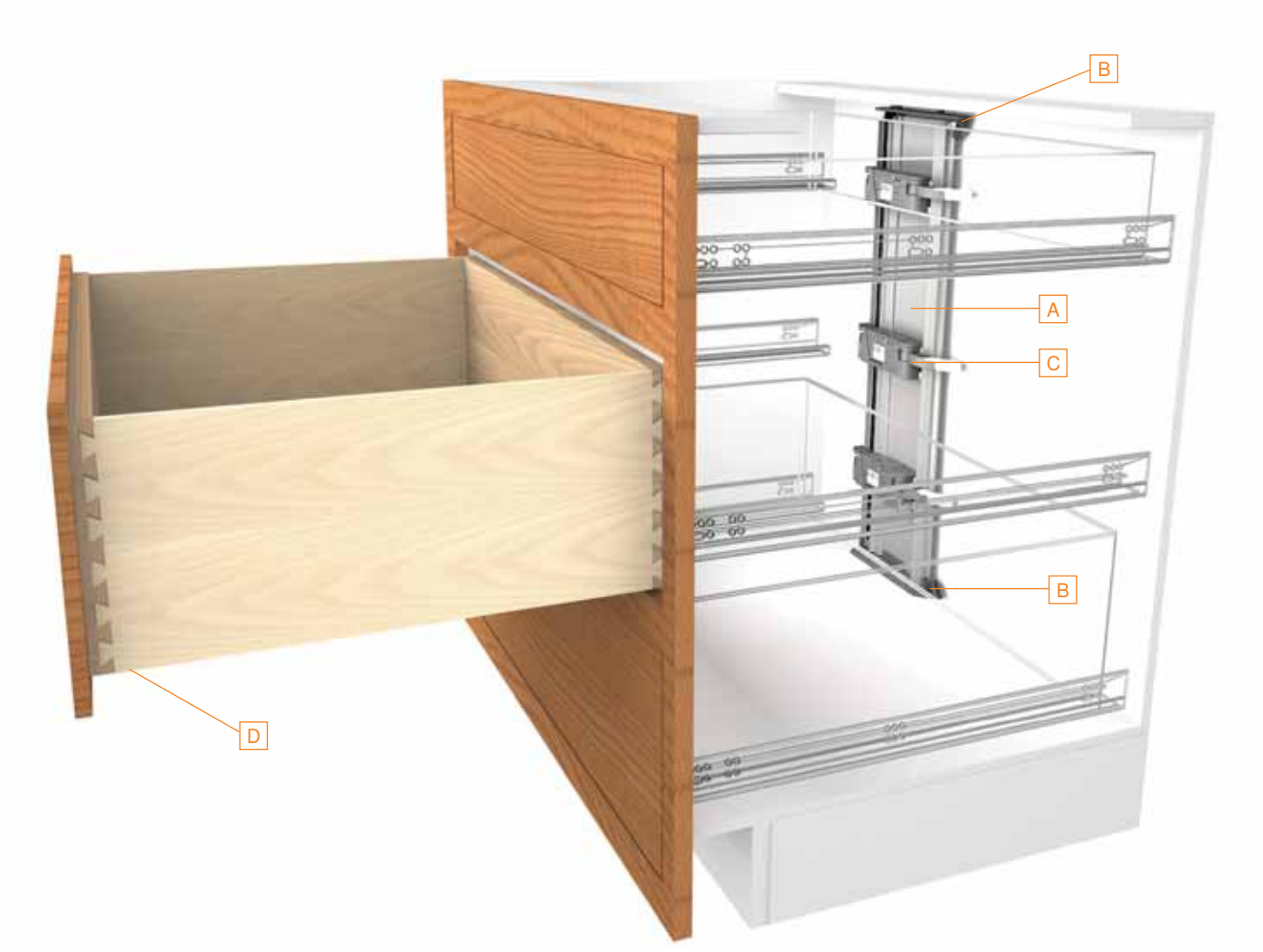

Vertical aluminum profile

A Profile can be cut to size

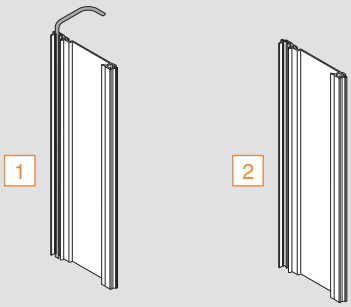

*cable length **800** (31-1/2")	Part no.
1 Profile with cable, length **720** (28-3/8")*	**Z10T720AB**
2 Profile without cable, length **1170** (46")	**Z10T1170A**

Top and bottom adapter set

B For use with horizontal stretcher rail

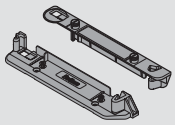

	Part no.
Top and bottom adapter set	**Z10D01E0.01**

Drive unit

C

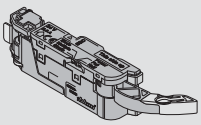

			Part no.
Installation	**pg 63**	Drive unit	**Z10A3000.03**

© 2017 Blum, Inc. Subject to technical modifications without notice

Inset vertical aluminum profile

SERVO-DRIVE locking device with integrated bumper

D Provides **3** (1/8") gap

	Part no.
SERVO-DRIVE locking device, left	**T51.1901.PS L**
SERVO-DRIVE locking device, right	**T51.1901.PS R**

Power supply set

Set includes:

- 19 ft universal cable
- 24 watt power supply
- Wall mount bracket
- Three-prong power cord
- Cable end protector (qty 3)
- INSERTA cable connector
- Cable clips (qty 10)
- Technical information

			Part no.
Details	**pg 57**	Power supply set	**Z10NE03UG10**

© 2017 Blum, Inc.

TANDEM plus BLUMOTION

Specifications

Space requirements

For opening widths **340** (13-3/8") and wider

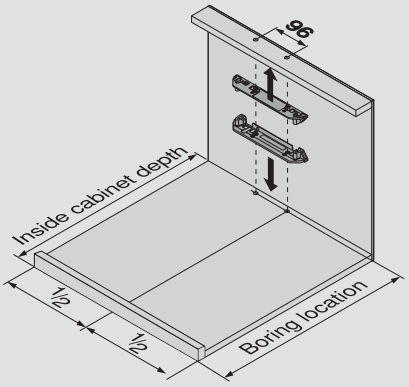

For opening widths **275** to **339** (10-13/16" – 13-3/8")

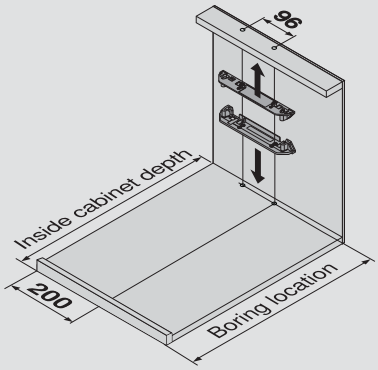

Boring specifications

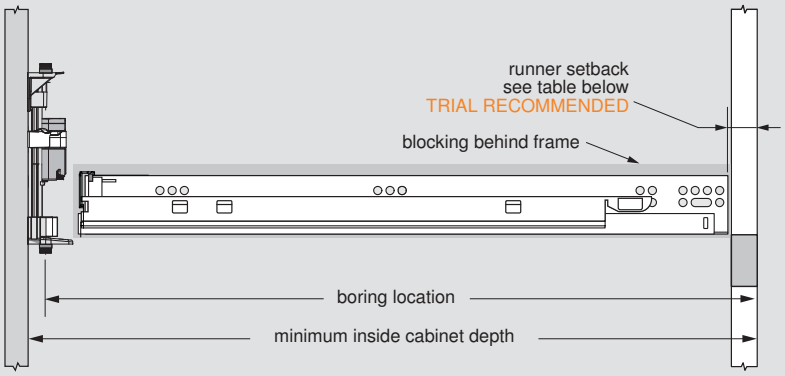

boring location requirements
boring location = drawer length + **21** (13/16") + runner setback
minimum inside cabinet depth = drawer length + **38** (1-1/2") + runner setback

Mounting the TANDEM runner for inset application

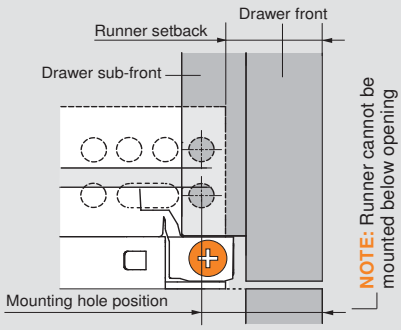

563/569 H/.		runner setback		
sub-front thickness	**13** (1/2")	**20** (25/32")	**23** (29/32")	**26** (1-1/32")
	16 (5/8")	**23** (29/32")	**26** (1-1/32")	**29** (1-5/32")
	19 (3/4")	**26** (1-1/32")	**29** (1-5/32")	**32** (1-1/4")
		16 (5/8")	**19** (3/4")	**22** (7/8")
		drawer front thickness		

563/569 F/A		runner setback		
sub-front thickness	**13** (1/2")	**17** (21/32")	**20** (25/32")	**23** (29/32")
	16 (5/8")	**20** (25/32")	**23** (29/32")	**26** (1-1/32")
	19 (3/4")	**23** (29/32")	**26** (1-1/32")	**29** (1-5/32")
		16 (5/8")	**19** (3/4")	**22** (7/8")
		drawer front thickness		

- Setbacks in this table recess the face of the drawer front inside of the cabinet **1** (1/32")
- The depth adjustment can then be used to move the drawer front out to its desired position, **2.5** (3/32") out adjustment only

calculating runner setback
563/569 H/. (sub-front thickness + drawer front thickness minus **9** (11/32") = runner setback)
563/569 F/A (sub-front thickness + drawer front thickness minus **12** (15/32") = runner setback)
NOTE: For mounting hole position, add **7** (9/32") to runner setback

© 2017 Blum, Inc. Subject to technical modifications without notice

Inset vertical aluminum profile

Boring specifications

Top and bottom boring pattern

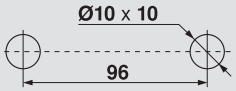

Calculating vertical profile length

Profile length = inside cabinet height minus **19** (3/4")

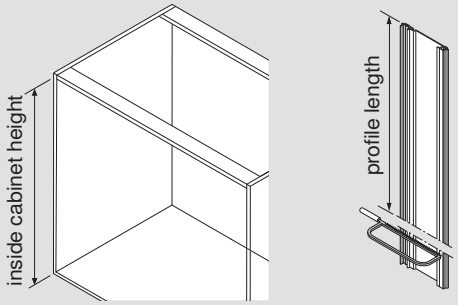

Installing vertical aluminum profile

1 Set profile onto bottom adapter
2 Push profile toward left side while engaging top
3 Push back on right side and snap into place

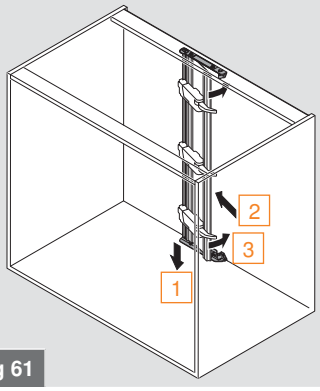

Wiring options **pg 61**

Positioning the drive unit

Lever arm should contact center of drawer back

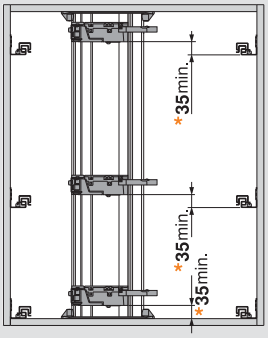

* If opening width is less than **420** (16-9/16"), drive unit should be mounted **50** (1-15/16") minimum from bottom of runner

SERVO-DRIVE locking device with integrated bumper

Installation **pg 64**

- Captive right device and self-aligning left device
- Self-adjusting drawer length tolerance
- Minimum inside drawer width **170** (6-11/16")
- Height adjustment +**3** (1/8")
- Side adjustment ±**1.5** (1/16")
- Depth adjustment +**2.5** (3/32"), preset at **0**
- Minimum sub-front thickness **13** (1/2")
- Designed for **13** (1/2") drawer bottom recess
- Integrated **3** (1/8") distance bumper for inset or overlay SERVO-DRIVE applications

© 2017 Blum, Inc.

TANDEM plus BLUMOTION

NOTE: For face frame application with rear attachment

Horizontal aluminum profile	
A 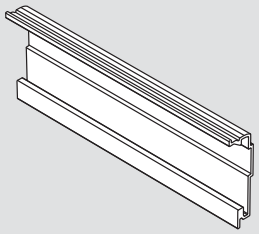	
	Part no.
Profile length **1143** (45"), cut to size	**Z10T1143B**

Adapter set for horizontal profile, face frame	
Set includes: ■ TANDEM adapters (left and right) ■ Profile adapter ■ Installation screws 661.1150.HG (qty 4) ■ Installation instructions B 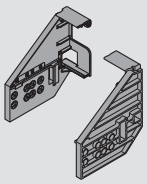 C 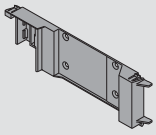	
	Part no.
Adapter set for horizontal profile, face frame	**Z10D5800.US**

© 2017 Blum, Inc. Subject to technical modifications without notice

Horizontal aluminum profile

Drive unit

D

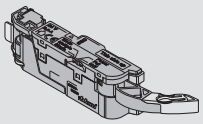

		Part no.
Installation pg 63	Drive unit	Z10A3000.03

Blum distance bumper

E Provides **3** (1/8") gap

1

2

		Part no.
	1 Ø5 mm bumper	993.0531
Specifications pg 60	2 Screw-on bumper	993.1220

Power supply set

Set includes:

- 19 ft universal cable
- 24 watt power supply
- Wall mount bracket
- Three-prong power cord
- Cable end protector (qty 3)
- INSERTA cable connector
- Cable clips (qty 10)
- Technical information

		Part no.
Details pg 57	Power supply set	Z10NE03UG10

© 2017 Blum, Inc.

TANDEM plus BLUMOTION

Specifications

Space requirements

Works with most TANDEM 563 lengths. Minimum opening width is **305** (12")

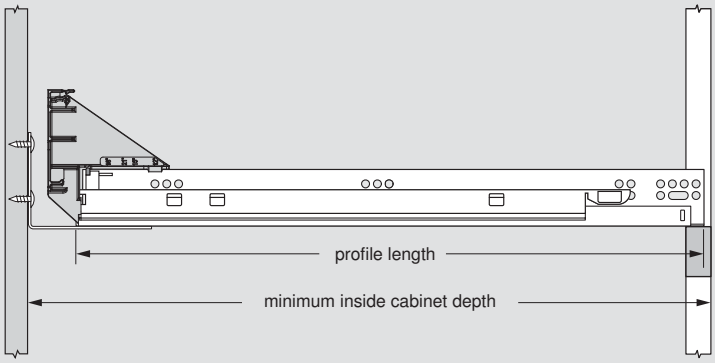

cabinet depth requirements				
drawer length	**305** (12")	**381** (15")	**457** (18")	**533** (21")
mimimum inside cabinet depth	**346** (13-5/8")	**422** (16-5/8")	**498** (19-5/8")	**574** (22-5/8")

NOTE: 41 (1-5/8") is required between drawer back and back panel

Mounting of adapters

1 Slide the adapters firmly onto each runner

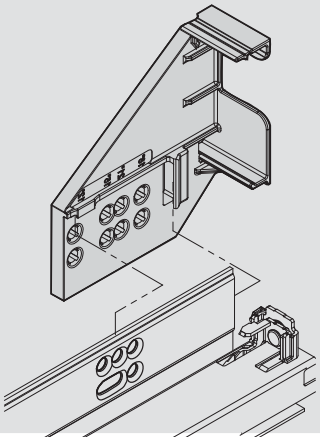

2 Attach with system screws (661.1150.HG)

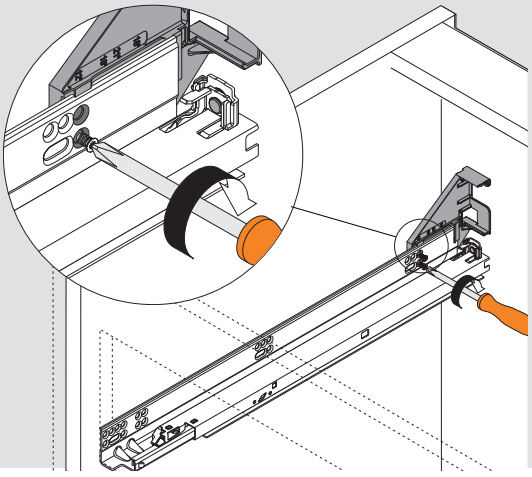

Calculating horizontal profile size

Profile length = interior cabinet opening width minus **19** (3/4")

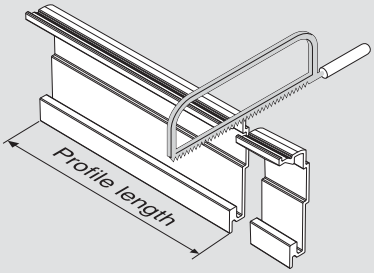

© 2017 Blum, Inc. Subject to technical modifications without notice

Horizontal aluminum profile

Installing profile adapter onto horizontal profile

1 Place bottom of profile adapter into the bottom slot of profile

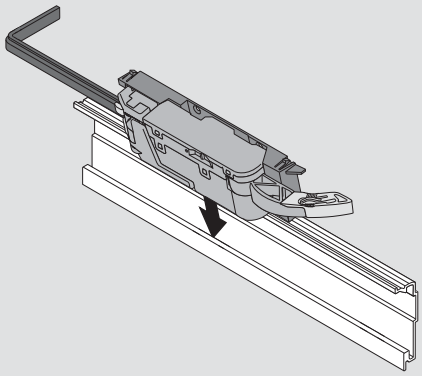

2 Push top of profile adapter toward the back of the profile and snap into place

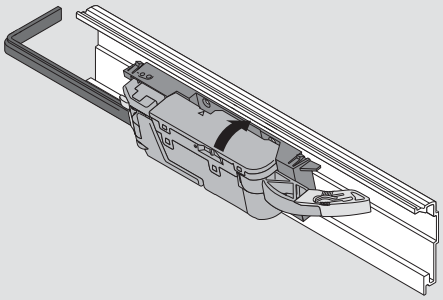

3 Align cable along bottom slot of profile

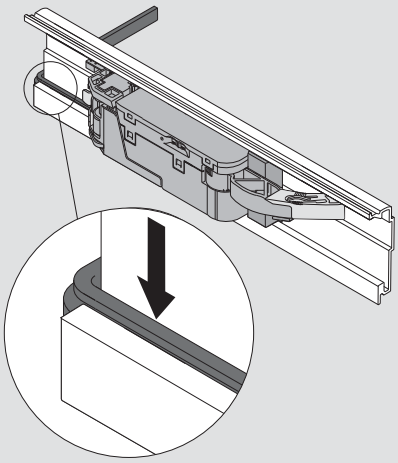

Installing horizontal profile into adapters

1 Slide cable through the notch in the adapter
2 Push horizontal profile toward bottom
3 Push top of profile to snap into place

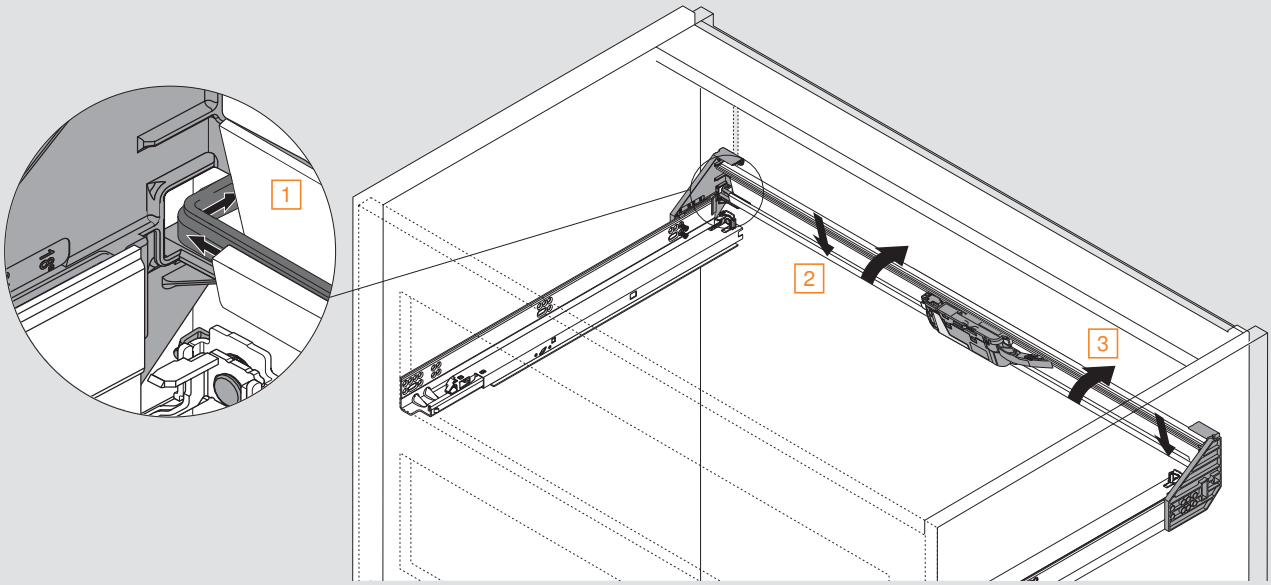

Wiring options **pg 61**

 © 2017 Blum, Inc.

TANDEM plus BLUMOTION

NOTE: For face frame application with rear attachment

Horizontal aluminum profile	
A 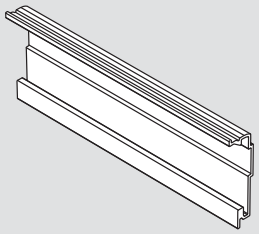	
	Part no.
Profile length **1143** (45"), cut to size	**Z10T1143B**

Adapter set for horizontal profile, face frame	
Set includes: ■ TANDEM adapters (left and right) ■ Profile adapter ■ Installation screws 661.1150.HG (qty 4) ■ Installation instructions	
B 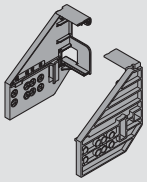 C 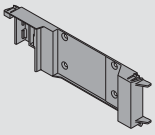	
	Part no.
Adapter set for horizontal profile, face frame	**Z10D5800.US**

© 2017 Blum, Inc. Subject to technical modifications without notice

Inset horizontal aluminum profile

Drive unit

D

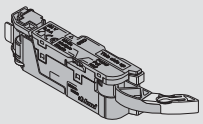

			Part no.
Installation	pg 63	Drive unit	Z10A3000.03

SERVO-DRIVE locking device with integrated bumper

E Provides **3** (1/8") gap

	Part no.
SERVO-DRIVE locking device, left	T51.1901.PS L
SERVO-DRIVE locking device, right	T51.1901.PS R

Power supply set

Set includes:

- 19 ft universal cable
- 24 watt power supply
- Wall mount bracket
- Three-prong power cord
- Cable end protector (qty 3)
- INSERTA cable connector
- Cable clips (qty 10)
- Technical information

			Part no.
Details	pg 57	Power supply set	Z10NE03UG10

 © 2017 Blum, Inc.

TANDEM plus BLUMOTION

Specifications

Space requirements

Works with most TANDEM 563 lengths. Minimum opening width is **305** (12").

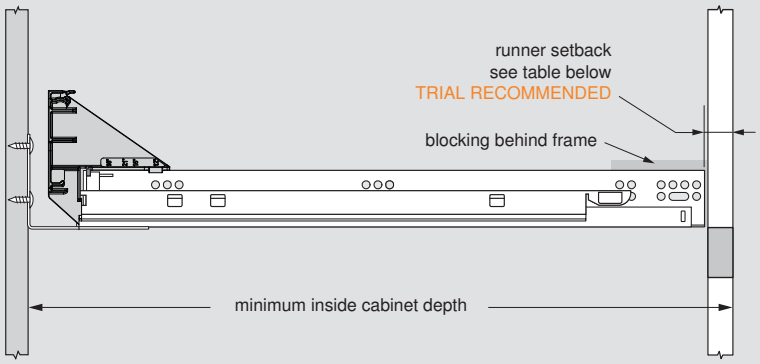

cabinet depth requirements
minimum inside cabinet depth = drawer length + **38** (1-1/2") + runner setback

Mounting the TANDEM runner for inset application

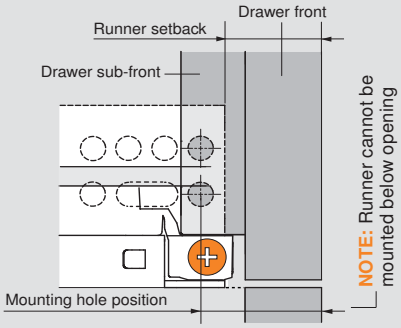

563/569 H/.		runner setback		
sub-front thickness	**13** (1/2")	**20** (25/32")	**23** (29/32")	**26** (1-1/32")
	16 (5/8")	**23** (29/32")	**26** (1-1/32")	**29** (1-5/32")
	19 (3/4")	**26** (1-1/32")	**29** (1-5/32")	**32** (1-1/4")
		16 (5/8")	**19** (3/4")	**22** (7/8")
		drawer front thickness		

563/569 F/A		runner setback		
sub-front thickness	**13** (1/2")	**17** (21/32")	**20** (25/32")	**23** (29/32")
	16 (5/8")	**20** (25/32")	**23** (29/32")	**26** (1-1/32")
	19 (3/4")	**23** (29/32")	**26** (1-1/32")	**29** (1-5/32")
		16 (5/8")	**19** (3/4")	**22** (7/8")
		drawer front thickness		

- Setbacks in this table recess the face of the drawer front inside of the cabinet **1** (1/32")
- The depth adjustment can then be used to move the drawer front out to its desired position, **2.5** (3/32") out adjustment only

calculating runner setback
563/569 H/. (sub-front thickness + drawer front thickness minus **9** (11/32") = runner setback)
563/569 F/A (sub-front thickness + drawer front thickness minus **12** (15/32") = runner setback)
NOTE: For mounting hole position, add **7** (9/32") to runner setback

SERVO-DRIVE locking device with integrated bumper

- Captive right device and self-aligning left device
- Self-adjusting drawer length tolerance
- Minimum inside drawer width **170** (6-11/16")
- Height adjustment +**3** (1/8")
- Side adjustment ±**1.5** (1/16")
- Depth adjustment +**2.5** (3/32"), preset at **0**
- Minimum sub-front thickness **13** (1/2")
- Designed for **13** (1/2") drawer bottom recess
- Integrated **3** (1/8") distance bumper for inset or overlay SERVO-DRIVE applications

Installation **pg 64**

Calculating horizontal profile size

Profile length = interior cabinet opening width minus **19** (3/4")

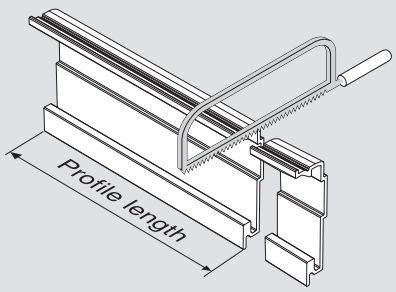

© 2017 Blum, Inc. Subject to technical modifications without notice

Inset horizontal aluminum profile

Mounting adapters

1 Slide the adapters firmly onto each runner

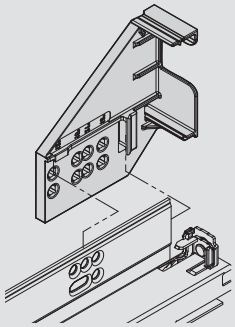

2 Attach with system screws (661.1150.HG)

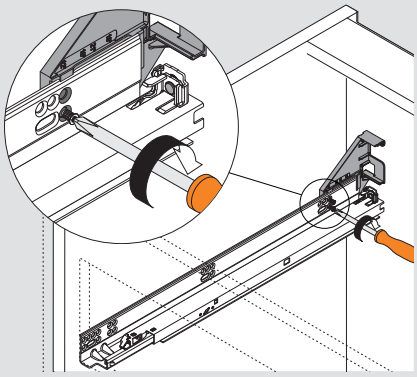

Installing profile adapter onto horizontal profile

1 Place bottom of profile adapter into the bottom slot of profile

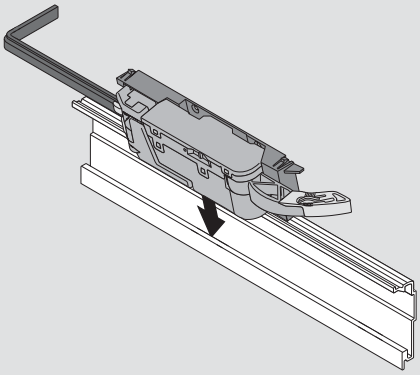

2 Push top of profile adapter toward the back of the profile and snap into place

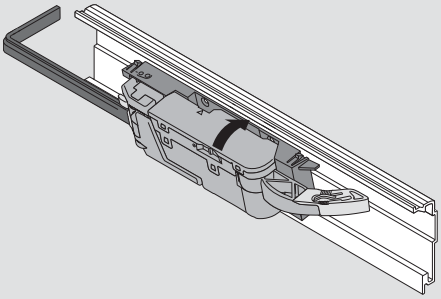

3 Align cable along bottom slot of profile

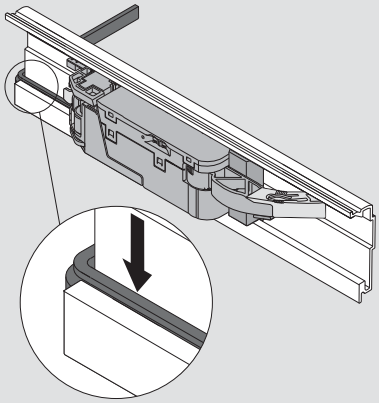

Installing horizontal profile into adapters

1 Slide cable through the notch in the adapter
2 Push horizontal profile toward bottom
3 Push top of profile to snap into place

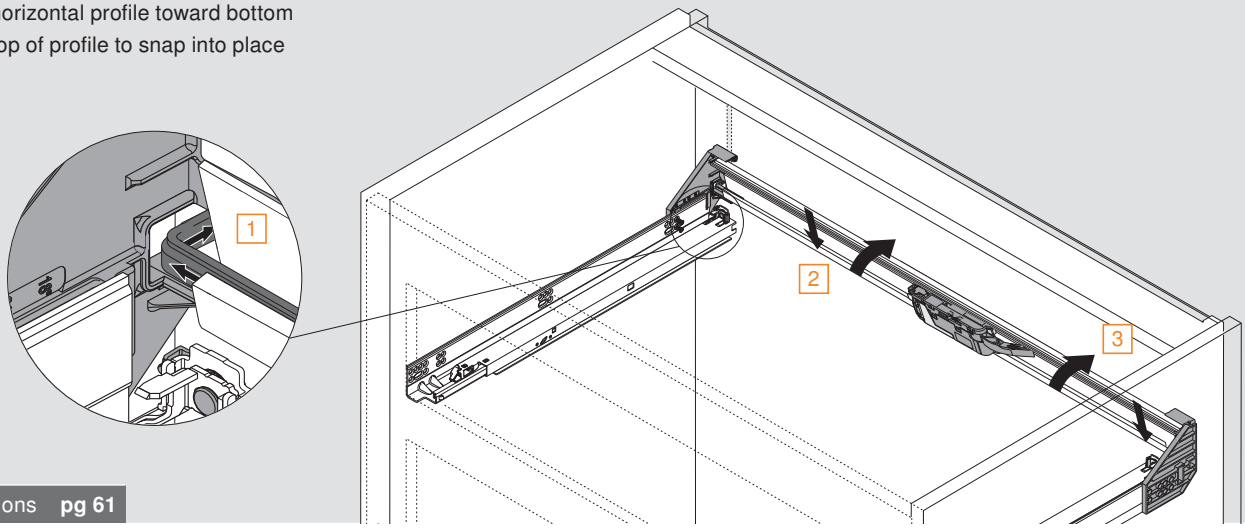

Wiring options **pg 61**

 © 2017 Blum, Inc.

TANDEM plus BLUMOTION

Top bracket with adapter

A

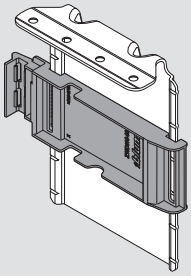

	Part no.
Top bracket with adapter	Z10D6252
Installation screw	661.1300.HG

Drive unit

B

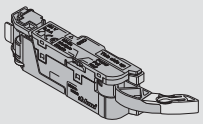

			Part no.
Installation	pg 63	Drive unit	Z10A3000.03

Blum distance bumper

C Provides **3** (1/8") gap

1

2

			Part no.
	1	Ø5 mm bumper	993.0531
Specifications	pg 60	2 Screw-on bumper	993.1220

© 2017 Blum, Inc. Subject to technical modifications without notice

Top bracket

Power supply set

Set includes:

- 19 ft universal cable
- 24 watt power supply
- Wall mount bracket
- Three-prong power cord
- Cable end protector (qty 3)
- INSERTA cable connector
- Cable clips (qty 10)
- Technical information

			Part no.
Details	pg 57	Power supply set	Z10NE03UG10

© 2017 Blum, Inc.

TANDEM plus BLUMOTION

Specifications

Space requirements

For opening widths **340** (13-3/8") and wider

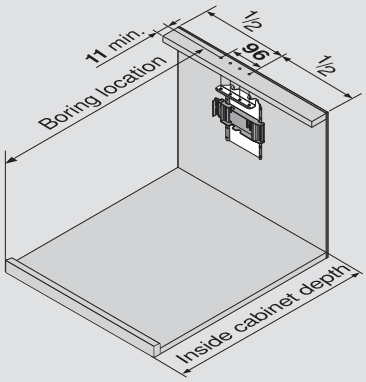

For opening widths **246** to **339** (9-11/16" – 13-3/8")

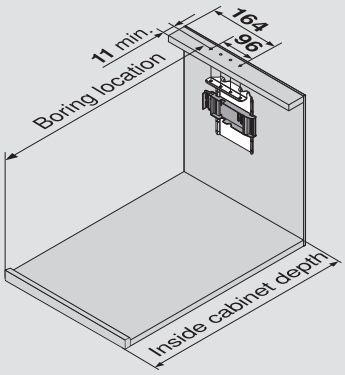

boring location requirements								
drawer length	**229** (9")	**305** (12")	**381** (15")	**457** (18")	**533** (21")	**610** (24")	**686** (27")	**762** (30")
boring location	**233** (9-3/16")	**309** (12-3/16")	**385** (15-3/16")	**461** (18-3/16")	**537** (21-3/16")	**614** (24-3/16")	**690** (27-3/16")	**766** (30-3/16")
min. inside cabinet depth	**270** (10-5/8")	**346** (13-5/8")	**422** (16-5/8")	**498** (19-5/8")	**574** (22-5/8")	**651** (25-5/8")	**727** (28-5/8")	**803** (31-5/8")

NOTE: 41 (1-5/8") is required between drawer back and back panel

Boring specifications

Top boring pattern

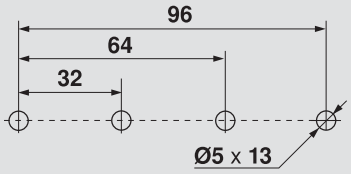

Positioning the drive unit

One drive unit can be positioned anywhere along the height of the bracket

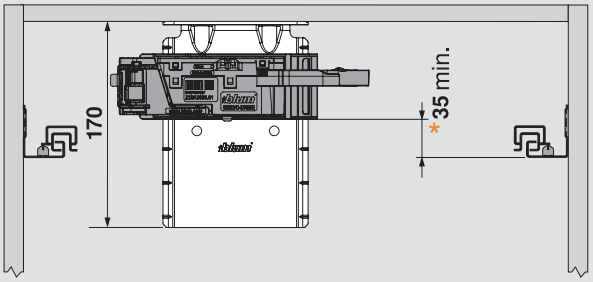

* If opening width is less than **420** (16-9/16"), drive unit should be mounted **50** (1-15/16") minimum from bottom of runner

© 2017 Blum, Inc. Subject to technical modifications without notice

Top bracket

Installation of top bracket with adapter

1 Feed cable into the drive unit attachment bracket

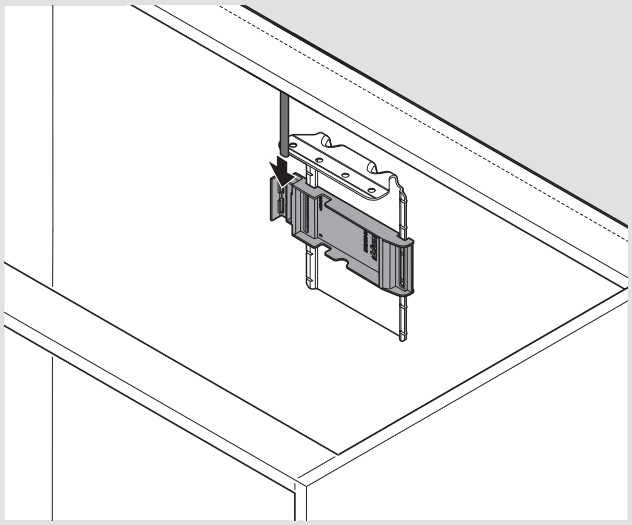

2 Secure with four system screws (661.1300.HG)

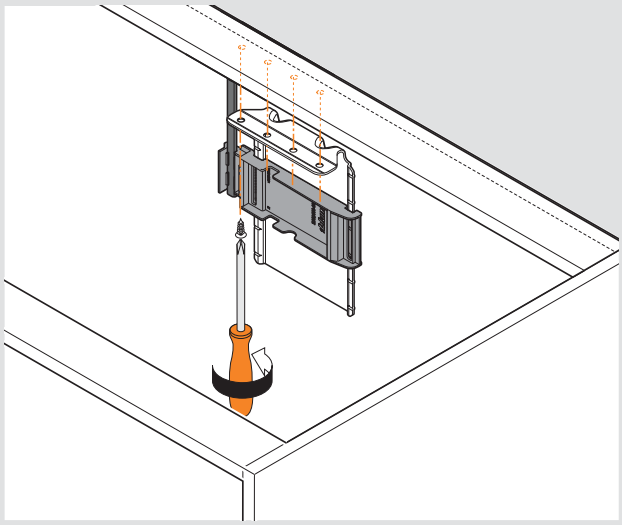

Wiring options **pg 61**

 © 2017 Blum, Inc.

TANDEM plus BLUMOTION

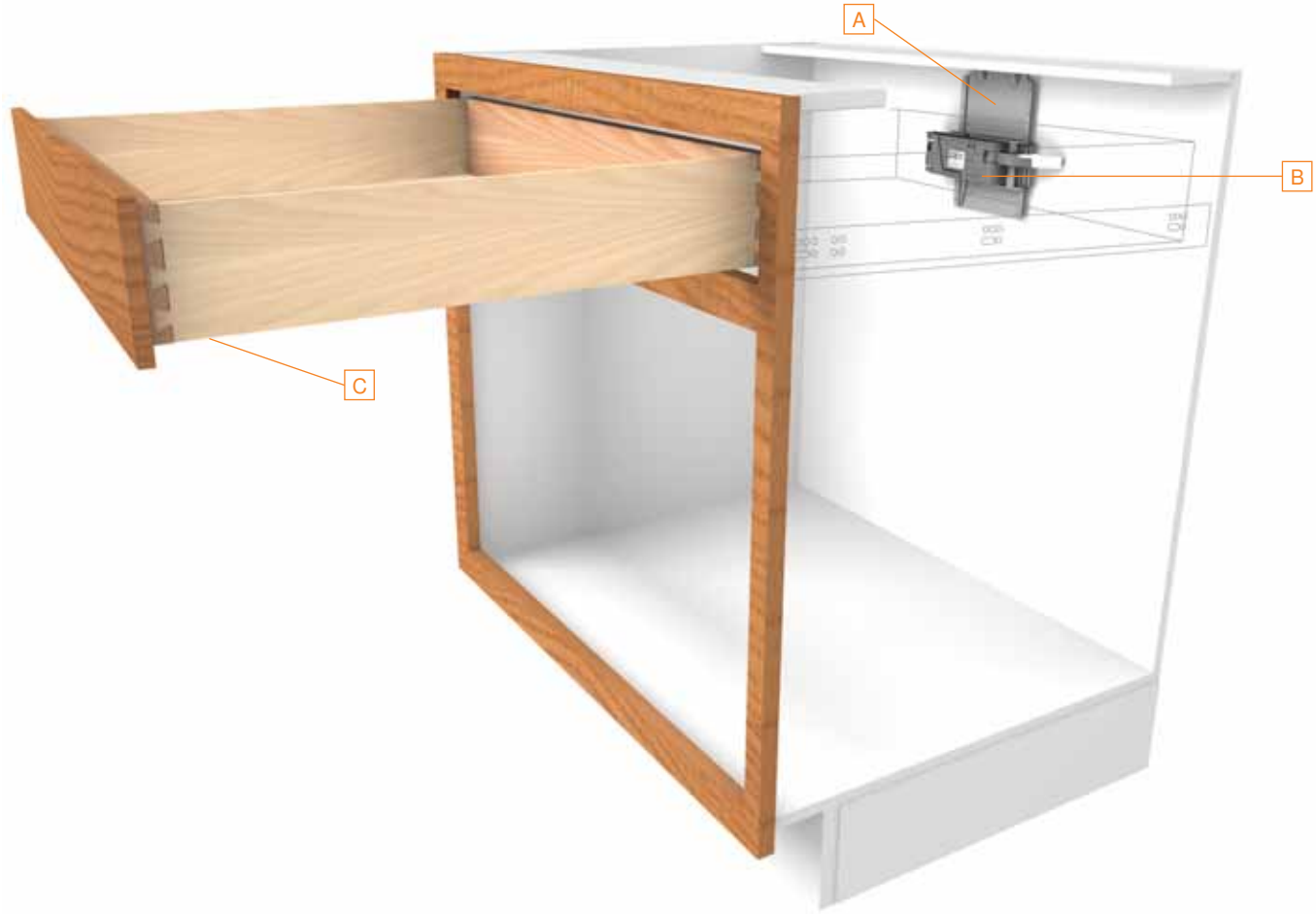

Top bracket with adapter

A

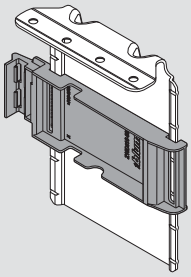

	Part no.
Top bracket with adapter	Z10D6252
Installation screw	661.1300.HG

Drive unit

B

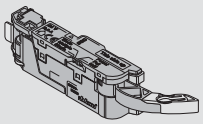

		Part no.
Installation pg 63	Drive unit	Z10A3000.03

SERVO-DRIVE locking device with integrated bumper

C Provides **3** (1/8") gap

	Part no.
SERVO-DRIVE locking device, left	T51.1901.PS L
SERVO-DRIVE locking device, right	T51.1901.PS R

© 2017 Blum, Inc. Subject to technical modifications without notice

Inset top bracket

Power supply set

Set includes:

- 19 ft universal cable
- 24 watt power supply
- Wall mount bracket
- Three-prong power cord
- Cable end protector (qty 3)
- INSERTA cable connector
- Cable clips (qty 10)
- Technical information

			Part no.
Details	pg 57	Power supply set	Z10NE03UG10

© 2017 Blum, Inc.

TANDEM plus BLUMOTION

Specifications

Space requirements

For opening widths **340** (13-3/8") and wider

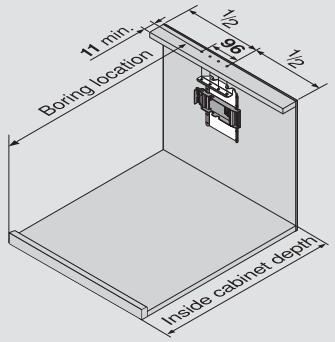

For opening widths **246** to **339** (9-11/16" – 13-3/8")

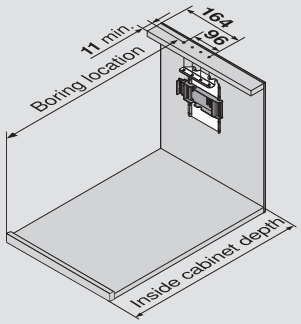

Boring specifications

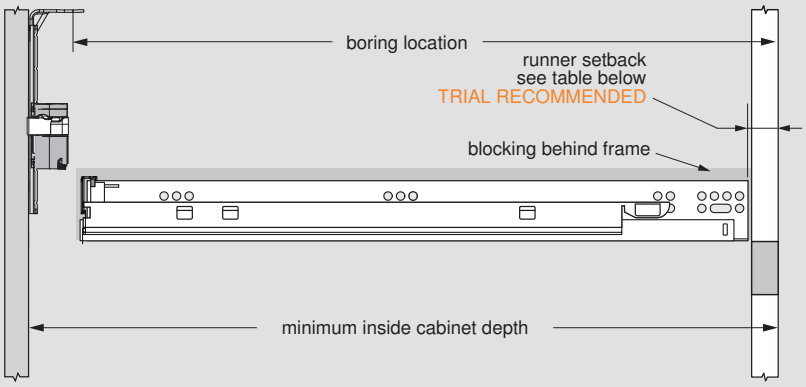

boring location requirements
boring location = drawer length + **1** (1/32") + runner setback
minimum inside cabinet depth = drawer length + **38** (1-1/2") + runner setback

Mounting the TANDEM runner for inset application

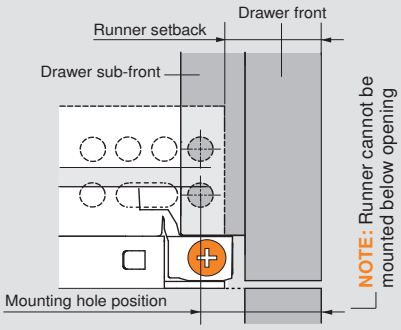

563/569 H/.		runner setback		
sub-front thickness	**13** (1/2")	**20** (25/32")	**23** (29/32")	**26** (1-1/32")
	16 (5/8")	**23** (29/32")	**26** (1-1/32")	**29** (1-5/32")
	19 (3/4")	**26** (1-1/32")	**29** (1-5/32")	**32** (1-1/4")
		16 (5/8")	**19** (3/4")	**22** (7/8")
		drawer front thickness		

563/569 F/A		runner setback		
sub-front thickness	**13** (1/2")	**17** (21/32")	**20** (25/32")	**23** (29/32")
	16 (5/8")	**20** (25/32")	**23** (29/32")	**26** (1-1/32")
	19 (3/4")	**23** (29/32")	**26** (1-1/32")	**29** (1-5/32")
		16 (5/8")	**19** (3/4")	**22** (7/8")
		drawer front thickness		

- Setbacks in this table recess the face of the drawer front inside of the cabinet **1** (1/32")
- The depth adjustment can then be used to move the drawer front out to its desired position, **2.5** (3/32") out adjustment only

calculating runner setback
563/569 H/. (sub-front thickness + drawer front thickness minus **9** (11/32") = runner setback)
563/569 F/A (sub-front thickness + drawer front thickness minus **12** (15/32") = runner setback)
NOTE: For mounting hole position, add **7** (9/32") to runner setback

© 2017 Blum, Inc. Subject to technical modifications without notice

Inset top bracket

Boring specifications

Top boring pattern

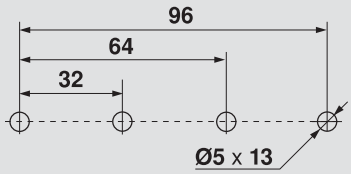

Positioning the drive unit

One drive unit can be positioned anywhere along the height of the bracket

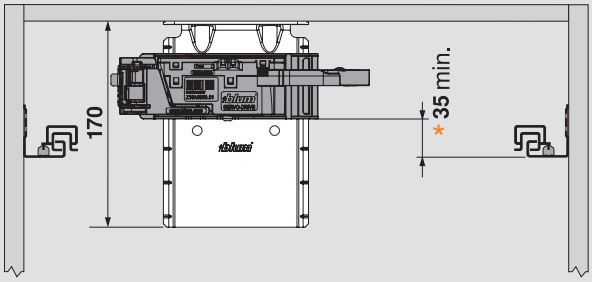

*If opening width is less than **420** (16-9/16"), drive unit should be mounted **50** (1-15/16") minimum from bottom of runner

Installation of top adapter

1 Feed cable into the drive unit attachment bracket

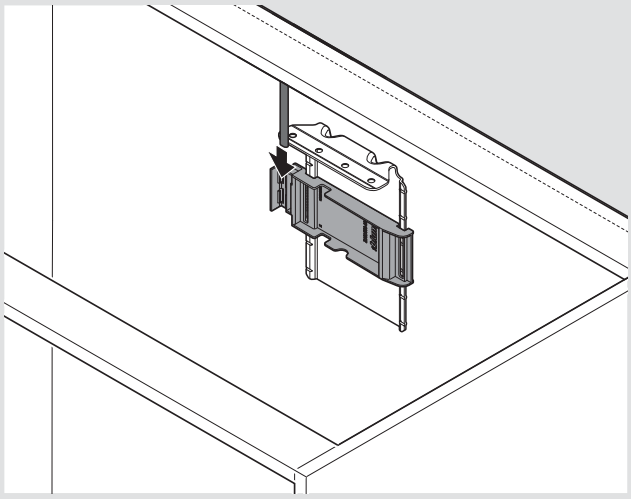

2 Secure with four system screws (661.1300.HG)

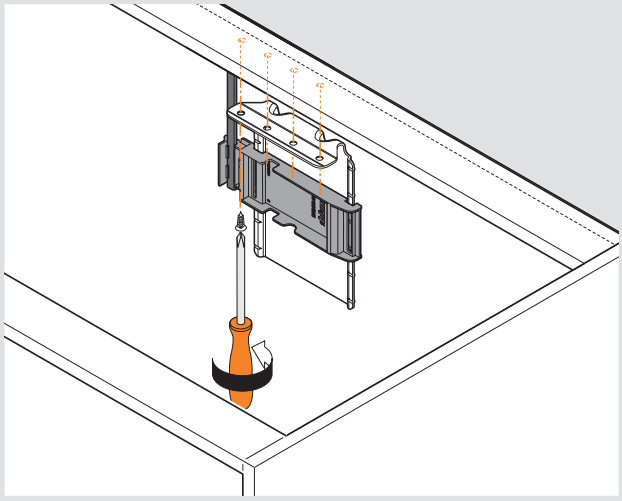

Wiring options **pg 61**

SERVO-DRIVE locking device with integrated bumper

- Captive right device and self-aligning left device
- Self-adjusting drawer length tolerance
- Minimum inside drawer width **170** (6-11/16")
- Height adjustment +**3** (1/8")
- Side adjustment ±**1.5** (1/16")
- Depth adjustment +**2.5** (3/32"), preset at **0**
- Minimum sub-front thickness **13** (1/2")
- Designed for **13** (1/2") drawer bottom recess
- Integrated **3** (1/8") distance bumper for inset or overlay SERVO-DRIVE applications

Installation **pg 64**

© 2017 Blum, Inc.

TANDEM plus BLUMOTION

Bottom bracket

A

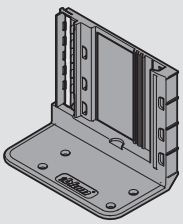

NOTE: 800 (31-1/2") universal cable is included	Part no.
Bottom bracket, double for two drive units	**Z10D7201.01**
Installation screw	**606N or 606P**

Drive unit

B

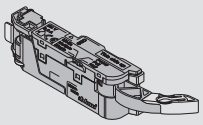

			Part no.
Installation	**pg 63**	Drive unit	**Z10A3000.03**

Blum distance bumper

C Provides **3** (1/8") gap

1

2

			Part no.
		1 Ø5 mm bumper	**993.0531**
Specifications	**pg 60**	2 Screw-on bumper	**993.1220**

© 2017 Blum, Inc. Subject to technical modifications without notice

Bottom bracket

Waste/recycle set

Set includes:

- Adapter plate
- Drive unit (pre-attached)
- Double bottom bracket (additional drive unit can be attached)
- 110v plug-in power supply with six foot cable
- Screw-on distance bumpers (qty 4)
- INSERTA cable connector
- Mounting template and instruction sheet
- All necessary mounting screws are included

		Part no.
Details pg 56	Waste/recycle set	Z10NA30UGUS

Power supply set

Set includes:

- 19 ft universal cable
- 24 watt power supply
- Wall mount bracket
- Three-prong power cord
- Cable end protector (qty 3)
- INSERTA cable connector
- Cable clips (qty 10)
- Technical information

		Part no.
Details pg 57	Power supply set	Z10NE03UG10

© 2017 Blum, Inc.

TANDEM plus BLUMOTION

Specifications

Space requirements

For opening widths **340** (13-3/8") and wider

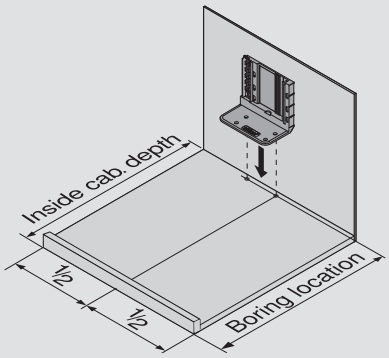

For opening widths **275** to **339** (10-13/16" to 13-3/8")

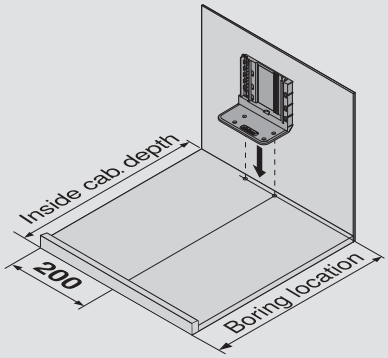

boring location requirements

drawer length	**229** (9")	**305** (12")	**381** (15")	**457** (18")	**533** (21")	**610** (24")	**686** (27")	**762** (30")
boring location	**253** (9-15/16")	**329** (12-15/16")	**405** (15-15/16")	**481** (18-15/16")	**557** (21-15/16")	**634** (24-15/16")	**710** (27-15/16")	**786** (30-15/16")
min. inside cabinet depth	**270** (10-5/8")	**346** (13-5/8")	**422** (16-5/8")	**498** (19-5/8")	**574** (22-5/8")	**651** (25-5/8")	**727** (28-5/8")	**803** (31-5/8")

NOTE: **41** (1-5/8") is required between drawer back and back panel

Boring specifications

Bottom boring pattern

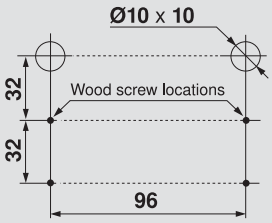

© 2017 Blum, Inc. Subject to technical modifications without notice

Bottom bracket

Installation of bottom bracket

1 Insert locating pins into pre-bored holes

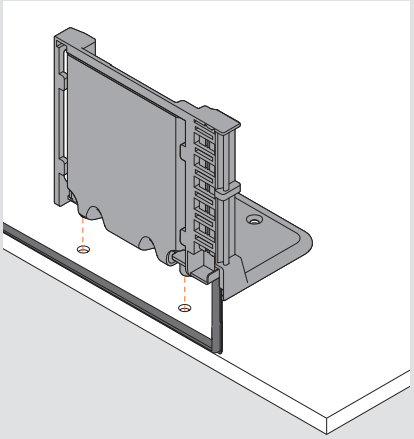

2 Secure with four wood screws (606N or 606P)

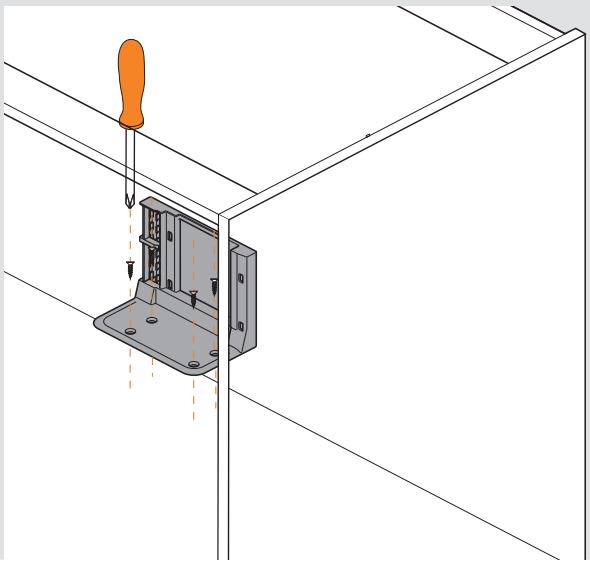

Drive unit attachment

Bottom bracket for attachment of one or two drive units

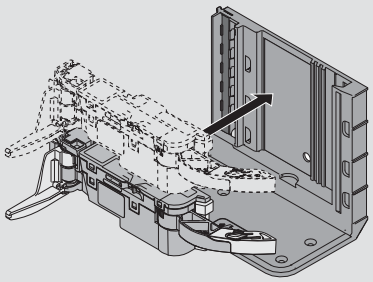

Wiring options **pg 61**

 © 2017 Blum, Inc.

TANDEM plus BLUMOTION

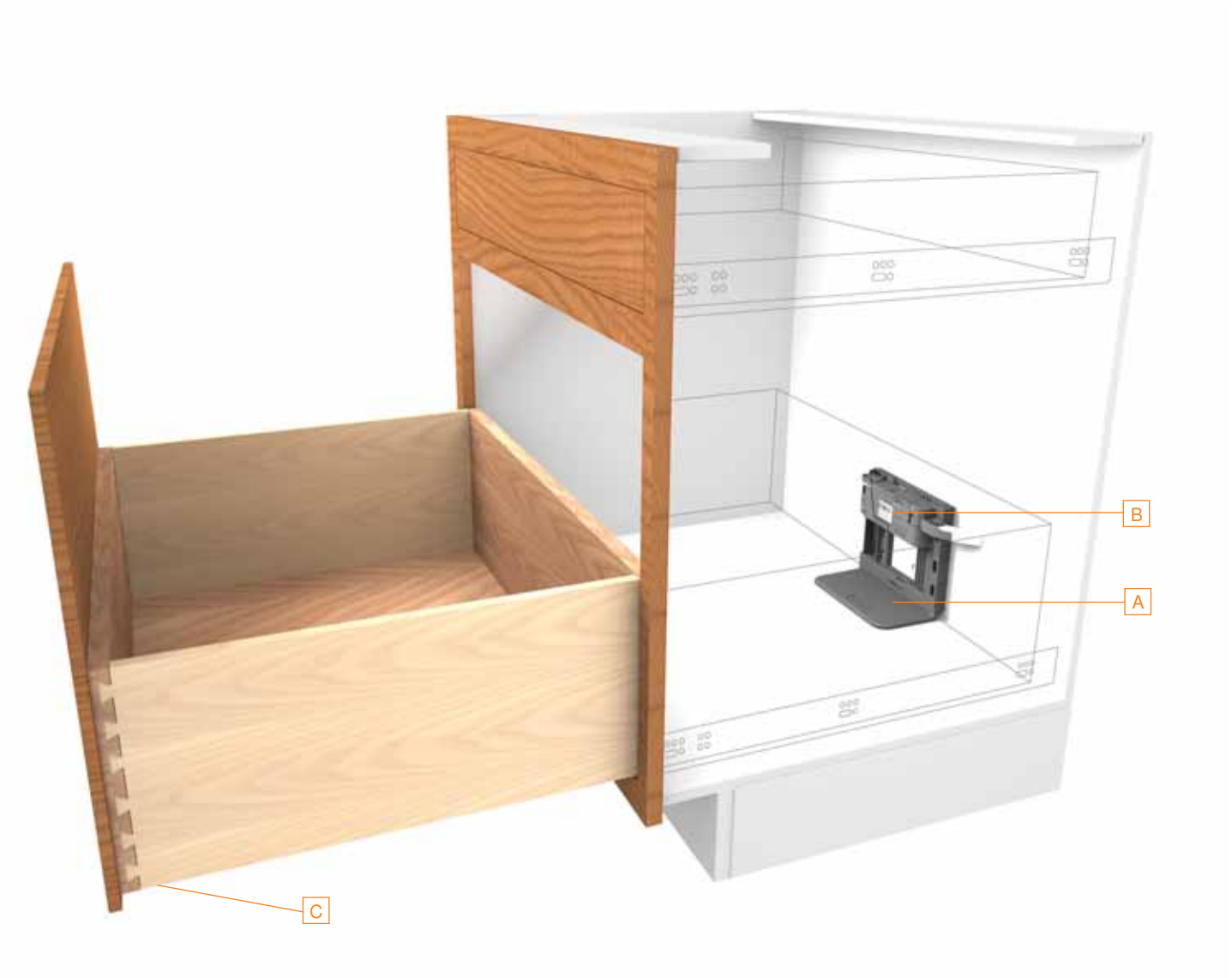

Bottom bracket	
A 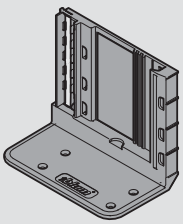	
NOTE: 800 (31-1/2") universal cable is included	Part no.
Bottom bracket, double for two drive units	**Z10D7201.01**
Installation screw	**606N or 606P**

Drive unit		
B 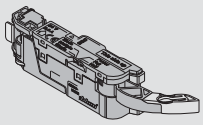		Part no.
Installation	**pg 63**	Drive unit	**Z10A3000.03**

SERVO-DRIVE locking device with integrated bumper	
C Provides **3** (1/8") gap	Part no.
SERVO-DRIVE locking device, left	**T51.1901.PS L**
SERVO-DRIVE locking device, right	**T51.1901.PS R**

© 2017 Blum, Inc. Subject to technical modifications without notice

Inset bottom bracket

Waste/recycle set

Set includes:

- Adapter plate
- Drive unit (pre-attached)
- Double bottom bracket (additional drive unit can be attached)
- 110v plug-in power supply with six foot cable
- Screw-on distance bumpers (qty 4)
- INSERTA cable connector
- Mounting template and instruction sheet
- All necessary mounting screws are included

			Part no.
Details	pg 56	Waste/recycle set	Z10NA30UGUS

Power supply set

Set includes:

- 19 ft universal cable
- 24 watt power supply
- Wall mount bracket
- Three-prong power cord
- Cable end protector (qty 3)
- INSERTA cable connector
- Cable clips (qty 10)
- Technical information

			Part no.
Details	pg 57	Power supply set	Z10NE03UG10

© 2017 Blum, Inc.

TANDEM plus BLUMOTION

Specifications

Space requirements

For opening widths **340** (13-3/8") and wider

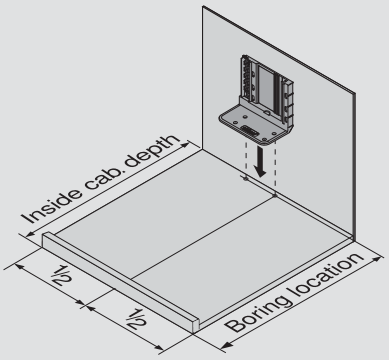

For opening widths **275** to **339** (10-13/16" – 13-3/8")

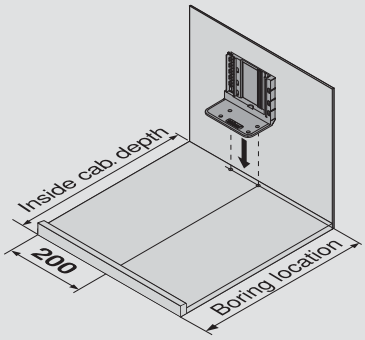

Boring specifications

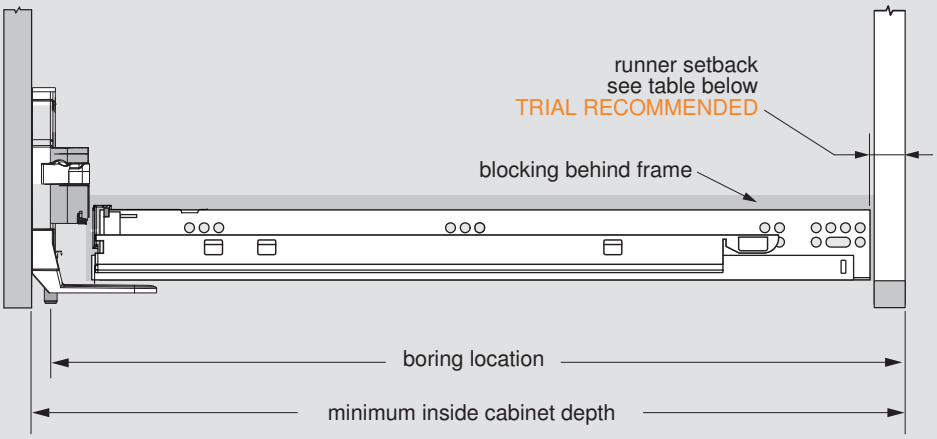

boring location requirements
boring location = drawer length + **21** (13/16") + runner setback
minimum inside cabinet depth = drawer length + **38** (1-1/2") + runner setback

Mounting the TANDEM runner for inset application

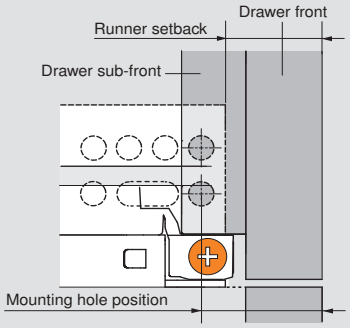

NOTE: Runner cannot be mounted below opening

563/569 H/.		runner setback		
sub-front thickness	**13** (1/2")	**20** (25/32")	**23** (29/32")	**26** (1-1/32")
	16 (5/8")	**23** (29/32")	**26** (1-1/32")	**29** (1-5/32")
	19 (3/4")	**26** (1-1/32")	**29** (1-5/32")	**32** (1-1/4")
		16 (5/8")	**19** (3/4")	**22** (7/8")
		drawer front thickness		

563/569 F/A		runner setback		
sub-front thickness	**13** (1/2")	**17** (21/32")	**20** (25/32")	**23** (29/32")
	16 (5/8")	**20** (25/32")	**23** (29/32")	**26** (1-1/32")
	19 (3/4")	**23** (29/32")	**26** (1-1/32")	**29** (1-5/32")
		16 (5/8")	**19** (3/4")	**22** (7/8")
		drawer front thickness		

- Setbacks in this table recess the face of the drawer front inside of the cabinet **1** (1/32")
- The depth adjustment can then be used to move the drawer front out to its desired position, **2.5** (3/32") out adjustment only

calculating runner setback
563/569 H/. (sub-front thickness + drawer front thickness minus **9** (11/32") = runner setback)
563/569 F/A (sub-front thickness + drawer front thickness minus **12** (15/32") = runner setback)
NOTE: For mounting hole position, add **7** (9/32") to runner setback

© 2017 Blum, Inc. Subject to technical modifications without notice

Inset bottom bracket

Boring specifications

Bottom boring pattern

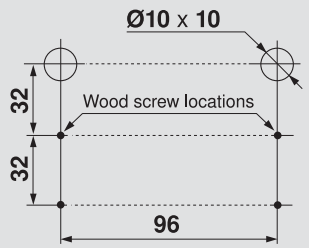

SERVO-DRIVE locking device with integrated bumper

- Captive right device and self-aligning left device
- Self-adjusting drawer length tolerance
- Minimum inside drawer width **170** (6-11/16")
- Height adjustment +**3** (1/8")
- Side adjustment ±**1.5** (1/16")
- Depth adjustment +**2.5** (3/32"), preset at **0**
- Minimum sub-front thickness **13** (1/2")
- Designed for **13** (1/2") drawer bottom recess
- Integrated **3** (1/8") distance bumper for inset or overlay SERVO-DRIVE applications

Installation **pg 64**

Installation of bottom bracket

1 Insert locating pins into pre-bored holes

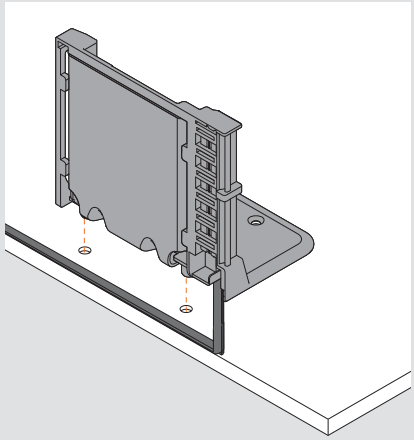

2 Secure with four wood screws (606N or 606P)

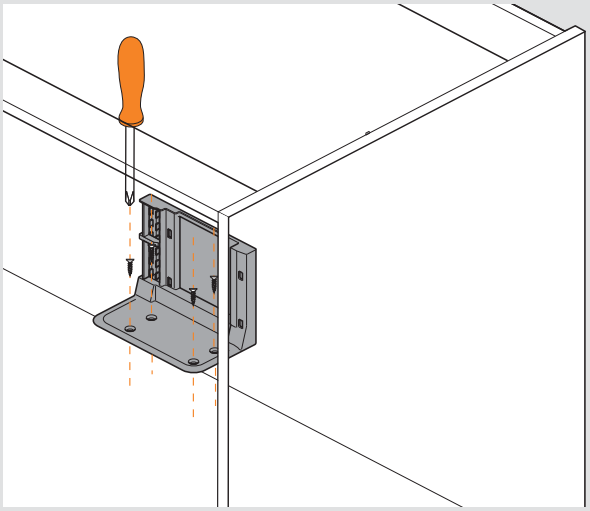

Drive unit attachment

Bottom bracket for attachment of one or two drive units

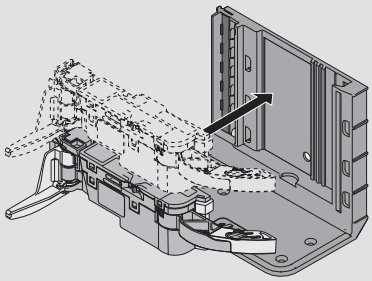

Wiring options **pg 61**

TANDEM inset spacer

For applications where there would not be enough space behind the drawer box to add SERVO-DRIVE due to cabinet construction, plumbing, etc. Two required per drawer.

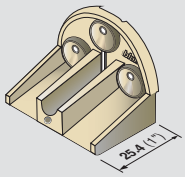

	Part no.
TANDEM spacer	**T59.A5P0S**
Installation screw	**606N or 606P**

© 2017 Blum, Inc.

TANDEMBOX

Vertical aluminum profile

A Profile can be cut to size

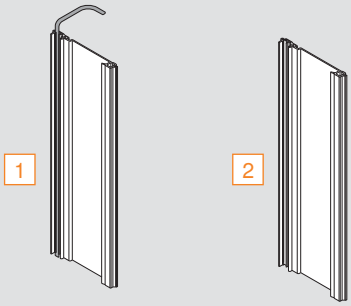

*cable length **800** (31-1/2")	Part no.
1 Profile with cable, length **720** (28-3/8")*	**Z10T720AB**
1 Profile without cable, length **1170** (46")	**Z10T1170A**

Top and bottom adapter set

B For use with horizontal stretcher rail

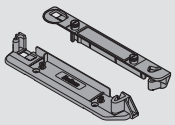

	Part no.
Top and bottom adapter set	**Z10D01E0.01**

Back and bottom adapter set

B For use with back stretcher rail

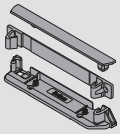

	Part no.
Back and bottom adapter set with cover cap	**Z10D01EA.01**

© 2017 Blum, Inc. Subject to technical modifications without notice

Vertical aluminum profile

Drive unit

C

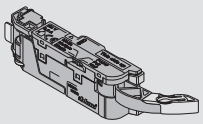

		Part no.
Installation pg 63	Drive unit	Z10A3000.03

Blum distance bumper

D Provides **3** (1/8") gap

1

2

		Part no.
	1 Ø5 mm bumper	993.0531
Specifications pg 60	2 Screw-on bumper	993.1220

Power supply set

Set includes:

- 19 ft universal cable
- 24 watt power supply
- Wall mount bracket
- Three-prong power cord
- Cable end protector (qty 3)
- INSERTA cable connector
- Cable clips (qty 10)
- Technical information

		Part no.
Details pg 57	Power supply set	Z10NE03UG10

© 2017 Blum, Inc.

TANDEMBOX top and bottom adapter

Specifications

Space requirements

For opening widths **420** (16-9/16") and wider

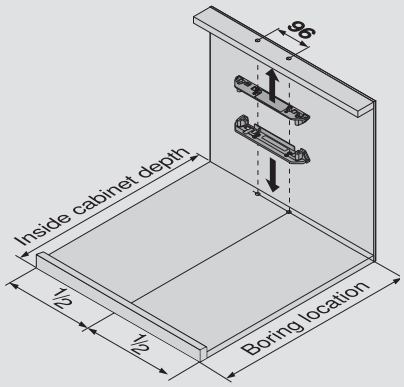

For opening widths **275** to **419** (10-13/16" – 16-1/2")

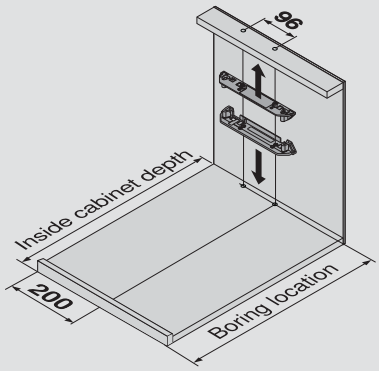

boring location requirements								
profile length	**270** (10-5/8")	**350** (13-3/4")	**400** (15-3/4")	**450** (17-11/16")	**500** (19-11/16")	**550** (21-5/8")	**600** (23-5/8")	**650** (25-9/16")
boring location	**289** (11-3/8")	**369** (14-1/2")	**419** (16-1/2")	**469** (18-7/16")	**519** (20-7/16")	**569** (22-3/8")	**619** (24-3/8")	**669** (26-5/16")
min. inside cabinet depth	**306** (12-1/16")	**386** (15-3/16")	**436** (17-3/16")	**486** (19-1/8")	**536** (21-1/8")	**586** (23-1/16")	**636** (25-1/16")	**686** (27")

NOTE: 41 (1-5/8") is required between drawer back and back panel

Boring specifications

Top and bottom boring pattern

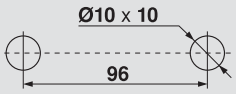

Calculating vertical profile length

Profile length = inside cabinet height minus **19** (3/4")

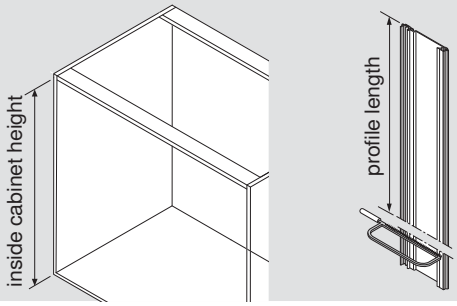

Installing vertical aluminum profile

1 Set profile onto bottom adapter
2 Push profile toward left side while engaging top
3 Push back on right side and snap into place

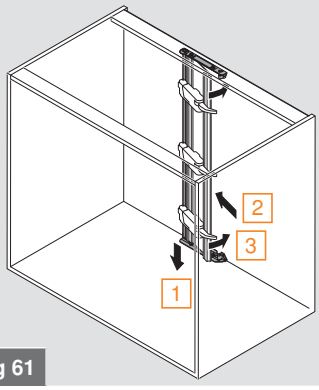

Wiring options **pg 61**

Positioning the drive unit

Lever arm should contact center of drawer back

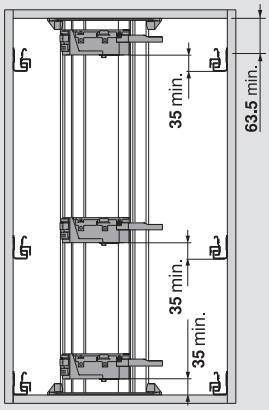

© 2017 Blum, Inc. Subject to technical modifications without notice

TANDEMBOX back and bottom adapter

Specifications

Space requirements

For opening widths **420** (16-9/16") and wider

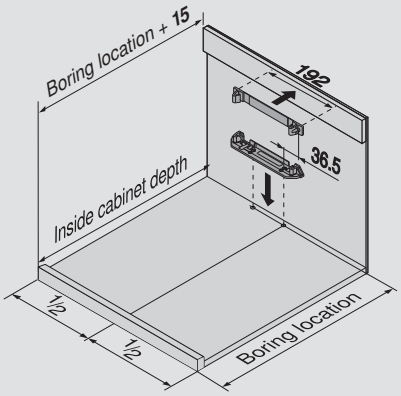

For opening widths **275** to **419** (10-13/16" – 16-1/8")

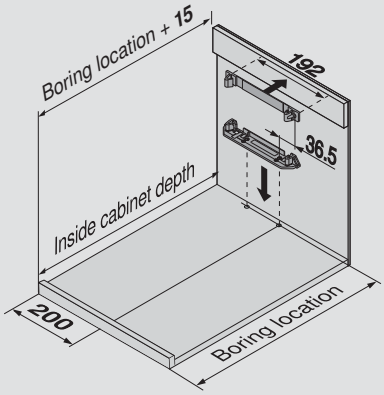

boring location requirements								
profile length	**270** (10-5/8")	**350** (13-3/4")	**400** (15-3/4")	**450** (17-11/16")	**500** (19-11/16")	**550** (21-5/8")	**600** (23-5/8")	**650** (25-9/16")
boring location	**289** (11-3/8")	**369** (14-1/2")	**419** (16-1/2")	**469** (18-7/16")	**519** (20-7/16")	**569** (22-3/8")	**619** (24-3/8")	**669** (26-5/16")
min. inside cabinet depth	**306** (12-1/16")	**386** (15-3/16")	**436** (17-3/16")	**486** (19-1/8")	**536** (21-1/8")	**586** (23-1/16")	**636** (25-1/16")	**686** (27")

NOTE: 41 (1-5/8") is required between drawer back and back panel

Boring specifications

Back screw positioning

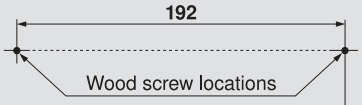

Bottom boring pattern

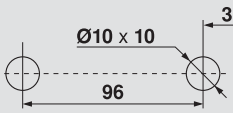

Determining vertical profile length

Profile length is dependent upon back adapter location

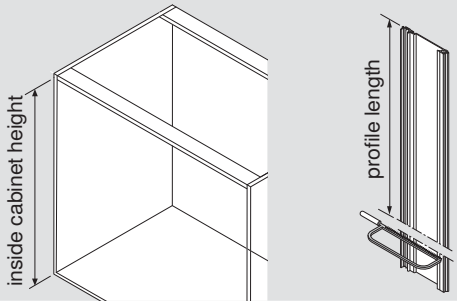

Installing vertical aluminum profile

1. Set profile onto bottom adapter
2. Push profile toward back while engaging adapter
3. Snap cover cap onto top of profile

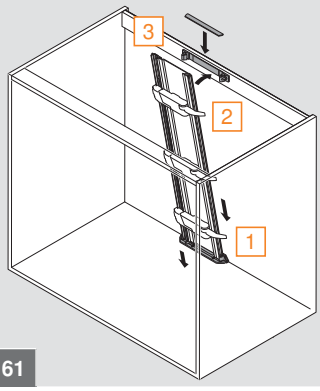

Wiring options **pg 61**

Positioning the drive unit

Lever arm should contact center of drawer back

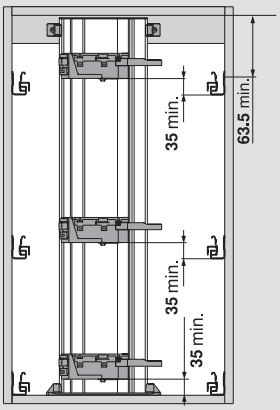

Dimensions in millimeters (inch equivalents as noted)

© 2017 Blum, Inc.

TANDEMBOX

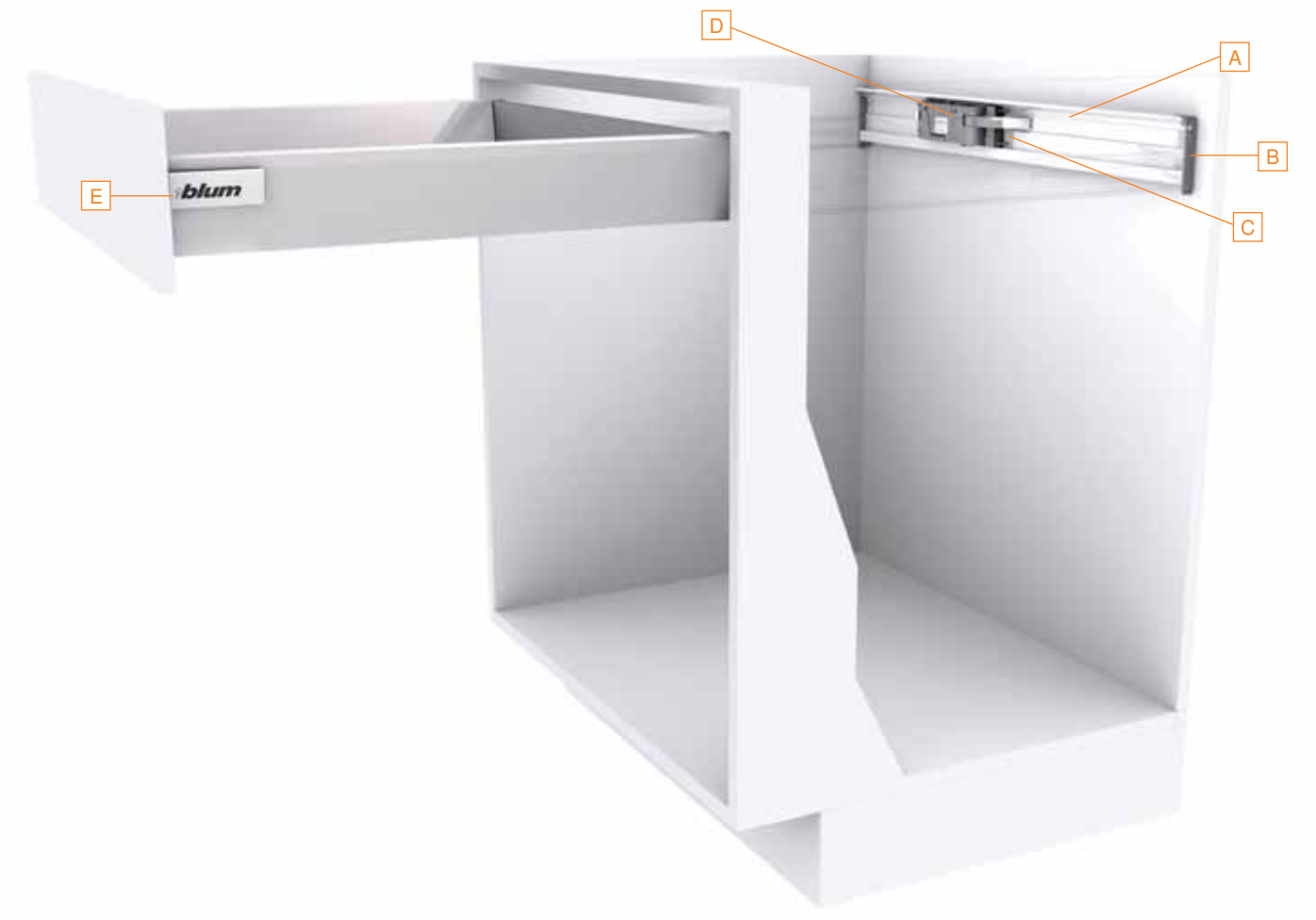

Horizontal aluminum profile	
A 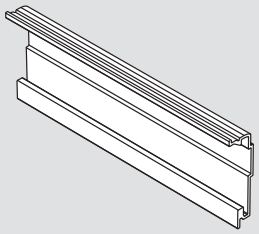	
	Part no.
Profile length **1143** (45"), cut to size	**Z10T1143B**

Adapter set for horizontal aluminum profile, panel

Set includes:

- Panel adapters (left and right)
- Profile adapter
- Installation template

B 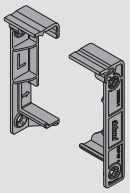

C 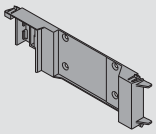

	Part no.
Adapter set for horizontal profile, panel	**Z10D5210.US**
Installation wood screw	**606N or 606P**
Installation system screw	**661.1300.HG**

© 2017 Blum, Inc. Subject to technical modifications without notice

Horizontal aluminum profile

Drive unit

D

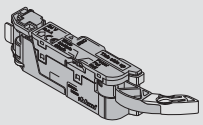

		Part no.
Installation pg 63	Drive unit	Z10A3000.03

Blum distance bumper

E Provides **3** (1/8") gap

1

2

		Part no.
	1 Ø5 mm bumper	993.0531
Specifications pg 60	2 Screw-on bumper	993.1220

Power supply set

Set includes:

- 19 ft universal cable
- 24 watt power supply
- Wall mount bracket
- Three-prong power cord
- Cable end protector (qty 3)
- INSERTA cable connector
- Cable clips (qty 10)
- Technical information

		Part no.
Details pg 57	Power supply set	Z10NE03UG10

 © 2017 Blum, Inc.

TANDEMBOX

Specifications

Space requirements

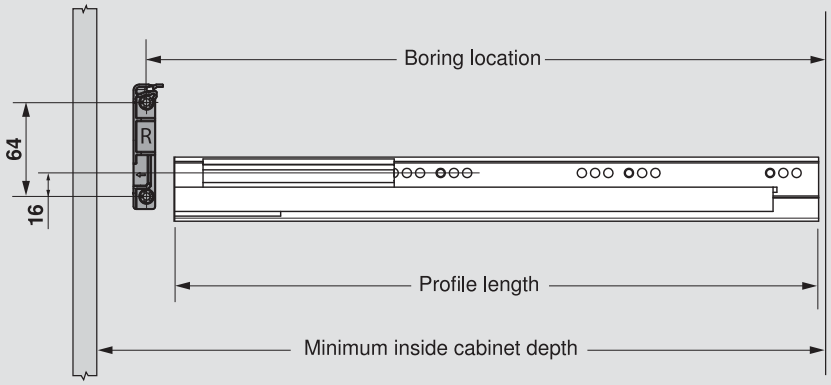

boring location requirements								
profile length	**270** (10-5/8")	**350** (13-3/4")	**400** (15-3/4")	**450** (17-11/16")	**500** (19-11/16")	**550** (21-5/8")	**600** (23-5/8")	**650** (25-9/16")
boring location	**297** (11-11/16")	**377** (14-13/16")	**427** (16-13/16")	**477** (18-3/4")	**527** (20-3/4")	**577** (22-11/16")	**627** (24-11/16")	**677** (26-5/8")
min. inside cabinet depth	**306** (12-1/16")	**386** (15-3/16")	**436** (17-3/16")	**486** (19-1/8")	**536** (21-1/8")	**586** (23-1/16")	**636** (25-1/16")	**686** (27")

NOTE: 41 (1-5/8") is required between drawer back and back panel

Mounting of adapters

1 Set cardboard template onto runner
2 Mark hole position

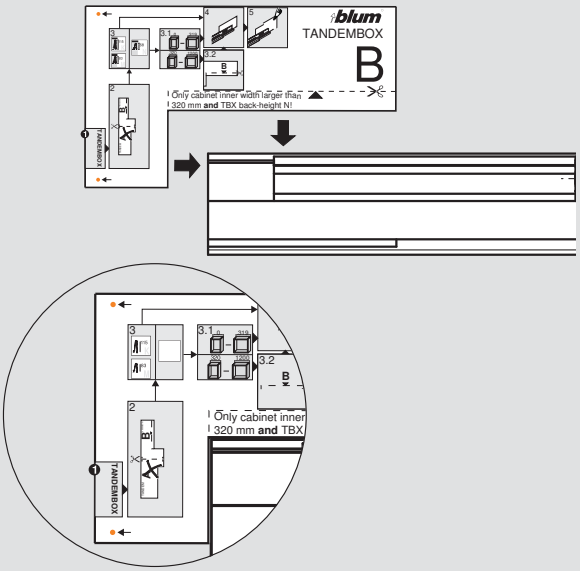

3 Attach with four wood screws (606N or 606P) or four system screws (661.1300.HG)

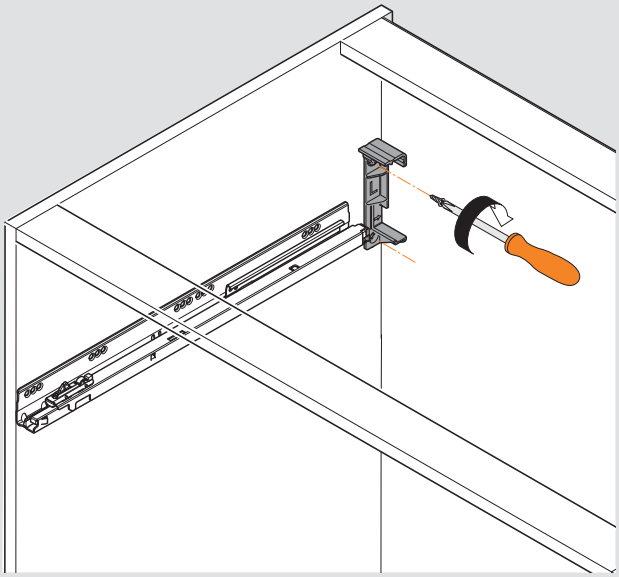

© 2017 Blum, Inc. Subject to technical modifications without notice

Horizontal aluminum profile

Calculating horizontal profile size

Profile length = interior cabinet opening minus **19** (3/4")

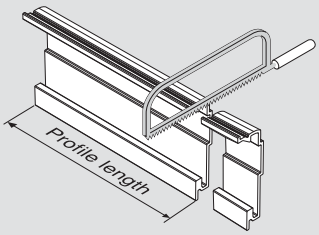

Installing profile adapter onto horizontal profile

1 Place bottom of profile adapter into the bottom slot of profile

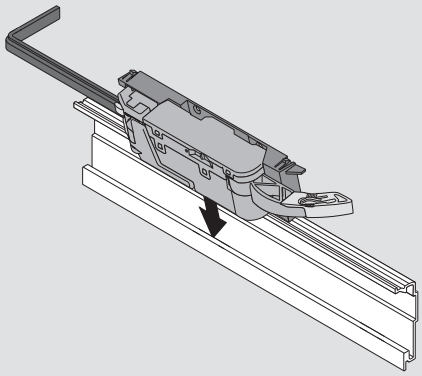

2 Push top of profile adapter toward the back of the profile and snap into place

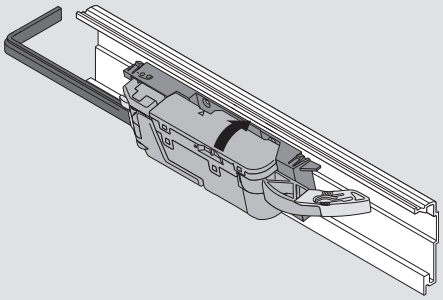

3 Align cable along bottom slot of profile

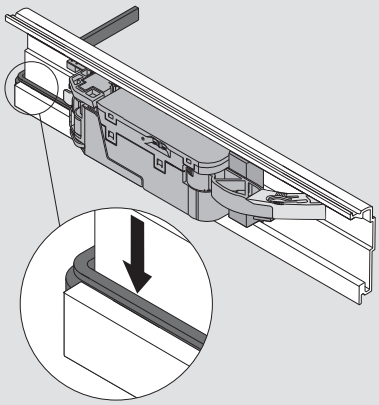

Installing horizontal profile into adapters

1 Slide cable through the notch in the adapter
2 Push horizontal profile toward bottom
3 Slide profile toward left adapter
4 Push top of profile to snap into adapter

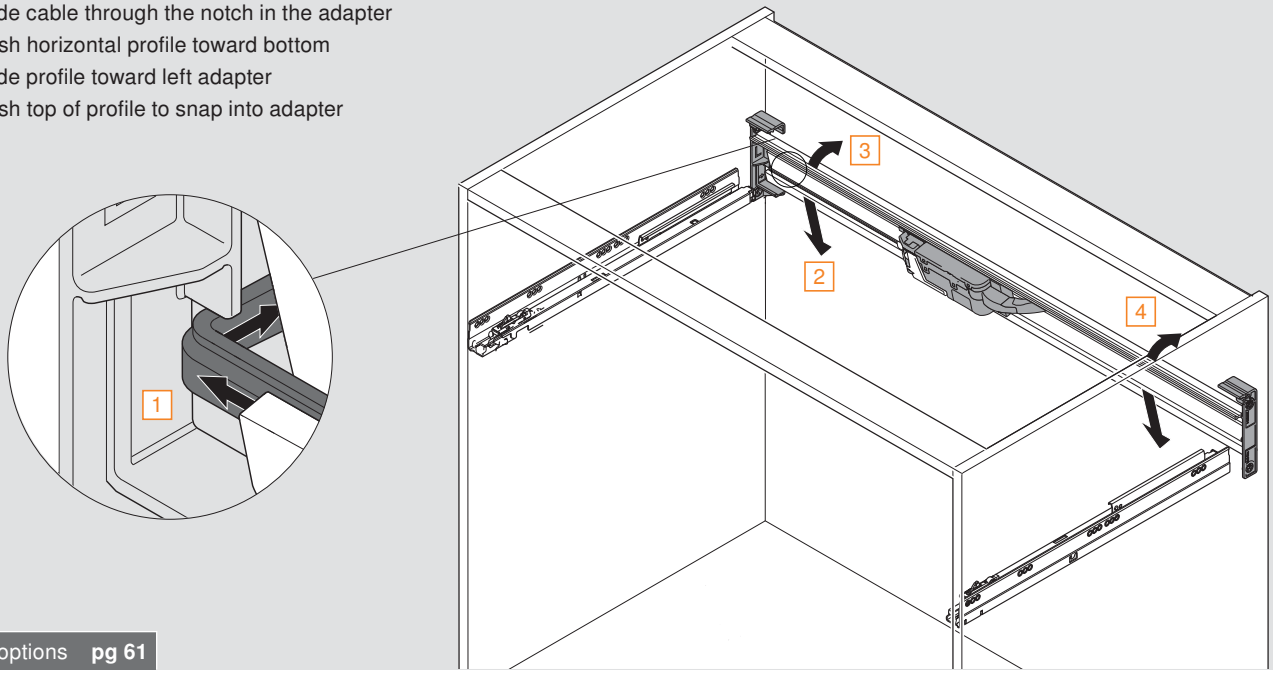

Wiring options **pg 61**

© 2017 Blum, Inc.

TANDEMBOX

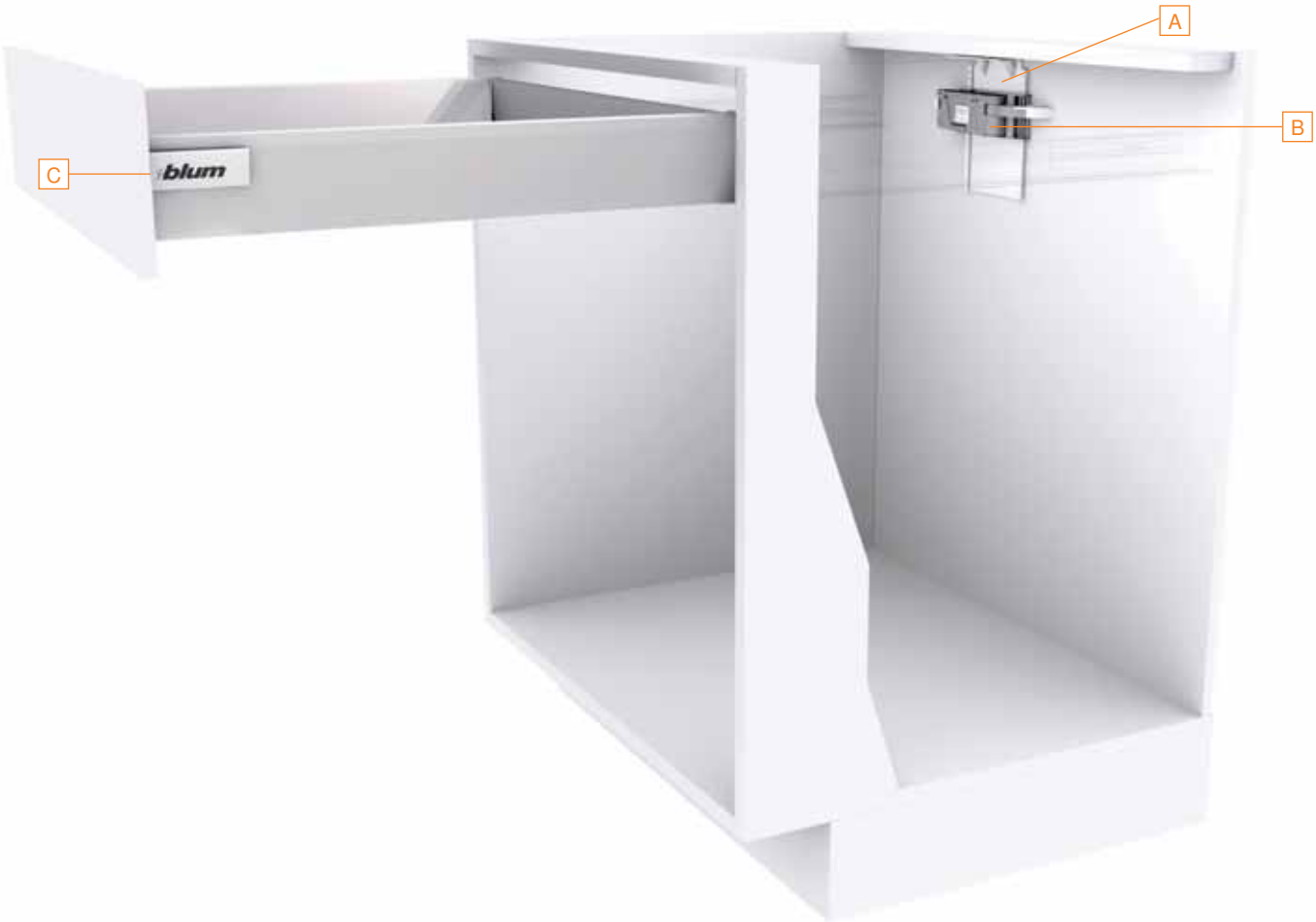

Top bracket with adapter

A

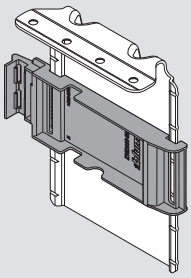

	Part no.
Top bracket with adapter	Z10D6252
Installation screw	661.1300.HG

Drive unit

B

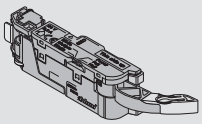

		Part no.
Installation pg 63	Drive unit	Z10A3000.03

Blum distance bumper

C Provides **3** (1/8") gap

1

2

		Part no.
	1 Ø5 mm bumper	993.0531
Specifications pg 60	2 Screw-on bumper	993.1220

© 2017 Blum, Inc. Subject to technical modifications without notice

Top bracket

Power supply set

Set includes:

- 19 ft universal cable
- 24 watt power supply
- Wall mount bracket
- Three-prong power cord
- Cable end protector (qty 3)
- INSERTA cable connector
- Cable clips (qty 10)
- Technical information

			Part no.
Details	pg 57	Power supply set	Z10NE03UG10

© 2017 Blum, Inc.

TANDEMBOX

Specifications

Space requirements

For opening widths **420** (16-9/16") and wider

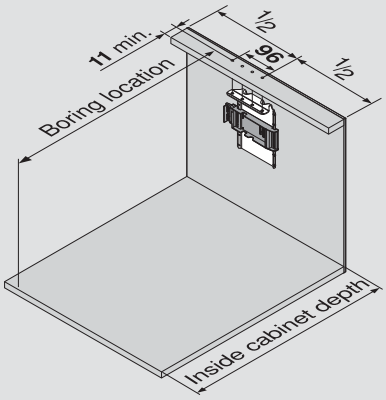

For opening widths **275** to **419** (10-13/16" – 16-1/2") wide

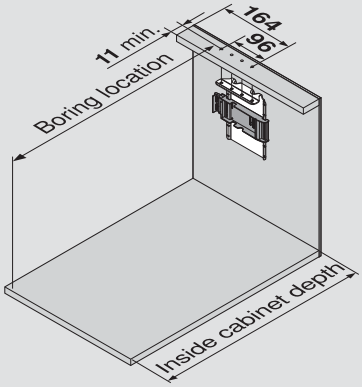

boring location requirements								
profile length	**270** (10-5/8")	**350** (13-3/4")	**400** (15-3/4")	**450** (17-11/16")	**500** (19-11/16")	**550** (21-5/8")	**600** (23-5/8")	**650** (25-9/16")
boring location	**269** (10-9/16")	**349** (13-3/4")	**399** (15-11/16")	**449** (17-11/16")	**499** (19-5/8")	**549** (21-5/8")	**599** (23-9/16")	**649** (25-9/16")
min. inside cabinet depth	**303** (11-15/16")	**383** (15-1/16")	**433** (17-1/16")	**483** (19")	**533** (21")	**583** (22-15/16")	**633** (24-15/16")	**683** (26-7/8")

NOTE: **41** (1-5/8") is required between drawer back and back panel

Boring specifications

Top boring pattern

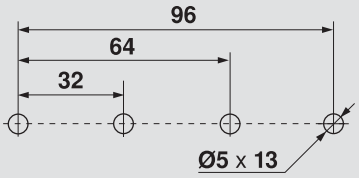

Positioning the drive unit

One drive unit can be positioned anywhere along the height of the bracket

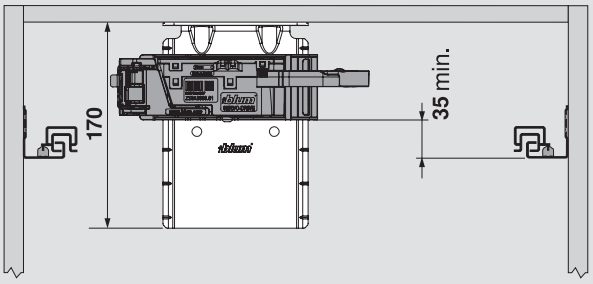

© 2017 Blum, Inc. Subject to technical modifications without notice

Top bracket

Installation of top adapter

1 Feed cable into the drive unit attachment bracket

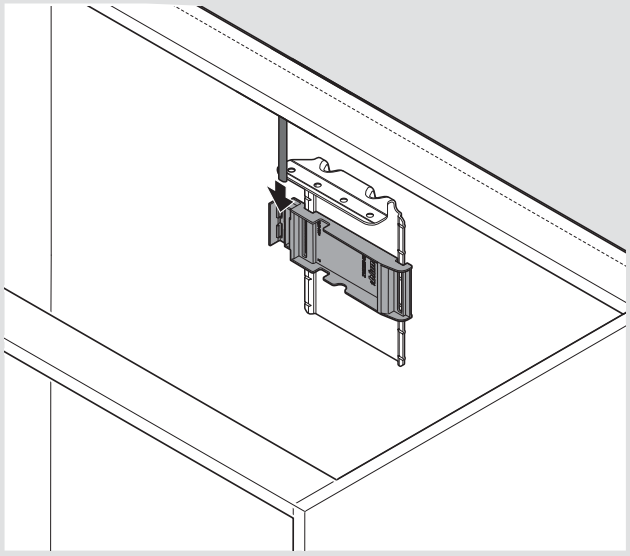

Wiring options **pg 61**

2 Secure with four system screws (661.1300.HG)

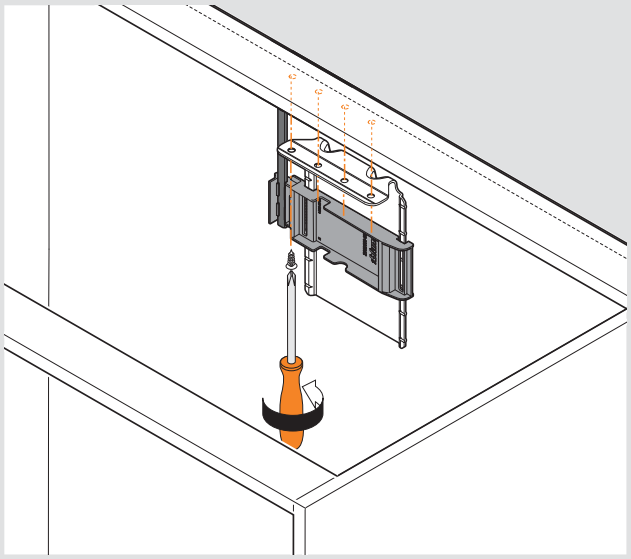

 © 2017 Blum, Inc.

TANDEMBOX

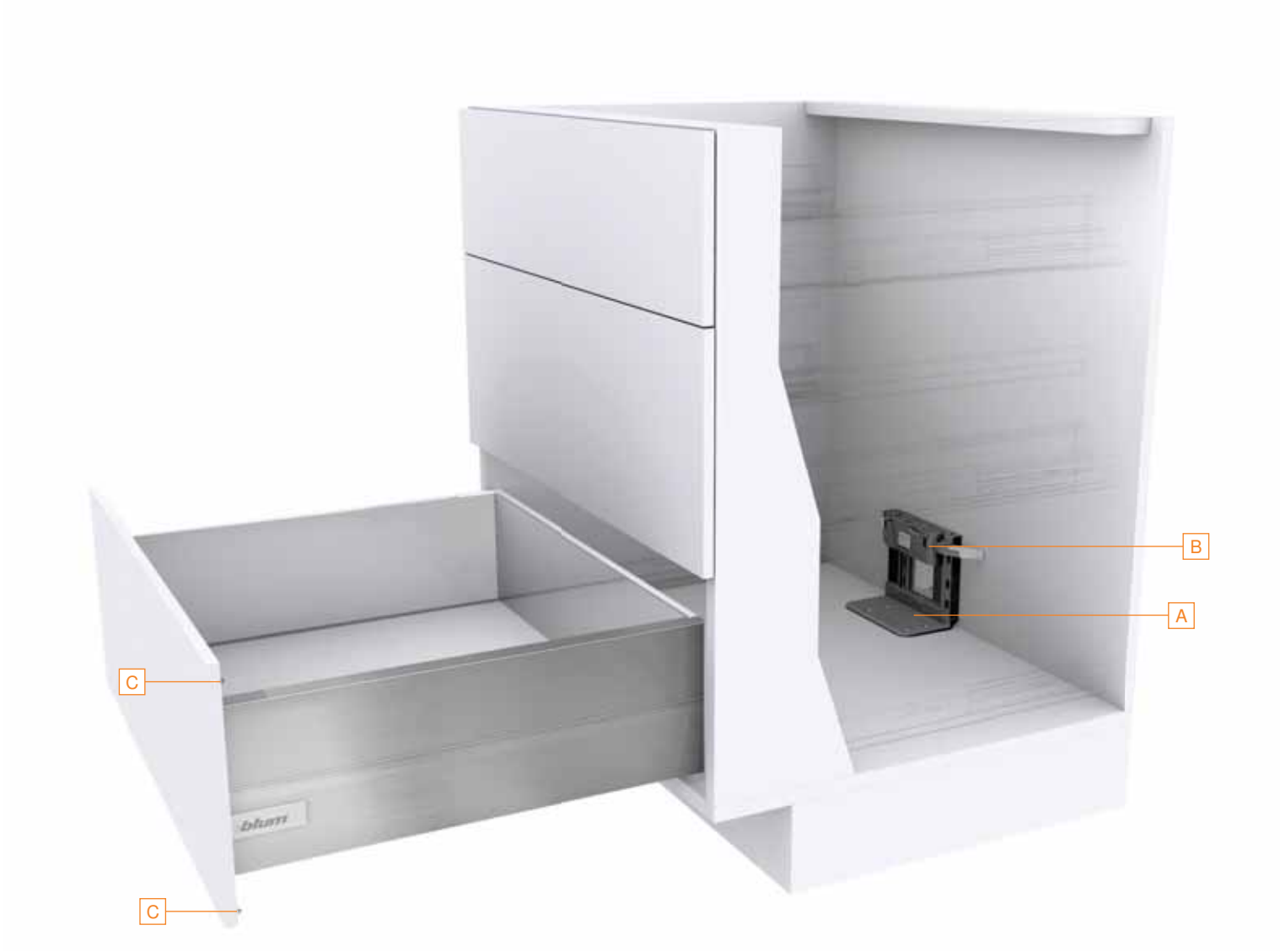

Bottom bracket

A

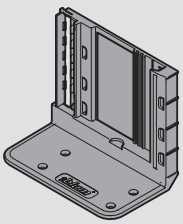

NOTE: 800 (31-1/2") universal cable is included	Part no.
Bottom bracket, double for two drive units	**Z10D7201.01**
Installation screw	**606N or 606P**

Drive unit

B

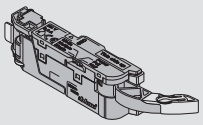

			Part no.
Installation	**pg 63**	Drive unit	**Z10A3000.03**

Blum distance bumper

C Provides **3** (1/8") gap

1

2

			Part no.
		1 Ø5 mm bumper	**993.0531**
Specifications	**pg 60**	2 Screw-on bumper	**993.1220**

© 2017 Blum, Inc. Subject to technical modifications without notice

Bottom bracket

Waste/recycle set

Set includes:

- Adapter plate
- Drive unit (pre-attached)
- Double bottom bracket (additional drive unit can be attached)
- 110v plug-in power supply with six foot cable
- Screw-on distance bumpers (qty 4)
- INSERTA cable connector
- Mounting template and instruction sheet
- All necessary mounting screws are included

		Part no.
Details pg 56	Waste/recycle set	Z10NA30UGUS

Power supply set

Set includes:

- 19 ft universal cable
- 24 watt power supply
- Wall mount bracket
- Three-prong power cord
- Cable end protector (qty 3)
- INSERTA cable connector
- Cable clips (qty 10)
- Technical information

		Part no.
Details pg 57	Power supply set	Z10NE03UG10

© 2017 Blum, Inc.

TANDEMBOX

Specifications

Space requirements

For opening widths **420** (16-9/16") and wider

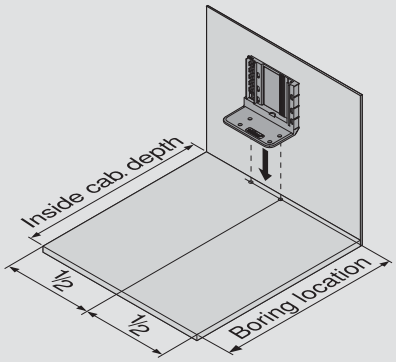

For opening widths **275** to **419** (10-13/16" – 16-1/2") wide

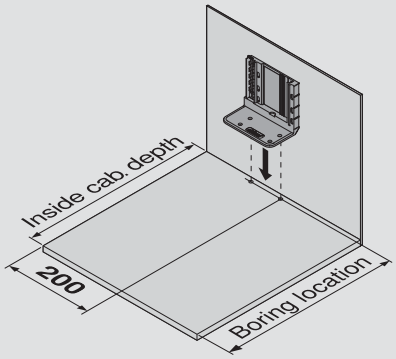

boring location requirements								
profile length	**270** (10-5/8")	**350** (13-3/4")	**400** (15-3/4")	**450** (17-11/16")	**500** (19-11/16")	**550** (21-5/8")	**600** (23-5/8")	**650** (25-9/16")
boring location	**289** (11-3/8")	**369** (14-1/2")	**419** (16-1/2")	**469** (18-7/16")	**519** (20-7/16")	**569** (22-3/8")	**619** (24-3/8")	**669** (26-5/16")
min. inside cabinet depth	**306** (12-1/16")	**386** (15-3/16")	**436** (17-3/16")	**486** (19-1/8")	**536** (21-1/8")	**586** (23-1/16")	**636** (25-1/16")	**686** (27")

NOTE: **41** (1-5/8") is required between drawer back and back panel

Boring specifications

Bottom boring pattern

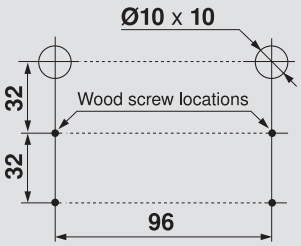

© 2017 Blum, Inc. Subject to technical modifications without notice

Bottom bracket

Installation of bottom bracket

1 Insert locating pins into pre-bored holes

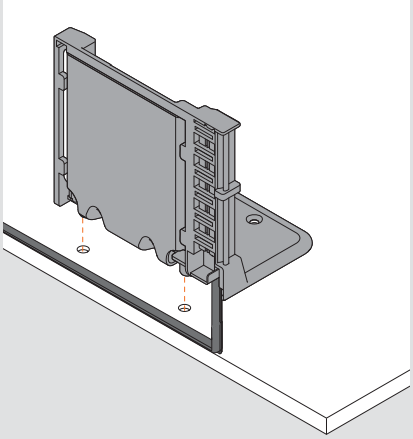

2 Secure with four wood screws (606N or 606P)

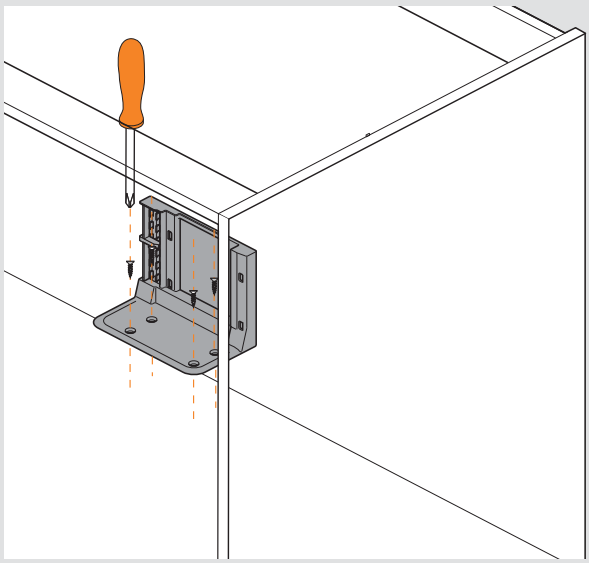

Drive unit attachment

Bottom bracket for attachment of one or two drive units

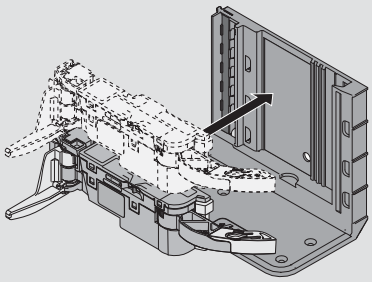

Wiring options **pg 61**

 © 2017 Blum, Inc.

Waste/recycle set

Everything you need

The waste/recycle set contains all necessary SERVO-DRIVE components for this application including technical information and cardboard boring templates. This makes order processing easy. One part number is all that is required. The installer has everything necessary for installation.

Easy installation

SERVO-DRIVE is quick and easy to install in waste/recycle applications. In addition, all SERVO-DRIVE components are maintenance free and comply with all safety standards.

For more information and specifications on TANDEM, TANDEMBOX and SERVO-DRIVE waste/recycle sets please see the Waste/recycle set brochure.

TANDEMBOX

TANDEM

SERVO-DRIVE waste/recycle set

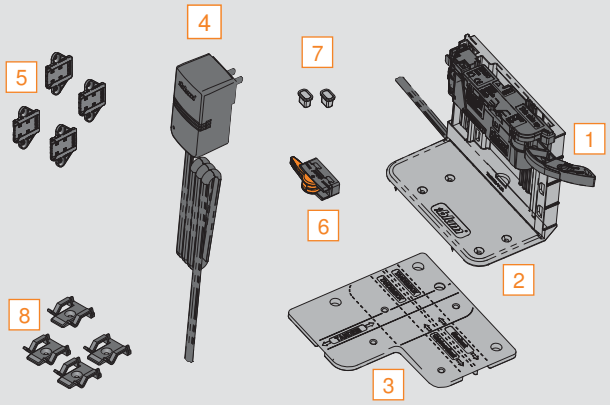

Set includes:

1. Drive unit (pre-attached)
2. Double bottom bracket with #6 x 1" wood screws (qty 2)
3. Adapter plate
4. 110 volt plug-in power supply with six foot of universal cable
5. Screw-on distance bumpers (qty 4) with #6 x 5/8" wood screws for installation (qty 8)
6. INSERTA cable connector
7. Cable end protectors (qty 2)
8. Cable clips (qty 4)

■ Installation template, instructions and user manual

	Part no.
SERVO-DRIVE waste/recycle set	**Z10NA30UGUS**

NOTE: Power supply will operate up to two drive units in a double bottom bracket application (second drive unit sold separately)

© 2017 Blum, Inc. Subject to technical modifications without notice

Power supply set

One or two sets: based on your kitchen layout

One or two power supply sets may be needed depending on your kitchen layout. When the cabinets are placed directly next to each other, one set may be enough. Two sets are required for an island kitchen or a double row "galley" kitchen.

Various kitchen layouts

One power supply set:

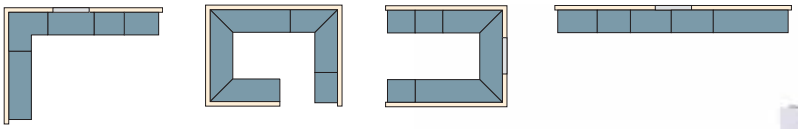

L shaped G shaped U shaped Line

Two power supply sets:

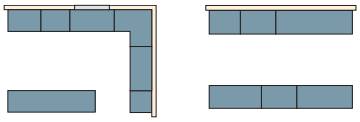

L with island Galley

Power supply components

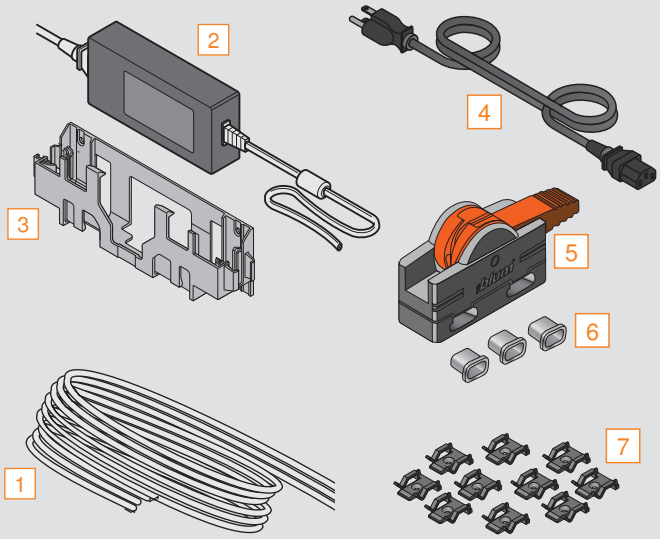

Supplies power to the drive units

Set includes:

- 1 19 ft universal cable
- 2 24 watt power supply
- 3 Wall mount bracket
- 4 Three-prong cord
- 5 INSERTA cable connector
- 6 Cable end protector (qty 3)
- 7 Cable clips (qty 10)
- Installation template, instructions and user manual

	Part no.
Power supply set	Z10NE03UG10

 © 2017 Blum, Inc.

Electrical components

SERVO-DRIVE power supply

Components

Supplies power to the drive units

- Energy Star Level VI
- UL certified
- Can power up to 50 drive units
- Connect to switched GFCI outlet
- Cable length is six foot

NOTE: Three-prong power cord required

	Part no.
Power supply	**Z10NE030G**

Specifications

Input specifications	
Input voltage	100-240 VAC
Input frequency	50-60 Hz
Input current	0.6 A
Inrush current	100 A maximum at 240 VAC
Protection class	Class I
Earth leakage current	3.5 mA maximum

General specifications	
Efficiency	≥ 87%
Switching frequency	65 kHz typical
No load loss (standby)	< 0.075 W
Energy Star	Level VI

Safety / Approvals	
EN / IEC	60950, 60335-1
UL	60950-1

Output specifications	
Output voltage	24 VDC
Output power	24 W continuous
Minimum load	None
Over voltage protection	At 33 VDC
Overload protection	10.5 A hiccup trip and restart mode with auto recovery
Short circuit protection	Continuous

Environmental information	
Operating temperature	32° F to 104° F
Storage temperature	-4° F to 185° F
Protection	IP40

© 2017 Blum, Inc. Subject to technical modifications without notice

Wall mount bracket for power supply

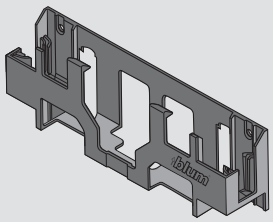

Installation pg 63	Part no.
Wall mount bracket	Z10NG120
Installation screw	606N or 606P

Power cord with three-prong plug

Must be plugged into a switched GFCI outlet

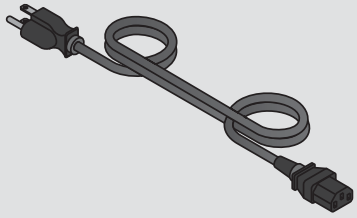

	Part no.
Power cord with three-prong plug	Z10M200U

INSERTA cable connector

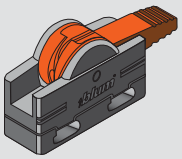

Installation pg 62	Part no.
INSERTA cable connector	Z10V1000.01

Cable clip

Adhesive back and/or screw-on

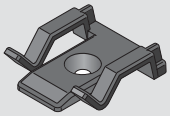

	Part no.
Cable clip	Z10K0009
Installation screw	606N or 606P

INSERTA cable connector set

Set includes:

- INSERTA cable connector
- Cable end protector (qty 2)

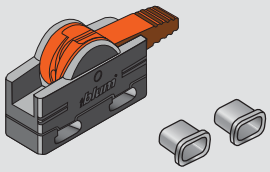

	Part no.
Cable connector set	Z10V100E.01

Synchronization cables

Installation pg 64	Part no.
80 (3") syncronization cable	Z10K008S
1200 (4') syncronization cable	Z10K120S

Universal cable

Length 26 ft with five cable end protectors

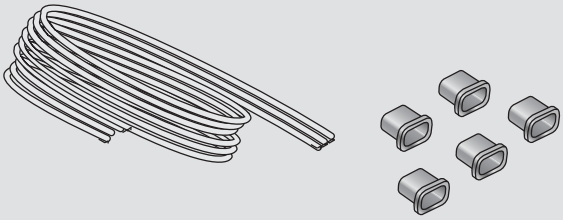

	Part no.
Universal cable	Z10K800AE

Cable end protector

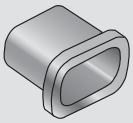

	Part no.
Cable end protector	Z10K0008

© 2017 Blum, Inc.

Distance bumpers

Drawer front distance bumper

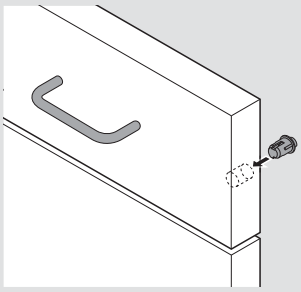

- For drawer heights **305** (12") or less two distance bumpers are required
- Center bumpers vertically left/right side of drawer front

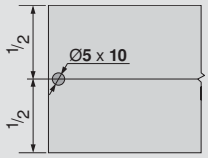

- For drawer heights **305** (12") and greater four distance bumpers are required

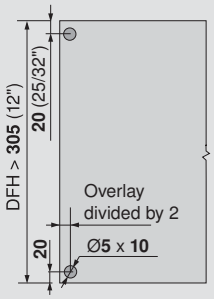

NOTE: Blum distance bumpers provide a travel of **3** (1/8")	Part no.
Ø5 mm bumper	**993.0531**

Screw-on distance bumper

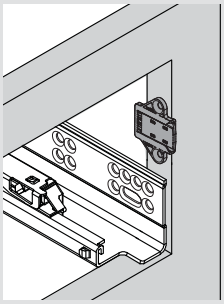

- For use with face frame or panel cabinets
- Can be mounted to side or bottom of cabinet opening
- Pre-bore with Ø2.5 mm drill bit

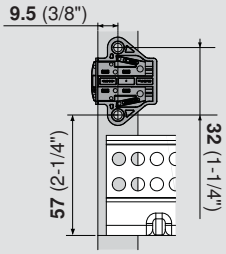

NOTE: Blum distance bumpers provide a travel of **3** (1/8")	Part no.
Screw-on bumper	**993.1220**
Installation screw	**606N or 606P**

SERVO-DRIVE locking device with integrated bumper

- Captive right device and self-aligning left device
- Self-adjusting drawer length tolerance
- Minimum inside drawer width **170** (6-11/16")
- Height adjustment +**3** (1/8")
- Side adjustment ±**1.5** (1/16")
- Depth adjustment +**2.5** (3/32"), preset at **0**
- Minimum sub-front thickness **13** (1/2")
- Designed for **13** (1/2") drawer bottom recess
- Integrated **3** (1/8") distance bumper for inset or overlay SERVO-DRIVE applications

	Part no.
SERVO-DRIVE locking device, left	**T51.1901.PS L**
SERVO-DRIVE locking device, right	**T51.1901.PS R**
Installation screw	**606N or 606P**

Installation pg 64

© 2017 Blum, Inc. Subject to technical modifications without notice

Wiring options

Two base cabinets connected

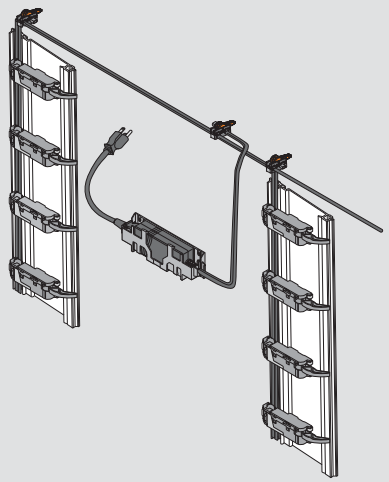

Individual drawer with top bracket

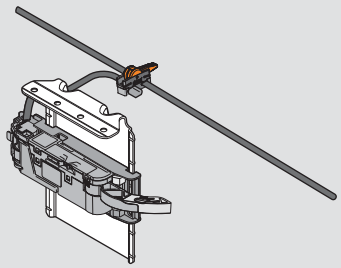

Cabinet with different applications

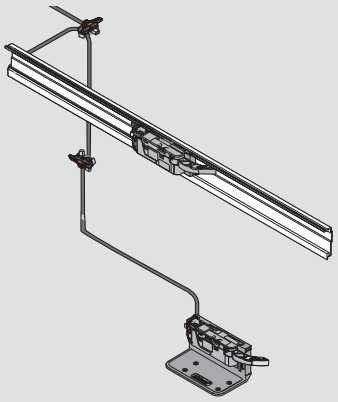

Bottom drawer with bottom bracket

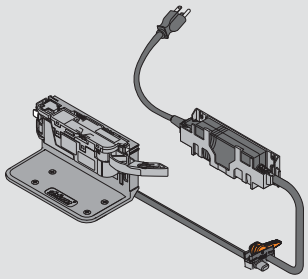

Two drawers connected with synchronization cable

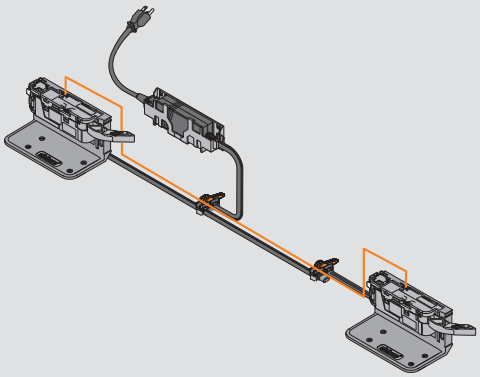

- Required when two drive units should open simultaneously
- Can be used in a variety of applications
- Connects directly to the back of the drive unit
- Available in two different lengths
- Cable color: cream

NOTE: Synchronization cable marked in orange

 © 2017 Blum, Inc.

Assembly/removal

Installing cable onto vertical profile

1 Insert cable for power into the left channel of profile
2 Insert cable for communication into the right channel of profile

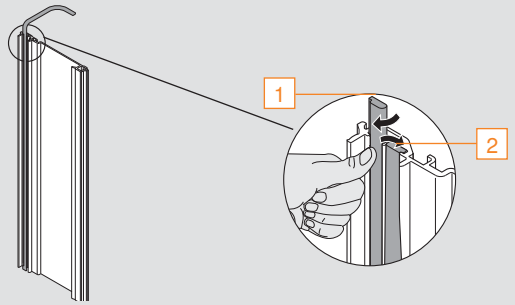

Installing cable onto bottom bracket

Insert cable from the rear of the bottom bracket

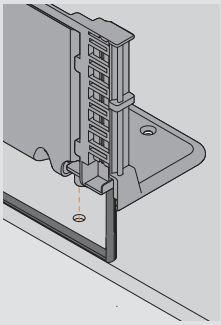

Installing cable onto horizontal profile

1 Insert cable for power into the bottom profile
2 Wrap cable behind profile

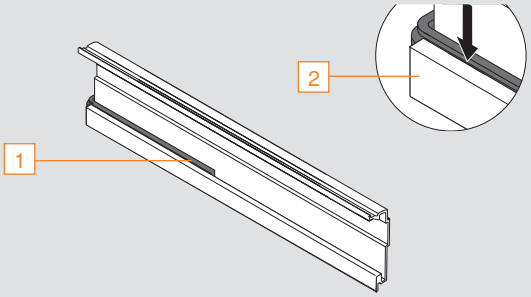

Installing cable onto horizontal adapter

Insert cable for power into the left channel of adapter

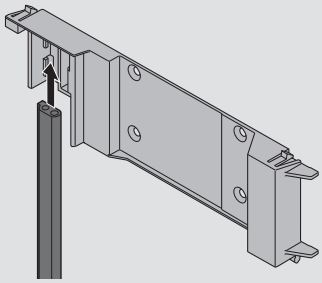

Installing cable connector

1 Insert cable for distribution into open slot
2 Insert cable for power into open slot

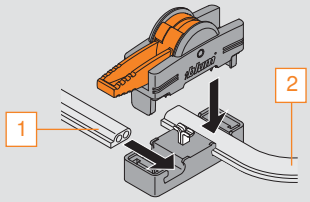

3 Rotate orange lever to lock into place
4 Slide cable end protector over exposed cable

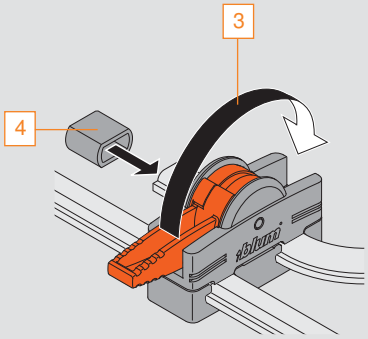

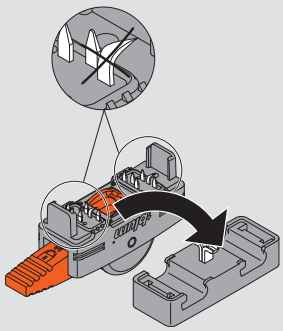

NOTE: Ensure piercing pins are not damaged

© 2017 Blum, Inc. Subject to technical modifications without notice

Installation of power supply

Minimum space requirements

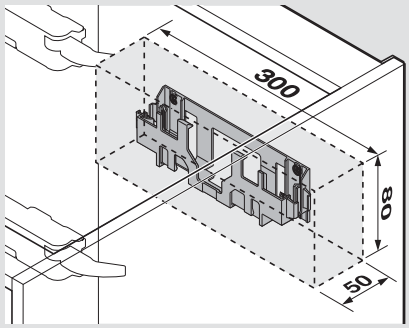

1 Insert power cord into power supply
2 Insert power supply into wall mount bracket

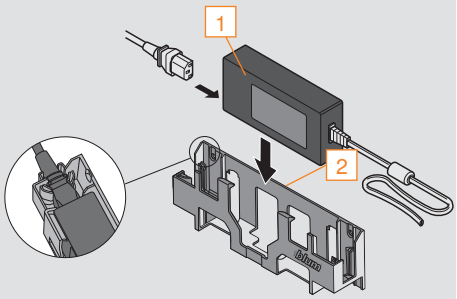

3 Attach wall mount bracket with four 606N or 606P screws

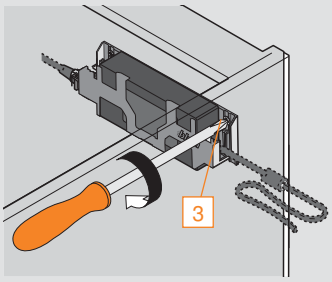

NOTE: Power supply can be mounted horizontally or vertically onto back panel

Drive unit installation

1 Open release lever and insert right hand side of drive unit

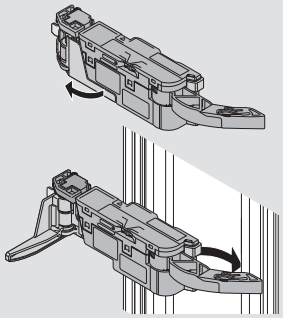

2 Open clip and align onto the profile slot and secure clip

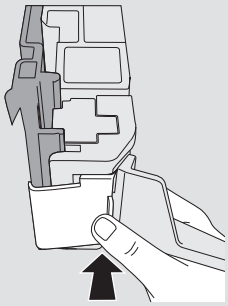

3 Close release lever

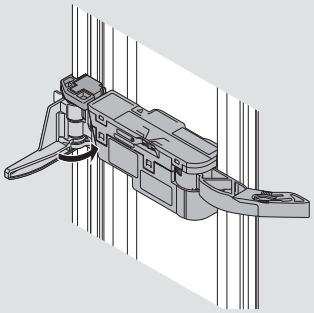

Drive unit removal

1 Open release lever

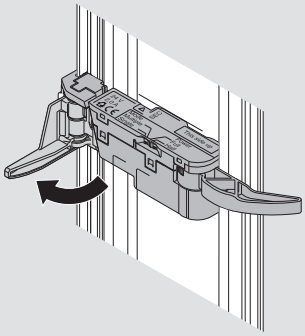

2 Lift up clip

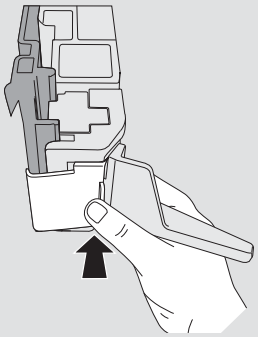

3 Pull outward and lift off profile

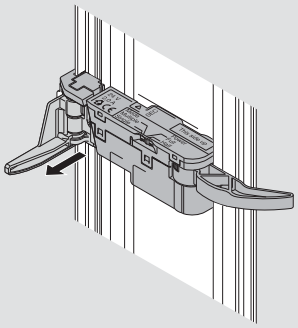

 © 2017 Blum, Inc.

Assembly/removal

Lever arm extension

The drive unit comes with the lever arm extension pre-attached. The lever arm extension must be removed for cabinet widths of **305** (12") or less.

1 Press release button
2 Pull

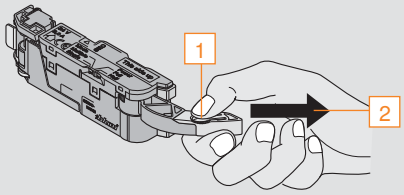

Drive unit adjustment

1 Operating mode display (LED)

2 Selector switch mode
Multiple: when set to "multiple" drive units move simultaneously
Single: only one drive unit moves (standard setting)

3 Selector switch power
Half: use for very small and/or light drawers
Full: standard settings for most applications

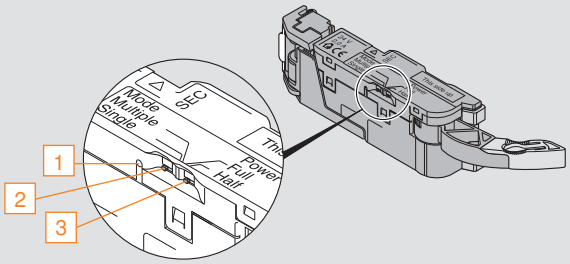

Installing synchronization cable

1 Insert synchronization cable into back of drive unit

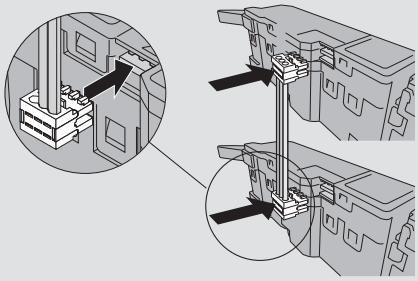

2 Reattach drive units

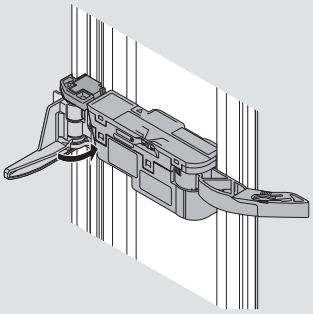

Installing the SERVO-DRIVE locking device

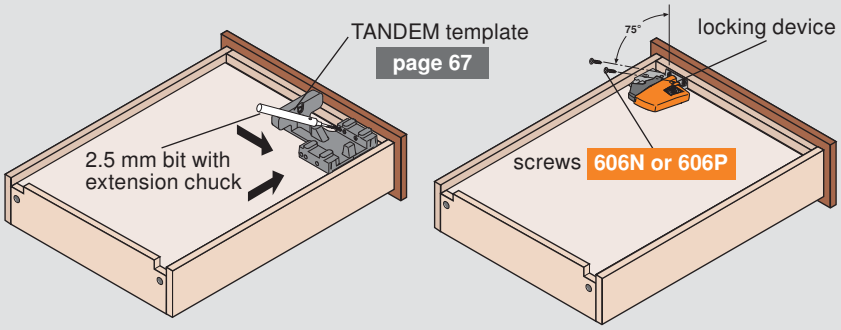

1 Position the 2.5 mm drill bit into the extension chuck so that it will bore **10** (13/32") deep
2 Place template into the front corner of the drawer
3 Bore two holes and repeat on other side
4 Attach locking devices with #6 x 5/8" deep thread wood screws (606N or 606P)

The mounting screws must go in at a precise angle and the locking device must fit flush to the drawer bottom to ensure proper function of the complete drawer system

NOTE: Using the **T65.1600.01** TANDEM template is highly recommended

© 2017 Blum, Inc. Subject to technical modifications without notice

Removing vertical profile from top and bottom adapters

1 Use screwdriver to assist in removing right side of adapters
2 Remove profile from cabinet

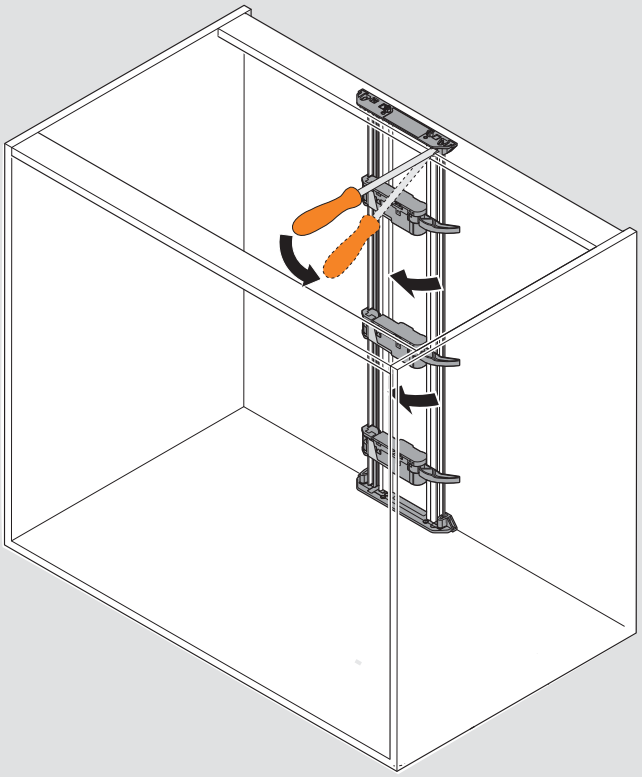

Removing vertical profile from back and bottom adapters

1 Use screwdriver to assist in removing right side of back adapter
2 Remove profile from cabinet

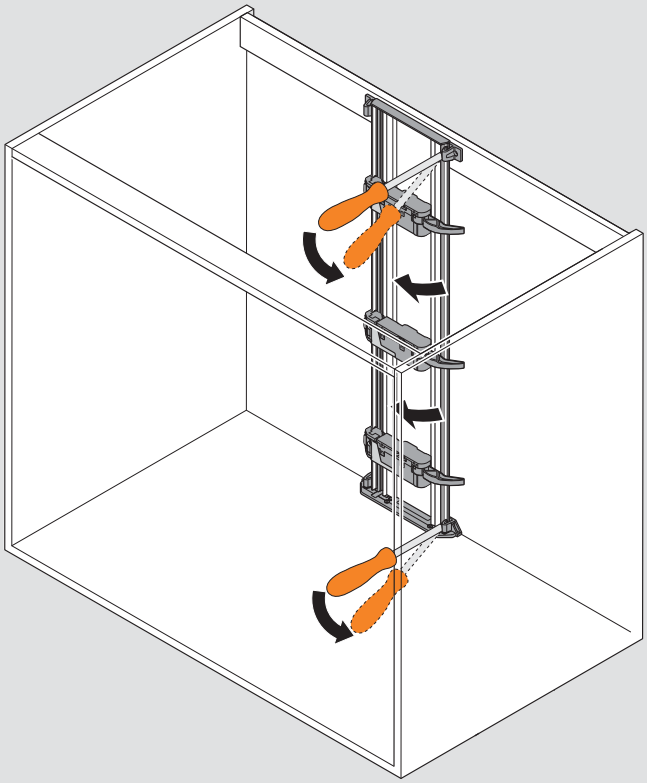

Removing horizontal profile

1 Use screwdriver to assist in removing profile from adapters
2 Remove profile from cabinet

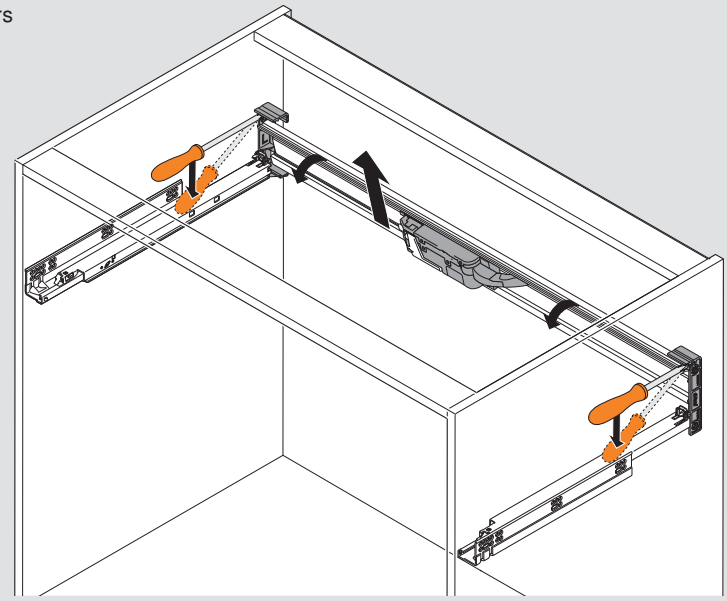

 © 2017 Blum, Inc.

Assembly aids

SERVO-DRIVE boring template

Components

- Used to pre-bore for top and bottom adapters
- Can also be used to pre-bore for bottom bracket
- For use with TANDEM and TANDEMBOX

Includes:
- Template
- Instructions

	Part no.
SERVO-DRIVE boring template	ZML.1150.US
Ø10 mm drill bit	DB-10mm

Using the SERVO-DRIVE boring template

1 Adjust view window to nominal length

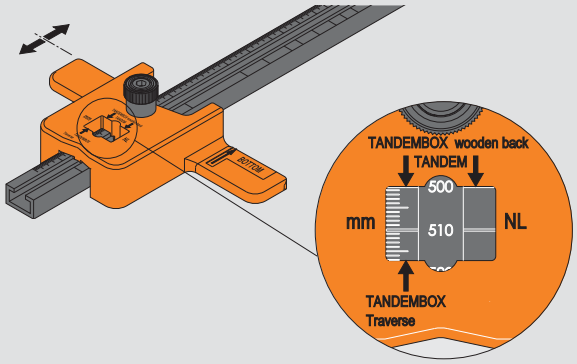

2 Mark center line of cabinet

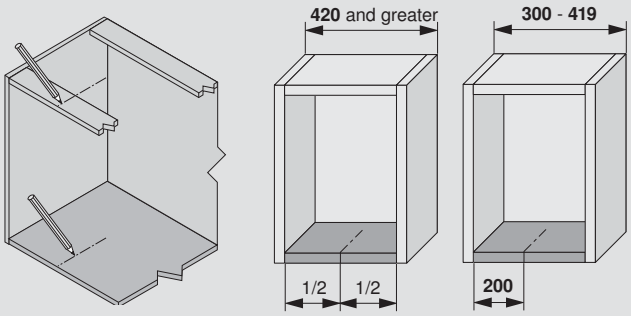

3 Align positioning arrow with center line

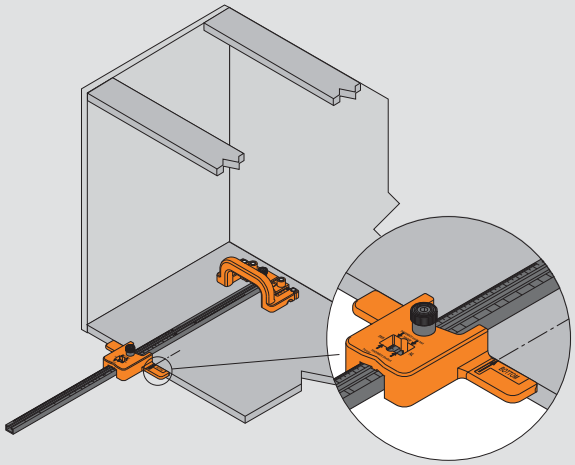

4 Bore two Ø10 mm holes for dowels, repeat for top adapter

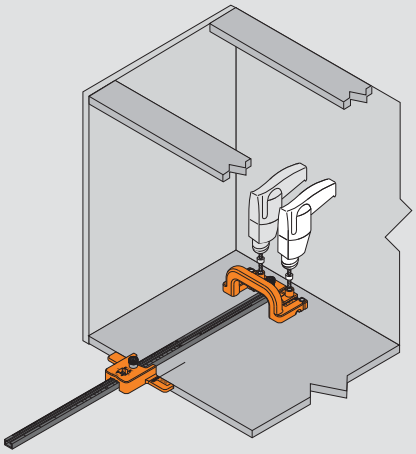

© 2017 Blum, Inc. Subject to technical modifications without notice

TANDEM template

Components

- Essential tool for drawers using TANDEM runners
- To bore the Ø6 mm holes for rear hooks
- Pre-bore Ø2.5 mm hole for TANDEM locking devices at the required angle

	Part no.
TANDEM template	**T65.1600.01**
Accessories (order separately)	
Ø2.5 mm drill bit	**DB-2.5mm**
Ø6 mm drill bit	**DB-6mm**
Tool set	**T65.9000**

Rear notching

Dimensions

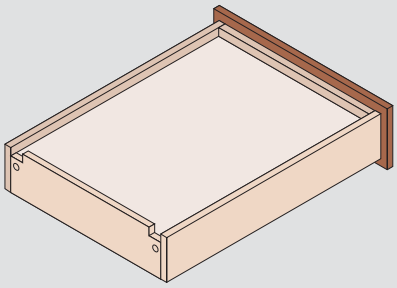

Drawers must be notched in the back to accommodate TANDEM runners

Rear view

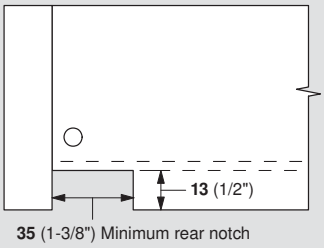

The notches must be flush with the drawer sides and bottom

Option – no notching

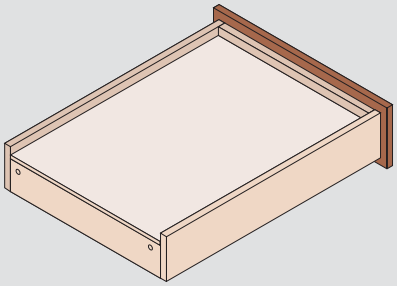

Make the back panel shorter and extend the drawer bottom to the back of the drawer

Rear boring

Dimensions

Rear view

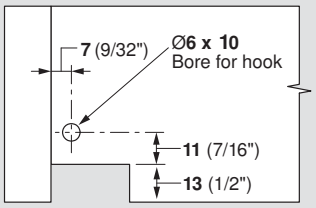

Drawers require 6 mm holes bored on each side of the back panel to accept the hooks on the back of TANDEM runners

Boring

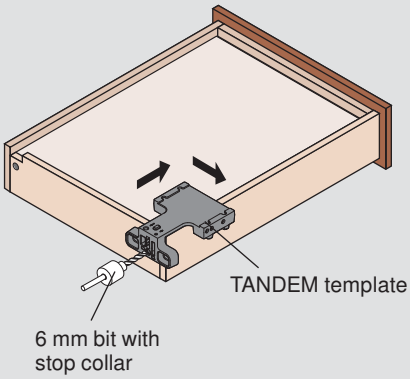

1. Place template over the drawer side
2. Position template so that the center rib rests against the inside face of the drawer side
3. Set stop collar on 6 mm bit so that it will bore **10** (13/32") deep
4. Hold template firmly and bore hole
5. Repeat on other side

NOTE: Using the **T65.1600.01** TANDEM template is highly recommended

© 2017 Blum, Inc.

POZI DRIVER and bits

A POZI screwdriver (different from Phillips) is the most crucial tool you can use to assure that full torque is applied to all Blum POZI mounting screws. POZI screws can be identified by the distinctive “tick” marks located in the center of the screw head recess.

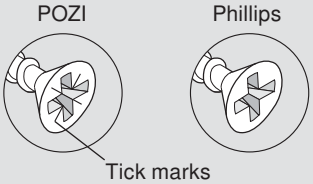

	Part no.
#2 POZI DRIVER	POZI DRIVER
1/4" Magnetic bit holder	BIT HOLDER
#2 x 1" POZI bit insert	POZI BIT #2x1
#2 x 2" POZI bit insert	POZI BIT #2x2

Twist drill bits

	Part no.
Ø2.5 mm, right handed	DB-2.5mm
Ø5 mm, right handed	DB-5mm
Ø6 mm, right handed	DB-6mm
Ø10 mm, right handed	DB-10mm

Deep thread system screw

Pilot bore Ø**5** (3/16") hole

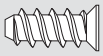

	Part no.
#7 x 13 mm, #2 POZI	661.1300.HG
#7 x 11.5 mm, #2 POZI	661.1150.HG

Deep thread wood screw

Pilot bore Ø**2.5** (3/32") hole

	Part no.
#6 x 5/8", #2 Phillips	606N
#6 x 5/8", #2 POZI	606P

TANDEMBOX front stabilization bracket

For use on tall fronted drawers using SERVO-DRIVE

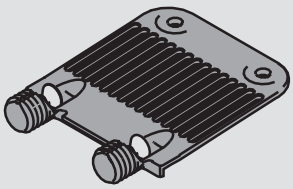

	Part no.
Front stabilization bracket	Z96.10E1

Front stabilization bracket application

Space requirements

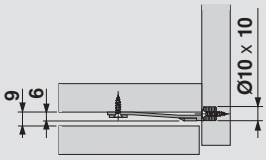

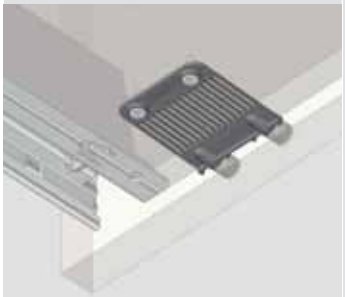

Front boring dimensions

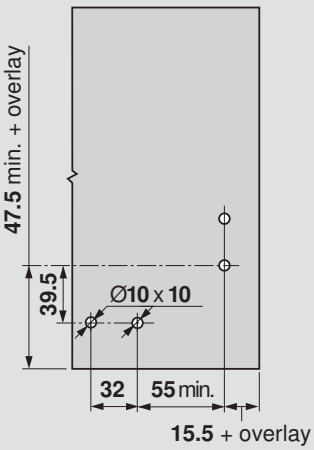

© 2017 Blum, Inc. Subject to technical modifications without notice

Part number index

Part No.	Page No.
606N	32, 36, 39, 44, 52, 59, 60, 68
606P	32, 36, 39, 44, 52, 59, 60, 68
661.1150.HG	68
661.1300.HG	24, 28, 44, 48, 68
993.0531	9, 17, 24, 32, 41, 45, 48, 52, 60
993.1220	9, 17, 24, 32, 41, 45, 48, 52, 60
BIT HOLDER	68
DB-10mm	66, 68
DB-2.5mm	67, 68
DB-5mm	68
DB-6mm	67, 68
POZI BIT #2x1	68
POZI BIT #2x2	68
POZI DRIVER	68
T59.A5P0S	39
T51.1901.PS L	13, 21, 28, 36, 60
T51.1901.PS R	13, 21, 28, 36, 60
T65.1600.01	67
T65.9000	67
Z10A3000.03	9, 12, 17, 21, 24, 28, 32, 36, 41, 45, 48, 52
Z10D01E0.01	8, 12, 40
Z10D01EA.01	8, 40
Z10D5210.US	44
Z10D5800.US	16, 20
Z10D6252	24, 28, 48
Z10D7201.01	32, 36, 52
Z10K0009	59
Z10K008S	59
Z10K120S	59
Z10K800AE	59
Z10M200U	59
Z10NA30UGUS	33, 37, 53, 56
Z10NE030G	58
Z10NE03UG10	9, 13, 17, 21, 25, 29, 33, 37, 41, 45, 49, 53, 57
Z10NG120	59
Z10T1143B	16, 20, 44
Z10T1170A	8, 12, 40
Z10T720AB	8, 12, 40
Z10V1000.01	59
Z10V100E.01	59
Z96.10E1	68
ZML.1150.US	66

 © 2017 Blum, Inc.

Blum, Inc. Headquarters, Stanley NC

Why choose Blum

Blum, Inc. is a leading manufacturer of functional hardware for the kitchen cabinet and commercial casework industries specializing in lift systems, concealed hinges and drawer runner systems. Virtually all of the hardware needed to assemble and make cabinets functional is available within the wide range of quality Blum products. Blum supports the U.S. market with a network of more than 150 dependable distributors, 40+ knowledgeable Blum sales representatives and an experienced customer service department.

Commitment to manufacturing in the U.S.

Blum manufactures many of its products in our 450,000 sq ft manufacturing, logistics and warehouse facility located in Stanley, North Carolina. Manufacturing closer to the customer allows Blum to react quickly to changing customer needs including unexpected surges in demand. Customer pickups and deliveries can be timed to better match their production schedules. Blum is committed to manufacturing in the U.S. for the U.S. market.

Product development at Blum considers all of the various customers who will come in contact with our products. With this “Global Customer Benefits” philosophy we strive to create advantages for all users.

ISO 9001
Certified Quality System

Blum, Inc. is ISO 9001 certified which means that you are assured of consistent quality in every Blum product. They exceed the requirements of ANSI/BHMA standards for cycle life, static load and self-closing performance.

Please visit blum.com for information on other Blum products.
LIT.SDR1000.02.17 © 2017 Blum, Inc. Printed in the USA

Blum, Inc.
7733 Old Plank Rd.
Stanley, NC 28164
800-438-6788
blum.com

FSC www.fsc.org MIX Paper from responsible sources FSC® C102623

ISO 9001 Certified Quality System