AMERICAN SPECIALTIES INC.
441 Saw Mill River Road
Yonkers, NY 10701-4913
914.476.9000 | Fax 914.476.0688

Repair parts list A0165 Hand Dryers

Key	Part #	Description
1	A0021	Cover
2	A0012	Cable clamp
3	A0004	Motor
4	A0005	Rubber grommet -Motor (4 reqd.)
5	A0006	Motor bracket
6	A0007	Nylon washer -Motor (4 reqd.)
7	A0009	Circuit Board Module (CBM)
8	A0022	Barrier plate
9	A0036	Sensor Module, 7" cable
10	A0023	Security hex screw with lock washer (2 reqd.)
11	A0011	Grounding screw with cup washer
12	A0010	Terminal block
13	A0024	Base plate
14	A0014	Blower housing - LH
15	A0013	Thermostat (TLC)
16	A0015	Blower wheel
17	A0037	Heater assembly
18	A0017	Blower housing - RH
19	A0024	Power Transistor (part of item 21)
20	A0018	Security hex wrench
21	A0025	Wire harness (not shown)
22	A0026	Motor brush (2 reqd.)
23	A0001	Rubber grommet - Base (4 reqd.)
24	A0028	Metal washer (4 reqd.)
25	A0029	Nylon bushing (4 reqd.)
26	A0034	Access hole plug
27	A0035	Rating label
28	A0030	Circuit diagram label (not shown)
29	-	Screw (3 reqd. ¯4x8mm), philips pan head
30	-	Screw (4 reqd. ¯1/4"x1-1/2"), philips pan head
31	-	Screw (4 reqd. ¯5x10mm), philips pan head
32	-	Screw (6 reqd. ¯4x10mm), philips pan head
33	-	Screw (2 reqd. ¯3x6mm), philips pan head
34	-	Screw (4 reqd. ¯5x12mm), philips pan head
35	-	Screw (4 reqd. ¯4x6mm), philips pan head
36	-	Screw (1 reqd. ¯4x6mm), headless set (with 2mm hex key)
37	-	Screw (2 reqd. ¯3x16mm), philips pan head
38	-	Screw (1 reqd. ¯4x10mm), philips pan head with external tooth lock washer
39	-	Mylar shield with **L1,N/L2,G** marked
40	-	Wire nuts (2 reqd.) not shown
41	-	Cable ties (2 reqd.) not shown

AMERICAN SPECIALTIES INC.
441 Saw Mill River Road
Yonkers, NY 10701-4913
914.476.9000 | Fax 914.476.0688
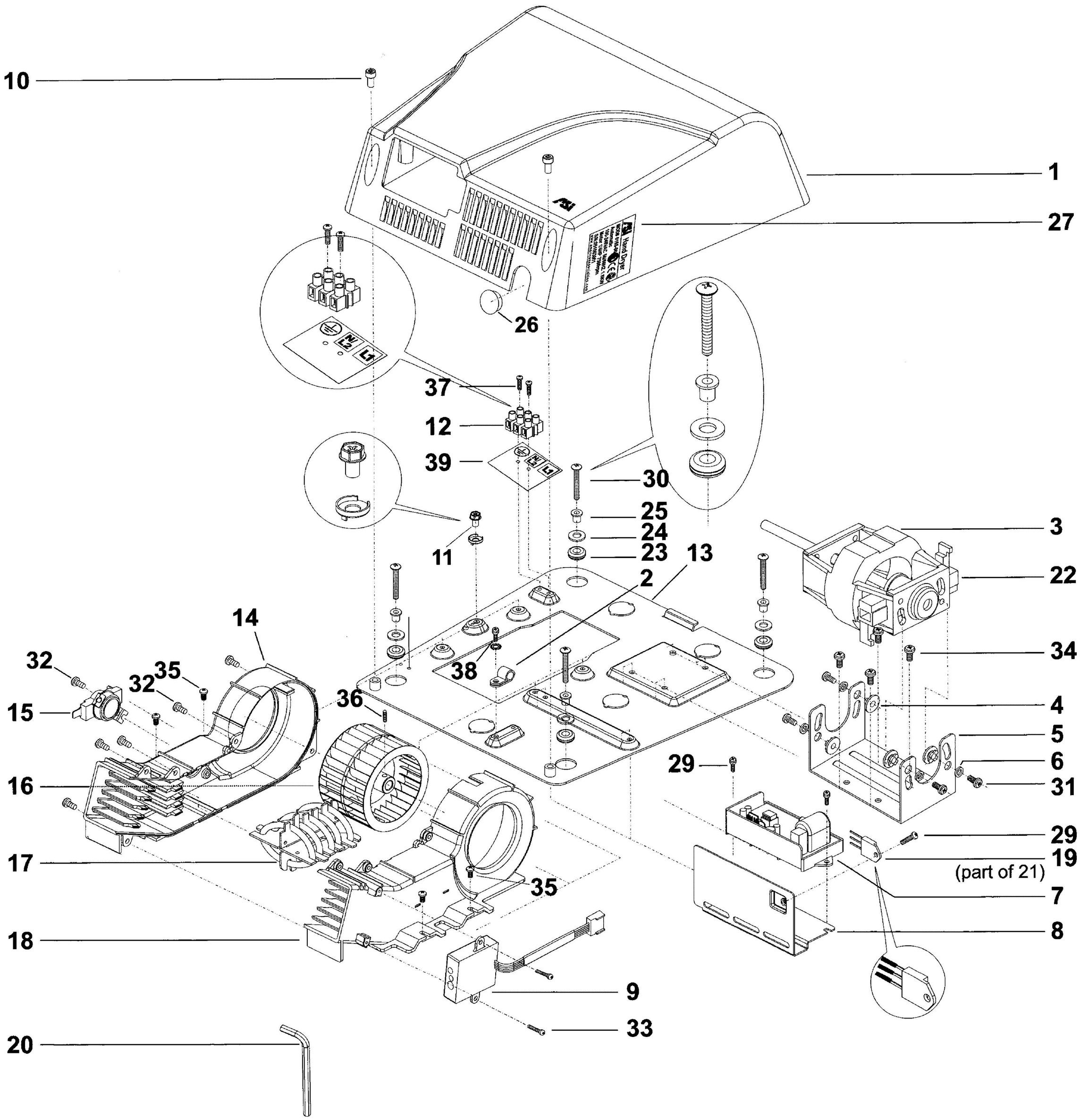
Diagram Patented No. D 542,976 S