Standard Hinge





Size	Art.No.	Drawing	Corner (Two Knuckle& Three Knuckle		Gauge	Case Quantity (Prs)	Gross Weight(per case)	Measurements (Per Case)
3"x3"	JWH1-3030R00	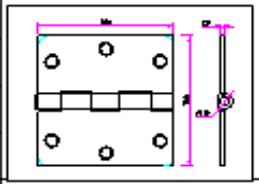	Square	Square	2.0mm	50	13	270x170x100
3"x3"	JWH1-3030R58		5/8"	5/8"	2.0mm	50	13	270x170x100
3"x3"	JWH1-3030R14		1/4"	1/4"	2.0mm	50	13	270x170x100
3"x3"	JWH1-3030R50		Square	5/8"or 1/4"	2.0mm	50	13	270x170x100

3 Round Corner,Square Hinges



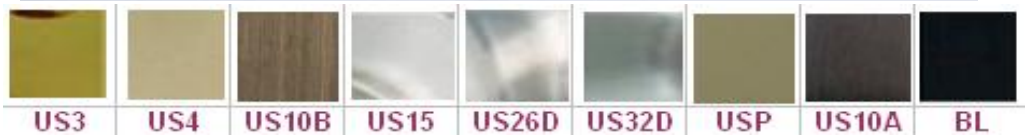

Size	Art.No.	Drawing	Corner (Two Knuckle& Three Knuckle		Gauge	Case Quantity (Prs)	Gross Weight(per case)	Measurements (Per Case)
3"x3"	JWH1-3030R00BB	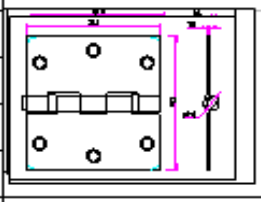	Square	Square	2.0mm	50	13	270x170x100
3"x3"	JWH1-3030R58BB		5/8"	5/8"	2.0mm	50	13	270x170x100
3"x3"	JWH1-3030R14BB		1/4"	1/4"	2.0mm	50	13	270x170x100
3"x3"	JWH1-3030R50BB		Square	5/8"or 1/4"	2.0mm	50	13	270x170x100

3 Round 2 ball bearings Hinges

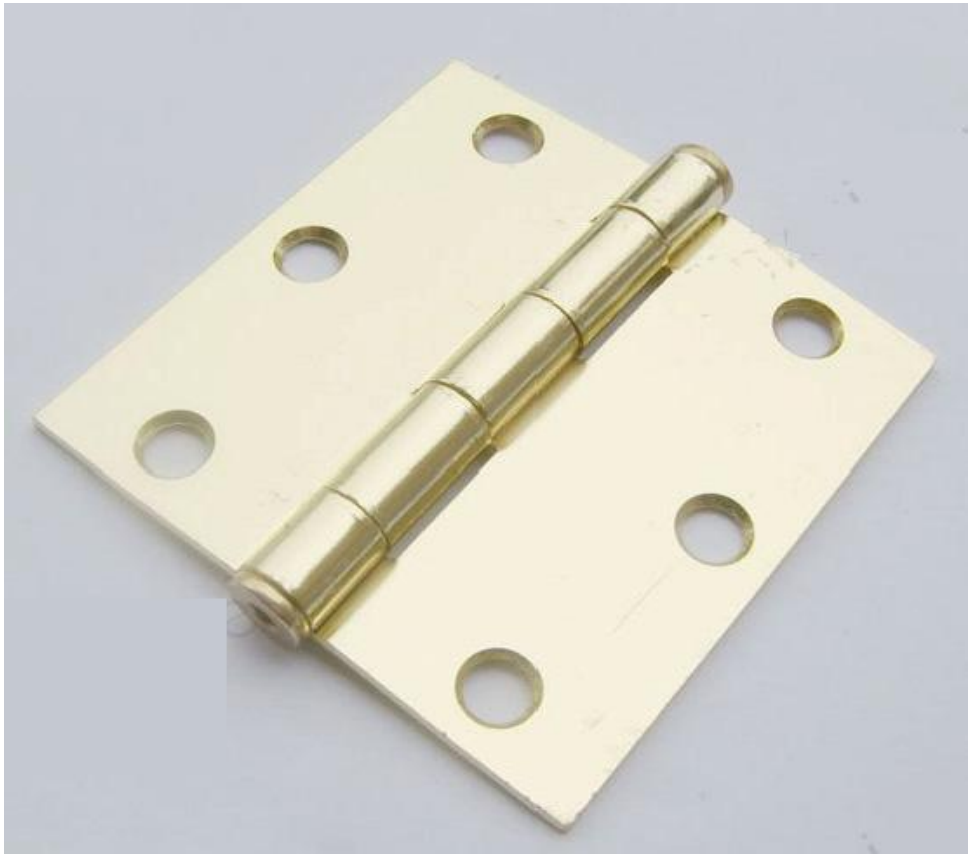

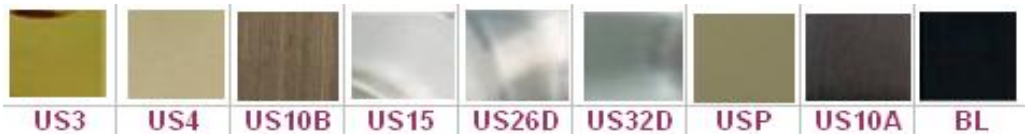

Size	Art.No.	Drawing	Corner (Two Knuckle& Three Knuckle		Gauge	Case Quantity (Prs)	Gross Weight(per case)	Measurements (Per Case)
3.5"x3.5"	JWH1-3535R00	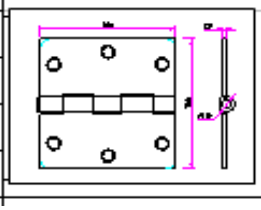	Square	Square	2.20mm	50	18.5	265x205x120
3.5"x3.5"	JWH1-3535R58		5/8"	5/8"	2.20mm	50	18.5	265x205x120
3.5"x3.5"	JWH1-3535R14		1/4"	1/4"	2.20mm	50	18.5	265x205x120
3.5"x3.5"	JWH1-3535R50		Square	5/8"or 1/4"	2.20mm	50	18.5	265x205x120

3.5 Round Corner,Square Hinges





Size	Art.No.	Drawing	Corner (Two Knuckle& Three Knuckle		Gauge	Case Quantity (Prs)	Gross Weight(per case)	Measurements (Per Case)
3.5"x3.5"	JWH1-3535R00BB	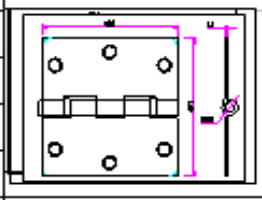	Square	Square	2.20mm	50	18.5	265x205x120
3.5"x3.5"	JWH1-3535R58BB		5/8"	5/8"	2.20mm	50	18.5	265x205x120
3.5"x3.5"	JWH1-3535R14BB		1/4"	1/4"	2.20mm	50	18.5	265x205x120
3.5"x3.5"	JWH1-3535R50BB		Square	5/8"or 1/4"	2.20mm	50	18.5	265x205x120

3.5 Round 2 ball bearings Hinges





Size	Art.No.	Drawing	Corner (Two Knuckle& Three Knuckle		Gauge	Case Quantity (Prs)	Gross Weight(per case)	Measurements (Per Case)
4"x4"	JWH1-4040R00	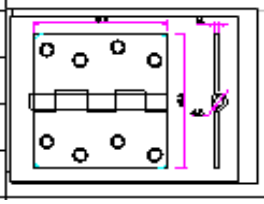	Square	Square	2.50mm	50	26	270x235x135
4"x4"	JWH1-4040R58		5/8"	5/8"	2.50mm	50	26	270x235x135
4"x4"	JWH1-4040R14		1/4"	1/4"	2.50mm	50	26	270x235x135
4"x4"	JWH1-4040R50		Square	5/8"or 1/4"	2.50mm	50	26	270x235x135

4 Round Corner,Square Hinges





Size	Art.No.	Drawing	Corner (Two Knuckle& Three Knuckle		Gauge	Case Quantity (Prs)	Gross Weight(per case)	Measurements (Per Case)
4"x4"	JWH1-4040R00BB	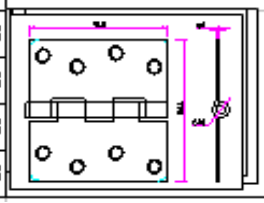	Square	Square	2.50mm	50	26	270x235x135
4"x4"	JWH1-4040R58BB		5/8"	5/8"	2.50mm	50	26	270x235x135
4"x4"	JWH1-4040R14BB		1/4"	1/4"	2.50mm	50	26	270x235x135
4"x4"	JWH1-4040R50BB		Square	5/8"or 1/4"	2.50mm	50	26	270x235x135

4 Round 2 ball bearings Hinges



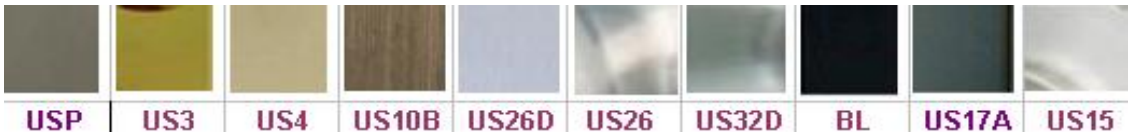

100x75x2.5mm	JWH1-107525	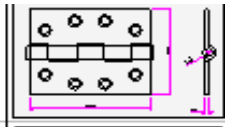
100X100X2.5MM	JWH1-101025	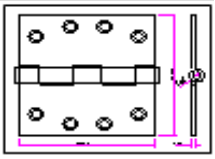

Butt Hinges



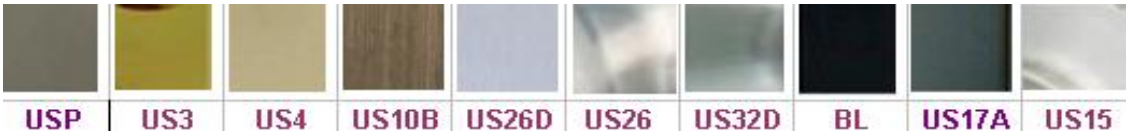

4"x3"x3mm	JWH1-403030	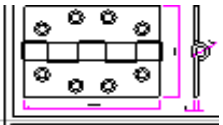
4"x4"x3mm	JWH1-404030	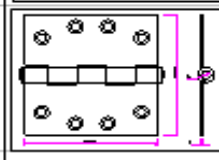
3.5"x3.5"x3.1mm	JWH1-353531	
4"x4"x3.2mm	JWH1-404032	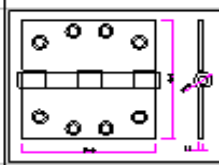
4.5"x4"x3.4mm	JWH1-454034	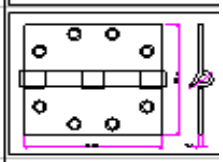
4.5"x4.5"x3.40mm	JWH1-454534	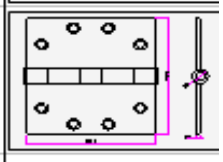
4.5"x4.5"x4.6mm	JWH1-454546	

Commercial Plain Hinges



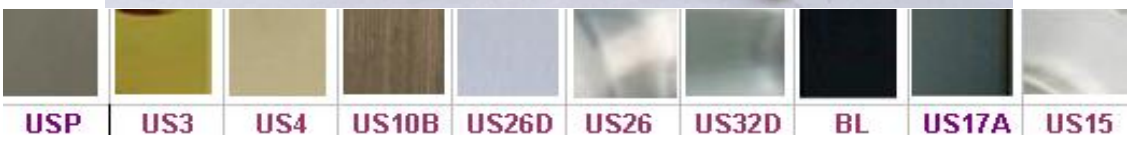

4"x3"x3mm	JWH1-403030BB	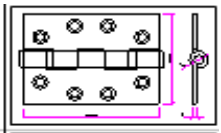
4"x4"x3mm	JWH1-404030BB	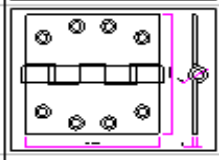
3.5"x3.5"x3.1mm	JWH1-353531BB	
4"x4"x3.2mm	JWH1-404032BB	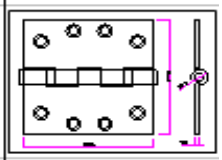
4.5"x4"x3.4mm	JWH1-454034BB	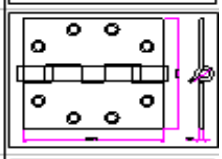
4.5"x4.5"x3.40mm	JWH1-454534BB	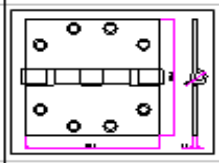
4.5"x4.5"x4.6mm	JWH1-454546BB	

Commercial Ball-Bearing Hinges

Normal Hinge



Welding hinge

Steel	Pin	Stainless Steel	Pin
50x50x2.5mm	5mm	50x50x2.5mm	5mm
65x65x3.0	6	65x65x3.0	6
75x75x3.2	7	75x75x3.0	7
90x90x3.5	8	90x90x3.0	8
100x100x3.5	8	100x100x4.0	10
125x125x4.5	10	125x125x4.0	10
150x150x5.0	11	150x150x4.0	12

Iron Welding Hinges

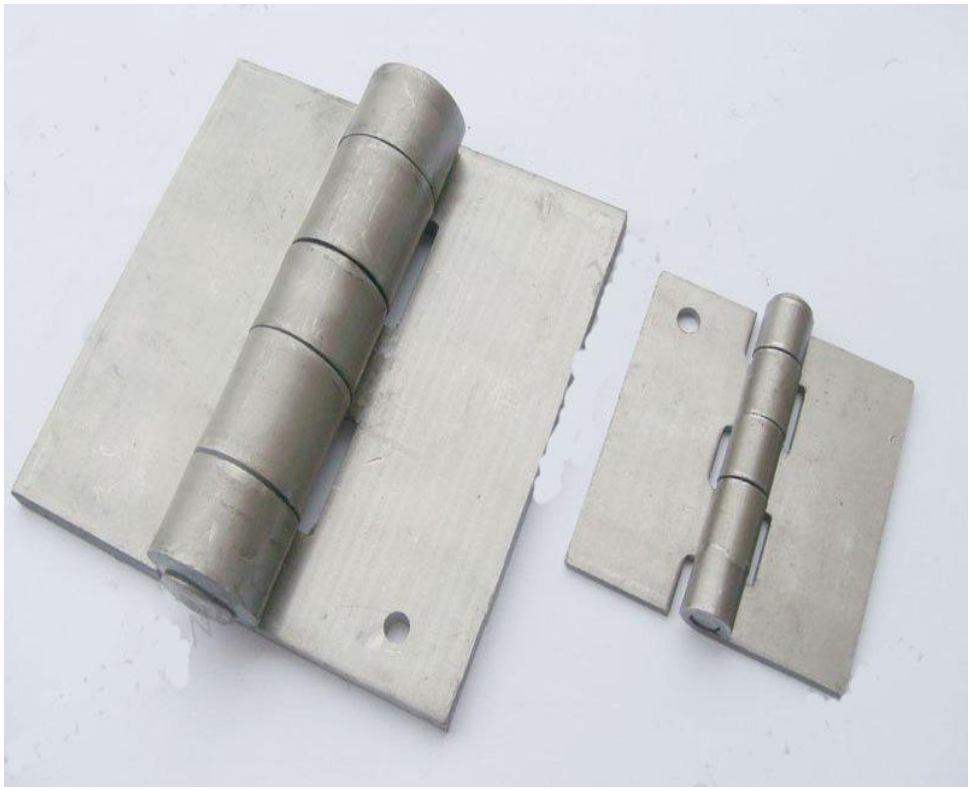

Extra Heavy Welding Hinges



Lift-Off Hinges, US-Standard



Welding Flag Hinges



Two-Leaf Iron Flag Hinges



Size 尺寸(inch)	每盒数量 (Pieces Per Box	每箱 (对打) Per Case (Doz.Prs)	尺码(厘米) Measurement (cm)	重量(公斤) Weight (Kgs)	
				毛重 Gross	净重 Net
3”	24	40	37.5×28×18	47	44
4”	24	40	40.5×34×23	51	48
5”	12	25	45×30×31	46	42
6”	12	25	45×34×31	49	45
8”	12	15	48×42.5×21	47	42
10”	12	15	48×24.5×28	56	54

T Hinge



Size 尺寸(inch)	每盒数量 (Pieces Per Box	每箱 (对打) Per Case (Doz.Prs)	尺码(厘米) Measurement (cm)	重量(公斤) Weight (Kgs)	
				毛重 Gross	净重 Net
80×50	12	25	38×19×25	40.5	38
95×55	12	25	43×23×26	48	45
110×55	12	20	41×25×21	47	44
140×60	12	15	46×31×18	55	52

H Hinges



Bright Light Iron Hings, Fixed Pin



Black Japanned Spring Hinges, Double-Action



Black Japanned Spring Hinges, Single Action

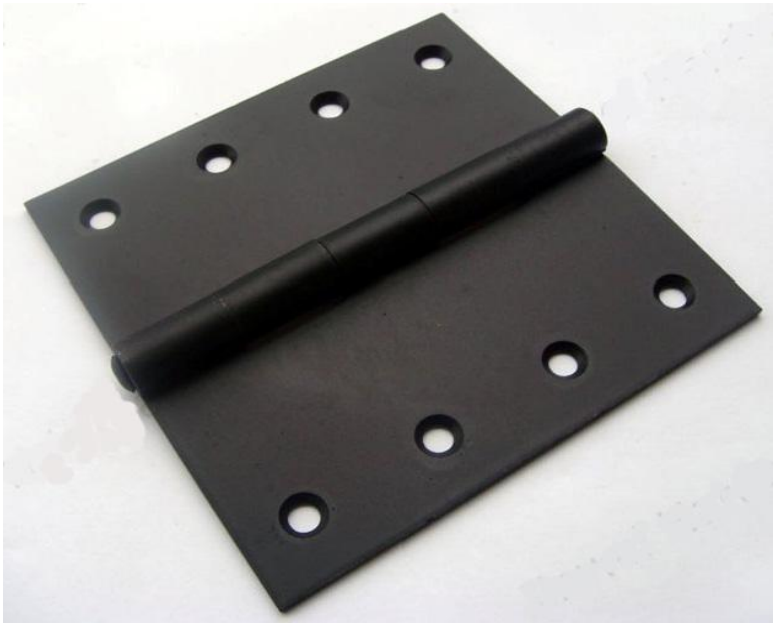

Black Japanned Butt Hinges

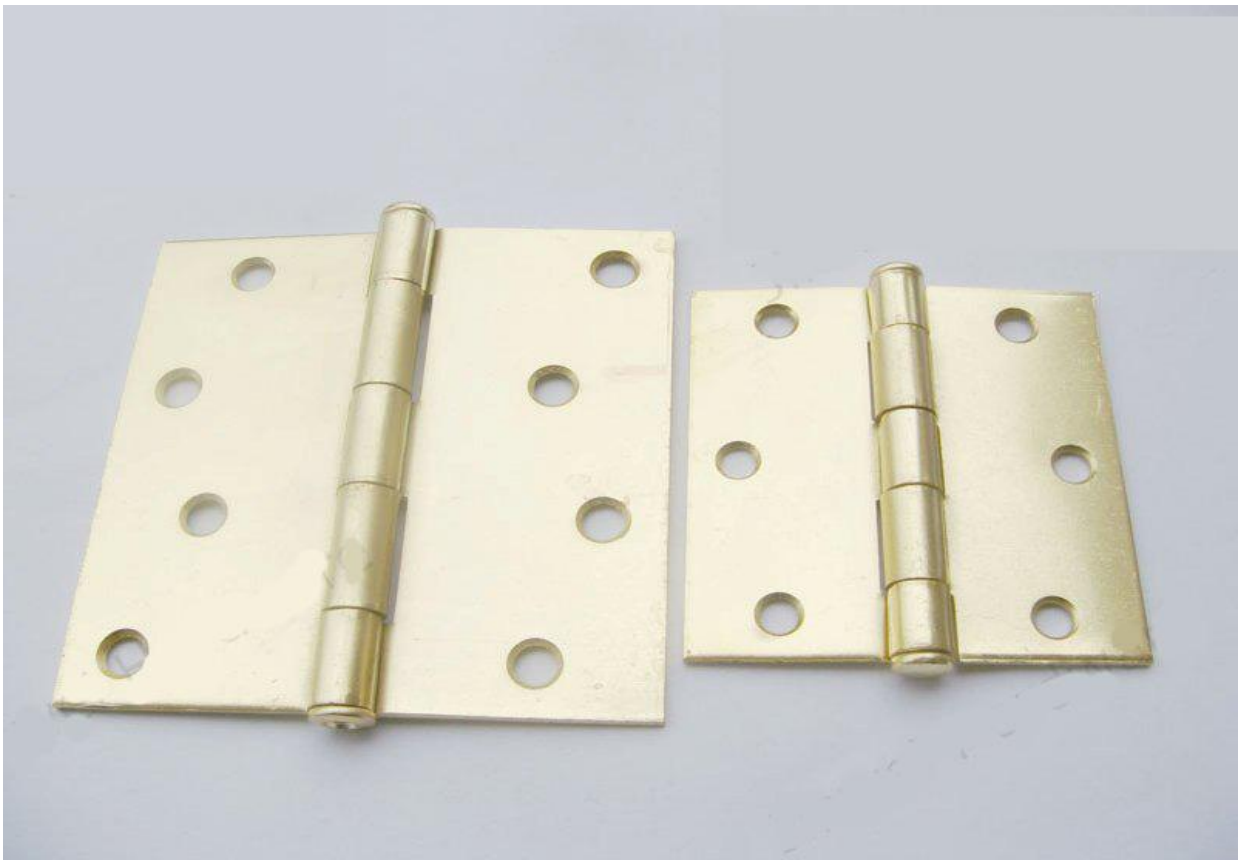

Size 尺寸(inch)	每盒数量 (Pieces Per Box	每箱 (付) Per Case (Prs)	尺码(厘米) Measurement (cm)	重量(公斤) Weight (Kgs)	
				毛重 Gross	净重Net
21/2" ×21/2"	2	240	47×26×19	47	45
3" ×3"	2	144	37×25.5×20.5	45	42
31/2" ×31/2"	2	96	40×25×18.5	41	38
4" ×4"	2	72	47×27×14	42	39
41/2" ×41/2"	2	36	42×29×16	42.5	39.5

Brass-Plated Iron Square Hinges,Loose pin



Steel Hinges, 4 Ball Bearing



Square Hinges, AU Standard



Size 尺寸(inch)	每盒数量 (Pieces Per Box	每箱 (对打) Per Case (Doz. Prs)	尺码(厘米) Measurement (cm)	重量(公斤) Weight (Kgs)	
				毛重 Gross	净重Net
1”	24	300	38.5×22.5×27	58	56
11/2”	24	100	38×23.5×15.5	41	38.5
2”	24	50	33.5×21.5×16	36	33.5
21/2”	24	50	41×22×16.5	46.5	43.5
3”	24	30	41×20×18.5	48	46
31/2”	24	20	44.5×22×15	45	43
4”	12	15	38.5×24.5×19	55	52
5”	12	10	46×29×16	62	59

Bright Heavy Iron Hinges,Fixed Pin



产品名称	尺寸明细	产品命名	图片	技术图纸	饰面	包装明细	备注
美制扇铰链	1.5"	JWH2-1151	光身薄铰图片(外		Zinc-Plated		
	2"				Brass-Plated		
	2.5"						
	3"						
	1"						

Mill steel hinge



产品名称	尺寸明细	产品命名	图片	技术图纸	饰面	包装明细	备注
英制厚铰链	1"	JWH2-1141	普通厚铰链抽芯图片(钱)		Zinc-Plated		
	1.5"				Brass-Plated		
	2"				Chrome-Plated		

UK Style Steel hinge



Bright Iron Heavy Hinges,Loose Pin



Bright Iron Square Hinges, loose Pin



产品名称	尺寸明细	产品命名	图片	技术图纸	饰面	包装明细	备注
澳制厚铰链	100x75x1.6mm	JWH2-2101	澳制厚铰链图片(沈)		All finish are available		
	101x73x2.0mm						
	89x58x2.0mm						
	89x58x1.6mm						
	85x60x1.6mm						
	76x51x1.6mm						
	70x50x1.6mm						

Butt Hinges, AU-Standard



产品名称	尺寸明细	产品命名	图片	技术图纸	饰面	包装明细	备注
抽芯厚铁铰链	1"	JWH2-1141	澳制厚铰链图片(沈)		Zinc-Plated		
	1.5"				Brass-Plated		
	2"				Chrome-Plated		
	2.5"						
	3"						
	3.5"						
	4"						

Australia style loose pin hinge



Butt Hinges, UK-Standard



Lift-Off Hinges, AU-Standard



Lift-Off Hinges, Zinc Plated



Round Corner Hinges, NZ-Standard



Spring Hinges, UK-Standard



Spring Hinges, UL-Standard

Special Hinge



Adjustable Hinges UK-Standard



Anti-Thift hinge-1



Anti-Thift hinge-2



尺寸Size (mm)	每盒数量 Pieces Per Box	每箱(只) Contents Per Case (Pcs)	尺码(厘米) Measurement (mm)	重量(公斤) Weight (Kgs)	
				毛重 Gross	净重 Net
1"	50	500	26X14X14.6	16	15
11/4"	50	500	27X16X14.6	20	19
11/2"	50	500	28X19X15.8	24	23

Back-Flap Hinges,UK-Standard



Bend Hinges, Spain Standard



Bend Hinges, UK-Standard



Butterfly Hinges

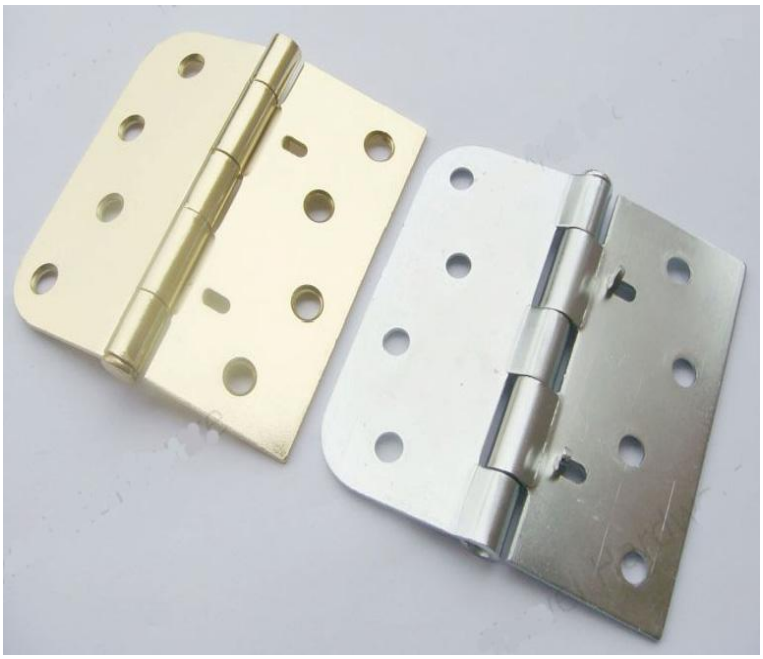

Round Corner, Square Hinges, Security Type

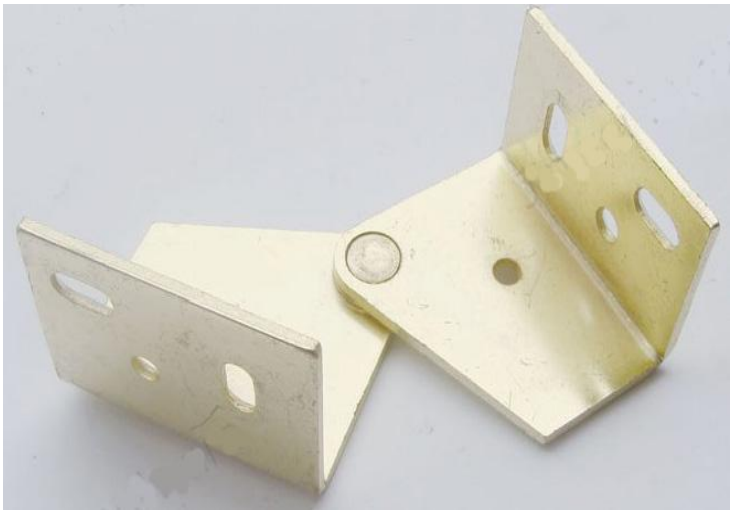

Shutter Hinges-1



Shutter Hinges-2



Shutter Hinges-3



Shutter Hinges-4



Stainless Steel Wide Throw Hinges

MX-282

门吸
Door Stopper



表面处理：
黄古铜
主要材质：
锌合金
适用范围：
房间门
主要特点：
地面或墙面安装、多种表面颜色

Finish:
AD
Material:
Zinc Alloy
Available For:
Rooms Doors
Features:
Installed of the Ground or Wall,
Various Surface Cloirs

MX-297

门吸
Door Stopper



表面处理：
青古铜、红古铜
主要材质：
锌合金
适用范围：
房间门
主要特点：
地面或墙面安装、多种表面颜色

Finish:
AB, AC
Material:
Zinc Alloy
Available For:
Rooms Doors
Features:
Installed of the Ground or Wall,
Various Surface Cloirs

MX-283

门吸
Door Stopper



表面处理：
黄古铜
主要材质：
锌合金
适用范围：
房间门
主要特点：
地面或墙面安装、多种表面颜色

Finish:
AD
Material:
Zinc Alloy
Available For:
Rooms Doors
Features:
Installed of the Ground or Wall,
Various Surface Cloirs

MX-295

门吸
Door Stopper



表面处理：
青古铜、红古铜
主要材质：
锌合金
适用范围：
房间门
主要特点：
地面或墙面安装、多种表面颜色

Finish:
AB, AC
Material:
Zinc Alloy
Available For:
Rooms Doors
Features:
Installed of the Ground or Wall,
Various Surface Cloirs

MX-284

门吸
Door Stopper



表面处理：
红古铜、黄古铜、拉丝
主要材质：
锌合金
适用范围：
房间门
主要特点：
地面或墙面安装、多种表面颜色

Finish:
AC, AD, SS
Material:
Zinc Alloy
Available For:
Rooms Doors
Features:
Installed of the Ground or Wall,
Various Surface Cloirs

MX-298

门吸
Door Stopper



表面处理：
青古铜、红古铜
主要材质：
锌合金
适用范围：
房间门
主要特点：
地面或墙面安装、多种表面颜色

Finish:
AB, AC
Material:
Zinc Alloy
Available For:
Rooms Doors
Features:
Installed of the Ground or Wall,
Various Surface Cloirs

MX–299

门吸
Door Stopper

表面处理:
青古铜、红古铜、拉丝钢
主要材质:
锌合金
适用范围:
房间门
主要特点:
地面或墙面安装、多种表面颜色

Finish:
AB, AC, SN
Material:
Zinc Alloy
Available For:
Rooms Doors
Features:
Installed of the Ground or Wall,
Various Surface Clolrs



MX–291

门吸
Door Stopper

表面处理:
青古铜、红古铜
主要材质:
锌合金
适用范围:
房间门
主要特点:
地面或墙面安装、多种表面颜色

Finish:
AB, AC
Material:
Zinc Alloy
Available For:
Rooms Doors
Features:
Installed of the Ground or Wall,
Various Surface Clolrs

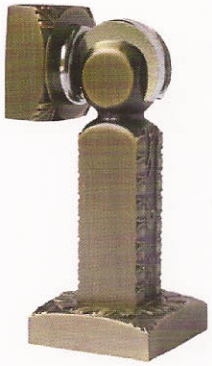

MX–259

门吸
Door Stopper

表面处理:
青古铜、红古铜、拉丝钢
主要材质:
锌合金
适用范围:
房间门
主要特点:
地面或墙面安装、多种表面颜色

Finish:
AB, AC, SN
Material:
Zinc Alloy
Available For:
Rooms Doors
Features:
Installed of the Ground or Wall,
Various Surface Clolrs



MX–296

门吸
Door Stopper

表面处理:
青古铜、红古铜
主要材质:
锌合金
适用范围:
房间门
主要特点:
地面或墙面安装、多种表面颜色

Finish:
AB, AC
Material:
Zinc Alloy
Available For:
Rooms Doors
Features:
Installed of the Ground or Wall,
Various Surface Clolrs



MX–293

门吸
Door Stopper

表面处理:
青古铜
主要材质:
锌合金
适用范围:
房间门
主要特点:
地面或墙面安装、多种表面颜色

Finish:
AB
Material:
Zinc Alloy
Available For:
Rooms Doors
Features:
Installed of the Ground or Wall,
Various Surface Clolrs



MX–231 兰

门吸
Door Stopper

表面处理:
镍拉丝、拉丝金、青古铜
主要材质:
锌合金
适用范围:
房间门
主要特点:
地面或墙面安装、多种表面颜色

Finish:
SN,SG,AB
Material:
Zinc Alloy
Available For:
Rooms Doors
Features:
Only For Groud Assembly, Positioning
Functions, Stable And Reliable





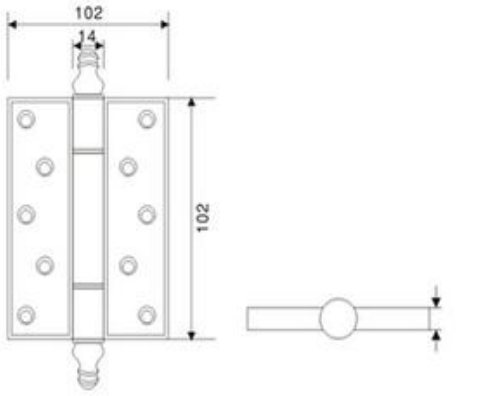

轴承 Bearings	規格 Dimensions (LXWXT)
2BB	125mm×95.2mm×4.0mm×Φ17mm



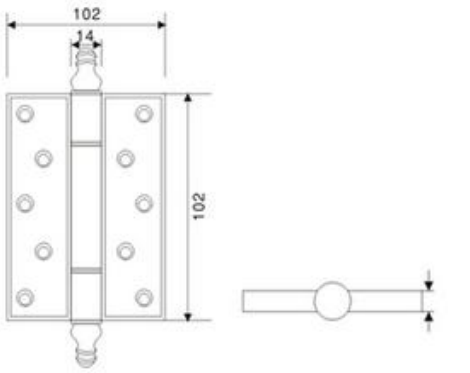

轴承 Bearings	規格 Dimensions (LXWXT)
2BB	125mm×95.2mm×4.0mm×Φ17mm



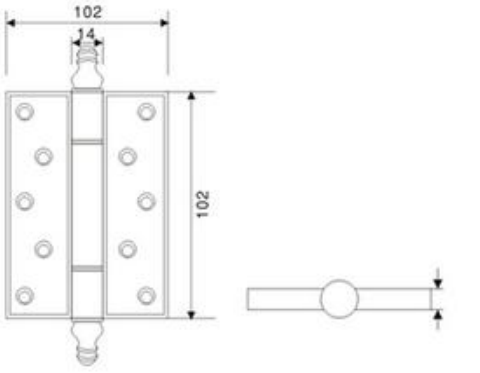

轴承 Bearings	規格 Dimensions (LXWXT)
2BB	125mm×95.2mm×4.0mm×Φ17mm



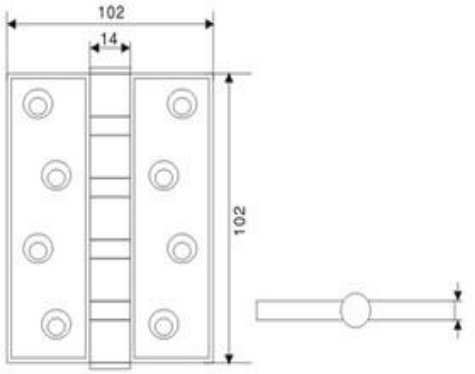

轴承 Bearings	规格 Dimensions (LXWXT)
4BB	100mm×75mm×4.0mm Φ15mm



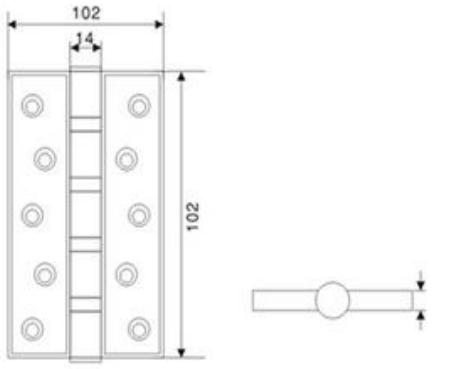

轴承 Bearings	规格 Dimensions (LXWXT)
4BB	125mm×95.2mm×4.0mm×Φ15mm



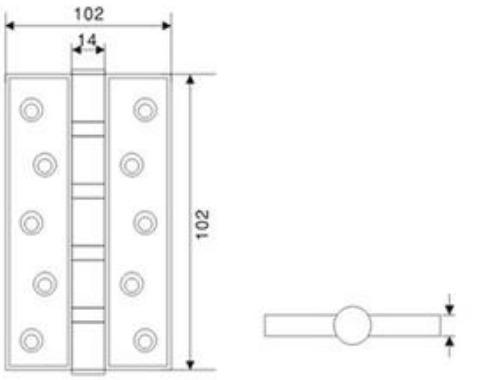

轴承 Bearings	规格 Dimensions (LXWXT)
4BB	125mm×95.2mm×4.0mm×Φ15mm

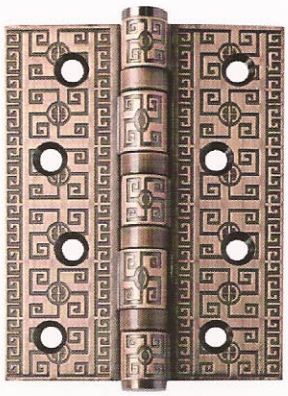

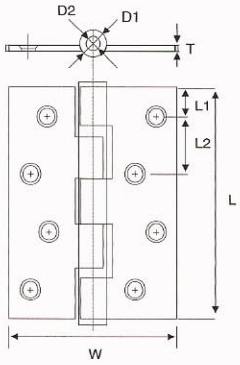

HY–3043欧式(2)

锌合页 Zinc Hinge

表面处理: 红古铜、青古铜、黄古铜
主要材质: 锌合金
适用范围: 各种木质大门、房门
主要特点: 滚珠轴承、S安装孔型、开关灵活、无噪音、寿命长
承重: 50Kg/3只

Finish: AC,AB,YAB
Material: Zinc Alloy
Available For: All kinds of Wooden Gate Door,Room Door
Features: Ball Bearing,SInstalled pass,Switching Flexibility,No Noise, Long life
Max Capactiy: 50Kg/3pcs

Dimension	L	L1	L2	W	D1	D2	T
4"×3"×4.0	101.6	14	25.5	76	ϕ15.2	ϕ8	4.0
5"×3"×4.0	127	14	25.5	76	ϕ15.2	ϕ8	4.0

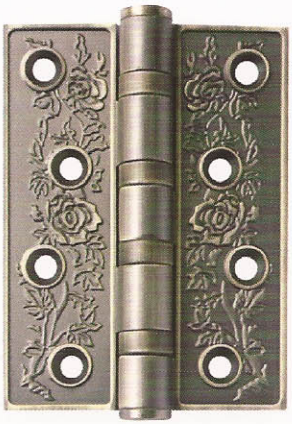

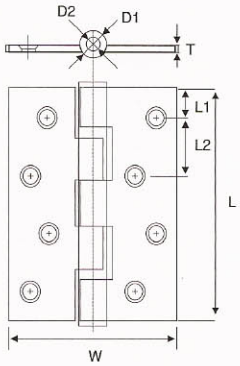

HY–3043欧式(3)

锌合页 Zinc Hinge

表面处理: 红古铜、青古铜、黄古铜
主要材质: 锌合金
适用范围: 各种木质大门、房门
主要特点: 滚珠轴承、S安装孔型、开关灵活、无噪音、寿命长
承重: 50Kg/3只

Finish: AC,AB,YAB
Material: Zinc Alloy
Available For: All kinds of Wooden Gate Door,Room Door
Features: Ball Bearing,SInstalled pass,Switching Flexibility,No Noise, Long life
Max Capactiy: 50Kg/3pcs

Dimension	L	L1	L2	W	D1	D2	T
4"×3"×4.0	101.6	14	25.5	76	ϕ15.2	ϕ8	4.0
5"×3"×4.0	127	14	25.5	76	ϕ15.2	ϕ8	4.0

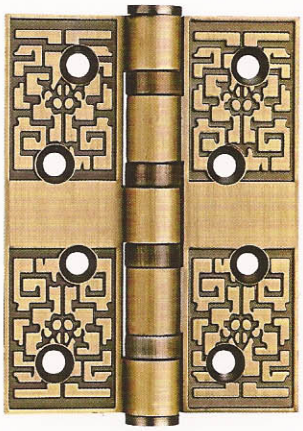

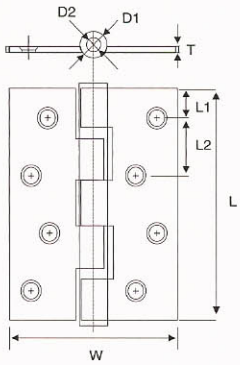

HY–3043欧式(4)

锌合页 Zinc Hinge

表面处理: 红古铜、青古铜、黄古铜
主要材质: 锌合金
适用范围: 各种木质大门、房门
主要特点: 滚珠轴承、S安装孔型、开关灵活、无噪音、寿命长
承重: 50Kg/3只

Finish: AC,AB,YAB
Material: Zinc Alloy
Available For: All kinds of Wooden Gate Door,Room Door
Features: Ball Bearing,SInstalled pass,Switching Flexibility,No Noise, Long life
Max Capactiy: 50Kg/3pcs

Dimension	L	L1	L2	W	D1	D2	T
4"×3"×4.0	101.6	14	25.5	76	ϕ15.2	ϕ8	4.0
5"×3"×4.0	127	14	25.5	76	ϕ15.2	ϕ8	4.0

HY–3053欧式(4)

锌合页 Zinc Hinge

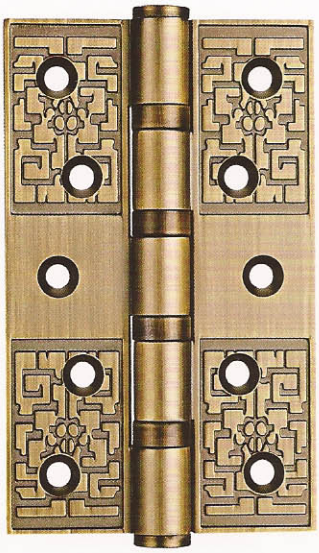

表面处理: 红古铜、青古铜、黄古铜
主要材质: 锌合金
适用范围: 各种木质大门、房门
主要特点: 滚珠轴承、S安装孔型、开关灵活、无噪音、寿命长
承重: 50Kg/3只

Finish: AC,AB,YAB
Material: Zinc Alloy
Available For: All kinds of Wooden Gate Door,Room Door
Features: Ball Bearing,SInstalled pass,Switching Flexibility,No Noise, Long life
Max Capactiy: 50Kg/3pcs

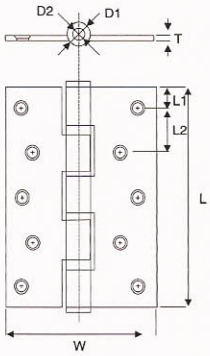

Dimension	L	L1	L2	W	D1	D2	T
4"×3"×4.0	101.6	14	25.5	76	ϕ15.2	ϕ8	4.0
5"×3"×4.0	127	14	25.5	76	ϕ15.2	ϕ8	4.0

最大承重：50kg/3只
Max Capactiy:50kg/3pcs

安装方式 Installation Method

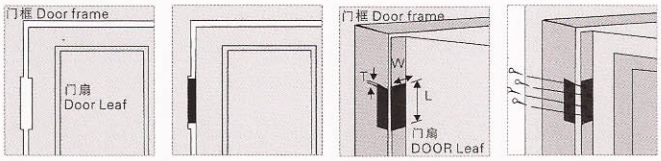

HY–3053欧式(3)

锌合页 Zinc Hinge



表面处理: 红古铜、青古铜、黄古铜
主要材质: 锌合金
适用范围: 各种木质大门、房门
主要特点: 滚珠轴承、S安装孔型、开关灵活、无噪音、寿命长
承重: 50Kg/3只

Finish: AC,AB,YAB
Material: Zinc Alloy
Available For: All kinds of Wooden Gate Door,Room Door
Features: Ball Bearing,SInstalled pass,Switching Flexibility,No Noise, Long life
Max Capactiy: 50Kg/3pcs

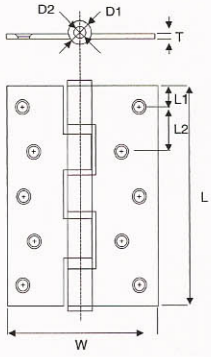

Dimension	L	L1	L2	W	D1	D2	T
4"×3"×4.0	101.6	14	25.5	76	ϕ15.2	ϕ8	4.0
5"×3"×4.0	127	14	25.5	76	ϕ15.2	ϕ8	4.0

最大承重：50kg/3只
Max Capactiy:50kg/3pcs

安装方式 Installation Method

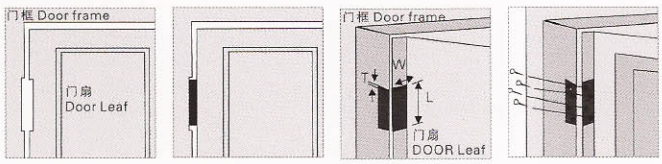

SH8709-XL-04 单真
SH8709-XL-04 单假



尺寸：595x70mm
表面处理：K金
主要材质：纯铜
锁体型号：8765
锁芯：双排10粒珠
钥匙：5条双排珠白铜钥匙
门边距：65mm
锁体中心距：87mm
适用门厚：45-55mm
适用范围：户外门、大门、别墅门
适用标准：QB/T2474-2000
定货提示：可定制适用门厚55-80mm锁蕊

Size: 595x70mm
Finish: KG
Material: Pure brass
Lock body: 8765
Cylinder: Double role 10beads
Keys: 5 pcs of double beads white brass keys
Backset: 65mm
Center Distance Of Lock Body:87mm
Door Thickness: 45-55mm
Available For: Door outside,gate,villa door
Applicable standard: QB/T2474-2000
Order Notice: Could request to produce special lock cylinder apply to door thickness 55-80mm

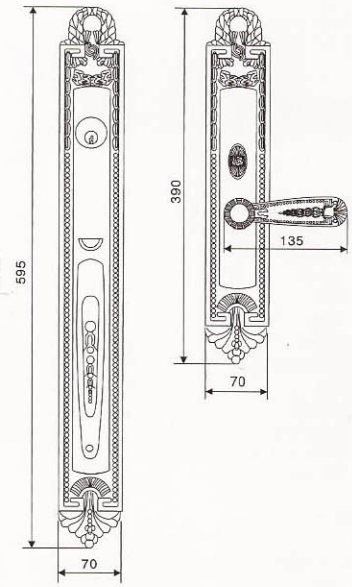

锁头
Lock



钥匙
lock opener

FINISH:



KG K金

SH8509-11-04

尺寸：295x52mm
表面处理：K金
主要材质：纯铜
锁体型号：8550
锁芯：双排10粒珠
钥匙：5条双排珠铜钥匙
门边距：50mm
锁体中心距：85mm
适用门厚：40–50mm
适用范围：房间门、入户门、各类木质门
适用标准：QB/T2474–2000

Size: 295x52mm
Finish: KG
Material: Pure brass
Lock body: 8550
Cylinder: Double role 10beads
Keys: 5 pcs of double beads brass keys
Backset: 50mm
Center Distance Of Lock Body: 85mm
Door Thickness: 40–50mm
Available For: Room door,entrance door, all kinds of wooden door
Applicable standard: QB/T2474–2000


KG K金

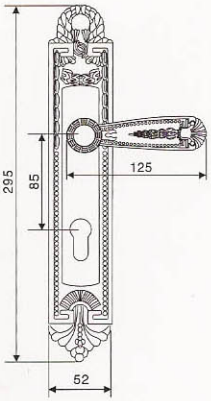


锁头
Lock


钥匙
lock opener



SH5809-11-04

尺寸：230x44mm
表面处理：K金
主要材质：纯铜
锁体型号：5850
锁芯：双排10粒珠
钥匙：3条双排珠铜钥匙
门边距：50mm
锁体中心距：58mm
适用门厚：40–50mm
适用范围：房间门、卫浴门、各类木质门
适用标准：QB/T2474–2000

Size: 230x44mm
Finish: KG
Material: Pure brass
Lock body: 5850
Cylinder: Double role 10beads
Keys: 3 pcs of double beads brass keys
Backset: 50mm
Center Distance Of Lock Body: 58mm
Door Thickness: 40–50mm
Available For: Room door,barthroom door, all kinds of wooden door
Applicable standard: QB/T2474–2000


KG K金

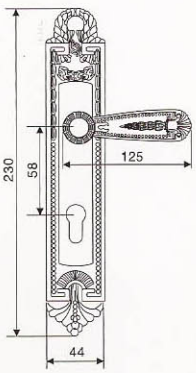


锁头
Lock


钥匙
lock opener



SH8709-XL-05 单真
SH8709-XL-05 单假



尺寸： 595x70mm
表面处理： 青古铜
主要材质： 纯铜
锁体型号： 8765
锁芯： 双排10粒珠
钥匙： 5条双排珠白铜钥匙
门边距： 65mm
锁体中心距： 87mm
适用门厚： 45–55mm
适用范围： 户外门、大门、别墅门
适用标准： QB/T2474–2000
定货提示： 可定制适用门厚55–80mm锁蕊

Size: 595x70mm
Finish: AB
Material: Pure brass
Lock body: 8765
Cylinder: Double role 10beads
Keys: 5 pcs of double beads white brass keys
Backset: 65mm
Center Distance Of Lock Body:87mm
Door Thickness: 45–55mm
Available For: Door outside,gate,villa door
Applicable standard: QB/T2474–2000
Order Notice: Could request to produce special lock cylinder apply to door thickness 55–80mm

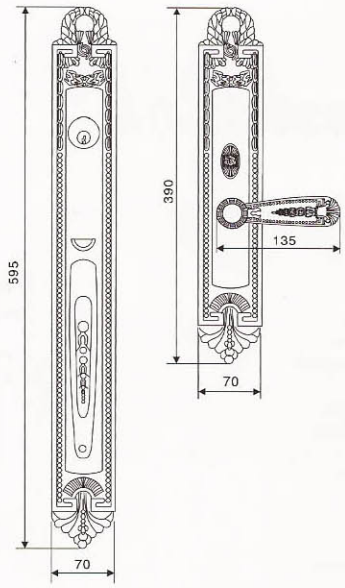

锁头
Lock



钥匙
lock opener

FINISH:



AB 青古铜

SH8509-11-05

尺寸：295x52mm
表面处理：青古铜
主要材质：纯铜
锁体型号：8550
锁芯：双排10粒珠
钥匙：5条双排珠铜钥匙
门边距：50mm
锁体中心距：85mm
适用门厚：40–50mm
适用范围：房间门、入户门、各类木质门
适用标准：QB/T2474–2000

Size: 295x52mm
Finish: AB
Material: Pure brass
Lock body: 8550
Cylinder: Double role 10beads
Keys: 5 pcs of double beads brass keys
Backset: 50mm
Center Distance Of Lock Body: 85mm
Door Thickness: 40–50mm
Available For: Room door,entrance door, all kinds of wooden door
Applicable standard: QB/T2474–2000


AB 青古铜

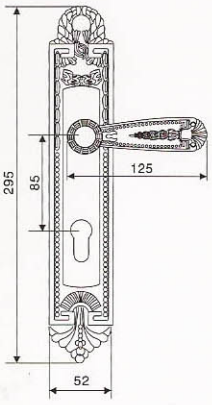


锁头
Lock


钥匙
lock opener



SH5809-11-05

尺寸：230x44mm
表面处理：青古铜
主要材质：纯铜
锁体型号：5850
锁芯：双排10粒珠
钥匙：3条双排珠铜钥匙
门边距：50mm
锁体中心距：58mm
适用门厚：40–50mm
适用范围：房间门、卫浴门、各类木质门
适用标准：QB/T2474–2000

Size: 230x44mm
Finish: AB
Material: Pure brass
Lock body: 5850
Cylinder: Double role 10beads
Keys: 3 pcs of double beads brass keys
Backset: 50mm
Center Distance Of Lock Body: 58mm
Door Thickness: 40–50mm
Available For: Room door,barthroom door, all kinds of wooden door
Applicable standard: QB/T2474–2000


AB 青古铜

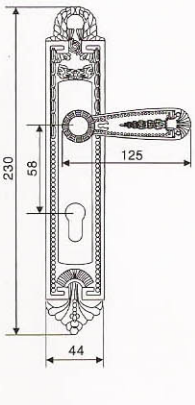


锁头
Lock


钥匙
lock opener



SH8710-04 单真
SH8710-04 单假



尺寸： 560x70mm
表面处理： K金
主要材质： 纯铜
锁体型号： 8765
锁芯： 双排10粒珠
钥匙： 5条双排珠白铜钥匙
门边距： 65mm
锁体中心距： 87mm
适用门厚： 45–55mm
适用范围： 户外门、大门、别墅门
适用标准： QB/T2474–2000
定货提示： 可定制适用门厚55–80mm锁蕊

Size: 560x70mm
Finish: KG
Material: Pure brass
Lock body: 8765
Cylinder: Double role 10beads
Keys: 5 pcs of double beads white brass keys
Backset: 65mm
Center Distance Of Lock Body:87mm
Door Thickness: 45–55mm
Available For: Door outside,gate,villa door
Applicable standard: QB/T2474–2000
Order Notice: Could request to produce special lock cylinder apply to door thickness 55–80mm

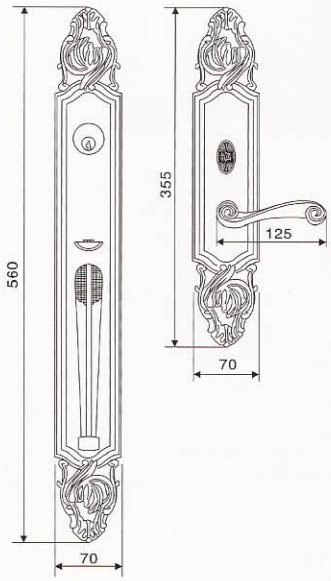

锁头
Lock



钥匙
lock opener

FINISH:



KG K金

SH8510-14-04

尺寸：295x52mm
表面处理：K金
主要材质：纯铜
锁体型号：8550
锁芯：双排10粒珠
钥匙：5条双排珠铜钥匙
门边距：50mm
锁体中心距：85mm
适用门厚：40–50mm
适用范围：房间门、入户门、各类木质门
适用标准：QB/T2474–2000

Size: 295x52mm
Finish: KG
Material: Pure brass
Lock body: 8550
Cylinder: Double role 10beads
Keys: 5 pcs of double beads brass keys
Backset: 50mm
Center Distance Of Lock Body: 85mm
Door Thickness: 40–50mm
Available For: Room door,entrance door, all kinds of wooden door
Applicable standard: QB/T2474–2000



KG K金

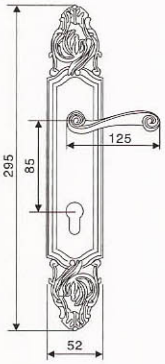



锁头
Lock



钥匙
lock opener



SH5810-14-04

尺寸：230x44mm
表面处理：K金
主要材质：纯铜
锁体型号：5850
锁芯：双排10粒珠
钥匙：3条双排珠铜钥匙
门边距：50mm
锁体中心距：58mm
适用门厚：40–50mm
适用范围：房间门、卫浴门、各类木质门
适用标准：QB/T2474–2000

Size: 230x44mm
Finish: KG
Material: Pure brass
Lock body: 5850
Cylinder: Double role 10beads
Keys: 3 pcs of double beads brass keys
Backset: 50mm
Center Distance Of Lock Body: 58mm
Door Thickness: 40–50mm
Available For: Room door,barthroom door, all kinds of wooden door
Applicable standard: QB/T2474–2000



KG K金

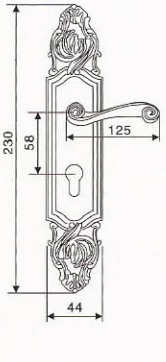



锁头
Lock



钥匙
lock opener



SH8710-05 单真
SH8710-05 单假



尺寸：560x70mm
表面处理：青古铜
主要材质：纯铜
锁体型号：8765
锁芯：双排10粒珠
钥匙：5条双排珠白铜钥匙
门边距：65mm
锁体中心距：87mm
适用门厚：45-55mm
适用范围：户外门、大门、别墅门
适用标准：QB/T2474-2000
定货提示：可定制适用门厚55-80mm锁蕊

Size: 560x70mm
Finish: AB
Material: Pure brass
Lock body: 8765
Cylinder: Double role 10beads
Keys: 5 pcs of double beads white brass keys
Backset: 65mm
Center Distance Of Lock Body:87mm
Door Thickness: 45-55mm
Available For: Door outside,gate,villa door
Applicable standard: QB/T2474-2000
Order Notice: Could request to produce special lock cylinder apply to door thickness 55-80mm

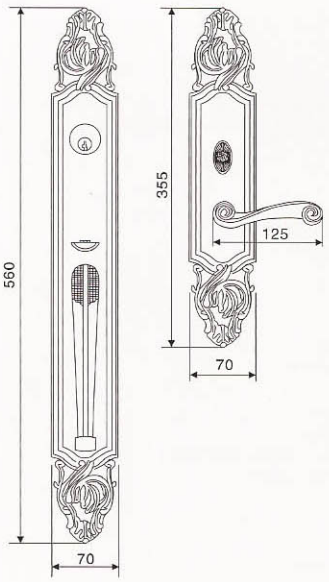

锁头
Lock



钥匙
lock opener

FINISH:



AB 青古铜

SH8510-14-05

尺寸：295x52mm
表面处理：青古铜
主要材质：纯铜
锁体型号：8550
锁芯：双排10粒珠
钥匙：5条双排珠铜钥匙
门边距：50mm
锁体中心距：85mm
适用门厚：40–50mm
适用范围：房间门、入户门、各类木质门
适用标准：QB/T2474–2000

Size: 295x52mm
Finish: AB
Material: Pure brass
Lock body: 8550
Cylinder: Double role 10beads
Keys: 5 pcs of double beads brass keys
Backset: 50mm
Center Distance Of Lock Body: 85mm
Door Thickness: 40–50mm
Available For: Room door,entrance door, all kinds of wooden door
Applicable standard: QB/T2474–2000



AB 青古铜

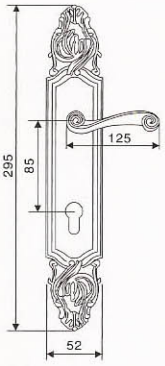



锁头
Lock



钥匙
lock opener



SH5810-14-05

尺寸：230x44mm
表面处理：青古铜
主要材质：纯铜
锁体型号：5850
锁芯：双排10粒珠
钥匙：3条双排珠铜钥匙
门边距：50mm
锁体中心距：58mm
适用门厚：40–50mm
适用范围：房间门、卫浴门、各类木质门
适用标准：QB/T2474–2000

Size: 230x44mm
Finish: AB
Material: Pure brass
Lock body: 5850
Cylinder: Double role 10beads
Keys: 3 pcs of double beads brass keys
Backset: 50mm
Center Distance Of Lock Body: 58mm
Door Thickness: 40–50mm
Available For: Room door,barthroom door, all kinds of wooden door
Applicable standard: QB/T2474–2000



AB 青古铜

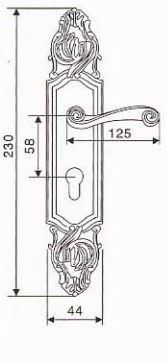



锁头
Lock



钥匙
lock opener



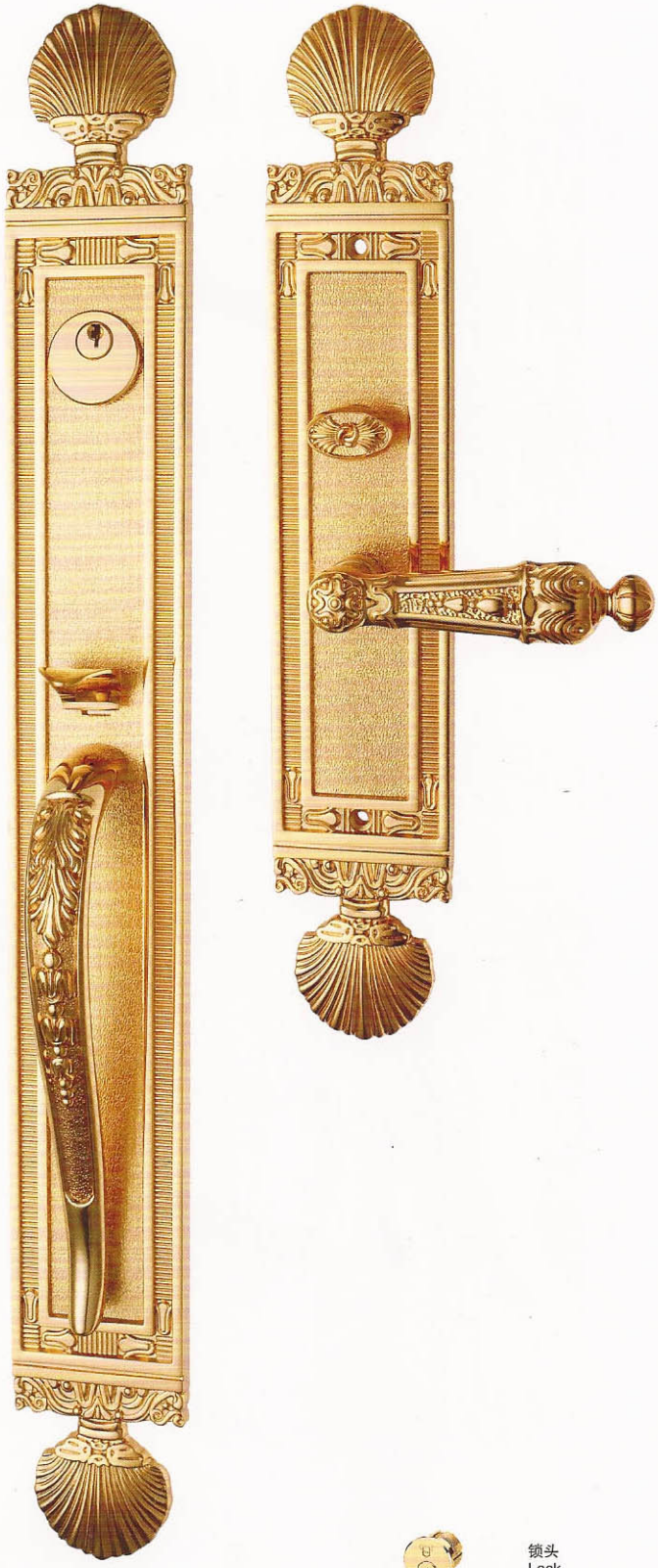

SH8712-XL-04 单真
SH8712-XL-04 单假

尺寸：586x68mm
表面处理：K金
主要材质：纯铜
锁体型号：8765
锁芯：双排10粒珠
钥匙：5条双排珠白铜钥匙
门边距：65mm
锁体中心距：87mm
适用门厚：45-55mm
适用范围：户外门、大门、别墅门
适用标准：QB/T2474-2000
定货提示：可定制适用门厚55-80mm锁蕊

Size: 586x70mm
Finish: KG
Material: Pure brass
Lock body: 8765
Cylinder: Double role 10beads
Keys: 5 pcs of double beads white brass keys
Backset: 65mm
Center Distance Of Lock Body:87mm
Door Thickness: 45-55mm
Available For: Door outside,gate,villa door
Applicable standard: QB/T2474-2000
Order Notice: Could request to produce special lock cylinder apply to door thickness 55-80mm

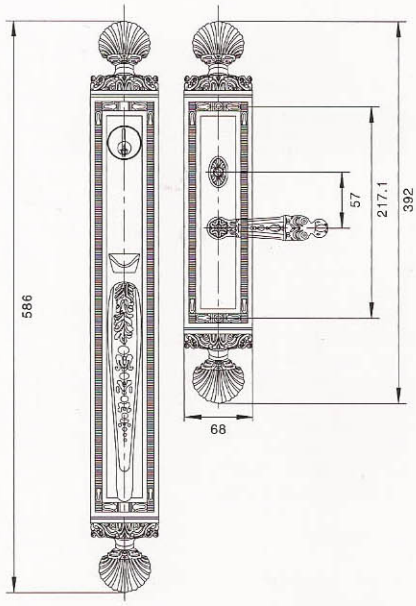

锁头
Lock



钥匙
lock opener

FINISH:



KG K金

SH8712-05 单真
SH8712-05 单假

尺寸： 586x68mm
表面处理： 青古铜
主要材质： 纯铜
锁体型号： 8765
锁芯： 双排10粒珠
钥匙： 5条双排珠白铜钥匙
门边距： 65mm
锁体中心距： 87mm
适用门厚： 45–55mm
适用范围： 户外门、大门、别墅门
适用标准： QB/T2474–2000
定货提示： 可定制适用门厚55–80mm锁蕊

Size: 586x70mm
Finish: AB
Material: Pure brass
Lock body: 8765
Cylinder: Double role 10beads
Keys: 5 pcs of double beads white brass keys
Backset: 65mm
Center Distance Of Lock Body:87mm
Door Thickness: 45–55mm
Available For: Door outside,gate,villa door
Applicable standard: QB/T2474–2000
Order Notice: Could request to produce special lock cylinder apply to door thickness 55–80mm

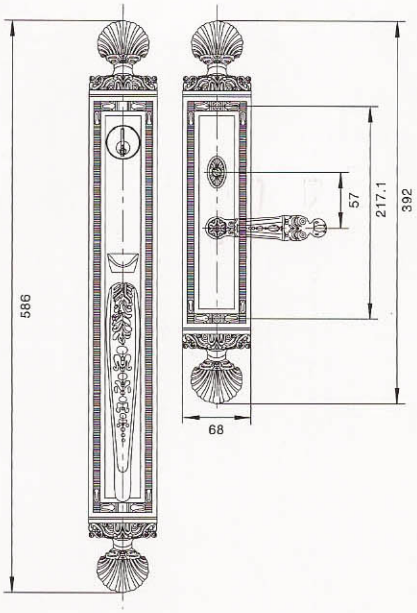



FINISH:

AB 青古铜

锁头
Lock



钥匙
lock opener

HY-3053-4BB

不锈钢合页 Stainless Steel Hinge Series

表面处理: 拉丝
主要材质: 纯SUS304不锈钢
适用范围: 各种木质大门、房门
主要特点: 滚珠轴承、S安装孔型、开关灵活、无噪音、寿命长
承重: 50Kg/3只

Finish: SSS
Material: SUS304 Stainless Steel
Available For: All kinds of Wooden Gate Door,Room Door
Features: Ball Bearing,SInstalled pass,Switching Flexibility,No Noise, Long life
Max Capactiy: 50Kg/3pcs

Dimension	L	L1	L2	W	D1	D2	T
5"×3"×3.5	127	12.5	25.5	76	ϕ15.2	ϕ8	3.5
5"×3"×3.0	127	12.5	25.5	76	ϕ14.2	ϕ8	3.0
5"×3"×2.5	127	12.5	25.5	76	ϕ12.2	ϕ7	2.5

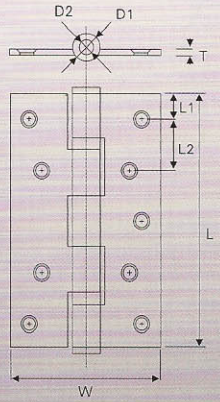

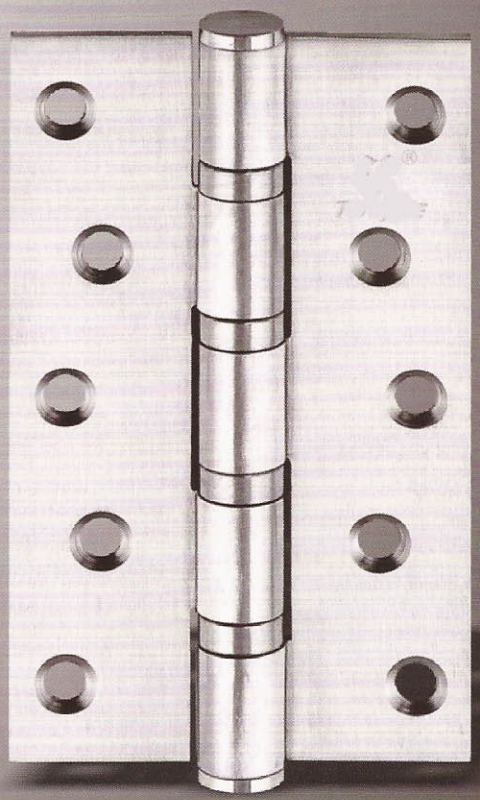

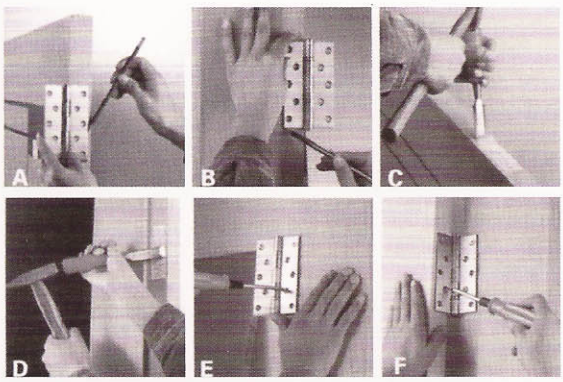

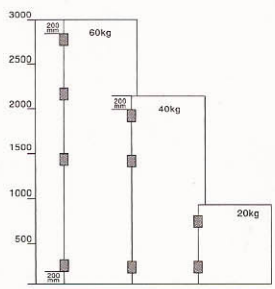

合页只数匹配图(门宽800mm)

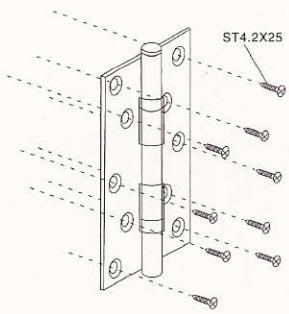

不锈钢合页安装步骤:

A 根据门扇的尺寸，确定每扇门需要安装的合页数量。并在门扇上画线。
B 根据门扇安装合页的数量和尺寸，在门框相应位置画线。
C 在门扇上开槽，深度根据合页厚度及两个合页片之间的间隙确定,一般深度为一个页面度。
D 在门扇上开槽，深度为一个页面厚度。
E 在门框上用两个螺钉固定一个合页。
F 将门与门框对齐，每个合页用两个螺钉固定在门扇上，试开启门扇，检查间隙是否合理。调节合适后拧紧全部螺钉。每个合页用10个螺钉固定。

Stainless Steel Hinge Installation Steps:

A According to the size of door leaf,make sure of the amount of rolled hinge each door needs, thendraw lines on the door leaf.
B Draw lines on the doorframe according to the amount and size of the rolled hinges needed to install.
C Notch on the door leaf. The depth should be made sure according to the thickness of the rolledhinge and space berween two hinges. The general depth is equal to the thickness of a hinge.
D Notch on the doorframe, with depth equal to the thickness of a hinge.
E Fix a hinge with two screws on the doorframe.
F Align the door to the doorframe. Each hinge id fixed with two screws on the door leaf. Try opening the door to check whether the space is reasonable. Adjust it then screw do within all screws. Each hinge is fixed with ten screws.

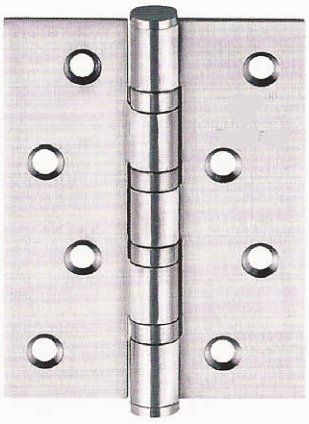

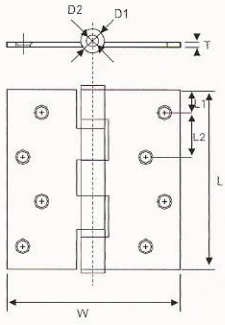

HY–2543–4BB

不锈钢合页 Stainless Steel Hinge Series

表面处理: 拉丝
主要材质: 纯SUS304不锈钢
适用范围: 各种木质大门、房门
主要特点: 滚珠轴承、S安装孔型、开关灵活、无噪音、寿命长
承重: 50Kg/3只

Finish: SSS
Material: SUS304 Stainless Steel
Available For: All kinds of Wooden Gate Door,Room Door
Features: Ball Bearing,SInstalled pass,Switching Flexibility, No Noise, Long life
Max Capactiy: 50Kg/3pcs

Dimension	L	L1	L2	W	D1	D2	T
4" × 3" × 2.5	101.6	12.7	25.4	76.2	ϕ12.2	ϕ7	2.5
4" × 3" × 2.0	101.6	12.7	25.4	76.2	ϕ12.2	ϕ7	2.0

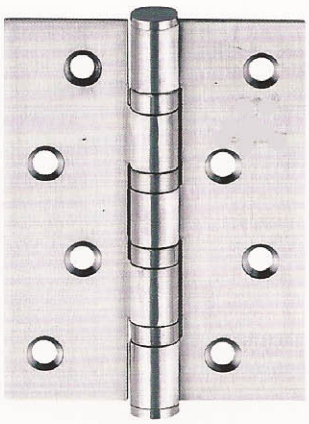

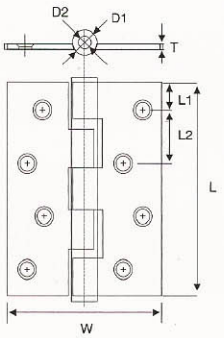

HY–3043–4BB

不锈钢合页 Stainless Steel Hinge Series

表面处理: 拉丝
主要材质: 纯SUS304不锈钢
适用范围: 各种木质大门、房门
主要特点: 滚珠轴承、S安装孔型、开关灵活、无噪音、寿命长
承重: 50Kg/3只

Finish: SSS
Material: SUS304 Stainless Steel
Available For: All kinds of Wooden Gate Door,Room Door
Features: Ball Bearing,SInstalled pass,Switching Flexibility, No Noise, Long life
Max Capactiy: 50Kg/3pcs

Dimension	L	L1	L2	W	D1	D2	T
4" × 3" × 3.5	101.6	12.7	25.4	76.2	ϕ15.2	ϕ8	3.5
4" × 3" × 3.0	101.6	12.7	25.4	76.2	ϕ14.2	ϕ8	3.0

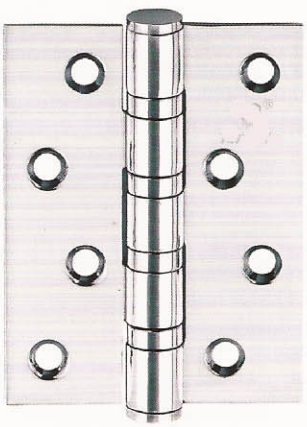

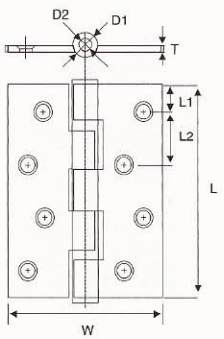

HY–3043PSS–4BB

不锈钢合页 Stainless Steel Hinge Series

表面处理: 镜光
主要材质: 纯SUS304不锈钢
适用范围: 各种木质大门、房门
主要特点: 滚珠轴承、S安装孔型、开关灵活、无噪音、寿命长
承重: 50Kg/3只

Finish: PSS
Material: SUS304 Stainless Steel
Available For: All kinds of Wooden Gate Door,Room Door
Features: Ball Bearing,SInstalled pass,Switching Flexibility,No Noise, Long life
Max Capactiy: 50Kg/3pcs

Dimension	L	L1	L2	W	D1	D2	T
4" × 3" × 3.5	101.6	12.7	25.4	76.2	ϕ15.2	ϕ8	3.5
4" × 3" × 3.0	101.6	12.7	25.4	76.2	ϕ14.2	ϕ8	3.0

HY-3044-4BB

不锈钢合页 Stainless Steel Hinge Series

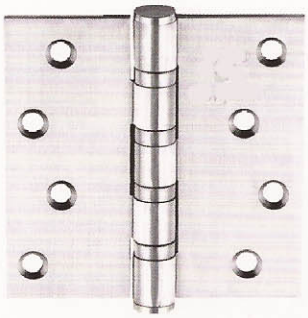

表面处理: 拉丝
主要材质: 纯SUS304不锈钢
适用范围: 各种木质大门、办公室门、通道门
主要特点: 滚珠轴承、S安装孔型、开关灵活、无噪音、寿命长
承重: 30Kg/3只

Finish: SSS
Material: SUS304 Stainless Steel
Available For: All kinds of Wooden Gate Door, office Door And Passage Door
Features: Ball Bearing,SInstalled pass,Switching Flexibility,No Noise, Long life
Max Capactiy: 30Kg/3pcs

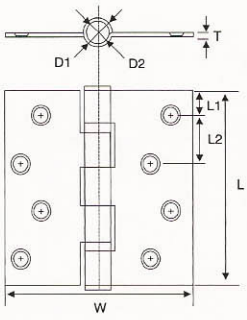

Dimension	L	L1	L2	W	D1	D2	T
4"×4"×3.0	101.6	12.7	25.4	101.6	ϕ14.2	ϕ8	3.0
4"×4"×2.5	101.6	12.7	25.4	101.6	ϕ12.2	ϕ7	2.5
4"×4"×2.0	101.6	12.7	25.4	101.6	ϕ11.2	ϕ7	2.0

最大承重：30kg/3只
Max Capactiy:30kg/3pcs

安装方式 Installation Method

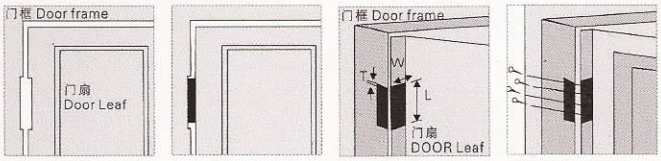

HY-3584-6BB

不锈钢合页
Stainless Steel Hinge Series

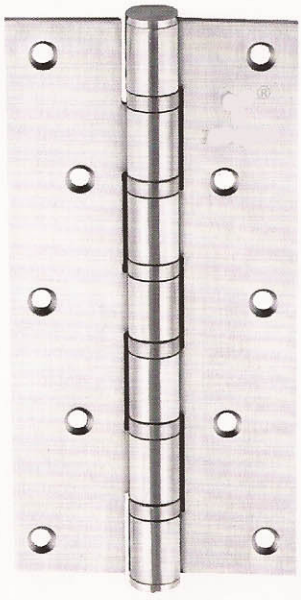

表面处理: 拉丝
主要材质: 纯SUS304不锈钢
适用范围: 各种木质大门、房门
主要特点: 滚珠轴承、S安装孔型、开关灵活、无噪音、寿命长最大
承重: 60Kg/3只

Finish: SSS
Material: SUS304 Stainless Steel
Available For: All kinds of Wooden Gate Door,Room Door
Features: Ball Bearing,SInstalled pass,Switching Flexibility,No Noise, Long life
Max Capactiy: 60Kg/3pcs

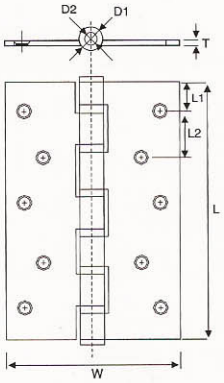

Dimension	L	L1	L2	W	D1	D2	T
8"×4"×3.5	203.2	12.85	35.5	101.6	ϕ15.2	ϕ8	3.5

最大承重：50kg/3只
Max Capactiy:50kg/3pcs

安装方式 Installation Method

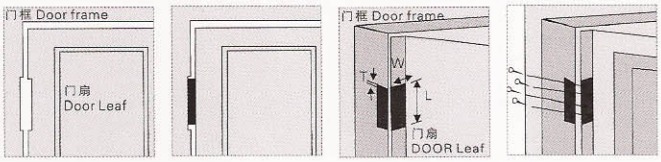

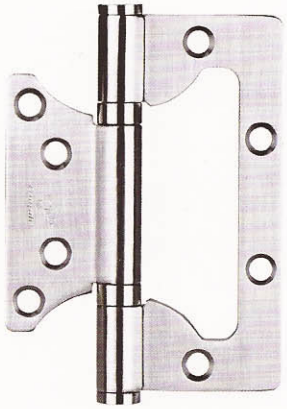

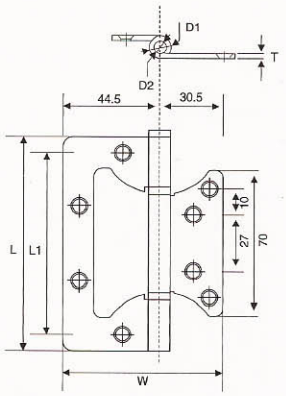

HY–2043 窗形–2BB(正轴)

不锈钢合页 Stainless Steel Hinge Series

表面处理: 拉丝
主要材质: 纯SUS304不锈钢
适用范围: 各种木质大门、房门
主要特点: 能使连接间隙最小化、安装容易、使用方便
承重: 25Kg/3只

Finish: SSS
Material: SUS304 Stainless Steel
Available For: All kinds of Wooden Gate Door, Room Door
Features: Minimize The Gap, Easy Assembly And Use
Max Capactiy: 25Kg/3pcs

Dimension	L	L1	W	D1	D2	T
101×75×2.0	101.6	75.6	75	ϕ11	ϕ7	2.0

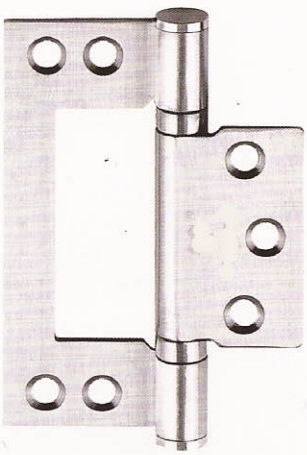

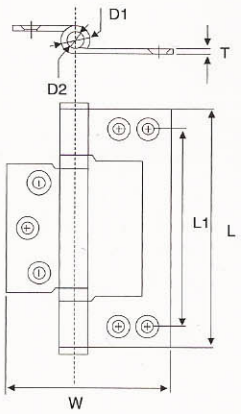

HY–3043 窗形–2BB(偏轴)
HY–2543 窗形–2BB(偏轴)

不锈钢合页 Stainless Steel Hinge Series

表面处理: 拉丝
主要材质: 纯SUS304不锈钢
适用范围: 各种木质大门、房门
主要特点: 能使连接间隙最小化、安装容易、使用方便
承重: 25Kg/3只

Finish: SSS
Material: SUS304 Stainless Steel
Available For: All kinds of Wooden Gate Door, Room Door
Features: Minimize The Gap, Easy Assembly And Use
Max Capactiy: 25Kg/3pcs

Dimension	L	L1	W	D1	D2	T
100×70.8×2.5	100	83	70.8	ϕ12.2	ϕ7	2.5
100×70.8×3.0	100	83	70.8	ϕ12.2	ϕ7	3.0

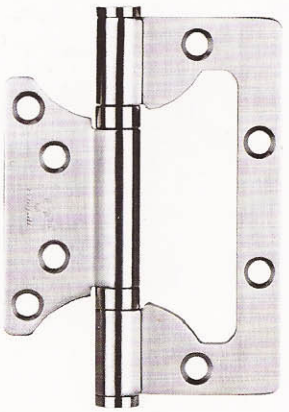

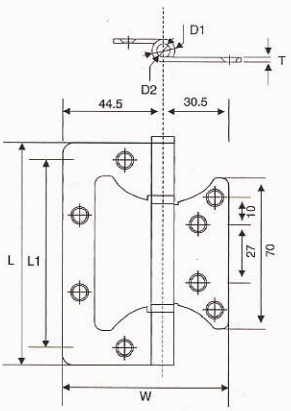

HY–2543 窗形–2BB(正轴)

不锈钢合页 Stainless Steel Hinge Series

表面处理: 拉丝
主要材质: 纯SUS304不锈钢
适用范围: 各种木质大门、房门
主要特点: 能使连接间隙最小化、安装容易、使用方便
承重: 25Kg/3只

Finish: SSS
Material: SUS304 Stainless Steel
Available For: All kinds of Wooden Gate Door, Room Door
Features: Minimize The Gap, Easy Assembly And Use
Max Capactiy: 25Kg/3pcs

Dimension	L	L1	W	D1	D2	T
101×75×2.5	101.6	75.6	75	ϕ12	ϕ7	2.5

HY-2553 窗形-2BB(偏轴)
HY-3053 窗形-2BB(偏轴)

不锈钢合页 Stainless Steel Hinge Series

表面处理: 拉丝
主要材质: 纯SUS304不锈钢
适用范围: 各种木质大门、房门
主要特点: 能使连接间隙最小化、安装容易、使用方便
承重: 25Kg/3只

Finish: SSS
Material: SUS304 Stainless Steel
Available For: All kinds of Wooden Gate Door, Room Door
Features: Minimize The Gap, Easy Assembly And Use
Max Capactiy: 25Kg/3pcs

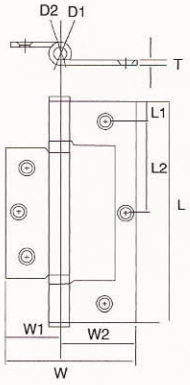

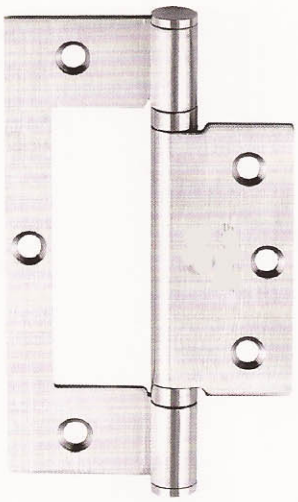

Dimension	L	L1	L2	W	D1	D2	T
127x76.2x2.5	127	12.5	25.5	76.2	ϕ12.2	ϕ7	2.5
127x76.2x3.0	127	12.5	25.5	76.2	ϕ12.2	ϕ7	3.0

HY-30435-4BB

曲铰 Crank Hinge

表面处理: 镜光
主要材质: 纯SUS304不锈钢
适用范围: 各种木质大门、办公室门、通道门
主要特点: 滚珠轴承、S安装孔型、开关灵活、无噪音、寿命长
承重: 30Kg/3只

Finish: PSS
Material: SUS304 Stainless Steel
Available For: All kinds of Wooden Gate Door, office Door And Passage Door
Features: Ball Bearing,SInstalled pass,Switching Flexibility,No Noise, Long life
Max Capactiy: 30Kg/3pcs

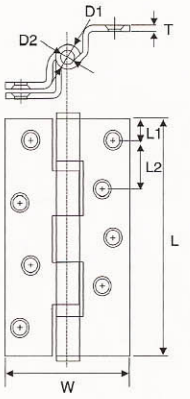

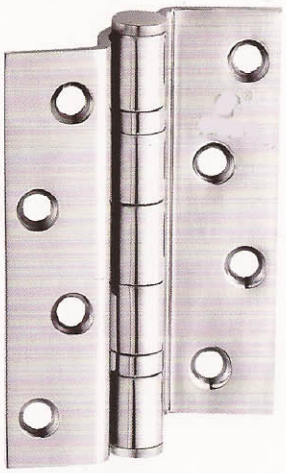

Dimension	L	L1	L2	W	D1	D2	T
101.6×66×3.0	101.6	12.7	25.4	66	ϕ14.2	ϕ8	3.0

HY-30535-4BB

曲铰 Crank Hinge

表面处理: 拉丝
主要材质: 纯SUS304不锈钢
适用范围: 各种木质大门、房门
主要特点: 滚珠轴承、S安装孔型、开关灵活、无噪音、寿命长
承重: 40Kg/3只

Finish: SSS
Material: SUS304 Stainless Steel
Available For: All kinds of Wooden Gate Door,Room Door
Features: Ball Bearing,SInstalled pass,Switching Flexibility,No Noise, Long life
Max Capactiy: 40Kg/3pcs

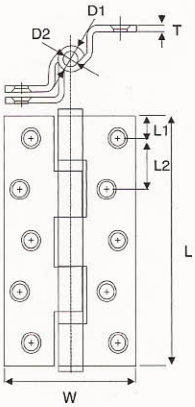

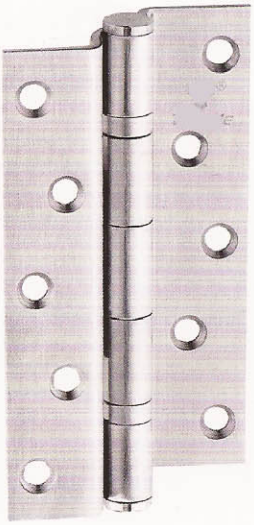

Dimension	L	L1	L2	W	D1	D2	T
127×66×3.0	127	12.7	25.4	66	ϕ14.2	ϕ8	3.0

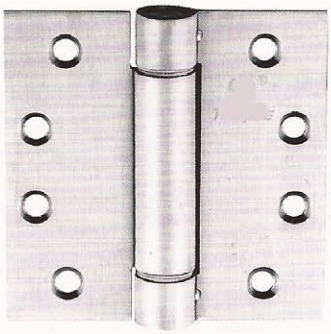

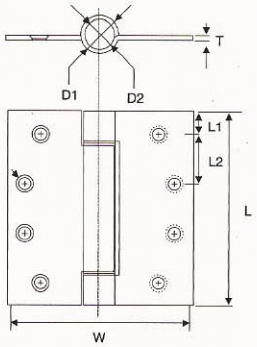

HY-3044单面弹簧铰

Single Spring Hinge

表面处理: 拉丝
主要材质: 纯SUS304不锈钢
适用范围: 各种木质大门、办公室门、通道门
主要特点: 门扇闭合大小根据实际需要调整、开合顺畅、可单向开启、开门角度大
承重: 30Kg/3只

Finish: SSS
Material: SUS304 Stainless Steel
Available For: All kinds of Wooden Gate Door, office Door And Passage Door
Features: Could adjust The spring To Control The Close spend,
smooth Opening, Unidirectional opening
Max Capactiy: 30Kg/3pcs

Dimension	L	L1	L2	W	D1	D2	T
4"×4'×3.0	101.6	12.7	25.4	101.6	ϕ19.2	ϕ13.2	3.0

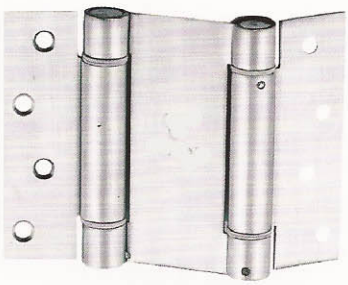

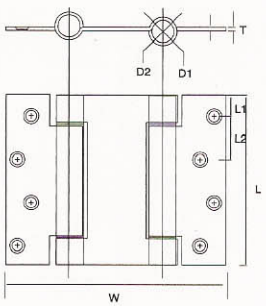

HY-双面弹簧铰

Double Spring Hinge

表面处理: 拉丝
主要材质: 纯SUS304不锈钢
适用范围: 各种木质大门、办公室门、通道门
主要特点: 门扇闭合大小根据实际需要调整、开合顺畅、可双向开启、开门角度大
承重: 30Kg/3只

Finish: SSS
Material: SUS304 Stainless Steel
Available For: All kinds of Wooden Gate Door, office Door And Passage Door
Features: Could adjust The spring To Control The Close spend,
smooth Opening,Double-open
Max Capactiy: 30Kg/3pcs

Dimension	L	L1	L2	W	D1	D2	T
4"×2.0	101.6	11.8	26	136.2	ϕ17.2	ϕ13.2	2

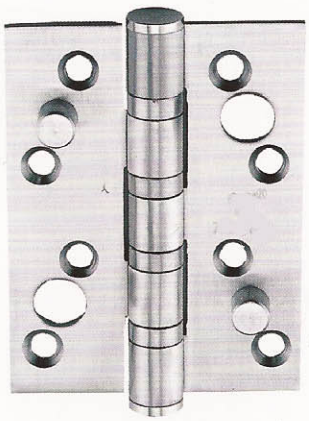

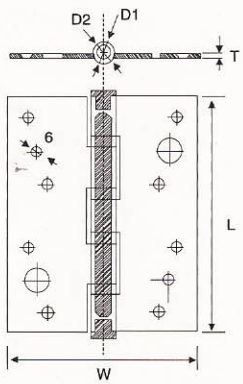

HY-3043双钉防盗铰

Double Hooks Security Hinge

表面处理: 拉丝
主要材质: 纯SUS304不锈钢
适用范围: 各种木质大门、房门
主要特点: 滚珠轴承、S安装孔型、开关灵活、无噪音、寿命长、
合页破坏时、也不能拆卸门扇
承重: 30Kg/3只

Finish: SSS
Material: SUS304 Stainless Steel
Available For: All kinds of Wooden Gate Door, Room Door
Features: Ball Bearing,SInstalled pass,Switching Flexibility,No Noise, Long life
Max Capactiy: 30Kg/3pcs

Dimension	L	L1	L2	W	D1	D2	T
5"×3.5"×3.0	127	12.5	25.5	88.9	ϕ14.2	ϕ8	3.0
5"×4"×3.0	127	12.5	25.5	101.6	ϕ14.2	ϕ8	3.0
4"×3"×3.0	101.6	12.7	25.4	76.2	ϕ14.2	ϕ8	3.0

HY-3043单面弹簧铰

Single Spring Hinge

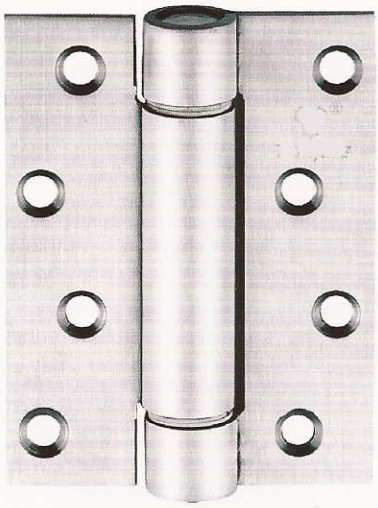

表面处理: 拉丝
主要材质: 纯SUS304不锈钢
适用范围: 各种木质大门、办公室门、通道门
主要特点: 门扇闭合大小根据实际需要调整、开合顺畅、可单向开启、开门角度大
承重: 30Kg/对

Finish: SSS
Material: SUS304 Stainless Steel
Available For: All kinds of Wooden Gate Door, office Door And Passage Door
Features: Could adjust The spring To Control The Close spend, smooth Opening,Double-open
Max Capactiy: 30Kg/Pairs

Dimension	L	L1	L2	W	D1	D2	T
4"×3"×3.0	101.6	12.7	25.4	76.2	ϕ14.2	ϕ8	3.0

安装方式 Installation Method

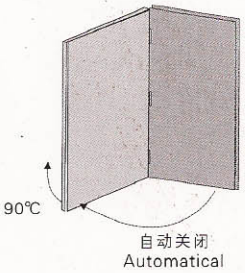

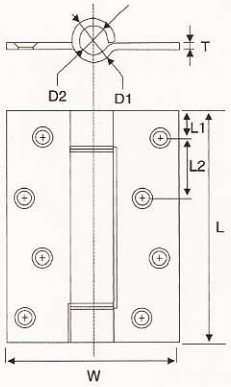

HY-3043双钩防盗铰

Double hooks Security Hinge

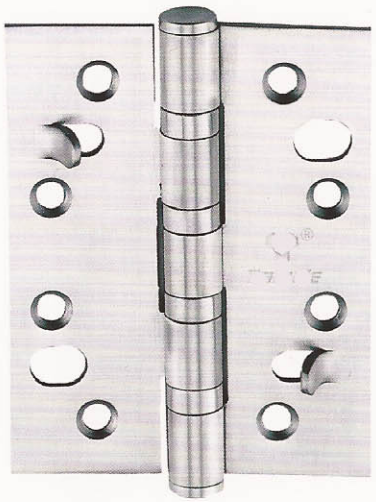

表面处理: 拉丝
主要材质: 纯SUS304不锈钢
适用范围: 各种木质大门、房门及开外门、阳台门
主要特点: 滚珠轴承、S安装孔型、开关灵活、无噪音、寿命长、合页破坏时、也不能拆卸门扇
承重: 50Kg/3只

Finish: SSS
Material: SUS304 Stainless Steel
Available For: All kinds of Wooden Gate Door, Room Door And Balcony Door
Features: Ball Bearing,SInstalled pass,Switching Flexibility,No Noise, Long life; hinge Destruction,We Can Not Demolish Door
Max Capactiy: 50Kg/3pcs

Dimension	L	L1	L2	W	D1	D2	T
4"×3"×3.0	101.6	12.7	25.4	76.2	ϕ14.2	ϕ8	3.0

安装方式 Installation Method

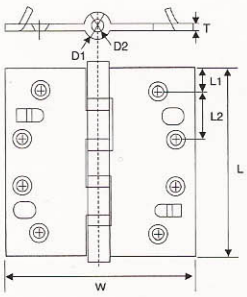

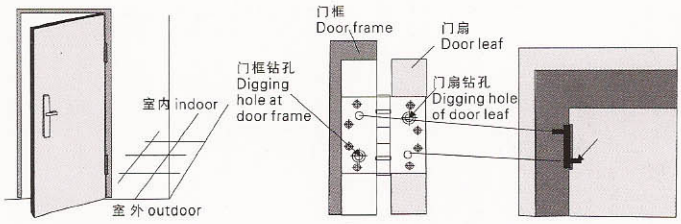

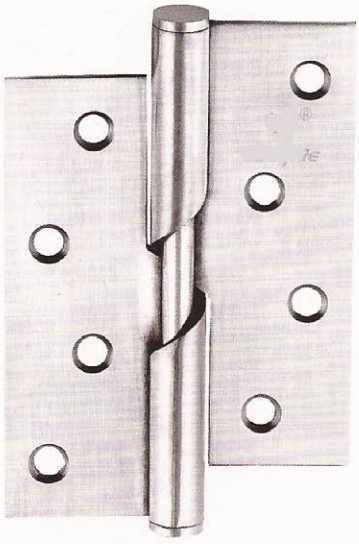

HY–2543升降铰

Life Off Hinge

表面处理: 拉丝
主要材质: 纯SUS304不锈钢
适用范围: 卫生间隔档门
主要特点: 承载并开合门扇,门推开后,保证门能自行缓慢关闭,安装简单、通用性强
承重: 40Kg/3只

Finish: SSS
Material: SUS304 Stainless Steel
Available For: Obstruct Door For Rest Room
Features: Installation Of Simple，Hing Universality
Max Capactiy: 40Kg/3pcs

Dimension	L	L1	L2	W	D1	D2	T
4"×3"×2.5	101.6	12.7	25.4	76.2	ϕ12.2	ϕ7.2	2.5

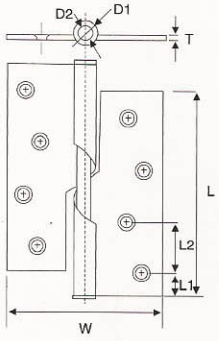

安装方式 Installation Method

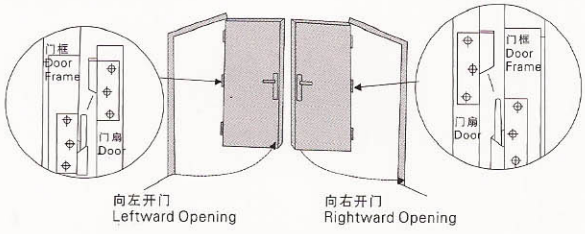

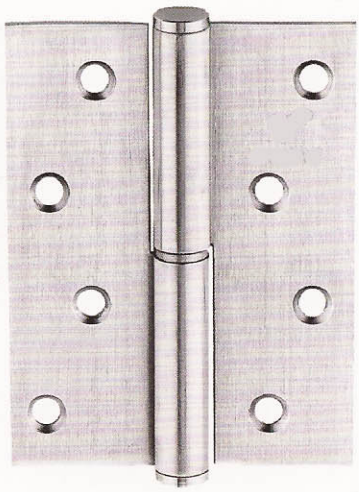

HY–2543直角拆装铰

Right–angle Assemble Hinge

表面处理: 拉丝
主要材质: 纯SUS304不锈钢
适用范围: 各种房门、通道门
主要特点: S安装孔型、开关灵活、无噪音、寿命长、无需拆卸螺丝钉、可装拆门扇
承重: 40Kg/对

Finish: SSS
Material: SUS304 Stainless Steel
Available For: All Wooden Door, And Access Doors
Features: SInstalled Pass, Switching Flexibility, No Noise,Long Life, Non–dismounting Screws, Dismountable Doorframe
Max Capactiy: 40Kg/Pairs

Dimension	L	L1	L2	W	D1	D2	T
4"×3"×2.5	101.6	12.7	25.4	76.2	ϕ12.2	ϕ7.2	2.5

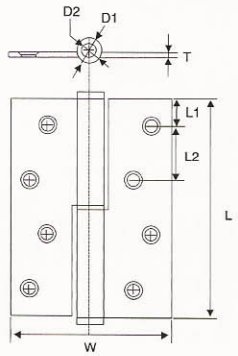

安装方式 Installation Method

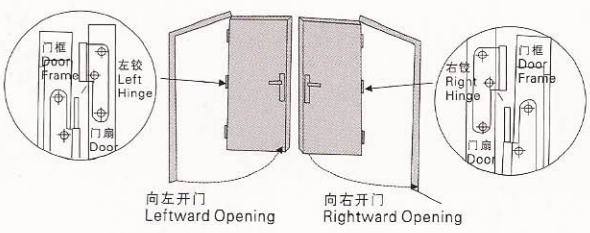

HY-30435圆角拆装铰

Round Corner Assemble Hinge

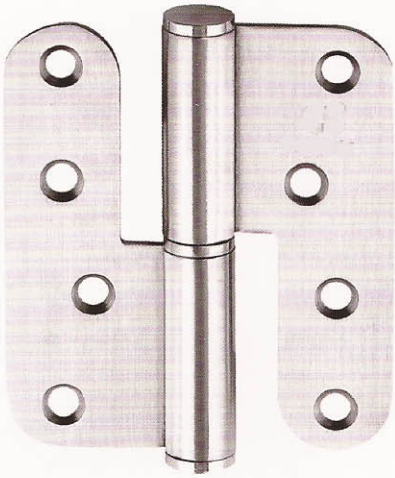

表面处理: 拉丝

主要材质: 纯SUS304不锈钢
适用范围: 各种木质大门、房门
主要特点: 滚珠轴承、S安装孔型、开关灵活、无噪音、寿命长
承重: 30Kg/3只

Finish: SSS
Material: SUS304 Stainless Steel
Available For: All kinds of Wooden Gate Door,Room Door
Features: Ball Bearing,SInstalled pass,Switching Flexibility, No Noise, Long life
Max Capactiy: 30Kg/3pcs

Dimension	L	L1	L2	W	D1	D2	T
4"×3.5"×3.0	101.6	10.3	27	88.9	ϕ16.2	ϕ10.2	3.0

安装方式 Installation Method

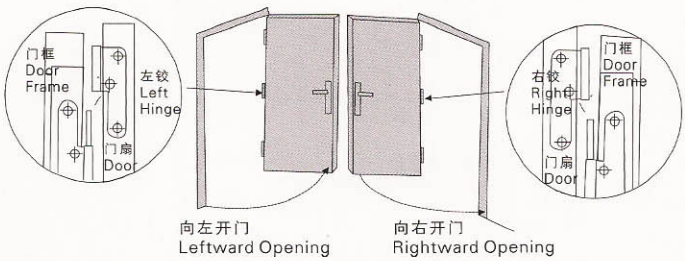

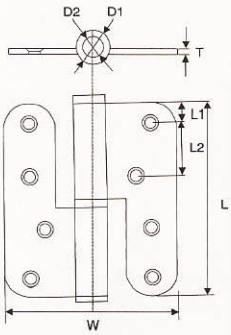



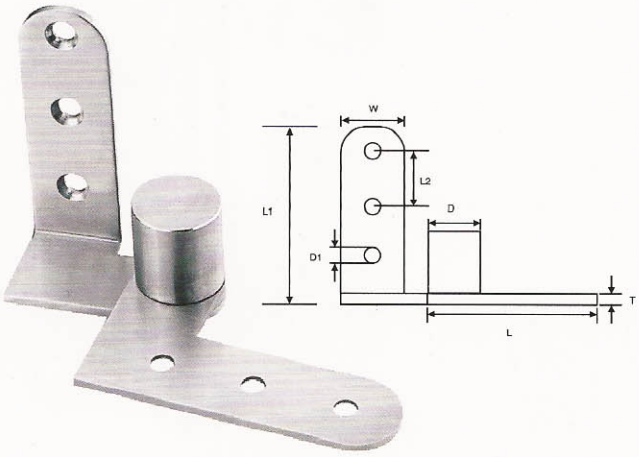

HY–圆柱天地铰

Cylindrical Pivot Hinge

表面处理:
拉丝
主要材质:
不锈钢
适用范围:
各木质大门
主要特点:
使门柜或门窗运作顺畅开启90°

Finish: SSS
Material: Stainless Steel
Available For: All Kinds of Wooden Gate Door
Features: Enable Door Or Window Works Smoothly. Open Angle Exceed 90°

Dimension	L	L1	L2	W	D	D1	T
85×25×3.0	85	78	25.2	25	ϕ24	ϕ6.2	3.0

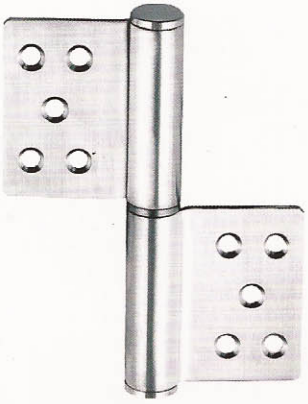

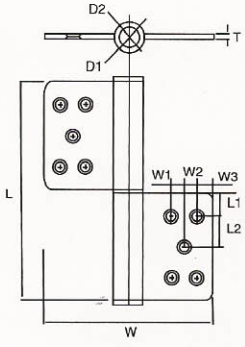

HY–3054–FG旗铰

Flag Hinge

表面处理: 拉丝
主要材质: 纯SUS304不锈钢
适用范围: 各种铁门、更适合通道门、防火门
主要特点: 分左右开门用旗铰、无需拆卸螺丝钉、可装拆门
承重: 50Kg/3只

Finish: SSS
Material: SUS304 Stainless Steel
Available For: All Kinds Of Iron Door, Passage Door And Fire–escape Door Are More Suitable
Features: There Are Leftward And Rightward Opening Flag Hinges, Non–dismounting Screws, Dismountable Door frame
Max Capactiy: 50Kg/3pcs

规格 Dimension	L	L1	L2	W	W1	W2	W3	D1	D2	T
128.5×101.6×3.0	128.5	13.5	18	101.6	8	8	9.5	ϕ182	ϕ12.2	3.0

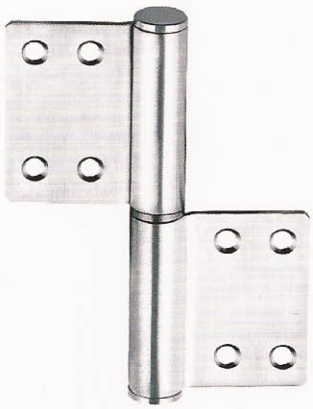

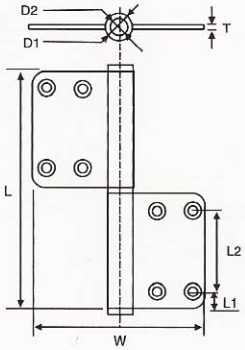

HY–2043–FG旗铰

Flag Hinge

表面处理: 拉丝
主要材质: 纯SUS304不锈钢
适用范围: 轻型铝合金门专用
主要特点: 分左右开门用旗铰、无需拆卸螺丝钉、可装拆门安装简单、通用性强
承重: 40Kg/3只

Finish: SSS
Material: SUS304 Stainless Steel
Available For: Special use for light aluminum alloy
Features: There Are Leftward And Rightward Opening Flag Hinges, Non–dismounting Screws, Dismountable Door frame
Max Capactiy: 40Kg/3pcs

规格 Dimension	L	L1	L2	W	D1	D2	T
102×74×2.0	102	7.4	35.2	74	ϕ12.2	ϕ7.2	2.0

HY–磨心铰
Pivot Hinge

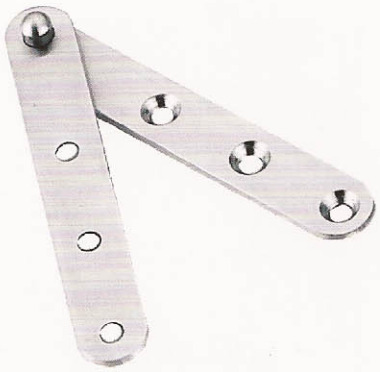

表面处理:
拉丝
主要材质:
不锈钢
适用范围:
简易门窗、橱柜
主要特点:
安装简单、通用性强

Finish: SSS
Material: Stainless Steel
Available For: Summary Doors And Windows, Cabinets
Features: Assembly,hing universality

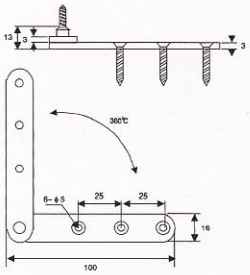

HY–鸡咀铰L/S
Pivot Hinge

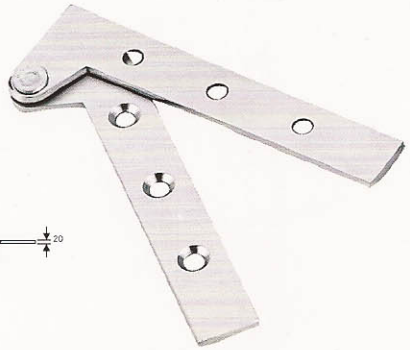

表面处理:
拉丝
主要材质:
不锈钢
适用范围:
简易门窗、橱柜
主要特点:
使门柜或门窗运作顺畅开启90°

Finish: SSS
Material: Stainless Steel
Available For: Summary Doors And Windows, Cabinets
Features: Enable Door Or Window Works Smoothly. Open Angle Exceed 90°

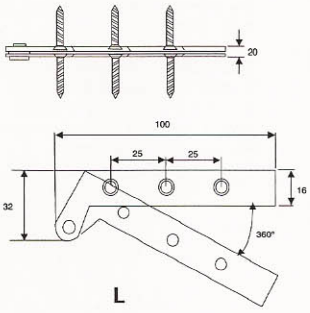

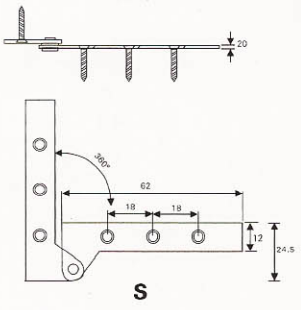

HY–平面天地铰
Pivot Hinge

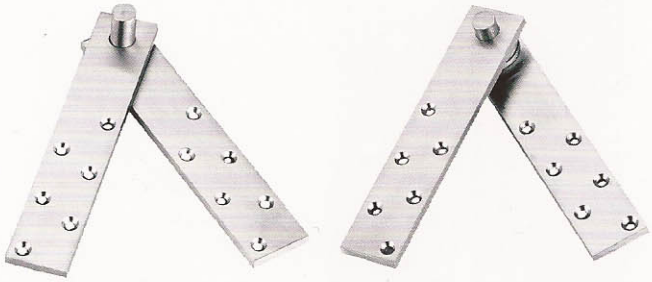

表面处理:
拉丝
主要材质:
不锈钢
适用范围:
各种木质大门
主要特点:
使门柜或门窗运作顺畅开启90°

Finish: SSS
Material: Stainless Steel
Available For: All kinds of Wooden Gate Door
Features: Enable Door Or Window Works Smoothly. Open Angle Exceed 90°

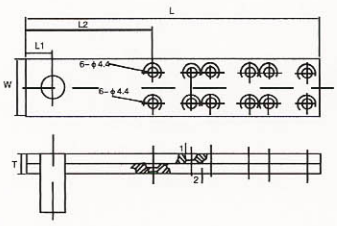

Dimension	L	L1	L2	W	T
150.8 x 29.7 x 10	150.8	13.4	64.7	29.7	10

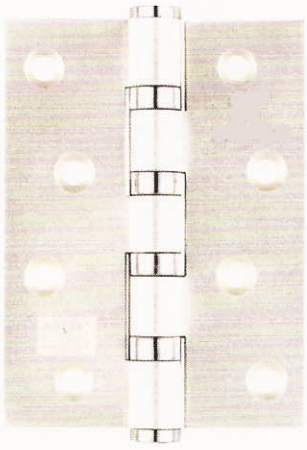

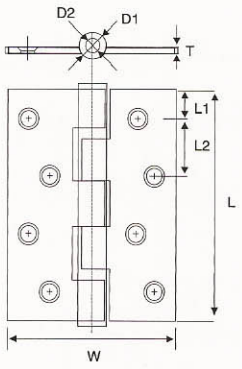

HY-GB3043-4BB
HY-GB3543-4BB

不锈钢合页 Stainless Steel Hinge Series

表面处理: 喷沙银
主要材质: 不锈钢电镀
适用范围: 各种木质大门、房门
主要特点: 滚珠轴承、S安装孔型、开关灵活、无噪音、寿命长
承重: 40Kg/3只

Finish: SPC
Material: Stainless Steel Plating
Available For: All kinds of Wooden Gate Door,Room Door
Features: Ball Bearing,SInstalled pass,Switching Flexibility,No Noise, Long life
Max Capactiy: 40Kg/3pcs

Dimension	L	L1	L2	W	D1	D2	T
4" × 3" × 3.5	101.6	12.7	25.4	76.2	ϕ 14	ϕ 8	3.5
4" × 3" × 3.0	101.6	12.7	25.4	76.2	ϕ 12	ϕ 8	3.0

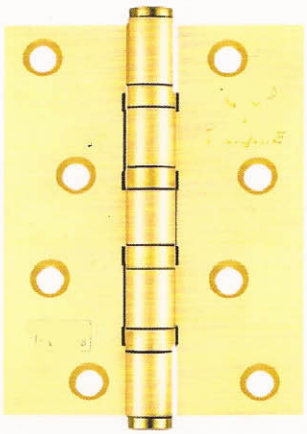

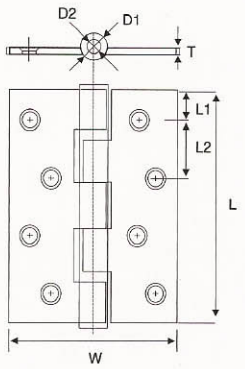

HY-GB3043-4BB
HY-GB3543-4BB

不锈钢合页 Stainless Steel Hinge Series

表面处理: 喷沙金
主要材质: 不锈钢电镀
适用范围: 各种木质大门、房门
主要特点: 滚珠轴承、S安装孔型、开关灵活、无噪音、寿命长
承重: 40Kg/3只

Finish: SPG
Material: Stainless Steel Plating
Available For: All kinds of Wooden Gate Door,Room Door
Features: Ball Bearing,SInstalled pass,Switching Flexibility,No Noise, Long life
Max Capactiy: 40Kg/3pcs

Dimension	L	L1	L2	W	D1	D2	T
4" × 3" × 3.5	101.6	12.7	25.4	76.2	ϕ 14	ϕ 8	3.5
4" × 3" × 3.0	101.6	12.7	25.4	76.2	ϕ 12	ϕ 8	3.0

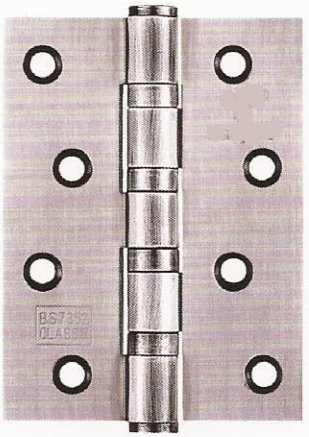

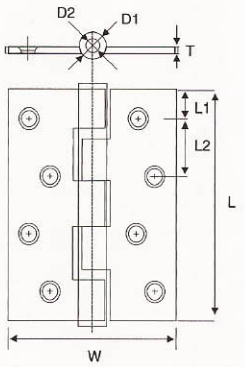

HY-GB3043-4BB
HY-GB3543-4BB

不锈钢合页 Stainless Steel Hinge Series

表面处理: 钢拉丝
主要材质: 不锈钢电镀
适用范围: 各种木质大门、房门
主要特点: 滚珠轴承、S安装孔型、开关灵活、无噪音、寿命长
承重: 40Kg/3只

Finish: SN
Material: Stainless Steel Plating
Available For: All kinds of Wooden Gate Door,Room Door
Features: Ball Bearing,SInstalled pass,Switching Flexibility,No Noise, Long life
Max Capactiy: 40Kg/3pcs

Dimension	L	L1	L2	W	D1	D2	T
4" × 3" × 3.5	101.6	12.7	25.4	76.2	ϕ 14	ϕ 8	3.5
4" × 3" × 3.0	101.6	12.7	25.4	76.2	ϕ 12	ϕ 8	3.0

HY-GB3043-4BB
HY-GB3543-4BB

不锈钢合页 Stainless Steel Hinge Series

表面处理: 铜拉丝
主要材质: 不锈钢电镀
适用范围: 各种木质大门、房门
主要特点: 滚珠轴承、S安装孔型、开关灵活、无噪音、寿命长
承重: 40Kg/3只

Finish: SSS
Material: Stainless Steel Plating
Available For: All kinds of Wooden Gate Door,Room Door
Features: Ball Bearing,SInstalled pass,Switching Flexibility,No Noise, Long life
Max Capactiy: 40Kg/3pcs

Dimension	L	L1	L2	W	D1	D2	T
4"×3"×3.5	101.6	12.7	25.4	76.2	ϕ14	ϕ8	3.5
4"×3"×3.0	101.6	12.7	25.4	76.2	ϕ12	ϕ8	3.0

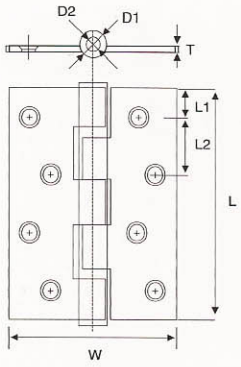

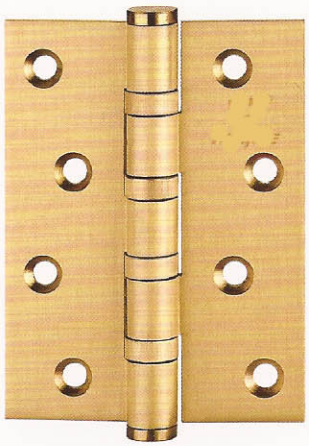

HY-GB3043-4BB
HY-GB3543-4BB

不锈钢合页 Stainless Steel Hinge Series

表面处理: 青古铜
主要材质: 不锈钢电镀
适用范围: 各种木质大门、房门
主要特点: 滚珠轴承、S安装孔型、开关灵活、无噪音、寿命长
承重: 40Kg/3只

Finish: AB
Material: Stainless Steel Plating
Available For: All kinds of Wooden Gate Door,Room Door
Features: Ball Bearing,SInstalled pass,Switching Flexibility,No Noise, Long life
Max Capactiy: 40Kg/3pcs

Dimension	L	L1	L2	W	D1	D2	T
4"×3"×3.5	101.6	12.7	25.4	76.2	ϕ14	ϕ8	3.5
4"×3"×3.0	101.6	12.7	25.4	76.2	ϕ12	ϕ8	3.0

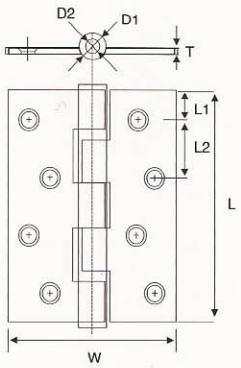

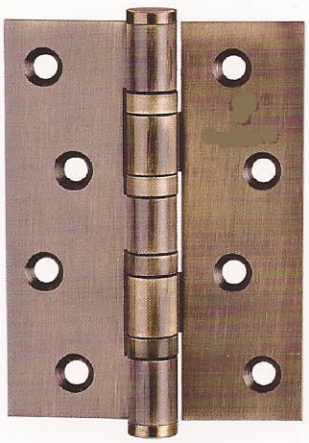

HY-GB3043-4BB
HY-GB3543-4BB

不锈钢合页 Stainless Steel Hinge Series

表面处理: 红古铜
主要材质: 不锈钢电镀
适用范围: 各种木质大门、房门
主要特点: 滚珠轴承、S安装孔型、开关灵活、无噪音、寿命长
承重: 40Kg/3只

Finish: AC
Material: Stainless Steel Plating
Available For: All kinds of Wooden Gate Door,Room Door
Features: Ball Bearing,SInstalled pass,Switching Flexibility,No Noise, Long life
Max Capactiy: 40Kg/3pcs

Dimension	L	L1	L2	W	D1	D2	T
4"×3"×3.5	101.6	12.7	25.4	76.2	ϕ14	ϕ8	3.5
4"×3"×3.0	101.6	12.7	25.4	76.2	ϕ12	ϕ8	3.0

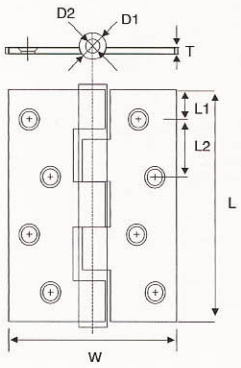

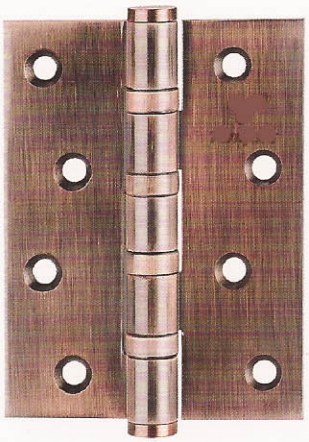

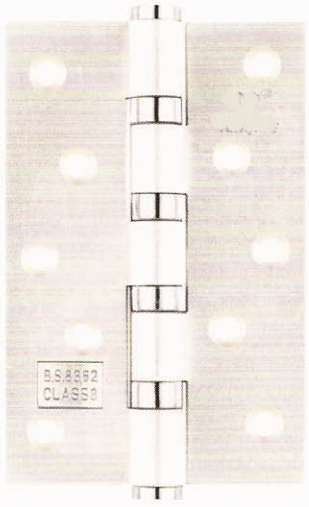

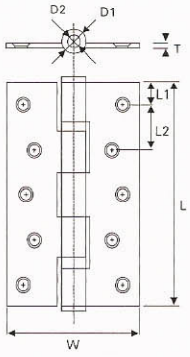

HY–GB3053–4BB

不锈钢合页 Stainless Steel Hinge Series

表面处理: 喷沙银
主要材质: 不锈钢电镀
适用范围: 各种木质大门、房门
主要特点: 滚珠轴承、S安装孔型、开关灵活、无噪音、寿命长
承重: 50Kg/3只

Finish: SPC
Material: Stainless Steel Plating
Available For: All kinds of Wooden Gate Door, Room Door
Features: Ball Bearing,SInstalled pass,Switching Flexibility,No Noise, Long life
Max Capactiy: 50Kg/3pcs

Dimension	L	L1	L2	W	D1	D2	T
5"×3"×3.5	127	12.5	25.5	76	ϕ15.2	ϕ8	3.5
5"×3"×3.0	127	12.5	25.5	76	ϕ14.2	ϕ8	3.0

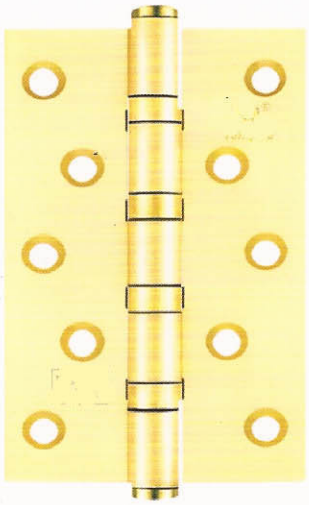

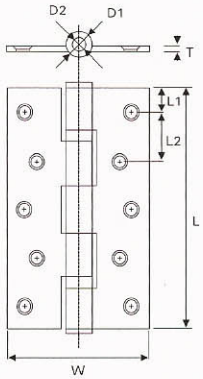

HY–GB3053–4BB

不锈钢合页 Stainless Steel Hinge Series

表面处理: 喷沙金
主要材质: 不锈钢电镀
适用范围: 各种木质大门、房门
主要特点: 滚珠轴承、S安装孔型、开关灵活、无噪音、寿命长
承重: 50Kg/3只

Finish: SPG
Material: Stainless Steel Plating
Available For: All kinds of Wooden Gate Door, Room Door
Features: Ball Bearing,SInstalled pass,Switching Flexibility,No Noise, Long life
Max Capactiy: 50Kg/3pcs

Dimension	L	L1	L2	W	D1	D2	T
5"×3"×3.5	127	12.5	25.5	76	ϕ15.2	ϕ8	3.5
5"×3"×3.0	127	12.5	25.5	76	ϕ14.2	ϕ8	3.0

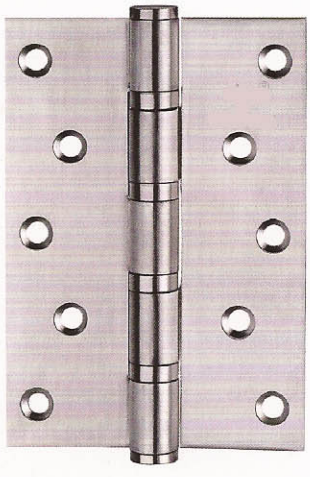

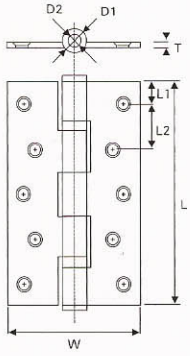

HY–GB3053–4BB

不锈钢合页 Stainless Steel Hinge Series

表面处理: 钢拉丝
主要材质: 不锈钢电镀
适用范围: 各种木质大门、房门
主要特点: 滚珠轴承、S安装孔型、开关灵活、无噪音、寿命长
承重: 50Kg/3只

Finish: SN
Material: Stainless Steel Plating
Available For: All kinds of Wooden Gate Door, Room Door
Features: Ball Bearing,SInstalled pass,Switching Flexibility,No Noise, Long life
Max Capactiy: 50Kg/3pcs

Dimension	L	L1	L2	W	D1	D2	T
5"×3"×3.5	127	12.5	25.5	76	ϕ15.2	ϕ8	3.5
5"×3"×3.0	127	12.5	25.5	76	ϕ14.2	ϕ8	3.0

HY-GB3053-4BB

不锈钢合页 Stainless Steel Hinge Series

表面处理: 铜拉丝
主要材质: 不锈钢电镀
适用范围: 各种木质大门、房门
主要特点: 滚珠轴承、S安装孔型、开关灵活、无噪音、寿命长
承重: 40Kg/3只

Finish: SSS
Material: Stainless Steel Plating
Available For: All kinds of Wooden Gate Door,Room Door
Features: Ball Bearing,SInstalled pass,Switching Flexibility,No Noise, Long life
Max Capactiy: 40Kg/3pcs

Dimension	L	L1	L2	W	D1	D2	T
5"×3"×3.5	127	12.5	25.5	76	ϕ15.2	ϕ8	3.5
5"×3"×3.0	127	12.5	25.5	76	ϕ14.2	ϕ8	3.0

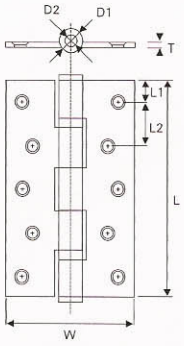

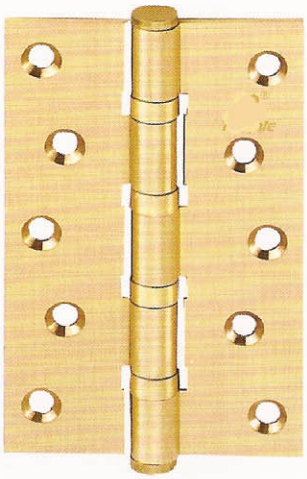

HY-GB3053-4BB

不锈钢合页 Stainless Steel Hinge Series

表面处理: 青古铜
主要材质: 不锈钢电镀
适用范围: 各种木质大门、房门
主要特点: 滚珠轴承、S安装孔型、开关灵活、无噪音、寿命长
承重: 40Kg/3只

Finish: AB
Material: Stainless Steel Plating
Available For: All kinds of Wooden Gate Door,Room Door
Features: Ball Bearing,SInstalled pass,Switching Flexibility,No Noise, Long life
Max Capactiy: 40Kg/3pcs

Dimension	L	L1	L2	W	D1	D2	T
5"×3"×3.5	127	12.5	25.5	76	ϕ15.2	ϕ8	3.5
5"×3"×3.0	127	12.5	25.5	76	ϕ14.2	ϕ8	3.0

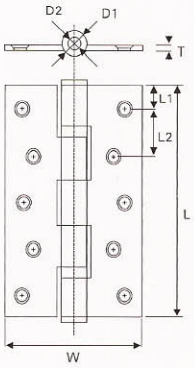

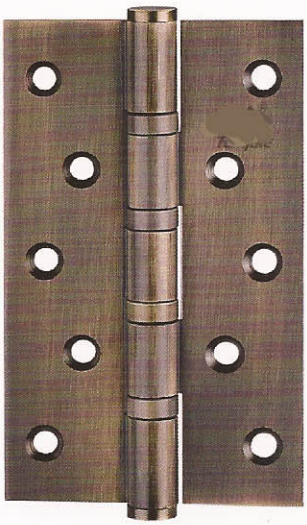

HY-GB3053-4BB

不锈钢合页 Stainless Steel Hinge Series

表面处理: 红古铜
主要材质: 不锈钢电镀
适用范围: 各种木质大门、房门
主要特点: 滚珠轴承、S安装孔型、开关灵活、无噪音、寿命长
承重: 40Kg/3只

Finish: AC
Material: Stainless Steel Plating
Available For: All kinds of Wooden Gate Door,Room Door
Features: Ball Bearing,SInstalled pass,Switching Flexibility,No Noise, Long life
Max Capactiy: 40Kg/3pcs

Dimension	L	L1	L2	W	D1	D2	T
5"×3"×3.5	127	12.5	25.5	76	ϕ15.2	ϕ8	3.5
5"×3"×3.0	127	12.5	25.5	76	ϕ14.2	ϕ8	3.0

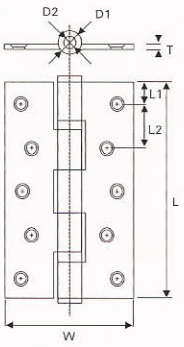



铜合页系列
Brass Hinge Series





轴承
Bearing

门高度与合页安装数量 (单位mm)
Different hinge quantities matching(Unit:mm)
with the door height

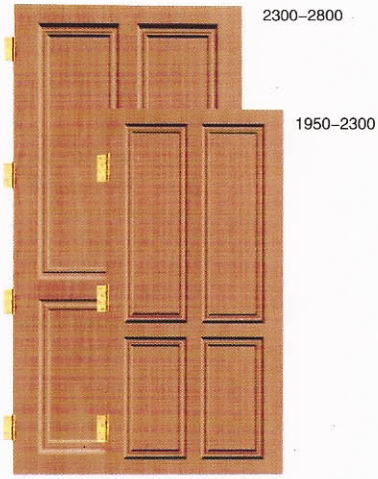

铜合页承重表
The table of bearing weight of brass hinge

合页厚度 Hinge thickness	合页高度 Hinge height	承重 Bearing weight
H=2.4mm	B=101.6mm	40 kg
H=3.0mm	B=101.6mm	45kg
	B=127mm	50 kg
	B=152mm	60 kg
H=3.5mm	B=101.6mm	60 kg
	B=127mm	70 kg
	B=152mm	80 kg
H=4.0mm	B=101.6mm	90 kg
	B=127mm	100 kg
	B=152mm	120 kg

以一扇门安装三只合页为准
Based on one door for three hinges

安装示意
installation indication

门框 Door frame

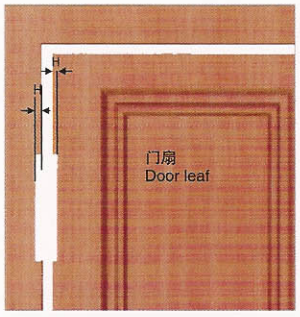

按合页厚度挖槽,H=合页厚度
Digging is based on the hinge thickness,
H=hinge thickness,

门框 Door frame

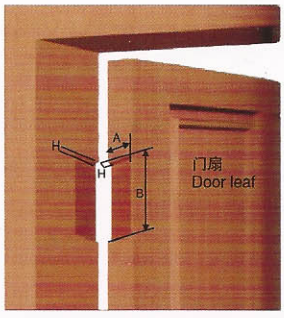

A=合页宽, B=合页长, H=合页厚度
A=hinge width, B=hinge lenght
H=hinge thickness

门框 Door frame

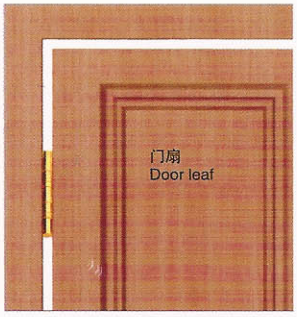

将合页装在挖槽处
Put the hinge at the digging place

门框 Door frame



合页安装螺丝
Fixing screw for hinge

注: 门扇安装调试合格后,进行油漆工艺时,请于合页表面贴上美纹进行保护.
Remarks: After door installed,when varnishing,it should stick paper on the hinge to protect it.

HY-3044-4BB

铜合页 Brass Steel Hinge Series

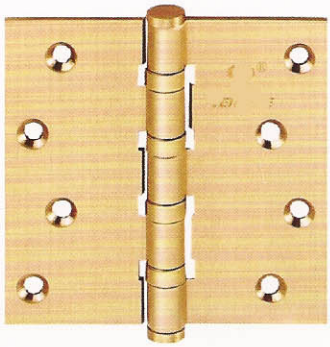

表面处理:
拉丝
主要材质:
铜
适用范围: 各种木质大门、房门
主要特点: 滚珠轴承、S安装孔型、开关灵活、无噪音、寿命长
承重: 40Kg/3只

Finish: SSS
Material: Brass
Available For: All kinds of Wooden Gate Door,Room Door
Features: Ball Bearing,SInstalled pass,Switching Flexibility,No Noise, Long life
Max Capactiy: 40Kg/3pcs

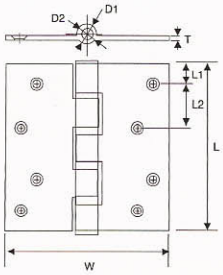

Dimension	L	L1	L2	W	D1	D2	T
4"×4"×3.5	101.6	12.7	25.4	101.6	ϕ14	ϕ7	3.5
4"×4"×3.0	101.6	12.7	25.4	101.6	ϕ12	ϕ7	3.0
4"×4"×2.5	101.6	12.7	25.4	101.6	ϕ11	ϕ7	2.5

HY-3043-4BB

铜合页 Brass Steel Hinge Series

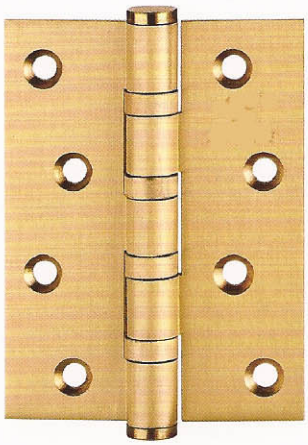

表面处理: 拉丝
主要材质: 铜
适用范围: 各种木质大门、房门
主要特点: 滚珠轴承、S安装孔型、开关灵活、无噪音、寿命长
承重: 40Kg/3只

Finish: SSS
Material: Brass
Available For: All kinds of Wooden Gate Door,Room Door
Features: Ball Bearing,SInstalled pass, Switching Flexibility No Noise,Long life
Max Capactiy: 40Kg/3pcs

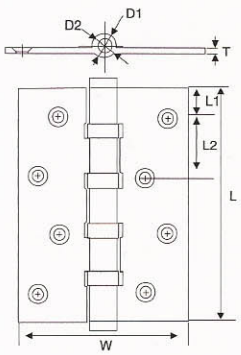

Dimension	L	L1	L2	W	D1	D2	T
4"×3"×3.5	101.6	12.7	25.4	76.2	ϕ14	ϕ7	3.5
4"×3"×3.0	101.6	12.7	25.4	76.2	ϕ12	ϕ7	3.0
4"×3"×2.5	101.6	12.7	25.4	76.2	ϕ11	ϕ7	2.5
4"×3"×2.0	101.6	12.7	25.4	76.2	ϕ10	ϕ7	2.0

HY-3053-4BB

铜合页 Brass Steel Hinge Series

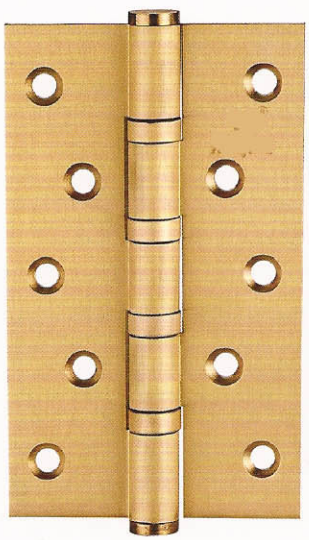

表面处理: 拉丝
主要材质: 铜
适用范围: 各种木质大门、房门
主要特点: 滚珠轴承、S安装孔型、开关灵活、无噪音、寿命长
承重: 40Kg/3只

Finish: SSS
Material: Brass
Available For: All kinds of Wooden Gate Door,Room Door
Features: Ball Bearing,SInstalled pass,Switching Flexibility,No Noise, Long life
Max Capactiy: 40Kg/3pcs

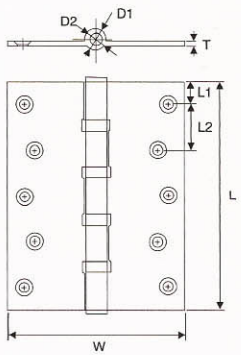

Dimension	L	L1	L2	W	D1	D2	T
5"×4"×3.5	127	12.5	25.5	101.6	ϕ14	ϕ7	3.5
5"×4"×3.0	127	12.5	25.5	101.6	ϕ12	ϕ7	3.0

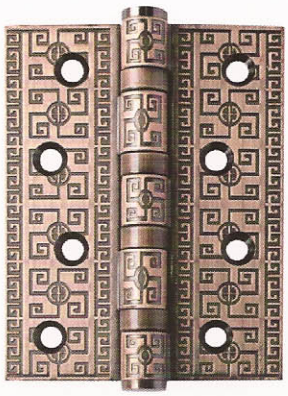

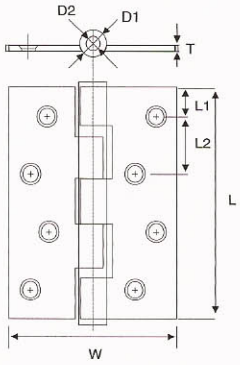

HY–3043欧式(2)

锌合页 Zinc Hinge

表面处理: 红古铜、青古铜、黄古铜
主要材质: 锌合金
适用范围: 各种木质大门、房门
主要特点: 滚珠轴承、S安装孔型、开关灵活、无噪音、寿命长
承重: 50Kg/3只

Finish: AC,AB,YAB
Material: Zinc Alloy
Available For: All kinds of Wooden Gate Door,Room Door
Features: Ball Bearing,SInstalled pass,Switching Flexibility,No Noise, Long life
Max Capactiy: 50Kg/3pcs

Dimension	L	L1	L2	W	D1	D2	T
4"×3"×4.0	101.6	14	25.5	76	ϕ15.2	ϕ8	4.0
5"×3"×4.0	127	14	25.5	76	ϕ15.2	ϕ8	4.0

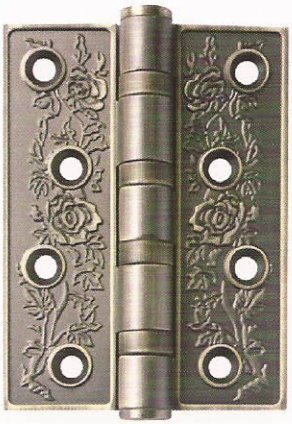

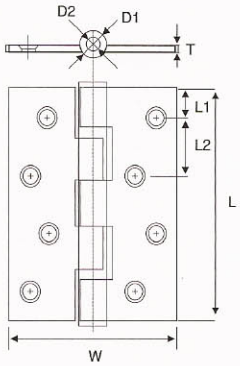

HY–3043欧式(3)

锌合页 Zinc Hinge

表面处理: 红古铜、青古铜、黄古铜
主要材质: 锌合金
适用范围: 各种木质大门、房门
主要特点: 滚珠轴承、S安装孔型、开关灵活、无噪音、寿命长
承重: 50Kg/3只

Finish: AC,AB,YAB
Material: Zinc Alloy
Available For: All kinds of Wooden Gate Door,Room Door
Features: Ball Bearing,SInstalled pass,Switching Flexibility,No Noise, Long life
Max Capactiy: 50Kg/3pcs

Dimension	L	L1	L2	W	D1	D2	T
4"×3"×4.0	101.6	14	25.5	76	ϕ15.2	ϕ8	4.0
5"×3"×4.0	127	14	25.5	76	ϕ15.2	ϕ8	4.0

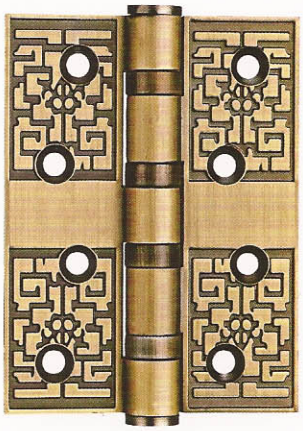

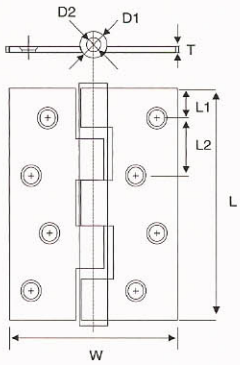

HY–3043欧式(4)

锌合页 Zinc Hinge

表面处理: 红古铜、青古铜、黄古铜
主要材质: 锌合金
适用范围: 各种木质大门、房门
主要特点: 滚珠轴承、S安装孔型、开关灵活、无噪音、寿命长
承重: 50Kg/3只

Finish: AC,AB,YAB
Material: Zinc Alloy
Available For: All kinds of Wooden Gate Door,Room Door
Features: Ball Bearing,SInstalled pass,Switching Flexibility,No Noise, Long life
Max Capactiy: 50Kg/3pcs

Dimension	L	L1	L2	W	D1	D2	T
4"×3"×4.0	101.6	14	25.5	76	ϕ15.2	ϕ8	4.0
5"×3"×4.0	127	14	25.5	76	ϕ15.2	ϕ8	4.0

HY–3053欧式(4)

锌合页 Zinc Hinge

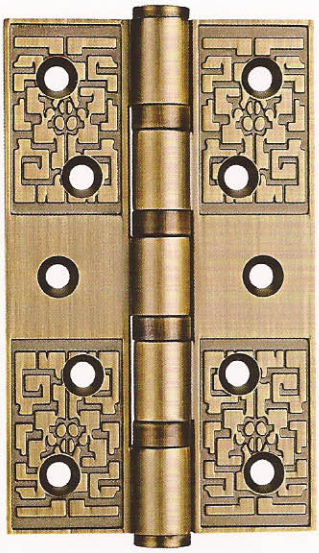

表面处理: 红古铜、青古铜、黄古铜
主要材质: 锌合金
适用范围: 各种木质大门、房门
主要特点: 滚珠轴承、S安装孔型、开关灵活、无噪音、寿命长
承重: 50Kg/3只

Finish: AC,AB,YAB
Material: Zinc Alloy
Available For: All kinds of Wooden Gate Door,Room Door
Features: Ball Bearing,SInstalled pass,Switching Flexibility,No Noise, Long life
Max Capactiy: 50Kg/3pcs

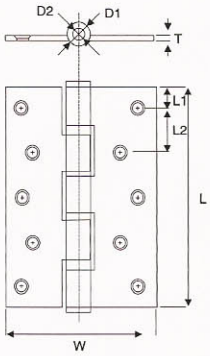

Dimension	L	L1	L2	W	D1	D2	T
4"×3"×4.0	101.6	14	25.5	76	ϕ15.2	ϕ8	4.0
5"×3"×4.0	127	14	25.5	76	ϕ15.2	ϕ8	4.0

最大承重：50kg/3只
Max Capactiy:50kg/3pcs

安装方式 Installation Method

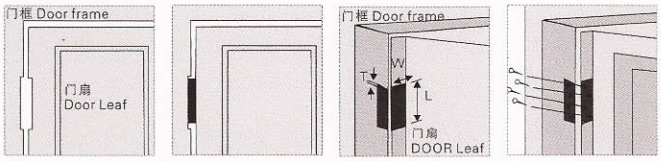

HY–3053欧式(3)

锌合页 Zinc Hinge



表面处理: 红古铜、青古铜、黄古铜
主要材质: 锌合金
适用范围: 各种木质大门、房门
主要特点: 滚珠轴承、S安装孔型、开关灵活、无噪音、寿命长
承重: 50Kg/3只

Finish: AC,AB,YAB
Material: Zinc Alloy
Available For: All kinds of Wooden Gate Door,Room Door
Features: Ball Bearing,SInstalled pass,Switching Flexibility,No Noise, Long life
Max Capactiy: 50Kg/3pcs

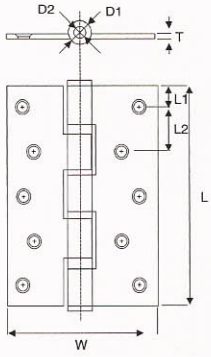

Dimension	L	L1	L2	W	D1	D2	T
4"×3"×4.0	101.6	14	25.5	76	ϕ15.2	ϕ8	4.0
5"×3"×4.0	127	14	25.5	76	ϕ15.2	ϕ8	4.0

最大承重：50kg/3只
Max Capactiy:50kg/3pcs

安装方式 Installation Method

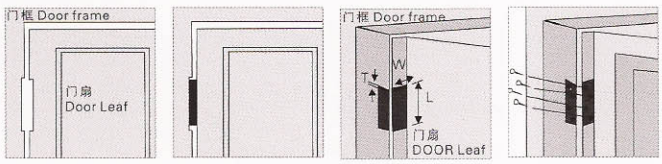

MX-601

门吸 Door Stopper

表面处理： 镍拉丝、拉丝金、青古铜
主要材质： 铜
适用范围： 房间门
主要特点： 地面或墙面安装、多种表面颜色

Finish: SN,SG,AB
Material: Brass
Available For: Rooms Doors
Features: Installed of the Ground or Wall,Various Surface Clolrs



立式安装示意
Vertical Installation

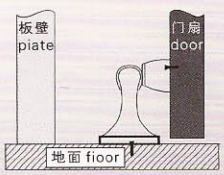

卧式安装示意
Horizontal Installation

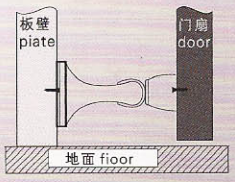

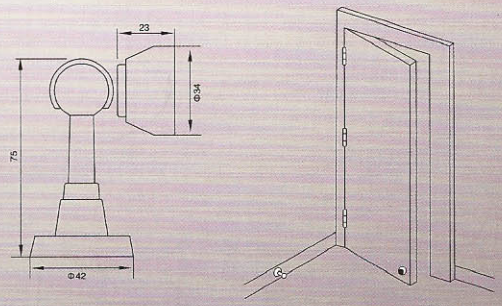

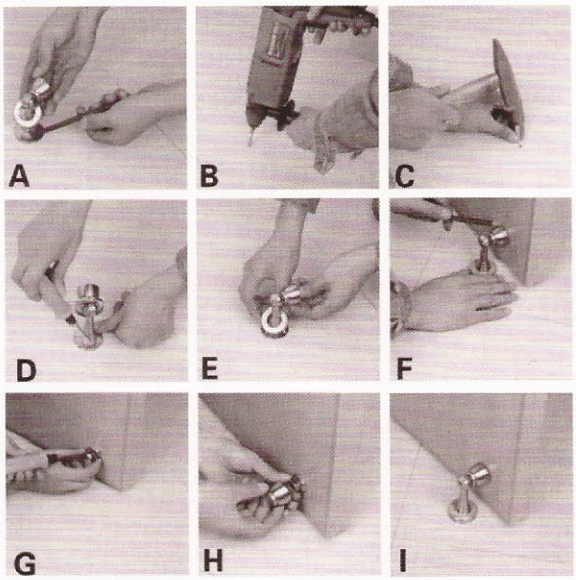

门吸安装步骤：
A 根据门扇停止的位置，确定底座在地面的位置，并画线。
B 在地面钻两个Φ6孔。
C 用铁锤打入塑料胶塞。
D 用螺钉固定门吸底座在地面。
E 把吸座底盖外壳旋进吸座底盖。
F 确定吸头的位置，使吸头与吸座准确定位并画线。
G 将吸头底盖固定。
H 把吸头体旋进吸头底盖。
I 使用实样。

Door Holderrack Installation Steps
A Position the base on the floor according to the door leaf, then draw lines.
B Drill six holes on the floor.
C Knock the rubber plug into it with hammer.
D Fix the door catch base on the floor with screws.
E Spin the catch base cover crust into the cover.
F Position the catch head, making it align to the catch base, and draw lines.
G Fix the catch head.
H Spin the catch head into the catch base cover.
I Use of pure oxygen.

MX-608

门顶 Door Top

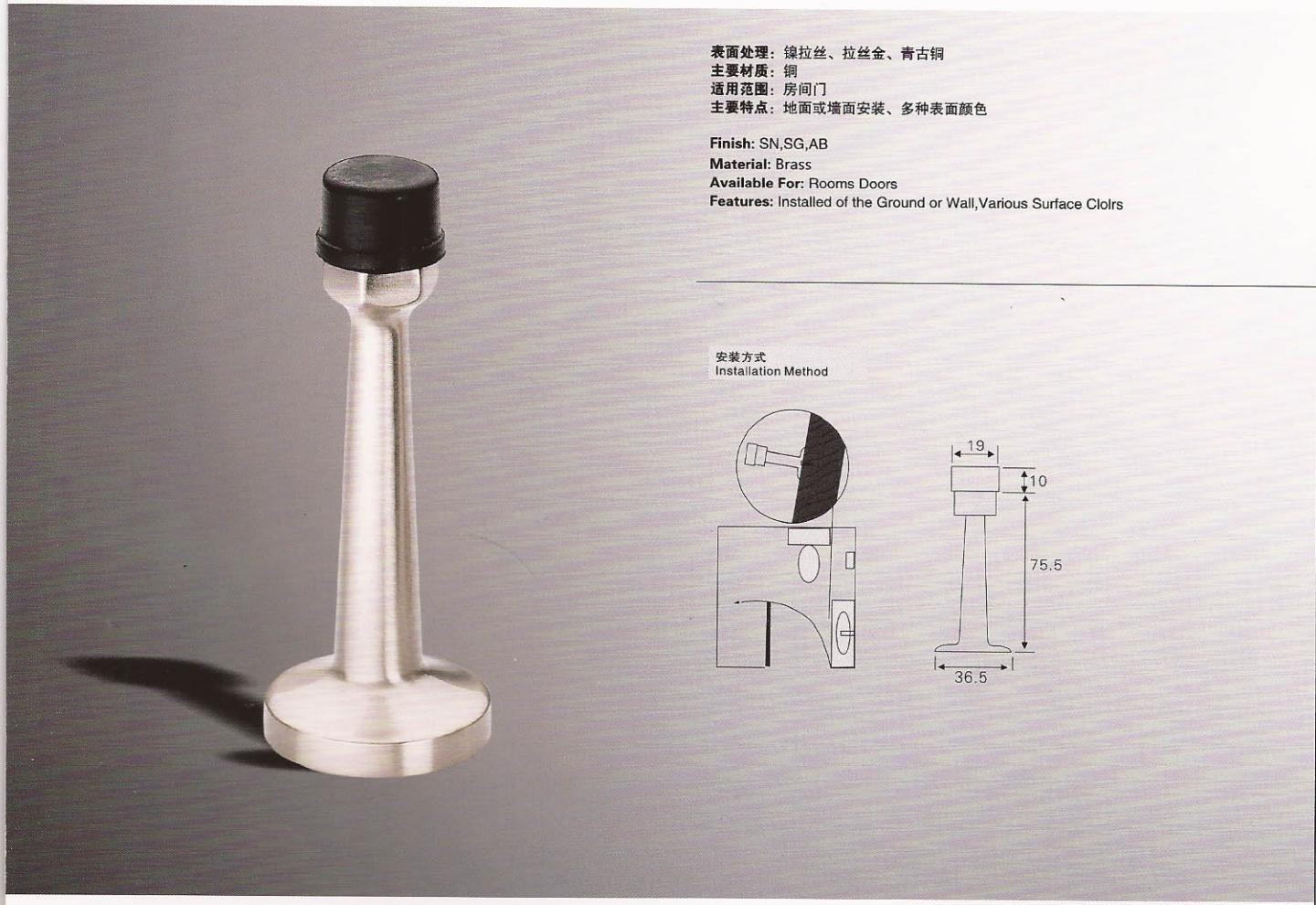

表面处理： 镍拉丝、拉丝金、青古铜
主要材质： 铜
适用范围： 房间门
主要特点： 地面或墙面安装、多种表面颜色

Finish: SN,SG,AB
Material: Brass
Available For: Rooms Doors
Features: Installed of the Ground or Wall,Various Surface Clolrs

安装方式
Installation Method

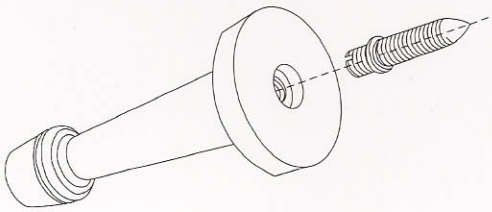

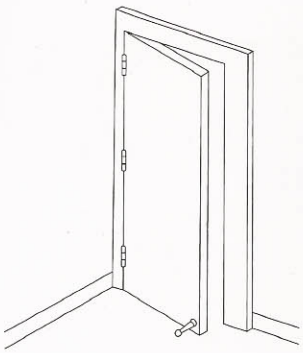

门顶产品特点：
防撞头采用NBR材料。主体材质采用62铜，单孔固定，安装方便

Door Stopper Features
The impact-avoidance head is made of NBR material.The principal part is made of 62 copper, with single-hole fixing. Convernient installation.

产品保养：
1、防止在搬运中出现的碰伤。
2、清洁时，尽量不要弄湿金属镀件，先用软布或干棉纱除灰尘，再用布擦拭，保持干燥，不可以实用有颜色的清洁剂，或用力破坏表面层。
3、应防止酸碱盐类的侵蚀和沾污。

Maintenance Of Products:
1、Ptebent scratches in delibery.
2、When cleaning, do not get wet the metal plating part. First dust it with soft colth or cotton yarn, Last dry it up with cloth. Keep it dry. Do not use colored cleanser of destroy the surface with force.
3、Prevent fron corrosion and staining.

门顶安装步骤：
A 先将螺钉头拧进门扇。
B 将主体拧螺钉另一端。
C 使用实样。

Door Sropper Installation Steps:
A Fix the screw.
B Fix the door stopper bady.
C Use of pure oxygen.

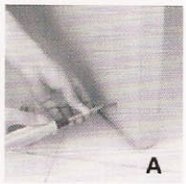

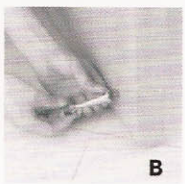

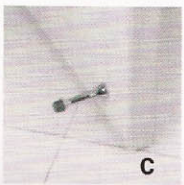

MX–610

地吸 To absorb

表面处理：镍拉丝、拉丝金、青古铜
主要材质：锌合金
适用范围：房间门
主要特点：只适用于地面、底面增加定位装置、稳定、牢固

Finish: SN,SG,AB
Material: Zinc Alloy
Available For: Rooms Doors
Features: Only For Groud Assembly, Positioning Functions, Stable And Reliable

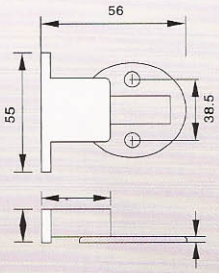

安装方式
Installation Method

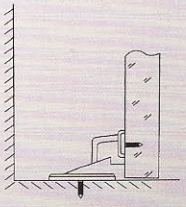

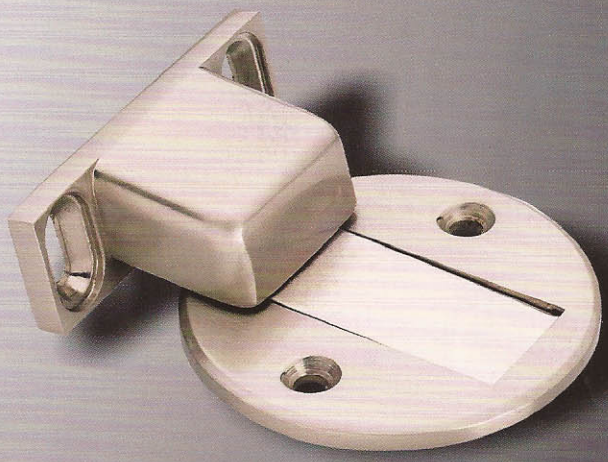

产品保养：
1、防止在搬运中出现的碰伤。
2、清洁时，尽量不要弄湿金属镀件，先用软布或干棉纱除灰尘，再用布擦拭，保持干燥，不可以实用有颜色的清洁剂，或用力破坏表面层。
3、应防止酸碱盐类的侵蚀和沾污。

Maintenance Of Products:
1、Ptebent scratches in delibery.
2、When cleaning, do not get wet the metal plating part. First dust it with soft colth or cotton yarn, Last dry it up with cloth. Keep it dry. Do not use colored cleanser of destroy the surface with force.
3、Prevent fron corrosion and staining.

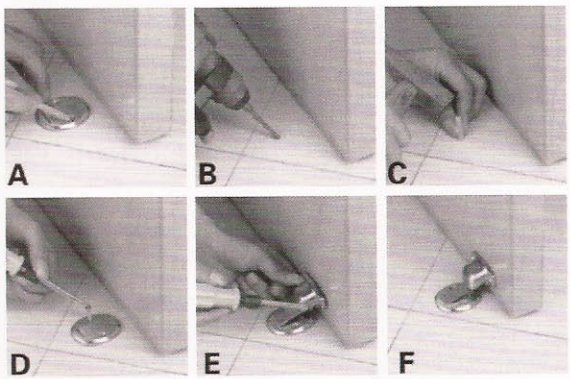

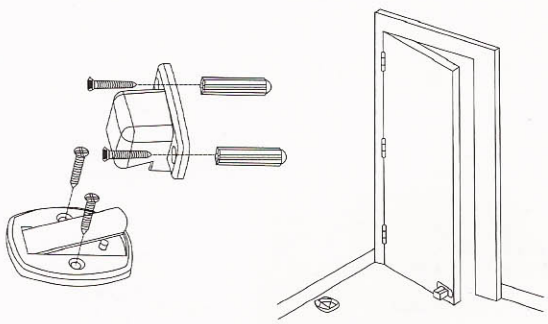

地吸安装步骤：
A 先确定门扇安装地吸底座的位置并画线。
B 在地面钻上钻孔。
C 用铁锤小心打入塑料胶塞。
D 以自攻螺丝把地板固定在地面。
E 在门扇上固定主体。
F 使用实样。

Door Holder Installation Steps:
A Position door holder.
B Drill holes on the floor.
C Knock the rubber plug into it with hammer.
D Fix the base on the floor with tapping screws.
E Fix the body on the wall.
F Use of pure oxygen.

地吸产品特点：
地吸主体为锌合金材料，强磁磁铁；主体安装在门背面，超薄吸片安装在地面，美观，占用空间少。

Door Holderrack features:
The magnetic catch is made of zinc alloy, powerful magnetic. The principal part is installed on the floor. It boasts of com design and taking little space.

MX–602

门吸
Door Stopper



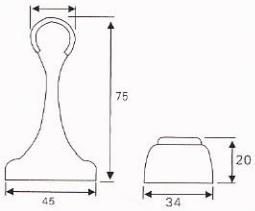

立式安装示意
Vertical Installation

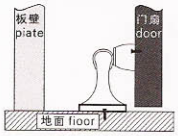

卧式安装示意
Horizontal Installation

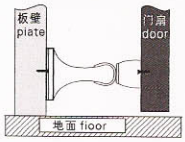

表面处理：
镍拉丝、拉丝金、青古铜
主要材质：
锌合金
适用范围：
房间门
主要特点：
地面或墙面安装、多种表面颜色

Finish:
SN,SG,AB
Material:
Zinc Alloy
Available For:
Rooms Doors
Features:
Installed of the Ground or Wall,
Various Surface Clolrs

MX–604

门吸
Door Stopper



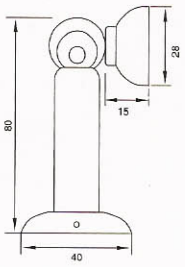

立式安装示意
Vertical Installation

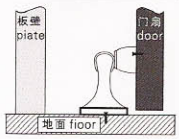

卧式安装示意
Horizontal Installation

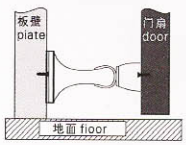

表面处理：
镍拉丝、拉丝金、青古铜
主要材质：
铜
适用范围：
房间门
主要特点：
地面或墙面安装、多种表面颜色

Finish:
SN,SG,AB
Material:
Brass
Available For:
Rooms Doors
Features:
Installed of the Ground or Wall,
Various Surface Clolrs

MX–605

地吸
To absorb



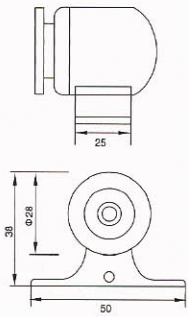

安装方式
Installation Method

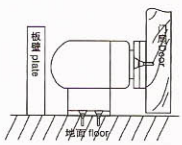

安装意图 Installation Illustration

表面处理：
镍拉丝、拉丝金、青古铜
主要材质：
铜
适用范围：
房间门
主要特点：
地面或墙面安装、多种表面颜色

Finish:
SN,SG,AB
Material:
Brass
Available For:
Rooms Doors
Features:
Installed of the Ground or Wall,
Various Surface Clolrs

MX-606

门吸
Door Stopper

表面处理:
镍拉丝、拉丝金、青古铜
主要材质:
锌合金
适用范围:
房间门
主要特点:
地面或墙面安装、多种表面颜色

Finish:
SN,SG,AB
Material:
Zinc Alloy
Available For:
Rooms Doors
Features:
Installed of the Ground or Wall,
Various Surface Clolrs

立式安装示意
Vertical Installation

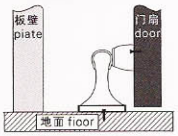

卧式安装示意
Horizontal Installation

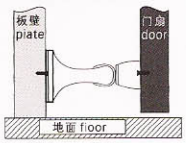

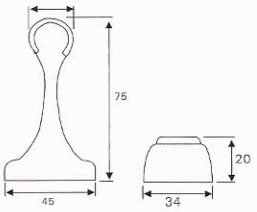



MX-607

门顶
Door Top

表面处理:
镍拉丝、拉丝金、青古铜
主要材质:
锌合金
适用范围:
房间门
主要特点:
地面或墙面安装、多种表面颜色

Finish:
SN,SG,AB
Material:
Zinc Alloy
Available For:
Rooms Doors
Features:
Installed of the Ground or Wall,
Various Surface Clolrs

安装方式
Installation Method

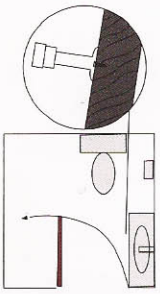

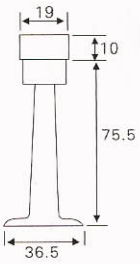



MX-609

半圆门顶
Half Roud Door Stopper

表面处理:
镍拉丝、拉丝金、青古铜
主要材质:
锌合金
适用范围:
房间门
主要特点:
只适用于地面、底面增加定位装置、
稳定、牢固

Finish:
SN,SG,AB
Material:
Zinc Alloy
Available For:
Rooms Doors
Features:
Only For Groud Assembly, Positioning
Functions, Stable And Reliable

安装方式
Installation Method

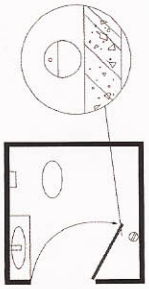

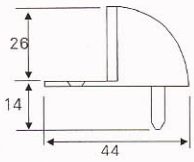



MX–260

门吸
Door Stopper



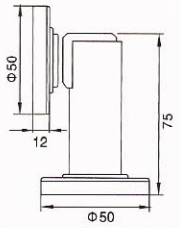

立式安装示意
Vertical Installation

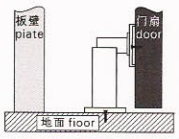

卧式安装示意
Horizontal Installation

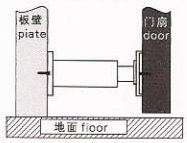

表面处理：
镍拉丝、拉丝金、青古铜
主要材质：
锌合金
适用范围：
房间门
主要特点：
地面或墙面安装、多种表面颜色

Finish:
SN,SG,AB
Material:
Zinc Alloy
Available For:
Rooms Doors
Features:
Installed of the Ground or Wall,
Various Surface Clolrs

MX–502

门吸
Door Stopper



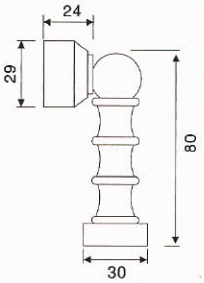

立式安装示意
Vertical Installation

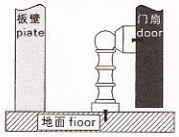

卧式安装示意
Horizontal Installation

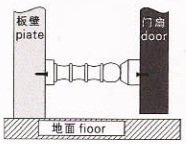

表面处理：
铝氧化
主要材质：
铝
适用范围：
房间门
主要特点：
地面或墙面安装

Finish:
AO
Material:
Aluminum
Available For:
Rooms Doors
Features:
Installed of the Ground or Wall

MX–503

门吸
Door Stopper



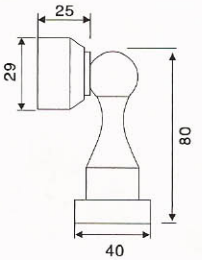

立式安装示意
Vertical Installation

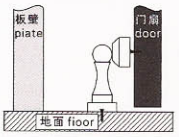

卧式安装示意
Horizontal Installation

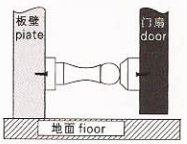

表面处理：
铝氧化
主要材质：
铝
适用范围：
房间门
主要特点：
地面或墙面安装

Finish:
AO
Material:
Aluminum
Available For:
Rooms Doors
Features:
Installed of the Ground or Wall

MX-505

地吸
To absorb



表面处理：
铝氧化
主要材质：
铝
适用范围：
房间门
主要特点：
地面或墙面安装

Finish:
AO
Material:
Aluminum
Available For:
Rooms Doors
Features:
Installed of the Ground or Wall

安装方式
Installation Method

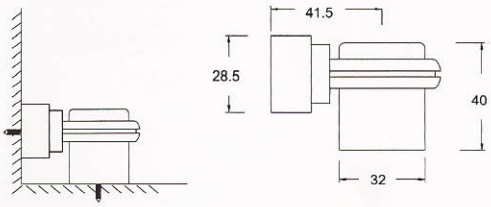

MX-506

地吸
To absorb

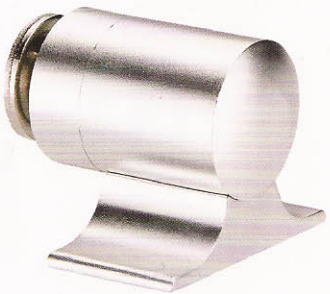

表面处理：
铝氧化
主要材质：
铝
适用范围：
房间门
主要特点：
地面或墙面安装

Finish:
AO
Material:
Aluminum
Available For:
Rooms Doors
Features:
Installed of the Ground or Wall

安装方式
Installation Method

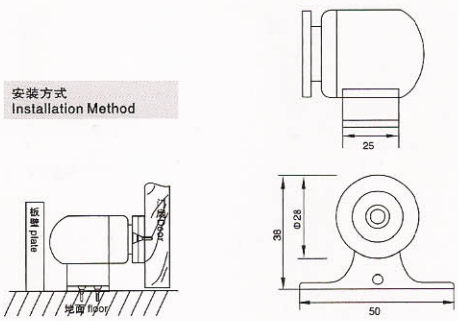

MX-507

地吸
To absorb

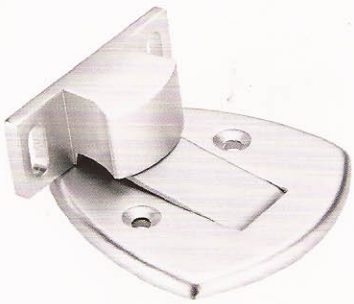

表面处理：
铝氧化
主要材质：
铝
适用范围：
房间门
主要特点：
地面或墙面安装

Finish:
AO
Material:
Aluminum
Available For:
Rooms Doors
Features:
Installed of the Ground or Wall

安装方式
Installation Method

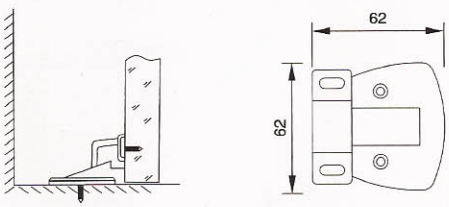

MX–504

门顶
Door Top

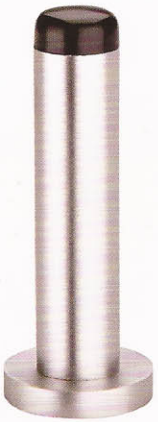

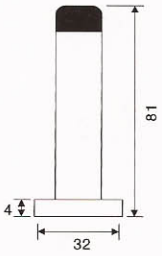

立式安装示意
Vertical Installation

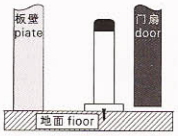

卧式安装示意
Horizontal Installation

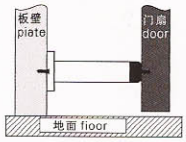

表面处理：
铝氧化
主要材质：
铝
适用范围：
房间门
主要特点：
地面或墙面安装

Finish:
AO
Material:
Aluminum
Available For:
Rooms Doors
Features:
Installed of the Ground or Wall

MX–508

门吸
Door Stopper



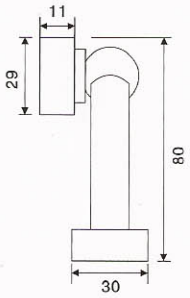

立式安装示意
Vertical Installation

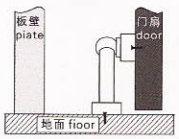

卧式安装示意
Horizontal Installation

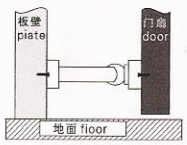

表面处理：
铝氧化
主要材质：
铝
适用范围：
房间门
主要特点：
地面或墙面安装

Finish:
AO
Material:
Aluminum
Available For:
Rooms Doors
Features:
Installed of the Ground or Wall

MX–510

门吸
Door Stopper



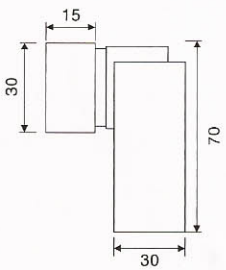

立式安装示意
Vertical Installation

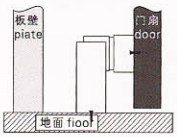

卧式安装示意
Horizontal Installation

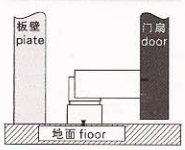

表面处理：
铝氧化
主要材质：
铝
适用范围：
房间门
主要特点：
地面或墙面安装

Finish:
AO
Material:
Aluminum
Available For:
Rooms Doors
Features:
Installed of the Ground or Wall

MX-511

门顶
Door Top

表面处理：
铝氧化
主要材质：
铝
适用范围：
房间门
主要特点：
地面或墙面安装

Finish:
AO
Material:
Aluminum
Available For:
Rooms Doors
Features:
Installed of the Ground or Wall

安装方式
Installation Method

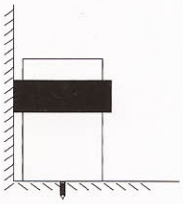

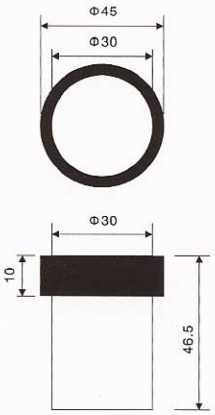



MX-274

门吸
Door Stopper

表面处理：
青古铜、红古铜、拉丝钢
主要材质：
锌合金
适用范围：
房间门
主要特点：
地面或墙面安装、多种表面颜色

Finish:
AB, AC, SN
Material:
Zinc Alloy
Available For:
Rooms Doors
Features:
Installed of the Ground or Wall,
Various Surface Clolrs

立式安装示意
Vertical Installation

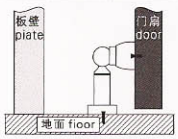

卧式安装示意
Horizontal Installation

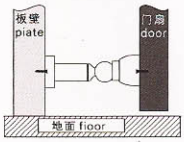

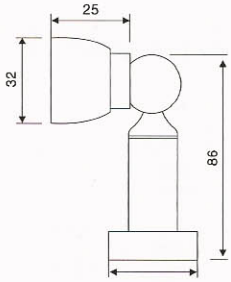



MX-275

门吸
Door Stopper

表面处理：
青古铜、红古铜、拉丝钢
主要材质：
锌合金
适用范围：
房间门
主要特点：
地面或墙面安装、多种表面颜色

Finish:
AB, AC, SN
Material:
Zinc Alloy
Available For:
Rooms Doors
Features:
Installed of the Ground or Wall,
Various Surface Clolrs

立式安装示意
Vertical Installation

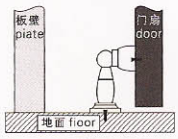

卧式安装示意
Horizontal Installation

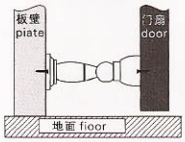

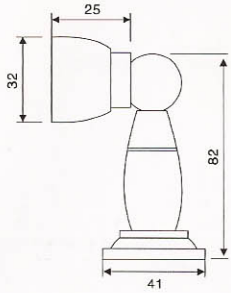



MX-282

门吸
Door Stopper



表面处理：
黄古铜
主要材质：
锌合金
适用范围：
房间门
主要特点：
地面或墙面安装、多种表面颜色

Finish:
AD
Material:
Zinc Alloy
Available For:
Rooms Doors
Features:
Installed of the Ground or Wall,
Various Surface Cloirs

MX-297

门吸
Door Stopper



表面处理：
青古铜、红古铜
主要材质：
锌合金
适用范围：
房间门
主要特点：
地面或墙面安装、多种表面颜色

Finish:
AB, AC
Material:
Zinc Alloy
Available For:
Rooms Doors
Features:
Installed of the Ground or Wall,
Various Surface Cloirs

MX-283

门吸
Door Stopper



表面处理：
黄古铜
主要材质：
锌合金
适用范围：
房间门
主要特点：
地面或墙面安装、多种表面颜色

Finish:
AD
Material:
Zinc Alloy
Available For:
Rooms Doors
Features:
Installed of the Ground or Wall,
Various Surface Cloirs

MX-295

门吸
Door Stopper



表面处理：
青古铜、红古铜
主要材质：
锌合金
适用范围：
房间门
主要特点：
地面或墙面安装、多种表面颜色

Finish:
AB, AC
Material:
Zinc Alloy
Available For:
Rooms Doors
Features:
Installed of the Ground or Wall,
Various Surface Cloirs

MX-284

门吸
Door Stopper



表面处理：
红古铜、黄古铜、拉丝
主要材质：
锌合金
适用范围：
房间门
主要特点：
地面或墙面安装、多种表面颜色

Finish:
AC, AD, SS
Material:
Zinc Alloy
Available For:
Rooms Doors
Features:
Installed of the Ground or Wall,
Various Surface Cloirs

MX-298

门吸
Door Stopper



表面处理：
青古铜、红古铜
主要材质：
锌合金
适用范围：
房间门
主要特点：
地面或墙面安装、多种表面颜色

Finish:
AB, AC
Material:
Zinc Alloy
Available For:
Rooms Doors
Features:
Installed of the Ground or Wall,
Various Surface Cloirs

MX–299

门吸
Door Stopper

表面处理:
青古铜、红古铜、拉丝钢
主要材质:
锌合金
适用范围:
房间门
主要特点:
地面或墙面安装、多种表面颜色

Finish:
AB, AC, SN
Material:
Zinc Alloy
Available For:
Rooms Doors
Features:
Installed of the Ground or Wall,
Various Surface Clolrs



MX–291

门吸
Door Stopper

表面处理:
青古铜、红古铜
主要材质:
锌合金
适用范围:
房间门
主要特点:
地面或墙面安装、多种表面颜色

Finish:
AB, AC
Material:
Zinc Alloy
Available For:
Rooms Doors
Features:
Installed of the Ground or Wall,
Various Surface Clolrs

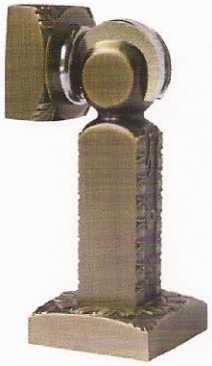

MX–259

门吸
Door Stopper

表面处理:
青古铜、红古铜、拉丝钢
主要材质:
锌合金
适用范围:
房间门
主要特点:
地面或墙面安装、多种表面颜色

Finish:
AB, AC, SN
Material:
Zinc Alloy
Available For:
Rooms Doors
Features:
Installed of the Ground or Wall,
Various Surface Clolrs



MX–296

门吸
Door Stopper

表面处理:
青古铜、红古铜
主要材质:
锌合金
适用范围:
房间门
主要特点:
地面或墙面安装、多种表面颜色

Finish:
AB, AC
Material:
Zinc Alloy
Available For:
Rooms Doors
Features:
Installed of the Ground or Wall,
Various Surface Clolrs



MX–293

门吸
Door Stopper

表面处理:
青古铜
主要材质:
锌合金
适用范围:
房间门
主要特点:
地面或墙面安装、多种表面颜色

Finish:
AB
Material:
Zinc Alloy
Available For:
Rooms Doors
Features:
Installed of the Ground or Wall,
Various Surface Clolrs



MX–231 兰

门吸
Door Stopper

表面处理:
镍拉丝、拉丝金、青古铜
主要材质:
锌合金
适用范围:
房间门
主要特点:
地面或墙面安装、多种表面颜色

Finish:
SN,SG,AB
Material:
Zinc Alloy
Available For:
Rooms Doors
Features:
Only For Groud Assembly, Positioning
Functions, Stable And Reliable



MX-228

门吸
Door Stopper



表面处理：
青古铜、红古铜、拉丝钢
主要材质：
锌合金
适用范围：
房间门
主要特点：
地面或墙面安装、多种表面颜色

Finish:
AB, AC, SN
Material:
Zinc Alloy
Available For:
Rooms Doors
Features:
Installed of the Ground or Wall,
Various Surface Clolrs

MX-225 夜光

门吸
Door Stopper



表面处理：
拉丝镍
主要材质：
锌合金
适用范围：
房间门
主要特点：
地面或墙面安装、多种表面颜色

Finish:
SN
Material:
Zinc Alloy
Available For:
Rooms Doors
Features:
Installed of the Ground or Wall,
Various Surface Clolrs

MX-220

门吸
Door Stopper



表面处理：
青古铜、红古铜、拉丝钢
主要材质：
锌合金
适用范围：
房间门
主要特点：
地面或墙面安装、多种表面颜色

Finish:
AB, AC, SN
Material:
Zinc Alloy
Available For:
Rooms Doors
Features:
Installed of the Ground or Wall,
Various Surface Clolrs

MX-225A

门吸
Door Stopper



表面处理：
拉丝镍
主要材质：
锌合金
适用范围：
房间门
主要特点：
地面或墙面安装、多种表面颜色

Finish:
SN
Material:
Zinc Alloy
Available For:
Rooms Doors
Features:
Installed of the Ground or Wall,
Various Surface Clolrs

MX-223

门吸
Door Stopper



表面处理：
青古铜
主要材质：
锌合金
适用范围：
房间门
主要特点：
地面或墙面安装、多种表面颜色

Finish:
AB
Material:
Zinc Alloy
Available For:
Rooms Doors
Features:
Installed of the Ground or Wall,
Various Surface Clolrs

MX-225D

门吸
Door Stopper

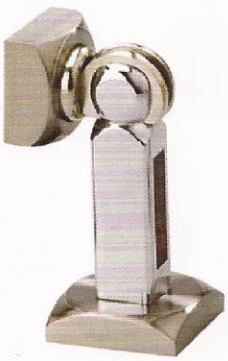

表面处理：
拉丝镍
主要材质：
锌合金
适用范围：
房间门
主要特点：
地面或墙面安装、多种表面颜色

Finish:
SN
Material:
Zinc Alloy
Available For:
Rooms Doors
Features:
Installed of the Ground or Wall,
Various Surface Clolrs

MX-232 夜光

门吸
Door Stopper

表面处理：
亮铬
主要材质：
锌合金
适用范围：
房间门
主要特点：
地面或墙面安装、多种表面颜色

Finish:
PC
Material:
Zinc Alloy
Available For:
Rooms Doors
Features:
Installed of the Ground or Wall,
Various Surface Clolrs



MX-202

门顶
Door Top

表面处理：
青古铜、红古铜、拉丝钢
主要材质：
锌合金
适用范围：
房间门
主要特点：
地面或墙面安装、多种表面颜色

Finish:
AB, AC, SN
Material:
Zinc Alloy
Available For:
Rooms Doors
Features:
Installed of the Ground or Wall,
Various Surface Clolrs



MX-230A

门吸
Door Stopper

表面处理：
亮铬
主要材质：
锌合金
适用范围：
房间门
主要特点：
地面或墙面安装、多种表面颜色

Finish:
PC
Material:
Zinc Alloy
Available For:
Rooms Doors
Features:
Installed of the Ground or Wall,
Various Surface Clolrs



MX-201

半圆门顶
Half Roud Door Stopper

表面处理：
镍拉丝、拉丝金、青古铜
主要材质：
锌合金
适用范围：
房间门
主要特点：
只适用于地面、底面增加定位装置、
稳定、牢固

Finish:
SN,SG,AB
Material:
Zinc Alloy
Available For:
Rooms Doors
Features:
Only For Groud Assembly, Positioning
Functions, Stable And Reliable

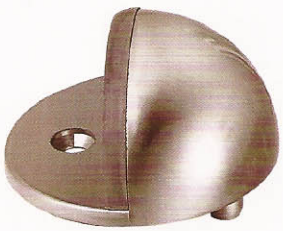

MX-230B

门吸
Door Stopper

表面处理：
亮铬
主要材质：
锌合金
适用范围：
房间门
主要特点：
地面或墙面安装、多种表面颜色

Finish:
PC
Material:
Zinc Alloy
Available For:
Rooms Doors
Features:
Installed of the Ground or Wall,
Various Surface Clolrs



MX-233

地吸
To absorb

表面处理：
镍拉丝、拉丝金、青古铜
主要材质：
锌合金
适用范围：
房间门
主要特点：
只适用于地面、底面增加定位装置、
稳定、牢固

Finish:
SN,SG,AB
Material:
Zinc Alloy
Available For:
Rooms Doors
Features:
Only For Groud Assembly, Positioning
Functions, Stable And Reliable

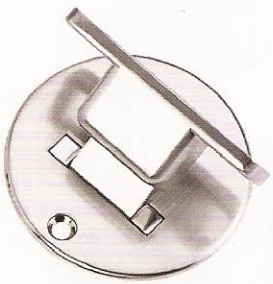

MX–236

门吸
Door Stopper



表面处理：
青古铜、红古铜、拉丝钢
主要材质：
锌合金
适用范围：
房间门
主要特点：
地面或墙面安装、多种表面颜色

Finish:
AB, AC, SN
Material:
Zinc Alloy
Available For:
Rooms Doors
Features:
Installed of the Ground or Wall,
Various Surface Clolrs

MX–252

门吸
Door Stopper



表面处理：
青古铜、红古铜、拉丝钢
主要材质：
锌合金
适用范围：
房间门
主要特点：
地面或墙面安装、多种表面颜色

Finish:
AB, AC, SN
Material:
Zinc Alloy
Available For:
Rooms Doors
Features:
Installed of the Ground or Wall,
Various Surface Clolrs

MX–237

门吸
Door Stopper



表面处理：
青古铜、红古铜、拉丝钢
主要材质：
锌合金
适用范围：
房间门
主要特点：
地面或墙面安装、多种表面颜色

Finish:
AB, AC, SN
Material:
Zinc Alloy
Available For:
Rooms Doors
Features:
Installed of the Ground or Wall,
Various Surface Clolrs

MX–255

门吸
Door Stopper



表面处理：
青古铜、红古铜、拉丝
主要材质：
不锈钢
适用范围：
房间门
主要特点：
地面或墙面安装、多种表面颜色

Finish:
AB, AC, SSS
Material:
Stainless Steel
Available For:
Rooms Doors
Features:
Installed of the Ground or Wall,
Various Surface Clolrs

MX–248

门吸
Door Stopper



表面处理：
青古铜、红古铜、拉丝钢
主要材质：
锌合金
适用范围：
房间门
主要特点：
地面或墙面安装、多种表面颜色

Finish:
AB, AC, SN
Material:
Zinc Alloy
Available For:
Rooms Doors
Features:
Installed of the Ground or Wall,
Various Surface Clolrs

MX–249

门吸
Door Stopper



表面处理：
青古铜、红古铜、拉丝钢
主要材质：
锌合金
适用范围：
房间门
主要特点：
地面或墙面安装、多种表面颜色

Finish:
AB, AC, SN
Material:
Zinc Alloy
Available For:
Rooms Doors
Features:
Installed of the Ground or Wall,
Various Surface Clolrs

MX-256

门顶
Door Top

表面处理：
青古铜、红古铜、拉丝钢
主要材质：
锌合金
适用范围：
房间门
主要特点：
地面或墙面安装、多种表面颜色

Finish:
AB, AC, SN
Material:
Zinc Alloy
Available For:
Rooms Doors
Features:
Installed of the Ground or Wall,
Various Surface Clolrs



MX-247

门顶
Door Top

表面处理：
青古铜、红古铜、拉丝钢
主要材质：
锌合金
适用范围：
房间门
主要特点：
地面或墙面安装、多种表面颜色

Finish:
AB, AC, SN
Material:
Zinc Alloy
Available For:
Rooms Doors
Features:
Installed of the Ground or Wall,
Various Surface Clolrs

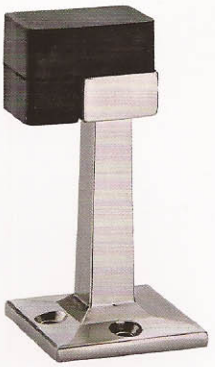

MX-271

地吸
To Absorb

表面处理：
亮铬、青古铜、红古铜、拉丝钢
主要材质：
锌合金
适用范围：
房间门
主要特点：
只适用于地面、底面增加
定位装置、稳定、牢固

Finish:
PC,AB, AC, SN
Material:
Zinc Alloy
Available For:
Rooms Doors
Features:
Only For Groud Assembly, Positioning
Functions, Stable And Reliable



MX-272

地吸
To Absorb

表面处理：
青古铜、红古铜、拉丝钢
主要材质：
锌合金
适用范围：
房间门
主要特点：
地面或墙面安装、多种表面颜色

Finish:
AB, AC, SN
Material:
Zinc Alloy
Available For:
Rooms Doors
Features:
Installed of the Ground or Wall,
Various Surface Clolrs

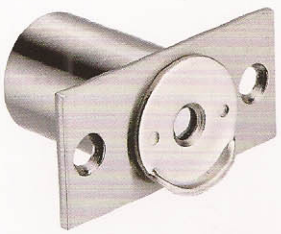

MX-273

门吸
Door Stopper

表面处理：
亮铬、青古铜、红古铜、拉丝钢
主要材质：
锌合金
适用范围：
房间门
主要特点：
地面或墙面安装、多种表面颜色

Finish:
PC,AB, AC, SN
Material:
Zinc Alloy
Available For:
Rooms Doors
Features:
Installed of the Ground or Wall,
Various Surface Clolrs

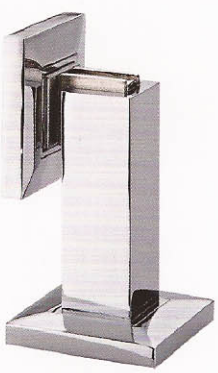

MX-251

门吸
Door Stopper

表面处理：
青古铜、红古铜、拉丝钢
主要材质：
锌合金
适用范围：
房间门
主要特点：
地面或墙面安装、多种表面颜色

Finish:
AB, AC, SN
Material:
Zinc Alloy
Available For:
Rooms Doors
Features:
Installed of the Ground or Wall,
Various Surface Clolrs



FDL

暗藏式防盗链
Hidden-Anti-theft clasp

产品特点：
底座采用优质锌合金压铸而成，可承载1000N拉力，表面电镀后封漆处理，耐腐蚀性72H，表面硬度3H，暗藏式结构，高雅华贵。

Featutes:
The base is made of quality die-casting zinc alloy. It can accommodare 1,000N power of tug. The surface has been processed with electroplating paint. With 72H corrosion resistance, surface hardness 3 H, hidden structure, elegant luxury design.

表面处理： 拉丝钢/铜拉丝
主要材质： 锌合金
适用范围： 酒店房门
主要特点： 暗藏式、耐冲击、美观、耐用

Finish: SN
Material: Zinc Alloy
Available For: Hotel Door
Features: Concealed, Impact Resistant, Elegant And Durable

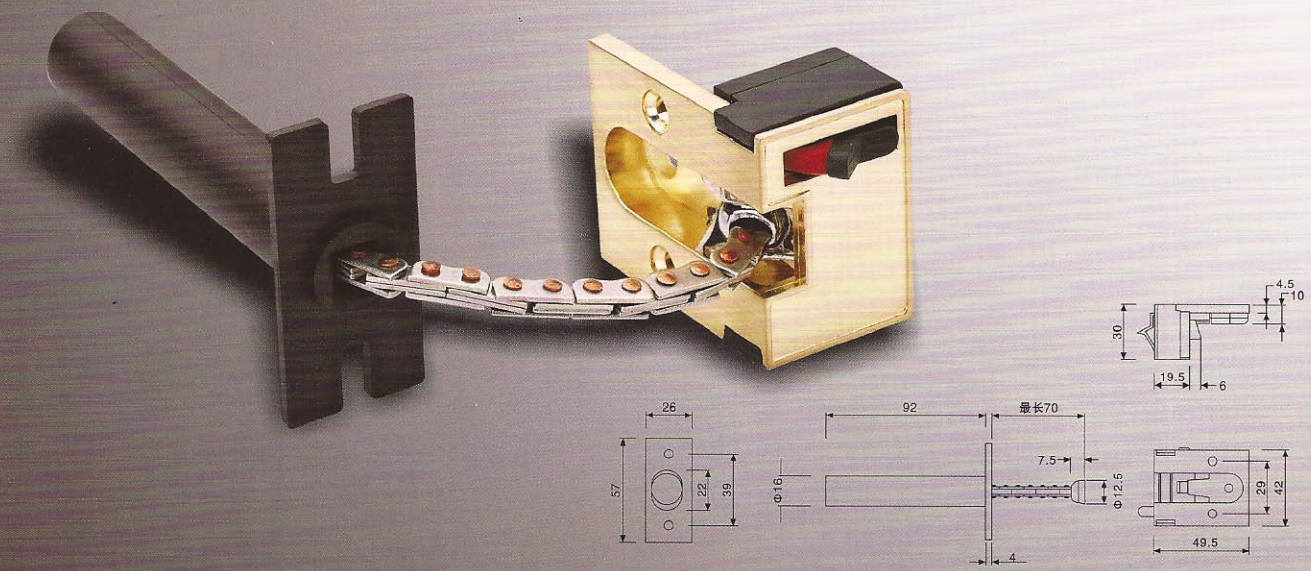

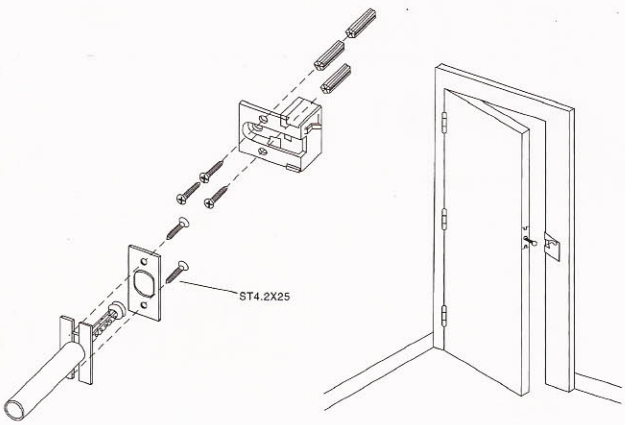

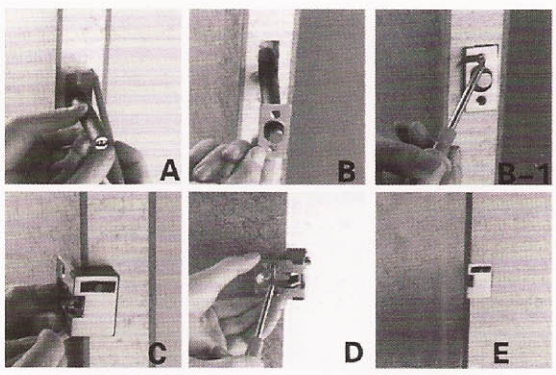

Installation For Secret Door Chain
A Drill holes at the appropriate position on the door leaf, and notch on it.
B Install the chain's tube into the hole, and then fix it with screws.
C Close the door, then mark the range of the notch for the clinch on the door jamb, and notch for the clinch on the door jamb,
D Fix the chinch with wooden screws.
E Close the door, Push down the button.

暗藏式防盗链安装
A 在门扇上适当位置钻孔，并凿出面板槽。
B 在门扇上开好的孔内，装入防盗链的套筒，用螺钉固定。
C 关上门，在门套相应位置画出扣座的开槽范围。并在门套上凿出安装扣座的槽。
D 用木螺钉固定扣座。
E 关上门，按下黑色按钮。

MX-214

防盗扣
Door Guard

表面处理：
拉丝钢、拉丝金、青古铜、红古铜
主要材质：
锌合金
适用范围：
酒店房门
主要特点：耐冲击、美观、耐用

Finish:
SN,SG,AB, AC
Material:
Zinc Alloy
Available For:
Hotel Door
Features:
Impact Resistant,
Elegant And Durable

安装方式
Installation Method

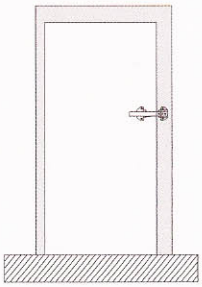

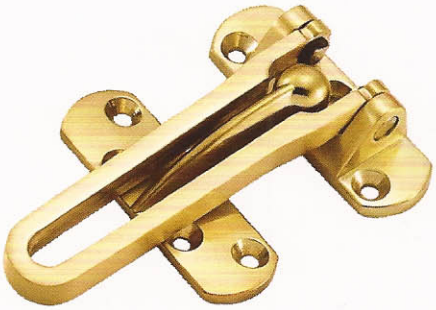

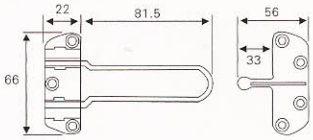

MX-258

防盗扣
Door Guard

表面处理：
拉丝钢、拉丝金、青古铜、红古铜
主要材质：
锌合金
适用范围：
酒店房门
主要特点：耐冲击、美观、耐用

Finish:
SN,SG,AB, AC
Material:
Zinc Alloy
Available For:
Hotel Door
Features:
Impact Resistant,
Elegant And Durable

安装方式
Installation Method

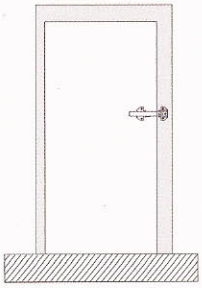

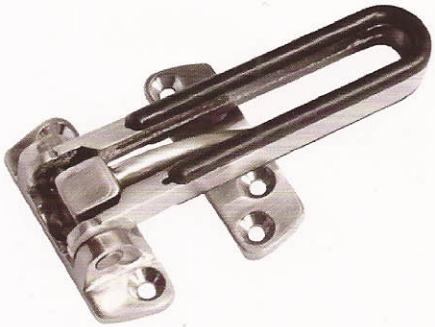

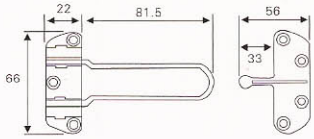

MX-276

防盗扣
Door Guard

表面处理：
拉丝金、青古铜、红古铜、亮铬
主要材质：
锌合金
适用范围：
酒店房门
主要特点：耐冲击、美观、耐用

Finish:
SN,AB, AC,PC
Material:
Zinc Alloy
Available For:
Hotel Door
Features:
Impact Resistant,
Elegant And Durable

安装方式
Installation Method

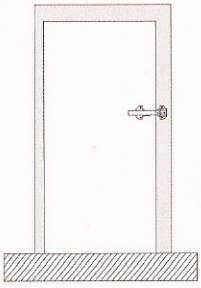



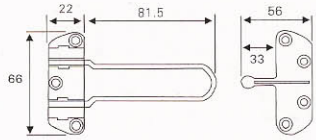

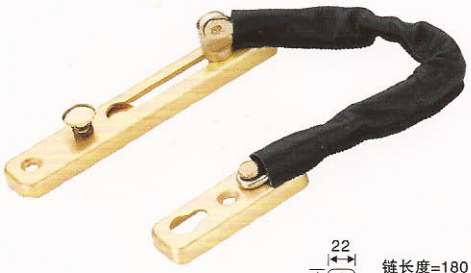

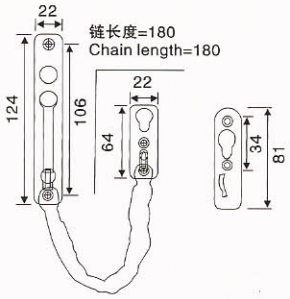

FDL–01

防盗链
Anti–theft clasp

安装方式
Installation method

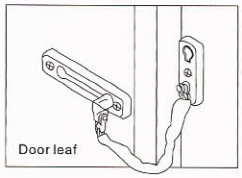

表面处理：
拉丝、拉丝金
主要材质：
不锈钢
适用范围：
酒店房门
主要特点：耐冲击、美观、耐用

Finish:
SSS,SG
Material:
Stainless Steel
Available For:
Hotel Door
Features:
Impact Resistant,
Elegant And Durable



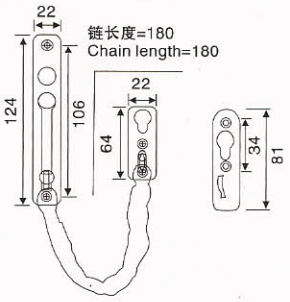

FDL–12

防盗链
Anti–theft clasp

安装方式
Installation method

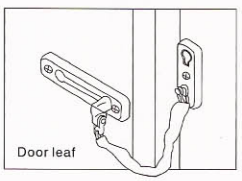

表面处理：
拉丝、拉丝金
主要材质：
不锈钢
适用范围：
酒店房门
主要特点：耐冲击、美观、耐用

Finish:
SSS,SG
Material:
Stainless Steel
Available For:
Hotel Door
Features:
Impact Resistant,
Elegant And Durable

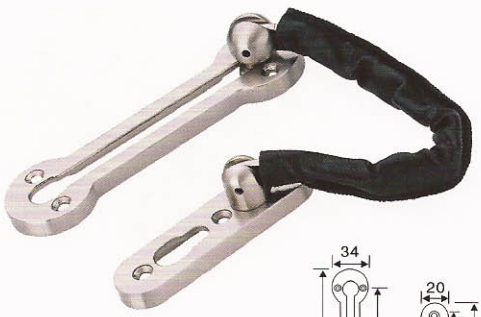

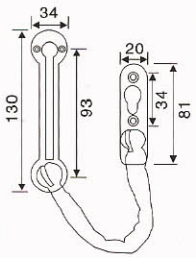

FDL–02

防盗链
Anti–theft clasp

安装方式
Installation method

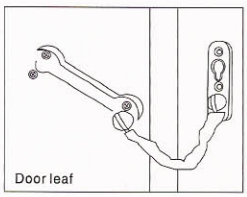

表面处理：
拉丝钢、拉丝金
主要材质：
锌合金
适用范围：
酒店房门
主要特点：耐冲击、美观、耐用

Finish:
SN,SG
Material:
Zinc Alloy
Available For:
Hotel Door
Features:
Impact Resistant,
Elegant And Durable

MX–M001S

猫眼
Cat's Eye



表面处理：
白镍拉丝、拉丝金、青古铜
主要材质：铜
最大厚度：35–55mm
适用范围：各种大门
主要功能：看清门外一切
主要特性：美观、耐用

Finish:
SN,SG,AB
Material:
Brass
Thickness :
35–55mm
Application:
All Kinds Of Doors
Functions:
To See Everything Outside
Features:
Beautiful, Durable

安装方式
Installation Method

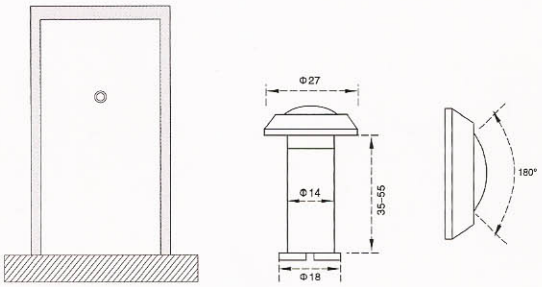

MX–M001M

猫眼
Cat's Eye



表面处理：
白镍拉丝、拉丝金、青古铜
主要材质：铜
最大厚度：35–60mm
适用范围：各种大门
主要功能：看清门外一切
主要特性：美观、耐用

Finish:
SN,SG,AB
Material:
Brass
Thickness :
35–55mm
Application:
All Kinds Of Doors
Functions:
To See Everything Outside
Features:
Beautiful, Durable

安装方式
Installation Method

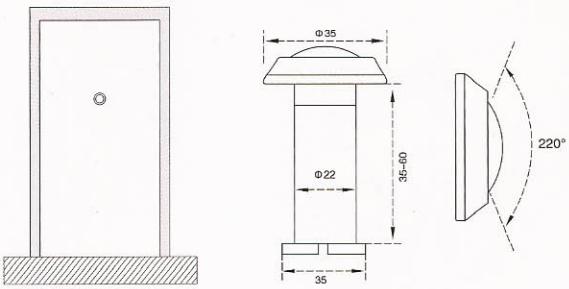

MX–M001L

猫眼
Cat's Eye



表面处理：
白镍拉丝、拉丝金、青古铜
主要材质：铜
最大厚度：40–55mm
适用范围：各种大门
主要功能：看清门外一切
主要特性：美观、耐用

Finish:
SN,SG,AB
Material:
Brass
Thickness :
35–55mm
Application:
All Kinds Of Doors
Functions:
To See Everything Outside
Features:
Beautiful, Durable

安装方式
Installation Method

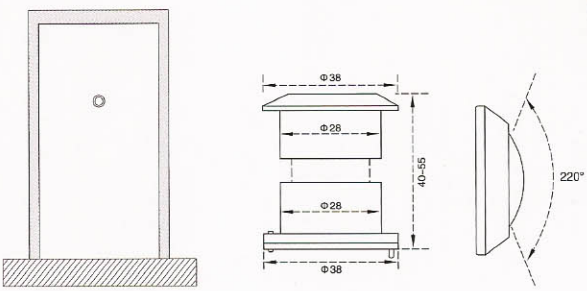



CX–6104
CX–6106
CX–6108

按钮插销 Bolt with button

表面处理：
拉丝钢/拉丝金
主要材质：
不锈钢/铜
适用范围：
各种木质门
主要功能：
门闩
主要特点：
暗装

Finish:
Brushed Steel / Brushed Gold
Material:
Stainless Steel / Copper
Scope:
Various Kinds Of Wooden Doors
Features:
Latch
Main Features:
Concealed

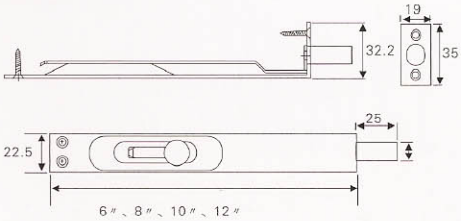

安装方式
Installation Method

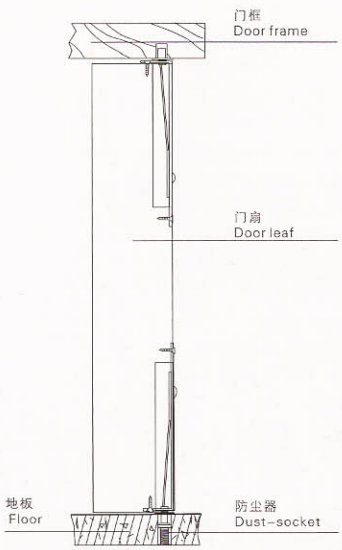

子母门
Door combining big and small ones

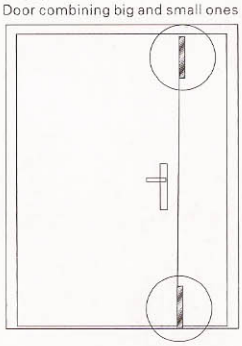



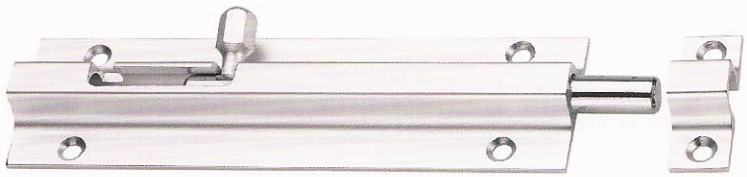

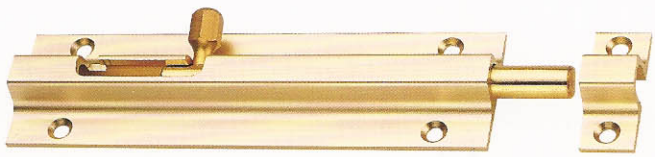

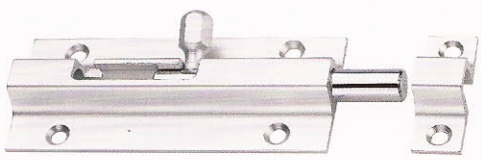



CX-6304
CX-6306
CX-6308

铝明插销

表面处理：喷砂金/喷砂银
主要材质：铝
适用范围：各种木质门
主要功能：门闩
主要特点：明装式

Finish: Sand Gold / Silver Sand
Material: Aluminum
Scope: Various Kinds Of Wooden Doors
Main Features: Latch
Features: Ming-loading

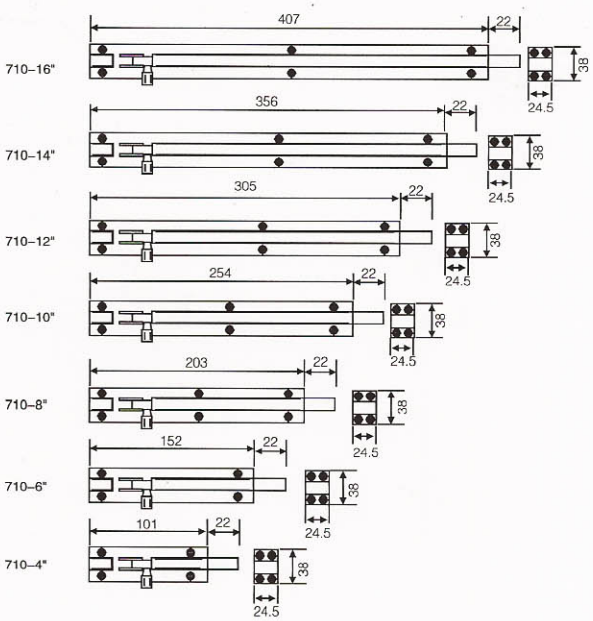

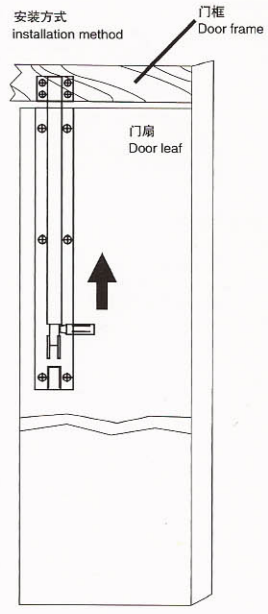



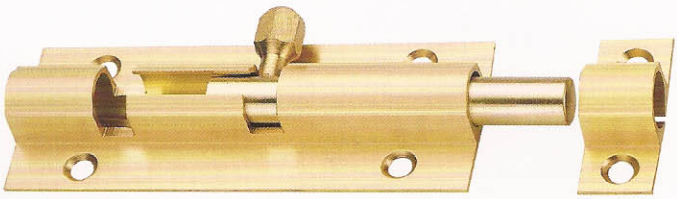

CX-6204
CX-6206
CX-6208

铜明插销

表面处理： 沙光
主要材质： 铜
适用范围： 各种木质门
主要功能： 门闩
主要特点： 明装式

Finish: Light Sand
Material: Copper
Scope: Various Kinds Of Wooden Doors
Main Features: Latch
Features: Ming-loading

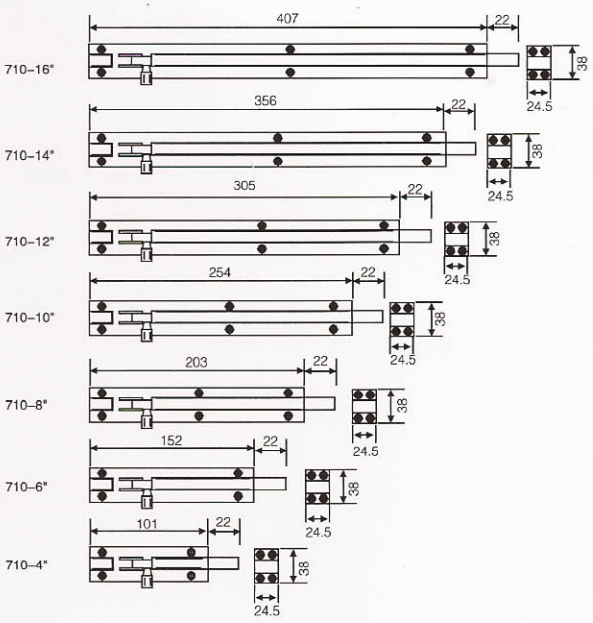

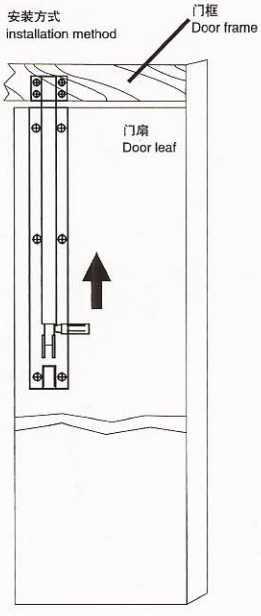

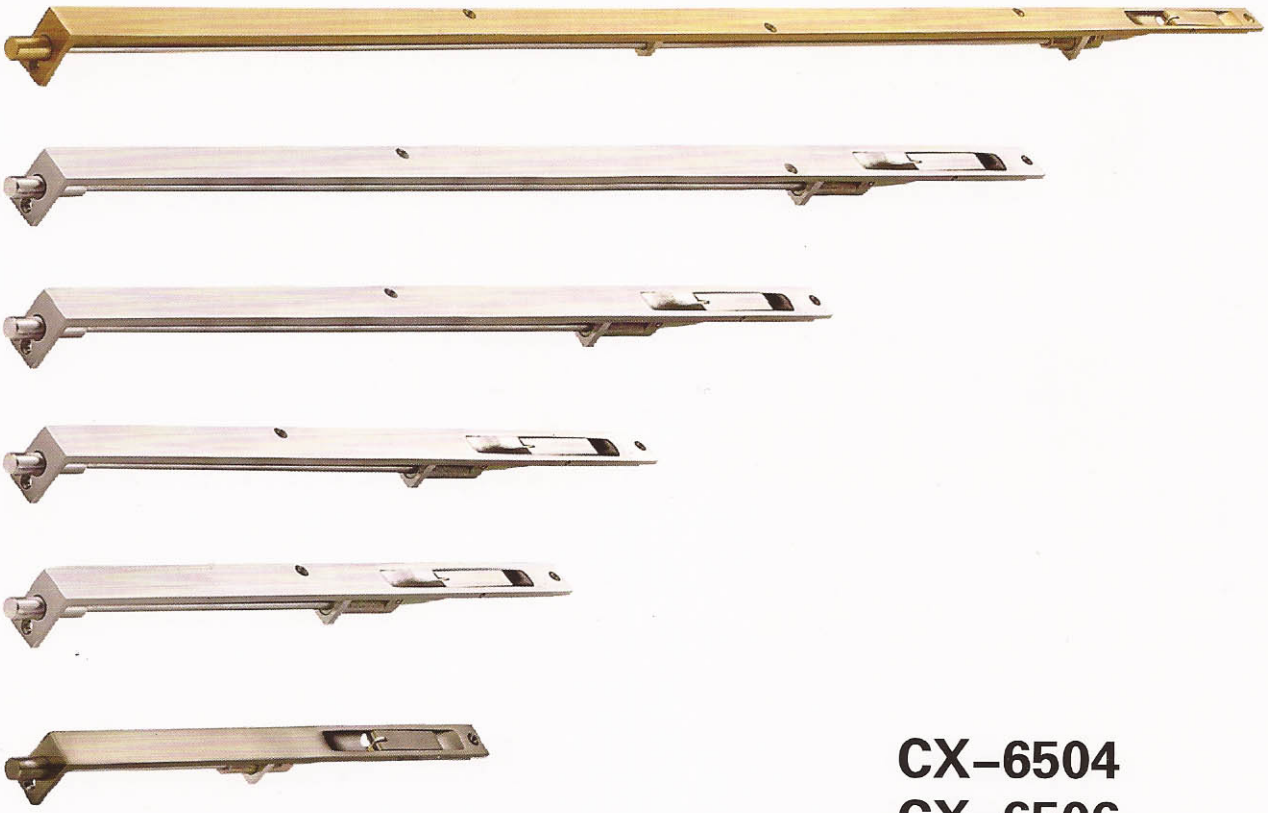

CX-6504
CX-6506
CX-6508

精铸插销 Casting Bolt

安装方式
Installation Method

子母门
Door combining big and small ones

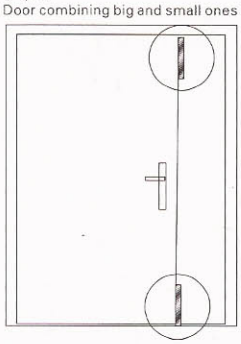

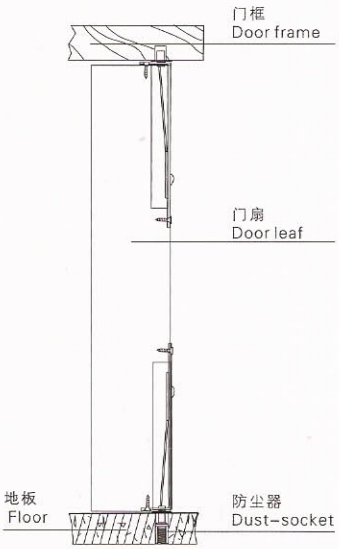

表面处理：
拉丝、亮光、青古、红古、砂钛金
主要材质：
不锈钢
适用范围：
各种大型双开门
主要特点：
暗藏式、扳动式、快速开启

Finish:
SSS,PPS,AB,AC,STG,BTG
Material:
Stainless Steel
Available For:
Door Combining Big And Small One, Double-open Door
Features:
Concealed Style, Pressing Style,
Rapid Opening

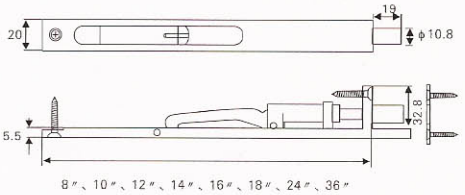

8″、10″、12″、14″、16″、18″、24″、36″





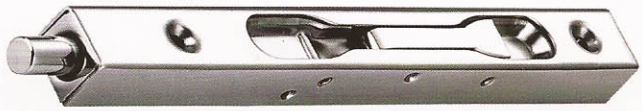



CX–6804
CX–6806
CX–6808

盒型暗插 Flush Bolt

表面处理:
拉丝、亮光、青古、红古、砂钛金、亮钛金
主要材质:
不锈钢
适用范围:
子母门、双开门
主要特点:
暗藏式、扳动式、快速开启

Finish:
SSS,PPS,AB,AC,STG,BTG
Material:
Stainless Steel
Available For:
Door Combining Big And Small One, Double–open Door
Features:
Concealed Style, Pressing Style,
Rapid Opening

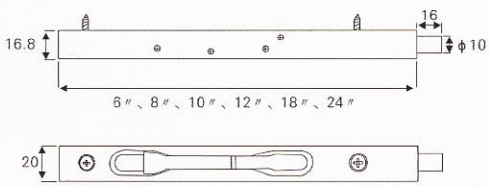

安装方式
Installation Method

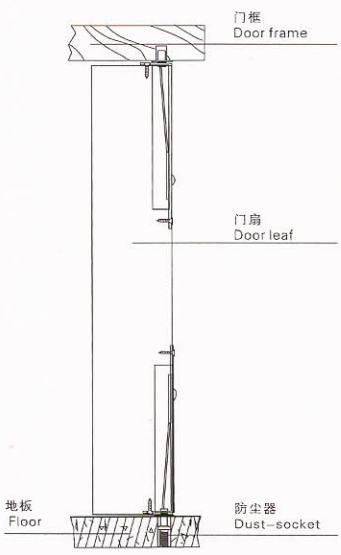

子母门
Door combining big and small ones

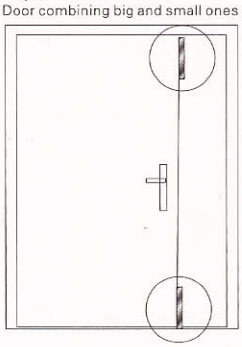

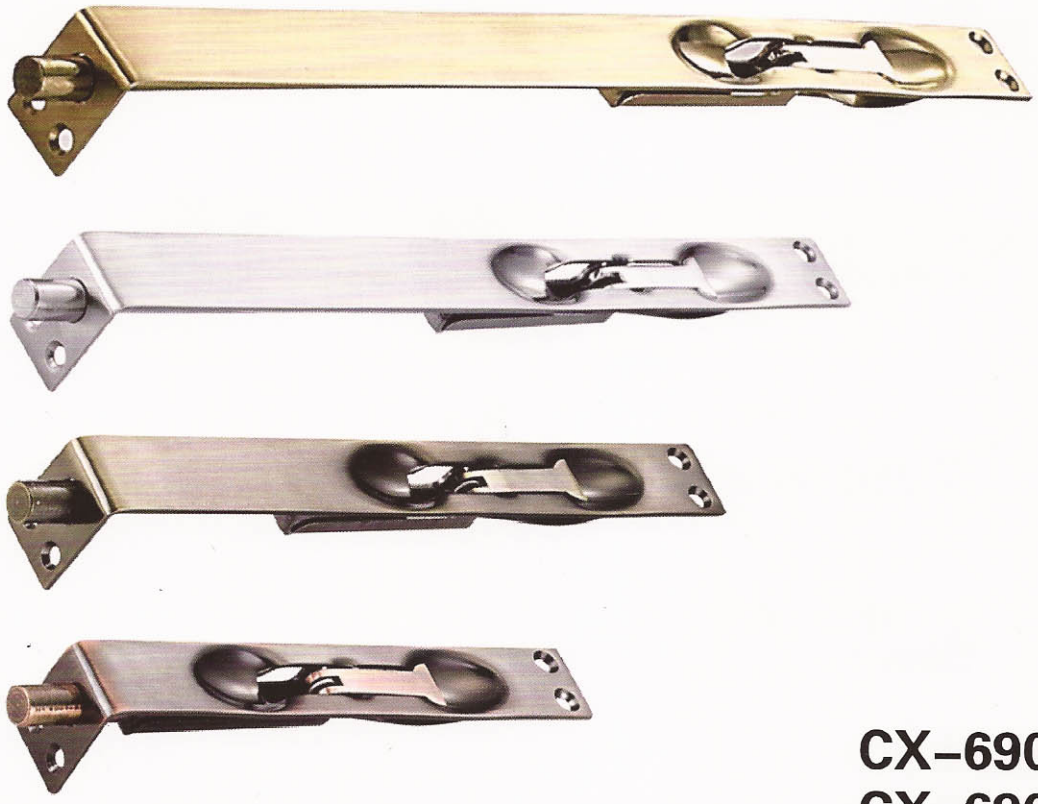

CX–6904
CX–6906
CX–6908

弹片插销 Bolt With Spring

安装方式
Installation Method

子母门
Door combining big and small ones

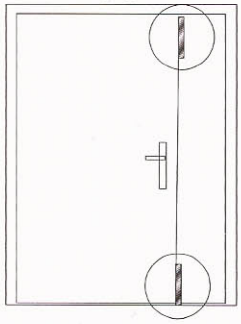

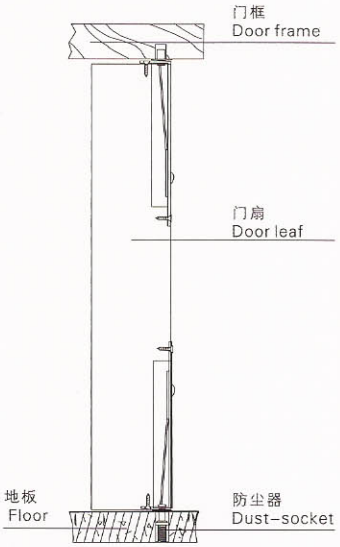

表面处理:
拉丝、亮光、青古、红古、砂钛金、亮钛金
主要材质:
不锈钢
适用范围:
子母门、双开门
主要特点:
暗藏式、扳动式、快速开启

Finish:
SSS,PPS,AB,AC,STG,BTG
Material:
Stainless Steel
Available For:
Door Combining Big And Small One, Double–open Door
Features:
Concealed Style, Pressing Style,
Rapid Opening

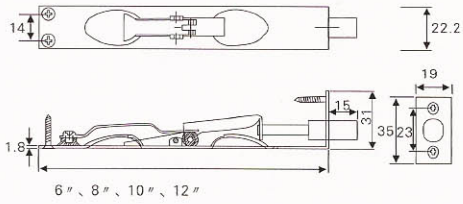

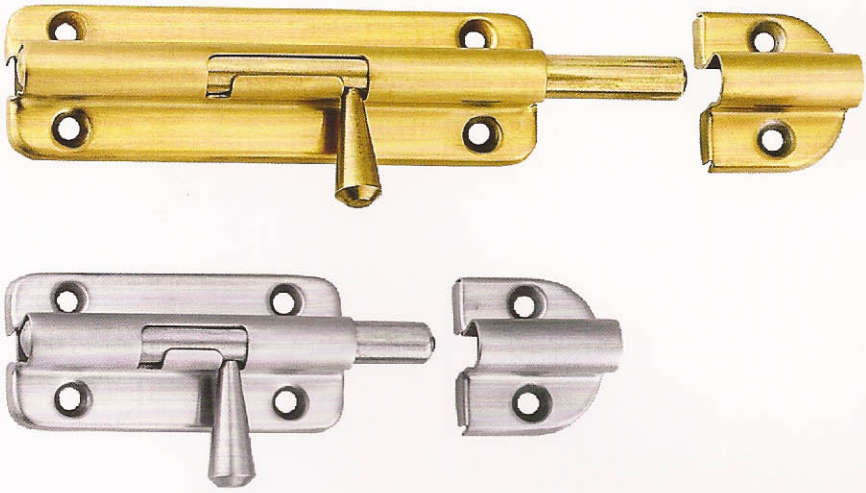

CX-6604
CX-6606
CX-6608

钢明插销(带弹力)

表面处理:
拉丝、砂金
主要材质:
不锈钢
适用范围:
公共通道、家居门窗
主要特点:
明装式、安装简便、受力大

Finish:
SSS,SG
Material:
Stainless Steel
Available For:
Public Access, Residential Door And Windows
Features:
Concealed Style, Pressing Style,
Rapid Opening

L=70〃、90〃、110〃

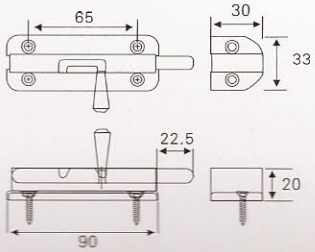

安装方式
Installation Method

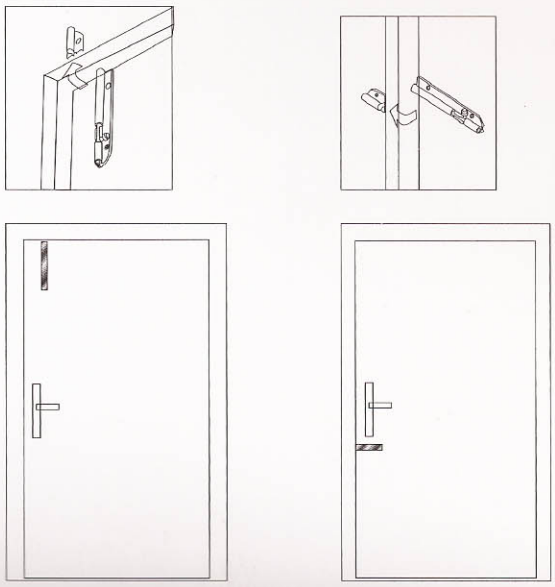

CX-6402

指示插销
Indicating Bolt

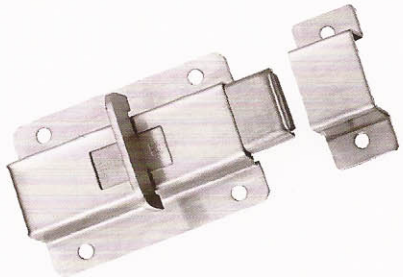



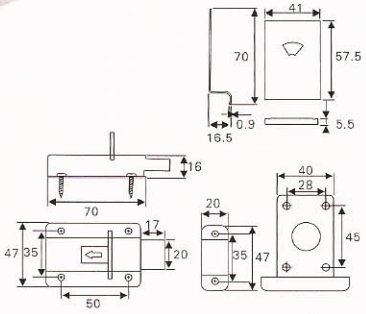

立式安装示意
Vertical Installation

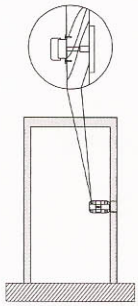

表面处理：
拉丝
主要材质：
不锈钢
适用范围：
浴室门、卫生间
主要特点：
安装简便、使用广

Finish:
SSS
Material:
Stainless Steel
Available For:
Bathroom Doors, Washroom
Features:
Easy To Install, Widely USE

CX-6403

弹簧推杆插销
Bolt With Spring

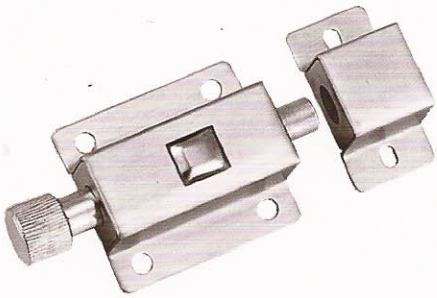

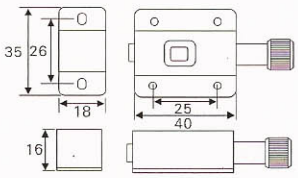

立式安装示意
Vertical Installation

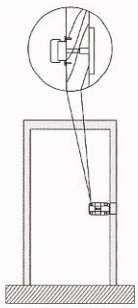

表面处理：
拉丝
主要材质：
不锈钢
适用范围：
浴室门、卫生间
主要特点：
明装式

Finish:
SSS
Material:
Stainless Steel
Available For:
Bathroom Doors, Washroom
Features:
Revealed Type, Easy To Install

CX-6404

弹簧按钮插
Bolt With Spring Button

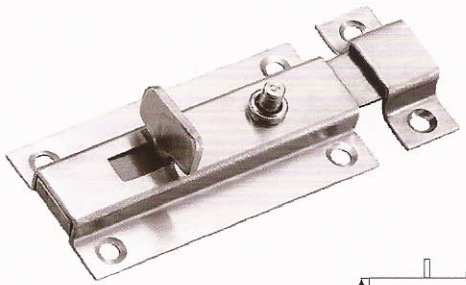

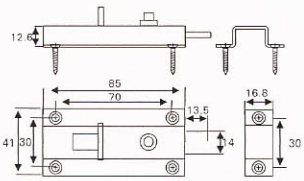

立式安装示意
Vertical Installation

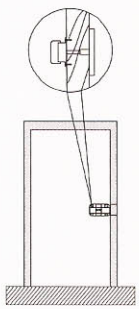

表面处理：
拉丝
主要材质：
不锈钢
适用范围：
木门、浴室门
主要特点：
明装式、安装简便、自动回位

Finish:
SSS
Material:
Stainless Steel
Available For:
Bathroom Doors, Washroom
Features:
Revealed Type, Easy To Install,
And Auto Fallback

CX-6405

隐藏式插销
Automatic Bolt

表面处理:
拉丝
主要材质:
不锈钢
适用范围:
双开门、子母门等较高的门扇
主要特点:
暗装式、自动式、安装简便

Finish:
SSS
Material:
Stainless Steel
Available For:
Double-door, Parent-child
Doors Higher Doors
Features:
Concealed, Automatic,Easy To Install

安装方式
Installation Method

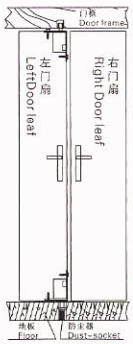

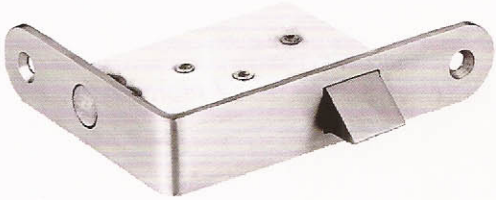

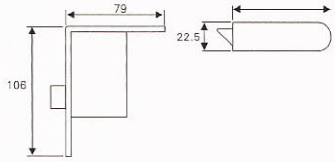



CX-6406

隐藏式插销
Indicating Bolt

表面处理:
拉丝
主要材质:
不锈钢
适用范围:
双开门、子母门等较高的门扇
主要特点:
暗装式、自动式、安装简便、
受力大

Finish:
SSS
Material:
Stainless Steel
Available For:
Double-door, Parent-child
Doors Higher Doors
Features:
Concealed, Automatic, Easy To Install

安装方式
Installation Method

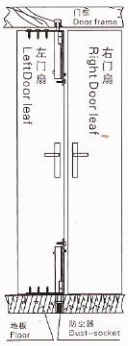

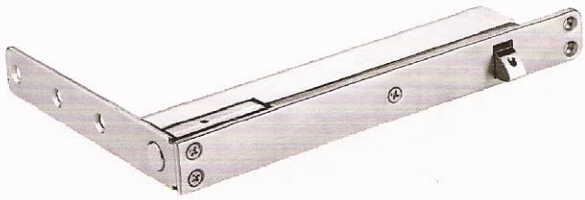

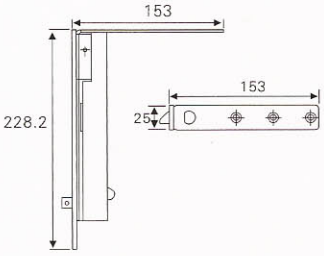



CX-6407

隐藏式插销
Automatic Bolt

表面处理:
拉丝
主要材质:
不锈钢
适用范围:
双开门、子母门等较高的门扇
主要特点:
暗装式、自动式、安装简便、
受力大

Finish:
SSS
Material:
Stainless Steel
Available For:
Double-door, Parent-child
Doors Higher Doors
Features:
Concealed, Automatic, Easy To Install

安装方式
Installation Method

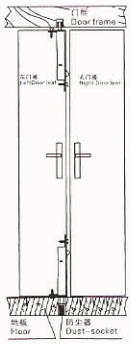



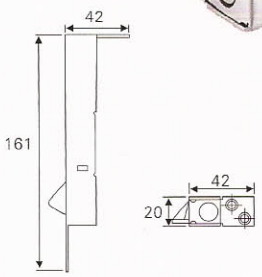



JL-275-1

十字铰链
Automatic Bolt



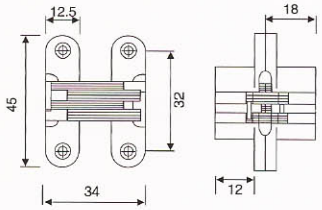

表面处理：
亮铬/拉丝钢
主要材质：
锌合金
适用范围：
双开门、子母门等较高的门扇
主要特点：
暗装式、自动式、安装简便、
受力大

Finish:
SP/SN
Material:
Stainless Steel
Available For:
Double-door, Parent-child
Doors Higher Doors
Features:
Concealed, Automatic, Easy To Install

JL-275-2

十字铰链
Automatic Bolt

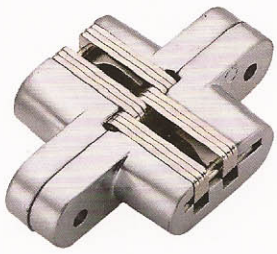

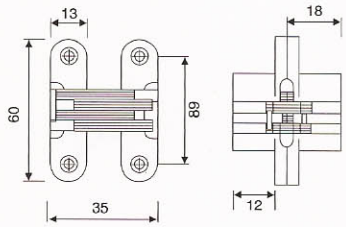

表面处理：
亮铬/拉丝钢
主要材质：
锌合金
适用范围：
双开门、子母门等较高的门扇
主要特点：
暗装式、自动式、安装简便、
受力大

Finish:
SP/SN
Material:
Stainless Steel
Available For:
Double-door, Parent-child
Doors Higher Doors
Features:
Concealed, Automatic, Easy To Install

JL-275-3

十字铰链
Automatic Bolt



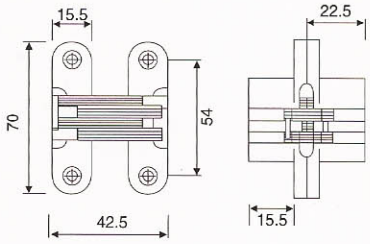

表面处理：
亮铬/拉丝钢
主要材质：
锌合金
适用范围：
双开门、子母门等较高的门扇
主要特点：
暗装式、自动式、安装简便、
受力大

Finish:
SP/SN
Material:
Stainless Steel
Available For:
Double-door, Parent-child
Doors Higher Doors
Features:
Concealed, Automatic, Easy To Install

JL–275–4

十字铰链
Automatic Bolt

表面处理：
亮铬/拉丝钢
主要材质：
锌合金
适用范围：
双开门、子母门等较高的门扇
主要特点：
暗装式、自动式、安装简便、
受力大

Finish:
SP/SN
Material:
Stainless Steel
Available For:
Double–door, Parent–child
Doors Higher Doors
Features:
Concealed, Automatic, Easy To Install

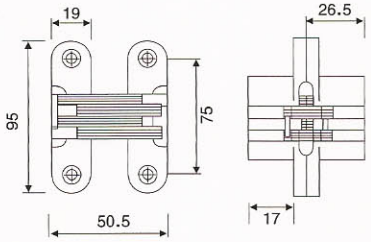

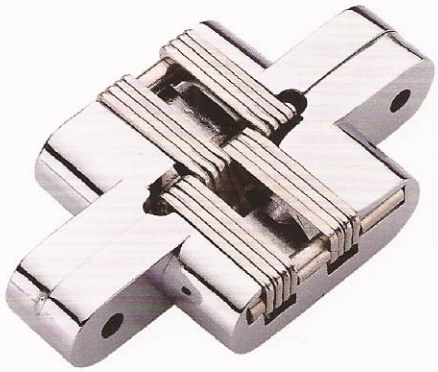

JL–275–5

十字铰链
Automatic Bolt

表面处理：
亮铬/拉丝钢
主要材质：
锌合金
适用范围：
双开门、子母门等较高的门扇
主要特点：
暗装式、自动式、安装简便、
受力大

Finish:
SP/SN
Material:
Stainless Steel
Available For:
Double–door, Parent–child
Doors Higher Doors
Features:
Concealed, Automatic, Easy To Install

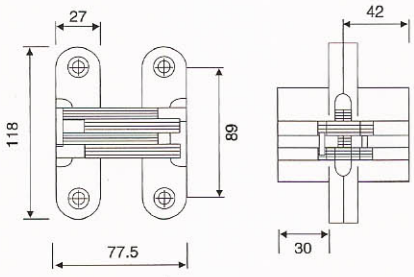

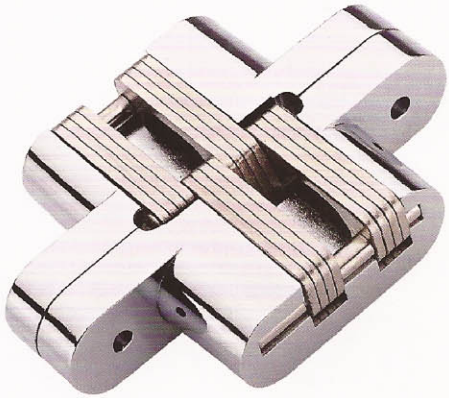

安装方式
Insallation method

使用时，展开没有明显间隙
There is noclear gap when opening it.

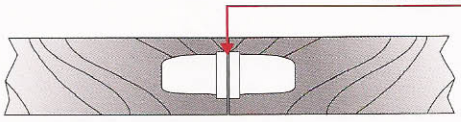

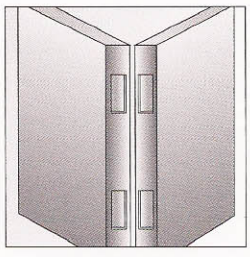

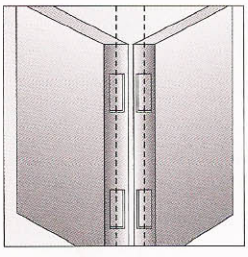

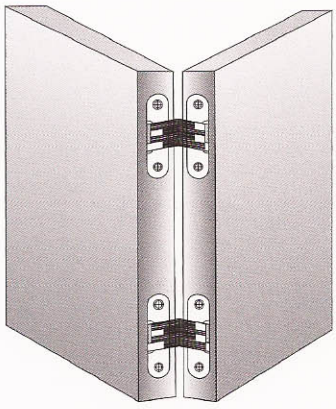

1.挖孔
Digging

2.注意上下孔位间需垂直一线
Note that top and down holes should be in vertical line

MX–234

门阻
Gate Resistance

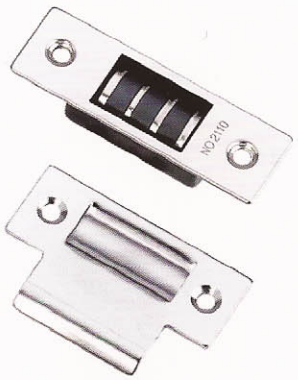

表面处理：亮铬
主要材质：冷轧钢板
适用范围：各种材质的门
主要特点：门关闭时扣紧门扇，起到自动门栓的作用
适用门厚：40–50mm

Finish: SP
Material: Cold–rolled steel
Available For:
All kinds of wooden doors
Features: Close door with the fuction of auto lock
Door Thickness: 40–50mm

MX–FCQ01

防尘器
dust–proof strike without plate



表面处理：拉丝钢、铜拉丝、亮铬
主要材质：铜
适用范围：一般安装于地面、配合各种插销使用
主要特点：能有效防止尘土、杂物掉入插销孔内

Finish: SN,PZ,SP
Material: Brass
Available For:
Generally Installed On The Ground, Match With The Flush Bolts
Features:
To Prevent Dust And Debris Falling Into Bolt Hole

MX–235

门阻
Gate Resistance

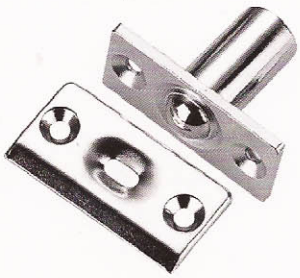

表面处理：亮铬
主要材质：铝合金
适用范围：各种材质的门
主要特点：门关闭时扣紧门扇，起到自动门栓的作用
适用门厚：40–50mm

Finish: SP
Material: Aluminum
Available For:
All kinds of wooden doors
Features: Close door with the fuction of auto lock
Door Thickness: 40–50mm

BL–600IL.M.S

玻璃夹
Glass Shelf



表面处理：镍拉丝、青古铜、红古铜
主要材质：锌合金
适用范围：玻璃层板、木层板
主要特点：美观、耐用
适用门厚：10~12mm
最大承重：10kg/2只

Finish: L,AB, AC
Material: Zinc Alloy
Available For:
Glass shelf and wooden plywood
Features: Elegant and practical
Door Thickness: 10~12mm
Max weight: 10kg/2pcs

MX–122

门阻
Gate Resistance



表面处理：拉丝
主要材质：不锈钢
适用范围：各种材质的门
主要特点：门关闭时扣紧门扇，起到自动门栓的作用
适用门厚：40–50mm

Finish: SSS
Material: Stainless Steel
Available For:
All kinds of wooden doors
Features: Close door with the fuction of auto lock
Door Thickness: 40–50mm

MX–123

磁夹
Magnetic clip



表面处理：
镍拉丝、青古铜、红古铜
主要材质：锌合金
适用范围：酒柜、陈列柜
主要特点：不生锈、美观耐用

Finish: L,AB,AC
Material: Zinc Alloy
Available For:
Liquor cabinet and show cabinet
Features:
Elegant and practical

DL-304

吊轮 Hanging Round



表面处理：
镍拉丝
主要材质：
尼龙/锌合金
适用范围：
适用于各种木质移门
主要特点：
尼龙滑轮、铝合金导轨、超静音设计、带防撞配件
门最大宽度：
800毫米
门最大高度：
2000毫米
适用门厚：
30-50毫米
最大承重：
80kg/2只
安装说明：
1、将吊轨安装在适当位置，把吊轮放进吊轨并装上防撞胶；
2、在固定门的上部、下部分别钻孔；
3、把上固定器配件分别固定在吊轨及门上部
4、把上固定器配件分别固定在门下部及地底部；
5、固定门与活动之间安装十字暗铰链；
6、在活动门下部适当位置安装下导轮并套进下导轨；
7、托其活动门使吊轮吊杆螺丝插入吊片并用扳手收紧螺母；

Finish:
L
Material:
Nylon/Zinc alloy
Available For:
All Kinds Of Wooden Sliding Door
Features:
Nylon Roller, Aluminum Alloy Hang Rail,
Silent Design, Whith An-bump Accessories
The Width Of The Wing:
800mm
The Height Of The Wing:
2000mm
Door Htickness:
30~50mm
Max Capactiy:
80kg/2pcs
Installation instructions:
1. Install the hanger rail in a proper position, put the hanger wheel into it and install the door stop and head shaft.
2. Drill holes on the top and bottom of the fixed door.
3. Fix the top fixing parts onto the hanger railand the door top.
4. Fix the lower fixing parts onto the door bottom and the ground.
5. Install cross hidden hinges between the fixed door and the moving door.
6. Install lower tumbler at proper position of lowet dodge gate and embed it in male drawer guide
7. Hold up the moving door to have the screws of the hanger wheel and hanger rod insert into the hanger piece and then screw down the outer hexagon head screw with a wrench

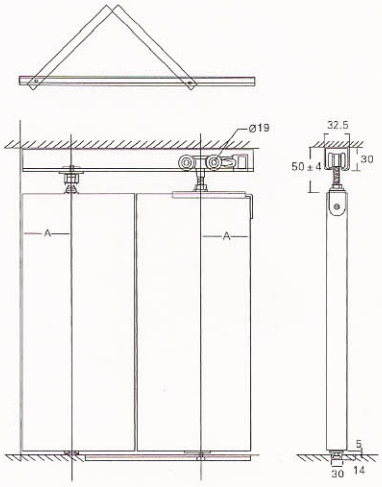

安装注意事项
1、上滑轨与下滑轨一定要垂直和平衡，否则影响门的正常滑动；
2、图中的“A”的尺寸一定要相等。
Installation
1. On the next slide and slide and balance must be vertical, otherwise the impact of the normal sliding doors;
2. The “A” must be the same size.

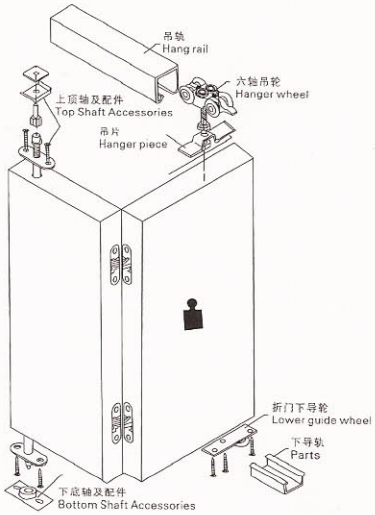

顶轴配件
Top Shaft Accessories





折门下导轮
Lower guide wheel



顶轴配件
Top Shaft Accessories





十字暗铰链
CROSS HINGES



DL–311

吊轮 Hanging Round

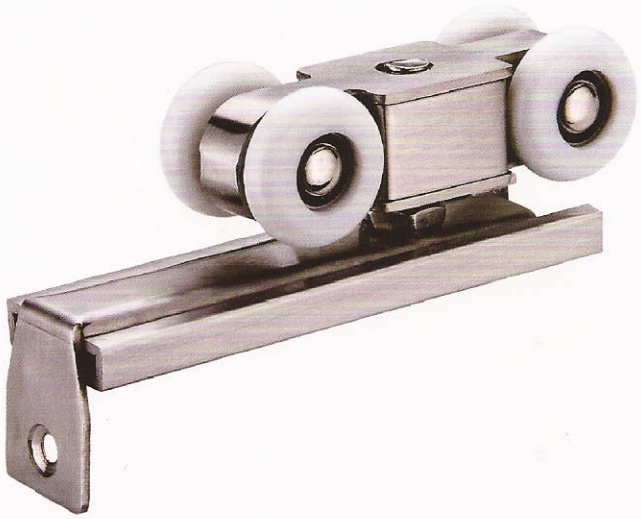

表面处理：
拉丝
主要材质：
不锈钢
适用范围：
适用于各种木质移门
主要特点：
尼龙滑轮、铝合金导轨、超静音设计、带防撞配件
门最大宽度：
1200毫米
门最大高度：
2400毫米
适用门厚：
30~60毫米
最大承重：
120kg
安装说明：
1、将吊片上的锣杆旋进吊轮里，并用扳手将螺母旋紧；
2、将装有吊片的吊轮放进吊轨里并且安装门挡；
3、将装有门挡和吊轮的吊轨安装到适当的位置，
4、按图示在门的上、下部分开槽，将滑槽安装在门上；
5、托起门，将吊轮上的吊片插入滑槽里，并用自攻螺丝将吊轮上的吊骗固定在门上，
6、使门垂直，在适当位置安装下导块；
7、推拉趟门，确定各部位安装合适。







Finish:
SSS
Material:
Nylon/Zinc alloy
Available For:
All Kinds Of Wooden Sliding Door
Features:
Nylon Roller, Aluminum Alloy Hang Rail,
Silent Design, Whith An–bump Accessories
The Width Of The Wing:
1200mm
The Height Of The Wing:
2400mm
Door Htickness:
30~60mm
Max Capactiy:
120kg
Installation instructions:
1. Rotate the screw in the hanger disc into the wheel and screw the nut down tight with spanner;
2. Put the hanger wheel mounting with hanger disc into the rail and mount the door stop;
3. Mount the hanger rail with door stop and wheel into appropriate position;
4. Dig grooves ontop and bottom of the door according to the illustration and mount the chute in the door;
5. Lift up the door, rotate the all–directional on–wheel screw into the hanger disc and screw the nut down tight with spanner;
6. Upright the door and install the lower limiter in proper position
7. Open and close the sliding door so as to ensure each position is installed properly.

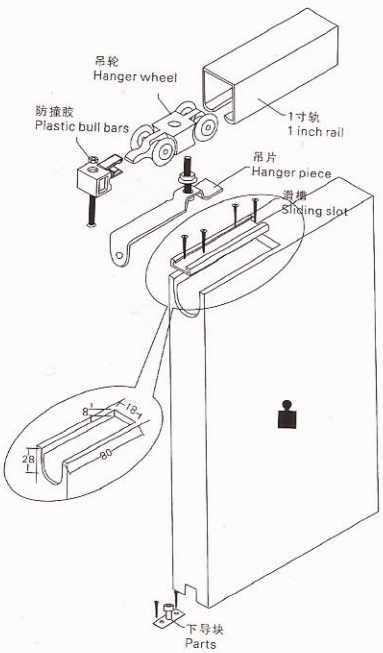

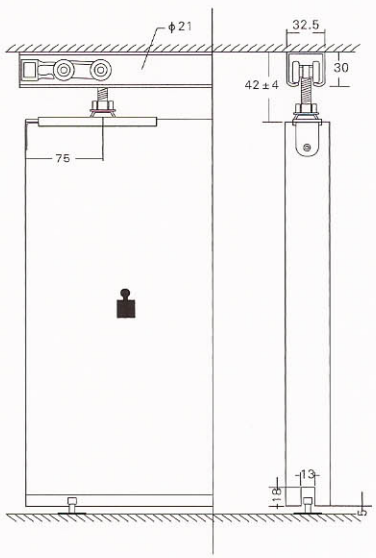

DL–313

吊轮 Hanging Round

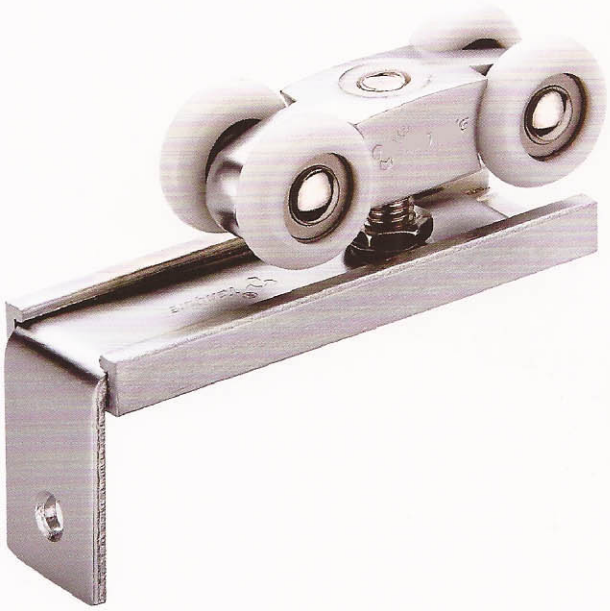

表面处理：
镍拉丝
主要材质：
尼龙/锌合金
适用范围：
适用于各种木质移门
主要特点：
尼龙滑轮、铝合金导轨、超静音设计、带防撞配件
门最大宽度：
1200毫米
门最大高度：
2400毫米
适用门厚：
25~40毫米
最大承重：
60kg/2只
安装说明：
1、将吊片上的锣杆旋进吊轮里，并用扳手将螺母旋紧；
2、将装有吊片的吊轮放进吊轨里并且安装门挡；
3、将装有门挡和吊轮的吊轨安装到适当的位置，
4、按图示在门的上、下部分开槽，将滑槽安装在门上；
5、托起门，将吊轮上的吊片插入滑槽里，并用自攻螺丝将吊轮上的吊骗固定在门上，
6、使门垂直，在适当位置安装下导块；
7、推拉趟门，确定各部位安装合适。

Finish:
L
Material:
Nylon/Zinc alloy
Available For:
All Kinds Of Wooden Sliding Door
Features:
Nylon Roller, Aluminum Alloy Hang Rail,
Silent Design, Whith An–bump Accessories
The Width Of The Wing:
1200mm
The Height Of The Wing:
2400mm
Door Htickness:
25~40mm
Max Capactiy:
60kg/2pcs
Installation instructions:
1. Rotate the screw in the hanger disc into the wheel and screw the nut down tight with spanner;
2. Put the hanger wheel mounting with hanger disc into the rail and mount the door stop;
3. Mount the hanger rail with door stop and wheel into appropriate position;
4. Dig grooves ontop and bottom of the door according to the illustration and mount the chute in the door;
5. Lift up the door, rotate the all–directional on–wheel screw into the hanger disc and screw the nut down tight with spanner;
6. Upright the door and install the lower limiter in proper position
7. Open and close the sliding door so as to ensure each position is installed properly.



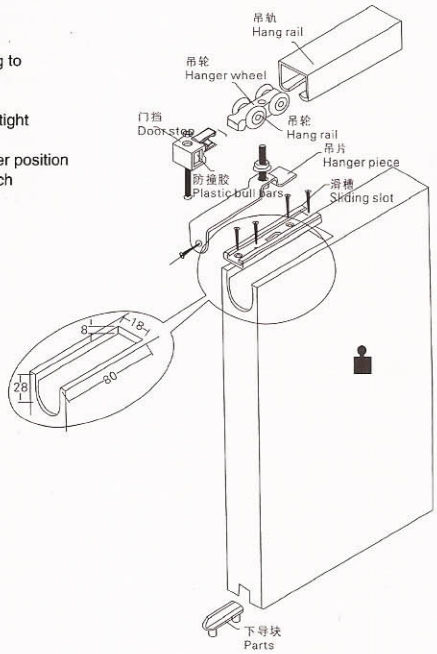

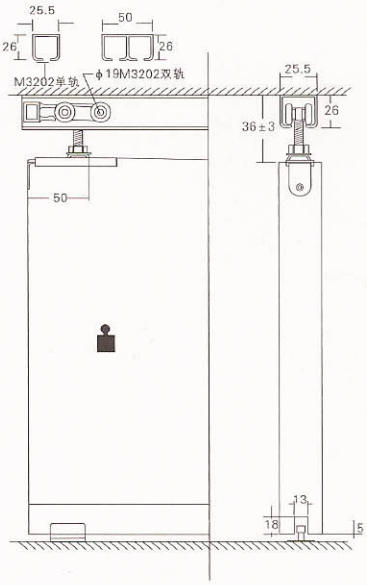

DL–314

吊轮 Hanging Round

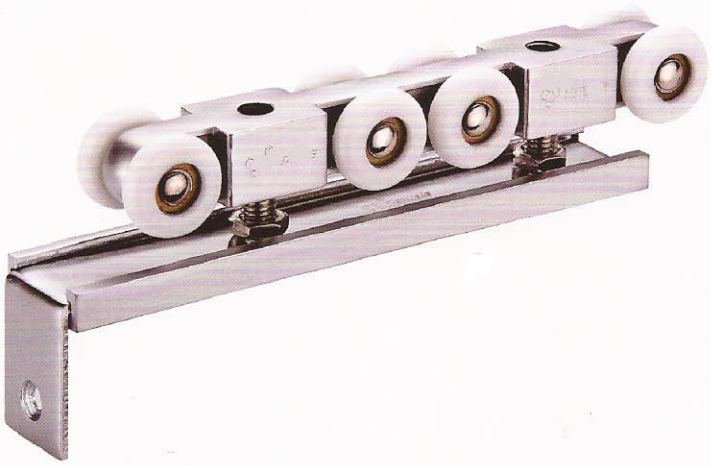

表面处理：
镍拉丝
主要材质：
尼龙/锌合金
适用范围：
适用于各种木质移门
主要特点：
尼龙滑轮、铝合金导轨、超静音设计、带防撞配件
门最大宽度：
1200毫米
门最大高度：
2400毫米
适用门厚：
25~40毫米
最大承重：
60kg/2只
安装说明：
1、将锣杆旋进吊轮里；
2、将装有锣杆的吊轮放进吊轨里并安装门档；
3、按图示在门的上、下部分开槽，将吊片安装在门上；
4、托起门，将吊片的开口套进锣杆的末端，并用扳手旋紧锣母；
5、使门垂直，在适当位置安装下导块；
6、推拉趟门，确定各部位安装合适。







Finish:
L
Material:
Nylon/Zinc alloy
Available For:
All Kinds Of Wooden Sliding Door
Features:
Nylon Roller, Aluminum Alloy Hang Rail,
Silent Design, Whith An–bump Accessories
The Width Of The Wing:
1000mm
The Height Of The Wing:
2000mm
Door Htickness:
25~40mm
Max Capactiy:
10kg/2pcs
Installation instructions:
Installation instructions:
1. Install the hanger rail in a proper position.
2. Groove the upper and lower parts of the door according to the size in the drawing and then fix the sliding slot onto the door;
3. Insert the hanger wheel into the hanger rail and then in stall the door stop;
4. Hold up the sliding door and insert the hanger piece in to the sliding slot;
5. Make the door vertical and install the lower guide block in a proper position;
6. Open and close the sliding door so as to ensure each position is installed properly.

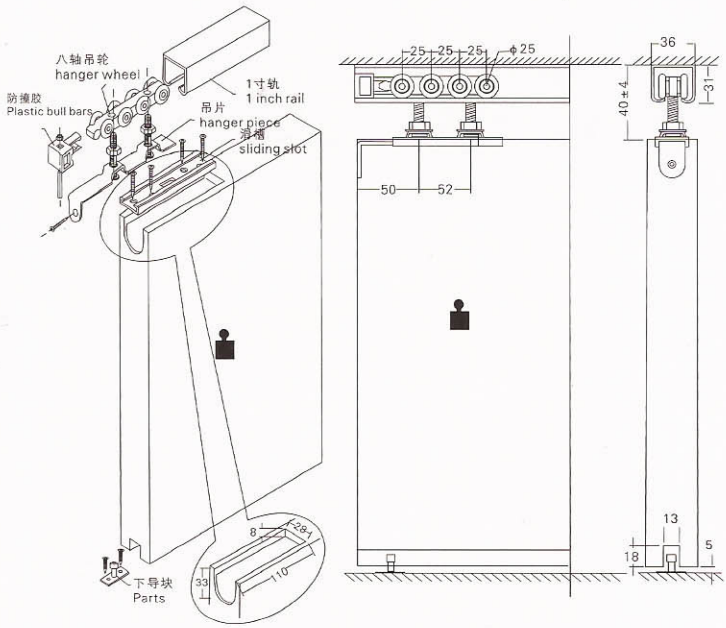

DL–312

吊轮 Hanging Round

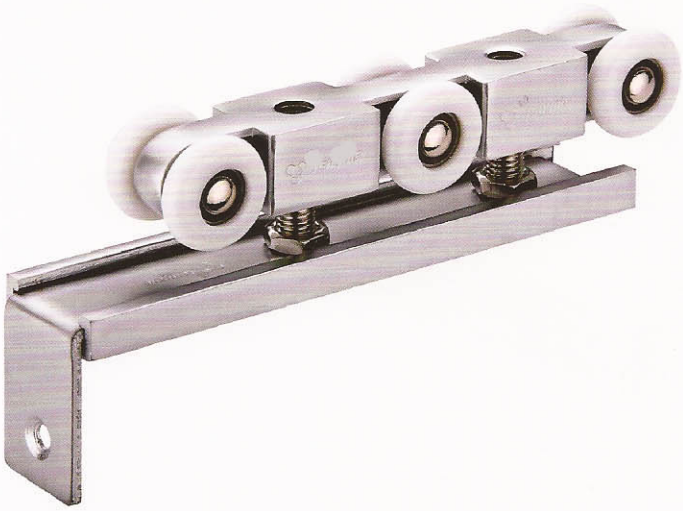

表面处理：
镍拉丝
主要材质：
尼龙/锌合金
适用范围：
适用于各种木质移门
主要特点：
尼龙滑轮、铝合金导轨、超静音设计、带防撞配件
门最大宽度：
1200毫米
门最大高度：
2400毫米
适用门厚：
30~60毫米
最大承重：
120kg
安装说明：
1、将吊片上的锣杆旋进吊轮里，并用扳手将螺母旋紧；
2、将装有吊片的吊轮放进吊轨里并且安装门挡；
3、将装有门挡和吊轮的吊轨安装到适当的位置，
4、按图示在门的上、下部分开槽，将滑槽安装在门上；
5、托起门，将吊轮上的吊片插入滑槽里，并用自攻螺丝将吊轮上的吊骗固定在门上，
6、使门垂直，在适当位置安装下导块；
7、推拉趟门，确定各部位安装合适。

Finish:
L
Material:
Nylon/Zinc alloy
Available For:
All Kinds Of Wooden Sliding Door
Features:
Nylon Roller, Aluminum Alloy Hang Rail,
Silent Design, Whith An–bump Accessories
The Width Of The Wing:
1200mm
The Height Of The Wing:
2400mm
Door Htickness:
30~60mm
Max Capactiy:
120kg
Installation instructions:
1. Rotate the screw in the hanger disc into the wheel and screw the nut down tight with spanner;
2. Put the hanger wheel mounting with hanger disc into the rail and mount the door stop;
3. Mount the hanger rail with door stop and wheel into appropriate position;
4. Dig grooves ontop and bottom of the door according to the illustration and mount the chute in the door;
5. Lift up the door, rotate the all–directional on–wheel screw into the hanger disc and screw the nut down tight with spanner;
6. Upright the door and install the lower limiter in proper position
7. Open and close the sliding door so as to ensure each position is installed properly.



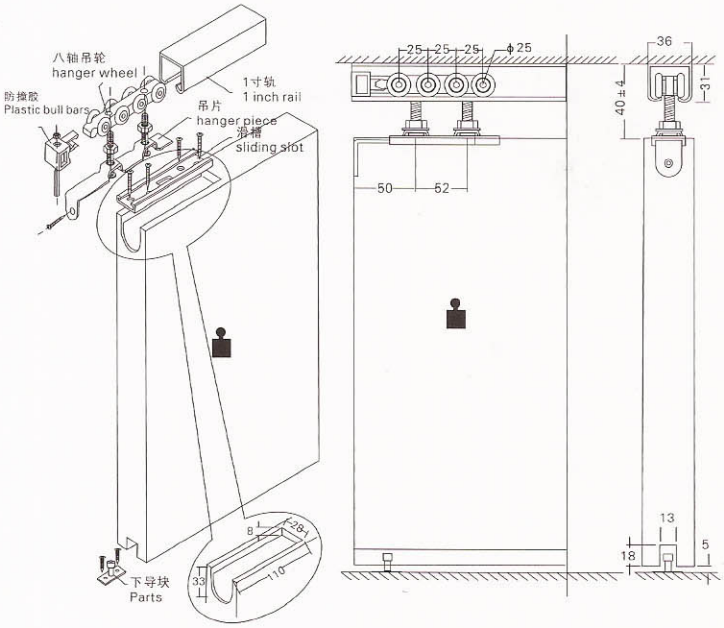

DL–310

吊轮 Hanging Round

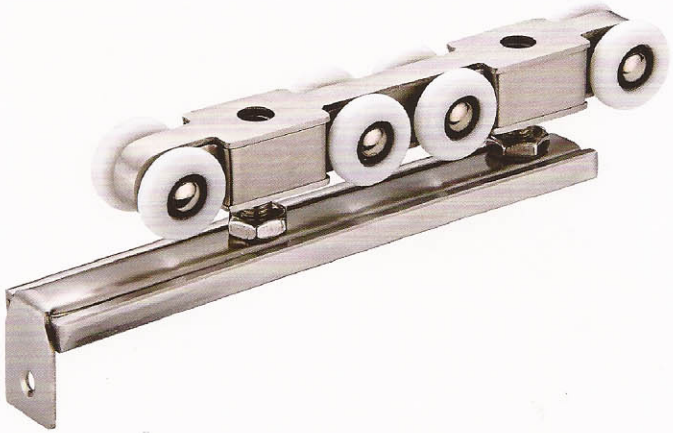

表面处理：
拉丝
主要材质：
不锈钢
适用范围：
适用于各种木质移门
主要特点：
尼龙滑轮、铝合金导轨、超静音设计、带防撞配件
门最大宽度：
1200毫米
门最大高度：
2400毫米
适用门厚：
25~40毫米
最大承重：
60kg/2只
安装说明：
1、将锣杆旋进吊轮里；
2、将装有锣杆的吊轮放进吊轨里并安装门档；
3、按图示在门的上、下部分开槽，将吊片安装在门上；
4、托起门，将吊片的开口套进锣杆的末端，并用扳手旋紧锣母；
5、使门垂直，在适当位置安装下导块；
6、推拉趟门，确定各部位安装合适。

门档
Door wards off



下导块
Parts



专用导轨
Track



Finish:
SSS
Material:
Nylon/Zinc alloy
Available For:
All Kinds Of Wooden Sliding Door
Features:
Nylon Roller, Aluminum Alloy Hang Rail,
Silent Design, Whith An–bump Accessories
The Width Of The Wing:
1000mm
The Height Of The Wing:
2000mm
Door Htickness:
25~40mm
Max Capactiy:
10kg/2pcs
Installation instructions:
Installation instructions:
1. Install the hanger rail in a proper position.
2. Groove the upper and lower parts of the door according to the size in the drawing and then fix the sliding slot onto the door;
3. Insert the hanger wheel into the hanger rail and then in stall the door stop;
4. Hold up the sliding door and insert the hanger piece in to the sliding slot;
5. Make the door vertical and install the lower guide block in a proper position;
6. Open and close the sliding door so as to ensure each position is installed properly.

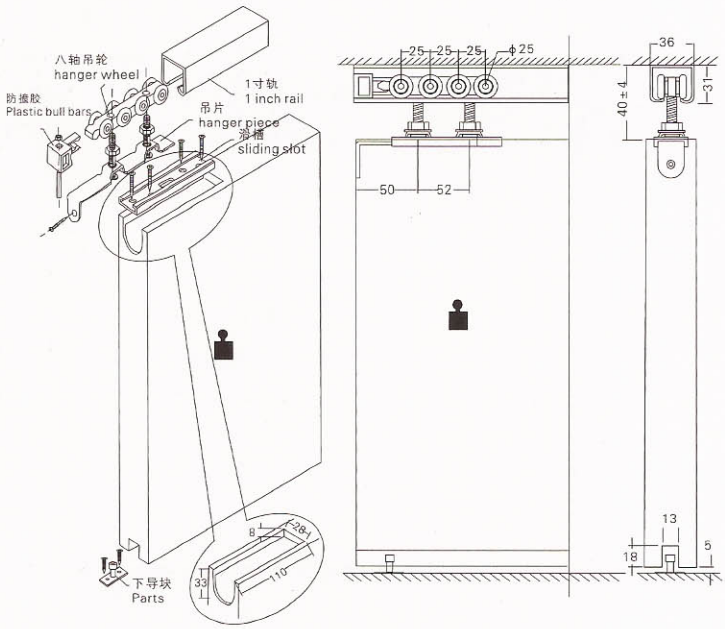

DL–302

吊轮 Hanging Round

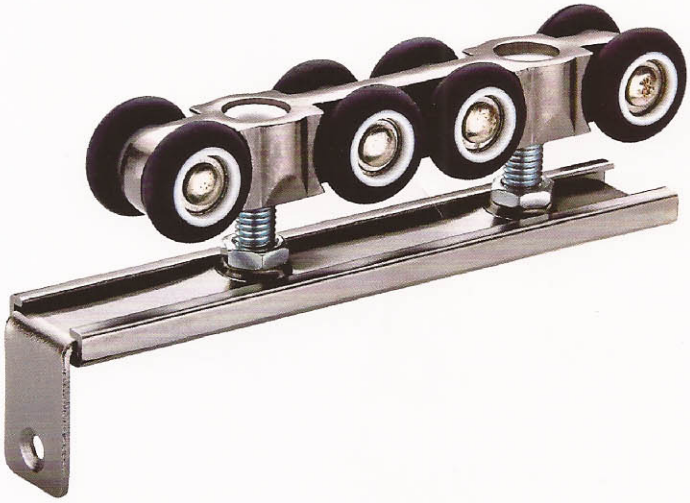

表面处理：
镍拉丝
主要材质：
尼龙/锌合金
适用范围：
适用于各种木质移门
主要特点：
尼龙滑轮、铝合金导轨、超静音设计、带防撞配件
门最大宽度：
1200毫米
门最大高度：
2400毫米
适用门厚：
30~60毫米
最大承重：
180kg/2只
安装说明：
1、将吊片上的锣杆旋进吊轮里，并用扳手将螺母旋紧；
2、将装有吊片的吊轮放进吊轨里并且安装门挡；
3、将装有门挡和吊轮的吊轨安装到适当的位置，
4、按图示在门的上、下部分开槽，将滑槽安装在门上；
5、托起门，将吊轮上的吊片插入滑槽里，并用自攻螺丝将吊轮上的吊骗固定在门上，
6、使门垂直，在适当位置安装下导块；
7、推拉越门，确定各部位安装合适。

Finish:
L
Material:
Nylon/Zinc alloy
Available For:
All Kinds Of Wooden Sliding Door
Features:
Nylon Roller, Aluminum Alloy Hang Rail,
Silent Design, Whith An–bump Accessories
The Width Of The Wing:
1200mm
The Height Of The Wing:
2400mm
Door Htickness:
30~60mm
Max Capactiy:
180kg/pcs
Installation instructions:
1. Rotate the screw in the hanger disc into the wheel and screw the nut down tight with spanner;
2. Put the hanger wheel mounting with hanger disc into the rail and mount the door stop;
3. Mount the hanger rail with door stop and wheel into appropriate position;
4. Dig grooves ontop and bottom of the door according to the illustration and mount the chute in the door;
5. Lift up the door, rotate the all–directional on–wheel screw into the hanger disc and screw the nut down tight with spanner;
6. Upright the door and install the lower limiter in proper position
7. Open and close the sliding door so as to ensure each position is installed properly.



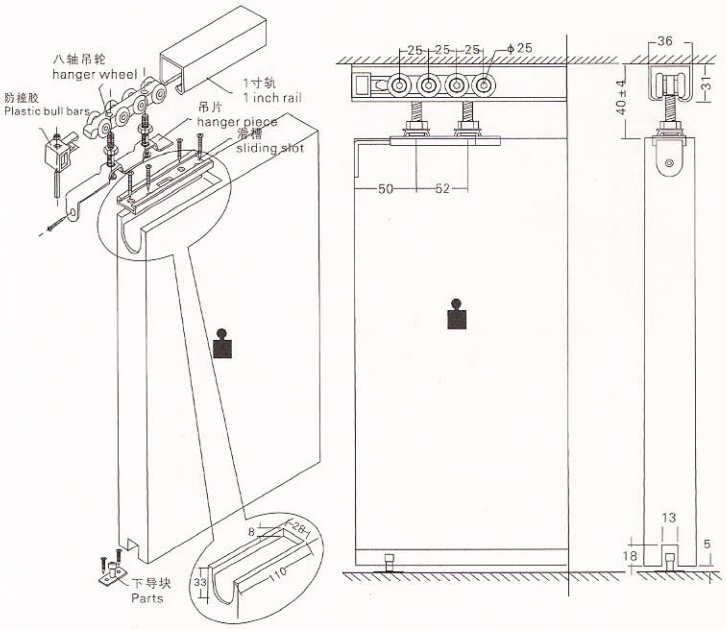

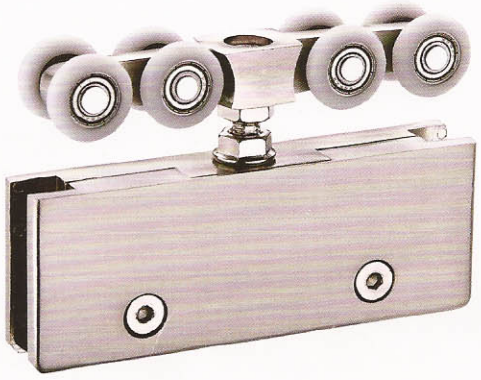

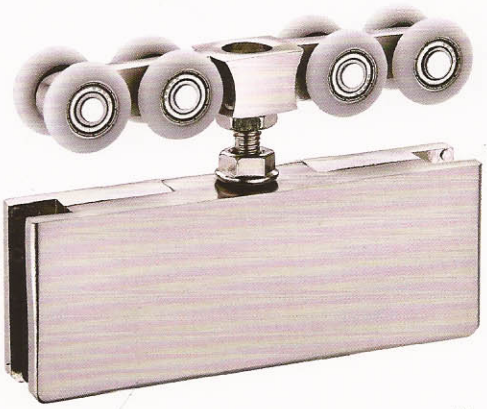

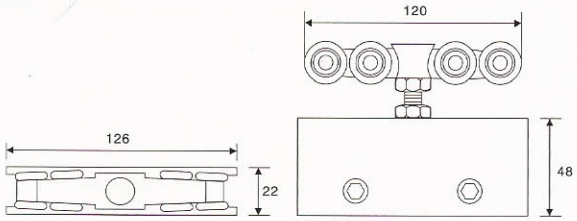

DL–315

玻璃吊轮 Glass Hanging Round

表面处理：镍拉丝
主要材质：尼龙/锌合金
适用范围：适用于各种木质移门
主要特点：尼龙滑轮、铝合金导轨、超静音设计、带防撞配件
门最大宽度：1200毫米
门最大高度：2400毫米
适用门厚：30~60毫米
最大承重：180kg/2只
安装说明：
1、将吊片上的锣杆旋进吊轮里，并用扳手将螺母旋紧；
2、将装有吊片的吊轮放进吊轨里并且安装门挡；
3、将装有门挡和吊轮的吊轨安装到适当的位置，
4、按图示在门的上、下部分开槽，将滑槽安装在门上；
5、托起门，将吊轮上的吊片插入滑槽里，并用自攻螺丝将吊轮上的吊躺固定在门上，
6、使门垂直，在适当位置安装下导块；
7、推拉趟门，确定各部位安装合适。

Finish: L
Material: Nylon/Zinc alloy
Available For: All Kinds Of Wooden Sliding Door
Features: Nylon Roller, Aluminum Alloy Hang Rail, Silent Design, Whith An–bump Accessories
The Width Of The Wing:1200mm
The Height Of The Wing: 2400mm
Door Htickness: 30–60mm
Max Capactiy: 180kg/pcs
Installation instructions:
1. Rotate the screw in the hanger disc into the wheel and screw the nut down tight with spanner;
2. Put the hanger wheel mounting with hanger disc into the rail and mount the door stop;
3. Mount the hanger rail with door stop and wheel into appropriate position;
4. Dig grooves ontop and bottom of the door according to the illustration and mount the chute in the door;
5. Lift up the door, rotate the all–directional on–wheel screw into the hanger disc and screw the nut down tight with spanner;
6. Upright the door and install the lower limiter in proper position
7. Open and close the sliding door so as to ensure each position is installed properly.

玻璃夹安装示意图
Glass Clamp Installation Drawing

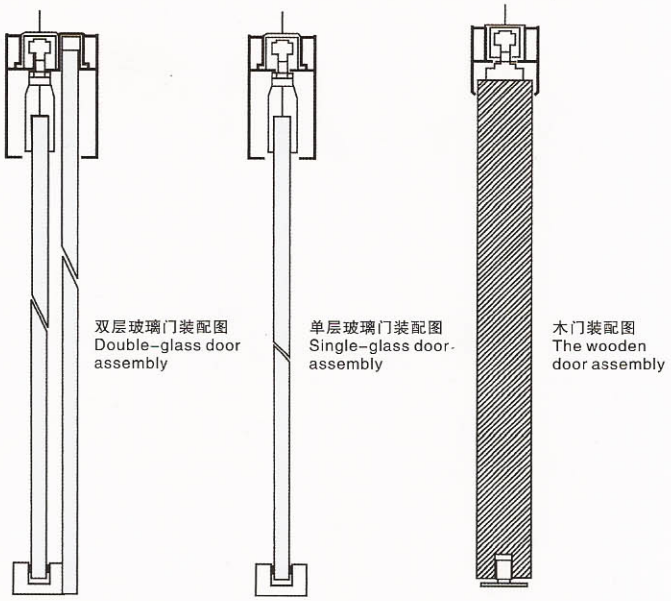

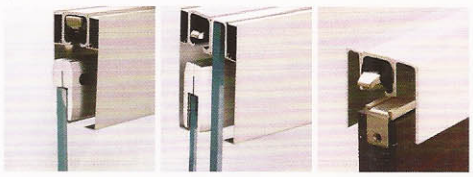



MT G09A 吊轨 Rail Track

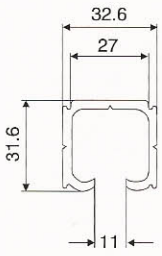

G09A

DL–MFT01

密封条 Sealing Strip

表面处理： 氧化铝
主要材质： 铝
适用范围： 适用于各种移门

Finish: A
Material: Aluminum
Available For: All Kinds Of Sliding Door



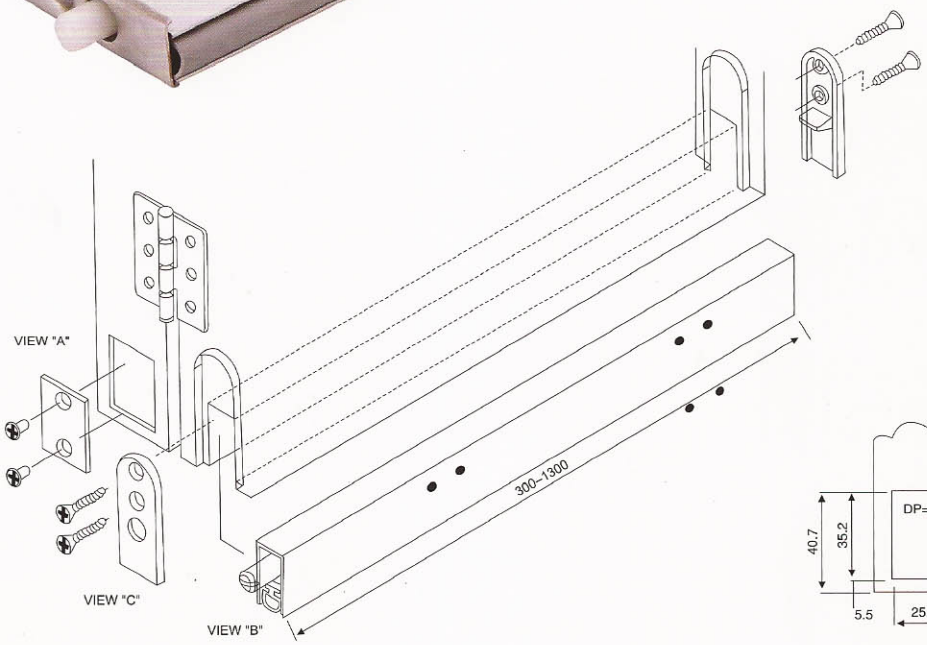

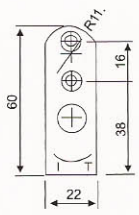

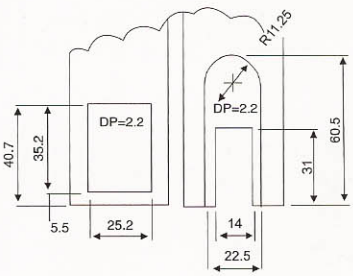

主要功能 Main Function



隔音沙
DRAUGHTS AND DUST

隔热
HEAT

隔冷
COLD



隔防蟑螂
INSECTS

防噪音
NOISE

防烟
SMOKE

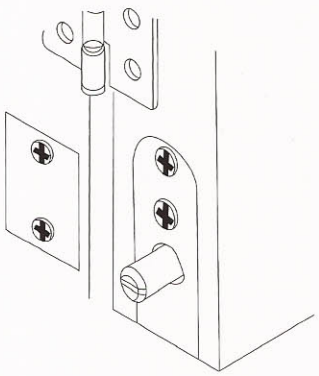

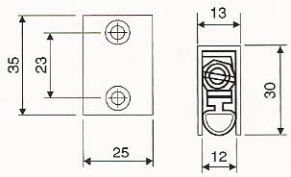

常用面饰一览表
FINISH SCHEDULE TABLE

Code 代码	Finish infofmation 表面说明	Code 代码	Finish infofmation 表面说明
XB	氧化金	BL	喷塑
A	氧化铝	SP	亮铬
SSS	拉丝	L	镍拉丝
PZ	铜拉丝	PN	亮镍
KN	镍拉丝金	CS	金拉丝
HK	枪黑金	KG	K金
RP	黑镍喷沙	OJ	欧洲金
CF	黑古铜	AL	砂金
YAB	黄古铜	CL	砂银
AB	青古铜	SN	拉丝钢
AC	红古铜	PE	磨砂珍珠铬
ACC	哑光黄古铜	PB	磨砂珍珠金
W	无光黑	SC	哑铬
CP	玫瑰金	Y	喷木纹
CW	白水晶	CB	蓝水晶
PVDG	PVD金	DAB	半哑青古铜
PVDC	PVD铬	PB	铜抛光



7804 SP

球形锁系列 Cylindrical Door Lock Series

表面处理：
亮铬
主要材质：
冷轧钢板/不锈钢/铜
锁舌： LL6/LL7
适用范围：
房间门、入户门、木门
主要功能：
标准门锁、通道门锁、
卫浴门锁

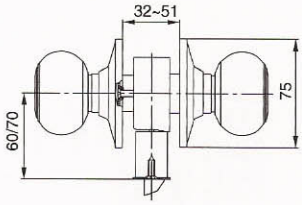

Finish:
SP
Material:
Stain/Steel/Brass
Latch: LL6/LL7
Available For:
Room Door,Entrance Door,
Wooden Door
Main Function:
Standard Lockset,Passage Lockset,
Privacy Lockset



SP 亮铬



7875 F

球形锁系列 Cylindrical Door Lock Series

表面处理：
镍拉丝
主要材质：
冷轧钢板/不锈钢/铜
锁舌： LL6/LL7
适用范围：
房间门、入户门、木门
主要功能：
标准门锁、通道门锁、
卫浴门锁

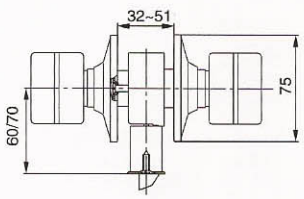

Finish:
L
Material:
Stain/Steel/Brass
Latch: LL6/LL7
Available For:
Room Door,Entrance Door,
Wooden Door
Main Function:
Standard Lockset,Passage Lockset,
Privacy Lockset



L 镍拉丝

D101 SS

球形锁系列 Cylindrical Door Lock Series

表面处理：
不锈钢拉丝
主要材质：
冷轧钢板/不锈钢/铜
锁舌： LP76
适用范围：
房间门、入户门、木门
主要功能：
标准门锁、通道门锁、
卫浴门锁

Finish:
SSS
Material:
Stain/Steel/Brass
Latch: LP76
Available For:
Room Door,Entrance Door,
Wooden Door
Main Function:
Standard Lockset,Passage Lockset,
Privacy Lockset

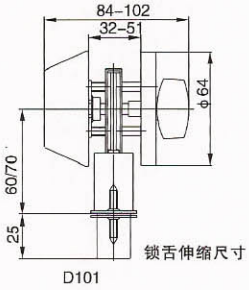

D101

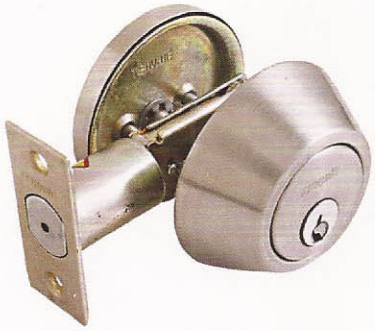

SSS 拉丝

7P3067 BL

塑钢门窗锁 Plastic–steel Lock

表面处理：
喷塑
主要材质：
冷轧钢板/不锈钢
锁舌： LL6/LL7
适用范围：
房间门、入户门、木门
主要功能：
标准门锁、通道门锁、
卫浴门锁

Finish:
BL
Material:
Stain/Steel
Latch: LL6/LL7
Available For:
Room Door,Entrance Door,
Wooden Door
Main Function:
Standard Lockset,Passage Lockset,
Privacy Lockset

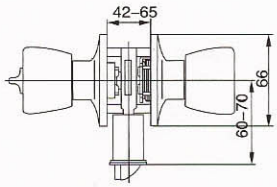

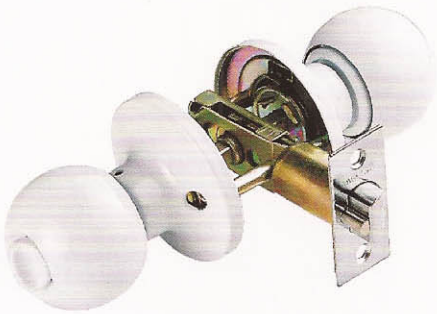

BL 喷塑

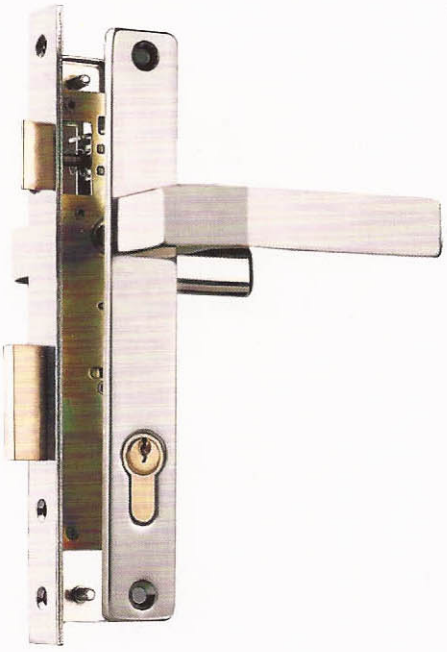

PV2010 L

塑钢门窗锁 Plastic–steel Lock

表面处理：
镍拉丝
主要材质：
锌合金/冷轧钢板
锁体： LS1.0
适用范围：
房间门、入户门、木门
主要功能：
塑钢门锁

Finish:
L
Material:
Zinc alloy/Stain
Lock body: LS1.0
Available For:
Room Door,Entrance Door,
Wooden Door
Main Function:
Plastic–steel Lock

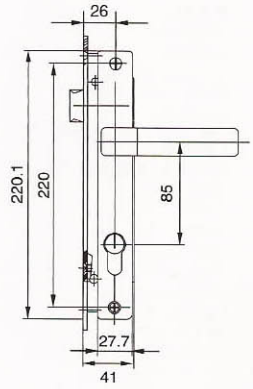



L 镍拉丝



FH–1C

防火门锁 Fire Resistant Door Lock

表面处理：
拉丝
主要材质：
不锈钢
锁体： 7255
适用范围：
房间门、入户门、木门
主要功能：
通道门锁

Finish:
SSS
Material:
Stain steel
Lock body: 7255
Available For:
Room Door,Entrance Door,
Wooden Door
Main Function:
Passage Lockset

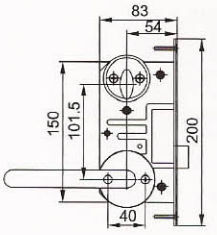

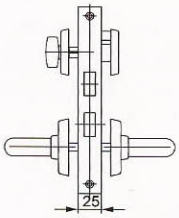



SSS 拉丝

9507 SN ET/BK

推拉门锁 Pushing And Pulling Door Lock



表面处理：
镍拉丝、镍拉丝金、枪黑金
主要材质：
锌合金
锁体： LY6
适用范围：
房间门、入户门、木门
主要功能：
标准门锁、卫浴门锁

Finish:
L, KN, HK
Material:
Zinc alloy
Lock body: LY6
Available For:
Room Door,Entrance Door,
Wooden Door
Main Function:
Standard Lockset,Privacy Lockset

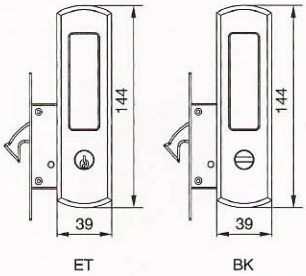

ET BK

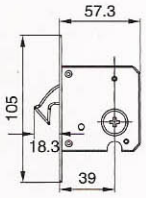



L 镍拉丝



KN 镍拉丝金



HK 枪黑金

9508 SN ET/BK

推拉门锁 Pushing And Pulling Door Lock



表面处理：
镍拉丝、镍拉丝金、枪黑金
主要材质：
锌合金
锁体： LY6
适用范围：
房间门、入户门、木门
主要功能：
标准门锁、卫浴门锁

Finish:
L, KN, HK
Material:
Zinc alloy
Lock body: LY6
Available For:
Room Door,Entrance Door,
Wooden Door
Main Function:
Standard Lockset,Privacy Lockset

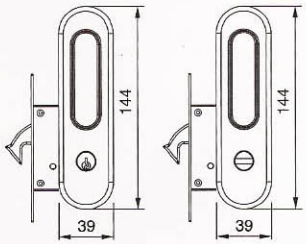

ET BK

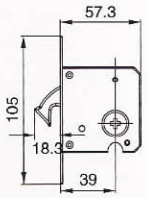



L 镍拉丝



KN 镍拉丝金



HK 枪黑金



GT/GD0GD112505 HK

GT0.GD0.GD1 锌合金门锁
GT0.GD0.GD1 Zinc Alloy Door Lock

表面处理：
枪黑金、镍拉丝、黑镍喷沙
主要材质：
锌合金
锁体： 55/5050/5850
适用范围：
房间门、入户门、木门
主要功能：
标准门锁、通道门锁、
卫浴门锁、虚设门锁

Finish:
HK, L, RP
Material:
Zinc alloy
Lock body: 55/5050/5850
Available For:
Room Door,Entrance Door,
Wooden Door
Main Function:
Standard Lockset,Passage Lockset,
Privacy Lockset,Decorative Lockset

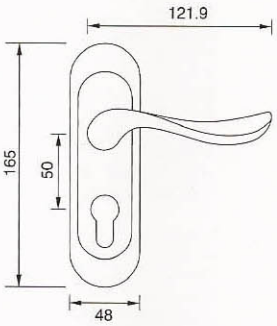

HK 枪黑金

RP 黑镍喷沙

L 镍拉丝



GT/GD0/GD10301 HK

GT0.GD0.GD1 锌合金门锁
GT0.GD0.GD1 Zinc Alloy Door Lock

表面处理：
枪黑金、镍拉丝
主要材质：
锌合金
锁体： 55/5050/5850
适用范围：
房间门、入户门、木门
主要功能：
标准门锁、通道门锁、
卫浴门锁、虚设门锁

Finish:
HK, L
Material:
Zinc alloy
Lock body: 55/5050/5850
Available For:
Room Door,Entrance Door,
Wooden Door
Main Function:
Standard Lockset,Passage Lockset,
Privacy Lockset,Decorative Lockset

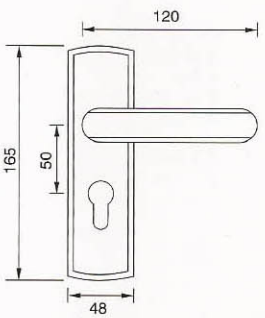

HK 枪黑金

L 镍拉丝

GT0126136 L

GT0.GD0.GD1 锌合金门锁
GT0.GD0.GD1 Zinc Alloy Door Lock

表面处理：
镍拉丝、K金
主要材质：
锌合金
锁体： 55/5050/5850
适用范围：
房间门、入户门、木门
主要功能：
标准门锁、通道门锁、
卫浴门锁、虚设门锁

Finish:
L, KG
Material:
Zinc alloy
Lock body: 55/5050/5850
Available For:
Room Door,Entrance Door,
Wooden Door
Main Function:
Standard Lockset,Passage Lockset,
Privacy Lockset,Decorative Lockset

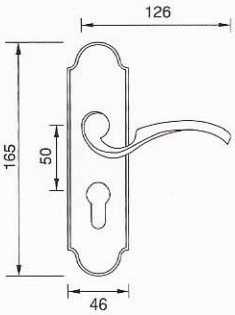





L 镍拉丝



KG K金

GT010801 L

GT0.GD0.GD1 锌合金门锁
GT0.GD0.GD1 Zinc Alloy Door Lock

表面处理：
镍拉丝
主要材质：
锌合金
锁体： 55/5050/5850
适用范围：
房间门、入户门、木门
主要功能：
标准门锁、通道门锁、
卫浴门锁、虚设门锁

Finish:
L
Material:
Zinc alloy
Lock body: 55/5050/5850
Available For:
Room Door,Entrance Door,
Wooden Door
Main Function:
Standard Lockset,Passage Lockset,
Privacy Lockset,Decorative Lockset

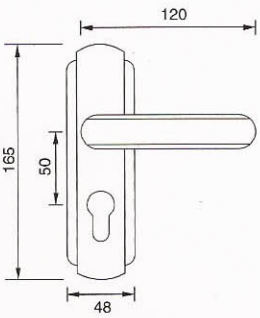





L 镍拉丝

9G1 锁体

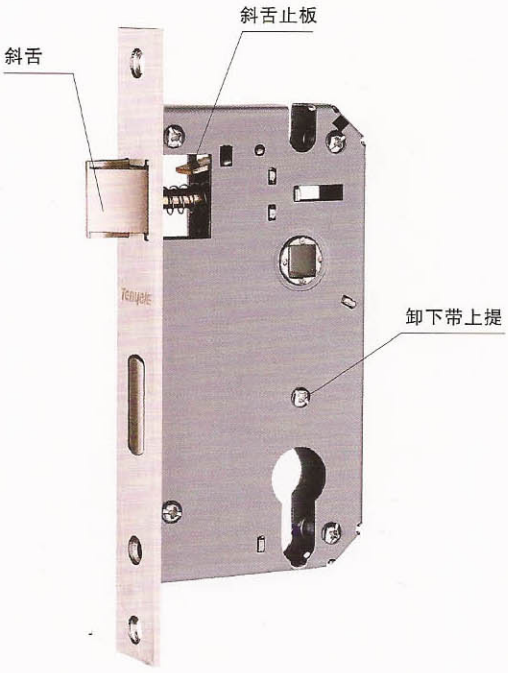

9G1锁体特点

- 独特的半圆弧斜活舌设计；
- 整体结构合理，制作精良；
- 不锈钢锁体面板，精铸的斜舌、方舌、美观大方外也保证了恒久耐用的特性；
- 简单的斜舌方向斜舌止板，只将锁体倒立，将斜舌压到锁体面板后，转动180°即可达到换向的目的；

附注 Remark

型号示例 9G1 03 01 L BK

9G1	03	01	L	BK
系列代号	面板代号	执手代号	表面处理	功能（房门锁不写）

Model: 9G10301 L BK
9G1–series code
03–escutcheon code
01–lever code
L–finish
BK–function(room door lock is omitted)

锁芯钥匙技术

高精密度单排珠锁芯设计，较传统锁芯更为安全，锁芯、锁头体采用电脑数控加工，更加减少互开误差。铜精致单开电脑锁匙，配备三把，更方便备用。

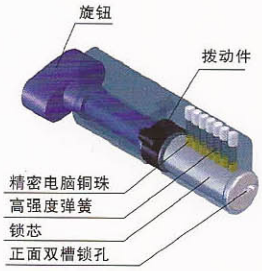



安装轴示图

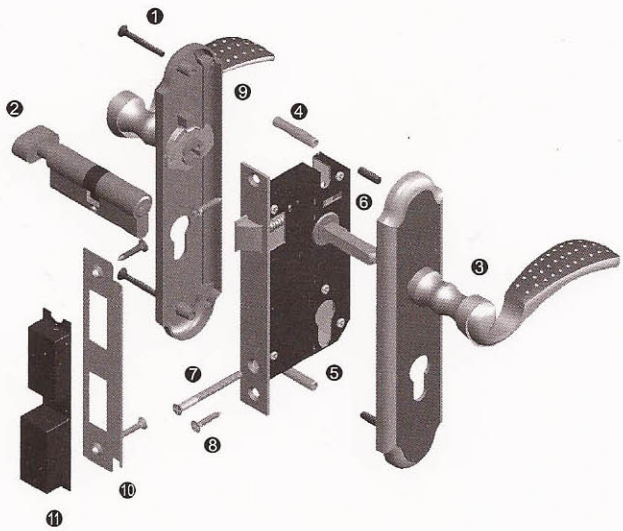

❶ 连接螺钉
❷ 单开锁头
❸ 外面板部件
❹ 连接螺管
❺ 锁体
❻ 方杆
❼ 锁头螺钉
❽ 自攻螺钉
❾ 内面板部件
❿ 锁扣板
⓫ 锁扣盒

锁体、锁头尺寸图

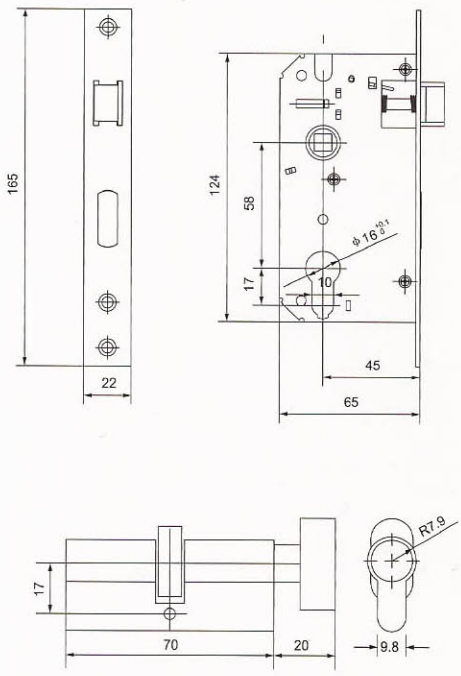

9G10301 L

9G1锌合金门锁系列 9G1 Zinc Alloy Door Lock Series

表面处理：
镍拉丝
主要材质：
锌合金
锁体： 5845
适用范围：
房间门、入户门、木门
主要功能：
标准门锁、通道门锁、
卫浴门锁、虚设门锁

Finish:
L
Material:
Zinc alloy
Lock body: 5845
Available For:
Room Door,Entrance Door,
Wooden Door
Main Function:
Standard Lockset,Passage Lockset,
Privacy Lockset,Decorative Lockset

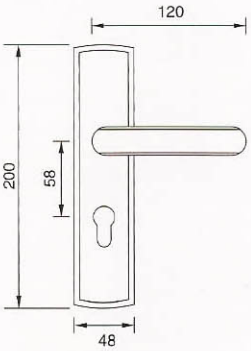



L 镍拉丝



9G110801 L

9G1锌合金门锁系列 9G1 Zinc Alloy Door Lock Series

表面处理：
镍拉丝
主要材质：
锌合金
锁体： 5845
适用范围：
房间门、入户门、木门
主要功能：
标准门锁、通道门锁、
卫浴门锁、虚设门锁

Finish:
L
Material:
Zinc alloy
Lock body: 5845
Available For:
Room Door,Entrance Door,
Wooden Door
Main Function:
Standard Lockset,Passage Lockset,
Privacy Lockset,Decorative Lockset

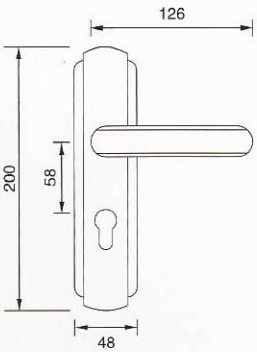



L 镍拉丝





9G112503 L

9G1锌合金门锁系列 9G1 Zinc Alloy Door Lock Series

表面处理：
镍拉丝
主要材质：
锌合金
锁体： 5845
适用范围：
房间门、入户门、木门
主要功能：
标准门锁、通道门锁、
卫浴门锁、虚设门锁

Finish:
L
Material:
Zinc alloy
Lock body: 5845
Available For:
Room Door,Entrance Door,
Wooden Door
Main Function:
Standard Lockset,Passage Lockset,
Privacy Lockset,Decorative Lockset

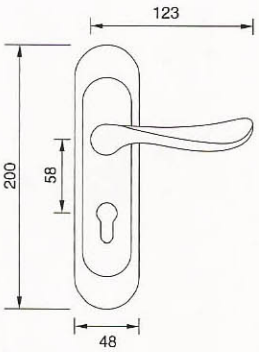



L 镍拉丝



9G1111171 L

9G1锌合金门锁系列 9G1 Zinc Alloy Door Lock Series

表面处理：
镍拉丝
主要材质：
锌合金
锁体： 5845
适用范围：
房间门、入户门、木门
主要功能：
标准门锁、通道门锁、
卫浴门锁、虚设门锁

Finish:
L
Material:
Zinc alloy
Lock body: 5845
Available For:
Room Door,Entrance Door,
Wooden Door
Main Function:
Standard Lockset,Passage Lockset,
Privacy Lockset,Decorative Lockset

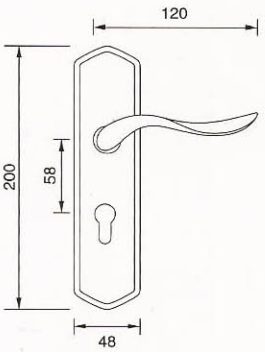



L 镍拉丝

9G1114170 L

9G1锌合金门锁系列 9G1 Zinc Alloy Door Lock Series

表面处理：
镍拉丝
主要材质：
锌合金
锁体： 5845
适用范围：
房间门、入户门、木门
主要功能：
标准门锁、通道门锁、
卫浴门锁、虚设门锁

Finish:
L
Material:
Zinc alloy
Lock body: 5845
Available For:
Room Door,Entrance Door,
Wooden Door
Main Function:
Standard Lockset,Passage Lockset,
Privacy Lockset,Decorative Lockset

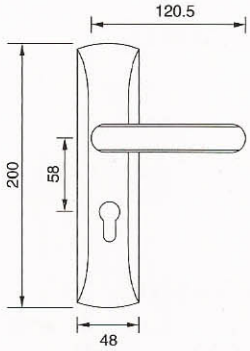





L 镍拉丝

9G1126136 L

9G1锌合金门锁系列 9G1 Zinc Alloy Door Lock Series

表面处理：
镍拉丝
主要材质：
锌合金
锁体： 5845
适用范围：
房间门、入户门、木门
主要功能：
标准门锁、通道门锁、
卫浴门锁、虚设门锁

Finish:
L
Material:
Zinc alloy
Lock body: 5845
Available For:
Room Door,Entrance Door,
Wooden Door
Main Function:
Standard Lockset,Passage Lockset,
Privacy Lockset,Decorative Lockset

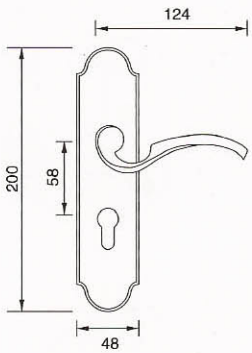





L 镍拉丝

GML/UML 锁体



GML



UML



独特的U型卡圈是专为GML精心制作加工而成，能防止手柄脱落或被拉出等功能，更适合工程使用。

GML-ST58锁体特点

- 独特的斜舌设计；
- 整体结构精密、准确、细致、斜舌寿命测试达到20万次；
- 锁体面板采用独特的SUS304不锈钢，保障了恒久耐用的特性；
- 锁体采用重弹簧复位，手感更佳；
- 简单的斜舌换向设计，只需将换向片一拉，拨出锁舌即可换向；

附注 Remark

型号示例 GML 101 01 A BK

GML	101	01	A	BK
系列代号	面板代号	执手代号	表面处理	功能（房门锁不写）

Model: GML10101 A BK
GML–series code
101–escutcheon code
01–lever code
A–finish
BK–function(room door lock is omitted)

锁芯钥匙技术

高精密度单排珠锁芯设计，较传统锁芯更为安全，锁芯、锁头体采用电脑数控加工，更加减少互开误差。铜精致单开电脑锁匙，配备三把，更方便备用。

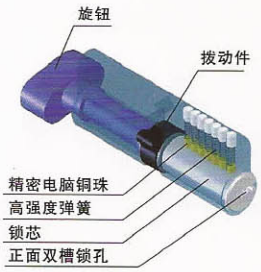



安装轴示图

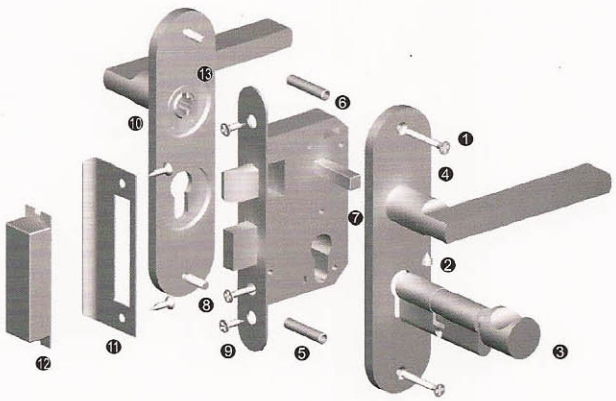

❶ 连接螺钉
❷ 紧定螺钉
❸ 单开锁头
❹ 外面板部件
❺ 连接螺管
❻ 锁体
❼ 方杆
❽ 锁头螺丝
❾ 自攻螺钉
❿ 内面板部件
⓫ 锁扣板
⓬ 锁扣盒
⓭ U型卡圈

锁体、锁头尺寸图

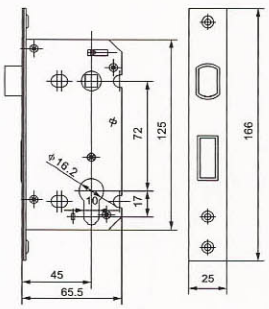

UML

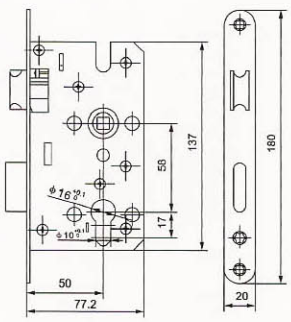

GML

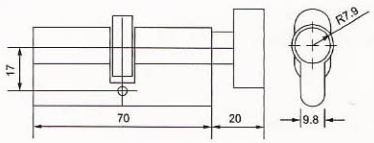

GML10101 A

GML/UML 氧化铝门锁系列
GML/UML Alumina Door Lock Series

表面处理：
氧化铝
主要材质：
氧化铝
锁体： 5850/7245
适用范围：
房间门、入户门、木门
主要功能：
标准门锁、通道门锁、
卫浴门锁、虚设门锁

Finish:
A
Material:
Alloy Aluminum
Lock body: 5850/7245
Available For:
Room Door,Entrance Door,
Wooden Door
Main Function:
Standard Lockset,Passage Lockset,
Privacy Lockset,Decorative Lockset

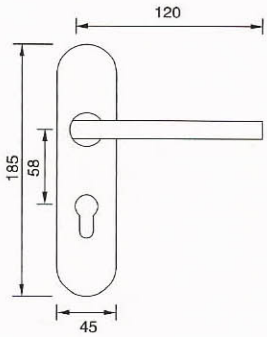





A 氧化铝

GML10403 A

GML/UML 氧化铝门锁系列
GML/UML Alumina Door Lock Series

表面处理：
氧化铝
主要材质：
氧化铝
锁体： 5850/7245
适用范围：
房间门、入户门、木门
主要功能：
标准门锁、通道门锁、
卫浴门锁、虚设门锁

Finish:
A
Material:
Alloy Aluminum
Lock body: 5850/7245
Available For:
Room Door,Entrance Door,
Wooden Door
Main Function:
Standard Lockset,Passage Lockset,
Privacy Lockset,Decorative Lockset

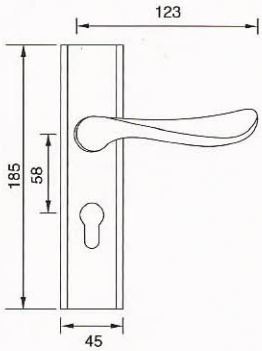





A 氧化铝



GML10204 A

GML/UML 氧化铝门锁系列
GML/UML Alumina Door Lock Series

表面处理：
氧化铝
主要材质：
氧化铝
锁体： 5850/7245
适用范围：
房间门、入户门、木门
主要功能：
标准门锁、通道门锁、
卫浴门锁、虚设门锁

Finish:
A
Material:
Alloy Aluminum
Lock body: 5850/7245
Available For:
Room Door,Entrance Door,
Wooden Door
Main Function:
Standard Lockset,Passage Lockset,
Privacy Lockset,Decorative Lockset

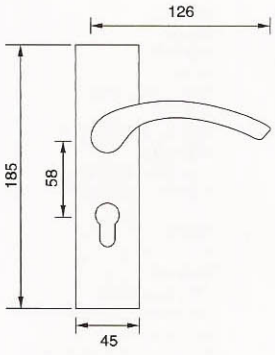

A 氧化铝



GML10302 A

GML/UML 氧化铝门锁系列
GML/UML Alumina Door Lock Series

表面处理：
氧化铝
主要材质：
氧化铝
锁体： 5850/7245
适用范围：
房间门、入户门、木门
主要功能：
标准门锁、通道门锁、
卫浴门锁、虚设门锁

Finish:
A
Material:
Alloy Aluminum
Lock body: 5850/7245
Available For:
Room Door,Entrance Door,
Wooden Door
Main Function:
Standard Lockset,Passage Lockset,
Privacy Lockset,Decorative Lockset

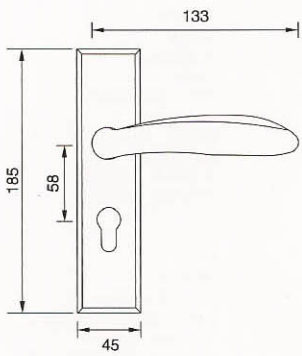

A 氧化铝

UML10105 A

GML/UML 氧化铝门锁系列
GML/UML Alumina Door Lock Series





表面处理：
氧化铝
主要材质：
氧化铝
锁体： 5850/7245
适用范围：
房间门、入户门、木门
主要功能：
标准门锁、通道门锁、
卫浴门锁、虚设门锁

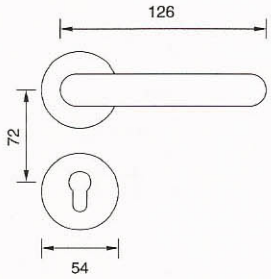

Finish:
A
Material:
Alloy Aluminum
Lock body: 5850/7245
Available For:
Room Door,Entrance Door,
Wooden Door
Main Function:
Standard Lockset,Passage Lockset,
Privacy Lockset,Decorative Lockset



A 氧化铝

UML10106 A

GML/UML 氧化铝门锁系列
GML/UML Alumina Door Lock Series





表面处理：
氧化铝
主要材质：
氧化铝
锁体： 5850/7245
适用范围：
房间门、入户门、木门
主要功能：
标准门锁、通道门锁、
卫浴门锁、虚设门锁

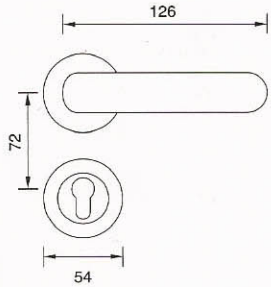

Finish:
A
Material:
Alloy Aluminum
Lock body: 5850/7245
Available For:
Room Door,Entrance Door,
Wooden Door
Main Function:
Standard Lockset,Passage Lockset,
Privacy Lockset,Decorative Lockset



A 氧化铝



GP00348 M

GP0锌合金门锁 GP0 Zinc Alloy Door lock

表面处理：
镍拉丝
主要材质：
锌合金
锁体： 5045
适用范围：
房间门、入户门、木门
主要功能：
标准门锁、通道门锁、
卫浴门锁、虚设门锁

Finish:
L
Material:
Zinc alloy
Lock body: 5045
Available For:
Room Door,Entrance Door,
Wooden Door
Main Function:
Standard Lockset,Passage Lockset,
Privacy Lockset,Decorative Lockset

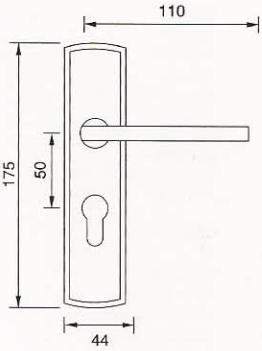



L 镍拉丝



GP0110165 L

GP0锌合金门锁 GP0 Zinc Alloy Door lock

表面处理：
镍拉丝
主要材质：
锌合金
锁体： 5045
适用范围：
房间门、入户门、木门
主要功能：
标准门锁、通道门锁、
卫浴门锁、虚设门锁

Finish:
L
Material:
Zinc alloy
Lock body: 5045
Available For:
Room Door,Entrance Door,
Wooden Door
Main Function:
Standard Lockset,Passage Lockset,
Privacy Lockset,Decorative Lockset

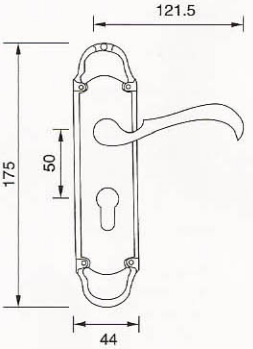



L 镍拉丝

U10157 M

U1分体门锁系列 U1 Mortise Door Lock Series

表面处理：
镍拉丝
主要材质：
锌合金
锁体： 7245
适用范围：
房间门、入户门、木门
主要功能：
标准门锁、通道门锁、
卫浴门锁、虚设门锁

Finish:
L
Material:
Zinc alloy
Lock body: 7245
Available For:
Room Door,Entrance Door,
Wooden Door
Main Function:
Standard Lockset,Passage Lockset,
Privacy Lockset,Decorative Lockset

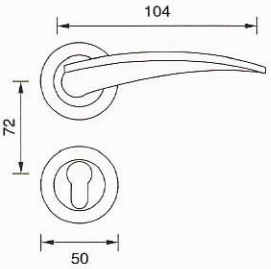







L 镍拉丝

U10155 M

U1分体门锁系列 U1 Mortise Door Lock Series

表面处理：
镍拉丝
主要材质：
锌合金
锁体： 7245
适用范围：
房间门、入户门、木门
主要功能：
标准门锁、通道门锁、
卫浴门锁、虚设门锁

Finish:
L
Material:
Zinc alloy
Lock body: 7245
Available For:
Room Door,Entrance Door,
Wooden Door
Main Function:
Standard Lockset,Passage Lockset,
Privacy Lockset,Decorative Lockset

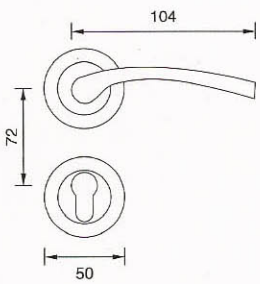







L 镍拉丝

SH01-04大拉手
CH01-04大拉手

尺寸：470x40mm
表面处理：K金
主要材质：纯铜
适用范围：户外门、大门、别墅门
安装中心距：64mm；
锁体中心距：85mm
适用门厚：45-50mm
钥匙：5条铜钥匙
锁芯：双排电脑珠
功能延伸：可定制适用门厚55-80mm锁体或T形门用锁体

Size: 470x40mm
Finish: KG
Material: Copper
Available For: Outside The House And Gate
Backset: 64mm;
Center Distance Of Lock Body: 85mm
Door Thickness: 45-50mm
Keys: 5 brass keys
Cylinder: Double Role Computer Beads
Extending Function: Could Request To Produce Special Lock Body Apply To Door Thickness 55-80mm Or Door

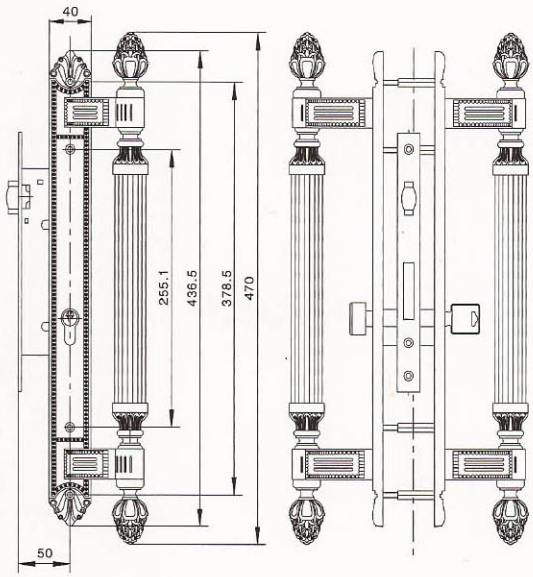



FINISH:

KG K金



锁头
Lock



钥匙
lock opener

SH8704-04 单真
SH8704-04 单假

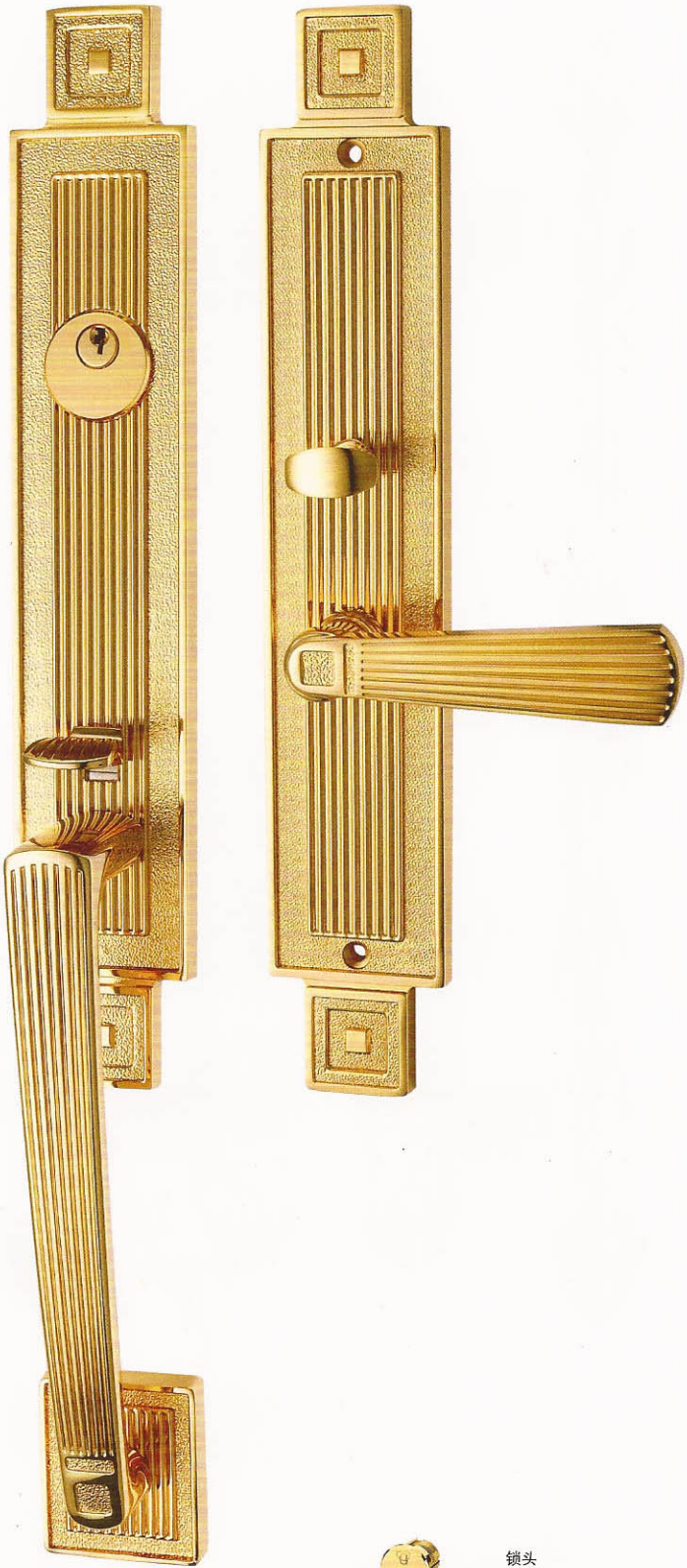

尺寸：500x65mm
表面处理：K金
主要材质：纯铜
锁体型号：8765
锁芯：双排10粒珠
钥匙：5条双排珠白铜钥匙
门边距：65mm
锁体中心距：87mm
适用门厚：45–55mm
适用范围：户外门、大门、别墅门
适用标准：QB/T2474–2000
定货提示：可定制适用门厚55–80mm锁蕊

Size: 595x70mm
Finish: KG
Material: Pure brass
Lock body: 8765
Cylinder: Double role 10beads
Keys: 5 pcs of double beads white brass keys
Backset: 65mm
Center Distance Of Lock Body:87mm
Door Thickness: 45–55mm
Available For: Door outside,gate,villa door
Applicable standard: QB/T2474–2000
Order Notice: Could request to produce special lock cylinder apply to door thickness 55–80mm

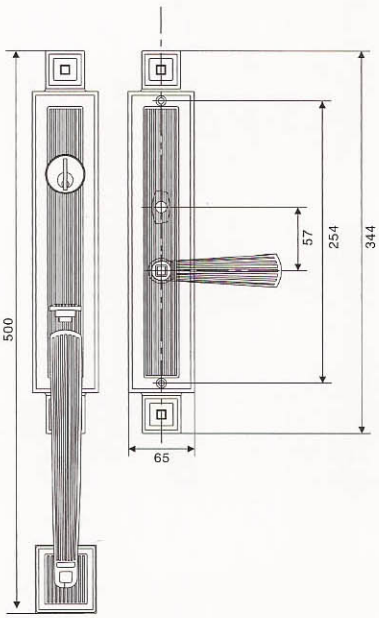

锁头
Lock



钥匙
lock opener

FINISH:



KG K金

SH8504-12-04

尺寸：290x52mm
表面处理：K金
主要材质：纯铜
锁体型号：8550
锁芯：双排10粒珠
钥匙：5条双排珠铜钥匙
门边距：50mm
锁体中心距：85mm
适用门厚：40–50mm
适用范围：房间门、入户门、各类木质门
适用标准：QB/T2474–2000

Size: 290x52mm
Finish: KG
Material: Pure brass
Lock body: 8550
Cylinder: Double role 10beads
Keys: 5 pcs of double beads brass keys
Backset: 50mm
Center Distance Of Lock Body: 85mm
Door Thickness: 40–50mm
Available For: Room door,entrance door, all kinds of wooden door
Applicable standard: QB/T2474–2000



KG K金

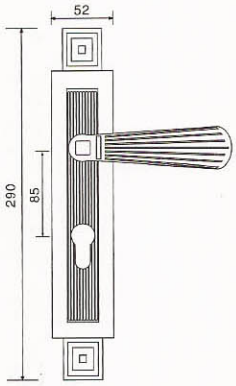



锁头
Lock



钥匙
lock opener

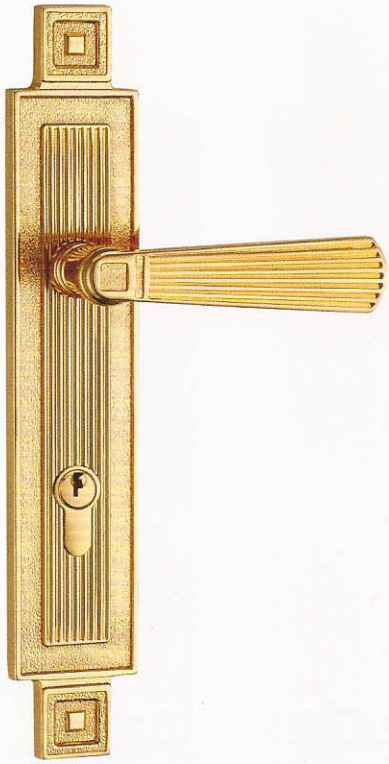

SH5804-12-04

尺寸：230x48mm
表面处理：K金
主要材质：纯铜
锁体型号：5850
锁芯：双排10粒珠
钥匙：3条双排珠铜钥匙
门边距：50mm
锁体中心距：58mm
适用门厚：40–50mm
适用范围：房间门、卫浴门、各类木质门
适用标准：QB/T2474–2000

Size: 230x48mm
Finish: KG
Material: Pure brass
Lock body: 5850
Cylinder: Double role 10beads
Keys: 3 pcs of double beads brass keys
Backset: 50mm
Center Distance Of Lock Body: 58mm
Door Thickness: 40–50mm
Available For: Room door,barthroom door, all kinds of wooden door
Applicable standard: QB/T2474–2000



KG K金

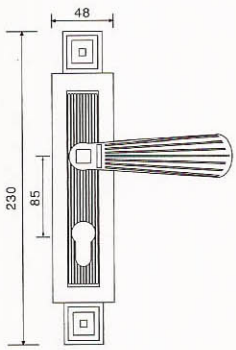



锁头
Lock



钥匙
lock opener

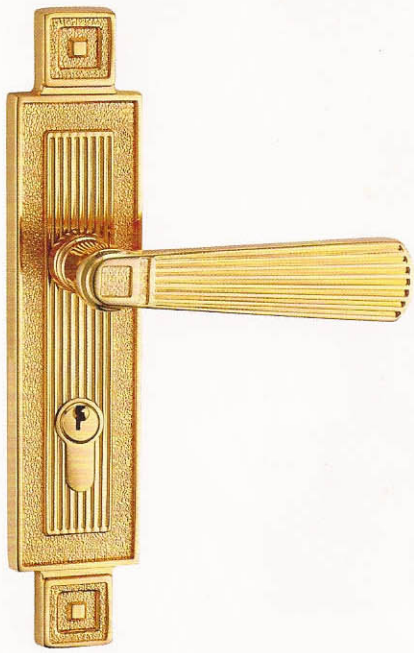

SH8704–05 单真
SH8704–05 单假

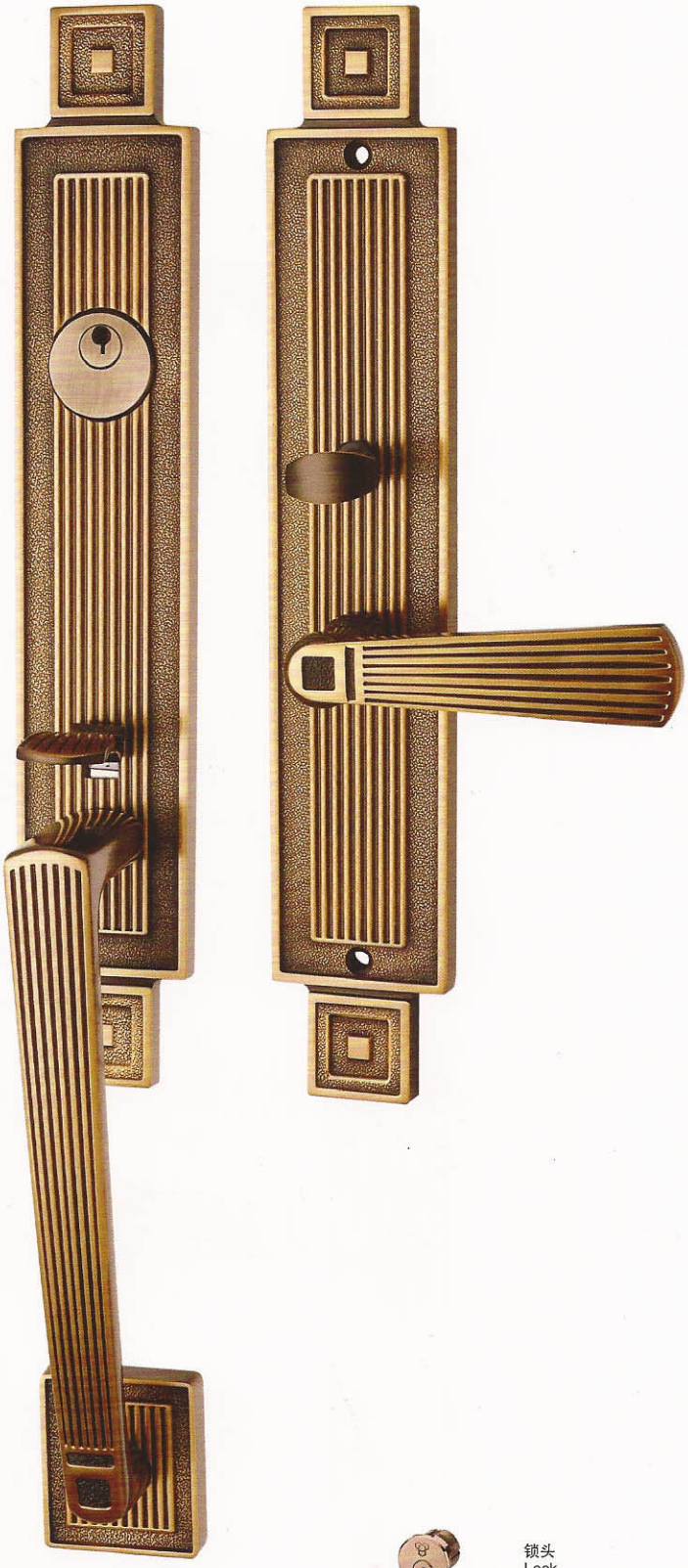

尺寸：500x65mm
表面处理：青古铜
主要材质：纯铜
锁体型号：8765
锁芯：双排10粒珠
钥匙：5条双排珠白铜钥匙
门边距：65mm
锁体中心距：87mm
适用门厚：45–55mm
适用范围：户外门、大门、别墅门
适用标准：QB/T2474–2000
定货提示：可定制适用门厚55–80mm锁蕊

Size: 595x70mm
Finish: AB
Material: Pure brass
Lock body: 8765
Cylinder: Double role 10beads
Keys: 5 pcs of double beads white brass keys
Backset: 65mm
Center Distance Of Lock Body:87mm
Door Thickness: 45–55mm
Available For: Door outside,gate,villa door
Applicable standard: QB/T2474–2000
Order Notice: Could request to produce special lock cylinder apply to door thickness 55–80mm

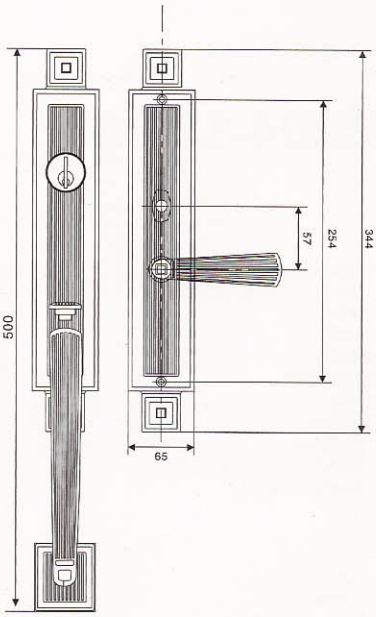

锁头
Lock



钥匙
lock opener

FINISH:



AB 青古铜

SH8504-12-05

尺寸：290x52mm
表面处理：青古铜
主要材质：纯铜
锁体型号：8550
锁芯：双排10粒珠
钥匙：5条双排珠铜钥匙
门边距：50mm
锁体中心距：85mm
适用门厚：40–50mm
适用范围：房间门、入户门、各类木质门
适用标准：QB/T2474–2000

Size: 290x52mm
Finish: AB
Material: Pure brass
Lock body: 8550
Cylinder: Double role 10beads
Keys: 5 pcs of double beads brass keys
Backset: 50mm
Center Distance Of Lock Body: 85mm
Door Thickness: 40–50mm
Available For: Room door,entrance door, all kinds of wooden door
Applicable standard: QB/T2474–2000


AB 青古铜

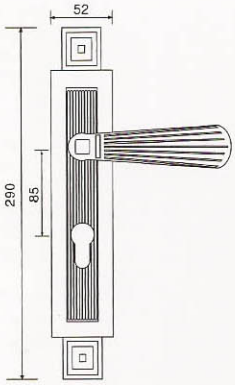


锁头
Lock


钥匙
lock opener



SH5804-12-05

尺寸：230x48mm
表面处理：青古铜
主要材质：纯铜
锁体型号：5850
锁芯：双排10粒珠
钥匙：3条双排珠铜钥匙
门边距：50mm
锁体中心距：58mm
适用门厚：40–50mm
适用范围：房间门、卫浴门、各类木质门
适用标准：QB/T2474–2000

Size: 230x48mm
Finish: AB
Material: Pure brass
Lock body: 5850
Cylinder: Double role 10beads
Keys: 3 pcs of double beads brass keys
Backset: 50mm
Center Distance Of Lock Body: 58mm
Door Thickness: 40–50mm
Available For: Room door,barthroom door, all kinds of wooden door
Applicable standard: QB/T2474–2000


AB 青古铜

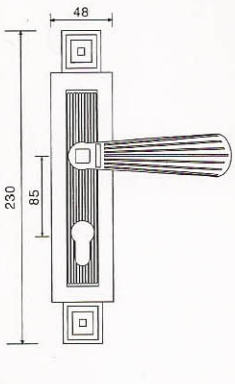


锁头
Lock


钥匙
lock opener



SH8709-XL-04 单真
SH8709-XL-04 单假



尺寸：595x70mm
表面处理：K金
主要材质：纯铜
锁体型号：8765
锁芯：双排10粒珠
钥匙：5条双排珠白铜钥匙
门边距：65mm
锁体中心距：87mm
适用门厚：45-55mm
适用范围：户外门、大门、别墅门
适用标准：QB/T2474-2000
定货提示：可定制适用门厚55-80mm锁蕊

Size: 595x70mm
Finish: KG
Material: Pure brass
Lock body: 8765
Cylinder: Double role 10beads
Keys: 5 pcs of double beads white brass keys
Backset: 65mm
Center Distance Of Lock Body:87mm
Door Thickness: 45-55mm
Available For: Door outside,gate,villa door
Applicable standard: QB/T2474-2000
Order Notice: Could request to produce special lock cylinder apply to door thickness 55-80mm

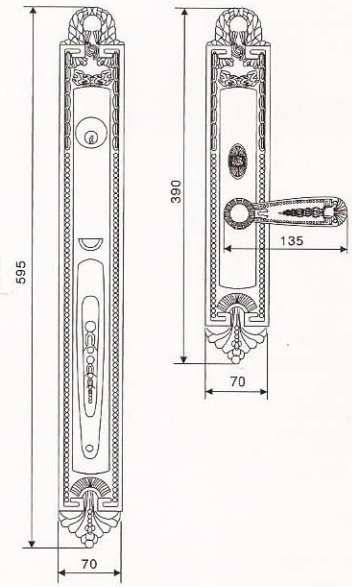

锁头
Lock



钥匙
lock opener

FINISH:



KG K金

SH8509-11-04

尺寸：295x52mm
表面处理：K金
主要材质：纯铜
锁体型号：8550
锁芯：双排10粒珠
钥匙：5条双排珠铜钥匙
门边距：50mm
锁体中心距：85mm
适用门厚：40–50mm
适用范围：房间门、入户门、各类木质门
适用标准：QB/T2474–2000

Size: 295x52mm
Finish: KG
Material: Pure brass
Lock body: 8550
Cylinder: Double role 10beads
Keys: 5 pcs of double beads brass keys
Backset: 50mm
Center Distance Of Lock Body: 85mm
Door Thickness: 40–50mm
Available For: Room door,entrance door, all kinds of wooden door
Applicable standard: QB/T2474–2000


KG K金

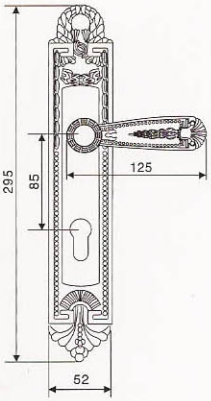


锁头
Lock


钥匙
lock opener



SH5809-11-04

尺寸：230x44mm
表面处理：K金
主要材质：纯铜
锁体型号：5850
锁芯：双排10粒珠
钥匙：3条双排珠铜钥匙
门边距：50mm
锁体中心距：58mm
适用门厚：40–50mm
适用范围：房间门、卫浴门、各类木质门
适用标准：QB/T2474–2000

Size: 230x44mm
Finish: KG
Material: Pure brass
Lock body: 5850
Cylinder: Double role 10beads
Keys: 3 pcs of double beads brass keys
Backset: 50mm
Center Distance Of Lock Body: 58mm
Door Thickness: 40–50mm
Available For: Room door,barthroom door, all kinds of wooden door
Applicable standard: QB/T2474–2000


KG K金

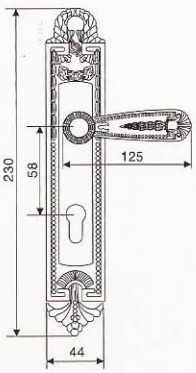


锁头
Lock


钥匙
lock opener



SH8709-XL-05 单真
SH8709-XL-05 单假



尺寸： 595x70mm
表面处理： 青古铜
主要材质： 纯铜
锁体型号： 8765
锁芯： 双排10粒珠
钥匙： 5条双排珠白铜钥匙
门边距： 65mm
锁体中心距： 87mm
适用门厚： 45–55mm
适用范围： 户外门、大门、别墅门
适用标准： QB/T2474–2000
定货提示： 可定制适用门厚55–80mm锁蕊

Size: 595x70mm
Finish: AB
Material: Pure brass
Lock body: 8765
Cylinder: Double role 10beads
Keys: 5 pcs of double beads white brass keys
Backset: 65mm
Center Distance Of Lock Body:87mm
Door Thickness: 45–55mm
Available For: Door outside,gate,villa door
Applicable standard: QB/T2474–2000
Order Notice: Could request to produce special lock cylinder apply to door thickness 55–80mm

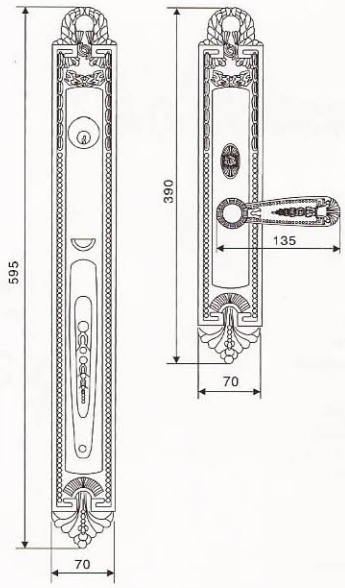

锁头
Lock



钥匙
lock opener

FINISH:



AB 青古铜

SH8509-11-05

尺寸：295x52mm
表面处理：青古铜
主要材质：纯铜
锁体型号：8550
锁芯：双排10粒珠
钥匙：5条双排珠铜钥匙
门边距：50mm
锁体中心距：85mm
适用门厚：40–50mm
适用范围：房间门、入户门、各类木质门
适用标准：QB/T2474–2000

Size: 295x52mm
Finish: AB
Material: Pure brass
Lock body: 8550
Cylinder: Double role 10beads
Keys: 5 pcs of double beads brass keys
Backset: 50mm
Center Distance Of Lock Body: 85mm
Door Thickness: 40–50mm
Available For: Room door,entrance door, all kinds of wooden door
Applicable standard: QB/T2474–2000


AB 青古铜

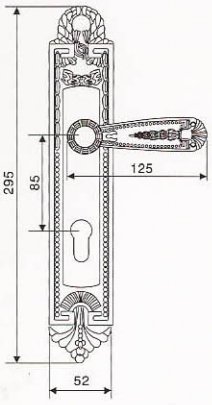


锁头
Lock


钥匙
lock opener



SH5809-11-05

尺寸：230x44mm
表面处理：青古铜
主要材质：纯铜
锁体型号：5850
锁芯：双排10粒珠
钥匙：3条双排珠铜钥匙
门边距：50mm
锁体中心距：58mm
适用门厚：40–50mm
适用范围：房间门、卫浴门、各类木质门
适用标准：QB/T2474–2000

Size: 230x44mm
Finish: AB
Material: Pure brass
Lock body: 5850
Cylinder: Double role 10beads
Keys: 3 pcs of double beads brass keys
Backset: 50mm
Center Distance Of Lock Body: 58mm
Door Thickness: 40–50mm
Available For: Room door,barthroom door, all kinds of wooden door
Applicable standard: QB/T2474–2000


AB 青古铜

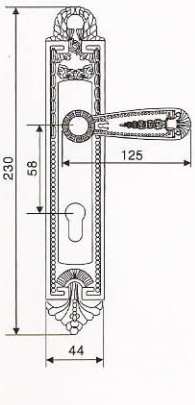


锁头
Lock


钥匙
lock opener



SH8710-04 单真
SH8710-04 单假



尺寸： 560x70mm
表面处理： K金
主要材质： 纯铜
锁体型号： 8765
锁芯： 双排10粒珠
钥匙： 5条双排珠白铜钥匙
门边距： 65mm
锁体中心距： 87mm
适用门厚： 45–55mm
适用范围： 户外门、大门、别墅门
适用标准： QB/T2474–2000
定货提示： 可定制适用门厚55–80mm锁蕊

Size: 560x70mm
Finish: KG
Material: Pure brass
Lock body: 8765
Cylinder: Double role 10beads
Keys: 5 pcs of double beads white brass keys
Backset: 65mm
Center Distance Of Lock Body:87mm
Door Thickness: 45–55mm
Available For: Door outside,gate,villa door
Applicable standard: QB/T2474–2000
Order Notice: Could request to produce special lock cylinder apply to door thickness 55–80mm

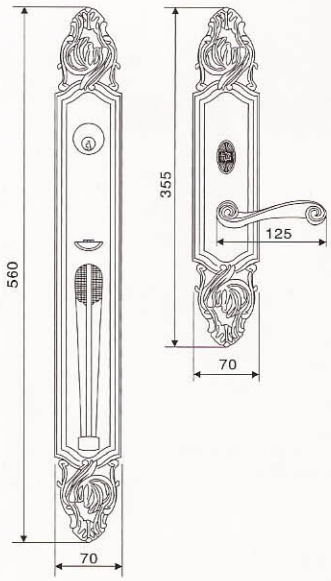

锁头
Lock



钥匙
lock opener

FINISH:



KG K金

SH8510-14-04

尺寸：295x52mm
表面处理：K金
主要材质：纯铜
锁体型号：8550
锁芯：双排10粒珠
钥匙：5条双排珠铜钥匙
门边距：50mm
锁体中心距：85mm
适用门厚：40–50mm
适用范围：房间门、入户门、各类木质门
适用标准：QB/T2474–2000

Size: 295x52mm
Finish: KG
Material: Pure brass
Lock body: 8550
Cylinder: Double role 10beads
Keys: 5 pcs of double beads brass keys
Backset: 50mm
Center Distance Of Lock Body: 85mm
Door Thickness: 40–50mm
Available For: Room door,entrance door, all kinds of wooden door
Applicable standard: QB/T2474–2000



KG K金

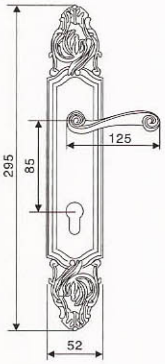



锁头
Lock



钥匙
lock opener



SH5810-14-04

尺寸：230x44mm
表面处理：K金
主要材质：纯铜
锁体型号：5850
锁芯：双排10粒珠
钥匙：3条双排珠铜钥匙
门边距：50mm
锁体中心距：58mm
适用门厚：40–50mm
适用范围：房间门、卫浴门、各类木质门
适用标准：QB/T2474–2000

Size: 230x44mm
Finish: KG
Material: Pure brass
Lock body: 5850
Cylinder: Double role 10beads
Keys: 3 pcs of double beads brass keys
Backset: 50mm
Center Distance Of Lock Body: 58mm
Door Thickness: 40–50mm
Available For: Room door,barthroom door, all kinds of wooden door
Applicable standard: QB/T2474–2000



KG K金

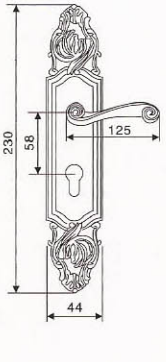



锁头
Lock



钥匙
lock opener



SH8710-05 单真
SH8710-05 单假



尺寸：560x70mm
表面处理：青古铜
主要材质：纯铜
锁体型号：8765
锁芯：双排10粒珠
钥匙：5条双排珠白铜钥匙
门边距：65mm
锁体中心距：87mm
适用门厚：45-55mm
适用范围：户外门、大门、别墅门
适用标准：QB/T2474-2000
定货提示：可定制适用门厚55-80mm锁蕊

Size: 560x70mm
Finish: AB
Material: Pure brass
Lock body: 8765
Cylinder: Double role 10beads
Keys: 5 pcs of double beads white brass keys
Backset: 65mm
Center Distance Of Lock Body:87mm
Door Thickness: 45-55mm
Available For: Door outside,gate,villa door
Applicable standard: QB/T2474-2000
Order Notice: Could request to produce special lock cylinder apply to door thickness 55-80mm

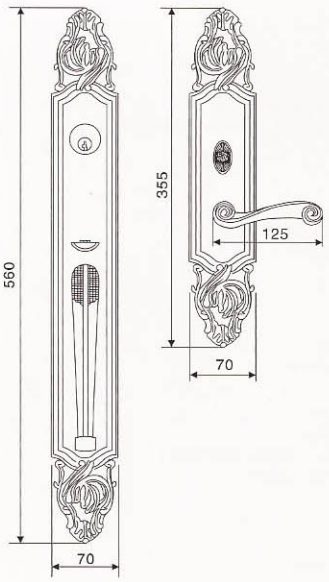

锁头
Lock



钥匙
lock opener

FINISH:



AB 青古铜

SH8510-14-05

尺寸：295x52mm
表面处理：青古铜
主要材质：纯铜
锁体型号：8550
锁芯：双排10粒珠
钥匙：5条双排珠铜钥匙
门边距：50mm
锁体中心距：85mm
适用门厚：40–50mm
适用范围：房间门、入户门、各类木质门
适用标准：QB/T2474–2000

Size: 295x52mm
Finish: AB
Material: Pure brass
Lock body: 8550
Cylinder: Double role 10beads
Keys: 5 pcs of double beads brass keys
Backset: 50mm
Center Distance Of Lock Body: 85mm
Door Thickness: 40–50mm
Available For: Room door,entrance door, all kinds of wooden door
Applicable standard: QB/T2474–2000



AB 青古铜

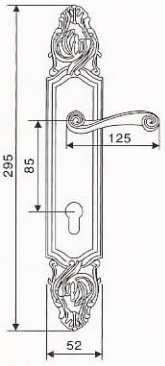



锁头
Lock



钥匙
lock opener



SH5810-14-05

尺寸：230x44mm
表面处理：青古铜
主要材质：纯铜
锁体型号：5850
锁芯：双排10粒珠
钥匙：3条双排珠铜钥匙
门边距：50mm
锁体中心距：58mm
适用门厚：40–50mm
适用范围：房间门、卫浴门、各类木质门
适用标准：QB/T2474–2000

Size: 230x44mm
Finish: AB
Material: Pure brass
Lock body: 5850
Cylinder: Double role 10beads
Keys: 3 pcs of double beads brass keys
Backset: 50mm
Center Distance Of Lock Body: 58mm
Door Thickness: 40–50mm
Available For: Room door,barthroom door, all kinds of wooden door
Applicable standard: QB/T2474–2000



AB 青古铜

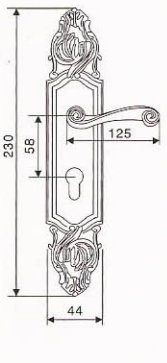



锁头
Lock



钥匙
lock opener



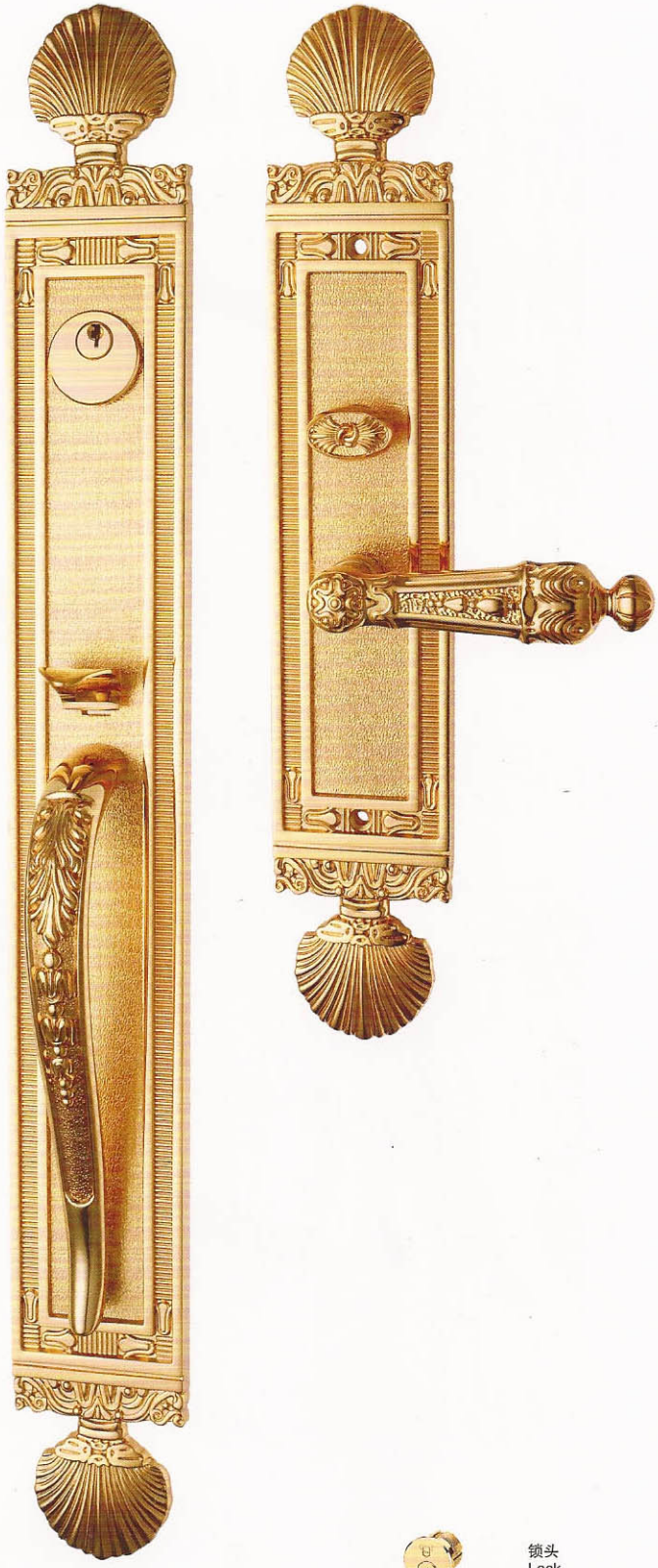

SH8712-XL-04 单真
SH8712-XL-04 单假

尺寸：586x68mm
表面处理：K金
主要材质：纯铜
锁体型号：8765
锁芯：双排10粒珠
钥匙：5条双排珠白铜钥匙
门边距：65mm
锁体中心距：87mm
适用门厚：45-55mm
适用范围：户外门、大门、别墅门
适用标准：QB/T2474-2000
定货提示：可定制适用门厚55-80mm锁蕊

Size: 586x70mm
Finish: KG
Material: Pure brass
Lock body: 8765
Cylinder: Double role 10beads
Keys: 5 pcs of double beads white brass keys
Backset: 65mm
Center Distance Of Lock Body:87mm
Door Thickness: 45-55mm
Available For: Door outside,gate,villa door
Applicable standard: QB/T2474-2000
Order Notice: Could request to produce special lock cylinder apply to door thickness 55-80mm

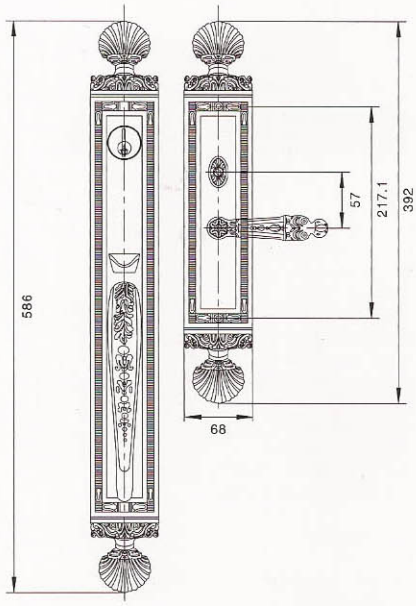

锁头
Lock



钥匙
lock opener

FINISH:



KG K金

SH8712-05 单真
SH8712-05 单假

尺寸： 586x68mm
表面处理： 青古铜
主要材质： 纯铜
锁体型号： 8765
锁芯： 双排10粒珠
钥匙： 5条双排珠白铜钥匙
门边距： 65mm
锁体中心距： 87mm
适用门厚： 45–55mm
适用范围： 户外门、大门、别墅门
适用标准： QB/T2474–2000
定货提示： 可定制适用门厚55–80mm锁蕊

Size: 586x70mm
Finish: AB
Material: Pure brass
Lock body: 8765
Cylinder: Double role 10beads
Keys: 5 pcs of double beads white brass keys
Backset: 65mm
Center Distance Of Lock Body:87mm
Door Thickness: 45–55mm
Available For: Door outside,gate,villa door
Applicable standard: QB/T2474–2000
Order Notice: Could request to produce special lock cylinder apply to door thickness 55–80mm

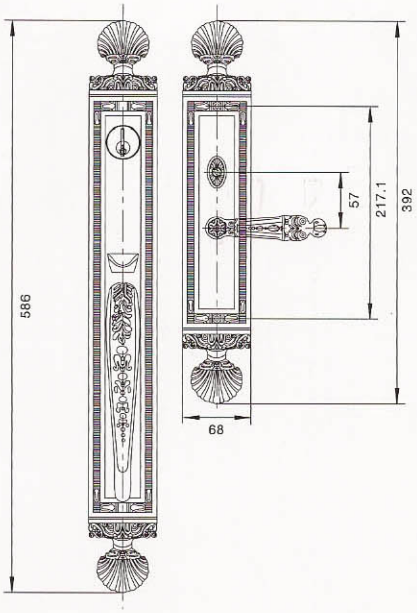



FINISH:

AB 青古铜

锁头
Lock



钥匙
lock opener

GE1.GE3.UE3 锁体



GE1锁体特点

- 独特的斜舌设计；
- 纯铜锁体面板，整体结构合理，制作精良；
- 简单的斜舌方向斜舌止板，只将锁体倒立，将斜舌压到锁体面板后，转动180°即可达到换向的目的；
- 下压时感觉不到摩擦阻力，回弹灵敏，手感舒适；

附注 Remark

型号示例 GE1 112 166 AH BK

GE1	112	166	AH	BK
系列代号	面板代号	执手代号	表面处理	功能（房门锁不写）

Model: GE1112 166AH BK
GE1–series code
112–escutcheon code
166–lever code
AH–finish
BK–function(room door lock is omitted)

锁芯钥匙技术

高精密度单排珠锁芯设计，较传统锁芯更为安全，锁芯、锁头体采用电脑数控加工，更加减少互开误差。铜精致单开电脑锁匙，配备三把，更方便备用。

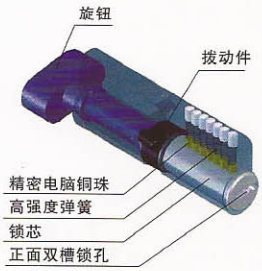

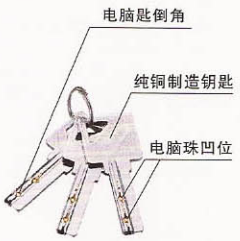

安装轴示图

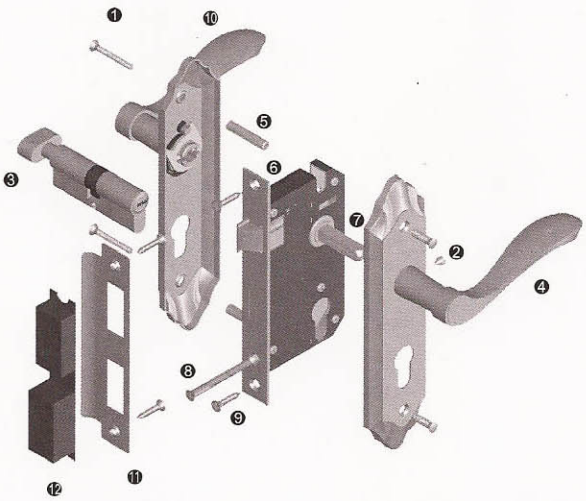

❶ 连接螺钉
❷ 紧定螺钉
❸ 单开锁头
❹ 外面板部件
❺ 连接螺管
❻ 锁体
❼ 方杆
❽ 锁头螺丝
❾ 自攻螺钉
❿ 内面板部件
⓫ 锁扣板
⓬ 锁扣盒

锁体、锁头尺寸图

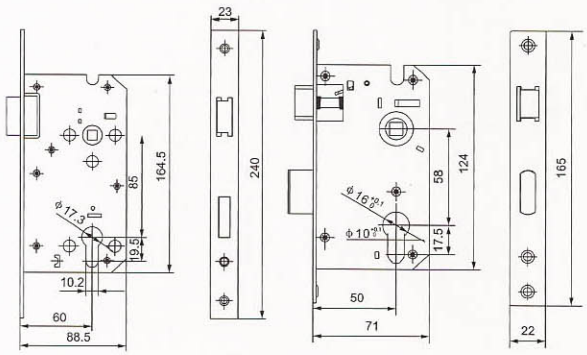

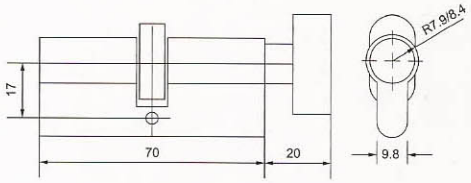

GE1113167
GE3113167

表面处理：
K金
主要材质：
纯铜
锁体： 8560/5850
适用范围：
房间门、入户门、木门
主要功能：
标准门锁、通道门锁、
卫浴门锁、虚设门锁

Finish:
KG
Material:
Pure Brass
Lock body: 8560/5850
Available For:
Room Door,Entrance Door,
Wooden Door
Main Function:
Standard Lockset,Passage Lockset,
Privacy Lockset,Decorative Lockset

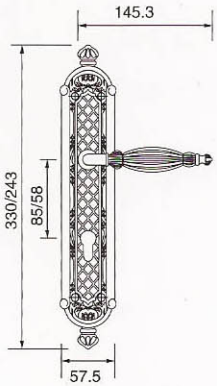



KG K金

GE116169
GE316169

表面处理：
欧洲金
主要材质：
纯铜
锁体： 8560/5850
适用范围：
房间门、入户门、木门
主要功能：
标准门锁、通道门锁、
卫浴门锁、虚设门锁

Finish:
OJ
Material:
Pure Brass
Lock body: 8560/5850
Available For:
Room Door,Entrance Door,
Wooden Door
Main Function:
Standard Lockset,Passage Lockset,
Privacy Lockset,Decorative Lockset

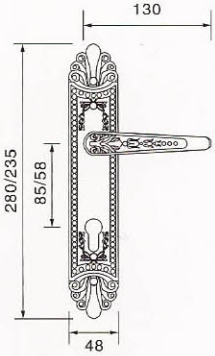



OJ 欧洲金

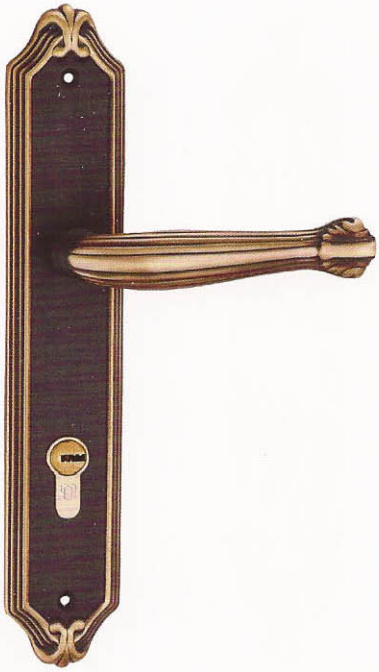

GE1112166 CF
GE3112166 CF

表面处理：
黑古铜
主要材质：
纯铜
锁体： 8560/5850
适用范围：
房间门、入户门、木门
主要功能：
标准门锁、通道门锁、
卫浴门锁、虚设门锁

Finish:
CF
Material:
Pure Brass
Lock body: 8560/5850
Available For:
Room Door,Entrance Door,
Wooden Door
Main Function:
Standard Lockset,Passage Lockset,
Privacy Lockset,Decorative Lockset

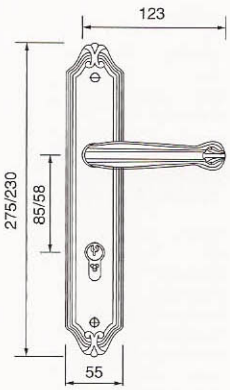

CF 黑古铜





UE3076169 CF
门锁 Lock

表面处理：
黑古铜
主要材质：
纯铜
锁体： 7250
适用范围：
房间门、入户门、木门
主要功能：
标准门锁、通道门锁、
卫浴门锁、虚设门锁

Finish:
CF
Material:
Pure Brass
Lock body: 7250
Available For:
Room Door,Entrance Door,
Wooden Door
Main Function:
Standard Lockset,Passage Lockset,
Privacy Lockset,Decorative Lockset

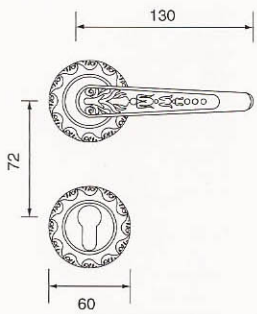

CF 黑古铜

SH4101–04

门锁 Lock

表面处理：
K金
主要材质：
纯铜
锁体： 7250
适用范围：
房间门、入户门、木门
主要功能：
标准门锁、通道门锁、
卫浴门锁、虚设门锁

Finish:
KG
Material:
Pure Brass
Lock body: 7250
Available For:
Room Door,Entrance Door,
Wooden Door
Main Function:
Standard Lockset,Passage Lockset,
Privacy Lockset,Decorative Lockset

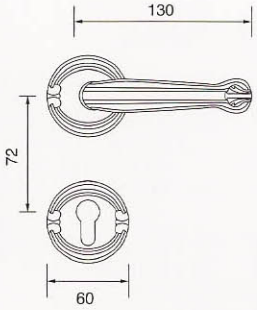



KG K金

SH4104–05

门锁 Lock

表面处理：
青古铜
主要材质：
纯铜
锁体： 7250
适用范围：
房间门、入户门、木门
主要功能：
标准门锁、通道门锁、
卫浴门锁、虚设门锁

Finish:
AB
Material:
Pure Brass
Lock body: 7250
Available For:
Room Door,Entrance Door,
Wooden Door
Main Function:
Standard Lockset,Passage Lockset,
Privacy Lockset,Decorative Lockset

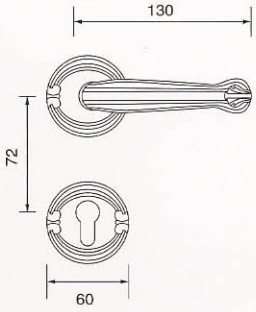

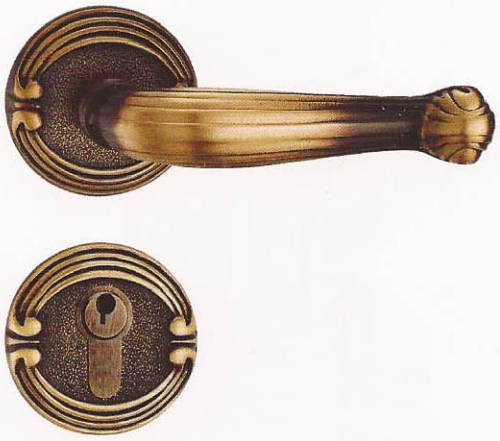

AB 青古铜

GE8 锁体



GE8锁体特点

- 独特的斜舌设计；
- 纯铜锁体面板，整体结构合理，制作精良；
- 简单的斜舌方向斜舌止板，只将锁体倒立，将斜舌压到锁体面板后，转动180°即可达到换向的目的；
- 下压时感觉不到摩擦阻力，回弹灵敏，手感舒适；

附注 Remark

型号示例 GE8 125 03 PZ BK

GE8	125	03	PZ	BK
系列代号	面板代号	执手代号	表面处理	功能（房门锁不写）

Model: GE812503 PZ BK
GE8–series code
125–escutcheon code
03–lever code
PZ–finish
BK–function(room door lock is omitted)

锁芯钥匙技术

高精密度单排珠锁芯设计，较传统锁芯更为安全，锁芯、锁头体采用电脑数控加工，更加减少互开误差。铜精致单开电脑锁匙，配备三把，更方便备用。

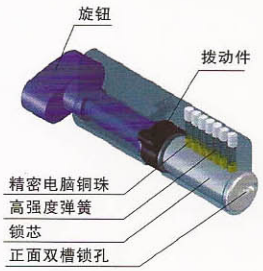



安装轴示图

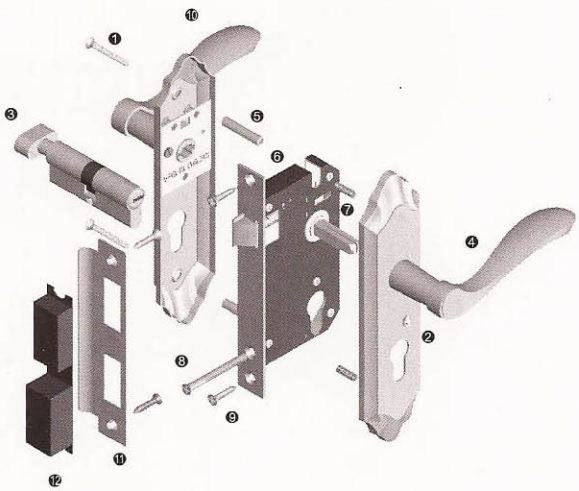

❶ 连接螺钉
❷ 紧定螺钉
❸ 单开锁头
❹ 外面板部件
❺ 连接螺管
❻ 锁体
❼ 方杆
❽ 锁头螺丝
❾ 自攻螺钉
❿ 内面板部件
⓫ 锁扣板
⓬ 锁扣盒

选择正确的执手、面板，将垫圈套入执手头，执手键槽对准面板上执手孔的凸键后推到位；将执手朝所需转动方向旋转90度；将限位螺钉用螺丝刀拧上(见图3)。

专利介绍:本专利名称为《可变换左右的门锁执手面板组件》;通过此机构，用户可以轻松更换左右执手.

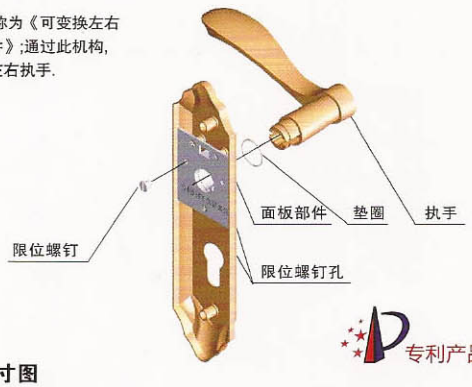

锁体、锁头尺寸图

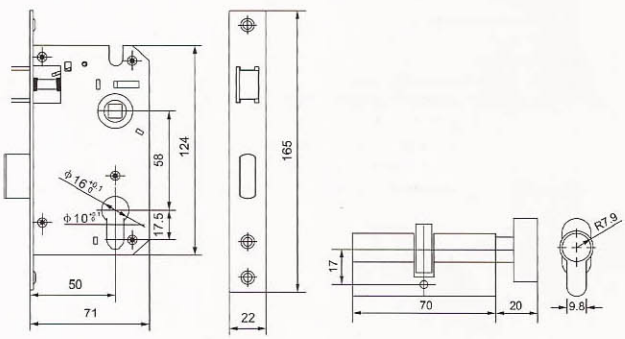

GE812503 PZ

GE8纯铜门锁 GE8 Copper Lock

表面处理：
铜拉丝
主要材质：
纯铜
锁体： 5850
适用范围：
房间门、入户门、木门
主要功能：
标准门锁、通道门锁、
卫浴门锁、虚设门锁

Finish:
PZ
Material:
Pure Brass
Lock body: 5850
Available For:
Room Door,Entrance Door,
Wooden Door
Main Function:
Standard Lockset,Passage Lockset,
Privacy Lockset,Decorative Lockset

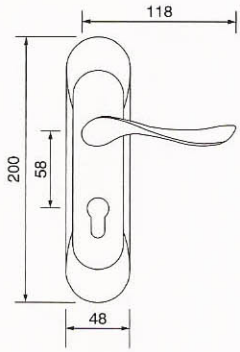



PZ 铜拉丝

GE8109164 PZ

GE8纯铜门锁 GE8 Copper Lock

表面处理：
铜拉丝
主要材质：
纯铜
锁体： 5850
适用范围：
房间门、入户门、木门
主要功能：
标准门锁、通道门锁、
卫浴门锁、虚设门锁

Finish:
PZ
Material:
Pure Brass
Lock body: 5850
Available For:
Room Door,Entrance Door,
Wooden Door
Main Function:
Standard Lockset,Passage Lockset,
Privacy Lockset,Decorative Lockset

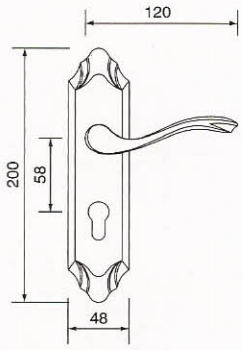



PZ 铜拉丝



GE8126136 PZ

GE8纯铜门锁 GE8 Copper Lock

表面处理：
铜拉丝
主要材质：
纯铜
锁体： 5850
适用范围：
房间门、入户门、木门
主要功能：
标准门锁、通道门锁、
卫浴门锁、虚设门锁

Finish:
PZ
Material:
Pure Brass
Lock body: 5850
Available For:
Room Door,Entrance Door,
Wooden Door
Main Function:
Standard Lockset,Passage Lockset,
Privacy Lockset,Decorative Lockset

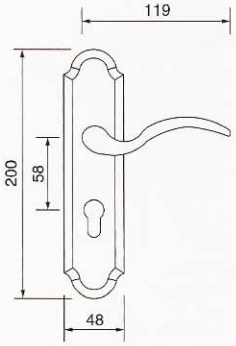



PZ 铜拉丝



GE8110165 PZ

GE8纯铜门锁 GE8 Copper Lock

表面处理：
铜拉丝
主要材质：
纯铜
锁体： 5850
适用范围：
房间门、入户门、木门
主要功能：
标准门锁、通道门锁、
卫浴门锁、虚设门锁

Finish:
PZ
Material:
Pure Brass
Lock body: 5850
Available For:
Room Door,Entrance Door,
Wooden Door
Main Function:
Standard Lockset,Passage Lockset,
Privacy Lockset,Decorative Lockset

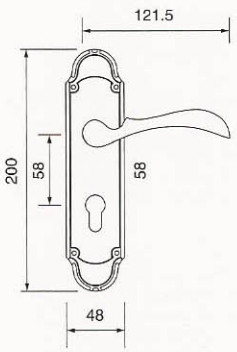



PZ 铜拉丝

GE8 锁体

GE8锁体特点

- 独特的斜活舌设计；
- 整体结构合理，制作精良；
- 简单的斜活舌方向调节件，只将锁体倒立，将斜活舌压到锁体面板后，转动180°即可达到换向的目的；
- 下压时感觉不到摩擦阻力，回弹灵敏，手感舒适；

附注 Remark

型号示例 GD8 105 159 L BK

GD8	105	159	L	BK
系列代号	面板代号	执手代号	表面处理	功能（房门锁不写）

Model: GD8105159 L BK
GD8–series code
105–escutcheon code
159–lever code
L–finish
BK–function(room door lock is omitted)





专利介绍：
本产品通过潜心研究现研制出可以防止执手与面板之间产生的松动。

锁芯钥匙技术

高精密度单排珠锁芯设计，较传统锁芯更为安全，锁芯、锁头体采用电脑数控加工，更加减少互开误差。铜精致单开电脑锁匙，配备三把，更方便备用。

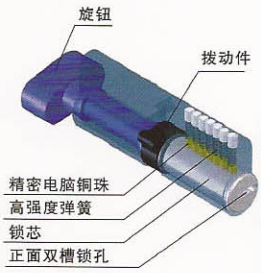



锁体、锁头尺寸图

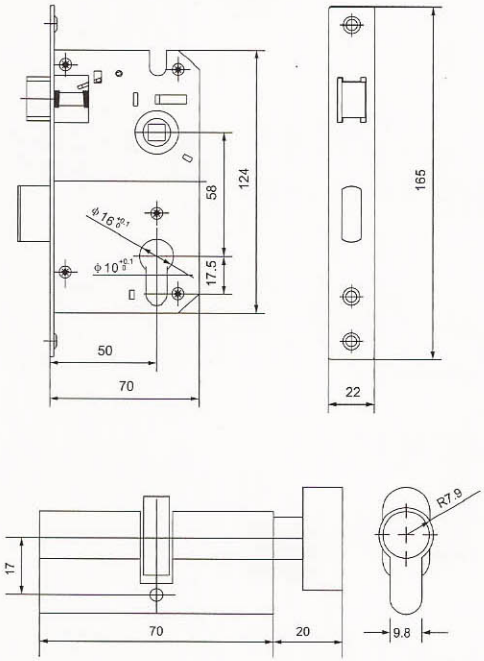

安装轴示图

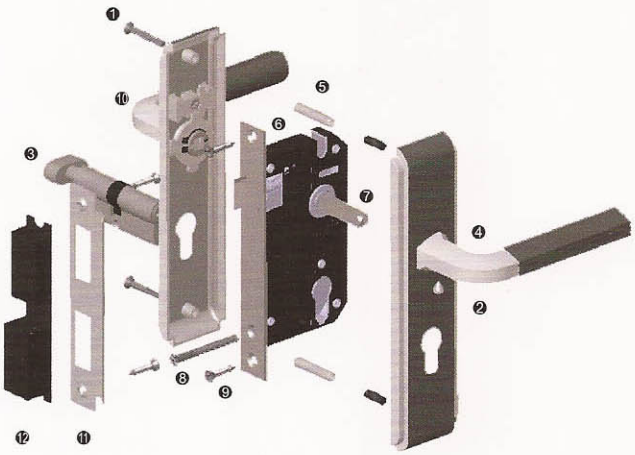

❶ 连接螺钉	❺ 连接螺管	❾ 自攻螺钉
❷ 紧定螺钉	❻ 锁体	❿ 内面板部件
❸ 单开锁头	❼ 方杆	⓫ 锁扣板
❹ 外面板部件	❽ 锁头螺丝	⓬ 锁扣盒



GD801136 L

GD8锌合金门锁 GD8 Zinc Alloy Door Lock

表面处理：
镍拉丝、镍拉丝金、枪黑金、黑镍喷沙
主要材质：
纯铜
锁体： 5850
适用范围：
房间门、入户门、木门
主要功能：
标准门锁、通道门锁、
卫浴门锁、虚设门锁

Finish:
L, KN, HK, RP
Material:
Pure Brass
Lock body: 5850
Available For:
Room Door,Entrance Door,
Wooden Door
Main Function:
Standard Lockset,Passage Lockset,
Privacy Lockset,Decorative Lockset

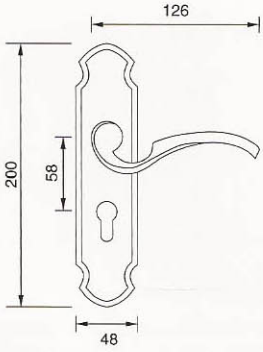


L 镍拉丝


RP 黑镍喷沙


KN 镍拉丝金


HK 枪黑金

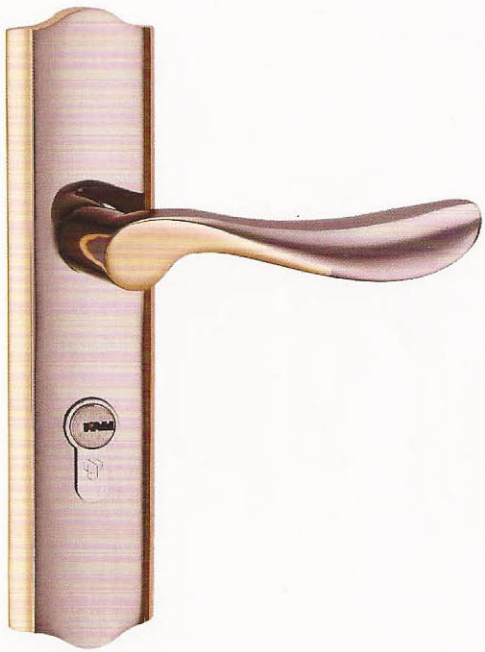

GD810403 HK

GD8锌合金门锁 GD8 Zinc Alloy Door Lock

表面处理：
镍拉丝、枪黑金、黑镍喷沙
主要材质：
纯铜
锁体： 5850
适用范围：
房间门、入户门、木门
主要功能：
标准门锁、通道门锁、
卫浴门锁、虚设门锁

Finish:
L, HK, RP
Material:
Pure Brass
Lock body: 5850
Available For:
Room Door,Entrance Door,
Wooden Door
Main Function:
Standard Lockset,Passage Lockset,
Privacy Lockset,Decorative Lockset

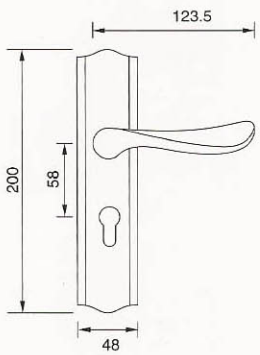


L 镍拉丝


RP 黑镍喷沙


HK 枪黑金

GD8174167 MAB

GD8锌合金门锁 GD8 Zinc Alloy Door Lock

表面处理：
枪黑金、青古铜、镍拉丝金
主要材质：
纯铜
锁体： 5850
适用范围：
房间门、入户门、木门
主要功能：
标准门锁、通道门锁、
卫浴门锁、虚设门锁

Finish:
HK, AB, KN
Material:
Pure Brass
Lock body: 5850
Available For:
Room Door,Entrance Door,
Wooden Door
Main Function:
Standard Lockset,Passage Lockset,
Privacy Lockset,Decorative Lockset

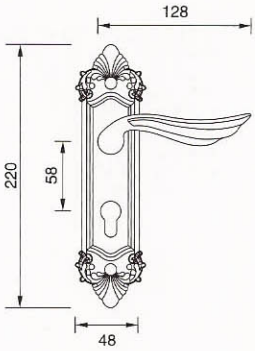




HK 枪黑金


AB 青古铜


KN 镍拉丝金

GD8105159 L

GD8锌合金门锁 GD8 Zinc Alloy Door Lock

表面处理：
镍拉丝、镍拉丝金、枪黑金、黑镍喷沙
主要材质：
锌合金
锁体： 5850
适用范围：
房间门、入户门、木门
主要功能：
标准门锁、通道门锁、
卫浴门锁、虚设门锁

Finish:
L, KN, HK, RP
Material:
Zinc alloy
Lock body: 5850
Available For:
Room Door,Entrance Door,
Wooden Door
Main Function:
Standard Lockset,Passage Lockset,
Privacy Lockset,Decorative Lockset

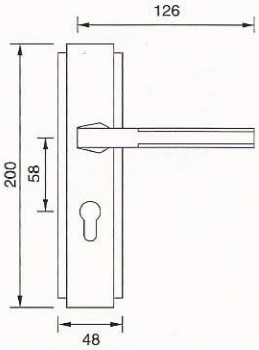




L 镍拉丝


RP 黑镍喷沙


KN 镍拉丝金


HK 枪黑金

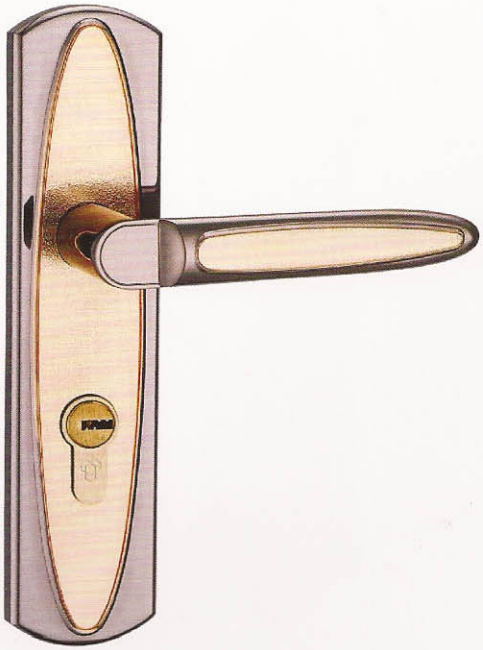

GD8115168 HK

GD8锌合金门锁 GD8 Zinc Alloy Door Lock

表面处理：
镍拉丝、黄古铜、枪黑金,镍拉丝金
主要材质：
锌合金
锁体： 5850
适用范围：
房间门、入户门、木门
主要功能：
标准门锁、通道门锁、
卫浴门锁、虚设门锁

Finish:
L, YAB, HK, KN
Material:
Zinc alloy
Lock body: 5850
Available For:
Room Door,Entrance Door,
Wooden Door
Main Function:
Standard Lockset,Passage Lockset,
Privacy Lockset,Decorative Lockset

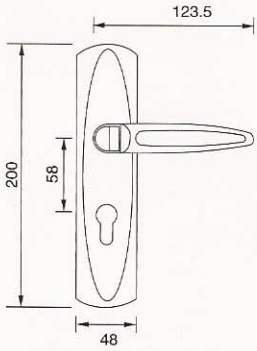


L 镍拉丝


YAB 黄古铜


HK 枪黑金


KN 镍拉丝金

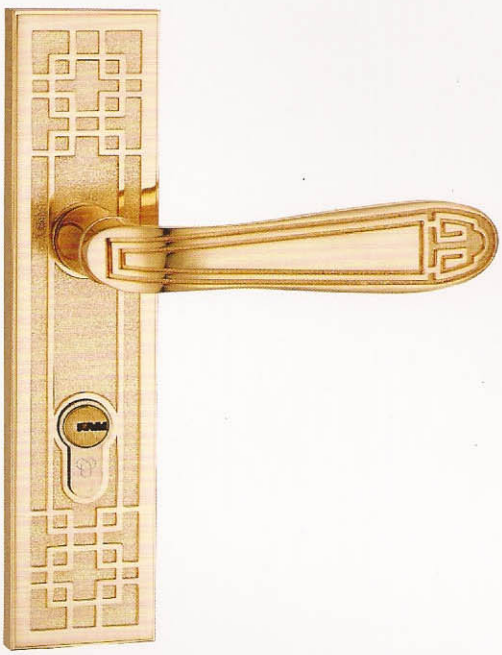

GD8118174 J

GD8锌合金门锁 GD8 Zinc Alloy Door Lock

表面处理：
K金、青古铜、镍拉丝金、枪黑金
主要材质：
锌合金
锁体： 5850
适用范围：
房间门、入户门、木门
主要功能：
标准门锁、通道门锁、
卫浴门锁、虚设门锁

Finish:
KG, AB, KN, HK
Material:
Zinc alloy
Lock body: 5850
Available For:
Room Door,Entrance Door,
Wooden Door
Main Function:
Standard Lockset,Passage Lockset,
Privacy Lockset,Decorative Lockset

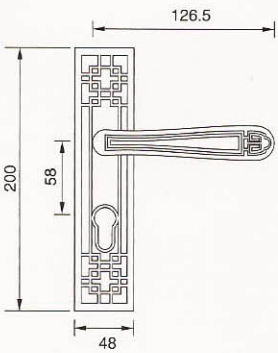


KG K金


AB 青古铜


HK 枪黑金


KN 镍拉丝金

GD9 锁体

GE8锁体特点

- 独特的斜活舌设计；
- 整体结构合理，制作精良；
- 简单的斜活舌方向调节件，只将锁体倒立，将斜活舌压到锁体面板后，转动180°即可达到换向的目的；
- 下压时感觉不到摩擦阻力，回弹灵敏，手感舒适；

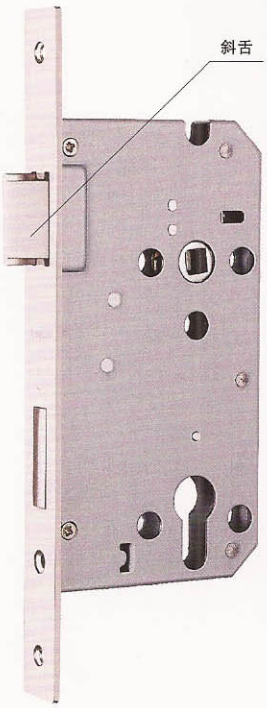

附注 Remark

型号示例 GD9 011 36 KN BK

GD9	011	36	KN	BK
系列代号	面板代号	执手代号	表面处理	功能（房门锁不写）

Model: GD901136 KN BK
GD9–series code
011–escutcheon code
36–lever code
KN–finish
BK–function(room door lock is omitted)

锁芯钥匙技术

高精密度单排珠锁芯设计，较传统锁芯更为安全，锁芯、锁头体采用电脑数控加工，更加减少互开误差。铜精致单开电脑锁匙，配备三把，更方便备用。

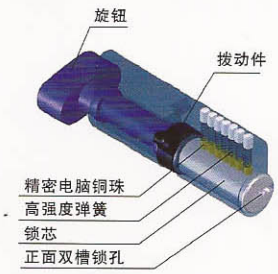

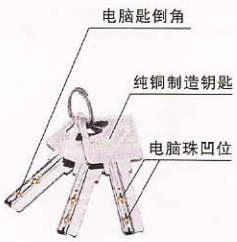

锁体、锁头尺寸图

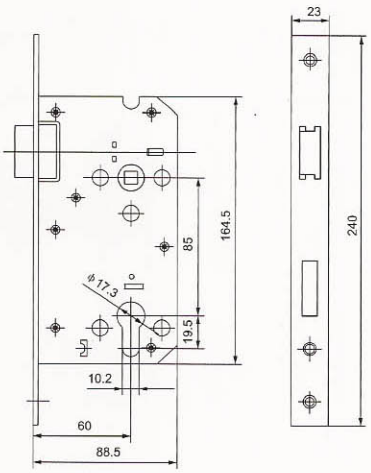

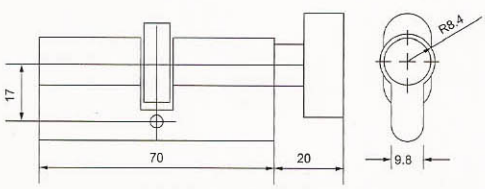

安装轴示图

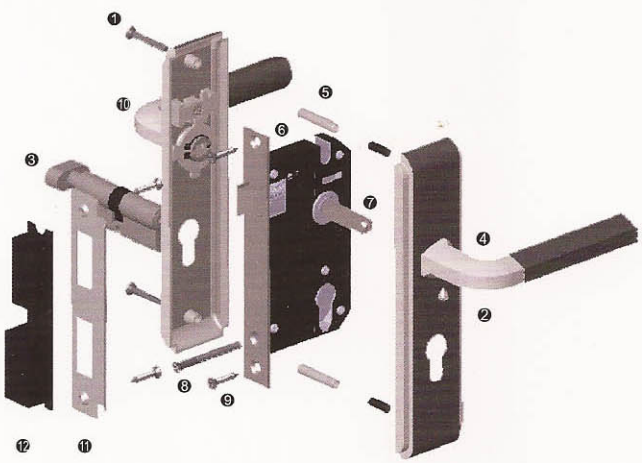

❶ 连接螺钉	❺ 连接螺管	❾ 自攻螺钉
❷ 紧定螺钉	❻ 锁体	❿ 内面板部件
❸ 单开锁头	❼ 方杆	⓫ 锁扣板
❹ 外面板部件	❽ 锁头螺丝	⓬ 锁扣盒



GD901136 KN

GD9锌合金门锁 GD9 Zinc Alloy Door Lock

表面处理：
镍拉丝、镍拉丝金、枪黑金、黑镍喷沙
主要材质：
锌合金
锁体： 8560
适用范围：
房间门、入户门、木门
主要功能：
标准门锁、通道门锁、
卫浴门锁、虚设门锁

Finish:
L, KN, HK, RP
Material:
Zinc alloy
Lock body: 8560
Available For:
Room Door,Entrance Door,
Wooden Door
Main Function:
Standard Lockset,Passage Lockset,
Privacy Lockset,Decorative Lockset

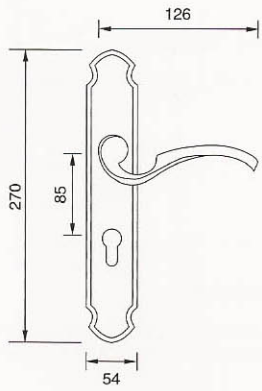


L 镍拉丝


RP 黑镍喷沙


KN 镍拉丝金


HK 枪黑金



GD90404 MAC

GD9锌合金门锁 GD9 Zinc Alloy Door Lock

表面处理：
青古铜、红古铜、枪黑金、镍拉丝金
主要材质：
锌合金
锁体： 8560
适用范围：
房间门、入户门、木门
主要功能：
标准门锁、通道门锁、
卫浴门锁、虚设门锁

Finish:
AB, AC, HK, KN
Material:
Zinc alloy
Lock body: 8560
Available For:
Room Door,Entrance Door,
Wooden Door
Main Function:
Standard Lockset,Passage Lockset,
Privacy Lockset,Decorative Lockset

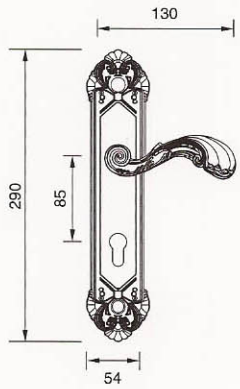


AB 青古铜


AC 红古铜


KN 镍拉丝金


HK 枪黑金

GD90504 HK

GD9锌合金门锁 GD9 Zinc Alloy Door Lock



表面处理：
青古铜、红古铜、枪黑金、镍拉丝金
主要材质：
锌合金
锁体： 8560
适用范围：
房间门、入户门、木门
主要功能：
标准门锁、通道门锁、
卫浴门锁、虚设门锁

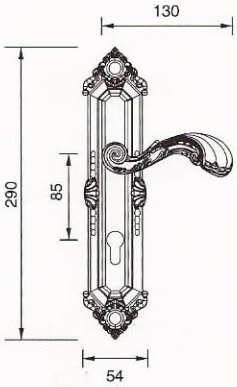

Finish:
AB, AC, HK, KN
Material:
Zinc alloy
Lock body: 8560
Available For:
Room Door,Entrance Door,
Wooden Door
Main Function:
Standard Lockset,Passage Lockset,
Privacy Lockset,Decorative Lockset


AB 青古铜


AC 红古铜


KN 镍拉丝金


HK 枪黑金



GT0.GD0.GD1 锁体

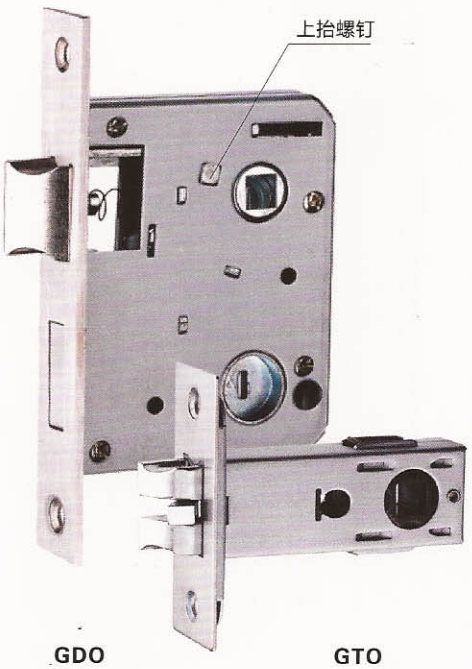

GDO　　GTO

GT0.GD0锁体特点

- GT0系列为单舌锁，GD0系列为双舌锁，同一款式的锁，可以选配单舌锁体或者双舌锁体；
- GD0系列内外执手上抬均可锁闭方舌，轻松方便；
- GT0系列锁体结构为防插卡式设计，安全牢固；
- 锁头处有加强定位杆，使产品更牢固可靠；
- 所有螺钉都经过热处理，牢固可靠；

附注 Remark

型号示例 GT/GD0 005 04 AC BK

GT/GD0	005	04	AC	BK
系列代号	面板代号	执手代号	表面处理	功能（房门锁不写）

Model: GT/GD000504AC
GT/GD0–series code
005–escutcheon code
04–lever code
AC–finish
BK–function(room door lock is omitted)

锁芯钥匙技术

高精密度单排珠锁芯设计，较传统锁芯更为安全，锁芯、锁头体采用电脑数控加工，更加减少互开误差。铜精致单开电脑锁匙，配备三把，更方便备用。

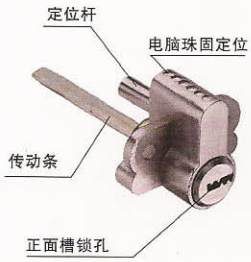

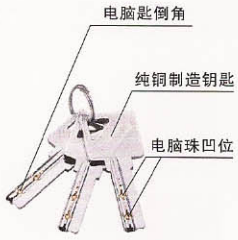

安装轴示图

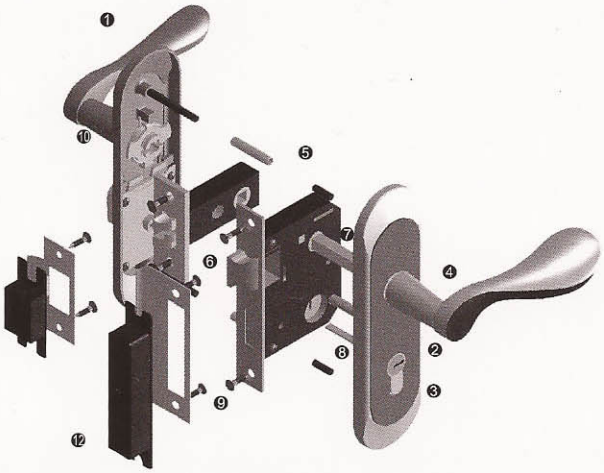

❶ 连接螺钉
❷ 紧定螺钉
❸ 单开锁头
❹ 外面板部件
❺ 连接螺管
❻ 锁体
❼ 方杆
❽ 锁头螺丝
❾ 自攻螺钉
❿ 内面板部件
⓫ 锁扣板
⓬ 锁扣盒

锁体、锁头尺寸图

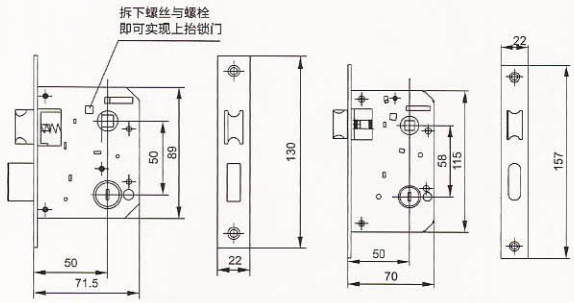

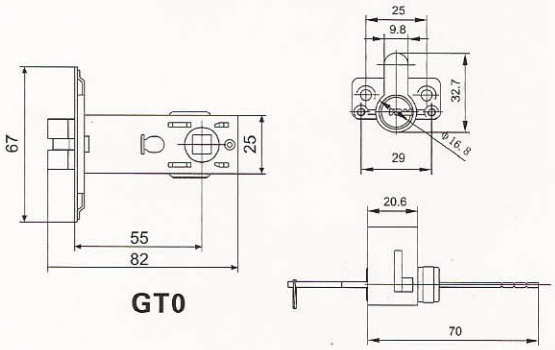

GT/GD00504 AC

GT0.GD0.GD1 锌合金门锁
GT0.GD0.GD1 Zinc Alloy Door Lock

表面处理：
红古铜、枪黑金
主要材质：
锌合金
锁体： 55/5050/5850
适用范围：
房间门、入户门、木门
主要功能：
标准门锁、通道门锁、
卫浴门锁、虚设门锁

Finish:
AC, HK
Material:
Zinc alloy
Lock body: 55/5050/5850
Available For:
Room Door,Entrance Door,
Wooden Door
Main Function:
Standard Lockset,Passage Lockset,
Privacy Lockset,Decorative Lockset

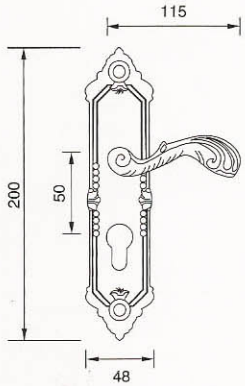



AC 红古铜

HK 枪黑金

GT00404 HK

GT0.GD0.GD1 锌合金门锁
GT0.GD0.GD1 Zinc Alloy Door Lock

表面处理：
枪黑金、红古铜
主要材质：
锌合金
锁体： 55/5050/5850
适用范围：
房间门、入户门、木门
主要功能：
标准门锁、通道门锁、
卫浴门锁、虚设门锁

Finish:
HK, AC
Material:
Zinc alloy
Lock body: 55/5050/5850
Available For:
Room Door,Entrance Door,
Wooden Door
Main Function:
Standard Lockset,Passage Lockset,
Privacy Lockset,Decorative Lockset

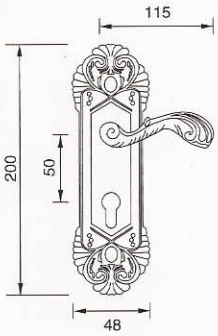



HK 枪黑金

AC 红古铜



STAINLESS **STEEL** LOCK

不锈钢8750 双真
不锈钢8750 双假

尺寸：455x70mm
表面处理：不锈钢拉丝
主要材质：SUS304不锈钢
锁体型号：8765
锁芯：双排10粒珠
钥匙：5条双排珠白铜钥匙
门边距：65mm
锁体中心距：87mm
适用门厚：45–55mm
适用范围：户外门、大门、别墅门
适用标准：QB/T2474–2000
定货提示：可定制适用门厚55–70mm锁蕊

Size: 455x76mm
Finish: SSS
Material: SUS304 Stainless steel
Lock body: 8765
Cylinder: Double role 10beads
Keys: 5 pcs of double beads white brass keys
Backset: 65mm
Center Distance Of Lock Body:87mm
Door Thickness: 45–55mm
Available For: Door outside,gate,villa door
Applicable standard: QB/T2474–2000
Order Notice: Could request to produce special lock cylinder apply to door thickness 55–70mm

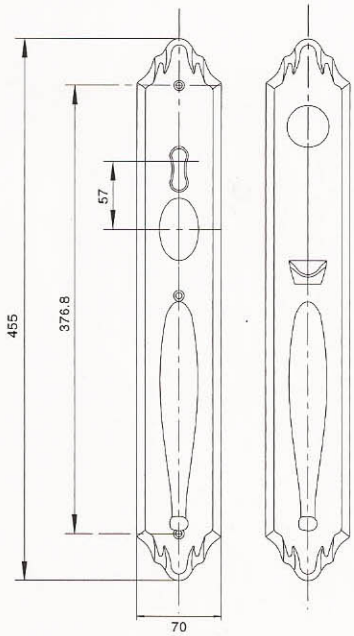



FINISH:



SSS 拉丝



锁头
Lock



钥匙
lock opener



不锈钢8003 单真
不锈钢8003 单假

尺寸： 415x66mm
表面处理： 不锈钢拉丝
主要材质： SUS304不锈钢
锁体型号： 8765
锁芯： 双排10粒珠
钥匙： 5条双排珠白铜钥匙
门边距： 65mm
锁体中心距： 87mm
适用门厚： 45–55mm
适用范围： 户外门、大门、别墅门
适用标准： QB/T2474–2000

Size: 415x66mm
Finish: SSS
Material: SUS304 Stainless steel
Lock body: 8765
Cylinder: Double role 10beads
Keys: 5 pcs of double beads white brass keys
Backset: 65mm
Center Distance Of Lock Body:87mm
Door Thickness: 45–55mm
Available For: Door outside,gate,villa door
Applicable standard: QB/T2474–2000

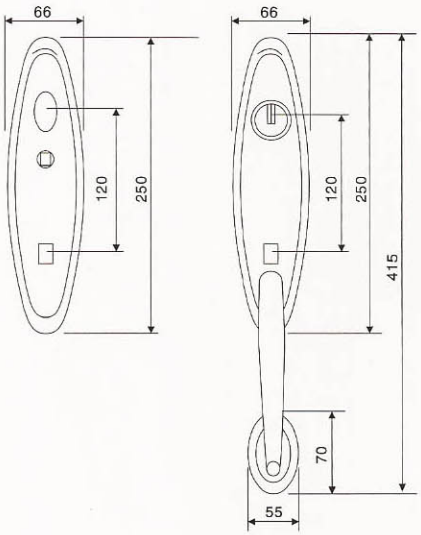



锁头
Lock



钥匙
lock opener

FINISH:



SSS 拉丝

不锈钢8004 单真
不锈钢8004 单假

尺寸：400x62mm
表面处理：不锈钢拉丝
主要材质：SUS304不锈钢
锁体型号：8060
锁芯：双排10粒珠
钥匙：5条双排珠白铜钥匙
门边距：60mm
锁体中心距：80mm
适用门厚：45–60mm
适用范围：户外门、大门、别墅门
适用标准：QB/T2474–2000

Size: 400x62mm
Finish: SSS
Material: SUS304 Stainless steel
Lock body: 8060
Cylinder: Double role 10beads
Keys: 5 pcs of double beads white brass keys
Backset: 60mm
Center Distance Of Lock Body: 80mm
Door Thickness: 45–60mm
Available For: Door outside,gate,villa door
Applicable standard: QB/T2474–2000

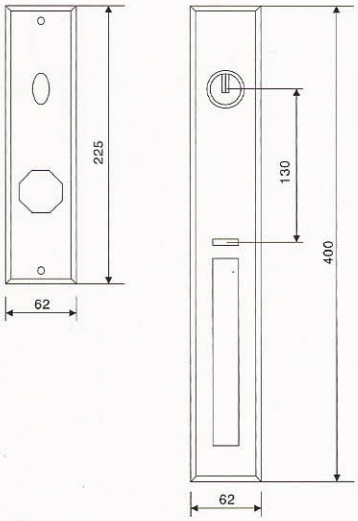



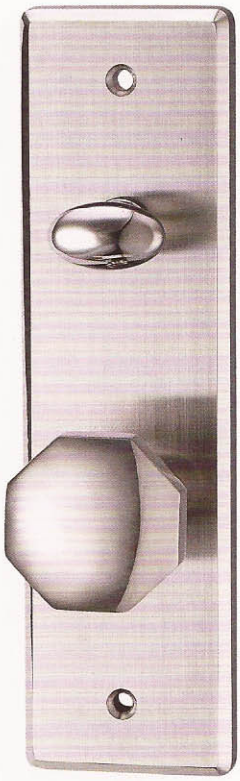

FINISH:



SSS 拉丝

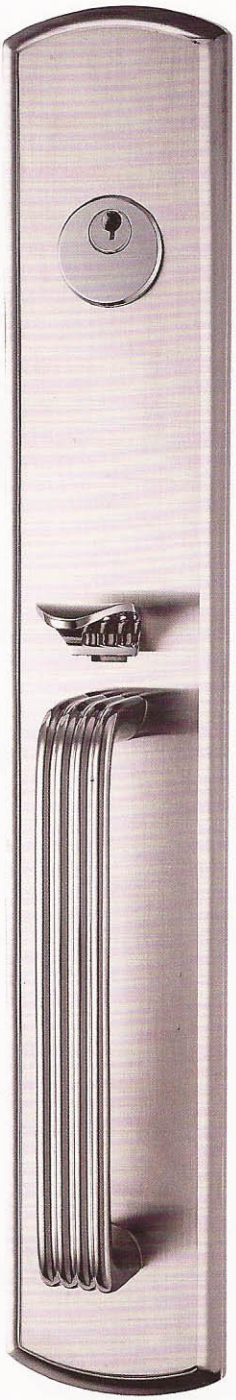

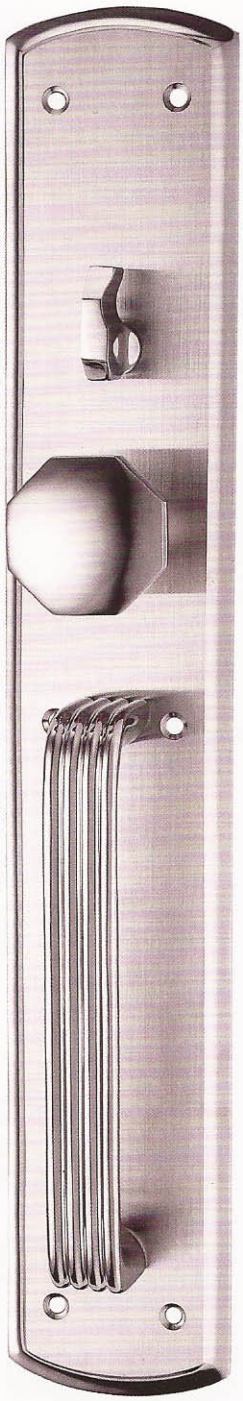

不锈钢8701 双真
不锈钢8701 双假

尺寸： 455x76mm
表面处理： 不锈钢拉丝
主要材质： SUS304不锈钢
锁体型号： 8765
锁芯： 双排10粒珠
钥匙： 5条双排珠白铜钥匙
门边距： 65mm
锁体中心距： 87mm
适用门厚： 45–55mm
适用范围： 户外门、大门、别墅门
适用标准： QB/T2474–2000

Size: 455x76mm
Finish: SSS
Material: SUS304 Stainless steel
Lock body: 8765
Cylinder: Double role 10beads
Keys: 5 pcs of double beads white brass keys
Backset: 65mm
Center Distance Of Lock Body:87mm
Door Thickness: 45–55mm
Available For: Door outside,gate,villa door
Applicable standard: QB/T2474–2000

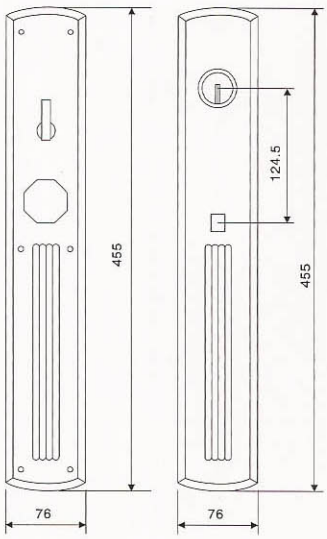



锁头
Lock



钥匙
lock opener

FINISH:



SSS 拉丝

不锈钢8702 双真
不锈钢8702 双假

尺寸：375x56mm
表面处理：不锈钢拉丝
主要材质：SUS304不锈钢
锁体型号：8060
锁芯：双排10粒珠
钥匙：5条双排珠白铜钥匙
门边距：60mm
锁体中心距：80mm
适用门厚：45–60mm
适用范围：户外门、大门、别墅门
适用标准：QB/T2474–2000

Size: 375x56mm
Finish: SSS
Material: SUS304 Stainless steel
Lock body: 8060
Cylinder: Double role 10beads
Keys: 5 pcs of double beads white brass keys
Backset: 60mm
Center Distance Of Lock Body: 80mm
Door Thickness: 45–60mm
Available For: Door outside,gate,villa door
Applicable standard: QB/T2474–2000

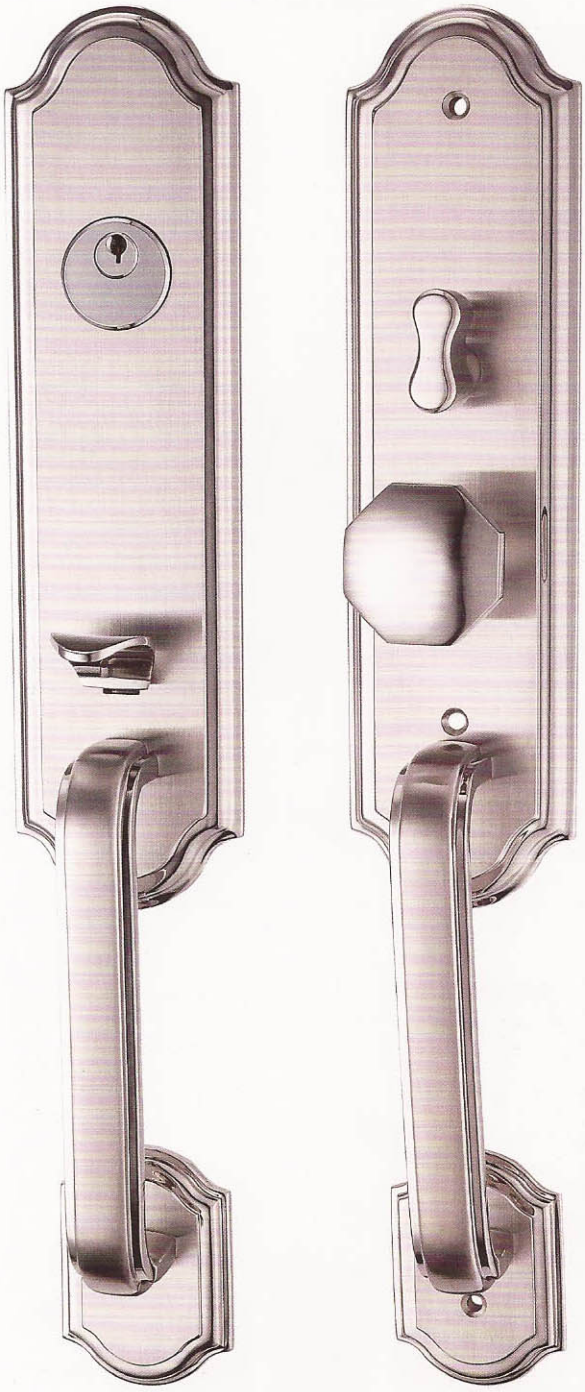

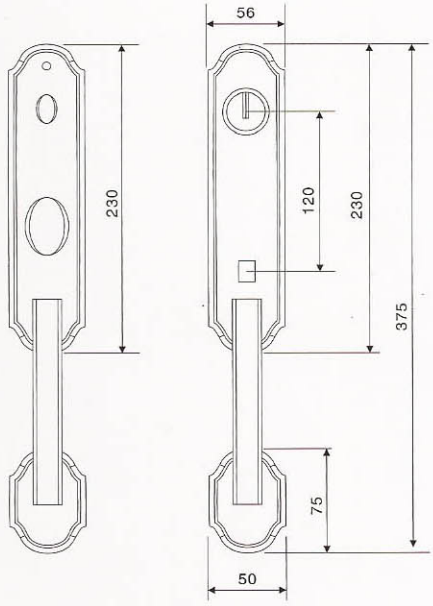

FINISH:



SSS 拉丝



锁头
Lock



钥匙
lock opener

PART SHOWING

D101

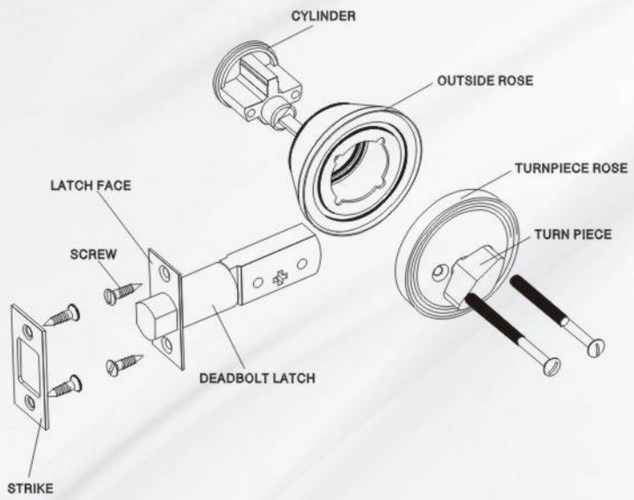

D102

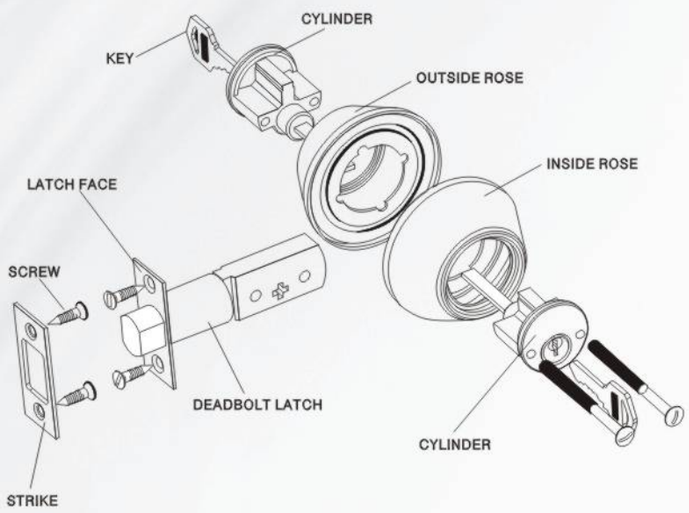

DOOR PREPARATION	LATCH	Other size available
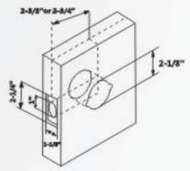	 LP6T (Adjustable for 2–3/8"or2–3/4"backset)	 LP67B (Adjustable for 2–3/8"or2–3/4"backset)



■ D101 SN
A:2-1/2"

DIMENSIONS

Door Prep:crossbore 2-1/8 " , edge bore 1 "
Backset: adjustable 2-3/8 " or 2-3/4 "
Door Thickness: Fits door 1-3/8 " to 2 "
Material: Steel or Brass or Stainless steel material available

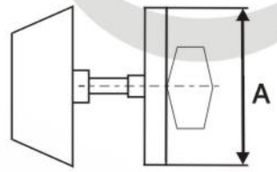



■ D102 AC
A:2-1/2"

DIMENSIONS

Door Prep:crossbore 2-1/8 " , edge bore 1 "
Backset: adjustable 2-3/8 " or 2-3/4 "
Door Thickness: Fits door 1-3/8 " to 2 "
Material: Steel or Brass or Stainless steel material available



■ D105 A
A:2-1/2"

DIMENSIONS

Door Prep:crossbore 2-1/8 " , edge bore 1 "
Backset: adjustable 2-3/8 " or 2-3/4 "
Door Thickness: Fits door 1-3/8 " to 2 "
Material: Steel or Brass or Stainless steel material available

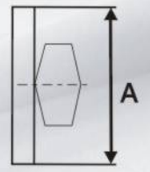

▶ **Detail description see page 15**

Designed by heart,
the product is exquisite







DIMENSIONS

Door Prep:crossbore2-1/8 " , edge bore 1 "
Backset: adjustable2-3/8 " or 2-3/4 "
Door Thickness: Fits door 1-3/8 " to 2 "
Material: Steel or Brass or Stainless steel material available

■ 3067 +D102 AB



DIMENSIONS

Door Prep:crossbore2-1/8 " , edge bore 1 "
Backset: adjustable2-3/8 " or 2-3/4 "
Door Thickness: Fits door 1-3/8 " to 2 "
Material: Steel or Brass or Stainless steel material available

■ 3091+D101 PC



DIMENSIONS

Door Prep:crossbore2-1/8 " , edge bore 1 "
Backset: adjustable2-3/8 " or 2-3/4 "
Door Thickness: Fits door 1-3/8 " to 2 "
Material: Steel or Brass or Stainless steel material available

■ 3801 +D101 PB

KEY MANAGEMENT SYSTEM

MASTER KEY SYSTEM

The master key system is a locking system with special structure and function that can use one key to open more than one lock.

- The master key can open all the individual door lock
- The individual operating keys can only open the corresponding individual door lock

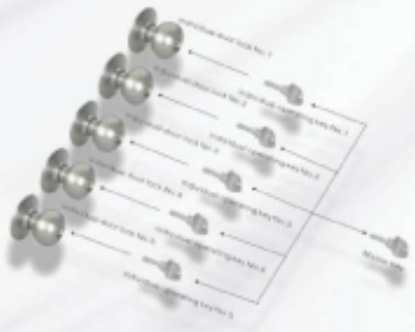

CONSTRUCTION KEY SYSTEM

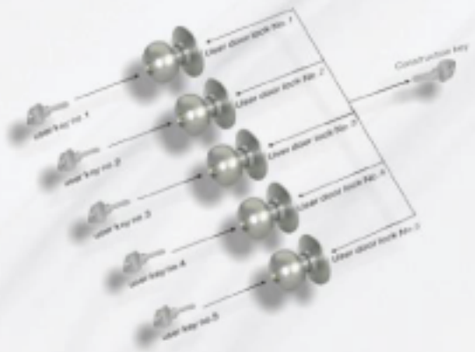

The construction key system is a locking system which similar as master key system,the difference are as below:

- The construction key can open all the user door lock before the user keys used.
- The user key can only open the corresponding user door lock, once you open the door by the user keys, the construction key will be invalid automatically, it can not be modified or altered to open this door anymore.

FOR GETTING MORE DETAILS PLEASE CONTACT US

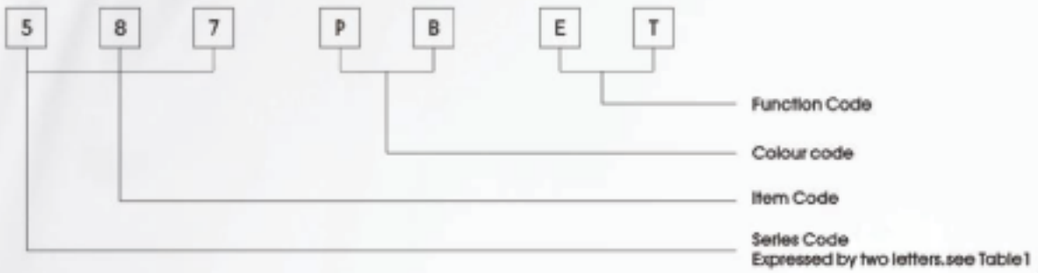

TABLE–1

SERIES CODE			
5--	CYLINDRIAL KNOB LOCK	7---	CYLINDRIAL KNOB LOCK(BIG KNOB & ROSE)
3---	TUBULAR KNOB LOCK & TUBULAR LEVER LOCK		
D---	DEADBOLT	8---	TUBULAR WOODEN LEVER LOCK

PACKING SPECIFICATION

ITEM NO	PACKING	PCS/CTN	MEASUREMENT	G.W/N.W(KG)
Cylindrical Knob Lock (570/578/587/581/588)	BOX	24PCS/CTN	36X33X23CM	14/12KGS
	BOX	30PCS/CTN	36X24.5X36.5CM	16/15KGS
	BLISTER	24PCS/CTN	40X32X36.5CM	16/15KGS
Cylindrical Knob Lock Big size(7801/7802/7804/ 7828/7862/7865/7875/ 7879/7587/5831)	BOX	24PCS/CTN	42X24.5X32CM	20/18KGS
	BOX	30PCS/CTN	42X24.5X40CM	24.5/22.5KGS
	BLISTER	24PCS/CTN	40X34X36.5CM	20/18KGS
Tubular Knob Lock (3067/3082/3091/3051/3065/ 3073/3061/3016/3017/3019/ 3020/3575/3065/3084/3578/ 3054/3041)	BOX	24PCS/CTN	36X33X23CM	14/12KGS
	BOX	30PCS/CTN	36X24X36.5CM	16/15KGS
	BLISTER	24PCS/CTN	40X32X36.5CM	16/15KGS
Tubular Lever Lock (3501/3601/3701/3801/3802)	BOX	20PCS/CTN	34X26.5X37CM	15/13KGS
	BLISTER	24PCS/CTN	41.5X35X38.5CM	22/20KGS
Tubular Lever Lock (832/3804/3805/3806/3807/ 3808/3809/3810)	BOX	20PCS/CTN	35X30.5X37CM	16/14KGS
	BLISTER			
Tubular Lever Lock (3811/3812/3813/3814/3815/ 3816/3819)	BOX	20PCS/CTN	38X34.5X37CM	17/15KGS
	BLISTER			
Deadbolt (D101/D102)	BOX	30PCS/CTN	39X31.5X15.5CM	15/13KGS
	BLISTER	24PCS/CTN	49X30.5X18CM	12/11KGS

Designed by heart,
the product is exquisite









PART SHOWING

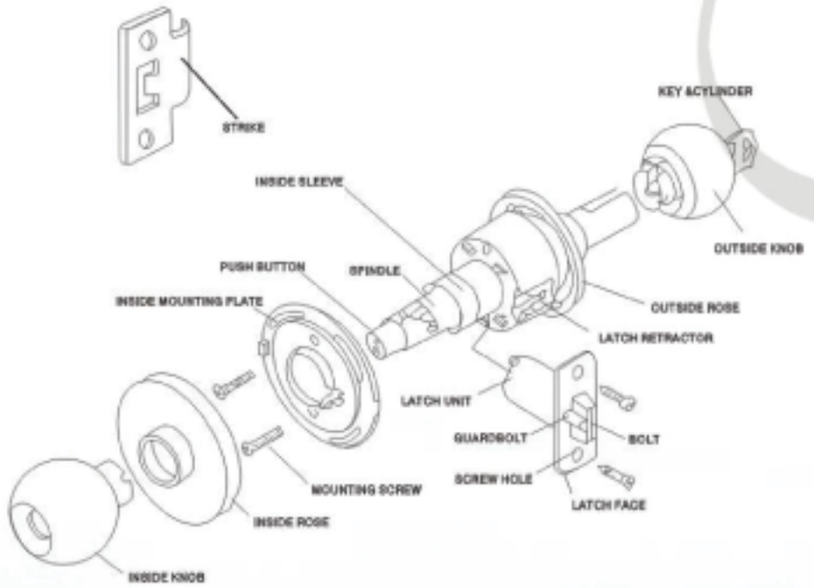

DOOR PREPARATION	LATCH	Other size available	
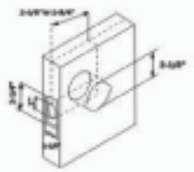	 LL6 (FOR2-3/8"BACKSET)	 LL7 (FOR2-3/4"BACKSET)	 LL9 (FOR3-1/2"BACKSET)

FUNCTIONS AVAILABLE



Entry/Office Lock (ET)
Both knobs locked or unlocked by key outside or push button inside



Privacy Lock (BK)
Outside knobs is locked by push button inside and unlocked by emergency release outside, rotating inside knobs, the inside knob is always unlocked providing emergency exit.



Passage/Closet Lock (PS)
Both knobs are always unlocked from inside and outside.



Storeroom Lock (SR)
Outside knobs unlocked only while key is inserted and turned, pull key locked. every time the door closed this unit will lock, it cannot be left unlocked. Inside knob always free providing emergency exit.



Single Dummy Trim (DM)
Single dummy trim for one side of door

CODE	DESCRIPTION
PB	Polished Brass
SB	Satin Brass
AB	Antique Brass
AC	Antique Copper
SN	Sation Nickel
BN	Black Nickel
PC	Polished Chrome
SC	Satin Chrome
SS	Satin Stainless Steel
SP	polished Stainless Steel
PD	Pearl Chrome
PVD	Lifetime Finish

■ OTHER FINISHES AVAILABLE, PLEASE CONTACT WITH US FOR THE DETAIL.

DIMENSIONS

Door Prep:crossbore 2-1/8 " , edge bore 1 "
Backset: adjustable 2-3/8 " or 2-3/4 " and other options available
Door Thickness: Fits door 1-1/4 " to 2 "
Material: Steel or Brass or Stainless steel material available

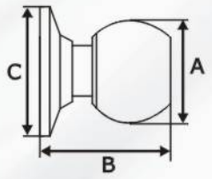



■ 587 AB ET
A:2-1/16″ B:2-1/4″ to 2-5/8″ C:2-1/2″



■ 587 BL ET
A:2-1/16″ B:2-1/4″ to 2-5/8″ C:2-1/2″



■ 587 AC ET
A:2-1/16″ B:2-1/4″ to 2-5/8″ C:2-1/2″



■ 587 SN ET
A:2-1/16″ B:2-1/4″ to 2-5/8″ C:2-1/2″



■ 587 PB ET
A:2-1/16″ B:2-1/4″ to 2-5/8″ C:2-1/2″



■ 7587 SS ET
A:2-1/8″ B:2-1/2″ C:3″



■ 578 AB ET
A:2″ B:2-1/8″ to 2-1/2″ C:2-1/2″



■ 578 AC ET
A:2″ B:2-1/8″ to 2-1/2″ C:2-1/2″



■ 578 PB ET
A:2″ B:2-1/8″ to 2-1/2″ C:2-1/2″



■ 7875 SN-PC ET
A:2″ B:2-1/4″ to 2-5/8″ C:3″



■ 7879 SN-PC ET
A:2-1/8″ B:2-1/4″ to 2-5/8″ C:3″



■ 5831 PB ET
A:2-1/16″ B:2-.3/8″ to 2-3/4″ C:3″

DIMENSIONS

Door Prep:crossbore 2-1/8 " , edge bore 1 "
Backset: adjustable 2-3/8 " or 2-3/4 " and other options available
Door Thickness: Fits door 1-1/4 " to 2 "
Material: Steel or Brass or Stainless steel material available

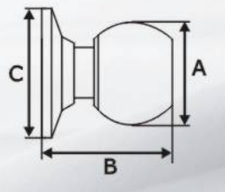

▶ **Detail description see page 2**

DIMENSIONS

Door Prep:crossbore 2-1/8 " , edge bore 1 "
Backset: adjustable 2-3/8 " or 2-3/4 " and other options available
Door Thickness: Fits door 1-1/4 " to 2 "
Material: Steel or Brass or Stainless steel material available

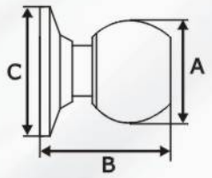



■ 7801 AC ET
A:2-1/4″ B:2-1/8″ to 2-1/2″ C:3″



■ 7864 PC-BN ET
A:2-1/4″ B:2-1/4″ to 2-5/8″ C:3″



■ 581 AB ET
A:2″ B:2-1/8″ to 2-1/2″ C:2-1/2″



■ 7804 PB ET
A:2-1/4″ B:2-1/4″ to 2-5/8″ C:3″



■ 570 PB ET
A:2″ B:2-3/8″ to 2-3/4″ C:2-1/2″



■ 588 SN ET
A:2″ B:2-1/8″ to 2-1/2″ C:2-1/2″



■ 7802 BN ET
A:2-1/16″ B:2-1/4″ to 2-5/8″ C:3″



■ 7864 BN-PB ET
A:2-1/4″ B:2-1/4″ to 2-5/8″ C:3″



■ 7820 E ET
A:2-1/4″ B:2-3/8″ to 2-3/4″ C:3″



■ 7828A ET
A:2-1/8″ B:2-1/8″ to 2-1/2″ C:3″



■ 7862 WL-PB ET
A:2-1/4″ B:2-7/16″ to 2-13/16″ C:3″



■ 7865 SC-PC ET
A:2-1/4″ B:2-1/4″ to 2-5/8″ C:3″

DIMENSIONS

Door Prep:crossbore 2-1/8 " , edge bore 1 "
Backset: adjustable 2-3/8 " or 2-3/4 " and other options available
Door Thickness: Fits door 1-1/4 " to 2 "
Material: Steel or Brass or Stainless steel material available

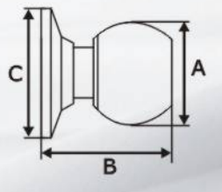

▶ **Detail description see page 2**

PART SHOWING

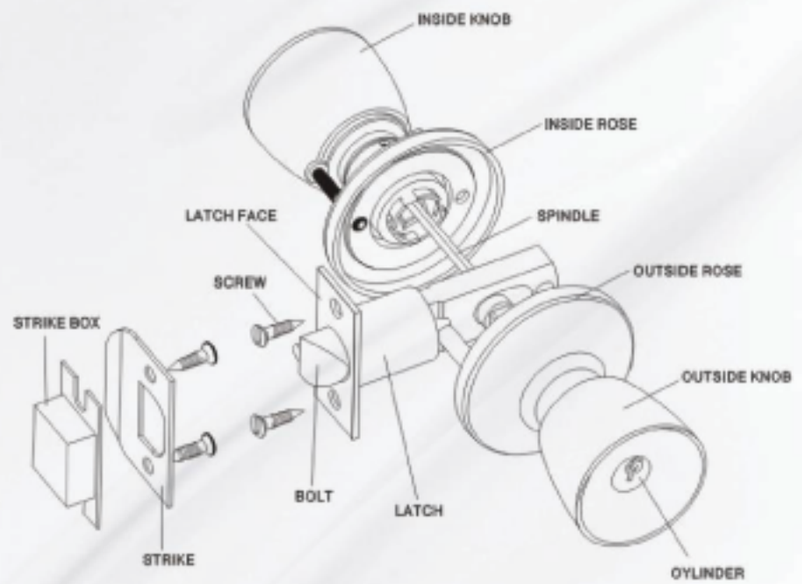

DOOR PREPARATION	LATCH	Other size available	
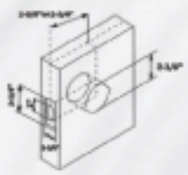	 LZ87 (Adjustable for 2-3/8"or2-3/4"backset)	 LZ87B(4W) (Adjustable for 2-3/8"or2-3/4"backset)	 LZ87B(6W) (Adjustable for 2-3/8"or2-3/4"backset)

FUNCTIONS AVAILABLE

	**Entry/Office Lock (ET)** Both knobs locked or unlocked by key outside or turnbutton inside
	**Privacy Lock (BK)** Both knobs locked or unlocked by turnbutton inside or emergency key outside
	**Passage/Closet Lock (PS)** Both knobs are always unlocked from inside or outside
	**Storeroom Lock (SR)** Everytime the door closed,outside knobs locked; outside knobs unlocked only while key is inserted and turned. Inside knobs always free providing emergency exit.
	**Double-Cylinder Lock (KK)** Outside and inside each has a cylinder and is turned only by keys
	**Single Dummy Trim (DM)** Single dummy trim for one side of door

CODE	DESCRIPTION
PB	Polished Brass
SB	Satin Brass
AB	Antique Brass
AC	Antique Copper
SN	Satin Nickel
BN	Black Nickel
PC	Polished Chrome
SC	Satin Chrome
SS	Satin Stainless Steel
SP	polished Stainless Steel
PD	Pearl Chrome
PVD	Lifetime Finish

■ OTHER FINISHES AVAILABLE, PLEASE CONTACT WITH US FOR THE DETAIL.

DIMENSIONS

Door Prep:crossbore 2-1/8 " , edge bore 1 "
Backset: adjustable 2-3/8 " or 2-3/4 "
Door Thickness: Fits door 1-3/8 " to 2 "
Material: Steel or Brass or Stainless steel material available

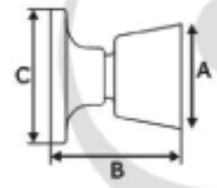



■ 3067 AB ET
A:2" B:2-1/2" C:2-5/8"



■ 3067 PC ET
A:2" B:2-1/2" C:2-5/8"



■ 3067 AC ET
A:2" B:2-1/2" C:2-5/8"



■ 3067 PB ET
A:2" B:2-1/2" C:2-5/8"



■ 3067 BN ET
A:2" B:2-1/2" C:2-5/8"



■ 3067 SN ET
A:2" B:2-1/2" C:2-5/8"

▶ Detail description see page 7

PART SHOWING

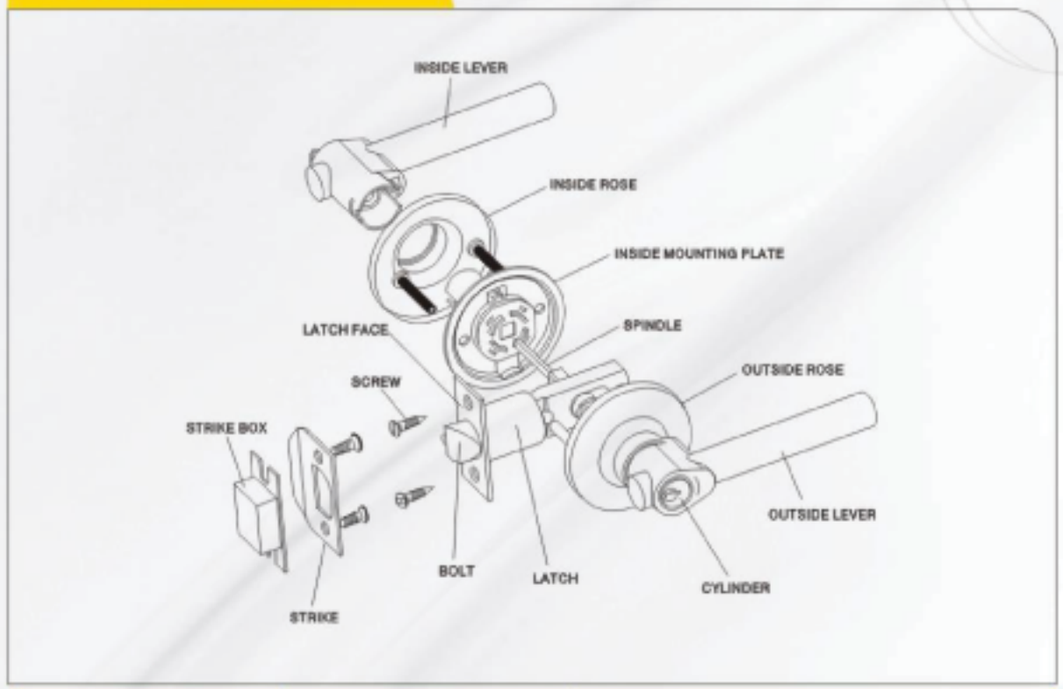

DOOR PREPARATION	LATCH	Other size available	
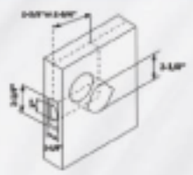	 LZ67 (Adjustable for 2-3/8"or2-3/4"backset)	 LZ67B(4W) (Adjustable for 2-3/8"or2-3/4"backset)	 LZ67B(6W) (Adjustable for 2-3/8"or2-3/4"backset)

FUNCTIONS AVAILABLE

	**Entry/Office Lock (ET)** Both levers locked or unlocked by key outside or turnbutton inside
	**Privacy Lock (BK)** Both levers locked or unlocked by turnbutton inside or emergency key outside
	**Passage/Closet Lock (PS)** Both levers are always unlocked from inside or outside
	**Storeroom Lock (SR)** Everytime the door closed,outside lever locked;outside lever unlocked only while key is inserted and turned.Inside lever always free providing emergency exit.
	**Single Dummy Trim (DM)** Single dummy trim for one side of door
	**Double–Cylinder Lock (KK)** Outside and inside each has a cylinder and is tuned only by keys

CODE	DESCRIPTION
PB	Polished Brass
SB	Satin Brass
AB	Antique Brass
AC	Antique Copper
SN	Sation Nickel
BN	Black Nickel
PC	Polished Chrome
SC	Satin Chrome
SS	Satin Stainless Steel
SP	polished Stainless Steel
PD	Pearl Chrome
PVD	Lifetime Finish

■ OTHER FINISHES AVAILABLE, PLEASE CONTACT WITH US FOR THE DETAIL.

DIMENSIONS

Door Prep:crossbore 2-1/8 " , edge bore 1 "
Backset: adjustable 2-3/8 " or 2-3/4 "
Door Thickness: Fits door 1-3/8 " to 2 "
Material: Zinc

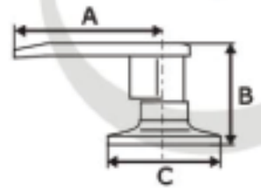



■ 832 AB ET
A:4-1/4" B:2-1/2" C:2-5/8"



■ 3501 PB ET
A:3-1/2" B:2" C:2-5/8"



■ 3801 PB ET
A:3-5/8" B:2-3/8" C:2-5/8"



■ 3601 PB ET
A:3-5/8" B:2-3/8" C:2-5/8"



■ 3802 PB ET
A:3-7/8" B:2-3/8" C:2-5/8"



■ 3701 PB ET
A:3-5/8" B:2-3/8" C:2-5/8"



■ 3804 PB ET
A:4-3/8" B:2-3/8" C:2-5/8"

▶ Detail description see page 11

DIMENSIONS

Door Prep:crossbore 2-1/8 " , edge bore 1 "
Backset: adjustable 2-3/8 " or 2-3/4 "
Door Thickness: Fits door 1-3/8 " to 2 "
Material: Steel or Brass or Stainless steel material available

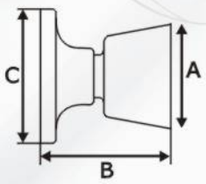



■ 3041 PB ET
A:2″ B:2-1/2″ C:2-5/8″



■ 3065 AC ET
A:2-1/8″ B:2-3/8″ C:2-5/8″



■ 3016 E ET
A:2-1/8″ B:2-5/8″ C:2-5/8″



■ 3017 A ET
A:2-1/16″ B:2-1/2″ C:2-5/8″



■ 3051 PB ET
A:1-7/8″ B:2-3/8″ C:2-5/8″



■ 3073 PB PS
A:2″ B:2-3/4″ C:2-5/8″



■ 3019 A ET
A:2″ B:2-1/2″ C:2-5/8″



■ 3020 E ET
A:2-1/4″ B:2-1/2″ C:2-5/8″



■ 3576 PB ET
A:1-7/8″ B:2-5/8″ C:2-5/8″



■ 3054 PB BK
A:2-1/2″ ×1-13/16″ B:2-1/2″ C:2-5/8″



■ 3082 SN BK
A:2″ B:2-5/8″ C:2-5/8″



■ 3091 SN ET
A:2″ B:2-5/8″ C:2-5/8″

DIMENSIONS

Door Prep:crossbore 2-1/8 " , edge bore 1 "
Backset: adjustable 2-3/8 " or 2-3/4 "
Door Thickness: Fits door 1-3/8 " to 2 "
Material: Steel or Brass or Stainless steel material available

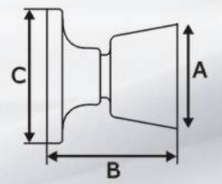

▶ **Detail description see page 7**

DIMENSIONS

Door Prep:crossbore 2-1/8 " , edge bore 1 "
Backset: adjustable 2-3/8 " or 2-3/4 "
Door Thickness: Fits door 1-3/8 " to 2 "
Material: Zinc

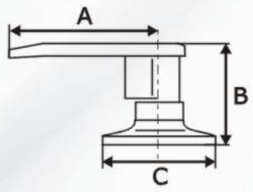



■ 3805 PB ET
A:4-3/8″ B:2-3/8″ C:2-5/8″



■ 3812 PB ET
A:4″ B:2-3/8″ C:2-5/8″



■ 3816 PB ET
A:4-1/8″ B:2″ C:2-5/8″



■ 3806 E ET
A:4-3/8″ B:2-3/8″ C:2-5/8″



■ 3809 PB ET
A:5″ B:2-5/8″ C:2-5/8″



■ 3813 PB ET
A:4-5/8″ B:2-3/8″ C:2-5/8″



■ 3818 SN ET
A:4-1/4″ B:2-3/8″ C:2-5/8″



■ 3807 A ET
A:4-13/16″ B:2-3/8″ C:2-5/8″



■ 3810 PB ET
A:4-3/8″ B:2-1/2″ C:2-5/8″



■ 3814 PB ET
A:3-7/8″ B:2-3/8″ C:2-5/8″



■ 3819 SN ET
A:4-1/8″ B:2-7/16″ C:2-5/8″



■ 3808 E ET
A:4-13/16″ B:2-3/8″ C:2-5/8″



■ 3811 PB ET
A:3-3/4″ B:2-3/8″ C:2-5/8″



■ 3815 PB ET
A:3-9/16″ B:2″ C:2-5/8″

DIMENSIONS

Door Prep:crossbore 2-1/8 " , edge bore 1 "
Backset: adjustable 2-3/8 " or 2-3/4 "
Door Thickness: Fits door 1-3/8 " to 2 "
Material: Zinc

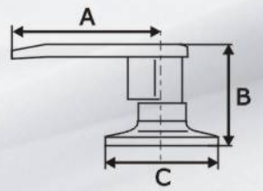

▶ **Detail description see page 11**

Z0001-Z3119 AB

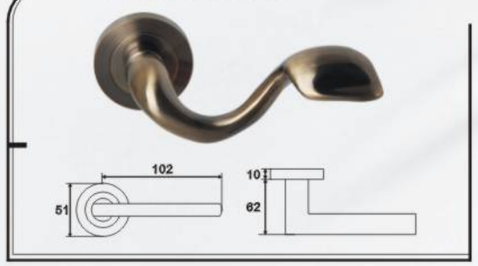

Z0001-Z3120 SN

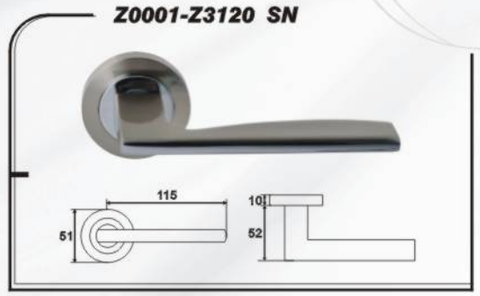

S0398-S0016 CP+SS

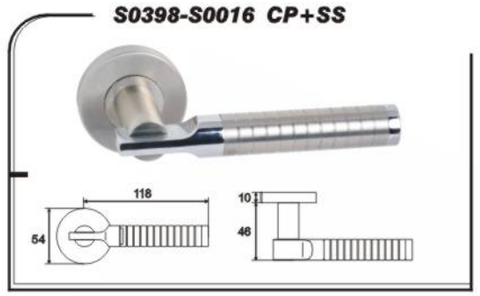

S0398-S0120 SS

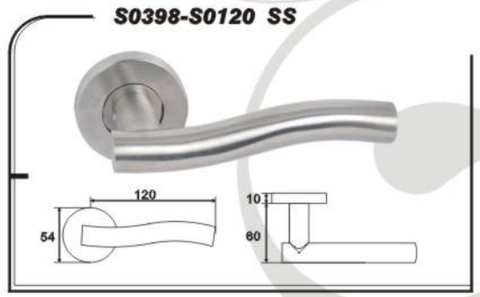

Z0001-Z3121 SN

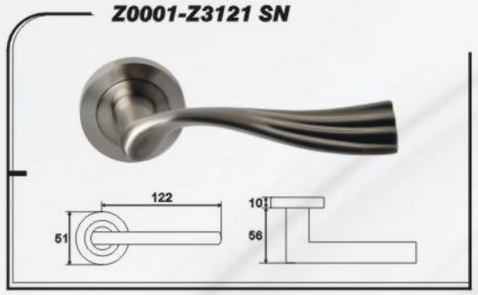

Z0001-Z3124 CP



S0398-S0140 SS



S0398-S0200 CP+SS

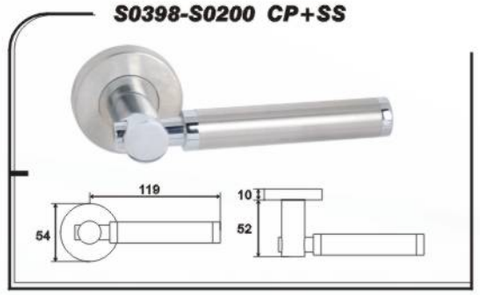

Z0001-Z3134 LN+SN

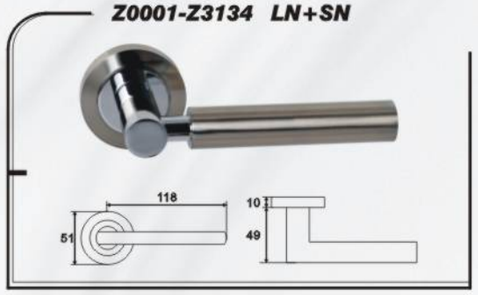

Z0001-Z3138 PB+BN

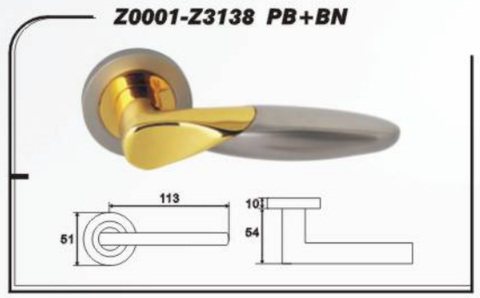

S0398-S0300 SS

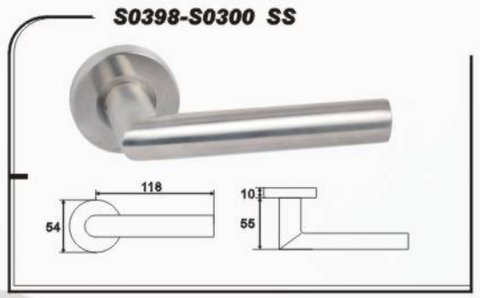

S0398-S0340 SS

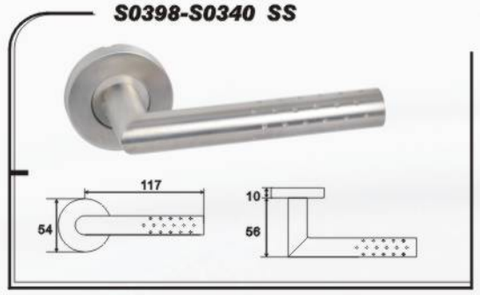

Z0001-Z3139 LN+SN



Z0001-Z3170 LN+SN

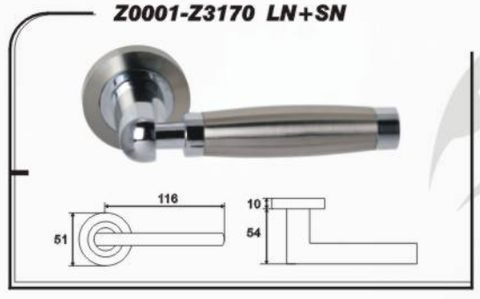

S0398-S0400 SS

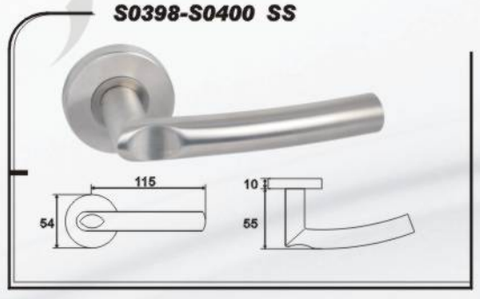

S0398-S0460 CP+SS



▶ Detail description see page 1

S0398-S0500 SS

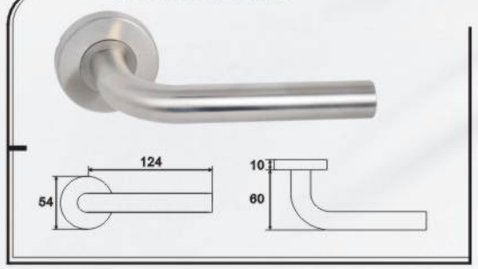

S0398-S0502 SS

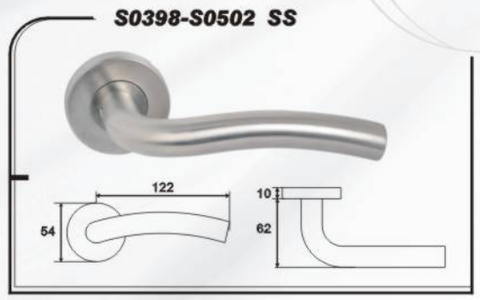

S0400-S0513 SS

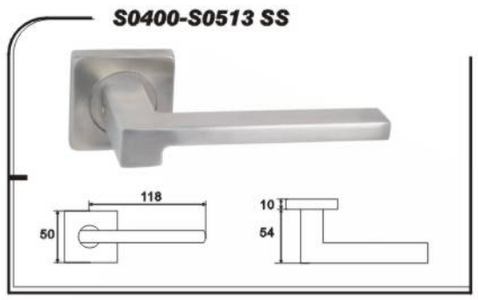

S0400-S0514 SS

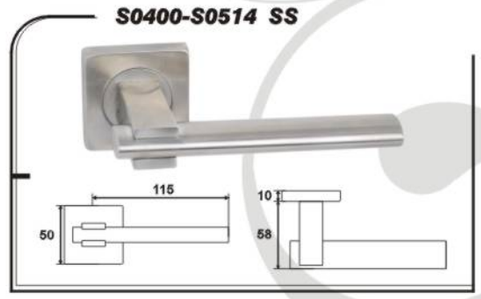

S0398-S0504 SS



S0398-S0506 SS

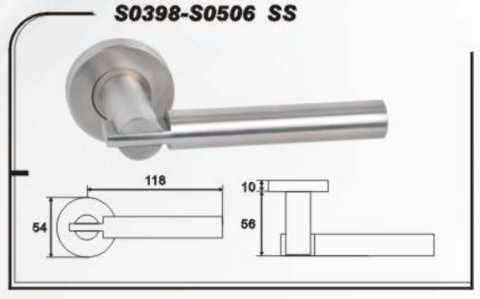

S0398-S0515 SS

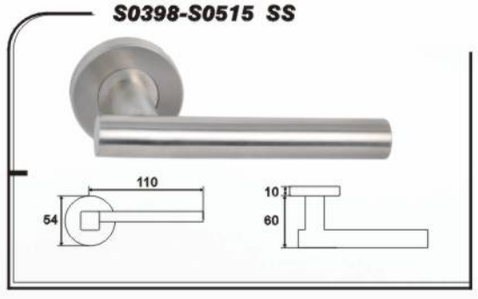

S0398-S0540 SS

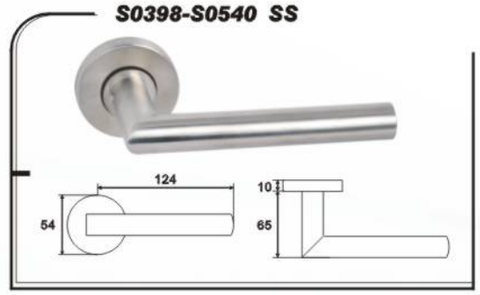

S0400-S0507 SS



S0398-S0509 SS

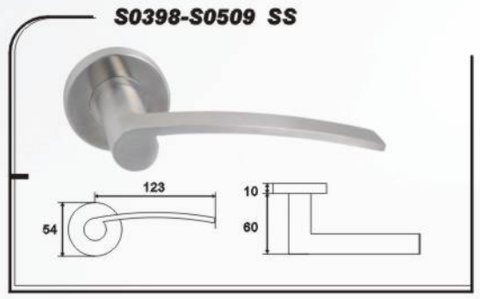

S0398-S0540 Q

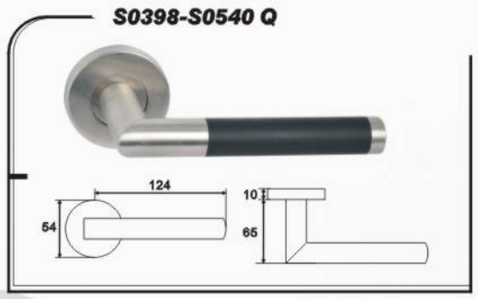

S0398-S0720 SS

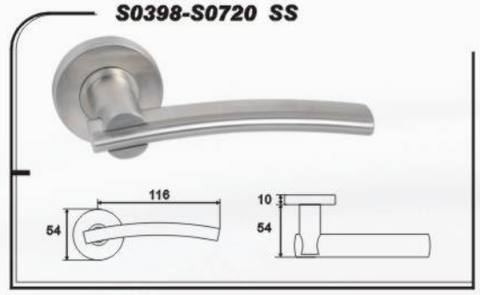

S0398-S0510 SS

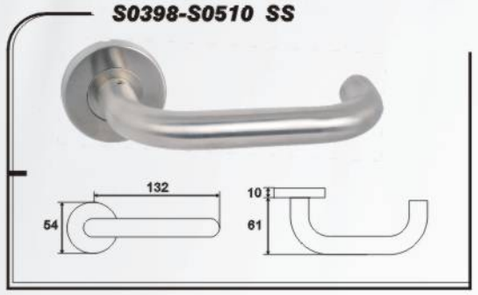

S0400-S0511 SS

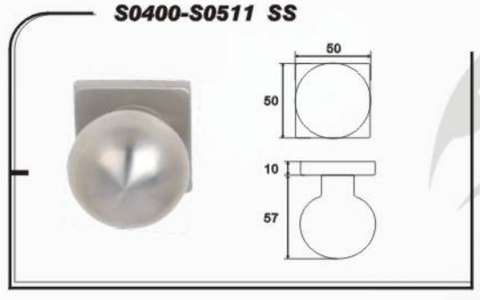

S0398-S2014 SS

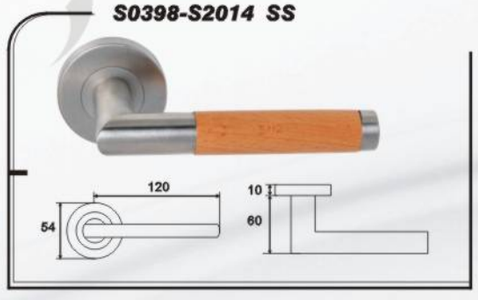

S0398-S2007 SS

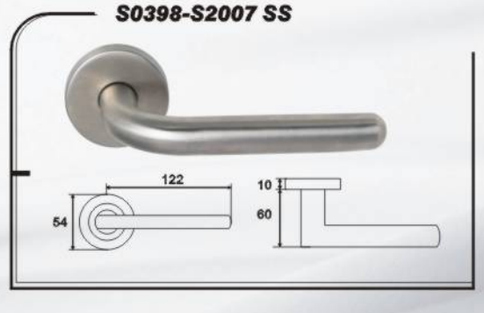

▶ Detail description see page 1

S0398-S2005 SS

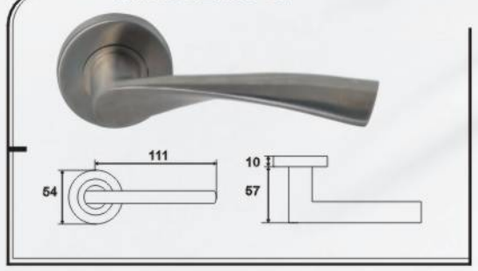

S0398-S2008 SS

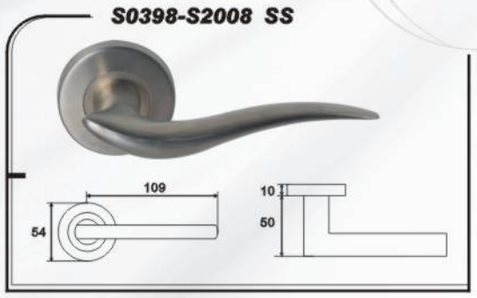

S0398-S2010 SS



S0398-S2011 SS



S0398-S2020 SS

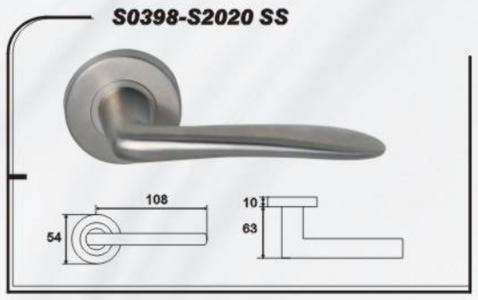

S0398-S2029 SS

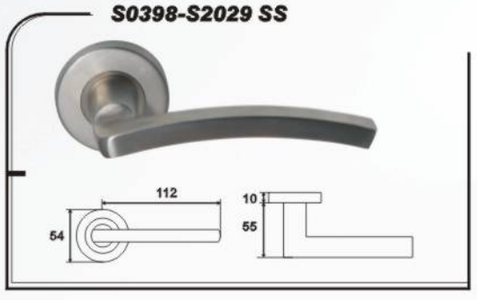

S0398-S2030 SS

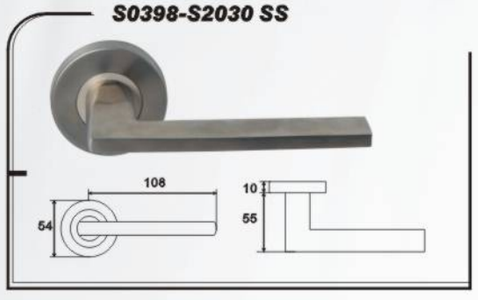

S0398-S2053 SS

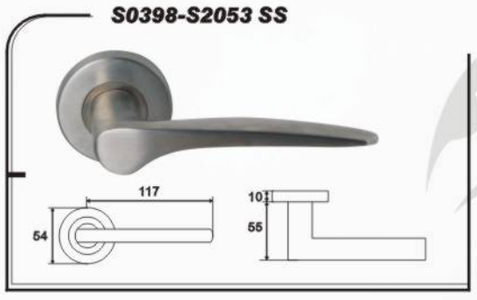

B0101-B0030 PB

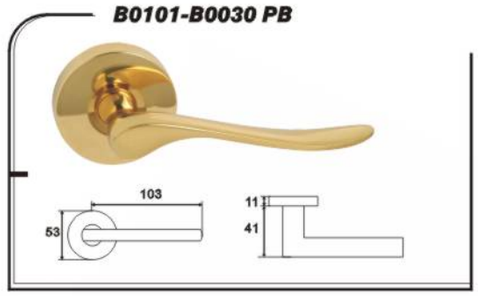

B0101-B0049 PB

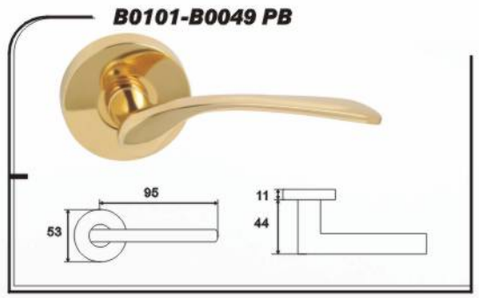

B0101-B0077 PB

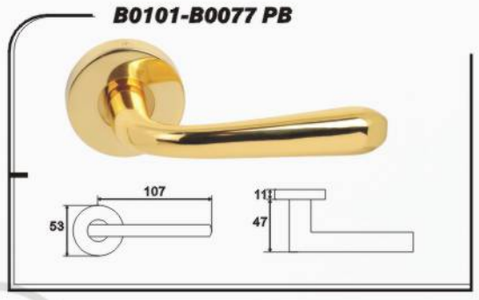

F03980-F0500 A

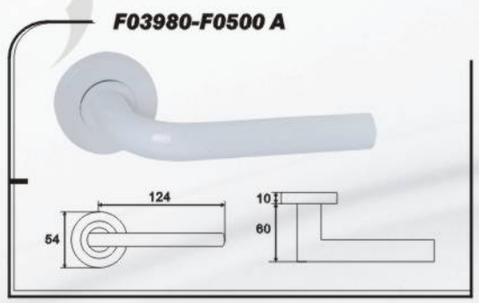

B0101-B0031 PB

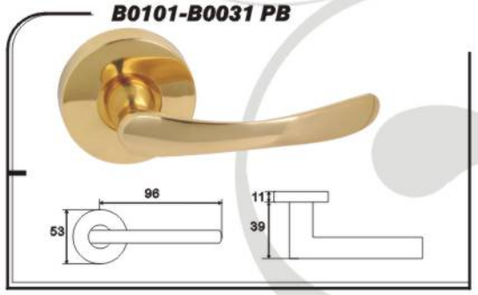

B0101-B0098 PB

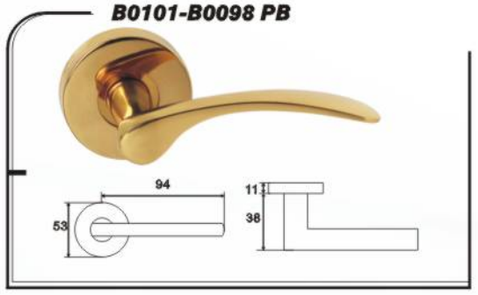

B0101-B0228 SN

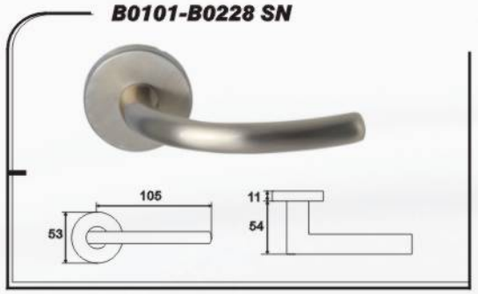

F0398-F0500 B



▶ Detail description see page 1



Z1004–Z1111 LN+SN

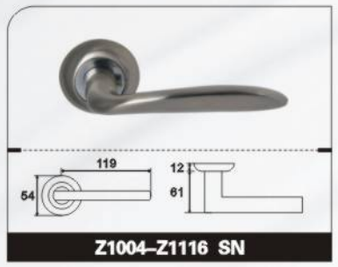

Z1004–Z1116 SN

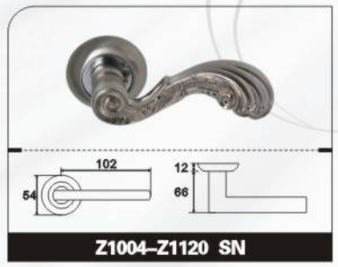

Z1004–Z1120 SN



Z1004-Z1121 SN



Z1004-Z1122 SN

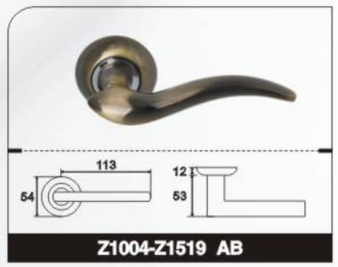

Z1004-Z1519 AB

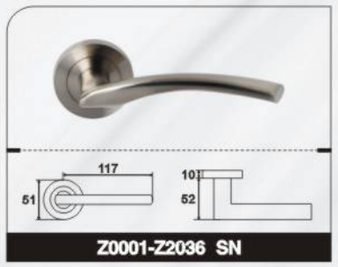

Z0001-Z2036 SN

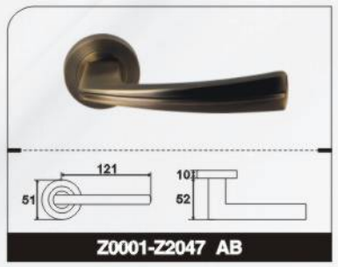

Z0001-Z2047 AB

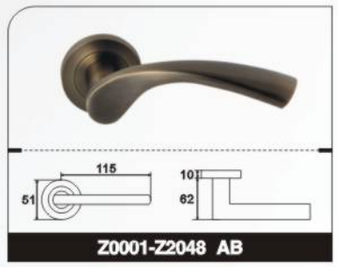

Z0001-Z2048 AB

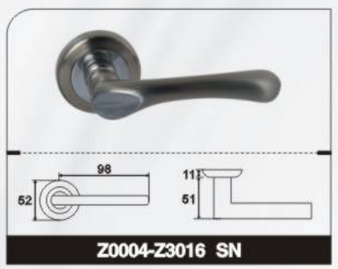

Z0004-Z3016 SN

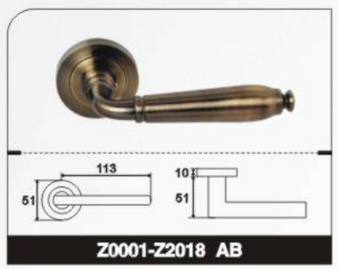

Z0001-Z2018 AB

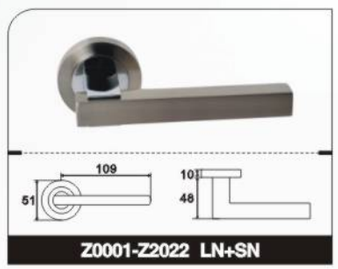

Z0001-Z2022 LN+SN

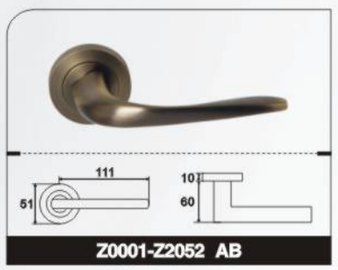

Z0001-Z2052 AB



Z0001-Z2053 SN



Z0001-Z2055 CP



Z0001-Z2058 SN

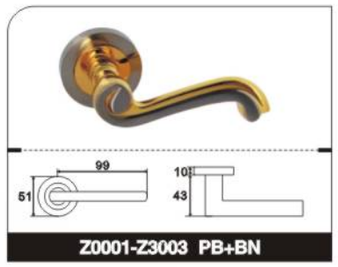

Z0001-Z3003 PB+BN



Z0001-Z3012 PB+BN

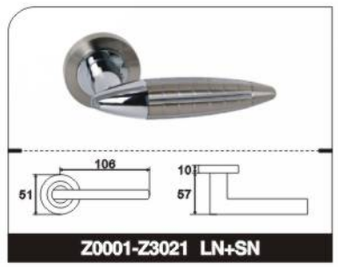

Z0001-Z3021 LN+SN

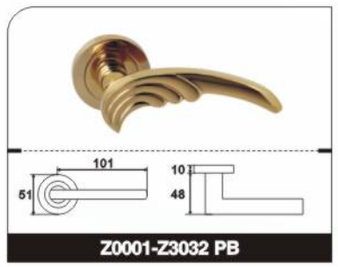

Z0001-Z3032 PB

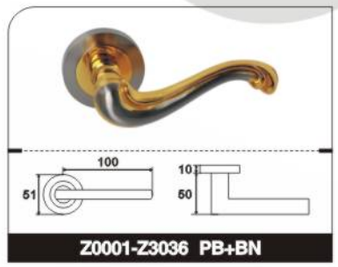

Z0001-Z3036 PB+BN

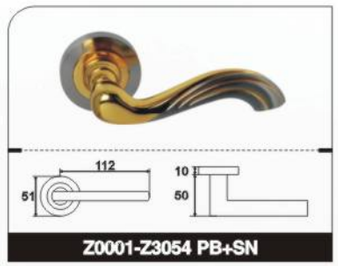

Z0001-Z3054 PB+SN

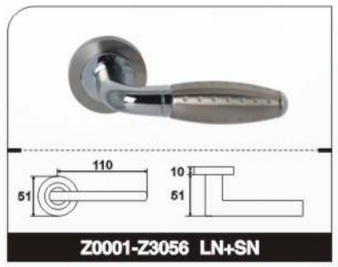

Z0001-Z3056 LN+SN

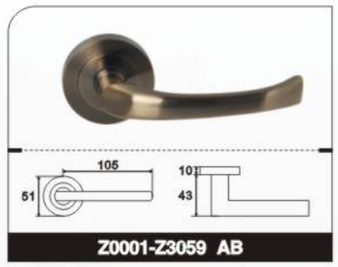

Z0001-Z3059 AB

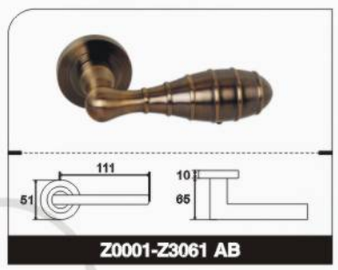

Z0001-Z3061 AB

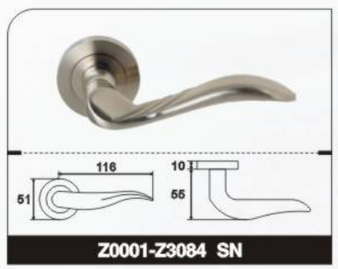

Z0001-Z3084 SN

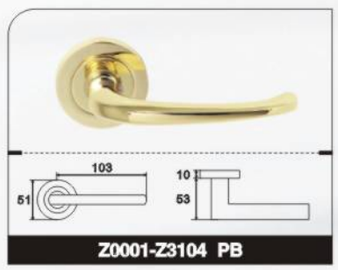

Z0001-Z3104 PB

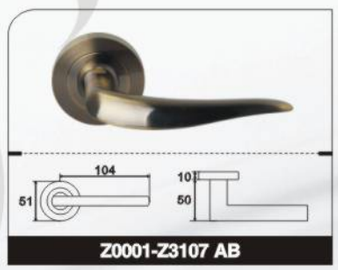

Z0001-Z3107 AB

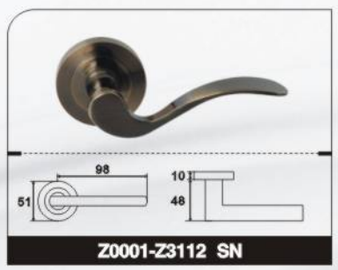

Z0001-Z3112 SN

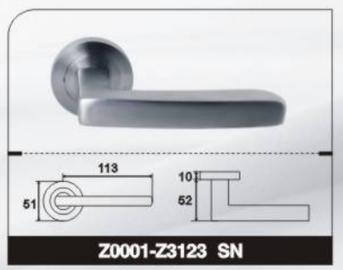

Z0001-Z3123 SN

▶ Detail description see page 1

PART SHOWING

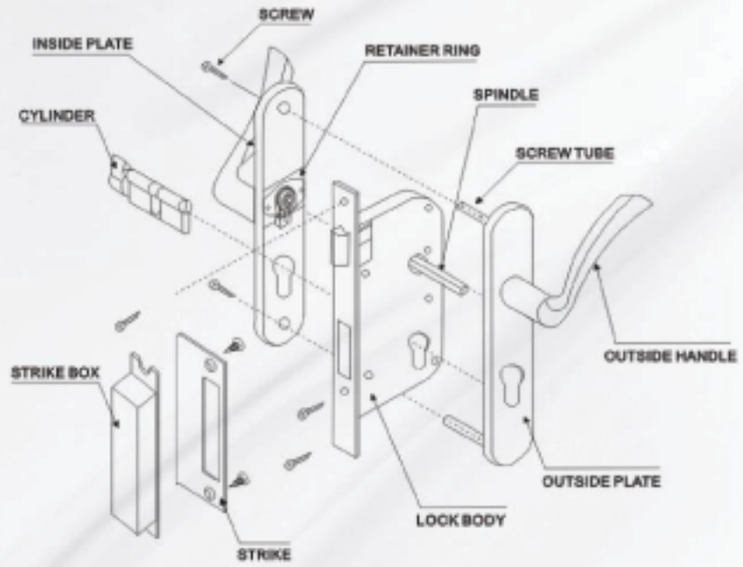

FOR GETTING MORE DETAILS ,PLEASE CONTACT US

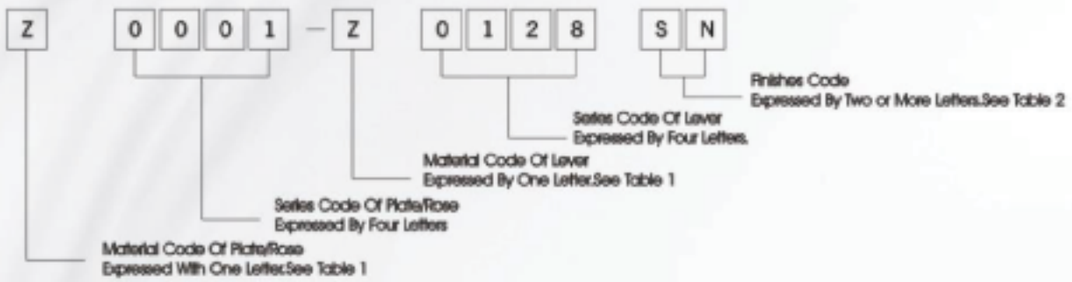

TABLE–1

MATERIAL	CODE
Aluminium	A
Zinc Alloy	Z
Stainless Steel	S
Brass	B
Steel	F

TABLE–2

CODE	DESCRIPTION	CODE	DESCRIPTION
PB	Polished Brass	A	White Painted
SN	Satin Nickel	B	Black Painted
SB	Satin Brass	SC	Satin Chrome
AB	Antique Brass	BN	Black Nickel
AC	Antique Copper	PD	Pearl Chrome
CP	Chrome Polished	PVD	Lifetime Finish
SS	Satin Stainless Steel	LN+SN	Light Nickel/Satin Nickel
SP	Polished Stainless Steel	PB+SB	Polished Brass/Satin Brass

7441L+Z0055 SN

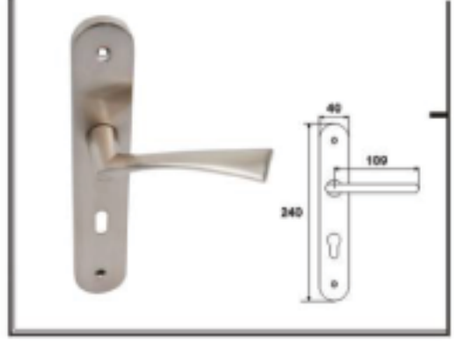

7441L+Z0069 LN+SN

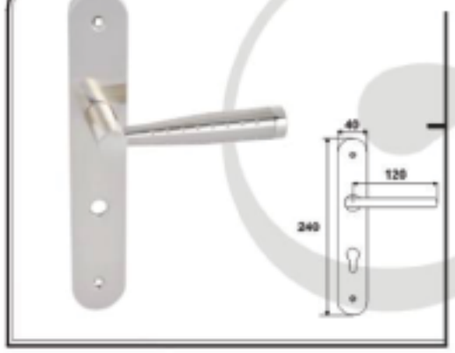

7441L+Z0077 SN

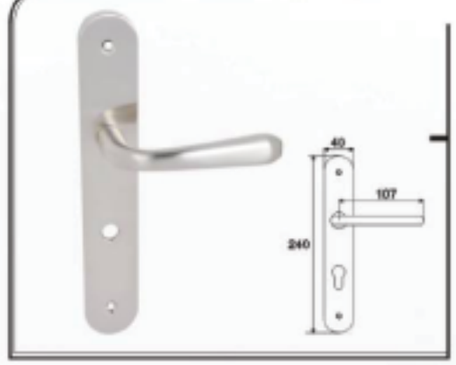

7441L+Z0092 AB



7441L+Z0096 SN



KEYHOLE TYPE AVAILABLE 01 02 03 04 05

7441L+Z0110 SN

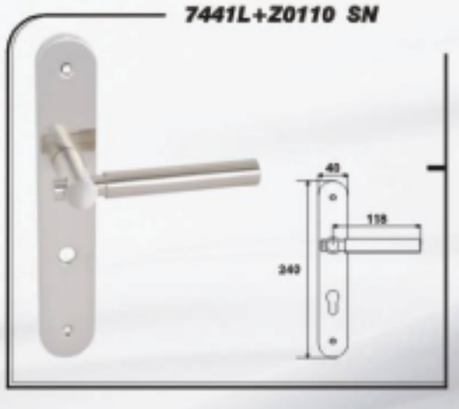

▶ Detail description see page 23

7441L+Z0104 SN

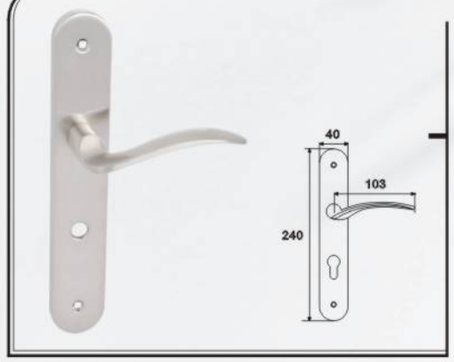

7441L+120 LN+SN

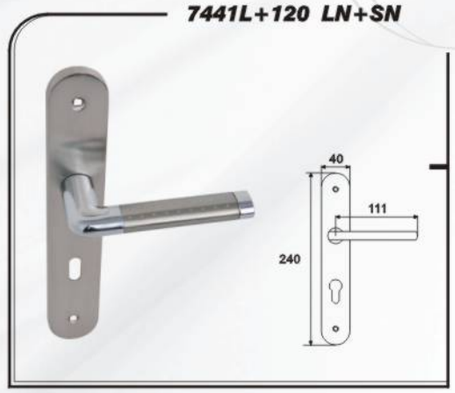

F5066-Z0067 CP

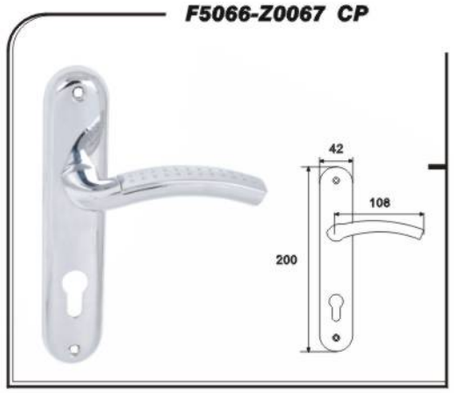

F5066-Z0101 GP

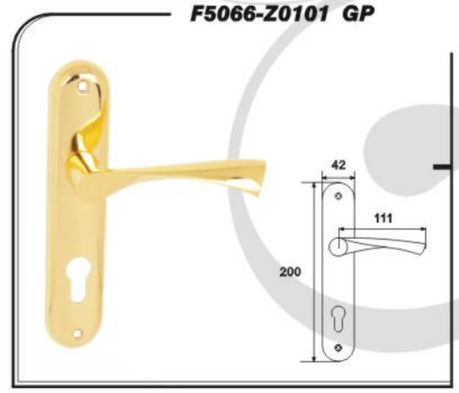

7441L+Z0137 SN

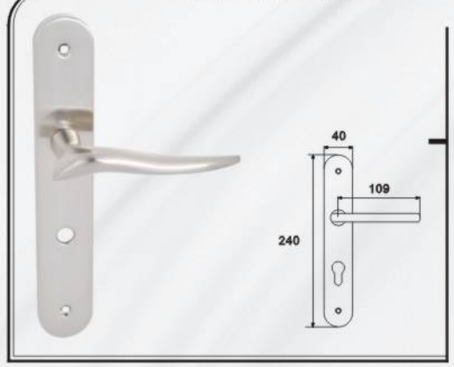

7441L+Z0139 SN

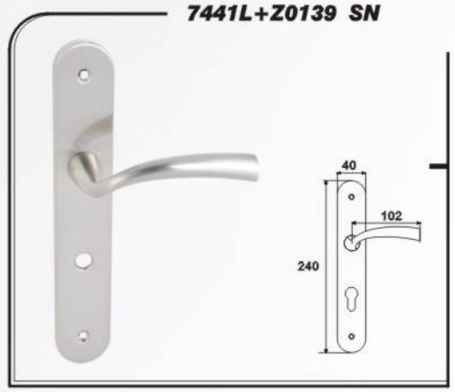

F5066L-Z0101 CP

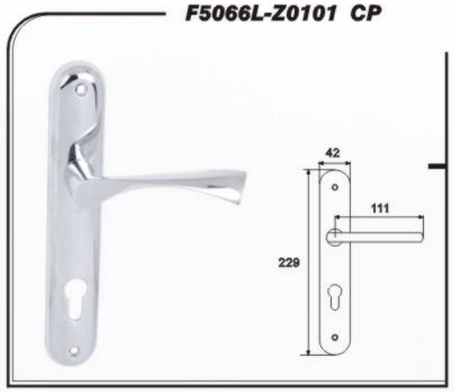

F5066-Z0149 GP

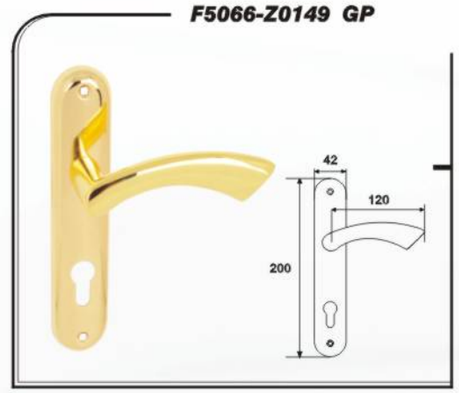

7441L+Z0156 SN

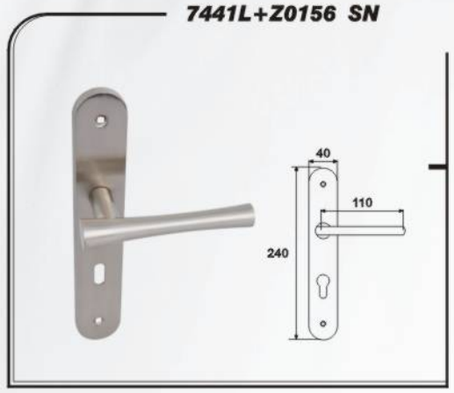

F3352+Z0082 SN

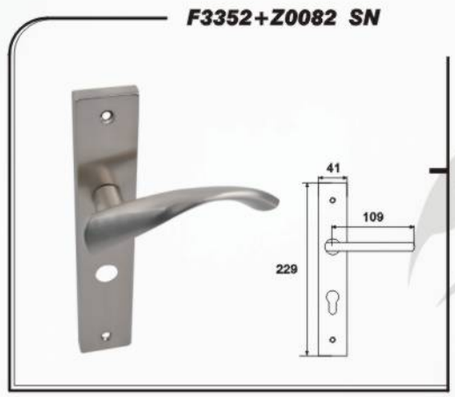

F5066-Z0151 AB

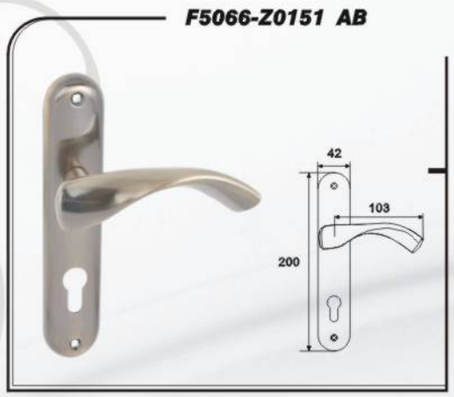

F5066-Z0154 GP



KEYHOLE TYPE AVAILABLE 01 02 03 04 05

▶ Detail description see page 23

S3350-S0016 SS

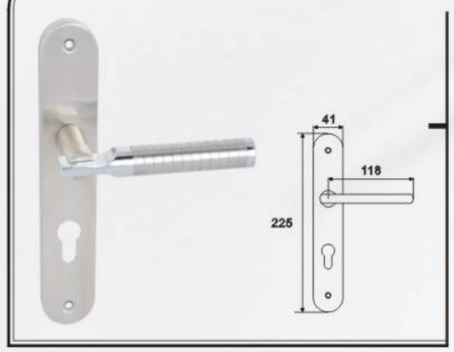

S3350-S0500 SS

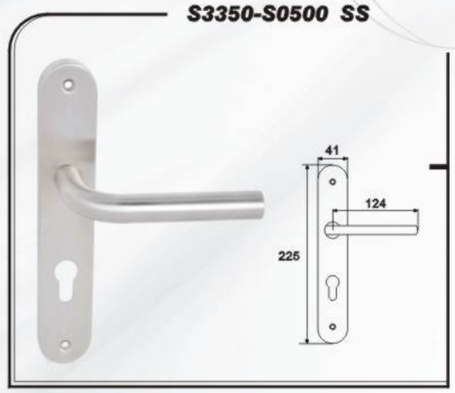

B2102-B0098 PB

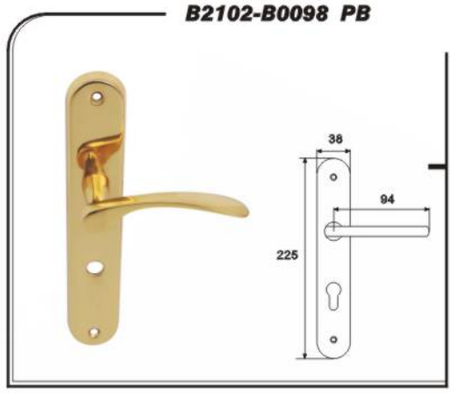

B5066-B0031 PB

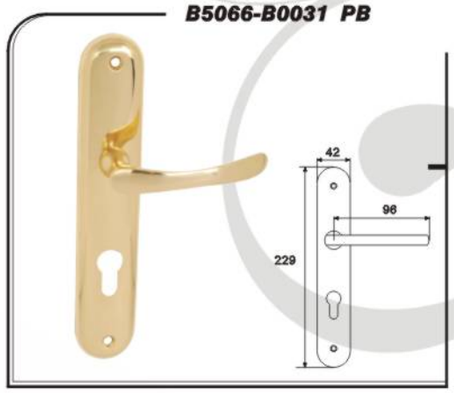

S0169-S0510 SS



S3350-S0511 SS

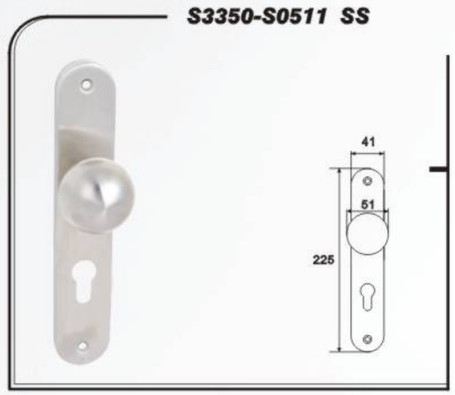

B7441-B0049 PB

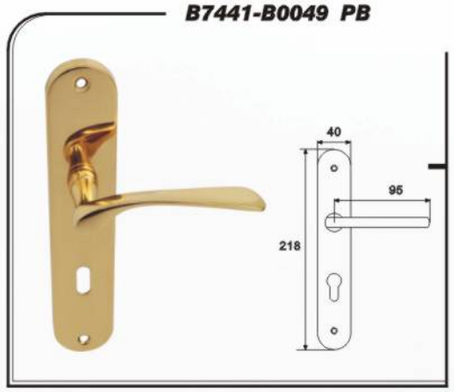

B7442-B0030 PB

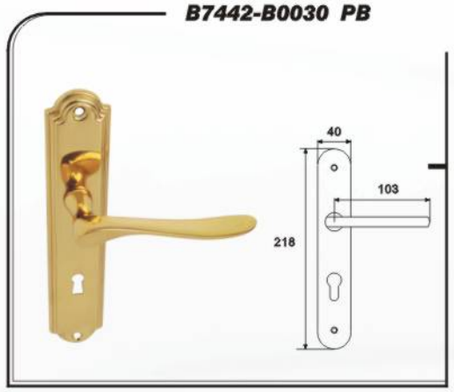

S3351-S0720 SS

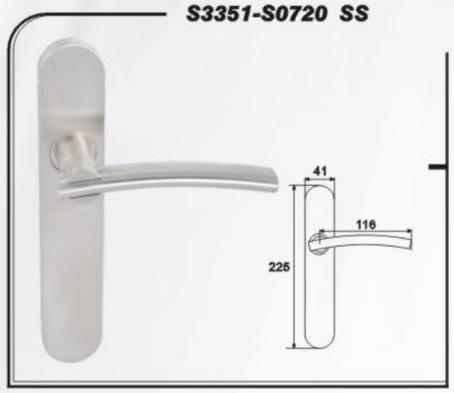

S3352-S0513 SS

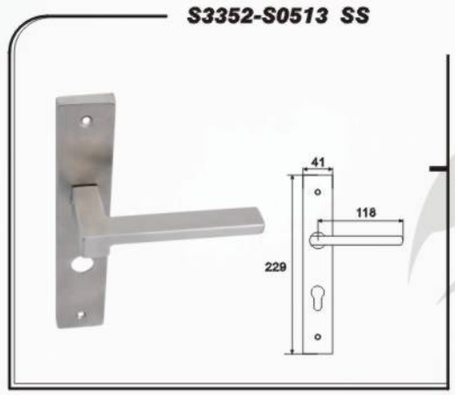

F3350-F0500 A

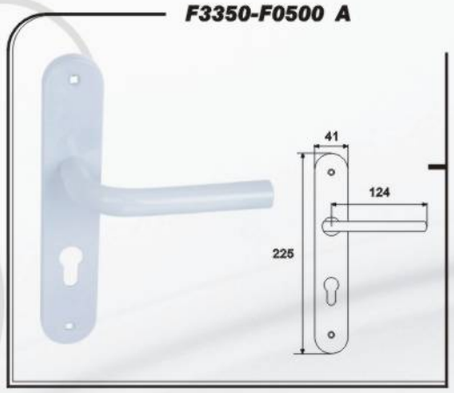

F3350-F0500 B

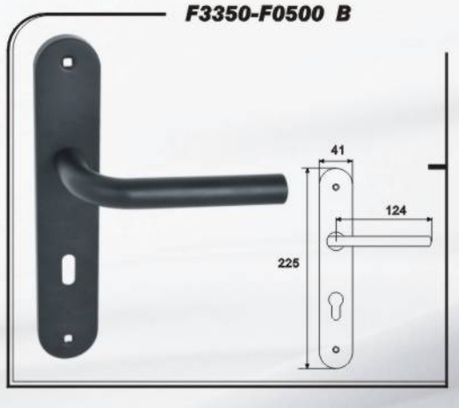

KEYHOLE TYPE AVAILABLE 01 02 03 04 05

▶ Detail description see page 23

Z0052-Z0027 SN

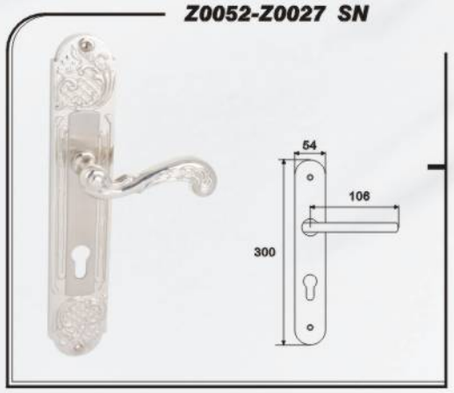

Z0053-Z0028 SN

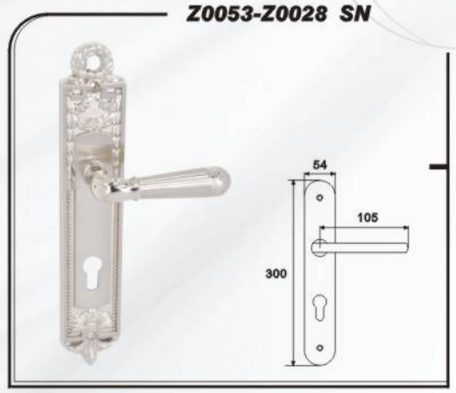

Z1102-Z0115 CP

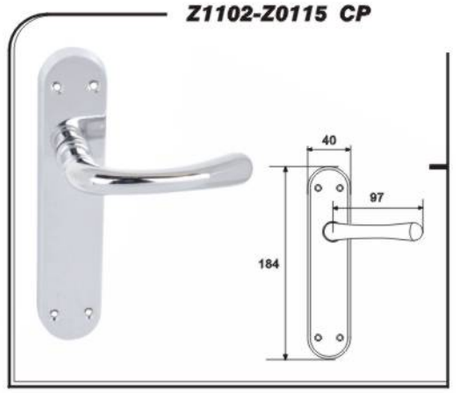

Z1102-Z0115 SN

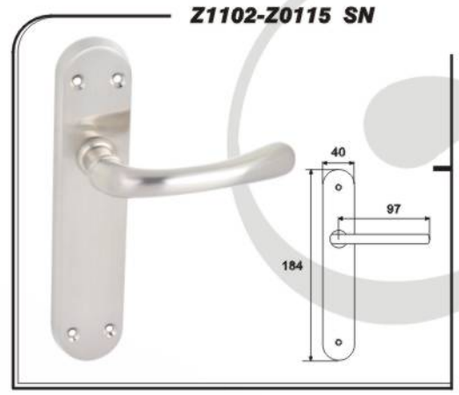

Z0054-Z0027 SN

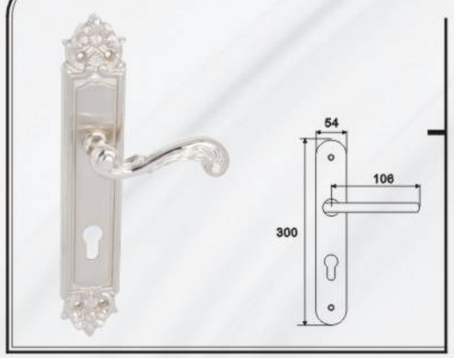

Z0064-Z0035 SN



Z1102-Z0115 PB

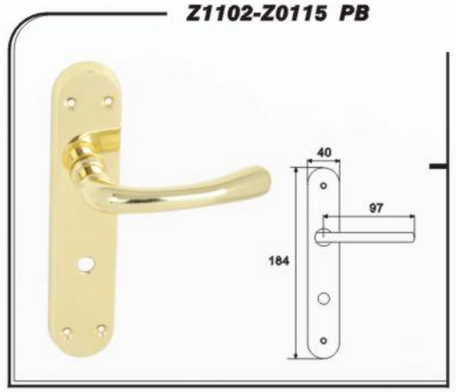

ZB000-ZB002 CP

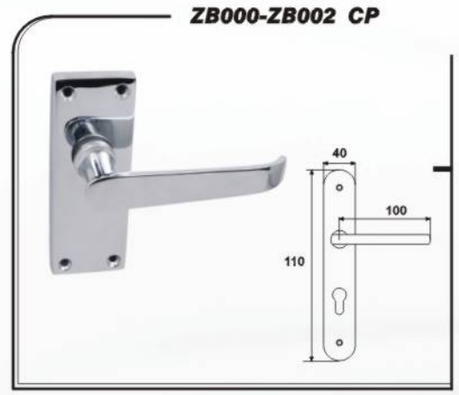

Z0051-Z0021 SN

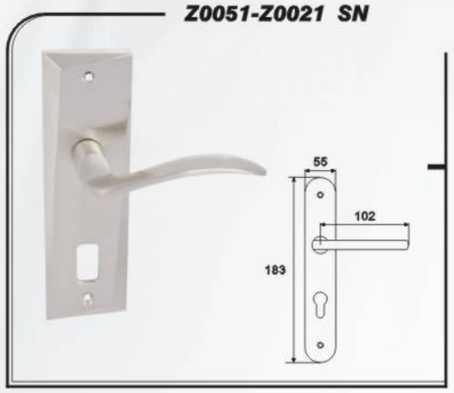

Z0070-Z0034 SN

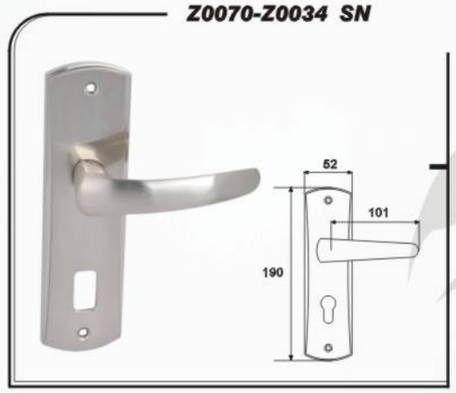

ZB002-ZB008 PB

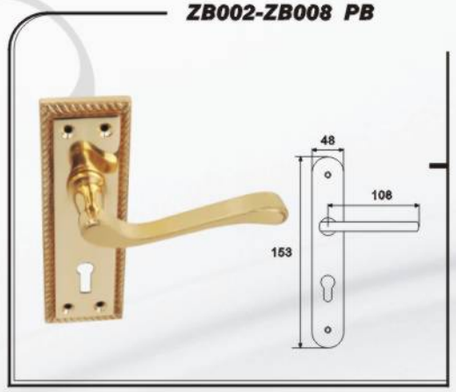

ZB002-ZB009 PB

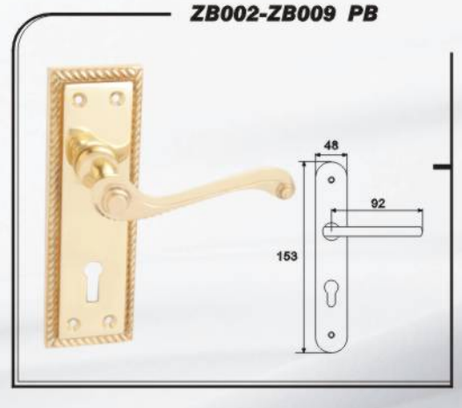

KEYHOLE TYPE AVAILABLE 01 02 03 04 05

▶ Detail description see page 23

Z2004-Z2024 CP

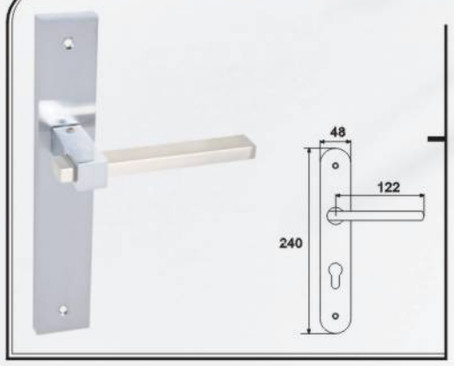

Z2014-Z2007 CP

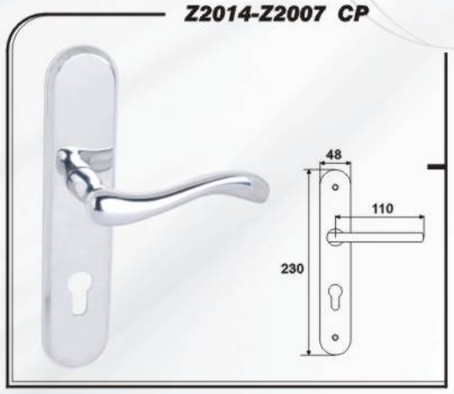

Z2012-Z2018 AB

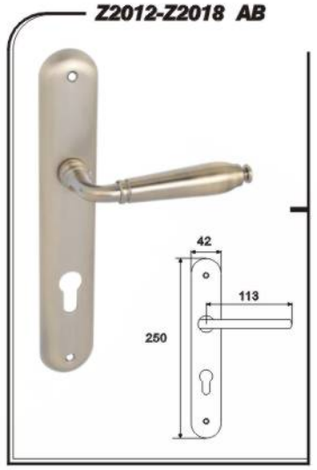

Z2024-Z2048 AB

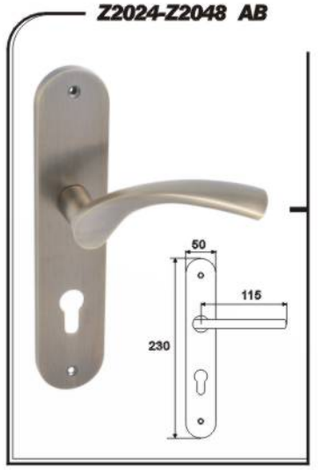

Z3001-Z3093 PB+SN

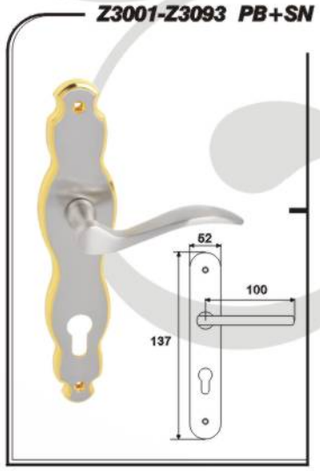

Z2014-Z2013 CP

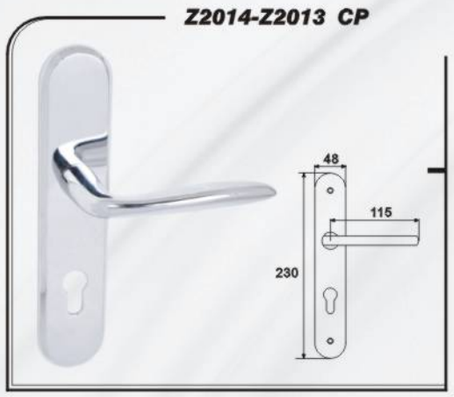

Z2014-Z2046 CP

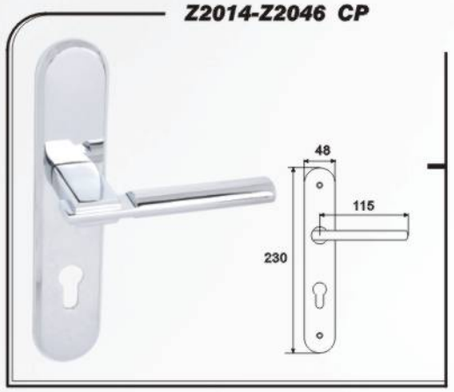

Z3010-Z3005 SN

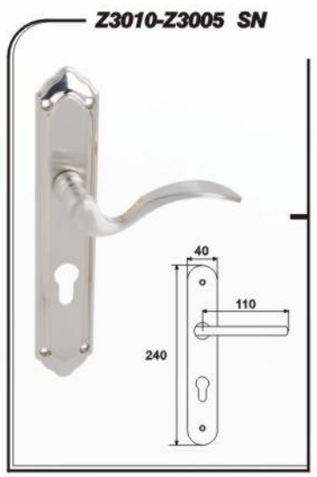

Z3011-Z3129 LN+SN

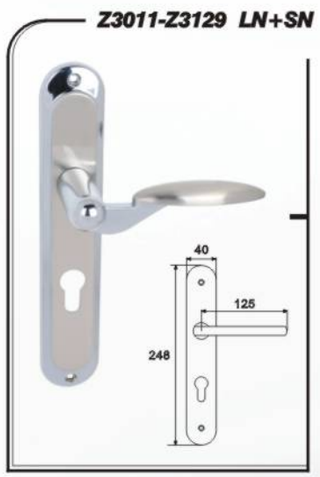

Z3020-Z3099 LN+SN

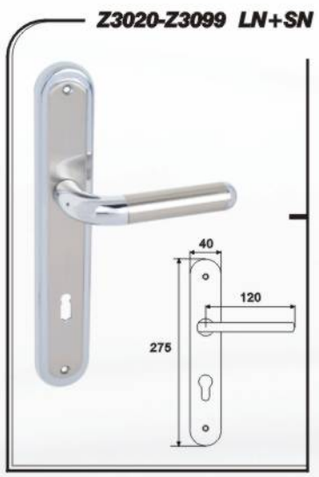

Z3026-Z3017 AC

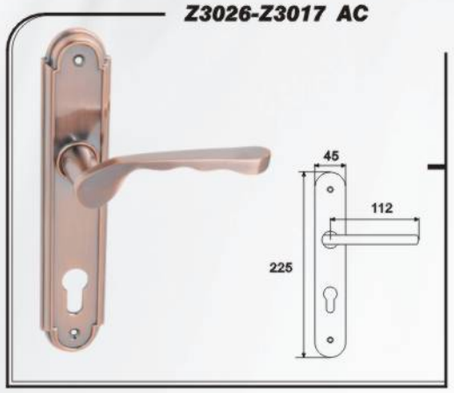

Z3157-Z3128 PB+BN

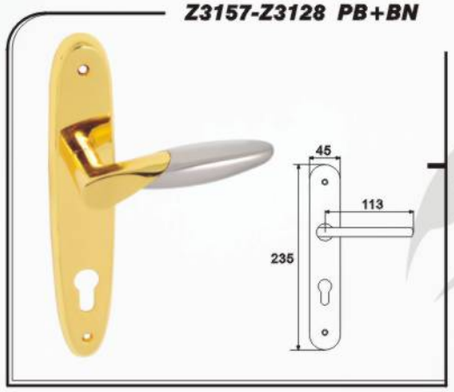

Z3042-Z3088 LN+SN



Z3054-Z3097 SN

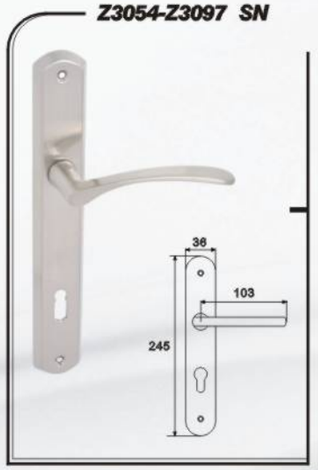

Z3161-Z3112 AB

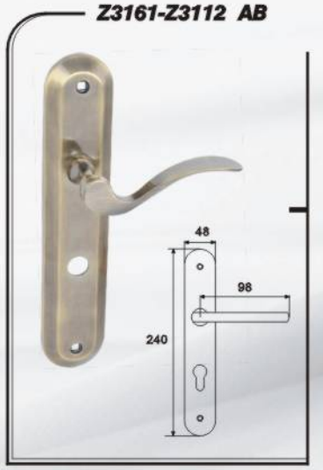

KEYHOLE TYPE AVAILABLE 01 02 03 04 05

▶ Detail description see page 23

B0101-04



B0106-03



S0398-04



F0398-03

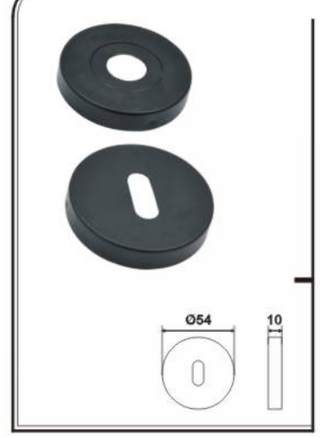

F0398-04

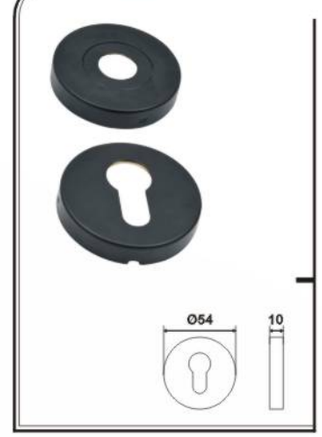

B0101-02



S0400-03

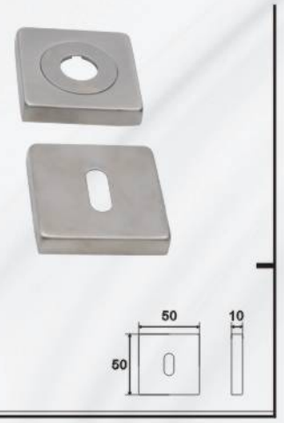

Z0001-03



Z0002-04



B0106-02



S0398-02



S0400-02



Z0003-04

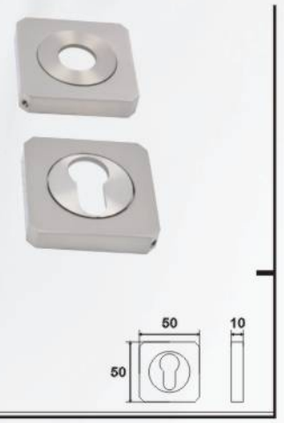

Z0004-04

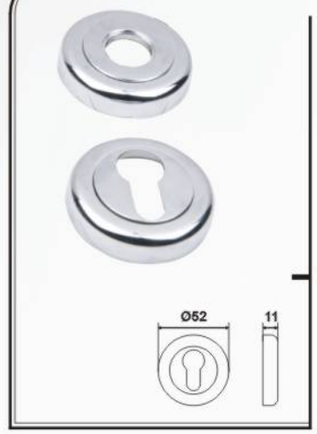

Z1004-04



Z0001-02



Z1004-02



F0398-02



KEYHOLE TYPE AVAILABLE 02 03 04 05

▶ Detail description see page 23

60A CP ET



70A PB ET



70B AB ET



70C AC BK



70D SN BK



70E SN BK



70F SN BK



70G SB BK

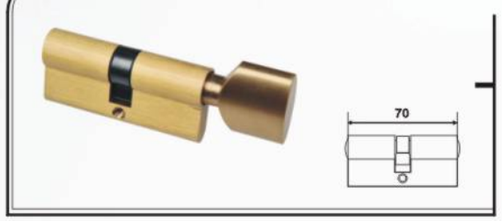

70H CP BK



70I CP BK



■ OTHER OPTIONS ARE AVAILABLE.PLEASE CHECK WITH US ABOUT THE DETAILS.

X55A SN

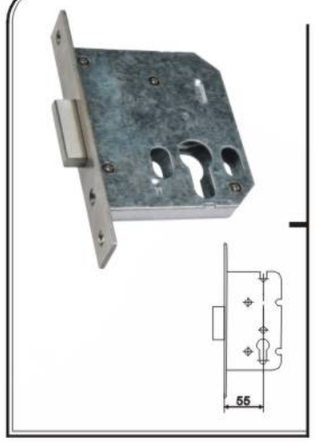

X55B SN

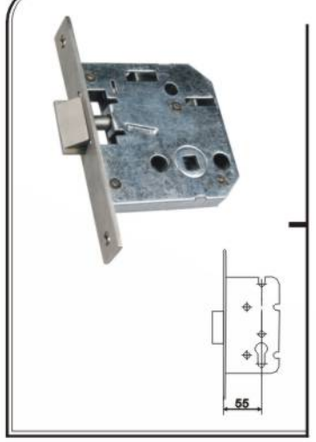

X9230 SN

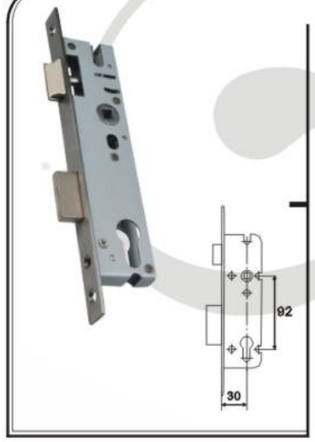

B7040C SB

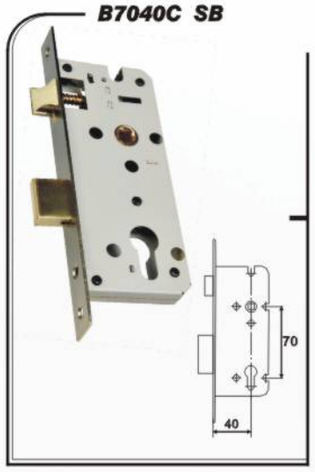

P7045 CP

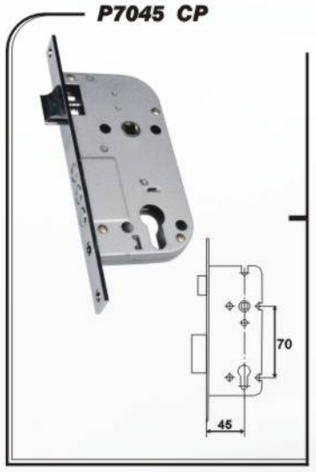

X7255 SN

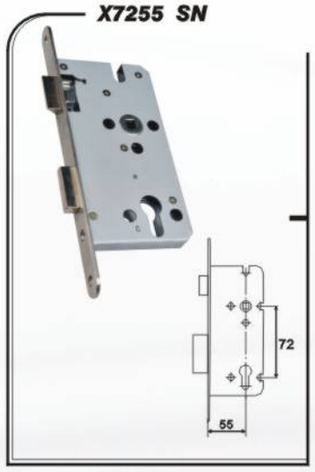

B8540 CP

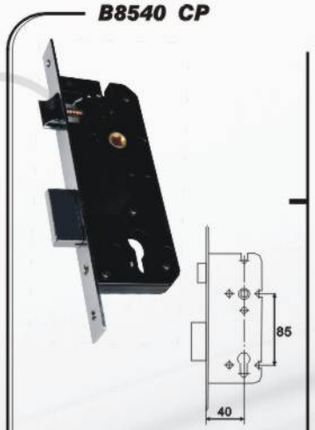

B8545A SN

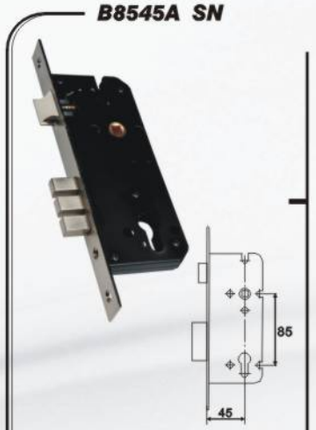

X8545 SN

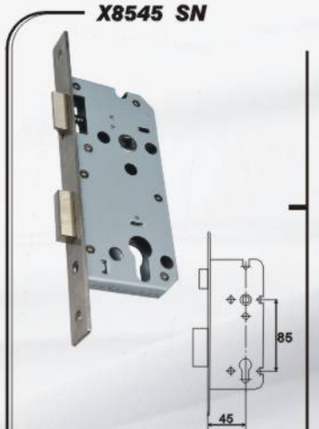

▶ Detail description see page 23

PART SHOWING

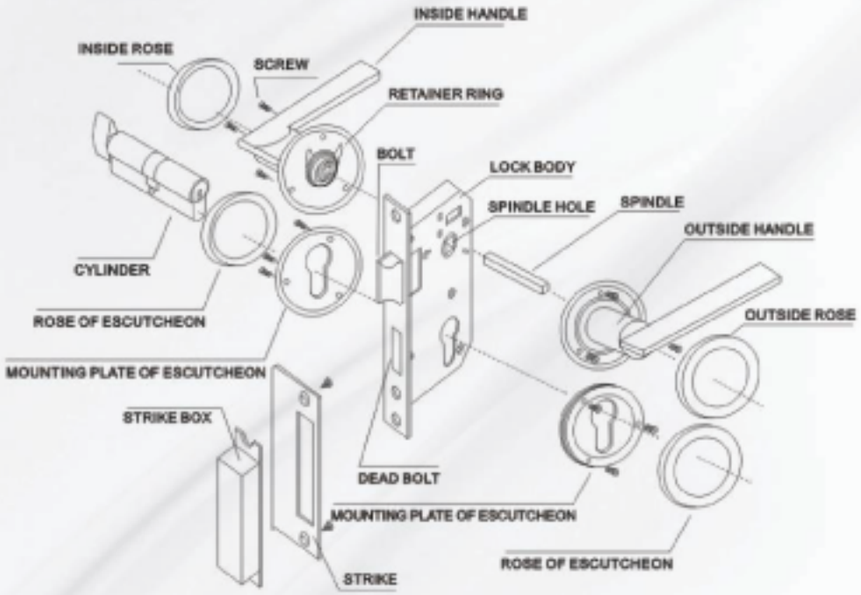

FOR GETTING MORE DETAILS ,PLEASE CONTACT US

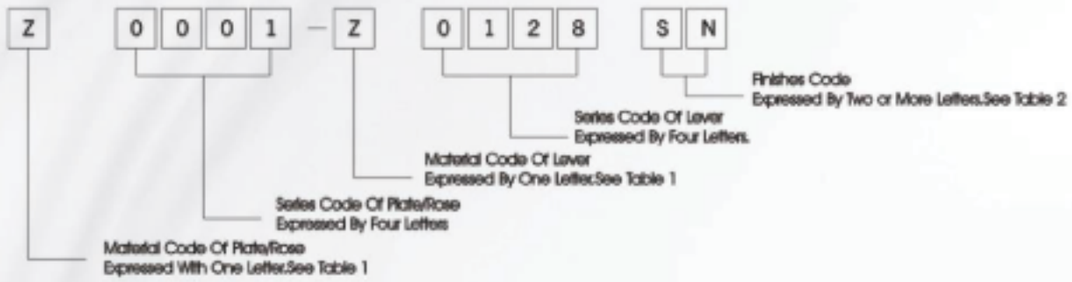

TABLE–1

MATERIAL	CODE
Aluminium	A
Zinc Alloy	Z
Stainless Steel	S
Brass	B
Steel	F

TABLE–2

CODE	DESCRIPTION	CODE	DESCRIPTION
PB	Polished Brass	A	White Painted
SN	Satin Nickel	B	Black Painted
SB	Satin Brass	SC	Satin Chrome
AB	Antique Brass	BN	Black Nickel
AC	Antique Copper	PD	Pearl Chrome
CP	Chrome Polished	PVD	Lifetime Finish
SS	Satin Stainless Steel	LN+SN	Light Nickel/Satin Nickel
SP	Polished Stainless Steel	PB+SB	Polished Brass/Satin Brass

Z0001-Z0004 SN

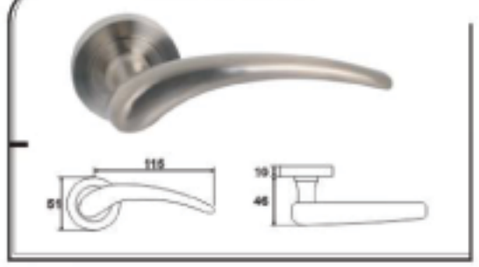

Z0001-Z0031 SB

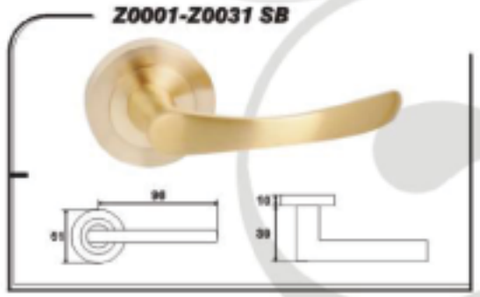

Z0001-Z0035 SN

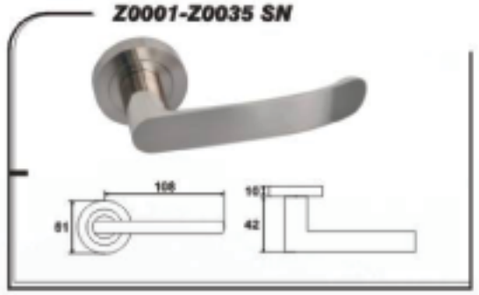

Z0001-Z0048 SN

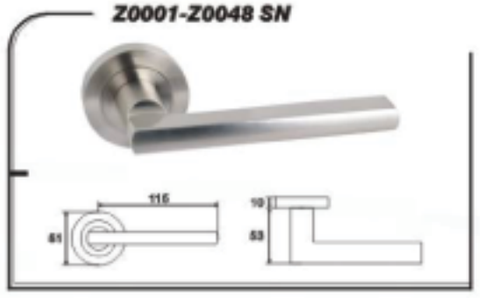

Z0001-Z0055 SN



Z0001-Z0056 LN+SN

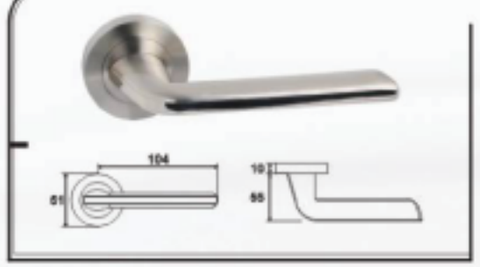

Z0001-Z0057 SN



Z0002-Z0067 LN+SN



▶ Detail description see page 1

Z0001-Z0069 LN+SN

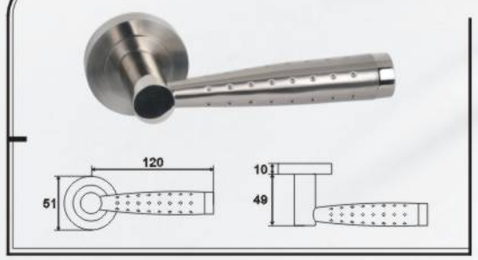

Z0001-Z0077 SN



Z0001-Z0092 AB

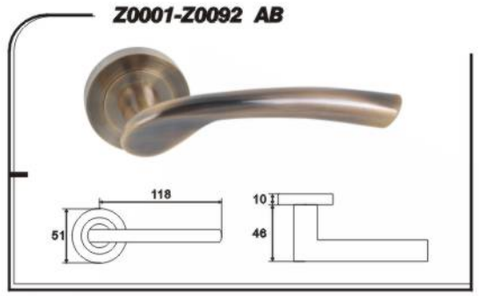

Z0001-Z0096 SN

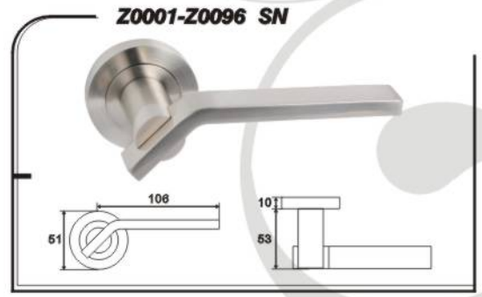

Z0001-Z0078 SN

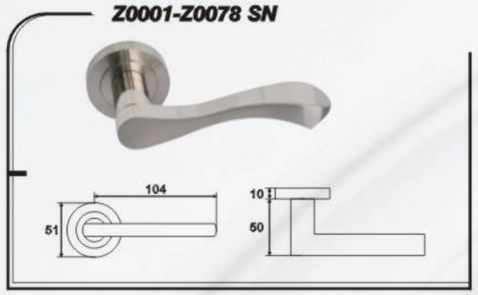

Z0001-Z0079 SN

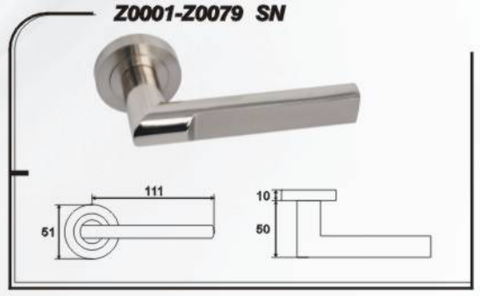

Z0001-Z0097 SN



Z0001-Z0098 SN

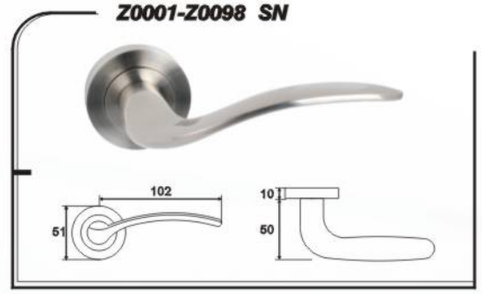

Z0001-Z0081 LN+SN

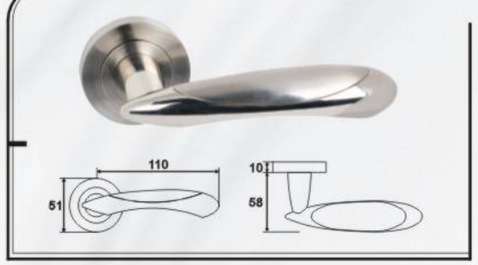

Z0001-Z0082 SN

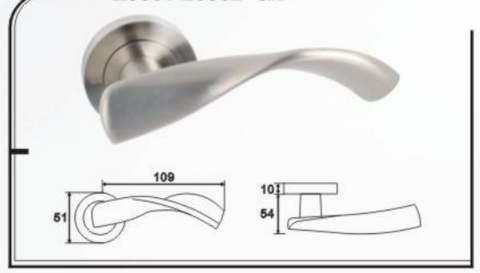

Z0001-Z0099 SB

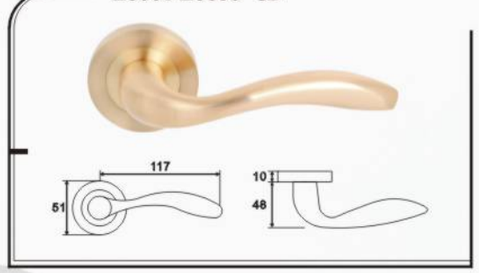

Z0001-Z0100 SN

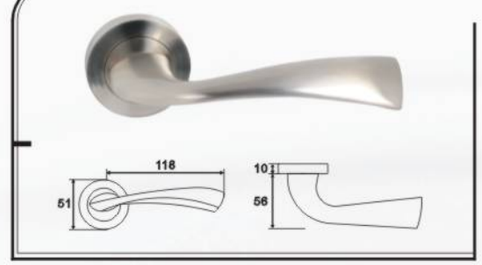

Z0002-Z0083 LN+SN

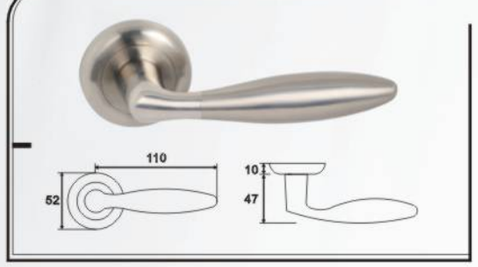

Z0001-Z0084 SN

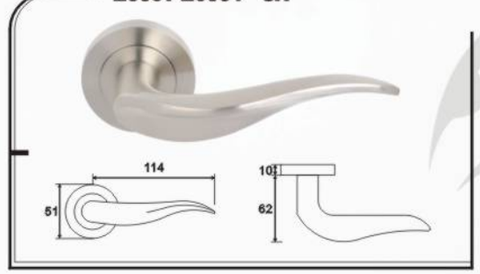

Z0001-Z0101 AB

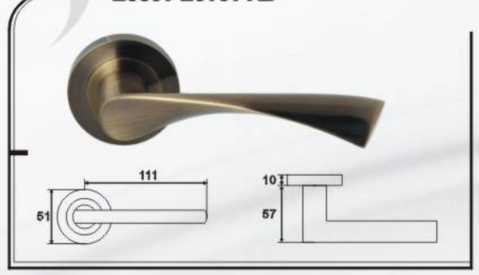

Z0004-Z0102 CP

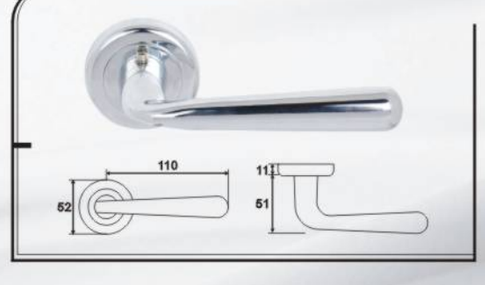

▶ Detail description see page 1

Z0001-Z0103 CP

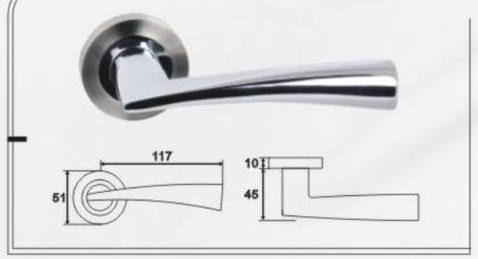

Z0001-Z0104 SN

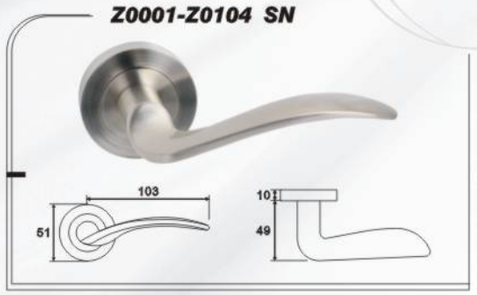

Z0001-Z0121 LN+SN



Z0001-Z0122 LN+SN

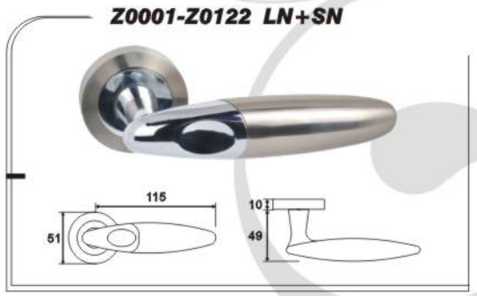

Z0001-Z0105 CP

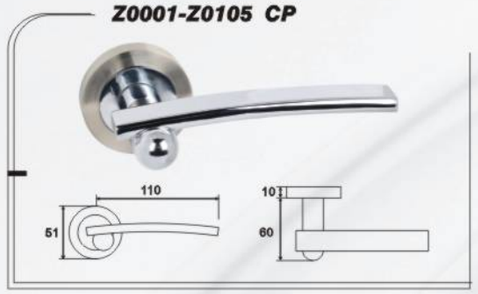

Z0004-Z0107 PB

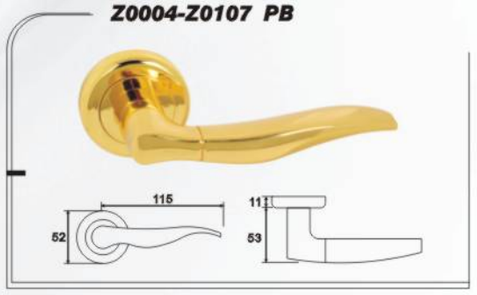

Z0001-Z0128 SB

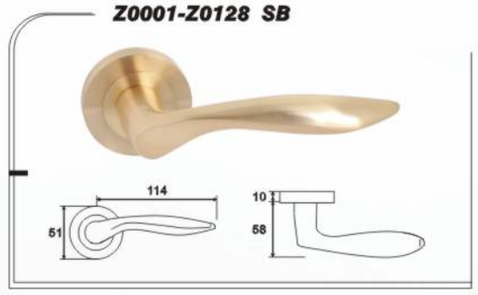

Z0001-Z0137 SN

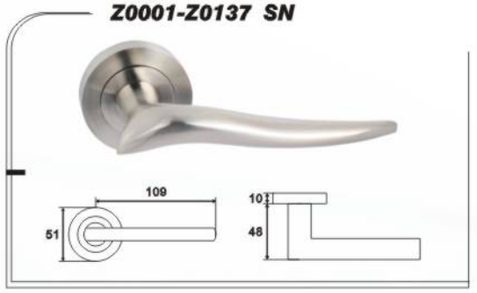

Z0001-Z0110 SN

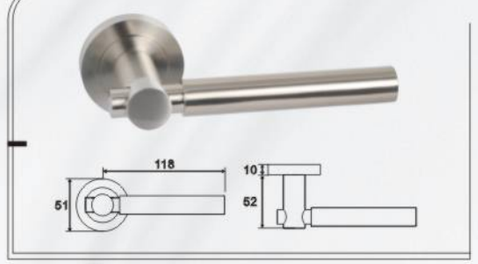

B0106-Z0111 CP

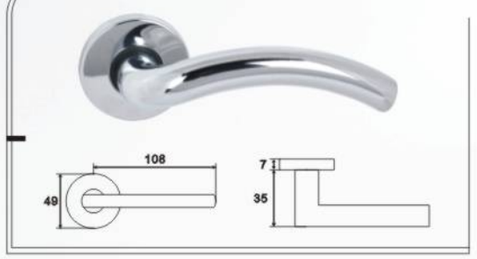

Z0001-Z0139 SN

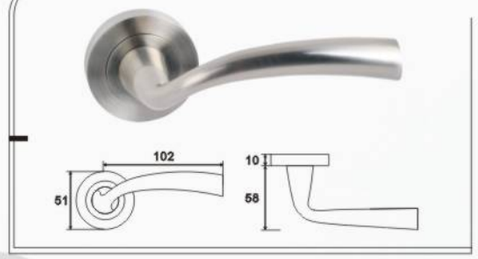

Z0004-Z0147 PB

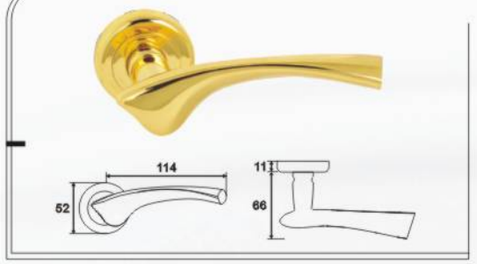

Z0001-Z0115 SN

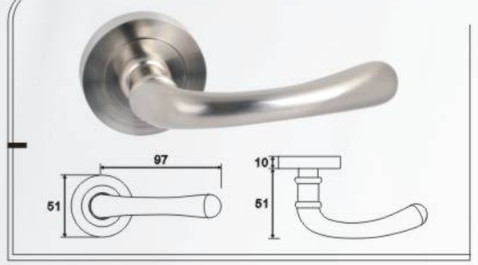

Z0001-Z0120 LN+SN

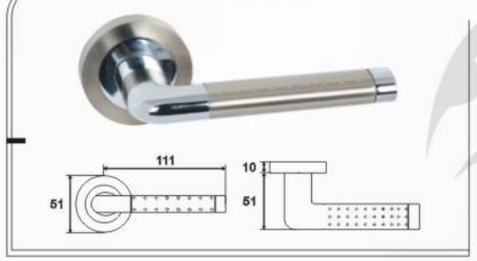

Z0004-Z0149 PB

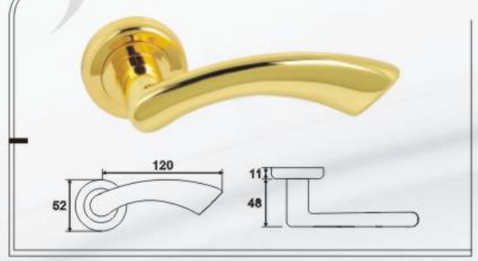

Z0004-Z0150 CP

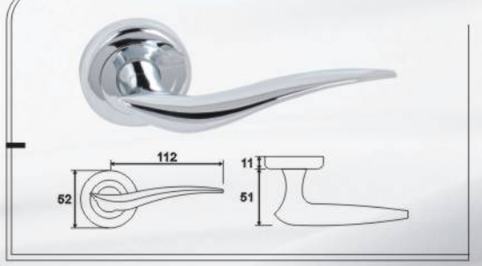

▶ Detail description see page 1

Z0004-Z0152 PB



Z0004-Z0154 PB

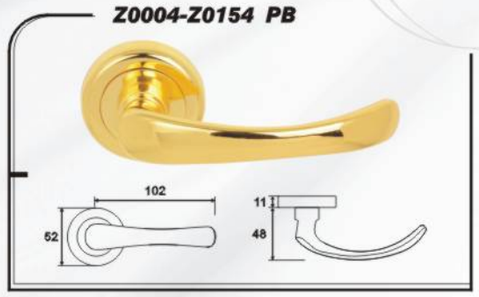

Z1004-Z1001 SG+CP

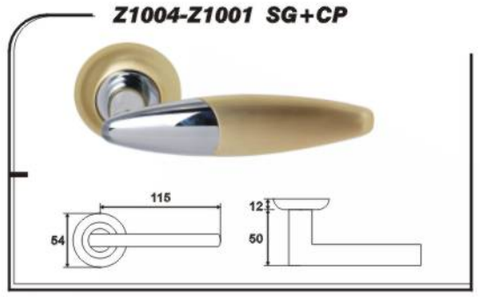

Z1004-Z1002 GP



S0398-Z0155 SN

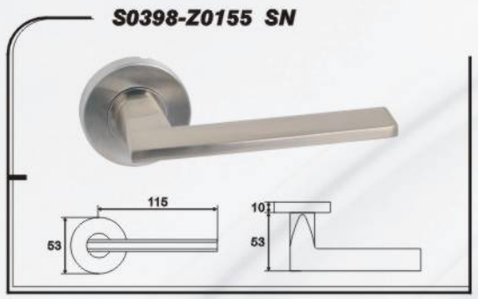

Z0001-Z0228 SN

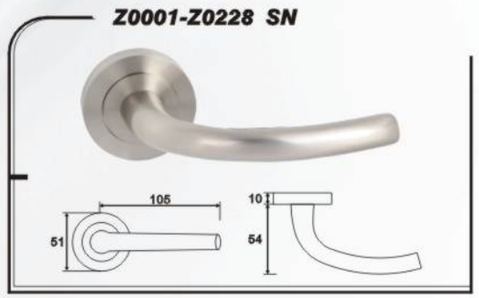

Z1004-Z1003 SG+GP

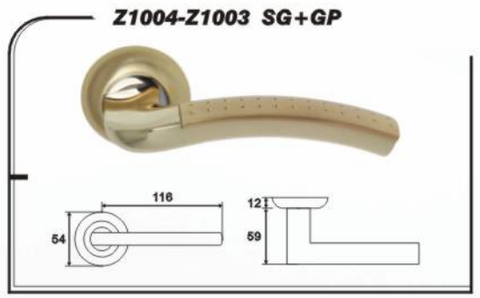

Z1004-Z1004 GP



Z0001-Z0077A SN

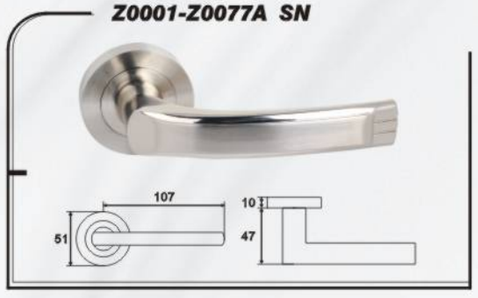

S0398-Z0508 SN



Z1004-Z1005 SG

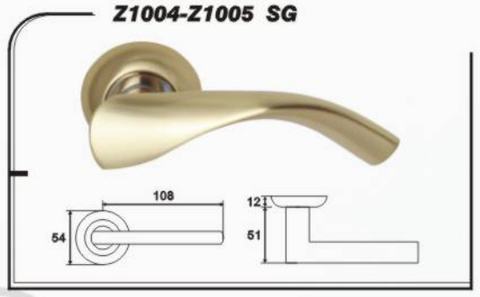

Z1004-Z1006 SC

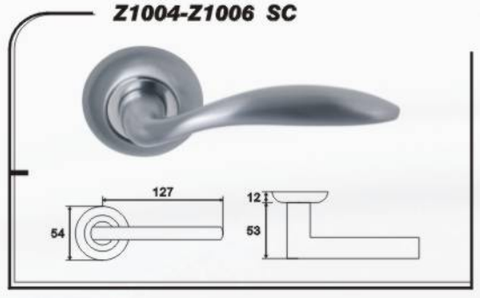

ZB245-ZB003 PB

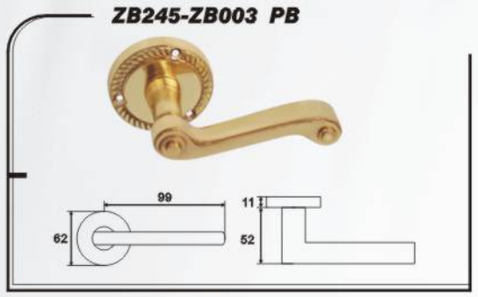

ZB245-ZB009 PB

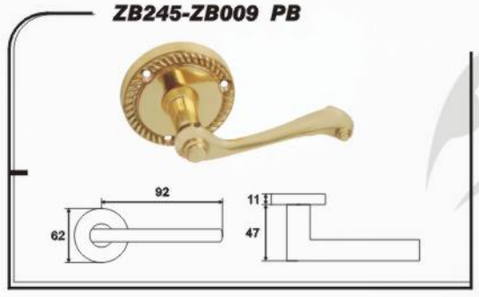

Z1004-Z1007 SG+GP



Z1004-Z1008 SC

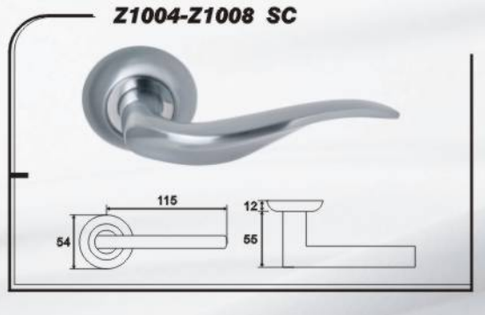

▶ Detail description see page 1

Z1004-Z1009 GP



Z1004-Z1010 SG+GP



Z1004-Z1017 SG+GP



Z1004-Z1018 SG+GP

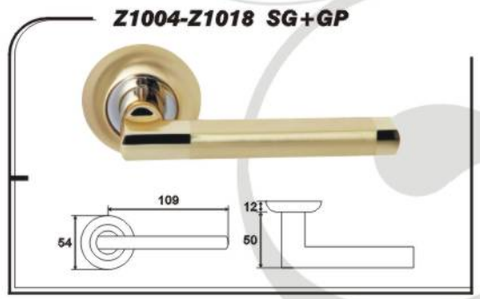

Z1004-Z1011 AB

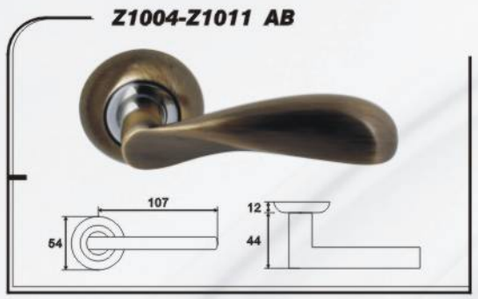

Z1004-Z1012 SN

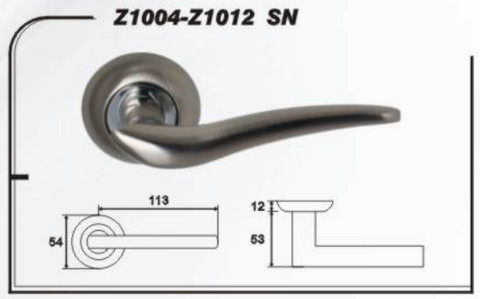

Z1004-Z1019 SN+CP



Z1004-Z1020 SG+GP



Z1004-Z1013 SG+GP



Z1004-Z1014 SG+GP

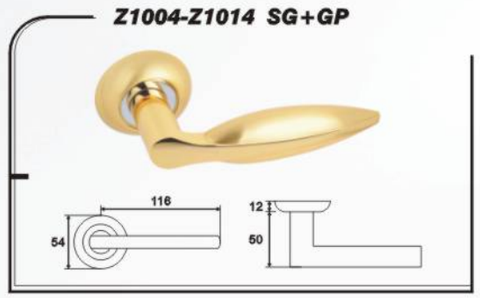

Z1004-Z1110 SN

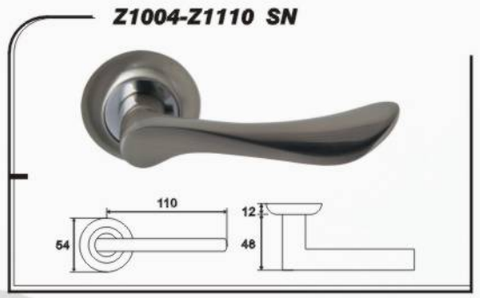

Z1004-Z1124 LN+SN



Z1004-Z1015 SG+GP



Z1004-Z1016 SC+CP

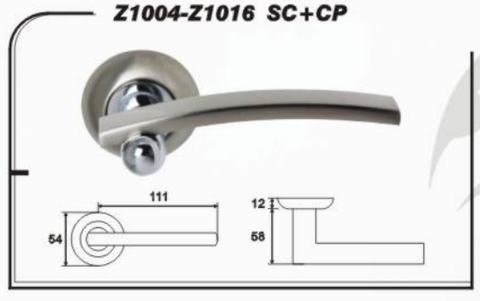

Z1004-Z1125 SN



Z1004-Z1126 SN



▶ Detail description see page 1

Z1004-Z1517 AB

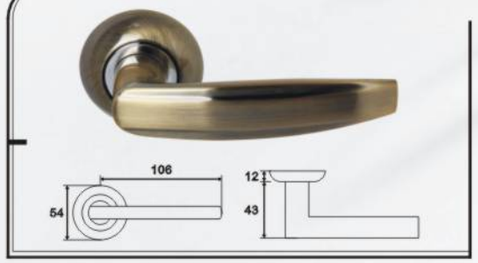

Z1004-Z1520 AB

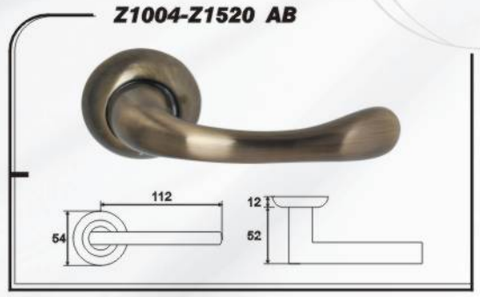

Z0001-Z2021 LN+SN

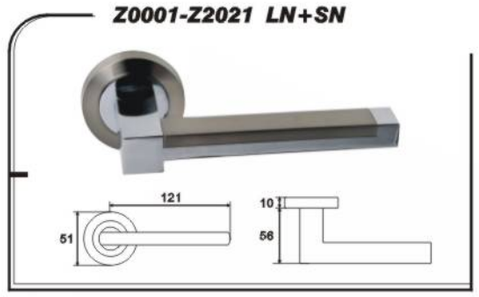

Z0001-Z2024 LN+SN

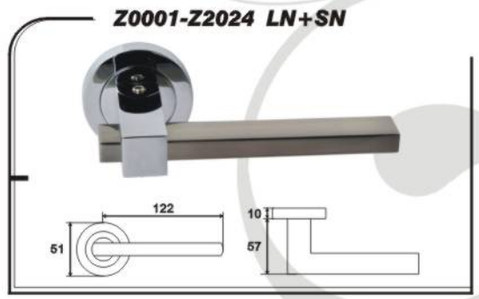

Z1004-Z1521 SN



Z1004-Z1532 LN+SN

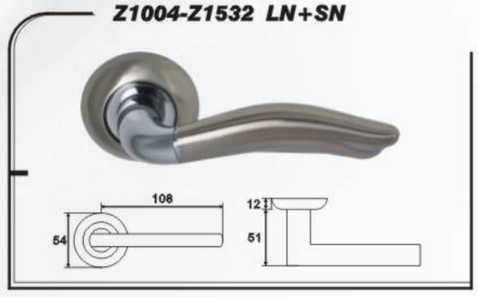

Z0001-Z2033 SN

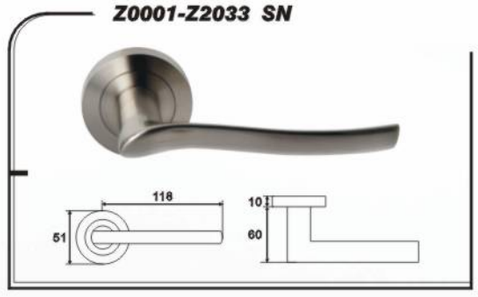

Z0001-Z2038 SN

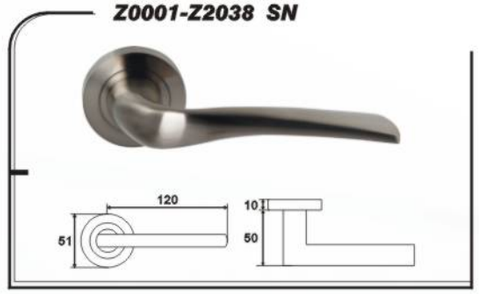

Z1004-Z0533 SN

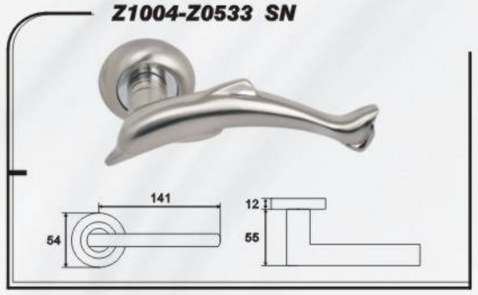

Z0001-Z2002 SN

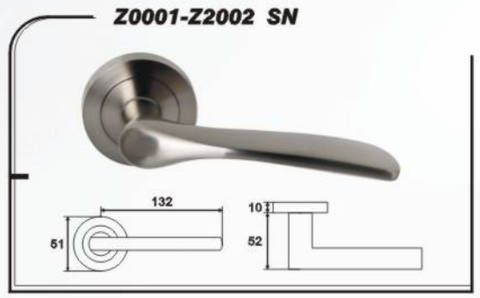

Z0001-Z2039 SN



Z0001-Z2040 LN+SN



Z0001-Z2007 CP



Z0001-Z2013 CP



Z0001-Z2042 SN

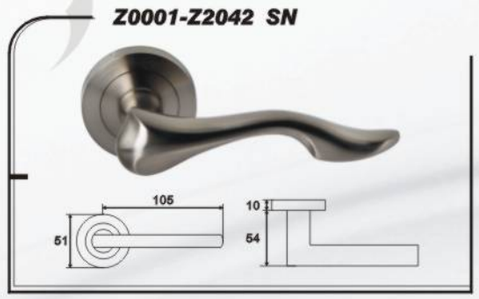

Z0001-Z2046 CP

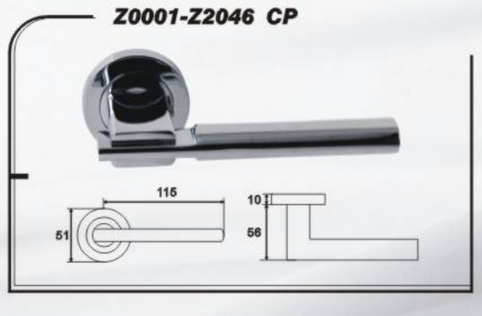

▶ Detail description see page 1

Z0001-Z2061 SN

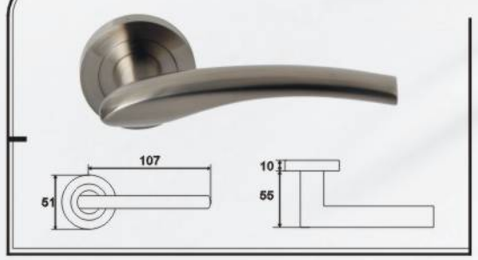

Z0001-Z3005 SN



Z0001-Z3073 AB

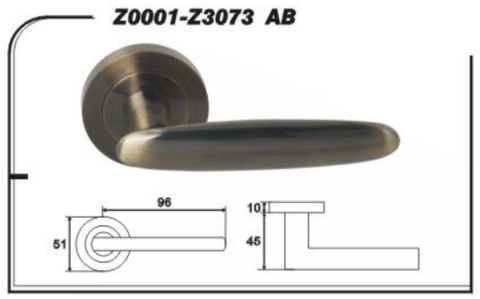

Z0001-Z3093 SN



Z0001-Z3017 AC

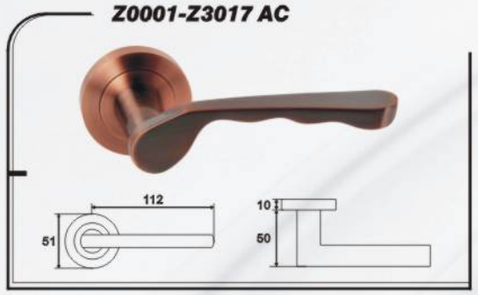

Z0001-Z3023 AB

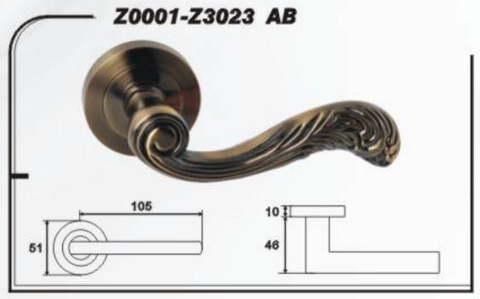

Z0001-Z3097 SN

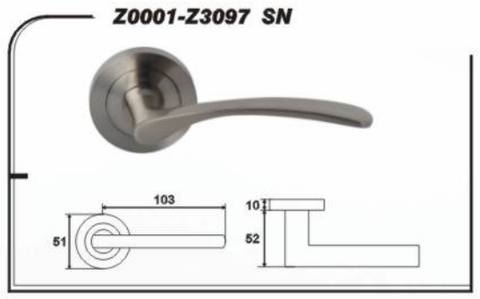

Z0001-Z3099 LN+SN



Z0001-Z3026 LN+SN



Z0001-Z3033 LN+SN



Z0001-Z3103 SC

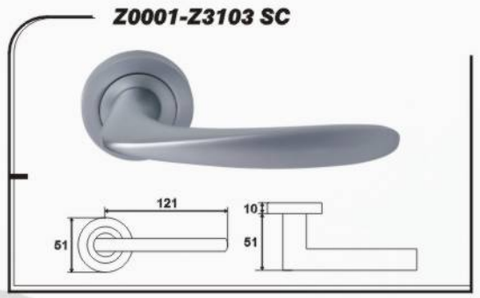

Z0001-Z3108 SN



Z0001-Z3060 SN



Z0001-Z3063 LN+SN



Z0001-Z3114 LN+SN

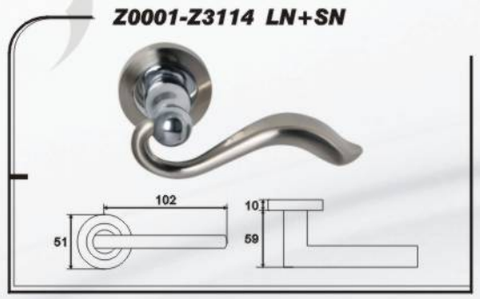

Z0001-Z3115 LN+SN

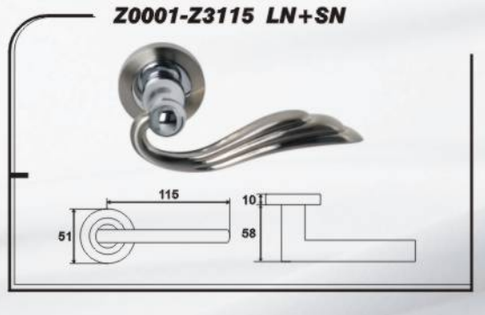

▶ Detail description see page 1

Zamac Door Catcher



Number C881
Width ⌀ 50mm
Height 77mm





Number C887A C887B
Width 60mm 60mm
Height 90mm 80mm





Number C894
Width ⌀ 43mm
Height 75mm





Number C891
Width ⌀ 45mm
Height 75mm





Number C890
Width 50mm
Height 76mm





Number C741
Width ⌀ 44mm
Height 72mm



Zamac Door stopper



Number C898S
Length 116mm
Height 27mm

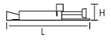



Number C898L
Length 157mm
Height 28mm

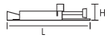



Number C899
Length 126mm
Height 24mm

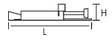



Number C936
Width ⌀ 45mm
Height 82mm





Number C701
Width ⌀ 51mm
Height 73mm





Number C888
Width ⌀ 40mm
Height 85mm

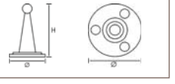



Number C889
Length 195mm
Height 34mm

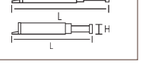



Number C858
Length 122mm
Height 35mm

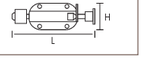



Number C892
Width ⌀ 34mm
Height 75mm

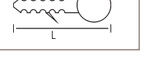

Zamac Door Catch



Number C895
Width ⌀ 45mm
Height 44mm





Number C759
Width 33mm
Height 40mm





Number C758
Width 44mm
Height 37mm





Number C902
Width ⌀ 60mm
Height 25mm

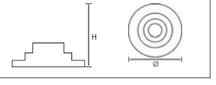



Number C700
Width ⌀ 62mm
Height 25mm

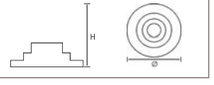



Number C701B
Width ⌀ 60mm
Height 25mm

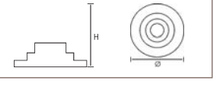



Number C934
Width ⌀ 25mm
Height 29mm





Number C935
Width ⌀ 31mm
Height 31mm





Number C933
Width ⌀ 29mm
Height 25mm



Zamac Door stopper



Number C883
Width ⌀ 45mm
Height 34mm

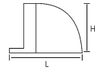



Number C884
Width ⌀ 45mm
Height 27mm

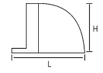



Number C886
Width ⌀ 40mm
Height 23mm

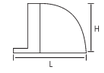



Number C802
Width ⌀ 44mm
Height 25mm

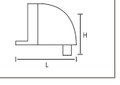



Number C799
Width ⌀ 45mm
Height 24mm

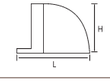



Number C800
Length 39mm
Width 33mm
Height 25mm

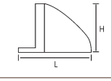



Number C801
Length 36mm
Width 52mm
Height 31mm

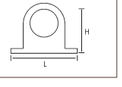



Number C938
C.C. ⌀ 28mm
Length 45mm
Width 49mm
Height 39mm

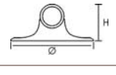



Number C874
C.C. ⌀ 58mm
Length 24mm
Width 58mm
Height 26mm

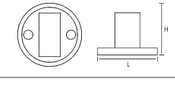

Zamac Door stopper



Number C797
Width ⌀ 25mm
Height 73mm



Number C882
Width ⌀ 25mm
Height 76mm



Number C798
Width ⌀ 23mm
Height 78mm



Number C765
Width ⌀ 25mm
Height 100mm



Number C769
Width ⌀ 32mm
Height 100mm



Number C893
Width ⌀ 24mm
Height 102mm



Number C885
Width ⌀ 36mm
Height 78mm



Number C723
Width ⌀ 22mm
Height 77mm



Number C982
Length 134mm
Width 43mm

Zamac Door Contral



Number C693
Length 60mm
Width 76mm



Number C931
Length 66mm
Width 76mm

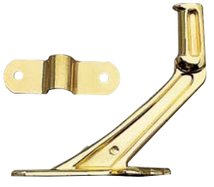

Number C689
Length 75mm
Width 32mm
Height 82mm



Number C692
Length 63mm
Width 16mm
Height 40mm



Number C932
Length 59mm
Width 10mm
Height 47mm



Number C691
Length 44mm
Width 16mm
Height 19mm



Number C690
Length 55mm
Width 15mm
Height 41mm



Number C694
Length 114mm
Width 58mm
Height 80mm



Number C937
Length 138mm
Width 41mm
Height 32mm

Zamac Bolt



Number	C616
Length	40mm
Width	72mm



Number	C722L	C722L
Length	55mm	41mm
Width	55mm	40mm



Number	C645
Length	40mm
Width	47mm



Number	C615
Length	100mm
Width	37mm

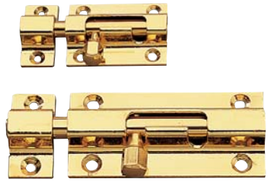

Number	C604L	C604S
Length	4″	3″
Width	37mm	37mm



Number	C646L	C646S
Length	2″	1.5″
Width	35mm	33mm



Number	C670
Length	6″
Width	39mm

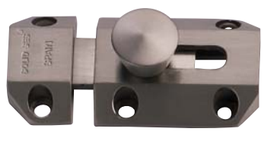

Number	C1110
Length	63mm
Width	34mm
Height	24mm

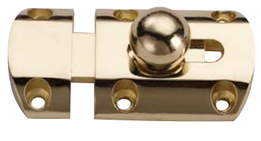

Number	C726
Length	63mm
Width	34mm

Zamac Bolt



Number	C647			
Length	8″	6″	4″	3″
Width	34mm	34mm	34mm	34mm



Number	C711			
Length	10″	8″	6″	
Width	24mm	24mm	24mm	

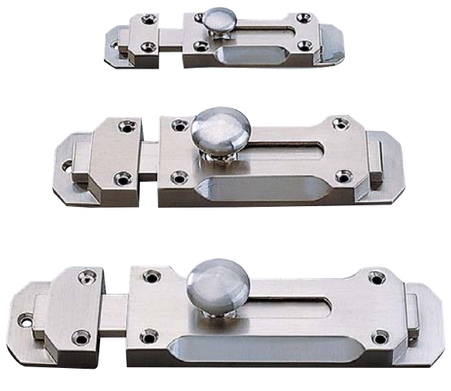

Number	C721		
Length	5″	4″	3″
Width	39mm	39mm	25mm



Number	C710				
Length	10″	8″	6″	4″	
Width	23mm	23mm	23mm	23mm	

Zamac Bolt

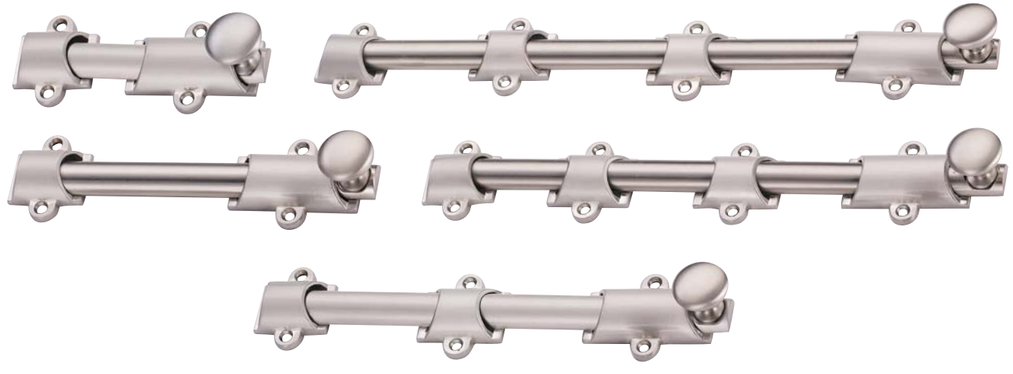

Number	C714	C714	C714	C71	C714
Length	12″	10″	9″	6″	4″
Width	41mm	41mm	41mm	41mm	41mm

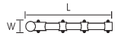



Number	C605							
Length	2″	2.5″	3″	4″	6″	8″	10″	12″
Width	32mm	32mm	32mm	32mm	32mm	32mm	32mm	32mm



Zamac Door Knocker



Number	C716S	C716L
Length	4″	5″
Width	45mm	60mm

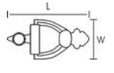



Number	C737	C943
Length	5″	4″
Width	81mm	53mm

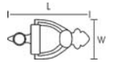



Number	C651L	C651S
Length	5″	3.5″
Width	29mm	24mm

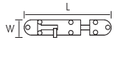



Number	C724L	C724S
Length	4″	3″
Width	31mm	31mm

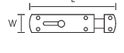



Number	C736
Length	160mm
Width	58mm





Number	C570
Length	79mm
Width	28mm
Height	32mm



Zamac Door Guard



Number C909
Length 107mm
Width 62mm

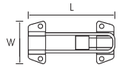



Number C906
Length 107mm
Width 62mm

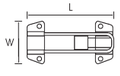



Number C981L C981S
Length 190mm 150mm
Width 60mm 60mm

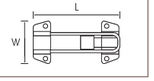



Number C903
Length 117mm
Width 65mm

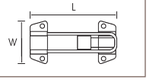



Number C907
Length 121mm
Width 37mm





Number C904
Length 140mm
Width 45mm



Zamac Door Chain



Number C1100
Length 5″
Width 35mm

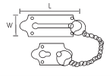



Number C650
Length 4″
Width 36mm

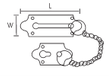



Number C715
Length $3\frac{1}{2}$″
Width 45mm

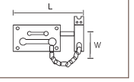



Number C649
Length 3.5″
Width 33mm

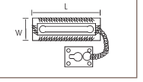



Number C905
Length 4″
Width 21mm





Number C908
Length 3″
Width 34mm

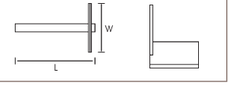

Zamac Window stay



Number C5100

Length 8″ 6″ 4″





Number C730

Length 285mm

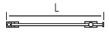



Number C984

Length 230mm





Number C983

Length 205mm

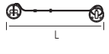

Zamac Window stay



Number C763

Length 240mm



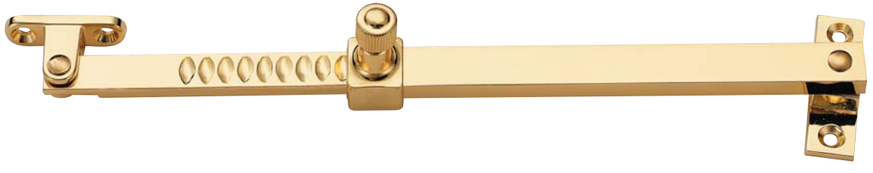

Number C740

Length 240mm

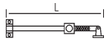



Number C762

Length 240mm

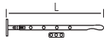



Number C864

Length 270mm

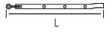

Zamac Window Latch

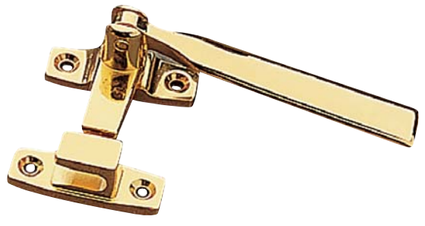

Number C742
Length 115mm

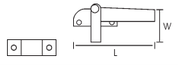



Number C862
Length 130mm

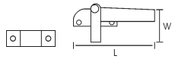



Number C863
Length 140mm

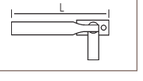



Number C764
Length 110mm

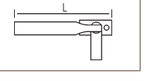



Number C727S C727L
Length 2″ 3″
Width 34mm 34mm





Number C725
Length 74mm
Width 33mm



Zamac Window Latch



Number C1874
Length 6″
Width 35mm

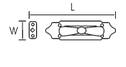



Number C1871
Length $5\frac{1}{2}$″
Width 34mm

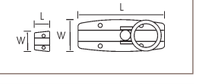



Number C1872
Length $5\frac{1}{2}$″
Width 34mm



Zamac Window Latch



Number C972
Length 36mm
Width 24mm
Height 20mm





Number C973
Length 53mm
Width 60mm
Height 27mm

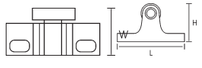



Number C618
Length 53mm
Width 25mm





Number C713A
Length 75mm
Width 50mm

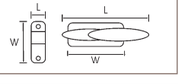



Number C713B
Length 75mm
Width 50mm

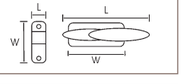



Number C684
Length 91mm
Width 61mm

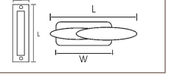



Number C704
Length 89mm
Width 60mm

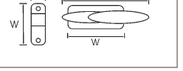



Number C712
Length 54mm
Width 39mm

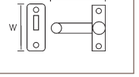



Number C717
Length 57mm
Width 49mm

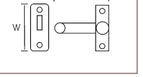

Zamac Bolt



Number C718
Length 60mm
Width 44mm
Height 75mm





Number C145
Length 4″
Width 53mm





Number C720C
Length 53mm
Width 44mm
Height 42mm

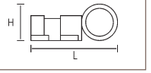



Number C720D
Length 53mm
Width 44mm
Height 42mm

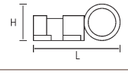



Number C720A
Length 51mm
Width 42mm
Height 46mm





Number C720B
Length 53mm
Width 44mm
Height 42mm





Number C720S
Length 51mm
Width 42mm
Height 46mm





Number C720L
Length 56mm
Width 42mm
Height 50mm



Zamac Hinge



Number	C756L	C756S
Length	95mm	82mm

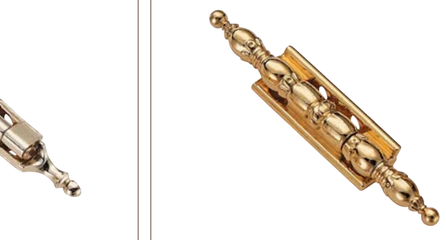

Number	C751
Length	98mm



Number	C753
Length	100mm



Number	C752
Length	98mm



Number	C755L
Length	115mm



Number	C755S
Length	100mm



Number	C750
Length	100mm



Number	C754L
Length	119mm



Number	C754S
Length	100mm

Zamac Hinge



Number	C648-A
Length	63mm
Width	54mm



Number	C648-B
Length	63mm
Width	54mm



Number	C648-C
Length	63mm
Width	54mm



Number	C648-D
Length	73mm
Width	56mm



Number	C757S	C757L
Length	77mm	102mm
Height	45mm	46mm



Number	C705-1	C705-2	C705-3
Length	97mm	97mm	97mm
Width	133mm	133mm	133mm
	75mm	75mm	75mm



Number	C709-1	C709-2	C709-3
Length	97mm	97mm	97mm
Width	129mm	129mm	129mm
	67mm	67mm	67mm

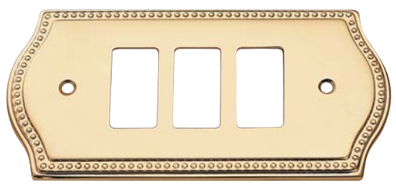

Number	C706-1	C706-2	C706-3
Length	97mm	97mm	97mm
Width	145mm	145mm	145mm
	73mm	73mm	73mm

Zamac Key Hole



Number C601
Length 46mm
Width 26mm





Number C602
Length 48mm
Width 25mm





Number C623
Length 45mm
Width 23mm





Number C930
Ø 63mm
Width 12mm





Number C630
Length 67mm
Width 30mm





Number C643A
Ø 54mm
Width 12mm





Number C643B
Ø 54mm
Width 12mm





Number C643D
Ø 54mm
Width 12mm





Number C643C
Ø 54mm
Width 12mm



Zamac Key Hole



Number C609
Length 59mm
Width 22mm





Number C624
Length 51mm
Width 20mm





Number C896
Length 35mm
Width 36mm





Number C621
Length 49mm
Width 23mm





Number C897
Length 39mm
Width 32mm





Number C619
Length 63mm
Width 20mm





Number C639
Length 38mm
Width 21mm





Number C638
Length 48mm
Width 22mm





Number C622
Length 37mm
Width 21mm



Zamac Key



Number C911
Length 62mm
Width 37mm



Number C912
Length 62mm
Width 37mm



Number C632
Length 75mm
Width 33mm



Number C631
Length 62mm
Width 35mm



Number C640
Length 78mm
Width 32mm



Number C915
Length 84mm
Width 33mm



Number C913
Length 62mm
Width 38mm



Number C915
Length 84mm
Width 33mm



Number C914
Length 62mm
Width 43mm

Zamac Number & Plates



Number C1000
Length 46mm
Width 30mm

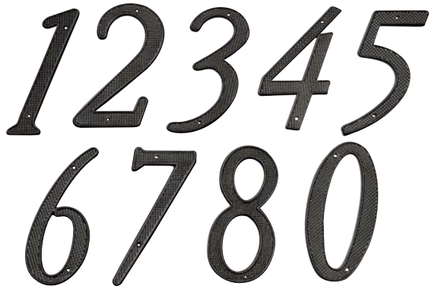

Number C738
Length 4″





Number C703-3 C703-4
Length 139mm 181mm
Width 90mm 90mm

Plastic Number & letters

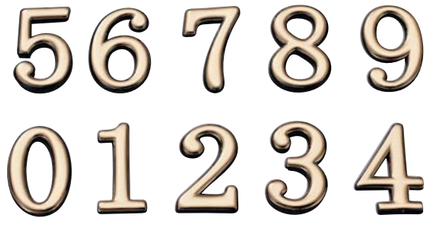

Number C707

Length 4″ 2″



Number C739 Zamac Letters

Length 4″



Number C708

Length 4″



Number C733

Length 2″

Plastic Number & letters



Number C702

Length 3″



Number C702

Length 3″

The Dispenser



Number C917

Length 120mm
Width 70mm
Height 260mm

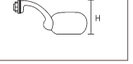



Number C918

Length 120mm
Width 70mm
Height 200mm

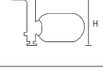



Number C919

Length 95mm
Width 80mm
Height 195mm

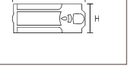

COLOR	COLOR NAME	COLOR	COLOR NAME	COLOR	COLOR NAME
BSN	Brush Satin Nickel 拉丝镍	BSB	Brushed Satin Brass 拉丝铜	WOODEN TEAK	Wooden Teak 喷柚木纹
SN	Satin Nickel 沙镍	AB	Antique Brass 青古铜	BL	Black 黑色
BN	Black Nickel 黑镍	AE	Antique English 英国青铜	WHITE	White 白色
BBN	Brushed Black Nickel 黑镍拉丝	AC	Antique Copper 红古铜	RED	Red 红色
CP	Chrome Plated 镀铬	PN	Pearl Nickel 珍珠镍	PURPLE	Purple 紫色
SC	Satin Chrome 沙铬	CHERRY WALNUT	Cherry Walnut Wood 樱桃红木	PINK	Pink 粉红色
BSC	Brush Satin Chrome 拉丝铬	WALNUT	Walnut Wood 喷桃木	BLUE	Blue 蓝色
SG	Satin Gold 沙金	BROWN OAK	Brown Oak Wood 喷棕橡木	GREY	Grey 灰色
GP	Gold Plated 仿金	OAK WOOD	Oak Wood 橡木	BROWN	Brown 棕色
BSG	Brush Satin Gold 拉丝金	RB	Red Beech 红桦	BEIGE	Beige 米黄色
BP	Brass Plated 镀铜	WB	White Beech 白桦	GREEN	Green 绿色
10B	10B 10B	PRB	Paint Red Beech 喷红桦	MILK WHITE	Milk White 乳白色


INTELLIGENCE
DOOR LOCK
智能门锁系列
Rigorous materials selection
strict with technology
Excellent in quality
perfection of production



TY2701
Sensing Lock Series
TY2701感应锁系列



TY2701 L



TY2701 C/S



TY2701 A/L

TY2701内部结构及特点
·开锁RF卡采用美国ATMEL(爱特梅尔)公司原装芯片；
·芯片内部固化全球唯一按16进制编排16位系列号密码；
·驱动部件使用日本Mabuchi Motor(万宝至)株式会社专用锁具马达；
·开锁RF卡可实现酒店一卡通功能；
·门锁电脑板芯片采用飞利浦工业级芯片；
·忘关门门没关好声光提醒功能；

TY2701 Internal structure and characteristics
·Unlock RF card adopts the original chip from USA ATMEL Company;
·The inside of the chip is fixed with the unique 16 digits serial NO.
Password arranged according to hex;
·Driving parts adopt special lock motor of Japan Mabuchi Motor Co., Ltd;
·Openning to lock The RF card can carry out one cartoon function of cabaret;
·A lock computer plank chip adopts philip's industry class chip;
·Unlocking warning/Alarming and lighting when the door is unlocked.

TY2701 尺寸图
Dimension figure

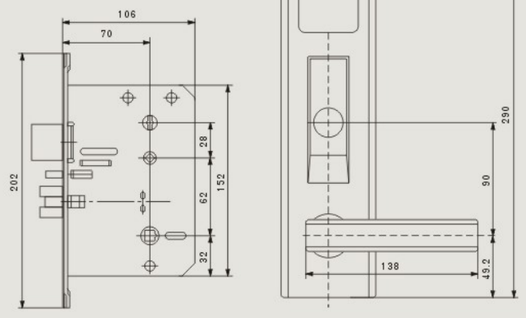

技术参考：
Technological Parameter

·电源 Power Supply	DC4.5V-.5V，4节1.5V Aa碱性电池 DC4.5V-.5V, 4 Jie 1.5V Aa Alkaline Battery
·静态电流 Static Current	<18微安(uA)
·动态电流 Dynamic Current	<200毫安(mA)
·储存温度 Storage Temperature	-20~+85℃
·储存湿度 Storage Humidity	10%~90% RH
·工作温度 \Work Temperature	0~+80℃

·工作湿度 \Work Humidity	15%~95% RH
·卡接近检测方法 Card Approaching Test Method	红外脉冲反射式接近检测 Infrared pulse reflection type approaching test
4赫兹(HZ) Infrared Pulse Transmission Frequency	·红处脉冲发射频率
·感应工作频率 Sensing work Frrequency	100K-150K
·欠压提示 Under Voltage Indication	工作电压低于4.8伏报警，此时还可开门200次 \Warn when work voltage is lower then 4.8V ,and under this situation, the door can be opened for 200 times.
·重量 \Weight	3.8-4.2Kg

系统功能卡列表：
List Form Of System Function Card
·密码授权卡 Password Authorization Card
·总管卡 Manager Card
·楼栋卡 Building Card
·区域卡(管理卡) Floor (Management Card)
·应急卡 Emergaency Card
·校时卡 Timing Card
·客人卡 Customer Card
·房号安装卡 Room NO. Installation Card
·数据卡 Date Card
·临时客人卡 Temporary Customer Card

可选表面处理
Optional surface treatment
L 镍拉丝　C/L 金拉丝　A/L 砂金





TY2801
Sensing Lock Series
TY2801感应锁系列



TY2801 L



TY2801 L



TY2801 A/L



TY2801 B/L

TY2801内部结构及特点
·开锁RF卡采用美国ATMEL(爱特梅尔)公司原装芯片；
·芯片内部固化全球唯一按16进制编排16位系列号密码；
·驱动部件使用日本Mabuchi Motor(万宝至)株式会社专用锁具马达；
·开锁RF卡可实现酒店一卡通功能；
·门锁电脑板芯片采用飞利浦工业级芯片；
·忘关门/门没关好声光提醒功能；

TY2801 Internal structure and characteristics
·Unlock RF card adopts the original chip from USA ATMEL Company;
·The inside of the chip is fixed with the unique 16 digits serial NO. Password arranged according to hex;
·Driving parts adopt special lock motor of Japan Mabuchi Motor Co., Ltd;
·Openning to lock The RF card can carry out one cartoon function of cabaret;
·A lock computer plank chip adopts philip's industry class chip;
·Unlocking warning/Alarming and lighting when the door is unlocked.

TY2801 尺寸图
Dimension figure

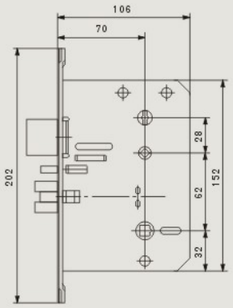

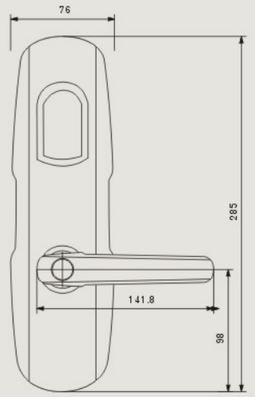

技术参考：
Technological Parameter

·电源 Power Supply	DC4.5V-.5V , 4节1.5V Aa碱性电池 DC4.5V-.5V, 4 Jie 1.5V Aa Alkaline Battery
·静态电流 Static Current	<18微安(uA)
·动态电流 Dynamic Current	<200毫安(mA)
·储存温度 Storage Temperature	-20~+85℃
·储存湿度 Storage Humidity	10%~90% RH
·工作温度 \Work Temperature	0~+80℃

·工作湿度 \Work Humidity	15%~95% RH
·卡接近检测方法 Card Approaching Test Method	红外脉冲反射式接近检测 Infrared pulse reflection type approaching test
4赫兹(HZ) Infrared Pulse Transmission Frequency	·红处脉冲发射频率
·感应工作频率 Sensing work Frrequency	100K-150K
·欠压提示 Under Voltage Indication	工作电压低于4.8伏报警，此时还可开门200次 \Warn when work voltage is lower then 4.8V ,and under this situation, the door can be opened for 200 times.
·重量 \Weight	3.8-4.2Kg

系统功能卡列表：
List Form Of System Function Card
·密码授权卡 Password Authorization Card
·总管卡 Manager Card
·楼栋卡 Building Card
·区域卡(管理卡) Floor (Management Card)
·应急卡 Emergaency Card
·校时卡 Timing Card
·客人卡 Customer Card
·房号安装卡 Room NO. Installation Card
·数据卡 Date Card
·临时客人卡 Temporary Customer Card

可选表面处理
Optional surface treatment
L 镍拉丝　A/L 砂金　B/L 砂银

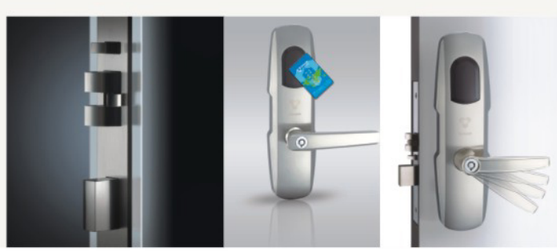

TY2400
Sensing Lock Series
TY2400感应锁系列

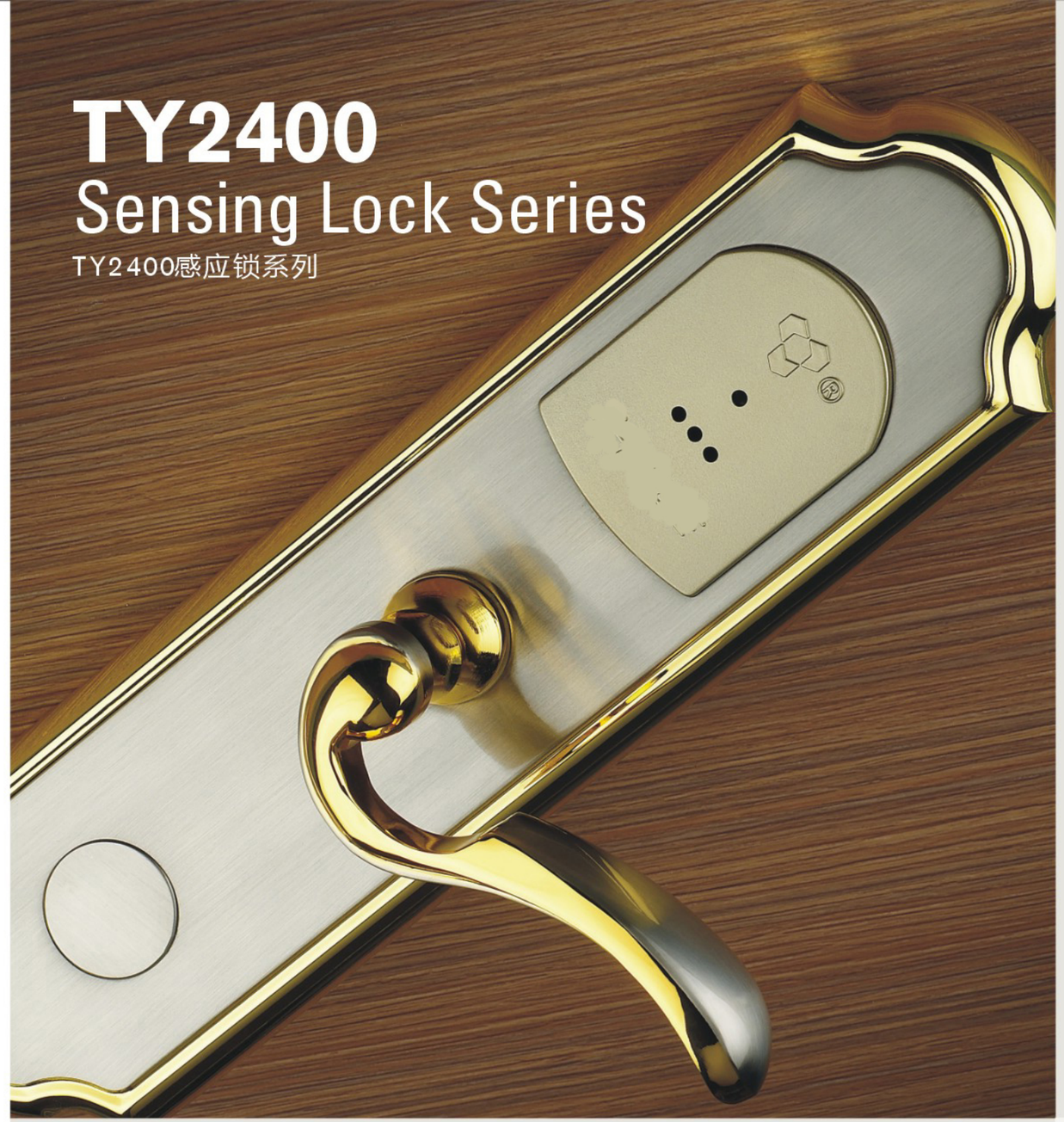



TY2400 C/L



TY2400 L

TY2400内部结构及特点

·开锁RF卡采用美国ATMEL(爱特梅尔)公司原装芯片；
·芯片内部固化全球唯一按16进制编排16位系列号密码；
·驱动部件使用日本Mabuchi Motor(万宝至)株式会社专用锁具马达；
·开锁RF卡可实现酒店一卡通功能；
·门锁电脑板芯片采用飞利浦工业级芯片；
·忘关门/门没关好声光提醒功能；

TY2400 Internal structure and characteristics

·Unlock RF card adopts the original chip from USA ATMEL Company;
·The inside of the chip is fixed with the unique 16 digits serial NO. Password arranged according to hex;
·Driving parts adopt special lock motor of Japan Mabuchi Motor Co., Ltd;
·Openning to lock The RF card can carry out one cartoon function of cabaret;
·A lock computer plank chip adopts philip's industry class chip;
·Unlocking warning/Alarming and lighting when the door is unlocked.

TY2400 尺寸图
Dimension figure

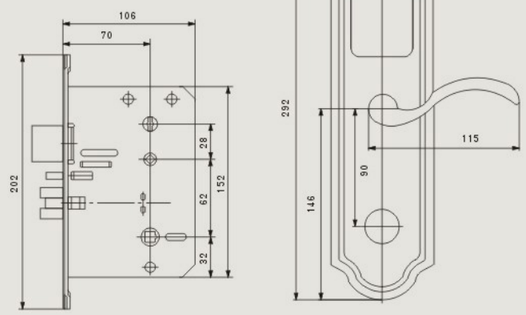

技术参考：
Technological Parameter

·电源 Power Supply	DC4.5V-.5V，4节1.5V Aa碱性电池 DC4.5V-.5V, 4 Jie 1.5V Aa Alkaline Battery
·静态电流 Static Current	<18微安(uA)
·动态电流 Dynamic Current	<200毫安(mA)
·储存温度 Storage Temperature	-20~+85℃
·储存湿度 Storage Humidity	10%~90% RH
·工作温度 \Work Temperature	0~+80℃
·工作湿度 \Work Humidity	15%~95% RH
·卡接近检测方法 Card Approaching Test Method	红外脉冲反射式接近检测 Infrared pulse reflection type approaching test
4赫兹(HZ) Infrared Pulse Transmission Frequency	·红处脉冲发射频率
·感应工作频率 Sensing work Frrequency	100K-150K
·欠压提示 Under Voltage Indication	工作电压低于4.8伏报警，此时还可开门200次 \Warn when work voltage is lower then 4.8V ,and under this situation, the door can be opened for 200 times.
·重量 \Weight	3.8-4.2Kg

系统功能卡列表：
List Form Of System Function Card

·密码授权卡 Password Authorization Card
·总管卡 Manager Card
·楼栋卡 Building Card
·区域卡(管理卡) Floor (Management Card)
·应急卡 Emergaency Card
·校时卡 Timing Card
·客人卡 Customer Card
·房号安装卡 Room NO. Installation Card
·数据卡 Date Card
·临时客人卡 Temporary Customer Card

可选表面处理
Optional surface treatment

L
镍拉丝

C/L
镍面/金边





TY2703
Sensing Lock Series
TY2703感应锁系列



TY2703 C/S



TY2703 L

TY2703内部结构及特点
·开锁RF卡采用美国ATMEL(爱特梅尔)公司原装芯片；
·芯片内部固化全球唯一按16进制编排16位系列号密码；
·驱动部件使用日本Mabuchi Motor(万宝至)株式会社专用锁具马达；
·开锁RF卡可实现酒店一卡通功能；
·门锁电脑板芯片采用飞利浦工业级芯片；
·忘关门/门没关好声光提醒功能；

TY2703 Internal structure and characteristics
·Unlock RF card adopts the original chip from USA ATMEL Company;
·The inside of the chip is fixed with the unique 16 digits serial NO. Password arranged according to hex;
·Driving parts adopt special lock motor of Japan Mabuchi Motor Co., Ltd;
·Openning to lock The RF card can carry out one cartoon function of cabaret;
·A lock computer plank chip adopts philip's industry class chip;
·Unlocking warning/Alarming and lighting when the door is unlocked.

TY2703 尺寸图
Dimension figure

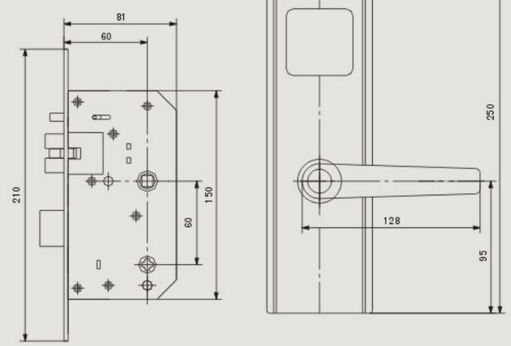

技术参考：
Technological Parameter

·电源 Power Supply	DC4.5V-.5V，4节1.5V Aa碱性电池 DC4.5V-.5V, 4 Jie 1.5V Aa Alkaline Battery
·静态电流 Static Current	<18微安(uA)
·动态电流 Dynamic Current	<200毫安(mA)
·储存温度 Storage Temperature	-20~+85℃
·储存湿度 Storage Humidity	10%~90% RH
·工作温度 Work Temperature	0~+80℃
·工作湿度 Work Humidity	15%~95% RH
·卡接近检测方法 Card Approaching Test Method	红外脉冲反射式接近检测 Infrared pulse reflection type approaching test
4赫兹(HZ) Infrared Pulse Transmission Frequency	·红处脉冲发射频率
·感应工作频率 Sensing work Frrequency	100K-150K
·欠压提示 Under Voltage Indication	工作电压低于4.8伏报警，此时还可开门200次 Warn when work voltage is lower then 4.8V, and under this situation, the door can be opened for 200 times.
·重量 Weight	3.8-4.2Kg

系统功能卡列表：
List Form Of System Function Card
·密码授权卡 Password Authorization Card
·总管卡 Manager Card
·楼栋卡 Building Card
·区域卡(管理卡) Floor (Management Card)
·应急卡 Emergaency Card
·校时卡 Timing Card
·客人卡 Customer Card
·房号安装卡 Room NO. Installation Card
·数据卡 Date Card
·临时客人卡 Temporary Customer Card

可选表面处理
Optional surface treatment
L 镍拉丝
C/S 金拉丝



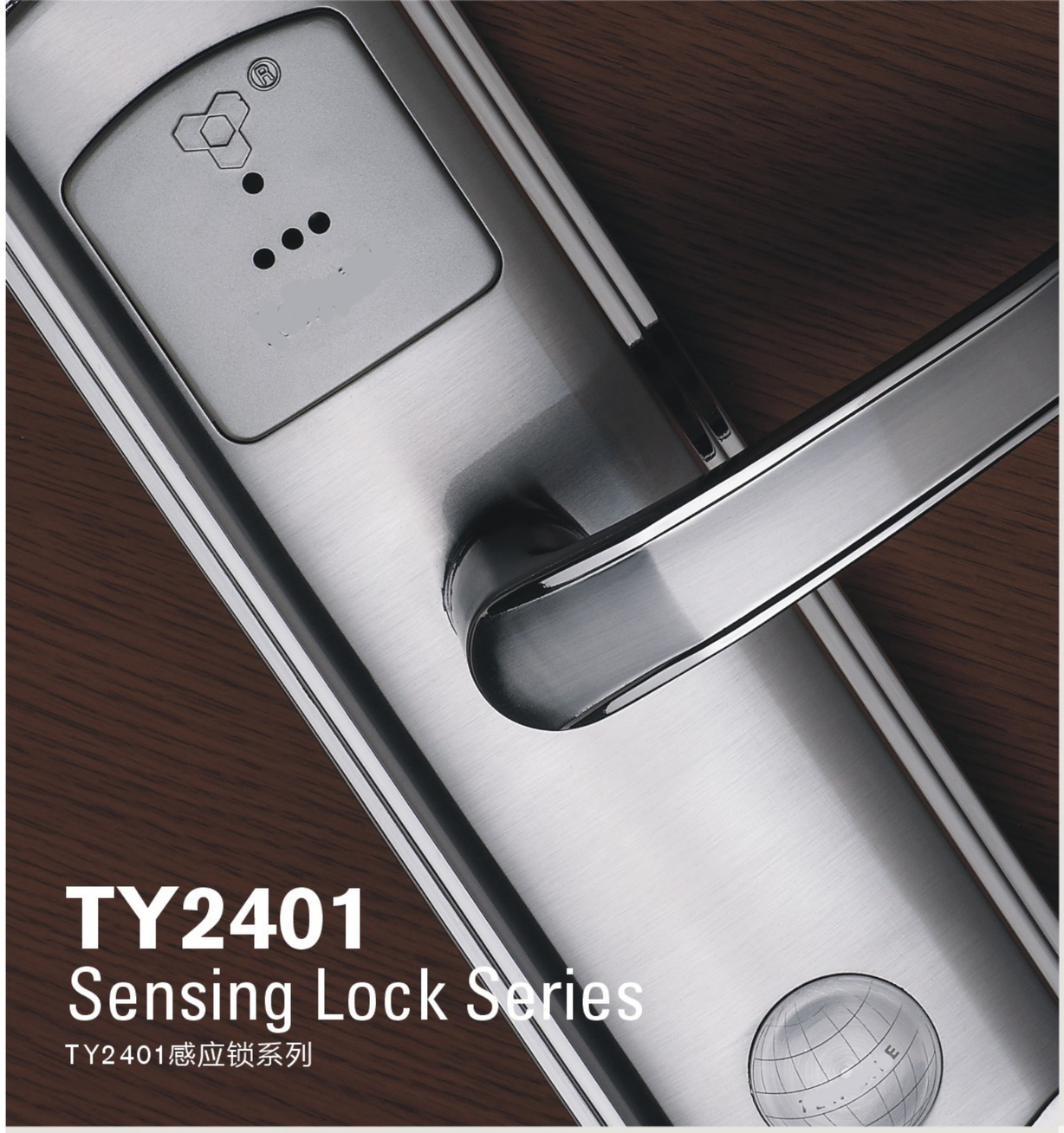

TY2401
Sensing Lock Series
TY2401感应锁系列



TY2401 L



TY2401 C/S

TY2401内部结构及特点

·开锁RF卡采用美国ATMEL(爱特梅尔)公司原装芯片；
·芯片内部固化全球唯一按16进制编排16位系列号密码；
·驱动部件使用日本Mabuchi Motor(万宝至)株式会社专用锁具马达；
·开锁RF卡可实现酒店一卡通功能；
·门锁电脑板芯片采用飞利浦工业级芯片；
·忘关门/门没关好声光提醒功能；

TY2401 Internal structure and characteristics

·Unlock RF card adopts the original chip from USA ATMEL Company;
·The inside of the chip is fixed with the unique 16 digits serial NO. Password arranged according to hex;
·Driving parts adopt special lock motor of Japan Mabuchi Motor Co., Ltd;
·Openning to lock The RF card can carry out one cartoon function of cabaret;
·A lock computer plank chip adopts philip's industry class chip;
·Unlocking warning/Alarming and lighting when the door is unlocked.

TY2401 尺寸图
Dimension figure

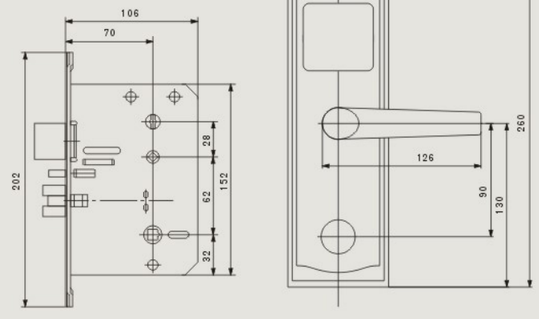

技术参考：
Technological Parameter

·电源 Power Supply	DC4.5V-.5V，4节1.5V Aa碱性电池 DC4.5V-.5V, 4 Jie 1.5V Aa Alkaline Battery
·静态电流 Static Current	<18微安(uA)
·动态电流 Dynamic Current	<200毫安(mA)
·储存温度 Storage Temperature	-20~+85℃
·储存湿度 Storage Humidity	10%~90% RH
·工作温度 \Work Temperature	0~+80℃

·工作湿度 \Work Humidity	15%~95% RH
·卡接近检测方法 Card Approaching Test Method	红外脉冲反射式接近检测 Infrared pulse reflection type approaching test
4赫兹(HZ) Infrared Pulse Transmission Frequency	·红处脉冲发射频率
·感应工作频率 Sensing work Frrequency	100K-150K
·欠压提示 Under Voltage Indication	工作电压低于4.8伏报警，此时还可开门200次 \Warn when work voltage is lower then 4.8V ,and under this situation, the door can be opened for 200 times.
·重量 \Weight	3.8-4.2Kg

系统功能卡列表：
List Form Of System Function Card

·密码授权卡 Password Authorization Card
·总管卡 Manager Card
·楼栋卡 Building Card
·区域卡(管理卡) Floor (Management Card)
·应急卡 Emergaency Card
·校时卡 Timing Card
·客人卡 Customer Card
·房号安装卡 Room NO. Installation Card
·数据卡 Date Card
·临时客人卡 Temporary Customer Card

可选表面处理
Optional surface treatment

L 镍拉丝
C/S 金拉丝

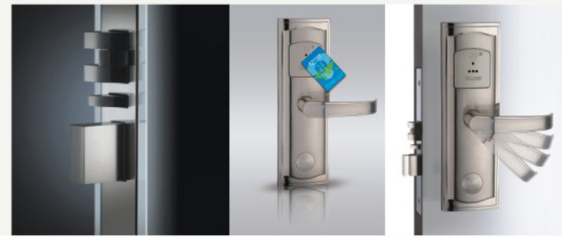



TY2402
Sensing Lock Series
TY2402感应锁系列



TY2402 C/S



TY2402 L

TY2402内部结构及特点
·304不锈钢材料制造
·开锁RF卡采用美国ATMEL(爱特梅尔)公司原装芯片；
·芯片内部固化全球唯一按16进制编排16位系列号密码；
·驱动部件使用日本Mabuchi Motor(万宝至)株式会社专用锁具马达；
·开锁RF卡可实现酒店一卡通功能；
·门锁电脑板芯片采用飞利浦工业级芯片；
·忘关门/门没关好声光提醒功能；

TY2402 Internal structure and characteristics
·Made by 304 stainless steel
·Unlock RF card adopts the original chip from USA ATMEL Company;
·The inside of the chip is fixed with the unique 16 digits serial NO. Password arranged according to hex;
·Driving parts adopt special lock motor of Japan Mabuchi Motor Co., Ltd;
·Openning to lock The RF card can carry out one cartoon function of cabaret;
·A lock computer plank chip adopts philip's industry class chip;
·Unlocking warning/Alarming and lighting when the door is unlocked.

TY2402 尺寸图
Dimension figure

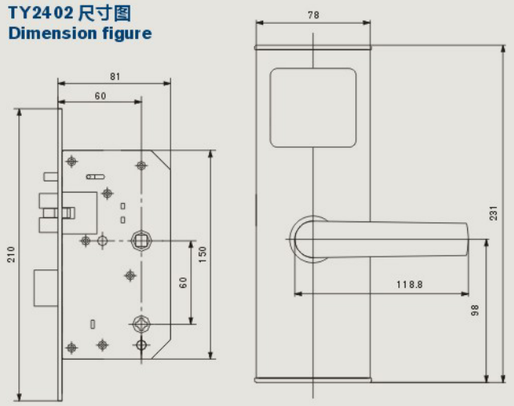

技术参考：
Technological Parameter

·电源 Power Supply	DC4.5V-.5V，4节1.5V Aa碱性电池 DC4.5V-.5V, 4 Jie 1.5V Aa Alkaline Battery
·静态电流 Static Current	<18微安(uA)
·动态电流 Dynamic Current	<200毫安(mA)
·储存温度 Storage Temperature	-20~+85℃
·储存湿度 Storage Humidity	10%~90% RH
·工作温度 \Work Temperature	0~+80℃

·工作湿度 \Work Humidity	15%~95% RH
·卡接近检测方法 Card Approaching Test Method	红外脉冲反射式接近检测 Infrared pulse reflection type approaching test
4赫兹(HZ) Infrared Pulse Transmission Frequency	·红处脉冲发射频率
·感应工作频率 Sensing work Frrequency	100K-150K
·欠压提示 Under Voltage Indication	工作电压低于4.8伏报警，此时还可开门200次 \Warn when work voltage is lower then 4.8V ,and under this situation, the door can be opened for 200 times.
·重量 \Weight	3.8-4.2Kg

系统功能卡列表：
List Form Of System Function Card
·密码授权卡 Password Authorization Card
·总管卡 Manager Card
·楼栋卡 Building Card
·区域卡(管理卡) Floor (Management Card)
·应急卡 Emergaency Card
·校时卡 Timing Card
·客人卡 Customer Card
·房号安装卡 Room NO. Installation Card
·数据卡 Date Card
·临时客人卡 Temporary Customer Card

可选表面处理
Optional surface treatment
L 镍拉丝
C/S 金拉丝



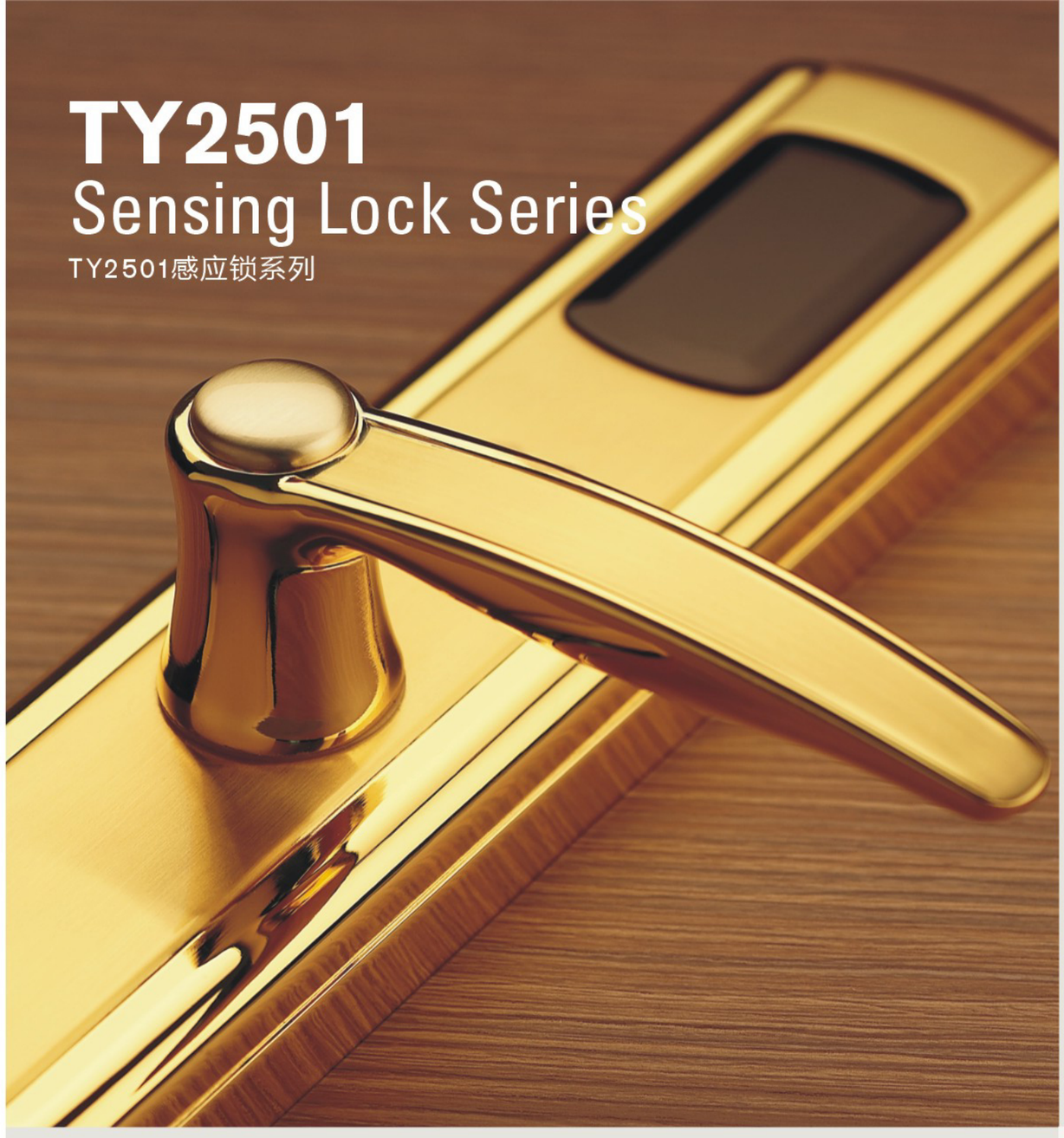

TY2501
Sensing Lock Series
TY2501感应锁系列



TY2501 C/S



TY2501 L

TY2501内部结构及特点
·开锁RF卡采用美国ATMEL(爱特梅尔)公司原装芯片；
·芯片内部固化全球唯一按16进制编排16位系列号密码；
·驱动部件使用日本Mabuchi Motor(万宝至)株式会社专用锁具马达；
·开锁RF卡可实现酒店一卡通功能；
·门锁电脑板芯片采用飞利浦工业级芯片；
·忘关门/门没关好声光提醒功能；

TY2501 Internal structure and characteristics
·Unlock RF card adopts the original chip from USA ATMEL Company;
·The inside of the chip is fixed with the unique 16 digits serial NO.
Password arranged according to hex;
·Driving parts adopt special lock motor of Japan Mabuchi Motor Co., Ltd;
·Openning to lock The RF card can carry out one cartoon function of cabaret;
·A lock computer plank chip adopts philip's industry class chip;
·Unlocking warning/Alarming and lighting when the door is unlocked.

TY2501 尺寸图
Dimension figure

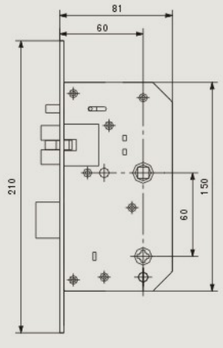

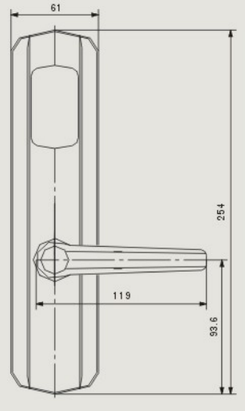

技术参考：
Technological Parameter

·电源 Power Supply	DC4.5V-.5V，4节1.5V Aa碱性电池 DC4.5V-.5V, 4 Jie 1.5V Aa Alkaline Battery
·静态电流 Static Current	<18微安(uA)
·动态电流 Dynamic Current	<200毫安(mA)
·储存温度 Storage Temperature	-20~+85℃
·储存湿度 Storage Humidity	10%~90% RH
·工作温度 \Work Temperature	0~+80℃

·工作湿度 \Work Humidity	15%~95% RH
·卡接近检测方法 Card Approaching Test Method	红外脉冲反射式接近检测 Infrared pulse reflection type approaching test
4赫兹(HZ) Infrared Pulse Transmission Frequency	·红处脉冲发射频率
·感应工作频率 Sensing work Frrequency	100K-150K
·欠压提示 Under Voltage Indication	工作电压低于4.8伏报警，此时还可开门200次 \Warn when work voltage is lower then 4.8V ,and under this situation, the door can be opened for 200 times.
·重量 \Weight	3.8-4.2Kg

系统功能卡列表：
List Form Of System Function Card
·密码授权卡 Password Authorization Card
·总管卡 Manager Card
·楼栋卡 Building Card
·区域卡(管理卡) Floor (Management Card)
·应急卡 Emergaency Card
·校时卡 Timing Card
·客人卡 Customer Card
·房号安装卡 Room NO. Installation Card
·数据卡 Date Card
·临时客人卡 Temporary Customer Card

可选表面处理
Optional surface treatment
L 镍拉丝
C/S 金拉丝

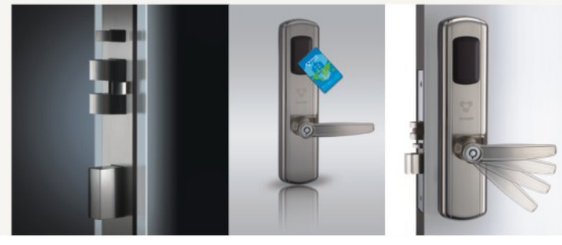

TY2601
Sensing Lock Series
TY2601感应锁系列

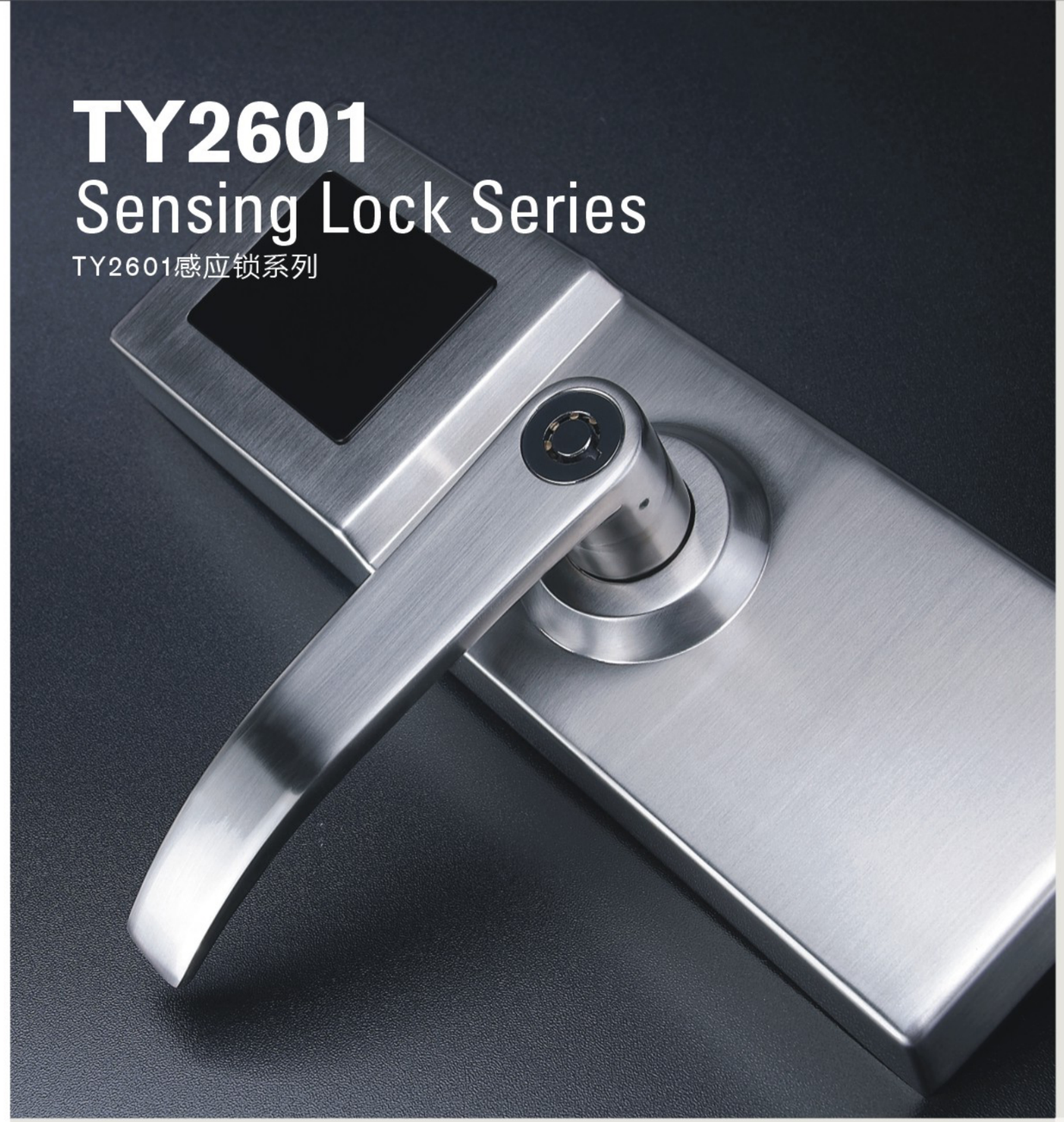



TY2601 A/L



TY2601 L



TY2601 C/S

TY2601内部结构及特点
·开锁RF卡采用美国ATMEL(爱特梅尔)公司原装芯片；
·芯片内部固化全球唯一按16进制编排16位系列号密码；
·驱动部件使用日本Mabuchi Motor(万宝至)株式会社专用锁具马达；
·开锁RF卡可实现酒店一卡通功能；
·门锁电脑板芯片采用飞利浦工业级芯片；
·忘关门/门没关好声光提醒功能；

TY2601 Internal structure and characteristics
·Unlock RF card adopts the original chip from USA ATMEL Company;
·The inside of the chip is fixed with the unique 16 digits serial NO. Password arranged according to hex;
·Driving parts adopt special lock motor of Japan Mabuchi Motor Co., Ltd;
·Openning to lock The RF card can carry out one cartoon function of cabaret;
·A lock computer plank chip adopts philip's industry class chip;
·Unlocking warning/Alarming and lighting when the door is unlocked.

TY2601 尺寸图
Dimension figure

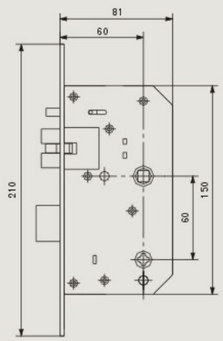

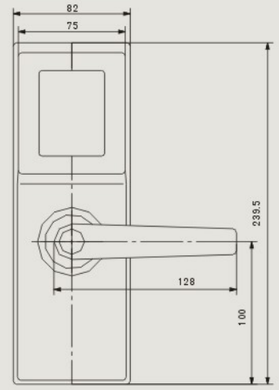

技术参考：
Technological Parameter

·电源 Power Supply	DC4.5V-.5V，4节1.5V Aa碱性电池 DC4.5V-.5V, 4 Jie 1.5V Aa Alkaline Battery
·静态电流 Static Current	<18微安(uA)
·动态电流 Dynamic Current	<200毫安(mA)
·储存温度 Storage Temperature	-20~+85℃
·储存湿度 Storage Humidity	10%~90% RH
·工作温度 \Work Temperature	0~+80℃

·工作湿度 \Work Humidity	15%~95% RH
·卡接近检测方法 Card Approaching Test Method	红外脉冲反射式接近检测 Infrared pulse reflection type approaching test
4赫兹(HZ) Infrared Pulse Transmission Frequency	·红处脉冲发射频率
·感应工作频率 Sensing work Frrequency	100K-150K
·欠压提示 Under Voltage Indication	工作电压低于4.8伏报警，此时还可开门200次 \Warn when work voltage is lower then 4.8V ,and under this situation, the door can be opened for 200 times.
·重量 \Weight	3.8-4.2Kg

系统功能卡列表：
List Form Of System Function Card
·密码授权卡 Password Authorization Card
·总管卡 Manager Card
·楼栋卡 Building Card
·区域卡(管理卡) Floor (Management Card)
·应急卡 Emergaency Card
·校时卡 Timing Card
·客人卡 Customer Card
·房号安装卡 Room NO. Installation Card
·数据卡 Date Card
·临时客人卡 Temporary Customer Card

可选表面处理
Optional surface treatment
L 镍拉丝　C/L 金拉丝　A/L 砂金



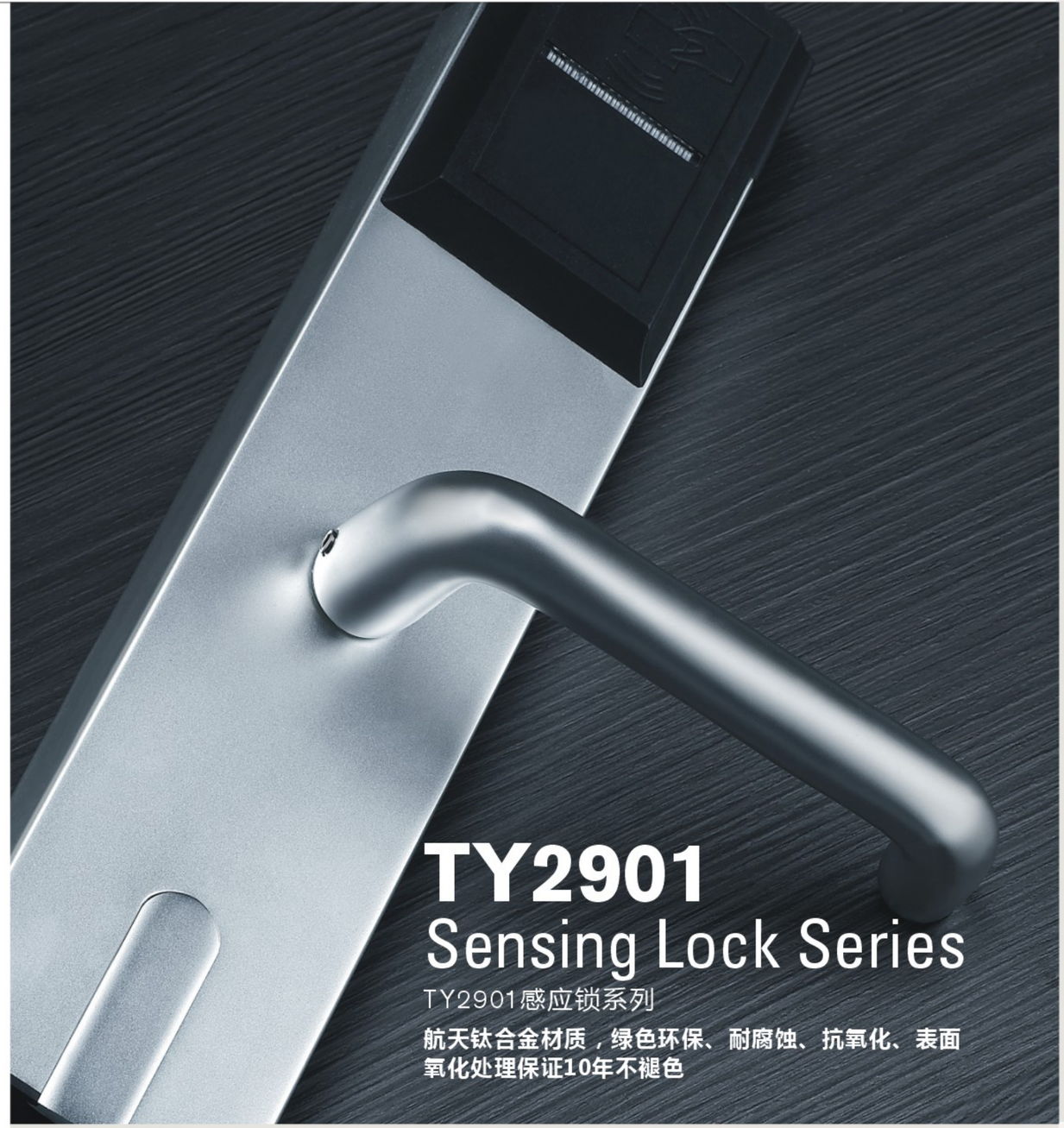

TY2901
Sensing Lock Series
TY2901感应锁系列

航天钛合金材质，绿色环保、耐腐蚀、抗氧化、表面氧化处理保证10年不褪色



TY2901 XB



TY2901-2 A

TY2901内部结构及特点

·开锁RF卡采用美国ATMEL(爱特梅尔)公司原装芯片；
·芯片内部固化全球唯一按16进制编排16位系列号密码；
·驱动部件使用日本Mabuchi Motor(万宝至)株式会社专用锁具马达；
·开锁RF卡可实现酒店一卡通功能；
·门锁电脑板芯片采用飞利浦工业级芯片；
·忘关门/门没关好声光提醒功能；

TY2901 Internal structure and characteristics

·Unlock RF card adopts the original chip from USA ATMEL Company;
·The inside of the chip is fixed with the unique 16 digits serial NO. Password arranged according to hex;
·Driving parts adopt special lock motor of Japan Mabuchi Motor Co., Ltd;
·Openning to lock The RF card can carry out one cartoon function of cabaret;
·A lock computer plank chip adopts philip's industry class chip;
·Unlocking warning/Alarming and lighting when the door is unlocked.

TY2901 尺寸图
Dimension figure

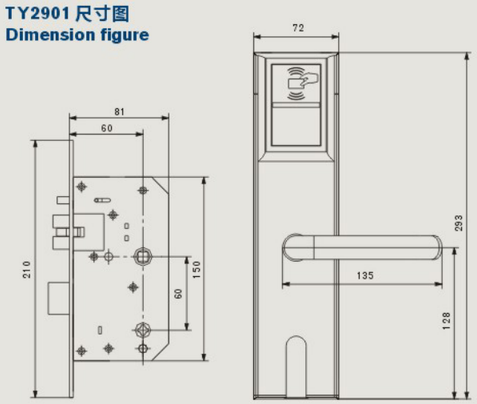

技术参考：
Technological Parameter

·电源 Power Supply	DC4.5V-.5V，4节1.5V Aa碱性电池 DC4.5V-.5V, 4 Jie 1.5V Aa Alkaline Battery
·静态电流 Static Current	<18微安(uA)
·动态电流 Dynamic Current	<200毫安(mA)
·储存温度 Storage Temperature	-20~+85℃
·储存湿度 Storage Humidity	10%~90% RH
·工作温度 \Work Temperature	0~+80℃

·工作湿度 \Work Humidity	15%~95% RH
·卡接近检测方法 Card Approaching Test Method	红外脉冲反射式接近检测 Infrared pulse reflection type approaching test
4赫兹(HZ) Infrared Pulse Transmission Frequency	·红处脉冲发射频率
·感应工作频率 Sensing work Frrequency	100K-150K
·欠压提示 Under Voltage Indication	工作电压低于4.8伏报警，此时还可开门200次 \Warn when work voltage is lower then 4.8V ,and under this situation, the door can be opened for 200 times.
·重量 \Weight	3.8-4.2Kg

系统功能卡列表：
List Form Of System Function Card

·密码授权卡 Password Authorization Card
·总管卡 Manager Card
·楼栋卡 Building Card
·区域卡(管理卡) Floor (Management Card)
·应急卡 Emergaency Card
·校时卡 Timing Card
·客人卡 Customer Card
·房号安装卡 Room NO. Installation Card
·数据卡 Date Card
·临时客人卡 Temporary Customer Card

可选表面处理
Optional surface treatment

A 氧化银　　XB 氧化金



TY8102
Sensing Lock Series
TY8102感应锁系列





TY8102 L



TY8102 C/S

TY8102内部结构及特点
·开锁RF卡采用美国ATMEL(爱特梅尔)公司原装芯片；
·芯片内部固化全球唯一按16进制编排16位系列号密码；
·驱动部件使用日本Mabuchi Motor(万宝至)株式会社专用锁具马达；
·开锁RF卡可实现酒店一卡通功能；
·门锁电脑板芯片采用飞利浦工业级芯片；
·忘关门/门没关好声光提醒功能；

TY8102 Internal structure and characteristics
·Unlock RF card adopts the original chip from USA ATMEL Company;
·The inside of the chip is fixed with the unique 16 digits serial NO.
Password arranged according to hex;
·Driving parts adopt special lock motor of Japan Mabuchi Motor Co., Ltd;
·Openning to lock The RF card can carry out one cartoon function of cabaret;
·A lock computer plank chip adopts philip's industry class chip;
·Unlocking warning/Alarming and lighting when the door is unlocked.

TY8102 尺寸图
Dimension figure

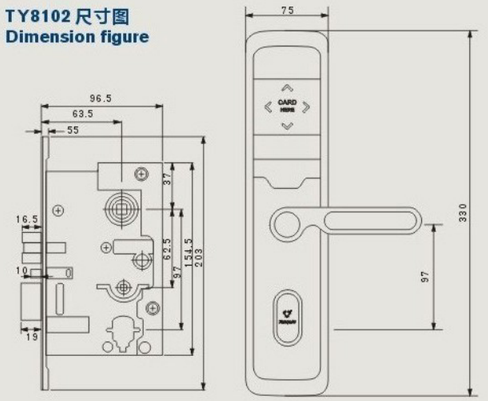

技术参考：
Technological Parameter

·电源 Power Supply	DC4.5V-.5V，4节1.5V Aa碱性电池 DC4.5V-.5V, 4 Jie 1.5V Aa Alkaline Battery
·静态电流 Static Current	<18微安(uA)
·动态电流 Dynamic Current	<200毫安(mA)
·储存温度 Storage Temperature	-20~+85℃
·储存湿度 Storage Humidity	10%~90% RH
·工作温度 \Work Temperature	0~+80℃
·工作湿度 \Work Humidity	15%~95% RH
·卡接近检测方法 Card Approaching Test Method	红外脉冲反射式接近检测 Infrared pulse reflection type approaching test
4赫兹(HZ) Infrared Pulse Transmission Frequency	·红处脉冲发射频率
·感应工作频率 Sensing work Frrequency	100K-150K
·欠压提示 Under Voltage Indication	工作电压低于4.8伏报警，此时还可开门200次 \Warn when work voltage is lower then 4.8V ,and under this situation, the door can be opened for 200 times.
·重量 \Weight	3.8-4.2Kg

系统功能卡列表：
List Form Of System Function Card
·密码授权卡 Password Authorization Card
·总管卡 Manager Card
·楼栋卡 Building Card
·区域卡(管理卡) Floor (Management Card)
·应急卡 Emergaency Card
·校时卡 Timing Card
·客人卡 Customer Card
·房号安装卡 Room NO. Installation Card
·数据卡 Date Card
·临时客人卡 Temporary Customer Card

可选表面处理
Optional surface treatment
L 镍拉丝　C/L 金拉丝　A/L 砂金

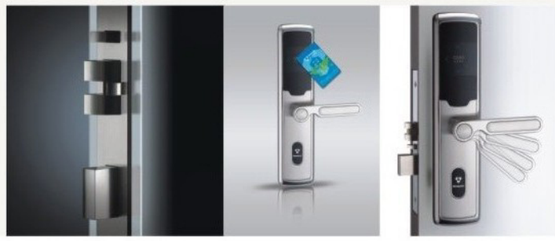



TY8101
Sensing Lock Series
TY8101感应锁系列



TY8101 L



TY8101 C/S

TY8101内部结构及特点
·开锁RF卡采用美国ATMEL(爱特梅尔)公司原装芯片；
·芯片内部固化全球唯一按16进制编排16位系列号密码；
·驱动部件使用日本Mabuchi Motor(万宝至)株式会社专用锁具马达；
·开锁RF卡可实现酒店一卡通功能；
·门锁电脑板芯片采用飞利浦工业级芯片；
·忘关门/门没关好声光提醒功能；

TY8101 Internal structure and characteristics
·Unlock RF card adopts the original chip from USA ATMEL Company;
·The inside of the chip is fixed with the unique 16 digits serial NO.
Password arranged according to hex;
·Driving parts adopt special lock motor of Japan Mabuchi Motor Co., Ltd;
·Openning to lock The RF card can carry out one cartoon function of cabaret;
·A lock computer plank chip adopts philip's industry class chip;
·Unlocking warning/Alarming and lighting when the door is unlocked.

TY8101 尺寸图
Dimension figure

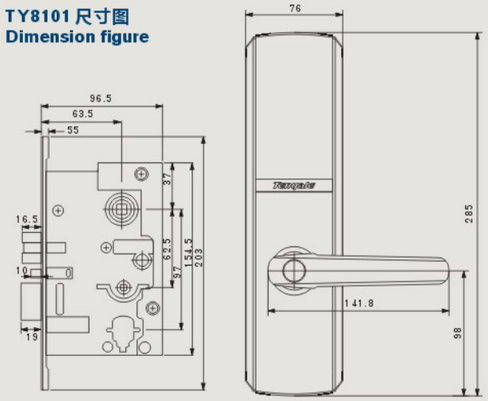

技术参考：
Technological Parameter

·电源 Power Supply	DC4.5V-.5V，4节1.5V Aa碱性电池 DC4.5V-.5V, 4 Jie 1.5V Aa Alkaline Battery
·静态电流 Static Current	<18微安(uA)
·动态电流 Dynamic Current	<200毫安(mA)
·储存温度 Storage Temperature	-20~+85℃
·储存湿度 Storage Humidity	10%~90% RH
·工作温度 \Work Temperature	0~ +80℃

·工作湿度 \Work Humidity	15%~95% RH
·卡接近检测方法 Card Approaching Test Method	红外脉冲反射式接近检测 Infrared pulse reflection type approaching test
4赫兹(HZ) Infrared Pulse Transmission Frequency	·红处脉冲发射频率
·感应工作频率 Sensing work Frrequency	100K-150K
·欠压提示 Under Voltage Indication	工作电压低于4.8伏报警，此时还可开门200次 \Warn when work voltage is lower then 4.8V ,and under this situation, the door can be opened for 200 times.
·重量 \Weight	3.8-4.2Kg

系统功能卡列表：
List Form Of System Function Card
·密码授权卡 Password Authorization Card
·总管卡 Manager Card
·楼栋卡 Building Card
·区域卡(管理卡) Floor (Management Card)
·应急卡 Emergaency Card
·校时卡 Timing Card
·客人卡 Customer Card
·房号安装卡 Room NO. Installation Card
·数据卡 Date Card
·临时客人卡 Temporary Customer Card

可选表面处理
Optional surface treatment
L 镍拉丝　C/L 金拉丝　A/L 砂金





TYZW6
Finger Mark Series
TYZW6指纹锁系列



TYZW6 C/S



TYZW6 L

技术参考：
Technological Parameter

·采集方式 Acquisition mode	光学CMOS
·分辨率 Resolution	550DPI
·拒真率(FRR) False Reject Rate	≤0.01%
·认真率(FAR) Seriously rate	≤0.0001%
·比对时间 Than the time	小于1秒
·比对方式 Than on the way	1：N
·指纹容量 Fingerprint capacity	120枚
·电源 Power supply	4节AA碱性电池
·电池寿命 Battery Life	3500-4000次
·工作电压 Work voltage	直流5V
·工作温度 Work Temperature	-15℃~50℃
·工作湿度 Work Humidity	10%~90%

TYZW6安装孔 尺寸图
Dimension figure

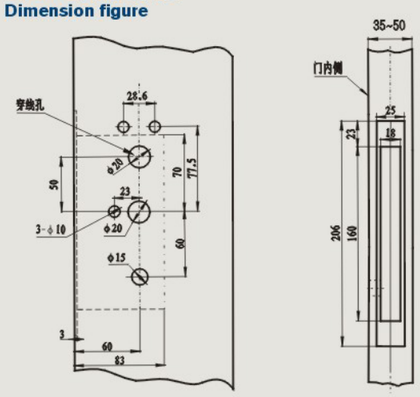

指纹是我们固有的识别特征。而指纹锁的研制是企业提升中国锁文化的又一次飞跃。

Fingerprint is our natural recognition character.Development of finger print lock is another leap to improve Chinese lock culture.

TYZW6型指纹锁特点

·外观美观，造型别致，呈现雍容华贵的风格
·使用方便，既可用指纹开锁，也可用密码开锁，还备有应急机械钥匙
·采集器硬度高，耐磨损，抗划能力强，正常使用万次以上
·兼容性好，可以兼容韩国主流的指纹模块通讯协议及硬件尺寸
·指纹容量大，可设120枚指纹
·抗静电能力强，最好可承受15000V静电放电
·模块采用美国IT公司的DSP处理器，质量稳定可靠

TY2601 Internal structure and characteristics

可选表面处理
Optional surface treatment

L 镍拉丝
C/L 金拉丝

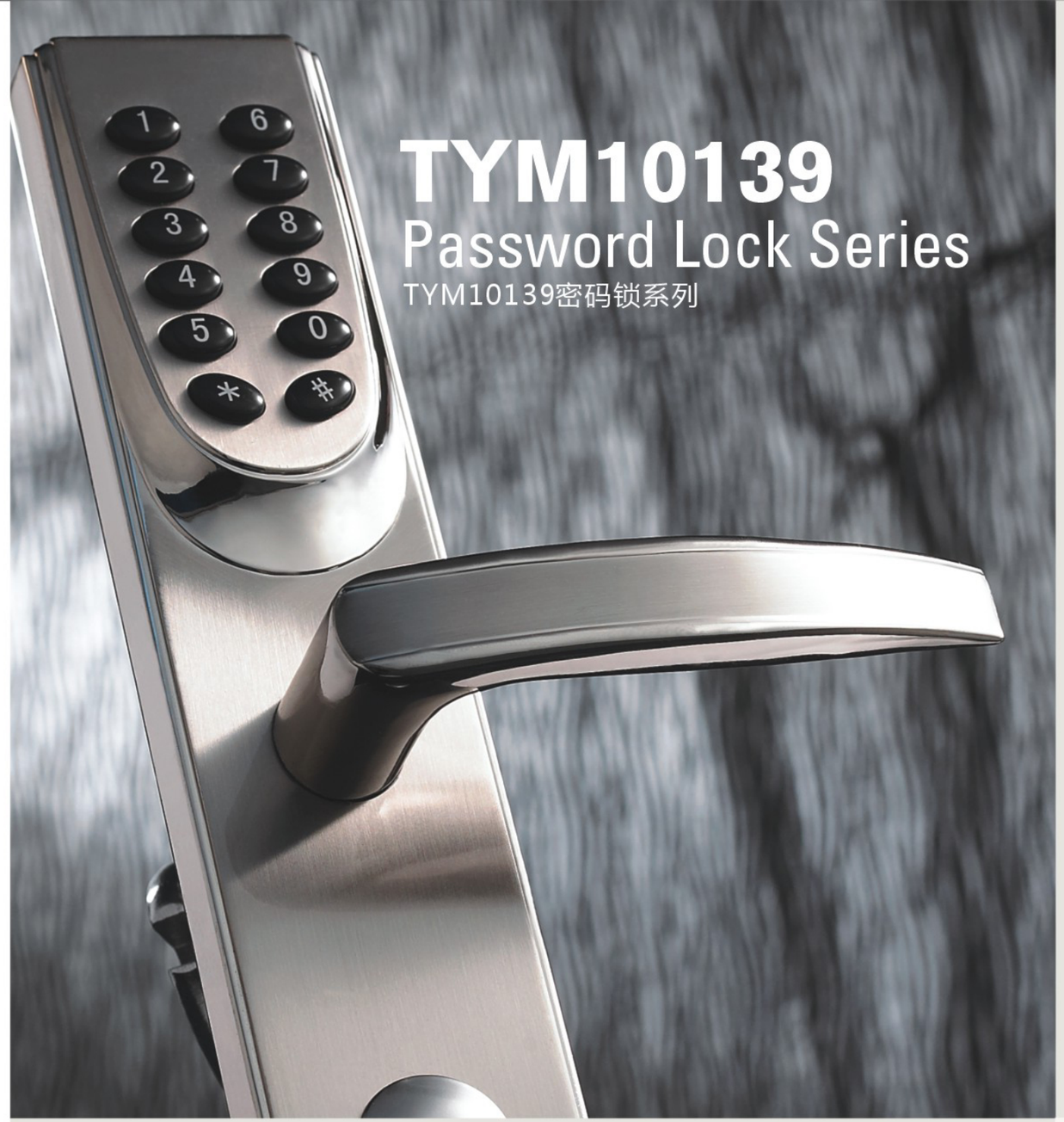

TYM10139
Password Lock Series
TYM10139密码锁系列



TYM10139 L

理性的设计思维与感性的诗意创造结合的天衣无缝，我们不仅将其做为一件实用物品来设计，更是将其视为一件精美的艺术品。

Rational design combines with poetic creation colsely,
it is a work of art more than practical object.

TYM10139型指纹锁特点

·外观造型简洁大方，是居家室内门锁或机要部门门锁的理想选择
·专利设计的先按内面板上的按钮提示，后上提执手闭门锁
·正常使用无须携带钥匙，减少麻烦，方便自知
·带应急开启外锁头
·执手转动采用轴承结构，既灵活、又不松动
·键盘均采用高级硅橡胶制造，美观、耐磨，用后不留指纹痕迹，安全可靠
·面板、执手表面采用先进的电镀工艺，显现高贵、典型之气质
·电子系统超低功耗设计，四节五号干电池，连续开锁5万次以上

TYM10139 Internal structure and characteristics

·Appearance and shape is simple and decent, which is the ideal selection for the door lock of the room or key department.
·It is a patent design that first push the button on the internal panel and then raise upward handle lock and close-door lock.
·Normal use, without carrying the key that can reduce the problem and is convenient as you know.
·With emergency switch for the external lock head.
·The rotation of handle adopts bearing structure, which is flexible and not loosened.
·The keyboard adopts advanced silicon rubber, which is beautiful, anti-abrasion. No finger mark left after the use, which is safe and reliable.
·The surface of the panel and handle adopts advanced electroplating process, which represents decency and elegance.
·Electric system adopts super lower power consumption design. With four 5# dry batteries, which can be used to unlock more than 50 thousand times.



IC Card Lock Series
IC卡锁系列



TY9822-1 L

TY9822内部结构及特点

·集成电路采用美国Microchip(梅克切普)公司工业级芯片。
·数据储存采用美国ATMEL(爱特梅尔)公司专业极芯片。
·引用日本MABUCHI MOTOR(万宝至)株式会社的马达做为智能门锁的驱动装置。10万次寿命测验保证。
·时钟芯片采用美国DALIS(达拉斯)公司专业级时钟芯片。
·国内首家在外面板上设置电源装置，便于酒店的维护操作，不影响宾客的休息。
·休眼状态时“活把手”设计，比“死把手”更合理、更安全；
·IC卡片使用美国Atmel公司技术芯片

TY9822 Internal structure and characteristics

·Integrated circuit adopts industrial chip of USA microchip Company.
·Data storage adopts special chip of USA Atmel Company.
·Introduce the motor of Japan MABUCHI MOTOR Co.,Ltd. As the driving equipment of intellectual three-door lock. 100 thousand times use life-testing guarantee.
·Clock chip adopts special clock chip of USA DALIS company.
·The first one in domestic to equip power supply equipment on the outside panel, which is convenient for the maintenance operation of hotel It does not influence the rest of gusts.
·THe “Flexible handle” design during the rest situation is more reasonable and safer than “fixed handle”.
·IC card adopts the technical chip of USA Atmel Company.



TY9822-1 C/S

系统功能卡列表：
List Form Of System Function Card

·初始卡 Initial card
·总管卡 Manager card
·管理卡 Management card
·客人卡 Customer card
·时钟卡 Clock card
·房号设置卡 Room number setting card
·时钟查询卡 Clock check card
·保安卡 Safety card
·时间设置卡 Time setting card
·开锁查询卡 Unlock check card

Double-face Card-insertion Series
双面插卡锁系列



TY2500 L

TY2500、TY2100内部结构及特点

·集成电路程序芯片采用美国Microchip(梅克切普)公司工业芯片。
·集成电路数据芯片采用美国ATMEL(爱特梅尔)公司专业芯片。
·集成电路时间芯片采用美国DALIS(达拉斯)公司专业时间芯片。
·驱动部件使用日本Mabuchi Motor(万宝至)株式会社专用锁具马达。
·休眼状态时“活把手”设计，比“死把手”更合理、安全。
·IC卡片使用美国Atmel公司技术芯片。

TY2500、TY2100 Internal structure and characteristics

·Integrated circuit adopts industrial chip of USA microchip Company.
·Integrated circuit data chip adopts special storage chip of USA Atmel Company.
·Integrated circuit time chip adopts special time chip of USA Dalis Company.
·Driving parts adopt special lock motor of Japan Mabuchi Motor Co.,Ltd.
·THe “Flexible handle” design during the rest situation is more reasonable and safer than “fixed handle”.
·IC card adopts the technical chip of USA Atmel Company.



TY2100 L

系统功能卡列表：
List Form Of System Function Card

·初始卡 Initial card
·总管卡 Manager card
·管理卡 Management card
·客人卡 Customer card
·时钟卡 Clock card
·房号设置卡 Room number setting card
·时钟查询卡 Clock check card
·保安卡 Safety card
·时间设置卡 Time setting card
·开锁查询卡 Unlock check card

可选表面处理
Optional surface treatment

L 镍拉丝　　C/L 金拉丝

技术参考：
Technological Parameter

·适用门厚 For door thickness	35-50mm
·安装中心距 Backset	60mm
·重量 \Weight	3.7kg
·工作温度 \Working temperature	-10~ +50℃
·工作湿度 \Working moisture	20%~95% RH
·供电电量 Power	0.0~6.0V
·电源 Power supply	四节五号碱性电池 Four 5# alkali batteries
·功耗 Power waste	静态电流小于20uA，开锁时工作电流200mA Static current is lower than 20 uA, the work current during unlocking is 200mA
·IC卡数据静态保持时间 Ic card data static storage time	10年/year
·抗静电干扰能力 Anti-static electricity disturbance ability	15000V
·开锁记录 Unlock record	126次/once
·报警 Alarm	低压报警时能开200次 Under the situation of alarm of low voltage the door can be opened for 200 times

TY9822 尺寸图
Dimension figure

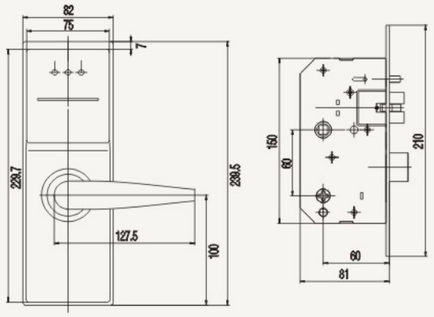

可选表面处理
Optional surface treatment

L 镍拉丝　　C/L 金拉丝

TY2500 尺寸图
Dimension figure

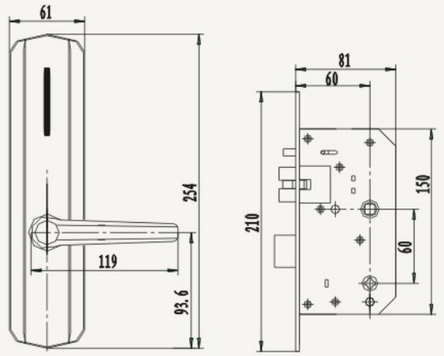

TY2100 尺寸图
Dimension figure

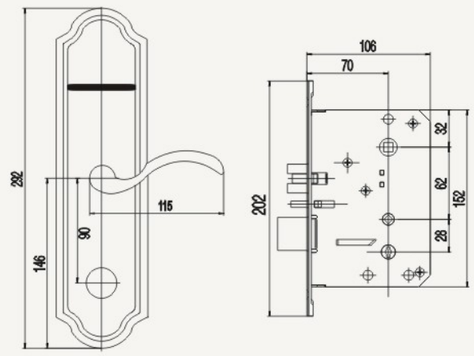

Energy saver Series
节电开关系列



A型取电开关



B型取电开关

节电开关特点

·国际潮流大流线设计，现代感强，融合各酒店装修风格。
·专用取电：使用房卡插入取电，杜绝纸片及塑料牌取电。
·宽槽的插卡口和倾口设计，友好的人机交流界面倾情流露。
·壳体采用阻燃PC标准材料，安全密封。
·开关插口处设有指示灯，操作方法直观明了；正面采用魅力蓝立体灯作装饰指示灯，方便客人夜间操作。
·开关一旦出现故障，内部继电器始终处于常闭接通电源状态，房间可正常供电。
·100-240VAC宽范围工作电压，输出电压稳定。
安装方便，只需接通输入、输出、零线三根线即可。

Energy saver features

·International streamlines design , modern and fit for each style of hotel.
·Smart control : the energy saver must use key card to get the power. It avoids any other persons to business card or plastic card instead of room key card
·Wide and slanting socket design for ealisy using.
·The shell of energy saver uses fire-retardant PC standard material for high security.
·There is a blue indication light on the energy saver. It is convenient for guest to operate at night.
·Once the saver is broken, internal relay still keeps connecting to provide power for using.
·It can work from 100V to 240V.
·Easy to install and use.

技术参考：
Technological Parameter

·电压 Voltage	110V~220V
·工作电流 AMP	16A
·外形尺寸 Dimensions	86x86
·工作温度 Working temperature	-40~+50℃
·工作湿度 Working moisture	40% ~80% RH
·未工作状态 No working status	指示灯为蓝色或红色 Indicating light in blue or red
·适应种类 App;ocations	IC卡/感应卡 IC card/RF card
·外壳材料 Shell	阻燃PC Fire resistable PC
·安装 Installation	同普通开关一样，只需用两个螺丝钉，将取电开关固定安装。 Mount the saver with two screws
·颜色 Color	白色(标准) White

Administrative system relevant products of hotel
酒店管理系统相关产品



IC发卡器



感应发卡器



感应发卡器



触摸屏开关



地脚灯



空调控制器



免打扰门铃开关



三合一门铃开关



带房号门铃开关



叮咚门铃



T2543/T3043
合页



T2553/T3053
合页



MX221
门吸



MX231兰
门吸



MX203
门吸



MX226
门吸



MX504
门顶



MX202
门顶

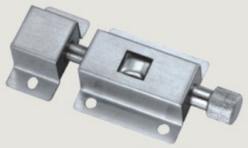

CX6908
弹簧插



MX214/MX611
防盗扣



MX258
防盗扣



FDL01
防盗链

Door Control Hardware Series
门控五金系列



FDL02
防盗链



MX227
地吸



MX211/MX605
地吸



MX235
门阻



MX234
门吸



MX122
门吸



YG103
衣钩



CX6204/CX6206/6208
插销



CX6404
插销



CX6304/CX6306/6308
插销



MOOIS
猫眼



MOOIM
猫眼



MOOIL
猫眼



MOOIS
门锁



MOOIS
门锁



MOOIS
门锁



B系列防火闭门器



M500 闭门器



M200 闭门器



L600 系列
隐藏式自动闭门器

Bathroom hardware series
卫浴五金系列

8300 series

Colour:chrome(铬)
Material:brass+zinc(铜+锌)



8358 单杯架
single tumbler holder



8355 双杯架
double tumbler holder



8360 毛巾环
towel ring



8351纸巾架
Paper holder

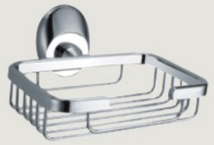

8356 皂网
Soap dish



8359 皂碟
Soap holder



8354 衣钩
Robe hook



8352皂液瓶
Soap dispenser holder



8322 浴巾架
Towel shelf



8348(60cm) 8361(75cm) 双杯毛巾架
Double towel bar

8353 化妆台
Glass shelf

8324(60cm) 8330(72cm)单杆毛巾架
Towel bar



8357马桶刷
Toilet brush&holder

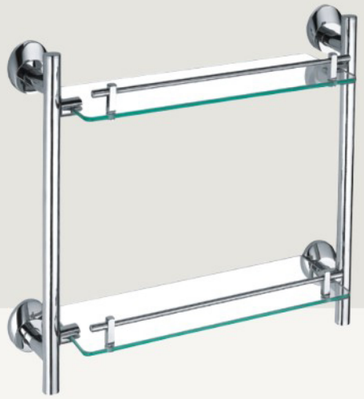

8302 二层置物架
Double glass shelf



TZ 5810
126x121x130



TZ 5812
126x122x130



H 5808
153x163x72



S 5830

Bathroom hardware series
卫浴五金系列



H 5820
300x160x56



H 5822
260x270x125



H 5823
282x260x100



TD 01
95x95x35 全铜



TD 23
100X100X40 不锈钢



TD 24
100X100X40 不锈钢

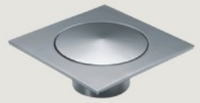

TD 19
95x95x48 全铜



TD 27
95X95X50 全铜



TD 32
100X100X40 不锈钢

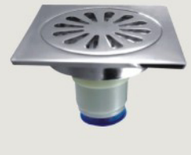

TD 40
95x95x60 全铜

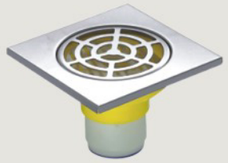

TD 45
95X95X60 不锈钢

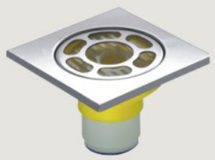

TD 46
95X95X60 不锈钢



F 5600/F 5800
6″x2 8″x2



F 002 升降化妆镜
6″x2 8″x2



F 2200
6″x2 8″x2



F 1600
6″x2 8″x2



F 1300
6″x2 8″x2



F 2100
6″x2 8″x2

Energy saver Series
智能门锁系统组成

编号	名称	用途	配置要求
1	射频感应卡智能门锁	安装与房间门上	按用户的房间而定，订货前要确定门锁的方向：右内开，右外开、左内开、左外开；机械钥匙分单开（一对一开门）或通开（一钥匙），单开每把锁附带两条机械钥匙，若要通开一定要定做
2	射频感应发卡器	发智能门锁钥匙卡和管理卡	每个工程最少配置一台,建议备用一台
3	T5557多功能数据采集器（Temic5557门锁使用） Mf1数据卡 （MF1门锁使用）	可按需求设置成数据卡、校时卡、房间设置卡、锁体信息卡等。 可按需求设置成数据卡、校时卡、房间设置卡、锁体信息卡等。	每个工程一台 每个工程最好配备10张
4	门锁管理软件	安装与电脑上，用于管理门锁	按用户需求可选择豪华网络版或标准版，每个工程一套
5	射频感应卡	用于开门和管理门锁	建议每把门锁配备3-5张
6	AA电池	对门锁供电	一定要用高性能碱性电池，每把锁四节
7	电脑	安装门锁管理软件，对门锁进行管理（一定要在WINDOWS 2000或XP操作系统上运行）	CPU为Pentium4以上品牌机，彩显真彩色32位，分辨率在800x600以上，内存256以上，硬盘空间40G以上，配置鼠标、光驱等。空余一个9针串口及上个USB口。为保证系统的正常运行，强烈建议不要安装除此之外的其他任何非相关软件
8	打印机	必要时可打印系统的数据	每个系统可配置一台



Card device
发卡器



连接方式：USB口电源供电

安全保密：双重加密，保证发出的开门卡通过认证方能开门。

操作方便：发卡时，只需将卡放在发卡机上，执行发卡命令即可（可用快捷键操作）;退房时，只要将卡放在卡机上即可自动退房；卡处发出来后，可再次确认，防止出现发卡出错的现象，提高工作效率。

Encoder
数据提取器



无线接收：充分利用射频感应技术，无需接触即可读取门锁内存各种数据，操作方便。

After sale service
售后服务

服务宗旨：
Service Tenet

点缀人间，奉献美好
Shortcut, Circumspect, Unconcerned

服务理念：
Service Concept

诚信为本，服务至上
Service comes first, taking honesty as the core.

服务承诺：
Service Promises

本公司提供一年的产品质量免费保修，终身维护服务
One year free to repair, maintain service for life provided by Tenyale for all product.

服务内容：
Service Content

客户与我们联系，就是我们提供服务的开始，我公司经过多年各种环境及广大客户的长期信赖与考验，已拥有完善的产品售前、售中、售后的技术支持和保障服务体系，包括：产品介绍、系统咨询、方案设计、系统配套、安装调试、人员培训、系统维护及软件版本升级等。一切为了让用户买的放心，用的称心，让用户满意。

This is the begnning of providing service by us, when the clients contact us. Tenyale has been hold a completely technical support and maintain system of all products, after suffer many kinds of long-term environment trial and get the long-term trust from clinets. Lncluding: introduction of product, system consultation, project design, system config, installation & debug, member training, system maintenance and edition upgrade etc. Everything for let user reassurance to buy, gratified to use and satisfy.

服务网络：
Service Network

我们在国内外共有六十多个直属办事处和代理点，建立了公司、分公司（办事处）、经销商三级服务网络，服务渗透每个角落，务求所有新老客户得到方便、快捷、完善的客户服务，为用户创造新的价值。

We have more than 60 internal &overseas offices and agent, already created the 3-level service network: company-sub-company-sales-agent, service can be enjoyed anywhere, let all new and old client can get convenience, shortcut and perfect customer service.



Identification method of left-open doors and rignt-opendoors
门锁方向识别方法

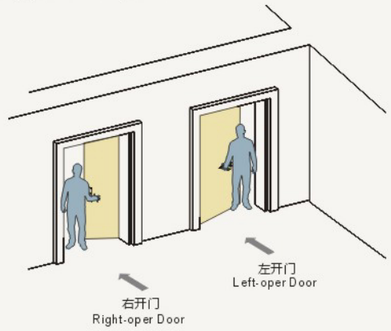

图2.1

门锁的左、右确认：房门有左、右开之分，如图2.1所示，相应门锁亦锁有左、右开之分。订货时应说明，安装时要选择与门开的方向一致门锁。

Identification method of left-open doors and right-open doors there are left-open door locks and right-open door locks while there are left-open doors and right-open doors. As image 2.1

左开门锁定义：人站在门外，门往里开，铰链在左边，为左开门。
右开门锁定义：同上，铰链在右边，为右开门。

If the door is left-open one , you need to choose left-open door locks; and if the door is right-open one, you need to choose right-open door locks. Altogether, you'd better chose door locks with he same open direction with the doors.

JL-275-4

十字铰链
Automatic Bolt

表面处理：
亮铬/拉丝钢
主要材质：
锌合金
适用范围：
双开门、子母门等较高的门扇
主要特点：
暗装式、自动式、安装简便、
受力大

Finish:
SP/SN
Material:
Stainless Steel
Available For:
Double-door, Parent-child
Doors Higher Doors
Features:
Concealed, Automatic, Easy To Install

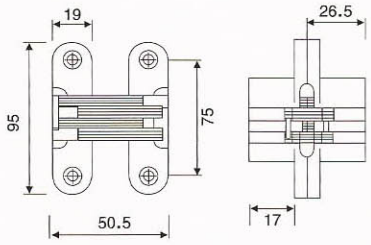



JL-275-5

十字铰链
Automatic Bolt

表面处理：
亮铬/拉丝钢
主要材质：
锌合金
适用范围：
双开门、子母门等较高的门扇
主要特点：
暗装式、自动式、安装简便、
受力大

Finish:
SP/SN
Material:
Stainless Steel
Available For:
Double-door, Parent-child
Doors Higher Doors
Features:
Concealed, Automatic, Easy To Install

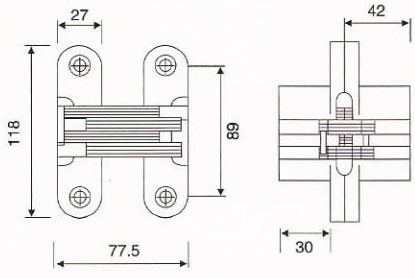

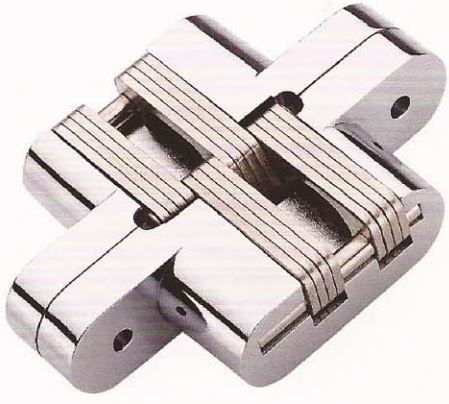

安装方式
Insallation method

使用时，展开没有明显间隙
There is noclear gap when opening it.

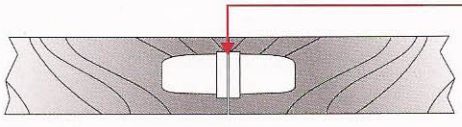

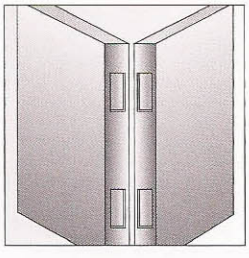

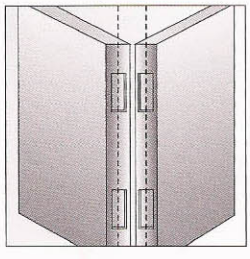

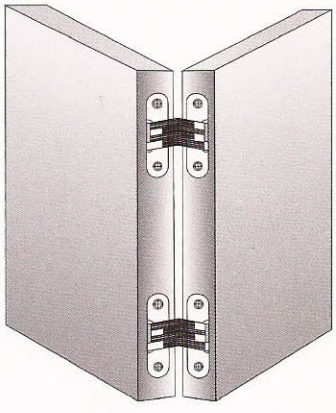

1.挖孔
Digging

2.注意上下孔位间需垂直一线
Note that top and down holes should be in vertical line



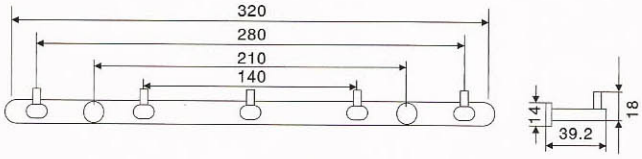

YG-105-3

排钩
Indicating Bolt

表面处理： 亮铬
主要材质： 锌合金/不锈钢
适用范围： 浴室、衣柜
主要特点： 美观、耐用

Finish: SP
Material: Zinc Alloy,Stainless Steel
Available For: Bathroom, wardrobes
Features: Elegant and practical



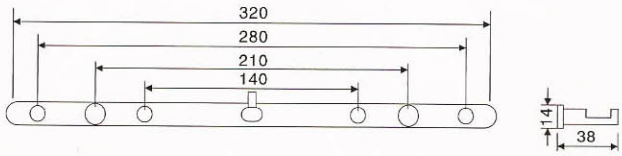

YG-106-3

排钩
Indicating Bolt

表面处理： 亮铬
主要材质： 锌合金/不锈钢
适用范围： 浴室、衣柜
主要特点： 美观、耐用

Finish: SP
Material: Zinc Alloy,Stainless Steel
Available For: Bathroom, wardrobes
Features: Elegant and practical



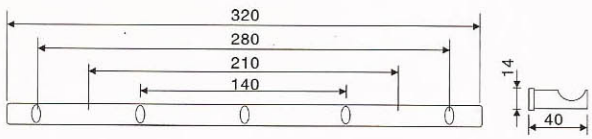

YG-107-3

排钩
Indicating Bolt

表面处理： 亮铬
主要材质： 锌合金/不锈钢
适用范围： 浴室、衣柜
主要特点： 美观、耐用

Finish: SP
Material: Zinc Alloy,Stainless Steel
Available For: Bathroom, wardrobes
Features: Elegant and practical



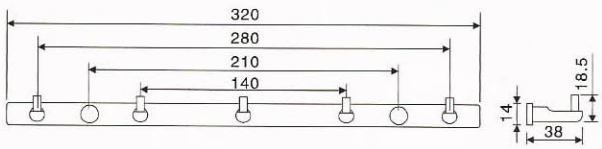

YG-108-3

排钩
Indicating Bolt

表面处理： 亮铬
主要材质： 锌合金/不锈钢
适用范围： 浴室、衣柜
主要特点： 美观、耐用

Finish: SP
Material: Zinc Alloy,Stainless Steel
Available For: Bathroom, wardrobes
Features: Elegant and practical

ZSP-大指示牌（推）

标识牌
Automatic Bolt

表面处理：
K金/亮铬/拉丝
主要材质：
不锈钢
适用范围：
双开门、子母门等较高的门扇
主要特点：
明装式、安装简便、受力大

Finish:
KG/SP/SN
Material:
Stainless Steel
Available For:
Double-door, Parent-child
Doors Higher Doors
Features:
Ming-loading, Automatic, Easy To Install

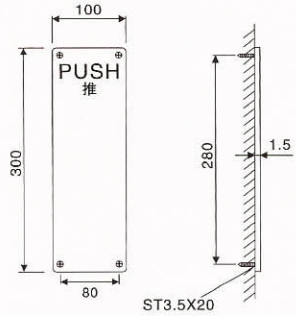

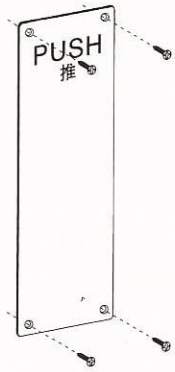



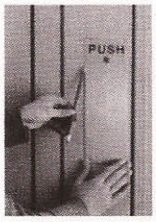



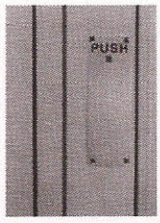

安装步骤：
A 画线
B 在墙面适当位置用螺钉固定底座
C 使用实样

A Installation Steps:
B Marking the positons
C Fix the base at the appropriate position on the wall.
Use of pure oxygen

ZSP-大指示牌（拉）

标识牌
Automatic Bolt

表面处理：
K金/亮铬/拉丝
主要材质：
不锈钢
适用范围：
双开门、子母门等较高的门扇
主要特点：
明装式、安装简便、受力大

Finish:
KG/SP/SN
Material:
Stainless Steel
Available For:
Double-door, Parent-child
Doors Higher Doors
Features:
Ming-loading, Automatic, Easy To Install

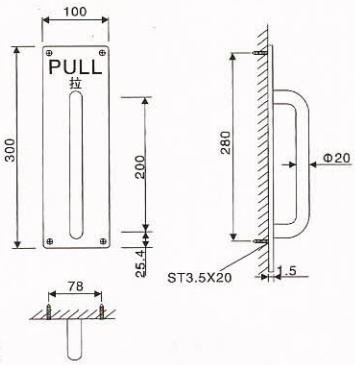

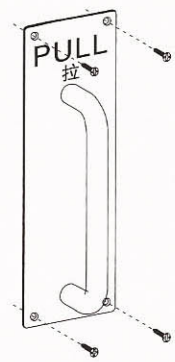



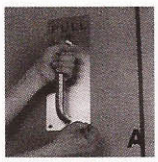

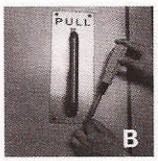

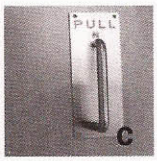

安装步骤：
A 画线
B 在墙面适当位置用螺钉固定底座
C 使用实样

A Installation Steps:
B Marking the positons
C Fix the base at the appropriate position on the wall.
Use of pure oxygen

MX–234

门阻
Gate Resistance

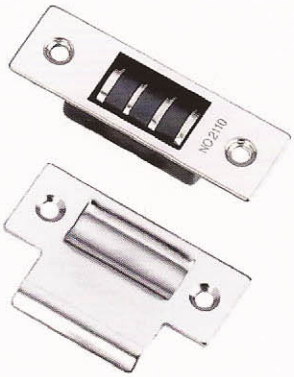

表面处理：亮铬
主要材质：冷轧钢板
适用范围：各种材质的门
主要特点：门关闭时扣紧门扇，起到自动门栓的作用
适用门厚：40–50mm

Finish: SP
Material: Cold–rolled steel
Available For:
All kinds of wooden doors
Features: Close door with the fuction of auto lock
Door Thickness: 40–50mm

MX–FCQ01

防尘器
dust–proof strike without plate



表面处理：拉丝钢、铜拉丝、亮铬
主要材质：铜
适用范围：一般安装于地面、配合各种插销使用
主要特点：能有效防止尘土、杂物掉入插销孔内

Finish: SN,PZ,SP
Material: Brass
Available For:
Generally Installed On The Ground, Match With The Flush Bolts
Features:
To Prevent Dust And Debris Falling Into Bolt Hole

MX–235

门阻
Gate Resistance

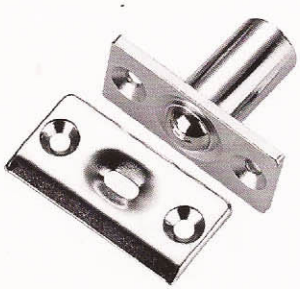

表面处理：亮铬
主要材质：铝合金
适用范围：各种材质的门
主要特点：门关闭时扣紧门扇，起到自动门栓的作用
适用门厚：40–50mm

Finish: SP
Material: Aluminum
Available For:
All kinds of wooden doors
Features: Close door with the fuction of auto lock
Door Thickness: 40–50mm

BL–600IL.M.S

玻璃夹
Glass Shelf



表面处理：镍拉丝、青古铜、红古铜
主要材质：锌合金
适用范围：玻璃层板、木层板
主要特点：美观、耐用
适用门厚：10~12mm
最大承重：10kg/2只

Finish: L,AB, AC
Material: Zinc Alloy
Available For:
Glass shelf and wooden plywood
Features: Elegant and practical
Door Thickness: 10~12mm
Max weight: 10kg/2pcs

MX–122

门阻
Gate Resistance

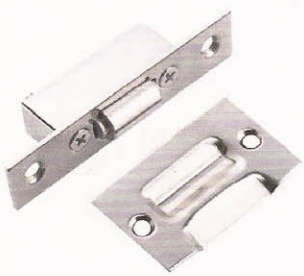

表面处理：拉丝
主要材质：不锈钢
适用范围：各种材质的门
主要特点：门关闭时扣紧门扇，起到自动门栓的作用
适用门厚：40–50mm

Finish: SSS
Material: Stainless Steel
Available For:
All kinds of wooden doors
Features: Close door with the fuction of auto lock
Door Thickness: 40–50mm

MX–123

磁夹
Magnetic clip



表面处理：
镍拉丝、青古铜、红古铜
主要材质：锌合金
适用范围：酒柜、陈列柜
主要特点：不生锈、美观耐用

Finish: L,AB,AC
Material: Zinc Alloy
Available For:
Liquor cabinet and show cabinet
Features:
Elegant and practical

YG–103

衣钩
Indicating Bolt

表面处理： 镍拉丝、亮铬
主要材质： 锌合金
适用范围： 浴室、衣柜
主要特点： 美观、耐用

Finish: L,SP
Material: Zinc Alloy
Available For: Bathroom,wardrobes
Features: Elegant and practical

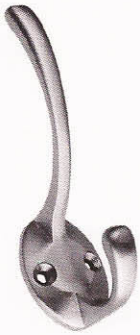

YG–114

衣钩
Indicating Bolt

表面处理： 镍拉丝、亮铬
主要材质： 锌合金
适用范围： 浴室、衣柜
主要特点： 美观、耐用

Finish: L,SP
Material: Zinc Alloy
Available For: Bathroom,wardrobes
Features: Elegant and practical



YG–112

衣钩
Indicating Bolt

表面处理： 镍拉丝、青古铜、红古铜
主要材质： 锌合金
适用范围： 浴室、衣柜
主要特点： 美观、耐用

Finish: L,AB, AC
Material: Zinc Alloy
Available For: Bathroom,wardrobes
Features: Elegant and practical



YG–115

衣钩
Indicating Bolt

表面处理： 镍拉丝、亮铬
主要材质： 锌合金
适用范围： 浴室、衣柜
主要特点： 美观、耐用

Finish: L,SP
Material: Zinc Alloy
Available For: Bathroom,wardrobes
Features: Elegant and practical



YG–113

衣钩
Indicating Bolt

表面处理： 镍拉丝、青古铜、红古铜
主要材质： 锌合金
适用范围： 浴室、衣柜
主要特点： 美观、耐用

Finish: L,AB, AC
Material: Zinc Alloy
Available For: Bathroom,wardrobes
Features: Elegant and practical

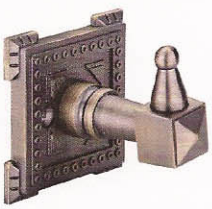

YG–116

衣钩
Indicating Bolt

表面处理： 镍拉丝、亮铬
主要材质： 锌合金
适用范围： 浴室、衣柜
主要特点： 美观、耐用

Finish: L,SP
Material: Zinc Alloy
Available For: Bathroom,wardrobes
Features: Elegant and practical

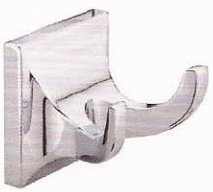

YG–117

衣钩
Indicating Bolt

表面处理： 亮铬
主要材质： 锌合金
适用范围： 房间门
主要特点： 地面或墙面安装、多种表面颜色

Finish: SP
Material: Zinc Alloy
Available For: Rooms Doors
Features: Installed of the Ground or Wall, Various Surface Clolrs

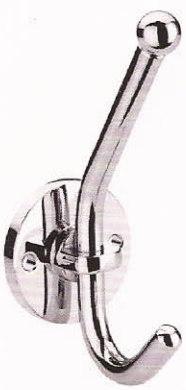

YG–118

衣钩
Indicating Bolt

表面处理： 亮铬
主要材质： 锌合金
适用范围： 房间门
主要特点： 地面或墙面安装、多种表面颜色

Finish: SP
Material: Zinc Alloy
Available For: Rooms Doors
Features: Installed of the Ground or Wall, Various Surface Clolrs





ZSP–指示牌(残疾通道)

标识牌 Singbord

表面处理:
拉丝/亮铬
主要材质:
纯SUS304不锈钢
适用范围:
公共场合
主要特点:
美观、醒目、实用

Finish:
SSS,SP
Material:
304 Stainless Steel
Available For:
Public Area
Features:
Good Appeatance, Attraction, Practicability

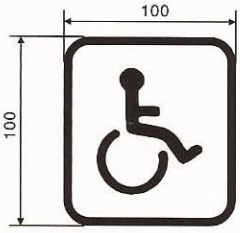



ZSP–指示牌(禁烟)

标识牌 Singbord

表面处理:
拉丝/亮铬
主要材质:
纯SUS304不锈钢
适用范围:
公共场合
主要特点:
美观、醒目、实用

Finish:
SSS,SP
Material:
304 Stainless Steel
Available For:
Public Area
Features:
Good Appeatance, Attraction, Practicability

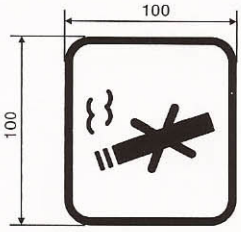



ZSP–指示牌(电话)

标识牌 Singbord

表面处理:
拉丝/亮铬
主要材质:
纯SUS304不锈钢
适用范围:
公共场合
主要特点:
美观、醒目、实用

Finish:
SSS,SP
Material:
304 Stainless Steel
Available For:
Public Area
Features:
Good Appeatance, Attraction, Practicability

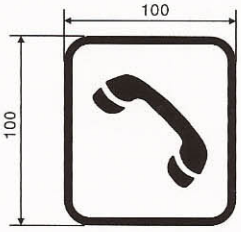

ZSP–指示牌(推)

标识牌 Singbord



表面处理：
拉丝/亮铬
主要材质：
纯SUS304不锈钢
适用范围：
公共场合
主要特点：
美观、醒目、实用

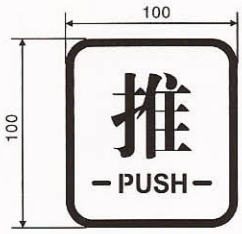

Finish:
SSS,SP
Material:
304 Stainless Steel
Available For:
Public Area
Features:
Good Appeatance, Attraction, Practicability

ZSP–指示牌(男)

标识牌 Singbord



表面处理：
拉丝/亮铬
主要材质：
纯SUS304不锈钢
适用范围：
公共场合
主要特点：
美观、醒目、实用

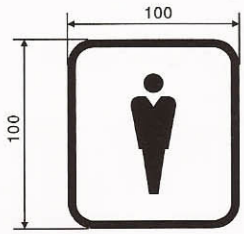

Finish:
SSS,SP
Material:
304 Stainless Steel
Available For:
Public Area
Features:
Good Appeatance, Attraction, Practicability

ZSP–指示牌(女)

标识牌 Singbord



表面处理：
拉丝/亮铬
主要材质：
纯SUS304不锈钢
适用范围：
公共场合
主要特点：
美观、醒目、实用

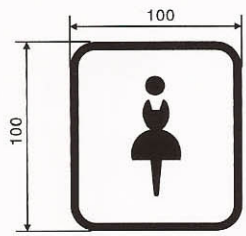

Finish:
SSS,SP
Material:
304 Stainless Steel
Available For:
Public Area
Features:
Good Appeatance, Attraction, Practicability

DOOR **CLOSER** SERIES

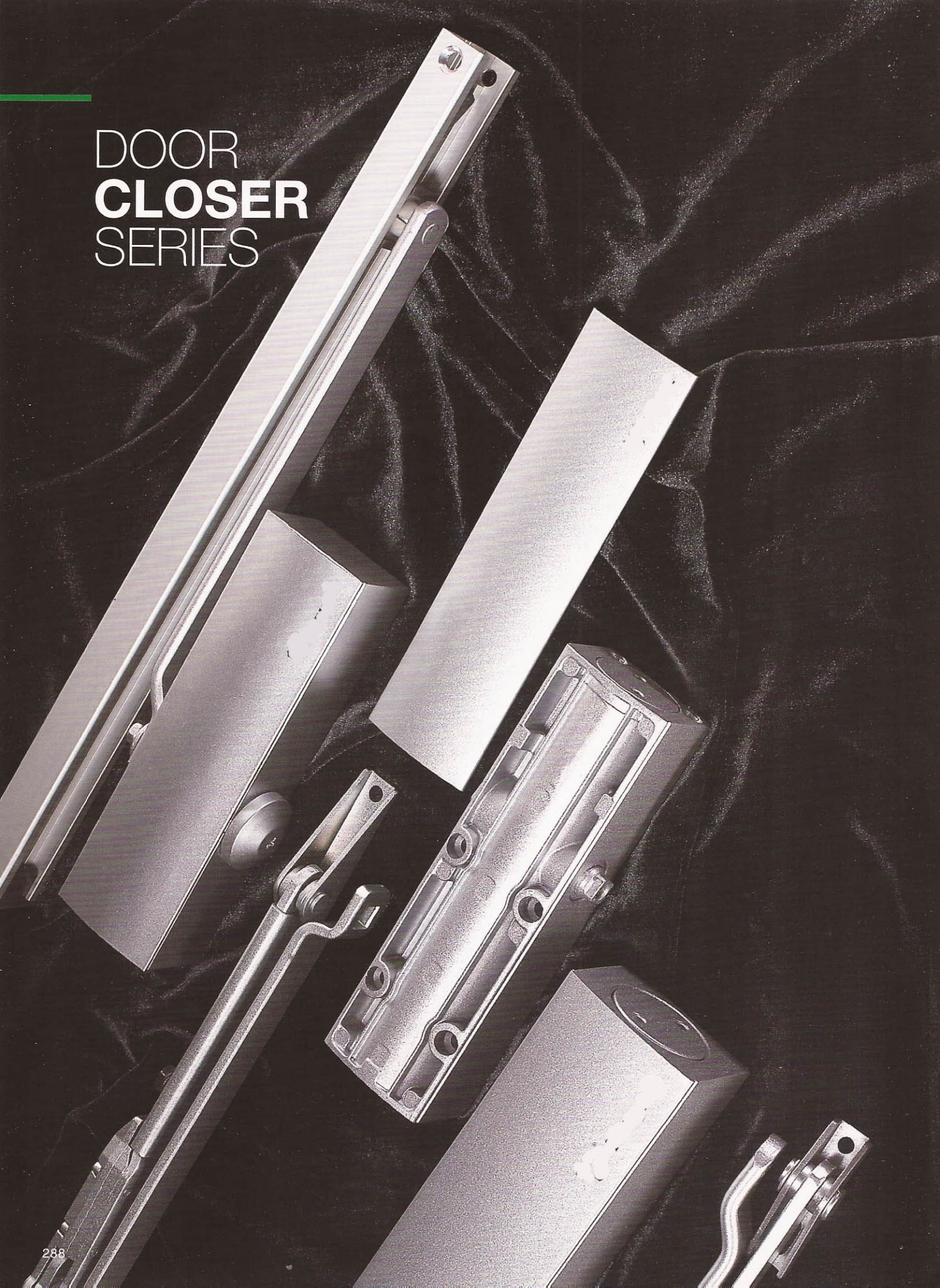

Scientific
structural design

Provide outstanding loading ability

科学的结构设计，赋予坚固的承重力

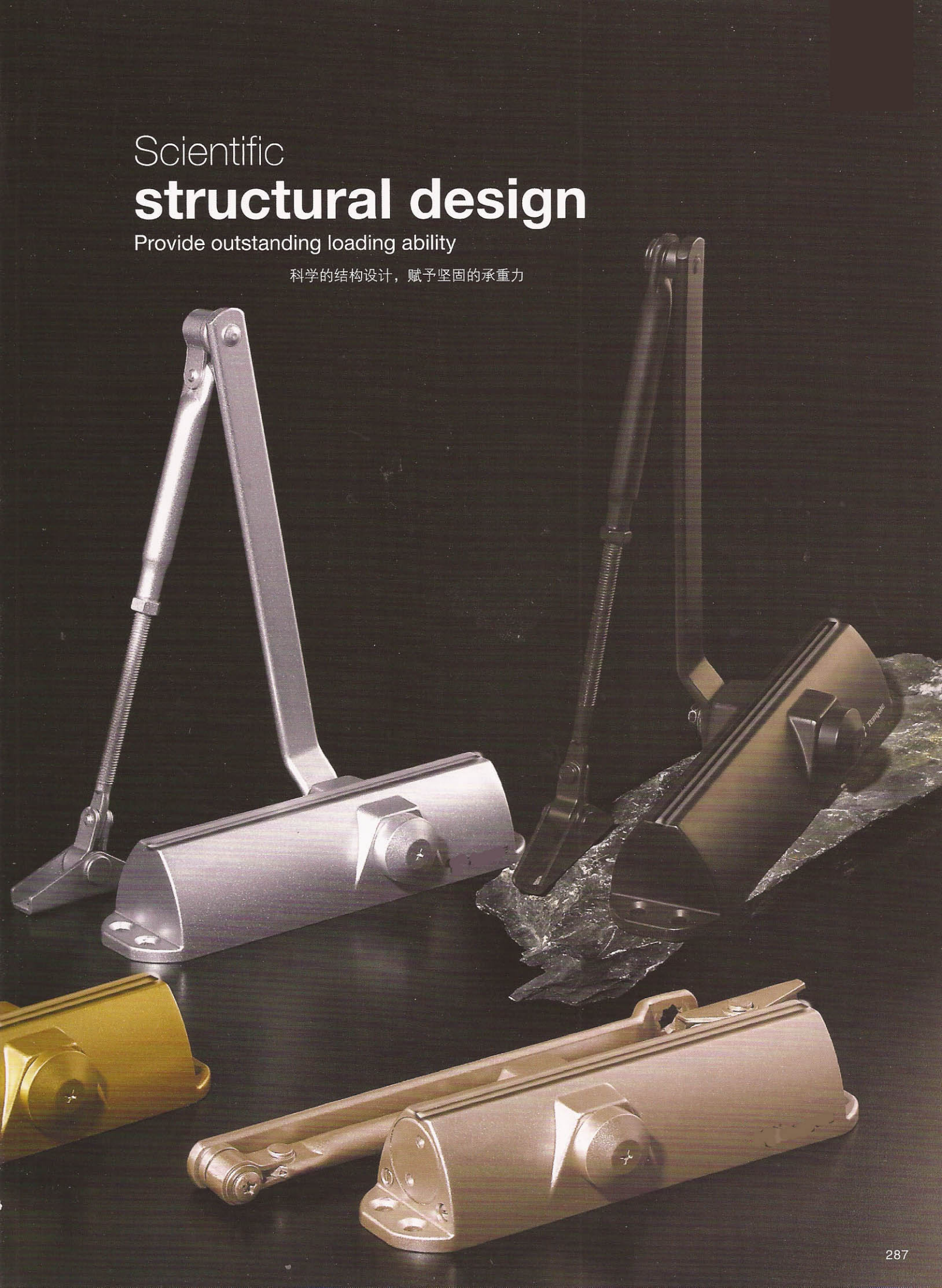

B	2	W

表示是否有停门功能（例：W-没有停门功能，D-有停门功能）
Means have hold open function or not. (W means have non hold open function. D means have hold open function.)

系列号(例: A,B,C,D,E……)
Series No. (example: A,B,C,D,E……)

表示关门力大小（例:1,2,3,4,5,6...其中
"1"适合门重15-30Kg "2"适合门重25-45Kg
"3"适合门重40-65Kg "4"适合门重60-85Kg
"5"适合门重80-120Kg "6"适合门重100-150Kg）
Means the power of the door closer (example: 1,2,3,4,5,6.....)
"1" means 15-30kg; "2" means 25-45kg;
"3"means 40-65kg; "4"meanss 60-85kg;
"5"means 80-120kg; "6"means 100-150kg;

表示壳体型号大小(例: 1,2,3,4,5.....)
Means the the body size (example: 1,2,3,4,5.....)

The instruction of installation form
安装形式介绍



左拉门侧垂直安装（标准安装形式）
pull door vertical installation
(standard installation)



右拉门侧垂直安装（标准安装形式）
pull door vertical installation
(standard installation)



上门框推门侧垂直安装
upper door frame vertical installation



推门侧平行安装
push door side parallel installation

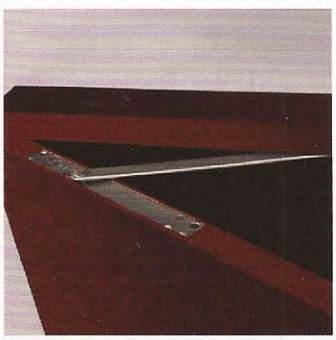

门内隐藏式安装
Inner door concealed installation



拉门侧滑轨式安装
pull door side sliding installation

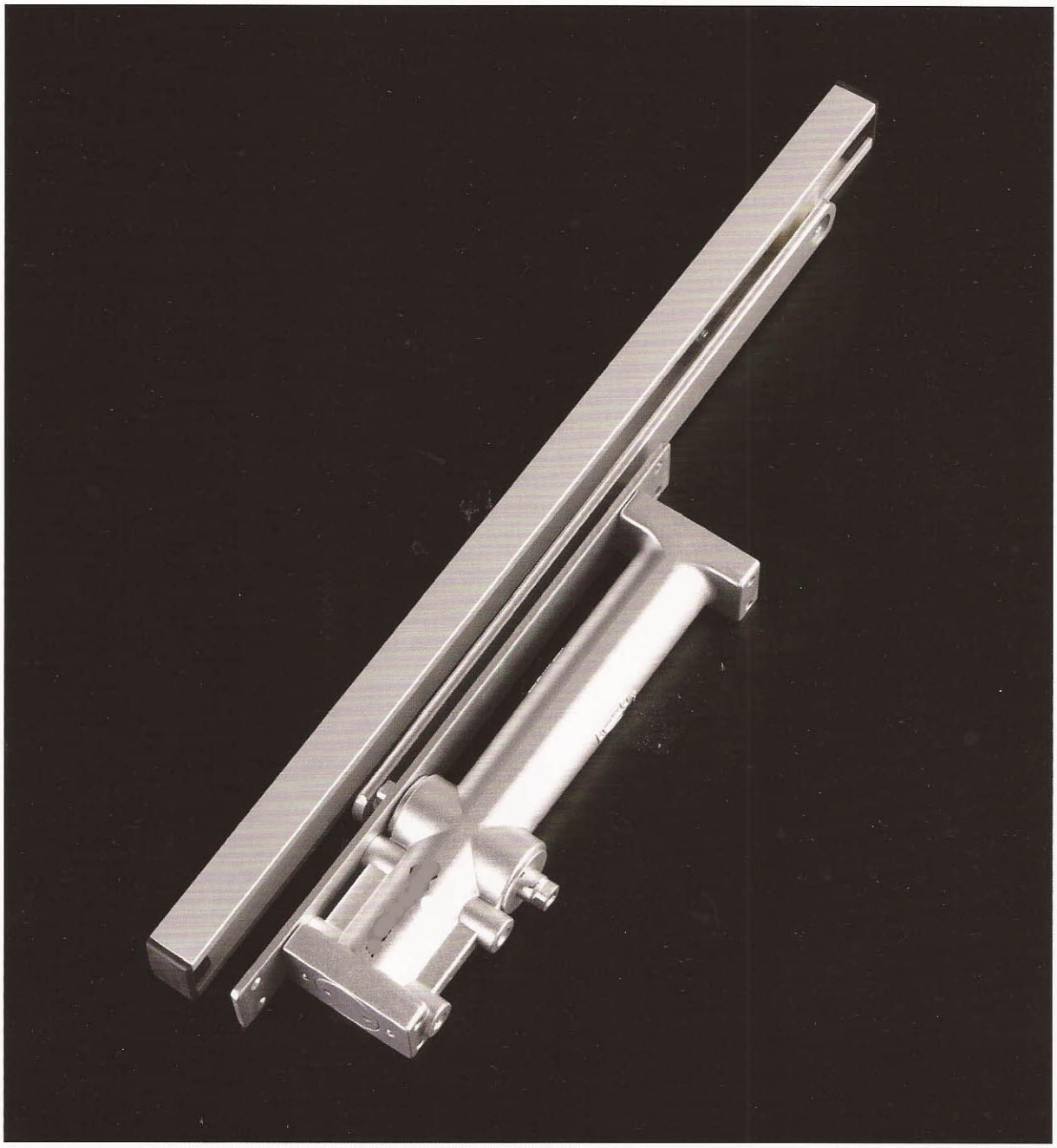

BMQ–1003

产品特点：

采用专门设计的高精密油封，防止机体漏油，高强度机体，是质量根本的保证，进口高品质液压油，无论严寒酷暑都可保证开启自动，运行平稳、品质稳定、经久耐用、提供两年品质保证。暗藏式结构，不影响门体外观，高贵雅典，提供两组调节阀，适用左开/右开门，可以两段调速。

Features:

It adopts specially designed high precision seal to prevent leakage of body, high–intensity aircraft, and the quality is the fundamental assurance imports of high–quality hydraulic oil, cold winter can be opened automatically guaranteed , stable operation, quality stability, durability, provide two quality assurance, Hidden structure, without affecting the door appearance, graceful, two–conditioning valve left open the application/right door, Speed can be divided into two sections.

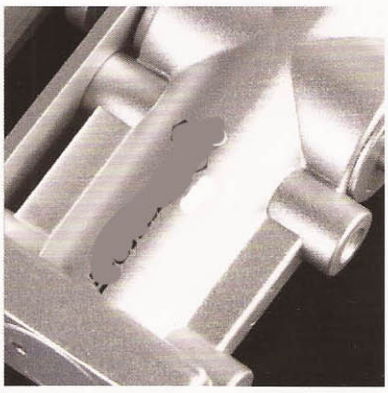

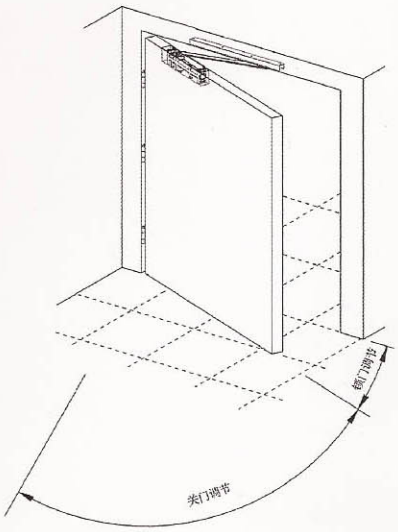

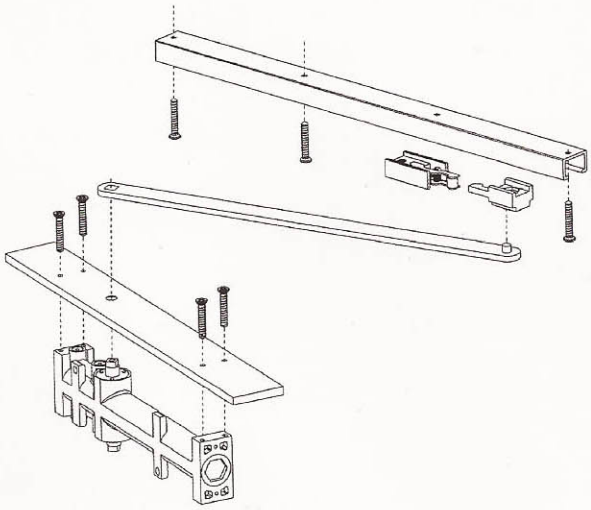

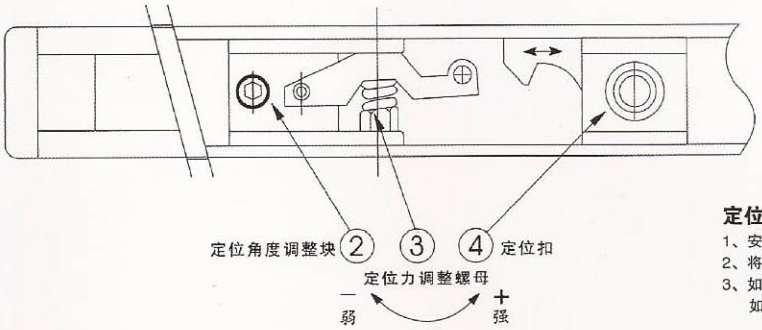

定位角度调整说明：

1、安装前将定位调整扣上置入滑动槽内。
2、将门打开至希望定位之角度，再将定位调整块上之螺丝锁紧即可。
3、如需调整定位力量，依图调整定位力调整螺母即可，
如不需要定位功能将定位调整块拿下即可。

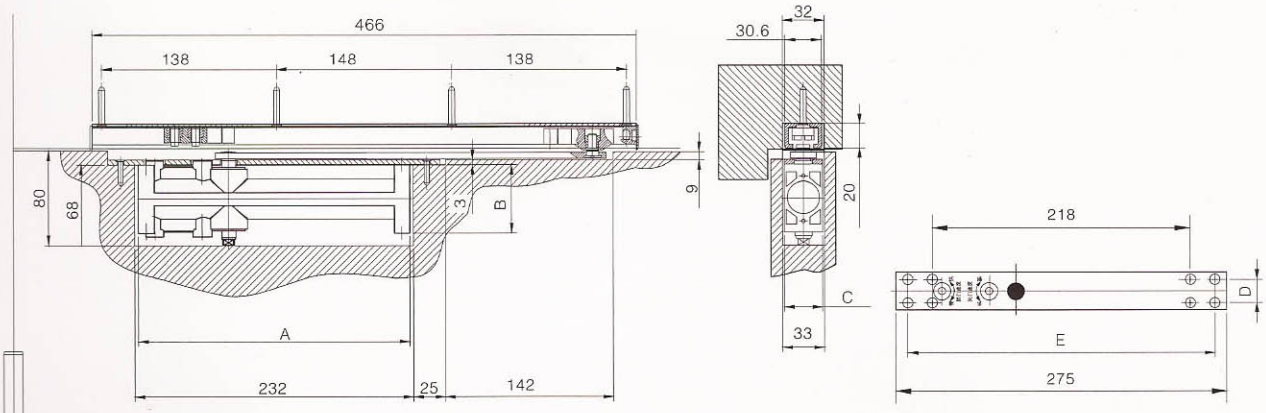

主要参数 Main parameter

Item	外形尺寸 (mm) Overall dimension			安装尺寸 (mm) Installation dimension		适用门重 Applicable door weight (kg)	适用门宽 Applicable door width (mm)	具备功能 Function	（请按产品说明书安装） Please install according to the instruction
	A	B	C	D	E				
B1003 内藏式	232	57	33	20	275	40～65	≤950	双段调速	配滑轨摇臂带停门功能
B1003 内藏式加重	232	57	33	20	275	60～85	≤1050	双段调速	

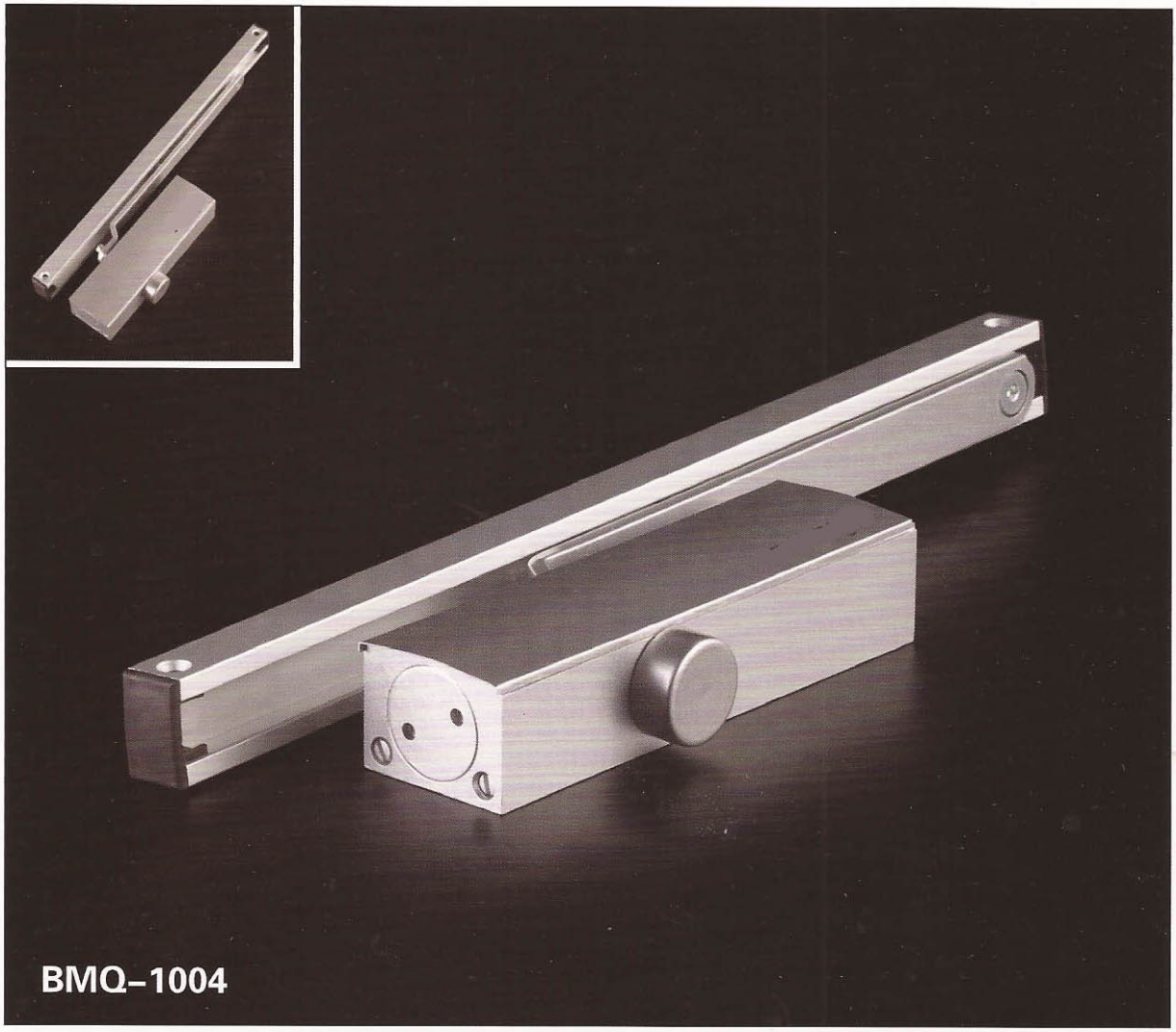

主要参数 Main parameter										
Item	外形尺寸 (mm) Overall dimension			安装尺寸 (mm) Installation dimension			适用门重 Applicable door weight (kg)	适用门宽 Applicable door width (mm)	具备功能 Function	（请按产品说明书安装） Please install according to the instruction
BL004 滑槽式	A	B	C	D	E	F				
	178	50	38	38	86	60	40～65	≤950	双段调速	配滑轨摇臂、带停门功能

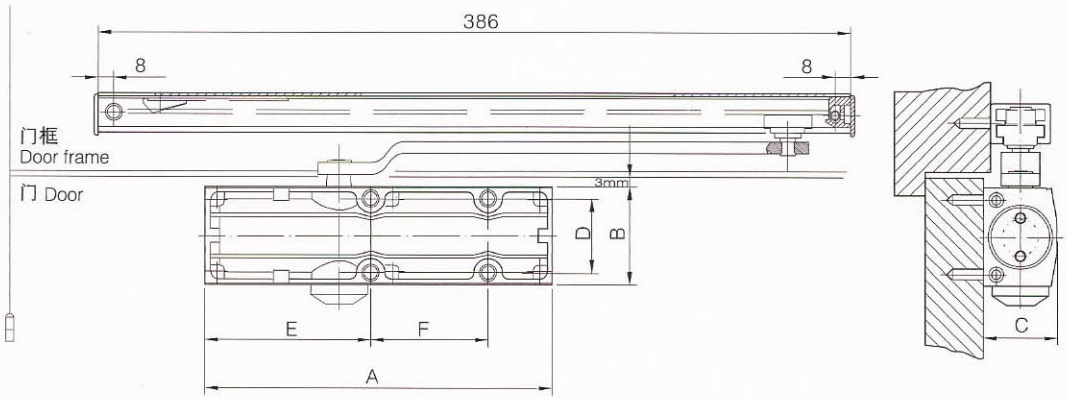



BMQ-C 系列防火闭门器

主要参数 Main parameter

Item	外形尺寸 (mm) Overall dimension			安装尺寸 (mm) Installation dimension		适用门重 Applicable door weight (kg)	适用门宽 Applicable door width (mm)	具备功能 Function	（请按产品说明书安装） Please install according to the instruction
	A	B	C	D	E				
C3W	206	44.5	68	19	188	40–65	≤950	双段调速	
C3D	206	44.5	68	19	188	40～65	≤950	双段调速 / 停门功能	
C4W	206	44.5	68	19	188	60～85	≤1050	双段调速	

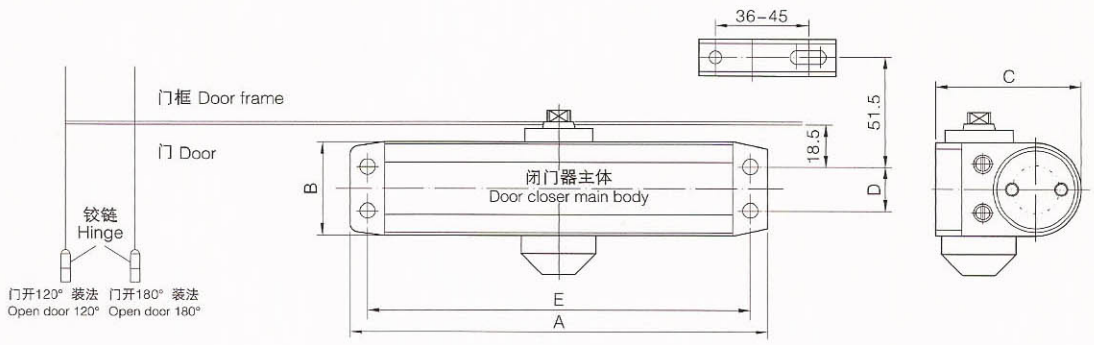



主要参数 Main parameter

Item	外形尺寸 (mm) Overall dimension			安装尺寸 (mm) Installation dimension		适用门重 Applicable door weight (kg)	适用门宽 Applicable door width (mm)	具备功能 Function	(请按产品说明书安装) Please install according to the instruction
	A	B	C	D	E				
B2W	120	36.5	56	19	132	25~45	≤900	双段调速	
B2D	120	36.5	56	19	132	25~45	≤900	双段调速 / 停门功能	
B3W	148	36.5	56	19	132	40~65	≤950	双段调速	
B3D	148	36.5	56	19	132	40~65	≤950	双段调速 / 停门功能	
B4W	180	40	63	19	165	60~85	≤950	双段调速	
B4D	180	40	63	19	165	60~85	≤950	双段调速 / 停门功能	

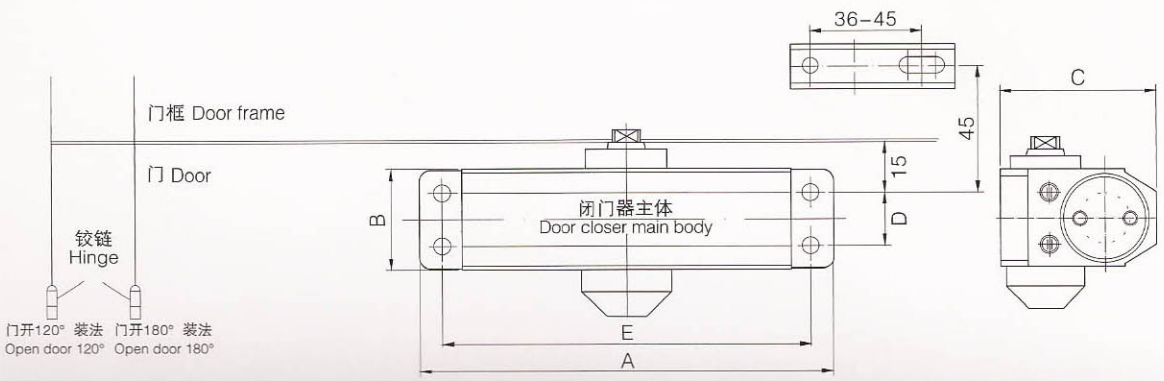



主要参数 Main parameter									
Item	外形尺寸 (mm) Overall dimension			安装尺寸 (mm) Installation dimension		适用门重 Applicable door weight (kg)	适用门宽 Applicable door width (mm)	具备功能 Function	(请按产品说明书安装) Please install according to the instruction
	A	B	C	D	E				
M2W	220	52	45	19	200	25～45	≤900	双段调速	
M3W	220	52	45	19	200	40～65	≤950	双段调速	
M3D	220	52	45	19	200	40～65	≤950	双段调速/停门功能	

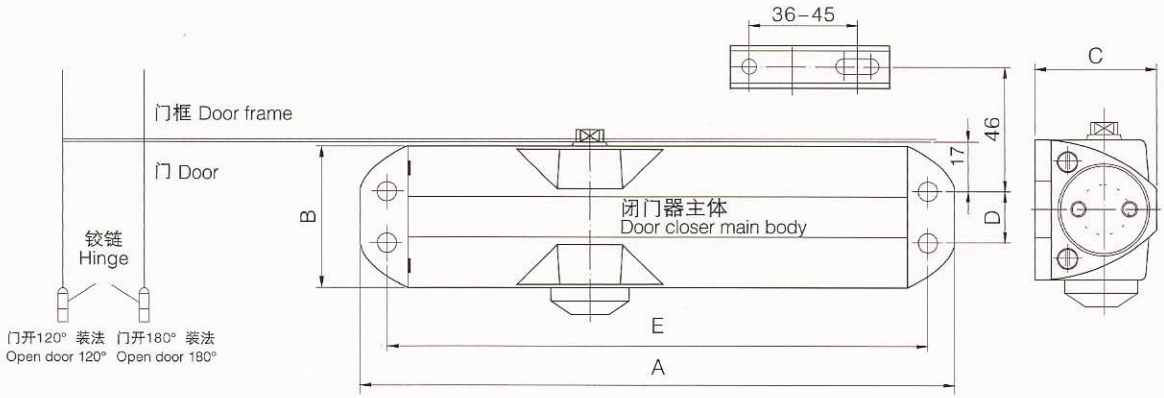

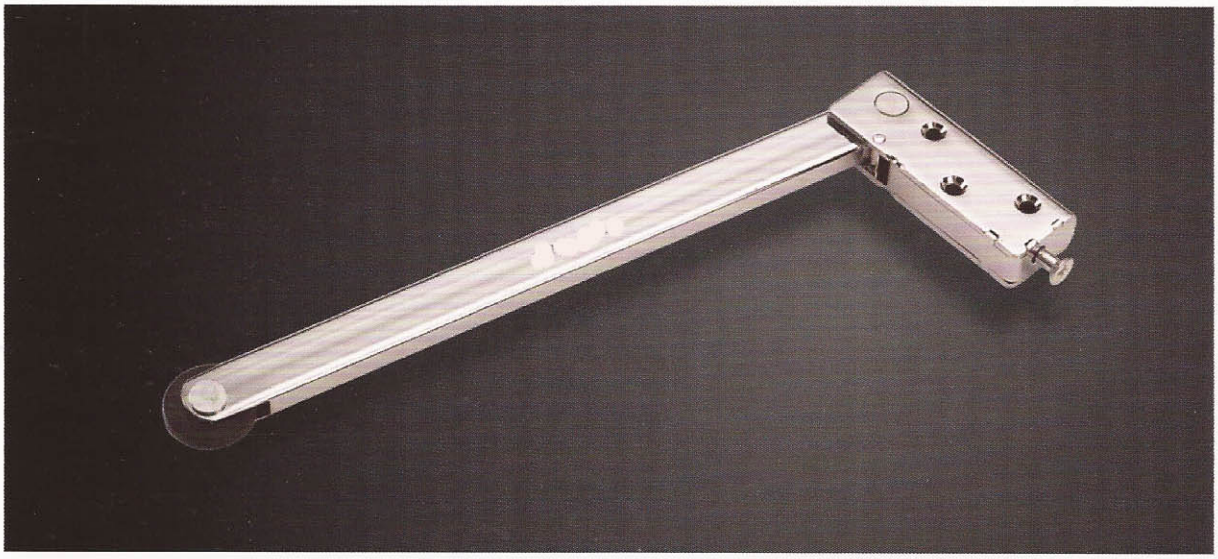

BMQ-XX型顺时器

TY-AB型顺时顺专为双开门自动闭门器配合使用。
两门只用一个顺时器。安装于锁轴门扇上门框。
双扇门闭锁前有锁孔门扇由于无顺时器阻碍，
先于有锁轴门扇到位。有锁轴门扇由于顺时器阻挡，
延时后与有锁孔门扇进行扣锁到位。

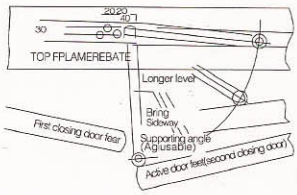

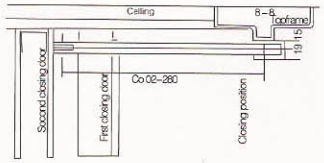

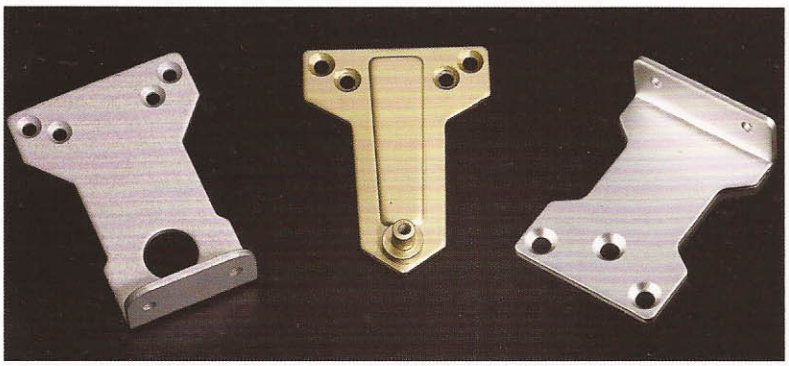



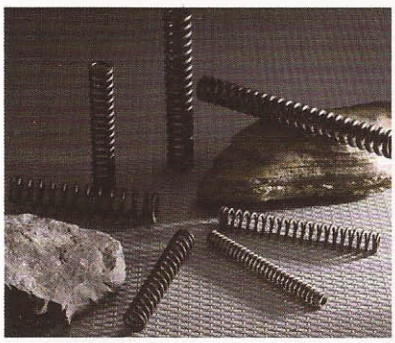



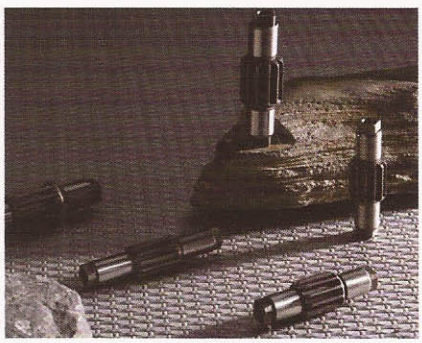

公司技术全面，设备齐全，工艺先进，制造精良。产品采用标准，钢版冲压成型，外表面采用电镀处理，结构合理，装调方便。
适用于各种商业和家居的双扇门配合自动闭门器使用。








NBN
7L-A1308

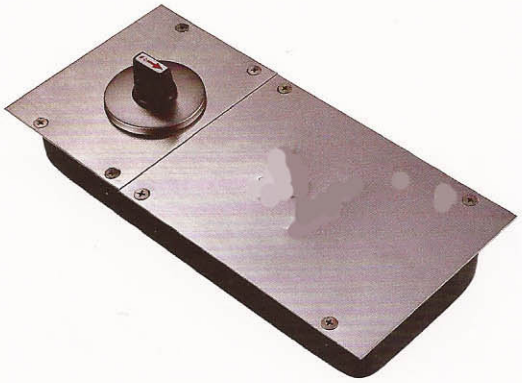



DTH–1.6 地弹簧

表面处理：亮铬、拉丝
主要材质：不锈钢
Finish: SP,SSS
Material: Stainless steel

功能及优点 Features and Benefits

- 所有地弹簧均超过30万次开关测试。
- 使用于最大门扇宽度为900mm以内的双向开启门，最大门重为70kg以下。
- 门扇最大开到130°，关闭效果从80°起有效，两个闭门速度调节控制阀，以配合不同闭门效果。
- 内置减压阀，防止因外来强压式强风状态下闭门而造成地弹簧损坏及漏油。
- 内加防冻油，凝固点低于–40°。适合全天候安装与使用。

地弹簧系列

现代商业是透明开放的世界，玻璃构造的装饰风格更明朗而直接地表达其内在的意念。天宇五金地弹簧系列使门的开合更为平稳而顺畅，配合各式玻璃夹，能配合高级的办公室、商店、餐厅等场所的装璜。

Floor Spring

Modern business is translucent and open–minded, decorated by glass can show this meaning more easily and directly. Floor spring series of Tianyu make opening and closing door more smoothly, matching with various kinds of glass clamp, it can meet the decoration of high–grade office,shop,restaurant and so on.

适用范围:：酒店、写字楼、商铺、公寓、会所等场所。
Suitable for the following:hotel, office, shop, apartment,conference areas and so on.

地弹簧配件 The Fittings of Floor spring

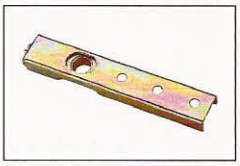

上转轴 up swivel

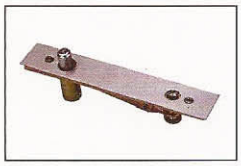

上顶轴 top swivel

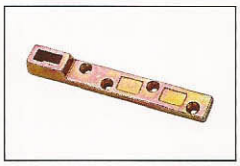

下摇臂 down rocking arm

结构图 Structural Graphics

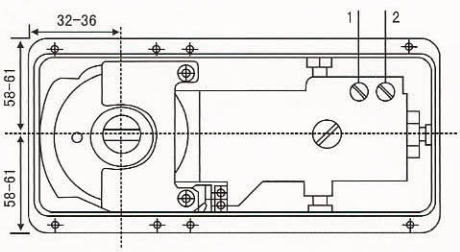

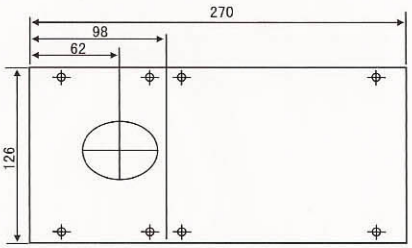

闭门速度调节
具备两个闭门速度控制段
调节阀1 调节130°–0°闭门速度
调节阀2 调节130°–20°闭门速度

定位功能（选项）
门扇能打开至90°定位
1 调节130°–0°闭门速度
2 调节130°–20°闭门速度
3 90°定位（选项）

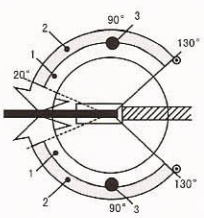

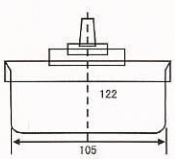

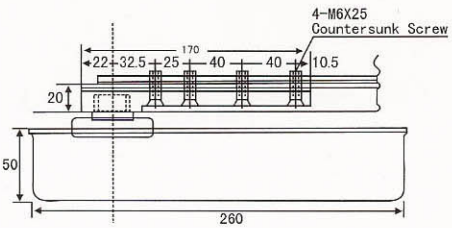

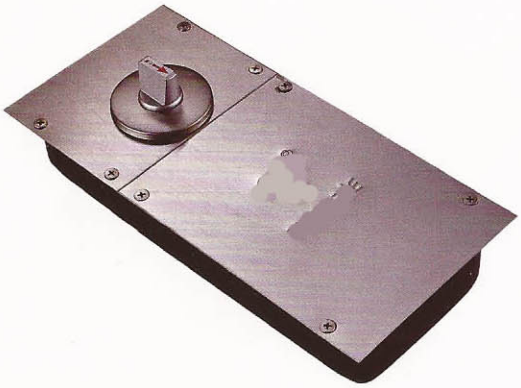



DTH–1.8 地弹簧

表面处理：亮铬、拉丝
主要材质：不锈钢
Finish: SP,SSS
Material: Stainless steel

功能及优点 Features and Benefits

- 所有地弹簧均超过30万次开关测试。
- 使用于最大门扇宽度为900mm以内的双向开启门，最大门重为80kg以下。
- 门扇最大开到130°，关闭效果从80°起有效，两个闭门速度调节控制阀，以配合不同闭门效果。
- 内置减压阀，防止因外来强压式强风状态下闭门而造成地弹簧损坏及漏油。
- 内加防冻油，凝固点低于–40°。适合全天候安装与使用。

地弹簧系列

现代商业是透明开放的世界，玻璃构造的装饰风格更明朗而直接地表达其内在的意念。天宇五金地弹簧系列使门的开合更为平稳而顺畅，配合各式玻璃夹，能配合高级的办公室、商店、餐厅等场所的装璜。

Floor Spring

Modern business is translucent and open–minded, decorated by glass can show this meaning more easily and directly. Floor spring series of Tianyu make opening and closing door more smoothly, matching with various kinds of glass clamp, it can meet the decoration of high–grade office,shop,restaurant and so on.

适用范围:：酒店、写字楼、商铺、公寓、会所等场所。
Suitable for the following:hotel, office, shop, apartment,conference areas and so on.

地弹簧配件 The Fittings of Floor spring

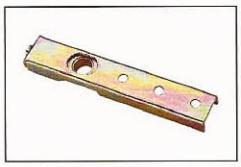

上转轴 up swivel

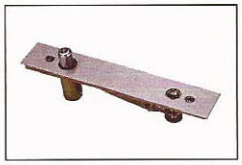

上顶轴 top swivel

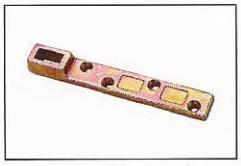

下摇臂 down rocking arm

结构图 Structural Graphics

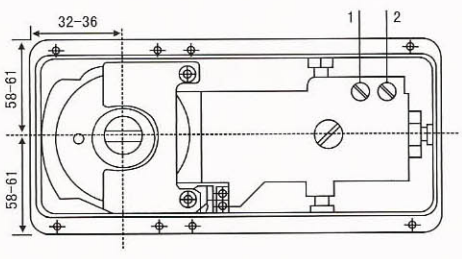

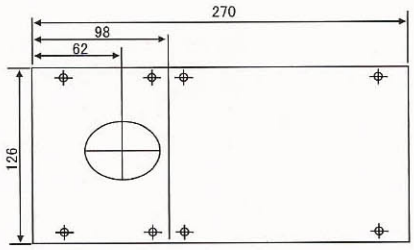

闭门速度调节
具备两个闭门速度控制段
调节阀1 调节130°–0°闭门速度
调节阀2 调节130°–20°闭门速度

定位功能（选项）
门扇能打开至90°定位
1 调节130°–0°闭门速度
2 调节130°–20°闭门速度
3 90°定位（选项）

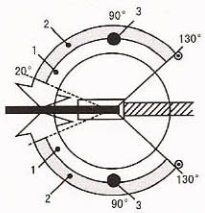

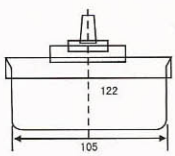

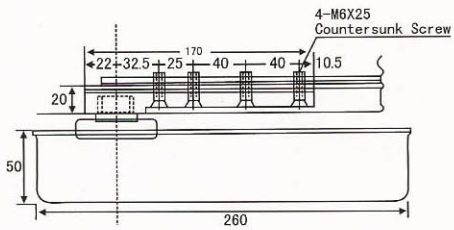





DTH-818N 地弹簧

表面处理：亮铬、拉丝
主要材质：不锈钢
Finish: SP,SSS
Material: Stainless steel

功能及优点 Features and Benefits

- 所有地弹簧均超过30万次开关测试。
- 使用于最大门扇宽度为950mm-1100mm的双向开启门，最大门重为100kg-110kg以下。
- 门扇最大开到130°，关闭效果从80°起有效，两个闭门速度调节控制阀，以配合不同闭门效果。
- 内置减压阀，防止因外来强压式强风状态下闭门而造成地弹簧损坏及漏油。
- 内加防冻油，凝固点低于-40°。适合全天候安装与使用。

地弹簧系列

现代商业是透明开放的世界，玻璃构造的装饰风格更明朗而直接地表达其内在的意念。天宇五金地弹簧系列使门的开合更为平稳而顺畅，配合各式玻璃夹，能配合高级的办公室、商店、餐厅等场所的装璜。

Floor Spring

Modern business is translucent and open-minded, decorated by glass can show this meaning more easily and directly. Floor spring series of Tianyu make opening and closing door more smoothly, matching with various kinds of glass clamp, it can meet the decoration of high-grade office,shop, restaurant and so on.

适用范围:：酒店、写字楼、商铺、公寓、会所等场所。
Suitable for the following:hotel, office, shop, apartment,conference areas and so on.

地弹簧配件 The Fittings of Floor spring

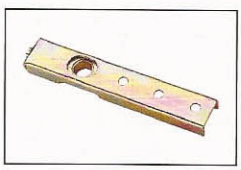

上转轴 up swivel

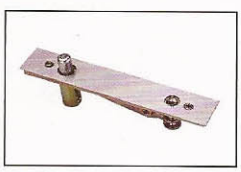

上顶轴 top swivel

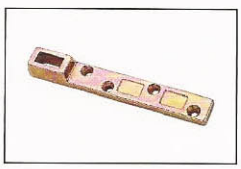

下摇臂 down rocking arm

技术数据及性能
Technical data and performance

闭门力量	尺寸	20	25
适合最大门宽[1]	≤950mm	●	—
适合最大门宽[1][2]	≤1100mm	—	●
最大门重（kg）		100	110
闭门速度以调节阀控制		●	●
90° 定位角度		○	○
产品重量（kg）		5.5	5.5
底座尺寸（mm）	长	303	303
	宽	144	144
	高	53	53

● 有 —无 ○选项

结构图 Structural Graphics

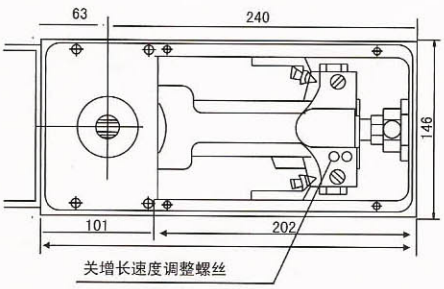

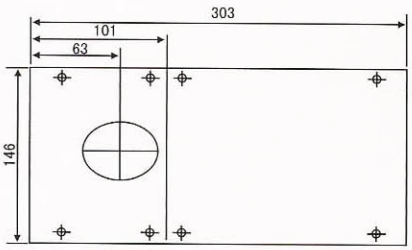

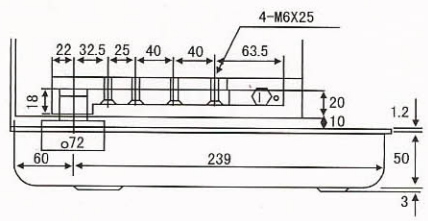

闭门速度调节
具备两个闭门速度控制段
调节阀1 调节130° -0° 闭门速度
调节阀2 调节130° -20° 闭门速度

定位功能（选项）
门扇能打开至90° 定位
1 调节130° -0° 闭门速度
2 调节130° -20° 闭门速度
3 90° 定位（选项）

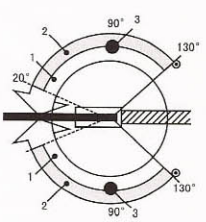

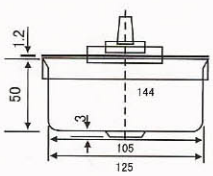





DTH-84N 地弹簧

表面处理： 亮铬、拉丝
主要材质： 不锈钢
Finish: SP,SSS
Material: Stainless steel

功能及优点 Features and Benefits

- 特薄型机体设计，机体厚度只为40mm，减小地方开孔深度，使安装更为简易。
- 内置减压阀，防止因外来强压式强风状态下闭门而造成地弹簧损坏及漏油。
- 恒温装置，能在极大温差变化下，令闭门速度仍保持稳定。
- 130° 至0° 及130° 至20° 两个闭门速度调控阀，以配合不同闭门效果。
- 除不带定位功能之型号外，更备有90° 定位或105° 定位之型号以供选择。
- 通用型设计，适合左右手及单双向开启门扇，各使用方式均备有完整配件。
- 承重力达130KG，最大门宽1200mm，适合各类门扇。

地弹簧系列

现代商业是透明开放的世界，玻璃构造的装饰风格更明朗而直接地表达其内在的意念。天宇五金地弹簧系列使门的开合更为平稳而顺畅，配合各式玻璃夹，能配合高级的办公室、商店、餐厅等场所的装璜。

Floor Spring

Modern business is translucent and open-minded, decorated by glass can show this meaning more easily and directly. Floor spring series of Tianyu make opening and closing door more smoothly, matching with various kinds of glass clamp, it can meet the decoration of high-grade office,shop, restaurant and so on.

适用范围:：酒店、写字楼、商铺、公寓、会所等场所。
Suitable for the following:hotel, office, shop, apartment,conference areas and so on.

地弹簧配件 The Fittings of Floor spring

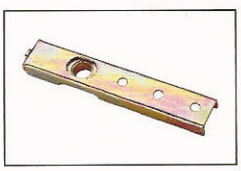

上转轴 up swivel

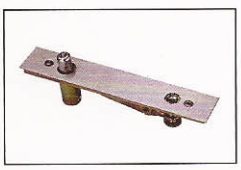

上顶轴 top swivel

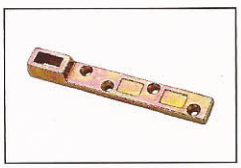

下摇臂 down rocking arm

技术数据及性能
Technical data and performance

弹簧强度		标准型	轻型	重型
闭门力量（Nm牛顿米）		20	15	25
适合最大门宽1）2）	800mm	—	●	—
	1200mm	●	—	●
闭门速度以调节阀控制		●	●	●
定位角度	或 90°	○	○	○
	或 105°	○	○	○
产品重量（kg）		5.4	5.4	5.4
底座尺寸（mm）	长	306	306	306
	宽	108	108	108
	高	40	40	40

● 有 —无 ○ 选项

结构图 Structural Graphics

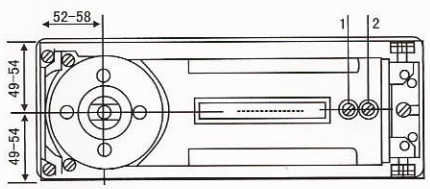

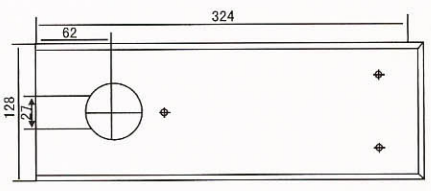

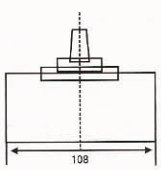

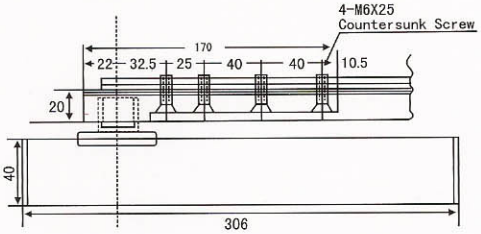

1 调节130° -0°
闭门速度
2 调节130° -20°
闭门速度
3 90° 定位
（选项）
4 105° 定位
（选项）

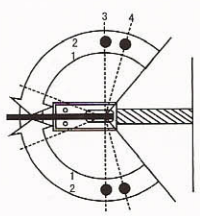

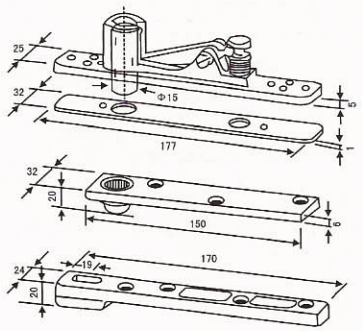

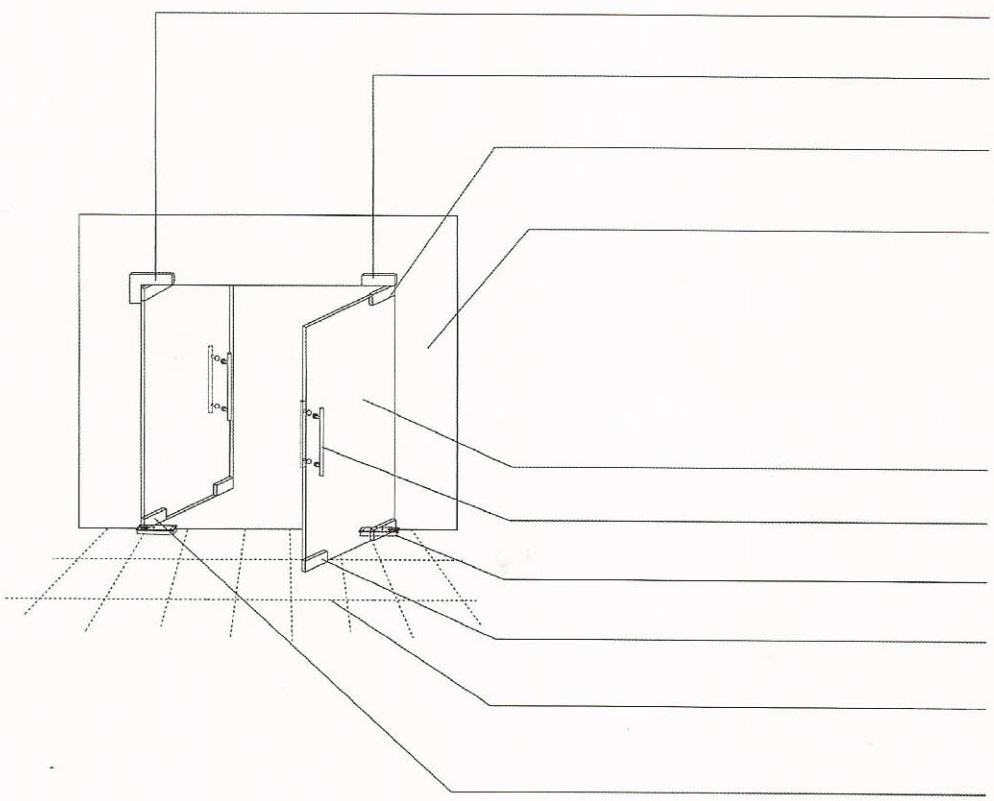

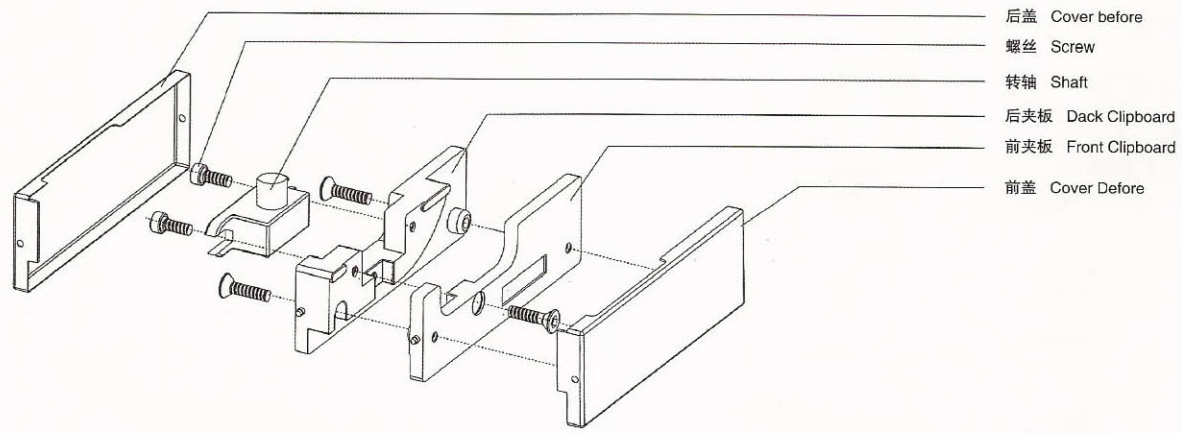

天宇门夹结构、尺寸符合国际标准，安装方便简易，外壳采用进口不锈钢SUS304板材，表面光洁无瑕，是玻璃门理想的配套选择。
Glass clamps of TENYALE enjoy the international structure and sizes, easy to install,inported stainless steel 304, perfect finish, as the ideal choice for glass doors.

适用范围:：酒店、写字楼、商铺、公寓、会所等场所。
Suitable for the following:hotel, office, shop, apartment,conference areas and so on.

玻璃门夹特点：

1、门夹芯用高强度锌合金压铸而成;
2、装饰外壳采用进口304不锈钢板冲压而成，安全耐用;
3、标准配置适用于10–12mm的钢化玻璃，定制加长螺钉可用于15mm玻璃;
4、下轴套选用优质碳钢精铸而成，锁夹的锁芯采用全铜制造。

Glass Clamp Features：

1. Clamp Cored from zinc alloy die castings with high intensity;
2. Decorative shell using 304 stainless steel plate inprots from stamping, safe, durable;
3. Standards apply to the allocation of 10–12mm toughened glass, glass customization longer screw can be used in 15mm;
4. Cast from high–quality carbon steel sleeve under selection, locking clips CORE–wide copper manufacturing. Here conventional–type(SCHS) (SCHS) (Top)
(Qu folder) (locking clip)

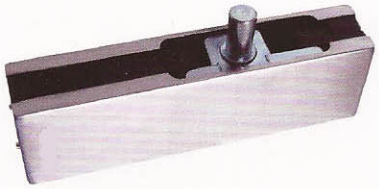

MJ-30 顶夹

玻璃门夹 Glass Clamp

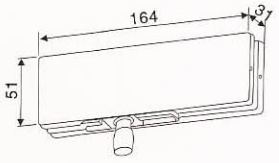

表面处理： 拉丝、亮铬
主要材质： 不锈钢外壳+铝合金内体
适用范围： 玻璃门
主要特点： 承载玻璃门扇开合

Finish: SSS,SP
Material: Stainless steel+Aluminum alloy
Available For: Glass Doors
Features: To bear opening/closing glass door

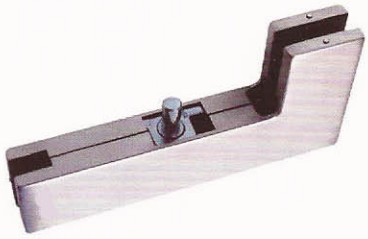

MJ-40 曲夹

玻璃门夹 Glass Clamp

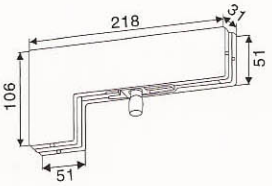

表面处理： 拉丝、亮铬
主要材质： 不锈钢外壳+铝合金内体
适用范围： 玻璃门
主要特点： 承载玻璃门扇开合

Finish: SSS,SP
Material: Stainless steel+Aluminum alloy
Available For: Glass Doors
Features: To bear opening/closing glass door



MJ-50A 锁夹

玻璃门夹 Glass Clamp

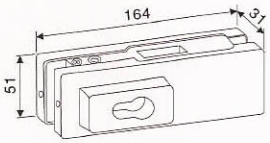

表面处理： 拉丝、亮铬
主要材质： 不锈钢外壳+铝合金内体
适用范围： 玻璃门
主要特点： 承载玻璃门扇开合

Finish: SSS,SP
Material: Stainless steel+Aluminum alloy
Available For: Glass Doors
Features: To bear opening/closing glass door

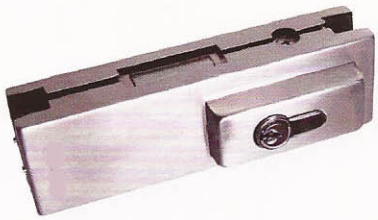

MJ-50B 锁夹

玻璃门夹 Glass Clamp

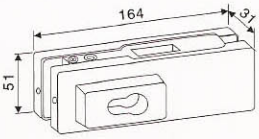

表面处理： 拉丝、亮铬
主要材质： 不锈钢外壳+铝合金内体
适用范围： 玻璃门
主要特点： 承载玻璃门扇开合

Finish: SSS,SP
Material: Stainless steel+Aluminum alloy
Available For: Glass Doors
Features: To bear opening/closing glass door



MJ-10 下夹

玻璃门夹 Glass Clamp

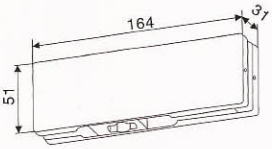

表面处理： 拉丝、亮铬
主要材质： 不锈钢外壳+铝合金内体
适用范围： 玻璃门
主要特点： 承载玻璃门扇开合

Finish: SSS,SP
Material: Stainless steel+Aluminum alloy
Available For: Glass Doors
Features: To bear opening/closing glass door

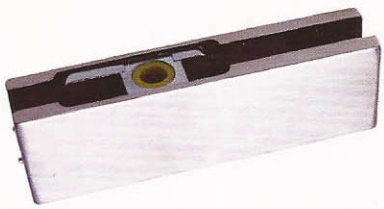

MJ-20 上夹

玻璃门夹 Glass Clamp

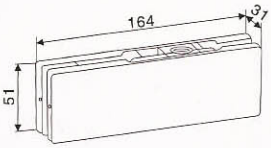

表面处理： 拉丝、亮铬
主要材质： 不锈钢外壳+铝合金内体
适用范围： 玻璃门
主要特点： 承载玻璃门扇开合

Finish: SSS,SP
Material: Stainless steel+Aluminum alloy
Available For: Glass Doors
Features: To bear opening/closing glass door

感应锁技术参考：
Technological Parameter

· 电源 Power Supply	DC4.8V–6V，4节1.5V Aa碱性电池 DC4.8V–6V, 4 Jie 1.5V Aa Alkaline Battery
· 静态电流 Static Current	<18微安(uA)
· 动态电流 Dynamic Current	<200毫安(mA)
· 储存温度 Storage Temperature	–20~+85℃
· 储存湿度 Storage Humidity	10%~90% RH
· 工作温度 Work Temperature	0~+80℃
· 工作湿度 Work Humidity	15%~95% RH
· 卡接近检测方法 Card Approaching Test Method	微波接近检测 Infrared pulse reflection type approaching test
· 感应工作频率 Sensing work Frrequency	100K–150K赫兹(低频)或13.56兆赫兹(高频) 100K–150K HZ (Low Frequency) or 13.56 MHZ (High Frequency)
· 欠压提示 Under Voltage Indication	工作电压低于4.8伏报警，此时还可开门200次 Warn when work voltage is lower then 4.8V ,and under this situation, the door can be opened for 200 times.

感应锁内部结构及特点
Sensing lock Internal structure and characteristics

- RF高频卡采用荷兰PHILIPS(飞利浦)公司原装芯片
- 开锁RF低频卡采用美国ATMEL(爱特梅尔)公司原装芯片；
- 芯片内部固化全球唯一按64位序列号(低频)或32位序列号(高频)；
- 驱动部件使用日本Mabuchi Motor(万宝至)株式会社专用锁具马达；
- 开锁RF卡可实现酒店一卡通功能；
- 门锁电脑板芯片采用飞利浦工业级芯片；
- 门没关好声光提醒功能；
- 反锁提醒功能

- RF High frequency card adopts the original chip from Netherland PHILIPS Company;
- Unlocking RF low frequency card adopts the original chip from American ATMEL Company;
- Fixed chip interior, global unique as per 64–bit series No. (low frequency) or 32–bit series No. (high frequency)
- Driving parts adopt special lock motor of Japan Mabuchi Motor Co., Ltd;
- Openning to lock The RF card can carry out one cartoon function of cabaret;
- A lock computer plank chip adopts philip`s industry class chip;
- Unlocking warning/Alarming and lighting when the door is unlocked;
- Back locking reminding function;

可选表面处理
Optional surface treatment



AL 砂金

感应锁系统功能卡列表：
Sensing lock List Form Of System Function Card

- 密码授权卡 Password Authorization Card
- 总管卡 Manager Card
- 楼栋卡 Building Card
- 楼层卡(管理卡) Floor (Management Card)
- 应急卡 Emergaency Card
- 校时卡 Timing Card
- 客人卡 Customer Card
- 房号安装卡 Room NO. Installation Card
- 数据卡 Date Card
- 退房卡 Check Card



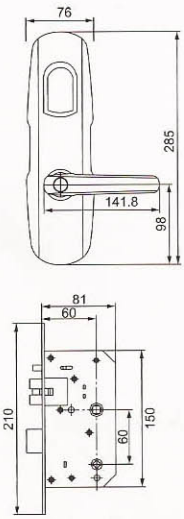

TY2801–2 A/L



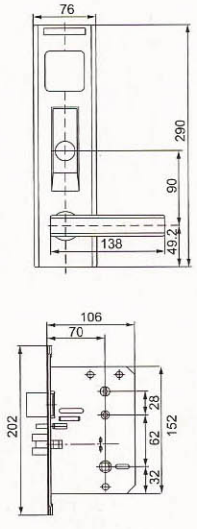

TY2701 C/S



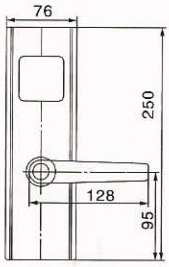

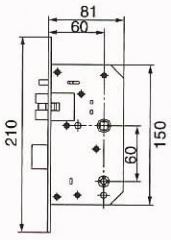

TY2703 L

GD9锌合金门锁 GD9 Zinc Alloy Door Lock

内部结构及特点

·RF高频卡采用荷兰PHILIPS(飞利浦)公司原装芯片
·开锁RF低频卡采用美国ATMEL(爱特梅尔)公司原装芯片；
·芯片内部固化全球唯一按64位序列号(低频)或32位序列号(高频)；
·驱动部件使用日本Mabuchi Motor(万宝至)株式会社专用锁具马达；
·开锁RF卡可实现酒店一卡通功能；
·门锁电脑板芯片采用飞利浦工业级芯片；
·门没关好声光提醒功能；
·反锁提醒功能

Internal structure and characteristics

·RF High frequency card adopts the original chip from Netherland PHILIPS Company ;
·Unlocking RF low frequency card adopts the original chip from American ATMEL Company ;
·Fixed chip interior, global unique as per 64-bit series No. (low frequency) or 32-bit series No. (high frequency)
·Driving parts adopt special lock motor of Japan Mabuchi Motor Co., Ltd;
·Openning to lock The RF card can carry out one cartoon function of cabaret;
·A lock computer plank chip adopts philip`s industry class chip;
·Unlocking warning/Alarming and lighting when the door is unlocked ;
·Back locking reminding function ;

可选表面处理

Optional surface treatment


L 镍拉丝


CS 金拉丝



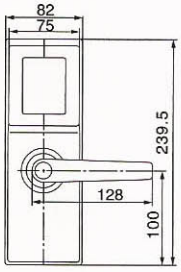

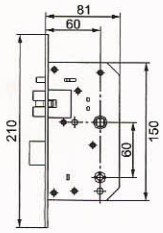

TY2601 L

GD9锌合金门锁 GD9 Zinc Alloy Door Lock

内部结构及特点

·RF高频卡采用荷兰PHILIPS(飞利浦)公司原装芯片
·开锁RF低频卡采用美国ATMEL(爱特梅尔)公司原装芯片；
·芯片内部固化全球唯一按64位序列号(低频)或32位序列号(高频)；
·驱动部件使用日本Mabuchi Motor(万宝至)株式会社专用锁具马达；
·开锁RF卡可实现酒店一卡通功能；
·门锁电脑板芯片采用飞利浦工业级芯片；
·门没关好声光提醒功能；
·反锁提醒功能

Internal structure and characteristics

·RF High frequency card adopts the original chip from Netherland PHILIPS Company ;
·Unlocking RF low frequency card adopts the original chip from American ATMEL Company ;
·Fixed chip interior, global unique as per 64-bit series No. (low frequency) or 32-bit series No. (high frequency)
·Driving parts adopt special lock motor of Japan Mabuchi Motor Co., Ltd;
·Openning to lock The RF card can carry out one cartoon function of cabaret;
·A lock computer plank chip adopts philip`s industry class chip;
·Unlocking warning/Alarming and lighting when the door is unlocked ;
·Back locking reminding function ;

可选表面处理

Optional surface treatment


L 镍拉丝


CS 金拉丝


AL 砂金

TY2901 XB

GD9锌合金门锁 GD9 Zinc Alloy Door Lock

内部结构及特点

·RF高频卡采用荷兰PHILIPS(飞利浦)公司原装芯片
·开锁RF低频卡采用美国ATMEL(爱特梅尔)公司原装芯片；
·芯片内部固化全球唯一按64位序列号(低频)或32位序列号(高频)；
·驱动部件使用日本Mabuchi Motor(万宝至)株式会社专用锁具马达；
·开锁RF卡可实现酒店一卡通功能；
·门锁电脑板芯片采用飞利浦工业级芯片；
·门没关好声光提醒功能；
·反锁提醒功能

Internal structure and characteristics

·RF High frequency card adopts the original chip from Netherland PHILIPS Company ;
·Unlocking RF low frequency card adopts the original chip from American ATMEL Company ;
·Fixed chip interior, global unique as per 64-bit series No. (low frequency) or 32-bit series No. (high frequency)
·Driving parts adopt special lock motor of Japan Mabuchi Motor Co., Ltd;
·Openning to lock The RF card can carry out one cartoon function of cabaret;
·A lock computer plank chip adopts philip`s industry class chip;
·Unlocking warning/Alarming and lighting when the door is unlocked ;
·Back locking reminding function ;

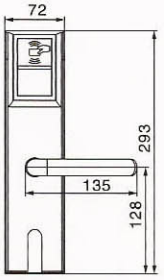

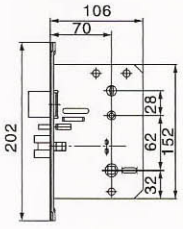



可选表面处理

Optional surface treatment



XB 氧化金



A 氧化铝

TY8101 AL

GD9锌合金门锁 GD9 Zinc Alloy Door Lock

内部结构及特点

·RF高频卡采用荷兰PHILIPS(飞利浦)公司原装芯片
·开锁RF低频卡采用美国ATMEL(爱特梅尔)公司原装芯片；
·芯片内部固化全球唯一按64位序列号(低频)或32位序列号(高频)；
·驱动部件使用日本Mabuchi Motor(万宝至)株式会社专用锁具马达；
·开锁RF卡可实现酒店一卡通功能；
·门锁电脑板芯片采用飞利浦工业级芯片；
·门没关好声光提醒功能；
·反锁提醒功能

Internal structure and characteristics

·RF High frequency card adopts the original chip from Netherland PHILIPS Company ;
·Unlocking RF low frequency card adopts the original chip from American ATMEL Company ;
·Fixed chip interior, global unique as per 64-bit series No. (low frequency) or 32-bit series No. (high frequency)
·Driving parts adopt special lock motor of Japan Mabuchi Motor Co., Ltd;
·Openning to lock The RF card can carry out one cartoon function of cabaret;
·A lock computer plank chip adopts philip`s industry class chip;
·Unlocking warning/Alarming and lighting when the door is unlocked ;
·Back locking reminding function ;

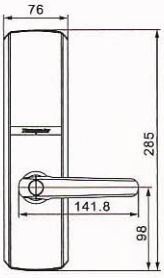

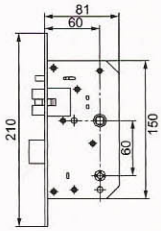



可选表面处理

Optional surface treatment



CS 金拉丝



L 镍拉丝



AL 砂金



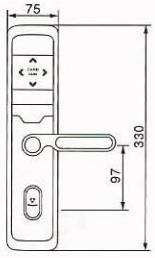

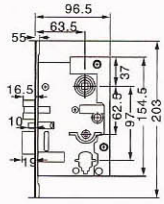

TY8102 L

GD9锌合金门锁 GD9 Zinc Alloy Door Lock

内部结构及特点

·RF高频卡采用荷兰PHILIPS(飞利浦)公司原装芯片
·开锁RF低频卡采用美国ATMEL(爱特梅尔)公司原装芯片；
·芯片内部固化全球唯一按64位序列号(低频)或32位序列号(高频)；
·驱动部件使用日本Mabuchi Motor(万宝至)株式会社专用锁具马达；
·开锁RF卡可实现酒店一卡通功能；
·门锁电脑板芯片采用飞利浦工业级芯片；
·门没关好声光提醒功能；
·反锁提醒功能

Internal structure and characteristics

·RF High frequency card adopts the original chip from Netherland PHILIPS Company ;
·Unlocking RF low frequency card adopts the original chip from American ATMEL Company ;
·Fixed chip interior, global unique as per 64-bit series No. (low frequency) or 32-bit series No. (high frequency)
·Driving parts adopt special lock motor of Japan Mabuchi Motor Co., Ltd;
·Openning to lock The RF card can carry out one cartoon function of cabaret;
·A lock computer plank chip adopts philip's industry class chip;
·Unlocking warning/Alarming and lighting when the door is unlocked ;
·Back locking reminding function ;

可选表面处理

Optional surface treatment



L 镍拉丝



CS 金拉丝



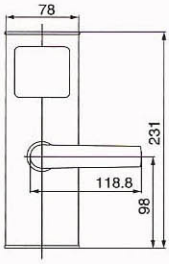

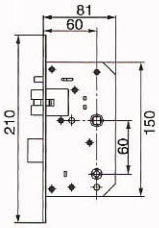

TY2402 L

GD9锌合金门锁 GD9 Zinc Alloy Door Lock

内部结构及特点

·304不锈钢材料制造
·RF高频卡采用荷兰PHILIPS(飞利浦)公司原装芯片
·开锁RF低频卡采用美国ATMEL(爱特梅尔)公司原装芯片；
·芯片内部固化全球唯一按64位序列号(低频)或32位序列号(高频)；
·驱动部件使用日本Mabuchi Motor(万宝至)株式会社专用锁具马达；
·开锁RF卡可实现酒店一卡通功能；
·门锁电脑板芯片采用飞利浦工业级芯片；
·门没关好声光提醒功能；
·反锁提醒功能

Internal structure and characteristics

·Made by 304 stainless steel
·RF High frequency card adopts the original chip from Netherland PHILIPS Company ;
·Unlocking RF low frequency card adopts the original chip from American ATMEL Company ;
·Fixed chip interior, global unique as per 64-bit series No. (low frequency) or 32-bit series No. (high frequency)
·Driving parts adopt special lock motor of Japan Mabuchi Motor Co., Ltd;
·Openning to lock The RF card can carry out one cartoon function of cabaret;
·A lock computer plank chip adopts philip's industry class chip;
·Unlocking warning/Alarming and lighting when the door is unlocked ;
·Back locking reminding function ;

可选表面处理

Optional surface treatment



L 镍拉丝



CS 金拉丝

感应锁技术参考：
Technological Parameter

· 采集方式 Acquisition mode	光学CMOS
· 分辨率 Resolution	550DPI
· 拒真率(FRR) False Reject Rate	≤0.01%
· 认真率(FAR) Seriously rate	≤0.0001%
· 比对时间 Than the time	小于1秒
· 比对方式 Than on the way	1：N
· 指纹容量 Fingerprint capacity	120枚
· 电源 Power supply	4节AA碱性电池
· 电池寿命 Battery Life	3500–4000次
· 工作电压 Work voltage	直流5V~6V
· 工作温度 Work Temperature	–15℃~50℃
· 工作湿度 Work Humidity	10%~90%

指纹锁特点
·外观美观，造型别致，呈现雍容华贵的风格
·使用方便，既可用指纹开锁，也可用密码开锁，还备有应急机械钥匙
·采集器硬度高，耐磨损，抗划能力强，正常使用万次以上
·指纹容量大，可设120枚指纹
·抗静电能力强，最好可承受15000V静电放电
·模块采用美国IT公司的DSP处理器，质量稳定可靠

Internal structure and characteristics
·Nice appearance, unique model, featuring an exquisite style
·Easy to use, fingerprint or password unlocking is available, also providing with the emergency mechanical key
·The collector with high rigidity, strong wear and scratch resistance, available for more than ten thousand times under normal service
·Big fingerprint capacity, 120 fingerprints are available
·Strong antistatic capability, max. capability can be reached to 15,000V electrostatic discharge
·Module adopts DSP processor of American IT Co., being stable and reliable quality

可选表面处理
Optional surface treatment


L 镍拉丝


CS 金拉丝



TYZW6 L 指纹锁

TYZW6安装孔 尺寸图
Dimension figure

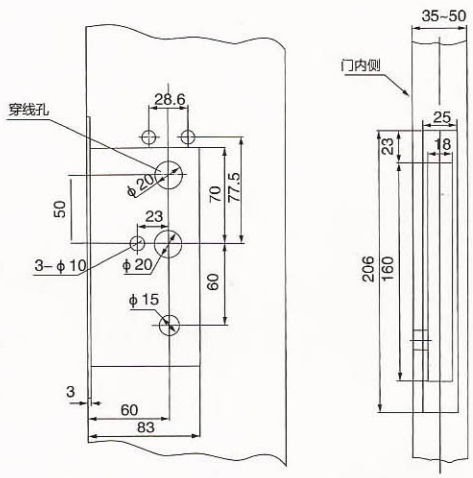





主要特点

- 可采用母卡管理/电脑管理
- 开锁方式：单卡/双卡
- 开门卡通过母卡设置
- 传统系统有防打滑装置
- 锁舌防撬报警/门未关好报警/低压报警
- 电池供电，电池不足时，可以使用外接电源供电开门

Main Characteristic

- Card Function: Mother Card and Child Card
- Open hte doo: guest card/gust card and waiter card be used togerher
- Opening Card is created by Mother Card Control mode of motor.
- Dribe system with anti-slip device
- Lacth prized warning/Unlocking warning/Low voltage warning
- Power supply: Battery-powered, the battery is low, you can use an external power supply to open the door

技术参数

工作电压：DC6V
静态电流：3uA
动态电流：250mA
开锁次数：10000
报警电压：4.0V
开门时间：4S
环境要求：温度(-20°C ~ 70°C)；适度(≤98%)

Technical Parameters

Operating voltage: DC6V
Static Current: 3uA
Dynamic Current: 250mA
Unlocking times: 10000
Alatming voltage: 4.0V
Door-opening time: 4S
Required environment:
temperature(-20°C ~ 70°C)；humidity(≤98%)

应用范围

适用机关、企业、学校、酒店、超市的文件柜、储物柜、
桑拿箱柜、洗浴中心箱柜、银行租借保险箱等。

Main Characteristic

be applicable to government department, enterprise, school, horel, filing cabinet used in bath centre, rental coffer used in bank.

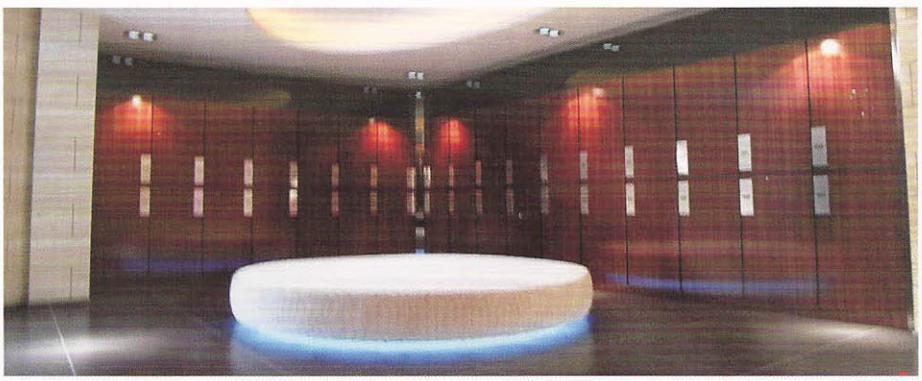

技术参考
Technical Parameters

· 指纹录入时间 Fingerprint collecting time	<1.0秒
· 指纹比对时间 Fingerprint identifying time	550DPI
· 拒真率(FRR) False Reject Rate	≤0.01%
· 认真率(FAR) Seriously rate	≤0.0001%
· 采集位移 Collection displacement	指纹相对位移不超过20%
· 管理指纹登记容量 Management capacity of fingerprint enrollment	2枚
· 用户指纹登记容量 The user capacity of fingerprint enrollment	50枚–100枚
· 手指旋转方向 Finger rotation	± 180°
· 温度范围 Working temperature	–30°C ~ 50°C
· 静态电流/动态电流: Work voltage	<25uA/<350mA
· 电源供给 Power supply	4节1.5V的5号AA碱性电池
· 开门密码组数 Code groups	1

主要特点
- 生物半导体指纹采集器
- 安全系数和稳定性高
- 多种开门模式可供选择（单指纹、单密码、指纹+密码）
- 具有通道和家用门锁状态转换功能
- 欠压电池更换提醒功能
- 艺术化、和谐、尊贵的经典造型

Main Characteristic
- High safety factor and steadiness
- Big LCD Chinese interface with operation tips. Easy to operate.
- Optional door–opening mode(fngerprint mode, cipher mode and mode of fngerprint and cipher togerther)
- With the function of switching the mode of lock–from–inside to the mode of passage lock freely
- With the function of lower voltage warning
- With classical hamonious artistic shapes.

可选表面处理
Optional surface treatment

CS 金拉丝　L 镍拉丝　AL 砂金

TYZW6安装孔 尺寸图
Dimension figure

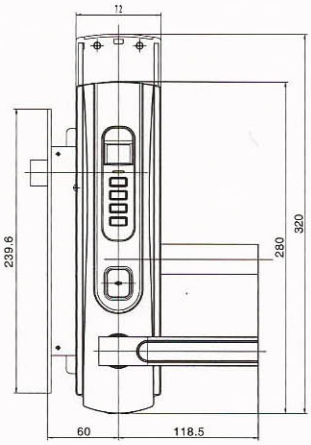

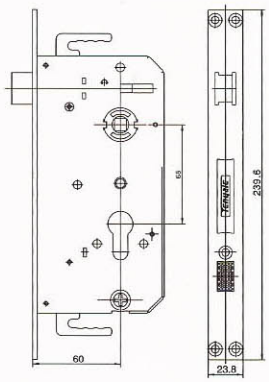



TYZW10 AL 指纹锁

DLS-1002

罗曼蒂克系列
Romantic Series

表面处理：
木+黑钛/黄古铜/青古铜
主要材质：
不锈钢+木
使用螺丝：
+M8
玻璃门：
Φ18
框架、木门：
Φ16

Finish:
Wood+Balack Titanium/Yollow Bronze/Geen Bronze
Material:
Stainless Steel SUS304+Wood
Fitting Screw:
+M8
Glass Doors:
Φ18
Frame, Flush Doors:
Φ16

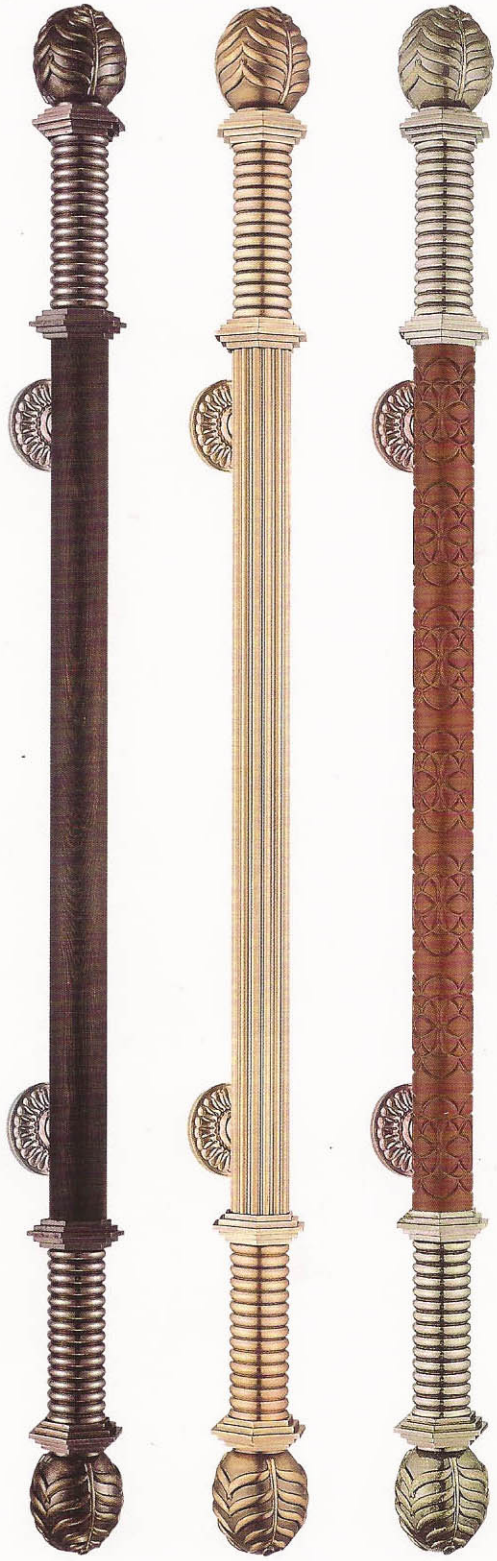

DLS-1002A DLS-1002B DLS-1002C

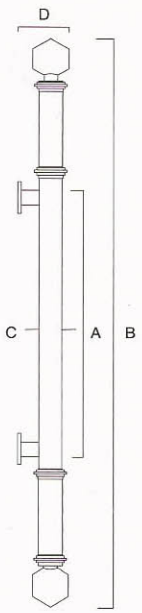

FORMAT	A	B	C	D
Φ50x1200	550	1200	Φ50	130



DLS–1003

罗曼蒂克系列
Romantic Series

表面处理： 青古铜+木
主要材质： 不锈钢+木
使用螺丝： +M8
玻璃门： Φ18
框架、木门： Φ16

Finish: Wood+Geen Bronze
Material: Stainless Steel SUS304+Wood
Fitting Screw: +M8
Glass Doors: Φ18
Frame, Flush Doors: Φ16

FORMAT	A	B	C	D
Φ51x1800	1080	1800	Φ51	110

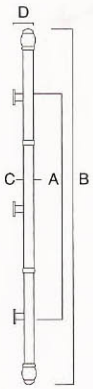

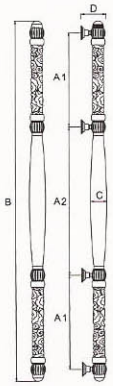

DLS–1004

罗曼蒂克系列
Romantic Series

表面处理： 木/钛金+哑光青古铜
主要材质： 不锈钢+木
使用螺丝： +M8
玻璃门： Φ18
框架、木门： Φ16

Finish: Wood/Titianium+Geen Bronze
Material: Stainless Steel SUS304+Wood
Fitting Screw: +M8
Glass Doors: Φ18
Frame, Flush Doors: Φ16

FORMAT	A1	A2	B	C	D
Φ80x1800	470	740	1800	Φ80	125



DLS–1004A **DLS–1004B**

DLS-1005

罗曼蒂克系列
Romantic Series

表面处理：
钛金/青古铜/青古铜+木
主要材质：
不锈钢+木
使用螺丝：
+M8
玻璃门：
Φ18
框架、木门：
Φ16

Finish:
Titanium/Geen Bronze/Geen Bronze+Wood
Material:
Stainless Steel SUS304+Wood
Fitting Screw:
+M8
Glass Doors:
Φ18
Frame, Flush Doors:
Φ16



DLS-1005A DLS-1005B DLS-1005C DLS-1005D

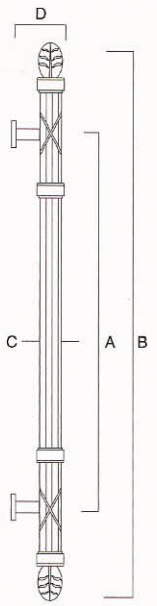

FORMAT	A	B	C	D
Φ63x1500	1000	1500	Φ63	120
Φ51x1200	790	1200	Φ51	110



DLS–1006

罗曼蒂克系列
Romantic Series

表面处理： 青古铜+木色
主要材质： 不锈钢
使用螺丝： +M8
玻璃门： Φ18
框架、木门： Φ16

Finish: Geen Bronze+Wood
Material: Stainless Steel SUS304
Fitting Screw: +M8
Glass Doors: Φ18
Frame, Flush Doors: Φ16

FORMAT	A	B	C	D
Φ51x1800	1600	1800	Φ51	115

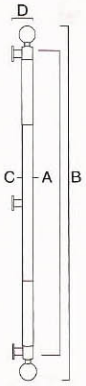

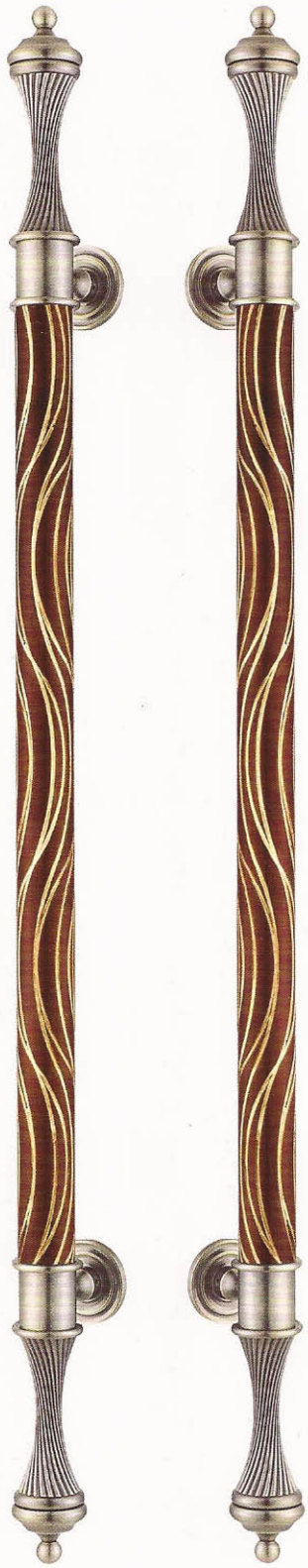

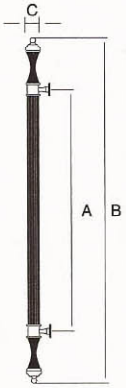

DLS–1007

罗曼蒂克系列
Romantic Series

表面处理： 金丝木+青古铜/红古铜
主要材质： 不锈钢+木
使用螺丝： +M8
玻璃门： Φ18
框架、木门： Φ16

Finish: Wood+Red Bronze/Green Bronze
Material: Stainless Steel SUS304+Wood
Fitting Screw: +M8
Glass Doors: Φ18
Frame, Flush Doors: Φ16

FORMAT	A	B	C
Φ60x1800	1257	1800	Φ60
Φ45x1300	950	1300	Φ45



DLS-1008A

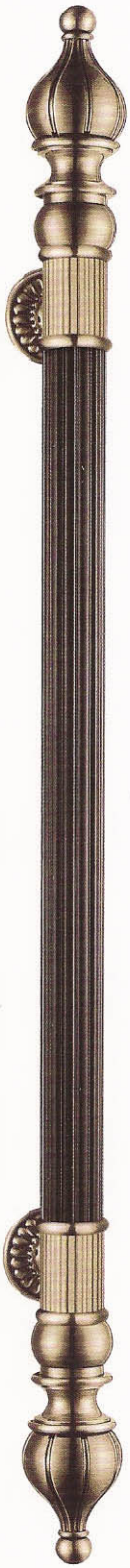

DLS-1008B



DLS-1008C

DLS-1008

罗曼蒂克系列
Romantic Series

表面处理：
红古铜/青古铜+木
主要材质：
不锈钢+木
使用螺丝：
+M8
玻璃门：
Φ18
框架、木门：
Φ16

Finish:
Red Bronze/Geen Bronze+Wood
Material:
Stainless Steel SUS304+Wood
Fitting Screw:
+M8
Glass Doors:
Φ18
Frame, Flush Doors:
Φ16

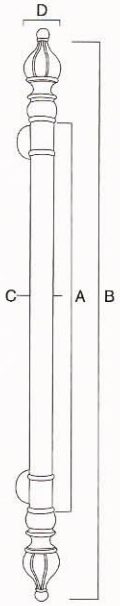

FORMAT	A	B	C	D
Φ51x1500	1050	1500	Φ51	120

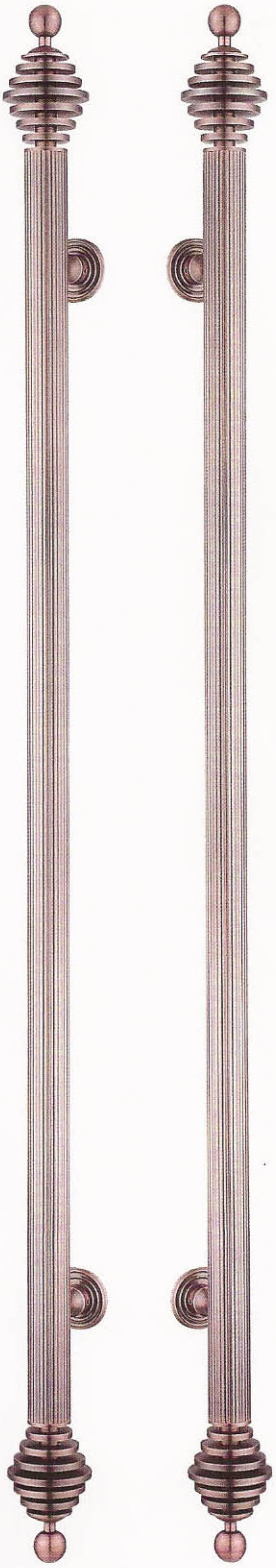

DLS–1009

罗曼蒂克系列
Romantic Series

表面处理： 青古铜/红古铜/黄古铜/黑钛
主要材质： 不锈钢+木
使用螺丝： +M8
玻璃门： Φ18
框架、木门： Φ16

Finish: Red Brone/Green Bronze/Yellow Bronze
Material: Stainless Steel SUS304+Wood
Fitting Screw: +M8
Glass Doors: Φ18
Frame, Flush Doors: Φ16

FORMAT	A	B	C
Φ50x1800	1200	1800	Φ50
Φ50x1200	800	1200	Φ50

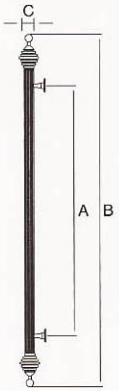

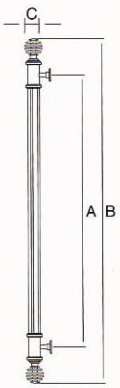

DLS–1010

罗曼蒂克系列
Romantic Series

表面处理： 木色+青古铜/红古铜
主要材质： 不锈钢+木
使用螺丝： +M8
玻璃门： Φ18
框架、木门： Φ16

Finish: Wood+Red Bronze/Green Bronze
Material: Stainless Steel SUS304+Wood
Fitting Screw: +M8
Glass Doors: Φ18
Frame, Flush Doors: Φ16

FORMAT	A	B	C
Φ60x1800	1400	1800	Φ60

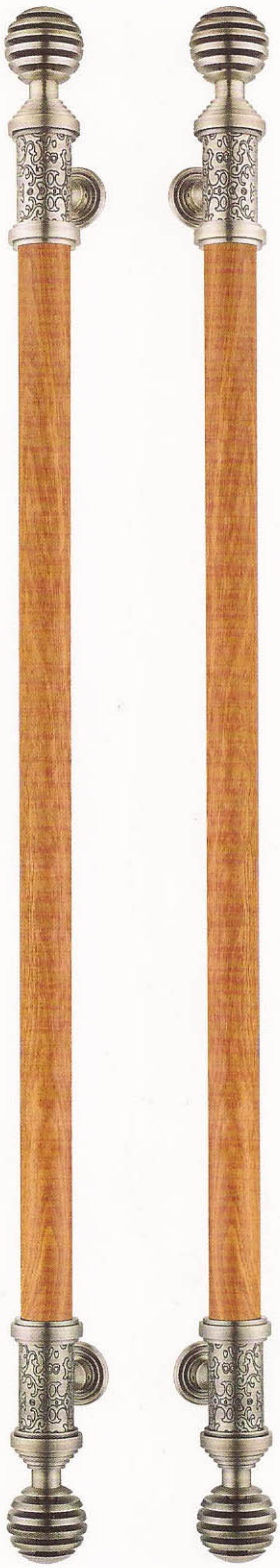

DLS–1011

罗曼蒂克系列
Romantic Series

表面处理：
木+黄古铜/青古铜/红古铜
主要材质：
不锈钢
使用螺丝：
+M8
玻璃门：
Φ18
框架、木门：
Φ16

Finish:
Wood+Red Bronze/Green Bronze
Material:
Stainless Steel SUS304
Fitting Screw:
+M8
Glass Doors:
Φ18
Frame, Flush Doors:
Φ16



DLS–1011A



DLS–1011B



DLS–1011C

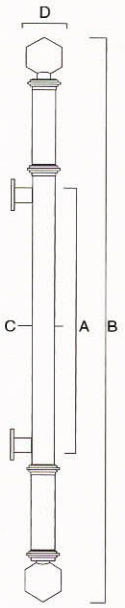

FORMAT	A	B	C	D
Φ51x1200	500	1200	Φ51	130



DLS–1013

罗曼蒂克系列
Romantic Series

表面处理： 金线木+钛金/红古铜/青古铜
主要材质： 不锈钢
使用螺丝： +M8
玻璃门： Φ18
框架、木门： Φ16

Finish: Wood+Titanium/Red Bronze/Green Bronze
Material: Stainless Steel SUS304
Fitting Screw: +M8
Glass Doors: Φ18
Frame, Flush Doors: Φ16w

FORMAT	A	B	C	D
Φ38x1200	680	1200	Φ38	95

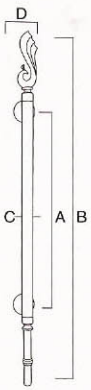

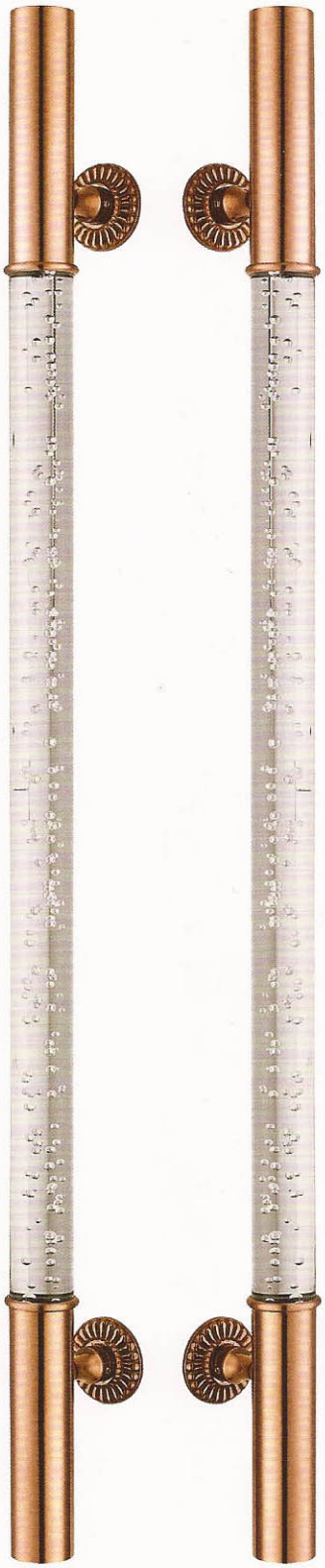

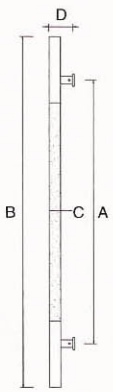

DLS–1016

罗曼蒂克系列
Romantic Series

表面处理： 玫瑰金+水晶
主要材质： 不锈钢
使用螺丝： +M8
玻璃门： Φ18
框架、木门： Φ16

Finish: Rose Gold/Crystal
Material: Stainless Steel SUS304
Fitting Screw: +M8
Glass Doors: Φ18
Frame, Flush Doors: Φ16

FORMAT	A	B	C	D
Φ51x1200	920	1200	Φ51	110

DLS–1018

罗曼蒂克系列
Romantic Series

表面处理：
水晶/木+红古铜/青古铜
主要材质：
不锈钢+木
使用螺丝：
+M8
玻璃门：
Φ18
框架、木门：
Φ16

Finish:
Crystal/Wood+Red Bronze/Green Bronze
Material:
Stainless Steel SUS304+Wood
Fitting Screw:
+M8
Glass Doors:
Φ18
Frame, Flush Doors:
Φ16

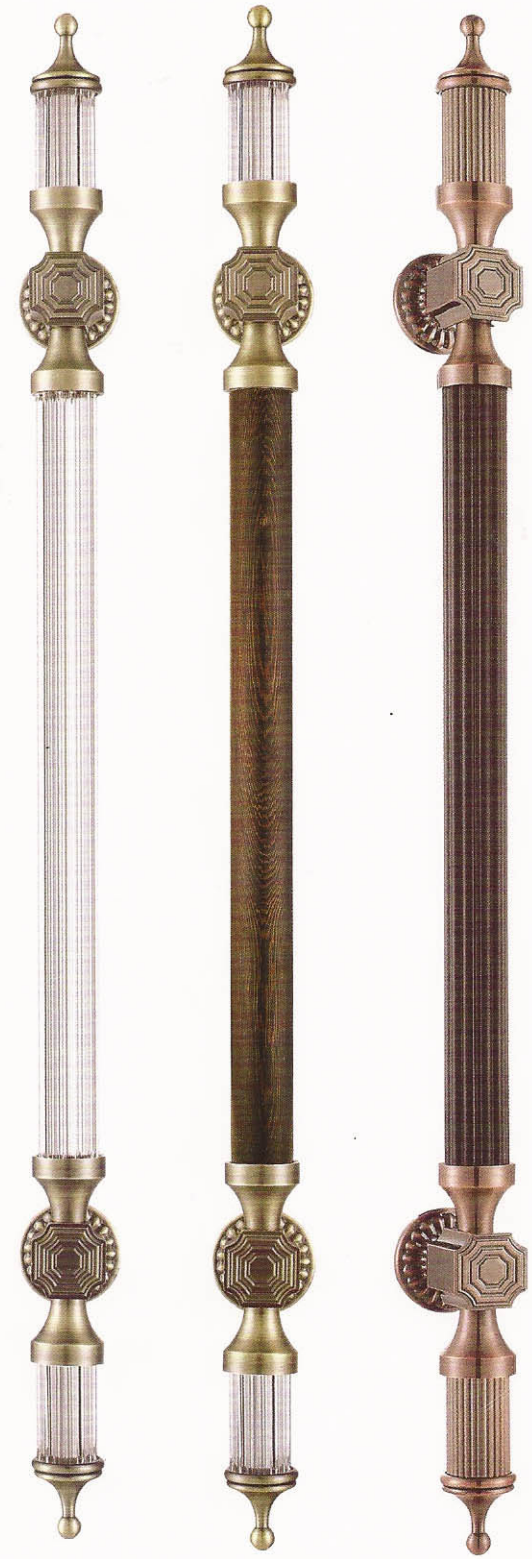

DLS–1018A **DLS–1018B** **DLS–1018C**

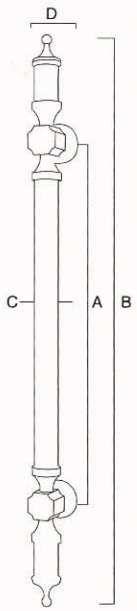

FORMAT	A	B	C	D
Φ45x1100	680	1100	Φ45	90



DLS–1017

罗曼蒂克系列
Romantic Series

表面处理： 钛金+浮雕水晶
主要材质： 不锈钢
使用螺丝： +M8
玻璃门： Φ18
框架、木门： Φ16

Finish: Titanium+Embossed Glass
Material: Stainless Steel SUS304
Fitting Screw: +M8
Glass Doors: Φ18
Frame, Flush Doors: Φ16

FORMAT	A	B	C	D
Φ63x1800	1059	1800	Φ63	154

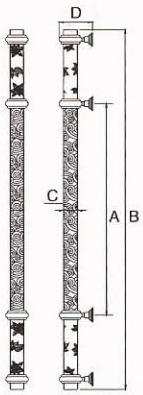

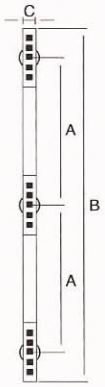

DLS–1029

罗曼蒂克系列
Romantic Series

表面处理： 木+钛金
主要材质： 不锈钢
使用螺丝： +M8
玻璃门： Φ18
框架、木门： Φ16

Finish: Wood+Titanium
Material: Stainless Steel SUS304+Wood
Fitting Screw: +M8
Glass Doors: Φ18
Frame, Flush Doors: Φ16

FORMAT	A	B	C
60x1800	750	1800	60

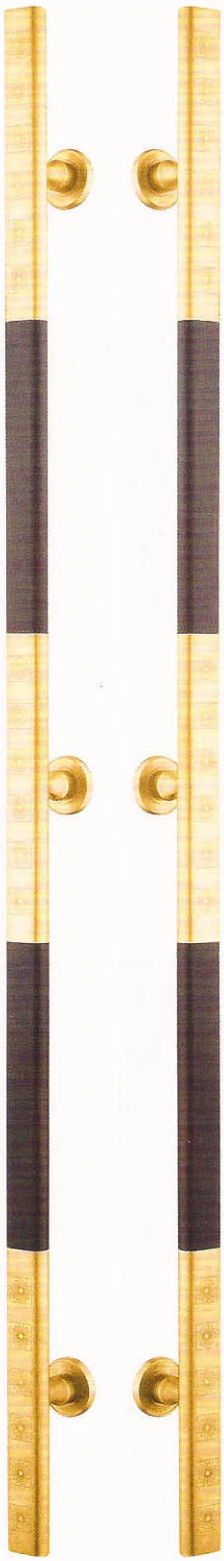



DLS–1027

罗曼蒂克系列
Romantic Series

表面处理： 木+钛金
主要材质： 不锈钢+木
使用螺丝： +M8
玻璃门： Φ18
框架、木门： Φ16

Finish: Wood+Titanium
Material: Stainless Steel SUS304+Wood
Fitting Screw: +M8
Glass Doors: Φ18
Frame, Flush Doors: Φ16

FORMAT	A	B	C
Φ38x1200	700	1200	Φ38

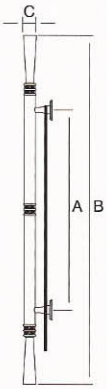

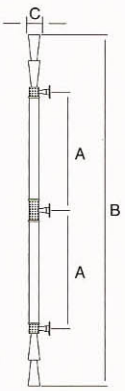

DLS–1026

罗曼蒂克系列
Romantic Series

表面处理： 木+钛金
主要材质： 不锈钢
使用螺丝： +M8
玻璃门： Φ18
框架、木门： Φ16

Finish: Wood+Geen Bronze
Material: Stainless Steel SUS304
Fitting Screw: +M8
Glass Doors: Φ18
Frame, Flush Doors: Φ16

FORMAT	A	B	C
Φ51x1800	600	1800	Φ51
Φ38x1800	400	1400	Φ38





DLS–1031

罗曼蒂克系列
Romantic Series

表面处理： 钛金+紫檀木
主要材质： 不锈钢/木
使用螺丝： +M8
玻璃门： Φ18
框架、木门： Φ16

Finish: Titanium+Wbony
Material: Stainless Steel SUS304/Wood
Fitting Screw: +M8
Glass Doors: Φ18
Frame, Flush Doors: Φ16

FORMAT	A	B	C	D
Φ38x1600	1100	1600	Φ25	85

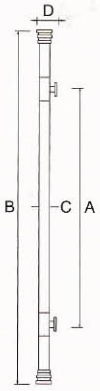

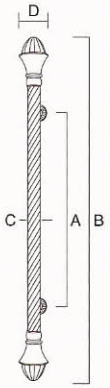

DLS–1032

罗曼蒂克系列
Romantic Series

表面处理： 钛金/青古铜
主要材质： 不锈钢
使用螺丝： +M8
玻璃门： Φ18
框架、木门： Φ16

Finish: Titanium+Green Bronze
Material: Stainless Steel SUS304
Fitting Screw: +M8
Glass Doors: Φ18
Frame, Flush Doors: Φ16

FORMAT	A	B	C	D
Φ51x1500	900	1500	Φ51	110

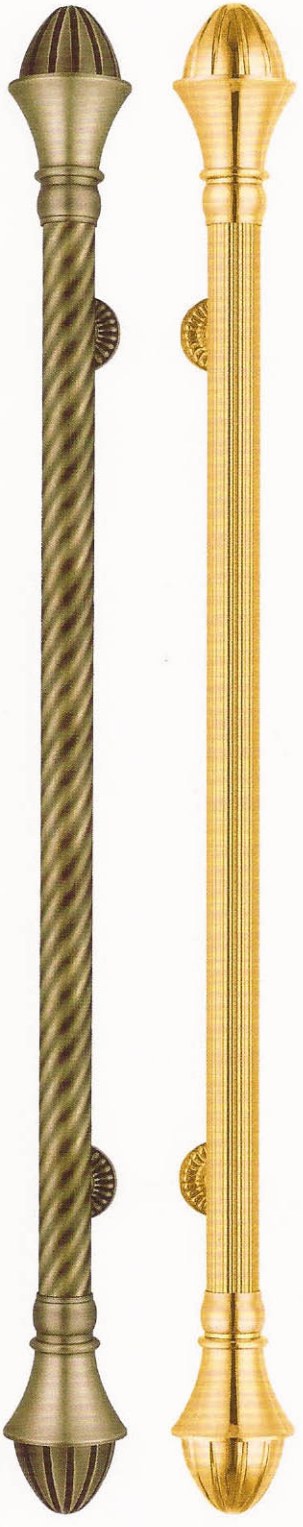

DLS–1032A **DLS–1032B**

DLS–1034

罗曼蒂克系列
Romantic Series



DLS–1034A

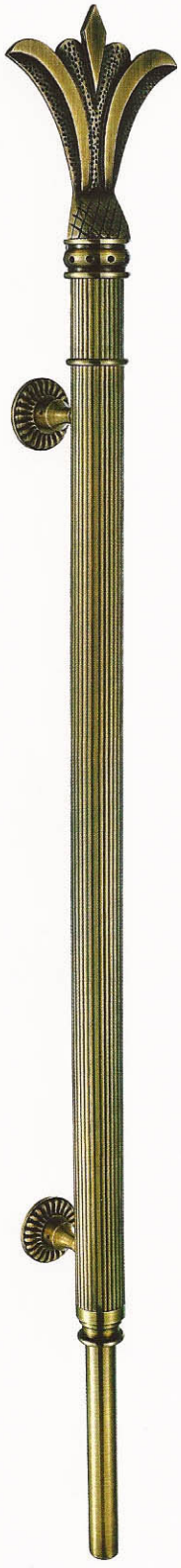

DLS–1034B

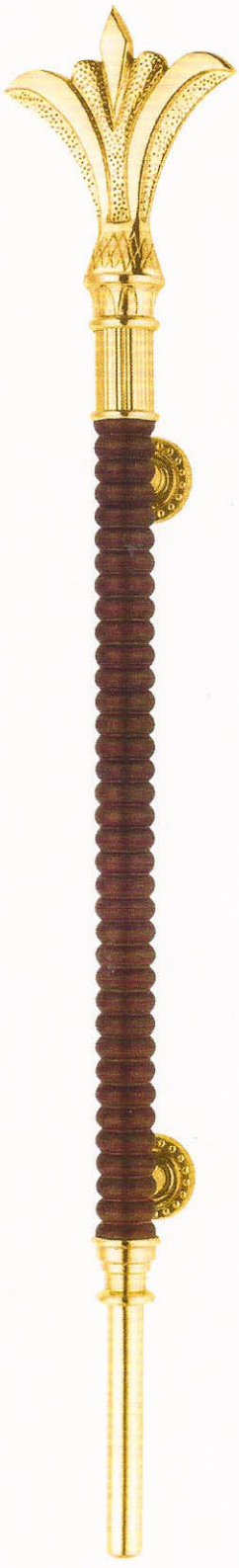

DLS–1034C

表面处理：
钛金/花梨木/红古铜/青古铜/黄古铜
主要材质：
不锈钢/木
使用螺丝：
+M8
玻璃门：
Φ18
框架、木门：
Φ16

Finish:
Tianium/Rose Wood/Green Bronze
/Red Bronze/Yellow Bronze
Material:
Stainless Steel SUS304/Wood
Fitting Screw:
+M8
Glass Doors:
Φ18
Frame, Flush Doors:
Φ16

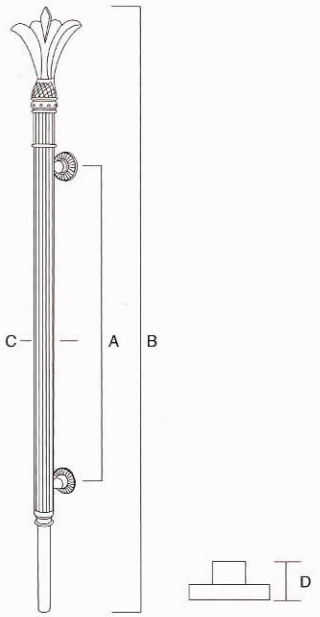

FORMAT	A	B	C	D
Φ55x1200	800	1200	Φ55	120

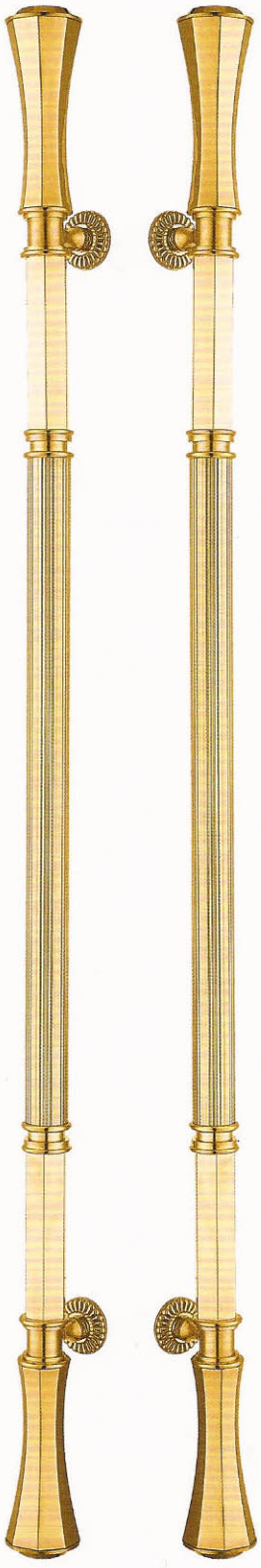

DLS–1036

罗曼蒂克系列
Romantic Series

表面处理： 钛金
主要材质： 不锈钢
使用螺丝： +M8
玻璃门： Φ18
框架、木门： Φ16

Finish: Titanium
Material: Stainless Steel SUS304+Wood
Fitting Screw: +M8
Glass Doors: Φ18
Frame, Flush Doors: Φ16

FORMAT	A	B	C	D
Φ51x1800	1300	1800	Φ51	110

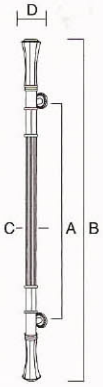

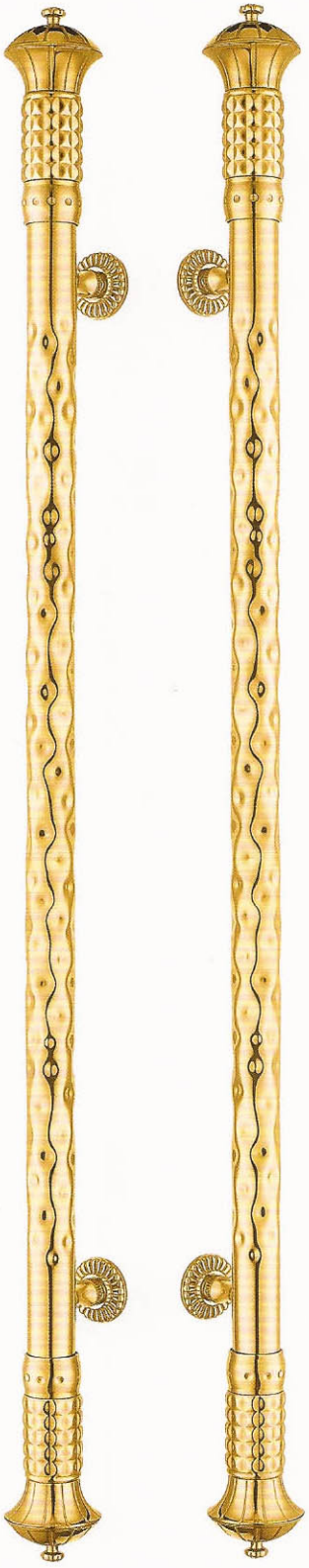

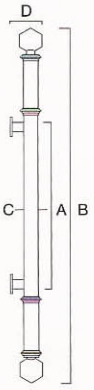

DLS–1035

罗曼蒂克系列
Romantic Series

表面处理： 青古铜+木
主要材质： 不锈钢+木
使用螺丝： +M8
玻璃门： Φ18
框架、木门： Φ16

Finish: Wood+Geen Bronze
Material: Stainless Steel SUS304+Wood
Fitting Screw: +M8
Glass Doors: Φ18
Frame, Flush Doors: Φ16

FORMAT	A	B	C	D
Φ51x1600	1080	1600	Φ51	110



DLS-1038

罗曼蒂克系列
Romantic Series

表面处理：
青古铜+斑马木
主要材质：
不锈钢/木
使用螺丝：
+M8
玻璃门：
Φ18
框架、木门：
Φ16

Finish:
Green Bronze+Zebra Wood
Material:
Stainless Steel SUS304+Wood
Fitting Screw:
+M8
Glass Doors:
Φ18
Frame, Flush Doors:
Φ16

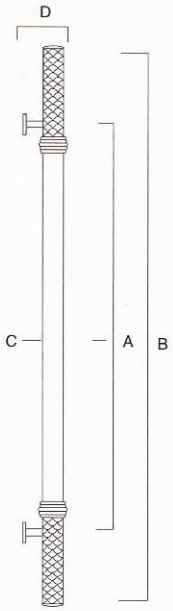

FORMAT	A	B	C	D
Φ51x1300	900	1300	Φ51	110

DLS–1041

罗曼蒂克系列
Romantic Series

表面处理： 青古铜/斑马木
主要材质： 不锈钢/木
使用螺丝： +M8
玻璃门： Φ18
框架、木门： Φ16

Finish: Geen Bronze+Zebra Wood
Material: Stainless Steel SUS304/Wood
Fitting Screw: +M8
Glass Doors: Φ18
Frame, Flush Doors: Φ16

FORMAT	A	B	C	D
Φ51x1500	800	1500	Φ51	110

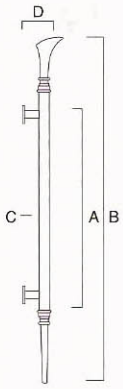

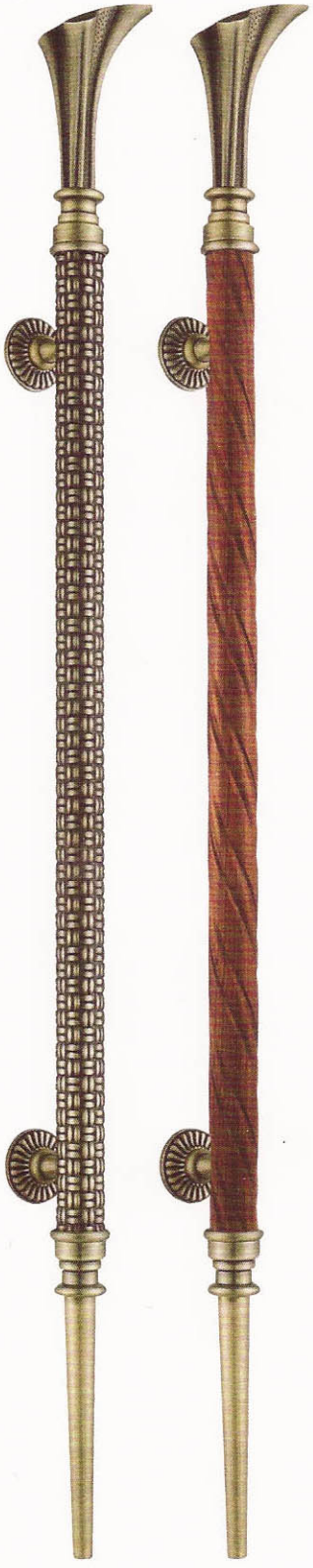

DLS–1041A DLS–1041B

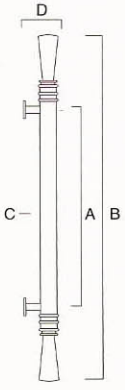

DLS–1040

罗曼蒂克系列
Romantic Series

表面处理： 青古铜/斑马木
主要材质： 不锈钢/木
使用螺丝： +M8
玻璃门： Φ18
框架、木门： Φ16

Finish: Geen Bronze+Zebra Wood
Material: Stainless Steel SUS304/Wood
Fitting Screw: +M8
Glass Doors: Φ18
Frame, Flush Doors: Φ16

FORMAT	A	B	C	D
Φ51x1500	800	1500	Φ51	110



DLS–1040A DLS–1040B



DLS-1042

罗曼蒂克系列
Romantic Series

表面处理： 青古铜/哑黑木
主要材质： 不锈钢/木
使用螺丝： +M8
玻璃门： Φ18
框架、木门： Φ16

Finish: Geen Bronze+Black Walnut
Material: Stainless Steel SUS304/Wood
Fitting Screw: +M8
Glass Doors: Φ18
Frame, Flush Doors: Φ16

FORMAT	A	B	C	D
Φ51x1400	1080	1400	Φ51	110

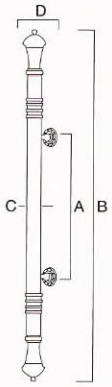

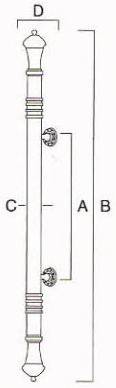

DLS-1043

罗曼蒂克系列
Romantic Series

表面处理： 钛金/花梨木
主要材质： 不锈钢/木
使用螺丝： +M8
玻璃门： Φ18
框架、木门： Φ16

Finish: Titanium+Rose Wood
Material: Stainless Steel SUS304/Wood
Fitting Screw: +M8
Glass Doors: Φ18
Frame, Flush Doors: Φ16

FORMAT	A	B	C	D
Φ38x1200	700	1200	Φ38	85
Φ38x900	460	900	Φ38	85



DLS-1043A DLS-1043B

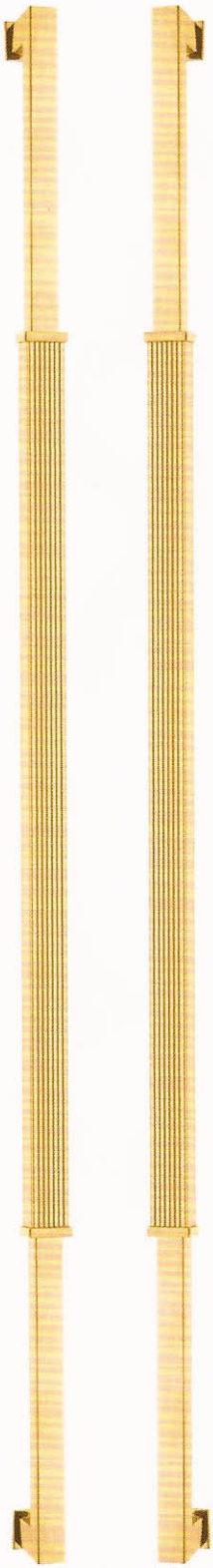

DLS-1047

罗曼蒂克系列
Romantic Series

表面处理： 钛金
主要材质： 不锈钢
使用螺丝： +M8
玻璃门： Φ18
框架、木门： Φ16

Finish: Titanium
Material: Stainless Steel SUS304
Fitting Screw: +M8
Glass Doors: Φ18
Frame, Flush Doors: Φ16

FORMAT	A	B	C	D
40x40x1500	1470	1500	40x40	90

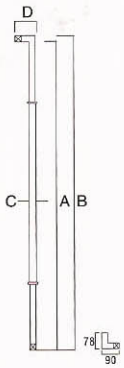

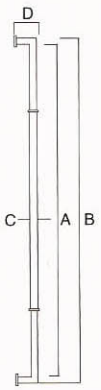

DLS-1046

罗曼蒂克系列
Romantic Series

表面处理： 钛金
主要材质： 不锈钢
使用螺丝： +M8
玻璃门： Φ18
框架、木门： Φ16

Finish: Titanium
Material: Stainless Steel SUS304
Fitting Screw: +M8
Glass Doors: Φ18
Frame, Flush Doors: Φ16

FORMAT	A	B	C	D
40x40x1500	1470	1500	40x40	85

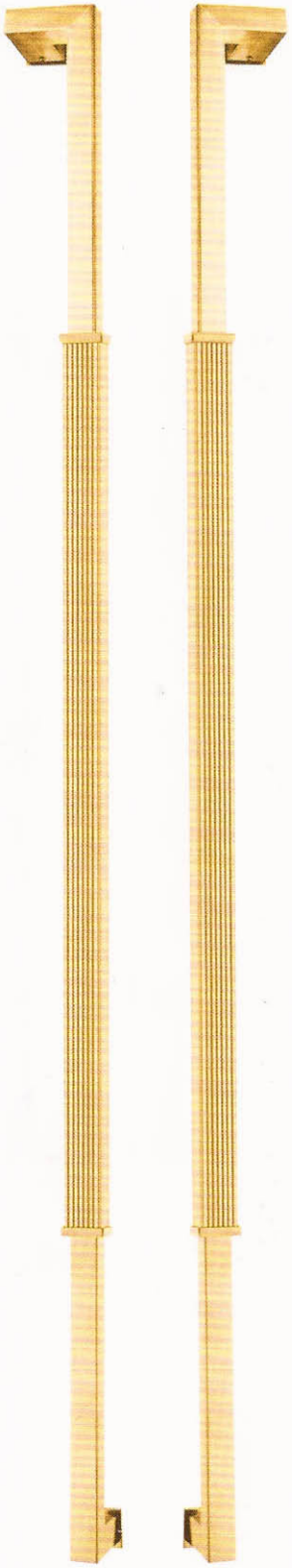



DLS–1048

罗曼蒂克系列
Romantic Series

表面处理： 玫瑰金+玫瑰木
主要材质： 不锈钢/木
使用螺丝： +M8
玻璃门： Φ18
框架、木门： Φ16

Finish: Rose Gold+Rose Wood
Material: Stainless Steel SUS304/Wood
Fitting Screw: +M8
Glass Doors: Φ18
Frame, Flush Doors: Φ16

FORMAT	A	B	C	D
40x40x1200	1170	1200	40x40	70

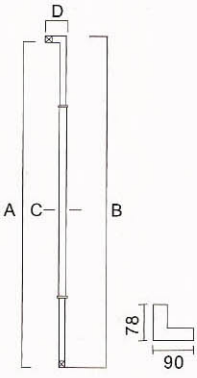



DLS–1050

罗曼蒂克系列
Romantic Series

表面处理： CPB/黄古铜/青古铜
主要材质： 不锈钢
使用螺丝： +M8
玻璃门： Φ18
框架、木门： Φ16

Finish: CPB/Yellow Bronze/Green Bronze
Material: Stainless Steel SUS304
Fitting Screw: +M8
Glass Doors: Φ18
Frame, Flush Doors: Φ16

FORMAT	A	B	C	D
40x20x600	475	510	Φ40	60

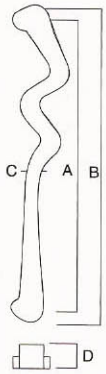

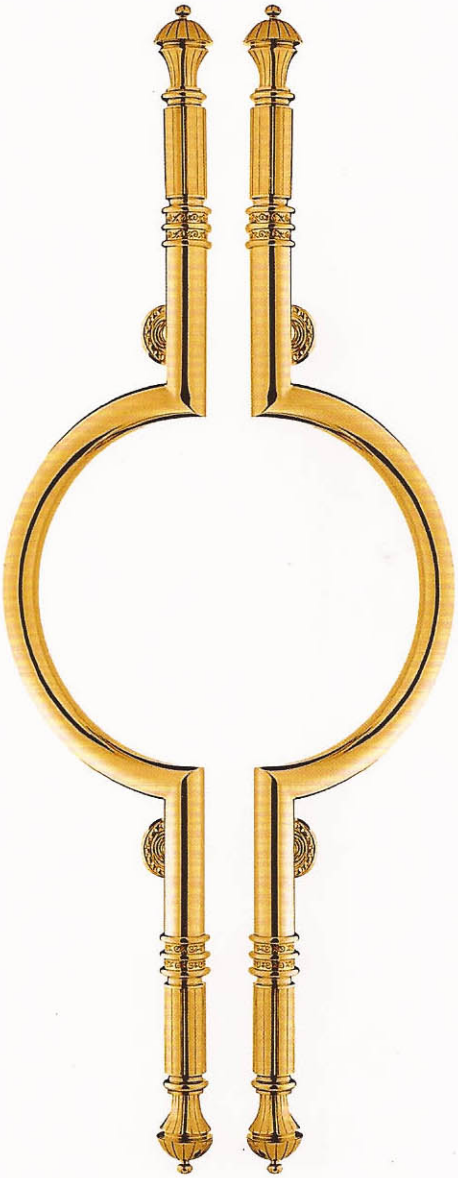



DLS–1059A DLS–1059B DLS–1059C

DLS–1053

罗曼蒂克系列
Romantic Series

表面处理： 钛金
主要材质： 不锈钢
使用螺丝： +M8
玻璃门： Φ18
框架、木门： Φ16

Finish: Titanium
Material: Stainless Steel SUS304
Fitting Screw: +M8
Glass Doors: Φ18
Frame, Flush Doors: Φ16

FORMAT	A	B	C
Φ51x1300	615	1300	Φ51

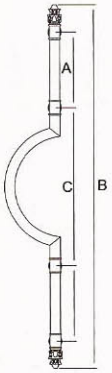

DLS–1059

罗曼蒂克系列
Romantic Series

表面处理： 钛金/花梨木/青古铜
主要材质： 不锈钢/木
使用螺丝： +M8
玻璃门： Φ18
框架、木门： Φ16

Finish: Titanium/Rose wood/Green Bronze
Material: Stainless Steel SUS304/Wood
Fitting Screw: +M8
Glass Doors: Φ18
Frame, Flush Doors: Φ16

FORMAT	A	B	C	D
Φ51x1000	600	1000	Φ51	110

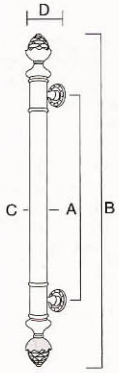

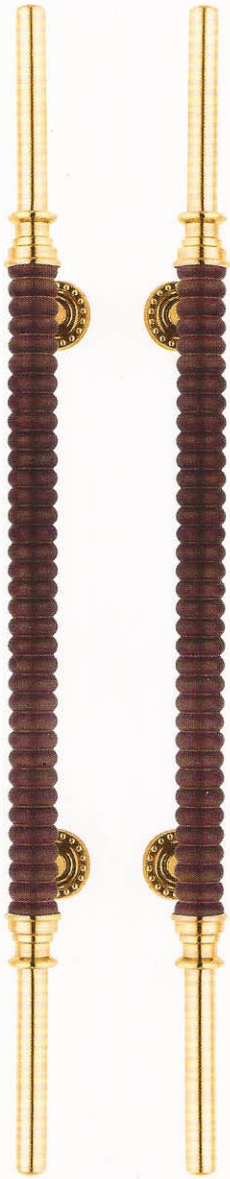

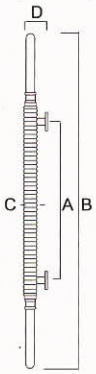

DLS–1056

罗曼蒂克系列
Romantic Series

表面处理： 钛金+花梨木
主要材质： 不锈钢/木
使用螺丝： +M8
玻璃门： Φ18
框架、木门： Φ16

Finish: Titanium+Rose Wood
Material: Stainless Steel SUS304/Wood
Fitting Screw: +M8
Glass Doors: Φ18
Frame, Flush Doors: Φ16

FORMAT	A	B	C	D
Φ51x1200	600	1200	Φ51	110

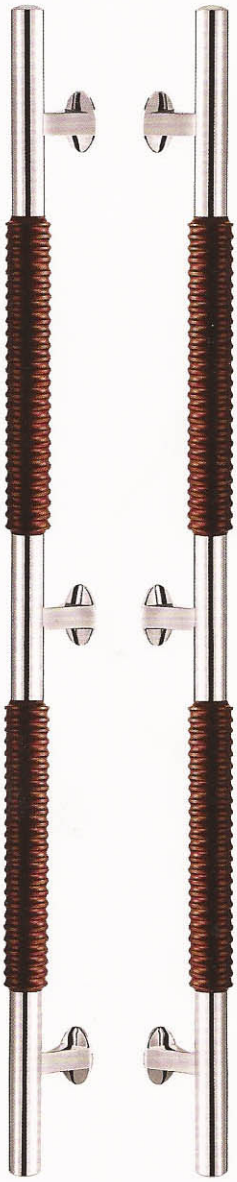

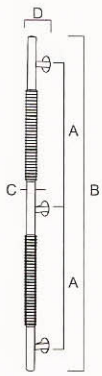

DLS–1057

罗曼蒂克系列
Romantic Series

表面处理： 镜光+橡木
主要材质： 不锈钢/木
使用螺丝： +M8
玻璃门： Φ18
框架、木门： Φ16

Finish: SSP+Wood
Material: Stainless Steel SUS304/Wood
Fitting Screw: +M8
Glass Doors: Φ18
Frame, Flush Doors: Φ16

FORMAT	A	B	C	D
Φ45x1800	1400	1800	Φ45	85

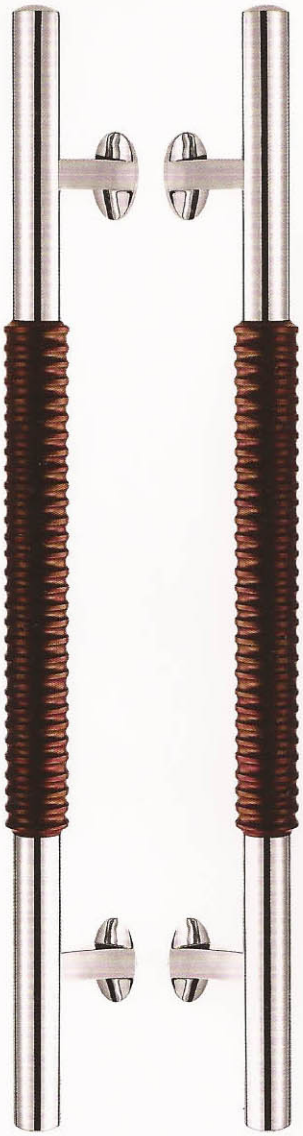

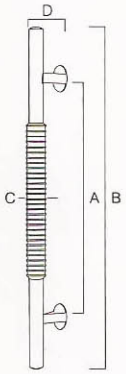

DLS-1058

罗曼蒂克系列
Romantic Series

表面处理： 镜光+橡木
主要材质： 不锈钢/木
使用螺丝： +M8
玻璃门： Φ18
框架、木门： Φ16

Finish: SSP+Wood
Material: Stainless Steel SUS304/Wood
Fitting Screw: +M8
Glass Doors: Φ18
Frame, Flush Doors: Φ16

FORMAT	A	B	C	D
Φ38x1000	700	1000	Φ38	85

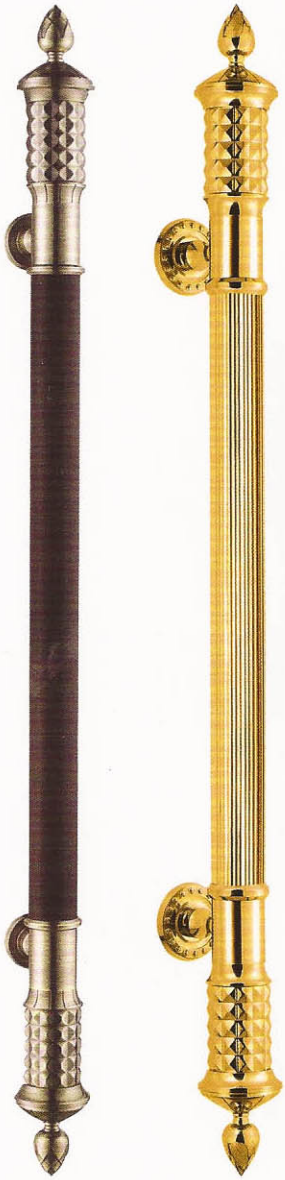

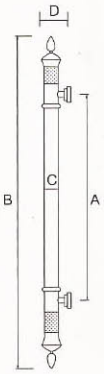

DLS-1062A DLS-1062B

DLS-1062

罗曼蒂克系列
Romantic Series

表面处理： 钛金/木+青古铜
主要材质： 不锈钢
使用螺丝： +M8
玻璃门： Φ18
框架、木门： Φ16

Finish: Tianium/Wood+Geen Bronze
Material: Stainless Steel SUS304
Fitting Screw: +M8
Glass Doors: Φ18
Frame, Flush Doors: Φ16

FORMAT	A	B	C	D
Φ51x1200	750	1200	Φ51	110

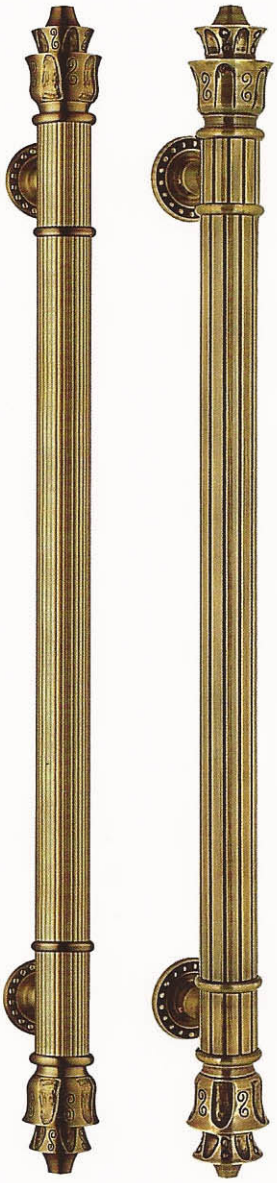

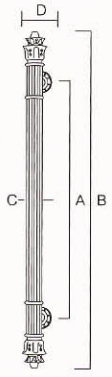

DLS–1063A **DLS–1063B**

DLS–1063

罗曼蒂克系列
Romantic Series

表面处理： 哑光青古铜
主要材质： 不锈钢
使用螺丝： +M8
玻璃门： Φ18
框架、木门： Φ16

Finish: Geen Bronze
Material: Stainless Steel SUS304
Fitting Screw: +M8
Glass Doors: Φ18
Frame, Flush Doors: Φ16

FORMAT	A	B	C	D
Φ51x1000	700	1000	Φ51	110

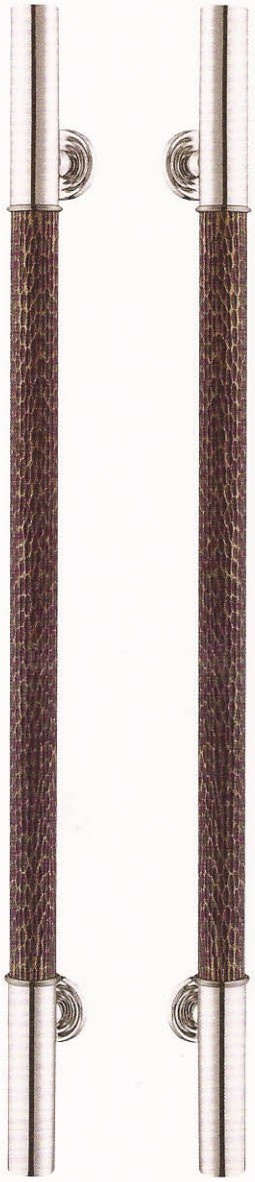

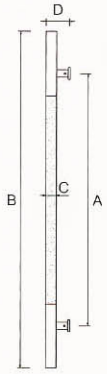

DLS–1067

罗曼蒂克系列
Romantic Series

表面处理： 砂光+青古铜
主要材质： 不锈钢
使用螺丝： +M8
玻璃门： Φ18
框架、木门： Φ16

Finish: Sand+Green Bronze
Material: Stainless Steel SUS304
Fitting Screw: +M8
Glass Doors: Φ18
Frame, Flush Doors: Φ16

FORMAT	A	B	C	D
Φ51x1200	920	1200	Φ51	110



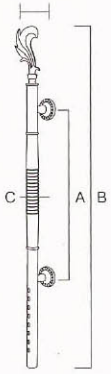

DLS–1068

罗曼蒂克系列
Romantic Series

表面处理： 钛金+莎比利木
主要材质： 不锈钢/木
使用螺丝： +M8
玻璃门： Φ18
框架、木门： Φ16

Finish: Titanium+Sapele
Material: Stainless Steel SUS304/Wood
Fitting Screw: +M8
Glass Doors: Φ18
Frame, Flush Doors: Φ16

FORMAT	A	B	C	D
Φ45x1300	600	1300	Φ45	100



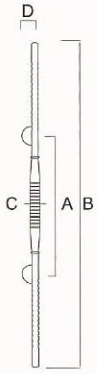

DLS–1069

罗曼蒂克系列
Romantic Series

表面处理： 钛金+莎比利木
主要材质： 不锈钢/木
使用螺丝： +M8
玻璃门： Φ18
框架、木门： Φ16

Finish: Titanium+Sapele
Material: Stainless Steel SUS304/Wood
Fitting Screw: +M8
Glass Doors: Φ18
Frame, Flush Doors: Φ16

FORMAT	A	B	C	D
Φ45x1300	600	1300	Φ45	100

DLS–1074

罗曼蒂克系列
Romantic Series

表面处理：
钛金/木
主要材质：
不锈钢
使用螺丝：
+M8
玻璃门：
Φ18
框架、木门：
Φ16

Finish:
Titanium/Wood
Material:
Stainless Steel SUS304
Fitting Screw:
+M8
Glass Doors:
Φ18
Frame, Flush Doors:
Φ16



DLS–1074A



DLS–1074B



DLS–1074C

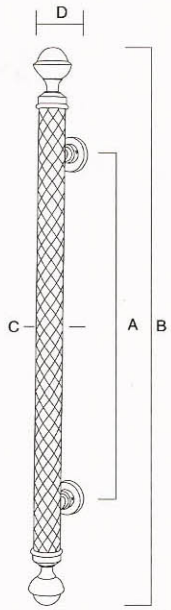

FORMAT	A	B	C	D
Φ38x1000	700	1000	Φ38	80

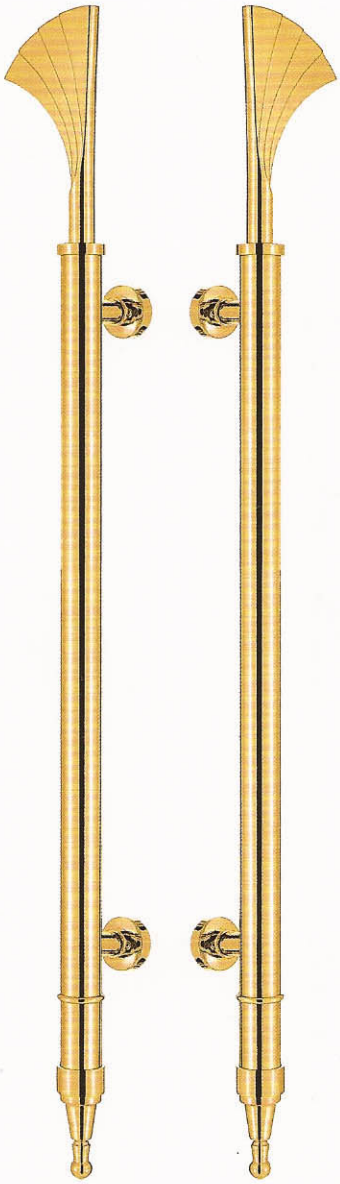

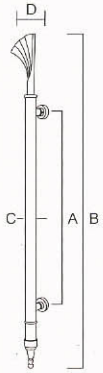

DLS–1071

罗曼蒂克系列
Romantic Series

表面处理： 钛金
主要材质： 不锈钢
使用螺丝： +M8
玻璃门： Φ18
框架、木门： Φ16

Finish: Titanium
Material: Stainless Steel SUS304
Fitting Screw: +M8
Glass Doors: Φ18
Frame, Flush Doors: Φ16

FORMAT	A	B	C	D
Φ38x1200	700	1200	Φ38	80

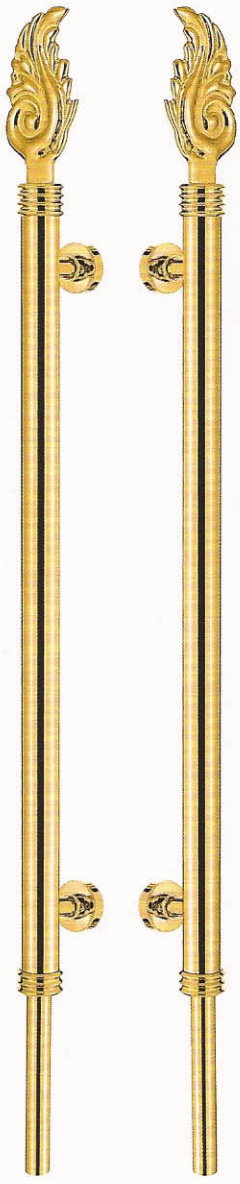

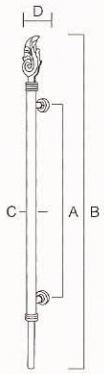

DLS–1073

罗曼蒂克系列
Romantic Series

表面处理： 钛金
主要材质： 不锈钢
使用螺丝： +M8
玻璃门： Φ18
框架、木门： Φ16

Finish: Titanium
Material: Stainless Steel SUS304
Fitting Screw: +M8
Glass Doors: Φ18
Frame, Flush Doors: Φ16

FORMAT	A	B	C	D
Φ38x1300	700	1300	Φ38	80





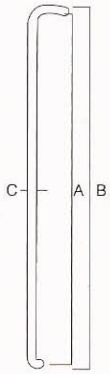

DLS–1079

罗曼蒂克系列
Romantic Series

表面处理：木
主要材质：不锈钢
使用螺丝：+M8
玻璃门：Φ18
框架、木门：Φ16

Finish: Wood
Material: Stainless Steel SUS304
Fitting Screw: +M8
Glass Doors: Φ18
Frame, Flush Doors: Φ16

FORMAT	A	B	C
Φ32x1300	1268	1300	Φ32

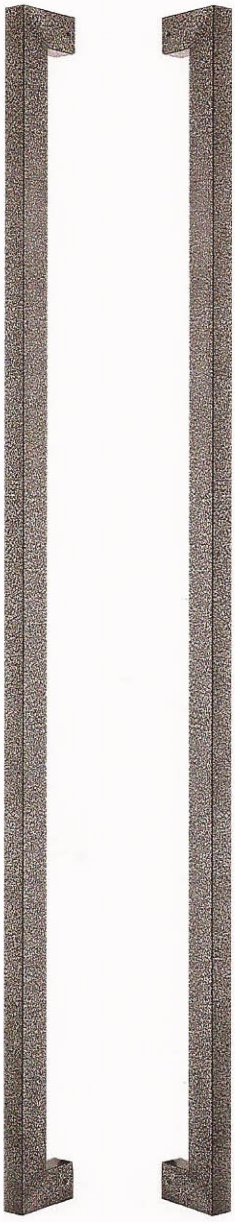



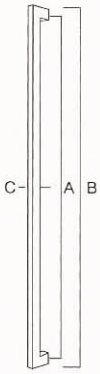

DLS–1080

罗曼蒂克系列
Romantic Series

表面处理：爆花银
主要材质：不锈钢
使用螺丝：+M8
玻璃门：Φ18
框架、木门：Φ16

Finish: Popcron Silver
Material: Stainless Steel SUS304
Fitting Screw: +M8
Glass Doors: Φ18
Frame, Flush Doors: Φ16

FORMAT	A	B	C
25x38x1200	1162	1200	25x38

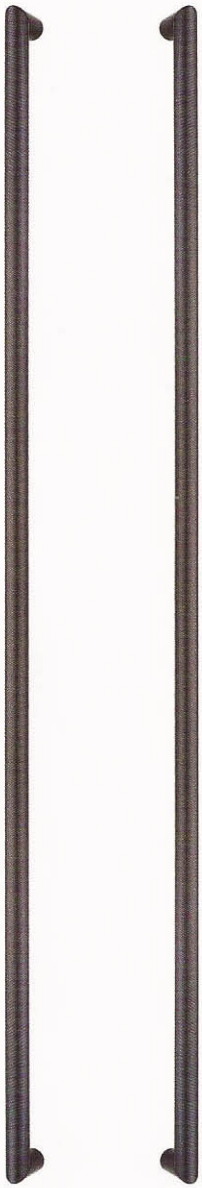



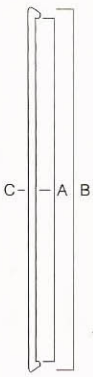

DLS–1081

罗曼蒂克系列
Romantic Series

表面处理：碳纤维
主要材质：不锈钢
使用螺丝：+M8
玻璃门：Φ18
框架、木门：Φ16

Finish: Carbon Fiber
Material: Stainless Steel SUS304
Fitting Screw: +M8
Glass Doors: Φ18
Frame, Flush Doors: Φ16

FORMAT	A	B	C
Φ38x1500	1462	1500	Φ38





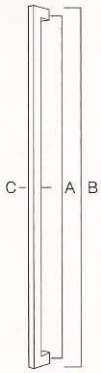

DLS–1083

罗曼蒂克系列
Romantic Series

表面处理：大理石色
主要材质：不锈钢
使用螺丝：+M8
玻璃门：Φ18
框架、木门：Φ16

Finish: Marble Color
Material: Stainless Steel SUS304
Fitting Screw: +M8
Glass Doors: Φ18
Frame, Flush Doors: Φ16

FORMAT	A	B	C
38x38x1800	1762	1800	38x38
25x38x1500	1462	1500	25x38

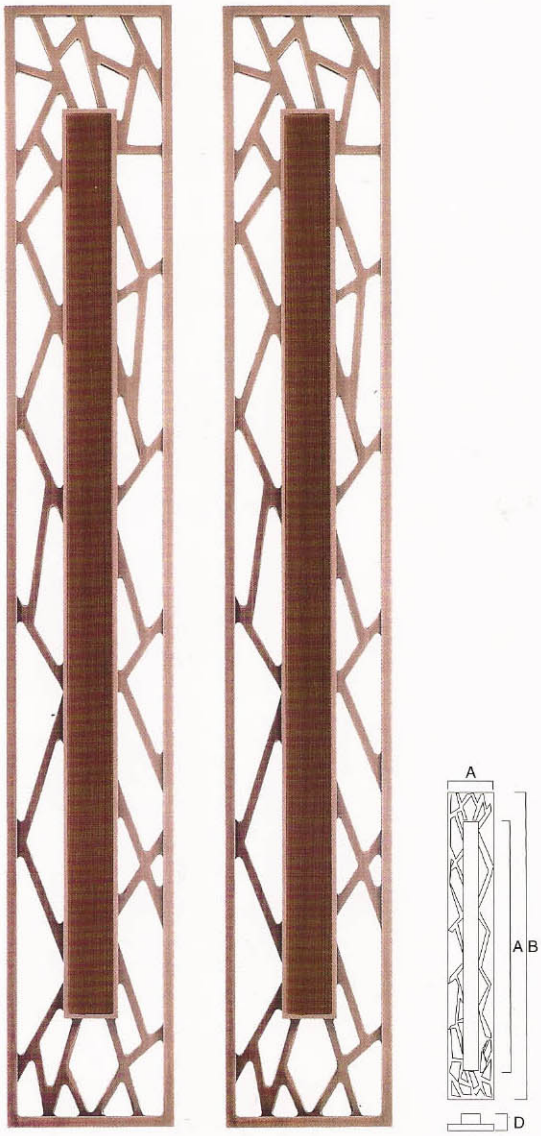

DLS–2005

琢雕系列
Carving Series

表面处理： 红古铜+木
主要材质： 不锈钢
使用螺丝： +M8
玻璃门： Φ18
框架、木门： Φ16

Finish: Red Zronze+Wood
Material: Stainless Steel SUS304
Fitting Screw: +M8
Glass Doors: Φ18
Frame, Flush Doors: Φ16

FORMAT	A	B	C	D
15x150x1000	505	1000	15x150	60

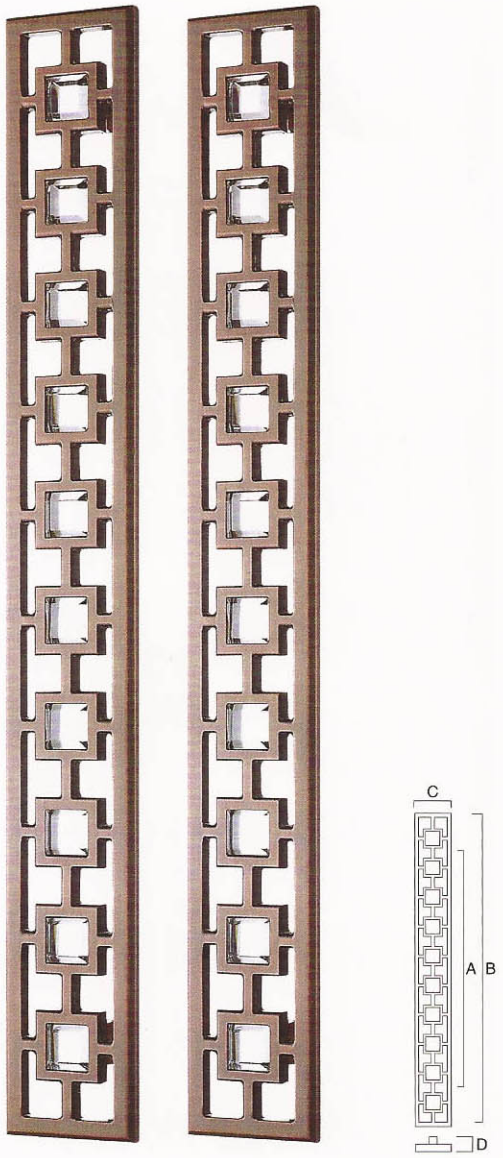

DLS–2006

琢雕系列
Carving Series

表面处理： 红古铜+水晶
主要材质： 不锈钢
使用螺丝： +M8
玻璃门： Φ18
框架、木门： Φ16

Finish: Red Zronze+Crystal
Material: Stainless Steel SUS304
Fitting Screw: +M8
Glass Doors: Φ18
Frame, Flush Doors: Φ16

FORMAT	A	B	C	D
15x100x800	670	800	15x100	55

DLS-2009

琢雕系列
Carving Series

表面处理：
青古铜/红古铜/黄古铜
主要材质：
不锈钢
使用螺丝：
+M8
玻璃门：
Φ18
框架、木门：
Φ16

Finish:
Green Bronze/Red Bronze/Yellow Bronze
Material:
Stainless Steel SUS304
Fitting Screw:
+M8
Glass Doors:
Φ18
Frame, Flush Doors:
Φ16

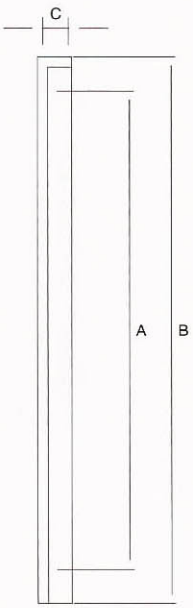

FORMAT	A	B	C
15x120x1600	1400	1600	15x120



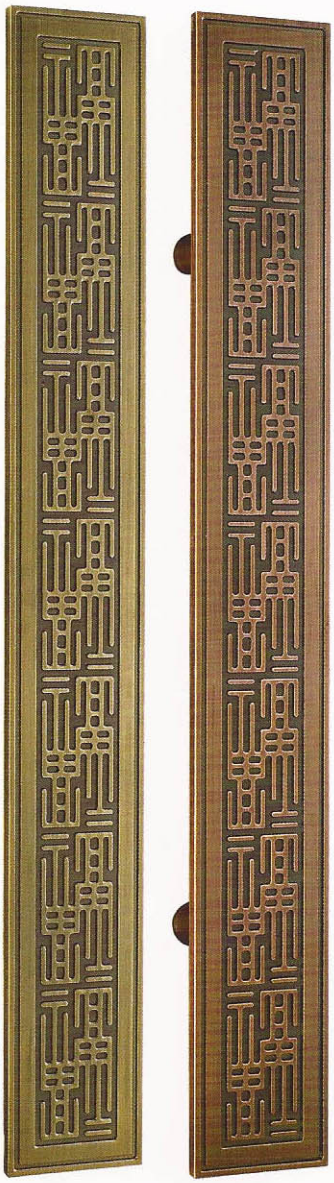

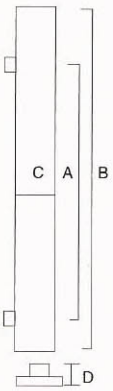

DLS–2023 A DLS–2023 B

DLS–2023

琢雕系列
Carving Series

表面处理： 青古铜/红古铜
主要材质： 铜
使用螺丝： +M8
玻璃门： Φ18
框架、木门： Φ16

Finish: Green Bronze/Red Bronze
Material: Copper
Fitting Screw: +M8
Glass Doors: Φ18
Frame, Flush Doors: Φ16

FORMAT	A	B	C	D
100x15x800	500	800	100x15	55

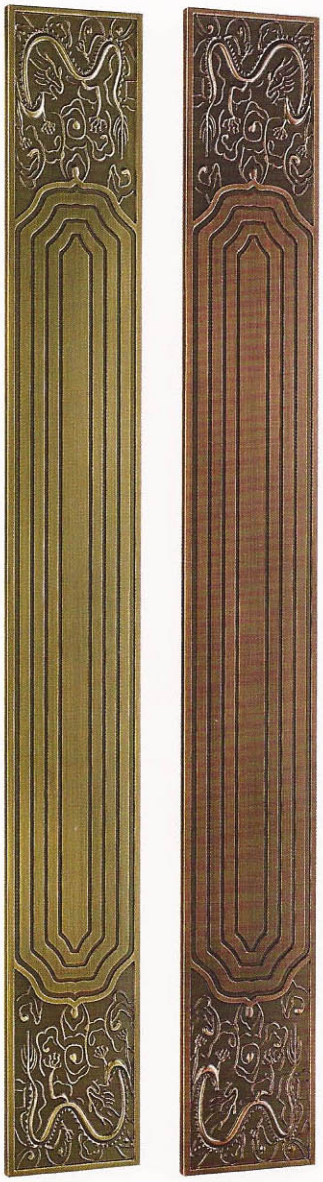

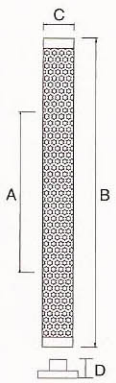

DLS–2021 A DLS–2021 B

DLS–2021

琢雕系列
Carving Series

表面处理： 青古铜/红古铜
主要材质： 铜
使用螺丝： +M8
玻璃门： Φ18
框架、木门： Φ16

Finish: Green Bronze/Red Bronze
Material: Copper
Fitting Screw: +M8
Glass Doors: Φ18
Frame, Flush Doors: Φ16

FORMAT	A	B	C	D
120x15x990	600	990	120x15	55

DLS–2016

琢雕系列
Carving Series

表面处理：
青古铜/红古铜/黄古铜
主要材质：
不锈钢
使用螺丝：
+M8
玻璃门：
Φ18
框架、木门：
Φ16

Finish:
Green Bronze/Red Bronze/Yellow Bronze
Material:
Stainless Steel SUS304
Fitting Screw:
+M8
Glass Doors:
Φ18
Frame, Flush Doors:
Φ16

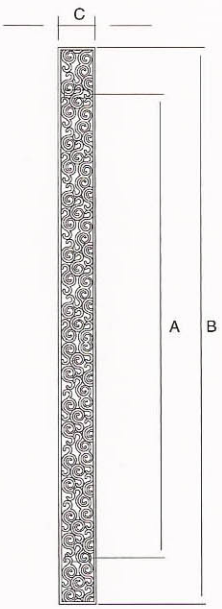

FORMAT	A	B	C
15x120x1800	1500	1800	15x120
15x100x1500	1200	1500	15x100
15x80x1000	900	1000	15x80





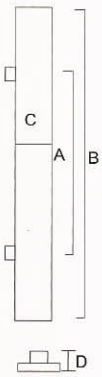

DLS–2028

琢雕系列
Carving Series

表面处理： 木色
主要材质： 黑桃木/花梨木
使用螺丝： +M8
玻璃门： Φ18
框架、木门： Φ16

Finish: Wood Color
Material: Black Walnut/Rose Wood
Fitting Screw: +M8
Glass Doors: Φ18
Frame, Flush Doors: Φ16

FORMAT	A	B	C	D
120x30x1200	600	1200	120x30	70



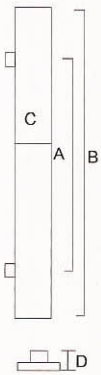

DLS–2030

琢雕系列
Carving Series

表面处理： 木色
主要材质： 黑桃木/花梨木
使用螺丝： +M8
玻璃门： Φ18
框架、木门： Φ16

Finish: Wood Color
Material: Black Walnut/Rose Wood
Fitting Screw: +M8
Glass Doors: Φ18
Frame, Flush Doors: Φ16

FORMAT	A	B	C	D
120x30x1200	600	1200	120x30	70

DLS-2034

琢雕系列
Carving Series

表面处理： 红古铜
主要材质： 不锈钢
使用螺丝： +M8
玻璃门： Φ18
框架、木门： Φ16

Finish: Red Bronze
Material: Stainless Steel SUS304
Fitting Screw: +M8
Glass Doors: Φ18
Frame, Flush Doors: Φ16

FORMAT	A	B	C
215x450	430	450	215

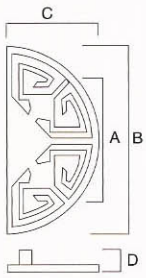

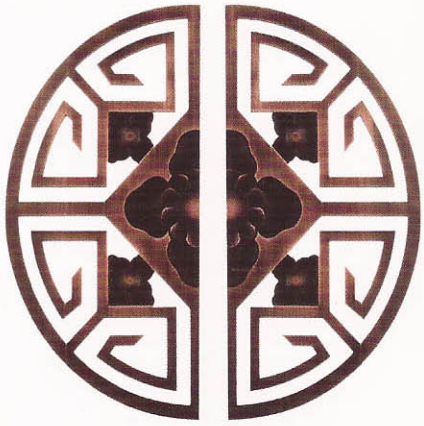

DLS-2035

琢雕系列
Carving Series

表面处理： 青古铜/红古铜
主要材质： 铜
使用螺丝： +M8
玻璃门： Φ18
框架、木门： Φ16

Finish: Green Bronze/Red Bronze
Material: Copper
Fitting Screw: +M8
Glass Doors: Φ18
Frame, Flush Doors: Φ16

FORMAT	A	B	C	D
300x150x15	145	300	150x15	55

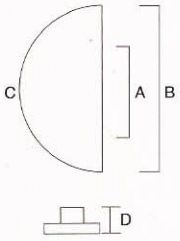

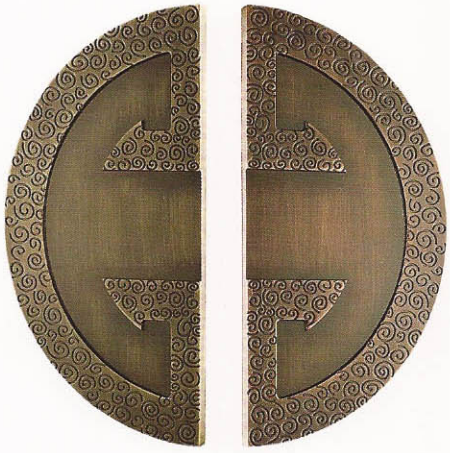

DLS-2038

琢雕系列
Carving Series

表面处理： 钛金
主要材质： 不锈钢
使用螺丝： +M8
玻璃门： Φ18
框架、木门： Φ16

Finish: Titanium
Material: Stainless Steel SUS304
Fitting Screw: +M8
Glass Doors: Φ18
Frame, Flush Doors: Φ16

FORMAT	A	B	C	D
150x10x300	100	300	150x10	52

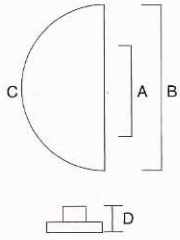



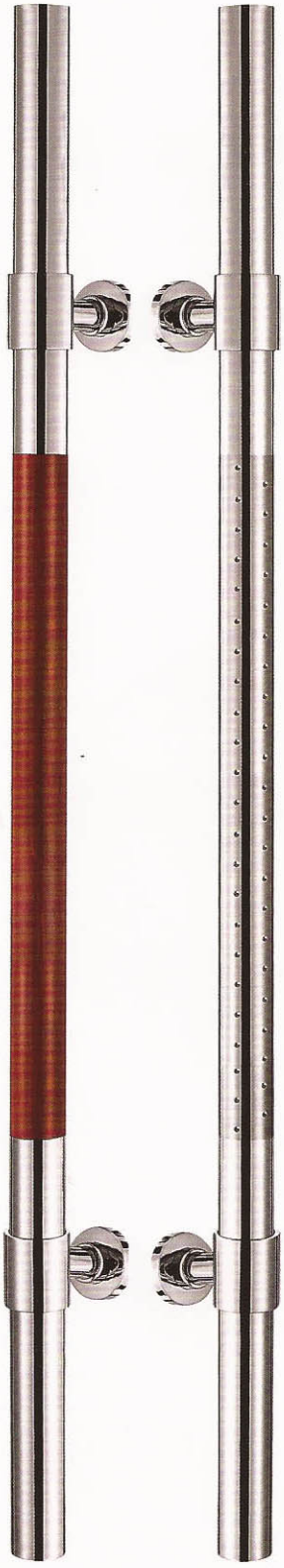

DLS–3003

典雅系列
Elegance Series

表面处理： 青古铜+木
主要材质： 镜光/花梨木
使用螺丝： +M8
玻璃门： Φ18
框架、木门： Φ16

Finish: SSP/Rosewood
Material: Stainless Steel SUS304/Wood
Fitting Screw: +M8
Glass Doors: Φ18
Frame, Flush Doors: Φ16

FORMAT	A	B	C	D
Φ38x1200	800	1200	Φ38	65

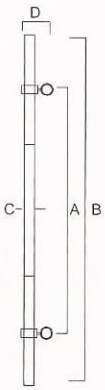

DLS–3003A **DLS–3003B**

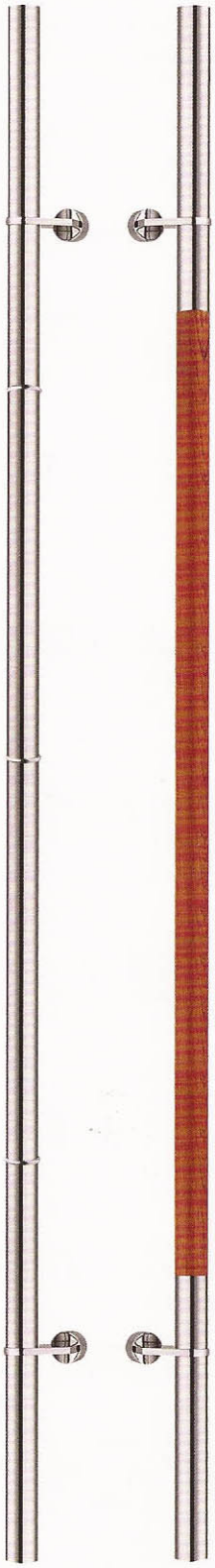

DLS–3004A **DLS–3004B**

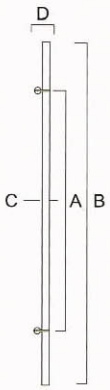

DLS–3004

典雅系列
Elegance Series

表面处理： 砂光/花梨木
主要材质： 不锈钢/木
使用螺丝： +M8
玻璃门： Φ18
框架、木门： Φ16

Finish: Sand/Rosewood
Material: Stainless Steel SUS304/Wood
Fitting Screw: +M8
Glass Doors: Φ18
Frame, Flush Doors: Φ16

FORMAT	A	B	C	D
Φ38x1800	1300	1800	Φ38	90
Φ38x1500	1000	1500	Φ38	90
Φ38x1200	800	1200	Φ38	90
Φ38x800	500	800	Φ38	90

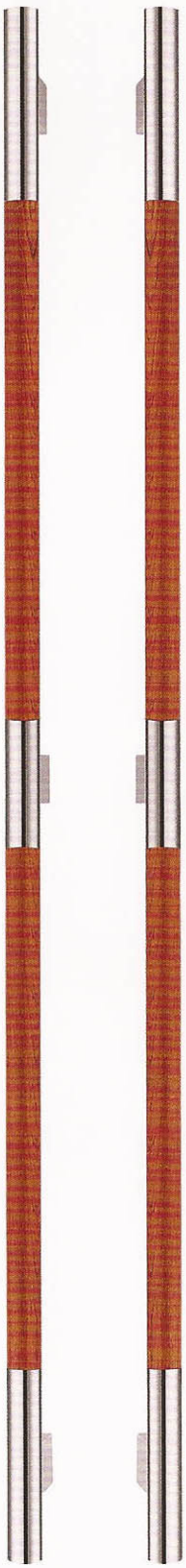

DLS–3005

典雅系列
Elegance Series

表面处理： 砂光+莎比利
主要材质： 不锈钢/木
使用螺丝： +M8
玻璃门： Φ18
框架、木门： Φ16

Finish: Sand+Sapele
Material: Stainless Steel SUS304/Wood
Fitting Screw: +M8
Glass Doors: Φ18
Frame, Flush Doors: Φ16

FORMAT	A	B	C	D
Φ38x1800	700	1800	Φ38	80

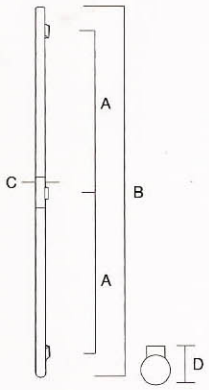

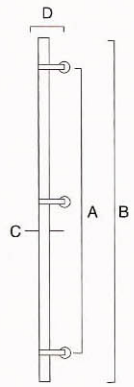

DLS–3006

典雅系列
Elegance Series

表面处理： 砂光+黑桃木
主要材质： 不锈钢+木
使用螺丝： +M8
玻璃门： Φ18
框架、木门： Φ16

Finish: Sand+Steel
Material: Stainless Steel SUS304+Wood
Fitting Screw: +M8
Glass Doors: Φ18
Frame, Flush Doors: Φ16

FORMAT	A	B	C	D
Φ38x1800	1400	1800	Φ38	90

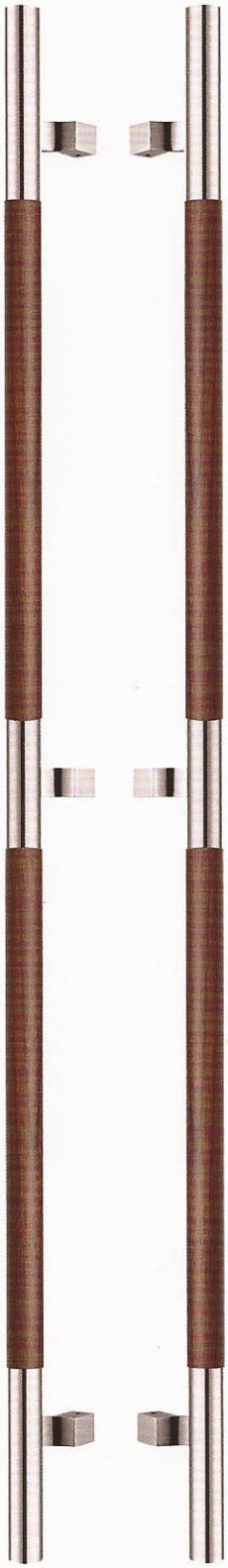

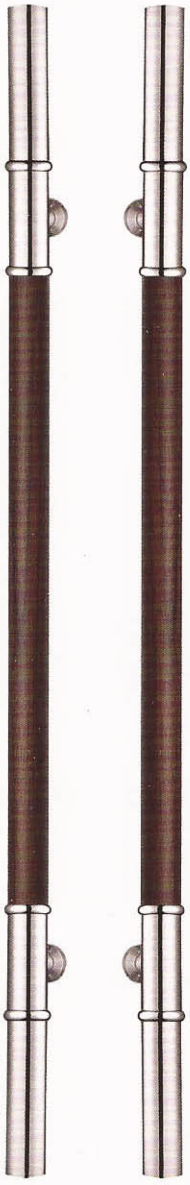

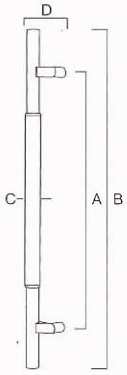

DLS–3009

典雅系列
Elegance Series

表面处理： 砂光+黑桃木
主要材质： 不锈钢/木
使用螺丝： +M8
玻璃门： Φ18
框架、木门： Φ16

Finish: Sand+Steel
Material: Stainless Steel SUS304/Wood
Fitting Screw: +M8
Glass Doors: Φ18
Frame, Flush Doors: Φ16

FORMAT	A	B	C	D
Φ38x1200	800	1200	Φ38	80

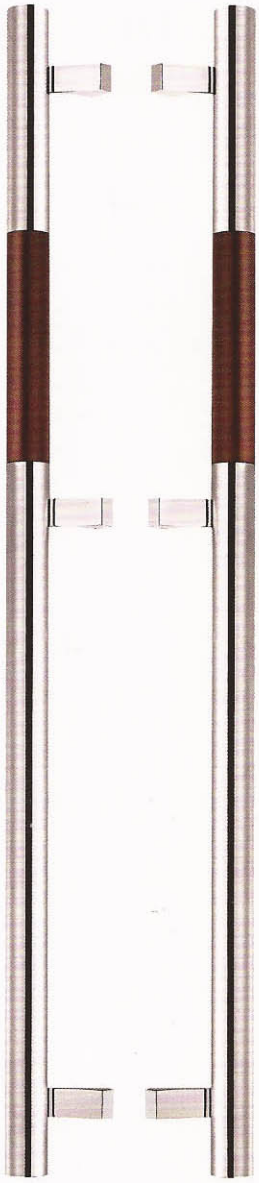

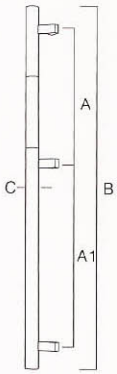

DLS–3010

典雅系列
Elegance Series

表面处理： 镜光+橡木
主要材质： 不锈钢/木
使用螺丝： +M8
玻璃门： Φ18
框架、木门： Φ16

Finish: SSP+Oak
Material: Stainless Steel SUS304+Wood
Fitting Screw: +M8
Glass Doors: Φ18
Frame, Flush Doors: Φ16

FORMAT	A	A1	B	C
Φ38x1200	380	500	1000	Φ38



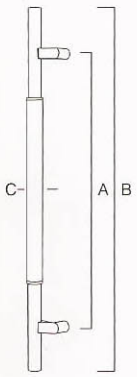

DLS–3014

典雅系列
Elegance Series

表面处理：镜光+黑桃木
主要材质：不锈钢/木
使用螺丝：+M8
玻璃门：Φ18
框架、木门：Φ16

Finish: SSP+Black Walunt
Material: Stainless Steel SUS304+Wood
Fitting Screw: +M8
Glass Doors: Φ18
Frame, Flush Doors: Φ16

FORMAT	A	B	C
Φ38x800	600	800	Φ38



DLS–3017A

DLS–3017B

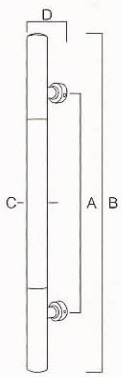

DLS–3017

典雅系列
Elegance Series

表面处理：钛金/镜光/花梨木
主要材质：不锈钢/木
使用螺丝：+M8
玻璃门：Φ18
框架、木门：Φ16

Finish: SSP/Rosewood
Material: Stainless Steel SUS304/Wood
Fitting Screw: +M8
Glass Doors: Φ18
Frame, Flush Doors: Φ16

FORMAT	A	B	C	D
Φ38x800	500	800	Φ38	80



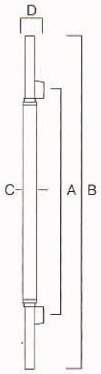

DLS–3019

典雅系列
Elegance Series

表面处理： 镜光+黑桃木
主要材质： 不锈钢/木
使用螺丝： +M8
玻璃门： Φ18
框架、木门： Φ16

Finish: SSP+Black Walnut
Material: Stainless Steel SUS304/Wood
Fitting Screw: +M8
Glass Doors: Φ18
Frame, Flush Doors: Φ16

FORMAT	A	B	C	D
Φ51x1200	850	1200	Φ51	90

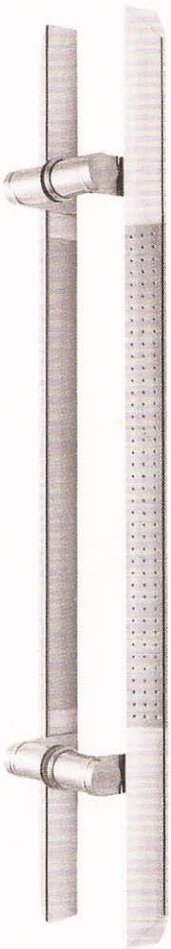

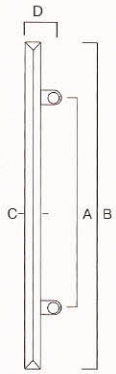

DLS–3020

典雅系列
Elegance Series

表面处理： 星点砂光+镜光
主要材质： 不锈钢
使用螺丝： +M8
玻璃门： Φ18
框架、木门： Φ16

Finish: Sand With Star+SSP
Material: Stainless Steel SUS304
Fitting Screw: +M8
Glass Doors: Φ18
Frame, Flush Doors: Φ16

FORMAT	A	B	C	D
39X39X1200	800	1200	39X39	80
39X39X800	500	800	39X39	80



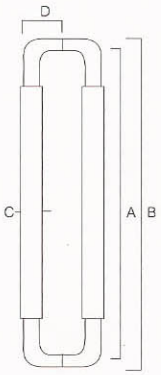

DLS–3026

典雅系列
Elegance Series

表面处理：镜光+黑桃木
主要材质：不锈钢/木
使用螺丝：+M8
玻璃门：Φ18
框架、木门：Φ16

Finish: SSP+Black Walnut
Material: Stainless Steel SUS304/Wood
Fitting Screw: +M8
Glass Doors: Φ18
Frame, Flush Doors: Φ16

FORMAT	A	B	C	D
Φ38x600	575	600	Φ38	70

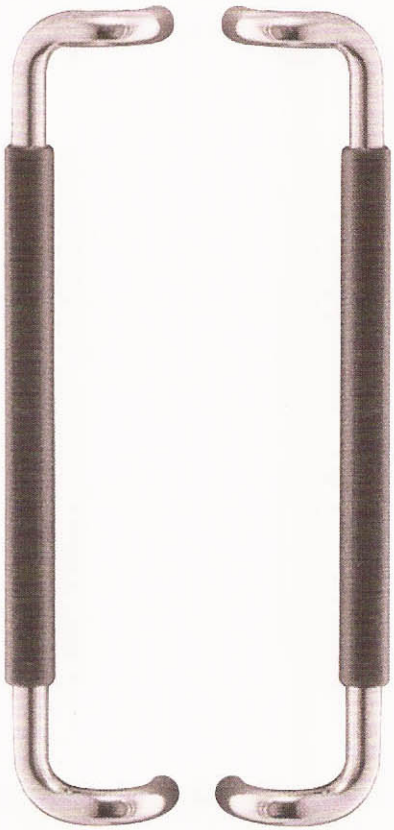

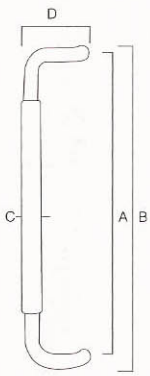

DLS–3031

典雅系列
Elegance Series

表面处理：镜光+黑桃木
主要材质：不锈钢/木
使用螺丝：+M8
玻璃门：Φ18
框架、木门：Φ16

Finish: SSP+Black Walunt
Material: Stainless Steel SUS304/Wood
Fitting Screw: +M8
Glass Doors: Φ18
Frame, Flush Doors: Φ16

FORMAT	A	B	C	D
Φ38x600	575	600	Φ38	70

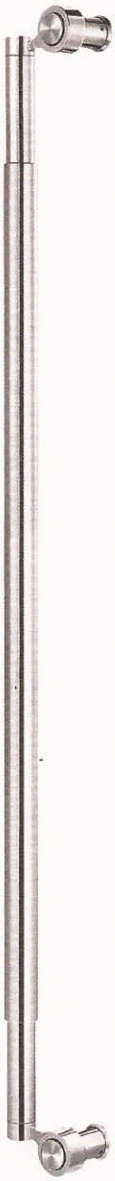

DLS–4001A



DLS–4001B



DLS–4001C



DLS–4001D

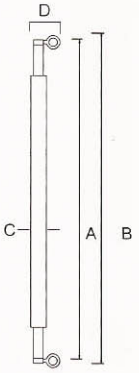

DLS–4001

不锈钢系列
Stainless steel series

表面处理： 镜光/花梨木/钛金
主要材质： 不锈钢/木
使用螺丝： +M8
玻璃门： Φ18
框架、木门： Φ16

Finish: SSP/Rosewood/Titanium
Material: Stainless Steel SUS304/Wood
Fitting Screw: +M8
Glass Doors: Φ18
Frame, Flush Doors: Φ16

FORMAT	A	B	C	D
Φ38x1800	1154	1200	Φ38	80

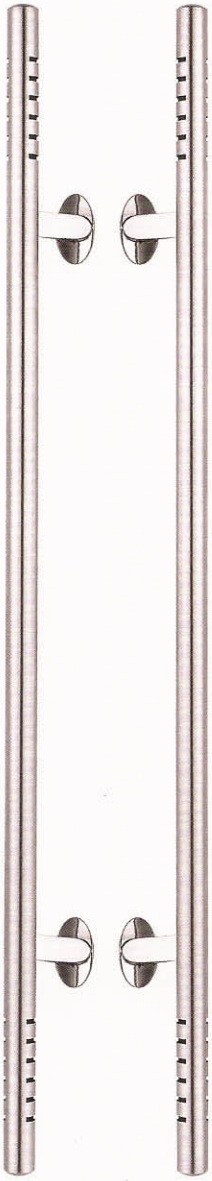

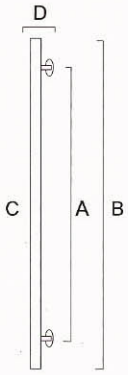

DLS-4002

不锈钢系列
Stainless steel series

表面处理： 砂光星孔+镜光
主要材质： 不锈钢
使用螺丝： +M8
玻璃门： Φ18
框架、木门： Φ16

Finish: Sand With Hole+SSP
Material: Stainless Steel SUS304
Fitting Screw: +M8
Glass Doors: Φ18
Frame, Flush Doors: Φ16

FORMAT	A	B	C	D
Φ38x1200	900	1200	Φ38	85

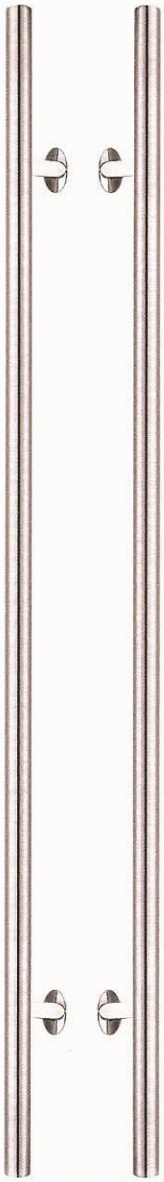

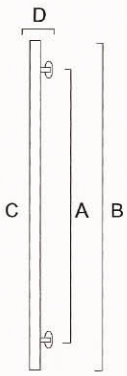

DLS-4003

不锈钢系列
Stainless steel series

表面处理： 不锈钢
主要材质： 星孔+镜光
使用螺丝： +M8
玻璃门： Φ18
框架、木门： Φ16

Finish: Sand+SSP
Material: Stainless Steel SUS304
Fitting Screw: +M8
Glass Doors: Φ18
Frame, Flush Doors: Φ16

FORMAT	A	B	C	D
Φ38x1200	800	1200	Φ38	85

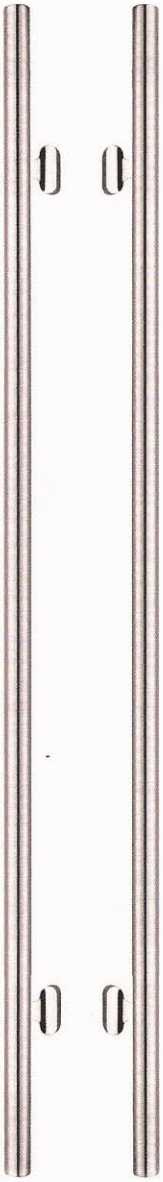

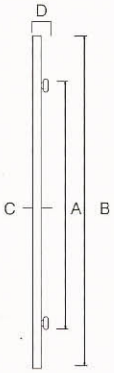

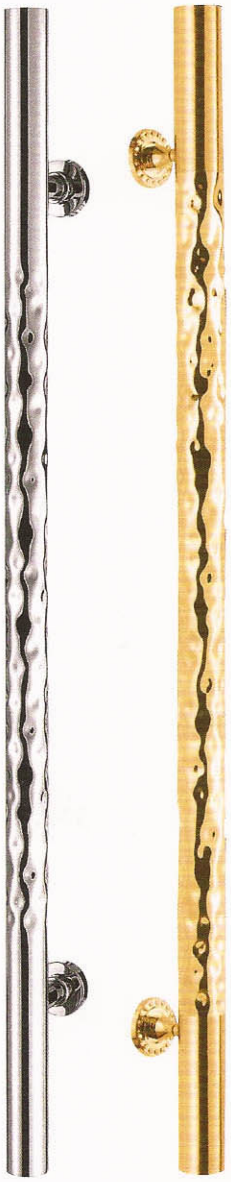



DLS–4005A DLS–4005B

DLS–4004

不锈钢系列
Stainless steel series

表面处理： 砂光/镜光
主要材质： 不锈钢
使用螺丝： +M8
玻璃门： Φ18
框架、木门： Φ16

Finish: Sand/SSP
Material: Stainless Steel SUS304
Fitting Screw: +M8
Glass Doors: Φ18
Frame, Flush Doors: Φ16

FORMAT	A	B	C	D
Φ38x1200	800	1200	Φ38	80

DLS–4005

不锈钢系列
Stainless steel series

表面处理： 砂光/镜光/钛金
主要材质： 不锈钢
使用螺丝： +M8
玻璃门： Φ18
框架、木门： Φ16

Finish: Sand/SSP/Titanium
Material: Stainless Steel SUS304
Fitting Screw: +M8
Glass Doors: Φ18
Frame, Flush Doors: Φ16

FORMAT	A	B	C	D
Φ51x1200	900	1200	Φ51	110

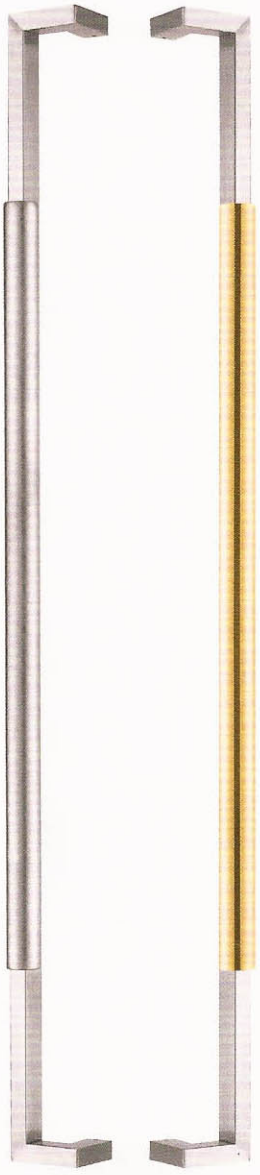

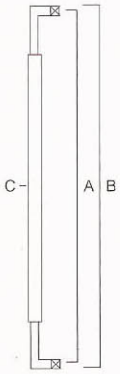

DLS-4005A DLS-4005B

DLS-4006

不锈钢系列
Stainless steel series

表面处理： 拉丝/钛金
主要材质： 不锈钢
使用螺丝： +M8
玻璃门： Φ18
框架、木门： Φ16

Finish: SSS/Titanium
Material: Stainless Steel SUS304
Fitting Screw: +M8
Glass Doors: Φ18
Frame, Flush Doors: Φ16

FORMAT	A	B	C
25x38x1300	1275	1300	25x38

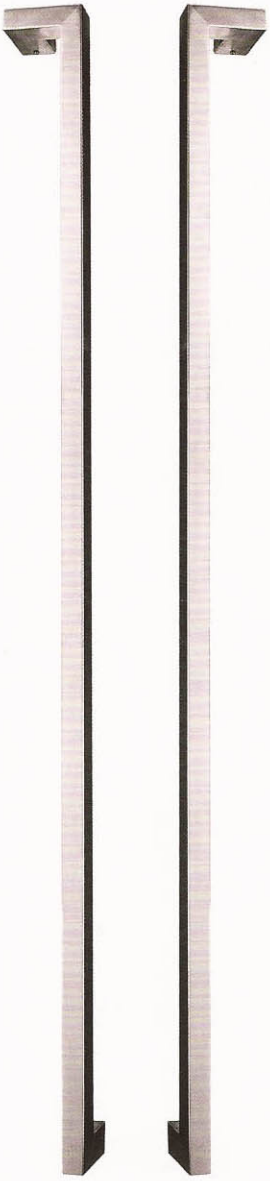

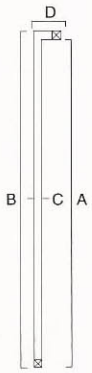

DLS-4009

不锈钢系列
Stainless steel series

表面处理： 拉丝
主要材质： 不锈钢
使用螺丝： +M8
玻璃门： Φ18
框架、木门： Φ16

Finish: SSS
Material: Stainless Steel SUS304
Fitting Screw: +M8
Glass Doors: Φ18
Frame, Flush Doors: Φ16

FORMAT	A	B	C	D
25x38x600	1168	1200	25x38	80

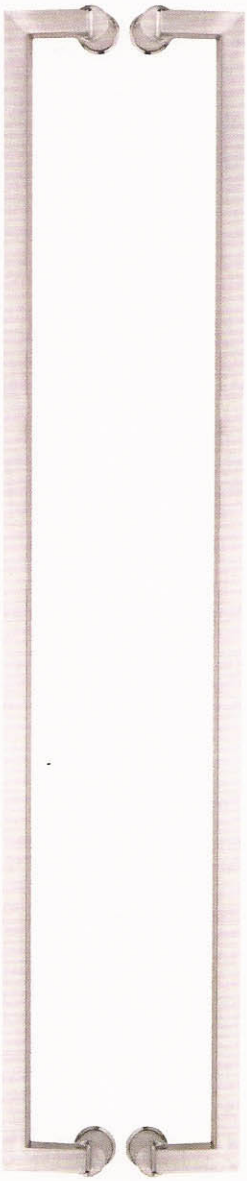

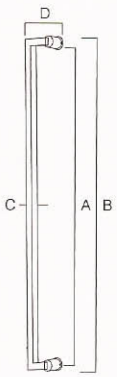

DLS–4010

不锈钢系列
Stainless steel series

表面处理： 拉丝
主要材质： 不锈钢
使用螺丝： +M8
玻璃门： Φ18
框架、木门： Φ16

Finish: SSS
Material: Stainless Steel SUS304
Fitting Screw: +M8
Glass Doors: Φ18
Frame, Flush Doors: Φ16

FORMAT	A	B	C	D
25x38x1000	962	1000	25x38	80

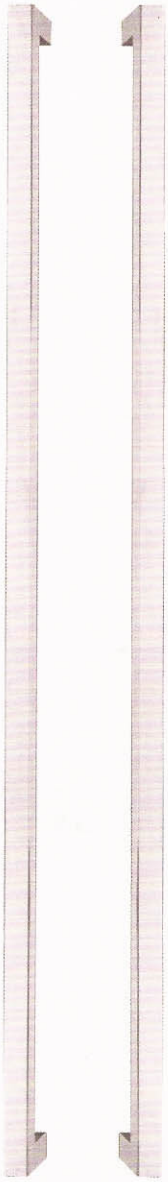

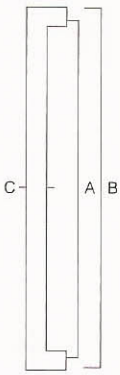

DLS–4012

不锈钢系列
Stainless steel series

表面处理： 拉丝
主要材质： 不锈钢
使用螺丝： +M8
玻璃门： Φ18
框架、木门： Φ16

Finish: SSS
Material: Stainless Steel SUS304
Fitting Screw: +M8
Glass Doors: Φ18
Frame, Flush Doors: Φ16

FORMAT	A	B	C
25x38x1200	1162	1200	25x38

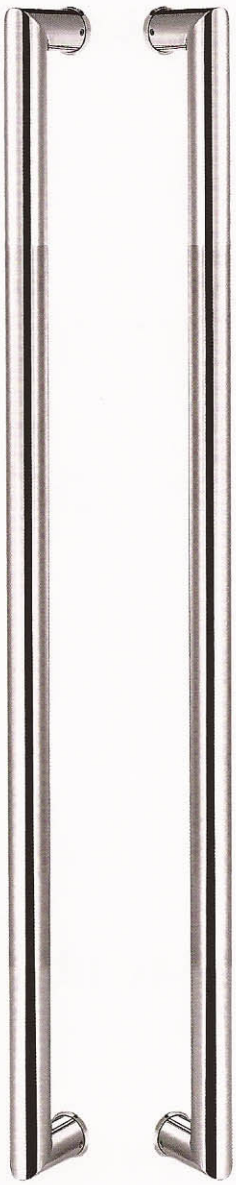

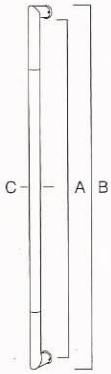

DLS–4013

不锈钢系列
Stainless steel series

表面处理： 砂光/镜光
主要材质： 不锈钢
使用螺丝： +M8
玻璃门： Φ18
框架、木门： Φ16

Finish: Sand/SSP
Material: Stainless Steel SUS304
Fitting Screw: +M8
Glass Doors: Φ18
Frame, Flush Doors: Φ16

FORMAT	A	B	C
Φ38x800	762	800	Φ38

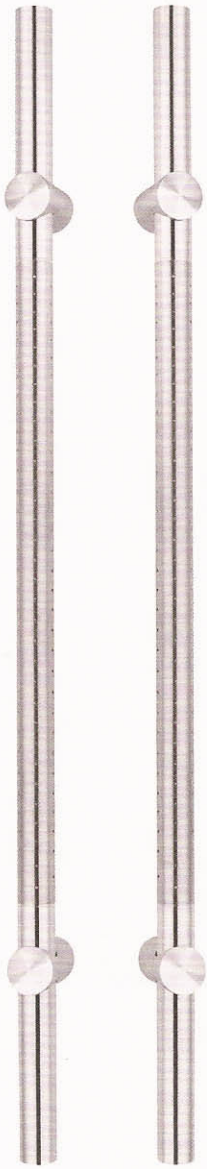

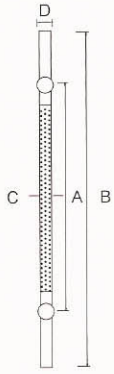

DLS–4023

不锈钢系列
Stainless steel series

表面处理： 星点砂光+镜光
主要材质： 不锈钢
使用螺丝： +M8
玻璃门： Φ18
框架、木门： Φ16

Finish: Sand With Star+SSP
Material: Stainless Steel SUS304
Fitting Screw: +M8
Glass Doors: Φ18
Frame, Flush Doors: Φ16

FORMAT	A	B	C	D
Φ38x1200	700	1200	Φ38	85

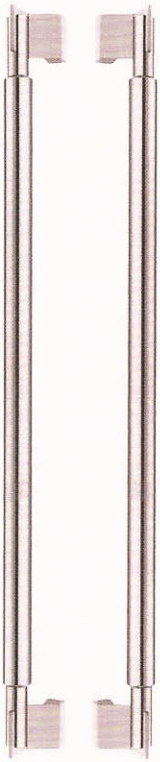

DLS-4026

不锈钢系列
Stainless steel series

表面处理： 砂光
主要材质： 不锈钢
使用螺丝： +M8
玻璃门： Φ18
框架、木门： Φ16

Finish: Sand
Material: Stainless Steel SUS304
Fitting Screw: +M8
Glass Doors: Φ18
Frame, Flush Doors: Φ16

FORMAT	A	B	C	D
Φ38x800	755	800	Φ38	73





DLS-4038

不锈钢系列
Stainless steel series

表面处理： 星孔砂光
主要材质： 不锈钢
使用螺丝： +M8
玻璃门： Φ18
框架、木门： Φ16

Finish: Sand With Start
Material: Stainless Steel SUS304
Fitting Screw: +M8
Glass Doors: Φ18
Frame, Flush Doors: Φ16

FORMAT	A	B	C	D
Φ38x1200	800	1200	Φ38	90

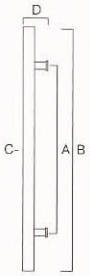

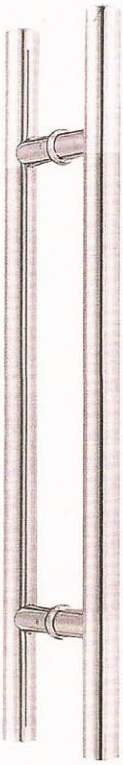

DLS-4032

不锈钢系列
Stainless steel series

表面处理： 砂光/镜光
主要材质： 不锈钢
使用螺丝： +M8
玻璃门： Φ18
框架、木门： Φ16

Finish: Sand/SSP
Material: Stainless Steel SUS304
Fitting Screw: +M8
Glass Doors: Φ18
Frame, Flush Doors: Φ16

FORMAT	A	B	C	D
Φ38x800	600	800	Φ38	80
40x20x600	600	425	40x20	57

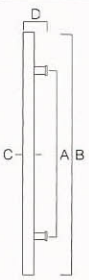

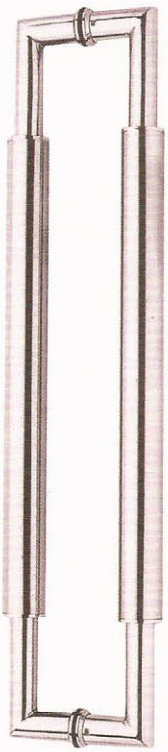

DLS-4033

不锈钢系列
Stainless steel series

表面处理： 砂光/镜光
主要材质： 不锈钢
使用螺丝： +M8
玻璃门： Φ18
框架、木门： Φ16

Finish: Sand/SSP
Material: Stainless Steel SUS304
Fitting Screw: +M8
Glass Doors: Φ18
Frame, Flush Doors: Φ16

FORMAT	A	B	C	D
Φ38x800	775	800	Φ38	70

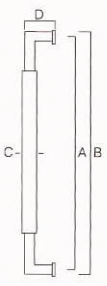

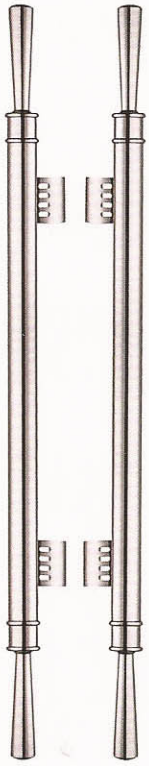

DLS–4043

不锈钢系列
Stainless steel series

表面处理： 砂光
主要材质： 不锈钢
使用螺丝： +M8
玻璃门： Φ18
框架、木门： Φ16

Finish: Sand
Material: Stainless Steel SUS304
Fitting Screw: +M8
Glass Doors: Φ18
Frame, Flush Doors: Φ16

FORMAT	A	B	C
Φ38x1200	600	1200	Φ38

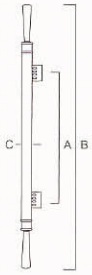

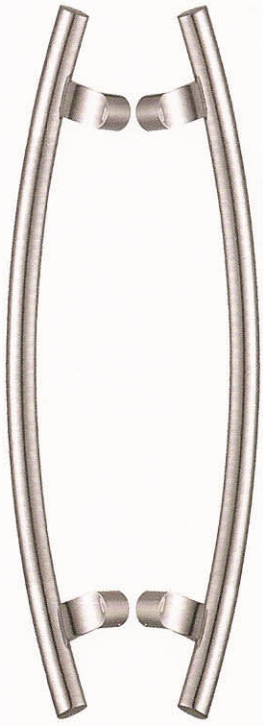

DLS–4046

不锈钢系列
Stainless steel series

表面处理： 砂光/镜光
主要材质： 不锈钢
使用螺丝： +M8
玻璃门： Φ18
框架、木门： Φ16

Finish: Sand/SSP
Material: Stainless Steel SUS304
Fitting Screw: +M8
Glass Doors: Φ18
Frame, Flush Doors: Φ16

FORMAT	A	B	C	D
Φ32x600	430	600	Φ32	65

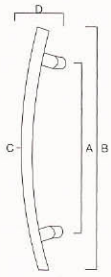

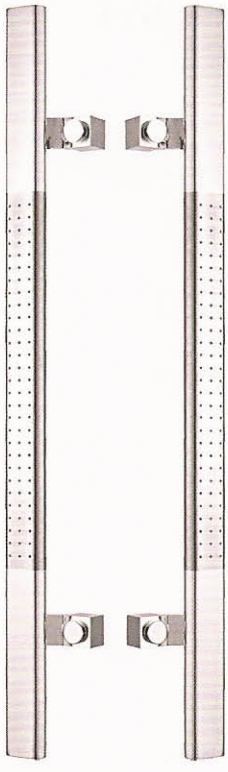

DLS–4048

不锈钢系列
Stainless steel series

表面处理： 星孔砂光/镜光
主要材质： 不锈钢
使用螺丝： +M8
玻璃门： Φ18
框架、木门： Φ16

Finish: Sand With Star/SSP
Material: Stainless Steel SUS304
Fitting Screw: +M8
Glass Doors: Φ18
Frame, Flush Doors: Φ16

FORMAT	A	B	C
19x38x600	600	800	19x38

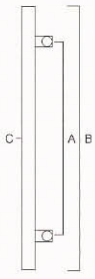

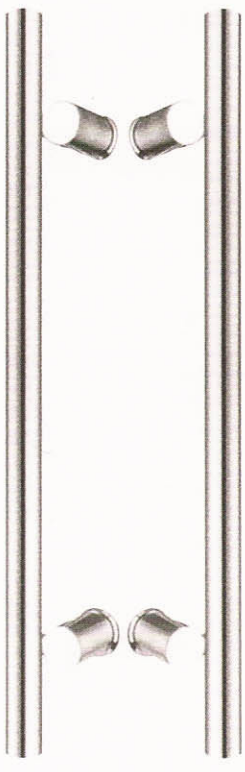

DLS–4050

不锈钢系列
Stainless steel series

表面处理： 砂光
主要材质： 不锈钢
使用螺丝： +M8
玻璃门： Φ18
框架、木门： Φ16

Finish: Sand
Material: Stainless Steel SUS304
Fitting Screw: +M8
Glass Doors: Φ18
Frame, Flush Doors: Φ16

FORMAT	A	B	C	D
Φ38x600	400	600	Φ38	80

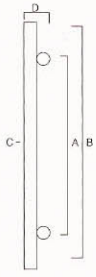

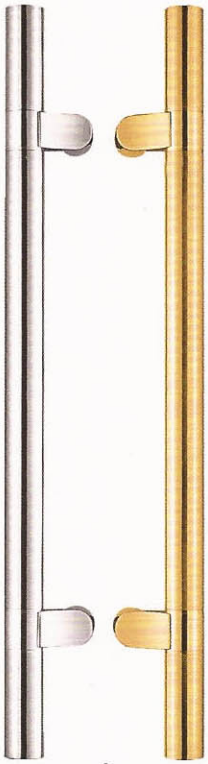

DLS-4051A DLS-4051B

DLS-4051

不锈钢系列
Stainless steel series

表面处理： 砂光/镜光/钛金
主要材质： 不锈钢
使用螺丝： +M8
玻璃门： Φ18
框架、木门： Φ16

Finish: Sand/SSP/Titanium
Material: Stainless Steel SUS304
Fitting Screw: +M8
Glass Doors: Φ18
Frame, Flush Doors: Φ16

FORMAT	A	B	C
Φ32x800	600	800	Φ32

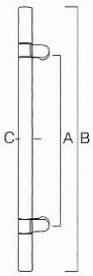



DLS-4052

不锈钢系列
Stainless steel series

表面处理： 拉丝/分色/镜光/PVD拉丝
主要材质： 不锈钢
使用螺丝： +M8
玻璃门： Φ18
框架、木门： Φ16

Finish: Satin/Dual Finish/Shiny/PVD Satin
Material: Stainless Steel SUS304
Fitting Screw: +M8
Glass Doors: Φ18
Frame, Flush Doors: Φ16

FORMAT	A	B	C	D
Φ25x450	250	450	Φ25	70

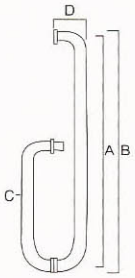

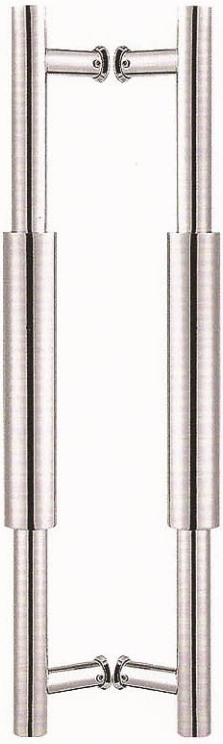

DLS-4053

不锈钢系列
Stainless steel series

表面处理： 拉丝/分色/镜光/PVD拉丝
主要材质： 不锈钢
使用螺丝： +M8
玻璃门： Φ18
框架、木门： Φ16

Finish: Satin/Dual Finish/Shiny/PVD Satin
Material: Stainless Steel SUS304
Fitting Screw: +M8
Glass Doors: Φ18
Frame, Flush Doors: Φ16

FORMAT	A	B	C	D
Φ38x600	450	600	Φ38	70

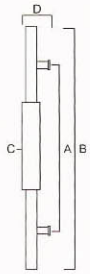

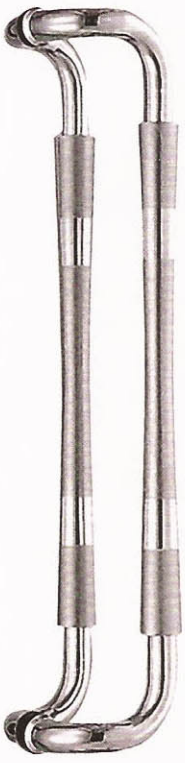

DLS-4054

不锈钢系列
Stainless steel series

表面处理： 拉丝/分色/镜光/PVD拉丝
主要材质： 不锈钢
使用螺丝： +M8
玻璃门： Φ18
框架、木门： Φ16

Finish: Satin/Dual Finish/Shiny/PVD Satin
Material: Stainless Steel SUS304
Fitting Screw: +M8
Glass Doors: Φ18
Frame, Flush Doors: Φ16

FORMAT	A	B	C
Φ38x800	775	800	Φ38

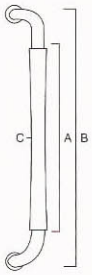



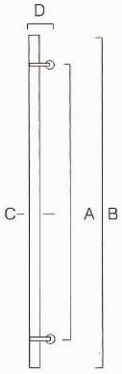

DLS–4506

不锈钢系列
Stainless steel series

表面处理： 镜光+哑黑
主要材质： 不锈钢
使用螺丝： +M8
玻璃门： Φ18
框架、木门： Φ16

Finish: SSP+Matt Black
Material: Stainless Steel SUS304
Fitting Screw: +M8
Glass Doors: Φ18
Frame, Flush Doors: Φ16

FORMAT	A	B	C	D
Φ38x1200	800	1200	Φ38	80

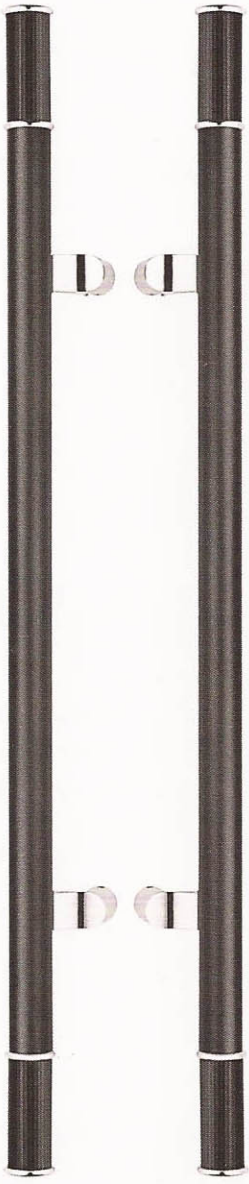

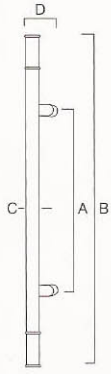

DLS–4510

不锈钢系列
Stainless steel series

表面处理： 镜光+哑黑
主要材质： 不锈钢
使用螺丝： +M8
玻璃门： Φ18
框架、木门： Φ16

Finish: SSP+Matt Black
Material: Stainless Steel SUS304
Fitting Screw: +M8
Glass Doors: Φ18
Frame, Flush Doors: Φ16

FORMAT	A	B	C	D
Φ38x1200	800	1200	Φ38	80

Door Viewer



B04



B-04



B-05



B-06



B-10



B-11



B-205



B-206



B304



B306



ZP303



ZP-303L



ZP303C



ZP303D



VD1199

Door Handle



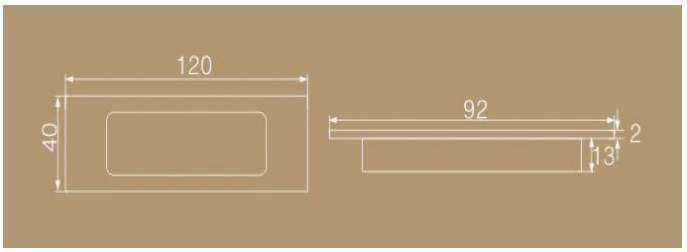

SL2011



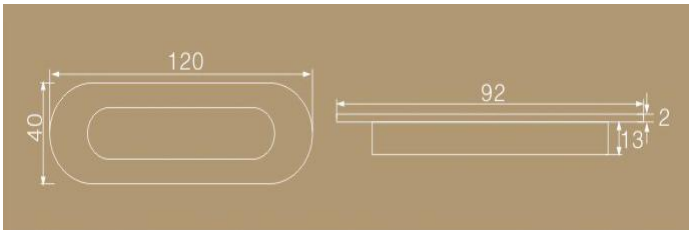

SL2012

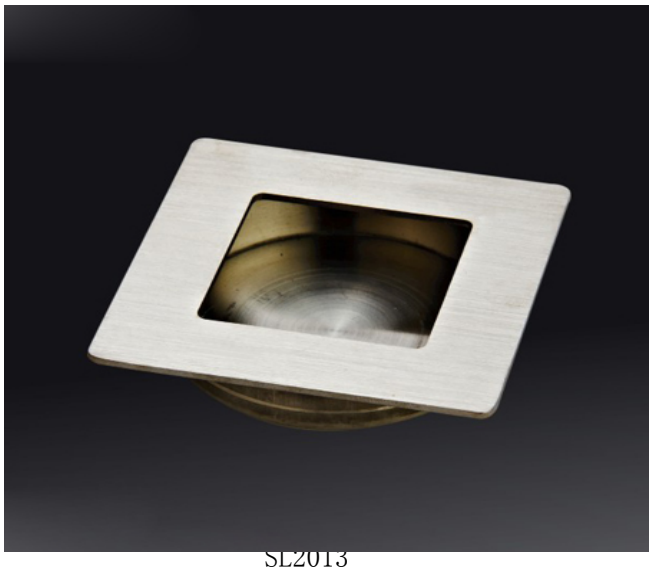

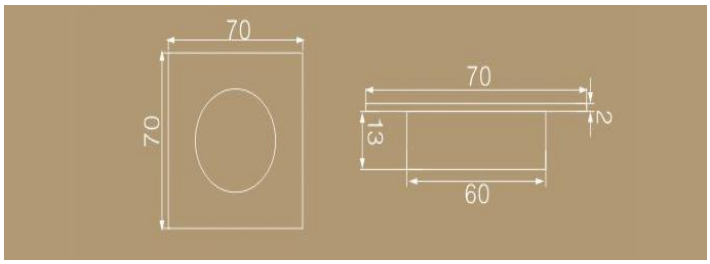

SL2013



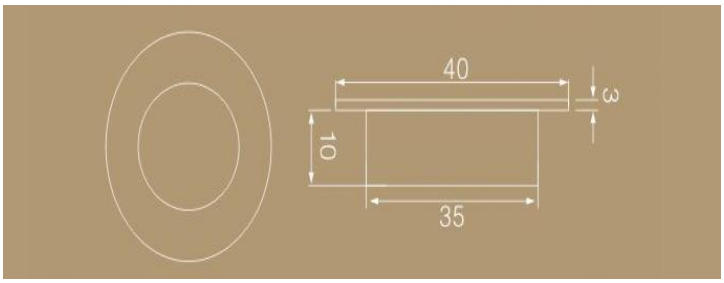

SL2014



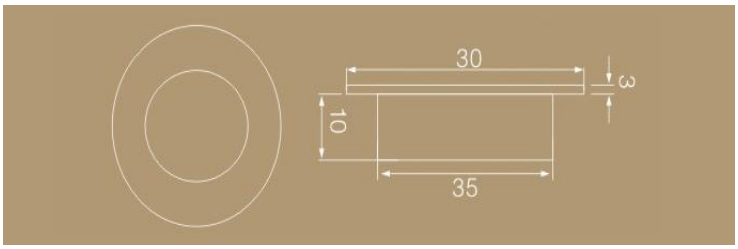

Glass Door Catch



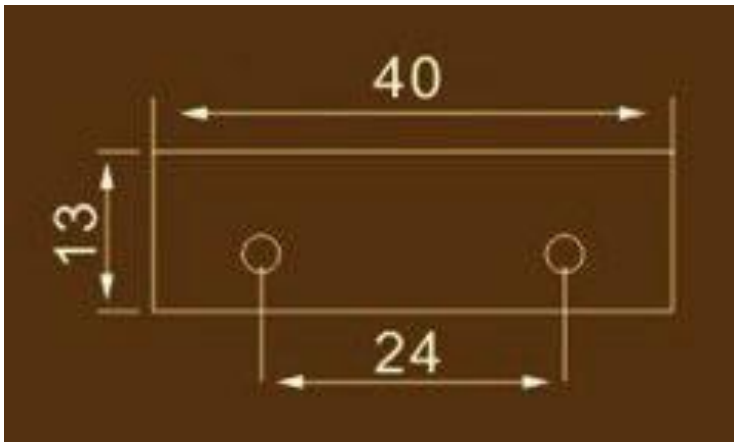

6611



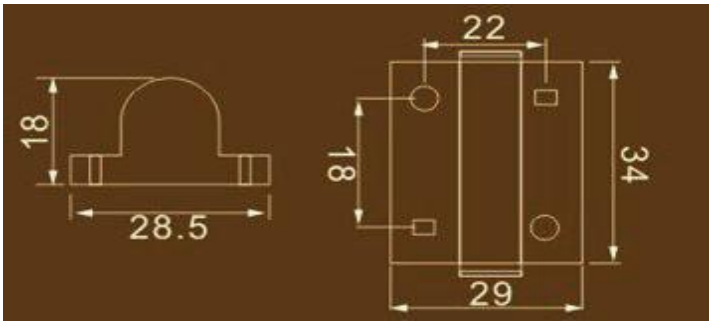

X6601

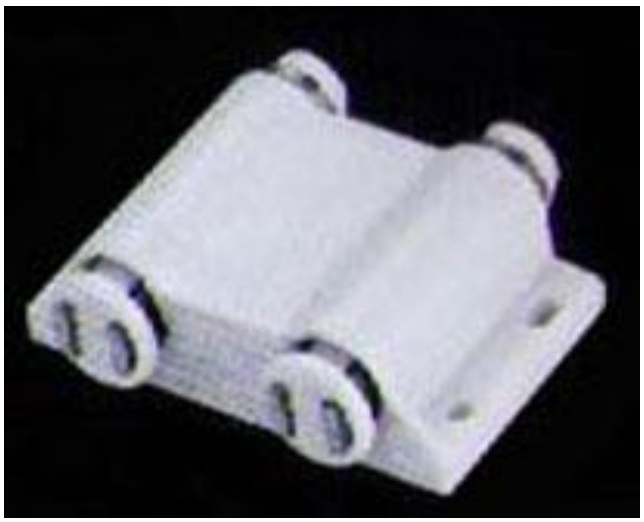

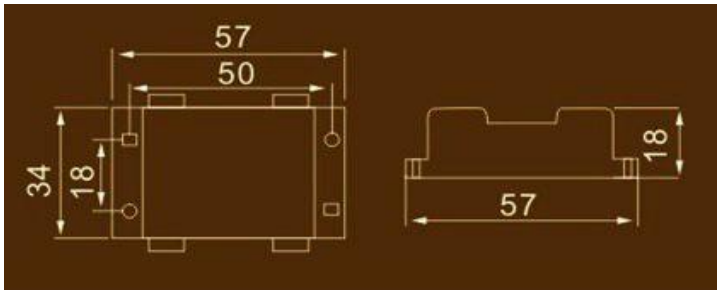

X6602



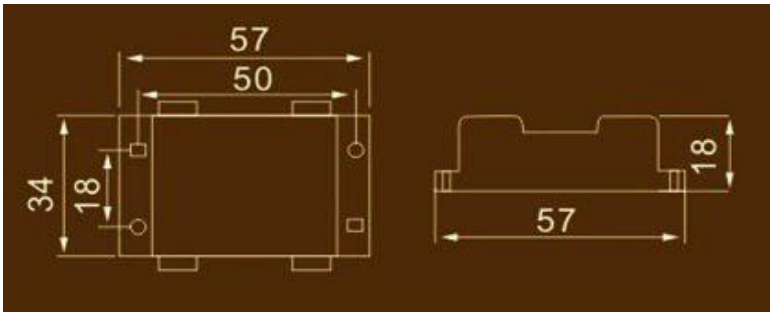

X6602-1



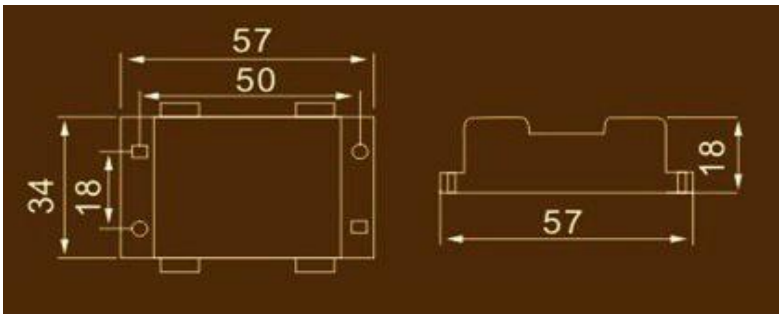

X6602-2

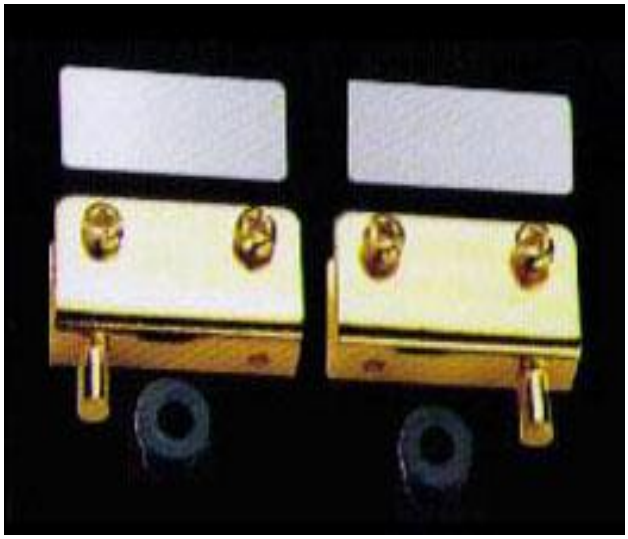

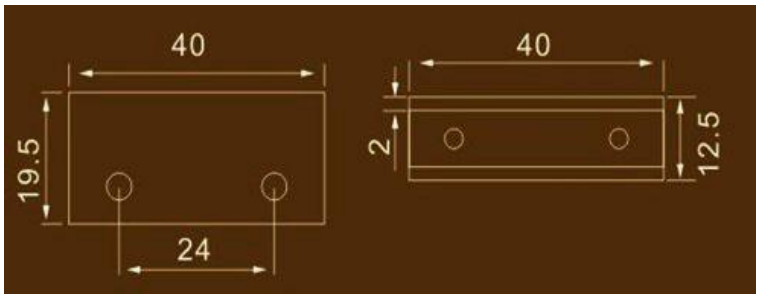

X6612

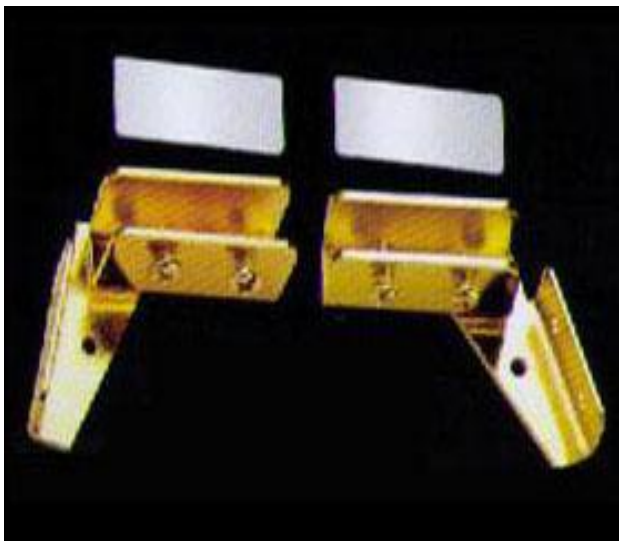

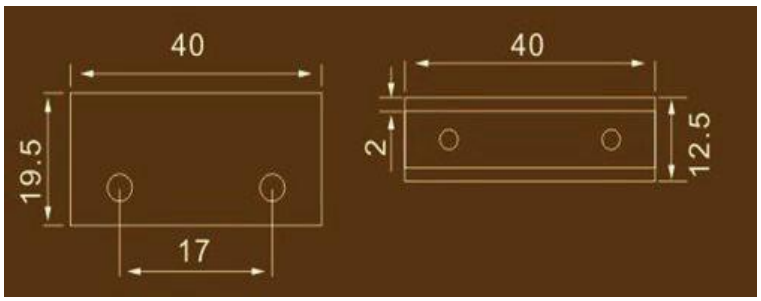

X6614

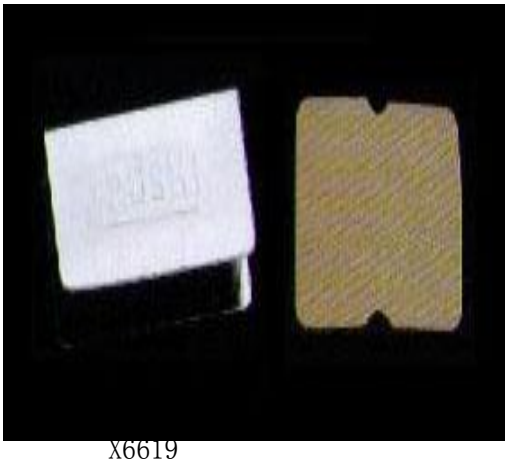

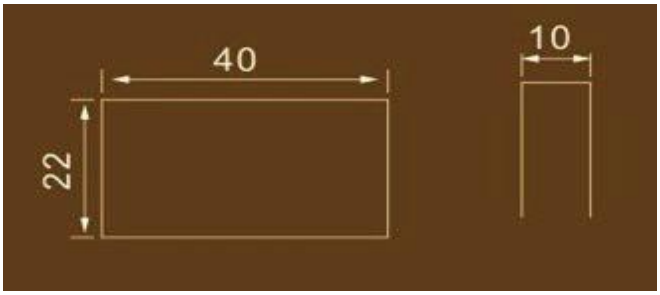

X6619

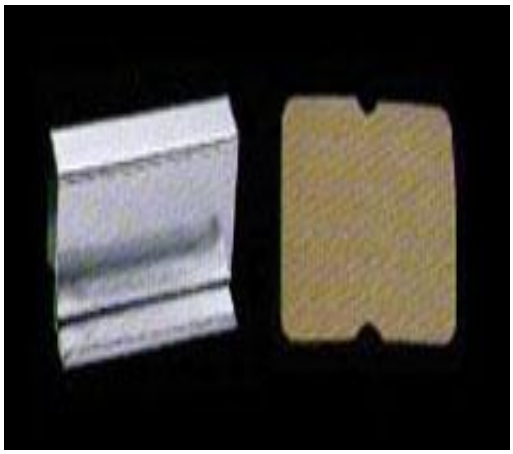

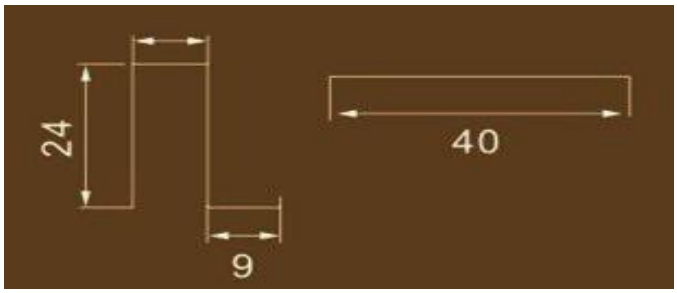

X6620

America Window & Door Hardware



2pt pocket surface



2pt pocket wood



Apogee Handles SB-SS copy



Apollo brass keyed spl



Apollo brass mpl



Apollo white spl



ApolloHandle75



GeminiLegacyTrim



Legacy & Gemini



Legacy & Olympus b copy



Legacy & Olympus copy



Legacy Brass with SPL copy



Legacy Exterior on Vinyl copy



Legacy Exterior on Vinyl Locking copy



Legacy Handle



Legacy Exterior on Vinyl Locking copy



Olympus



product_182



product_183



product_184



product_187



product_185



sliding door handle1#



product_186



sliding door handle2#



sliding door handle3#



sliding door handle6#



sliding door handle7#



sliding door handle8#



sliding door handle9#



sliding door handle-legacy



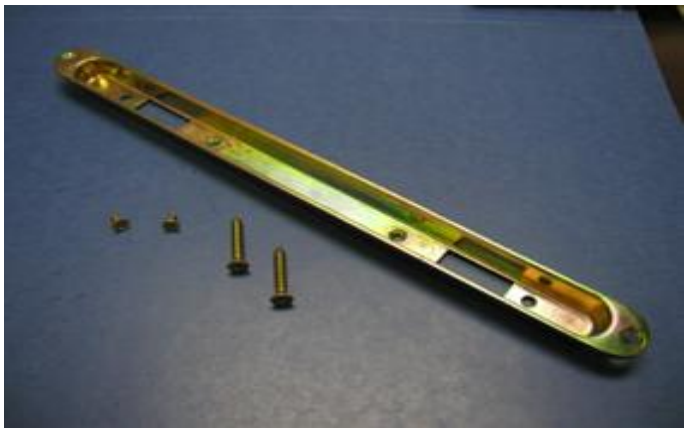

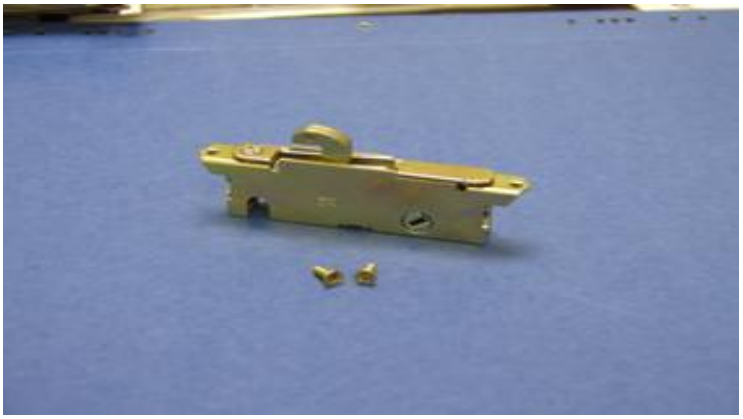













Cadenza Window Handles



HMHG-I-BL



HMHG-I-BR



HMHG-II-BL



HMHG-II-BR



HMHG-III-BL



HMHG-III-LB



HMHG-III-PG



HMHG-III-WH



HMHG-II-LB



HMHG-II-PG



HMHG-II-WH



HMHG-I-LB



HMHG-I-PC



HMHG-I-PG



HMHG-IV-BL



HMHG-IV-BR



HMHG-IV-LB



HMHG-IV-PG



HMHG-IV-WH



HMHG-I-WH



HMHG-V-BL



HMHG-V-BR



HMHG-VI-PG



HMHG-V-LB



HMHG-V-PC



HMHG-V-PG



HMHG-V-WH

DOOR HANDLES

Sliding Patio Door Handles



HDHL-01



HDHL-02



HDHL-03



HDHL-04



HDHL-05



HDHL-06



HDHL-07



HDHL-08



HDHL-09



HDHL-10



HDHL-11



HDHL-12



HDHL-13



HDHL-14



HDHL-15



HDHL-16



HDHL-17



HDHL-18



HDHL-19



HDHL-20



HDHR-01



HDHR-02



HDHR-03



HDHR-04



HDHR-05



HDHR-06



HDHR-07



HDHR-08



HDHR-09



HDHR-10



HDHR-11



HDHR-12



HDHR-13



HDHR-14



HDHR-15



HDHR-16



HDHR-17



HDHR-18



HDHR-19



HDHS-01



HDHS-02



HDHS-03



HDHS-04



HDHS-05



HDHS-06

UPVC Door Handles



HMDH-01



HMDH-02

Tilt&Slide Door Handles

Stainless Steel Door Handles

Interior Rosette Door Handles

Interior Lever Door Handles

Interior Door Knobs

Brass Forging Door Handles

Anodized Alu Door Handles

WINDOW HANDLES

Cockspur Window Handles



HMWH-01-BL



HMWH-01-PC



HMWH-01-PG



HMWH-01-WH(1)



HMWH-01-WH



HMWH-02-PC



HMWH-02-WH



HMWH-03-PG(1)



HMWH-03-PG



HMWH-03-WH(1)



HMWH-03-WH



HMWH-04-SC



HMWH-04-SC



HMWH-05-WH



HMWH-06-DC



HMWH-06-SC



HMWH-06-WH



HMWH-07-PG



HMWH-08-PC



HMWH-09-WH



WHES-01-PG

Espag Window Handles



HMDH-01



HMDH-02



HMDH-03



HMDH-014



HMDH-05



HMDH-06



HMDH-07



HMDH-08

Sash Window Locks

Tilt&Turn Window Handles

Window latches



MTK-A08





MTK-S09



MTK-RC001.25



MTK-WR011.90



MTK-DS002.25
(optional)



MTK-GR008.4550



MTK-A10

UP TO YOU

DIFFERENT SURFACE

"Can I choose different color and different style?"

------Sure, you can!



MTK-S07



MTK-RC001.25



MTK-FG012.11



MTK-WR007.50



MTK-DS003.25

MTK-S06



MTK-RC001.25



MTK-DS001.25

MTK-WR006.54





MTK-FG005.12



MTK-WR011.90



MTK-DS001.25



MTK-RC001.25

MTK-GR003.50





MTK-S16

GOOD QUALITY
GOOD CHOICE

A wide range of accessories finished in high gloss polished solid stainless steel.

It is a merchandise that emphasizing by an eye-catching design, making it outstanding among the surroundings. It could also carry heavy door leaves and accept minor adjustment in the installation.





MTK-WR011.90



MTK-RC001.25



MTK-GR001.50



MTK-S03

MTK-A01





MTK-SB001.00 MTK-FG012.11 MTK-DS011.408



More choices



MTK-WR011.90



MTK-WR011.90



MTK-RC001.25



MTK-DS001.25



MTK-GR005.50

MTK-S05

Glass sliding door system is an ideal solution for living room, dining room or work areas. It could divide them into several separate parts. No matter the door is closed or open, the light will come in and brighten the room.

This system is easy to install. Adding the anti-jumping function into basic system makes the system in a maximum of stability. Heavy door leaves can be installed without any problem.

MTK-S01
MTK-S01D





MTK-WR011.90



MTK-DS001.25
(optional)



MTK-RC001.25

INNOVATIVE
HARDWARE

It is an interesting evolution with an innovative hardware. The hollow roller cap could be replaced and installed in any roller cap as you prefer. Characterized by its distinguished appearance, it is proved to be a highlight design among the other systems. It also perfectly brings the wide function and innovative design together.









GOOD PRODUCT

Good products make your house nice. With various designs, our hinges could be used everywhere in your house: doors, shower rooms, stairs, swimming pools…This ideal solution shows your delicate life and with its high gloss polished or satin finishing, the hinges could blend into surroundings perfectly.



MTK-KH001



MTK-LH1



MTK-JH001



MTK-KH004&KH005





MTK-KH002&KH003



MTK-JH002



MTK-S19



MTK-WR011.90



MTK-DS001.25
(optional)



MTK-RC001.25



MTK-GR009.60

MTK-S02

MTK-HL002.48.60





MTK-HH001.18.45

The delicate swing door system is an ideal solution with two 90-degree hinges for living room. It becomes more and more popular in contemporary interior design.

It is made of aluminum and the brushed surface likes stainless steel which could cut down the price and guarantee the perfect function at the same time.



MTK-C01

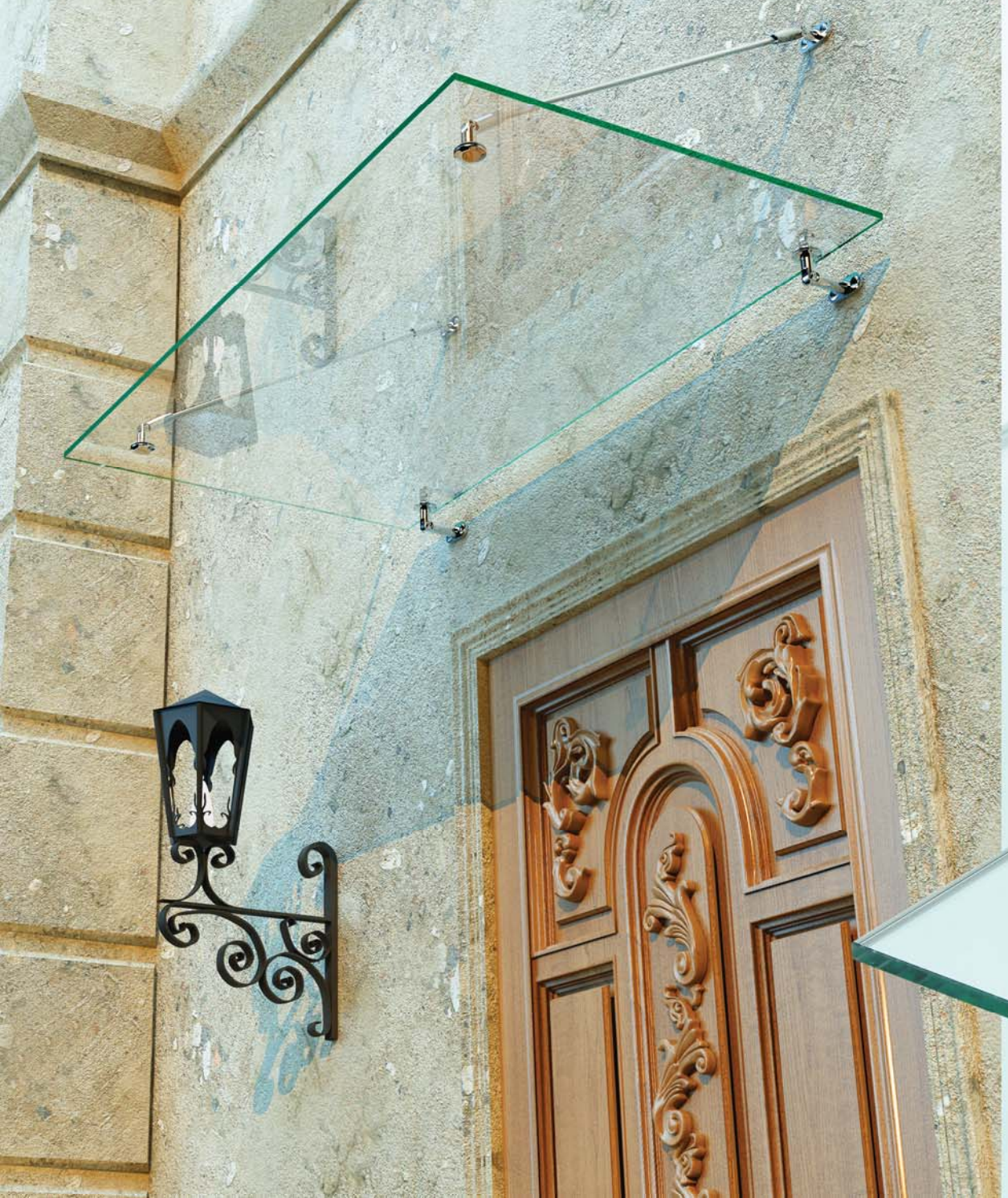




MTK-HN002.11
MTK-HN004.11
MTK-HN003.11
MTK-HN009.11
MTK-HN005.11
MTK-HN007.11
MTK-HN01.11
MTK-HR007.12
MTK-HN006.10
MTK-HL001.28
MTK-HR011.25
MTK-HR004.20
MTK-HR008.12
MTK-HR001.50
MTK-HR002..55
MTK-HN201.10
MTK-HR003.50
MTK-HH01.40



Installation Drilling Diagram
Unit: mm

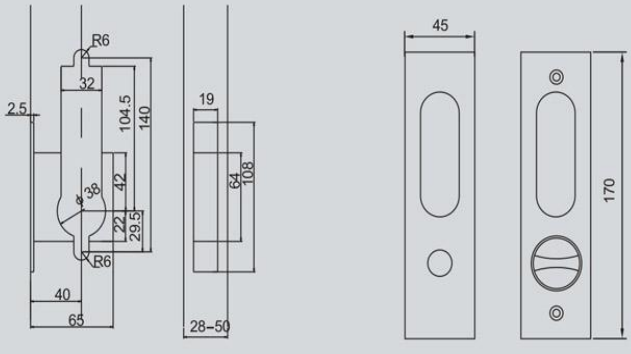



Installation Drilling Diagram
Unit: mm

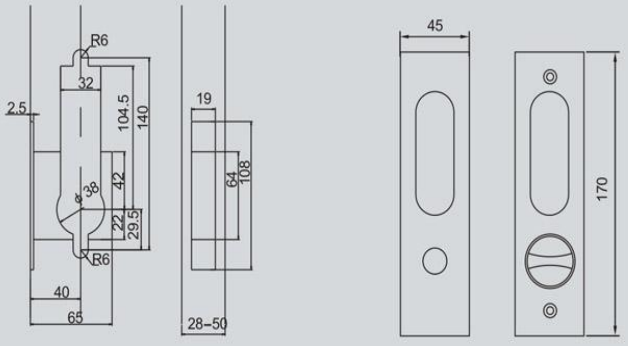



Installation Drilling Diagram
Unit: mm

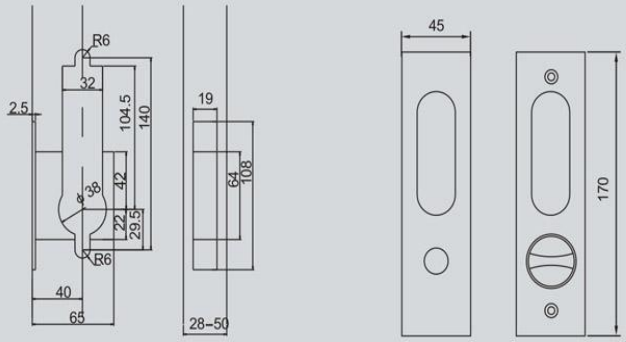



Installation Drilling Diagram
Unit: mm

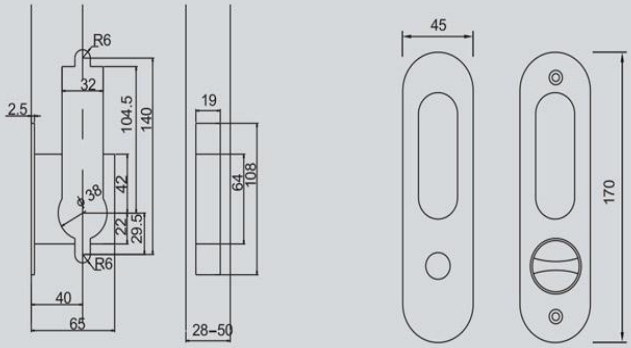

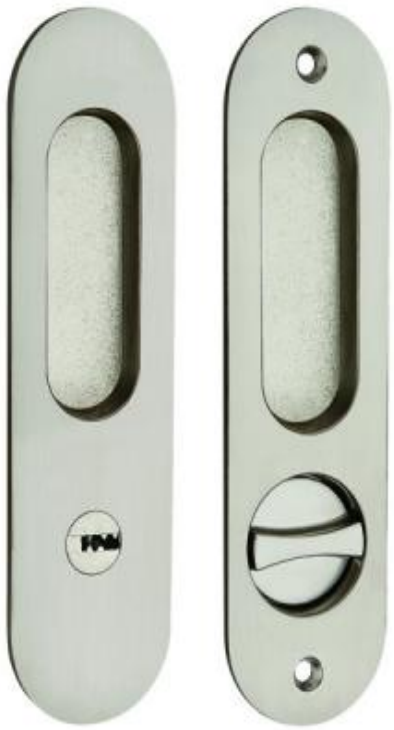

Installation Drilling Diagram
Unit: mm

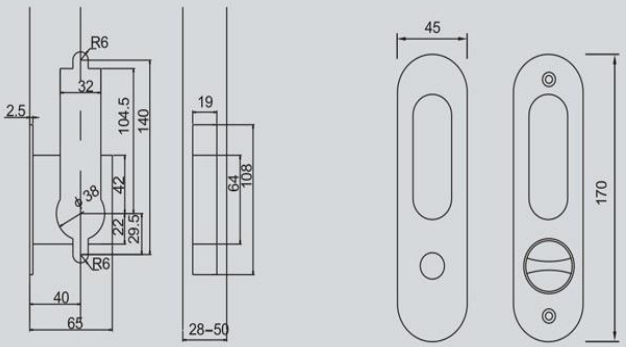

America Window & Door Hardware

America Window Operator

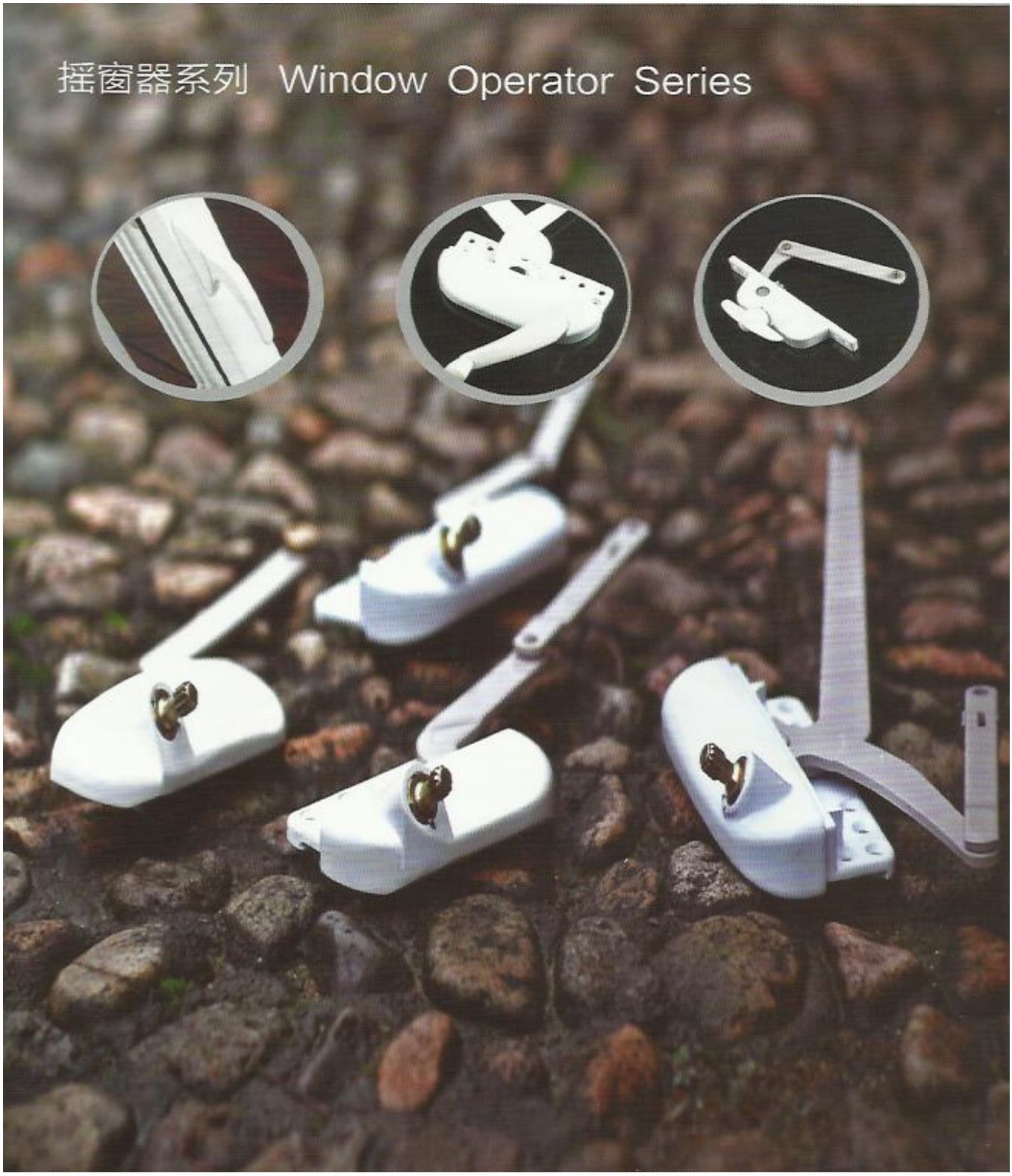

WN050 系列外平开窗五金配件配置
Wn050 series outward-opening window hardware configurations

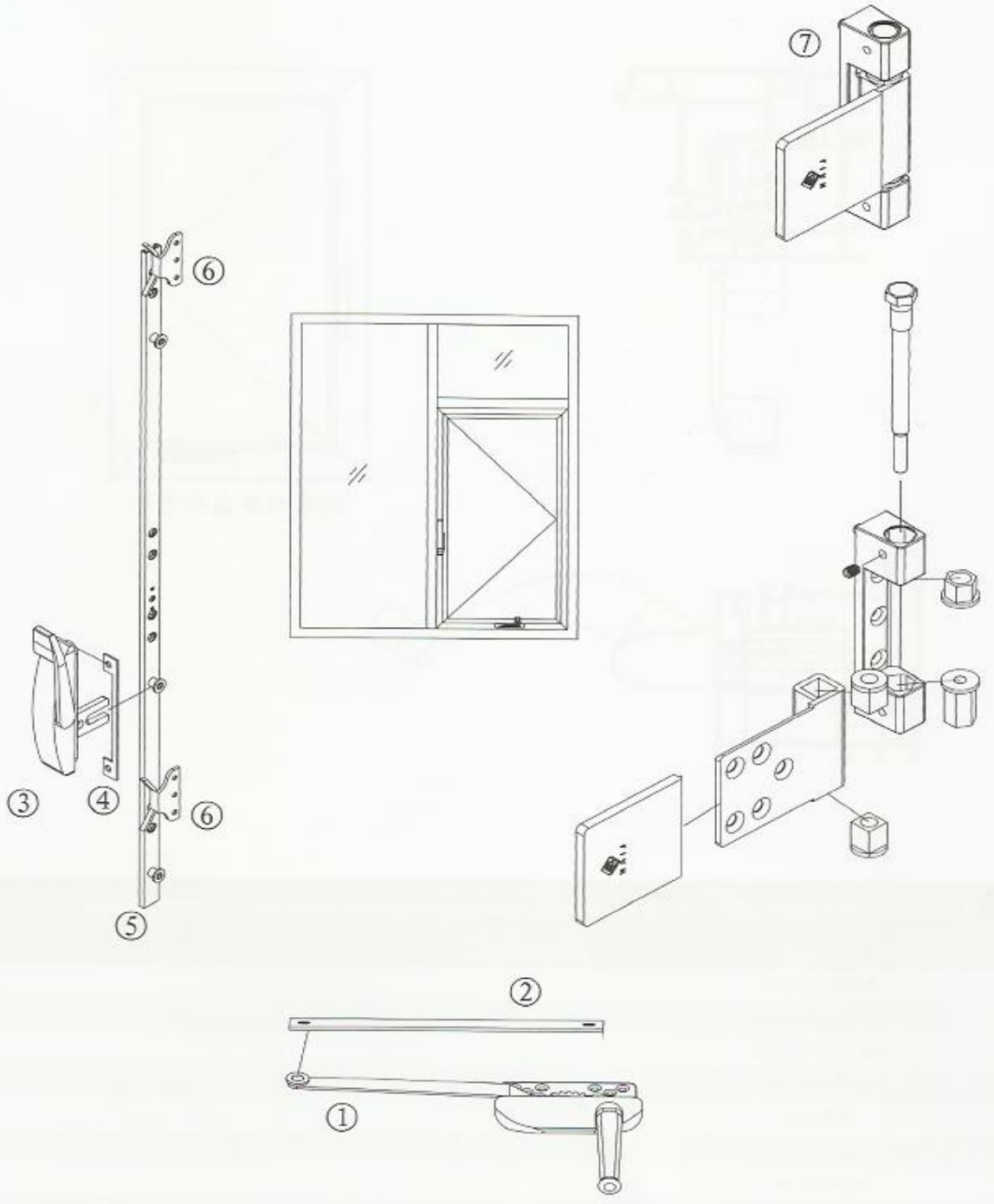

WN050 系列外平开窗五金配件配置
Wn050 series outward-opening window hardware configurations

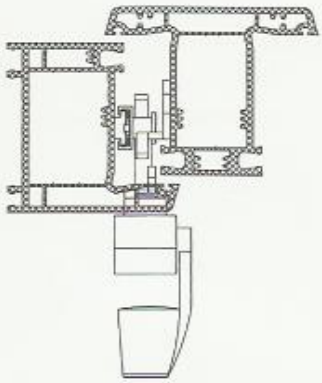



WN050系列固定+单扇外平开

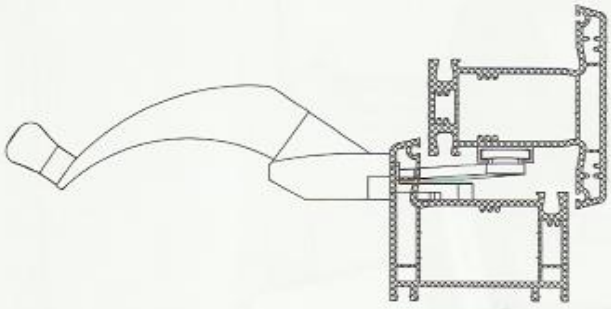

WN050 系列外平开窗五金配件配置表 Wn050series outward-opening window hardware configurations diagram				
序号 NO	名称 Name	编号 Number	数量 Quantity	备注 Note
1	摇窗器 operator		1	
2	三角架 stud bracket		1	
3	滑槽 mounting track		1	
4	三联杆 three-link		2	
5	开关 lock		1	
6	加强片 back supporting plates		1	
7	联动杆 tie bar		1	
8	多点开关片 multi-lock keeper		2	

60 系列单扇上悬窗五金配件配置
60 series single outward top-suspension casement configurations

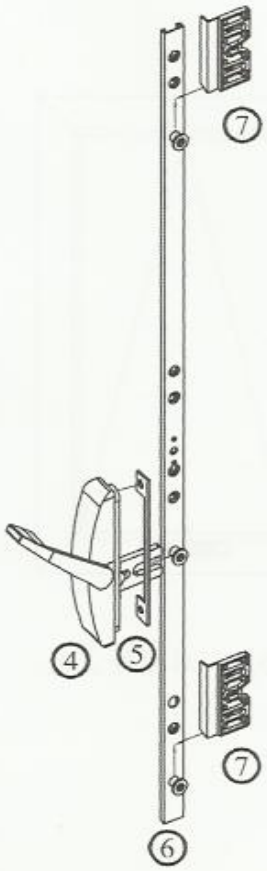

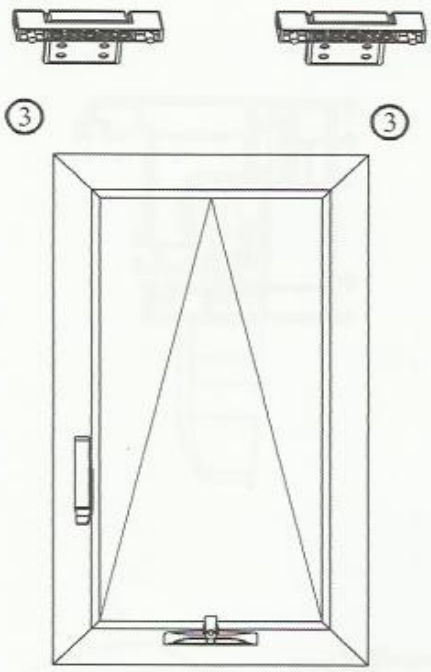

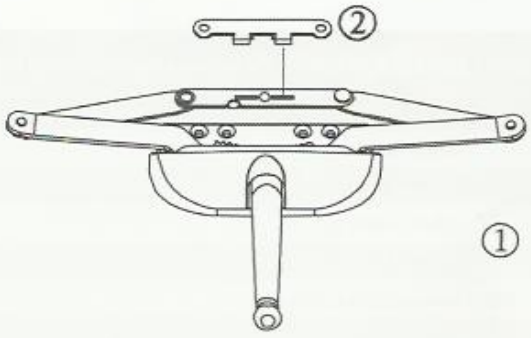

60 系列单扇上悬窗五金配件配置
60 series single outward top-suspension casement configurations

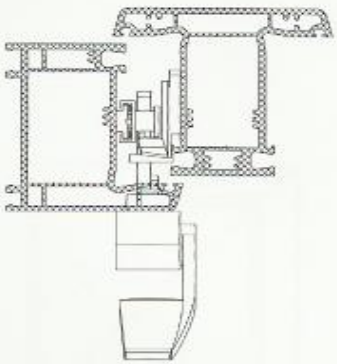

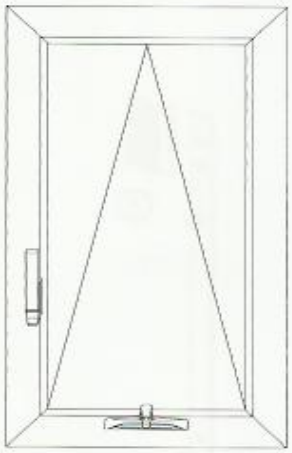

70系列单扇外上悬

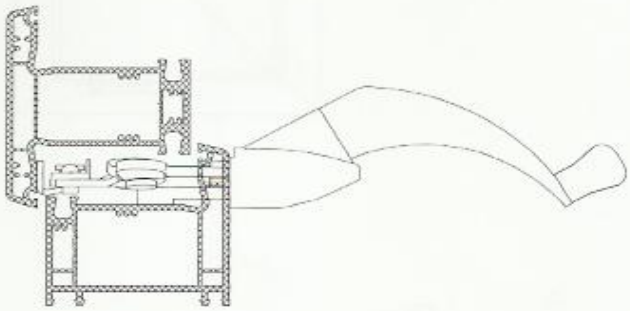

60 系列单扇外上悬窗五金配件配置表 60 series single outward top-suspension casement configurations diagram				
序号 NO	名称 Name	编号 Number	数量 Quantity	备注 Note
1	摇窗器 operator		1	
2	连接板 connecting block		1	
3	铰链 hinge		2	
4	开关 lock		1	
5	加强片 back supporting plates		1	
6	联动杆 tie bar		1	
7	多点开关片 multi-lock keeper		2	

70 系列外平开窗五金配件配置
70 series outward-opening window hardware configurations

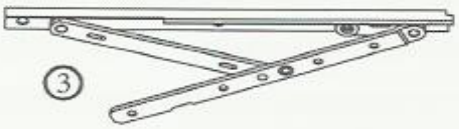

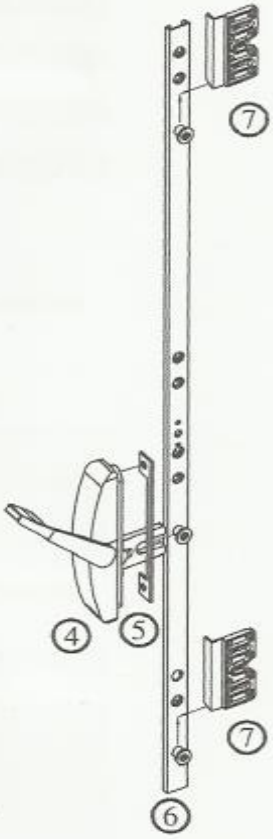

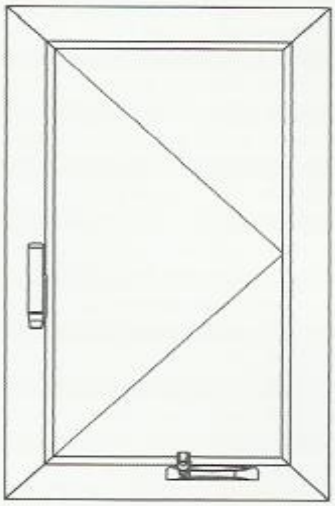

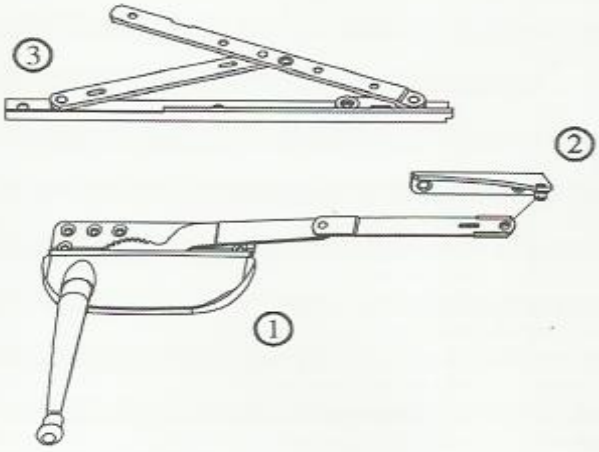

70 系列外平开窗五金配件配置
70 series outward-opening window hardware configurations

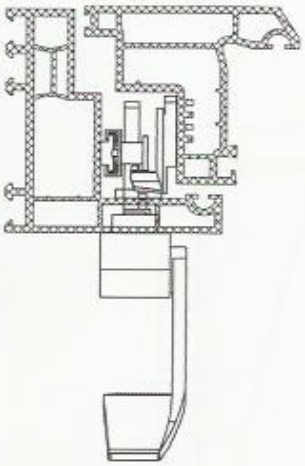

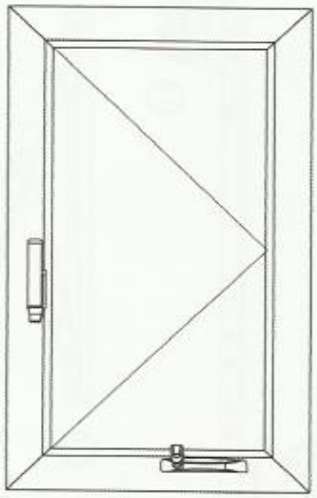

70系列单扇外平开

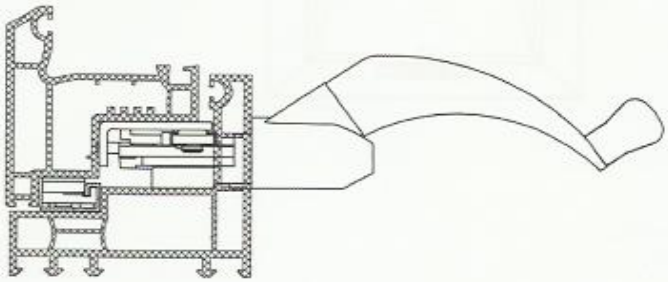

70 系列外平开窗五金配件配置表　70 series outward-opening window hardware configurations diagram				
序号 NO	名称 Name	编号 Number	数量 Quantity	备注 Note
1	摇窗器 operator		1	
2	三角架 stud bracket		1	
3	三联杆 three-link		2	
4	开关 lock		1	
5	加强片 back supporting plates		1	
6	联动杆 tie bar		1	
7	多点开关片 multi-lock keeper		2	

70 系列单扇上悬窗五金配件配置
70 series single outward top-suspension casement configurations

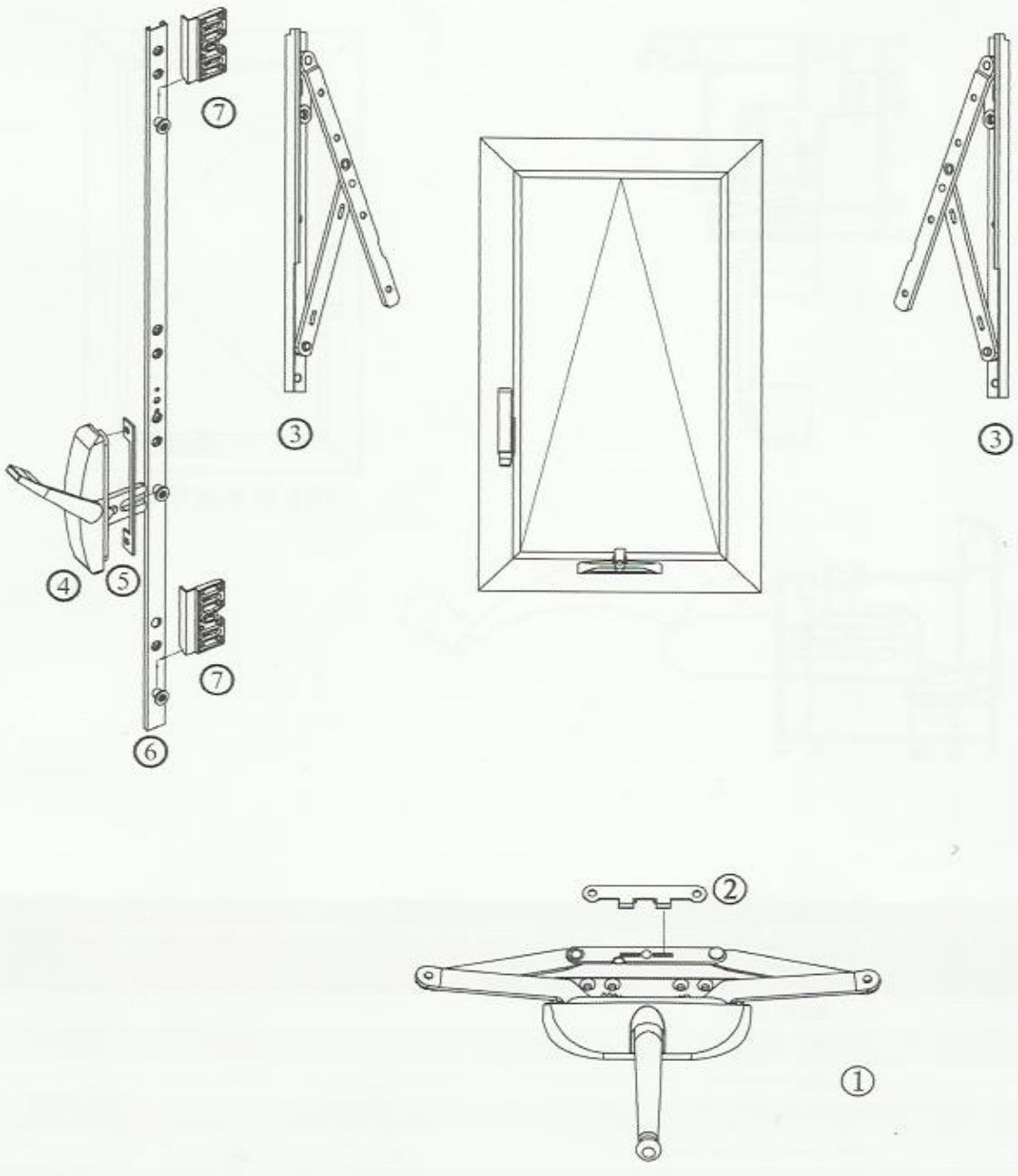

70 系列单扇上悬窗五金配件配置
70 series single outward top-suspension casement configurations

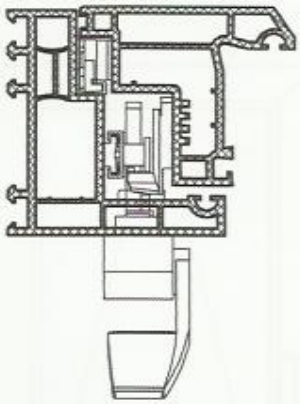

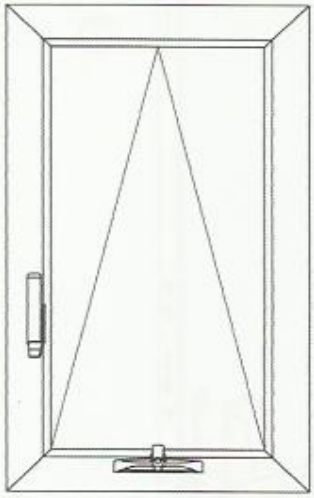

70系列单扇外上悬

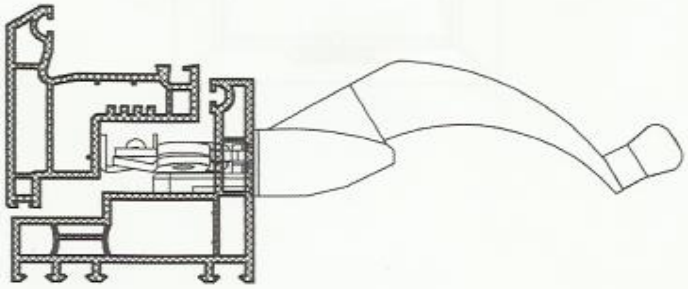

70 系列单扇外上悬窗五金配件配置表 70 series single outward top-suspension casement configurations diagram				
序号 NO	名称 Name	编号 Number	数量 Quantity	备注 Note
1	摇窗器 operator		1	
2	连接板 connecting block		1	
3	三联杆 three-link		2	
4	开关 lock		1	
5	加强片 back supporting plates		1	
6	联动杆 tie bar		1	
7	多点开关片 multi-lock keeper		2	

70 系列外平开窗五金配件配置
70 series outward-opening window hardware configurations

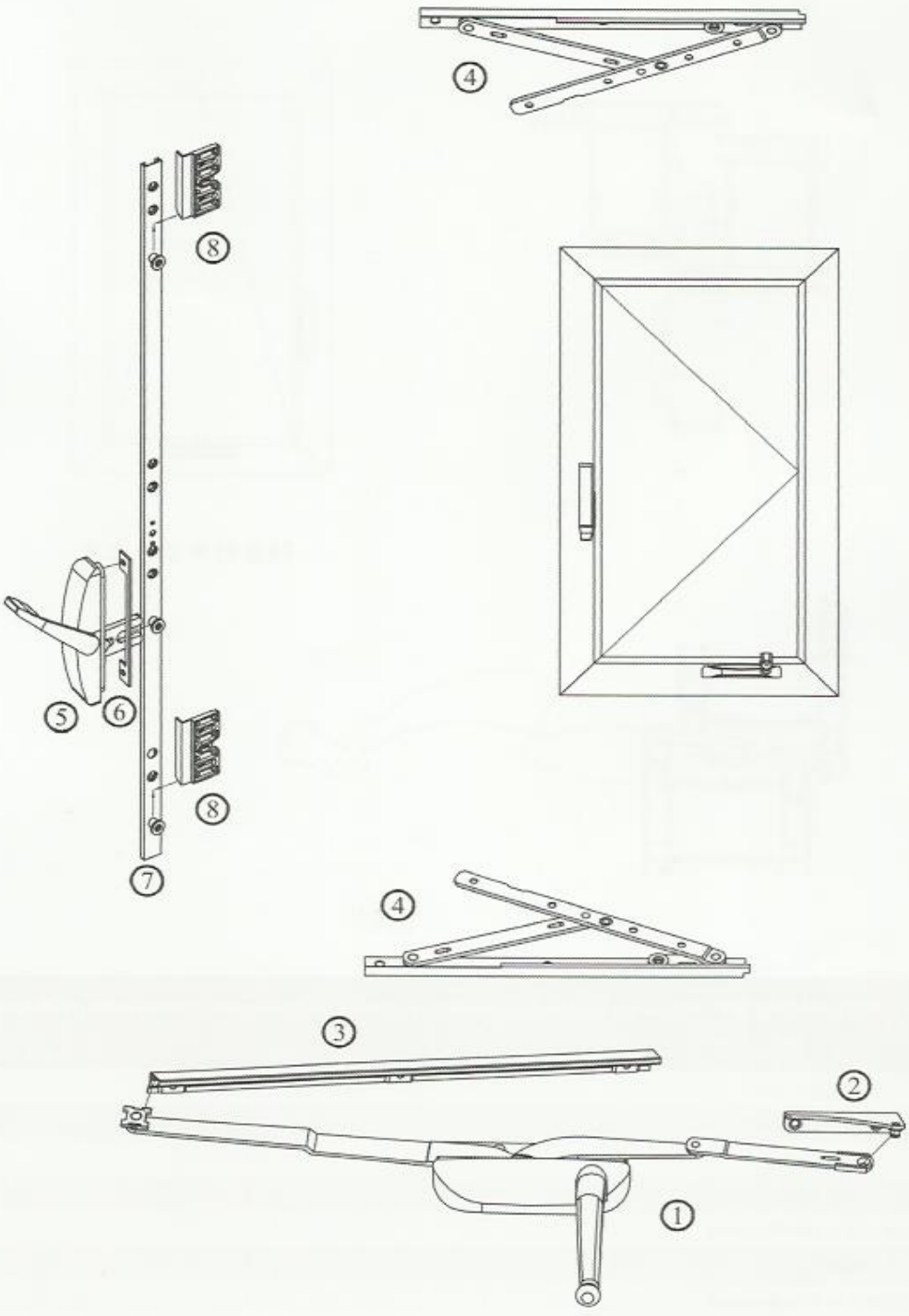

70 系列外平开窗五金配件配置
70 series outward-opening window hardware configurations

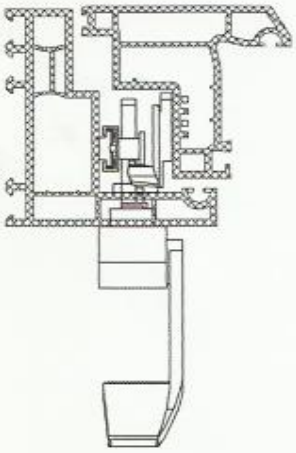

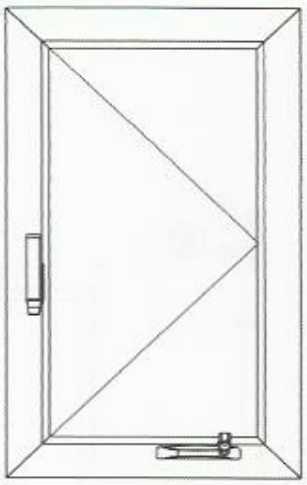

70系列单扇外平开

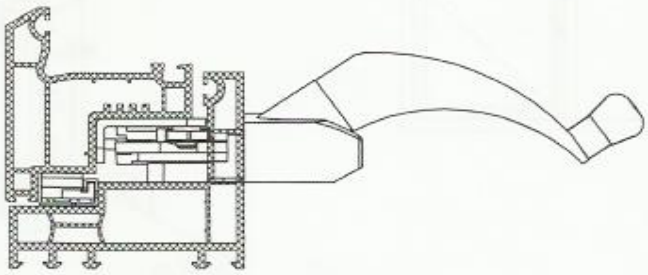

70 系列外平开窗五金配件配置表 70 series outward-opening window hardware configurations diagram				
序号 NO	名称 Name	编号 Number	数量 Quantity	备注 Note
1	摇窗器 operator		1	
2	三角架 stud bracket		1	
3	滑槽 mounting track		1	
4	三联杆 three-link		2	
5	开关 lock		1	
6	加强片 back supporting plates		1	
7	联动杆 tie bar		1	
8	多点开关片 multi-lock keeper		2	

铝合金 / 木窗用单臂手摇开窗器
Aluminum alloy/wooden window single arm operator



图示为左开窗器
Left operator shown

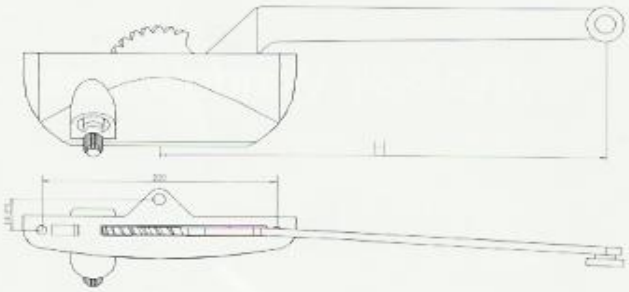



铝合金 / 木窗用单臂手摇开窗器窗框开孔示意图
Aluminum alloy/wooden window single arm operator

产品名称 (products)	产品编号 (serial no.)	中心距长度 (L) (Central Length)
左开单臂开窗器 7.5 英寸 7.5-inch left opening Single Arm Operator	01/0104L	7.5"(190.5mm)
左开单臂开窗器 9.5 英寸 9.5-inchleft opening Single Arm Operator	01/0105L	9.5"(241.3mm)
左开单臂开窗器 13.5 英寸 13.5-inch left opening Single Arm Operator	01/0106L	13.5"(342.9mm)
右开单臂开窗器 7.5 英寸 7.5-inch right opening Single Arm Operator	01/0104R	7.5"(190.5mm)
右开单臂开窗器 9.5 英寸 9.5-inch right opening Single Arm Operator	01/0105R	9.5"(241.3mm)
右开单臂开窗器 13.5 英寸 13.5-inch right opening Single Arm Operator	01/0106R	13.5"(342.9mm)

铝合金 / 木窗用曲臂手摇开窗器
Aluminum alloy/wooden bent arm operator



图示为左开窗器
Right operator shown

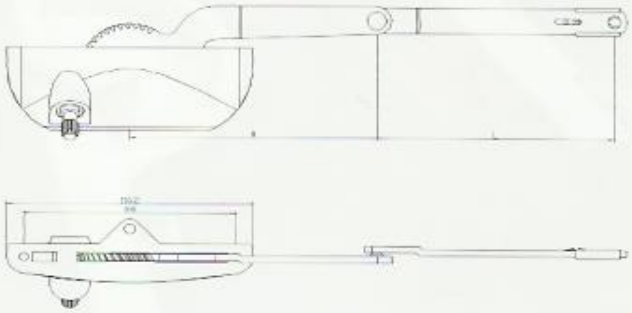

产品名称 (products)	产品编号 serial no.	齿轮臂长度 (H) Gear Arm Length	直杆长度 (L) Bar Length
左开上曲臂开窗器 8 英寸 8-inch left opening Up-bent Arm operator	01/0204LU	3.5"(88.9mm)	4.5"(114.3mm)
左开上曲臂开窗器 9 英寸 9-inch left opening Up-bent Arm operator	01/0205LU	4.5"(114.3mm)	4.5"(114.3mm)
左开上曲臂开窗器 13.5 英寸 13.5-inch left opening Up-bent Arm operator	01/0206LU	3.5"(88.9mm)	9"(228.8mm)
右开上曲臂开窗器 8 英寸 8-inch right opening Up-bent Arm operator	01/0204RU	3.5"(88.9mm)	4.5"(114.3mm)
右开上曲臂开窗器 9 英寸 9-inch right opening Up-bent Arm operator	01/0205RU	4.5"(114.3mm)	4.5"(114.3mm)
右开上曲臂开窗器 13.5 英寸 13.5-inch right opening Up-bent Arm operator	01/0206RU	3.5"(88.9mm)	9"(228.8mm)
左开下曲臂开窗器 8 英寸 8-inch left opening down-bent Arm operator	01/0204LD	3.5"(88.9mm)	4.5"(114.3mm)
左开下曲臂开窗器 9 英寸 9-inch left opening down-bent Arm operator	01/0205LD	4.5"(114.3mm)	4.5"(114.3mm)
左开下曲臂开窗器 13.5 英寸 13.5-inch left opening down-bent Arm operator	01/0206LD	3.5"(88.9mm)	9"(228.8mm)
右开下曲臂开窗器 8 英寸 8-inch right opening split Arm operator	01/0204RD	3.5"(88.9mm)	4.5"(114.3mm)
右开下曲臂开窗器 9 英寸 9-inch right opening split Arm operator	01/0205RD	4.5"(114.3mm)	4.5"(114.3mm)
右开下曲臂开窗器 13.5 英寸 13.5-in right opening split Arm operator	01/0206RD	3.5"(88.9mm)	9"(228.8mm)

L 系列 --X 臂上悬手摇开窗器
L series: X-arm awning operator



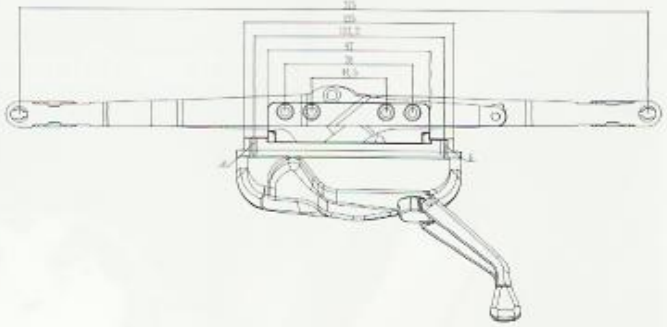

图示为右开窗器
Left operator shown



开窗器窗框开孔示意图
Window frame drilling chart for single arm operator

产品名称（products）	产品编号 (serial no.)	中心距长度 (L)(Central Length)
L 系列 --X 臂上悬手摇开窗器 L series: X-arm awning operator	01/1505L(R)	

L 系列 -- 双臂手摇开窗器
L series: Dual arm awning operator

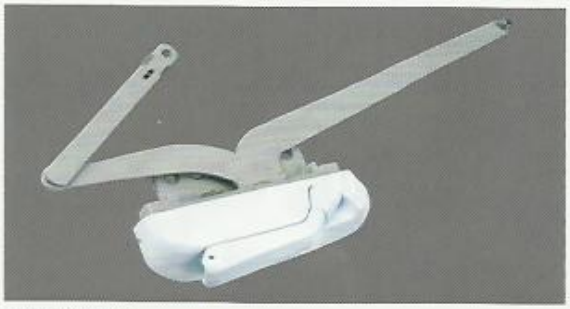

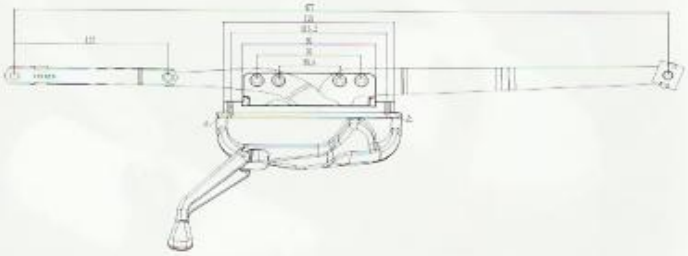

图示为左开窗器
Left operator shown

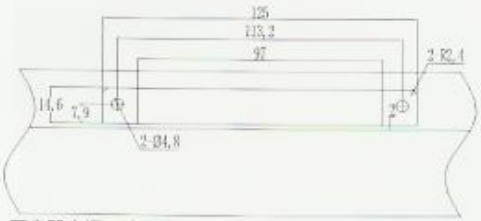

开窗器窗框开孔示意图
Window frame drilling chart for single arm operator

产品名称（products）	产品编号 (serial no.)	中心距长度 (L)(Central Length)
L 系列 -- 双臂手摇开窗器 L series: Dual arm awning operator	01/0604L(R)	

L 系列 -- 上悬手摇开窗器
L series-Awning operator

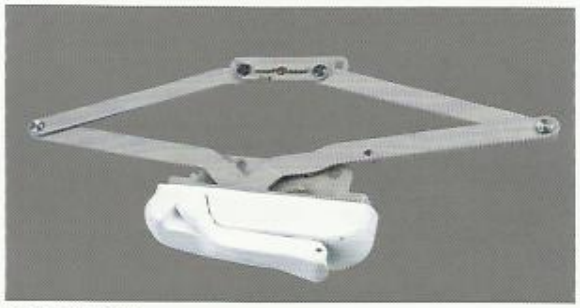

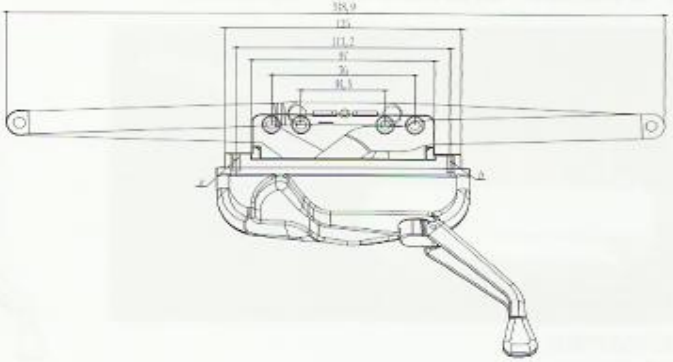

图示为右开窗器
Left operator shown

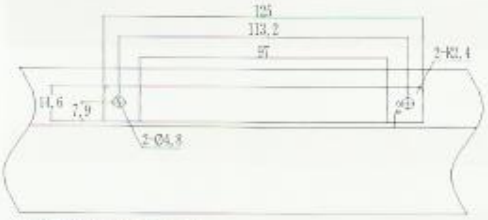

开窗器窗框开孔示意图
Window frane drilling chart for single arm operator

产品名称（products）	产品编号 (serial no.)	中心距长度 (L)(Central Length)
L 系列 -- 上悬手摇开窗器 L series-Awning operator	01/1507L(R)	

L 系列 -- 单臂手摇开窗器
L series-Single arm operator

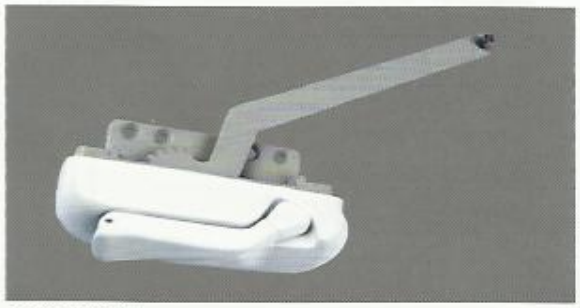

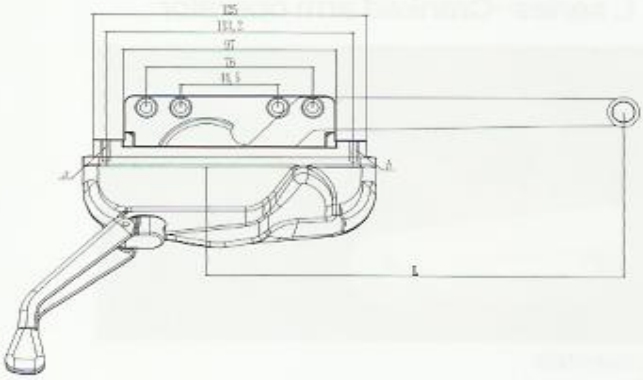

图示为左开窗器
Left operator shown

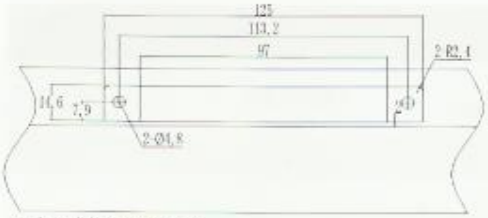

开窗器窗框开孔示意图
Window frane drilling chart for single arm operator

产品名称（products）	产品编号 (serial no.)	中心距长度 (L)(Central Length)
L 系列 -- 单臂手摇开窗器 L series-Single arm operator	01/0113L(R)	7.5"(190.5mm)
	01/0114L(R)	9.5"(241.3mm)
	01/0115L(R)	13.5"(342.9mm)

L 系列 -- 曲臂手摇开窗器
L series–Cranked arm operator

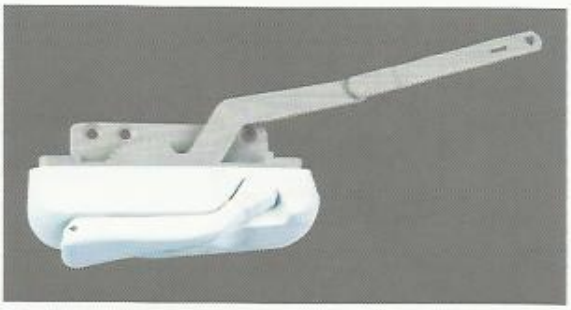

图示为左开窗器
Left operator shown

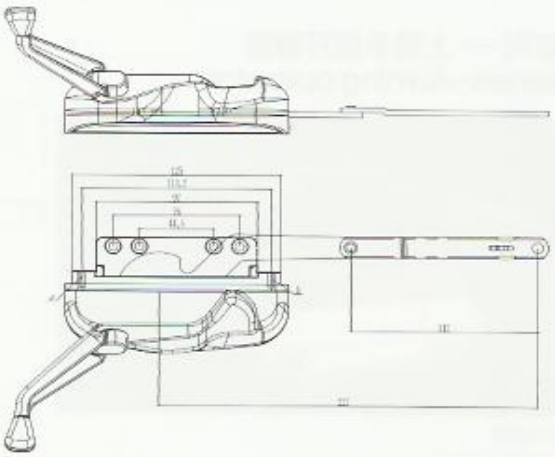

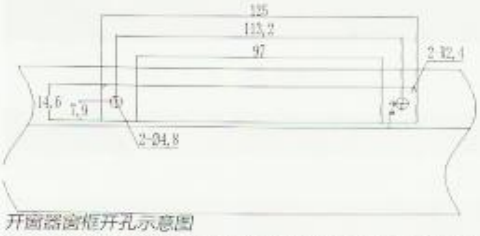

开窗器窗框开孔示意图
Window frane drilling chart for single arm operator

产品名称（products）	产品编号 (serial no.)	中心距长度 (L)(Central Length)
L 系列 -- 曲臂手摇开窗器 L series–Cranked arm operator	01/0210L(R)	

L 系列 -- 曲臂手摇开窗器
L series–Cranked arm operator

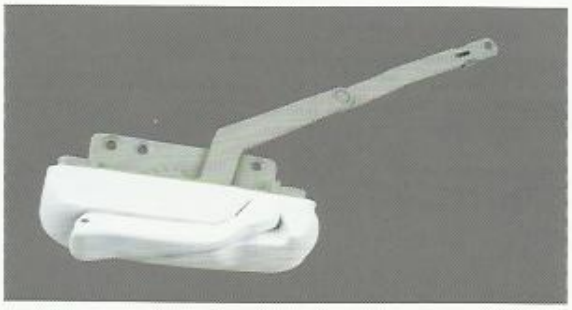

图示为左开窗器
Left operator shown

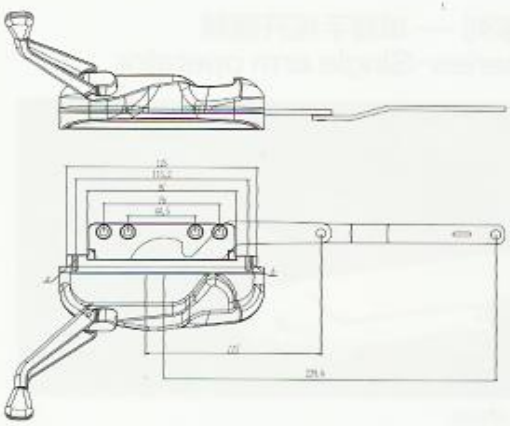

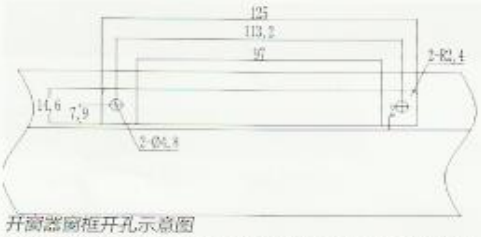

开窗器窗框开孔示意图
Window frane drilling chart for single arm operator

产品名称（products）	产品编号 (serial no.)	中心距长度 (L)(Central Length)
L 系列 -- 曲臂手摇开窗器 L series–Cranked arm operator	01/0213L(R)	

Y 系列 -- 双臂手摇开窗器
Y series- Dual arm operator

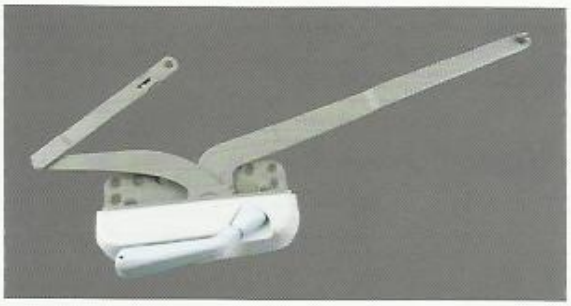

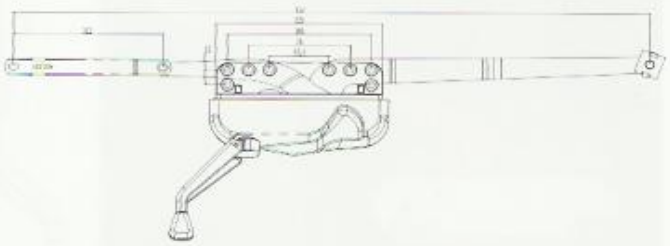

图示为左开窗器
Left operator shown

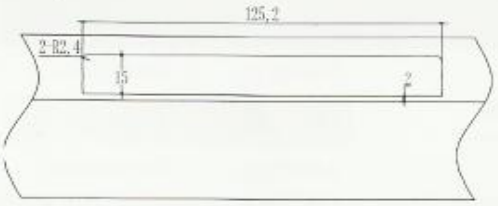

开窗器窗框开孔示意图
Window frane drilling chart for single arm operator

产品名称 (products)	产品编号 (serial no.)	中心距长度 (L)(Central Length)
Y 系列 -- 双臂手摇开窗器 Y series- Dual arm operator	01/0603L(R)	

Y 系列 --X 臂上悬手摇开窗器
Y series- X-arm awning operator



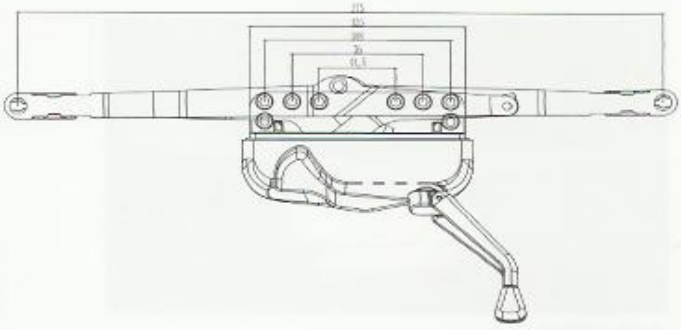

图示为右开窗器
Left operator shown

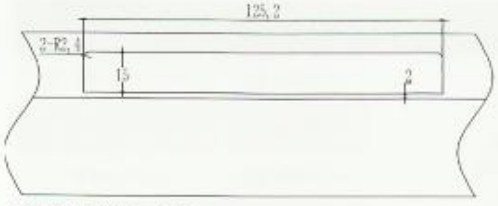

开窗器窗框开孔示意图
Window frane drilling chart for single arm operator

产品名称 (products)	产品编号 (serial no.)	中心距长度 (L)(Central Length)
Y 系列 --X 臂上悬手摇开窗器 Y series- X-arm awning operator	01/1504L(R)	

Y 系列 -- 单臂手摇开窗器
Y series-Single arm operator

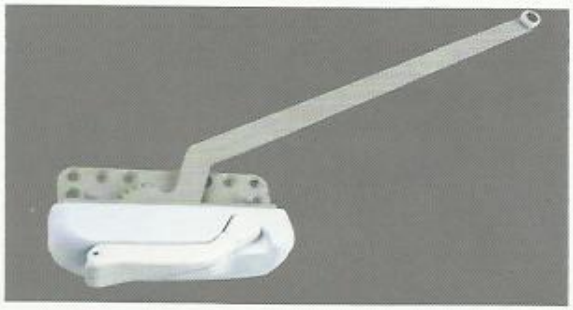

图示为左开窗器
Left operator shown

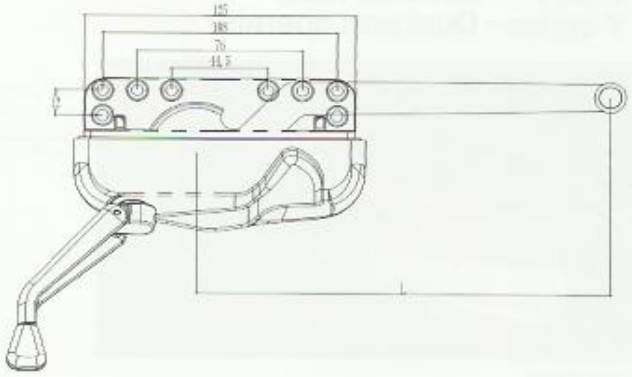

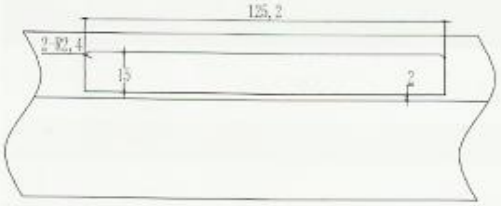

开窗器窗框开孔示意图
Window frane drilling chart for single arm operator

产品名称（products）	产品编号 (serial no.)	中心距长度 (L)(Central Length)
Y 系列 -- 单臂手摇开窗器 Y series-Single arm operator	01/0110L(R)	7.5"(190.5mm)
	01/0111L(R)	9.5"(241.3mm)
	01/0112L(R)	13.5"(342.9mm)

Y 系列 --上悬手摇开窗器
Y series- Awning operator



图示为右开窗器
Left operator shown

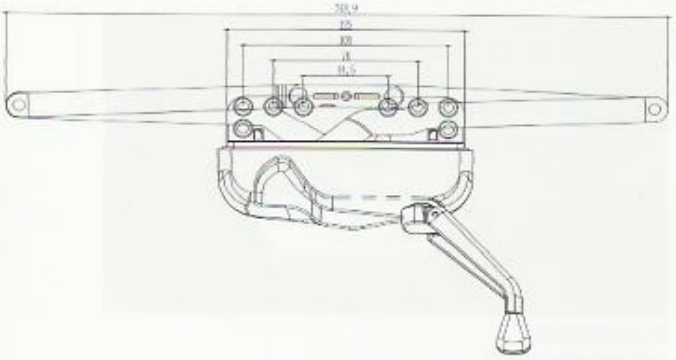



开窗器窗框开孔示意图
Window frane drilling chart for single arm operator

产品名称（products）	产品编号 (serial no.)	中心距长度 (L)(Central Length)
Y 系列 -- 上悬手摇开窗器 Y series- Awning operator	01/1506L(R)	348.9mm (13.7")
	01/1508L(R)	228.6mm(9")
	01/1509L(R)	406.4mm(16")
	01/1510L(R)	533.4mm(21")

Y 系列 -- 曲臂手摇开窗器
Y series-Cranked arm operator

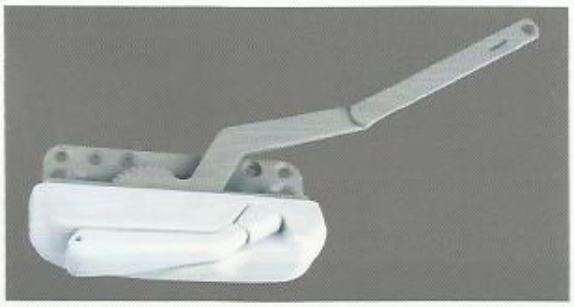

图示为左开窗器
Left operator shown

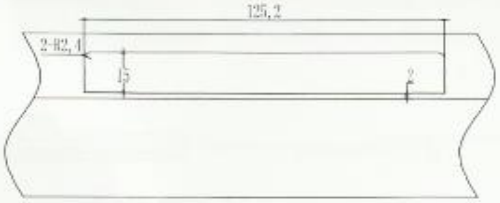

开窗器窗框开孔示意图
Window frane drilling chart for single arm operator

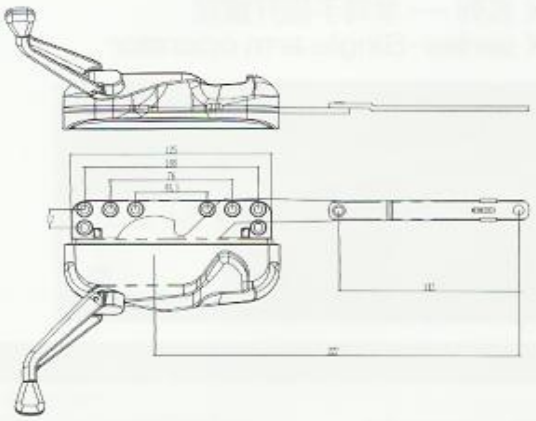

产品名称（products）	产品编号 (serial no.)	中心距长度 (L)(Central Length)
Y 系列 -- 曲臂手摇开窗器 Y series-Cranked arm operator	01/0209L(R)	

Y 系列 -- 曲臂手摇开窗器
Y series-Cranked arm operator

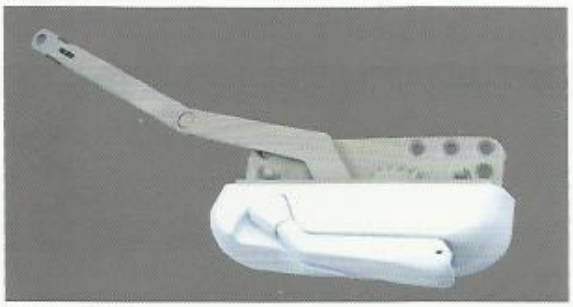

图示为右开窗器
Left operator shown



开窗器窗框开孔示意图
Window frane drilling chart for single arm operator

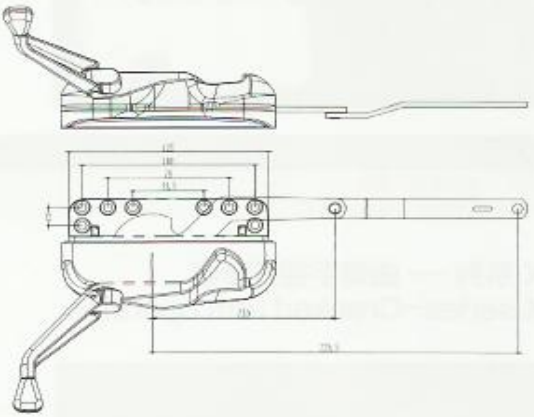

产品名称（products）	产品编号 (serial no.)	中心距长度 (L)(Central Length)
Y 系列 -- 曲臂手摇开窗器 Y series-Cranked arm operator	01/0214L(R)	

X 系列 -- 单臂手摇开窗器
X series-Single arm operator



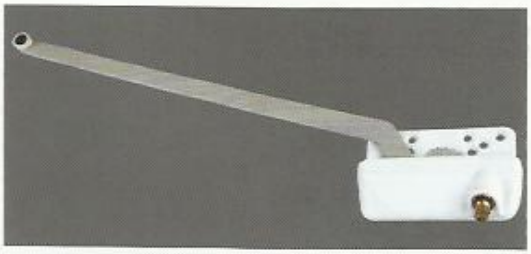

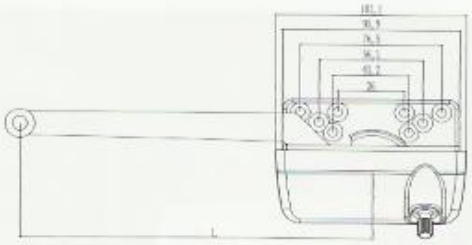

产品名称（products）	产品编号 (serial no.)	中心距长度 (L) (Central Length)
X 系列 -- 单臂手摇开窗器 X series-Single arm operator	01/0107L(R)	7.5"(190.5mm)
	01/0108L(R)	9.5"(241.3mm)
	01/0109L(R)	13.5"(342.9mm)

X 系列 -- 曲臂手摇开窗器
X series-Cranked arm operator





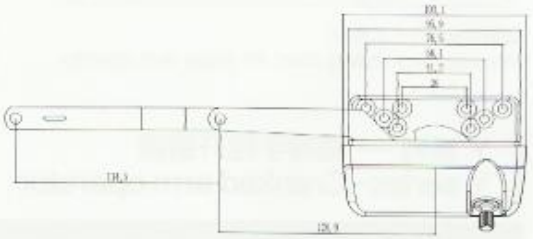

产品名称（products）	产品编号 (serial no.)
X 系列 -- 曲臂手摇开窗器 X series-Cranked arm operator	01/0211L(R)

X 系列 -- 曲臂手摇开窗器
X series-Cranked arm operator



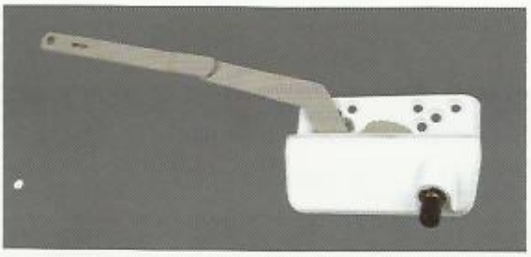

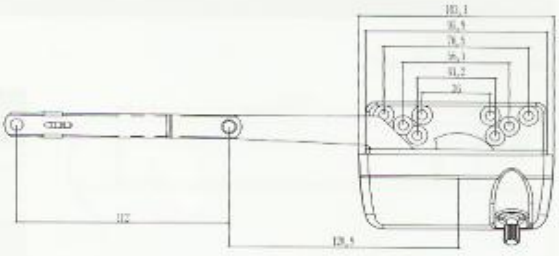

产品名称（products）	产品编号 (serial no.)
X 系列 -- 曲臂手摇开窗器 X series-Cranked arm operator	01/0212L(R)

单臂手摇开窗器:
Single arm operator:

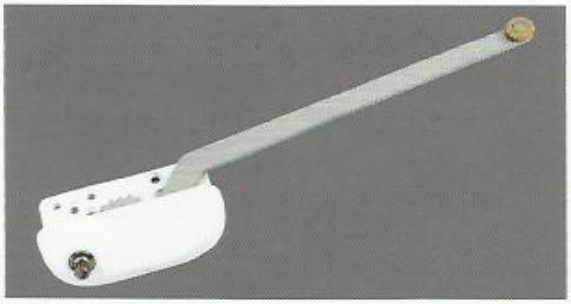

图示为左开窗器
Left operator shown

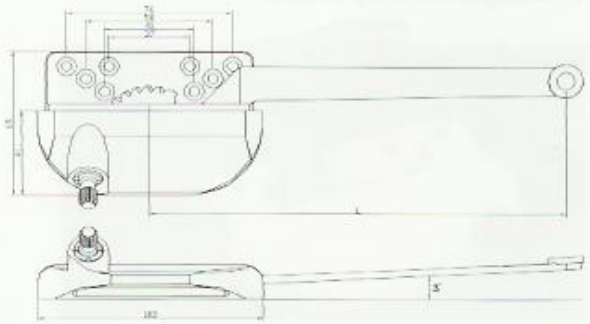



单臂开窗器窗框开孔示意图
Window frane drilling chart for single arm operator

产品名称 (products)	产品编号 (serial no.)	中心距长度 (L)(Central Length)
左开单臂开窗器 7.5 英寸 7.5-in left opening Single Arm Operator	01/0101L	7.5'(190.5mm)
左开单臂开窗器 9.5 英寸 9.5-in left opening Single Arm Operator	01/0102L	9.5'(241.3mm)
左开单臂开窗器 13.5 英寸 13.5-in left opening Single Arm Operator	01/0103L	13.5'(342.9mm)
右开单臂开窗器 7.5 英寸 7.5-in right opening Single Arm Operator	01/0101R	7.5'(190.5mm)
右开单臂开窗器 9.5 英寸 9.5-in right opening Single Arm Operator	01/0102R	9.5'(241.3mm)
右开单臂开窗器 13.5 英寸 13.5-in right opening Single Arm Operator	01/0103R	13.5'(342.9mm)

上曲臂手摇开窗器
Dyad operator



图示为左开窗器
Right operator shown

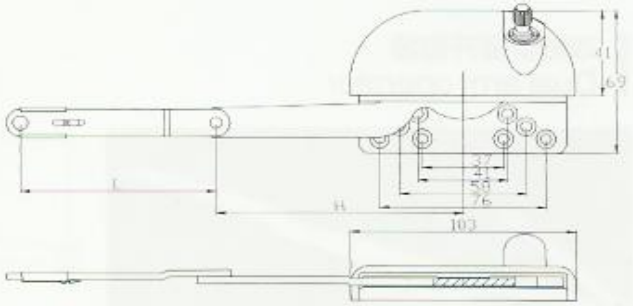

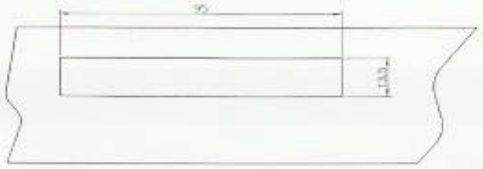

曲臂开窗器窗框开孔示意图
Window frane drilling chart forsingle arm operator

产品名称 (products)	产品编号 (serial no.)	中心距长度 (L) (Central Length)	直杆长度 (L) Bar Length
左开上曲臂开窗器 8 英寸 8-in left opening dyad operator	01/0201LU	3.5'(88.9mm)	4.5'(114.3mm)
左开上曲臂开窗器 9 英寸 9-in left opening dyad operator	01/0202LU	4.5'(114.3mm)	4.5'(114.3mm)
左开上曲臂开窗器 12.5 英寸 12.5-in left opening dyad operator	01/0203LU	3.5'(88.9mm)	9'(228.8mm)
右开上曲臂开窗器 8 英寸 8-in right opening dyad operato	01/0201RU	3.5'(88.9mm)	4.5'(114.3mm)
右开上曲臂开窗器 9 英寸 9-in right opening dyad operator	01/0202RU	4.5'(114.3mm)	4.5'(114.3mm)
右开上曲臂开窗器 12.5 英寸 12.5-in right opening dyad operator	01/0203RU	3.5'(88.9mm)	9'(228.8mm)

下曲臂手摇开窗器
Single arm operator



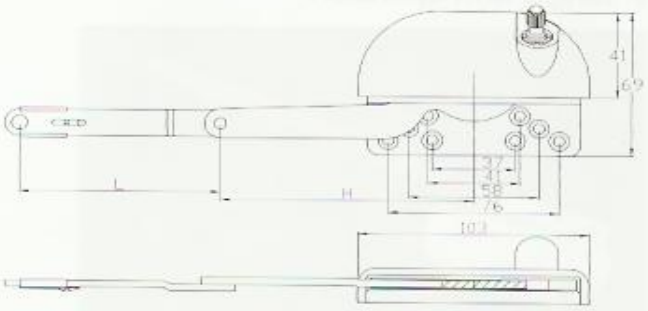

图示为左开窗器
Right operator shown

产品名称（products）	产品编号 (serial no.)	中心距长度 (L)(Central Length)	直杆长度 (L) Bar Length
左开下曲臂开窗器 8 英寸 8-in left opening split Arm operator	01/0201LD	3.5'(88.9mm)	4.5'(114.3mm)
左开下曲臂开窗器 9 英寸 9-in left opening split Arm operator	01/0202LD	4.5'(114.3mm)	4.5'(114.3mm)
左开下曲臂开窗器 13.5 英寸 13.5-in left opening split Arm operator	01/0203LD	3.5'(88.9mm)	9"(228.8mm)
右开下曲臂开窗器 8 英寸 8-in right opening split Arm operator	01/0201RD	3.5'(88.9mm)	4.5'(114.3mm)
右开下曲臂开窗器 9 英寸 9-in right opening split Arm operator	01/0202RD	4.5'(114.3mm)	4.5'(114.3mm)
右开下曲臂开窗器 13.5 英寸 13.5-in rightopening split Arm operator	01/0203RD	3.5'(88.9mm)	9(228.8mm)

双臂手摇开窗器
Dual arm operator

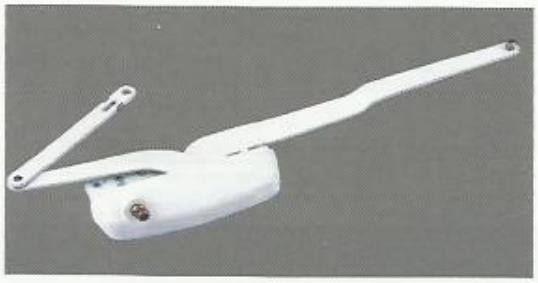

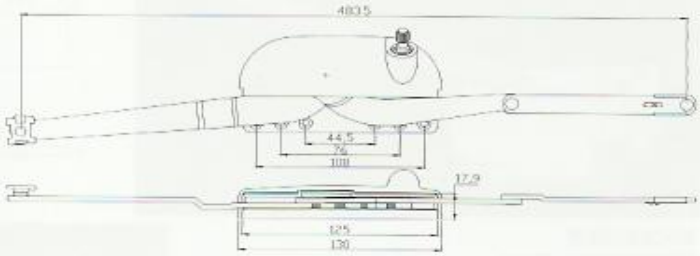

图示为左开窗器
Left operator shown



双臂开窗器窗框开孔示意图
Window frane drilling chart for dual arm operator

产品名称（products）	产品编号 (serial no.)
左开双臂手摇开窗器 left opening dual arm operator	01/0601L
右开双臂手摇开窗器 right opening dual arm operator	01/0601R

双臂手摇开窗器
Dual arm operator



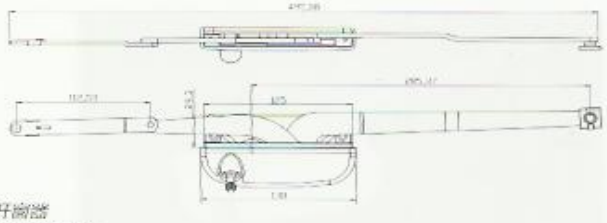

图示为左开窗器
left operator shown

产品名称（products）	产品编号 (serial no.)
左开双臂手摇开窗器 left opening duay arm operator	01/0602L
右开双臂手摇开窗器 right opening duay arm operator	01/0602R

大壳体上曲臂手摇开窗器
Grand case dyad operator



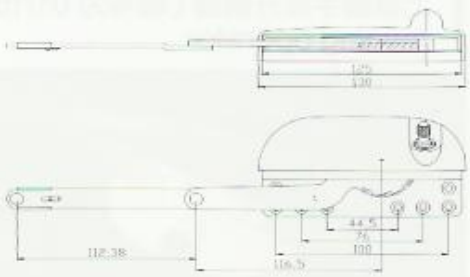

图示为左开窗器
right operator shown

产品名称（products）	产品编号 (serial no.)
左开上曲臂手摇开窗器 (Left opening Dyad operator)	01/0207LU
右开上曲臂手摇开窗器 (Right opening Dyad Operator)	01/0207RU

大壳体下曲臂手摇开窗器
Grand case split operator



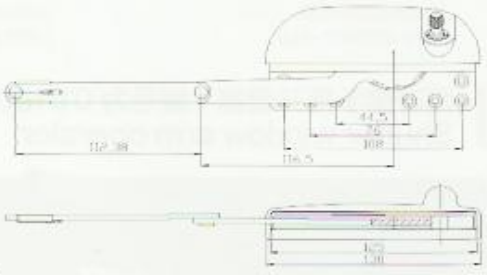

图示为左开窗器
right operator shown

产品名称（products）	产品编号 (serial no.)
左开下曲臂手摇开窗器 (Left opening split operator)	01/0207LD
右开下曲臂手摇开窗器 (Right opening Split Operator)	01/0207RD

曲臂手摇开窗器
case dyad operator



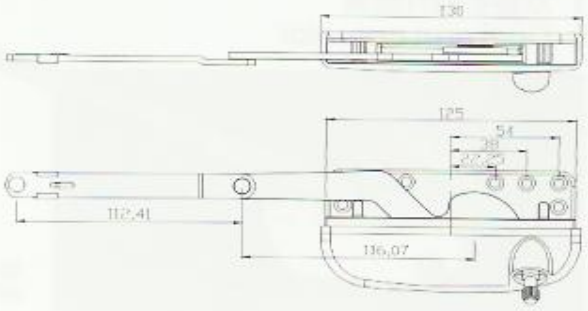

产品名称（products）	产品编号 (serial no.)
左开上曲臂手摇开窗器	01/0208LU
右开上曲臂手摇开窗器	01/0208RU
左开下曲臂手摇开窗器	01/0208LD
右开下曲臂手摇开窗器	01/0208RD

上悬窗手摇开窗器（编号为 01/1501）
Awning operator



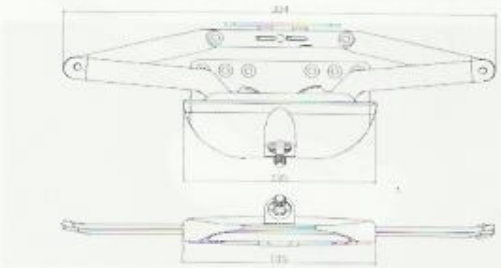

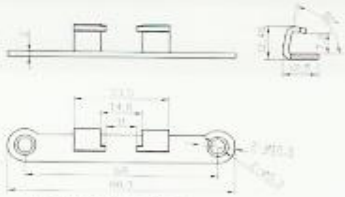

活动定位板示意图
（编号 :01/1501-11a)

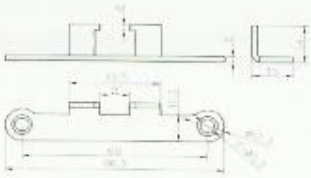

活动定位板示意图
（编号 :01/1501-11b)

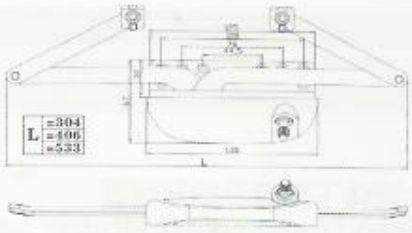

上悬开窗器（编号 :01/1511R)

百叶窗手摇开窗器（编号为 01/1601）
Shutter window arm operator



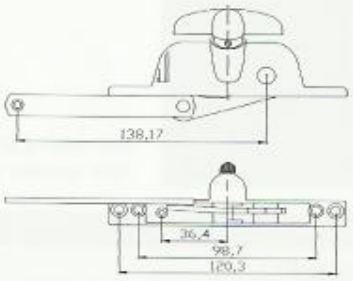

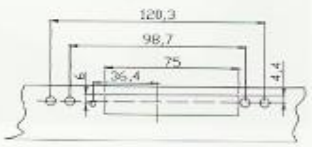

百叶窗手摇开窗器
窗框开孔示意图



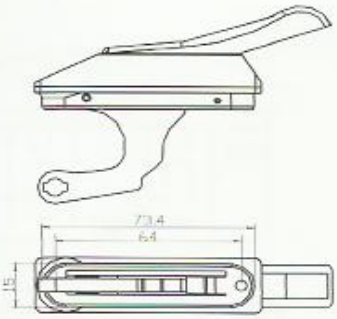

多点开关 (02/0502) Multi-lock handle



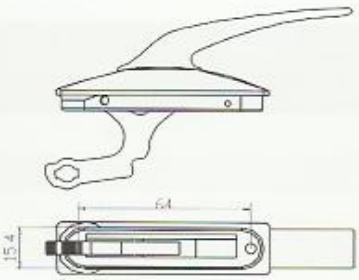

多点开关 (02/0503) Multi-lock handle

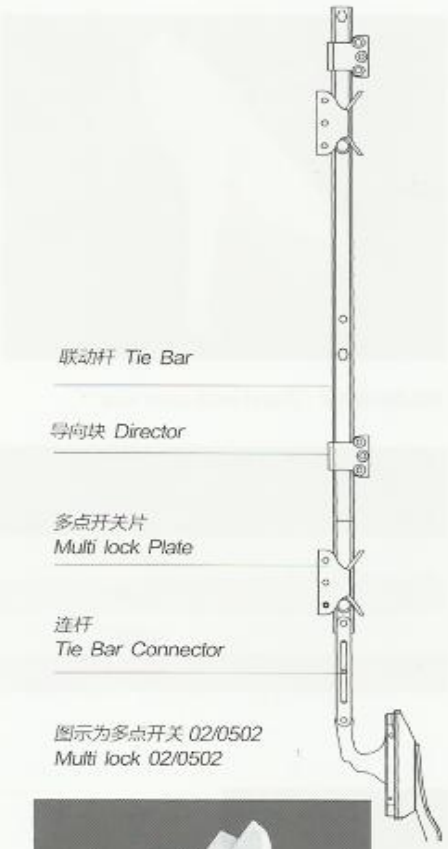

图示为多点开关 02/0502
Multi lock 02/0502



180 度单点移动开关 (02/0506)
Grand single point lock

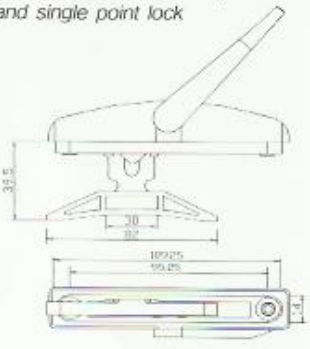



多点开关 (02/0509)
Multi-lock handle

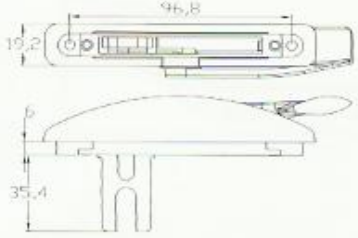



09# 多点开关 (02/0510)
Multi-lock handle

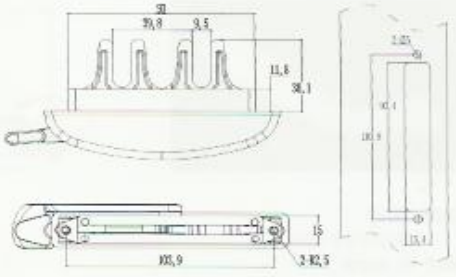

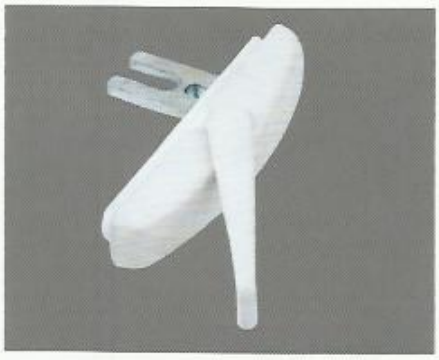

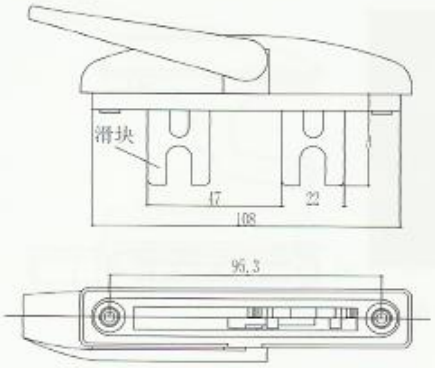

180度多点开关 Grand multi point lock

多点开关 Multi-lock handle		
产品编号 (serial NO.)	A (mm)	滑块材质
02/0501	33.5	锌合金
02/0505	41.5	锌合金
02/0507	41.5	塑料
02/0511	53.4	锌合金



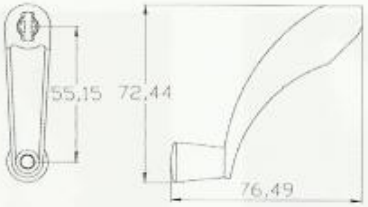

Crank
摇把 (产品编号为 01/1301)



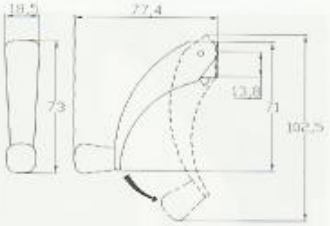

Folding crank
折叠摇把 (产品编号为 01/1302)



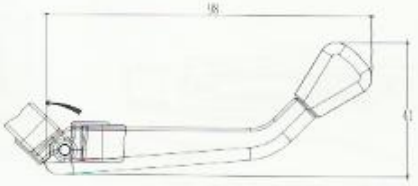

隐藏式摇把
(产品编号为 01/1304)
Built-in crank

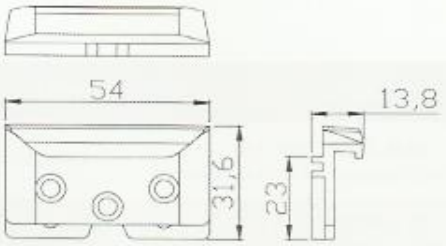

多点开关片 (编号为 02/0804)
Multi-lock keeper

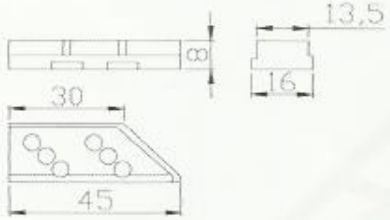

多点开关片 (编号为 02/0805L 或 R) 图示左
Multi-lock keeper

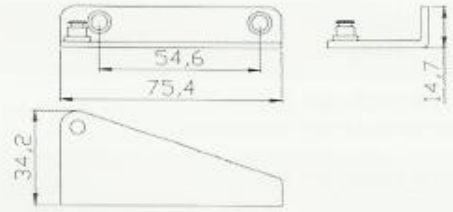

三角支架 (编号为 01/0901L 或 R) 图示右
Stud bracket

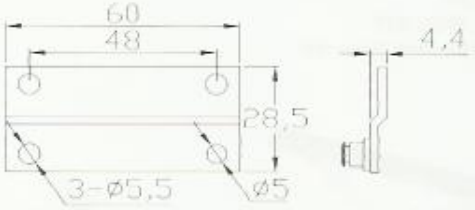

支架 (编号为 01/0902L 或 R) 图示左
Stud bracket

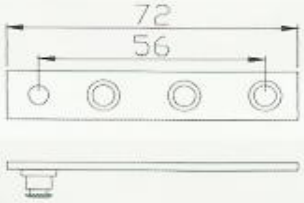

支架 (编号为 01/0903)
Stud bracket

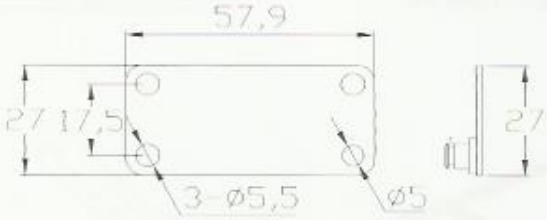

支架 (编号为 01/0904L 或 R) 图示左
Stud bracket:

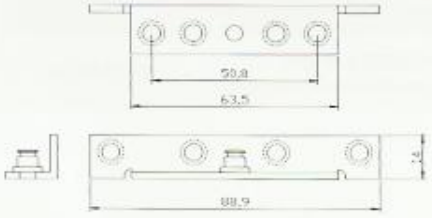

支架 (编号为 01/0905)
Stud bracket

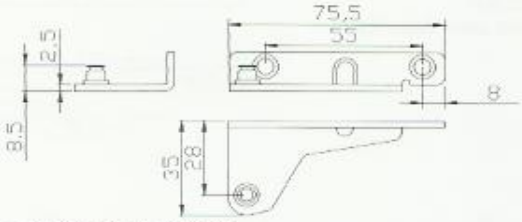

三角支架 (编号为 01/0906)
Stud bracket

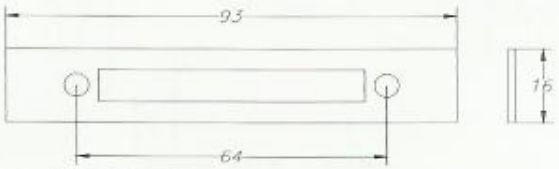

开关加强片 (编号为 02/1101)
Back supporting plates

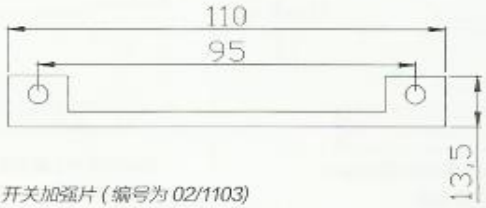

开关加强片 (编号为 02/1103)
Back supporting plates

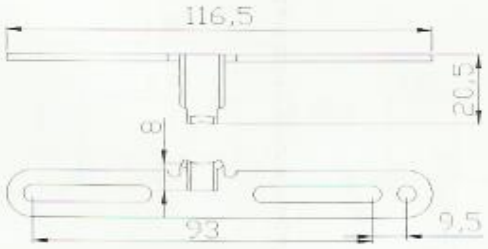

单点开关片 (编号为 02/1201)
Single lock keeper

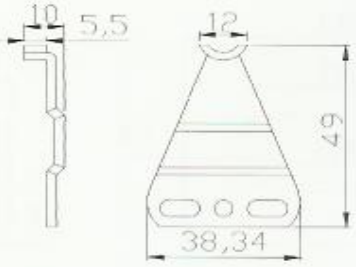

单点开关片 (编号为 02/1202)
Single lock keeper

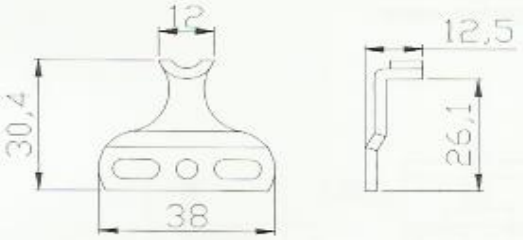

单点开关片 (编号为 02/1203)
Single lock keeper

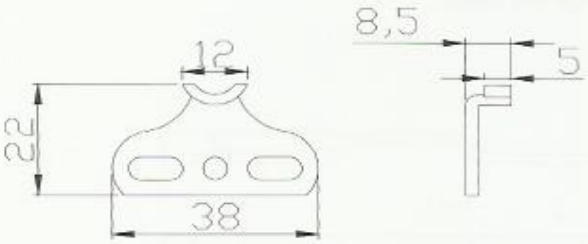

单点开关片 (编号为 02/1204)
Single lock keeper

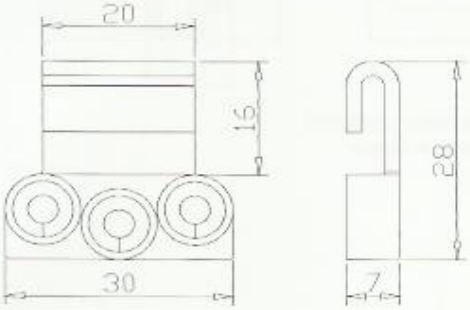

导向块 (编号为 02/0701)
Tie bar guide

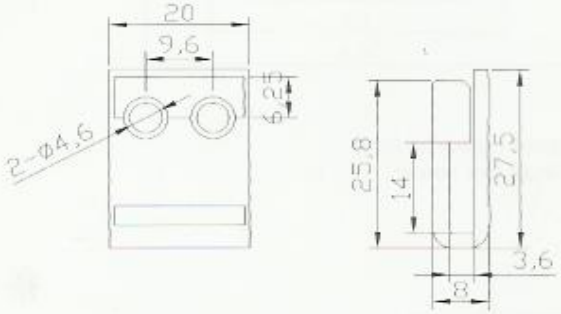

导向块 (编号为 02/0702)
Tie bar guide

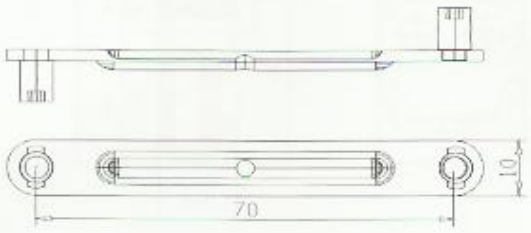

连杆 (编号为 02/1001-04)
Tie bar connector

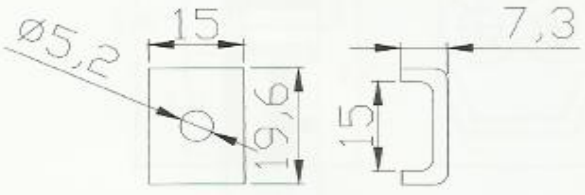

安装块 (编号为 1104)
Fixing block

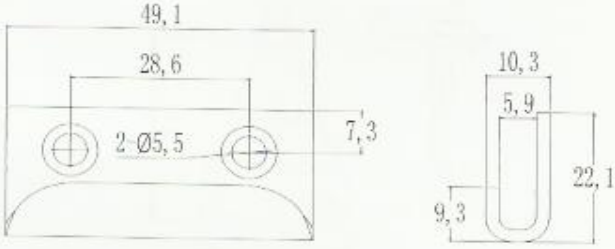

锁块（编号为 04/1405）
Single lock keeper

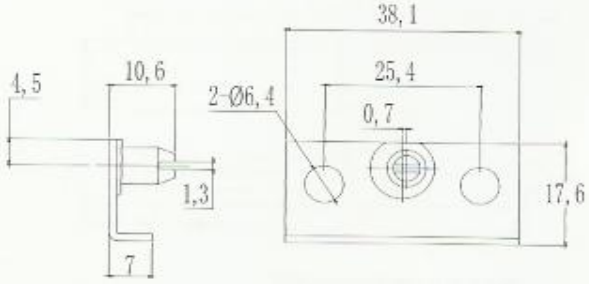

缓冲器（编号为 04/1406）
Single lock keeper

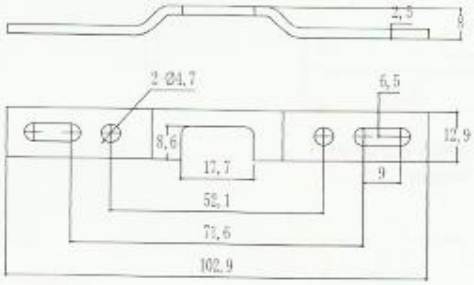

缓冲条（编号为 04/1047）
Single lock keeper

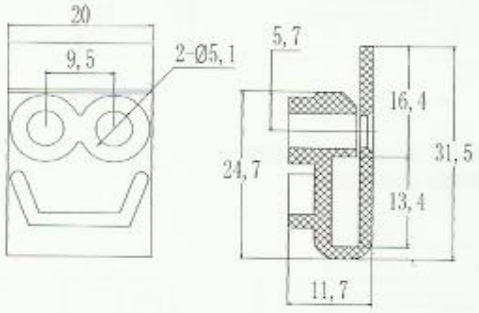

导向块（编号为 02/0703）
Single lock keeper

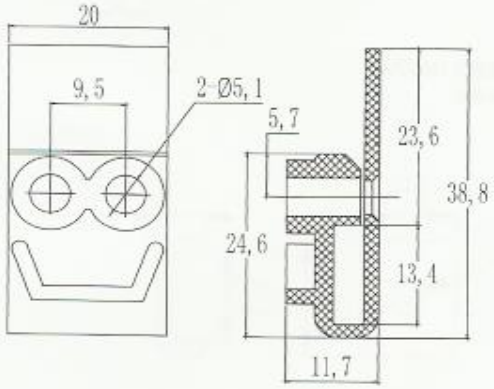

导向块（编号为 02/0704）
Single lock keeper

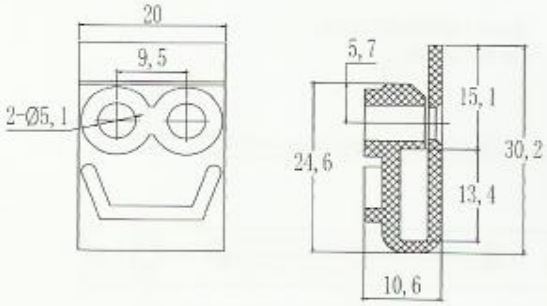

导向块（编号为 02/0705）
Single lock keeper



不锈钢导轨 *Stainless mounting track*

产品编号 (serial NO.)	长度 (L)
01/0401	220mm
01/0402	300mm
01/0403	350mm





双臂摇窗器导轨 (编号为 01/0404)
Dual arm operator mounting track

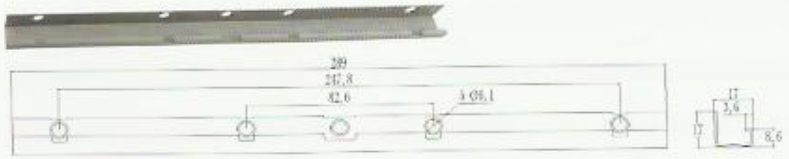

X 系列 —— 单臂导轨 (01/0406)
X series–single arm mounting track

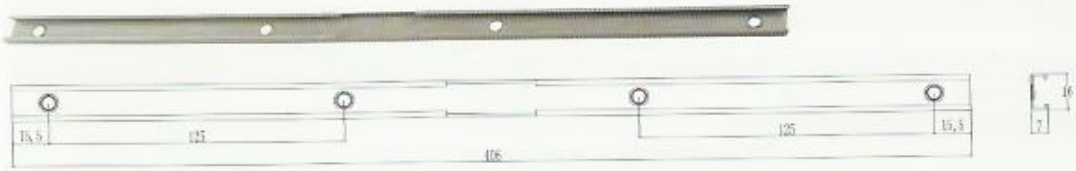

X 臂导轨 (01/0408)
X series– arm operator mounting track

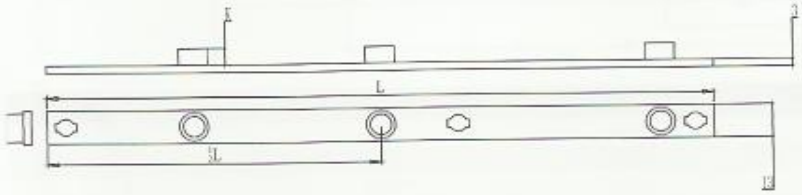

产品名称	产品编号	滑轮数	L (mm)	产品编号	滑轮数	L (mm)	滑轮高度 (K)
铁联动杆 02/1001 系列	02/1001-250	2	250	02/1001-1050	3	1050	K=10mm K=6.5mm
	02/1001-350	2	350	02/1001-1150	3	1150	
	02/1001-450	2	450	02/1001-1250	3	1250	
	02/1001-550	2	550	02/1001-1350	3	1350	
	02/1001-650	2	650	02/1001-1450	3	1450	
	02/1001-750	2	750	02/1001-1550	4	1550	
	02/1001-850	2	850	02/1001-1650	4	1650	
	02/1001-950	2	950				

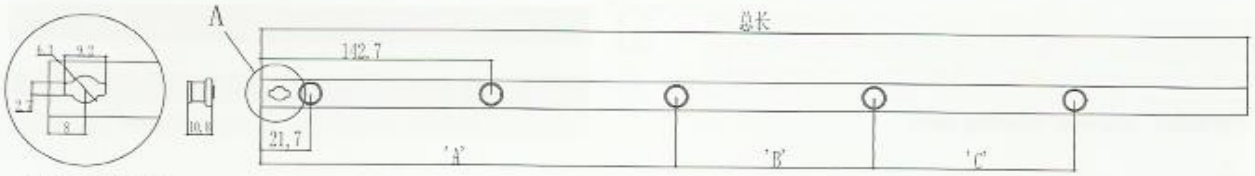

局部放大图 A

		02/1005-47	1800.8	561.0	561.0	561.0
		02/1005-46	1699.2	527.0	527.0	527.0
		02/1005-45	1597.6	494.0	494.0	494.0
	02/1005-22		1496.1	702.0	676.5	
	02/1005-21		1394.5	651.0	626.0	
	02/1005-20		1292.9	601.0	574.5	
	02/1005-19		1191.3	559.0	524.0	
	02/1005-18		1089.7	498.0	473.5	
	02/1005-17		988.1	448.0	422.0	
	02/1005-16		886.5	398.0	371.5	
	02/1005-15		784.9	346.0	320.5	
	02/1005-14		683.3	295.5	270.0	
	02/1005-13		581.7	243.5	220.	
02/1005-02			480.1	363.5		
02/1005-01			378.5	261.0		
02/1005-00			276.9			
2 个锁点	3 个锁点	4 个锁点	总长	DIM"A"	DIM"B"	DIM"C"
产品编号						

02/1005 系列不锈钢槽型 — 联动杆锁点间距

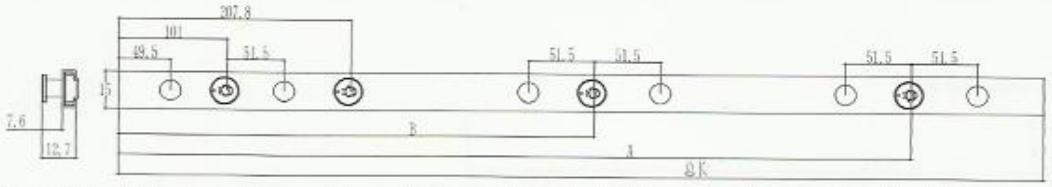

	02/1003-22	1600	1494	750
	02/1003-21	1500	1394	750
	02/1003-20	1400	1294	700
	02/1003-19	1300	1194	650
	02/1003-18	1200	1094	600
	02/1003-17	1100	994	550
	02/1003-16	1000	894	500
02/1003-15		900	794	
02/1003-14		800	694	
02/1003-13		700	594	
02/1003-02		600	494	
02/1003-01		438	332	
02/1003-00		249		
2 个锁点	3 个锁点	总长	DIM"A"	DIM"B"
产品编号				

02/1003 系列不锈钢槽型 — 联动杆锁点间距

窗锁系列 Window Lock Series

技术信息：
符合 JG/T 130-2007 标准；
符合 GB/T 9286-1998 标准；
符合 Q/FLSJ 02-2008 标准；
保养说明：
表面应用质地柔软的抹布擦拭，以免划伤表面。





9.04.0009
新韩式锁
Latest korean lock

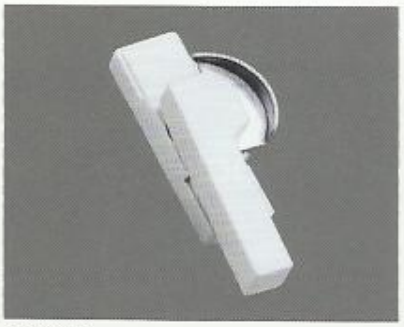

9.04.0014
方正月牙锁
Square positive lock



9.04.0019
方正 2 号月牙锁
Square positive #2 lock

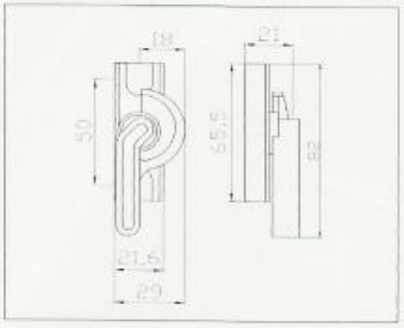

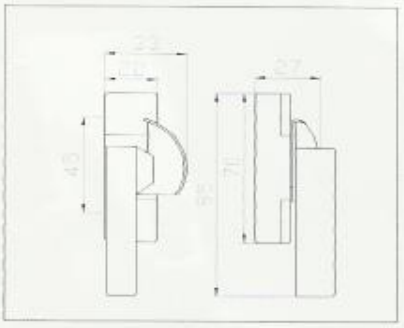

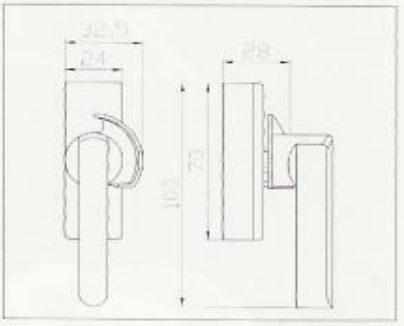

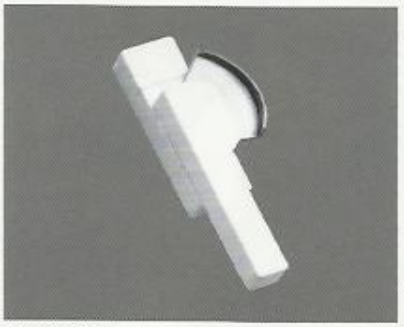

9.04.0022
方正 3 号月牙锁
Square positive #3 lock



9.04.0005
长柄月牙锁
Long-shaft crescent lock



9.04.0006
短柄月牙锁
Short-shaft crescent lock

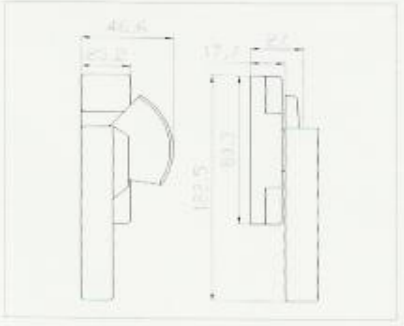

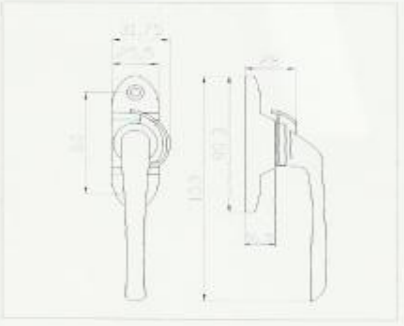

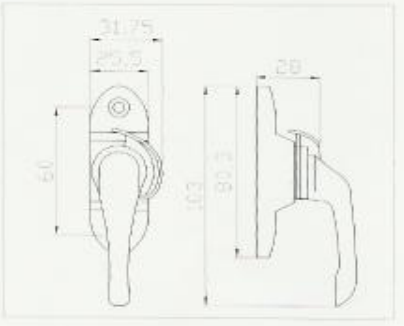



9.04.0023
短柄 2 号月牙锁
Short-shaft #2 crescent lock

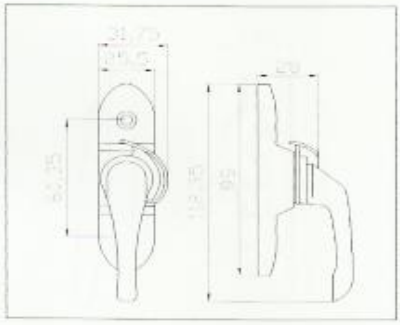



9.04.0021
828 月牙锁
828 Crescent Lock

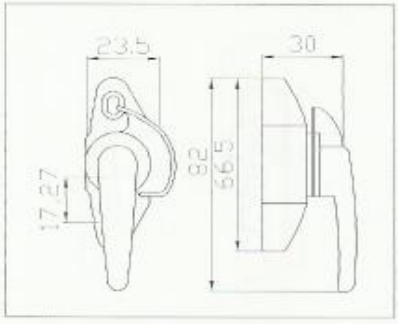



9.04.0007
韩式有扣锁
Korean hook lock

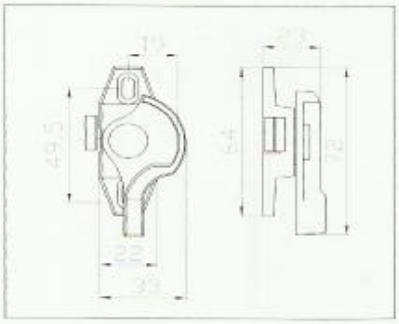



9.04.0008
韩式无扣锁
Korean lock

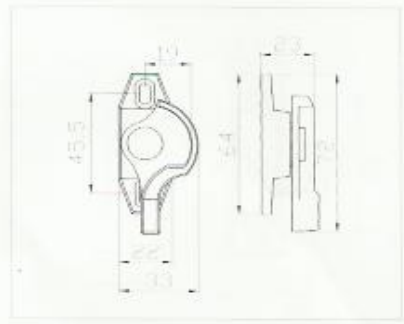



9.04.0032
12 号月牙锁
#12 Crescent lock

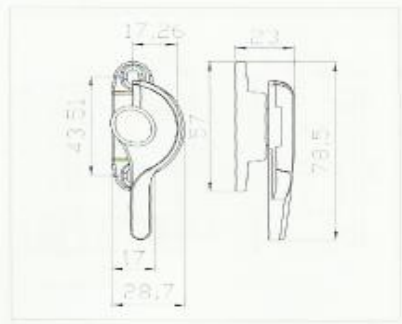



9.04.0010
Lg 锁
LG lock

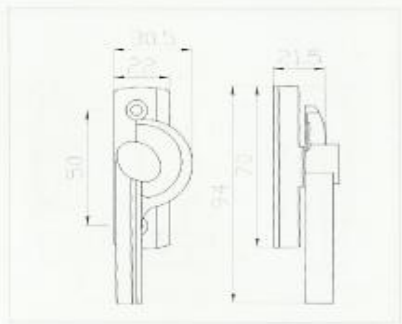



9.04.0033
LG2 号锁
LG#2 LOCK

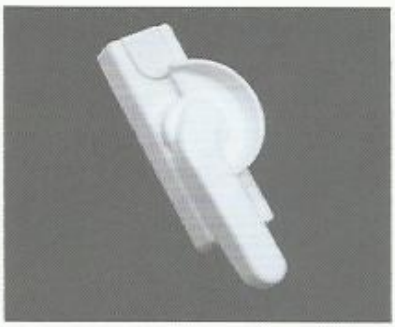

9.04.0056
世纪短柄月牙锁
Century short-shaft crescent lock



9.04.0055
世纪长柄月牙锁
Century long-shaft crescent lock

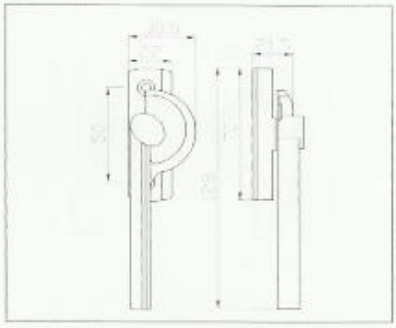

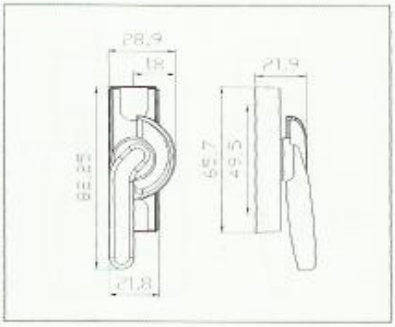

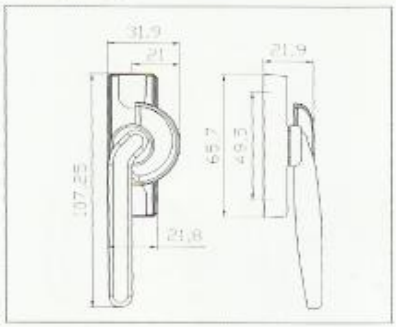



9.04.0002
1 号美式锁
#1 American lock



9.04.0003
2 号美式锁
#2 American lock

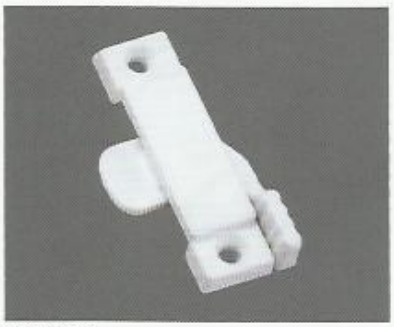

9.04.0004
3 号美式锁
#3 American lock

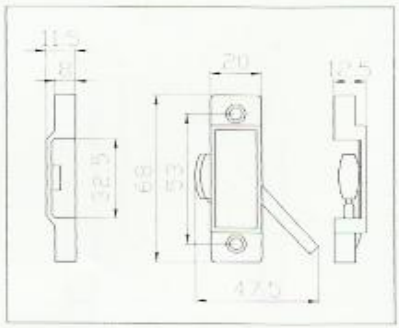

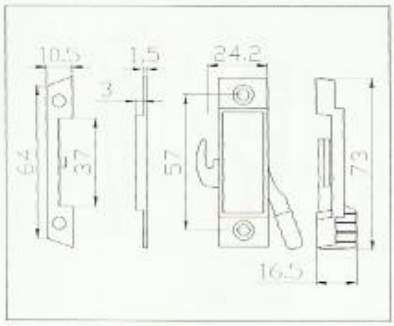

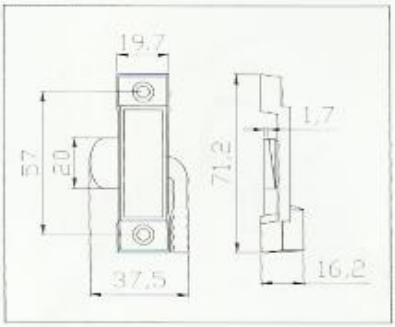

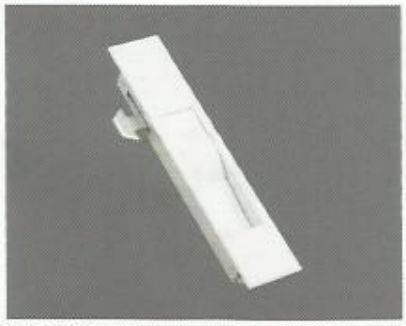

9.04.0053
7号钩锁
#7 Hook lock

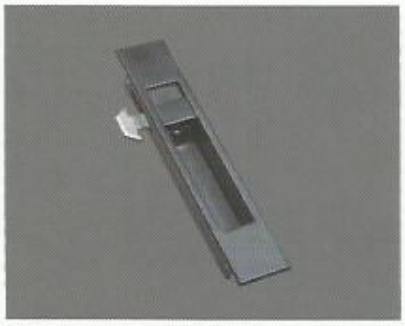

9.04.0054
8号钩锁
#8 Hook lock

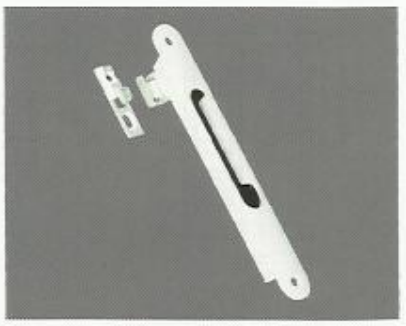

9.04.0013
皇家钩锁
huangjia hook lock

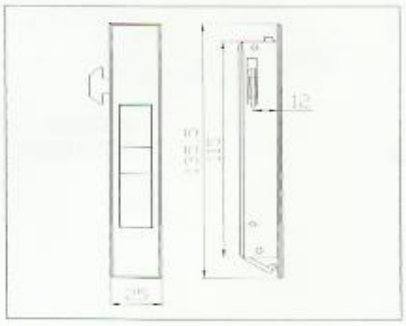

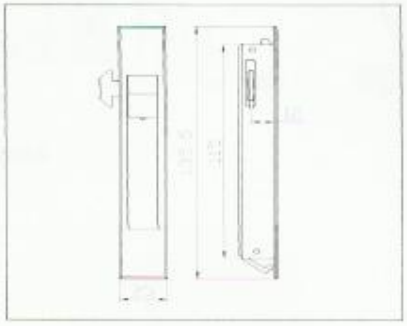

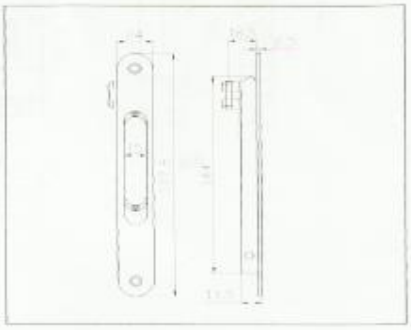

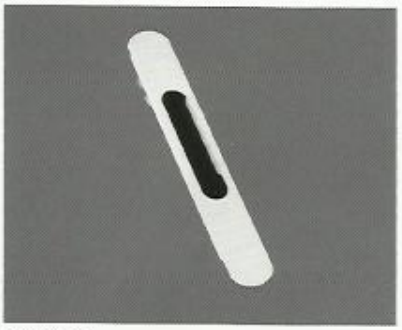

9.04.0024
1004 钩锁
1004 Hook lock



9.04.0030
自动钩锁
Self-motion hook lock

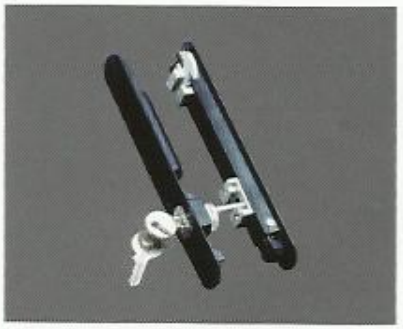

9.04.0029
1005 双面钩锁
1005 Double-face hook lock

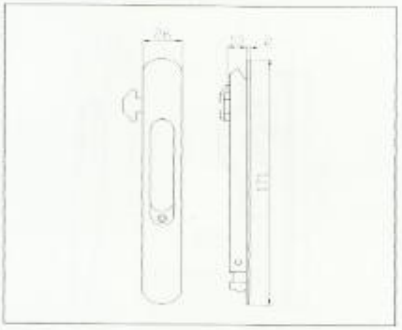

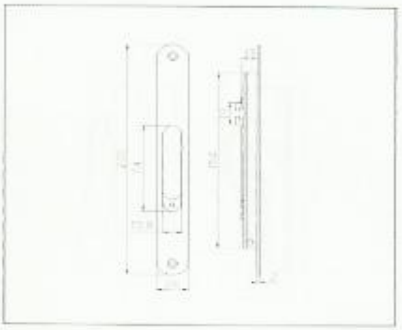

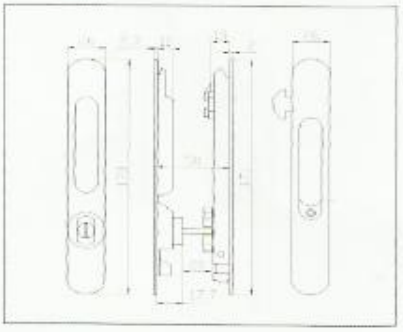

可选通用配件：

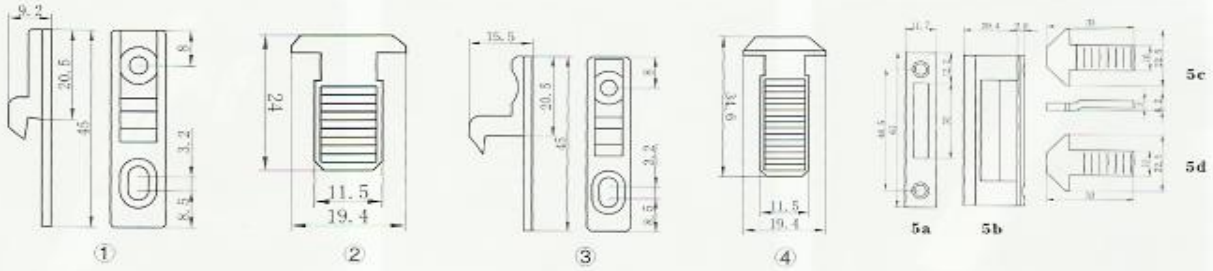

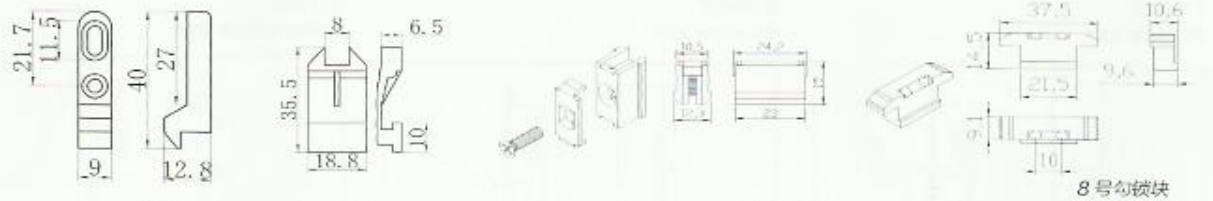

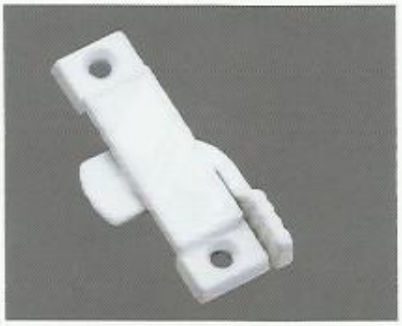

9.04.0018
4 号美式锁
#4 American lock



9.04.0027
5 号美式锁
#5 American lock

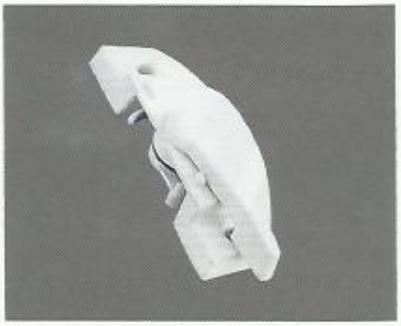

9.04.0031
6 号美式锁
#6 American lock

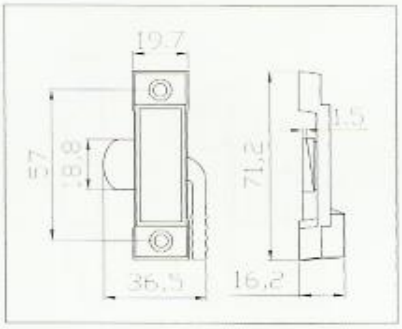

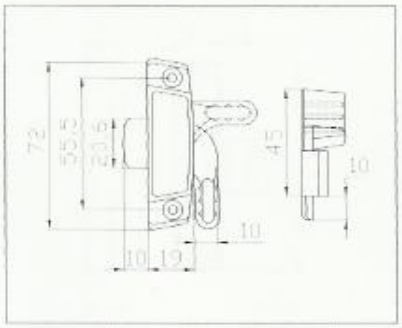

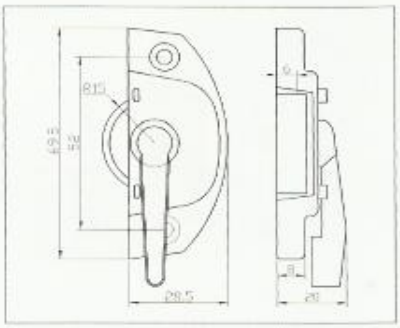



9.04.0062
12 号美式锁
#12American lock



9.04.0061
8 号美式锁
#8American lock



9.04.0060
带锁美式锁
American lock with key

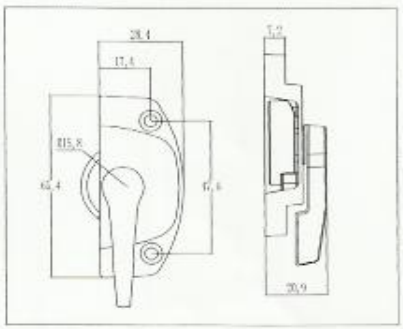

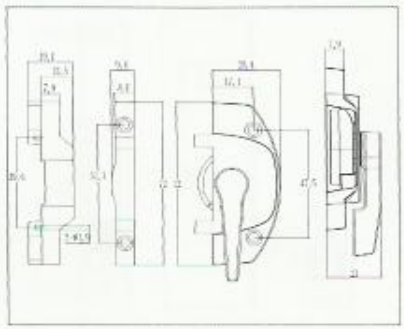

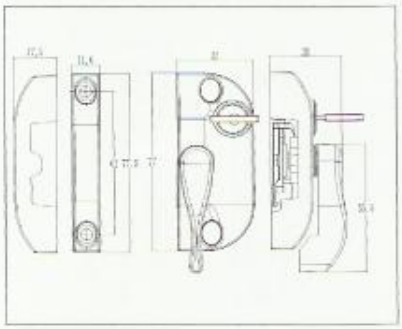



9.04.0042
7号美式锁
#7 American lock

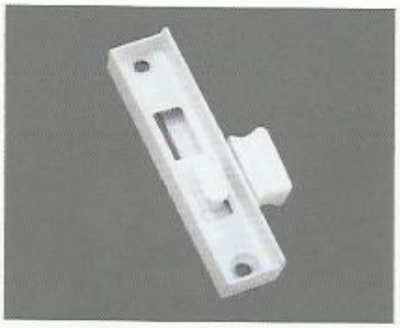

9.04.0001
单点锁(滑扣)
single-point lock(slide catch)

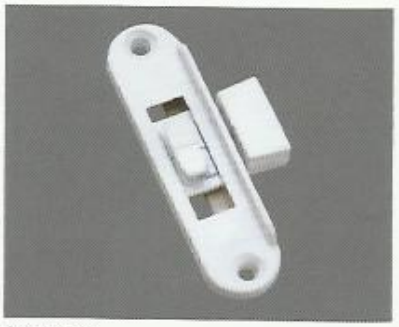

9.04.0020
2号单点锁
#2 Single-point lock

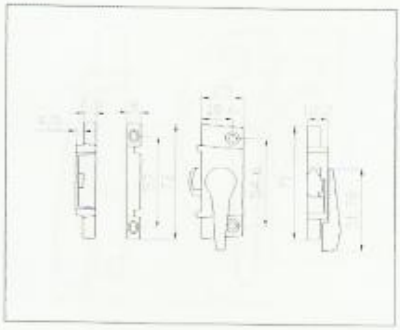

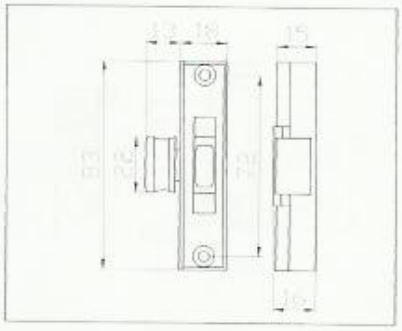

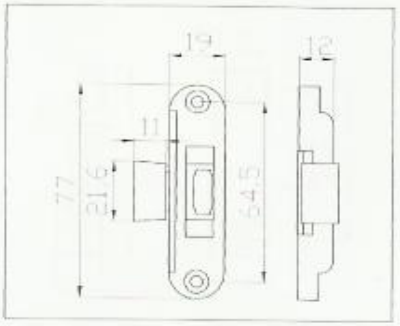

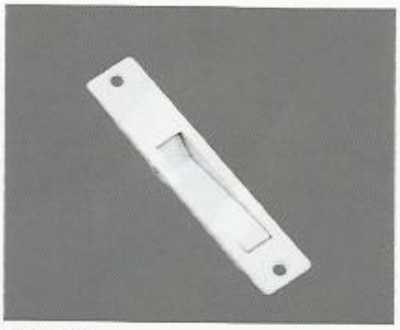

9.04.0012
宽碰锁
Wide touch lock

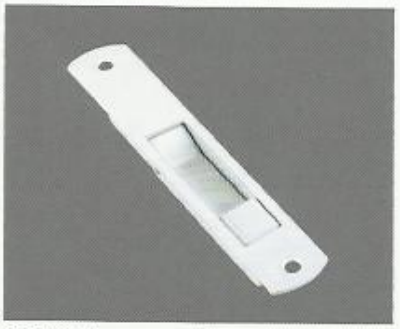

9.04.0059
2号碰锁
2#Wide touch lock



9.04.0011
钩锁
Hook lock

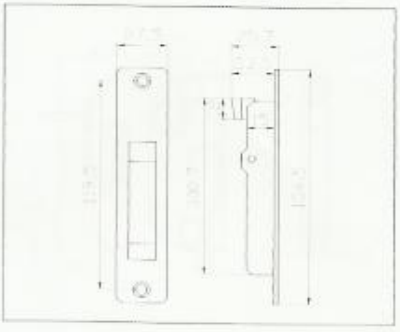

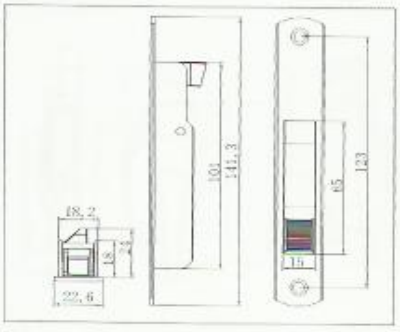

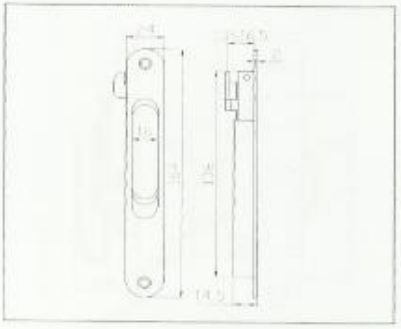

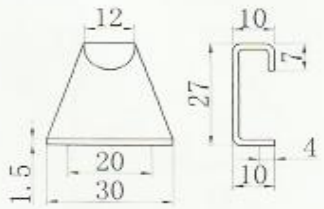

3.03.040020
(SG01)

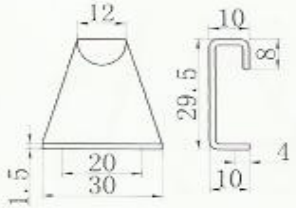

3.03.040021
(SG02)

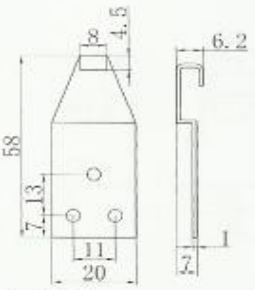

3.03.040022
(SG03)

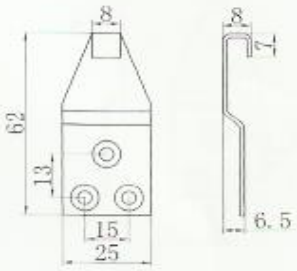

3.03.040023 / 3.05.040010
(SG04)

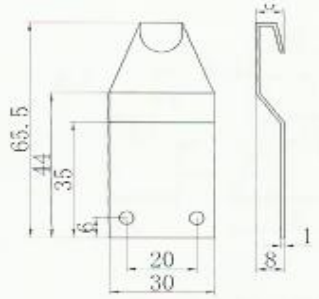

3.03.040024
(SG05)

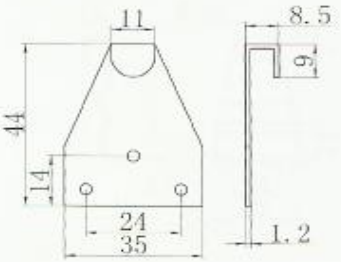

3.03.040026
(SG07)

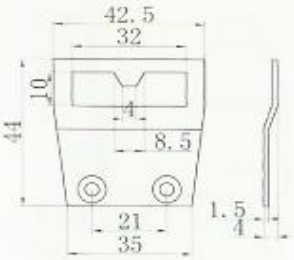

3.03.040027
(SG08)

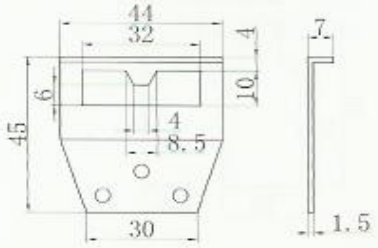

3.03.040028
(SG09)

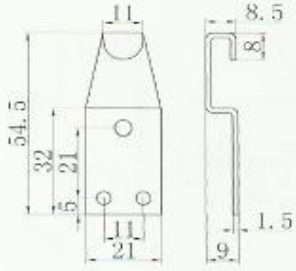

3.03.040029
(SG10)

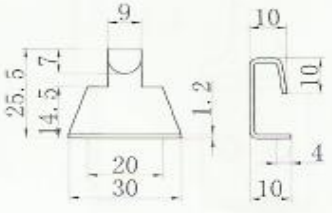

3.03.040031
(SG12)

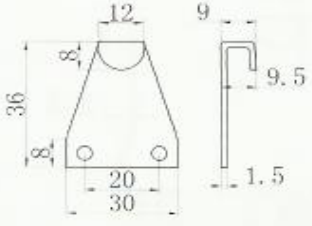

3.03.040032
(SG13)

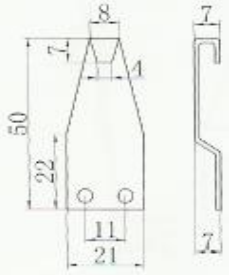

3.03.040033
(SG14)

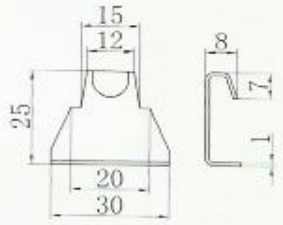

3.05.040011
(SG15)

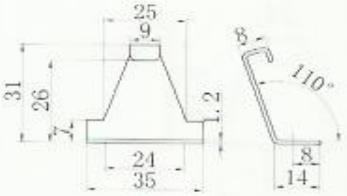

3.03.040034
(SG16)

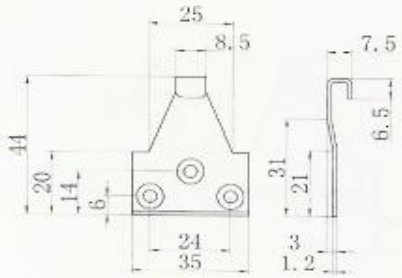

3.03.040035
(SG17)

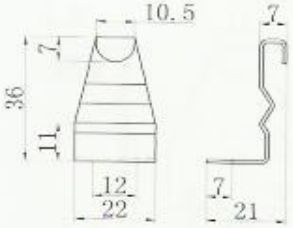

3.03.040037 / 3.05.040012
(SG19)

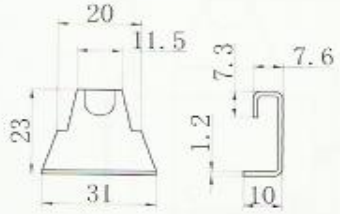

3.03.040046 / 3.05.040015
(SG23)

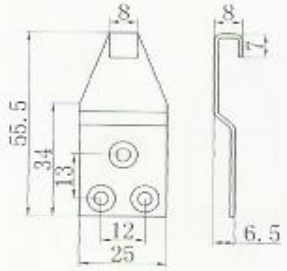

3.03.040045 / 3.05.040014
(SG27)

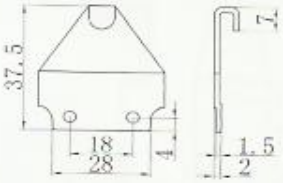

3.05.040016
(SG30 西飞 2 号钩子)

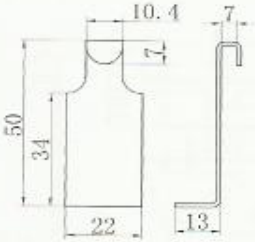

3.05.040017
(SG31 西飞 1 号钩子)

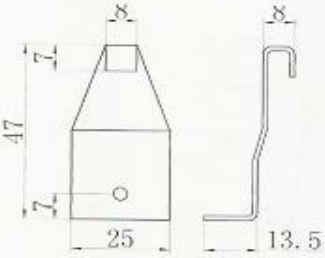

3.05.040018
(80C 钩子)

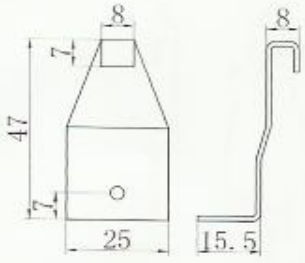

3.05.040019
(90C 钩子)

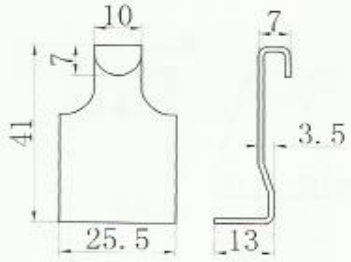

3.05.040022
(828-4 钩子 / 苹果 828 不锈钩子)

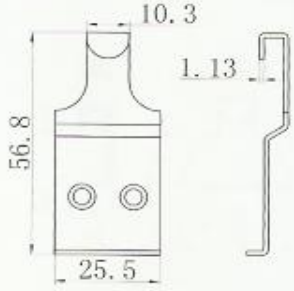

3.05.040023
(80C1# 不锈钢钩子)

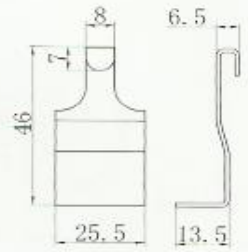

3.05.040024
(80C2# 不锈钢钩子)

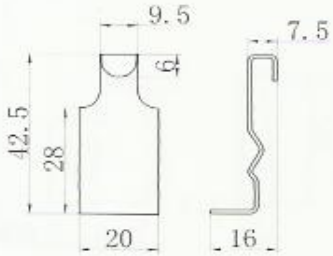

3.05.040030
(828-2 钩子)



3.05.040031
(4# 新钩子)

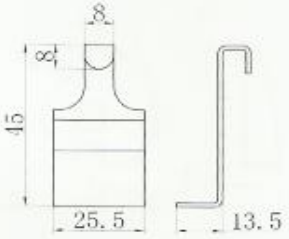

3.05.040032
(城东锁钩子)

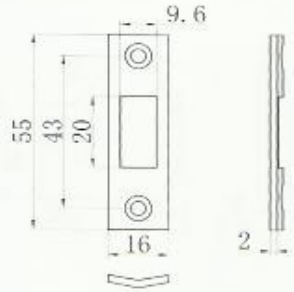

3.03.080005
(钩锁扣)

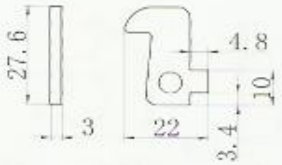

3.03.040010
(钩锁钩子)

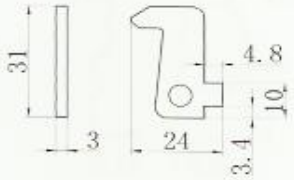

3.03.040053
(钩锁钩子-1)

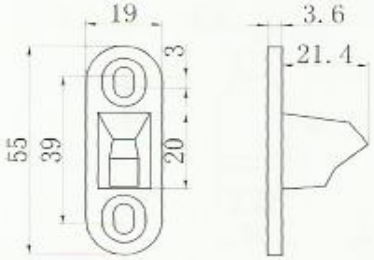

3.02.040053
(钩锁锁扣)

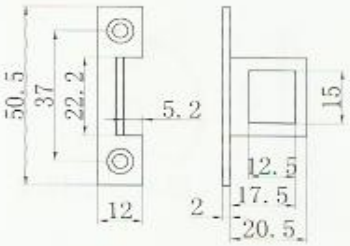

3.03.080006
(锁扣 1#/ 碰锁钩子定做)

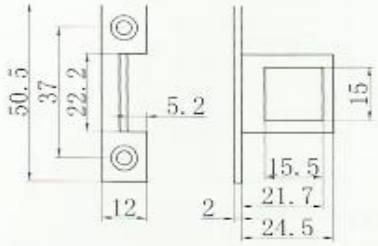

3.03.070047
(锁扣 2#/ 碰锁钩子)

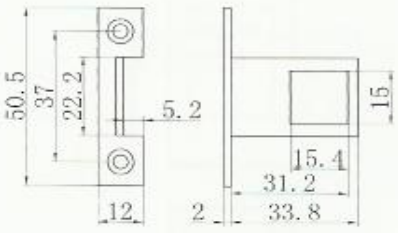

3.03.070046
(锁扣 3#/ 中悬窗钩子)

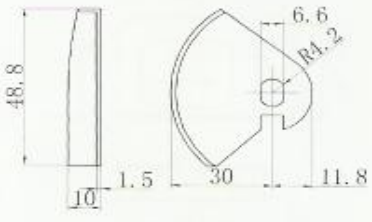

3.05.040006(左)/3.05.040007(右)
(80 勾舌)

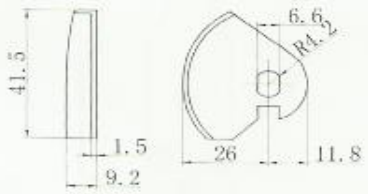

3.05.040008(左)/3.05.040009(右)
(90 勾舌)

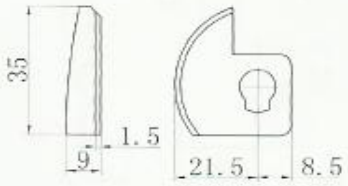

3.05.040026(左)/3.05.040027(右)
(方正月牙锁不锈钢耳勾)

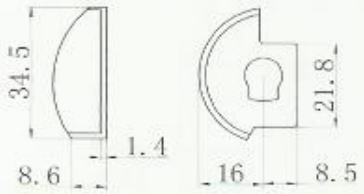

3.05.040037(左)/3.05.040038(右)
(方正月牙锁不锈钢耳勾-1)

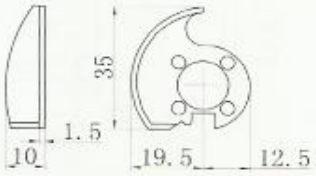

3.05.040028(左)/3.05.040029(右)
(方正 2# 月牙锁不锈钢耳勾)

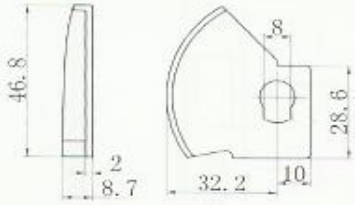

3.05.040033(左)/3.05.040034(右)
(方正 3# 月牙锁不锈钢耳勾)

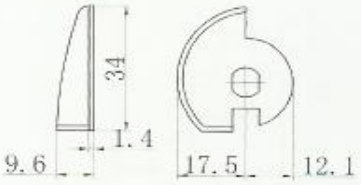

3.05.040002(左)/3.05.040003(右)
(长柄月牙锁不锈钢勾舌)

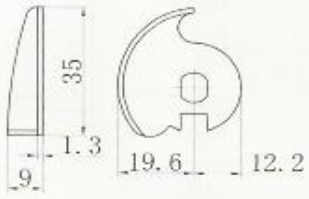

3.05.040004(左)/3.05.040005(右)
(长柄月牙锁加高 3mm 勾舌)

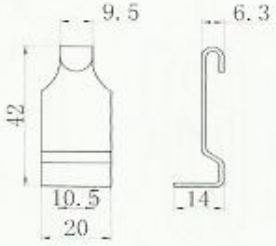

3.05.040035
(828-1 钩子)

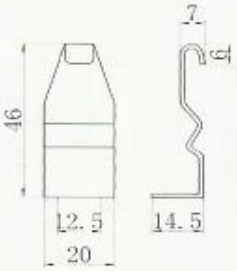

3.05.040036
(828-3 钩子)

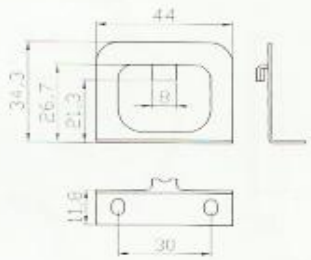

3.05.040039
(90 方锁勾-1)

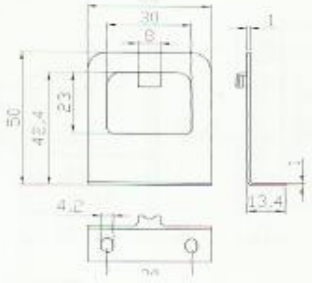

3.05.040040
(90 方锁勾-2)

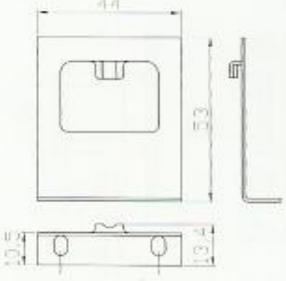

3.05.040041
(90 方锁勾-3)

Euro Window & Door Hardware





9.01.0004
德式带锁执手（锌座）
German Chain Lock Handle(Zinc Base)



9.01.0255
德式带锁执手（铝方座）
German Chain Lock Handle(Quadrate aluminum base)



9.01.0256
德式带锁执手（铝圆座）
German Chain Lock Handle(Round aluminum base)

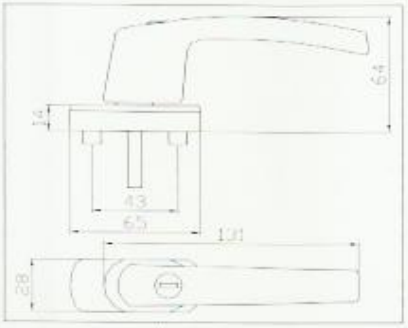

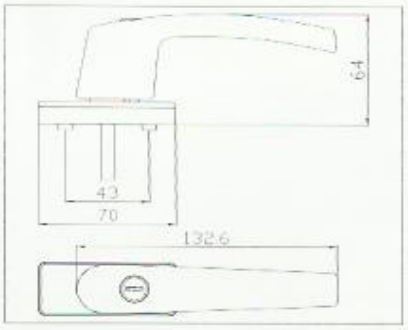

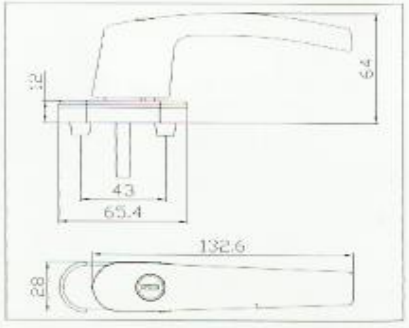



9.01.0079
英式 2 号带锁执手
English #2 Chain Lock Handle

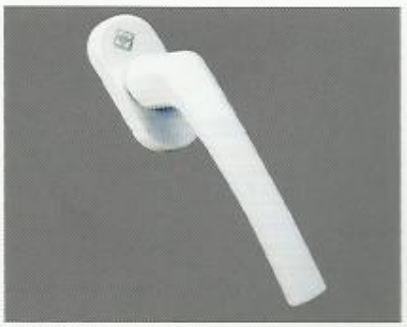

9.01.0196
德式 9 号执手
German 9# handle



9.01.0257
内开 22 号执手
Inward 22# handle

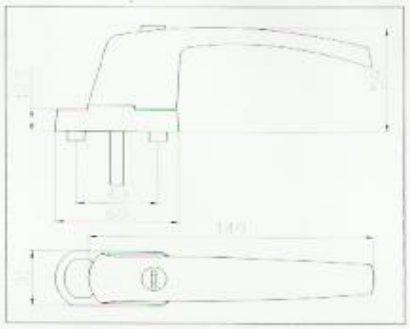

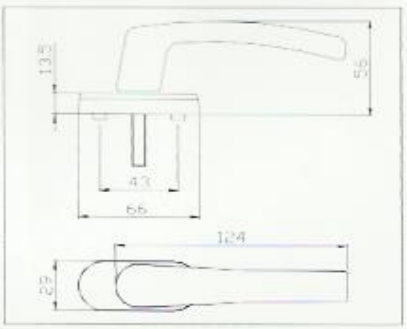

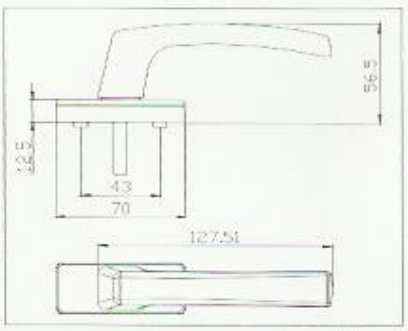



9.01.0068
德式 5 号执手
German #5 Handle



9.01.0083
德式 6-1 号执手
German #6-1 Handle



9.01.0132
塑德式 6 号执手
Plastic German #6 Handle

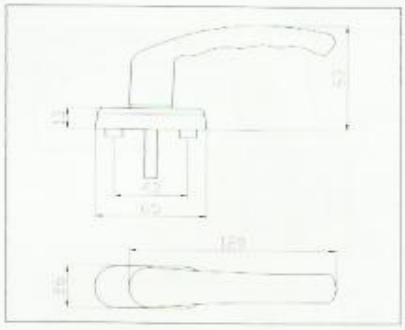

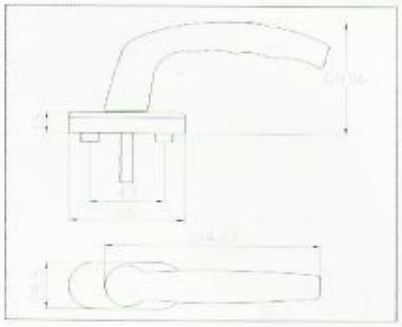

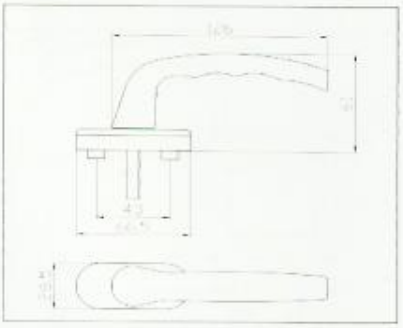



9.01.0086
德式 7-1 号执手
German #7-1 handle

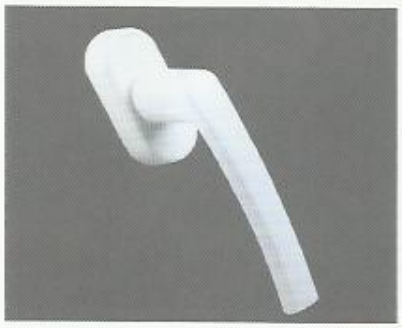

9.01.0118
德式 8-1 号执手
German #8-1 handle



9.01.0112
塑料 3 号执手
Plastic #3 handle

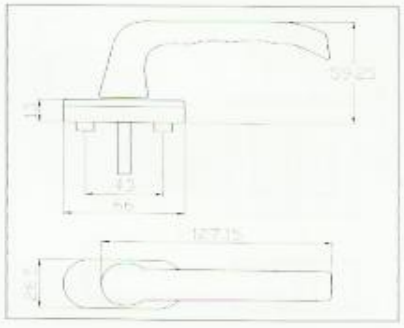

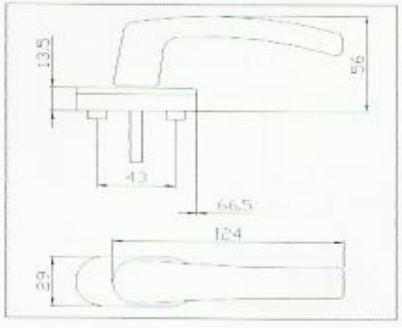

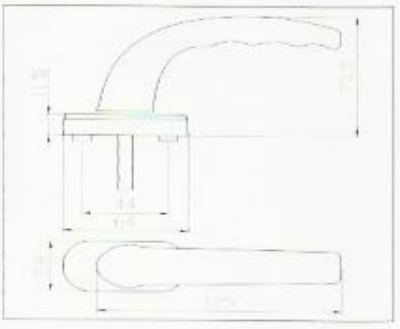



9.01.0219
塑料 4 号执手
Plastic #4 handle

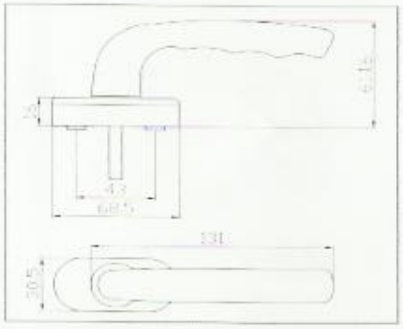



9.01.0007
标准执手
German handle

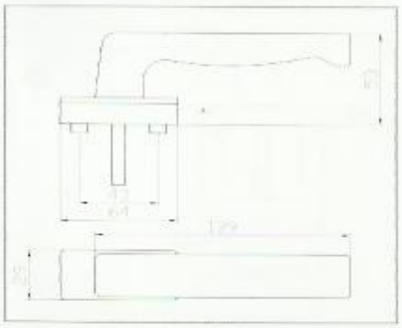

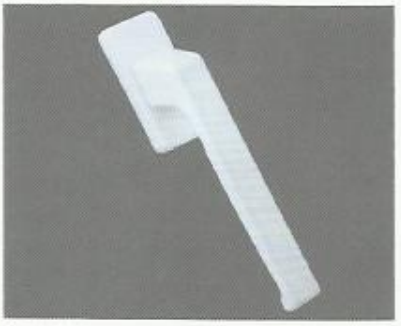

9.01.0198
标准 2 号执手
German #2 handle

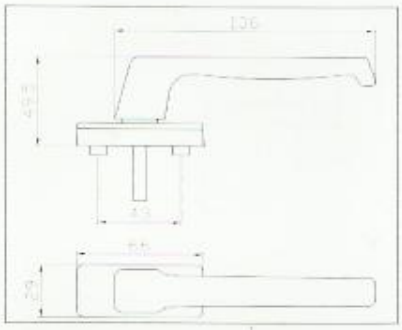



9.01.0006
标准直柄执手 (锌座)
Standard straight handle(zinc base)

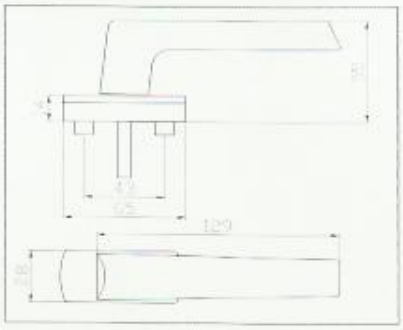

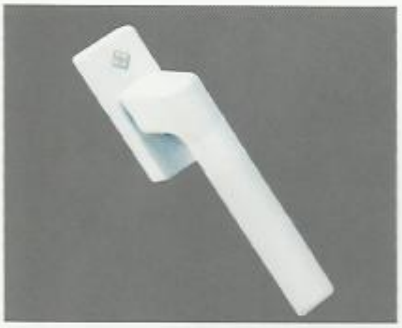

9.01.0258
标准直柄执手 (铝方座)
Standard straight handle(Aluminum base)

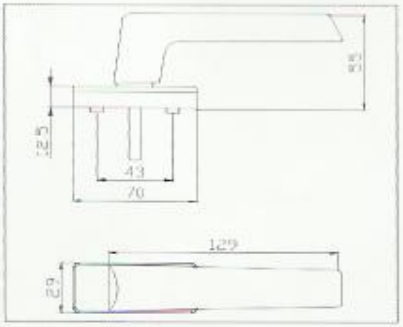



9.01.0167
内开 10 号执手
Inward #10 handle

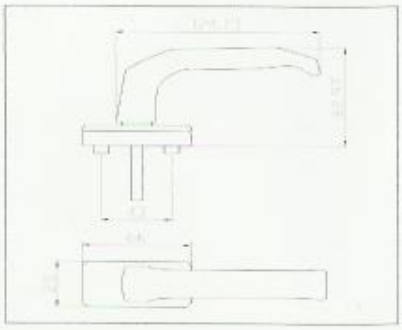

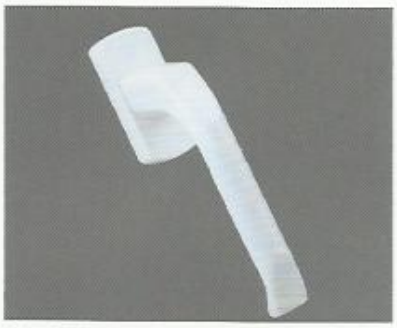

9.01.0195
内开 11 号执手
Inward #11 handle

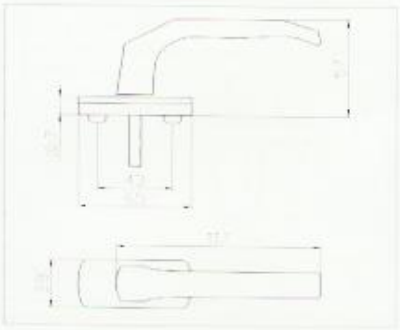



9.01.0280 内开 23 号执手 (塑座) Inward # 23 handle(plastic base)
9.01.0281 内开 23-2 号执手 (铝圆座) Inward # 23-2 handle(Round aluminum base)

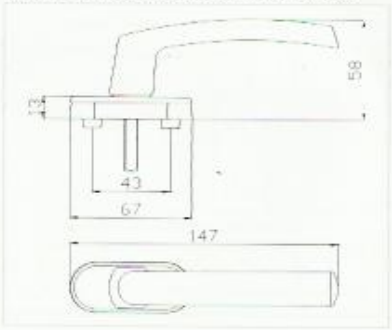



9.01.0074
推拉拉手
Slide handle

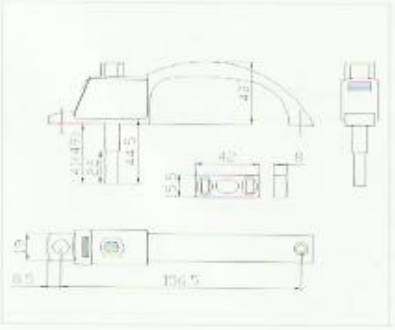

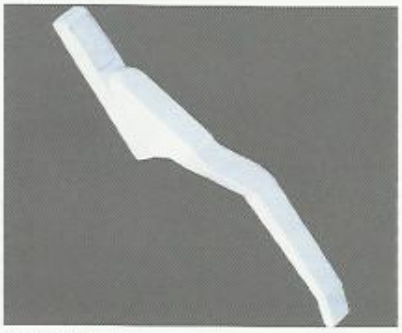

9.01.0014
外开专用一号执手
Exterior special #1 handle

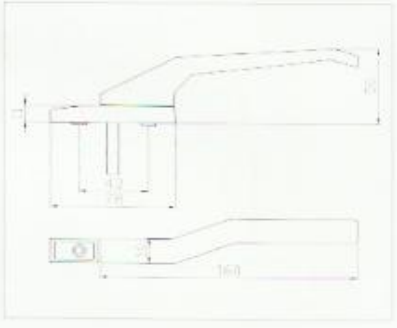



9.01.0015
外开专用二号执手
Exterior special #2 handle

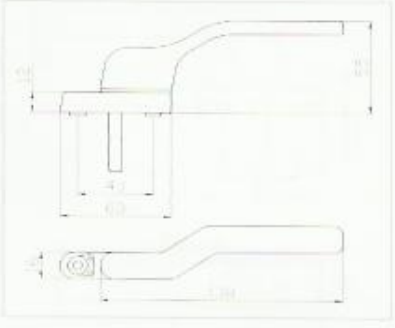



9.01.0016
外开专用三号执手 (锌质)
Exterior special #3 handle(zinc)

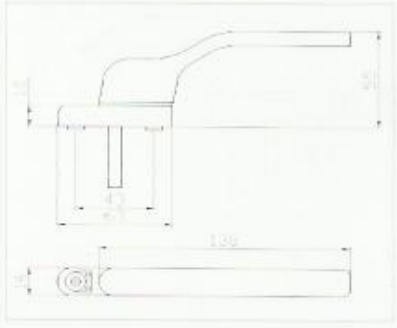

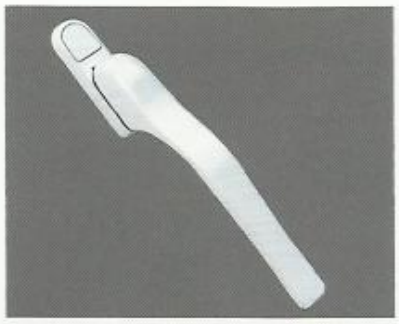

9.01.0259
外开专用三号执手(铝质)
Exterior special #3 handle(aluminum)

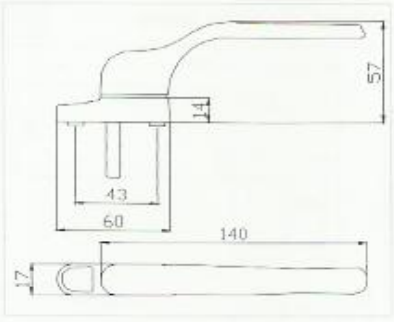



9.01.0019
外开专用六号执手(锌质)
Exterior special #6 handle(zinc)

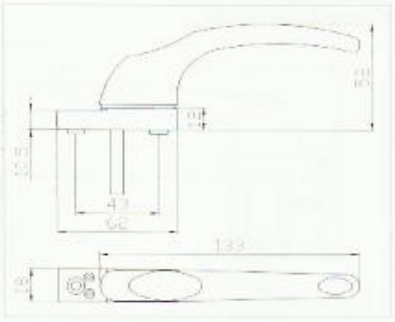

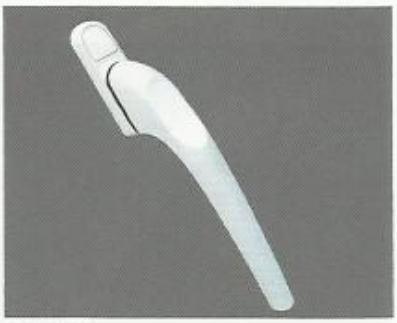

9.01.0260
外开专用六号执手(铝合金)
Exterior special #6 handle(aluminum)

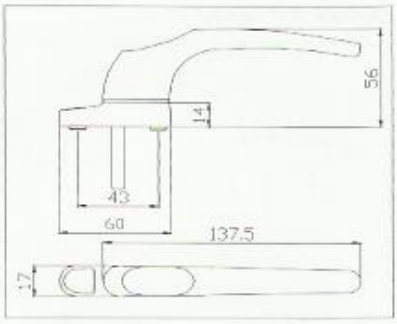

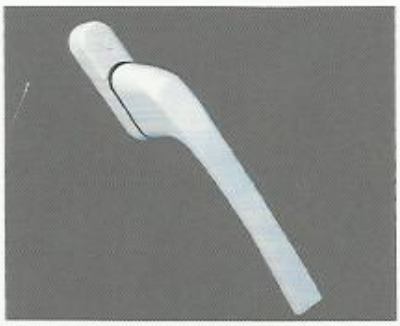

9.01.0261
外开 18 号执手(铝合金)
Exterior special #18 handle(aluminum)

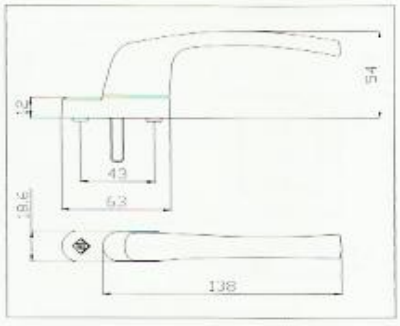



9.01.0020
外开专用七号执手
Exterior special #7 handle

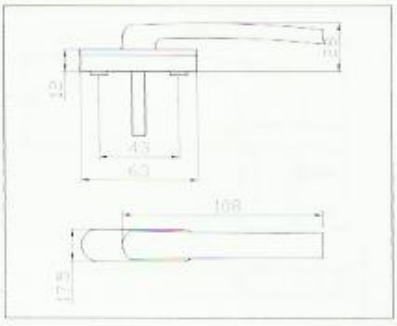

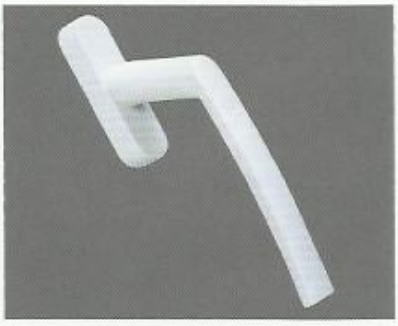

9.01.0018
外开专用 5# 执手
Exterior special #5 handle

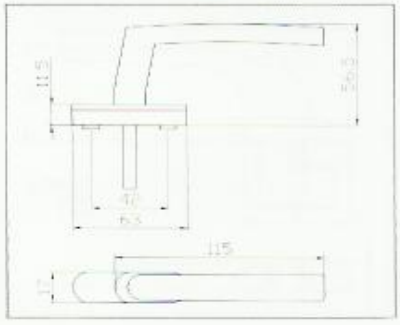



9.01.0039
外开十号执手
Outward #10 handle

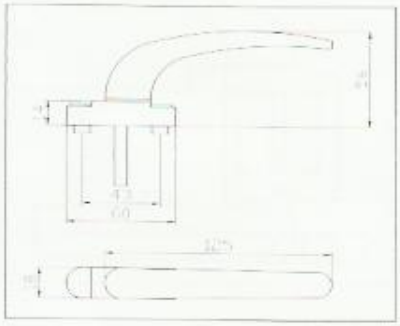



9.01.0250
外开 14 号执手
Outward #14 handle

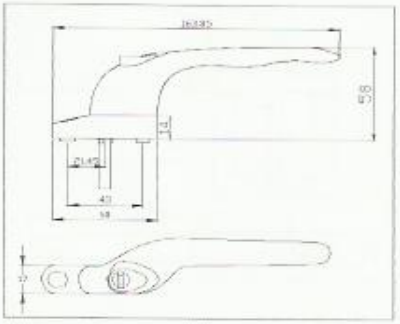



9.01.0262
外开 14 号带钮执手
Outward #14 button handle

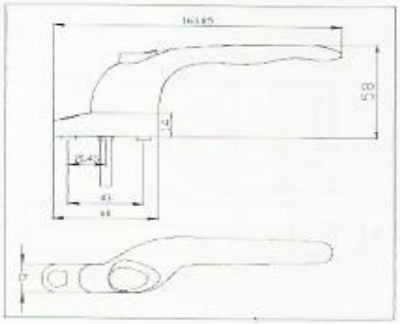



9.01.0252
外开 15 号执手 (锌铝)
Outward #15 handle (zinc&aluminum)

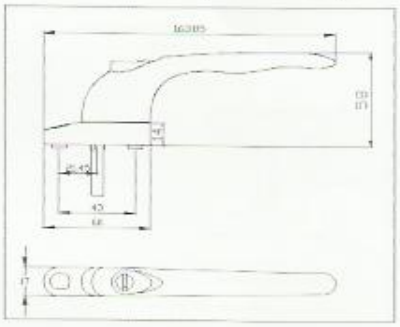



9.01.0264
外开 15 号带钮执手 (锌铝)
Outward #15 button handle(zinc&aluminum)

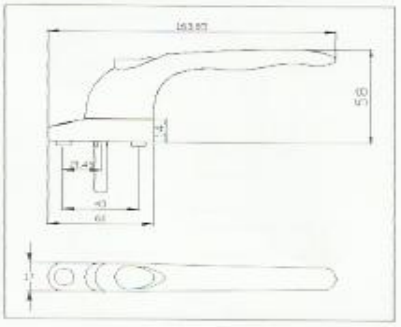

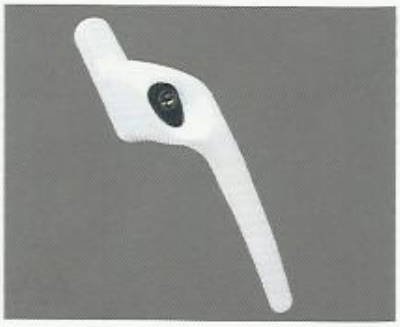

9.01.0266
外开 16 号执手 (锌铝)
Outward #16 handle(zinc&aluminum)

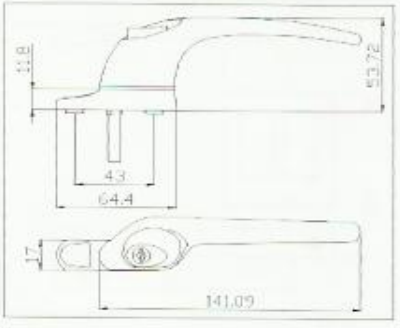



9.01.0267
外开 17 号执手(锌质)
Outward #17 handle(zinc)

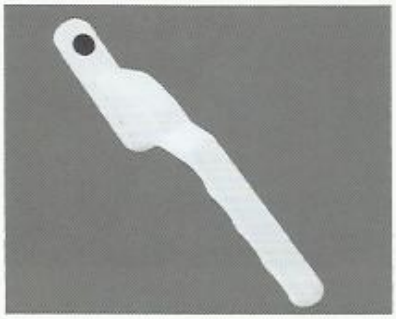

9.01.0172
外开 13 号执手
Exterior #13 handle



9.01.0173
外开 13 号 带锁执手
Exterior #13 chain lock handle

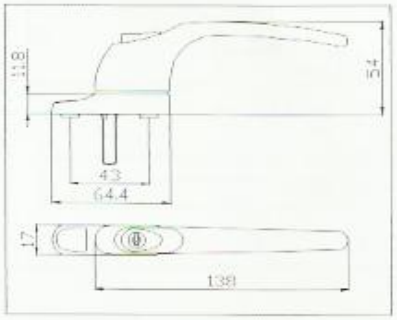

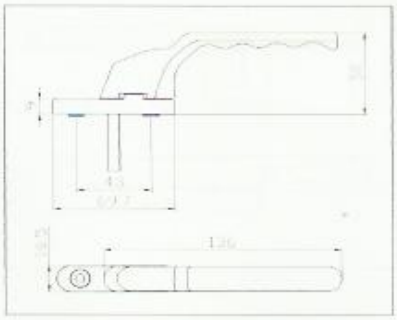

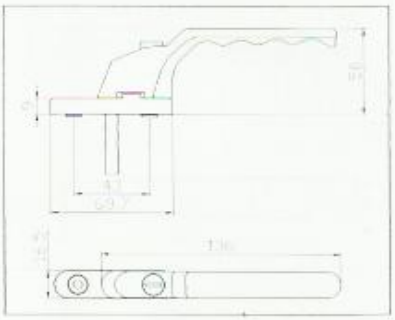

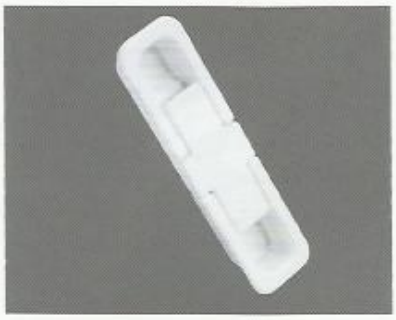

9.01.0013
暗执手(扣手)
Built-in handle(buttonhole handle)



9.01.0135
2 号暗执手
#2 Built-in handle



9.01.0282
5 号暗执手
#5 Built-in handle

9.01.0143
3 号暗执手
#3 Built-in handle

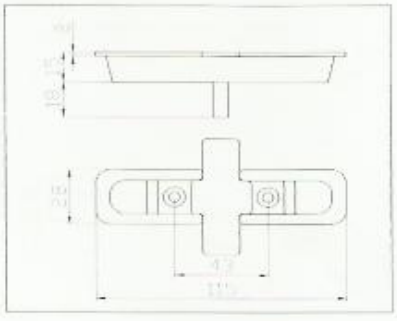

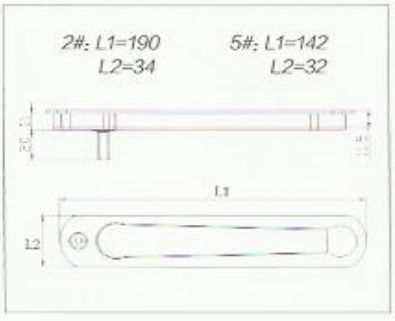

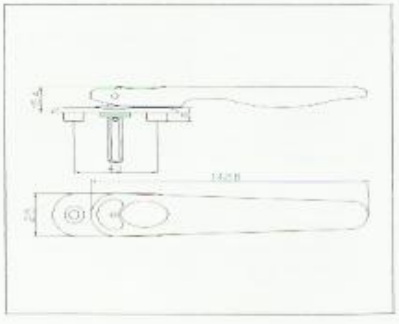



9.01.0192
4号暗执手
#4 Built-in handle

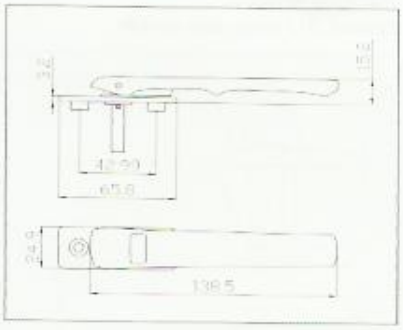

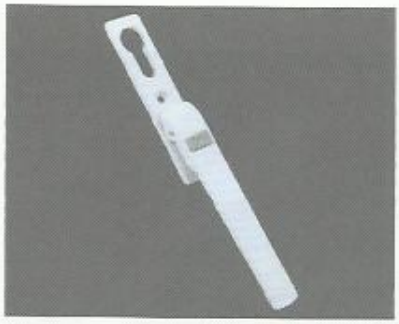

9.01.0222
4-1号暗执手
#4-1 Built-in handle

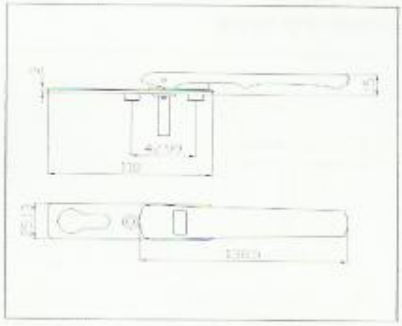



9.01.0009
小单点执手
Small single-point handle

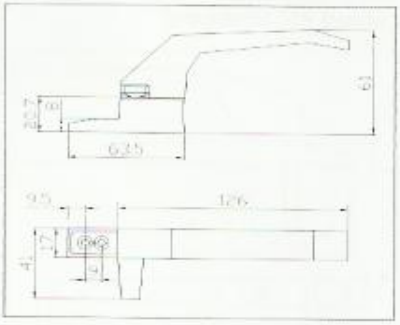



9.01.0010
单点执手
Single-point handle

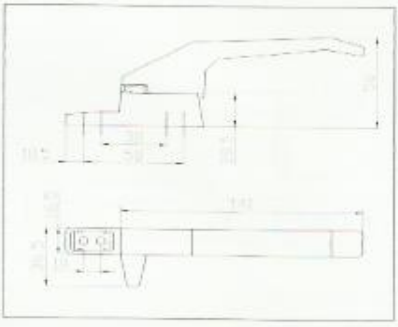



9.01.0011
单点高执手
Single-point high handle

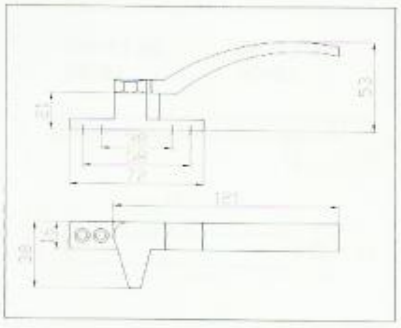

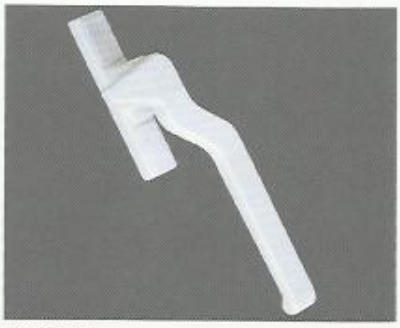

9.01.0012
单点矮执手
Single-point short handle

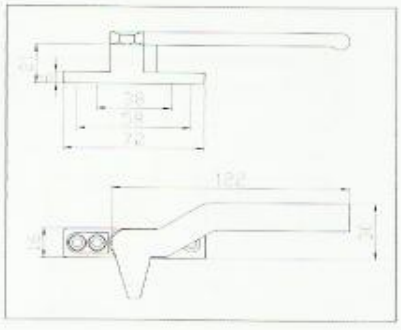



9.01.0061
铝单点短执手
Aluminum single-point short handle

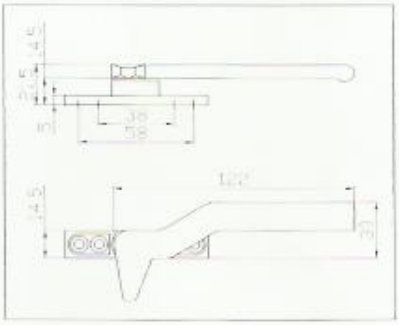



9.01.0168L/9.01.0169R
单点 11 号执手
Single-point #11 handle

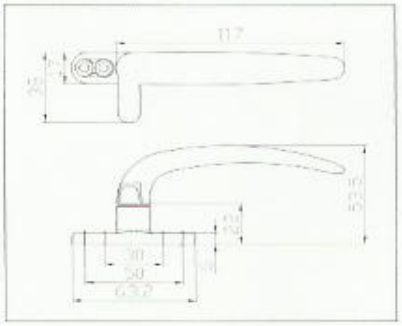



9.01.0062
T 型执手
T-shape handle

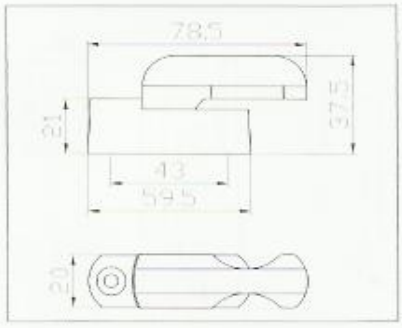



9.01.0268 德式对开执手（铝圆座）
German twin handles(Round aluminum base)

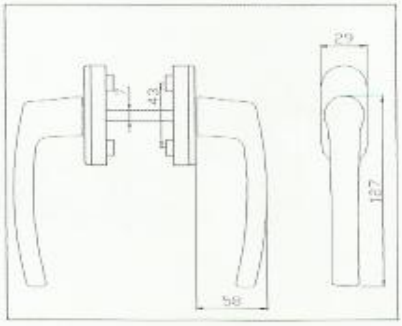



9.01.0269 德式带锁对开执手（铝圆座）
German chain lock twin handles(Round aluminum base)

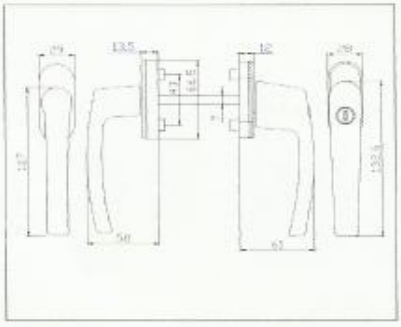

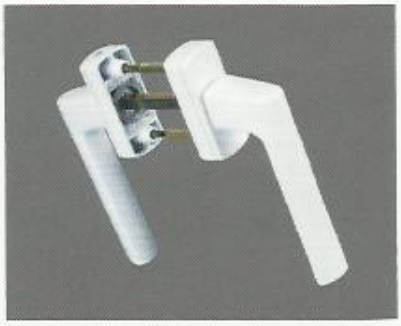

9.01.0049
标准直柄对开执手
Standard straight twin handles

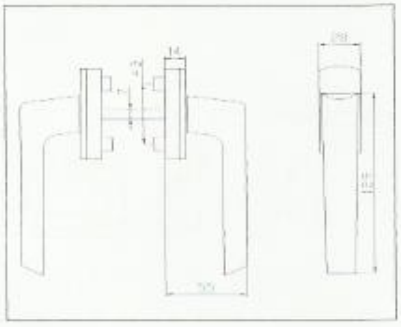

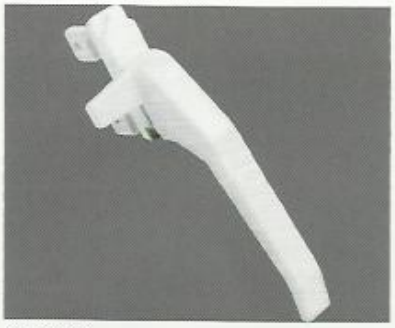

9.01.0040
铝单点 1 号执手
Aluminum single-point #1 handle

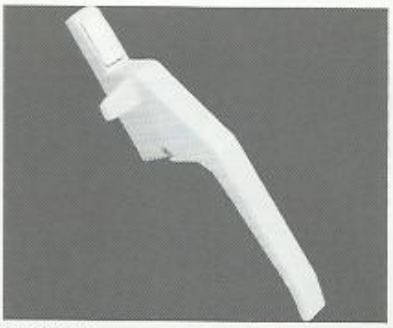

9.01.0041
铝单点 2 号执手
Alumnium single-point #2 handle

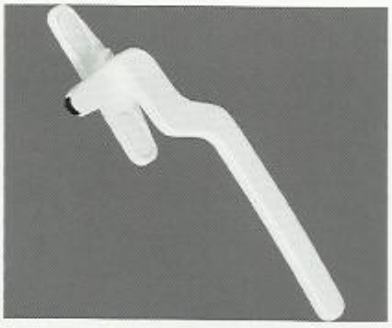

9.01.0042
铝单点四号执手
Aluminum single-point #4 handle

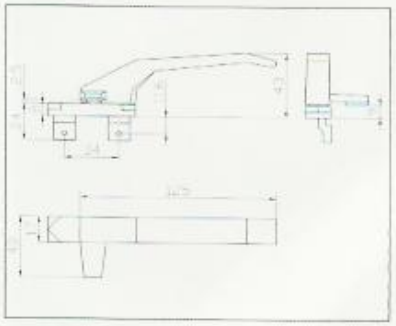

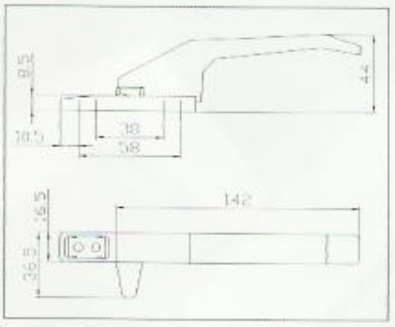

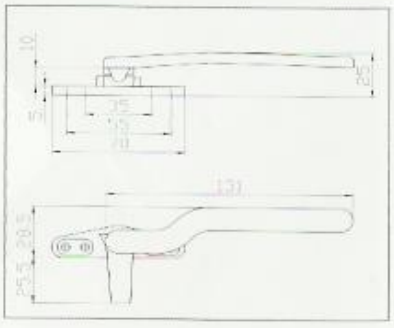

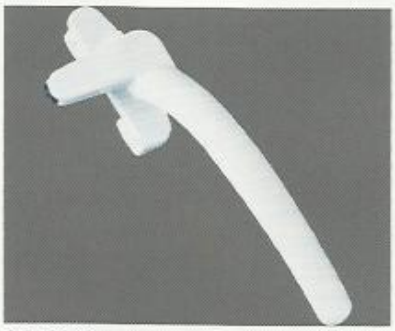

9.01.0043
铝单点五号执手
Aluminum single-point #5 handle

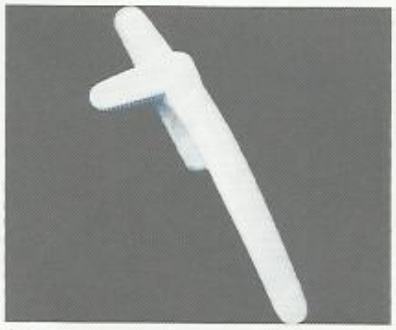

9.01.0044
铝单点六号执手
Aluminum single-point #6 handle

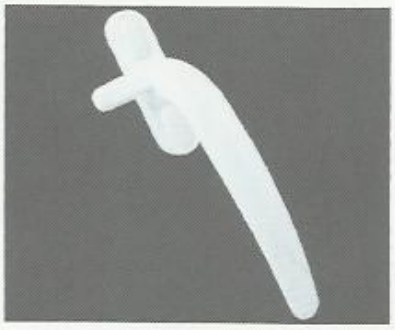

9.01.0170L/9.01.0171R
单点 12 号执手
Single-point #12 handle

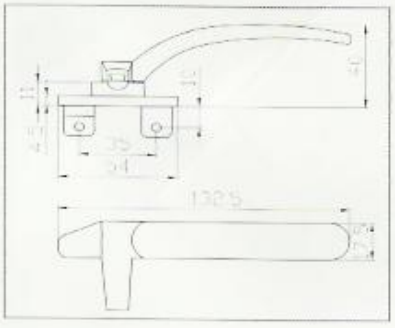

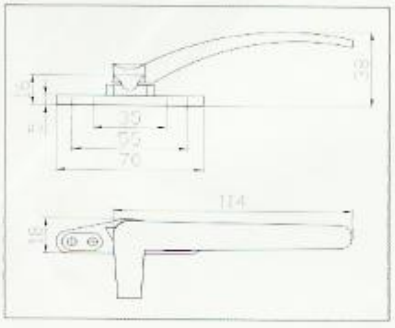

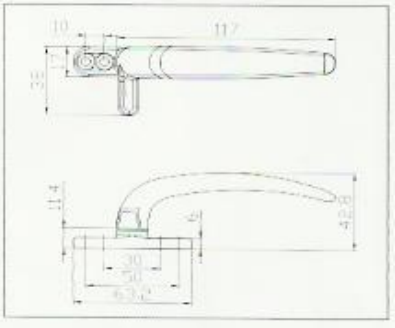



9.01.0059
铝单点七号执手
Aluminum single-point #7 handle

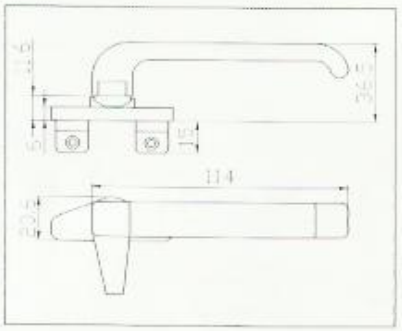



9.01.0090
铝单点 9 号执手
Aluminum single-point #9 handle

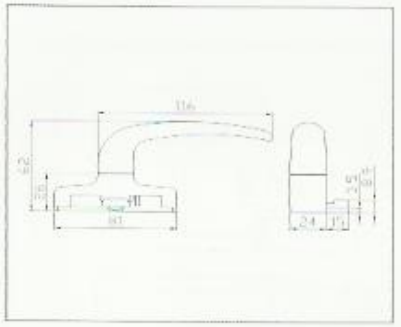



9.01.0089
铝单点 8 号执手
Aluminum single-point #8 handle

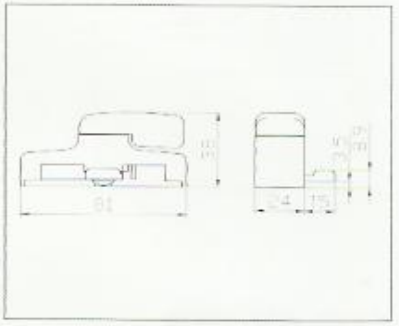



9.01.0146
单点 10 号执手
Single-point #10 handle

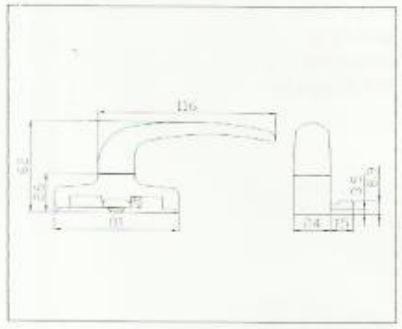



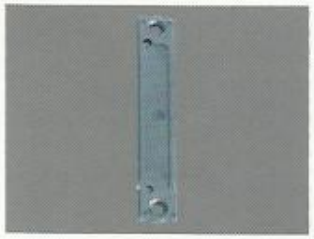

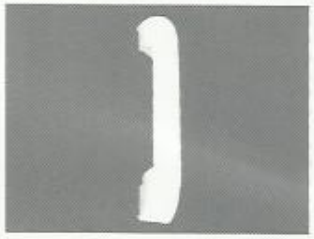





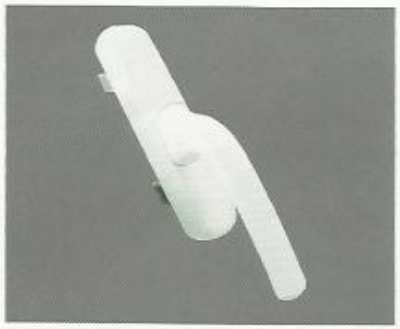

9.01.0030
514-2 执手
514-2 handle

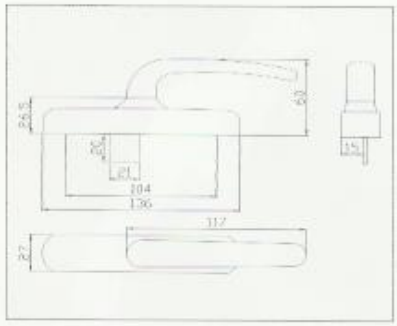

9.01.0095
514-1 执手
514-1 handle

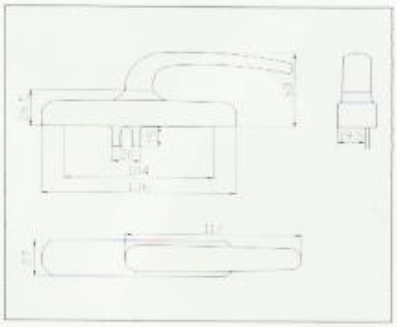

9.01.0096
514-4 执手
514-4 handle



适用范围: 铝合金、平开门窗
Application scope: aluminum alloy,casement doors & windows

产品选择: 拨舌(1号、2号、4号、5号、6号、7号、8号)
Products at choice: with the same plucking(#1/#2/#4/#5/#6/#7/#8)

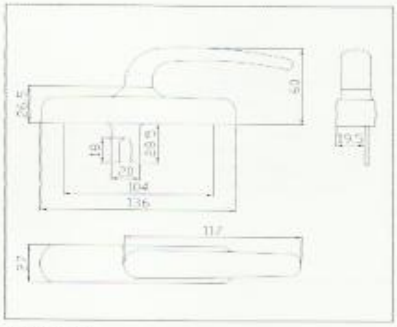

9.01.0097
514-5 执手
514-5 handle

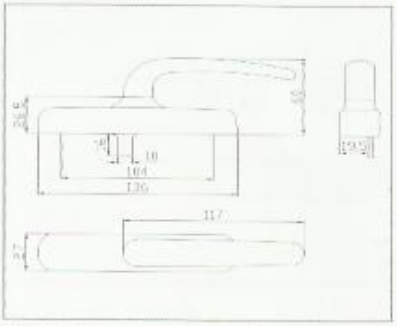

9.01.0098
514-6 执手
514-6 handle

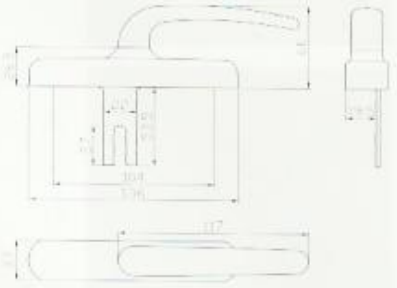

9.01.0176
514-55 执手
514-55 handle

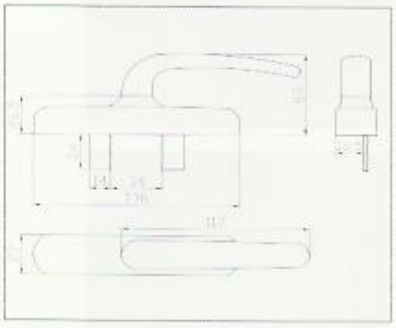

9.01.0134
514-7 执手
514-7 handle

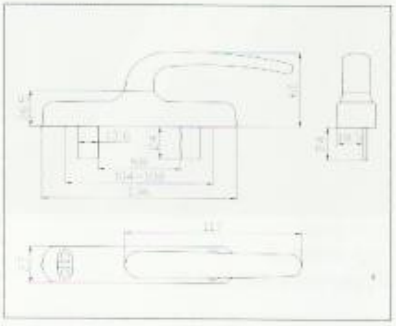

9.01.0232
514-8 执手
514-8 handle



9.01.0033
513 铝执手
513 Aluminum handle

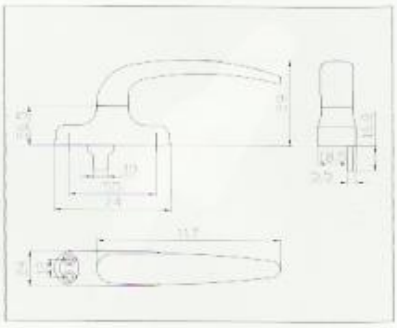

9.01.0034
513-1 执手
513-1 handle

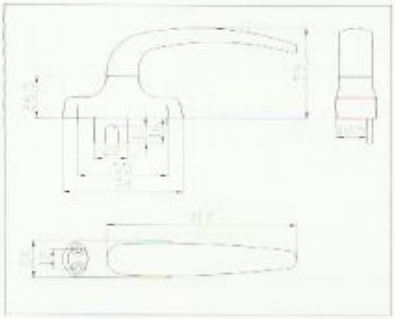

适用范围：铝合金平开窗
Application scope: aluminum alloy casement window

产品选择：拨舌（1号、2号、3号、4号）
Products at choice: with the same plucking(#1/#2/#3/#4)

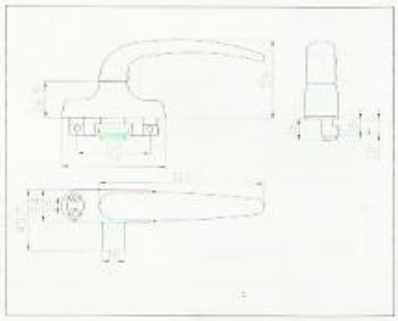

9.01.0035
513-2 执手
513-21 handle

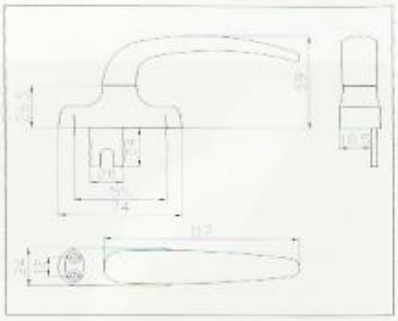

9.01.0099
513-3 执手
513-3handle

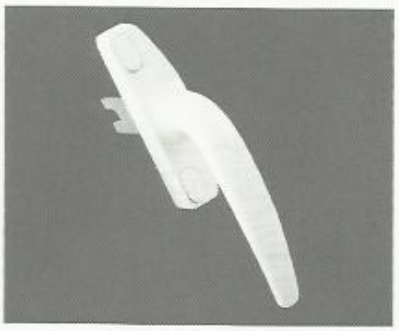

9.01.0029
517-1(512-3) 执手
517-1(512-3) handle

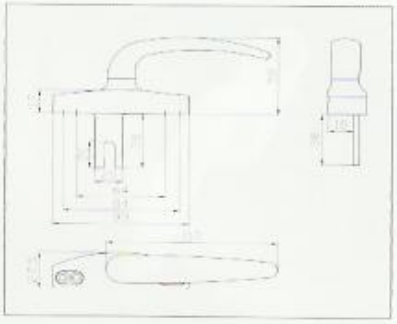

9.01.0094
517-2 执手
517-2handle

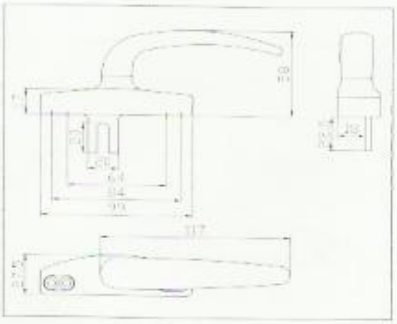

适用范围：铝合金平开窗
Application scope: aluminum alloy casement window

产品选择：拨舌（1号、2号、3号）
Products at choice: with the same plucking(#1/#2/#3)

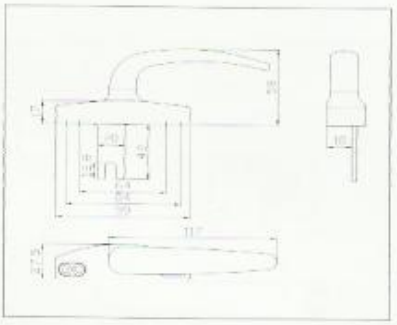

9.01.0233
517-3 执手
517-3 handle



9.01.0278
529 执手
529 Handle

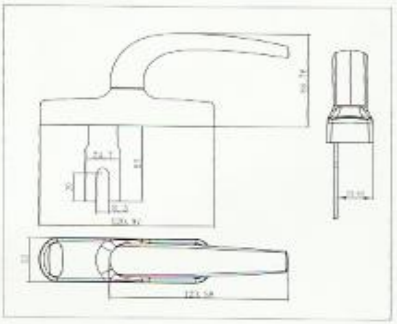

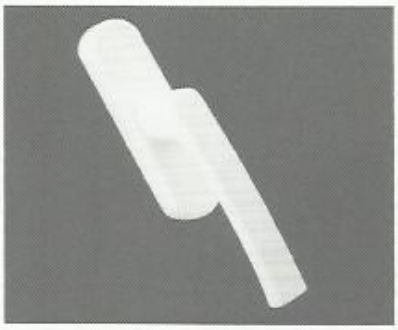

9.01.0227
幕墙 4-4 号执手
screen wall #4-4 handle

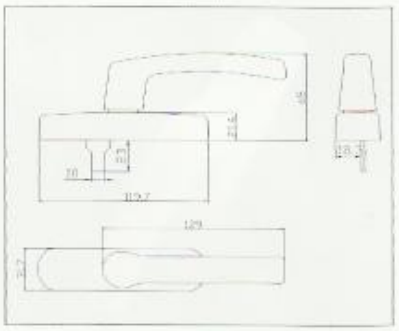

9.01.0224
幕墙 4-1 号执手
screen wall #4-1 handle

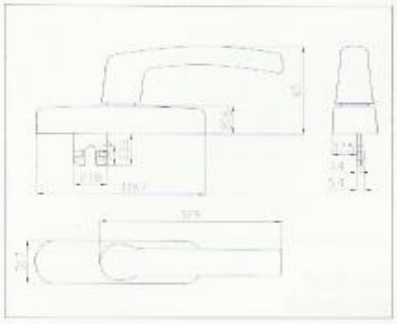

适用范围：铝合金、幕墙平开窗
Application scope: aluminum alloy, screen wall inward casement window

产品选择：拔舌 (1 号、2 号、3 号、4 号)
Products at choice: with the same plucking(#1/#2/#3/#4)

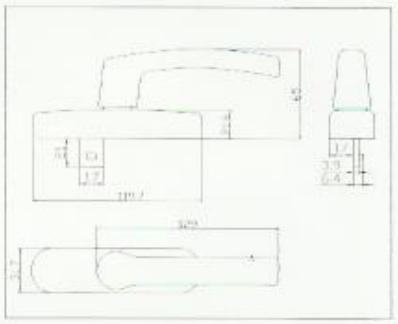

9.01.0225
幕墙 4-2 号执手
screen wall #4-2 handle

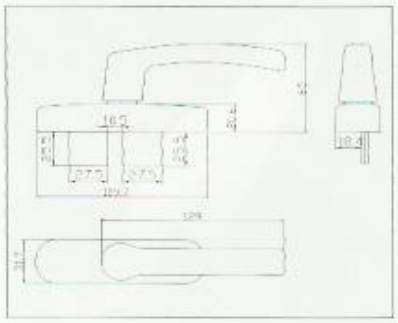

9.01.0226
幕墙 4-3 号执手
screen wall #4-3 handle

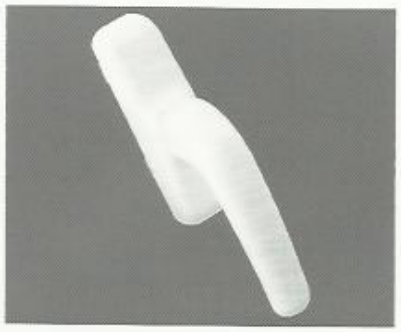

适用范围：铝合金、幕墙平开窗
Application scope: aluminum alloy, screen wall inward casement window

产品选择：拨舌（1号、2号）
Products at choice: with the same plucking(#1/#2)

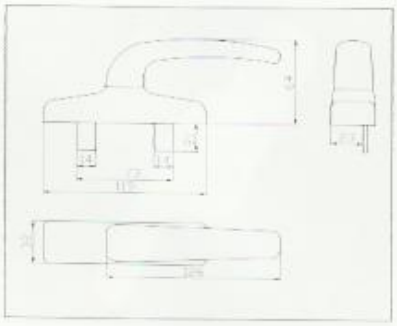

9.01.0031
516-2 执手
516-2 handle

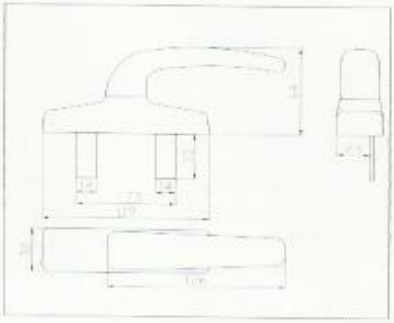

9.01.0228
516-2B 执手
516-2 B handle

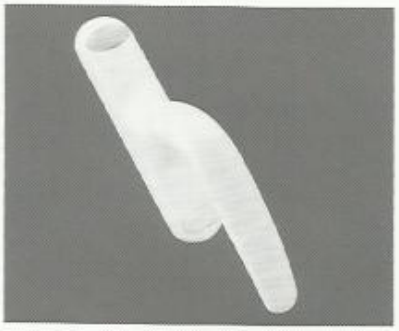

适用范围：铝合金、幕墙平开窗
Application scope: aluminum alloy, screen wall inward casement window

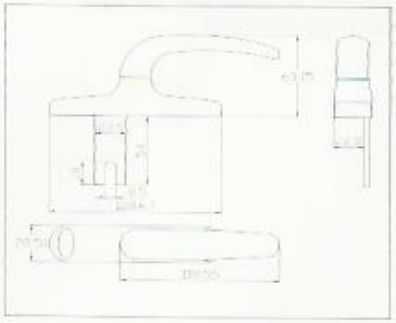

9.01.0189
518 执手
518 handle

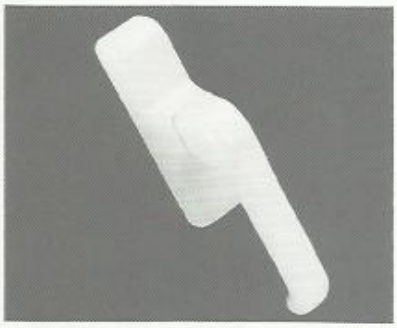

适用范围：铝合金、幕墙平开窗
Application scope: aluminum alloy, screen wall inward casement window

产品选择：拨舌（1号、2号）
Products at choice: with the same plucking(#1/#2)

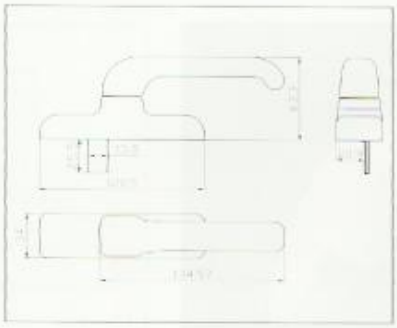

9.01.0144
522-1执手
522-1 handle

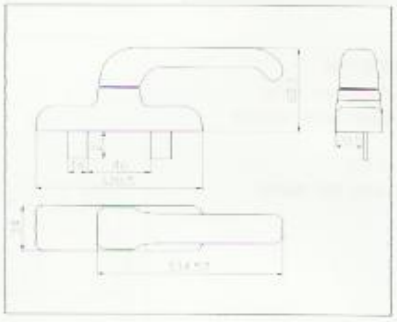

9.01.0154
522-2执手
522-2 handle

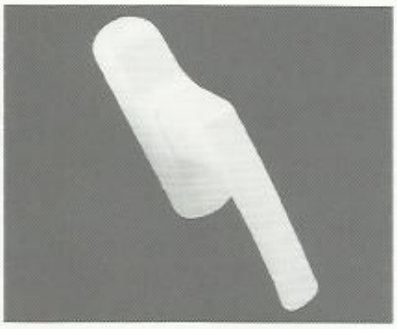

适用范围：铝合金、幕墙平开窗
Application scope: aluminum alloy, screen wall inward casement window

产品选择：拨舌（1号、2号）
Products at choice: with the same plucking(#1/#2)

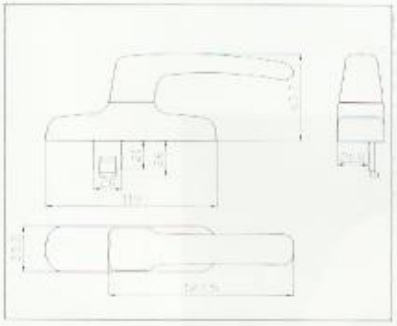

9.01.0145
523-1执手
523-1 handle

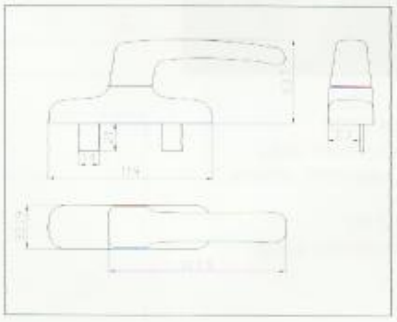

9.01.0151
523-2执手
523-2 handle

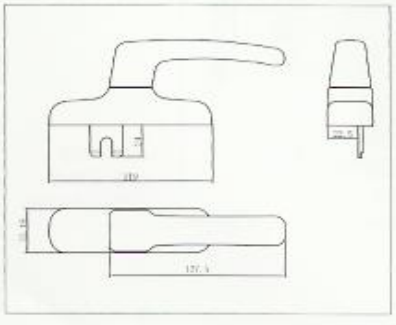

9.01.0279
523-3执手
523-3 handle

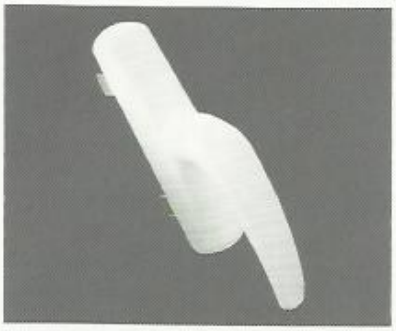

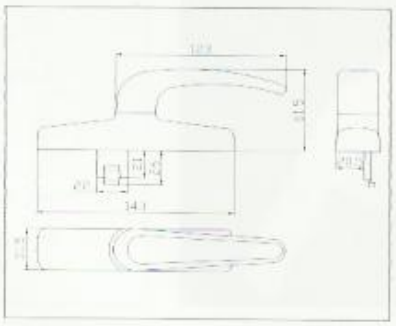

9.01.0152
524-1执手
524-1 handle

适用范围：铝合金、幕墙平开窗
Application scope: aluminum alloy, screen wall inward casement window

产品选择：拔舌（1号、2号）
Products at choice: with the same plucking(#1/#2)

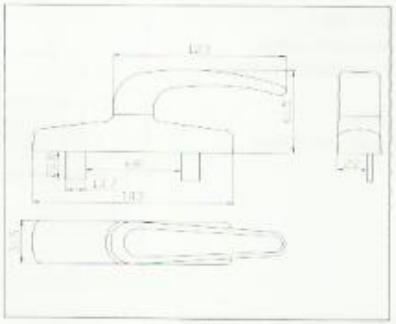

9.01.0130
524-2执手
524-2 handle

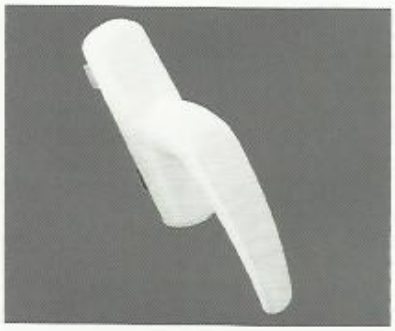

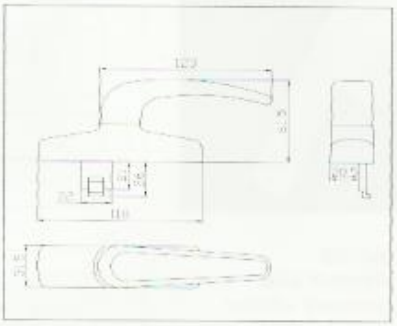

9.01.0153
525-1执手
525-1handle

适用范围：铝合金、幕墙平开窗
Application scope: aluminum alloy, screen wall inward casement window

产品选择：拔舌（1号、2号）
Products at choice: with the same plucking(#1/#2)

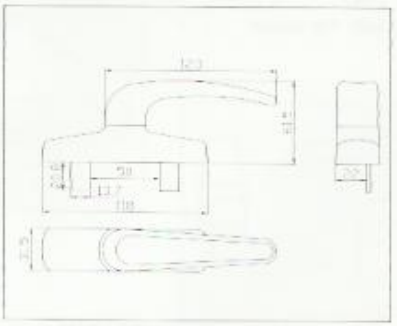

9.01.0129
525-2执手
525-2 handle

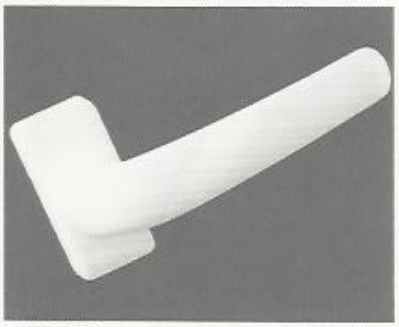

9.01.0032
718 执手
718 handles

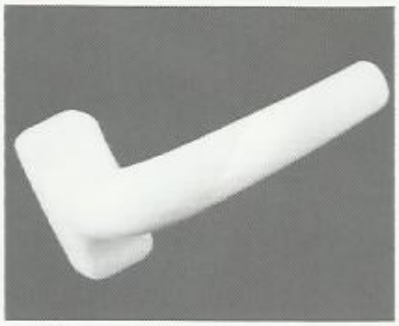

9.01.0166
718-2 执手
718-2 handles

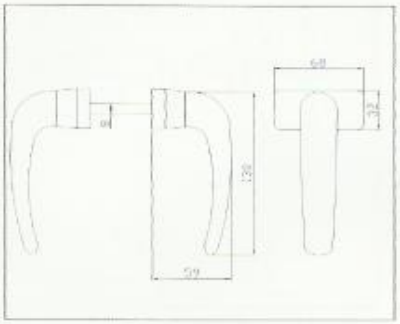

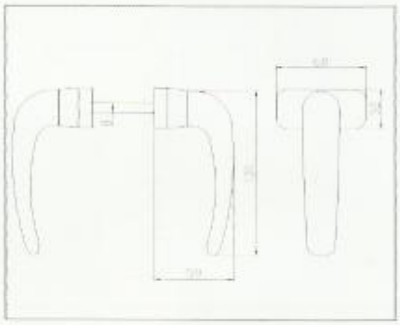

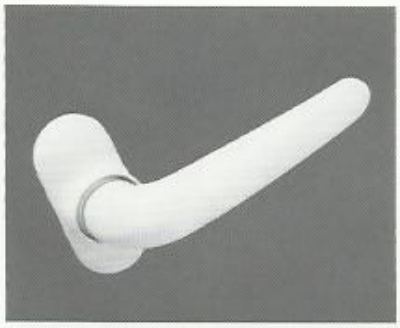

9.01.0235
17 号对开执手
#17 twin handles

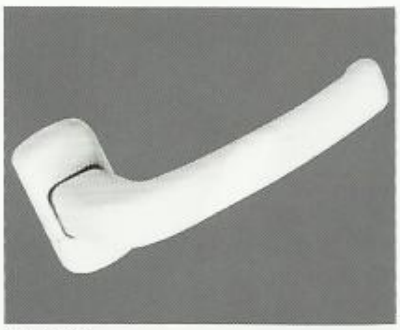

9.01.0141
6 号对开执手
#6 twin handles

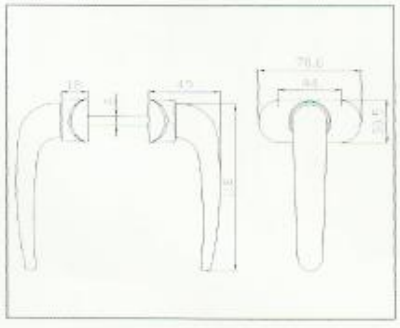

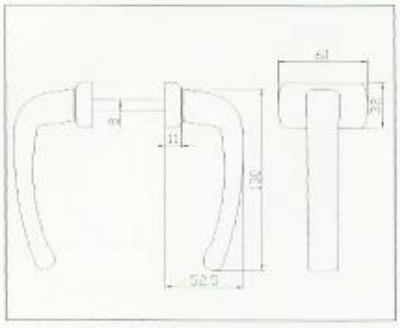

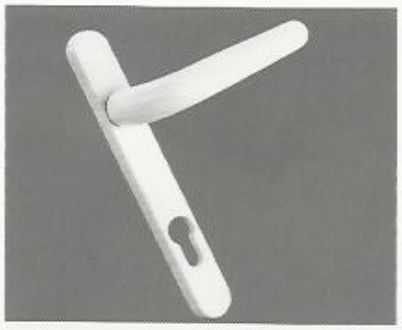

9.01.0072
838 面板执手
838 Panel handle

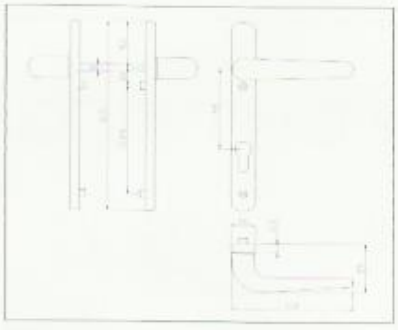

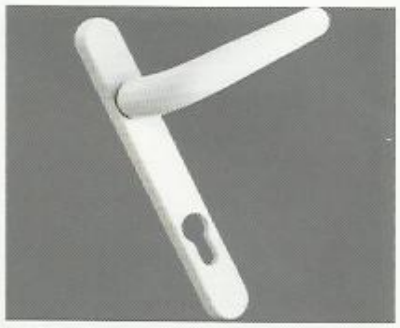

9.01.0065
818 面板执手
818 Panel handle

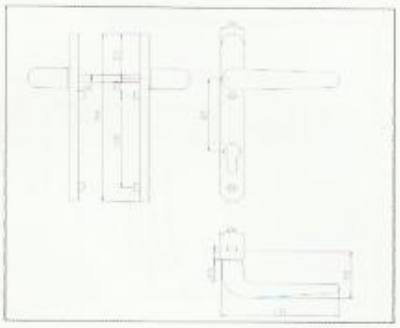

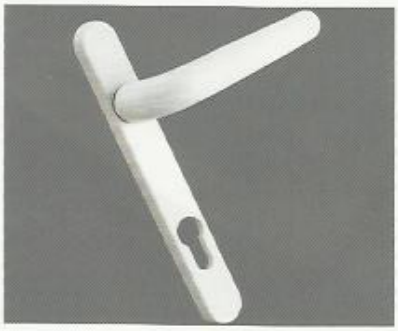

9.01.0066
828 面板执手
828 Panel handle

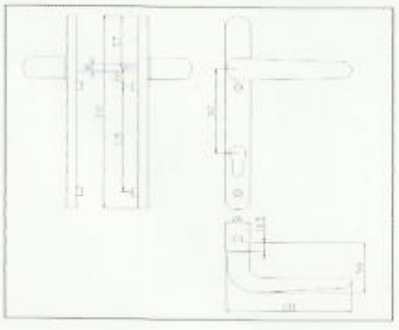

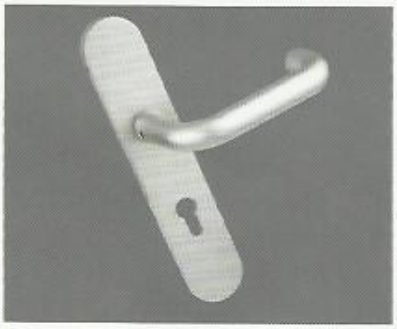

9.01.0241
9/14 面板执手
9/14 panel handle

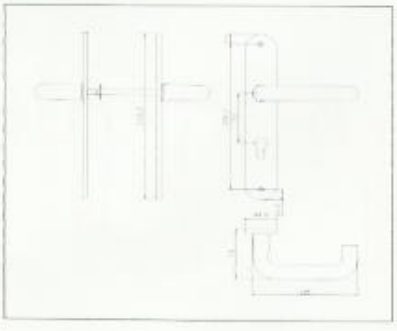

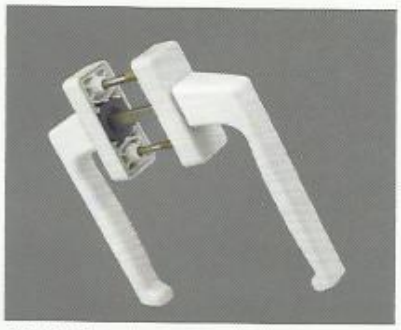

9.01.0199
标准 2 号对开执手
Standard #2 twin handles



9.01.0147
2/11 面板执手
2/11 panel handle



9.01.0201
2/13 面板执手
2/13 panel handle

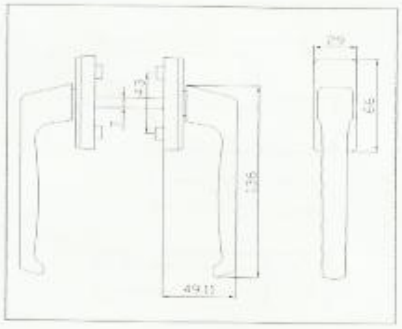

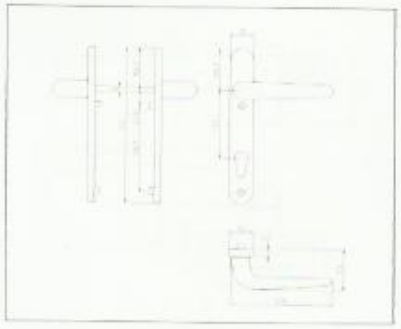

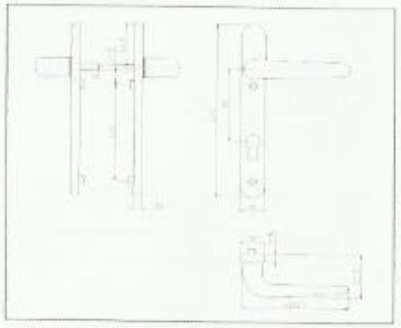

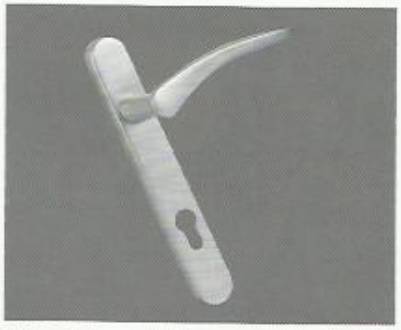

9.01.0270
15/13 面板执手 (铝冲压式)
15/13 panel handle(aluminum)

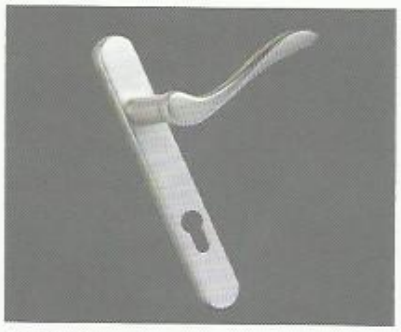

9.01.0271
16/13 面板执手 (铝冲压式)
16/13 panel handle(aluminum)

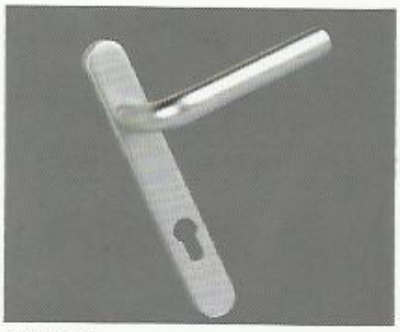

9.01.0272
17/13 面板执手 (铝冲压式)
17/13 panel handle(aluminum)

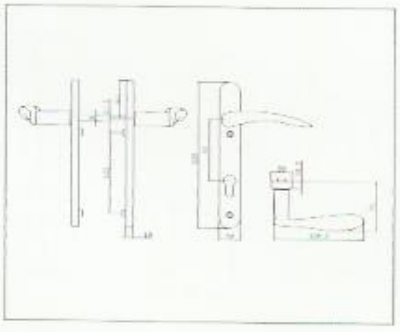

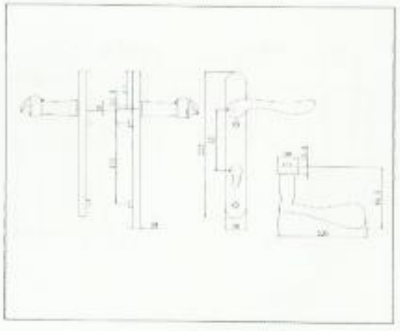

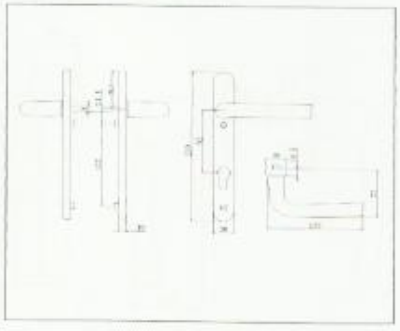



9.01.0273
18/13 面板执手 (铝冲压式)
18/13 panel handle(aluminum)

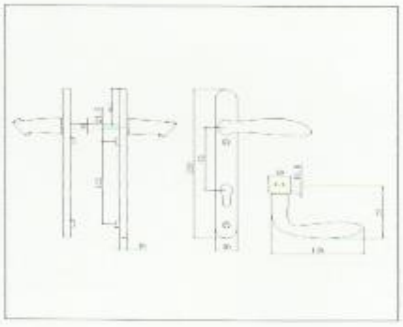

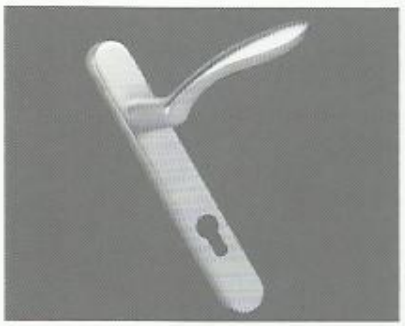

9.01.0274
19/13 面板执手 (铝冲压式)
19/13 panel handle(aluminum)

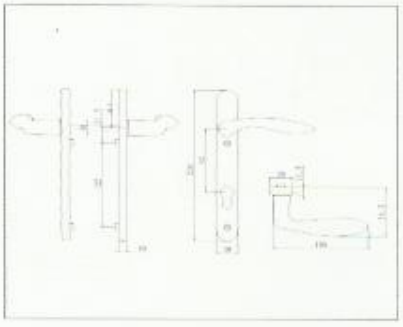

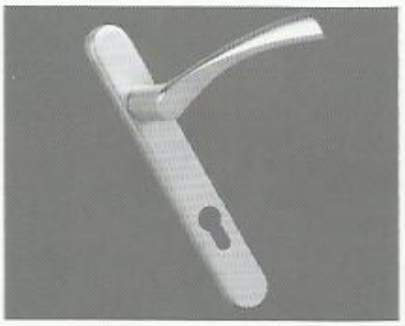

9.01.0275
20/13 面板执手 (铝冲压式)
20/13 panel handle(aluminum)

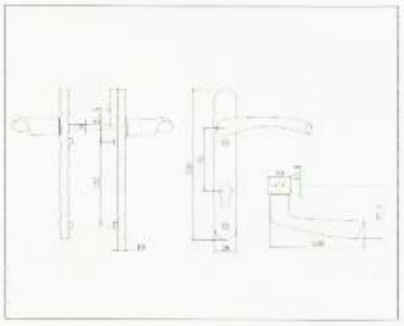

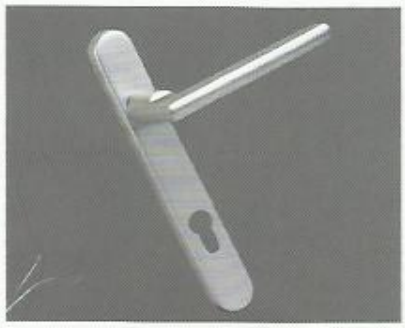

9.01.0276
21/13 面板执手 (铝冲压式)
21/13 panel handle(aluminum)

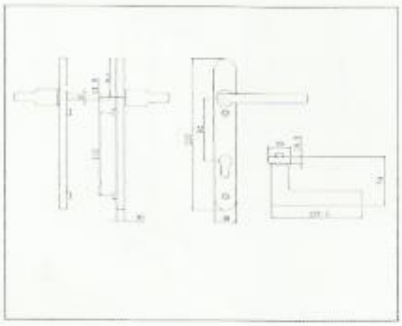

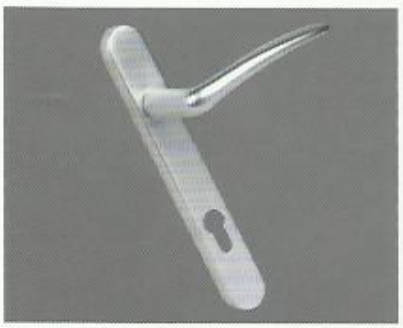

9.01.0277
22/13 面板执手 (铝冲压式)
22/13 panel handle(aluminum)

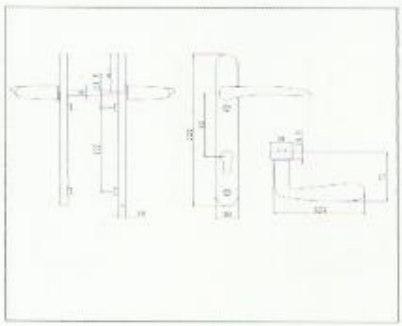



9.01.0051
一号面板执手
#1 Panel handle

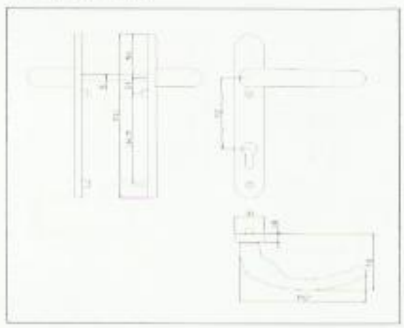



9.01.0202
1+2/3 面板执手
1+2/3 panel handle

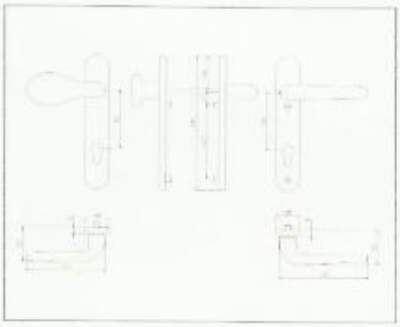

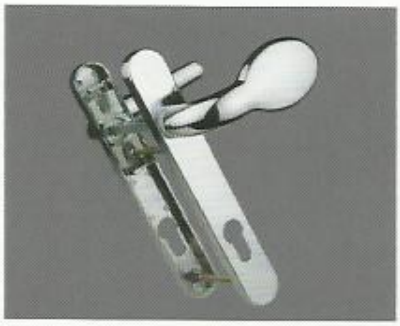

9.01.0156
1+2/11 面板执手
1+2/11 panel handle

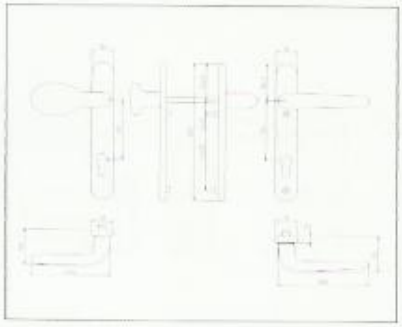

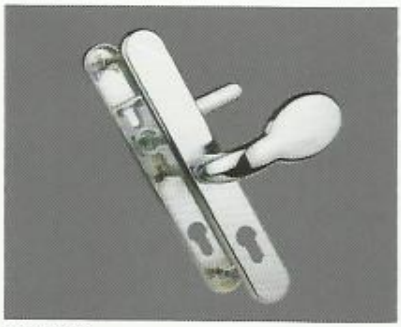

9.01.0076
英式高低面板执手
English high low panel handle

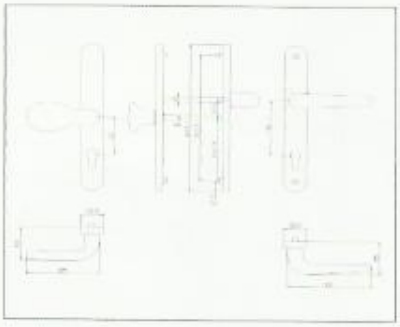



9.01.0245
1+10/18 面板执手
1+10/18 panel handle

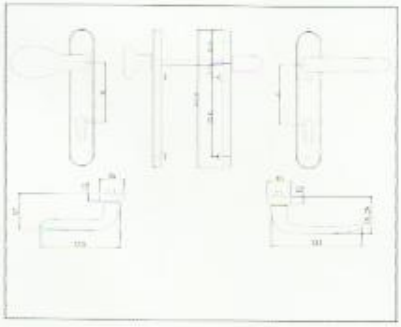

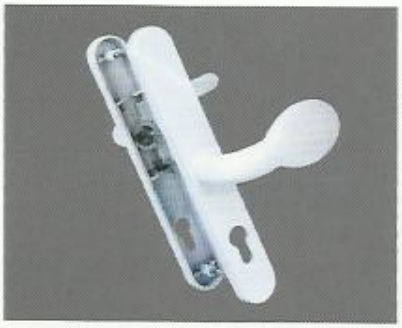

9.01.0244
1/17+10/16 面板执手
1/17+10/16 panel handle

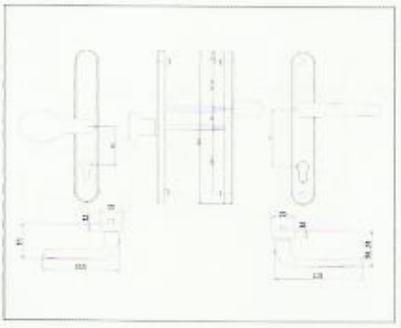

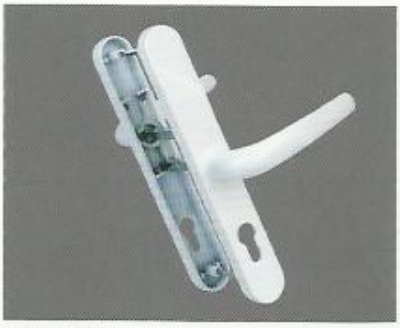

9.01.0244-1
10/16+17 面板执手
10/16+17 panel handle

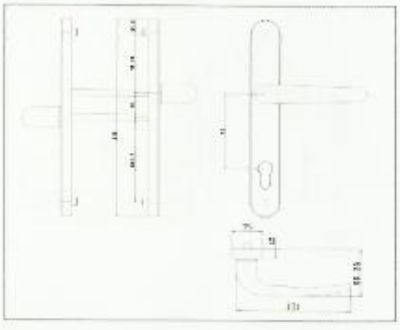

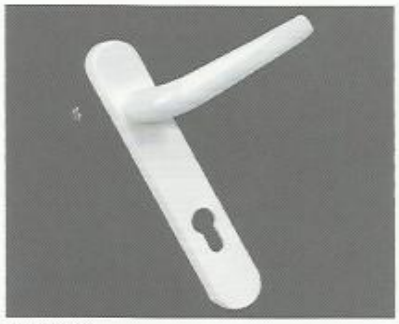

9.01.0246
10/18 面板执手
10/18 panel handle

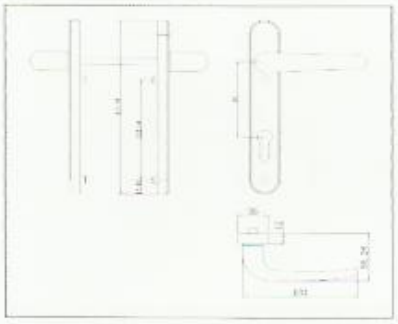



9.01.0242
10/16 面板执手
10/16 panel handle

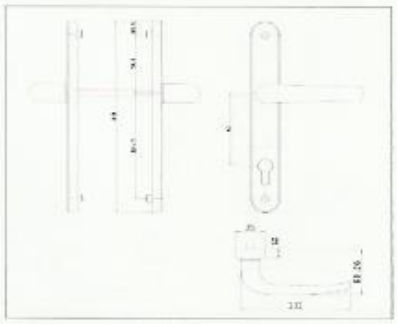



9.01.0052
二号面板执手
#2 Panel handle

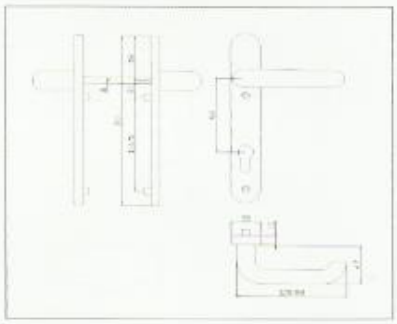

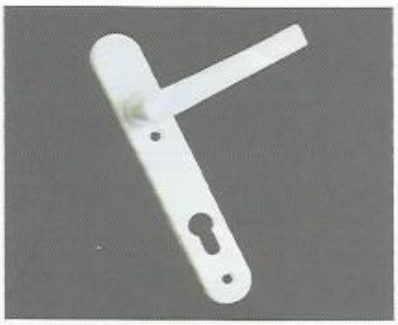

9.01.0053
三号面板执手
#3 Panel handle

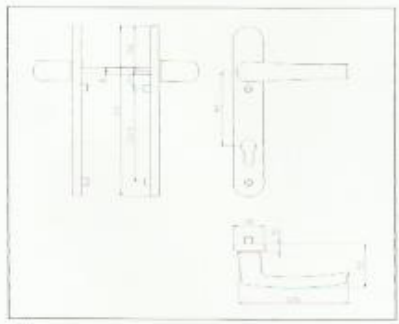



9.01.0100
9 号面板执手
#9 Panel handle

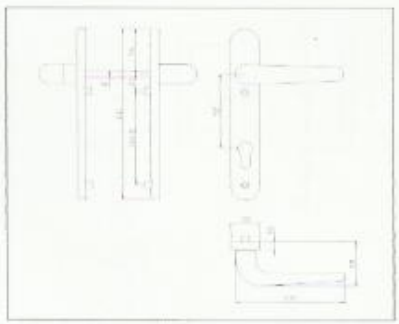



9.01.0150
7/10 面板执手
7/10 panel handle

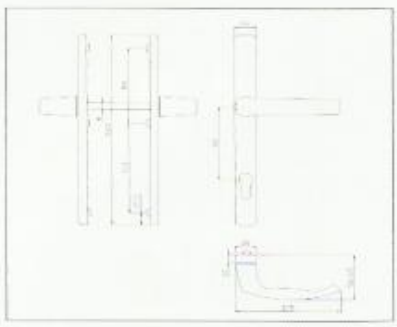

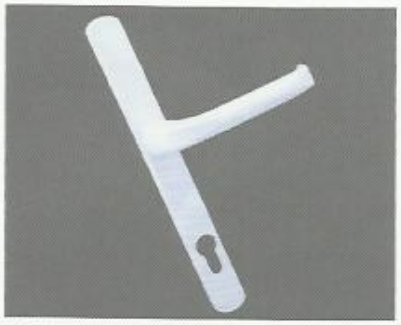

9.01.0190
8/12 面板执手
8/12 panel handle

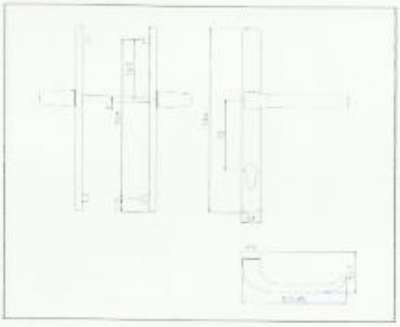



9.01.0231
2/2 面板执手
2/2 panel handle

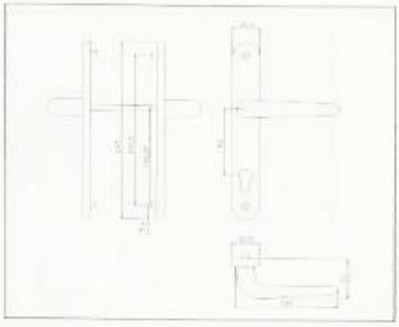

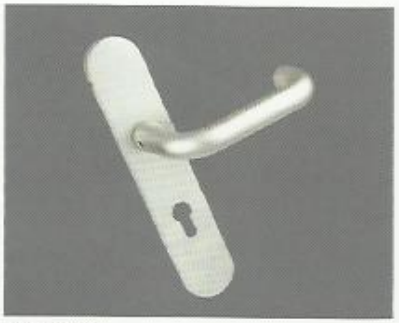

9.01.0241
9/14 面板执手
9/14 panel handle

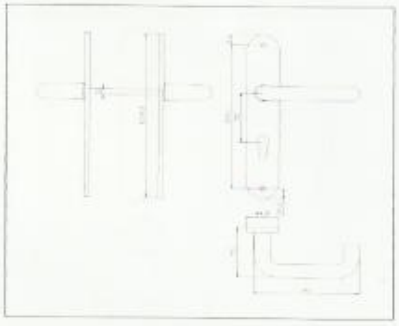

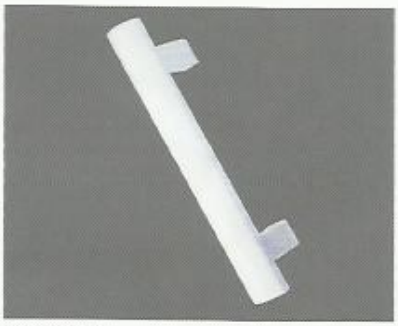

9.01.0045
拉手一号
Handle #1

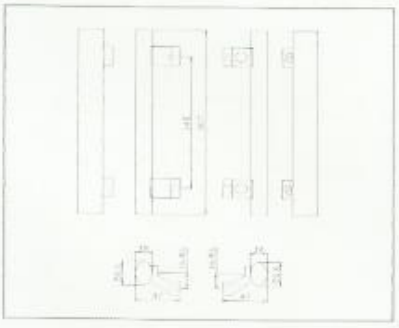

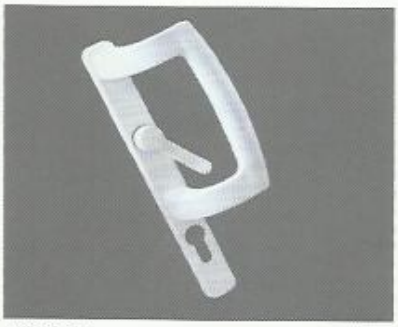

9.01.0064
拉手三号
Handle #3

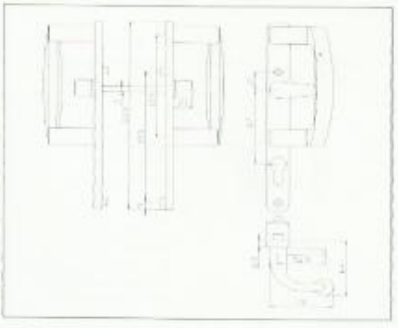

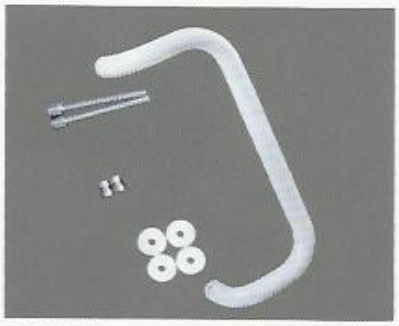

9.01.0080
拉手四号
Handle #4

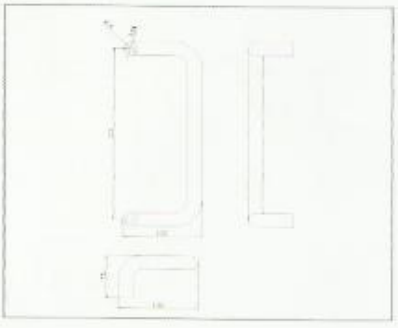

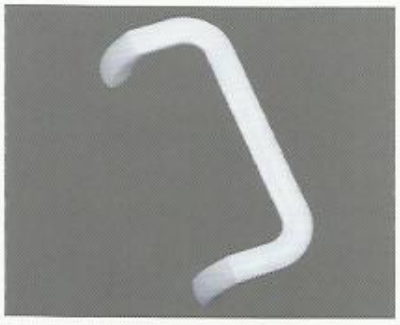

9.01.0188
拉手 6 号 (塑料大拉手)
Handle #6 (plastic)

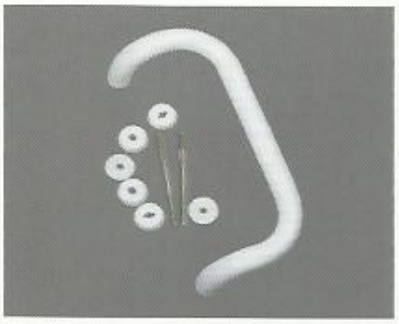

9.01.0194
拉手 7 号 (铝执手)
Handle #7 (aluminum)

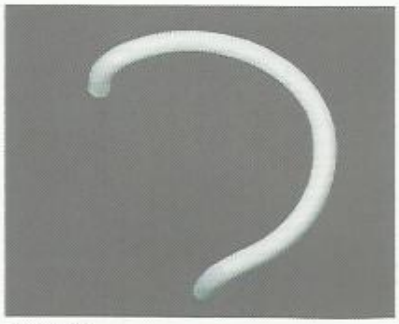

9.01.0218
拉手 8 号 (铝执手)
Handle #8 (aluminum)

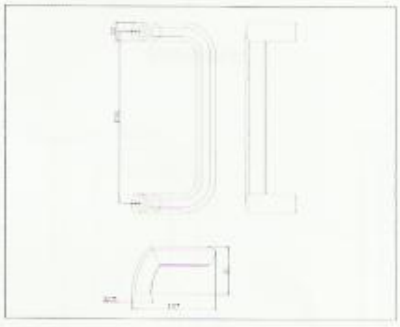

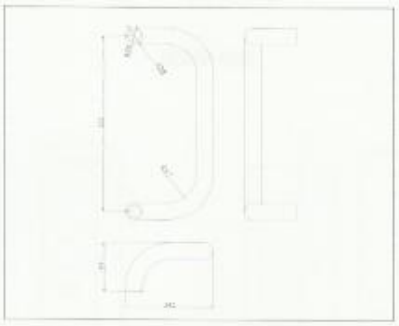

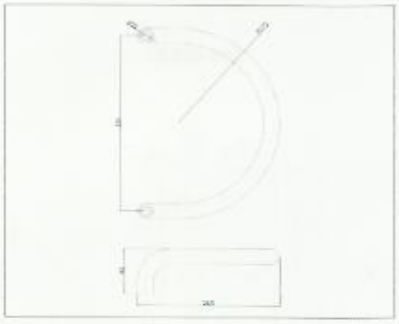

通用面板如下:



1 号面板



2 号面板

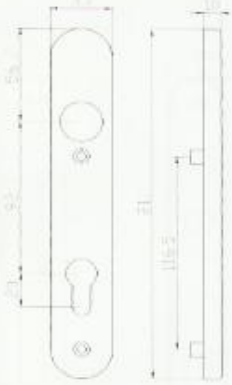

3 号面板

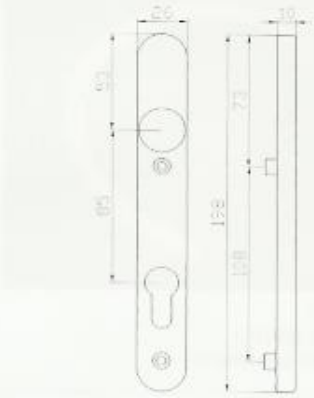

818 号面板

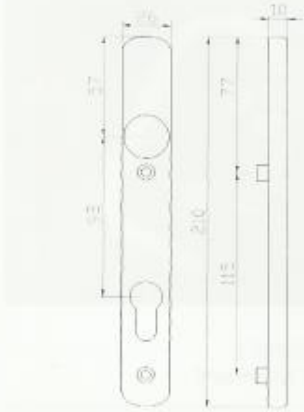

828 号面板

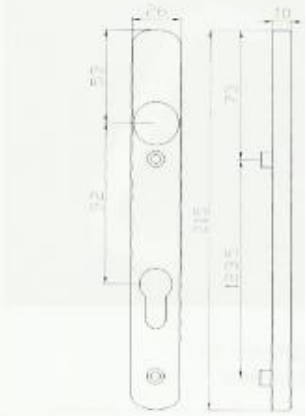

838 号面板

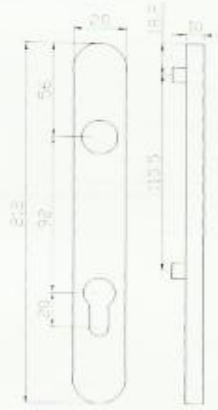

7 号面板



10 号面板

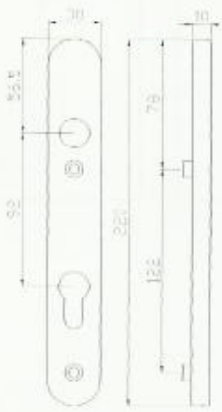

13 号面板

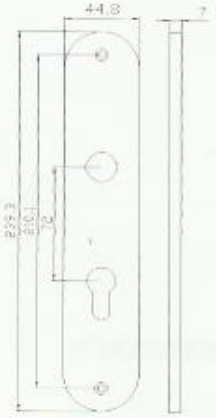

14 号面板

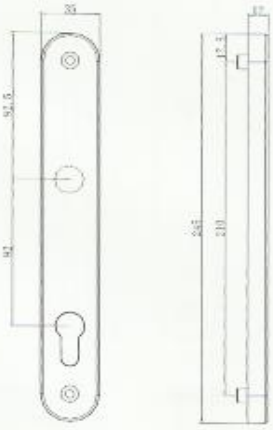

16 号面板

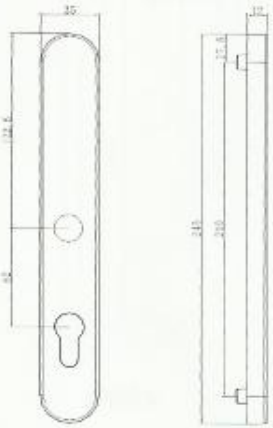

17 号面板

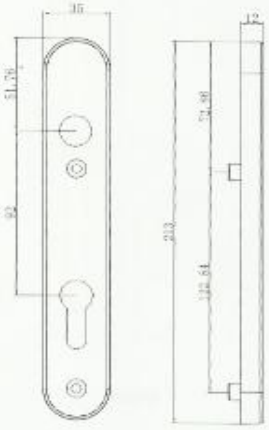

18 号面板

通用面板柄如下:

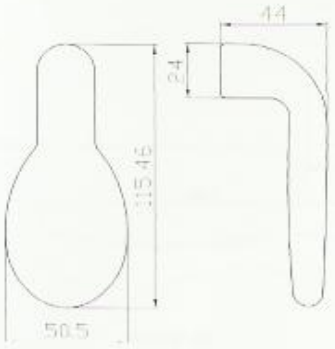

1号手柄

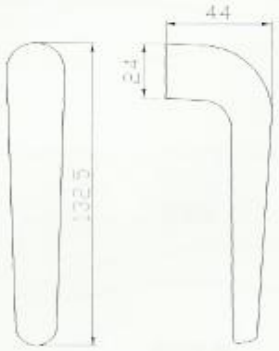

2号手柄

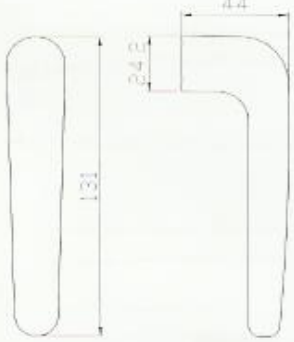

3号手柄

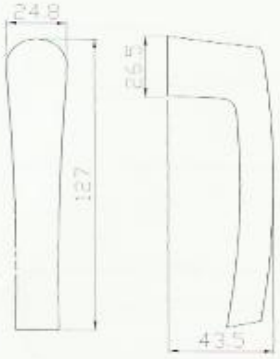

4号手柄

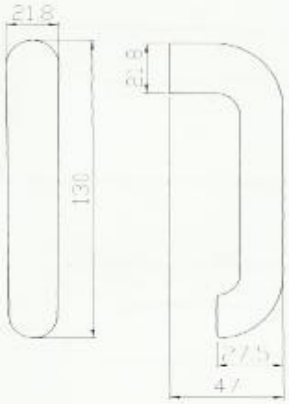

5号手柄

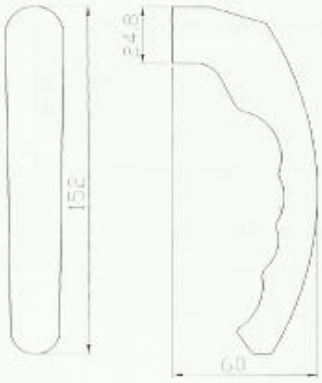

6号手柄

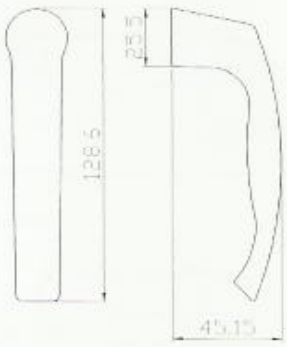

7号手柄

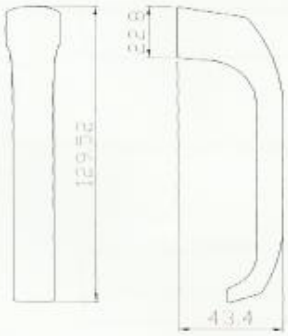

8号手柄

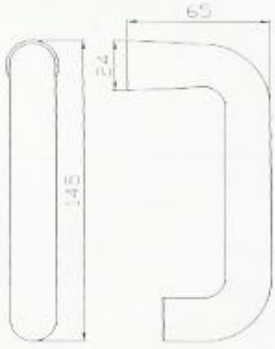

9号手柄

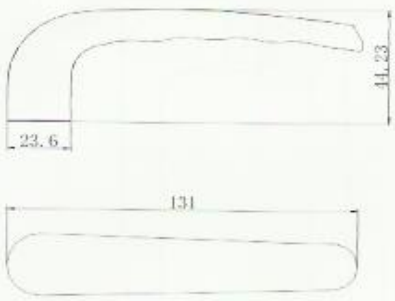

10 号手柄

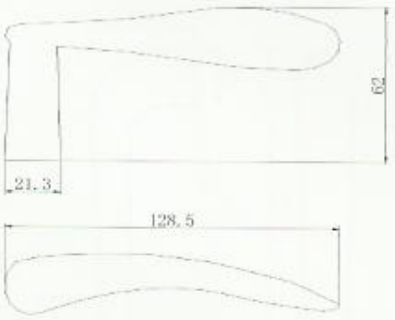

15 号手柄

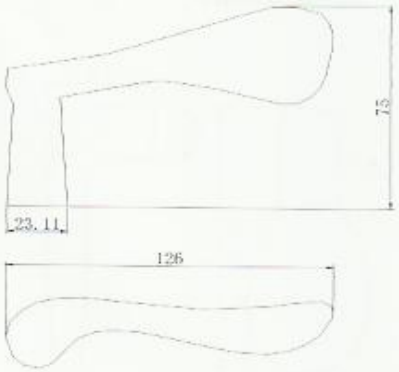

16 号手柄

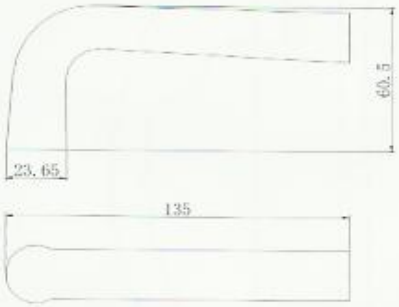

17 号手柄

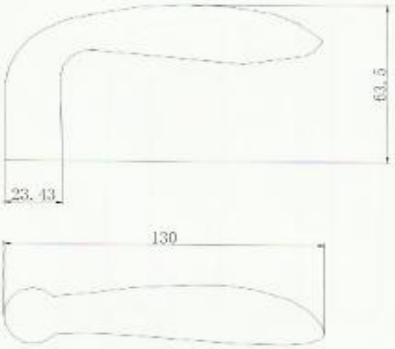

18 号手柄

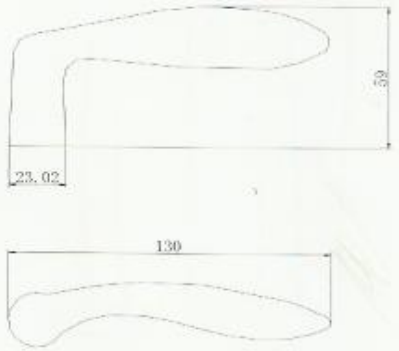

19 号手柄

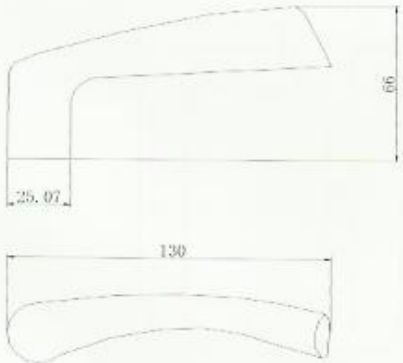

20 号手柄

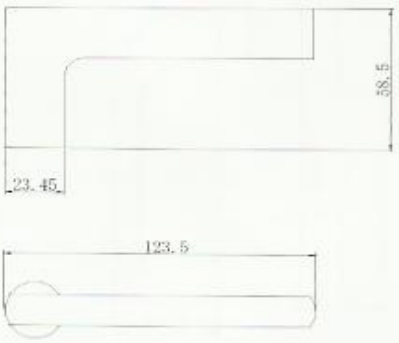

21 号手柄

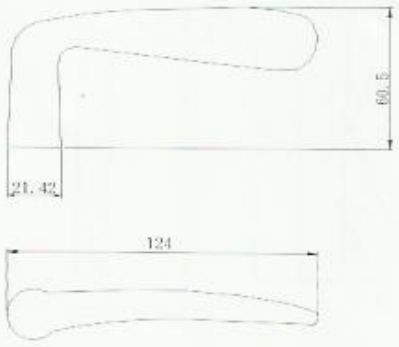

22 号手柄

传动器系列 Transmission Series

技术信息：
符合 JG/T 126-2007 标准；
符合 GB/T 10125-1997 标准；
符合 Q/FLSJ 02-2008 标准；
材料：
动杆、定杆采用 GB/T11253 碳素结构钢中不低于 Q235 钢带力学性能的材料；
锁块、支架采用力学性能不低于 GB/T16746ZZnAl4Cu1Mg 铸造锌合金铁材料；
锁柱采用力学性能不低于 GB/T905 规定中 Q235 的材料；
齿轮采用力学性能不低于 GB/T702 规定中 08F 的材料；



传动器系列 Transmission Series

技术信息：
符合 JG/T 126-2007 标准；
符合 GB/T 10125-1997 标准；
符合 Q/FLSJ 02-2008 标准；
材料：
动杆、定杆采用 GB/T11253 碳素结构钢中不低于 Q235 钢带力学性能的材料；
锁块、支架采用力学性能不低于 GB/T16746ZZnAl4Cu1Mg 铸造锌合金铁材料；
锁柱采用力学性能不低于 GB/T905 规定中 Q235 的材料；
齿轮采用力学性能不低于 GB/T702 规定中 08F 的材料；



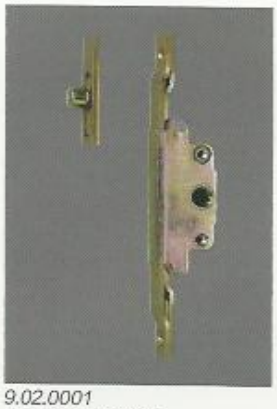



9.02.0001
外开 1-1 号传动器
Outward-opening #1-1 transmission



9.02.0099
外开 1-2 号传动器
Outward-opening #1-2
Transmission

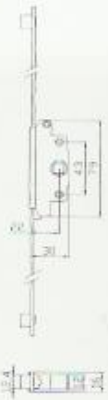

9.02.0013
单片外开传动器
Single-piece outward-opening
transmission

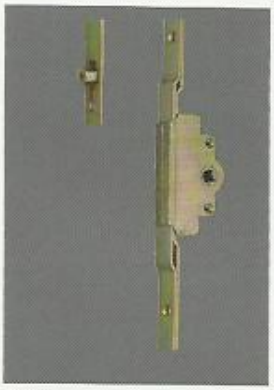

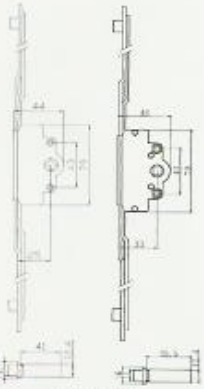

9.02.0005
门传动器
Door Transmission

9.02.0170
33 门传动器
33 Door transmission



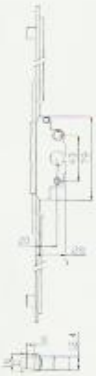

9.02.0119
外开 3 号传动器
Outward-opening #3 transmission





9.02.0003
单片推拉传动器
Single-piece slide transmission





9.02.0008
单片 2 号传动器
Single-piece #2 transmission

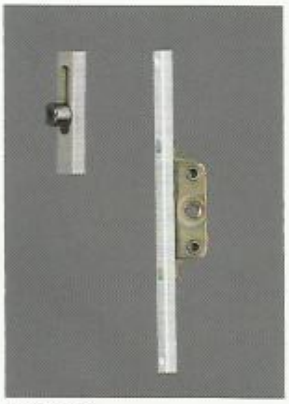



9.02.0011
铝双片传动器
Aluminum double-piece transmission

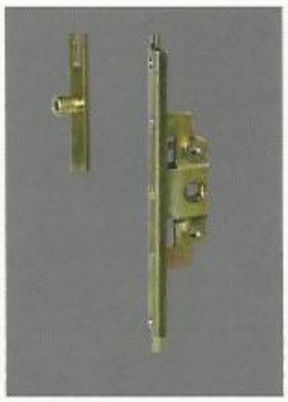

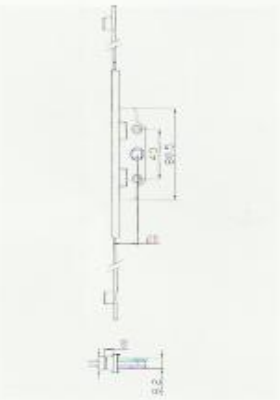

9.02.0098
保险单片传动器
Safety single-piece transmission

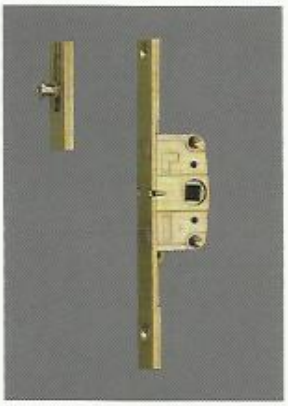



9.02.0088
英式防盗传动器
British burglarproof transmission





9.02.0111
22 英寸防盗传动器
22 Inch british burglarproof transmission





9.02.0121
三片双向传动器
Three-piece double-way transmission

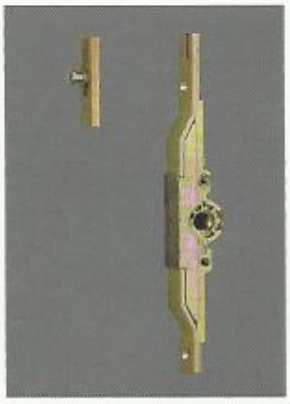



9.02.0104
推拉传动器
Slide transmission

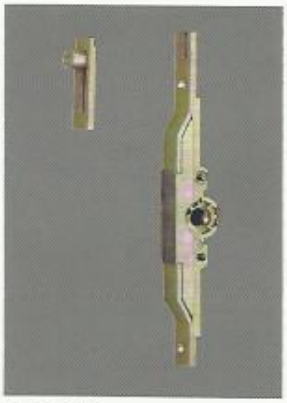



9.02.0002
内开传动器
Inward-opening transmission

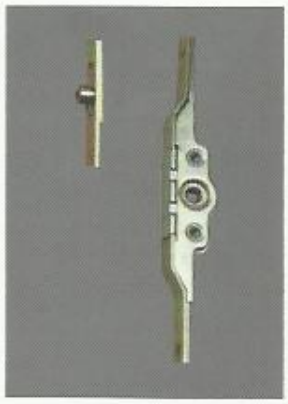

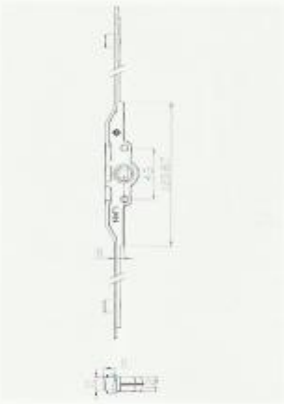

9.02.0116
内开 6 号传动器
Inward-opening #6 transmission

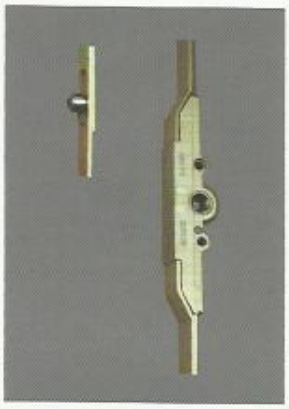



9.02.0117
内开 8 号传动器
Inward-opening #8 transmission



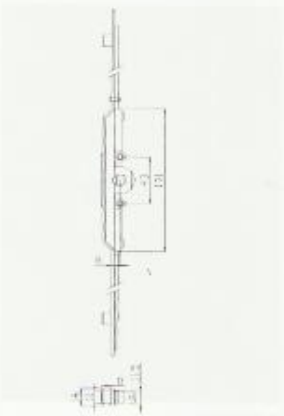

9.02.0118
内开 9 号传动器
Inward-opening #9 transmission





9.02.0100
双向传动器 4 号
Double-way transmission #4

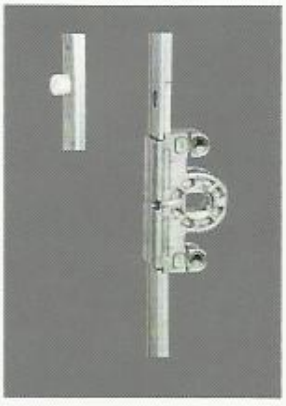

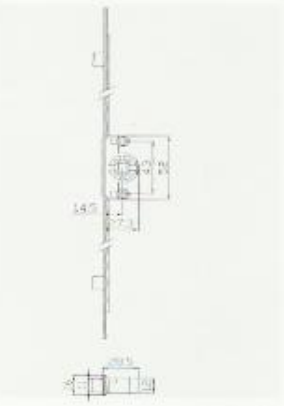

9.02.0090
3 号内开传动器
#3 Inward-opening transmission

安全型平开窗锁闭侧配置图

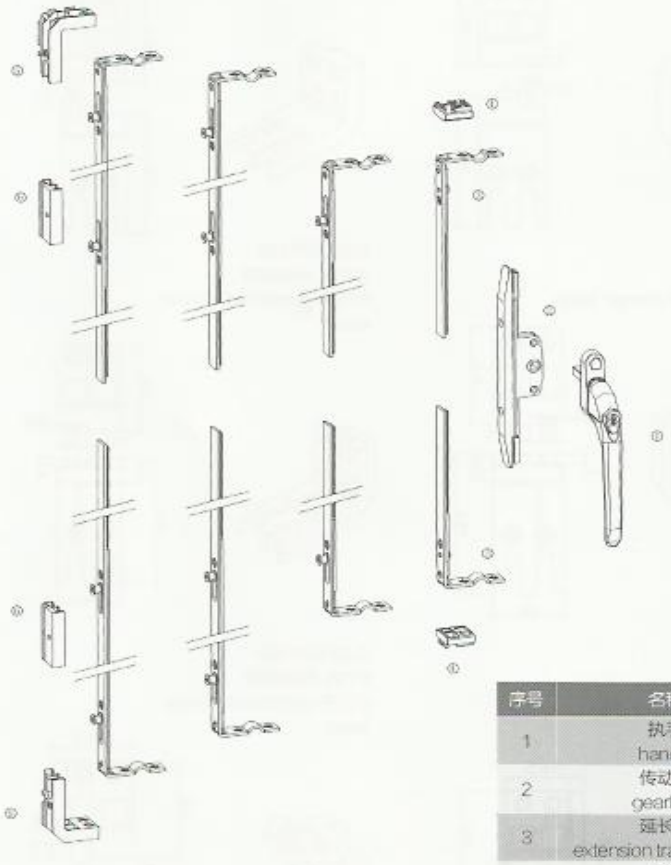

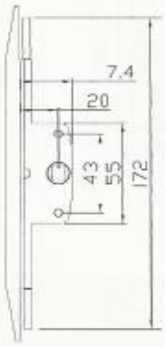

9.02.0132
双向 6# 传动盒
#6 Double-way transmission

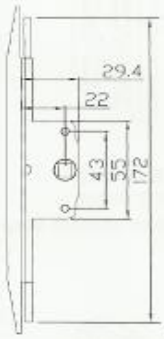

9.02.0133
双向 7# 传动盒
#7 Double-way transmission

安全型平开窗锁闭侧配置表

序号	名称	用量	备注
1	执手 handle	1	可先其它外开执手 can choose other outward handles
2	传动盒 gearbox	1	根据型材可选中心距 20 或 22mm choose 20mm or 22mm according to the profile
3	延长件 extension transmission	2	根据窗型高度可选相应规格 choose the length according to the window height
4	插座 corner keep	2	根据型材可选其它规格 choose other ones according to the profile
5	拐角锁块 combined corner keep	2	根据型材可选其它规格 choose other ones according to the profile
6	王字锁块 mushroom keep	2	根据型材可选其它规格 choose other ones according to the profile

名称	编号	(mm)	L(mm)	L1(mm)		
163-8 延长件 163-8 extension transmission	9.02.0123	350-450	163	94	--	--
335-8 延长件 335-8 extension transmission	9.02.0124	451-750	335	245	1	8mm
485-8-1 延长件 485-8-1 extension transmission	9.02.0125	751-1050	485	225	2	8mm
485-8-2 延长件 485-8-2 extension transmission	9.02.0126	751-1050	485	225	1	8mm
637-8 延长件 637-8 extension transmission	9.02.0127	1051-1400	637	245	2	8mm
335-9 延长件 335-9 extension transmission	9.02.0128	451-750	335	245	1	9mm
485-9-1 延长件 485-9-1 extension transmission	9.02.0129	751-1050	485	225	2	9mm
485-9-2 延长件 485-9-2 extension transmission	9.02.0130	751-1050	485	225	1	9mm
637-9 延长件 637-9 extension transmission	9.02.0131	1051-1400	637	245	2	9mm

3.02.020142
209 王字锁块
209 mushroom keep

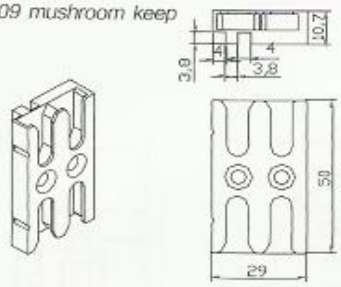

3.02.020143
409 拐角锁块
409 combined corner keep

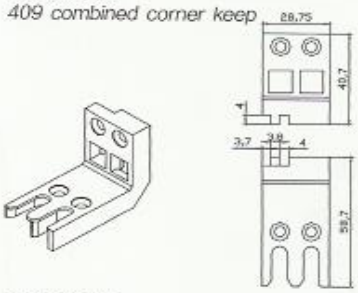

3.02.020144
609 拐角锁块
609 combined corner keep

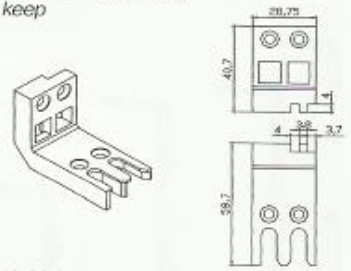

3.02.020145
218 王字锁块
218 mushroom keep

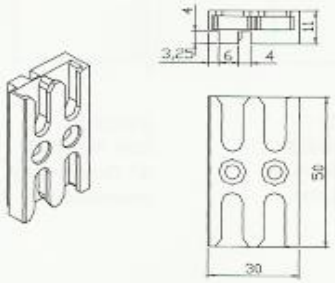

3.02.020147
418 拐角锁块
418 combined corner keep

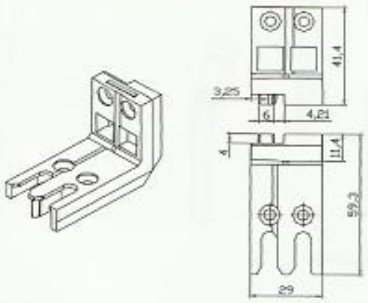

3.02.020148
618R 拐角锁块
618R combined corner keep

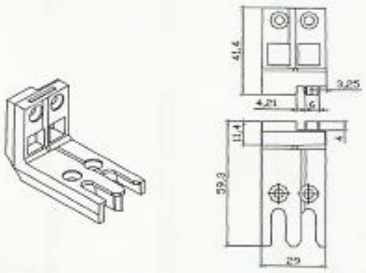

3.02.020146
211 王字锁块
211 mushroom keep

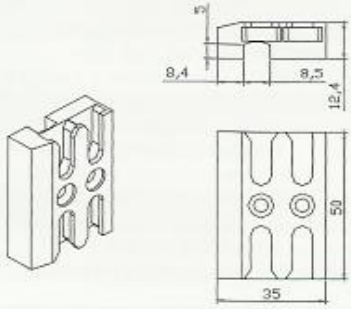

3.02.020149
411L 拐角锁块
411L combined corner keep

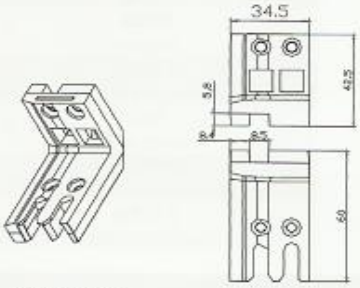

3.02.020150
611R 拐角锁块
611R combined corner keep

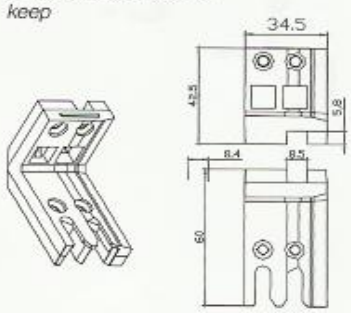

3.02.020160
221 王字锁块
221 mushroom keep

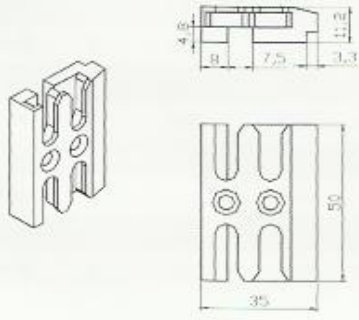

3.02.020161
421 拐角锁块
421 combined corner keep

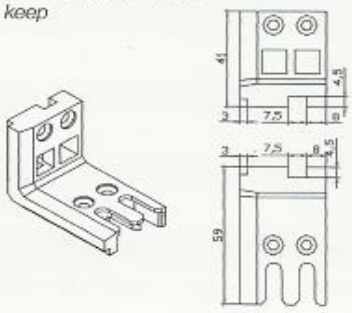

3.02.020162
621 拐角锁块
621 combined corner keep

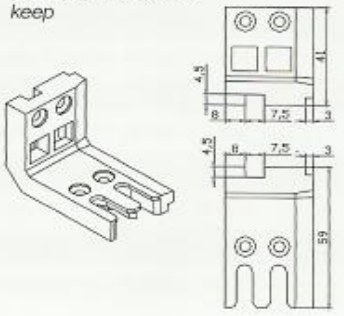

3.02.020166
4231 王字锁块
4231 mushroom keep

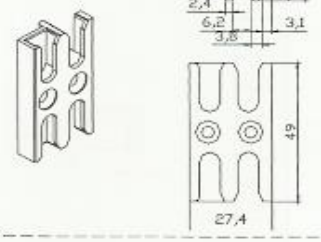

3.02.020168
423R 拐角锁块
423Rcombined corner keep

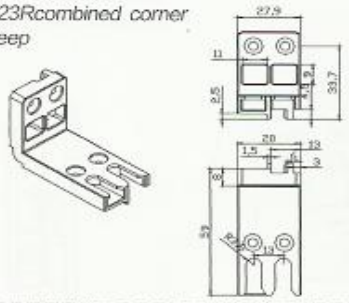

3.02.020169
423L 拐角锁块
423L combined corner keep

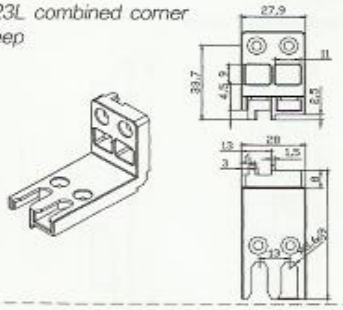

3.02.020170
299-19 王字锁块
299-19 mushroom keep

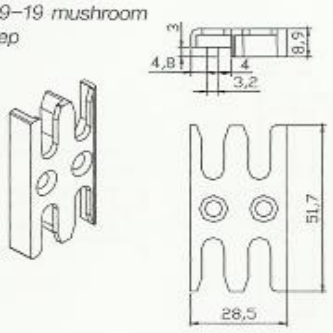

3.02.020171
999-19L 插座
999-19L corner keep

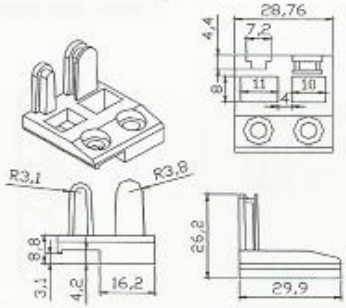

3.02.020172
999-19R 插座
999-19R corner keep

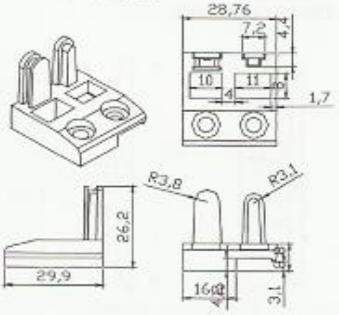

3.02.020174
203-19 王字锁块
203-19 mushroom keep

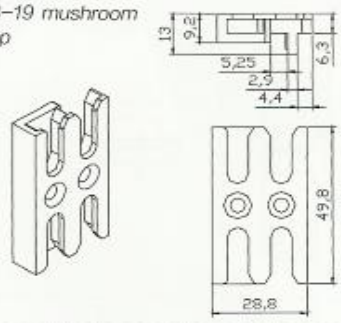

3.02.020177
403-19L 拐角锁块
403-19L combined corner keep

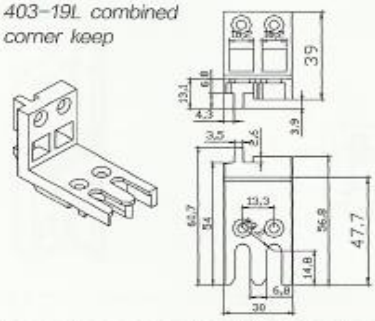

3.02.020178
403-19R 拐角锁块
403-19R combined corner keep

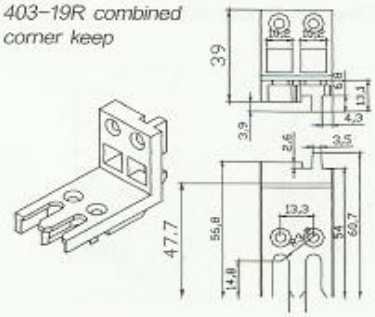

3.02.020173
220-19 王字锁块
220-19 mushroom keep

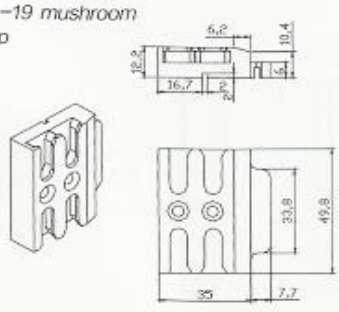

3.02.020176
420-19R 拐角锁块
420-19R combined corner keep

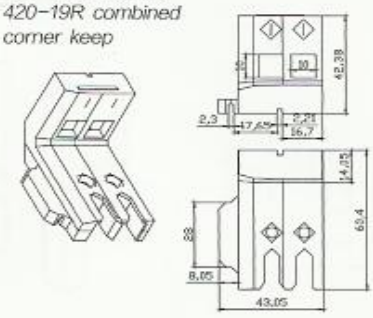

3.02.020175
620-19R 拐角锁块
620-19R combined corner keep

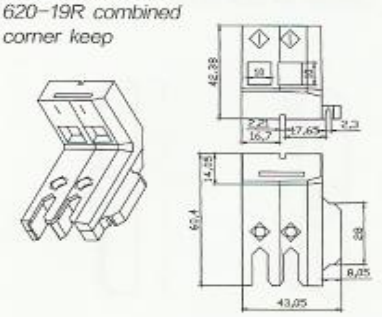

3.02.020028
普通锁块
General lock block

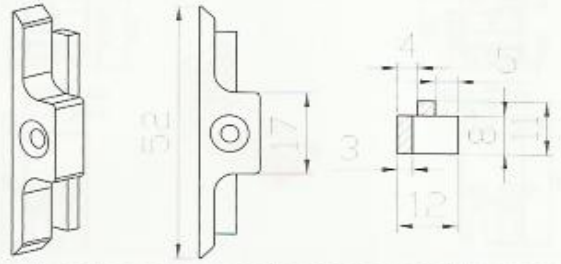

3.02.020034
川信锁块
Chuanxin lock block

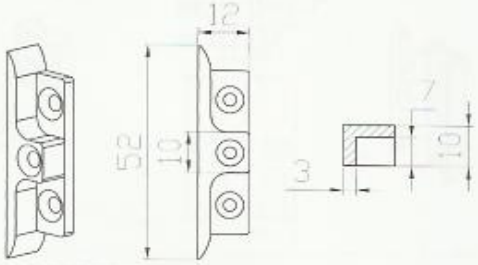

3.02.020035
德玛斯锁块
Demas lock block

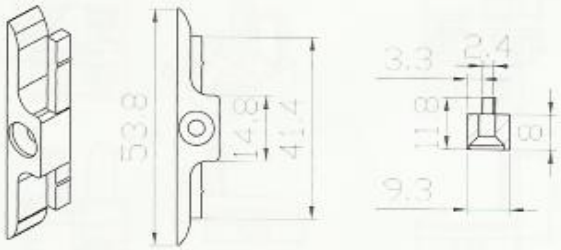

3.02.020036
兰根锁块
Langon lock block

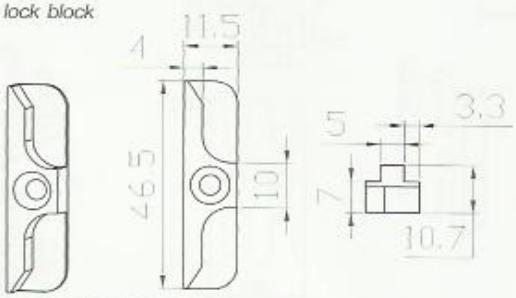

3.02.020037
川信三点锁块
Chuanxin 3-point lock block

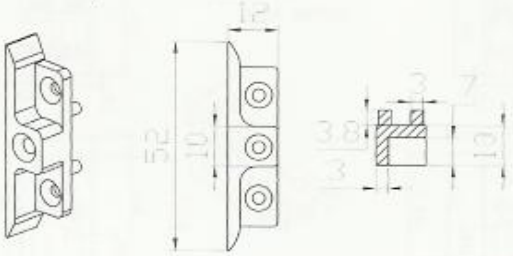

3.02.020038
铝 2# 锁块
Aluminum #2 lock block

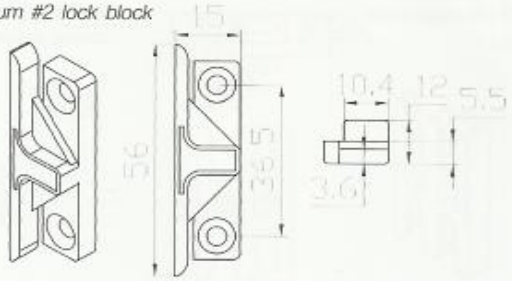

3.02.020085
德式 1 号锁块
German #1 lock block

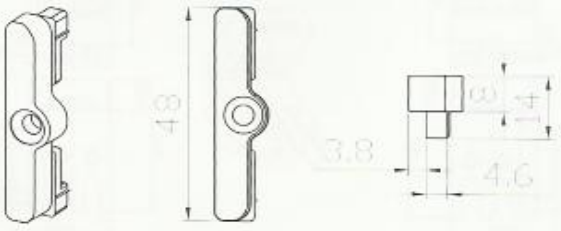

3.02.020086
德式 2 号锁块
German #2 lock block

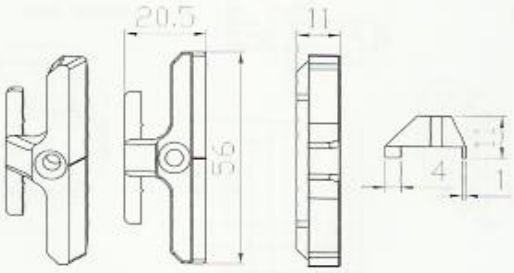

3.02.020087
德式 3 号锁块
German #3 lock block

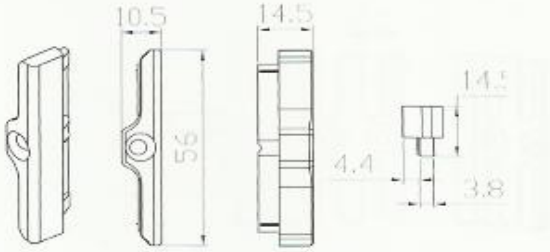

3.02.020089
英式 2 号锁块
English #2 lock block

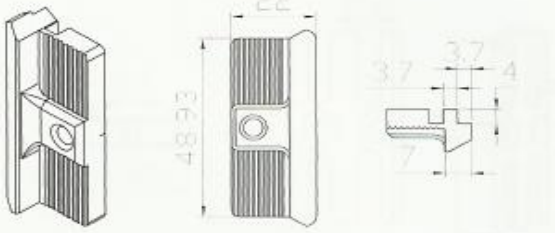

9.08.0210
3 号门锁块
3# door lock block

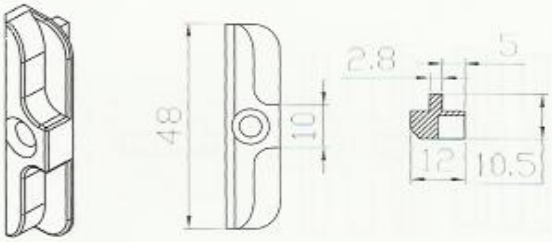

3.02.020088
德式 4 号锁块
German #4 lock block

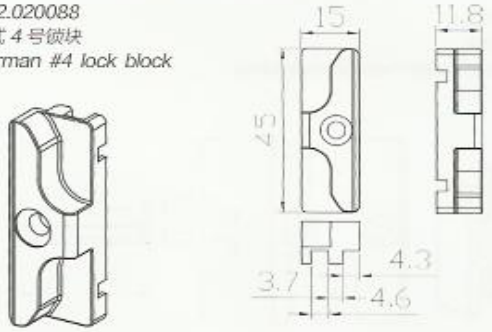

9.02.0171
4 号门锁块
4# door lock block

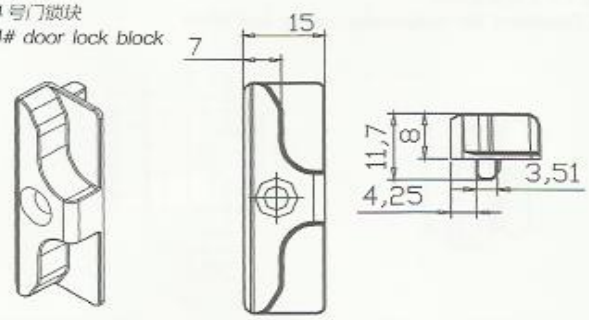

3.02.020099
窗中挺锁块
Window mullion lock block

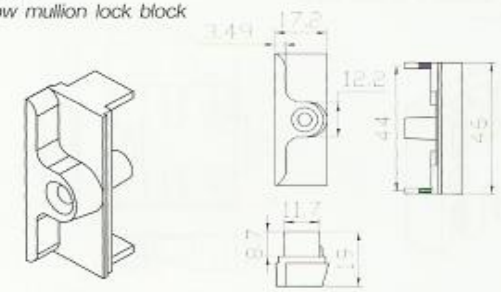

3.02.020100
门中挺锁块
Door mullion lock block

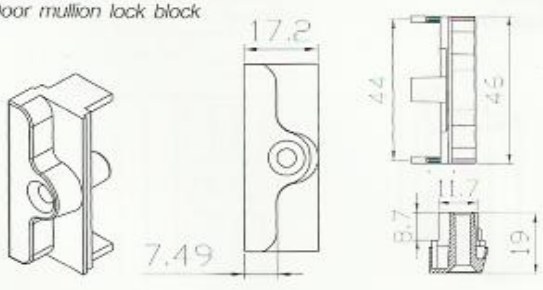

3.02.020030
H 锁块
H-shape lock block

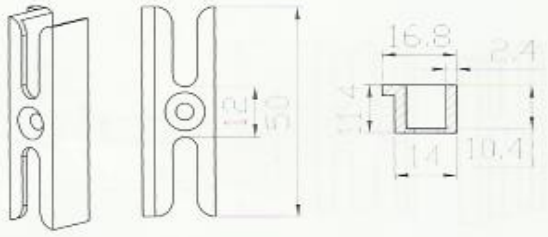

3.02.020042
王字加高锁块
Wang-Shape height-added lock block

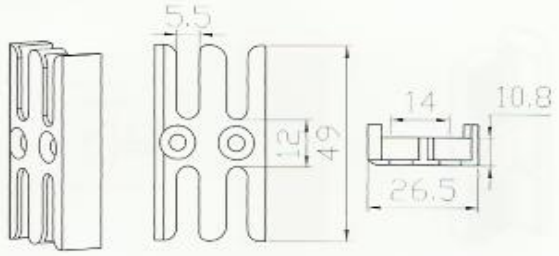

3.02.020076
王字三点锁块
Wang-Shape 3-point lock block

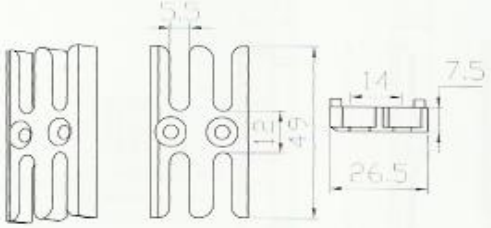

3.02.020043
王字加宽锁块
Wang-Shape width-added lock block

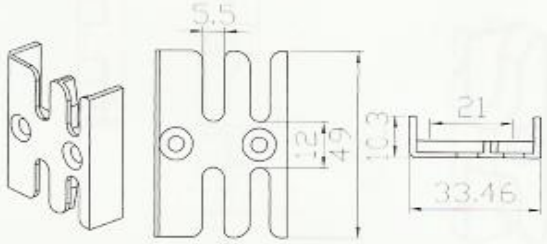

3.02.020049
王字 5# 锁块
Wang-Shape #5 lock block

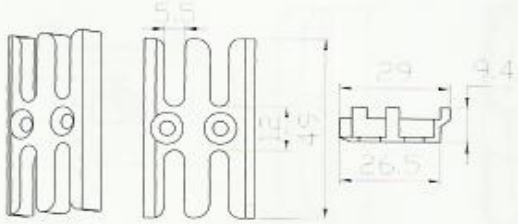

3.02.020068
王字 6# 锁块
Wang-Shape # 6 lock block

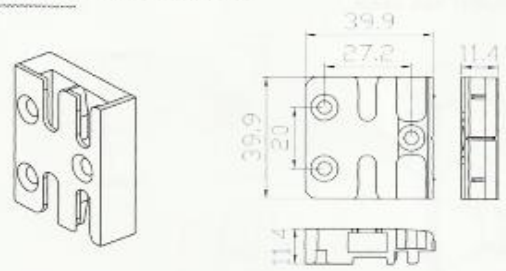

3.02.020072
3 号平开上悬安全锁块
#3 Casement top-suspension safety lock block

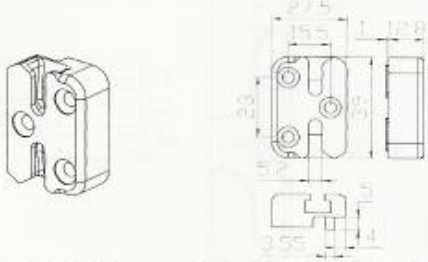

3.02.020029
王字锁块
Wang-Shape lock block

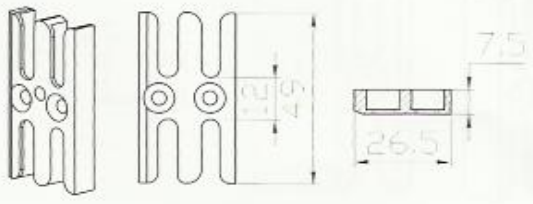

3.02.020164
234 王字锁块
234-shape lock block

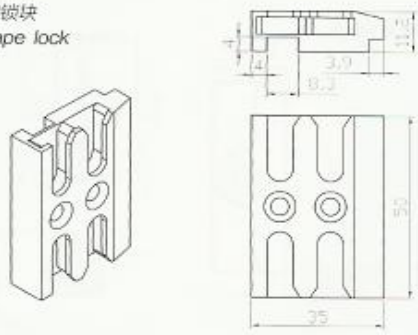

3.03.020152
王字 8 号锁块
Wang-Shape #8 lock block

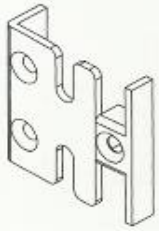



9.02.0115
王字 10 号锁块
Wang-Shape #10 lock block

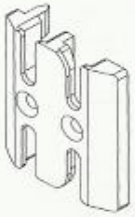

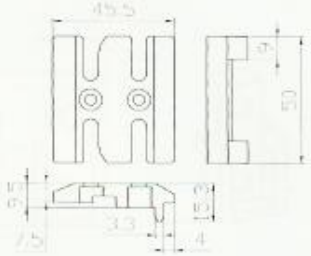

3.02.020141
王字 11 号锁块
Wang-shape #11 lock block

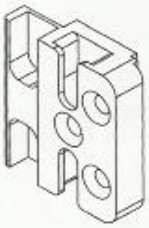

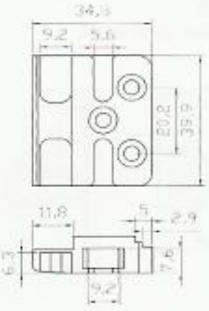

3.02.020179
王字 12 号锁块
Wang-shape #12 lock block

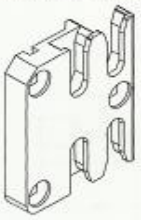

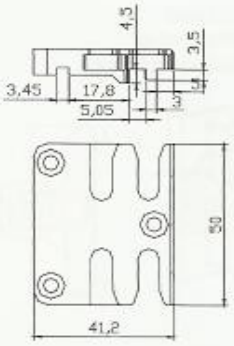

9.02.0172
354518 王字锁块
354518 shape lock block

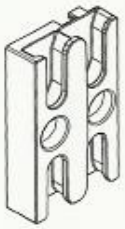

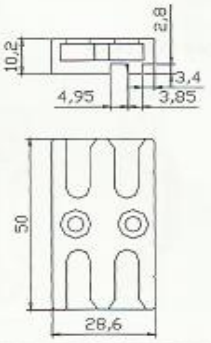

3.02.020167
4232 插座
4232 corner lock block

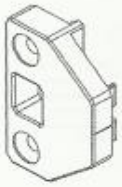

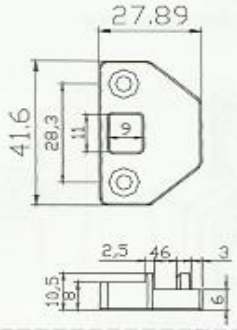

3.02.020136
英式插座
English corner keep

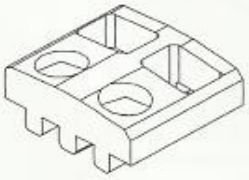

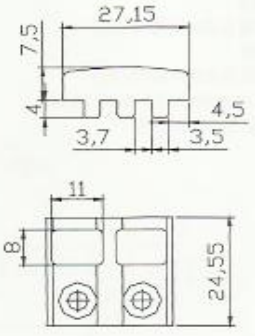

3.02.020031
方锁块
Square lock block



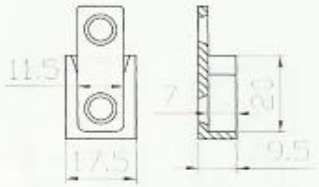

3.02.020051
3# 方锁块
#3 Square lock block

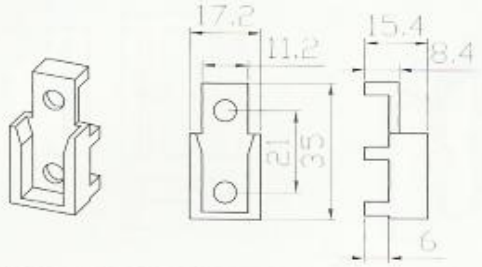

3.02.020044
小方锁块
Minor square lock block

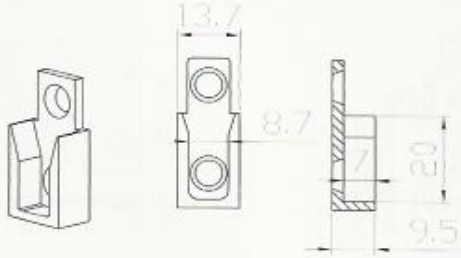

3.02.020080
可调锁块 (L=3.9)
Modulation lock block

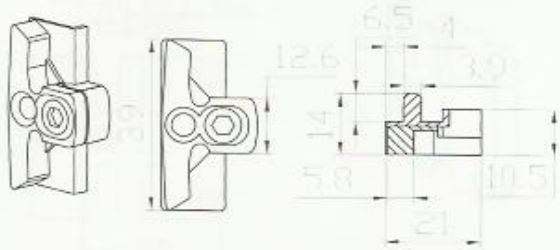

3.02.020084
2 号可调锁块
#2 Modulation lock block

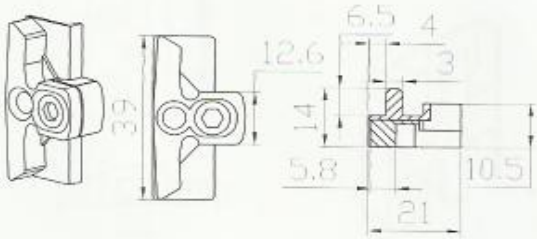

3.02.020081
3 号可调锁块
#3 Modulation lock block

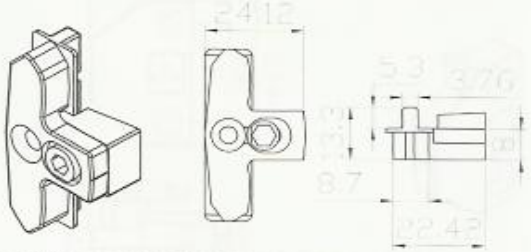

3.03.020124
单点锁块
Single-point lock block

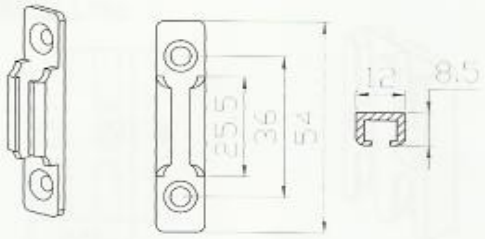

3.02.020046
T 型 3 号锁块
T-Shape #3 lock block

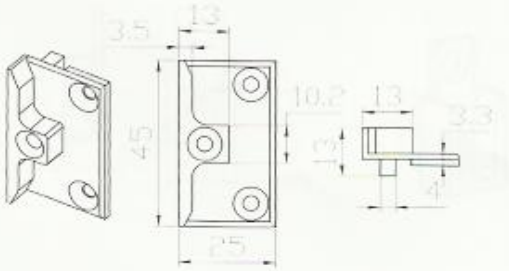

3.03.020148
勾型锁点加高 5.4mm 锁块 (左)
3.03.020149
勾型锁点中高 5.4mm 锁块 (右)
Hooked lock point with lock block intended by 5.4mm(L/R)

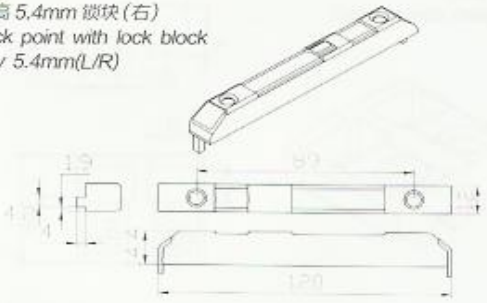

3.02.020146
勾型锁点不带角锁块
Hooked lock point without angle lock block

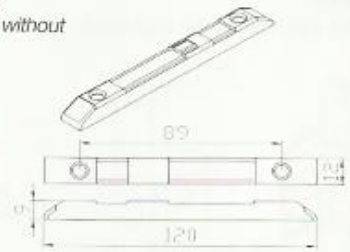

3.03.020147
勾型锁点带角锁块
Hooked lock point with angle lock block

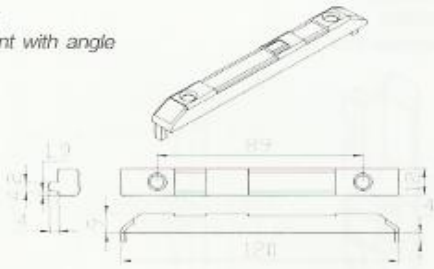

9.08.0131
翻转锁块（左）
Reverse lock block(left)
9.08.0132
翻转锁块（右）
Reverse lock block (right)

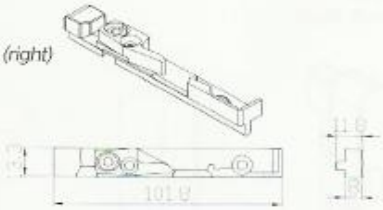

9.08.0139
2号翻转锁块（左）
#2 Reverse lock block(left)
9.08.0140
2号翻转锁块（右）
#2 Reverse lock block (right)

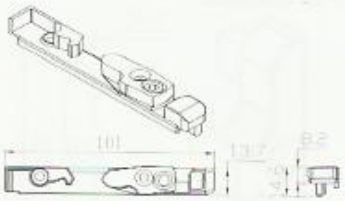

3.02.020071
3号平开上悬翻转锁块
#3 Casement top-suspension reversal lock block

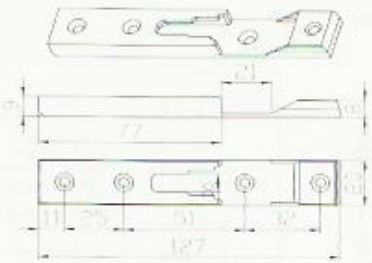

9.02.0173
6号平开上悬左右通用翻转锁块
#6 Casement top-suspension reversal lock block

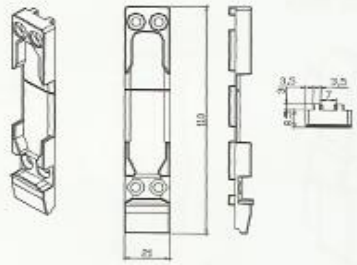

3.02.020073
4号平开上悬翻转锁块（左）
3.02.020096
4号平开上悬翻转锁块（右）
#4 Casement top-suspension reversal lock block(L/R)

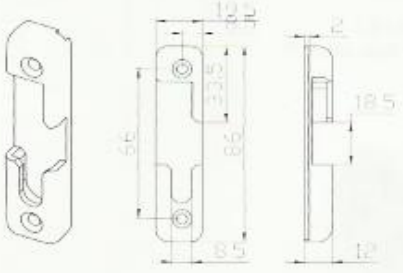

3.02.020074
4号平开上悬安全锁块（左）
3.02.020097
4号平开上悬安全锁块（右）
#4 Casement top-suspension safety lock block(L/R)

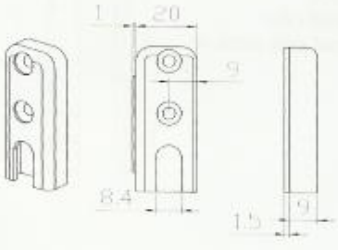

3.02.020131
3 号窗锁块
3# window lock block

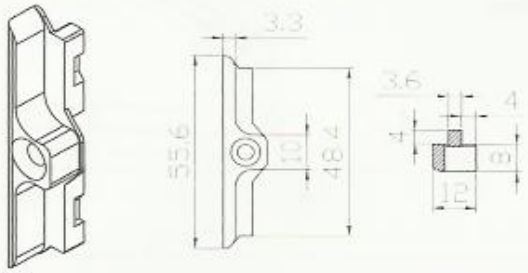

3.02.100043
6 号平开上悬锁块
6# casement top-suspension lock block

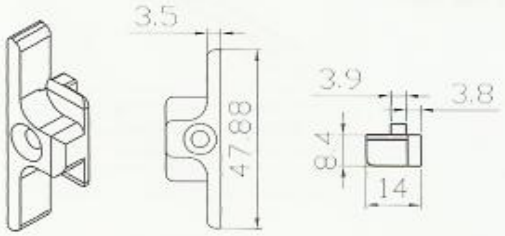

3.02.100079
6-2 号锁块
6-2# lock block

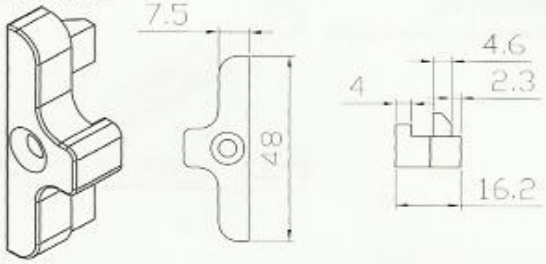

3.02.100080
6-3 号锁块
6-3# lock block

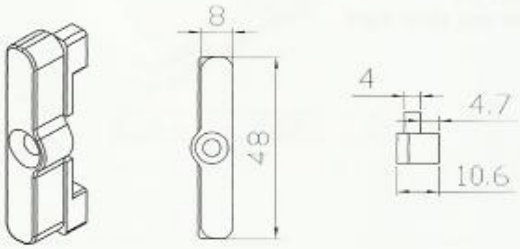

3.02.100081
6-4 号锁块
6-4# lock block

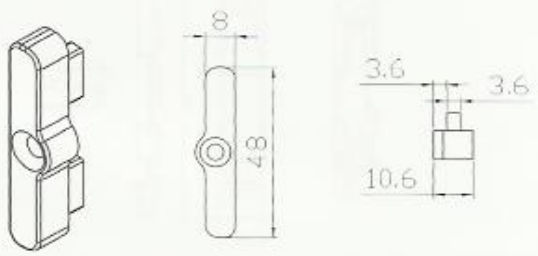

3.02.100082
6-5 号锁块
6-5# lock block

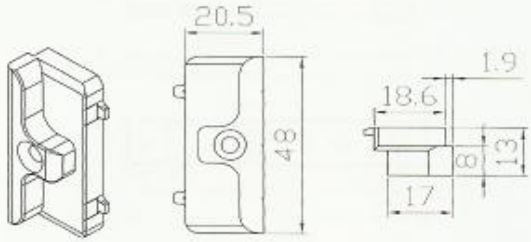

3.02.100049
6 号翻转锁块(左)
6# reversal lock block L
3.02.100050
6 号翻转锁块(右)
6# reversal lock block R

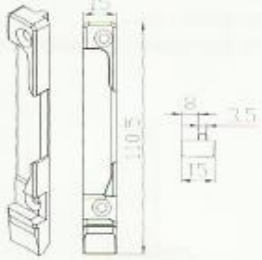

3.02.100067
6-2 号翻转锁块(左)
6-2# reversal lock block L
3.02.100068
6-2 号翻转锁块(右)
6-2# reversal lock block R

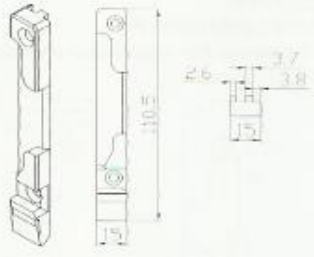

3.02.100071
6-4 号翻转锁块（左） 6-4# reversal lock block L
3.02.100072
6-4 号翻转锁块（右） 6-4# reversal lock block R

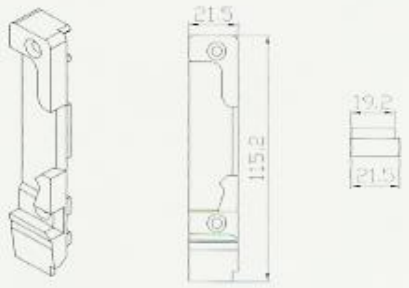

3.02.100055
6 号平开上悬防误操作块
6# casement top-suspension mal-operation proof block

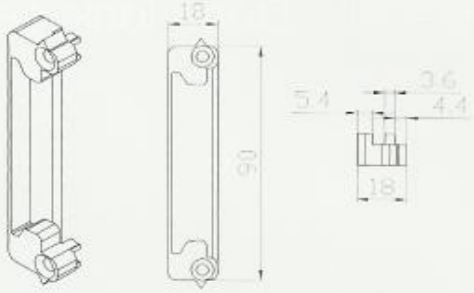

3.02.100073
6-2 号防误操作块 6-2# mal-operation proof block

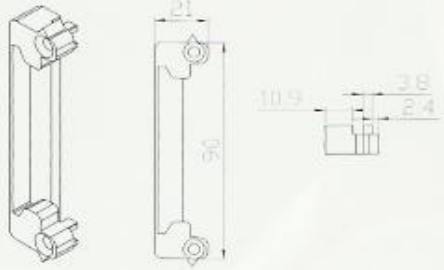

3.02.100074
6-3 号防误操作块 6-3# mal-operation proof block

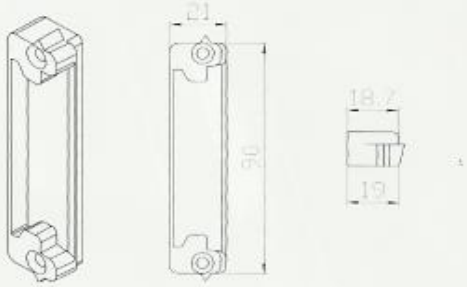

3.02.100075
6-4 号防误操作块 6-4# mal-operation proof block

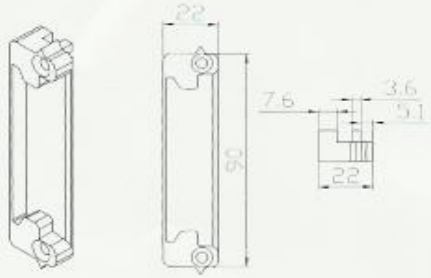

3.02.100076
6-5 号防误操作块 6-5# mal-operation proof block

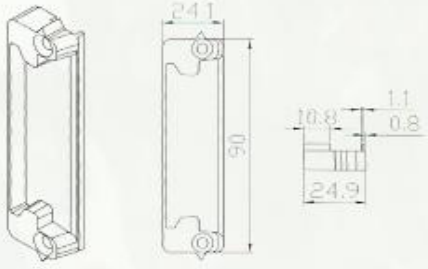



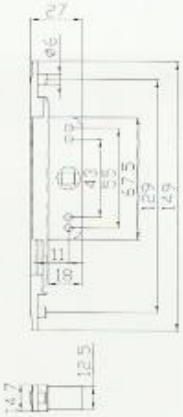

9.02.0014
单向 1 号传动器
Single-way #1 transmission



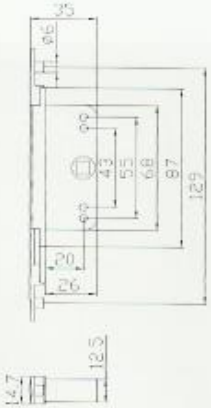

9.02.0015
单向 2 号传动器
Single-way #2 transmission



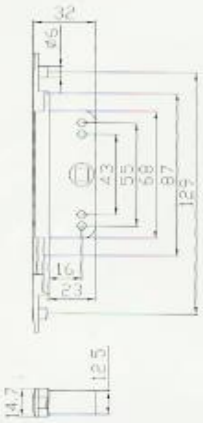

9.02.0016
单向 3 号传动器
Single-way #3 transmission



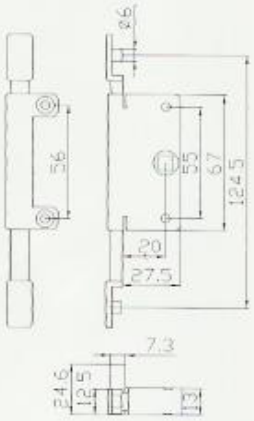

9.02.0017
单向 4 号传动器
Single-way #4 transmission





9.02.0018
单向 5 号传动器
Single-way #5 transmission



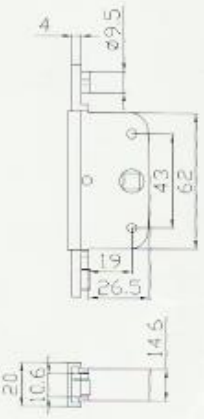

9.02.0019
双向传动器 2 号
Double-way #2 transmission



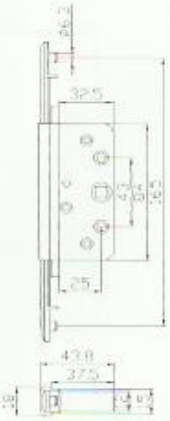

9.02.0020
双向传动器 3 号
Double-way #3 transmission

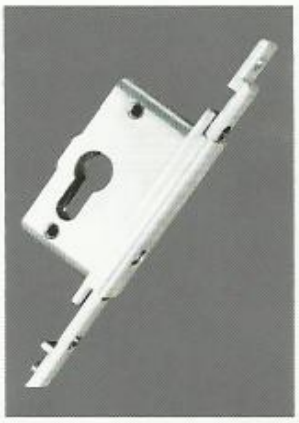

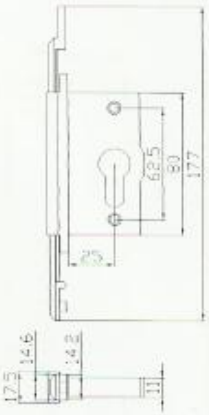

9.03.0015
锁芯盒
Lock core box



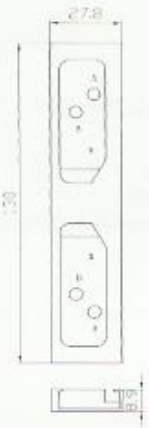

9.08.0125
1 号拨动锁盒
#1 Bolt lock case



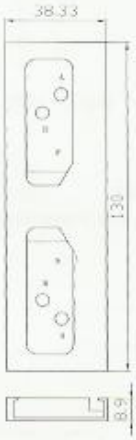

9.08.0126
2 号拨动锁盒
#2 Bolt lock case



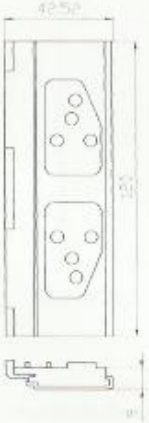

9.08.0127
3 号拨动锁盒
#3 Bolt lock case



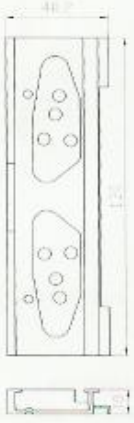

9.08.0127
4 号拨动锁盒
#4 Bolt lock case

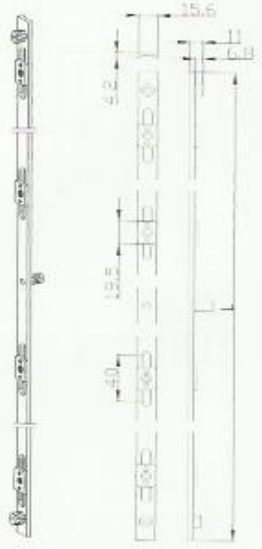

L=200~1400

9.02.0097
铝拨叉传动杆
Aluminum fork transmission bar



L=200~1400

9.02.0095
铝方槽式传动杆
Aluminum aquare-notch transmission bar

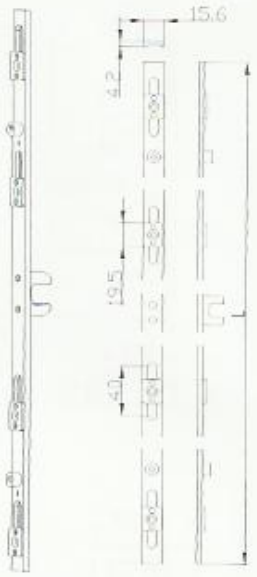

L=200~1400

9.02.0096
U 型槽传动杆
U-shape-notch transmission bar

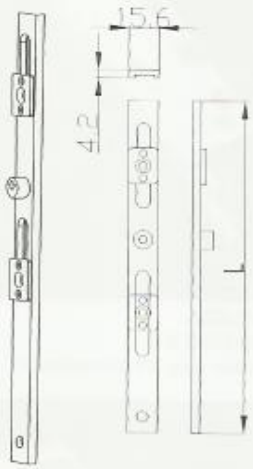

L=200~1400

9.02.0093
铝 1 号单片挂接杆
#1 aluminum single plate connecting bar

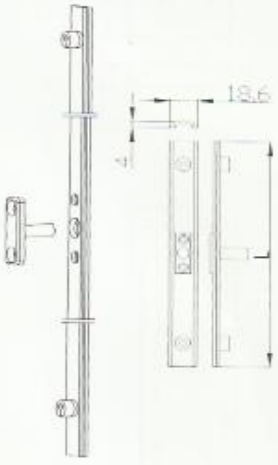

L=200~1400

9.02.0091
铝标准槽式外开传动杆
Standard-notched aluminum outward transmission bar

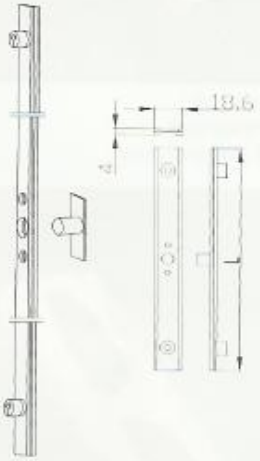

L=200~1400

9.02.0092
铝标准槽式内开传动杆
Standard-notched aluminum inward transmission bar

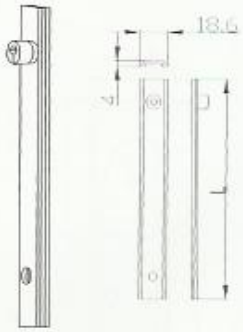

L=200~800

9.02.0103
铝欧标挂接杆
EU-standard aluminum connecting bar

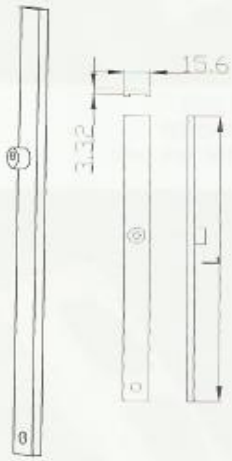

L=200~800

9.02.0094
铝 2 号单片挂接杆
#2 aluminum single plate connecting bar

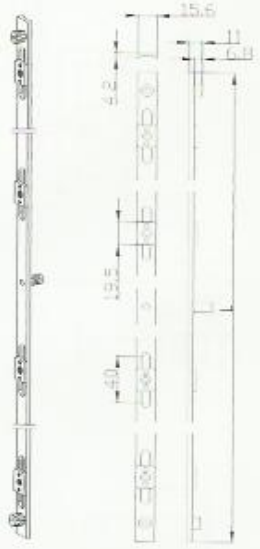

L=200~1400

9.02.0097
铝拨叉传动杆
Aluminum fork transmission bar



L=200~1400

9.02.0095
铝方槽式传动杆
Aluminum aquare-notch transmission bar



L=200~1400

9.02.0096
U型槽传动杆
U-shape-notch transmission bar

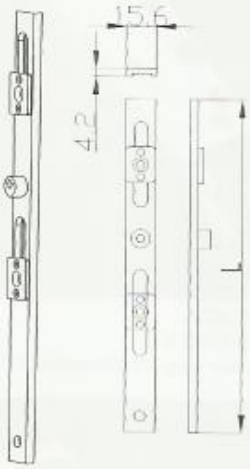

L=200~1400

9.02.0093
铝1号单片挂接杆
#1 aluminum single plate connecting bar

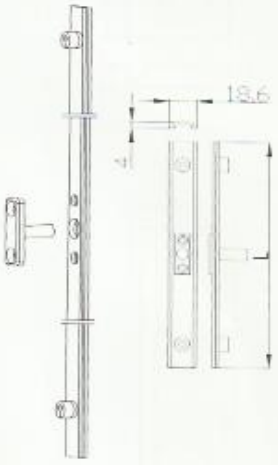

L=200~1400

9.02.0091
铝标准槽式外开传动杆
Standard-notched aluminum outward transmission bar

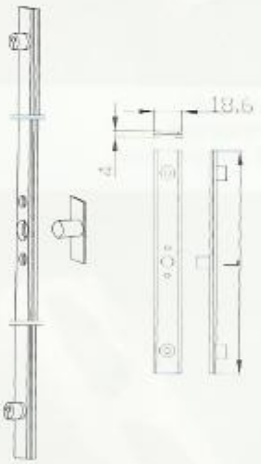

L=200~1400

9.02.0092
铝标准槽式内开传动杆
Standard-notched aluminum inward transmission bar

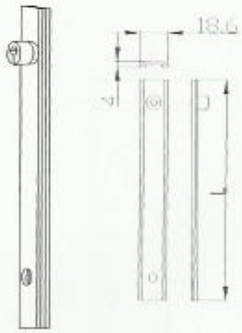

L=200~800

9.02.0103
铝欧标挂接杆
EU-standard aluminum connecting bar

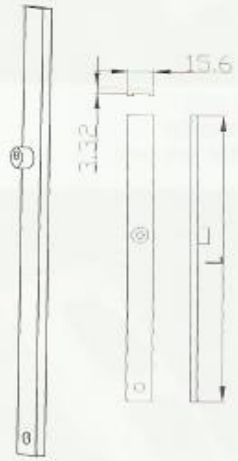

L=200~800

9.02.0094
铝2号单片挂接杆
#2 aluminum single plate connecting bar

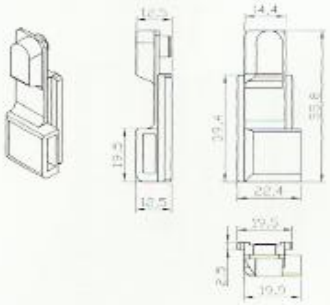

9.02.0091
锁杆（左）
Lock bar(L)

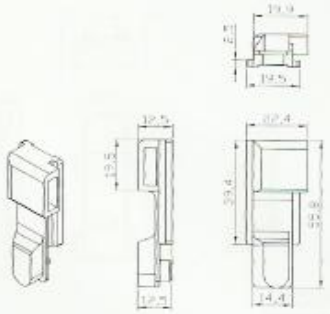

9.02.0092
锁杆（右）
Lock bar(R)

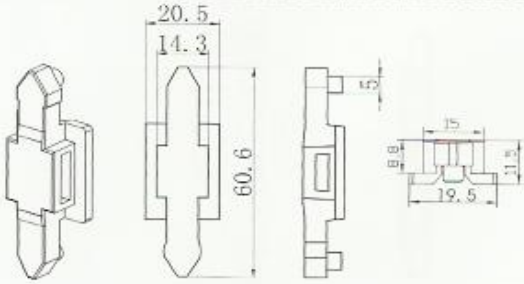

3.02.000003
藕合块
Coupling block

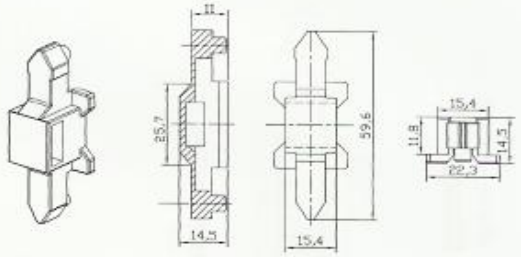

3.02.080046
#2 号藕合块
#2 Coupling block

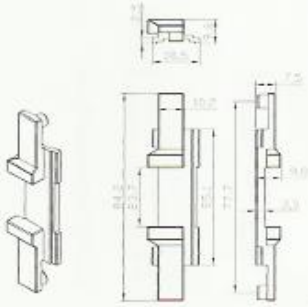

9.08.0153
3 号藕合块
#3 Coupling block

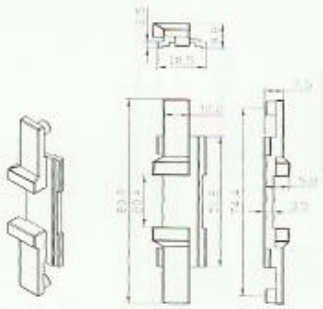

3.02.100037
4 号藕合块
#4 Coupling block

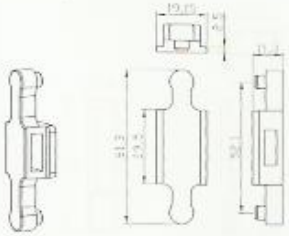

3.02.100008
5 号藕合块
#5 Coupling block



3.02.080010
双头滑块
Two-head slide block

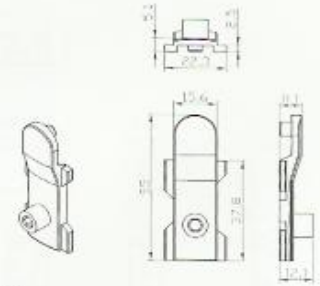

9.08.0220
2 号单头滑块
#2 single slide blcok

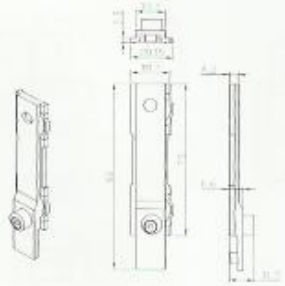

3.10.0134
3 号滑块
#3 slide block

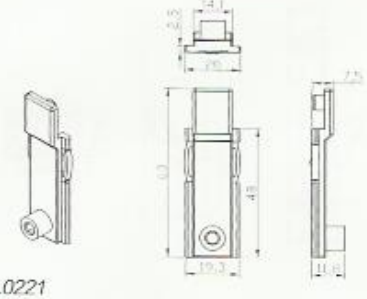

9.08.0221
4 号滑块
#4 slide block

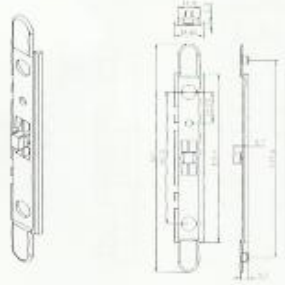

3.02.080023
主传动杆
aluminum #3 shoot bolt

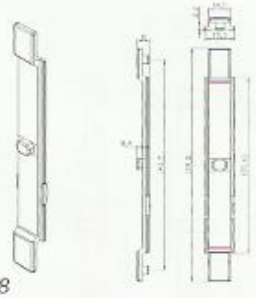

3.02.080078
3 号主传动杆
#3 Major transmission rod

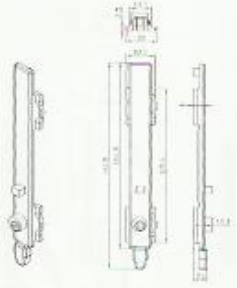

3.10.0141
铝 3 号平开上悬插肖

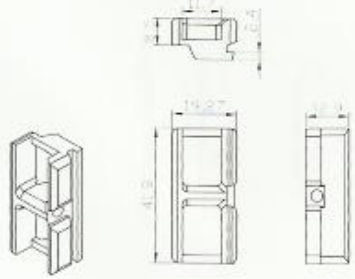

3.10.0143
铝 3 号平开上悬插座
aluminum #3 socket

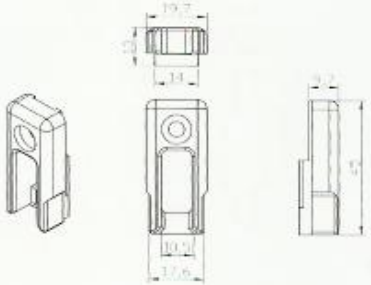

9.08.0094
塑天地插座
plastic top&bottom socket

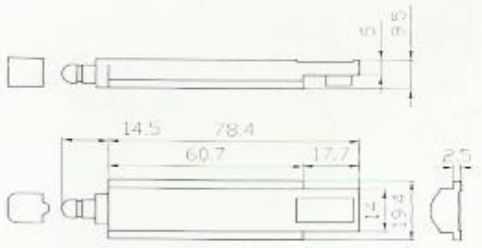

9.08.0093
型天地插
plastic top&bottom bolt

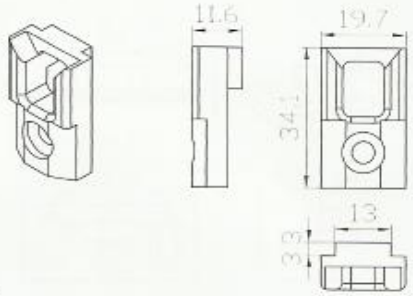

9.08.0122
天地插塑座 2 号
#2 plastic top&bottom socket

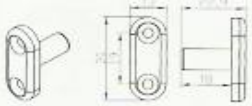

9.08.0129
外开拨柱
Outward poke column

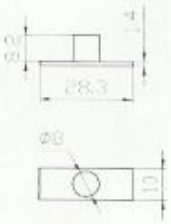

9.08.0130
内开拨柱
Inward poke column

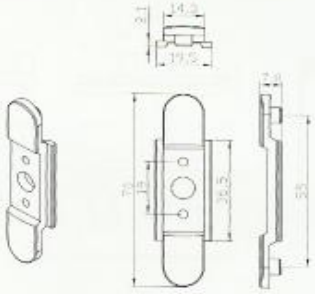

3.02.080073
2 号主传动杆
#2 Major transmission rod

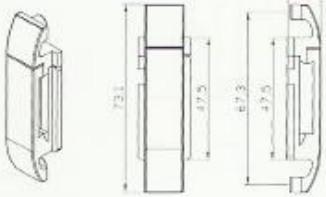

9.08.0097
双向转换器
double-way converter

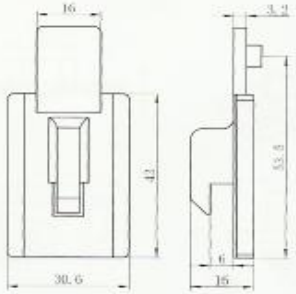

3.02.080014
上滑钩
Top slide hook



3.02.080015
下滑钩
Bottom slide hook

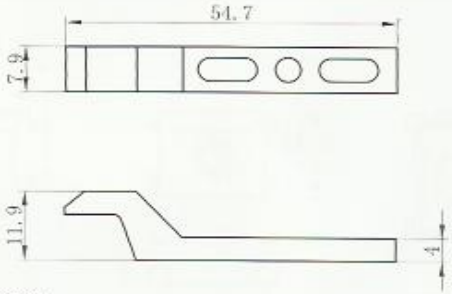

3.02.080013
钩锁块
hook lock block

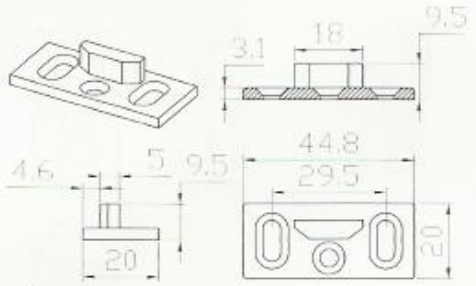

3.02.020039
T 型 1# 锁块
T-shape #1 lock block

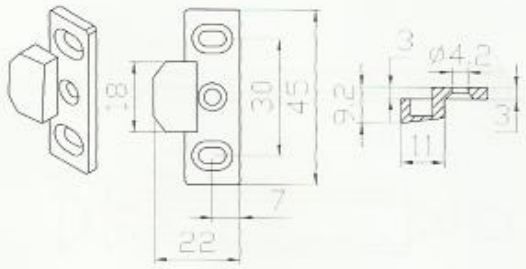

3.02.020040
T 型 2# 锁块
T-shape #2 lock block

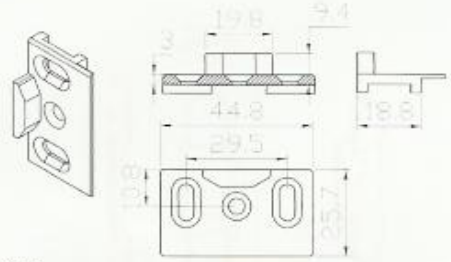

3.02.020045
T 型 4 号锁块
T-Shape #4 lock block

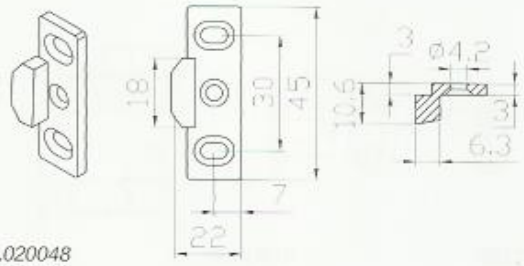

3.02.020048
T 型 5 号锁块
T-Shape #5 lock block

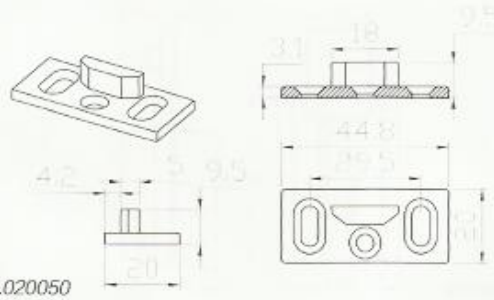

3.02.020050
T 型 6 号锁块
T-Shape #6 lock block

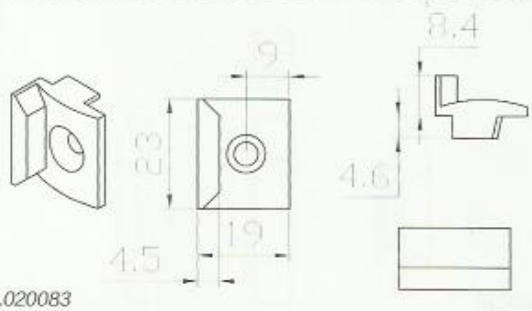

3.02.020083
铝 1# 锁块
Aluminum #1 lock block

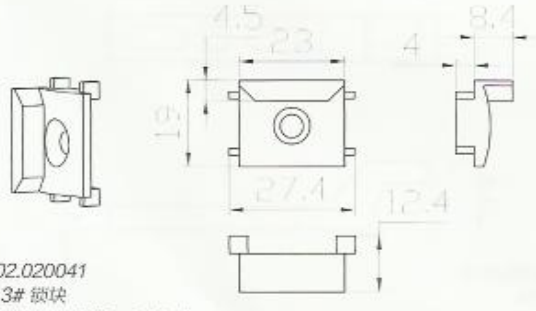

3.02.020041
铝 3# 锁块
Aluminum #3 lock block

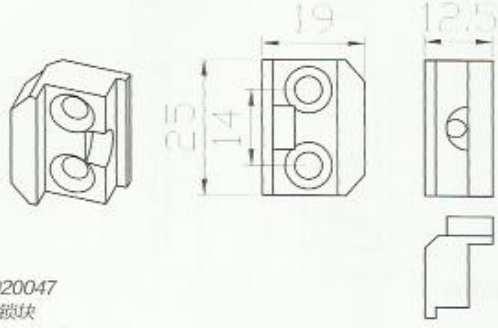

3.02.020047
铝 4# 锁块
Aluminum #4 lock block

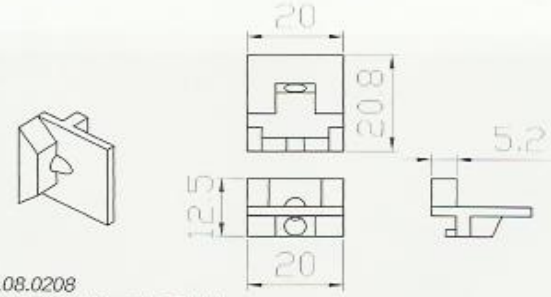

9.08.0208
铝 6# 锁块 (铝平开上悬锁块)
Aluminum # 6 lock block

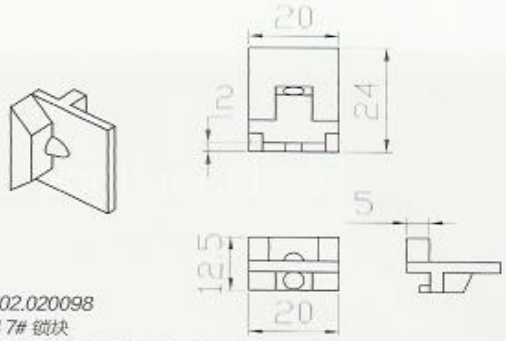

3.02.020098
铝 7# 锁块
Aluminum # 7 lock block

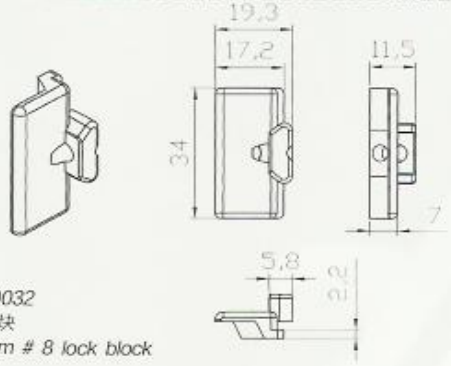

3.02.100032
铝 8# 锁块
Aluminum # 8 lock block

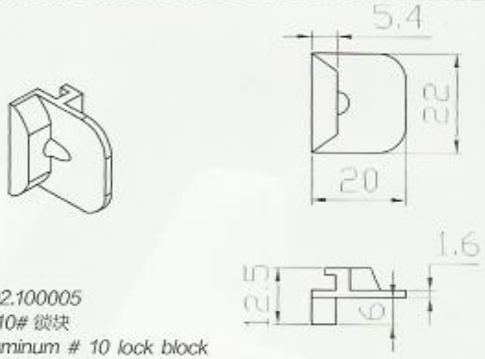

3.02.100005
铝 10# 锁块
Aluminum # 10 lock block

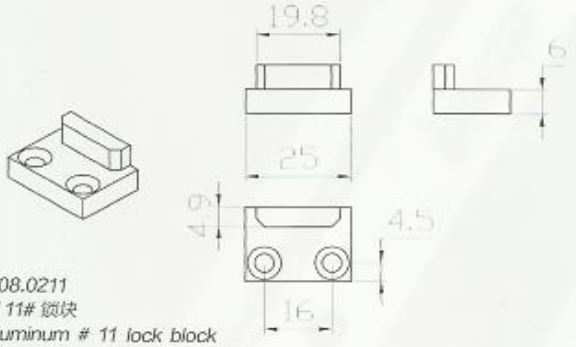

9.08.0211
铝 11# 锁块
Aluminum # 11 lock block

门锁系列　Door lock series

技术信息：
符合 QB/T 2474-2000 标准；
符合 Q/FLSJ 02-2008 标准；

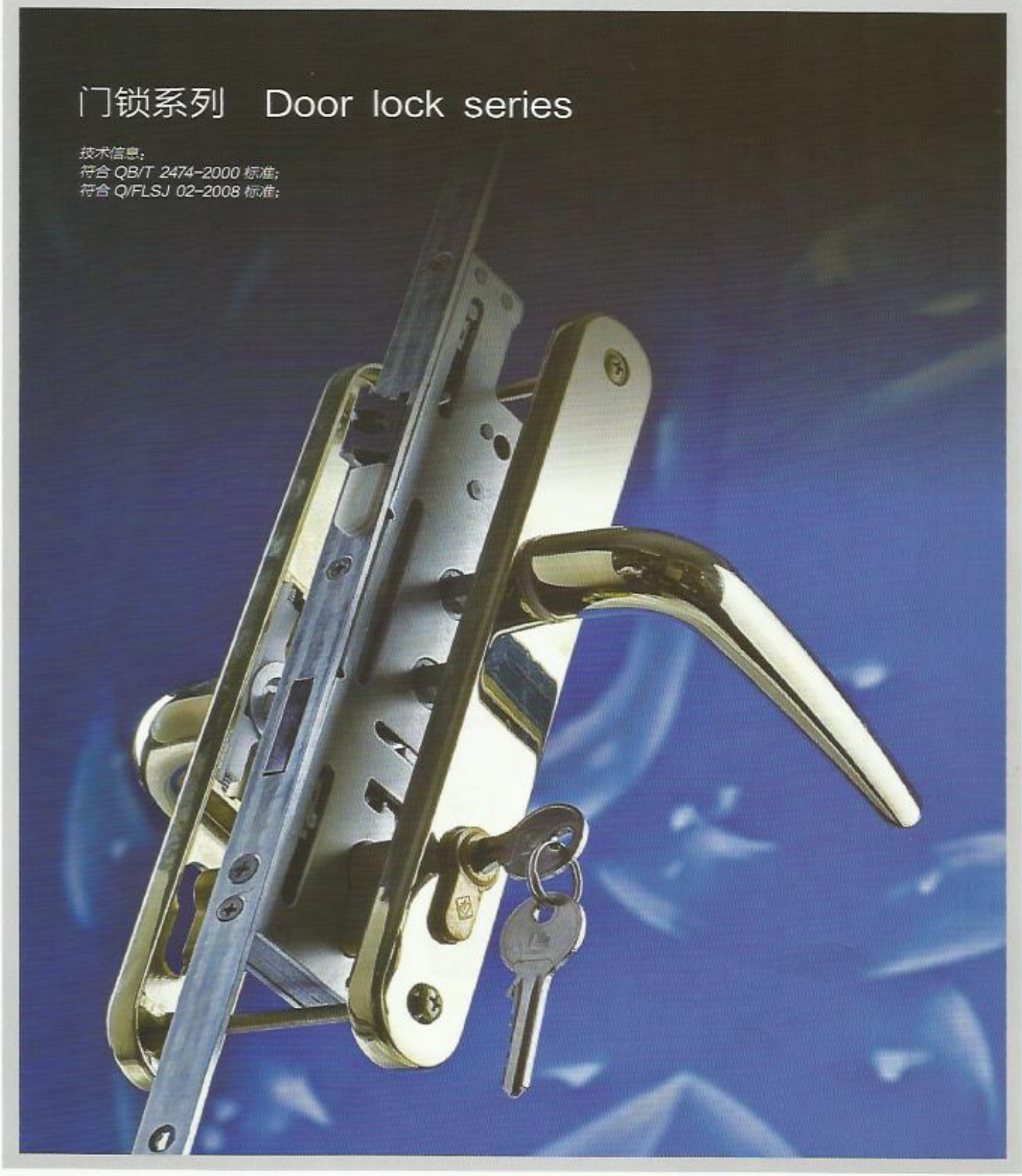

门锁系列 Door lock series

技术信息：
符合 QB/T 2474–2000 标准；
符合 Q/FLSJ 02–2008 标准；

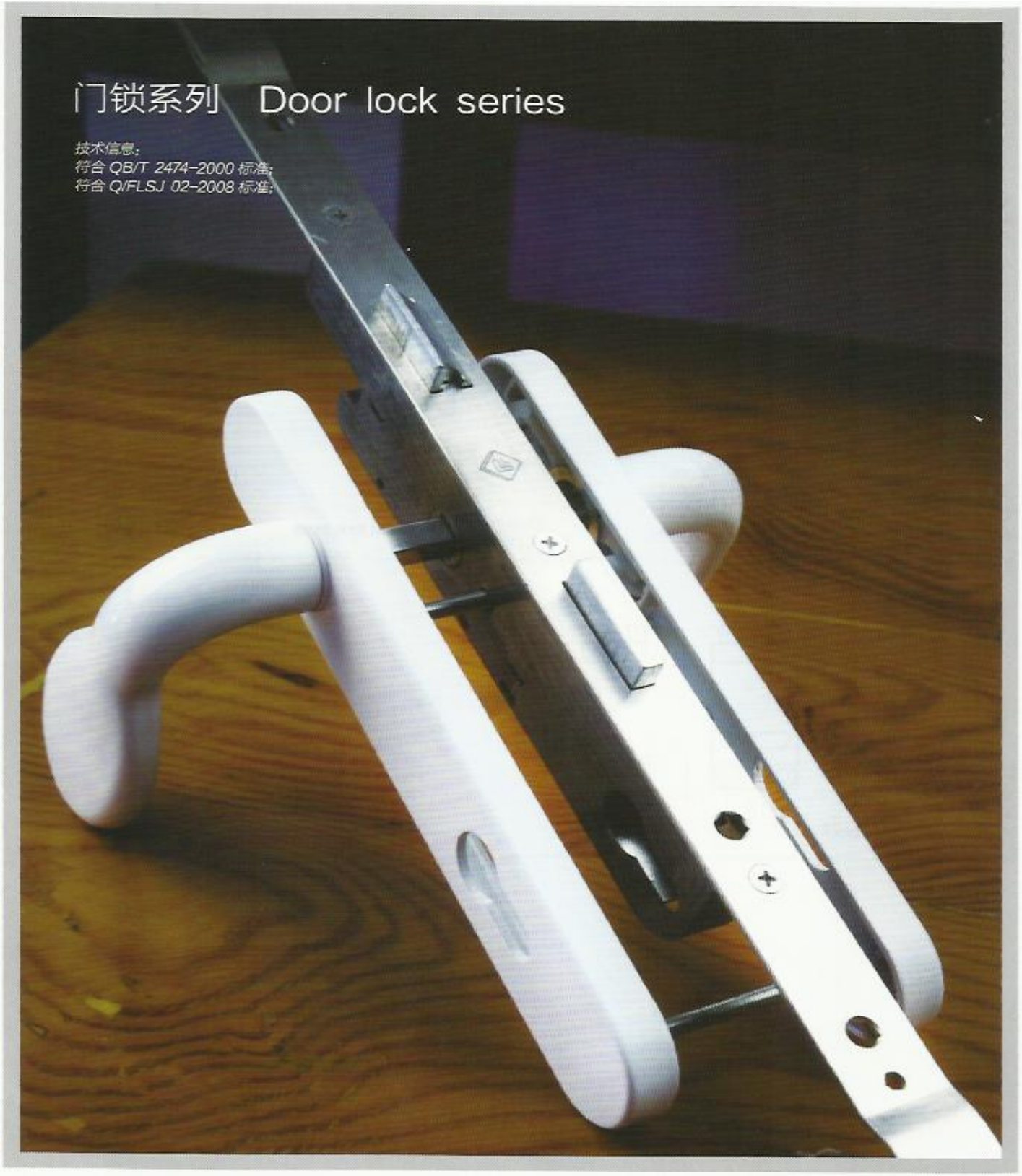

简易门锁
simple door lock

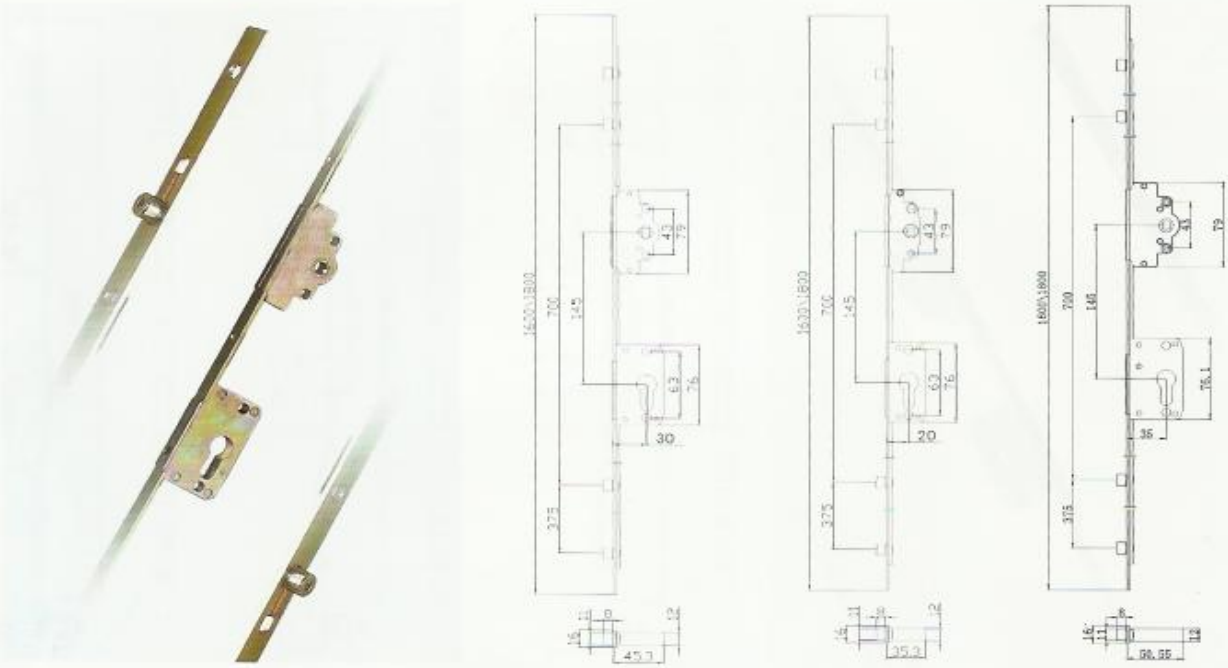

9.03.0108A
1800mm 连体简易门锁 A
9.03.0108B
1600mm 连体简易门锁 A
Combined simple door lock A

9.03.0109A
1800mm 连体简易门锁 B
9.03.0109B
1600mm 连体简易门锁 B
Combined simple door lock B

9.03.0130A
1800mm 连体简易门锁 C
9.03.0130B
1600mm 连体简易门锁 C
Combined simple door lock C

1600mm/1800mm 连体简易门锁（可选配件）				
序号	名 称	编号	数量	备 注
1	德式 4 号锁块 German 4# lock block	3.02.020088	4	可选件
2	小面板 minor panel	9.08.0101	1	
3	锁芯 cylinder		1	根据所配型材选择
4	螺钉 screw		4	根据所配型材选择
5	对开执手 twin handle		1	可选件

推拉简易门锁
Casement simple door lock

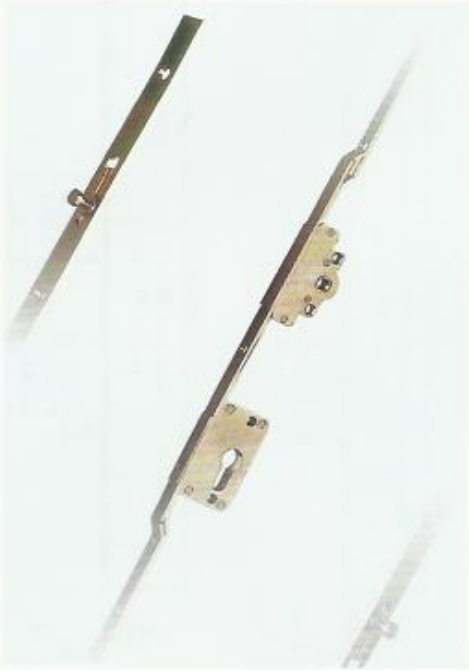

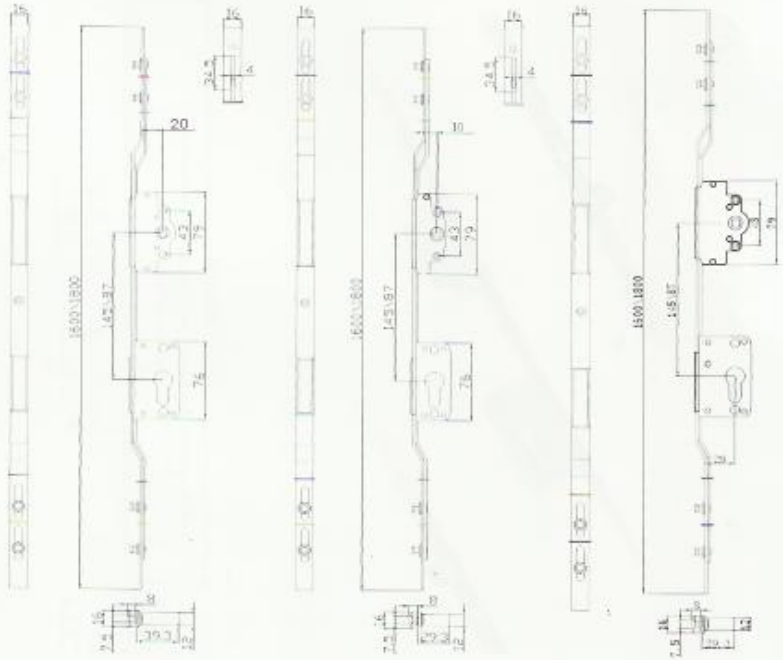

9.03.0018A
1600mm 推拉简易门锁 A(锁芯距 145mm)
9.03.0018B
1800mm 推拉简易门锁 A(锁芯距 145mm)
9.03.0111A
1600mm 推拉简易门锁 A(锁芯距 87mm)
9.03.0111B
1800mm 推拉简易门锁 A(锁芯距 87mm)
Casement simple door lock A

9.03.0112A
1600mm 推拉简易门锁 B(锁芯距 145mm)
9.03.0112B
1800mm 推拉简易门锁 B(锁芯距 145mm)
9.03.0113A
1600mm 推拉简易门锁 B(锁芯距 87mm)
9.03.0113B
1800mm 推拉简易门锁 B(锁芯距 87mm)
Casement simple door lock B

9.03.0131A
1600mm 推拉简易门锁 C(锁芯距 145mm)
9.03.0131B
1800mm 推拉简易门锁 C(锁芯距 145mm)
9.03.0132A
1600mm 推拉简易门锁 C(锁芯距 87mm)
9.03.0132B
1800mm 推拉简易门锁 C(锁芯距 87mm)
Casement simple door lock C

1600mm/1800mm 推拉简易门锁 (可选配件)				
序号	名 称	编号	数量	备 注
1	单点锁块 single point lock block	3.03.020124	4	
2	小面板 minor panel	9.08.0101	1	
3	锁芯 cylinder		1	根据所配型材选择
4	螺钉 screw		4	根据所配型材选择
5	对开执手 twin handle		1	可选件
6	拉手三号 3# door handle	9.01.0064	1	

推拉简易门锁
Casement simple door lock



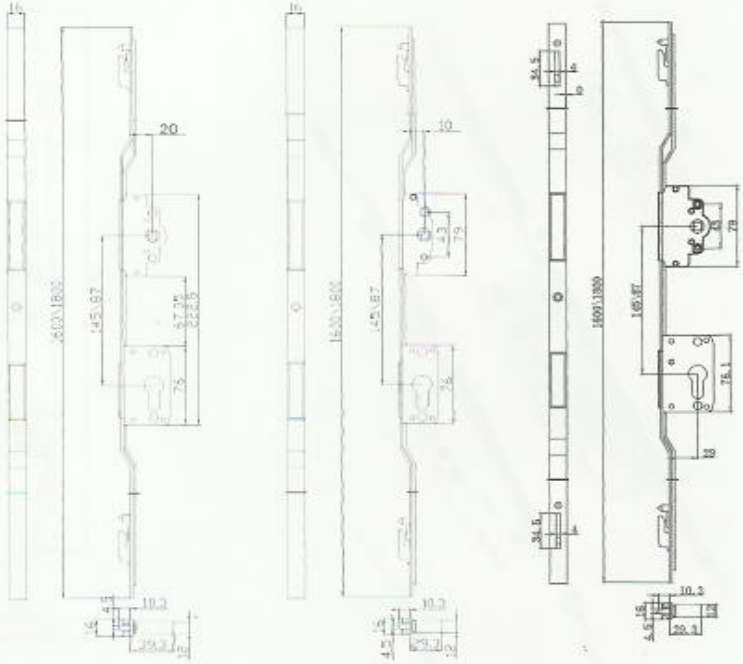

9.03.0114A 1600mm 勾式推拉简易门锁 A(锁芯距 145mm)
9.03.0114B 1800mm 勾式推拉简易门锁 A(锁芯距 145mm)
9.03.0115A 1600mm 勾式推拉简易门锁 A(锁芯距 87mm)
9.03.0115B 1800mm 勾式推拉简易门锁 A(锁芯距 87mm)
Casement simple door lock A

9.03.0116A 1600mm 勾式推拉简易门锁 B(锁芯距 145mm)
9.03.0116B 1800mm 勾式推拉简易门锁 B(锁芯距 145mm)
9.03.0117A 1600mm 勾式推拉简易门锁 B(锁芯距 87mm)
9.03.0117B 1800mm 勾式推拉简易门锁 B(锁芯距 87mm)
Casement simple door lock B

9.03.0133A 1600mm 勾式推拉简易门锁 C(锁芯距 145mm)
9.03.0133B 1800mm 勾式推拉简易门锁 C(锁芯距 145mm)
9.03.0134A 1600mm 勾式推拉简易门锁 C(锁芯距 87mm)
9.03.0134B 1800mm 勾式推拉简易门锁 C(锁芯距 87mm)
Casement simple door lock C

1600mm/1800mm 勾式推拉简易门锁（可选配件）

序号	名 称	编 号	数量	备 注
1	勾型锁点不带角锁块 hooked lock point without angle lock block	3.03.020146	2	根据所配型材选择
2	小面板 minor panel	9.08.0101	1	
3	锁芯 cylinder		1	根据所配型材选择
4	螺钉 screw		4	根据所配型材选择
5	对开执手 twin handle		1	可选件
6	拉手三号 handle 3#	9.01.0064	1	

安全门锁
Security door lock

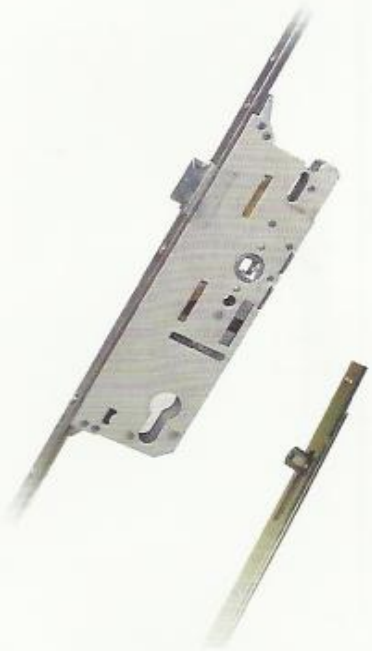



9.03.0024　5号安全门锁
#5 security door lock

5号安全门锁（可选配件）				
序号	名 称	编 号	数量	备 注
1	6号锁板 6# lock panel	9.08.0159	1	
2	锁芯 cylinder		1	根据所配型材选择
3	螺钉 screw		2	根据所配型材选择
4	面板执手 panel handle		1	可选件

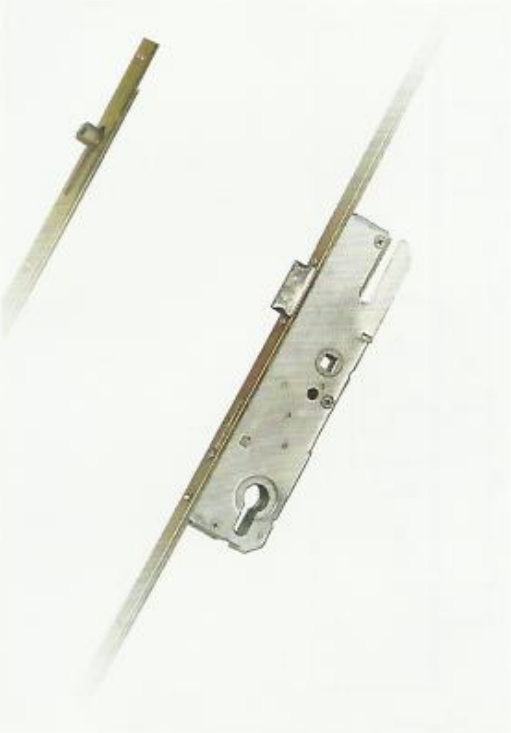



齿轮门锁（可选配件）				
序号	名 称	编 号	数量	备 注
1	德式 4 号锁块 German 4# lock block	3.02.020088	4	可选件
2	连体式锁板 integral lock panel	9.08.0141	1	根据所配型材选择
3	锁芯 cylinder		1	根据所配型材选择
4	螺钉 screw		2	根据所配型材选择
5	面板执手 panel handle		1	可选件

6 号门锁
#6 door lock



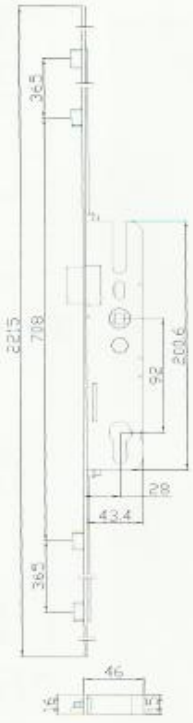

9.03.0034
6-28 门锁
6-28 door lock



9.03.0035
6-35 门锁
6-35 door lock

6 号门锁（可选配件）				
序号	名 称	编 号	数 量	备 注
1	德式 4 号锁块 German 4# lock block	3.02.020088	4	可选件
2	6 号锁板 6# lock panel	9.08.0159	1	
3	锁芯 cylinder		1	根据所配型材选择
4	螺钉 screw		4	根据所配型材选择
5	面板执手 panel handle		1	可选件

7号门锁
#7 door lock



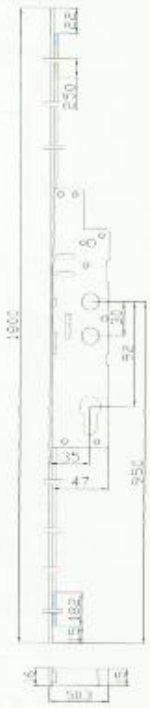

9.03.0036
7-1 号门锁
#7-1 door lock



9.03.0037
7-2 号门锁
#7-2 door lock



9.03.0038
7-3 号门锁
#7-3 door lock

7号门锁（可选配件）				
序号	名 称	编 号	数 量	备 注
1	传动插肖上 upper transmission bolt	9.08.0146	1	
2	传动插肖下 lower transmission bolt	9.08.0147	1	
3	6-1号单锁板 6-1# single lock panel	9.08.0162	1	
4	6-1号双锁板 6-1# dual lock panel	9.08.0161	1	
5	6号锁板 6# lock panel	9.08.0159	1	
6	6-2号锁板 6-2# lock panel	9.08.0160	1	7-3门锁选配件
7	锁芯 cylinder		1	根据所配型材选择
8	英式高低面板执手 English high low panel handle	9.01.0076	1	可选件

28/92-2 号门锁
#28/92-2 door lock

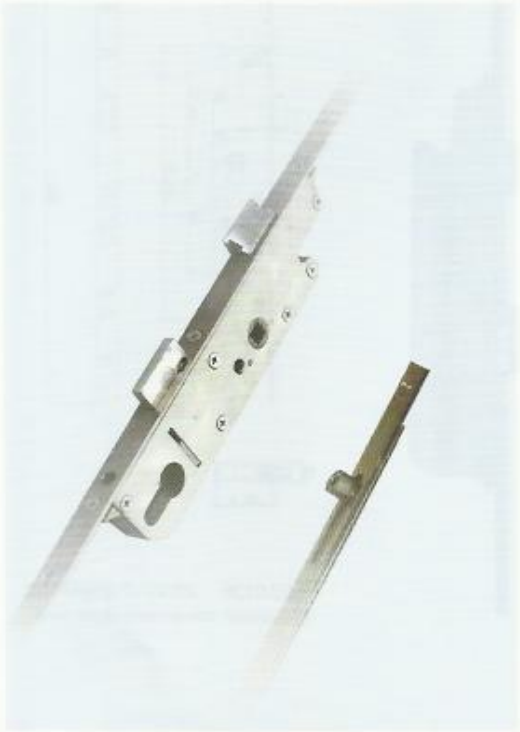

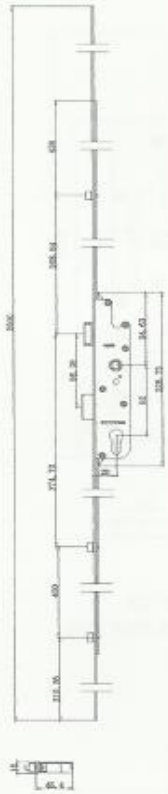

9.03.0135
28/92-2 号门锁
#28/92-2 door lock

6 号门锁（可选配件）				
序号	名 称	编 号	数 量	备 注
1	德式 4 号锁块 German 4# lock block	3.02.020088	4	可选件
2	6 号锁板 6# lock panel	9.08.0159	1	
3	锁芯 cylinder		1	根据所配型材选择
4	螺钉 screw		4	根据所配型材选择
5	面板执手 panel handle		1	可选件

门锁
door lock



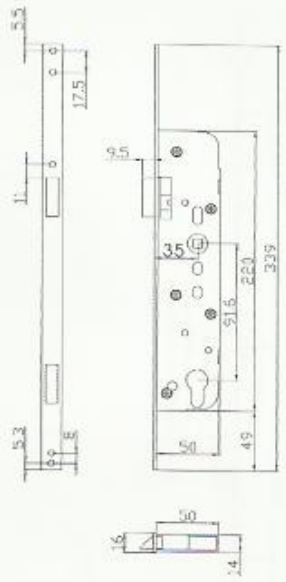

9.03.0011 欧式平开门锁
European casement door lock



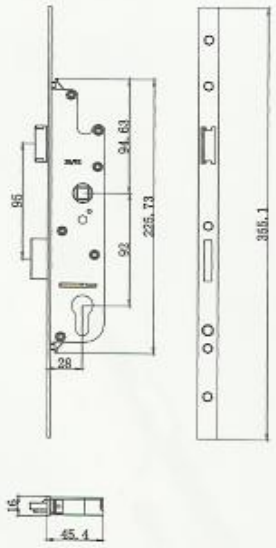

9.03.0136 28/92-2号简易门锁
European casement door lock



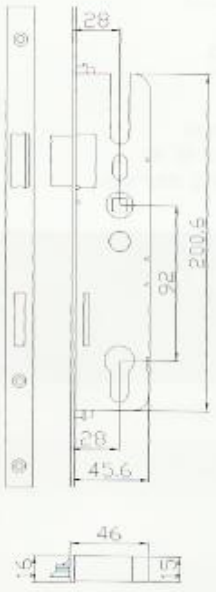

9.03.0118 6-28简易门锁
6-28 simple door lock

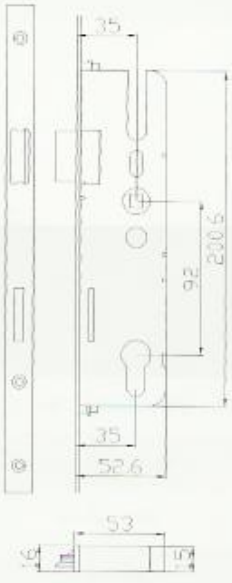

9.03.0119 6-35简易门锁
6-35 simple door lock

推拉门锁、锁芯
Slide door lock/lock core



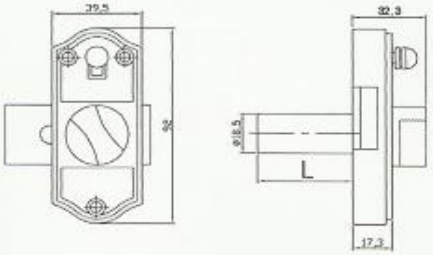

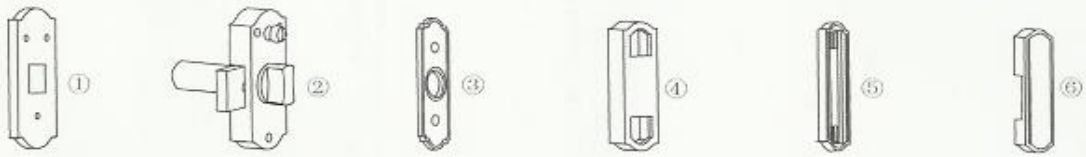

2-leaf slide door lock 两扇推拉门锁	①	主锁垫	main lock mat
	②	主锁体	main door lock
	③	反拉扣板	reverse clip
	④	二扇塑扣垫	2-leaf plastic clip pad
	⑥	锁扣	lock catch

4-leaf slide door lock 四扇推拉门锁	①	主锁垫	main lock mat
	②	主锁体	main door lock
	③	反拉扣板	reverse clip
	④	四扇扣垫	4-leaf clip pad
	⑥	锁扣	lock catch

锁芯系列
Lock core series

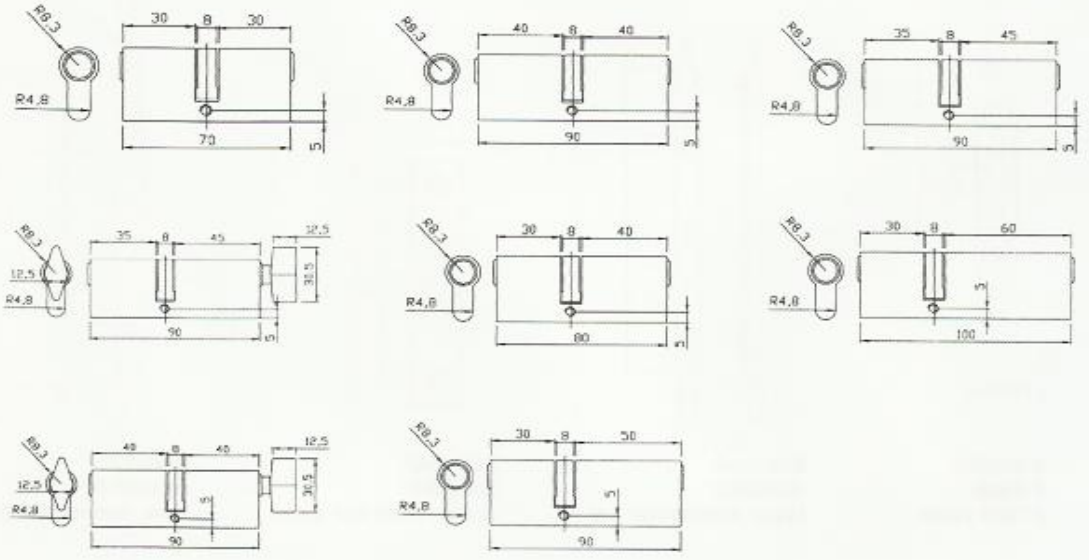

常用配件



9.08.0155L/R
2 号连体式锁板
#2 integral lock panel



9.03.0051L/R
4 号连体式锁板
#4 integral lock panel



9.03.0049L/R
5 号连体式锁板
#5 integral lock panel



9.03.0050L/R
6 号连体式锁板
#6 integral lock panel



9.08.0141
连体式锁板
Integral lock panel



9.03.0120
13 号锁板
#13 lock panel



9.08.0163
7 号锁板
#7 lock panel



9.08.0146
传动插肖上
Upper transmission bolt



9.08.0142
专用小锁板
Special small lock panel

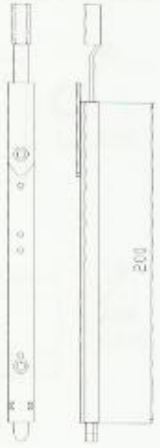

9.08.0147
传动插肖下
lower transmission bolt

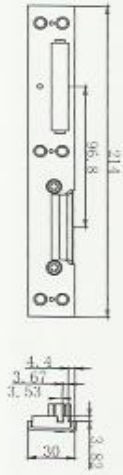

9.08.0159
6 号锁板
#6 lock panel

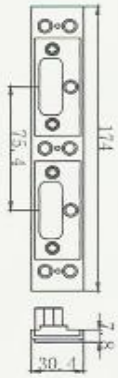

9.08.0161
6-1 号双锁板
#6-1 dual lock panel

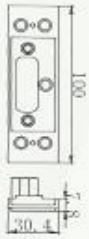

9.08.0162
6-1 号单锁板
#6-1 single lock panel

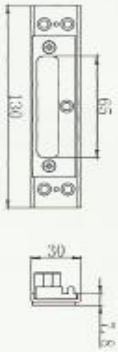

9.08.0233
6-1.2 号双锁板
#6-1.2 dual lock panel

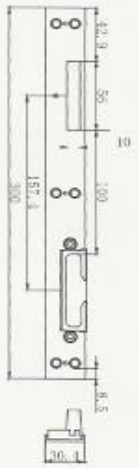

9.08.0160
6-2 号锁板
#6-2 lock panel

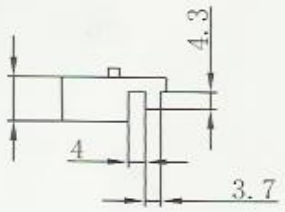

6 号锁板 1 号垫块
1# plastic block for 6# lock panel

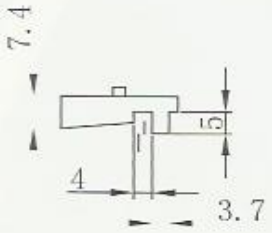

6 号锁板 2 号垫块
2# plastic block for 6# lock panel

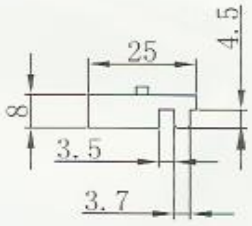

6 号锁板 3 号垫块
3# plastic block for 6# lock panel

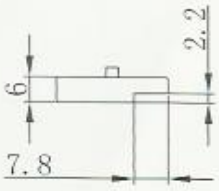

6 号锁板 4 号垫块
4# plastic block for 6# lock panel

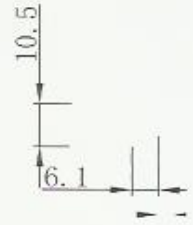

6 号锁板 5 号垫块
5# plastic block for 6# lock panel

6 号锁板、6-1 号单锁板、6-1 号双锁板、6-1.2 号锁板、6-2 号锁板根据型材不同可选择上列不同的锁板垫块。
These plastic blocks can be used in different profiles

门锁
door lock



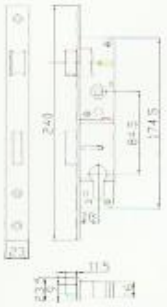

9.03.0021
窄芯锁 1 号
Narrow core lock #1



9.03.0026
窄芯锁 2 号
Narrow core lock #2



9.03.0027
窄芯锁 3 号
Narrow core lock #3





9.03.0016
50 平开门锁
50 casement door lock

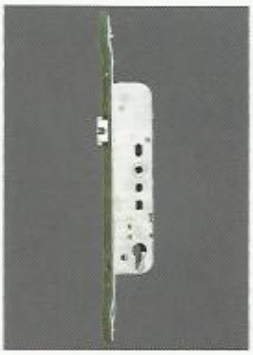

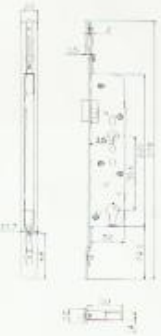

9.03.0007
断桥传动器门锁
Broken-bridge transmission door lock



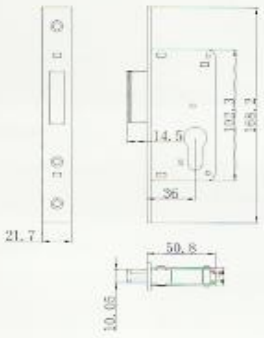

9.03.0125
2 号通道门锁
chanel door lock #2

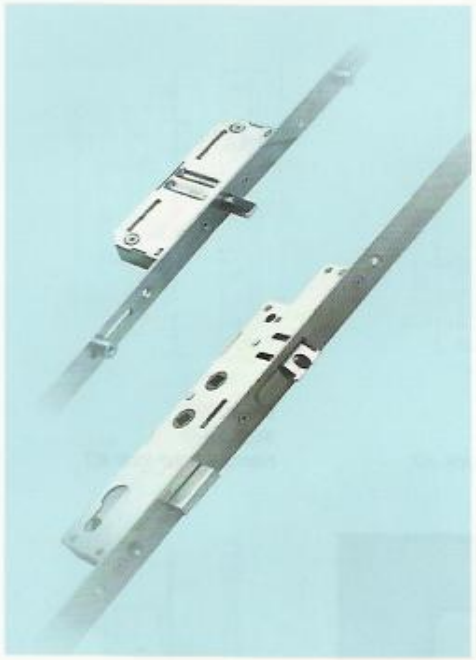

7-4 号门锁
door lock #7-4

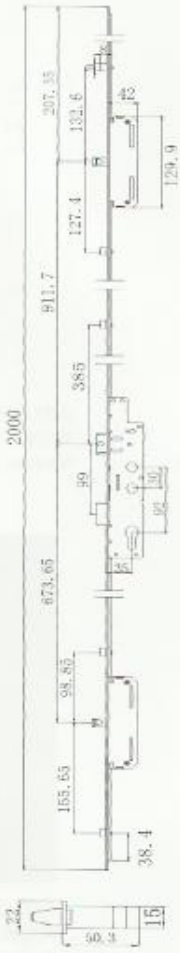

7-4 号门锁（可选配件）				
序号 NO	名 称 Name	编号 Number	数量 Quantity	备 注 Note
1	锁板 lock block		1	根据型材选择 select base on the profile
2	专用小锁板 special minor lock block		2	
3	锁芯 cylinder		1	根据型材选择 select base on the profile
4	面板执手 panel handle		1	可选择 selectable

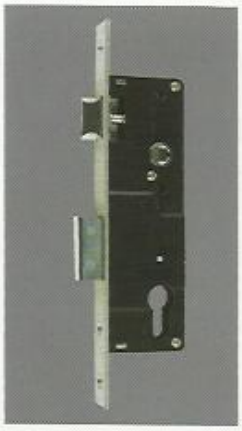

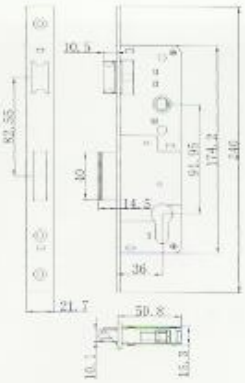

9.03.0126
8 号门锁 door lock #8

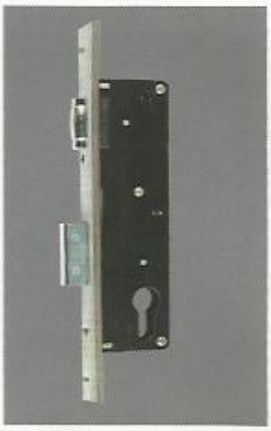



9.03.0127
8 号滚舌门锁 roller door lock #8





9.03.0122
6-28 挂接门锁
6-28 hang-connect door lock



9.03.0123
6-35 挂接门锁
6-35 hang-connect door lock

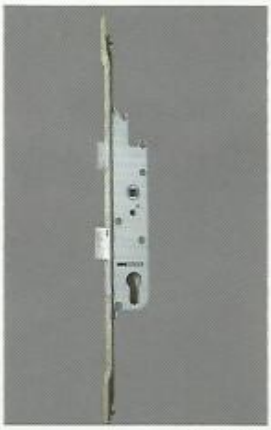



9.03.0137
28-92-2 号挂接门锁
28-92-2 hang-connect door lock



99.08.0144
不锈钢锁板
Stainless lock panel



9.08.0152
AT/819(不锈钢)锁板
AT/819 (stainless) lock panel

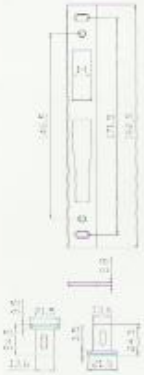

9.08.0158
5 号锁板
#5 lock panel



9.08.0143
湘瑞锁板
Xiangrui lock panel



3.05.030013
12 号锁板
#12 lock panel

Euro Window & Door Hardware





9.06.0076
3D8 号铰链
#3D8 hinge

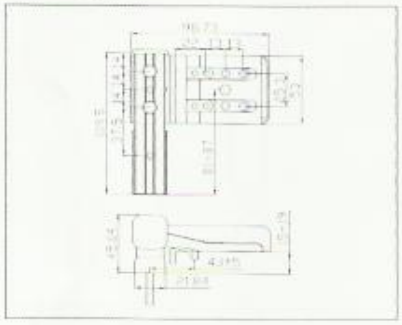

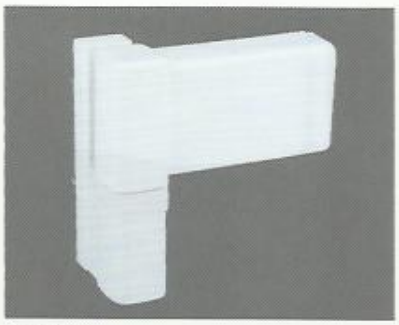

9.06.0116
3D12 号铰链
#3D12 hinge

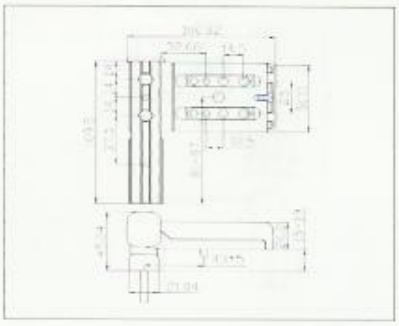

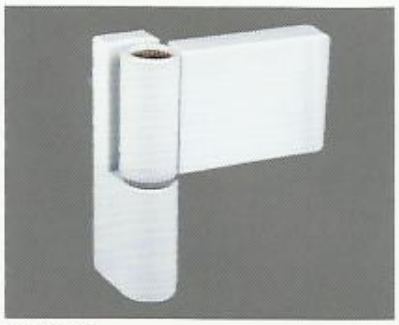

9.06.0001
新门铰链
Latest door hinge

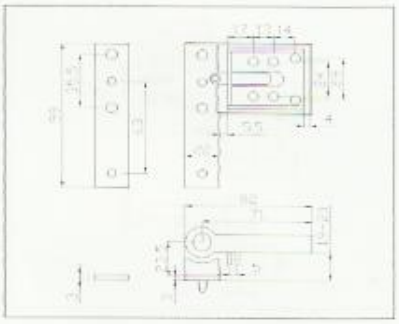



9.06.0122
3D15 号铰链
#3D15 hinge

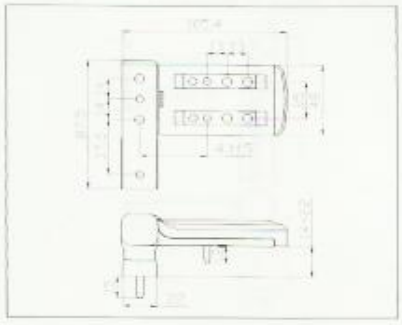



9.06.0126
3D15-2 号铰链
#3D15-2 hinge

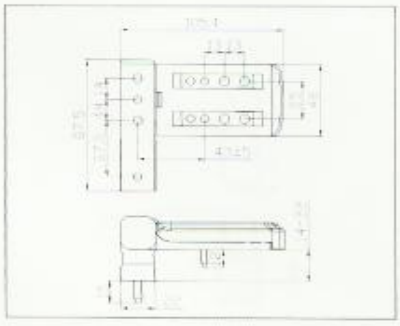

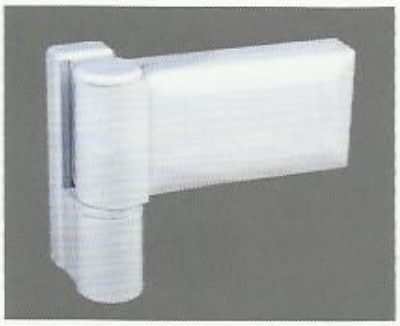

9.06.0127
3D16 号铰链
#3D16 hinge

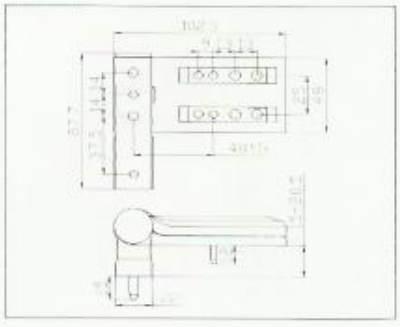

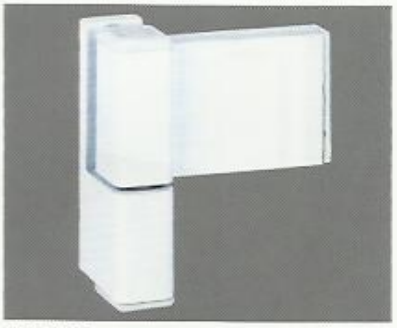

9.06.0142
3D17号铰链
#3D17 door hinge

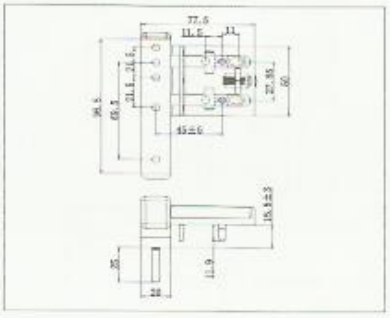



9.06.0143
3D18号铰链
#3D18 door hinge

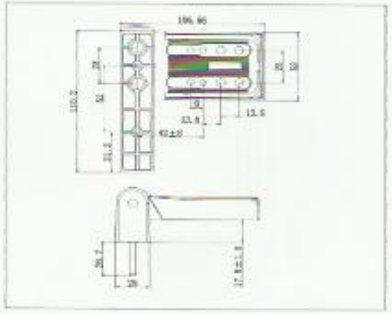



9.06.0002
德式三维门铰链
German 3-dimension door hinge

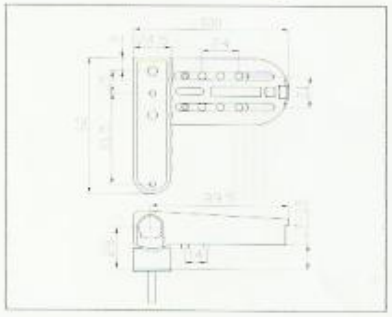



9.06.0117
3D11号铰链
#3D11 hinge

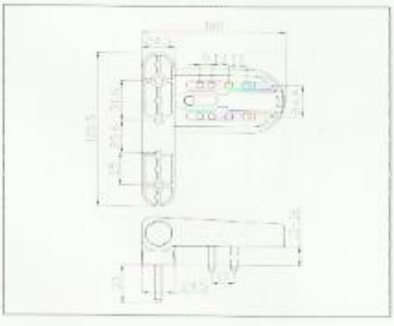



9.06.0044
铝4号门铰链
Aluminum #4 door hinge

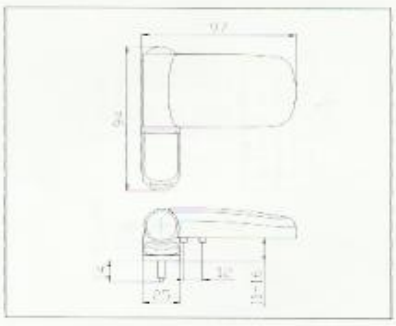

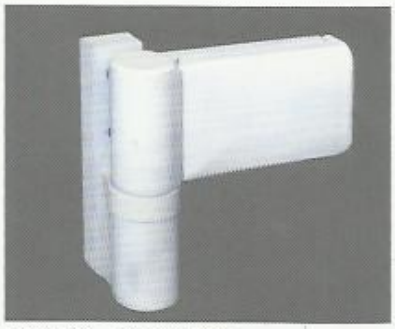

9.06.0163 3D20号铰链
#3D20 door hinge(17.5)
9.06.0164 3D20-2号铰链
#3D20 -2door hinge(20.5)

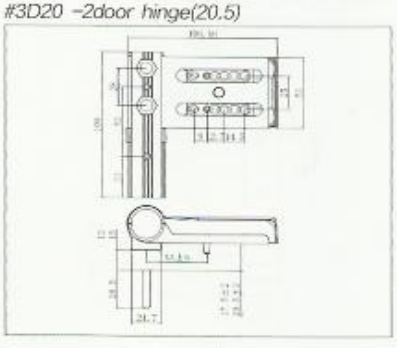



9.06.0060
英式 1 号铰链
English #1 hinge



9.06.0061
英式 2 号铰链
English #2 hinge



9.06.0077
英式 3 号铰链
English #3 hinge

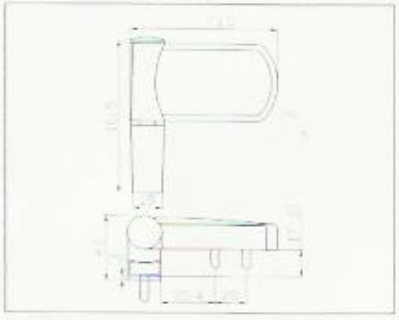

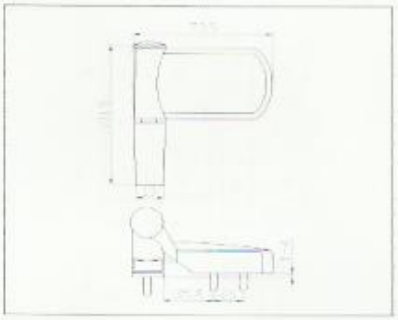

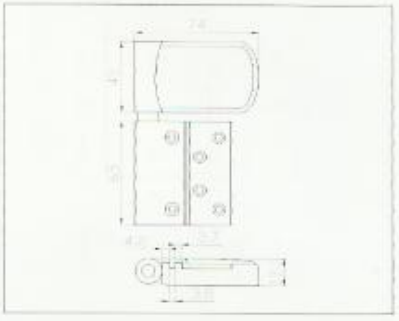



9.06.0003
二维可调门铰链 (新)
2-Dimension adjustable door hinge(new)

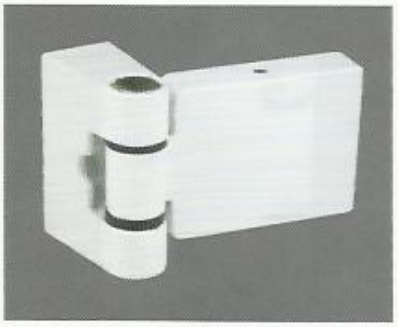

9.06.0003
二维可调门铰链
2-Dimension adjustable door hinge

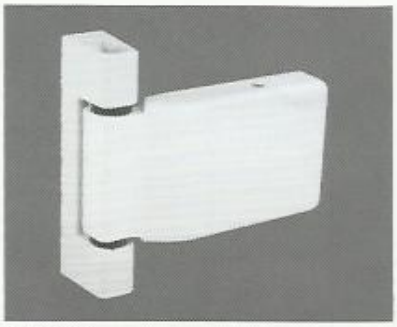

9.06.0115
3D13 号铰链
#3D13 hinge

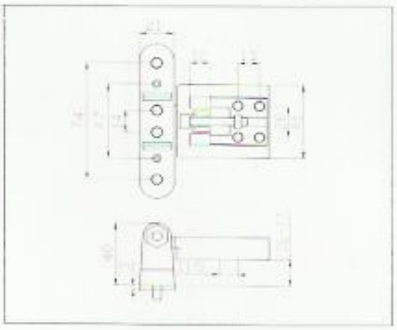

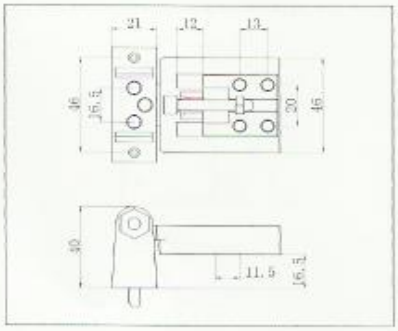

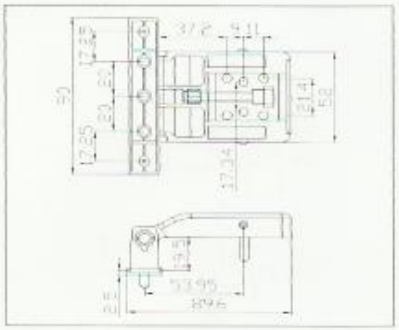



9.06.0004
标准门铰链 8 孔
Standard 8-hole door hinge



9.06.0005
华塑门铰链
Huasu door hinge



9.06.0006
标准门铰链 5 孔
Standard 5-hole door hinge

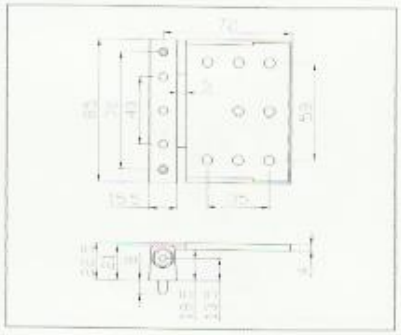

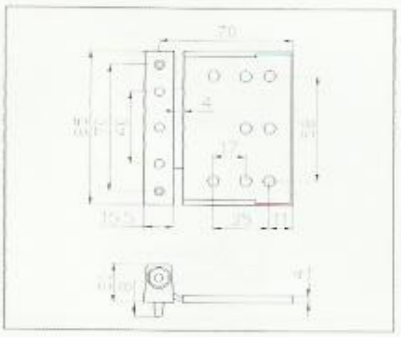

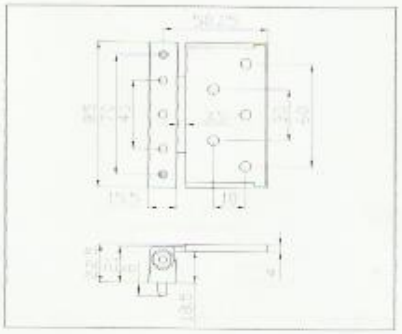

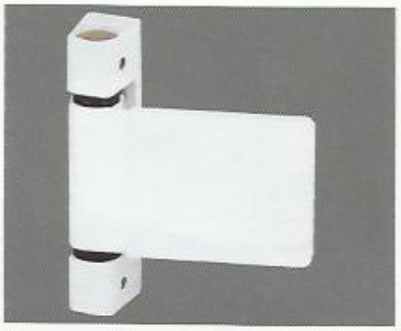

9.06.0007
多功能外开窗铰链
Multifunctional outward window hinge



9.06.0008
多功能外开小窗铰链
Multifunctional outward smaller window hinge



9.06.0009
外开窗铰链
Outward window hinge

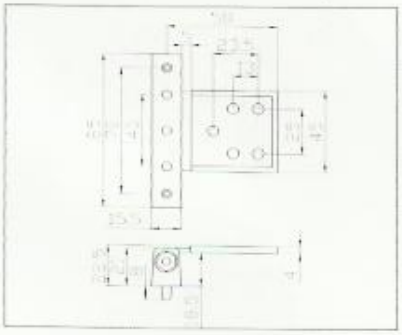

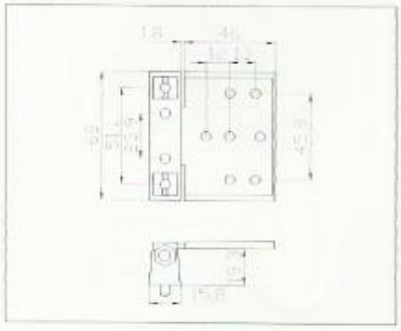

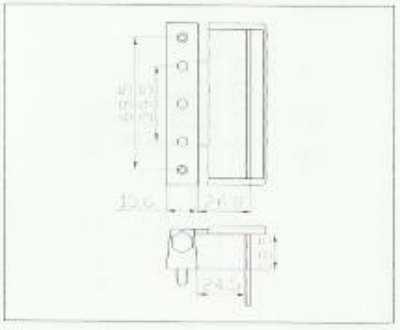



9.06.0010
外开转角铰链
Ourtward corner hinge

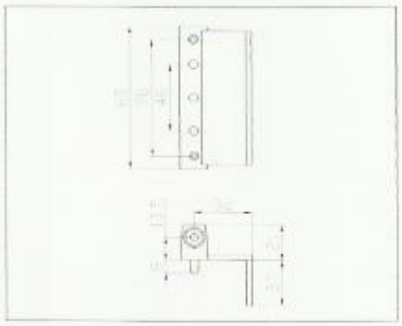

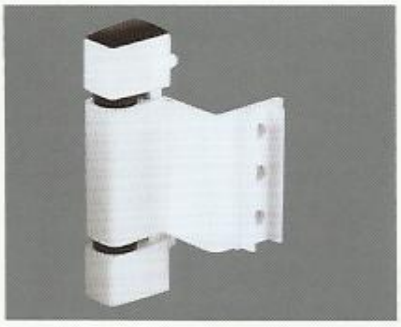

9.06.0062
14 号铰链
#14 hinge

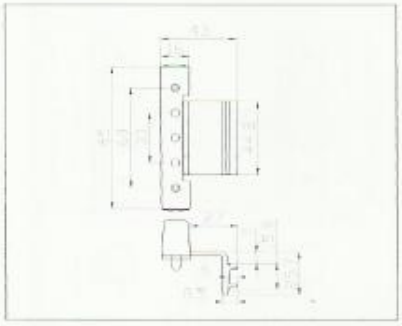

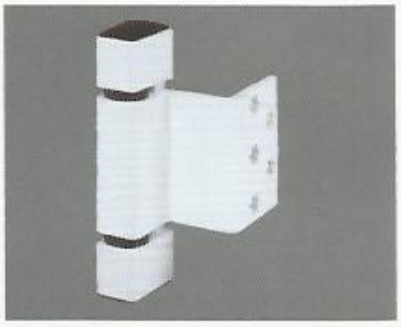

9.06.0114
14-2 号铰链
#14-2 hinge

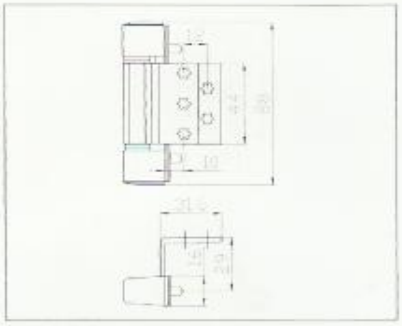

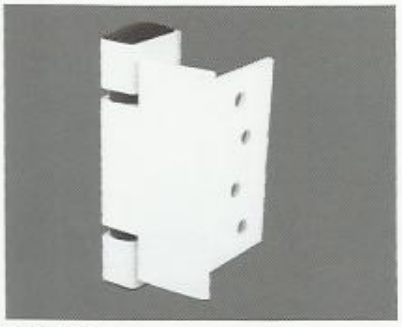

9.06.0124
14-3 号铰链
#14-3 hinge

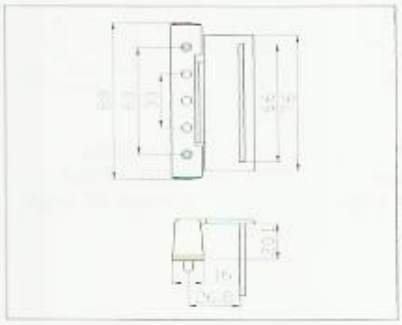



9.06.0050
2D2 号铰链
#2D2 hinge

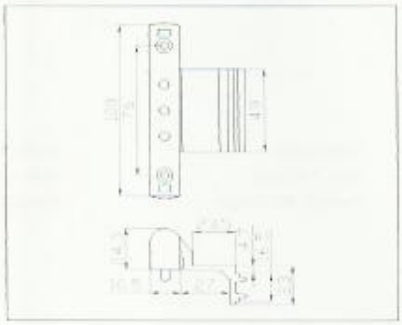



9.06.0059
2D3 号铰链
#2D3 hinge

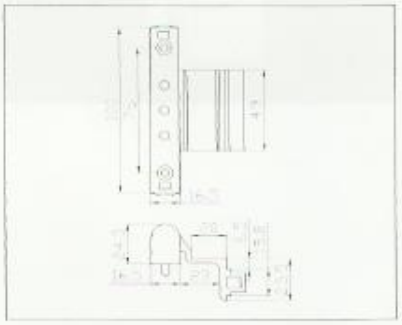

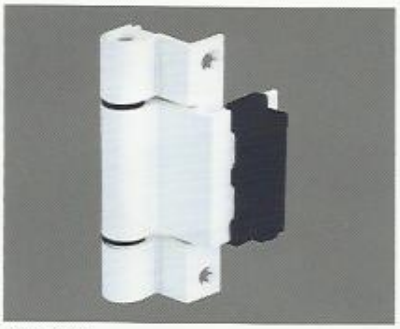

9.06.0064
12 号铰链
#12 hinge



9.06.0051
AD 铰链
AD hinge



9.06.0011
内开窗铰链
Inward window hinge

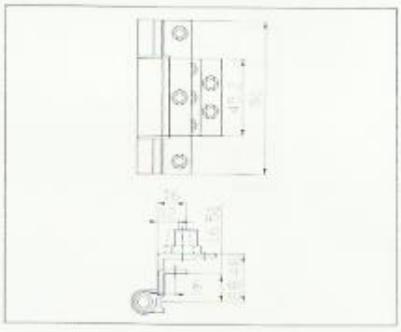

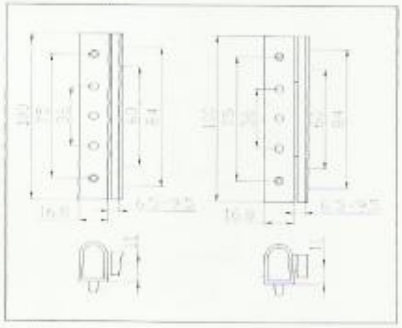

9.06.0128
0 度 AD 铰链
0° AD hinge

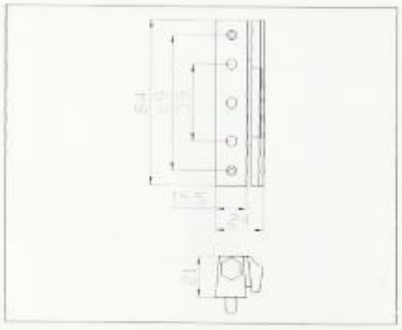



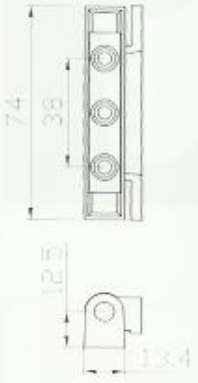

9.06.0081
内开 3 号铰链
Inward #3 hinge

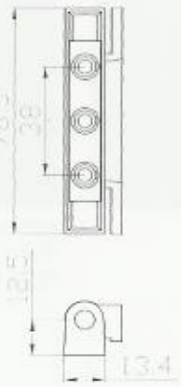

9.06.0082
内开 4 号铰链
Inward #4 hinge

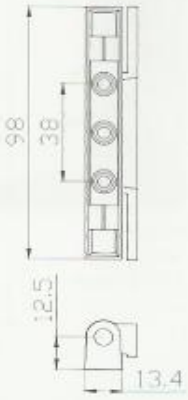

9.06.0083
内开 5 号铰链
Inward #5 hinge

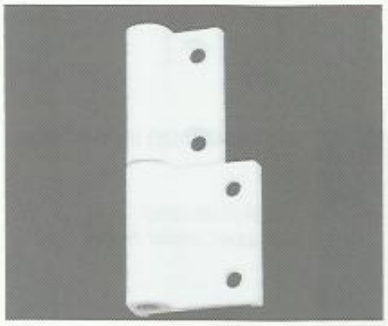

9.06.0043
铝纱窗铰链
Aluminum screen window hinge

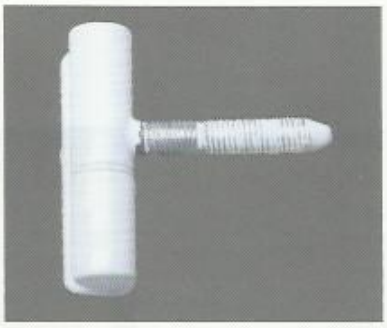

9.06.0125
螺丝铰链
Screw hinge

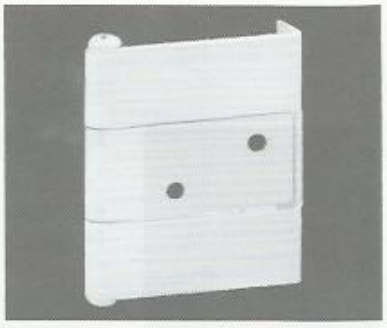

9.06.0085
纱窗铰链
Window Screen hinge

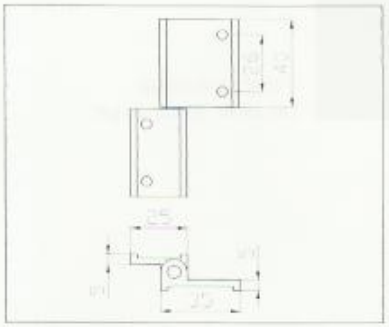

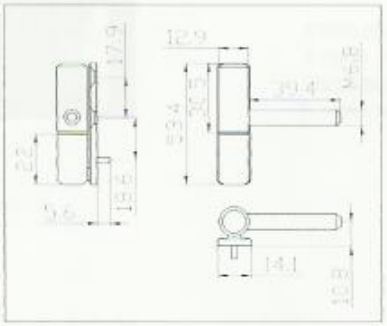

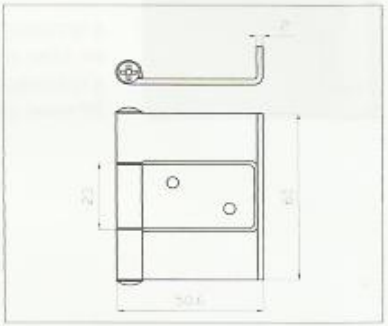

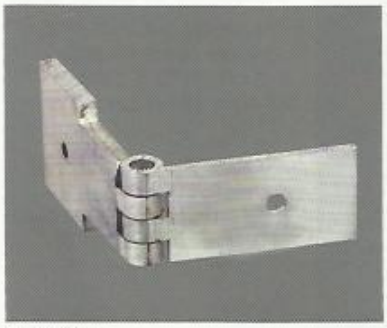

9.06.0153
22 号铰链
22# hinge

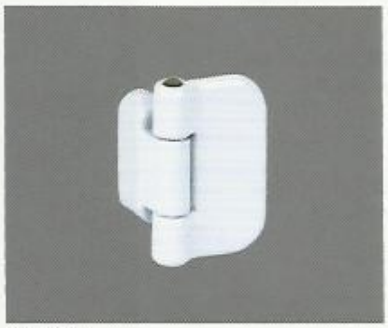

9.06.0154
26 号铰链
26# hinge

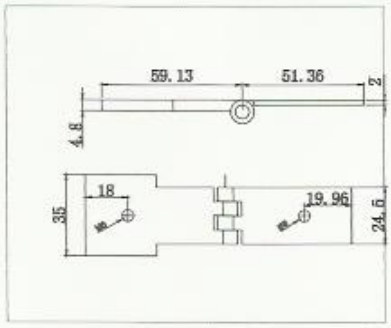

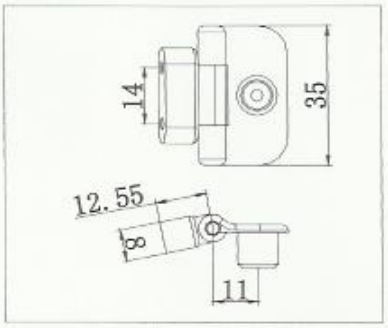



8号角部铰链 8# corner hinge

8号上铰链 (9.06.0155)
8# upper corner hinge

8号中铰链 (9.06.0156)
8# middle corner hinge

8号下铰链左 (9.06.0157)
8# lower corner hinge L
8号下铰链右 (9.06.0158)
8# lower corner hinge R



Db 角部铰链 DB corner hinge

上铰链 (9.06.0056)
DB upper corner hinge

中铰链 (9.06.0057)
DB middle corner hinge

下铰链 (9.06.0058)
DB lower corner hinge

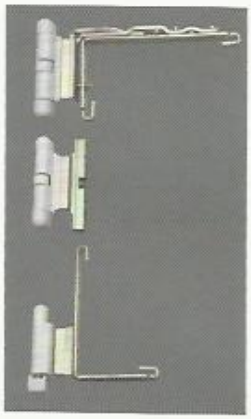

5号角部铰链 5# corner hinge

上铰链 (9.06.0129L/9.06.0129R)
5# upper corner hinge

中铰链 (9.06.0057)
5# middle corner hinge

下铰链 (9.06.0130L/9.06.0130R)
5# lower corner hinge

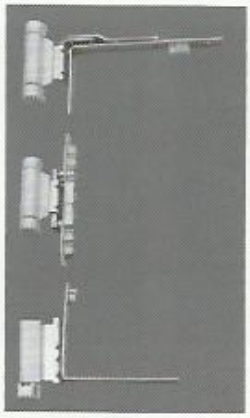

6号角部铰链 6# corner hinge

6号上角铰链 9系 (9.06.0136)
6# upper corner hinge 9
6号上角铰链 13系 (9.06.0137)
6# upper corner hinge 13

6号中角铰链 9系 (9.06.0138)
6# middle corner hinge 9
6号中角铰链 13系 (9.06.0139)
6# middle corner hinge 13

6号下角铰链 9系 (9.06.0140)
6# lower corner hinge 9
6号下角铰链 13系 (9.06.0141)
6# lower corner hinge 13

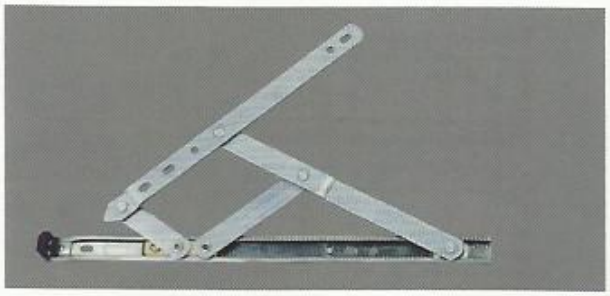

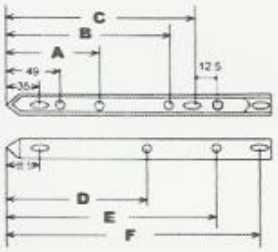

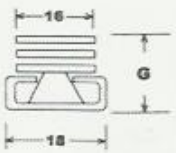

序号 No	型号 Type	安装尺寸 (INSTALLATION SIZE)					单位: mm	
		A	B	C	D	E	F	G
01	M08A	39	-	167	152	-	200	13.2
02	M08B4	39	-	167	152	-	200	13.2
03	M10A4	69	-	200.5	213.5	-	254	15.5
04	M12A4	69	-	225.5	252.5	-	304.5	16
05	M12B4	69	-	225.5	252.5	-	304.5	16
06	M14A4	100	-	256	302	-	357	16
07	M14A5	100	-	256	302	-	357	16
08	M14B4	100	-	256	302	-	357	16
09	M16A5	100	-	277	339.5	-	406.5	16
10	M16A4	100	-	277	339.5	-	406.5	16
11	M16B4	100	-	277	339.5		406.5	16

产品技术参数 (PRCDUCT TECHN CAL PARAMETER)							
序号 No	型号 Type	连杆数 linking rod quantity	窗类型 window type	窗最重 window nax weight	窗最高 window nax height	窗最宽 window nax width	开启角度 opening angle
01	M08A	4	下悬窗	15 kg	500 mm	1100 mm	87±2
02	M08B4	4	下悬窗	13 kg	650 mm	1200 mm	87±2
03	M10A4	4	下悬窗	16 kg	500 mm	1200 mm	87±2
04	M12A4	4	下悬窗	18 kg	650 mm	1200 mm	87±2
05	M12B4	4	下悬窗	16 kg	650 mm	1200 mm	87±2
06	M14A4	4	下悬窗	20 kg	750 mm	1200 mm	87±2
07	M14A5	5	下悬窗	22 kg	750 mm	1200 mm	60±2
08	M14B4	4	下悬窗	18 kg	750 mm	1200 mm	87±3
09	M16A5	5	下悬窗	24 kg	850 mm	1200 mm	60±2
10	M16A4	4	下悬窗	22 kg	850 mm	1200 mm	87±2
11	M16B4	4	下悬窗	20 kg	850 mm	1200 mm	87±2
04	M12A4	4	平开窗	16 kg	1200 mm	600 mm	87±2
05	M12B4	4	平开窗	14 kg	1200 mm	600 mm	87±2
06	M14A4	4	平开窗	18 kg	1200 mm	600 mm	87±2
07	M14A5	5	平开窗	20 kg	1200 mm	600 mm	60±2
08	M14B4	4	平开窗	16 kg	1200 mm	600 mm	87±3
09	M16A5	5	平开窗	22 kg	1200 mm	600 mm	60±2
10	M16A4	4	平开窗	20 kg	1200 mm	600 mm	87±2
11	M16B4	4	平开窗	28 kg	1500 mm	600 mm	



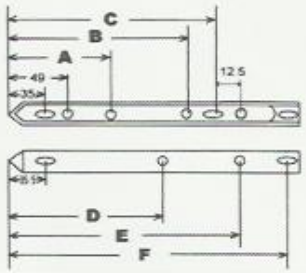

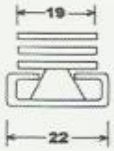

序号 No	型号 Type	安装尺寸(INSTALLATION SIZE)					单位: mm	
		A	B	C	D	E	F	G
01	LM08A	39	-	167	152	-	200	13.2
02	LM08B4	39	-	167	152	-	200	13.2
03	LM10A4	69	-	200.5	213.5	-	254	15.5
04	LM12A4	69	-	225.5	252.5	-	304.5	16
05	LM12B4	69	-	225.5	252.5	-	304.5	16
06	LM14A4	100	-	256	302	-	357	16
07	LM14A5	100	-	256	302	-	357	16
08	LM14B4	100	-	256	302	-	357	16
09	LM16A5	100	-	277	339.5	-	406.5	16
10	LM16A4	100	-	277	339.5	-	406.5	16
11	LM16B4	100	-	277	339.5		406.5	16

产品技术参数 (PRCDUCT TECHN CAL PARAMETER)							
序号 No	型号 Type	连杆数 linking rod quantity	窗类型 window type	窗最重 window nax weight	窗最高 window nax height	窗最宽 window nax width	开启角度 opening angle
01	LM08A	4	下悬窗	15 kg	500 mm	1100 mm	87±2
02	LM08B4	4	下悬窗	13 kg	650 mm	1200 mm	87±2
03	LM10A4	4	下悬窗	16 kg	500 mm	1200 mm	87±2
04	LM12A4	4	下悬窗	18 kg	650 mm	1200 mm	87±2
05	LM12B4	4	下悬窗	16 kg	650 mm	1200 mm	87±2
06	LM14A4	4	下悬窗	20 kg	750 mm	1200 mm	87±2
07	LM14A5	5	下悬窗	22 kg	750 mm	1200 mm	60±2
08	LM14B4	4	下悬窗	18 kg	750 mm	1200 mm	87±3
09	LM16A5	5	下悬窗	24 kg	850 mm	1200 mm	60±2
10	LM16A4	4	下悬窗	22 kg	850 mm	1200 mm	87±2
11	LM16B4	4	下悬窗	20 kg	850 mm	1200 mm	87±2
04	LM12A4	4	平开窗	16 kg	1200 mm	600 mm	87±2
05	LM12B4	4	平开窗	14 kg	1200 mm	600 mm	87±2
06	LM14A4	4	平开窗	18 kg	1200 mm	600 mm	87±2
07	LM14A5	5	平开窗	20 kg	1200 mm	600 mm	60±2
08	LM14B4	4	平开窗	16 kg	1200 mm	600 mm	87±3
09	LM16A5	5	平开窗	22 kg	1200 mm	600 mm	60±2
10	LM16A4	4	平开窗	20 kg	1200 mm	600 mm	87±2
11	LM16B4	4	平开窗	28 kg	1500 mm	600 mm	

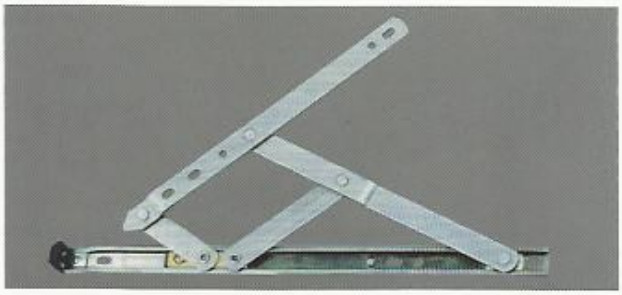

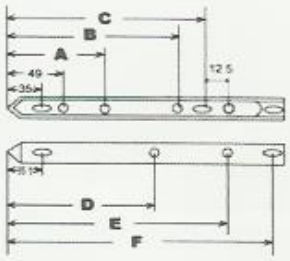

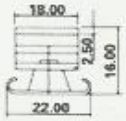

序号 No	型号 Type	安装尺寸 (INSTALLATION SIZE)					单位: mm	
		A	B	C	D	E	F	G
01	RM08A	39	-	167	152	-	200	13.2
02	RM08B4	39	-	167	152	-	200	13.2
03	RM10A4	69	-	200.5	213.5	-	254	15.5
04	RM12A4	69	-	225.5	252.5	-	304.5	16
05	RM12B4	69	-	225.5	252.5	-	304.5	16
06	RM14A4	100	-	256	302	-	357	16
07	RM14A5	100	-	256	302	-	357	16
08	RM14B4	100	-	256	302	-	357	16
09	RM16A5	100	-	277	339.5	-	406.5	16
10	RM16A4	100	-	277	339.5	-	406.5	16
11	RM16B4	100	-	277	339.5		406.5	16

产品技术参数 (PRCDUCT TECHN CAL PARAMETER)							
序号 No	型号 Type	连杆数 linking rod quantity	窗类型 window type	窗最重 window nax weight	窗最高 window nax height	窗最宽 window nax width	开启角度 opening angle
01	RM08A	4	下悬窗	15 kg	500 mm	1100 mm	87±2
02	RM08B4	4	下悬窗	13 kg	650 mm	1200 mm	87±2
03	RM10A4	4	下悬窗	16 kg	500 mm	1200 mm	87±2
04	RM12A4	4	下悬窗	18 kg	650 mm	1200 mm	87±2
05	RM12B4	4	下悬窗	16 kg	650 mm	1200 mm	87±2
06	RM14A4	4	下悬窗	20 kg	750 mm	1200 mm	87±2
07	RM14A5	5	下悬窗	22 kg	750 mm	1200 mm	60±2
08	RM14B4	4	下悬窗	18 kg	750 mm	1200 mm	87±3
09	RM16A5	5	下悬窗	24 kg	850 mm	1200 mm	60±2
10	RM16A4	4	下悬窗	22 kg	850 mm	1200 mm	87±2
11	RM16B4	4	下悬窗	20 kg	850 mm	1200 mm	87±2
04	RM12A4	4	平开窗	16 kg	1200 mm	600 mm	87±2
05	RM12B4	4	平开窗	14 kg	1200 mm	600 mm	87±2
06	RM14A4	4	平开窗	18 kg	1200 mm	600 mm	87±2
07	RM14A5	5	平开窗	20 kg	1200 mm	600 mm	60±2
08	RM14B4	4	平开窗	16 kg	1200 mm	600 mm	87±3
09	RM16A5	5	平开窗	22 kg	1200 mm	600 mm	60±2
10	RM16A4	4	平开窗	20 kg	1200 mm	600 mm	87±2
11	RM16B4	4	平开窗	28 kg	1500 mm	600 mm	

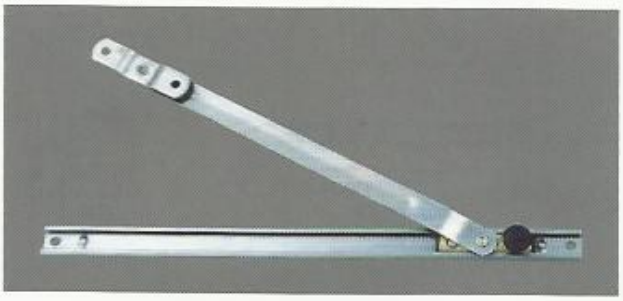

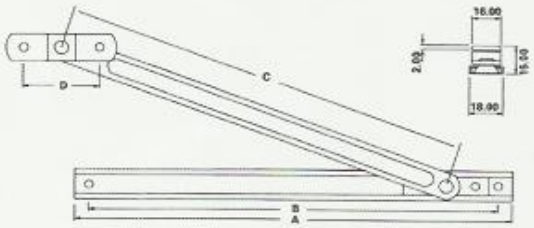

型号 Type	A 底槽长 bottom notch width	B 底槽安装距 bottom notch installation gap	C 摆杆长 sway rod length	D 摆杆安装孔距 hole gap for sway rod installation
DF08B	200.00	189.00	130.00	47.20
DF10B	250.00	239.00	185.00	47.20
DF12B	295.00	284.00	228.00	47.20
DF14B	344.00	333.00	285.00	47.20
DF10.5B	268.00	256.00	191.00	47.20

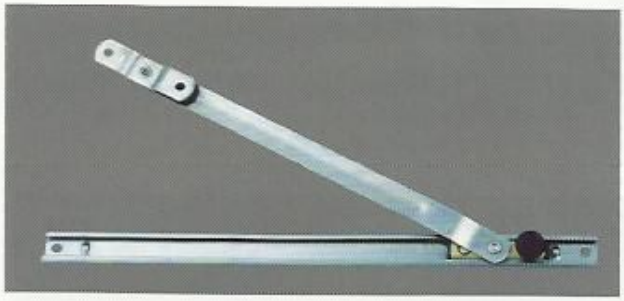

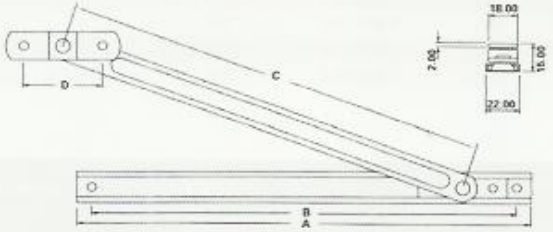

型号 Type	A 底槽长 bottom notch width	B 底槽安装距 bottom notch installation gap	C 摆杆长 sway rod length	D 摆杆安装孔距 hole gap for sway rod installation	E 码高 yard height
LDF8.5B	216.00	197.00	123.00	58.20	13.50
LDF10.5B	268.00	249.00	117.00	58.20	13.50
LDF12B	298.00	279.00	207.00	58.20	13.50
LDF14B	344.00	325.00	249.00	58.20	13.50
LDF16B	400.00	318.00	312.00	58.20	13.50

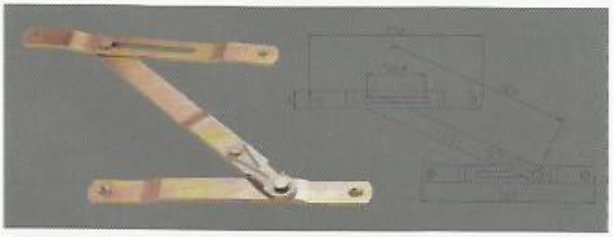

9.06.0041 三节风撑 Wind brace

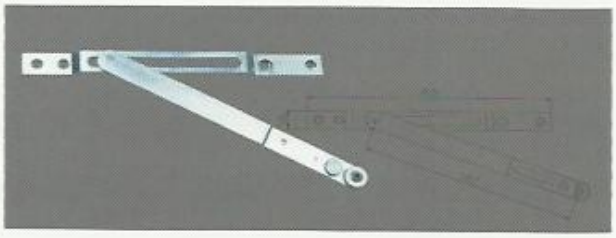

9.06.0133 2号三节风撑 #2 wind brace

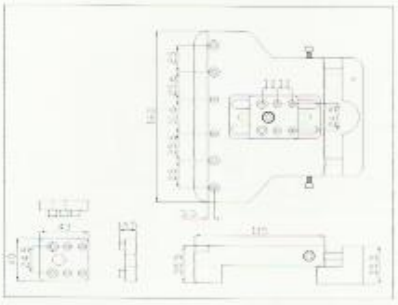

3D11 号铰链靠模
3D11# hinge jig

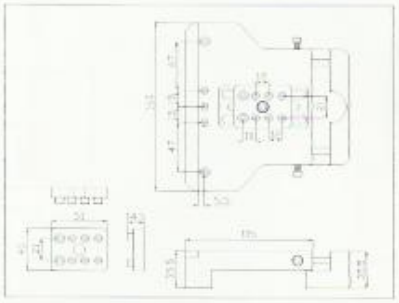

德式三维铰链靠模
German 3D hinge jig

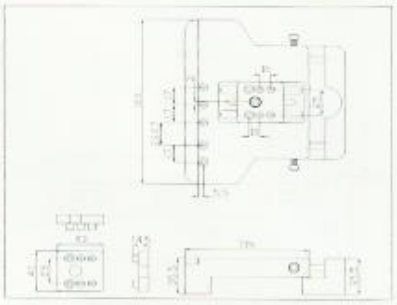

英式铰链靠模(L)
English hinge jig

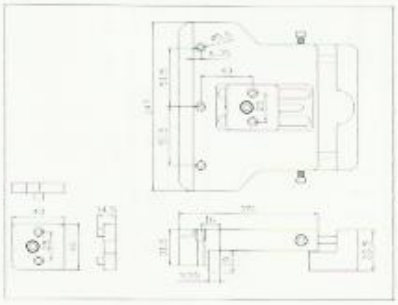

3D15 号铰链靠模
3D15# hinge jig

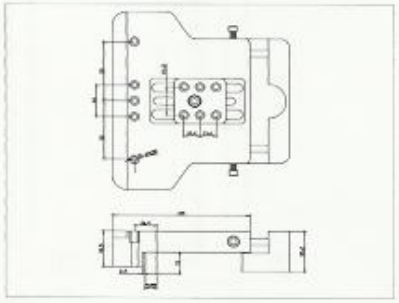

3D8 号铰链 2 号靠模
3D8# hinge jig 2#

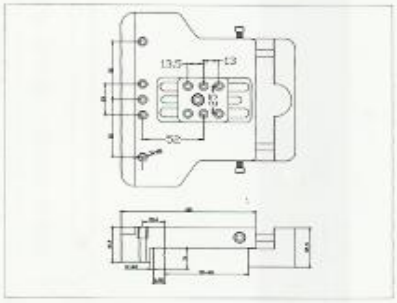

3D12 号铰链 2 号靠模
3D12# hinge jig 2#

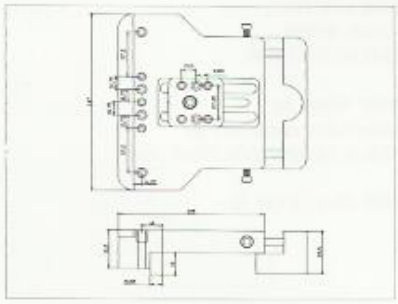

3D17 号铰链靠模
3D17# hinge jig

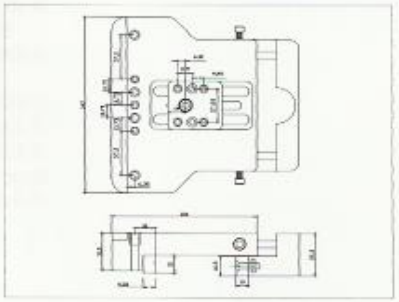

3D17 号铰链 2 号靠模
3D17# hinge jig 2#

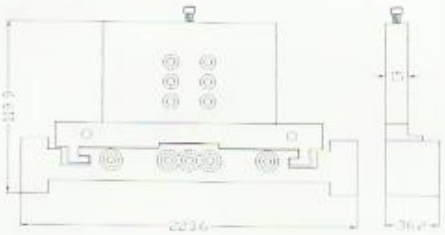

3D12 号铰链靠模
3D12# hinge jig

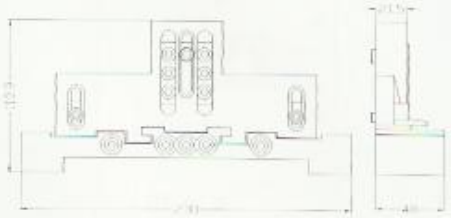

3D8 号铰链靠模
3D8# hinge jig



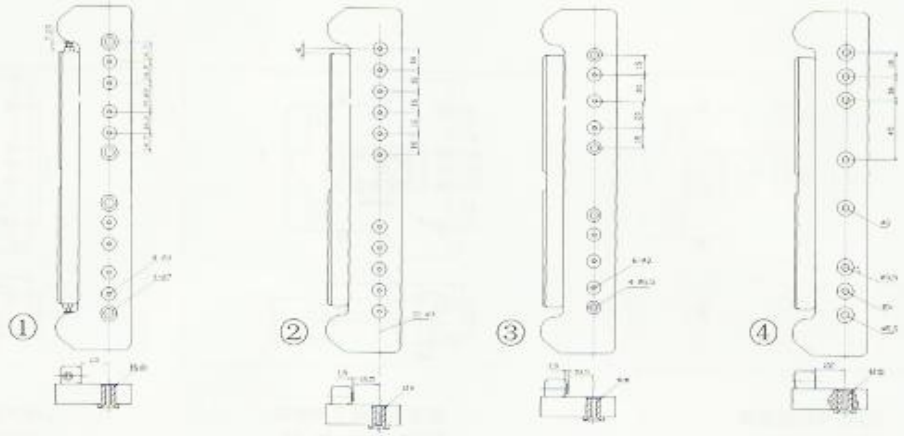

① DB 角铰链靠模
② 平开上悬，角部铰链靠模
③ 9.06.0006,9.06.0007,
9.06.0008, 等靠模
④ 9.06.0001 新门铰链靠模

① DB corner hinge jig
② Top-suspension casement jig
③ 9.06.0006,9.06.0007,9.06.0008 door hinge jig
④ 9.06.0001 door hinge jig

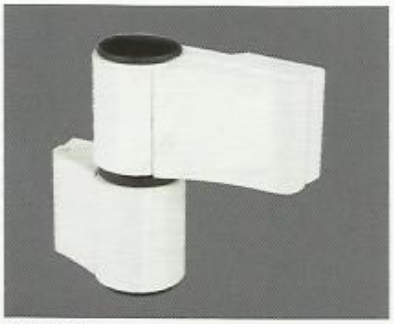

9.06.0017
50-1 铰链
50-1 hinge



9.06.0078
铝 9 号门铰链
Aluminum alloy #9 door hinge

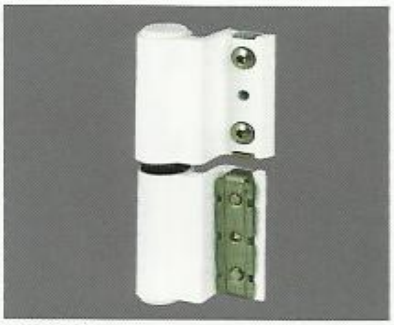

9.06.0159
铝 24 号门铰链
Aluminum alloy #24 door hinge

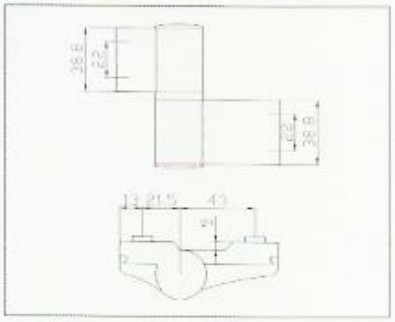

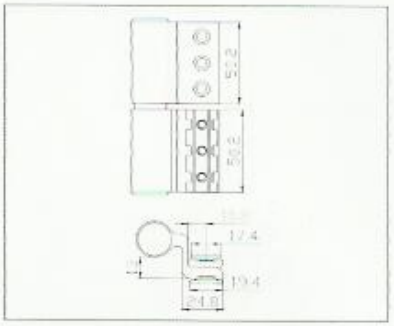

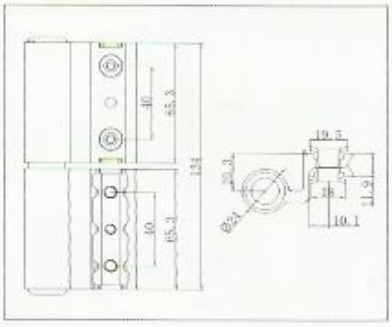

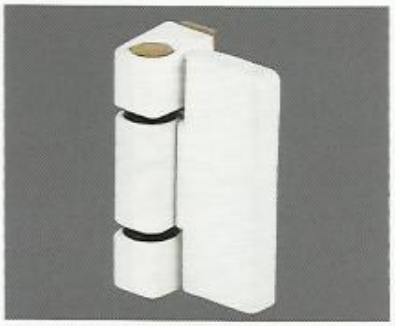

9.06.0012
50-2 铰链
50-2 hinge

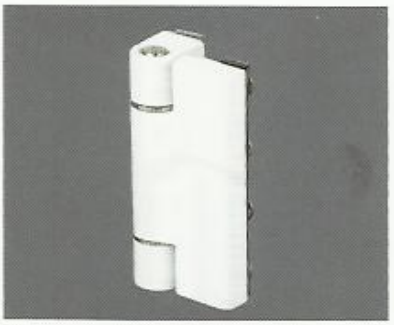

9.06.0013
50-3 铰链
50-3 hinge

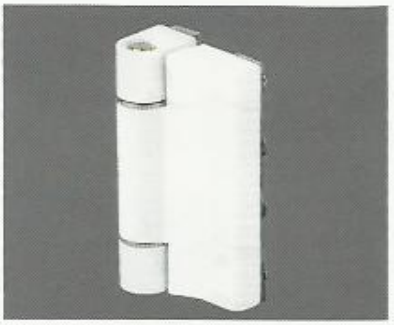

9.06.0014
铝合金 1 号铰链
Aluminum alloy #1 hinge

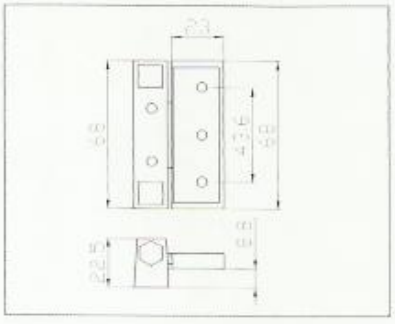

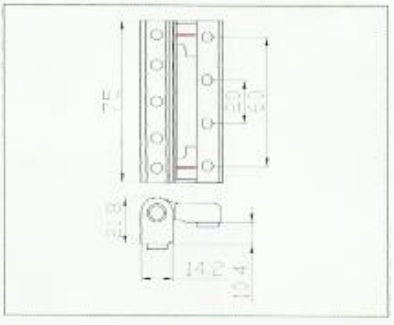

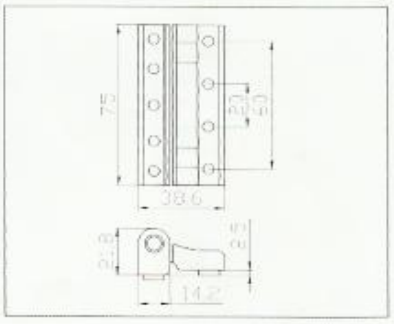



9.06.0015
铝合金 2 号铰链
Aluminum alloy #2 hinge

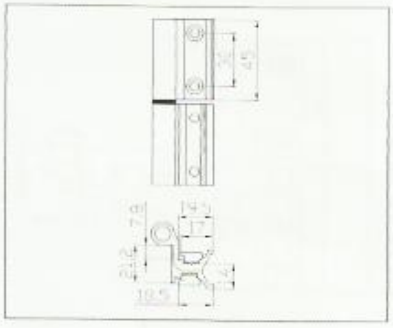



9.06.0048
3D 铝门铰链
3D Aluminum door hinge

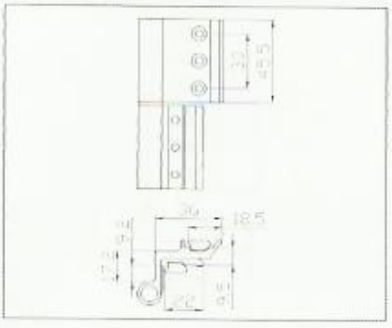



9.06.0052
铝 7 号铰链
Aluminum alloy #7 hinge

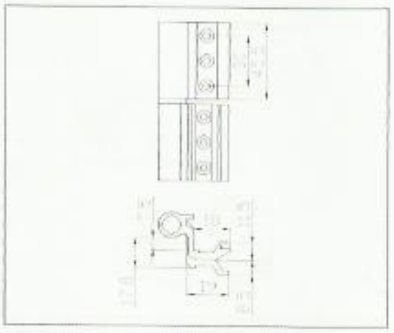



9.06.0049
铝 8 号铰链
Aluminum alloy #8 hinge

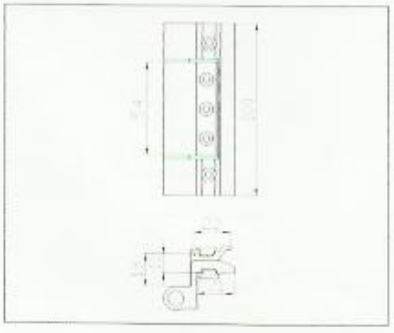

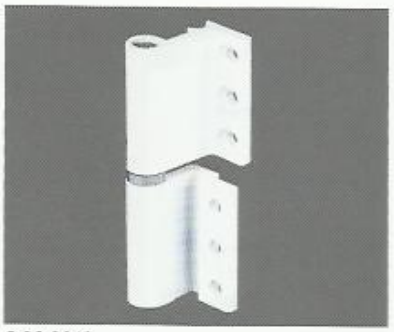

9.06.0016
铝合金 3 号铰链
Aluminum alloy #3 hinge

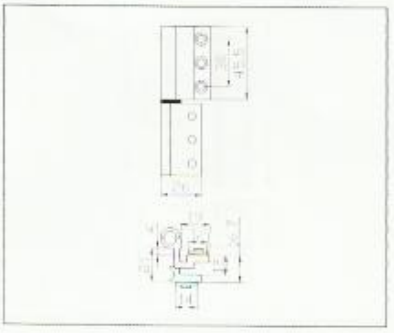

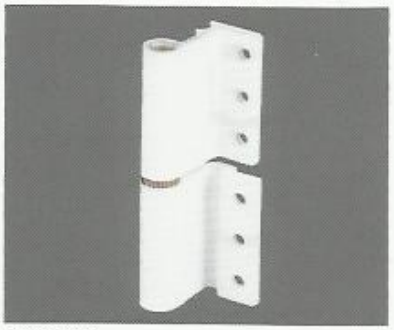

9.06.0045
铝 5 号铰链
Aluminum alloy #5 hinge

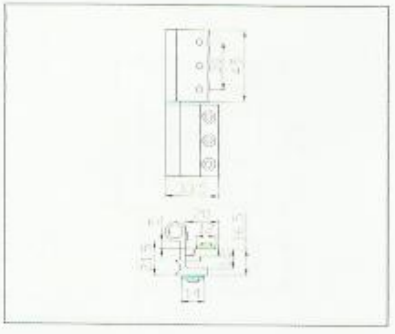

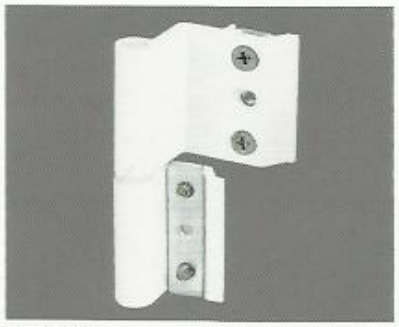

9.06.0046
铝 6 号铰链
Aluminum alloy #6 hinge

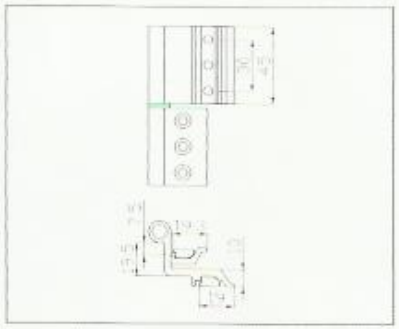



9.06.0055
铝 10 号铰链
Aluminum #10 hinge

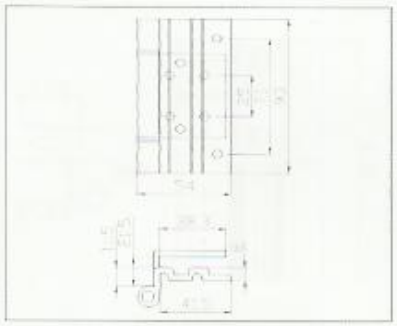

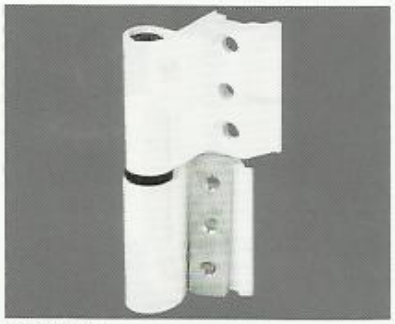

9.06.0063
铝 11 号铰链
Aluminum alloy #11 hinge

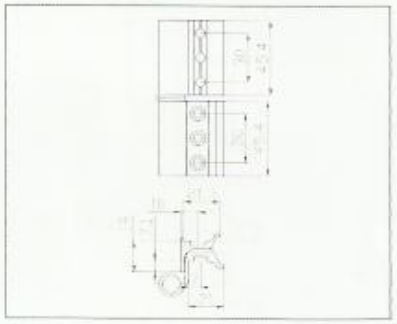



9.06.0066
15 铰链
#15 hinge

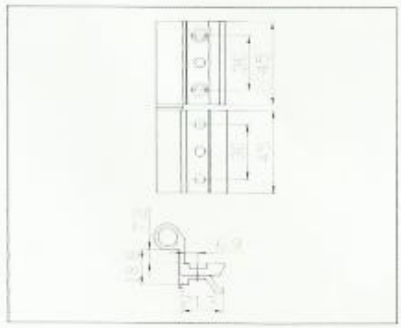

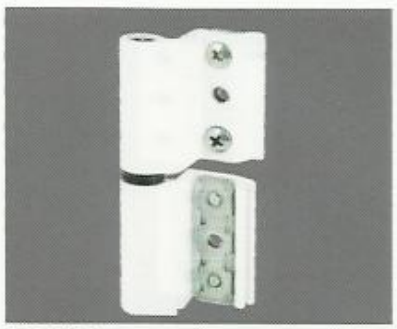

9.06.0134
铝 20 号铰链
Aluminum alloy #20 hinge

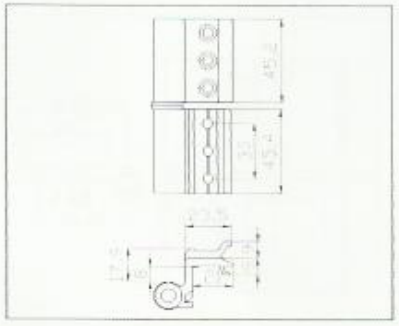



9.06.0135
铝 21 号铰链
Aluminum alloy #21 hinge

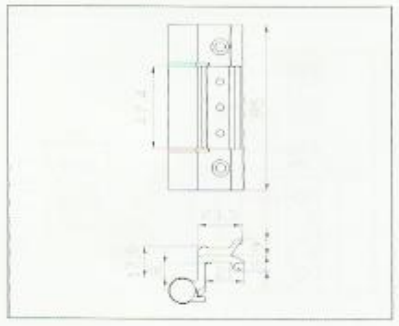



9.06.0079
铝 18 号铰链
Aluminum alloy #18 hinge

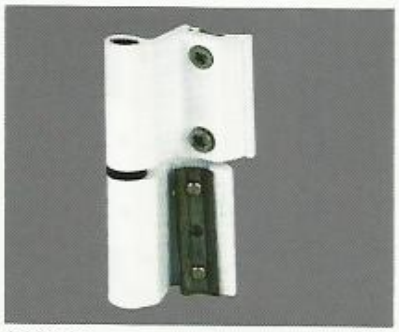

9.06.0160
铝 23 号铰链
Aluminum alloy #23 hinge

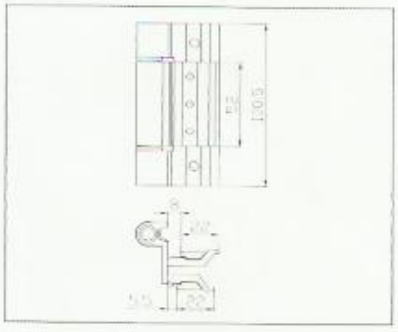

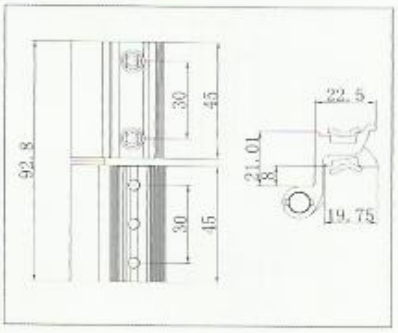

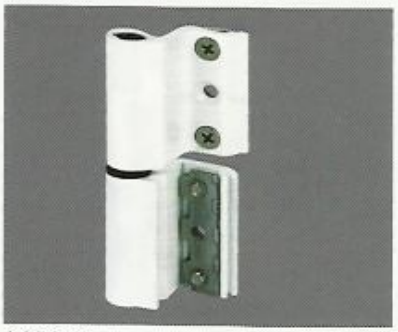

9.06.0161
铝 25 号铰链
Aluminum alloy #25 hinge

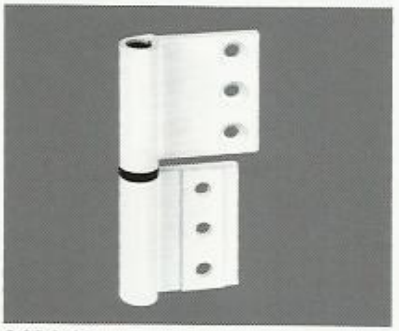

9.06.0162
铝 27 号铰链
Aluminum alloy #27 hinge

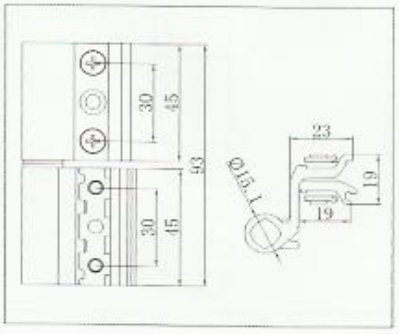

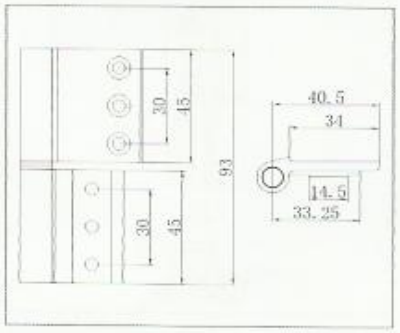

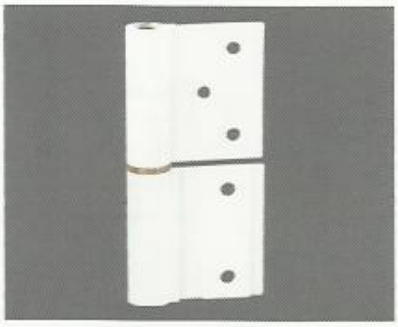

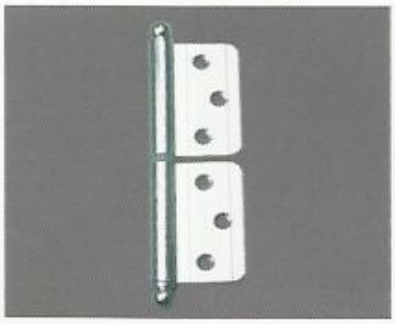

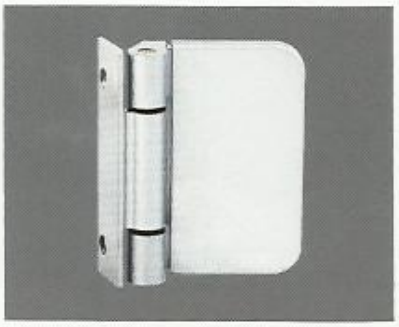

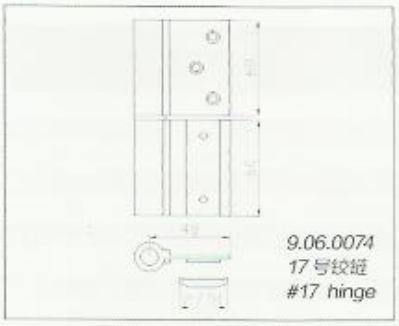

9.06.0074
17 号铰链
#17 hinge

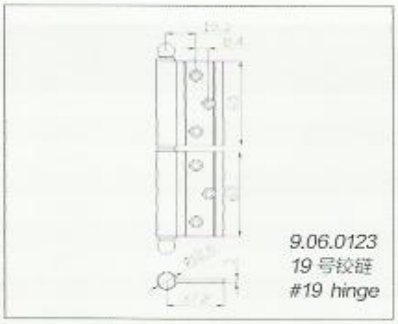

9.06.0123
19 号铰链
#19 hinge

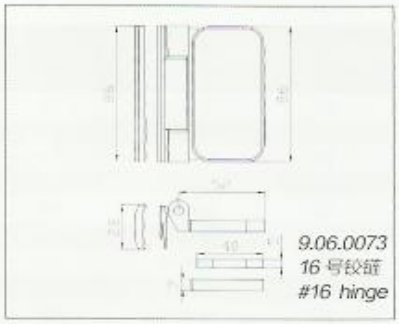

9.06.0073
16 号铰链
#16 hinge

伸缩风撑系列　iexpansion windbreak bracket series

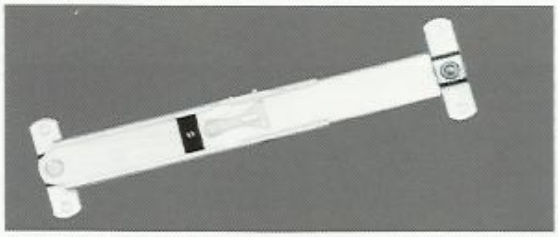

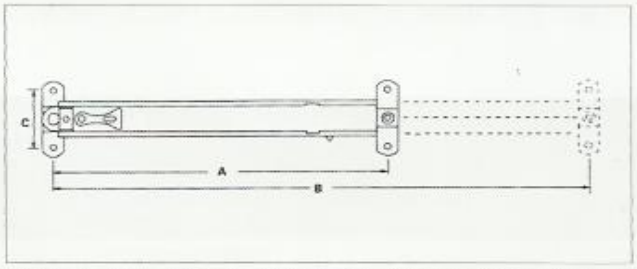

型号 Type	A 收缩长度 contraction length	B 伸展长度 expansion length	C 安装孔距 hole installation gap
Ls152	152.00mm	200.00mm	45.00mm
LS203	203.00mm	300.00mm	45.00mm
LS254	254.00mm	400.00mm	45.00mm
LS355	355.00mm	600.00mm	45.00mm

限位撑系列　limit bracket series



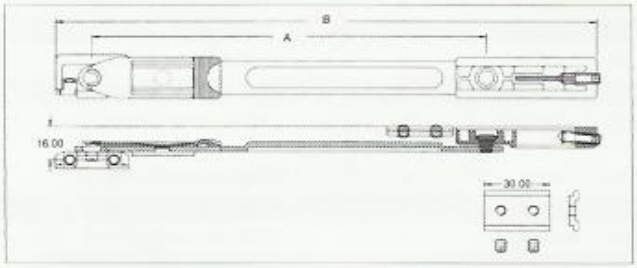

型号 Type	A	B	窗宽度 (window width)
XWC210	140.00mm	207.50mm	不少于 320mm
XWC250	180.00mm	247.50mm	不少于 380mm
XWC300	230.00mm	297.50mm	不少于 410mm
XWC350	280.00mm	347.50mm	不少于 460mm



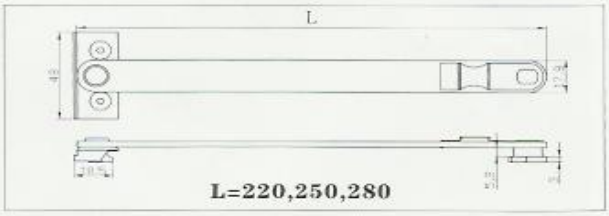

2号限位撑系列　　# 2limit bracket series

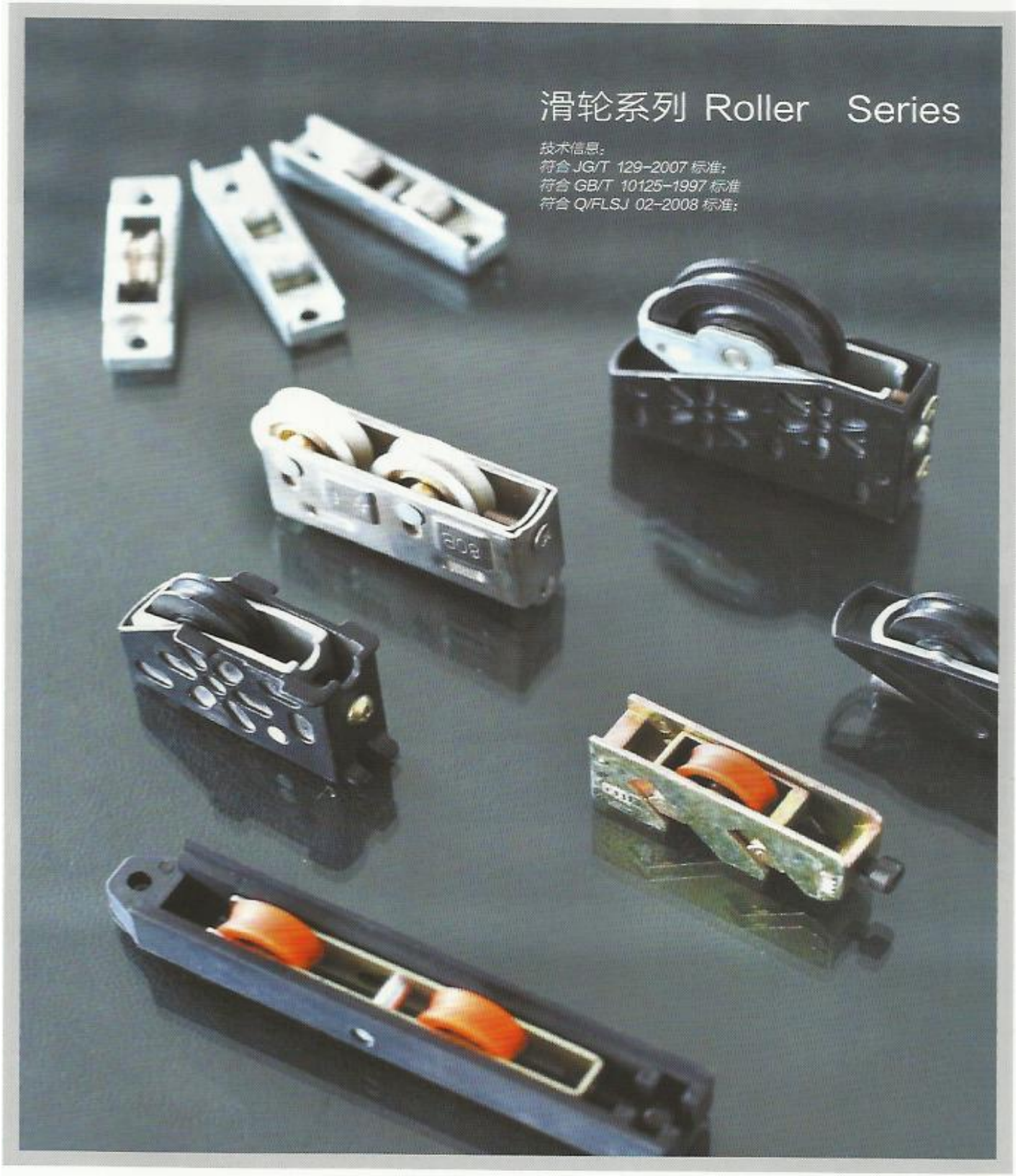
滑轮系列 Roller Series
技术信息：
符合 JG/T 129-2007 标准；
符合 GB/T 10125-1997 标准
符合 Q/FLSJ 02-2008 标准；

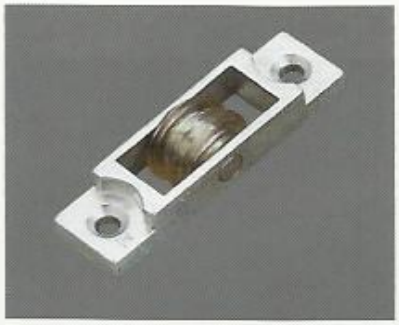

9.05.0001
95(06) 滚针门槽轮 (聚碳)
95(06)needle door notch roller(polycarbonate)

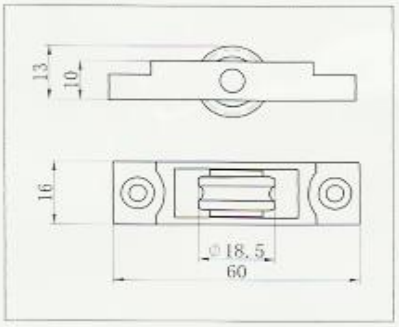



9.05.0003
95(06) 滚针铜门槽轮 (专用)
95(06)needle copper door notch roller(for special purpose)

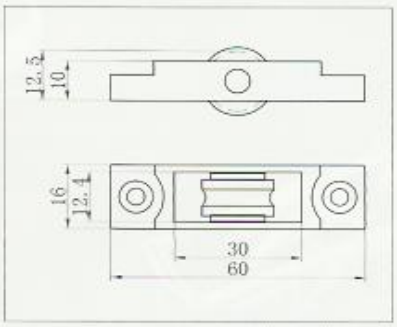

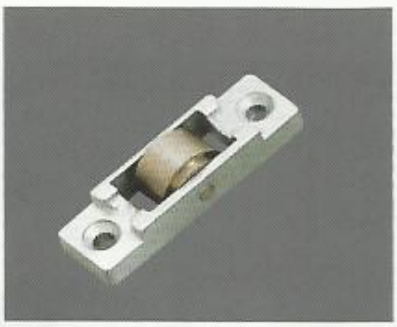

9.05.0009
95(04) 滚针铜平轮 (专用)
95(04)needle copper level roller(for apecial purpose)

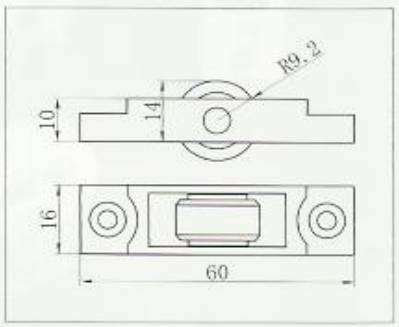



9.05.0012
95 聚碳平轮 (C)
95 polycarbonate level roller(C)

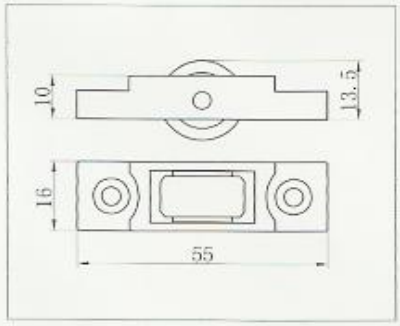

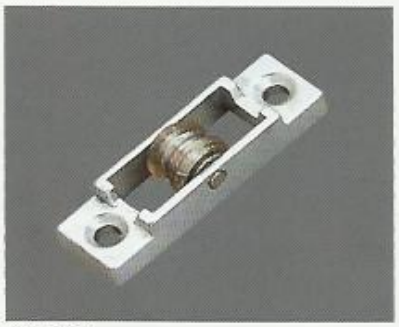

9.05.0015
88 聚碳槽轮 (A)
88 Polycarbonate notch roller(A)

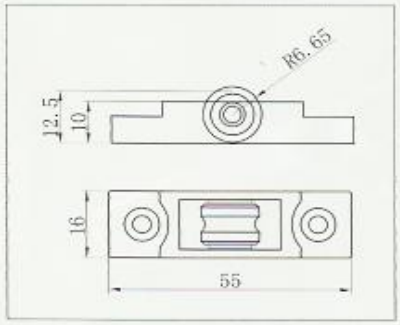

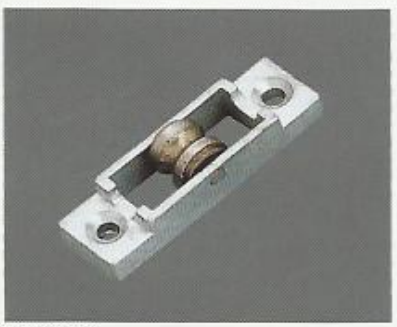

9.05.0018
88 铜槽轮 (专用)
88 Copper notch roller(for special purpose)

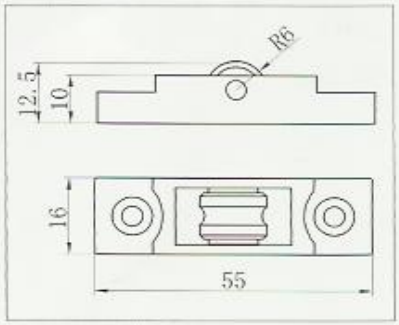

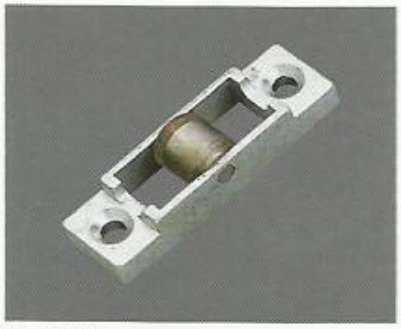

9.05.0020
80 聚碳平轮 (C)
80 Polycarbonate level roller(C)



9.05.0022
80 铜平轮 (专用)
80 Copper level roller(for special prupose)



9.05.0024
80 铜平轮 (C)
80 Copper level roller(C)

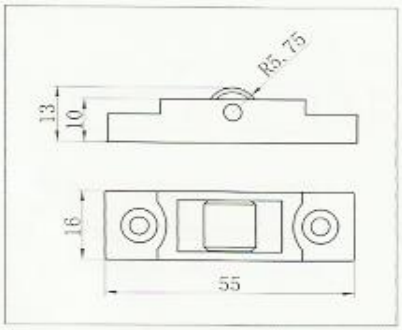

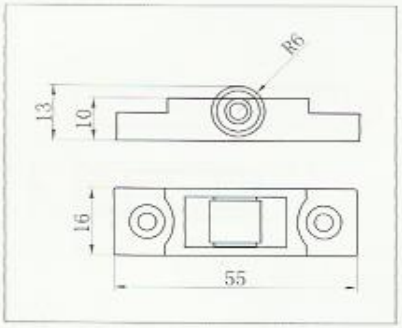

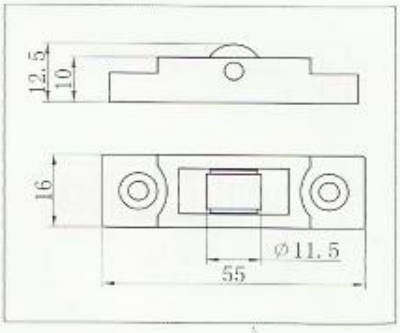



9.05.0025
14(73) 聚碳槽轮
14(73)Polycarbonate notch roller

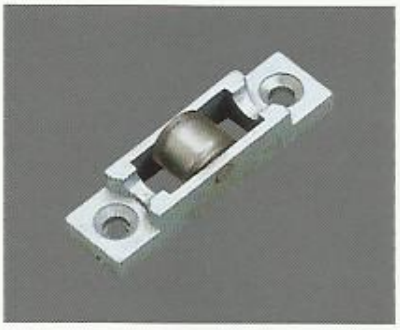

9.05.0026
14(73) 聚碳平轮
14(73) Polycarbonate level roller



9.05.0027
14(73) 铜槽轮 (专用)
14(73) Copper notch roller(special purpose)

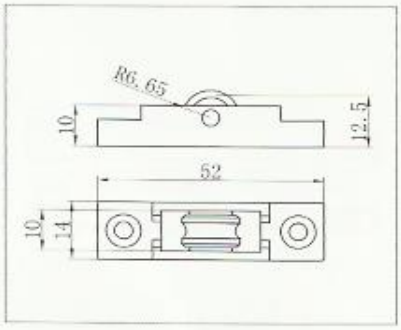

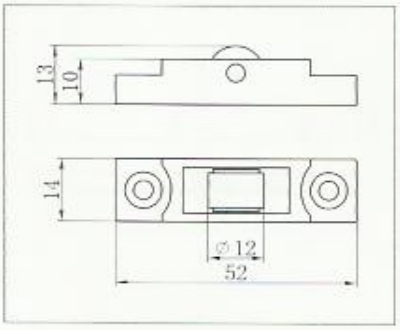

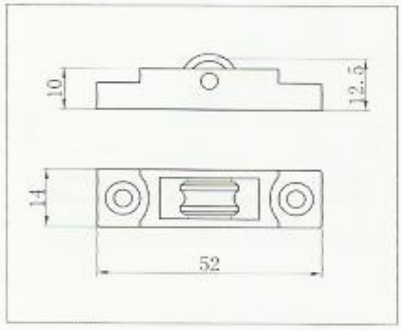

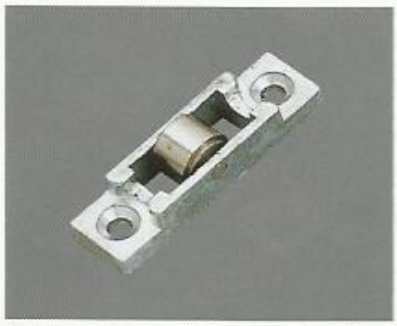

9.05.0028
14(73) 铜平轮 (专用)
14(73)Copper level roller(special purpose)



9.05.0029
88 铜槽双轮 (专用)
88 Copper notch twin roller(special purpose)



9.05.0030
80 铜平双轮 (专用)
80 Copper level twin roller(special purpose)

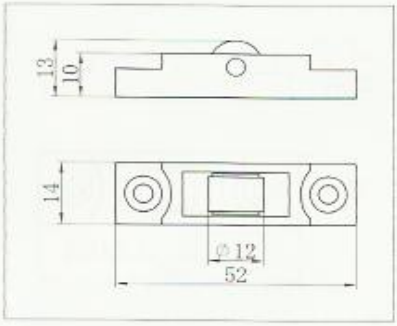

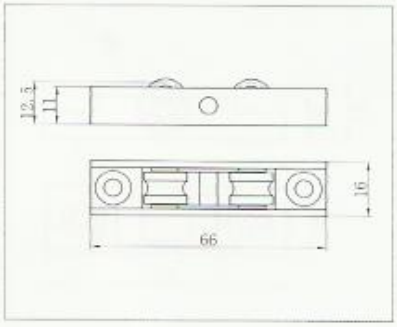

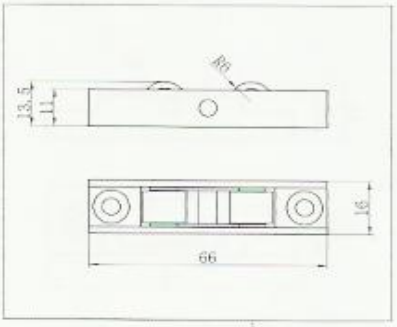



9.05.0041
滚珠可调门铜双轮
Ball modulation door copper twin roller



9.05.0042
滚珠可调窗铜双轮
Ball modulation window copper twin roller

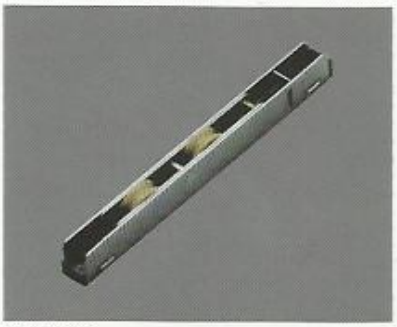

9.05.0061
不锈钢可调双轮
Stainless steel window copper twin roller

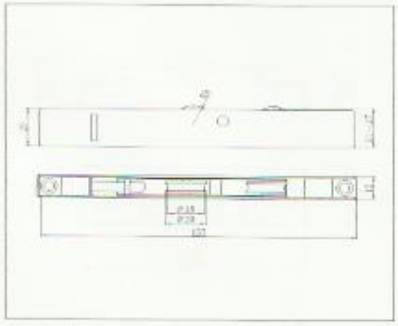

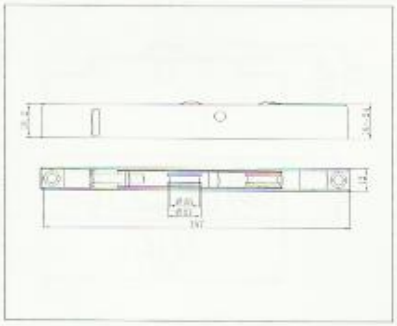

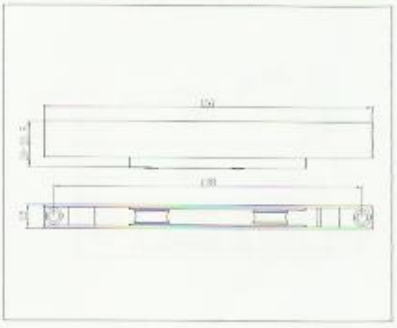



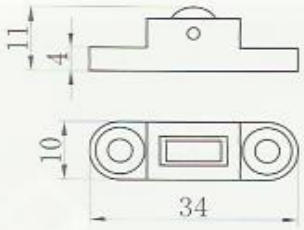

9.05.0034 纱窗滑轮 (3*10)
Screen window roller(3*10)

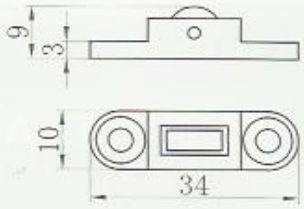

9.05.0035 纱窗滑轮 (3*10*7)
Screen window roller(3*10*7)

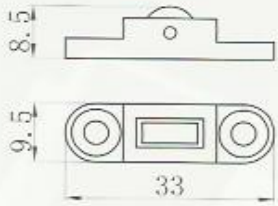

9.05.0036 纱窗滑轮 (3*9.5)
Screen window roller(3*9.5)

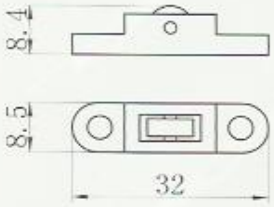

9.05.0037 纱窗滑轮 (3*8.5)
Screen window roller(3*8.5)

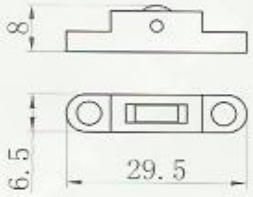

9.05.0038 纱窗滑轮 (3*6.5)
Screen window roller(3*6.5)

框图

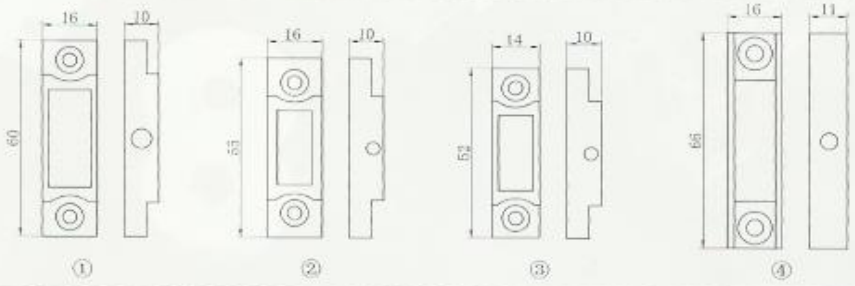

轮高

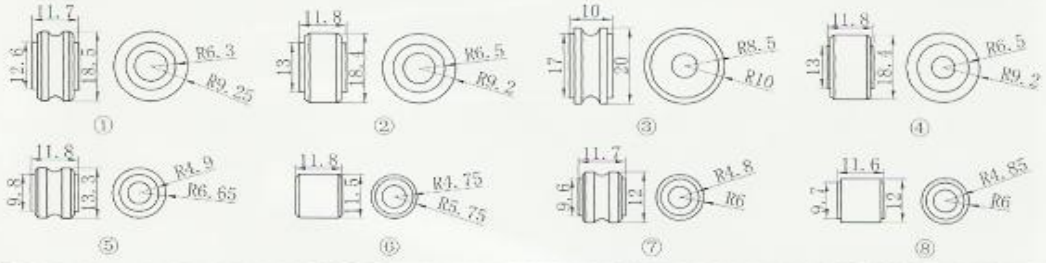

轮高



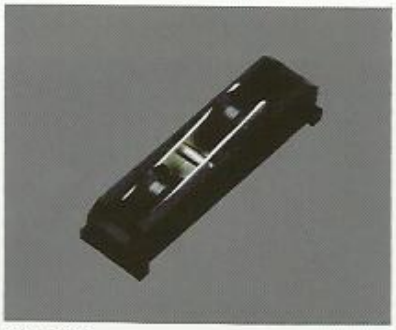

9.05.0033
黑塑双轮
Black plastic twin roller

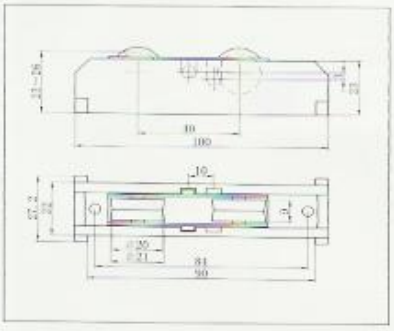

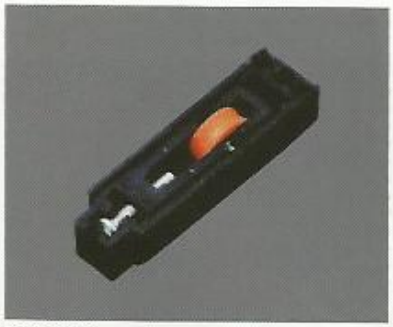

9.05.0059
铝欧标单轮
Aluminum European standard single roller

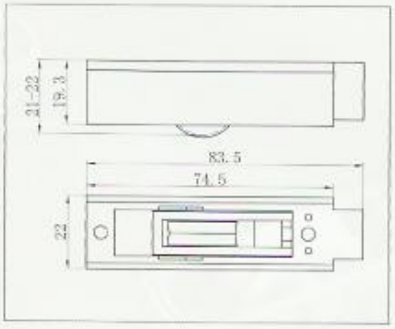



9.05.0060
铝欧标双轮
Aluminum European standard twin roller

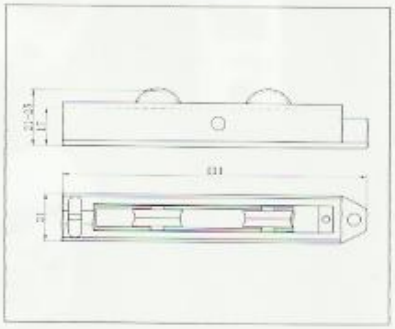



9.05.0039
兴发 2000 滑轮
Xinfa 2000 roller

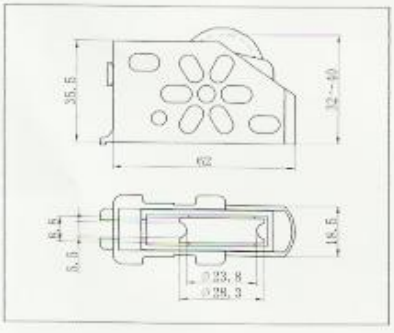



9.05.0040
90 滑轮
90 Roller

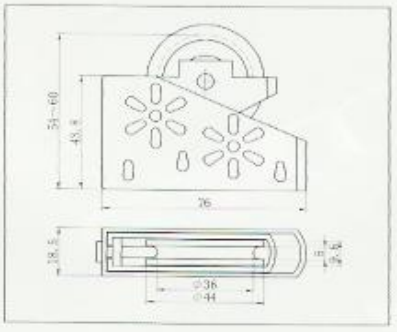



9.05.0058
铝 82S 滑轮
Aluminum 82S roller

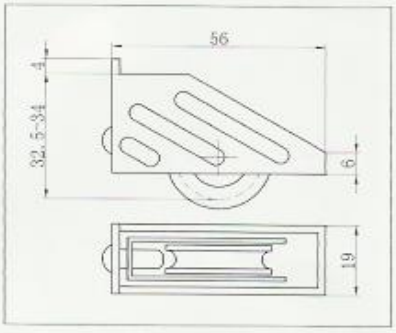



9.05.0032
铝 828 高脚轮
Aluminum 828 high-heel roller

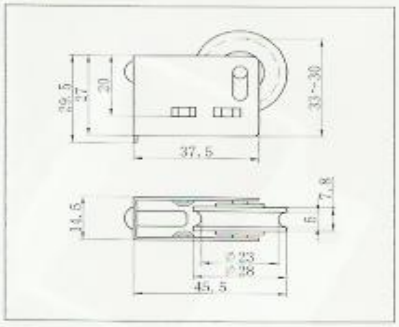



9.05.0064
铁壳 82S 滑轮
Iron carapace 82S roller

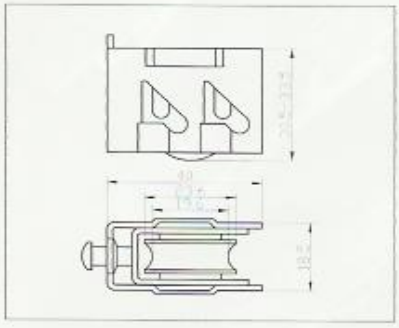



9.05.0069
俄式滑轮
Russia roller

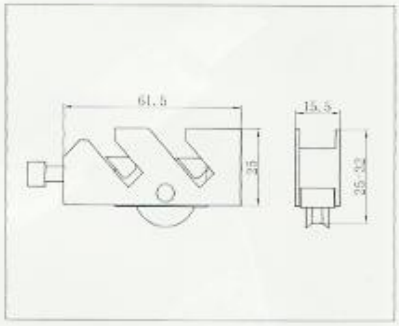

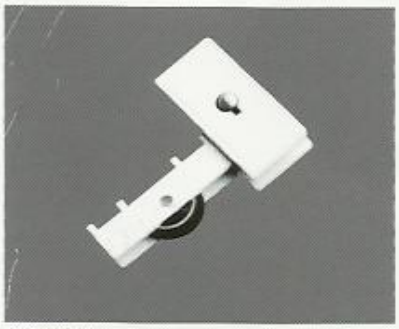

9.05.0062
带锁滑轮
Chain lock roller

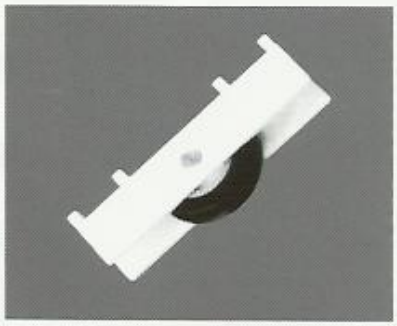

9.05.0063
单滑轮
Single roller

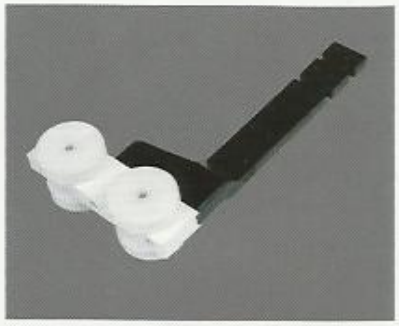

9.05.0068
吊轮
type

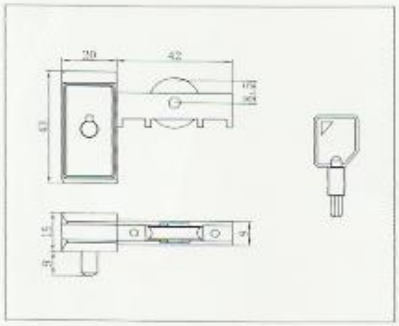

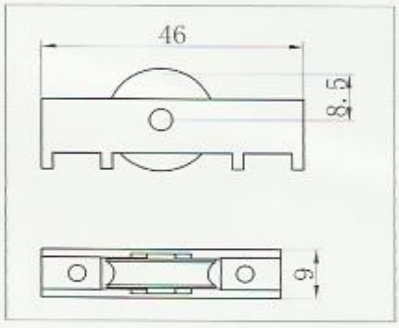

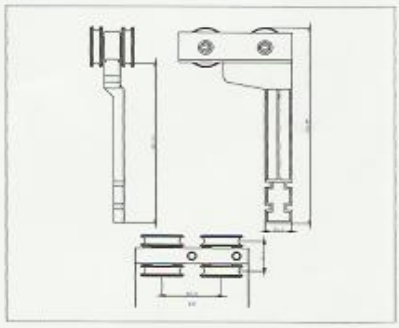

辅助件系列 Auxiliaries Series

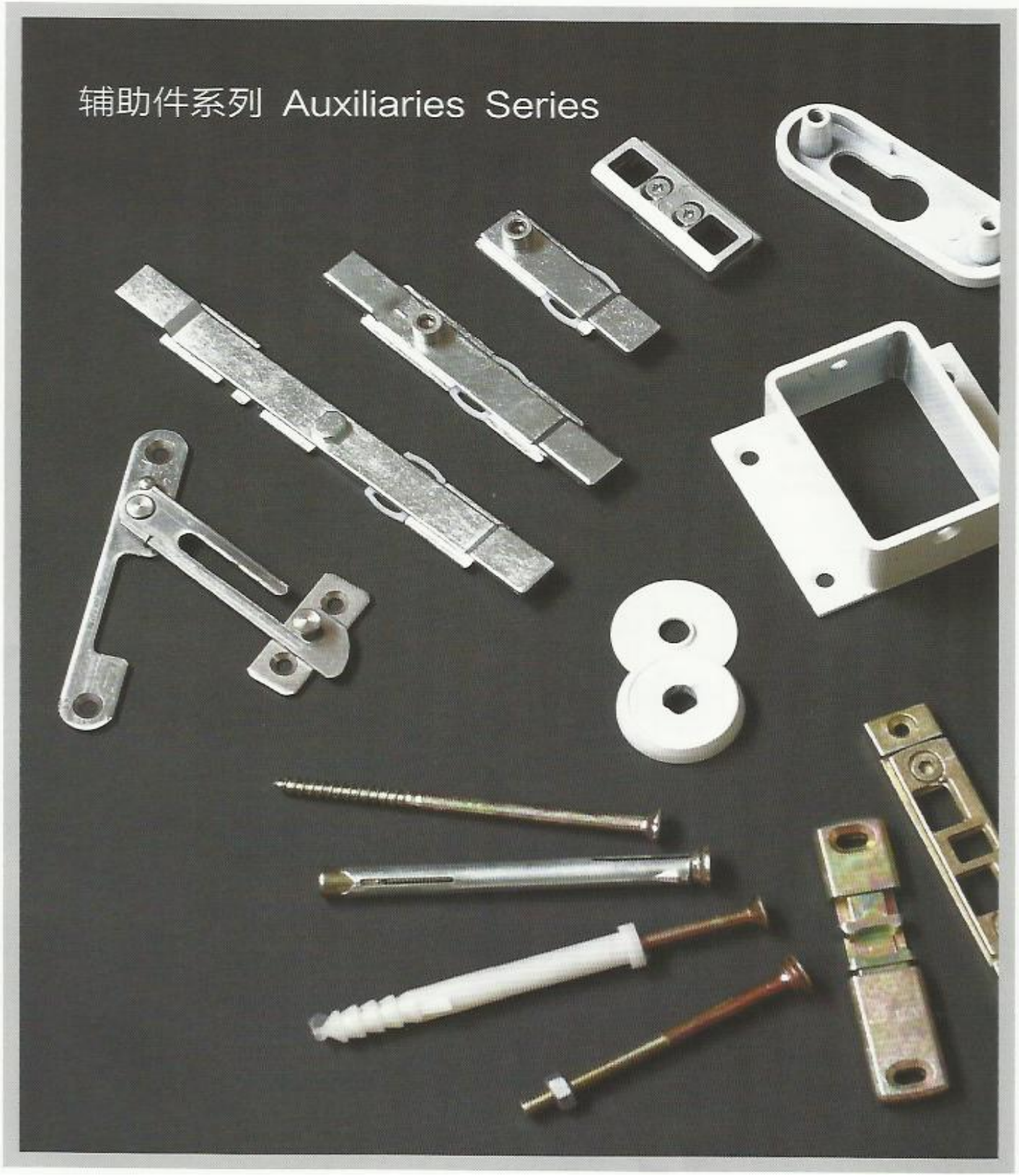

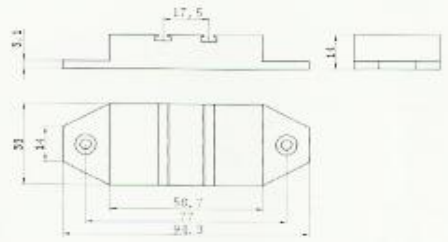

9.08.0040
百合花密封桥
Lily sealed bridge

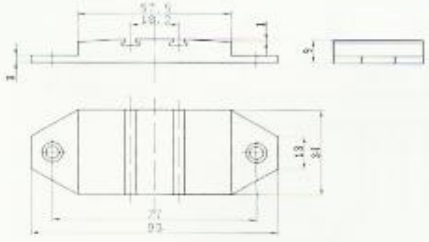

9.08.0041
实 80 密封桥
Shide 80 sealed bridge

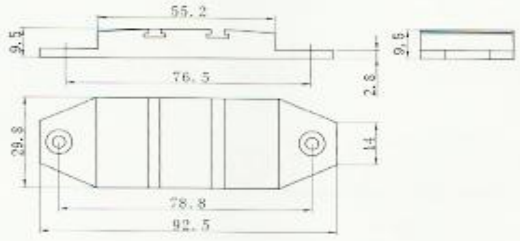

9.08.0042
吴泰密封桥
Wutai sealed bridge

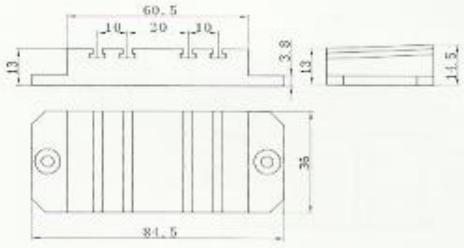

9.08.0045
华 60 密封桥
Hua60 sealed bridge

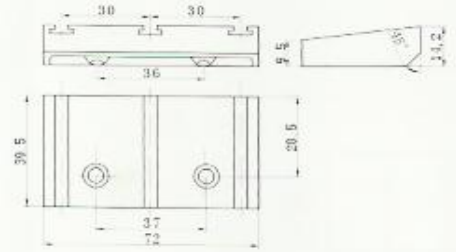

9.08.0046
开捷密封桥
Kaijie sealed bridge

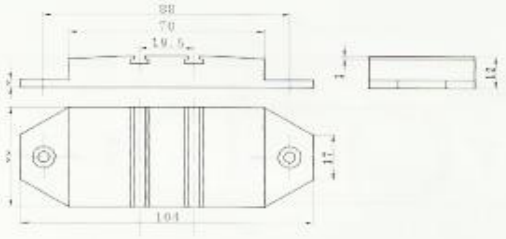

9.08.0047
实德密封桥
Shide sealed bridge

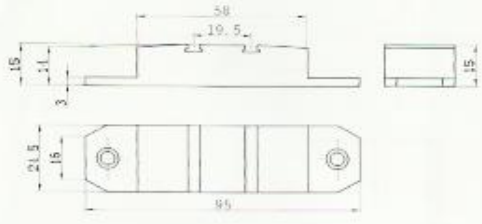

9.08.0048
纱窗密封桥
Screen window sealed bridge

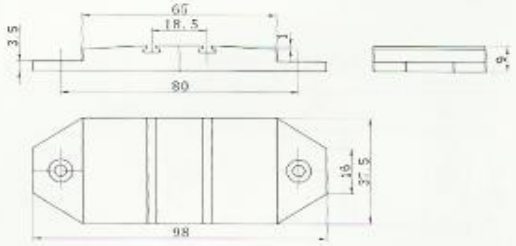

9.08.0049
国风密封桥
Guofeng sealed bridge

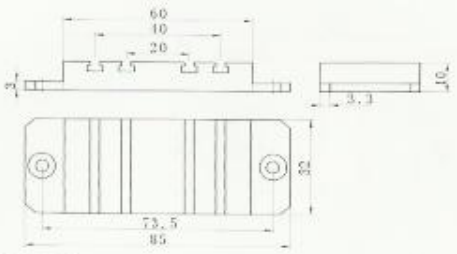

9.08.0050
华 50 密封桥
Hua 50 sealed bridge

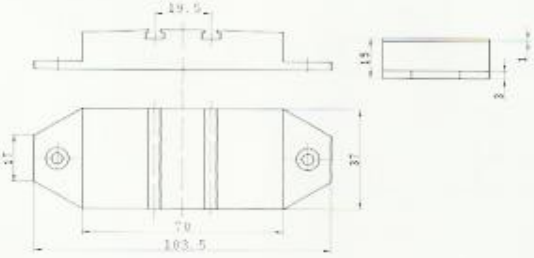

9.08.0051
海螺密封桥
Conch sealed bridge

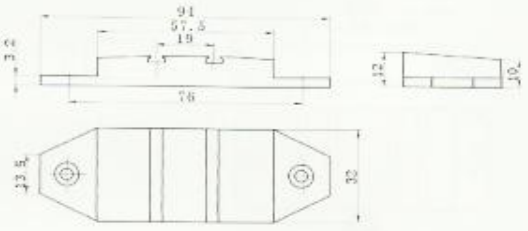

9.08.0052
海螺 73 窗用密封桥
Conch 73 window sealed bridge

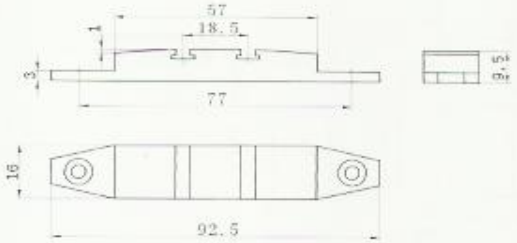

9.08.0053
海螺 73 窗用密封桥 -1
Conch 73 window sealed bridge-1

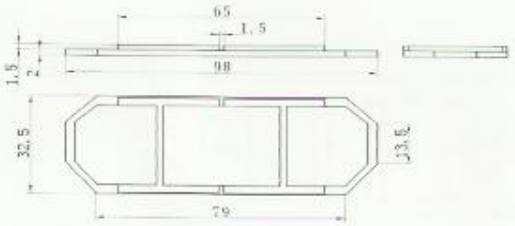

9.08.0054
国风 80 密封桥底
Guofeng 80 sealed bridge base

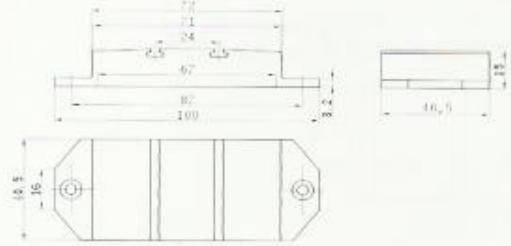

9.08.0055
国风 65 窗用密封桥
Guofeng 65 window sealed bridge

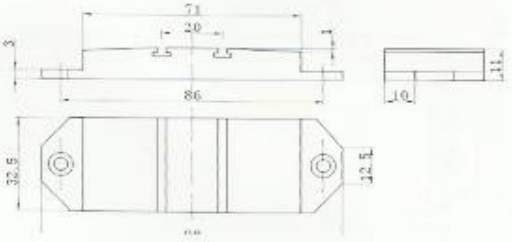

9.08.0057
国风 80 密封桥
Guofeng 80 sealed bridge

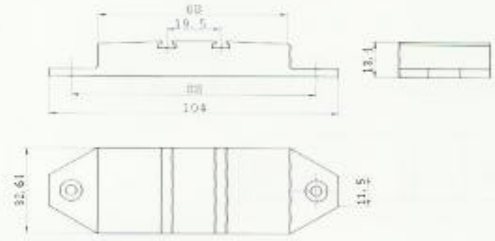

9.08.0058
海 80 窗用密封桥
Hai 80 window sealed bridge

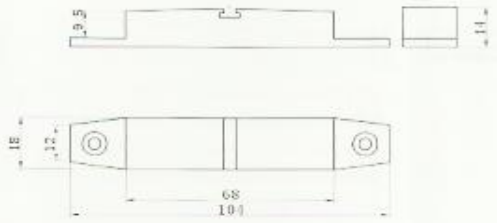

9.08.0060
海 80 纱窗密封桥
Hai 80 screen window sealed bridge

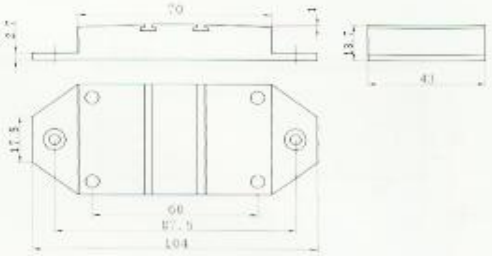

9.08.0044
维卡密封桥
Weika sealed bridge

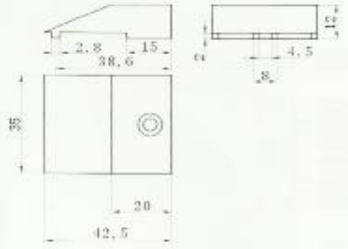

9.08.0009
05 助升块
05 rise-aid slide block

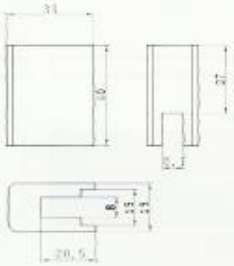

9.08.0038
8 限位块
8 limit block

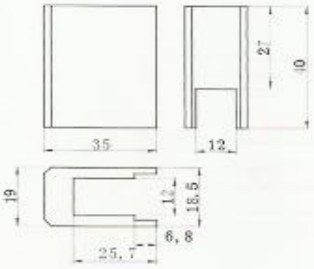

9.08.0034
通用 95 限位块 (12 限位块)
General 95 limit block

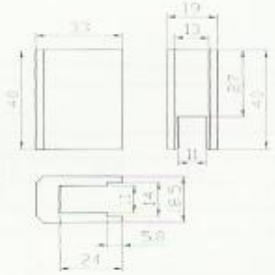

9.08.0035
通用 80 限位块 (11 限位块)
General 80 limit block

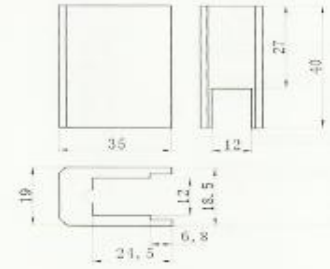

9.08.0036
海有槽限位块
Conch notched limit block

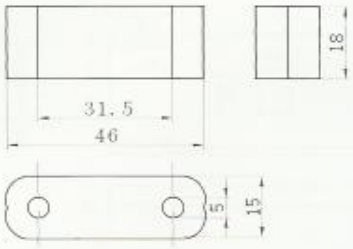

9.08.0037
国风限位块
Guofeng limit block

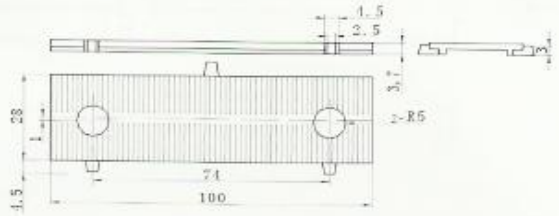

9.08.0015 青岛百龙玻璃垫片
Qingdao bailong glass pad

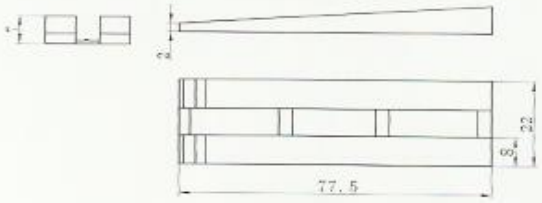

9.08.0016
国风玻璃垫片
Guofeng glass pad

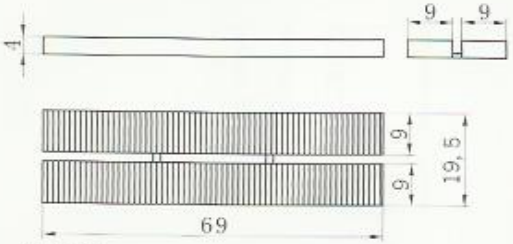

9.08.0017
通用玻璃垫片
Ventilation glass pad

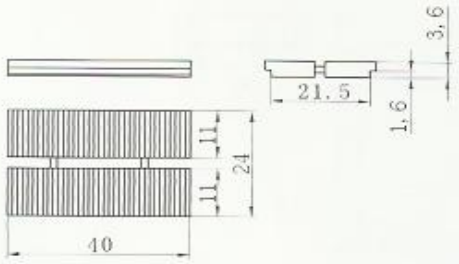

9.08.0019
实德玻璃垫片
Shide glass pad

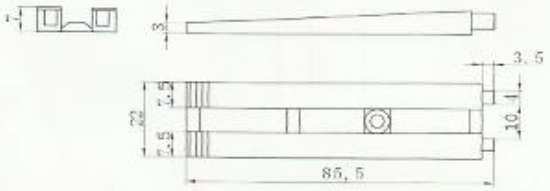

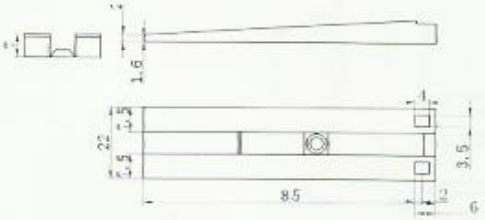

9.08.0020
国风转角玻璃垫片-1
Guofeng glass pad-1

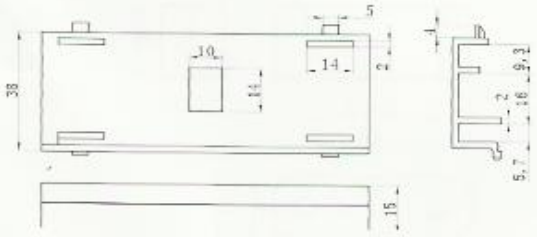

9.08.0025
三玻垫片(厚)
Triple glass pad(thick)

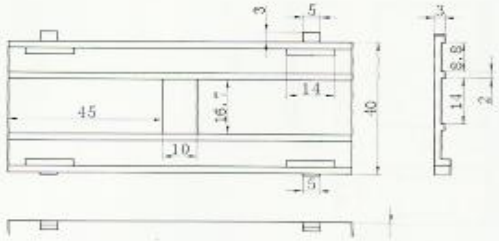

9.08.0026
三玻垫片(薄)
Triple glass pad(thin)

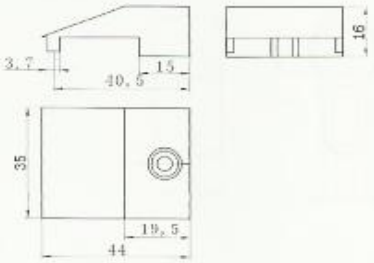

9.08.0001
海螺助升滑块
Conch rise-aid slide block

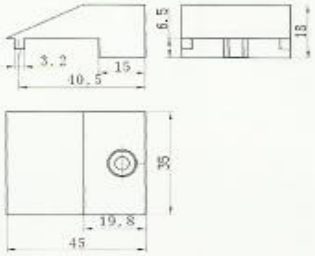

9.08.0002
实德助升滑块
Shide rise-aid slide block

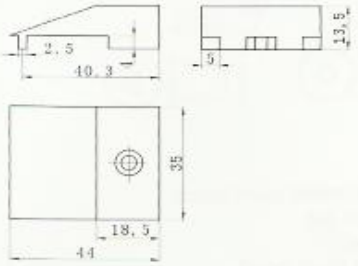

9.08.0003
国风助升滑块
Guofeng rise-aid slide block

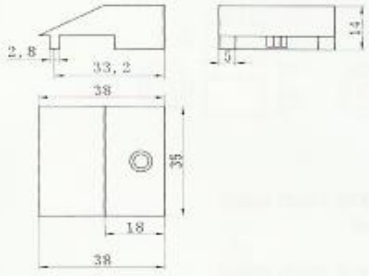

9.08.0004
国风 50 助升滑块
Guofeng 50 rise-aid slide block

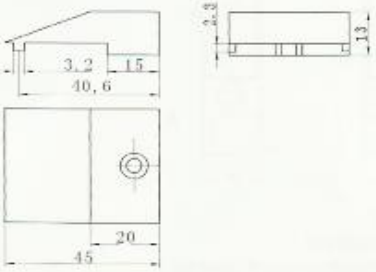

9.08.0005
华塑助升滑块
Huasu rise-aid slide block

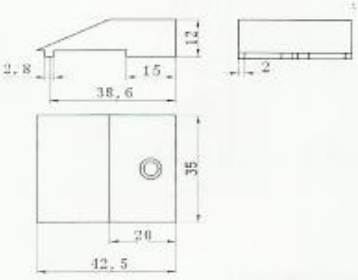

9.08.0006
德玛斯 06 助升滑块
Demas 06 rise -aid slide block

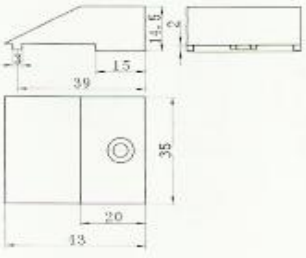

9.08.0007
德玛斯 07 助升滑块
Demas 07 rise-aid slide block

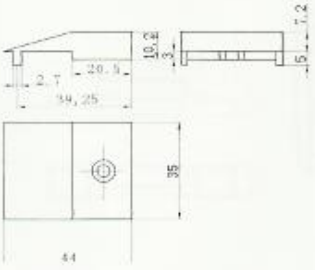

9.08.0012
10 助升块
10 rise-aid slide block

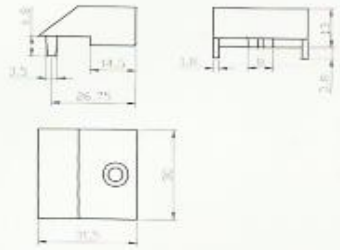

9.08.0154
海螺 65 助升滑块
Conch 65 rise-aid slide block

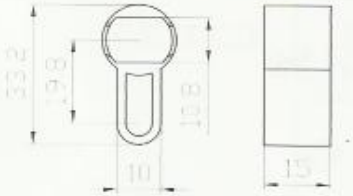

9.08.0115
锁芯塞
Lock core plug

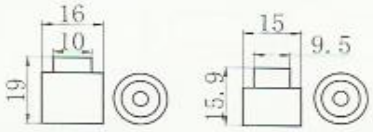

9.08.0064
19X16 碰珠 (19X16 touch bead)
19*16 touch ball
9.08.0065
16X16 碰珠 (16X16 touch bead)
16*16 touch ball

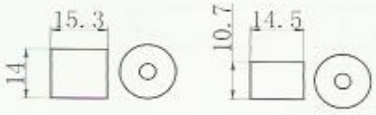

9.08.0066
14X16 碰珠 (14X16 touch bead)
14*16 touch ball
9.08.0068
80 碰珠 (80 touch bead)
80 touch ball

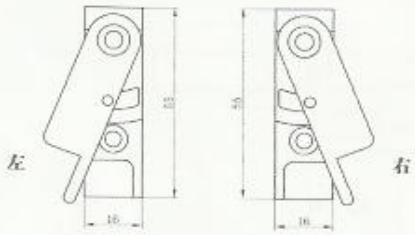

9.08.0089
防误操作器 (左)
Mal-operation-proof device(L)
9.08.0133
防误操作器 (右)
Mal-operation-proof device(R)

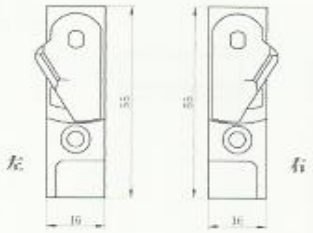

9.08.0099
2 号防误操作器 (左)
#2 Mal-operation-proof device(L)
9.08.0134
2 号防误操作器 (右)
#2 Mal-operation-proof device(R)

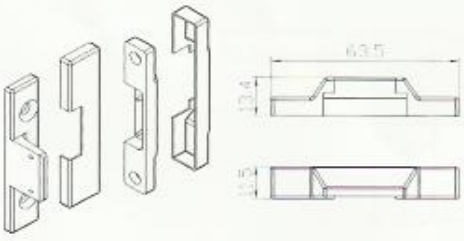

3.10.0160
6 号隐藏式中间锁
#6 Built-in central lcok

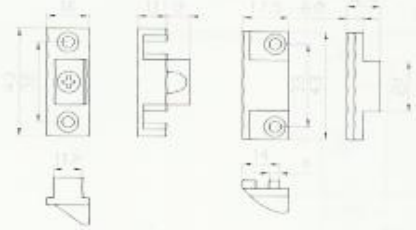

9.08.0095
隐藏式中间锁
Built-in central lock

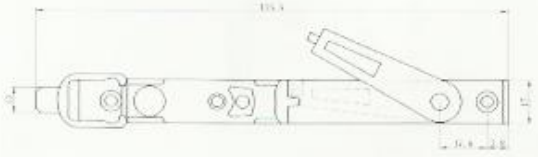

9.08.0096
德式插肖
German bolt

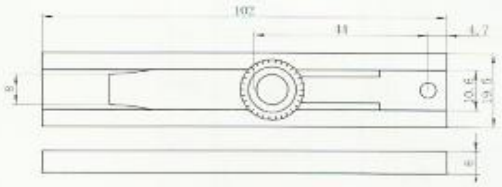

9.08.0103
普通插肖
General bolt

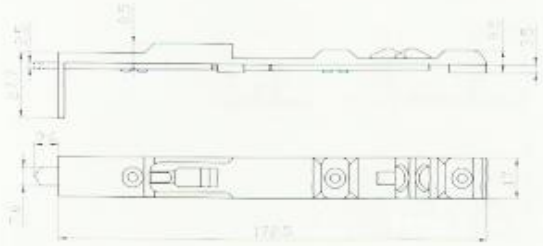

3.10.0162
6-1 号插肖
#6-1 Bolt

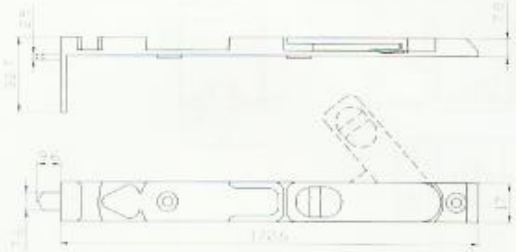

3.10.0163
6-2 号插肖
#6-2 Bolt

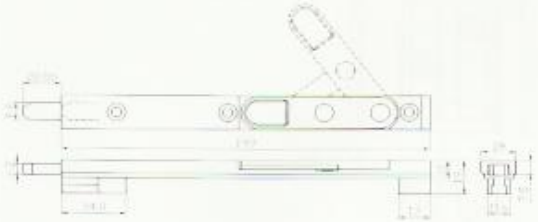

9.08.0184
5 号插肖
#5 Bolt

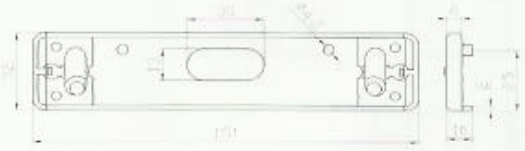

9.03.0095
9 号锁板
#9 Bolt

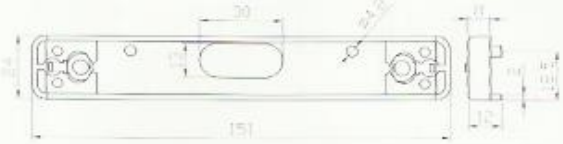

9.03.0096
10 号锁板
#10 Bolt

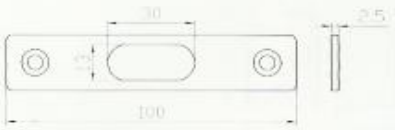

3.03.030349
11 号锁板
#11 Bolt

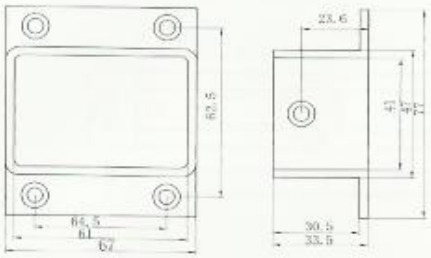

9.08.0105
栅栏插接件 (Fence fasteners)

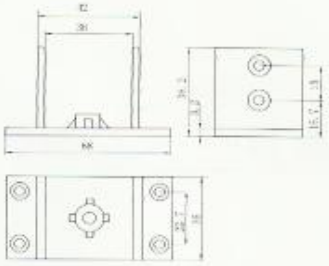

9.08.0106
俄式中梃插接件
(Russian mullion fasteners)

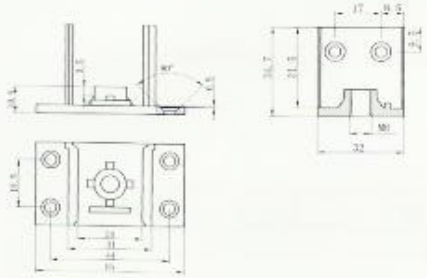

9.08.0107
海螺中梃插接件
(CONCH mullion fasteners)

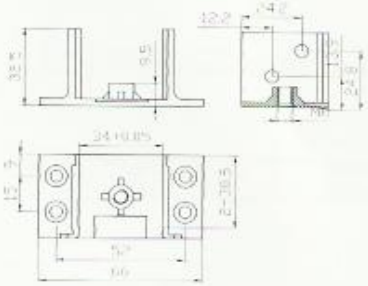

9.08.0047
4 号中挺插接件
(#4 mullion fasteners)

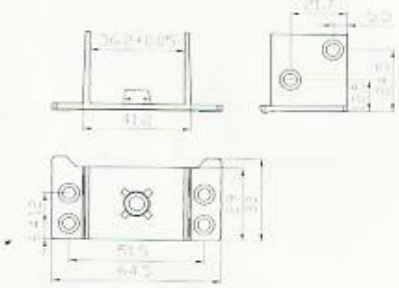

9.08.0048
5 号中挺插接件
(#5 mullion fasteners)

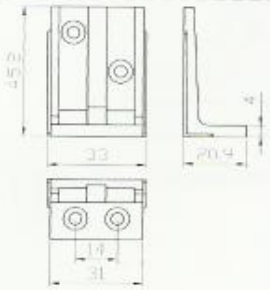

L3.02.080078
LG 中挺插接件
(LG mullion fasteners)

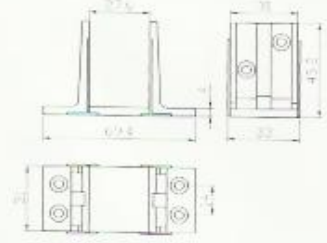

L3.02.080077
LG 中挺插接件
(LG mullion fasteners)

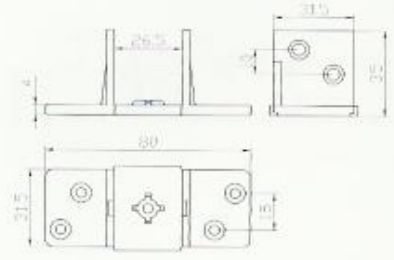

3.02.080082
8 号中挺插接件
(#8 mullion fasteners)

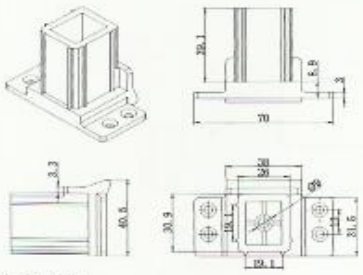

9.08.0225
中挺插接件
mullion fasteners

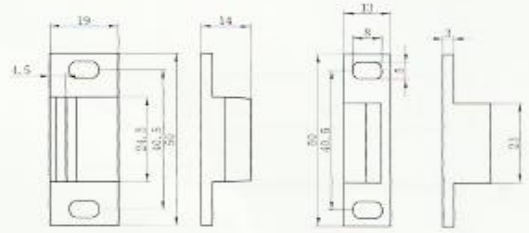

9.08.0114
塑料中间锁
Plastic middle lock

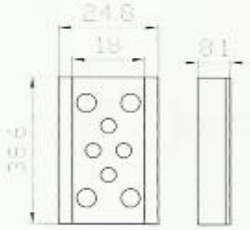

9.08.0077
纱窗垫块
Screen window mat

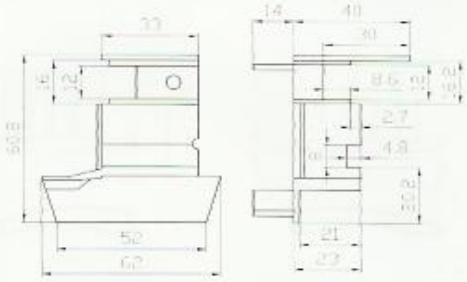

9.08.0061
型材封盖
Extrusion cover



9.08.0212
2号中挺封盖A
2# mullion cover A

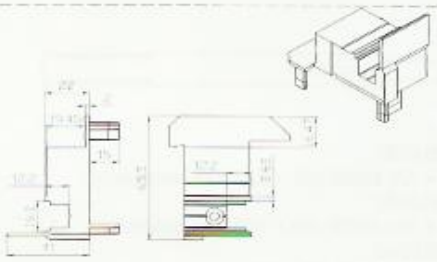

9.08.0213
2号中挺封盖B
2# mullion cover B

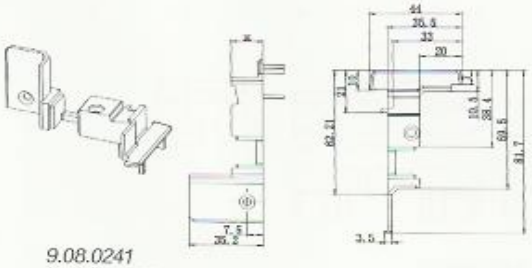

9.08.0241
3号中挺封盖A
3# mullion cover A

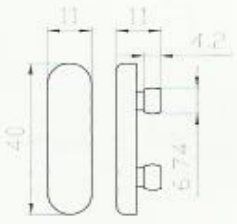

9.08.0063
漏水孔盖
Lleakage hole cover

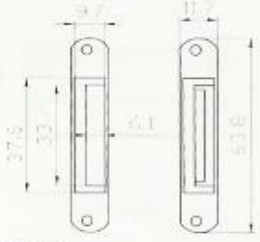

9.08.0119
叶片式漏水孔盖
Leafy vent cover

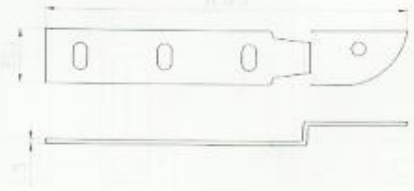

3.03.080015
铁脚固定片
Iron-foot fixture

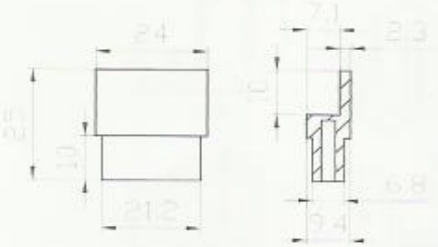

9.08.0108
T 型堵头
T-shaped plug

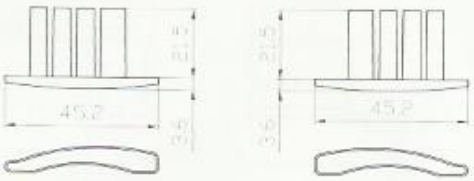

9.08.0113
卷帘窗堵头
Roller blinds blug



名称	型号 L(mm)
连接螺栓	60
	80
	100
	120

9.08.0102
连接螺栓
Connecting screw



9.08.0081
10 × 120 铁胀胀 (10 × 120 iron expansion)
9.08.0082
10 × 100 铁胀胀 (10 × 100 iron expansion)
9.08.0083
10 × 80 铁胀胀 (10 × 80 iron expansion)



9.08.0086
10 × 90 塑胀胀 (10 × 90 plastic expansion)
9.08.0087
10 × 72 塑胀胀 (10 × 72 plastic expansion)
9.08.0088
10 × 120 塑胀胀 (10 × 120 plastic expansion)

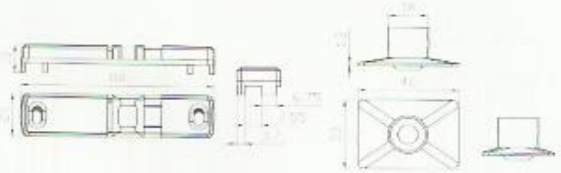

9.08.0138
门碰
Door damper

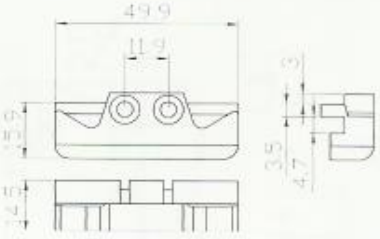

3.02.080074
2 号防误操作块
#2 Misoperation-proof block

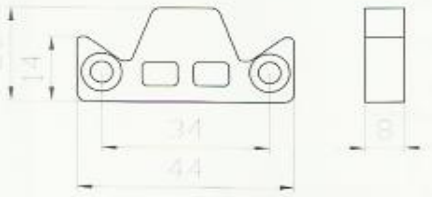

3.02.080001
防误操作块
Misoperation-proof block

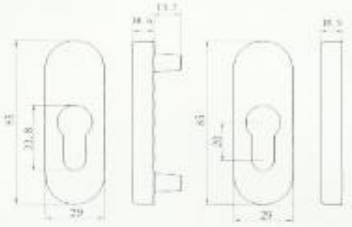

9.08.0101
连体小面板
Minor panel

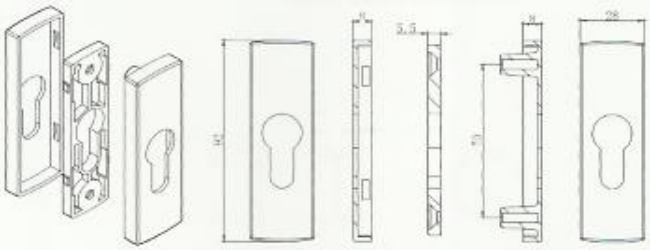

9.01.0254
4 号小面板
Minor panel

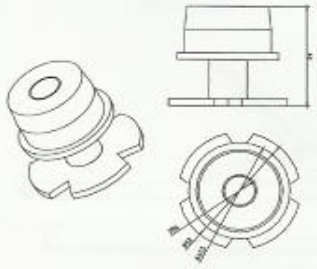

9.08.0234
铝螺帽螺丝

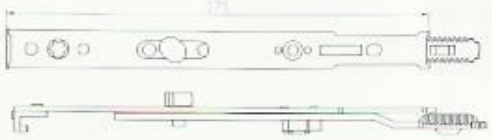

3.10.0159
6 号假连接件
6# Connecting fastener

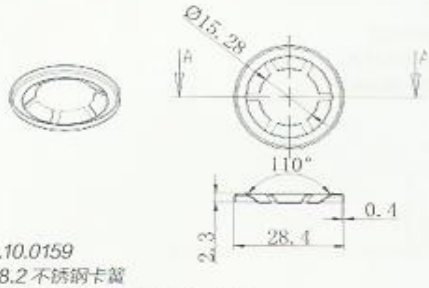

3.10.0159
28.2 不锈钢卡簧
28.2 stainless steel jump ring

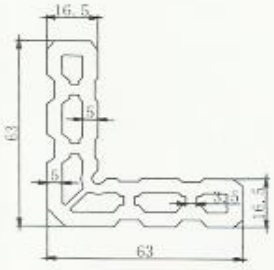

9.08.0237
扇铝材角码
Fan aluminum profile corner

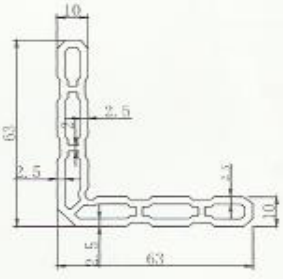

9.08.0238
扇塑材铝角码
Fan upvc profile corner

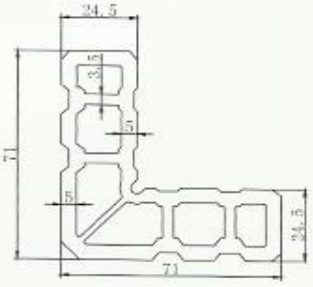

9.08.0239
框铝材角码
Frame aluminum profile corner

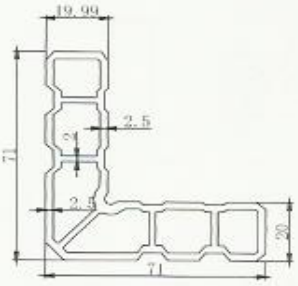

9.08.0240
框塑材铝角码
Frame upvc profile corner

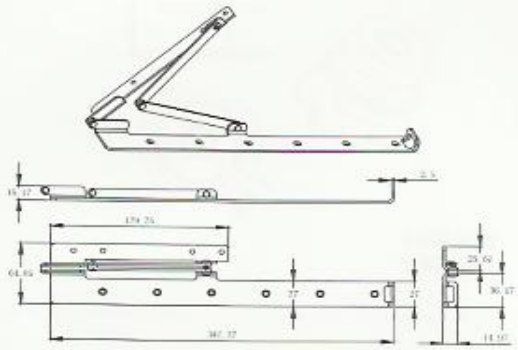

9.06.0148
台板四连杆 A
Table hinge A

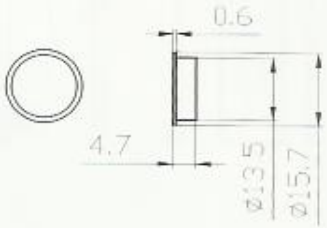

9.08.0062
型材小盖
Extrusion minor cover
型号 :15mmX17mm

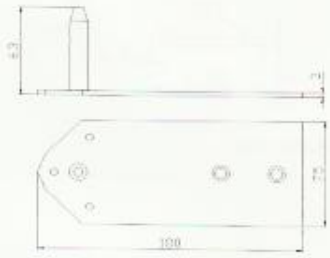

9.08.0126
英式铝合金窗安装连接件
English aluminum window
connecting fastener

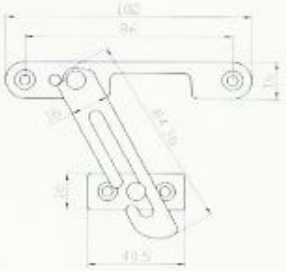

9.08.0222
门钩
Door hook

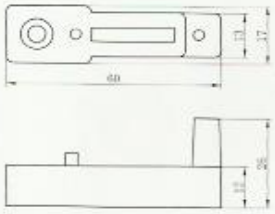

3.04.080004
上防撞块
Top damper

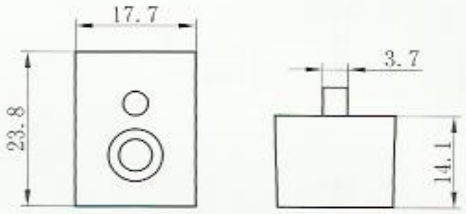

3.04.080003
下防撞块
bottom damper

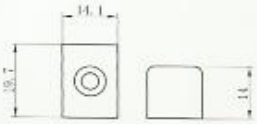

3.04.080005
2001 框防撞块
2001 frame damper

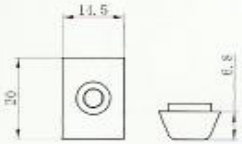

3.04.080006
2001 扇防撞块
2001 leaf damper

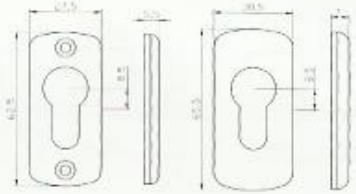

9.08.0151
2 号小面板
#2 Minor panel

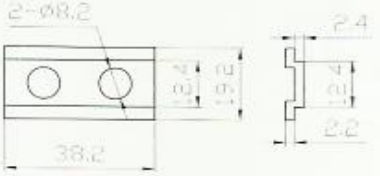

9.08.0124
插肖塑连接件
Plastic bolt connector

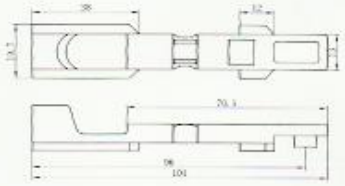

9.08.0104
塑天地插肖柄
plastic top&bottom bolt handle

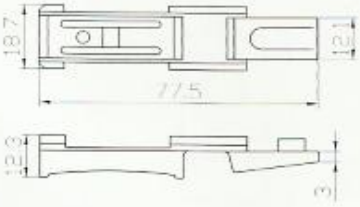

9.08.0123
手动插肖塑柄 2 号
plastic handle #2 manumotive bolt.

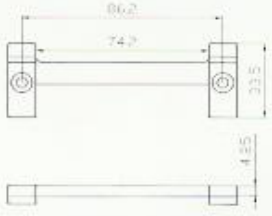

3.02.080006
蟹爪夹块
Claw clip

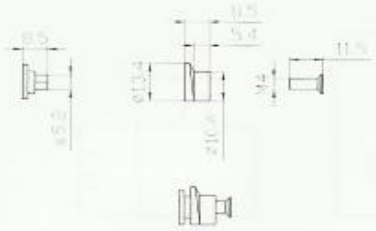

9.08.0112
调节锁点
Adjustment lock point

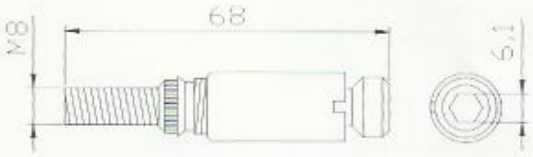

9.08.0217
合页螺丝
Hinge spigot

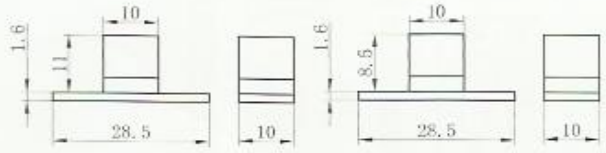

9.08.0100
可拆式锁
Disassemble lock keeper

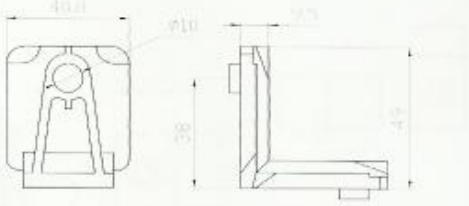

9.08.0168
铝角码
Aluminum buttom corner

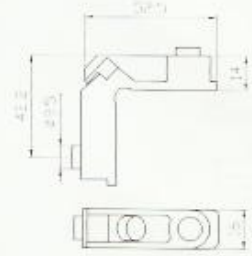

9.08.0157
铝推拉窗角码
Aluminum slide window bracket

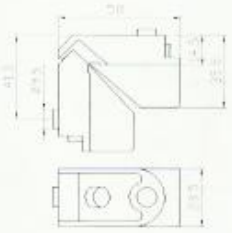

9.08.0156
铝平开门角码
Aluminum casement door bracket

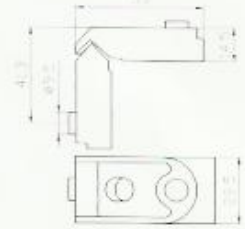

3.01.080001
铝平开窗角码
Aluminum casement window bracket



9.08.0150
尼龙角码(组角块)
Combination corner block



9.08.0109
70 防撞块
(70damper)

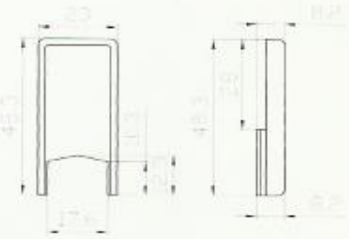

9.08.0110
70 盖板封盖
(70 cover seal)

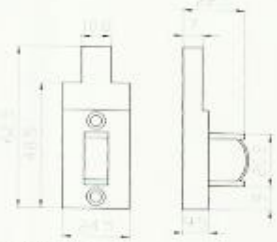

9.08.0120
47 防撞块
(47 damper)

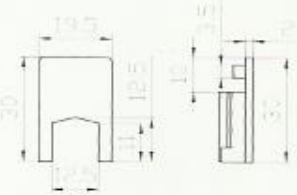

9.08.0121
47 封盖
(47 seal)

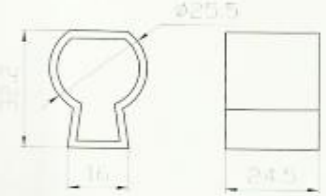

9.08.0111
70 拉手封盖
70 handle seal

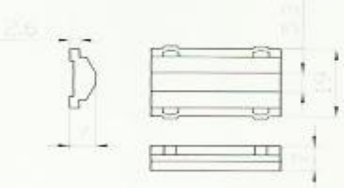

9.08.0117
爬升垫块
Climbing pad



1 号组角钢片
①



2 号组角钢片
②



3 号组角钢片
③



4 号组角钢片
④

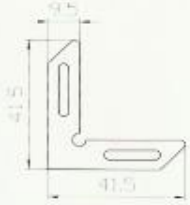

5 号组角钢片
⑤

3.05.080004
1 号角码组角钢片
3.05.080007
4 号角码组角钢片

3.05.080005
2 号角码组角钢片
3.05.080008
5 号角码组角钢片

3.05.080006
3 号角码组角钢片

Window Material

塑钢推拉平开型材标准槽尺寸
Pushes to even up to open the type material stock size

联勇鑫UPVC推拉平开系列适用标准尺寸,具体要求如下图:
（注明尺寸均为表面处理喷漆、喷粉等后的完成尺寸）

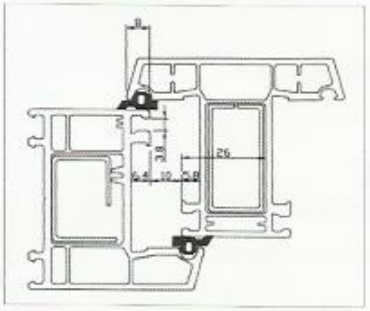

联勇鑫五金件要求外平开无欧标槽窗扇和窗框的配合尺寸
Lianyongxin coordinate sizes of lutward casement leaf & frame without EU-standard notch

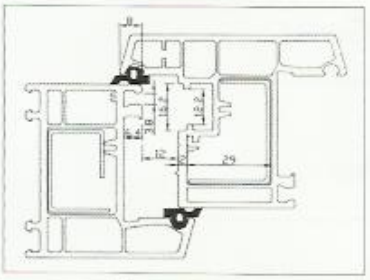

联勇鑫五金件要求外平开带欧标槽窗扇和窗框的配合型材的尺寸
lianyongxin coordinate sizes of outward casement leaf & frame with EU-standard notch

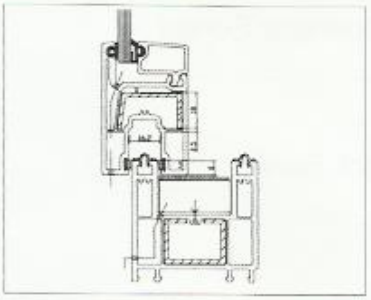

联勇鑫五金件要求推拉窗扇和窗框型材的尺寸
lianyongxin coordinate sizes of extrusions for slide window leaf & frame

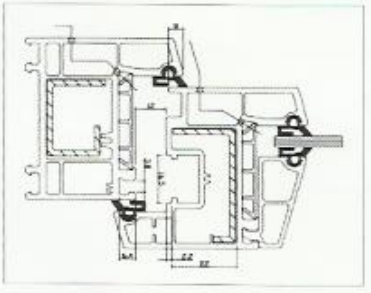

联勇鑫五金件要求内平开窗扇和窗框的配合尺寸窗扇上可动件的断面尺寸
lianyongxin coordinate sizes of inward casement leaf & frame; sectional sizes of movable parts ofleaf

活动百叶窗配置如下：
Movable shutters configurations are as follows:

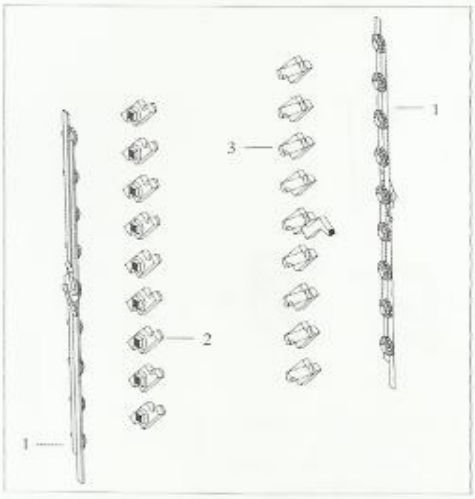



百页窗片 LP61NC
234g/m

活动百叶窗 movable shutters				
序号 NO	名称 Name	编号 Number	数量 Quantity	备注 Note
1	传动条 Transmission	3.10.0017	1套	600~1200
2	叶片 Lamina	3.10.0018	视高度而定	
3	百叶执手 Handle	3.10.0019	1只	

中悬窗配置如下：
Pivoted window configurations are as follows:

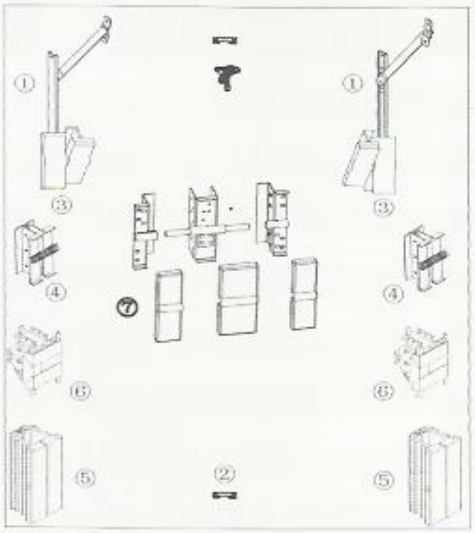

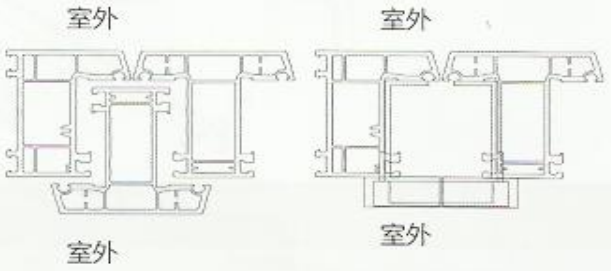

中悬窗 pivoted window				
序号 NO	名称 Name	编号 Number	数量 Quantity	备注 Note
1	风撑 Windbreak		2	600~1200
2	拉绳扣 Cable Loop		1	
3	1# 中悬窗铰链 1# Hinge	3.10.0020	1套	
4	2# 中悬窗铰链 2#Hinge	3.10.0021	1套	可选择
5	中悬窗铝铰链 Aluminum Pivoted Window Hinge	3.10.0022	1套	可选择
6	中悬窗塑铰链 Upvc Pivotedwindow Hinge	3.10.0023	1套	可选择
7	中梃铰链 Mullion Hinge	3.10.0118	1套	可选择

卷帘窗配置
Roller shutter window configurations

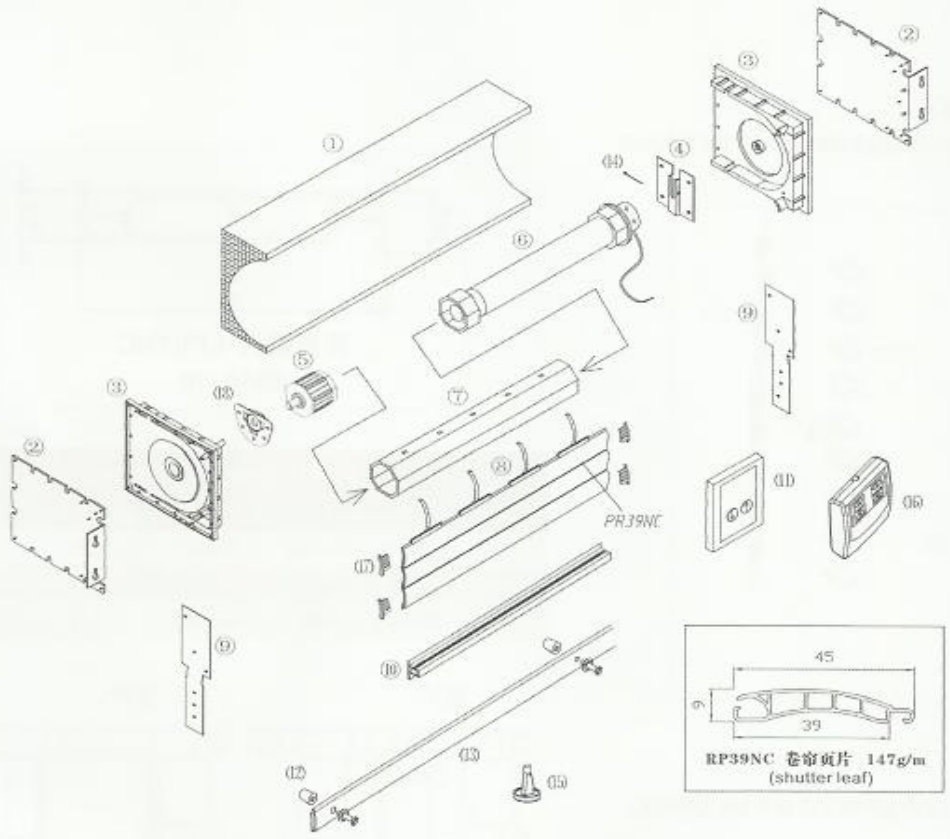

帘窗配置表 roller shutter window configuration diagram				
序号NO	名称 Name	编号 Number	数量 Quantity	备注 Note
1	隔热泡沫	3.04.070027	1	
2	安装固定片(分左右)	3.10.0036(L)3.10.0037(R)	2	可选件
3	侧盖板	3.04.070012	2	
4	轴承	3.10.0040	2	
5	卷棍(带铁轴)	3.10.0041	2	
6	滚轮1号	3.04.070016	1	
7	八角棍1号	3.10.0042	1	
8	滚轮2号	3.04.070017	1	
9	挂扣	3.10.0043	4-8	
10	封扣	3.10.0044	1	
11	定位器	3.04.070024	1	
12	连接固定铁片(分左右)	3.10.0045(L)3.10.0046(R)	2	可选件
13	收绳盒	3.10.0047	1	
14	塑料挡块	3.10.0048	2	
15	档板	3.10.0049	1	
16	孔盖	3.04.070026	4-6	
17	卷帘窗堵头	9.08.0113(L)/9.08.0185(R)	视窗高度而定 14套/m	
18	轴承塑外套	3.04.070014	2	

电动卷帘窗配置
Electromotion roller shutter window configurations

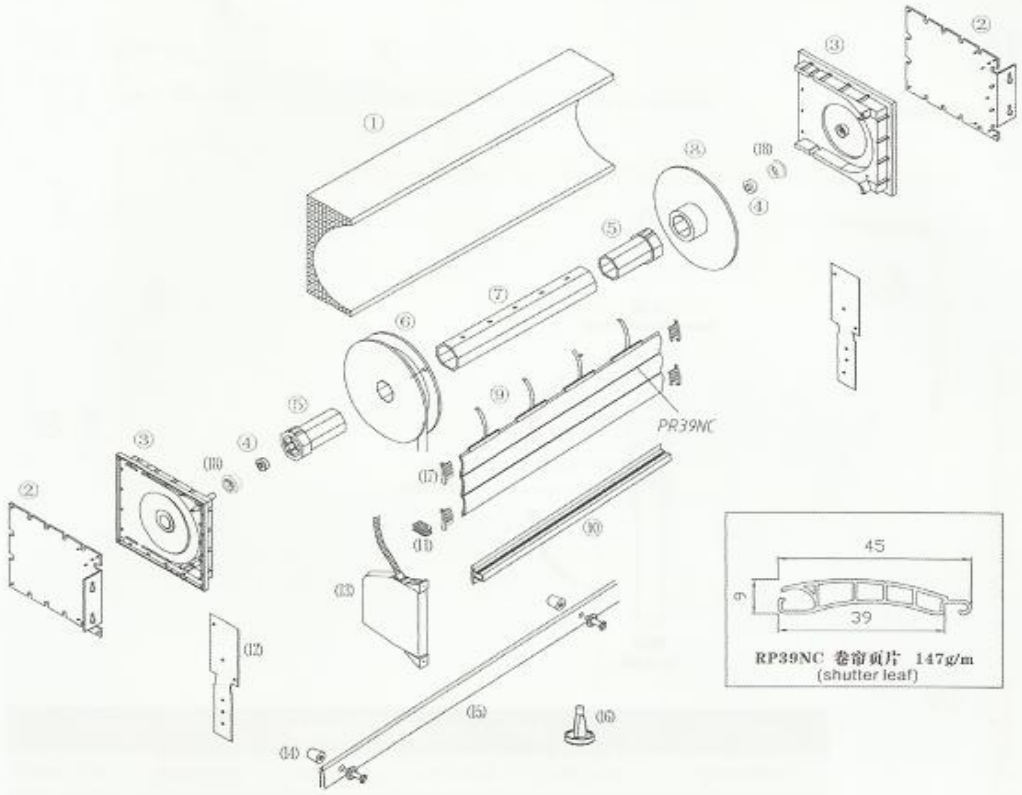

电动卷帘窗配置表 (Electric Roller Shutter Window Configurations From)				
序号 NO	名称 Name	编号 Number	数量 Quantity	备注 Note
1	隔热泡沫	3.04.070027	1	
2	安装固定片（分左右）	3.10.0036(L)3.10.0037(R)	2	可选件
3	侧盖板	3.04.070012	2	
4	撑板	3.10.0050	1	
5	闷头	3.10.0051	1	
6	电机	3.10.0052	1	
7	八角棍 2 号	3.10.0053	1	
8	挂扣	3.10.0043	4-8	可选件
9	连接固定铁片（分左右）	3.10.0045(L)3.10.0046(R)	2	视窗高度而定
10	封扣	3.10.0044	1	
11	开关	3.10.0054	1	
12	塑料挡块	3.10.0048	2	
13	档板	3.10.0049	1	
14	销子	3.10.0055	1	
15	孔盖	3.04.070026	4-6	
16	红外线遥控器	3.10.0060	1	
17	卷帘窗堵头	9.08.0113(L)/9.08.0185(R)	视窗高度而定 14 套 /m	
18	2 号撑板	3.10.0050B	1	

电动卷帘窗安装注意事项：
1、撑板与侧盖板连接需要牢固可靠；
2、八角棍与闷头。电机驱动头处需要用白攻钉定位。以防止八角棍转可驱动；
3、卷帘盒需要安装是遮阳避雨处。以防温度过高或雨水淋湿电机引发事故；
4、电动行程等问题参照电机使用说明书。

6 号内平开上悬窗配置
#6 Inward-opening top-suspension casement configurations

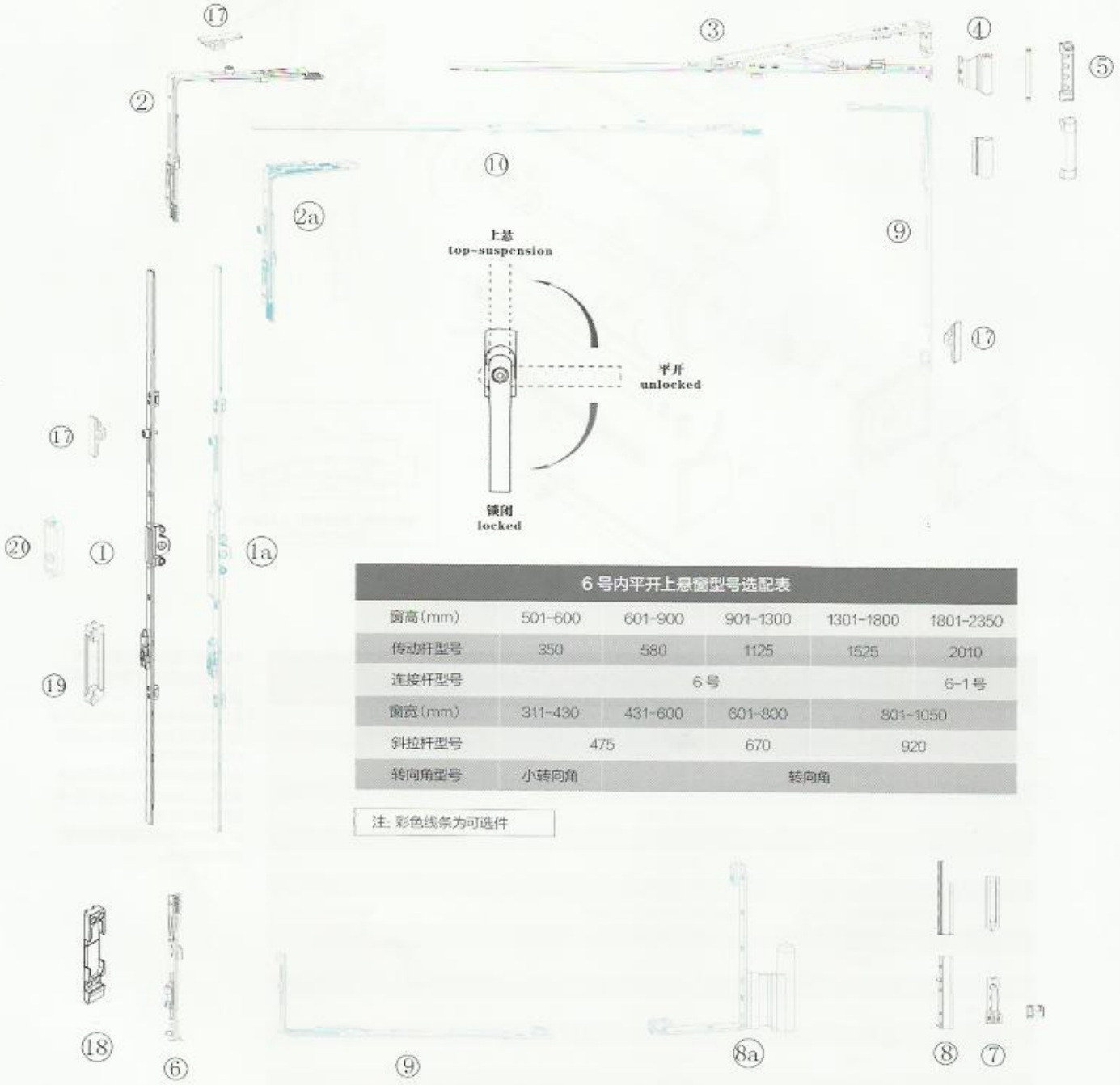

6 号内平开上悬窗型号选配表					
窗高(mm)	501-600	601-900	901-1300	1301-1800	1801-2350
传动杆型号	350	580	1125	1525	2010
连接杆型号	6 号				6-1 号
窗宽(mm)	311-430	431-600	601-800	801-1050	
斜拉杆型号	475		670	920	
转向角型号	小转向角	转向角			

注：彩色线条为可选件

6 号内平开上悬窗配置
#6 Inward-opening top-suspension casement configurations

6 号内平开上悬窗配置表 #6 inward-opening top-suspension casement configuratlons diagram				
序号 NO	名称 Name	编号 Number	数量 Quantity	备注 Note
	6# 平开上悬 350 传动杆 6# transmission rod 350	3.10.0168		
	6# 平开上悬 580 传动杆 6# transmission rod 580	3.10.0167		
1	6# 平开上悬 1125 传动杆 6# transmission rod 1125	3.10.0144		根据窗的高度选择
	6# 平开上悬 1525 传动杆 6# transmission rod 1525	3.10.0169		
	6# 平开上悬 2010 传动杆 6# transmission rod 2010	3.10.0170		
	6# 平开上悬 8/350 传动杆 6# transmission rod 8/350		1	
	6# 平开上悬 8/580 传动杆 6# transmission rod 8/580			
1a	6# 平开上悬 8/1125 传动杆 6# transmission rod 8/1125			
	6# 平开上悬 8/1525 传动杆 6# transmission rod 8/1525			
	6# 平开上悬 8/2010 传动杆 6# transmission rod 8/2010			
2	6# 平开上悬转向角 6# steering angle	3.10.0145		
2a	6# 平开上悬小转向角 6# small steering angle	3.10.0185	1	
	6# 平开上悬 475 斜拉杆（不分左右）6# diagonal bar 475L/R	3.10.0146		
	6# 平开上悬 475 斜拉杆（L）6# diagonal bar 475L	3.10.0164		
	6# 平开上悬 475 斜拉杆（R）6# diagonal bar 475R	3.10.0165		
	6# 平开上悬 670 斜拉杆（不分左右）6# diagonal bar 670L/R	3.10.0172		
3	6# 平开上悬 670 斜拉杆（L）6# diagonal bar 670L	3.10.0174	1	根据窗的高度选择
	6# 平开上悬 670 斜拉杆（R）6# diagonal bar 670R	3.10.0173		
	6# 平开上悬 920 斜拉杆（不分左右）6# diagonal bar 920L/R	3.10.0181		
	6# 平开上悬 920 斜拉杆（L）6# diagonal bar 920L	3.10.0176		
	6# 平开上悬 920 斜拉杆（R）6# diagonal bar 920R	3.10.0175		
	6# 平开上悬活页（9 系）6# diagonal bar steel block 9	3.10.0147		
4	6# 平开上悬活页（10 系）6# diagonal bar steel block 10	3.10.0148	1	根据窗的高度选择
	6# 平开上悬活页（13 系）6# diagonal bar steel block 13	3.10.0149		
	6# 平开上悬活页（14 系）6# diagonal bar steel block 14	3.10.0150		
5	6# 平开上悬上铰链座 6# upper angle hinge bracket	3.10.0151	1	
6	6# 平开上悬连接杆 6# Connection bar	3.10.0152	1	根据窗的高度选择
	6-1# 平开上悬连接杆 6-1# Connection bar	3.10.0171		
7	6# 平开上悬下铰链座 6# lower angle hinge bracket	3.10.0153	1	
8	6# 平开上悬下铰链活页 6# lower angle hinge bearing	3.10.0154	1	
8a	6 号角部铰链下铰链托式活页 6# lower corner hinge bearing	3.10.0182		
	6# 平开上悬 350 中间锁 6# middle lock 350	3.10.0155		
9	6# 平开上悬 580 中间锁 6# middle lock 580	3.10.0156	1-2	
	6# 平开上悬 685 中间锁 6# middle lock 685	3.10.0177		
	6# 平开上悬 1235 中间锁 6# middle lock 1235	3.10.0178		
10	6# 平开上悬 600 延长杆 6# extension bar 600	3.10.0157	1	
	6# 平开上悬锁块 6# lock block	3.02.100043		
	6-2 号锁块 6-2# lock block	3.02.100079		
17	6-3 号锁块 6-3# lock block	3.02.100080	3	
	6-4 号锁块 6-4# lock block	3.02.100081		
	6-5 号锁块 6-5# lock block	3.02.100082		
	6# 平开上悬 9 系通用翻转锁块 6# reversal lock block	3.02.100049		
	6-2 号翻转锁块（左）6-2# reversal lock block L	3.02.100067		
18	6-2 号翻转锁块（右）6-2# reversal lock block R	3.02.100068	1	
	6-4 号翻转锁块（左）6-4# reversal lock block L	3.02.1000071		
	6-4 号翻转锁块（右）6-4# reversal lock block R	3.02.100072		
	6# 平开上悬防误操作块 6# mal-operation-proof buckle	3.02.100055		
	6-2 号防误操作块 6-2# mal-operation-proof buckle	3.02.100073		
19	6-3 号防误操作块 6-3# mal-operation-proof buckle	3.02.100074	1	
	6-4 号防误操作块 6-4# mal-operation-proof buckle	3.02.100075		
	6-5 号防误操作块 6-5# mal-operation-proof buckle	3.02.100076		
20	6 号定位插 6# orientation block	3.10.0158	1	

铝合金系列槽口标准
Aluminum alloy notch standards

联鑫铝合金系列槽口五金适用手型材槽口为标准欧式槽口，且体要求如下图:
（注明尺寸均为表面处理喷漆、喷粉等后的完成尺寸）

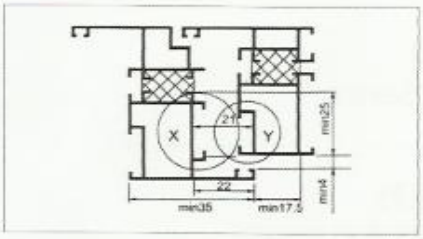

联鑫五金件要求铝合金窗扇区和窗框的配合尺寸
Coordinate sizes of Lianxin hardware components for aluminum alloy window leaf and frame

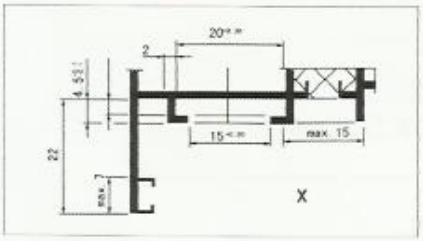

联鑫五金件要求铝合金窗扇型材的尺寸
Sizes of lianxin hardware components for aluminum alloy window leaf extrusions

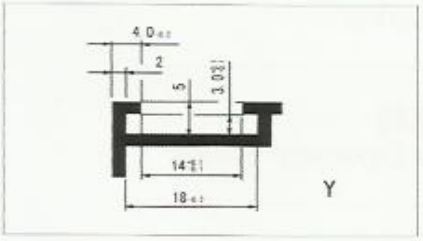

联鑫五金件要求铝合金窗框型材的尺寸
Sizes of lianxin hardware components for aluminum alloy window frame extrusions

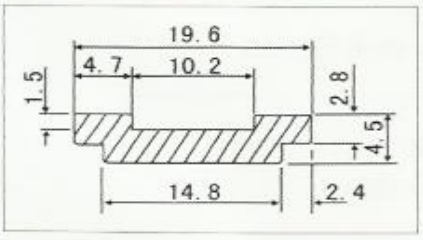

联鑫铝合金五件窗扇区上可动件的断面尺寸
Section sizes of Lianxin aluminum alloy hardware components for moveable parts of window leaf

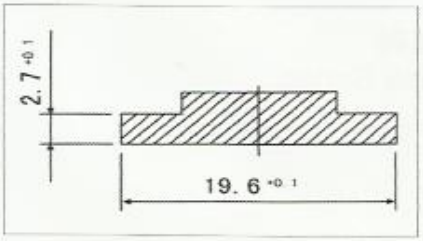

联鑫铝合金五件窗扇上固定件的断面尺寸
Section sizes of Lianxin aluminum alloy hardware components for fixtures of window leaf

2001 推拉配置
2001 slide configurations

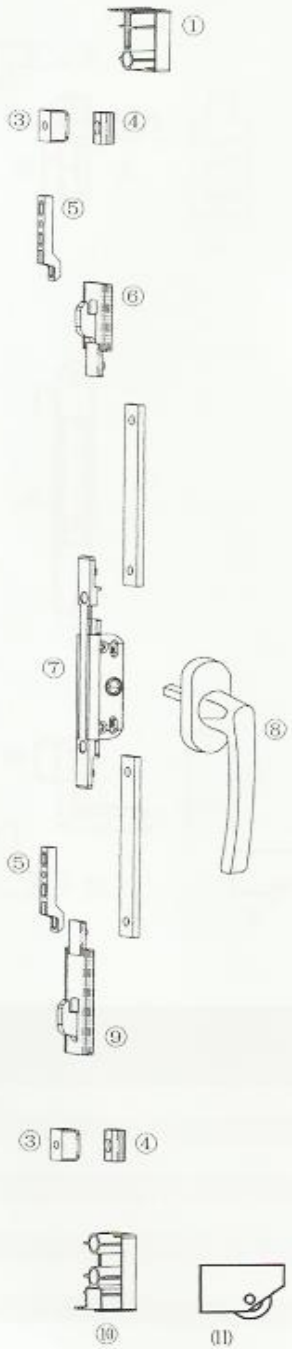

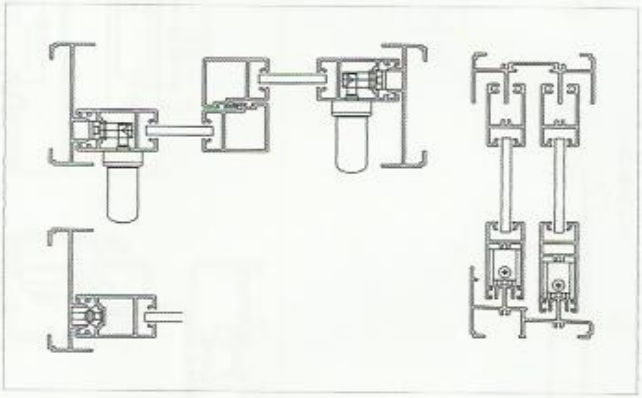

2001 推拉配置 2001 slide comfigurations				
序号 NO	名称 Name	编号 Number	数量 Quantity	备注 Note
1	2001 上组角盖 A 2001 top-corner cover A	3.04.080007	1	600~1200
2	2001 上组角盖 B 2001 top-corner cover B	3.04.080008	1	
3	2001 框防撞块 2001 frame damper	3.04.080005	2	
4	2001 扇防撞块 2001 leaf damper	3.04.080006	2	
5	钩锁块 hook lock block	3.02.080013	2	
6	上滑钩 top slide hook	3.02.080014	1	
7	单向传动器 single transmission		1	
8	执手 handle		1	
9	下滑钩 bottom slide hook	3.02.080015	1	
10	2001 下组角盖 A 2001 bottom-corner cover A	3.04.080009	1	
11	滑轮 pulley		4	
12	2001 下组角盖 B 2001 bottom-corner cover B	3.04.080010	1	

铝推拉配置
Aluminum slide configuations

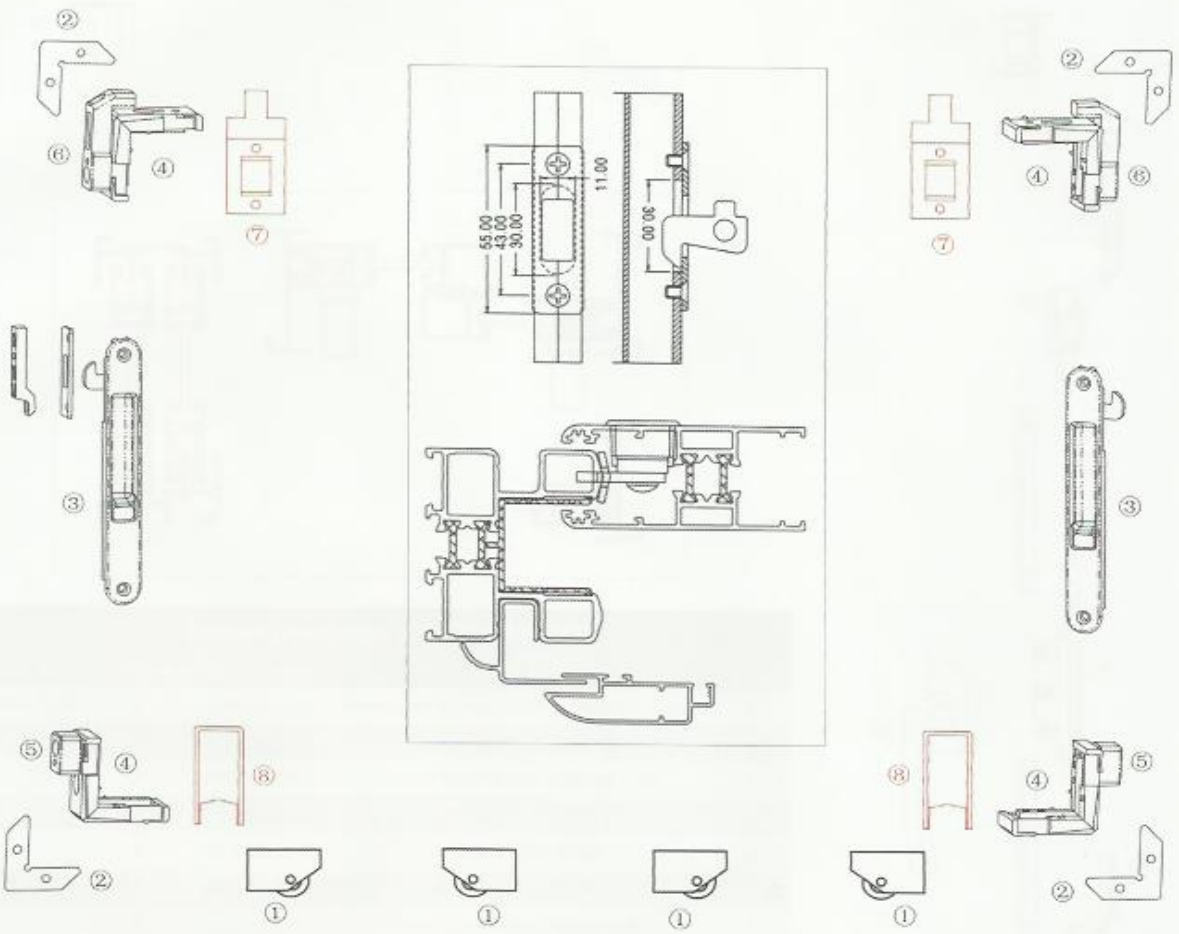

铝推拉配置表 aluminum slinde configuration diagram				
序号 NO	名称 Name	编号 Number	数量 Quantity	备注 Note
1	滑轮 pulley		4	
2	组角钢片 combine-corner steel sheet		4	可选件
3	钩锁 hook lock		1	
4	尼龙角码（组角块）nylon corner	9.08.0150	4	
5	下防撞块 bottom damper	3.04.080003	2	
6	上防撞块 top damper	3.04.080004	2	
7	70 防撞块 70 damper	9.08.0109	2	
8	70 盖板封盖 70 seal cover	9.08.0110	2	

铝平开配置 (1、2)
Aluminum casement configuations(1/2)





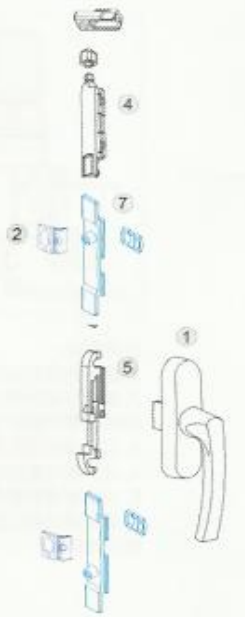

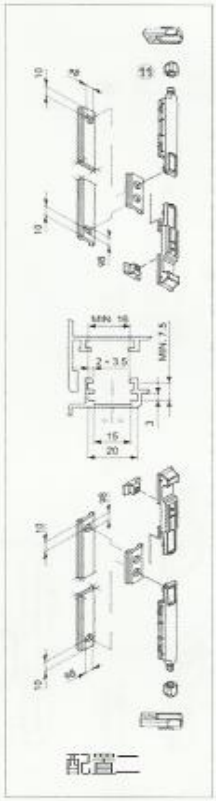

配置二





注意事项:

1、窗户的框与扇的组角连接必须牢固可靠。

2、窗框与窗扇槽口平面上的尺寸应保证与本手册 P21 图 A 上所标示的标准槽口配合尺寸一致。

3、以上蓝色图形五金件为窗户选用件。

4、内开组件必须配合欧槽限位撑使用。以达到最佳效果。

5、有多款执手可供选择。

6、虚线框内为假中梃对开窗用配套件。

7、本配置谨供参考：锁点可按型材及客户要求配置。

8、请正确选用口型合理、材料优质密封胶条。安会影响整窗的功能及效果。



配置一

铝平开配置表 (1/2) Aluminum casement configuration diagram (1/2)				
序号 NO	名称 Name	编号 Number	数量 Quantity	备注 Note
1	幕墙 3 号执手 screen-wall #3 handle	9.01.0069		可选幕墙带锁 3 号执手、幕墙直柄 3 号执手
2	铝 6 号锁块 aluminum #6 lock block	9.08.0208		可选铝 1 号锁块、铝 3 号锁块 (可选件)
3	塑天地插座 plastic top&bottom socket	9.08.0094		可选内倾调节插座
4	塑天地插 plastic top&bottom inserter	9.08.0093		
5	双向转换器 double converter	9.08.0097		
6	爬升垫块 climb-rise pad	9.08.0117		
7	双头滑块 double-head slide block	3.02.080010		可选件
8	铰链 hinge			
10	限位撑 limit bracket	9.06.0067		
11	手动插消把手式 manumotive bolt(handle type)			假中梃式可选件

铝平开配置(3、4)
Aluminum casement configuations (3、4)

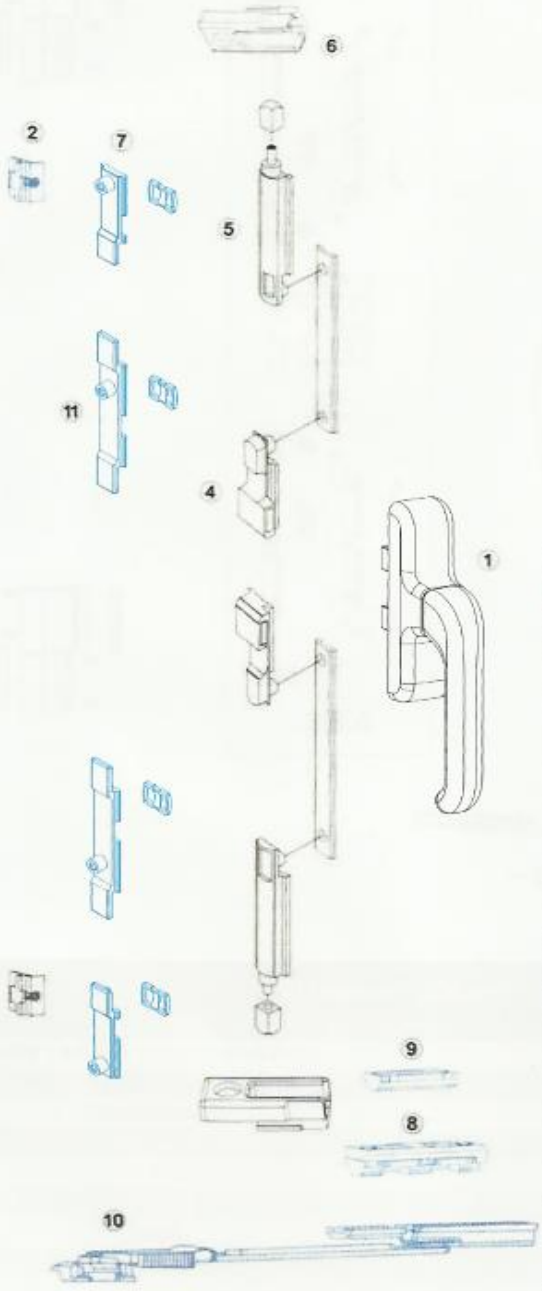

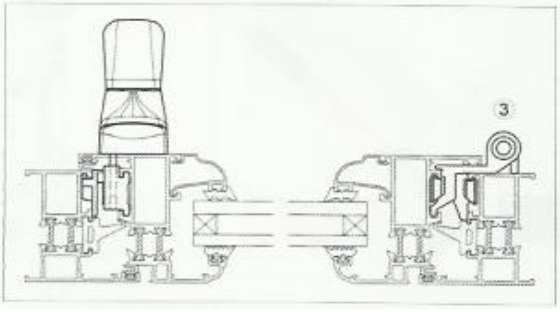

注意事项:
1、窗户的框与扇的组角连接必须牢固可靠。
2、窗框与窗扇槽口平面上的尺寸应保证与本手册 P27 上图 A 所标示的标准槽口配合尺寸一致。
3、以上蓝色图形五金件为窗户可选用件。
4、内开组件配合欧槽限位撑使用。效果更佳。
5、本配置谨供参考，锁点可按型材及客户要求配置。
6、请正确选用口型合理、材料优质的密封胶条，它会影响整窗的 功能及效果。

铝平开配置表 -3
aluminum casement comfiguations diagram-3

序号 NO	名称 Name	编号 Number	数量 Quantity	备注 Note
1	执手 handle		1	
3	铰链 hinge		2	
4	锁杆(左 / 右) lock rod(L/R)	9.08.0091(L) 9.08.0092(R)	2	
5	塑天地插 plastic top&bottom inserter	9.08.0093	2	
6	塑天地插座 plastic top&bottom socket	9.08.0094	2	
8	上悬调节锁座 top-suspension adjust lock sit	3.04.080013	2	可选件
9	爬升垫块 climb-rise pad	9.08.0117	1	

铝平开配置表 -4
aluminum casement comfiguations diagram-4

序号 NO	名称 Name	编号 Number	数量 Quantity	备注 Note
1	执手 handle		1	
2	铝 6 号锁块 aluminum #6 lock block	9.08.0208	2	可选件
3	铰链 hinge		2	
4	锁杆(左 / 右) lock rod(L/R)	9.08.0091(L) 9.08.0092(R)	2	
7	4 号滑块 #4 slide block	3.02.080077	2	可选件
11	双头滑块 double-head slide block	3.02.080010	2	可选件

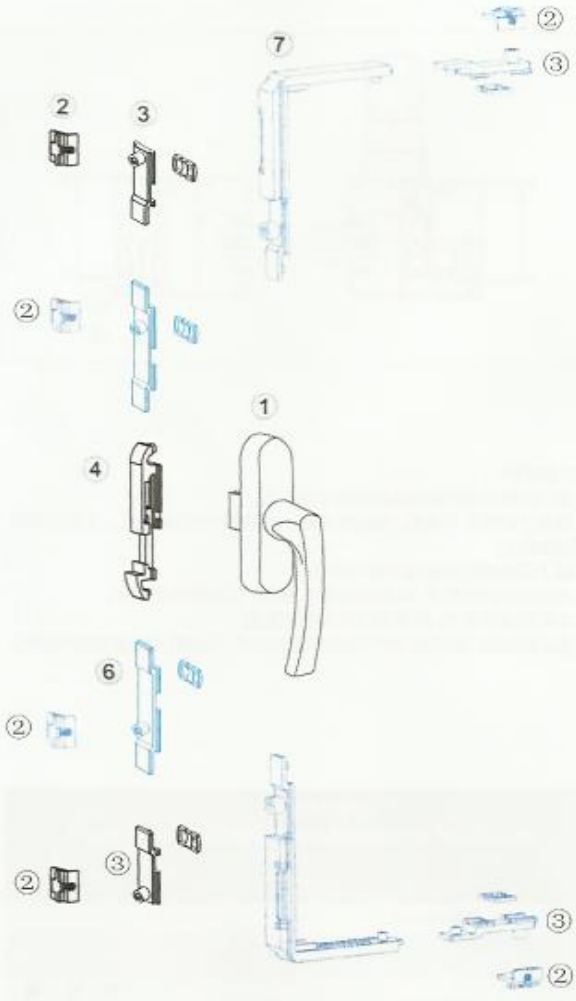

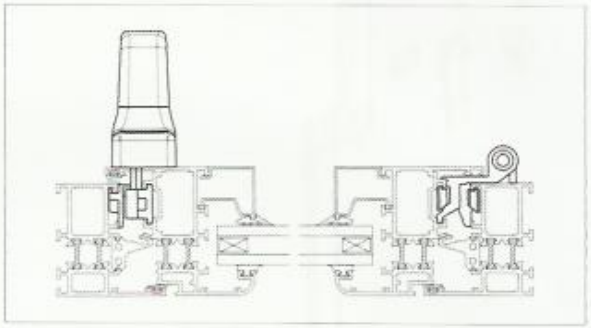

注意事项:
1、窗户的框与扇的组角连接必须牢固可靠。
2、窗框与窗扇槽口平面上的尺寸应保证与本手册 P14 上图 A 所标示的标准槽口配合尺寸一致。
3、以上蓝色图形五金件为窗户选用件。
4、内开组件必须配合欧槽限位撑使用。效果更佳。
5、本配置证供参考; 锁点可按型材及客户要求配置。
6、请正确选用口型合理、材料优质的密封胶条, 它会影响整窗的功能及效果。

铝平开配置表 -5
aluminum casement comfiguations diagram-5

序号 NO	名称 Name	编号 Number	数量 Quantity	备注 Note
1	幕墙 3 号执手 screen-wall #3 handle	9.01.0069	1	
2	铝 6 号锁块 aluminum #6 lock block	9.08.0208	2	
3	4 号滑块 #4 slide block	9.08.0097	2	
4	双向转换器 double-way converter	3.10.0001	2	
6	双头滑块 double-head slide block	9.06.0067	2	可选件
7	转向器带锁点 redirector with lock keeper	3.02.080077	2	可选件
8	限位撑 limit bracket	3.02.080010	1	可选件

铝平开配置表 -6
aluminum casement comfiguations diagram-6

序号 NO	名称 Name	编号 Number	数量 Quantity	备注 Note
1	幕墙 3 号执手 screen-wall #3 handle	9.01.0069	1	
2	铝 6 号锁块 aluminum #6 lock block	9.08.0208	2	
3	4 号滑块 #4 slide block	9.08.0097	2	
4	双向转换器 double-way converter	9.06.0067	2	
6	双头滑块 double-head slide block	3.02.080077	2	可选件
8	限位撑 limit bracket	3.02.080010	1	可选件

铝平开配置 -7
Aluminum casement configurations-7

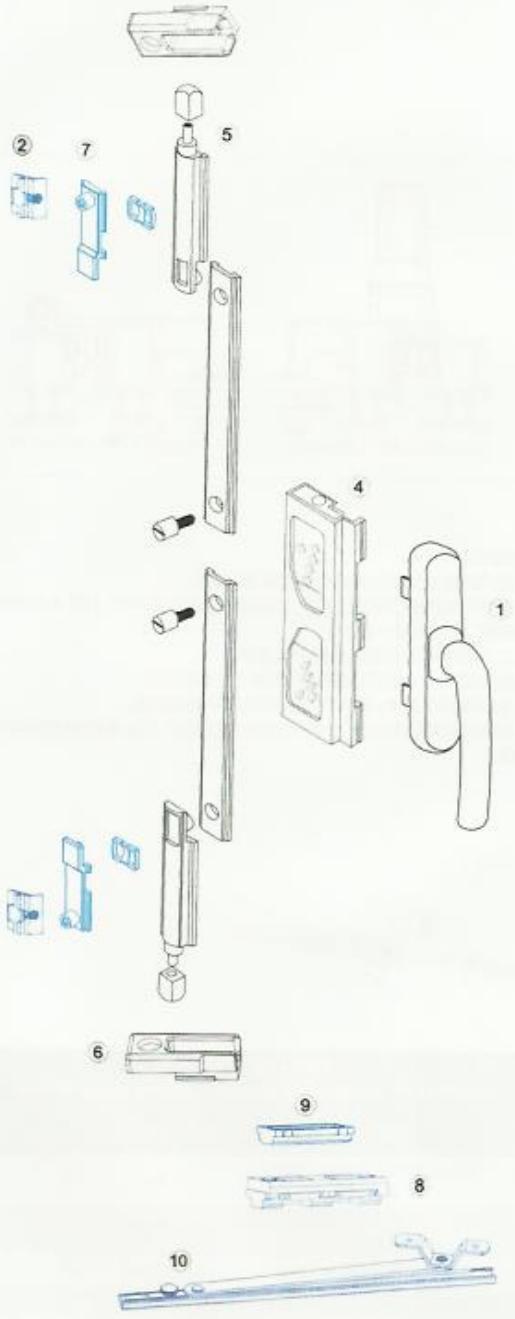

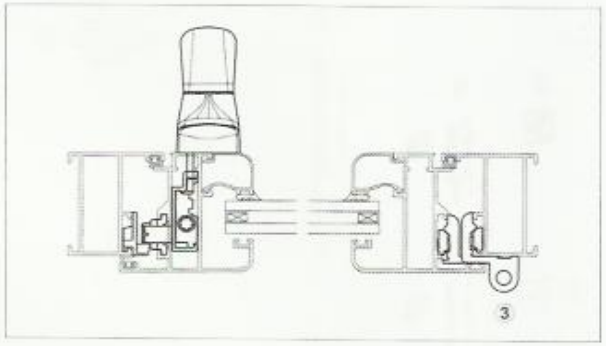

联注意事项：

1、窗户的框与扇的组角连接必胶牛固可靠。

2、适用于欧式外平开窗，传动器具有五种距离的传动螺丝孔，适用于多种铝型材设计。

3、以上蓝色图形五金件为窗户选用件。

4、内开组件必胶配合 14 槽限位撑 B 使用，以达到最佳效果。

5、本配置谨供参考：锁点可按客房要求配置。

6、请正确选用口型合理、材料优质的密封胶条，它会影响整窗功能及效果。

铝平开配置表 -7 aluminum casement comfiguations diagram-7				
序号 NO	名称 Name	编号 Number	数量 Quantity	备注 Note
1	执手 handle		1	
2	铝 6 号锁块 aluminum #6 lock block	9.08.0208	2	
3	铰链 hinge		2	选 1 号、2 号、3 号拔动锁盒
4	3# 拔动锁盒 #3 poke lock box	9.08.0127	1	
5	塑天地插 plastic top&bottom inserter	9.08.0093	2	
6	塑天地插座 plastic top&bottom socket	9.08.0094	2	
7	4 号滑块 #4 slide block	3.02.080077	2	可选件
8	上悬调节锁座 top-suspension adjust lock sit	3.04.080013	1	可选件
9	爬升垫块 climb-rise pad	9.08.0117	1	可选件
10	欧标槽限位撑 European notch limit bracket		1	可选件

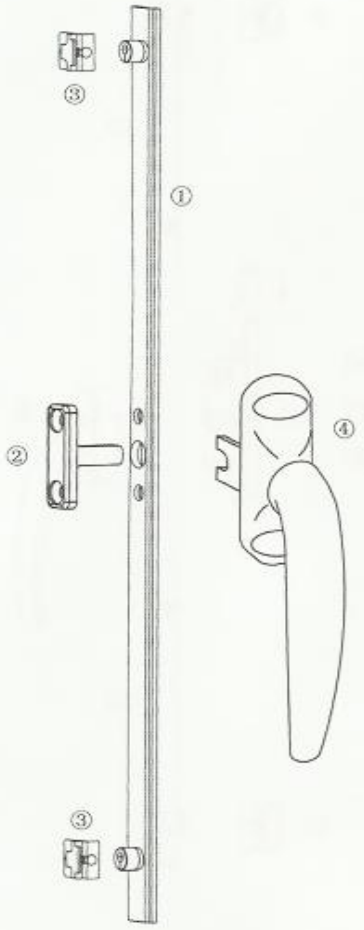

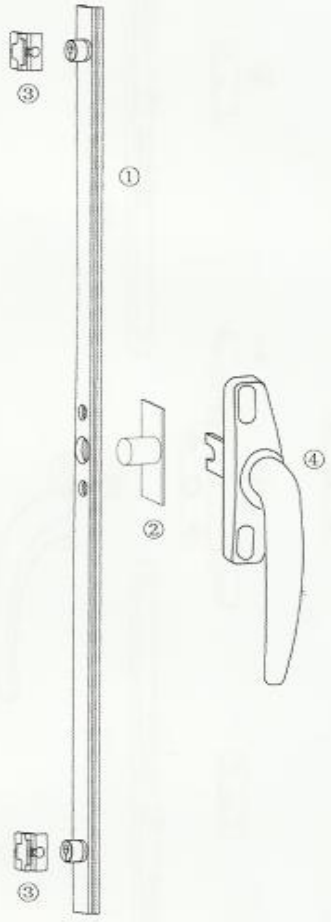

铝平开配置表 -8 aluminum casement comfiguations diagram-8				
序号 NO	名称 Name	编号 Number	数量 Quantity	备注 Note
1	铝标准槽式外开传动杆 outward transmission	9.02.0091	1	
2	外开拨柱 outward poke column	9.08.0129	1	
3	铝 6 号锁块 aluminum #6 lock block	9.08.0208	2	
4	512-5 执手 512-5 handle	9.01.0092	1	

铝平开配置表 -9 aluminum casement comfiguations diagram-9				
序号 NO	名称 Name	编号 Number	数量 Quantity	备注 Note
1	铝标准槽式内开传动杆 inward transmission	9.02.0092	1	
2	内开拨柱 inward poke column	9.08.0130	1	
3	铝 6 号锁块 aluminum #6 lock block	9.08.0208	2	
4	512-3 执手 512-3 handle	9.01.0029	1	

铝平开配置 (10、11)
aluminum casement configurations(10/11)

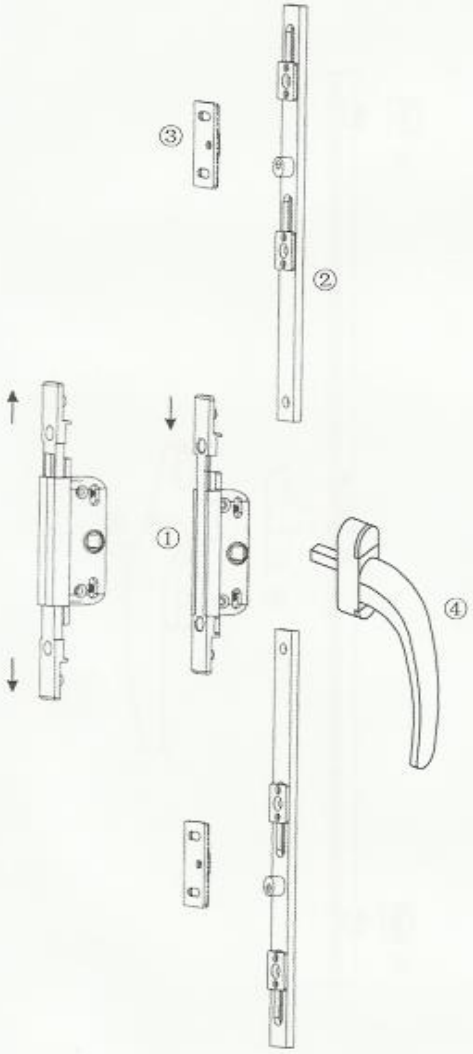

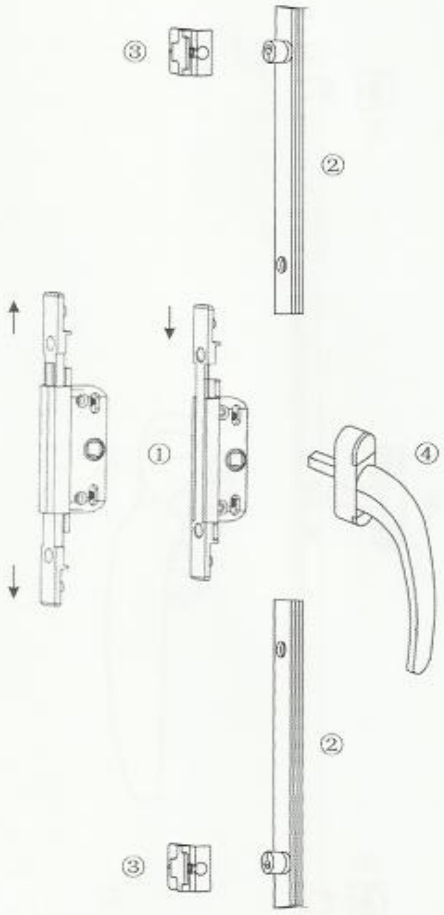

铝平开配置表 -10
aluminum casement comfiguations diagram-10

序号 NO	名称 Name	编号 Number	数量 Quantity	备注 Note
1	单向传动器 single-way transmission		1	选 2 号、3 号、5 号单向传动器
2	铝 1 号单片接接杆 #1 aluminum single connecting bar	9.02.0093	2	长度可选
3	锁块 lock block		2	可选其它
4	执手 handle		1	可选其它外开传动器

铝平开配置表 -11
aluminum casement comfiguations diagram-11

序号 NO	名称 Name	编号 Number	数量 Quantity	备注 Note
1	单向传动器 single-way transmission		1	选 2 号、3 号、5 号单向传动器
2	铝欧标挂接杆 Eu-standard aluminum connecting bar	9.02.0103	2	长度可选
3	铝 6 号锁块 aluminum #6 lock block	9.08.0208	2	可选其它
4	执手 handle		1	可选其它外开传动器

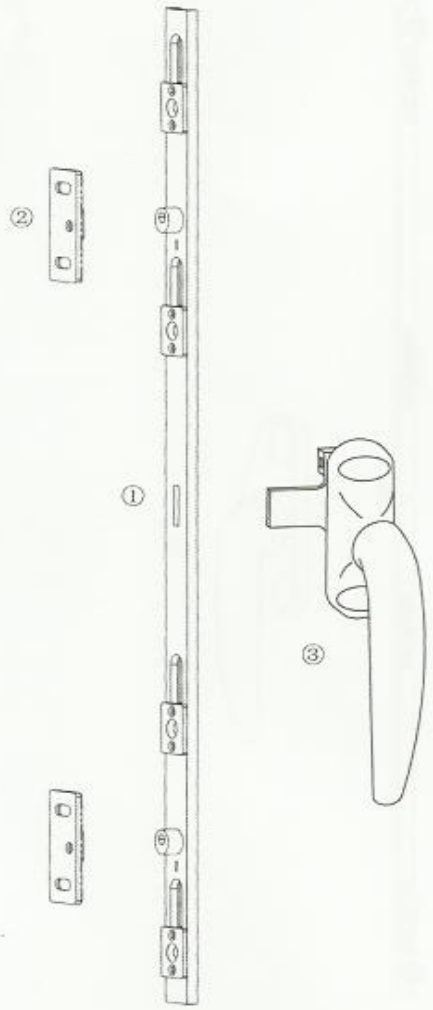

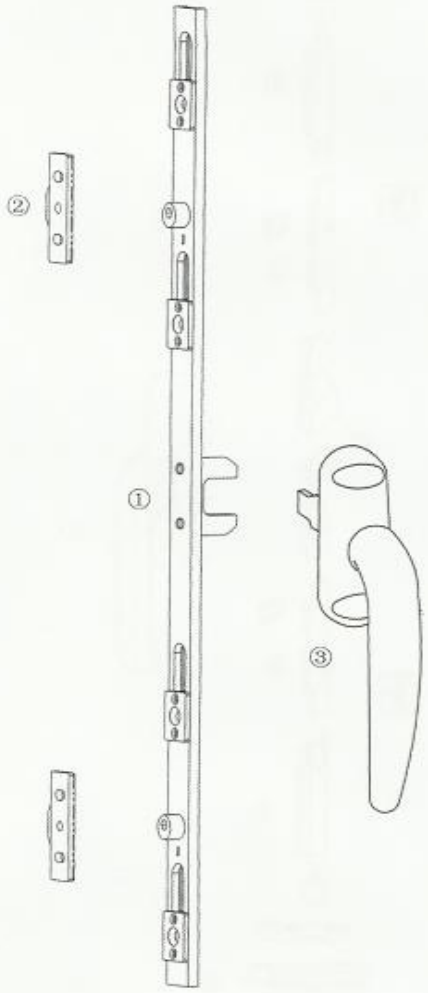

铝平开配置表 -12
aluminum casement comfiguations diagram-12

序号 NO	名称 Name	编号 Number	数量 Quantity	备注 Note
1	铝方槽式传动杆 aluminum square notch transmission	9.02.0095	1	
2	T 型 1 号锁块 T shape #1 lock block		2	可选其它
3	513-2 执手 513-2 handle	9.01.0035	1	

铝平开配置表 -13
aluminum casement comfiguations diagram-13

序号 NO	名称 Name	编号 Number	数量 Quantity	备注 Note
1	U 型槽传动杆 U shape notch transmission	9.02.0096	1	
2	T 型锁块 T shape lock block		2	
3	513-1 执手 513-1 handle	9.01.0034	1	

铝平开配置 (14、15)
Aluminum casement configurations(14/15)

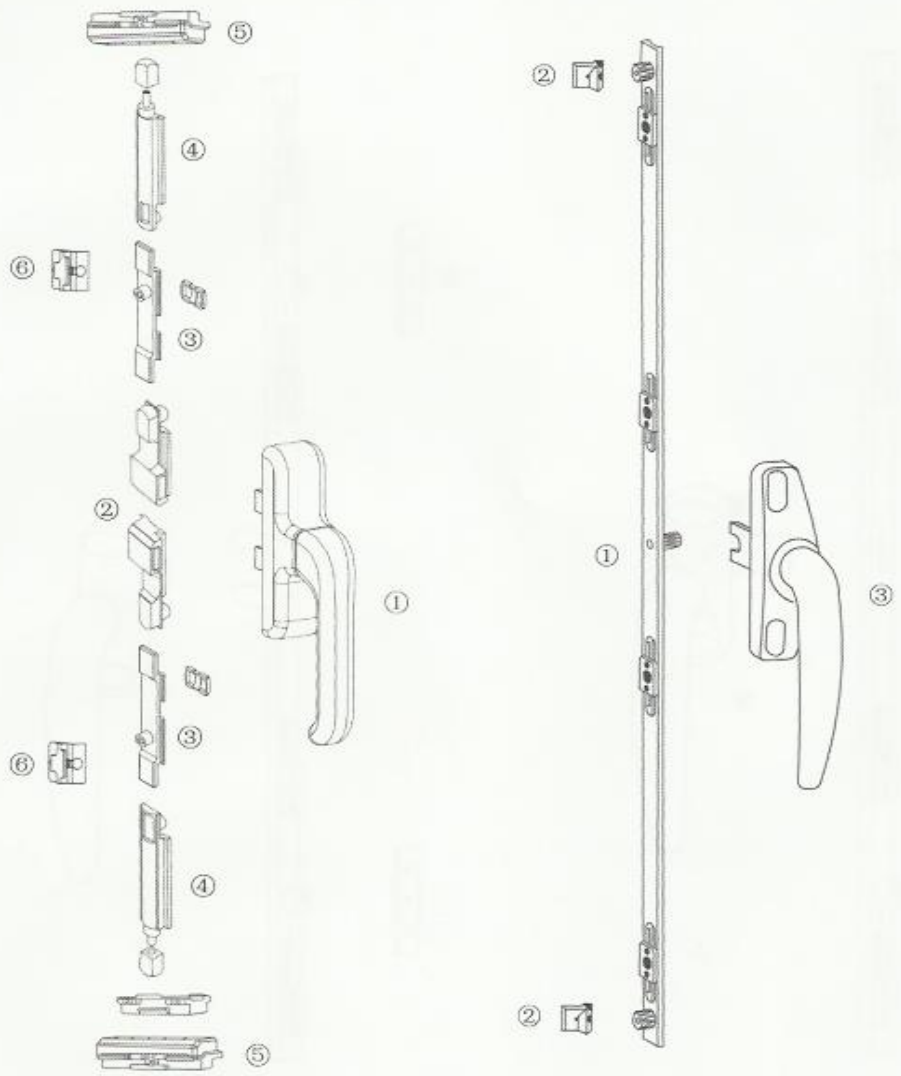

铝平开配置表 -14 aluminum casement comfiguations diagram-14				
序号 NO	名称 Name	编号 Number	数量 Quantity	备注 Note
1	执手 handle		1	
2	锁杆 (左 / 右)lock rod(L/R)	9.08.0091(L) 9.08.0092(R)	2	
3	双头滑块 double-head slide block	3.02.080010	2	
4	塑天地插 plastic top&bottom lock sit	9.08.0093	2	
5	上悬调节锁座 top-suspension lock sit	3.04.080013	2	
6	铝 6 号锁块 aluminum #6 lock block	9.08.0208	2	

铝平开配置表 -15 aluminum casement comfiguations diagram-15				
序号 NO	名称 Name	编号 Number	数量 Quantity	备注 Note
1	铝拨叉传动杆 aluminum foke transmission	9.02.0097	1	
2	锁块 lock block		2	
3	执手 handle		1	

铝平开配置 (18、19)
Aluminum casement configurations(18/19)

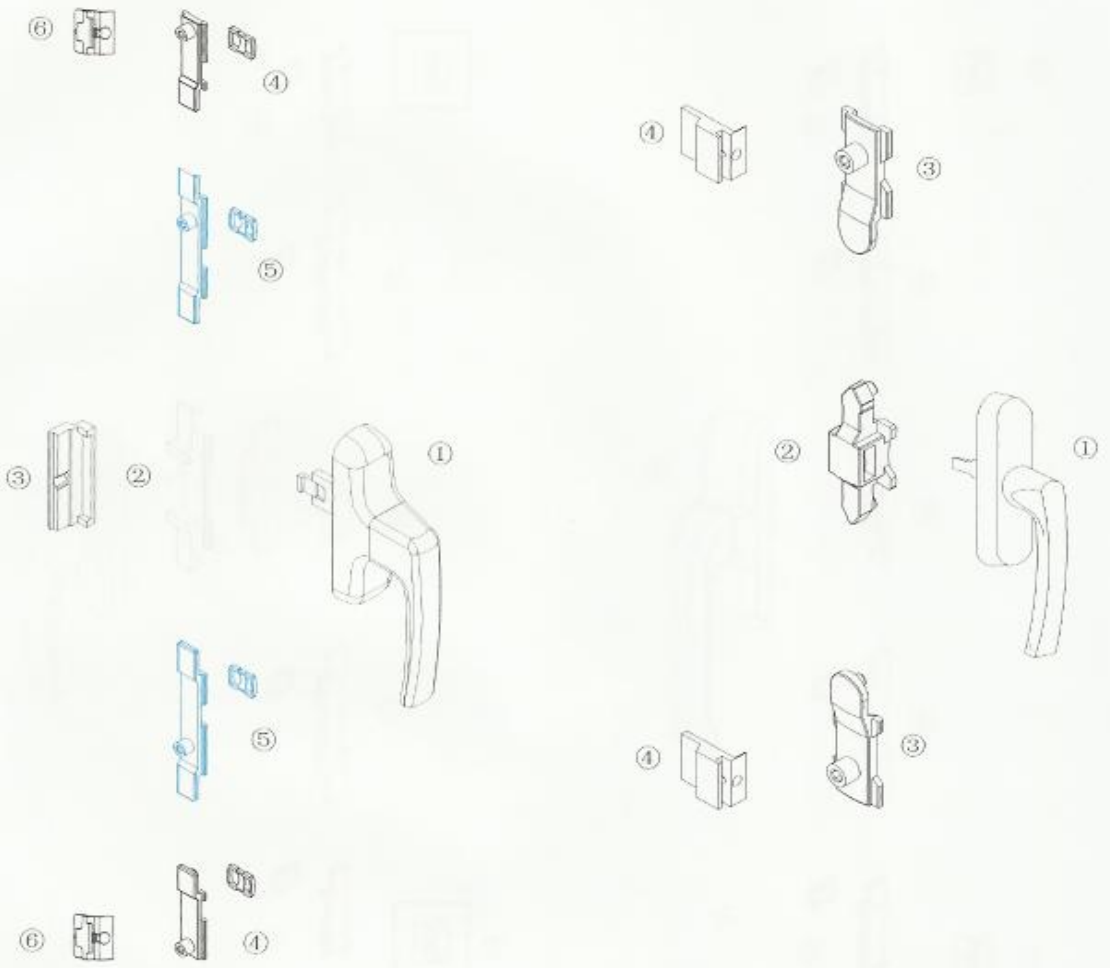

铝平开配置表 -18 aluminum casement comfiguations diagram-18				
序号 NO	名称 Name	编号 Number	数量 Quantity	备注 Note
1	523 执手 523 handle	9.01.0145	1	
2	4 号藕合块 #4 coupling block	3.02.100037	1	
3	铝 3 号平开上悬防误 wrong-proof operator	3.10.0133	1	
4	4 号滑块 #4 slide block	3.02.080077	2	
5	双头滑块 double-head slide block	3.02.080010	2	可选件
6	铝 6 号锁块 aluminum #6 lock block	9.08.0208	2/4	

铝平开配置表 -19 aluminum casement comfiguations diagram-19				
序号 NO	名称 Name	编号 Number	数量 Quantity	备注 Note
1	幕墙 4-1 号执手 screen-wall 4-1 handle	9.01.0224	1	
2	2 号藕合块 #2 coupling block	3.02.080046	1	
3	2 号滑块 #2 slide block	9.08.0220	2	
4	铝 7 号锁块 aluminum #7 lock block	3.02.020098	2	

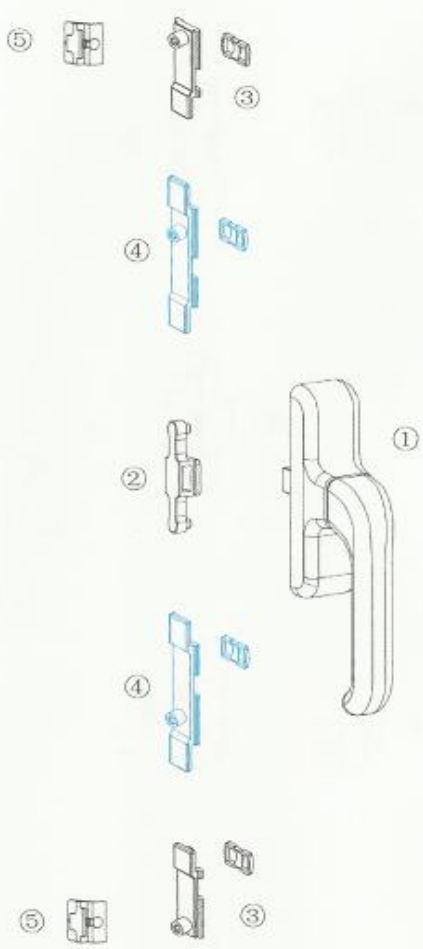

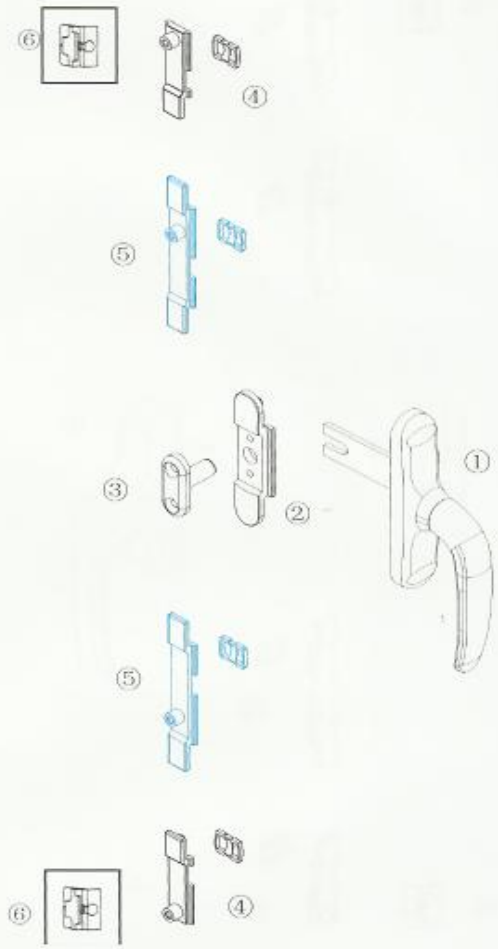

铝平开配置表 -16 aluminum casement comfiguations diagram-16				
序号 NO	名称 Name	编号 Number	数量 Quantity	备注 Note
1	522-1 执手 522-1 handle	9.01.0144	1	
2	5 号耦合块 #5 coupling block	3.02.100008	1	
3	4 号滑块 #4 slide block	3.02.080077	2	
4	双头滑块 double-head slide block	3.02.080010	2	可选件
5	铝 6 号锁块 aluminum #6 lock block	9.08.0208	2/4	

铝平开配置表 -17 aluminum casement comfiguations diagram-17				
序号 NO	名称 Name	编号 Number	数量 Quantity	备注 Note
1	518 执手 518 handle	9.01.0189	1	
2	2 号主传动杆 #2 main transmission	3.02.080073	1	
3	外开拔柱 outward poke column	9.08.0129	1	
4	4 号滑块 #4 slide block	3.02.080077	2	
5	双头滑块 double-head slide block	3.02.080010	2	可选件
6	铝 6 号锁块 aluminum #6 lock block	9.08.0208	2/4	

铝平开配置 (22、23)
Aluminum casement configurations(22/23)

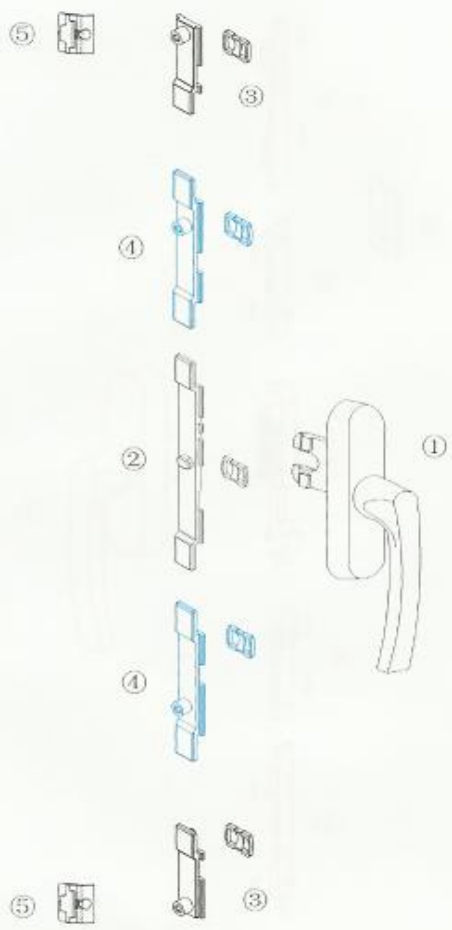

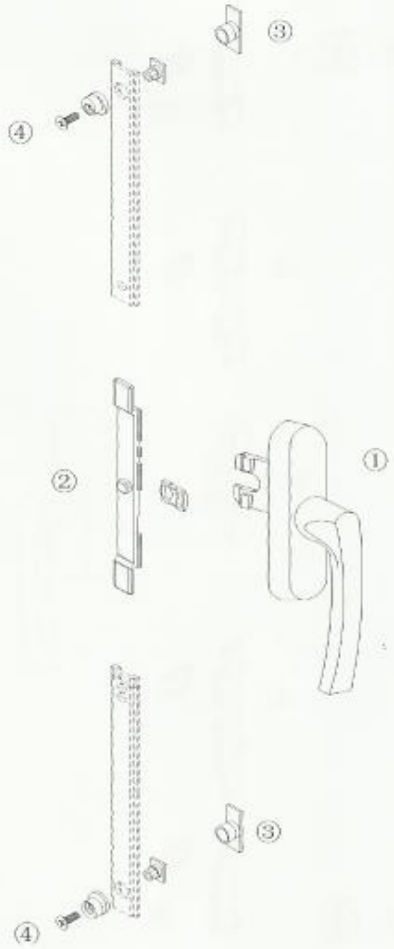

铝平开配置表 -20 aluminum casement comfiguations diagram-20				
序号 NO	名称 Name	编号 Number	数量 Quantity	备注 Note
1	幕墙 4-4 号执手 screen-wall 4-4 handle	9.01.0227	1	
2	3 号主传动杆 #3 main transmission rod	3.02.080078	1	可选件
3	4 号滑块 #4 slide block	3.02.080077	2	
4	双头滑块 double-way block	3.02.080010	2	可选件
5	铝 6 号锁块 aluminum #6 lock block	9.08.0208	2/4	

铝平开配置表 -21 aluminum casement comfiguations diagram-21				
序号 NO	名称 Name	编号 Number	数量 Quantity	备注 Note
1	幕墙 4 号执手 screen-wall #4 handle	9.01.0227	1	可选件
2	3 号主传动杆 #3 main transmission	3.02.080078	1	
3	可拆式锁点 disassemble lock keeper	9.08.0100	2	可选④

铝上悬配置
Aluminum top-suspension configuration

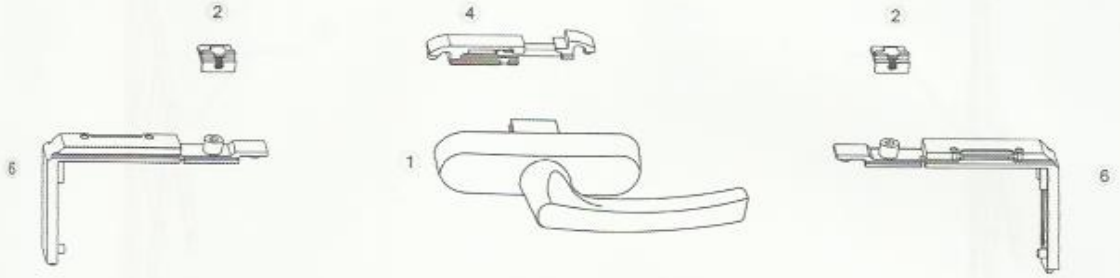

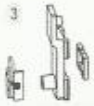



铝平开配置表 -21 aluminum casement comfiguations diagram-21				
序号 NO	名称 Name	编号 Number	数量 Quantity	备注 Note
1	幕墙 4-3 号执手 screen-wall #4-3 handle	9.01.0226	1	
2	铝 6 号锁块 aluminum #6 lock block	9.08.0208	4	
3	4 号滑块 #4 slide block	3.02.080077	2	
4	双向转换器 double-way converter	9.08.0097	1	
5	铝 8 号铰链 aluminum #8 hinge	9.06.0049	2	
6	转向器带锁点 redirector with lock keeper	3.10.0001	2	
7	限位撑 limit braket	9.06.0067	2	









铝下悬配置
Aluminum bottom-suspension configuration

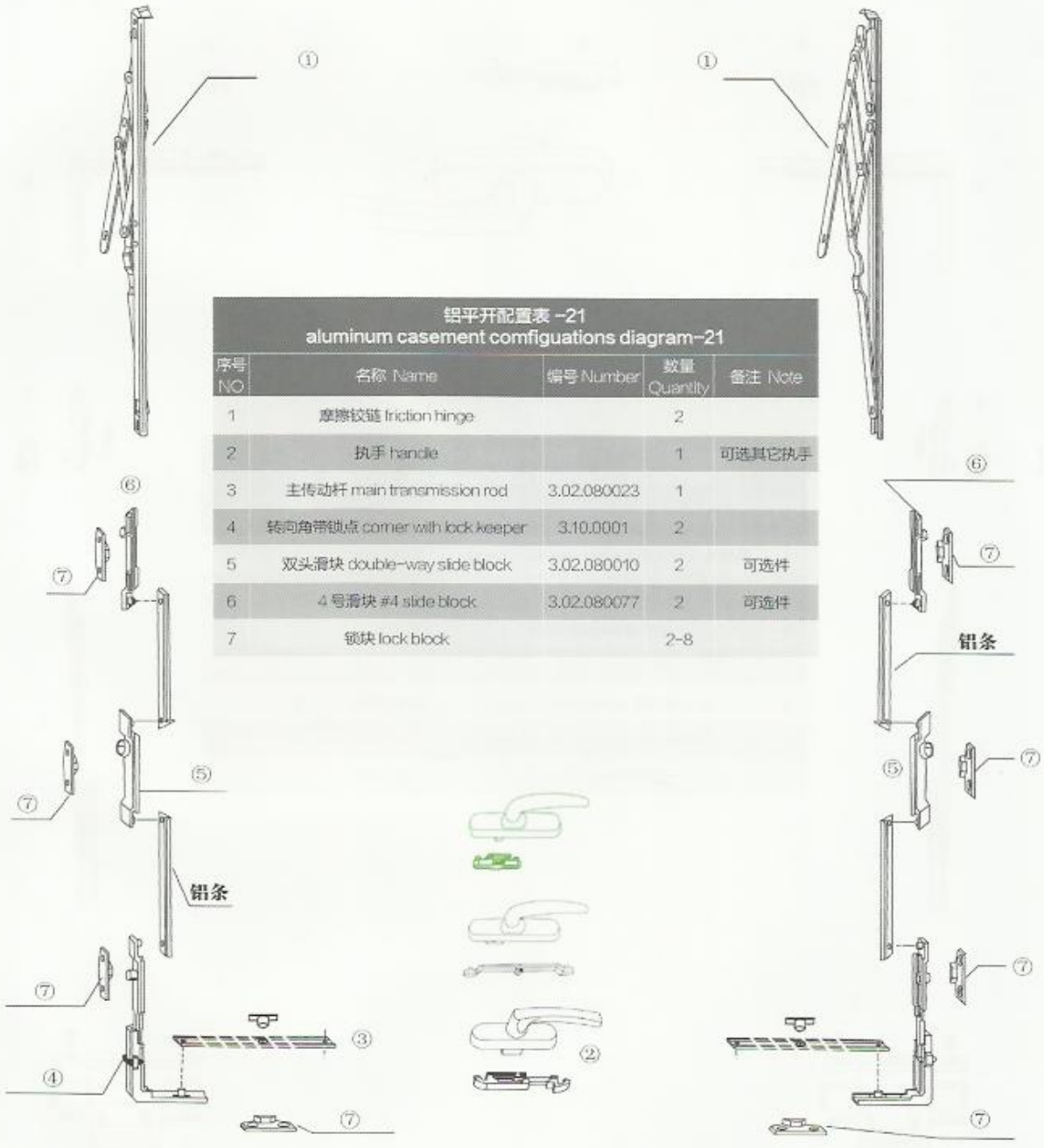

铝平开配置表 -21
aluminum casement comfiguations diagram-21

序号 NO	名称 Name	编号 Number	数量 Quantity	备注 Note
1	摩擦铰链 friction hinge		2	
2	执手 handle		1	可选其它执手
3	主传动杆 main transmission rod	3.02.080023	1	
4	转向角带锁点 corner with lock keeper	3.10.0001	2	
5	双头滑块 double-way slide block	3.02.080010	2	可选件
6	4 号滑块 #4 slide block	3.02.080077	2	可选件
7	锁块 lock block		2-8	

铝 2 号内平开上悬配置
Aluminum #2 inward-opening top-suspension casement configurations

* 本系统适用于扇宽(SK)340-1200mm, 扇高(SG)500-2000mm, 原则上扇高不超过扇的 1.5 倍。
* 当扇宽(SK)在 340-580mm 之间时, 可选用 200 型斜拉杆; 当扇宽(SK)在 581-1200mm 之间时, 可选用 320 型斜拉杆。
* 带"☆"处为调节点, 当窗户安装好后可进行微量调整, 使整窗配合达到最佳状态。

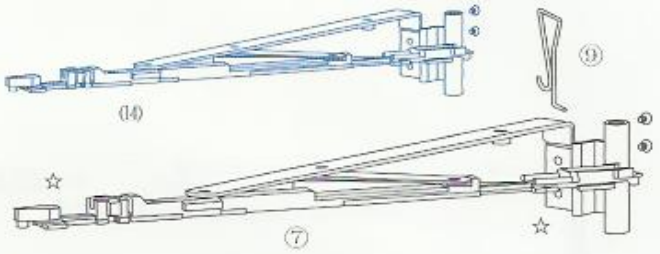

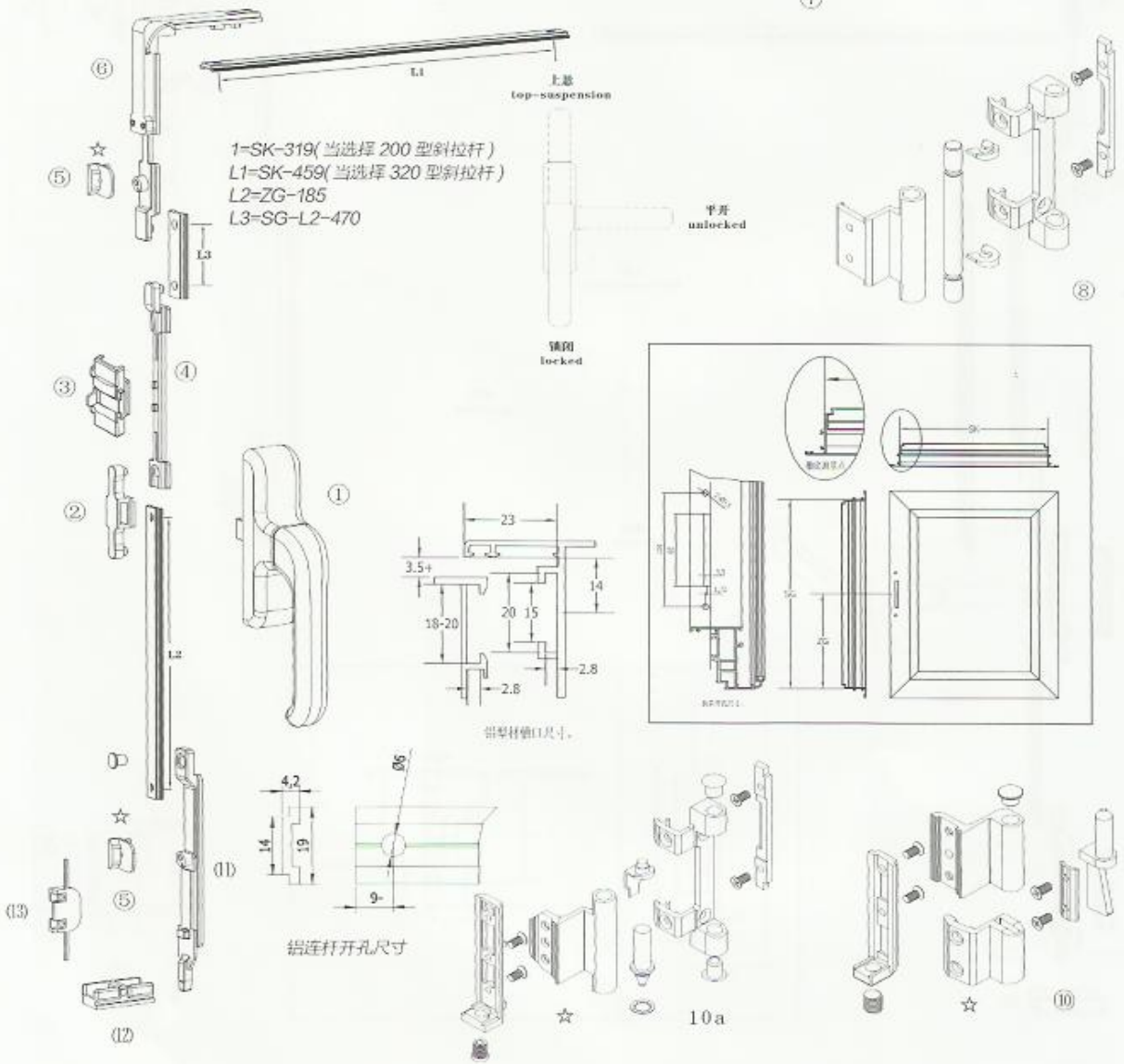

铝 3 号内平开上悬配置
Aluminum #3 inward-opening top-suspension casement configurations

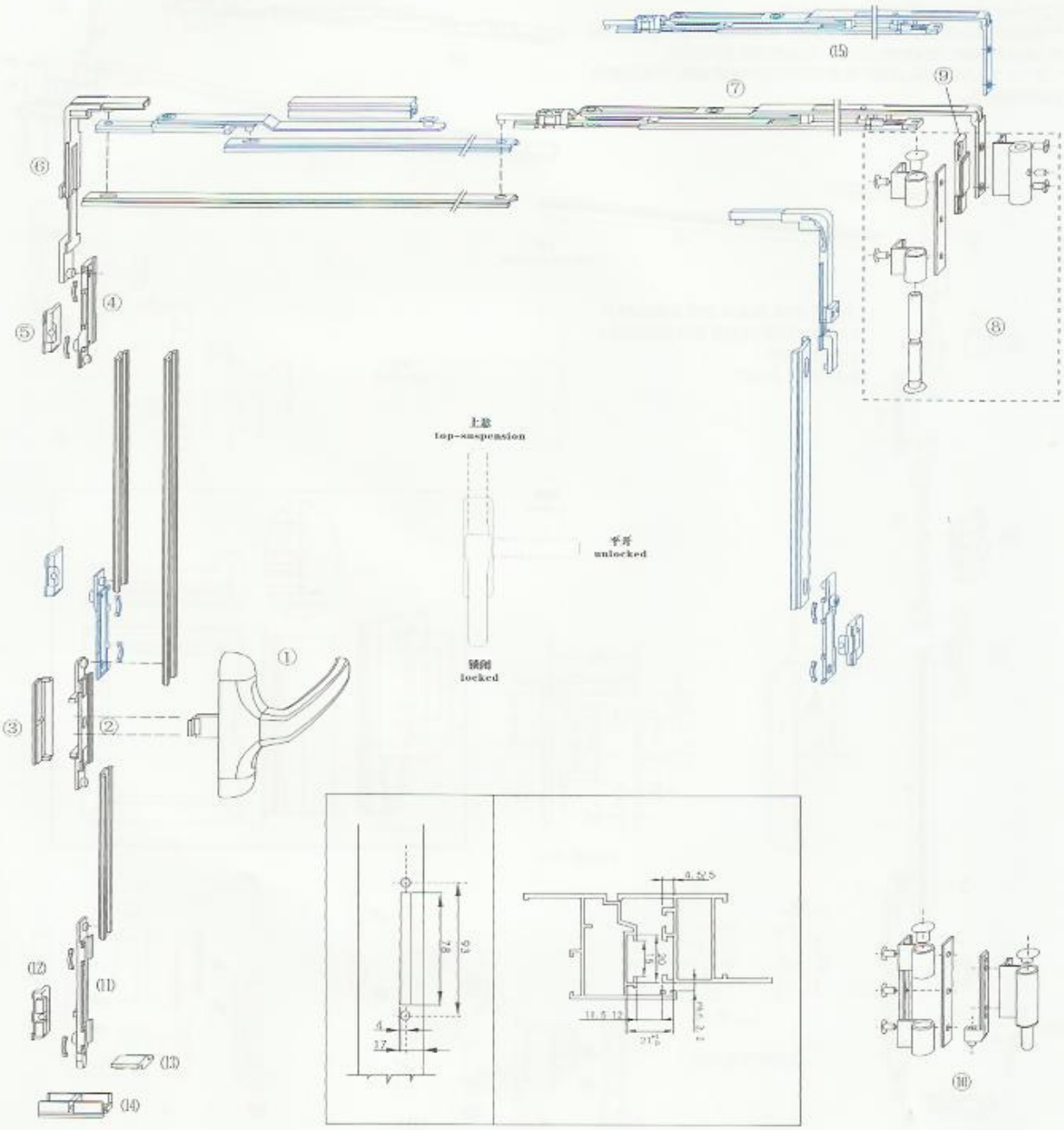

铝 2 号内平开上悬配置
Aluminum #2 inward-opening top-suspension casement configurations

铝 2 号内平开上悬窗配置表 aluninum#2 inward-opening top-suspension casement configurations diagram				
序号 NO	名称 Name	编号 Number	数量 Quantity	备注 Note
1	522 执手 522 handle	9.01.0144	1	
2	5 号藏合块 #5 coupling block	3.02.100008	1	
3	铝 2 号防误操作器 wrong-proof operator	3.02.100012	1	
4	主传动杆 main transmission	3.02.100005	1	
5	铝 10 号锁块 aluminum #10 lock block	3.10.0125	2	
6	转向角 corner	3.10.0126	1	
7	320 斜拉杆 320 slanting pull rod	3.10.0128	1	小窗可选(14)200 斜拉杆
8	上铰链 top hinge	3.03.100055	1	
9	卡簧 jump ring	3.10.0129	1	
10	下铰链 bottom hinge	3.10.0130	1	可选 2 号下铰链 (10a)
11	插肖 bolt	3.10.0131	1	
12	插座 socket	3.10.0132	1	
13	扣码 button	3.10.0183	1	

铝 3 号内平开上悬配置
Aluminum #3 inward-opening top-suspension casement configurations

铝 3 号内平开上悬窗配置表 aluninum#3 inward-opening top-suspension casement configurations diagram				
序号 NO	名称 Name	编号 Number	数量 Quantity	备注 Note
1	523 执手 523 handle	9.01.0145	1	
2	4 号藏合块 #4coupling block	3.02.100037	1	
3	防误锁块 wrong-proof operator	3.10.0133	1	
4	3 号单头滑块 #3 single slide block	3.10.0134	1-3	
5	铝 8 号锁块 aluminum #8 lock block	3.02.100032	2-3	
6	铝 3 号转向角 corner	3.10.0135	1-2	
7	铝 3 号 498 斜拉杆 498 slanting rod	3.10.0136	1-2	小窗可选(15)373 斜拉杆
8	上铰链 top hinge	3.10.0138	1	
9	挡块 hinder block	3.10.0139	1	
10	下铰链 bottom hinge	3.10.0140	1	
11	插肖 bolt	3.10.0141	1	
12	铝 9 号锁块 aluminum #9 lock block	3.02.100031	1	
13	助升块 rise-aid block	3.10.0142	1	
14	插座 socket	3.10.0143	1	

Euro Window Parts

Cadenza Window Handles



HMHG-I-BL



HMHG-I-BR



HMHG-II-BL



HMHG-II-BR



HMHG-III-BL



HMHG-III-LB



HMHG-III-PG



HMHG-III-WH



HMHG-II-LB



HMHG-II-PG



HMHG-II-WH



HMHG-I-LB



HMHG-I-PC



HMHG-I-PG

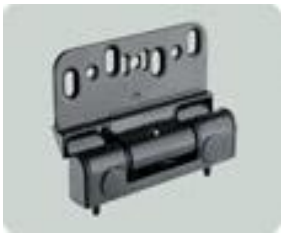

HMHG-IV-BL



HMHG-IV-BR



HMHG-IV-LB



HMHG-IV-PG



HMHG-IV-WH



HMHG-I-WH



HMHG-V-BL



HMHG-V-BR



HMHG-VI-PG



HMHG-V-LB



HMHG-V-PC



HMHG-V-PG



HMHG-V-WH

Cockspur Window Handles



HMWH-01-BL



HMWH-01-PC



HMWH-01-PG



HMWH-01-WH(1)



HMWH-01-WH



HMWH-02-PC



HMWH-02-WH



HMWH-03-PG(1)



HMWH-03-PG



HMWH-03-WH(1)



HMWH-03-WH



HMWH-04-SC



HMWH-05-SC



HMWH-05-WH



HMWH-06-DC



HMWH-06-SC



WHES-01-PG



HMWH-07-PG



HMWH-08-PC



HMWH-09-WH



HMWH-06-WH

Espag Window Handles



HMDH-01



HMDH-02



HMDH-03



HMDH-04



HMDH-05



HMDH-06



HMDH-07



HMDH-08

Cubicle Partition Projects Of
Toilet，Fitting Room，Dressing Room
卫生间、试衣间、更衣室隔断方案

XDF-001
Nylon series
尼龙系列



PICTURE OF PRODUCTS

每套标准包装：
STANDARD PACKING LIST
Model:XDF-001

1、可调脚座：2只
Adjustable support leg：2pcs

2、合页：2个
Hinge：2pcs

3、角码：12只
Coner fastener：12pcs

4、门锁：1把
Door lock:1pcs

5、衣帽钩：1只
Clothes hook:1pcs

6、拉手：1对
Door knob：1pair

7、厕纸架：可选
Paper holder：if necessary



N-001

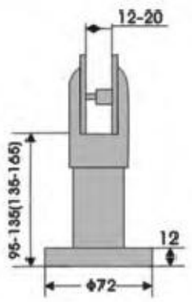



N-002

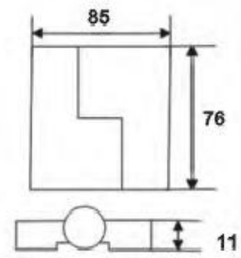



N-003

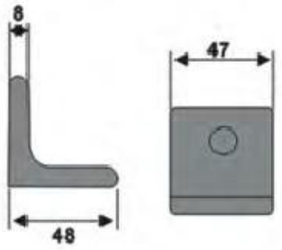



N-004

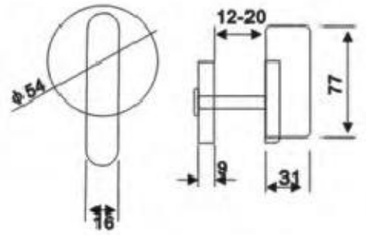



N-005

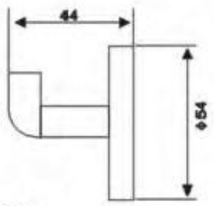



N-006

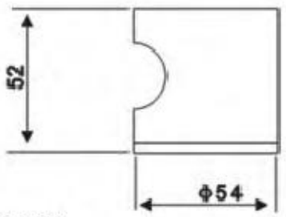



N-007

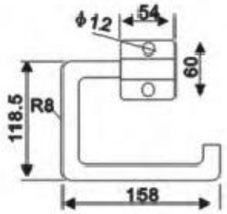

Cubicle Partition Projects Of
Toilet，Fitting Room，Dressing Room
卫生间、试衣间、更衣室隔断方案

XDF-004
Nylon series
尼龙系列



每套标准包装：
STANDARD PACKING LIST
Model:XDF-004

1、可调脚座：2只
Adjustable support leg：2pcs

2、合页：2个
Hinge：2pcs

3、角码：12只
Coner fastener：12pcs

4、门锁：1把
Door lock:1pcs

5、衣帽钩：1只
Clothes hook:1pcs

6、拉手：1对
Door knob：1pair

7、厕纸架：可选
Paper holder：if necessary



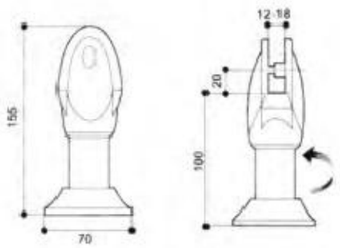

N-009



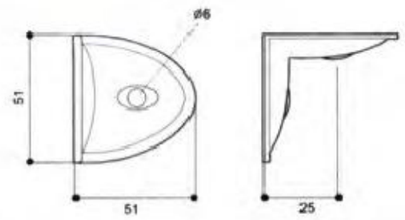

N-053



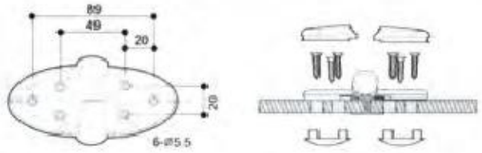

N-052



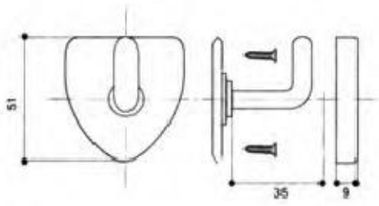

N-055



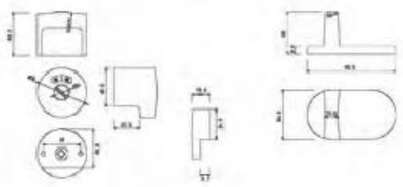

N-084



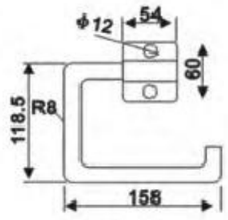

N-007

Cubicle Partition Projects Of
Toilet，Fitting Room，Dressing Room
卫生间、试衣间、更衣室隔断方案

XDF-012
Nylon series
尼龙系列



PICTURE OF PRODUCTS

每套标准包装：
STANDARD PACKING LIST
Model:XDF-012

1、可调脚座：2只
Adjustable support leg：2pcs

2、合页：2个
Hinge：2pcs

3、角码：12只
Coner fastener：12pcs

4、门锁：1把
Door lock:1pcs

5、衣帽钩：1只
Clothes hook:1pcs

6、拉手：1对
Door knob：1pair

7、厕纸架：可选
Paper holder：if necessary



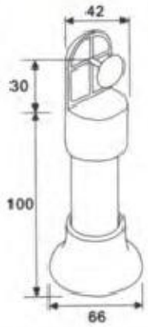

N-041



N-042

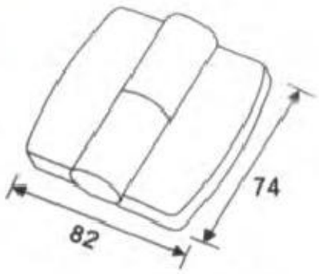



N-044

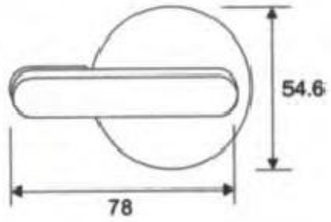



N-043

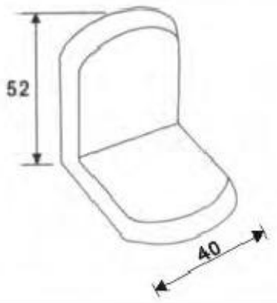



N-045

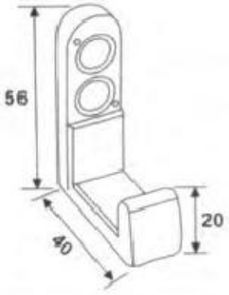



N-046



Cubicle Partition Projects Of
Toilet，Fitting Room，Dressing Room
卫生间、试衣间、更衣室隔断方案

XDF-017
Nylon series
尼龙系列



每套标准包装：
STANDARD PACKING LIST
Model:XDF-017

1、可调脚座：2只
Adjustable support leg：2pcs

2、合页：2个
Hinge：2pcs

3、角码：12只
Coner fastener：12pcs

4、门锁：1把
Door lock:1pcs

5、衣帽钩：1只
Clothes hook:1pcs

6、拉手：1对
Door knob：1pair

7、厕纸架：可选
Paper holder：if necessary



N-008

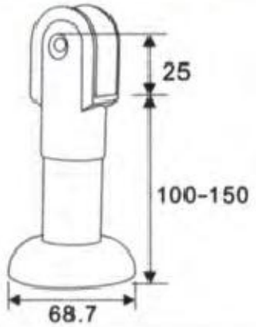



N-302平门(flat)



N-302叠门(folding)

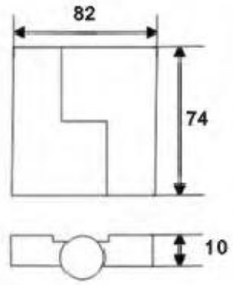



N-306

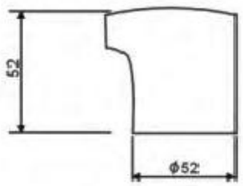



N-015

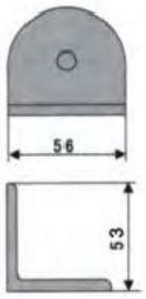



N-304平门(flat)



N-304叠门(folding)

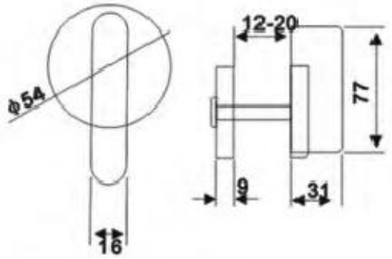



N-005

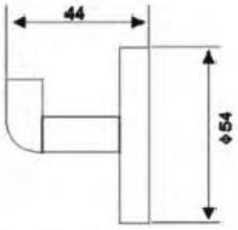

Cubicle Partition Projects Of
Toilet，Fitting Room，Dressing Room
卫生间、试衣间、更衣室隔断方案

XDF-002
Stainless steel series
不锈钢系列



PICTURE OF PRODUCTS

每套标准包装：
STANDARD PACKING LIST
Model:XDF-002

1、可调脚座：2只
Adjustable support leg：2pcs

2、合页：2个
Hinge：2pcs

3、角码：12只
Coner fastener：12pcs

4、门锁：1把
Door lock:1pcs

5、衣帽钩：1只
Clothes hook:1pcs

6、拉手：1对
Door knob：1pair

7、厕纸架：可选
Paper holder：if necessary



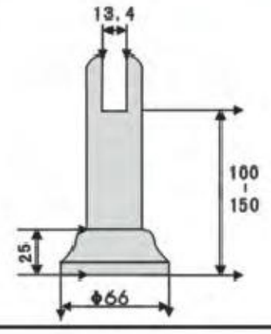

T-001



T-003

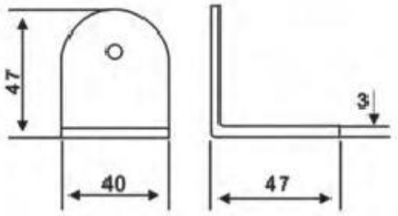



T-002

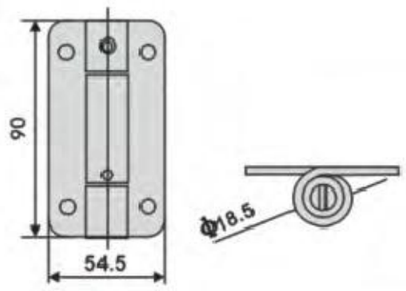



T-006

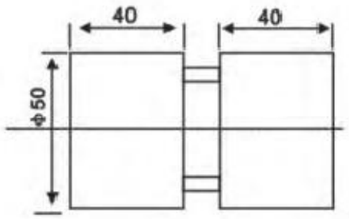



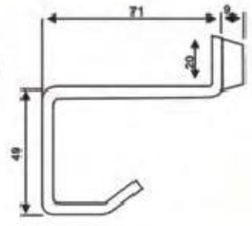

T-005



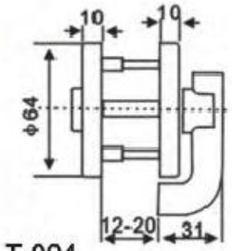

T-004



T-007

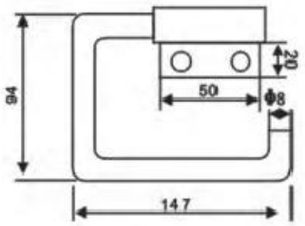

PICTURE OF PRODUCTS



Cubicle Partition Projects Of
Toilet，Fitting Room，Dressing Room
卫生间、试衣间、更衣室隔断方案

XDF-005
Stainless steel
#304 series
不锈钢系列

每套标准包装：
STANDARD PACKING LIST
Model:XDF-005

1、可调脚座：2只
Adjustable support leg：2pcs

2、合页：2个
Hinge：2pcs

3、角码：12只
Coner fastener：12pcs

4、门锁：1把
Door lock:1pcs

5、衣帽钩：1只
Clothes hook:1pcs

6、拉手：1对
Door knob：1pair

7、厕纸架：可选
Paper holder：if necessary



E-901

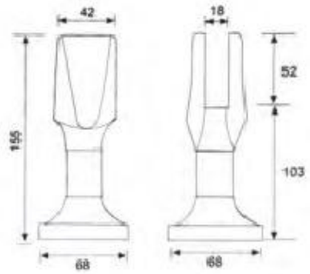



E-055

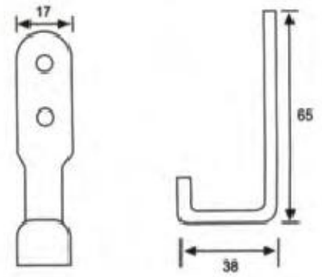



E-052

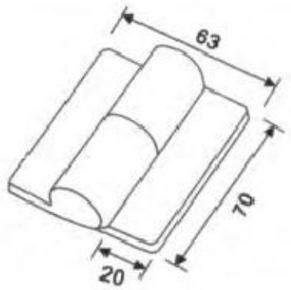



E-053

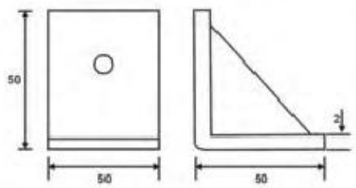



E-010

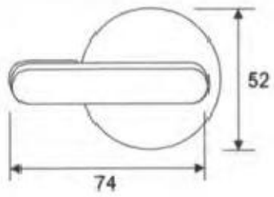



E-106

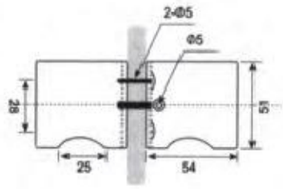

Cubicle Partition Projects Of
Toilet，Fitting Room，Dressing Room
卫生间、试衣间、更衣室隔断方案

XDF-009
Stainless steel #304 series
不锈钢系列





每套标准包装：
STANDARD PACKING LIST
Model:XDF-009

1、可调脚座：2只
Adjustable support leg：2pcs

2、合页：2个
Hinge：2pcs

3、角码：12只
Coner fastener：12pcs

4、门锁：1把
Door lock:1pcs

5、衣帽钩：1只
Clothes hook:1pcs

6、拉手：1对
Door knob：1pair

7、厕纸架：可选
Paper holder：if necessary



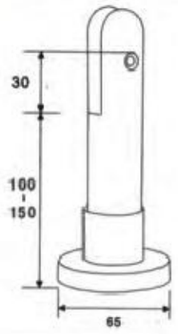

E-091



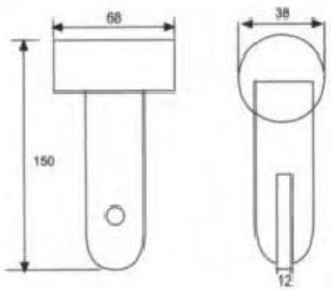

E-098



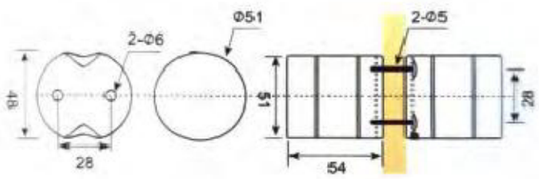

E-046



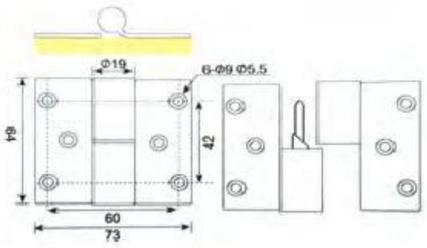

E-132



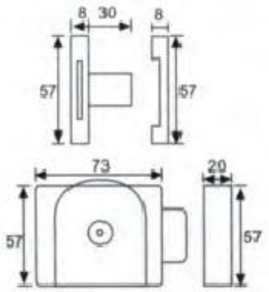

E-094





E-123

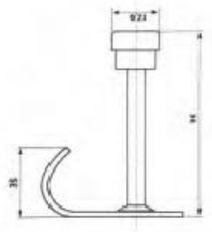

E-016

Cubicle Partition Projects Of
Toilet，Fitting Room，Dressing Room
卫生间、试衣间、更衣室隔断方案

XDF-010
Stainless steel #304 series
不锈钢系列



每套标准包装：
STANDARD PACKING LIST
Model:XDF-010

1、可调脚座：2只
Adjustable support leg：2pcs

2、合页：2个
Hinge：2pcs

3、角码：12只
Coner fastener：12pcs

4、门锁：1把
Door lock:1pcs

5、衣帽钩：1只
Clothes hook:1pcs

6、拉手：1对
Door knob：1pair

7、厕纸架：可选
Paper holder：if necessary



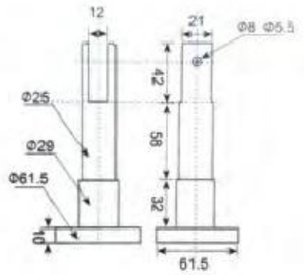

E-031





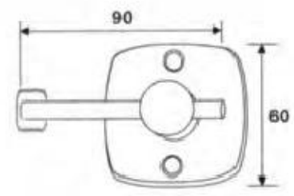

E-034



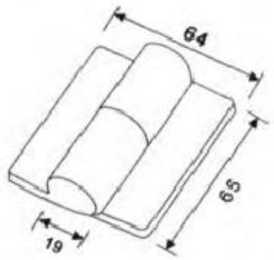

E-032



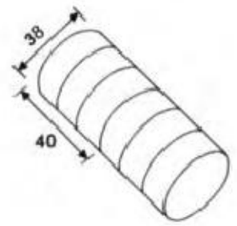

E-036



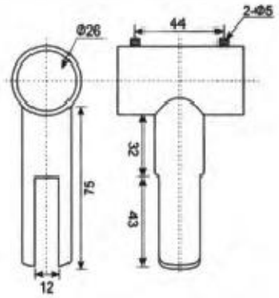

E-038





E-009





E-035

Cubicle Partition Projects Of
Toilet，Fitting Room，Dressing Room
卫生间、试衣间、更衣室隔断方案

XDF-011
Stainless steel #304 series
不锈钢系列



每套标准包装：
STANDARD PACKING LIST
Model:XDF-011

1、可调脚座：2只
Adjustable support leg：2pcs

2、合页：2个
Hinge：2pcs

3、角码：12只
Coner fastener：12pcs

4、门锁：1把
Door lock:1pcs

5、衣帽钩：1只
Clothes hook:1pcs

6、拉手：1对
Door knob：1pair

7、厕纸架：可选
Paper holder：if necessary



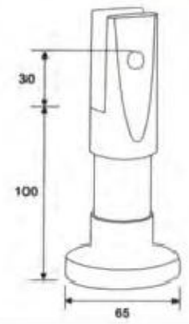

E-041



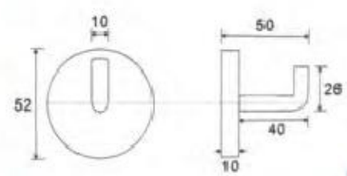

E-155



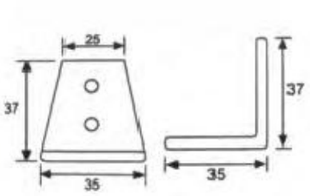

E-133



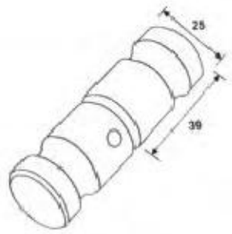

E-066



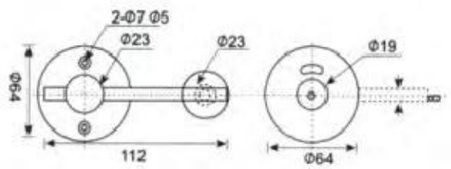

E-044



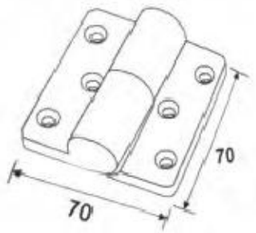

E-042



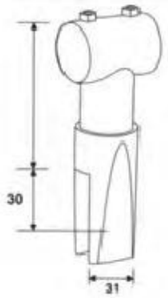

E-048

Cubicle Partition Projects Of
Toilet，Fitting Room，Dressing Room
卫生间、试衣间、更衣室隔断方案

XDF-015
Stainless steel
#304 series
不锈钢系列

PICTURE OF PRODUCTS

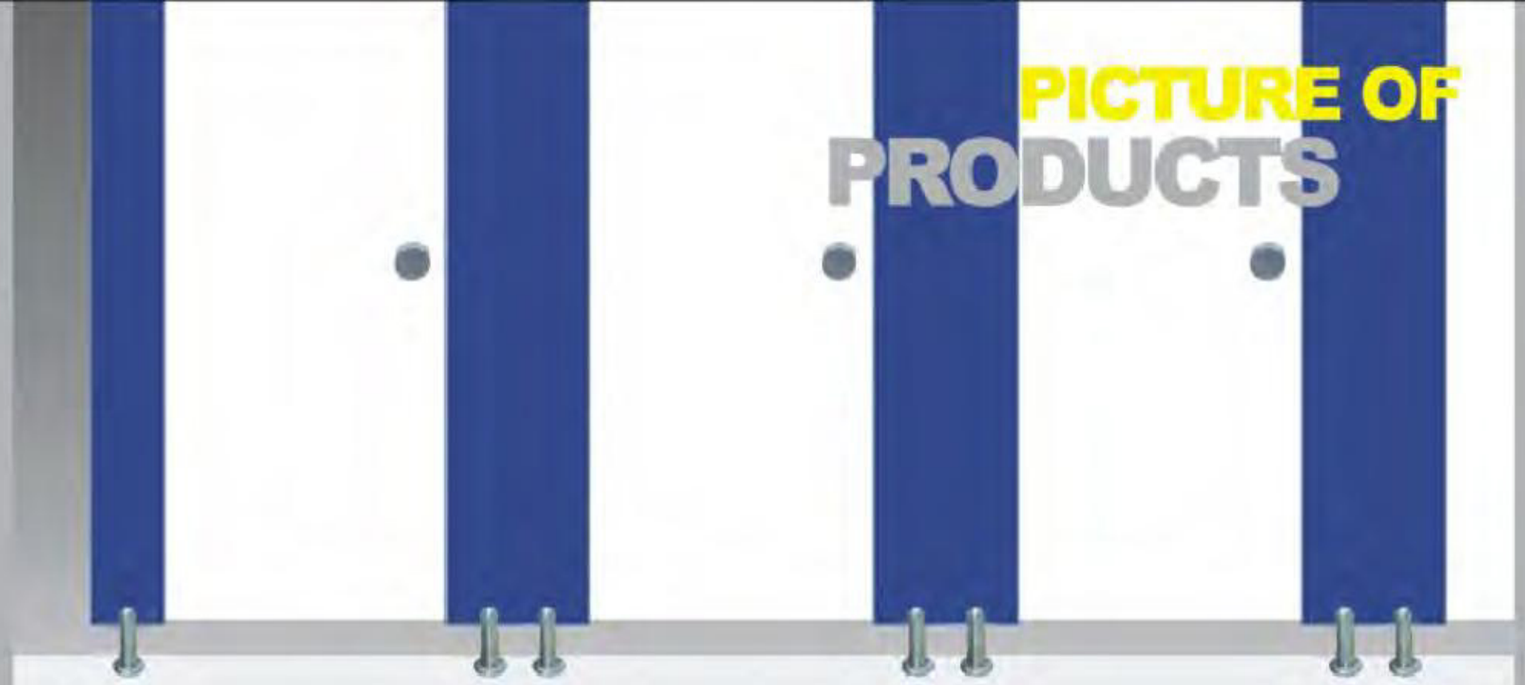

每套标准包装：
STANDARD PACKING LIST
Model:XDF-015

1、可调脚座：2只
Adjustable support leg：2pcs

2、合页：2个
Hinge：2pcs

3、角码：12只
Coner fastener：12pcs

4、门锁：1把
Door lock:1pcs

5、衣帽钩：1只
Clothes hook:1pcs

6、拉手：1对
Door knob：1pair

7、厕纸架：可选
Paper holder：if necessary



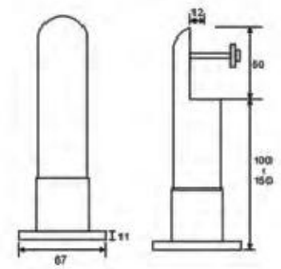

E-131



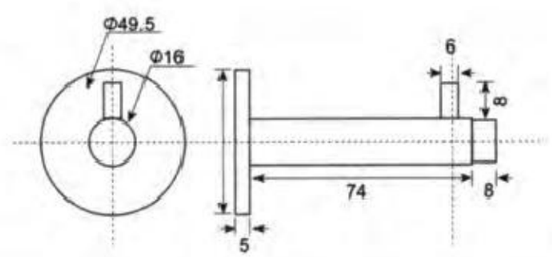

E-135



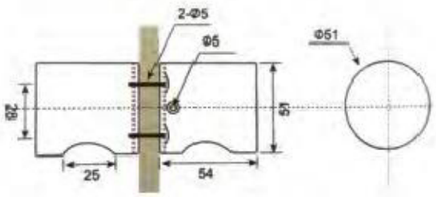

E-056



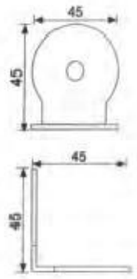

E-143



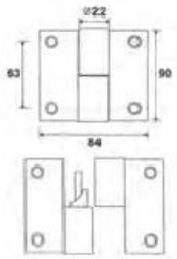

E-292



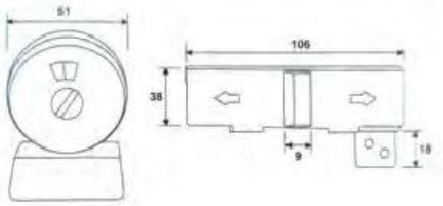

E-994

Cubicle Partition Projects Of
Toilet，Fitting Room，Dressing Room
卫生间、试衣间、更衣室隔断方案

XDF-006 Aluminum alloy series
铝合金系列



每套标准包装：
STANDARD PACKING LIST
Model:XDF-006

1、可调脚座：2只
Adjustable support leg：2pcs

2、合页：2个
Hinge：2pcs

3、角码：12只
Coner fastener：12pcs

4、门锁：1把
Door lock:1pcs

5、衣帽钩：1只
Clothes hook:1pcs

6、拉手：1对
Door knob：1pair

7、厕纸架：可选
Paper holder：if necessary



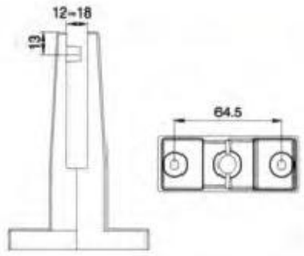

E-061



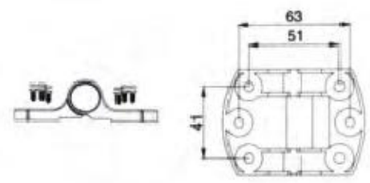

E-062



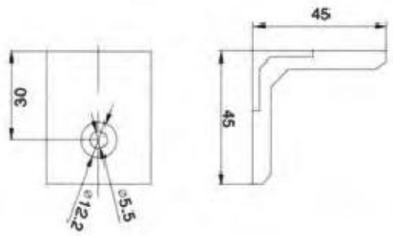

E-063



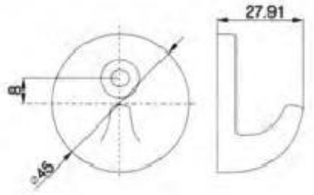

E-065





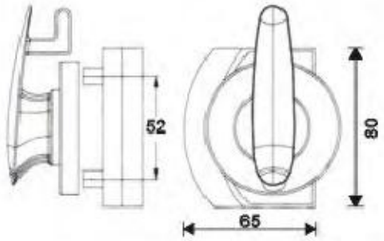

E-064

Cubicle Partition Projects Of
Toilet，Fitting Room，Dressing Room
卫生间、试衣间、更衣室隔断方案

XDF-003
Zinc alloy series
锌合金系列



PICTURE OF PRODUCTS

每套标准包装：
STANDARD PACKING LIST
Model:XDF-003

1、可调脚座：2只
Adjustable support leg：2pcs

2、合页：2个
Hinge：2pcs

3、角码：12只
Coner fastener：12pcs

4、门锁：1把
Door lock:1pcs

5、衣帽钩：1只
Clothes hook:1pcs

6、拉手：1对
Door knob：1pair

7、厕纸架：可选
Paper holder：if necessary



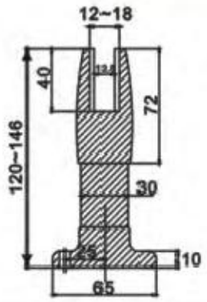

Z-001





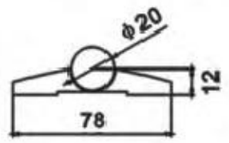

Z-002





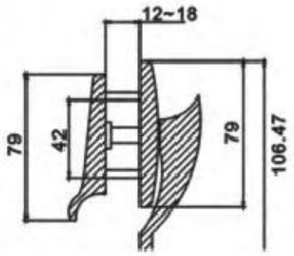

Z-004



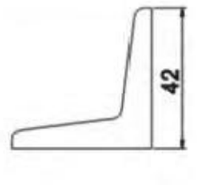

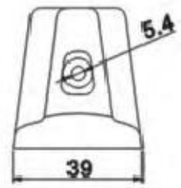

Z-003



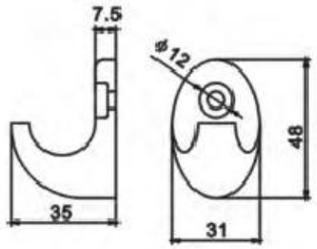

Z-005



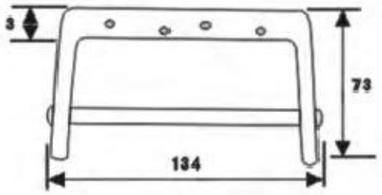

Z-007

Cubicle Partition Projects Of
Toilet，Fitting Room，Dressing Room
卫生间、试衣间、更衣室隔断方案

XDF-007
Zinc alloy series
锌合金系列



每套标准包装：
STANDARD PACKING LIST
Model:XDF-007

1、可调脚座：2只
Adjustable support leg：2pcs

2、合页：2个
Hinge：2pcs

3、角码：12只
Coner fastener：12pcs

4、门锁：1把
Door lock:1pcs

5、衣帽钩：1只
Clothes hook:1pcs

6、拉手：1对
Door knob：1pair

7、厕纸架：可选
Paper holder：if necessary



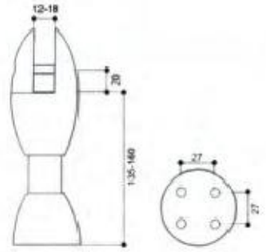

E-071



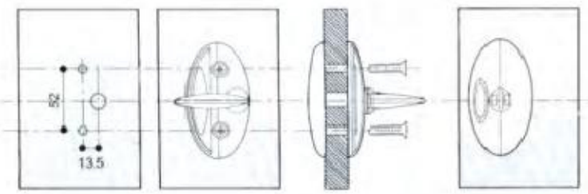

E-074



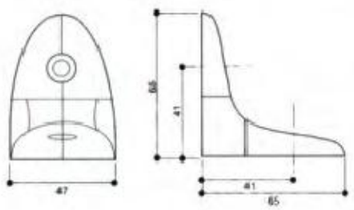

E-073



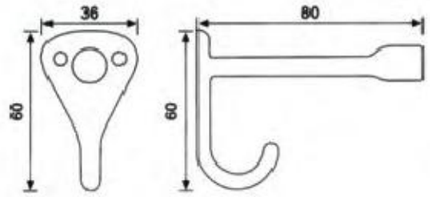

E-075



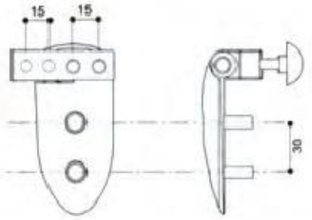

E-072



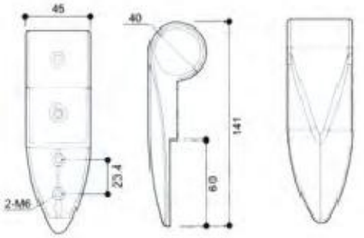

E-078

Cubicle Partition Projects Of
Toilet，Fitting Room，Dressing Room
卫生间、试衣间、更衣室隔断方案

XDF-008
Zinc alloy series
锌合金系列



PICTURE OF PRODUCTS

每套标准包装：
STANDARD PACKING LIST
Model:XDF-008

1、可调脚座：2只
Adjustable support leg：2pcs

2、合页：2个
Hinge：2pcs

3、角码：12只
Coner fastener：12pcs

4、门锁：1把
Door lock:1pcs

5、衣帽钩：1只
Clothes hook:1pcs

6、拉手：1对
Door knob：1pair

7、厕纸架：可选
Paper holder：if necessary



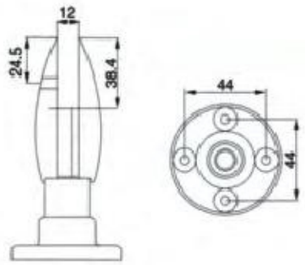

E-081



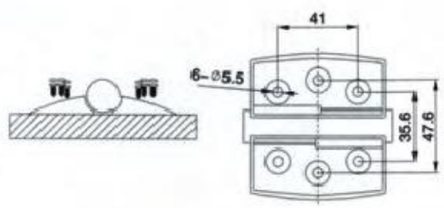

E-082



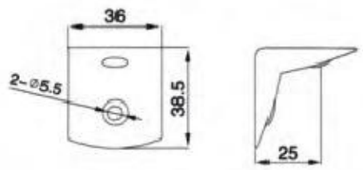

E-083



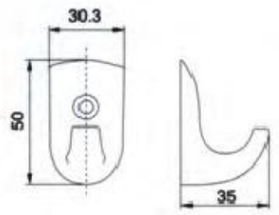

E-085



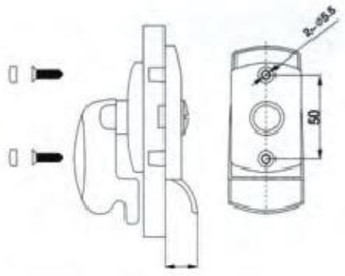

E-084

Cubicle Partition Projects Of
Toilet，Fitting Room，Dressing Room
卫生间、试衣间、更衣室隔断方案

PICTURE OF PRODUCTS

XDF-016
Zinc alloy series
锌合金系列



每套标准包装：
STANDARD PACKING LIST
Model:XDF-016

1、可调脚座：2只
Adjustable support leg：2pcs

2、合页：2个
Hinge：2pcs

3、角码：12只
Coner fastener：12pcs

4、门锁：1把
Door lock:1pcs

5、衣帽钩：1只
Clothes hook:1pcs

6、拉手：1对
Door knob：1pair

7、厕纸架：可选
Paper holder：if necessary



E-001

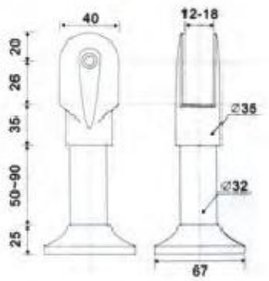

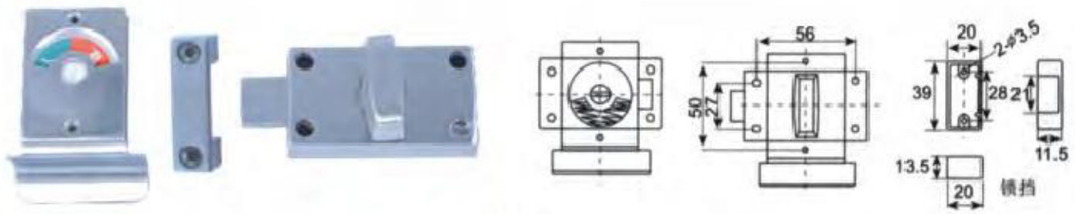

E-011B



E-145





E-426

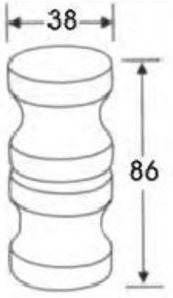



E-009

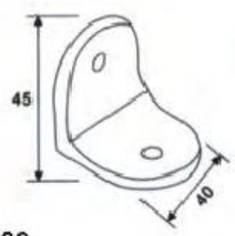



E-005

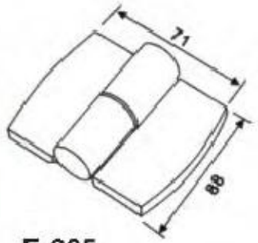



E-108

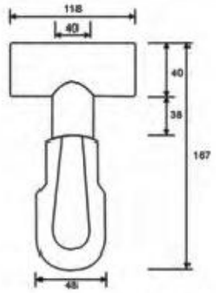

Cubicle Partition Projects Of
Toilet，Fitting Room，Dressing Room
卫生间、试衣间、更衣室隔断方案

XDF-020
Stainless steel
#304 series
不锈钢系列



XDF-021
Stainless steel
#304 series
不锈钢系列


E-291


E-423


E-205


E-721



E-010B


E-872


E-506


E-862


E-165


E-484


E-218


E-976


E-433

Cubicle Partition Projects Of
Toilet，Fitting Room，Dressing Room
卫生间、试衣间、更衣室隔断方案



PICTURE OF PRODUCTS

XDF-022
Stainless steel
#304 series
不锈钢系列

XDF-023
Stainless steel
#304 series
不锈钢系列



E-391



E-664



E-201



E-503



E-762



E-016



E-606



E-242



E-156



E-423



E-318



N-054SS



E-208

Cubicle Partition Projects Of
Toilet，Fitting Room，Dressing Room
卫生间、试衣间、更衣室隔断方案

XDF-024
Stainless steel #304 series
不锈钢系列



每套标准包装：
STANDARD PACKING LIST
Model:XDF-017

1、可调脚座：2只
Adjustable support leg：2pcs

2、合页：2个
Hinge：2pcs

3、角码：12只
Coner fastener：12pcs

4、门锁：1把
Door lock:1pcs

5、衣帽钩：1只
Clothes hook:1pcs

6、拉手：1对
Door knob：1pair

7、厕纸架：可选
Paper holder：if necessary


T-001


T-002


E-010


E-862


E-175


E-058


E-059


E-976


T-003


E-070


E-080

Cubicle Partition Projects Of
Toilet，Fitting Room，Dressing Room
卫生间、试衣间、更衣室隔断方案

XDF-026
Stainless steel
#304 series
不锈钢系列



PICTURE OF PRODUCTS

XDF-025
Aluminum
alloy series
铝合金系列



E-004



E-175



E-771



E-775



E-392



E-513



E-774



E-773



T-004B



E-426



E-772

Cubicle Partition Projects Of
Toilet，Fitting Room，Dressing Room
卫生间、试衣间、更衣室隔断方案

XDF-018
Zinc alloy series
锌合金系列



PICTURE OF PRODUCTS

XDF-019
Zinc alloy series
锌合金系列



Z-101



Z-104



Z-201



Z-204



Z-102



Z-105



Z-202



Z-205



Z-103



Z-106



Z-203



E-206


E-501


T-001


E-041


E-721


E-861


E-061


E-002


E-031


E-091


Z-001


E-191


E-391


E-131


E-201


E-004


E-051


E-771


E-611


E-431


E-231


E-071


E-221


E-211


E-171


E-001


E-031B


E-291


E-901


E-801


E-421


Z-201


Z-101


E-003


N-011


N-009


N-001



N-008



N-071



N-041



N-010



E-181



E-081

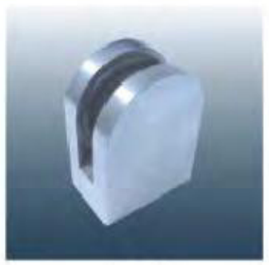

E-161



E-111

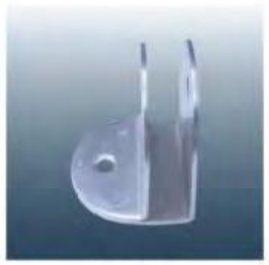

E-101

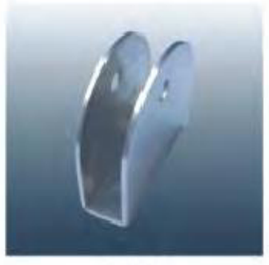

E-151



E-141



E-411



E-241

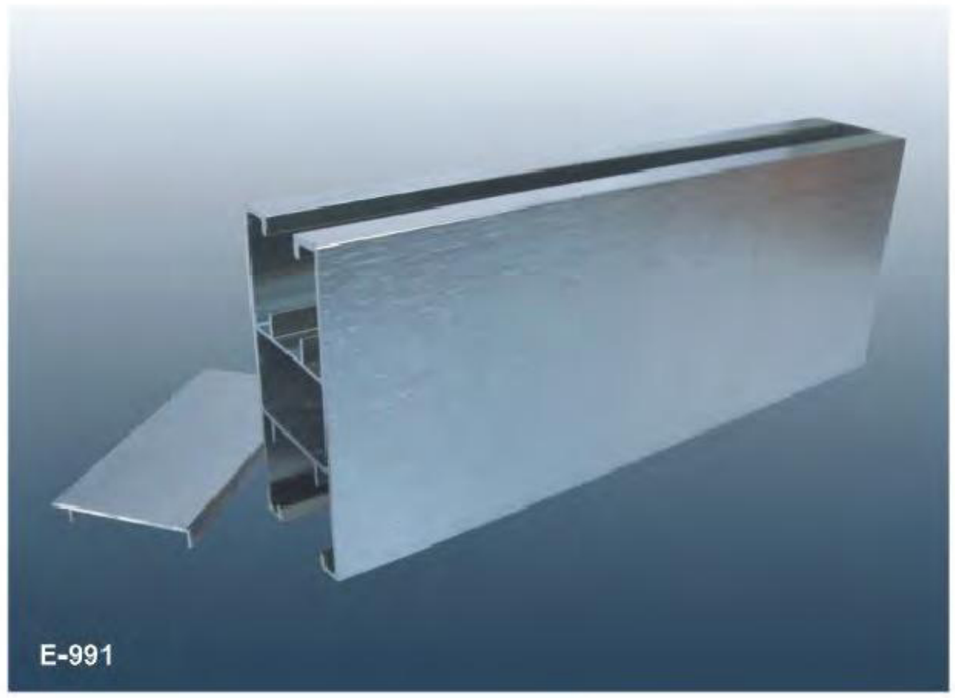

E-991


T-002


E-862


E-042


E-005


E-792叠门(folding)


E-792平门(flat)


Z-002


E-172


E-732

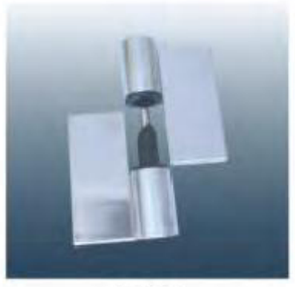
E-032


E-006


E-742


E-242


E-392


E-762


E-782


E-262


E-752


E-872


E-292叠门(folding)


E-292平门(flat)


E-092


E-132


E-722(black)

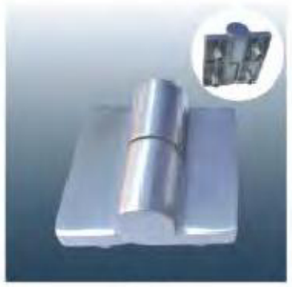
E-052


E-272


E-222


E-772


E-072


E-192


E-892


E-802


E-312


E-008


E-007


E-102


E-722（silver）


E-252


E-062

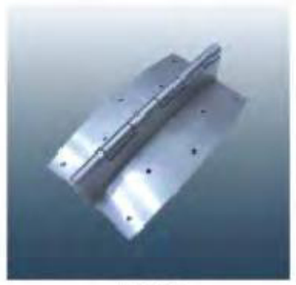
E-282


E-112


E-122


E-082


E-162A


E-162B


E-142


E-182


E-202

合页系列 Hinge Series



Z-102

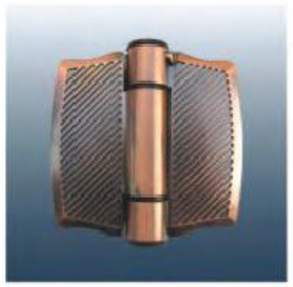

Z-202

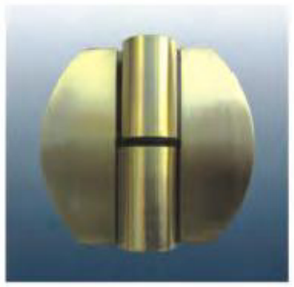

E-232

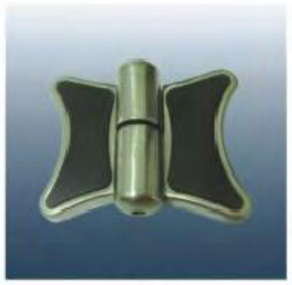

E-302



N-052



N-002



N-012



E-192



N-832

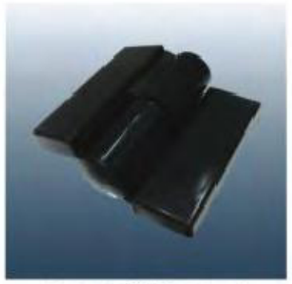

N-302叠门(folding)



N-302平门(flat)



N-042

卫生间隔断系统 Toilet Partition System


T-003


Z-003


E-043


E-009


E-433


E-423


E-093


E-773


E-503


E-513


E-143

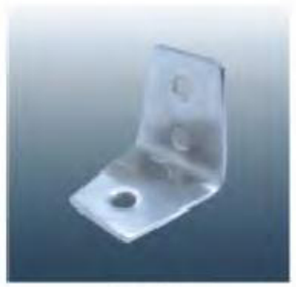
E-133


E-153


E-053


P-613


E-073


E-083

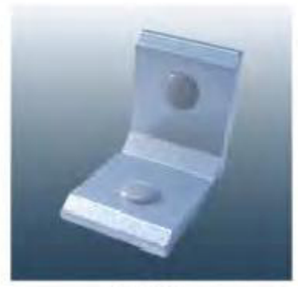
E-063


E-113


E-103


E-163


E-123


Z-203


Z-103


N-014


N-073


N-053


N-003


N-063


N-015


N-043


N-054


N-404


N-074


N-016


N-017


N-084


N-304叠门(folding)


N-304平门(flat)

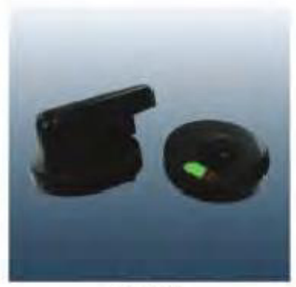
N-094


N-004


T-004


T-004B


E-010


E-174


N-054SS


Z-004


E-094


E-011B

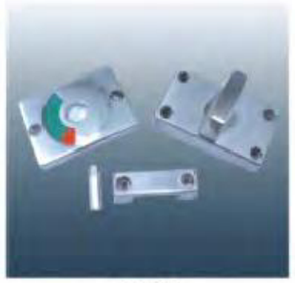
E-011


E-474


E-154


E-010B


E-434


E-464


E-664


E-484


E-054


E-414


E-494

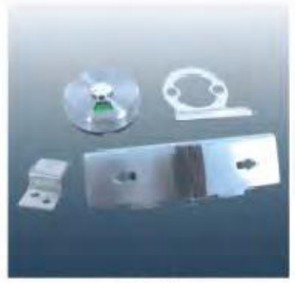
E-994


E-454


E-164

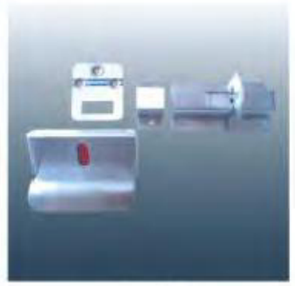
E-144


Z-054


E-012A


E-012B


E-784


E-774


Z-204


Z-104


E-044


E-034


E-064


E-504


E-654



E-214


E-084


E-424


E-134



E-634


E-664

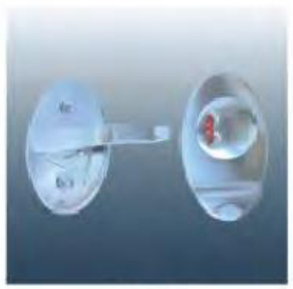
E-184


E-194


E-074


E-108


E-098


E-048


E-058


E-218


E-038


E-628


E-318


E-548


E-068


E-078


E-208


N-068


N-058


N-108


N-078




N-021(big)


N-020(middle)


N-005(small)


E-016


E-135


E-175


E-185


E-145


E-095


T-005


E-055


E-165


E-045


E-775


E-065


E-205


E-155


Z-005


E-305

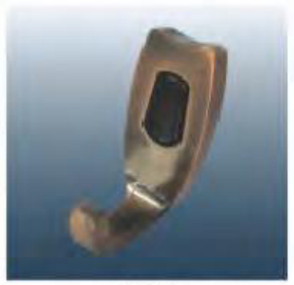
Z-205


E-195


E-085


E-035


E-075


Z-105


N-065


N-055


E-059


E-089


E-079


E-049


N-059


N-069


N-079

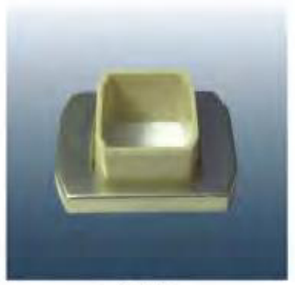
N-049


E-070


E-080

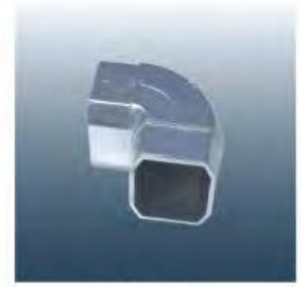
N-060


E-040


E-050


E-060


N-040


N-050


N-430


N-440


T-006


E-096


E-066


E-056

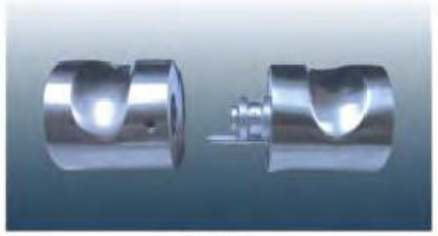
E-106

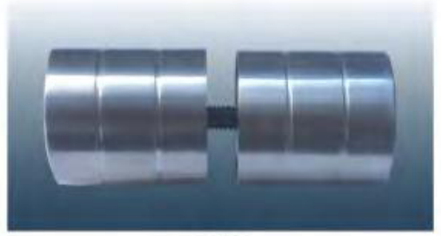
E-036

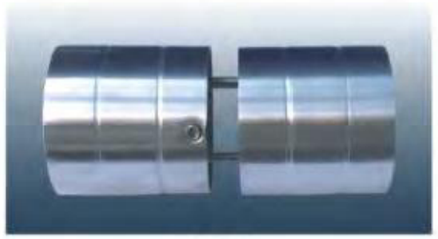
E-046

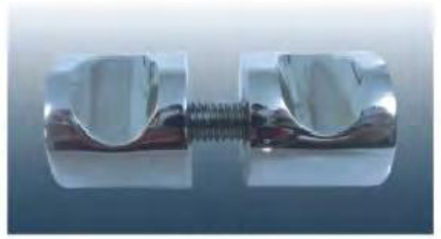
E-013


E-015


E-976


E-014

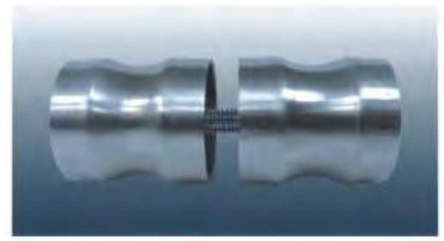
E-426

E-416

DK-01


E-506


E-606

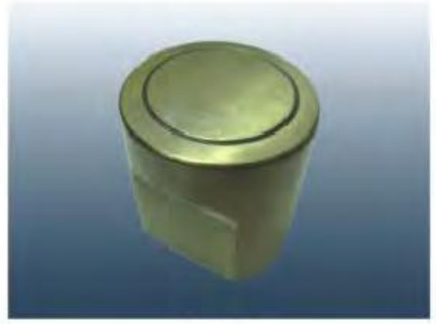
Z-106


E-206

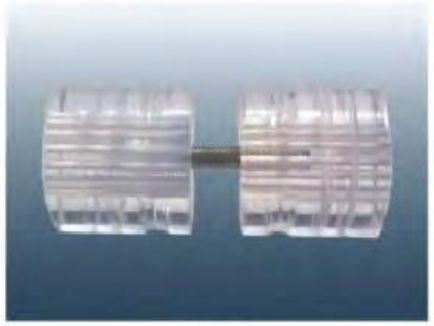

N-066

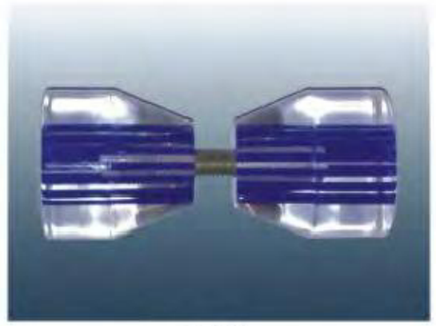

N-076

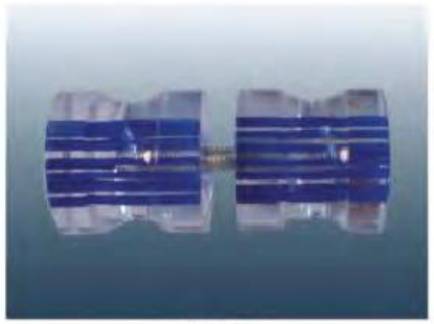

N-086

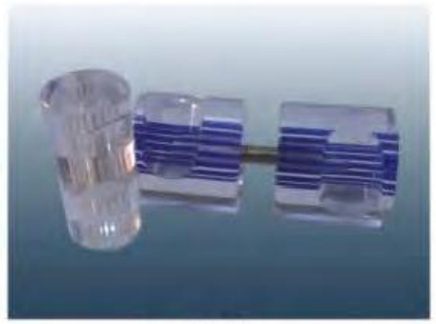

N-056



N-306



N-006



N-046



T-007



N-007

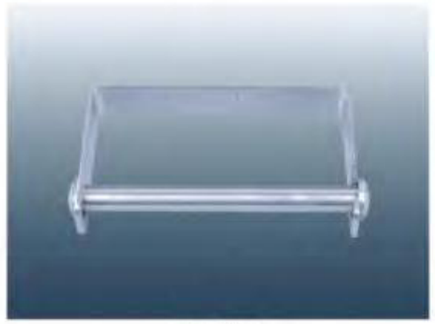

Z-007



P-014

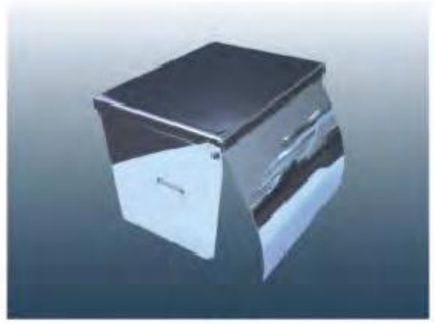

P-018



E-907



P-012
paper holder



P-013
paper holder

Cubicle Partition Projects Of
Toilet，Fitting Room，Dressing Room
卫生间、试衣间、更衣室隔断方案

▼ Horizontal view(平视图)

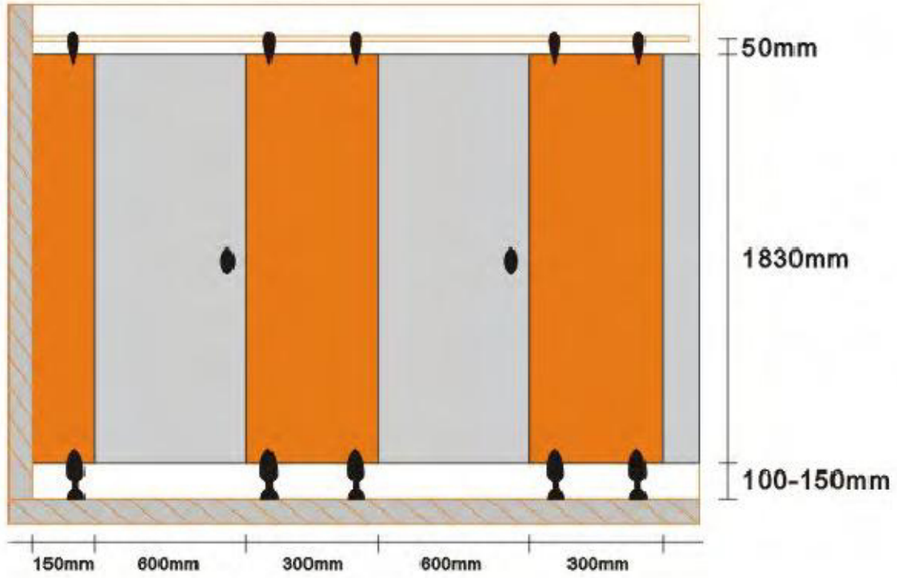

▼ Vertical view(俯视图)

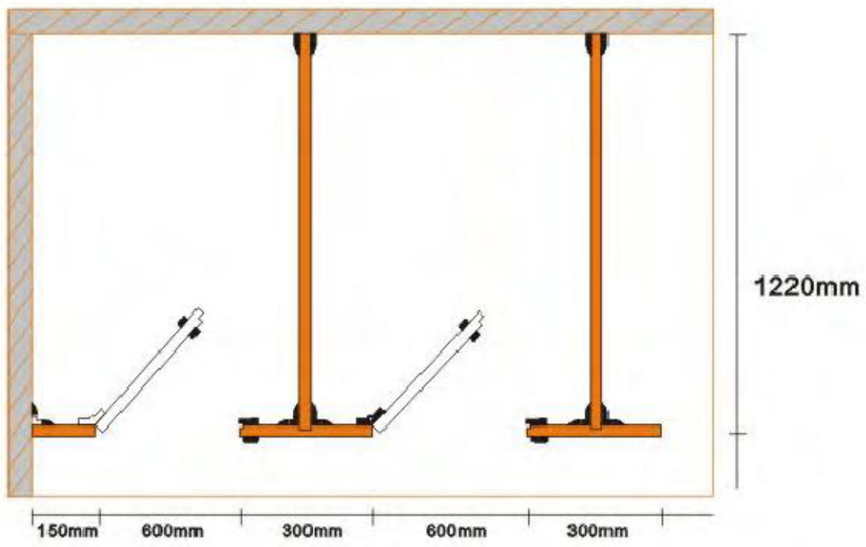

▼ Prototype(效果图)

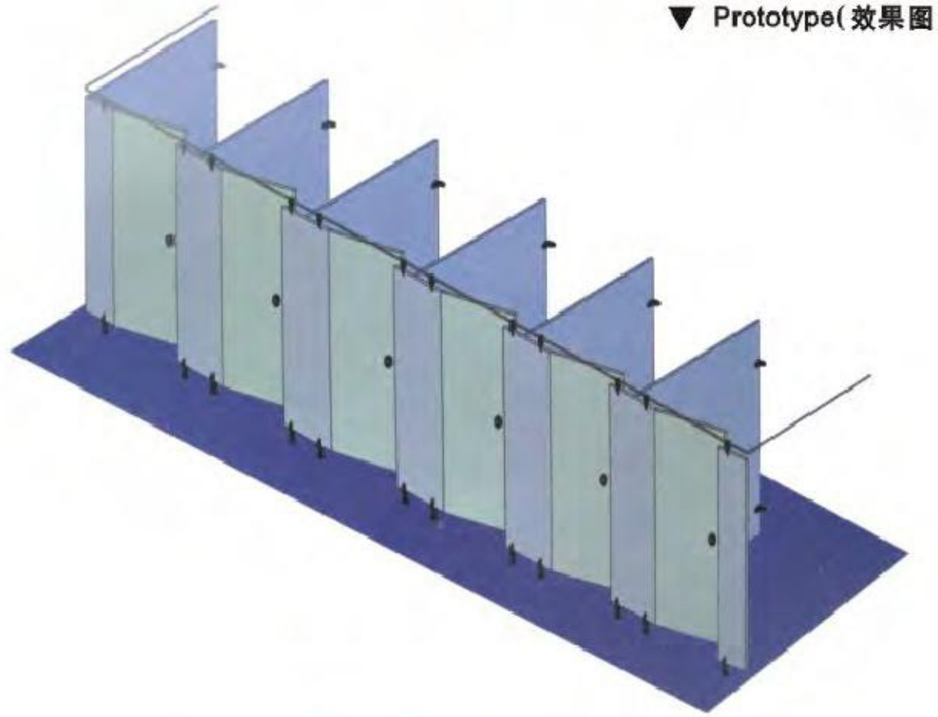



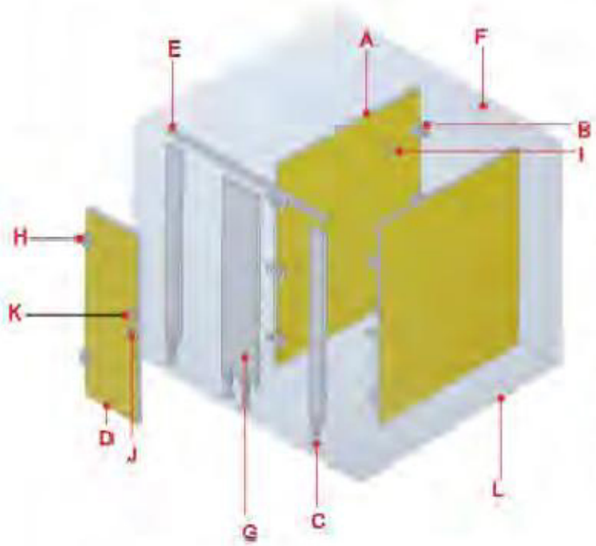

Graphical representation
图形表示

Components in detail
隔断组成图解

A Divisional panel 中隔板（P板）
B Corner fastener 固定角码3个
C Adjustable leg 支撑脚
D Door 门（D板）
E Aluminum bar 压杆
F Wall 墙
G Front board 前挡板（T板）
H Hinge 合页
I Coat hook 衣钩
J Lock 指示锁
K Knob 拉手
L Floor 地面

▼ 开门方向与合页左右区分
How to choose the hinge for different directions of door opening

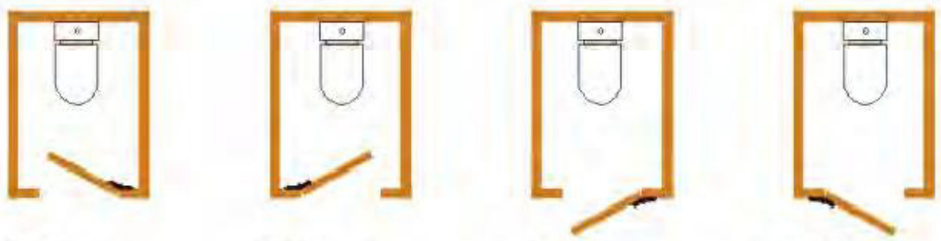

右内开
使用合页左（L）
Open from Inside:
use Left(L)

左内开
使用合页右（R）
Open from Inside:
use Right(R)

右外开
使用合页右（R）
Open from Outside:
use Right(R)

左外开
使用合页左（L）
Open from Outside:
use Left(L)

A



B

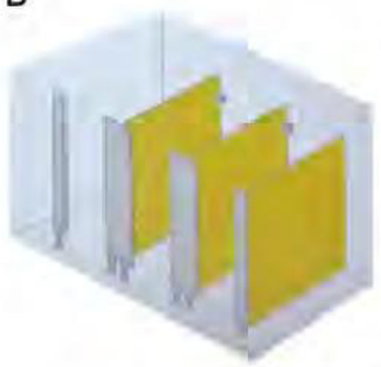

C

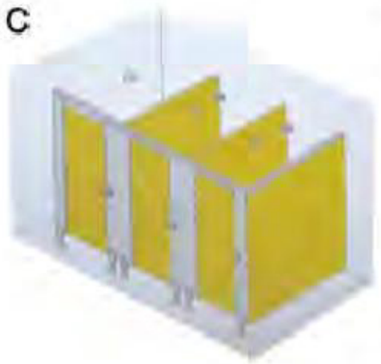

Installation steps
安装步骤

1、固定支撑脚：
校好预留门扇与门缝的水平尺寸定位，再固定支撑脚座上钻孔，上胶塞上螺丝，将支撑脚全部固定在相应位置。
2、墙体固定角码：
在墙体上制出角码的中心线（一般在两厕位中心位置）定好三点后用电钻钻孔、预埋胶塞再将角码固定在墙上。
3、固定T板（前挡板）和P板（中隔板）：
根据支撑脚与角码的对应位置，在T板上划出相应与P板的连接位置装上角码，再将T板和P板连接成“⊥”字型。
4、初步成型卫生间：
将T板和P板连接成的“⊥”字型骨架在原先装好的支撑脚和角码的相应位置上螺丝，卫生间初具模型。
5、上横拉杆：
在T板上扣上拉杆，调好每个门缝预留尺寸，用螺丝逐个固定。
6、上门扇：
先将合页的顶座（不带盖）上在门扇上，靠上门扇，留好双边门缝再将合页支座（合页下部分）靠在相应位置上好螺丝，调整好合页芯归位角度使门扇开闭自如。
7、指示锁、拉手：
依不同锁种的孔距在门扇或T板上定位划线、钻孔，调好有、无人指示上好螺丝。
8、装上衣帽钩，盖上所示螺丝盖、合页盖，再做一次全面检查；卫生间安装完毕。

1、Fix adjustable leg
Adjust the horizontal size between the door leaf and door frame,then bore holes in the panel, fix the adjustable leg in the appropriate location with screws.
2、Fix corner fastener
Draw a center line on the wall (generally in the center of two toilet seats) then use a drill to bore holes, put plastic plug into the holes, finally fix the corner fasteners on the wall.
3、Fix front board and middle board
According to the corresponding position of support leg and corner fastener, install the corner fasteners on the connect position of front board and middle board, then connect the front board and middle board as T shape
4、Initial toilet partition
Fix the T shape frame on the corresponding position of support leg and corner fastener with screws, the initial toilet partition is formed.
5、Fix the bar
Fix the bar on the front board, adjust each door on proper size, then fix with screws one by one.
6、Install door
First, fix the hinge(no cover) on the door, keep a suitable door gap, then fix the hinge(supporting part of the hinge) with screws, adjust the hinge to let the door open and close freely.
7、Indicator lock, knob
Line and drill on the door or T panel according to the hole distance of different locks ,adjust and install it with screws if that is ok .
8、Fix coat hook, cover the screw cover and hinge cover, check it again if all are successful, then installation is finished.

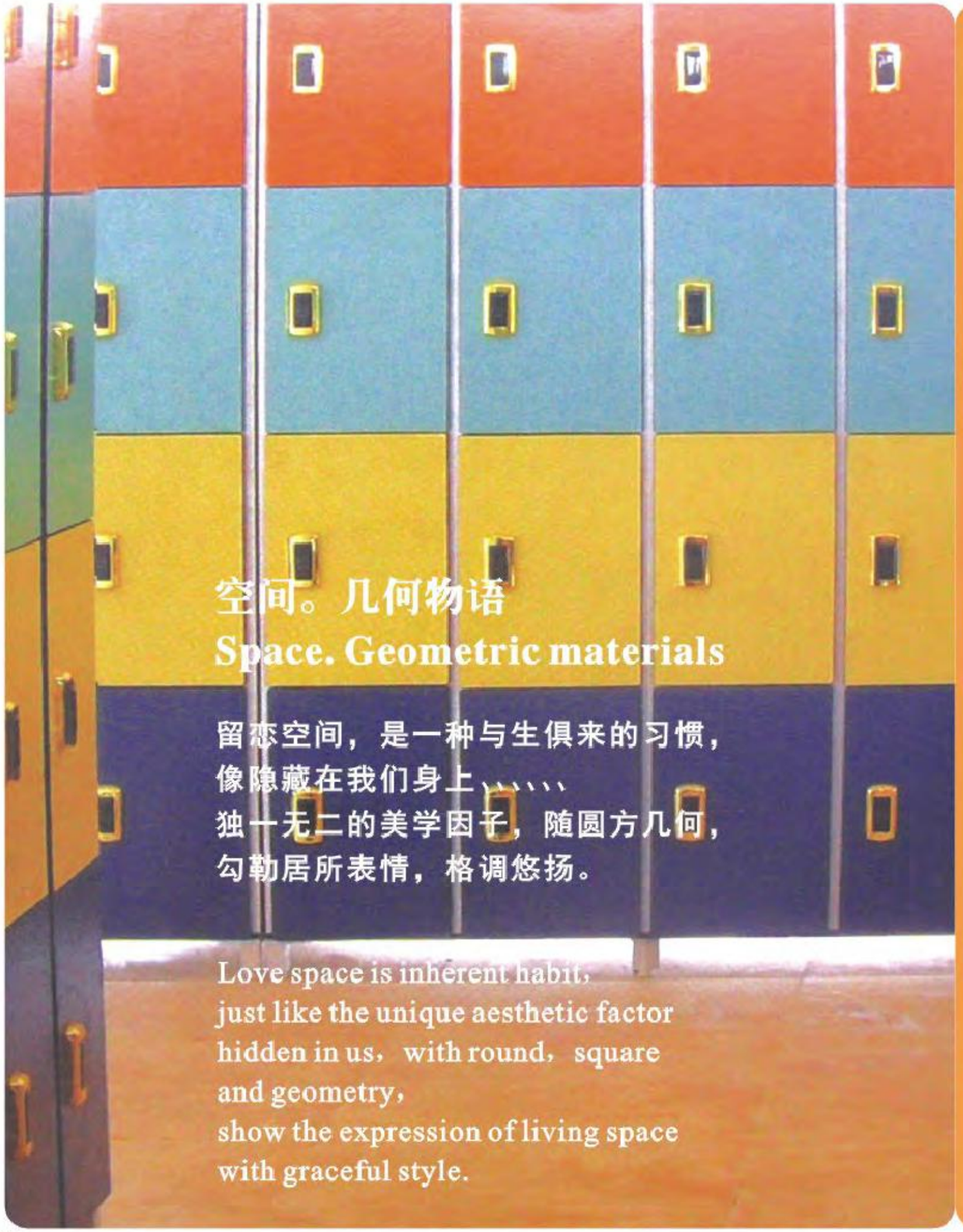

空间。几何物语
Space. Geometric materials

留恋空间，是一种与生俱来的习惯，
像隐藏在我们身上……
独一无二的美学因子，随圆方几何，
勾勒居所表情，格调悠扬。

Love space is inherent habit,
just like the unique aesthetic factor
hidden in us, with round, square
and geometry,
show the expression of living space
with graceful style.

C

储物柜系统
Lockers System


E-102


E-112


E-122


E-182


E-504


E-654


E-214


E-634


E-664


E-931


E-941


E-674


A-033


A-032


E-163

Installation（安装示意图）

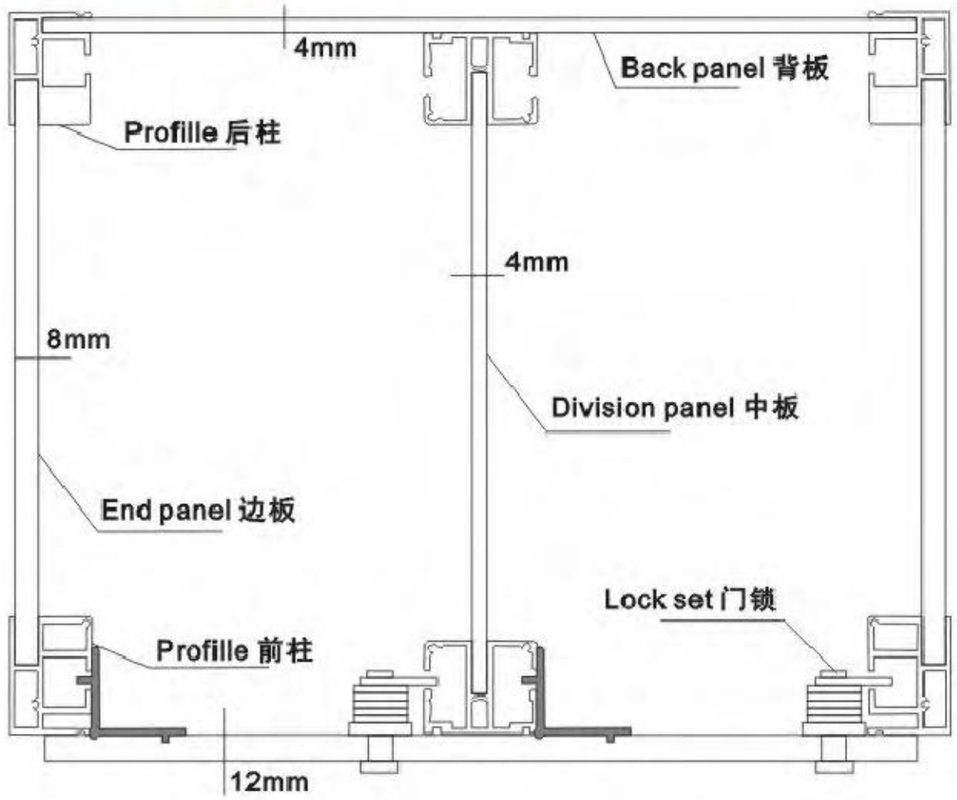













双门组合 2Tiers per column

柜内空间宽阔，适合俱乐部、体育场等需要放较大型物品之场合使用。
2 Tiers per column are spacious，suitable for club, stadium and other occasions that requiring larger storage spaces.

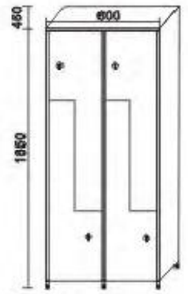

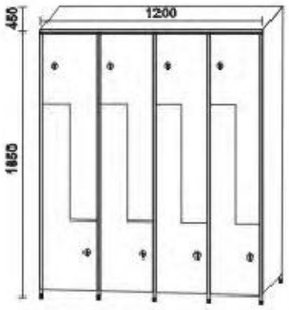

Z型双门组合 Z-shape

提供可挂衣的空间，适合俱乐部、体育场等需悬挂衣服的场合使用。
Offer the space for clothes hanging,which are ideal for athletic clubs,gyms,and other locations that need to hang clothes.

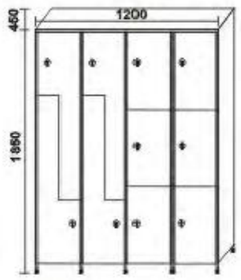

Z型双门与三门组合
Z-shape and 3 Tiers per column

提供可挂衣的空间，适合俱乐部、体育场等需悬挂衣服的场合使用。
Offer the space for clothes hanging,which are ideal for athletic clubs,gyms,and other locations that need to hang clothes.

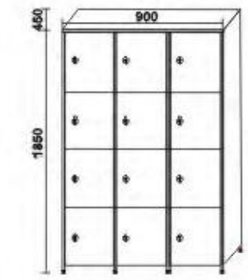

四门组合 4Tiers per column

适合放置固定制式尺寸的物品，如书包、皮包等中型物品，以学校、购物中心、车站场所使用。
4 Tiers per column are suitable for schools,shopping malls,train stations,etc.Where need to place the fixed standard size items such as school bags,purses,etc.



六门组合 6Tiers per column

以存放小型物品之特定场所使用，例如溜冰场、保龄球场之寄物柜。
6 Tiers per column are ideal for locations requiring small storage space,such as skating rinks,bowling alleys,etc.

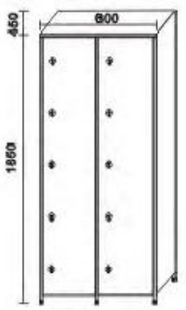

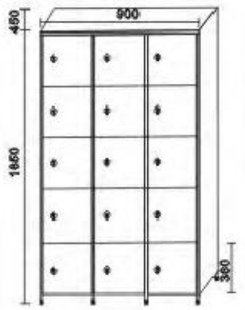

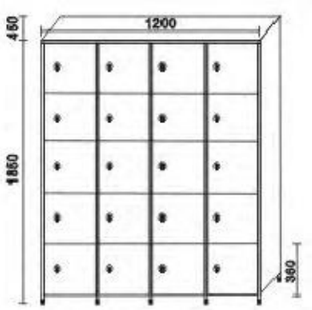

五门组合 5Tiers per column

以存放小型物品之特定场所使用，例如溜冰场、保龄球场之寄物柜。
5 Tiers per column are ideal for locations requiring small storage space, such as skating rinks,bowling alleys,etc.







Light beige 815（荷花白）



Black 816（纯黑）



Light green 817（浅豆绿）



Light pink 818（浅粉红）



Pure white 819（暖白）

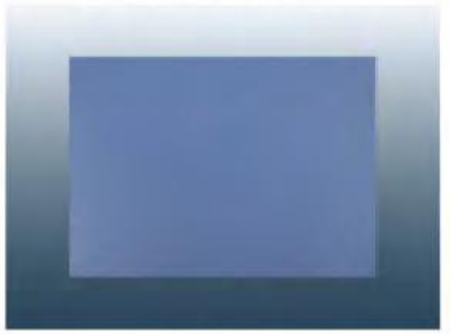

Blue 820（湛蓝）



Gray 821（灰色）



Wooden brown 822（沙比利）



B

内墙系统
Interior Wall System

Wall Cladding System
挂墙系统

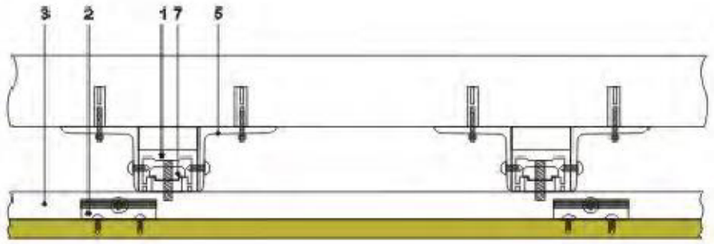

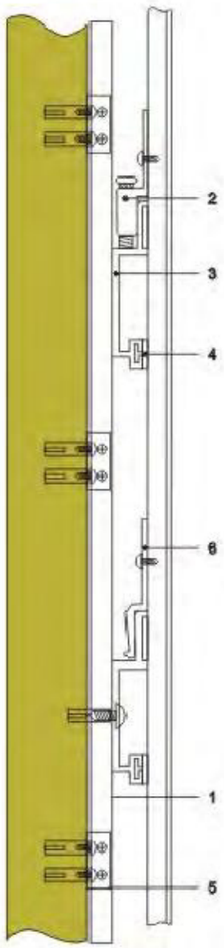

Section view of horizontal division
兴蒂丰挂墙系统横剖面图

分部细节 Section Details

1、竖龙骨 Vertical shape rail

2、可调节码 Adjustable jump piece

3、U型横龙骨 U-shape rail

4、紧密胶条 Sealing rubber

5、L型固定码 L shaped fastener

6、固定码 Fixed Jump piece

7、龙骨连接片 Rail junction

Wall cladding assembly sketch map 挂墙拼装示意图

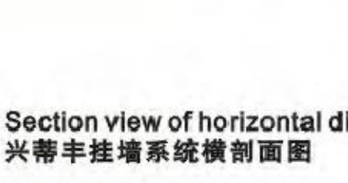

Wall cladding assembly sketch map 挂墙拼装示意图

1、固定码 Fixed Jump piece (P-610)

2、可调节码 Adjustable Jump piece (P-611)

3、竖龙骨 Vertical shape rail (P-620)

4、横龙骨 U shape rail (P-612)

5、角码 Corner bracket (P-613)

6、效果图 Assembly photo

7、胶条 sealing rubber



P-610



P-611



P-620



P-612



P-613



Assembly photo











D

铝材系统
Aluminum System

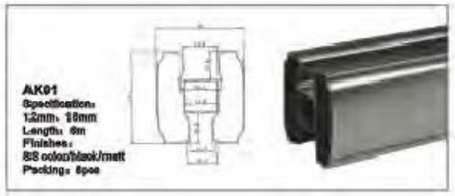

AK01
Specification:
1.2mm、18mm
Length: 6m
Finishes:
SS color/black/matt
Packing: 8pcs

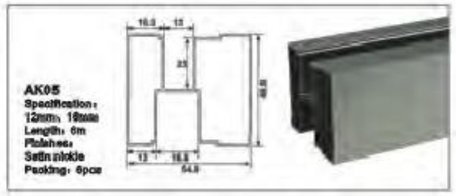

AK05
Specification:
1.2mm、18mm
Length: 6m
Finishes:
Satin nickle
Packing: 6pcs

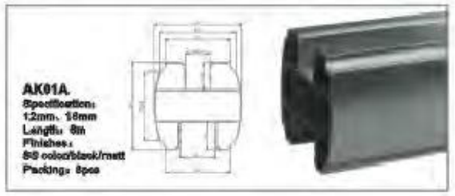

AK01A
Specification:
1.2mm、18mm
Length: 6m
Finishes:
SS color/black/matt
Packing: 8pcs

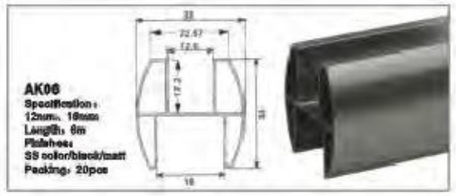

AK06
Specification:
1.2mm、18mm
Length: 6m
Finishes:
SS color/black/matt
Packing: 20pcs

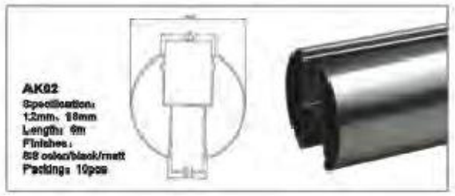

AK02
Specification:
1.2mm、18mm
Length: 6m
Finishes:
SS color/black/matt
Packing: 10pcs

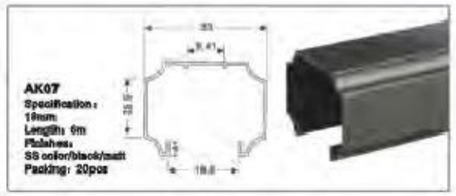

AK07
Specification:
18mm
Length: 6m
Finishes:
SS color/black/matt
Packing: 20pcs

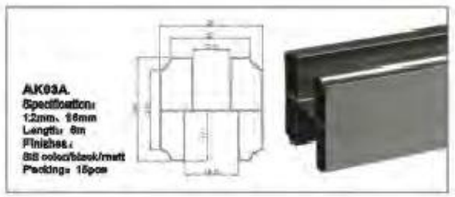

AK03A
Specification:
1.2mm、18mm
Length: 6m
Finishes:
SS color/black/matt
Packing: 15pcs

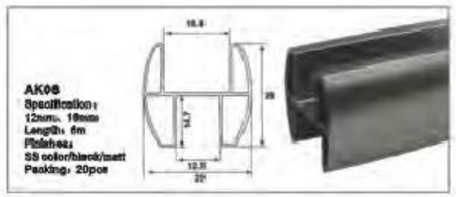

AK08
Specification:
12mm、18mm
Length: 6m
Finishes:
SS color/black/matt
Packing: 20pcs

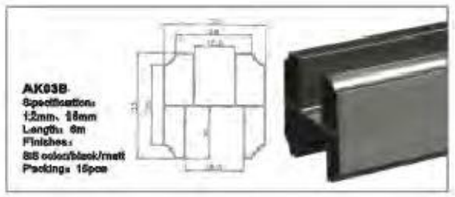

AK03B
Specification:
1.2mm、18mm
Length: 6m
Finishes:
SS color/black/matt
Packing: 15pcs

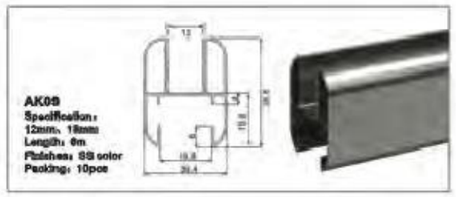

AK09
Specification:
12mm、18mm
Length: 6m
Finishes: SS color
Packing: 10pcs

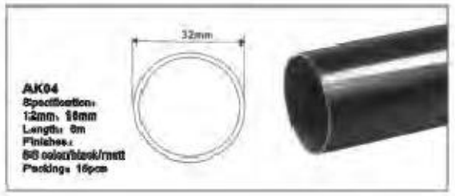

AK04
Specification:
1.2mm、18mm
Length: 6m
Finishes:
SS color/black/matt
Packing: 15pcs

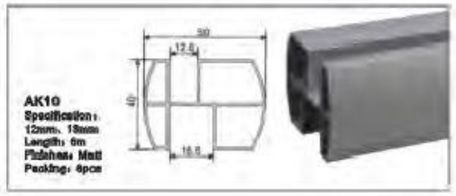

AK10
Specification:
12mm、18mm
Length: 6m
Finishes: Matt
Packing: 6pcs



AK11
Specification:
12mm、18mm
Length: 6m
Finishes:
Matt/satin nickle
Packing: 10pcs

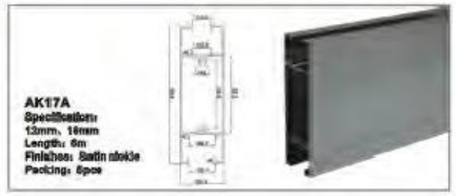

AK17A
Specification:
12mm、18mm
Length: 6m
Finishes: Satin nickle
Packing: 8pcs

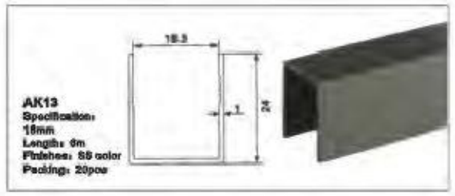

AK13
Specification:
18mm
Length: 6m
Finishes: SS color
Packing: 20pcs

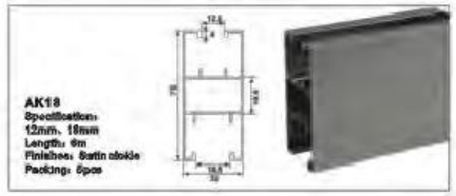

AK18
Specification:
12mm、18mm
Length: 6m
Finishes: Satin nickle
Packing: 8pcs

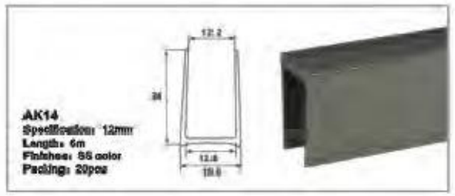

AK14
Specification: 12mm
Length: 6m
Finishes: SS color
Packing: 20pcs

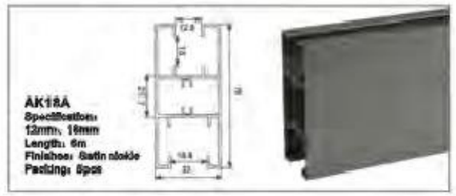

AK18A
Specification:
12mm、18mm
Length: 6m
Finishes: Satin nickle
Packing: 8pcs

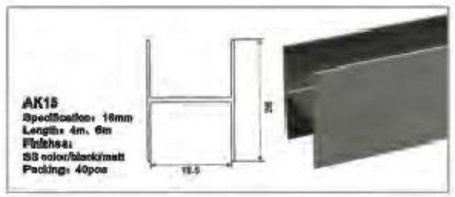

AK15
Specification: 18mm
Length: 4m、6m
Finishes:
SS color/black/matt
Packing: 40pcs

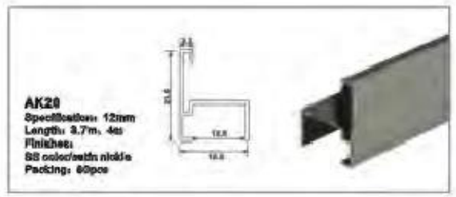

AK20
Specification: 12mm
Length: 3.7m、4m
Finishes:
SS color/satin nickle
Packing: 80pcs

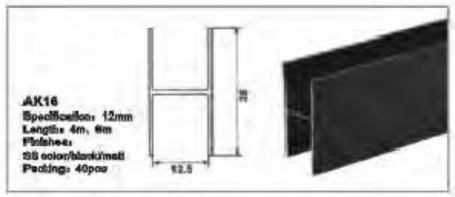

AK16
Specification: 12mm
Length: 4m、6m
Finishes:
SS color/black/matt
Packing: 40pcs

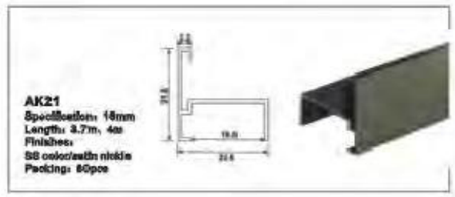

AK21
Specification: 18mm
Length: 3.7m、4m
Finishes:
SS color/satin nickle
Packing: 80pcs

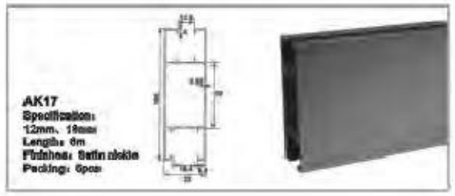

AK17
Specification:
12mm、18mm
Length: 6m
Finishes: Satin nickle
Packing: 6pcs

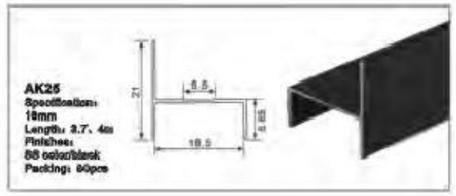

AK25
Specification:
18mm
Length: 3.7、4m
Finishes:
SS color/black
Packing: 80pcs

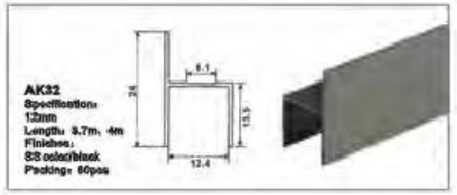
AK32
Specification:
12mm
Length: 5.7m, 4m
Finishes:
SS color/black
Packing: 60pcs

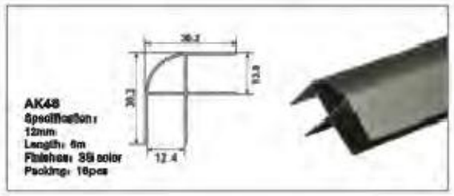
AK48
Specification:
12mm
Length: 6m
Finishes: SS color
Packing: 10pcs

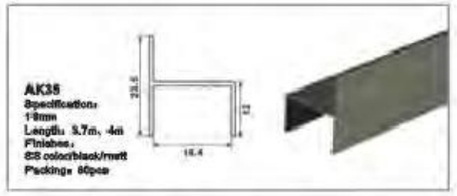
AK35
Specification:
19mm
Length: 5.7m, 4m
Finishes:
SS color/black/matt
Packing: 60pcs

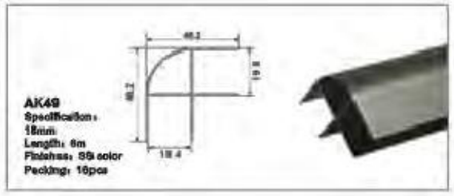
AK49
Specification:
19mm
Length: 6m
Finishes: SS color
Packing: 10pcs

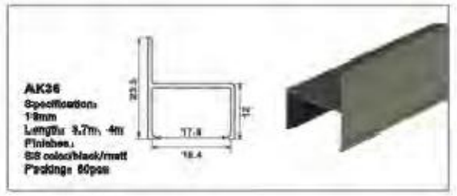
AK36
Specification:
19mm
Length: 5.7m, 4m
Finishes:
SS color/black/matt
Packing: 60pcs

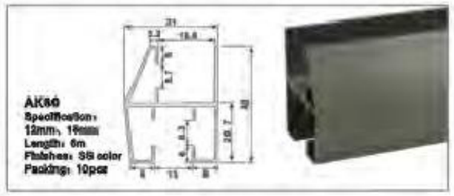
AK60
Specification:
12mm, 19mm
Length: 6m
Finishes: SS color
Packing: 10pcs

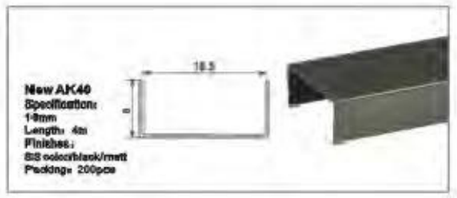
New AK40
Specification:
19mm
Length: 4m
Finishes:
SS color/black/matt
Packing: 200pcs

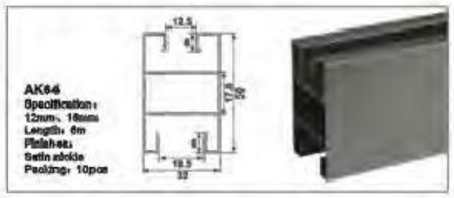
AK64
Specification:
12mm, 19mm
Length: 6m
Finishes:
Satin nickle
Packing: 10pcs

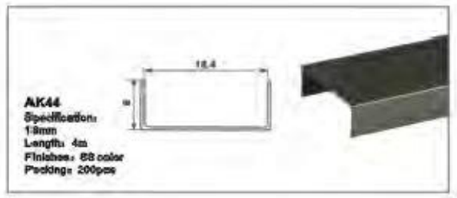
AK44
Specification:
19mm
Length: 4m
Finishes: SS color
Packing: 200pcs

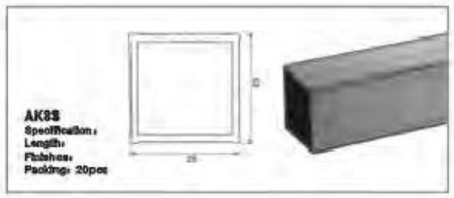
AK8S
Specification:
Length:
Finishes:
Packing: 20pcs

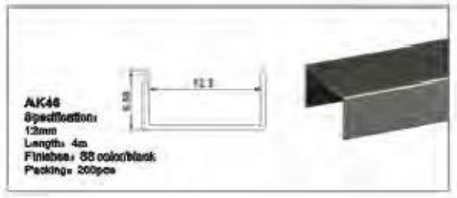
AK46
Specification:
12mm
Length: 4m
Finishes: SS color/black
Packing: 200pcs

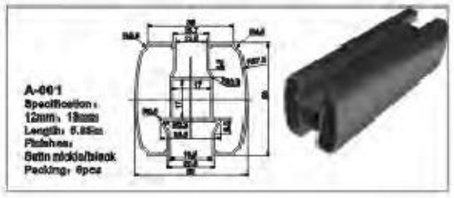
A-061
Specification:
12mm, 19mm
Length: 5.85m
Finishes:
Satin nickle/black
Packing: 6pcs

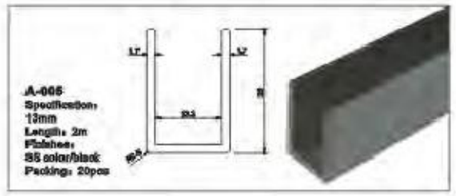
A-065
Specification:
13mm
Length: 2m
Finishes:
SS color/black
Packing: 20pcs

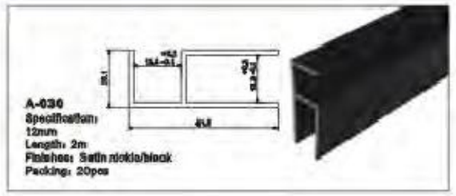
A-030
Specification:
12mm
Length: 2m
Finishes: Satin nickle/black
Packing: 20pcs

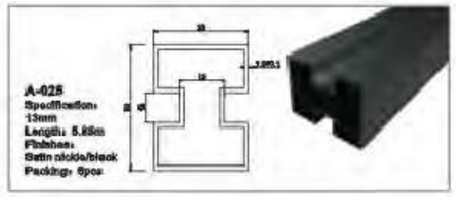
A-025
Specification:
13mm
Length: 5.85m
Finishes:
Satin nickle/black
Packing: 6pcs

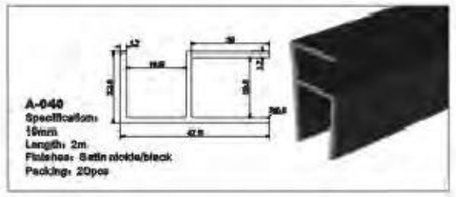
A-040
Specification:
19mm
Length: 2m
Finishes: Satin nickle/black
Packing: 20pcs







TIMBER CONNECTOR






FC-KP1
FC-KP3
FC-KP4
FC-KR1
FC-KR2
FC-KS1
FC-KT1-1
FC-KT1-2
FC-KW1
FC-KW7
FC-KWM1
FC-KWM2


FC-KWM3
FC-LP1
FC-LP5
FC-LP
FC-LWM1
FC-NA1
FC-NA2
FC-PL3AA
FC-PL3AB
FC-PP4
FC-PP5
FC-PP7



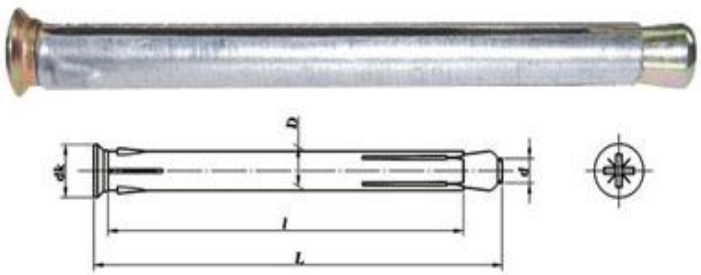

FC-20101						
Picture	Item No.	Description	Size	Packing		Material
				PCS/BOX	BOX/CTN	
	FC-20101	Inflate Pin	6*30 6*40 6*50 6*60 6*80 6*100 8*60 8*70 8*90 8*110 8*130 8*150 8*180 8*200	polybag+carton+pallet		ManganeseSteel

FC-20201									
Picture	Item No.	Description	Size	Specification				Packing	Material
				L	H	B	S	PCS/CTN	
	FC-20201	90angle Wood connector with rib	70*70*55 90*90*65 105*105*90	70 90 105	70 90 105	55 65 90	2.5/2.2 2.5/2.0 3.0/2.5/2.0	50 50 25	Pre-galv.Steel Sheet D*51D+Z275

FC-20203									
Picture	Item No.	Description	Size	Specification				Packing	Material
				L	H	B	S	PCS/CTN	
	FC-20203	135angle Wood connector	50*50*35	50	50	35	2.5	50	Pre-galv.Steel Sheet D*51D+Z275
			50*50*40	50	50	40	2.5	50	
			70*70*55	70	70	55	2.5	50	
			90*90*40	90	90	40	2.5	50	
			90*90*65	90	90	65	2.5	50	
			105*105*90	105	105	90	2.5/3.0	50	

FC-20204									
Picture	Item No.	Description	Size	Specification				Packing	Material
				L	H	B	S	PCS/CTN	
	FC-20204	Flat Wood Connector	100*40	100		40	3.0	100	Pre-galv.Steel Sheet D*51D+Z275
			175*65	175		65	2.5	50	
			180*40	180		40	3.0	50	
			60*40	60		40	2.0	100	
			80*20	80		20	2.0	100	
			80*40	80		40	2.0	100	
			100*20	100		20	2.0	100	

FC-20205

Picture	Item No.	Description	Size	Specification				Packing	Material
				L	H	B	S	PCS/CTN	
			30*30*30	30	30	30	2.0	100	
			40*40*40	40	40	40	2.0	100	
			60*60*60	60	60	60	2.0	50	



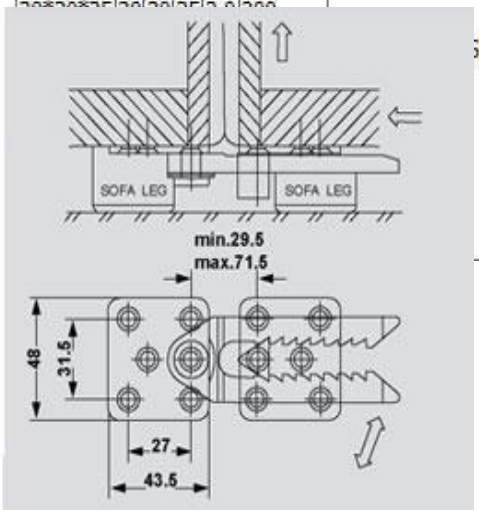

FC-20206

Picture	Item No.	Description	Size	Specification				Packing	Material
				L	H	B	S	PCS/CTN	
	FC-20206	Adjustable brackets, 2.0mm	60*30*60	60	30	60	2.0	50	Pre-galv.Steel Sheet D*51D+Z275
			60*40*60	60	40	60	2.0	50	
			80*50*30	80	50	30	2.0	100	
			80*65*20	80	65	20	2.0	50	

FC-20207

Picture	Item No.	Description	Size	Specification				Packing	Material
				A	B	C	S	PCS/CTN	
	FC-20207	Z-Type Connector 2.5mm	20*70*10	20	70	10	2.5	20	Pre-galv.Steel Sheet D*51D+Z275
			40*85*30	40	85	30	2.5	50	
			50*85*30	50	85	30	2.5	50	
			60*85*30	60	85	30	2.5	50	

FC-20208

Picture	Item No.	Description	Size	Specification				Packing	Material
				L	H	B	S	PCS/CTN	
	FC-20208	Narrow square	25*25*15	25	25	15	2.0	100	Pre-galv.Steel Sheet D*51D+Z275 or plating after punching.
			30*30*15	30	30	15	2.0	100	
			40*40*15	40	40	15	2.0	100	
			50*50*15	50	50	15	2.0	1000	
			60*60*20	60	60	20	2.0	100	
			80*80*20	80	80	20	2.0	50	
			100*100*20	100	100	20	2.0	50	

FC-20209									
Picture	Item No.	Description	Size	Specification				Packing	Material
				A	B	C	S	PCS/CTN	
	FC-20209	T Connector 2.0mm	70*50*16	70	50	16	2.0	50	Pre-galv.Steel Sheet D*51D+Z275 or plating after punching.

FC-20210								
Picture	Item No.	Description	Size	Specification			Packing	Material
				L	B	S	PCS/CTN	
	FC-20210	Roof ridge fixing type A	170	170	35	2.0	100	Pre-galv.Steel Sheet D*51D+Z275
			210	210	35	2.0	50	
			250	250	35	2.0	50	
			290	290	35	2.0	20	
			330	330	35	2.0	20	

FC-20211								
Picture	Item No.	Description	Size	Specification			Packing	Material
				L	B	S	PCS/CTN	
	FC-20211	Roof ridge fixing type B	170R,L	170	35	2.0	100	Pre-galv.Steel Sheet D*51D+Z275 This item has left side and right side difference
			170R,L	170	35	2.0	100	
			210R,L	210	35	2.0	50	
			210R,L	210	35	2.0	50	
			250R,L	250	35	2.0	50	
			250R,L	250	35	2.0	50	
			290R,L	290	35	2.0	20	
			290R,L	290	35	2.0	20	
			330R,L	330	35	2.0	20	
			330R,L	330	35	2.0	20	
			370R,L	370	35	2.0	20	
			370R,L	370	35	2.0	20	

FC-20212								
Picture	Item No.	Description	Size	Specification			Packing	Material
				A	B	C	PCS/CTN	
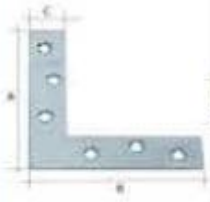	FC-20212	L Flat angle	60*60*10	60	60	10	200	Pre-galv.Steel Sheet D*51D+Z275or plating after punching.
			80*80*18	80	80	18	200	
			100*100*18	100	100	18	150	
			150*150*25	150	150	25	100	
			200*200*30	200	200	30	50	
			250*250*30	250	250	30	25	
			300*300*40	300	300	40	25	

FC-20213								
Picture	Item No.	Description	Size	Specification			Packing	Material
				L	B	S	PCS/CTN	
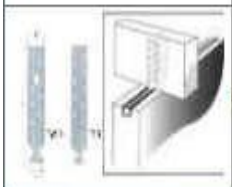	FC-20213	Profile anchor	160*40*30	160	40	30	25	Pre-galv.Steel Sheet D*51D+Z275
			140*40*22.5	140	40	22.5	25	
			160*40*22.5	160	40	22.5	25	
			180*40*22.5	180	40	22.5	25	

FC-20214								
Picture	Item No.	Description	Size	Specification			Packing	Material
				L	B	S	PCS/CTN	
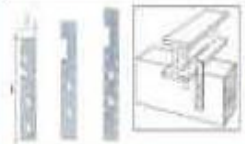	FC-20214	T-Anchor Plate	160*40*3.0	160	40	3.0	100	Pre-galv.Steel Sheet D*51D+Z275
			180*40*3.0	180	40	3.0	100	
			200*40*3.0	200	40	3.0	100	

FURNITURE CONNECTOR







FC-20301	
Picture	
Item No.	FC-20301
Description	furniture fitting
Thickness (mm)	1.6
Weight	64.13
Material	cold-rolledsheet
Finish	Greenwhite zinc plating
Packing	bulkpacking

FC-20302	
Picture	
Item No.	FC-20302
Description	furniture fitting
Thickness (mm)	1.6
Weight	52.9
Material	cold-rolledsheet
Finish	Greenwhite zinc plating
Packing	bulkpacking

FC-20303							
Picture	Item No.	Description	Thickness (mm)	Weight	Material	Finish	Packing
	FC-20303	furniture fitting	1.5	60.04	cold-rolledsheet	Greenwhite zinc plating	bulkpacking

FC-20304							
Picture	Item No.	Description	Thickness (mm)	Weight	Material	Finish	Packing
	FC-20304	furniture fitting			cold-rolledsheet	Greenwhite zinc plating	bulkpacking

FC-20305							
Picture	Item No.	Description	Thickness (mm)	Weight	Material	Finish	Packing
	FC-20305	furniture fitting	1.5	48.98	cold-rolledsheet	Greenwhite zinc plating	bulkpacking

FC-20306							
Picture	Item No.	Description	Thickness (mm)	Weight	Material	Finish	Packing
	FC-20306	furniture fitting	2.0	162.8	cold-rolledsheet	Greenwhite zinc plating	bulkpacking

FC-20307							
Picture	Item No.	Description	Thickness (mm)	Weight	Material	Finish	Packing
	FC-20307	furniture fitting			cold-rolledsheet	Greenwhite zinc plating	bulkpacking

FC-20308							
Picture	Item No.	Description	Thickness (mm)	Weight	Material	Finish	Packing
	FC-20308	furniture fitting			cold-rolledsheet	Greenwhite zinc plating	bulkpacking

TUBE CLIPS & HOSE HOOPS






FC-223
FC-224
FC-225
FC-226
FC-227
FC-228
FC-229
FC-230
FC-231
FC-232
FC-233
FC-234


FC-235

FC-20102						
Picture	Item No.	Description	Size	Packing		Material
				PCS/BOX	BOX/CTN	
	FC-20102	Insulation Nails	6*30 6*40 6*50 6*60 6*80 6*100 8*60 8*70 8*90 8*110 8*130 8*150 8*180 8*200	polybag+carton+pallet		galvanized sheet / cold-rolled sheet than zinc plating

FC-20103					
Picture	Item No.	Description	Dmm	Material	Finish
	FC-20103	Hose Clip-German Style	10/16 13-19 16-25 19-29 22-32 25-38	Mild steel Stainless steel 304/316	Zinc plated

FC-20104								
Picture	Item No.	Description	Dmm	A*B*Cmm	Packing		Material	Finish
					PCS/BOX	BOX/CTN		
	FC-20104	Single Ring Pipe Clamp With Rubber M6 All items one opened and closed	6	13*1.2*1	100	10	Mild steel Rubber Thickness*2.0mm	Zinc plated
			8	13*1.2*1	100	10		
			10	13*1.2*1	100	10		
			12	13*1.2*1	100	10		
			14	13*1.2*1	100	10		
			15	13*1.2*1	100	10		
			16	13*1.2*1	100	10		
			18	13*1.2*1	100	10		
			20	13*1.2*1	100	10		
			22	13*1.2*1	100	10		

FC-20105								
Picture	Item No.	Description	Dmm	A*B*Cmm	Packing		Material	Finish
					PCS/BOX	BOX/CTN		
	FC-20105	F Type Fixed Drive	6	12*1.2	100	10	Mild steel	Zinc plated
			8	12*1.2	100	10		
			10	12*1.2	100	10		
			12	12*1.2	100	10		
			14	12*1.2	100	10		
			15	12*1.2	100	10		
			16	12*1.2	100	10		
			18	15*1.2	100	10		
			20	15*1.2	100	10		
			22	15*1.2	100	10		

FC-20106								
Picture	Item No.	Description	Dmm	A*B*Cmm	Packing		Material	Finish
					PCS/BOX	BOX/CTN		
	FC-20106	U Type Fixed Drive	6	12*1.2	100	10	Mild steel	Zinc plated
			8	12*1.2	100	10		
			10	12*1.2	100	10		
			12	12*1.2	100	10		
			14	12*1.2	100	10		
			15	12*1.2	100	10		
			16	12*1.2	100	10		
			18	15*1.2	100	10		
			20	15*1.2	100	10		
			22	15*1.2	100	10		

FC-20107							
Picture	Item No.	Description	Dmm	A*B*Cmm	Packing	Material	Finish
					BOX/CTN		
	FC-20107	U Type With Rubber	15	20*1.2	20	Mild steel	White Zinc plated
			18	20*1.2	20		
			22	20*1.2	20		
			26	20*1.2	20		
			28	20*1.2	20		
			35	20*1.2	20		
			42	20*1.2	20		
			48	30*1.2	20		
			54	30*1.2	20		
			60	30*1.2	20		

FC-20108

Picture	Item No.	Description	Dmm	A*B*Cmm	Packing		Material	Finish
					PCS/BOX	BOX/CTN		
	FC-20108	Single Pipe Clamps With Inner Rubber 1.All Item Both Closed 2.Thread is from 6mm To 6.5mm High 3.All Specificate Can be Produced According To Buy's Demands	6	11*0.9*0.8	100	10	Iron Sheet	Yellow Zinc plated
			8	11*0.9*0.8	100	10		
			10	11*0.9*0.8	100	10		
			12	11*0.9*0.8	100	10		
			14	11*0.9*0.8	100	10		
			15	11*0.9*0.8	100	10		
			16	11*0.9*0.8	100	10		
			18	11*0.9*0.8	100	10		
			20	11*0.9*0.8	100	10		
			22	11*0.9*0.8	100	10		

FC-20109

Picture	Item No.	Description	Dmm	A*B*Cmm	Packing		Material	Finish
					PCS/BOX	BOX/CTN		
	FC-20109	Single Ring Pipe Clamp With Rubber M8	6	12*1	100	10	Mild steel Rubber Thickness:4mm	Zinc plated
			8	12*1	100	10		
			10	12*1	100	10		
			12	12*1	100	10		
			14	12*1	100	10		
			15	12*1	100	10		
			16	12*1	100	10		
			18	12*1	100	10		
			20	12*1	100	10		
			22	12*1	100	10		

FC-20110

Picture	Item No.	Description	Dmm	A*B*Cmm	Packing		Material	Finish
					PCS/BOX	BOX/CTN		
	FC-20110	Single Pipe clamps Without Rubber 1.All items one opened and one closed 2.All specific can be produced according to buyer's demands	15-19	20*1.5	50	10	Mild steel Stainless steel	Zinc plated
			20-25	20*1.5	50	10		
			26-30	20*1.5	50	10		
			32-36	20*1.5	50	10		
			38-43	20*1.5	25	10		
			47-51	20*1.5	25	10		
			53-58	20*1.5	25	10		
			60-64	20*1.5	25	10		
			68-73	20*1.5	25	10		
			75-80	20*1.5	25	10		

FC-20111								
Picture	Item No.	Description	Dmm	A*B*Cmm	Packing		Material	Finish
					PCS/BOX	BOX/CTN		
	FC-20111	Single Pipe clamps Without Rubber 1.All items one opened and one closed 2.All specific can be produced according to buyer's demands	6 8 10 12 14 15	11*0.9*0.8 11*0.9*0.8 11*0.9*0.8 11*0.9*0.8 11*0.9*0.8 11*0.9*0.8	100 100 100 100 100 100	10 10 10 10 10 10	Iron Sheet	Sheet multicolor plated

FC-20112								
Picture	Item No.	Description	Dmm	A*B*Cmm	Packing		Material	Finish
					PCS/BOX	BOX/CTN		
	FC-20112	Hangering Pipe Clamp With Rubber M10	25-30 32-36 38-42 47-50 60-64 75-80 82-90 100-106 114-119 133-140 159-165	19*1.3 19*1.3 19*1.3 19*1.3 19*1.3 20*2.0 20*2.0 20*2.0 20*2.0 20*2.0 20*2.0	100 100 100 100 100 100 50 50 25 25 25	10000 10000 10000 10000 10000 10000 10000 10000 10000 10000 10000	Pre-galvanized carbon steel	Pre-galvanized carbon steel

FC-20113								
Picture	Item No.	Description	Dmm	A*B*Cmm	Packing		Material	Finish
					PCS/BOX	BOX/CTN		
	FC-20113	Single Ring Pipe Clamp M6 whit Connecting Screw 1.Tow side screws 2.Connecting screw: m6*30, m6*40	18 22 28 35 40 48 54 60 70 75	20* (1.3~1.5) 20* (1.3~1.5) 20* (1.3~1.5) 20* (1.3~1.5) 20* (1.3~1.5) 20* (1.3~1.5) 20* (1.3~1.5) 20* (1.3~1.5) 20* (1.3~1.5) 20* (1.3~1.5)	50 50 50 50 25 25 25 25 25 25	10 10 10 10 10 10 10 10 10 10	Mild steel	White/Yellow Zinc plated



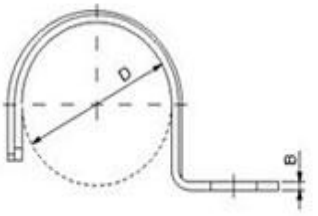



"F" TYPE FIXED DRIVE

1. MATERIAL: IRON SHEET

REFERENCE	Dmm	PCS/BOX	BOX/CARTON	AxBmm
233006	6	100	10	12x1.2
233008	8	100	10	12x1.2
233010	10	100	10	12x1.2
233012	12	100	10	12x1.2
233014	14	100	10	12x1.2
233015	15	100	10	12x1.2
233016	16	100	10	12x1.2
233018	18	100	10	15x1.2
233020	20	100	10	15x1.2
233022	22	100	10	15x1.2
233024	24	100	10	15x1.2
233026	26	100	10	15x1.2
233028	28	100	10	15x1.2
233030	30	100	10	15x1.2
233032	32	100	10	18x1.2
233036	36	100	10	18x1.2
233040	40	50	10	18x1.2
233042	42	50	10	18x1.2
233047	47	50	10	18x1.2
233060	60	50	10	18x1.2

FC-20114

Picture	Item No.	Description	Dmm	A*B*Cmm	Packing		Material	Finish
					PCS/BOX	BOX/CTN		
	FC-20114	Double Ring Pipe Clamp With Rubber	8/10	11*1*1	50	10	Mild steel	White/Yellow Zinc plated
			10/12	11*1*1	50	10		
			12/14	11*1*1	50	10		
			14-16	11*1*1	50	10		
			16-18	11*1*1	25	10		
			18-20	11*1*1	25	10		
			20-22	11*1*1	25	10		
			22-24	11*1*1	25	10		
			24-26	11*1*1	25	10		
			26-28	11*1*1	25	10		
			28-30	11*1*1				

"U" TYPE FIXED DRIVE



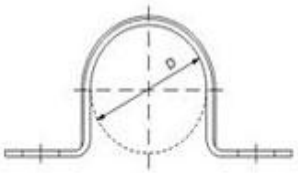



1. MATERIAL: IRON SHEET
2. ∅6-22 ROUND HOLE
3. ∅24-60 SQUARE HOLE

REFERENCE	Dmm	PCS/BOX	BOX/CARTON	AxBmm
232006	6	100	10	12x1.2
232008	8	100	10	12x1.2
232010	10	100	10	12x1.2
232012	12	100	10	12x1.2
232014	14	100	10	12x1.2
232015	15	100	10	12x1.2
232016	16	100	10	12x1.2
232018	18	100	10	15x1.2
232020	20	100	10	15x1.2
232022	22	100	10	15x1.2
232024	24	100	10	15x1.2
232026	26	100	10	15x1.2
232028	28	100	10	15x1.2
232030	30	50	10	15x1.2
232032	32	50	10	18x1.2
232037	37	50	10	18x1.2
232040	40	50	10	18x1.2
232042	42	50	10	18x1.2
232047	47	50	10	18x1.2
232060	60	50	10	18x1.2

"U" TYPE WITH RUBBER



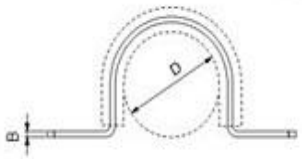

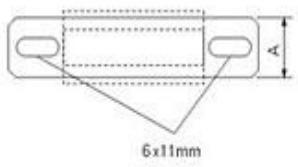

1. MATERIAL: IRON SHEET

REFERENCE	SPECIFIC Dmm	AxBmm	BOX/CARTON
234015	15	20x1.2	20
234018	18	20x1.2	20
234022	22	20x1.2	20
234026	26	20x1.2	20
234028	28	20x1.2	20
234035	35	20x1.2	20
234042	42	20x1.2	20
234048	48	30x1.2	20
234054	54	30x1.2	20
234060	60	30x1.2	20
234067	67	30x1.2	20
234075	75	30x1.2	20
234090	90	30x1.2	20

DRAWER SLIDES & HINGES





FC-20309							
Picture	Item No.	Description	Thickness (mm)	Weight	Material	Finish	Packing
	FC-20309	furniture fitting			cold-rolledsheet	Greenwhite zinc plating	bulkpacking

FC-20310							
Picture	Item No.	Description	Thickness (mm)	Weight	Material	Finish	Packing
	FC-20310	furniture fitting			cold-rolledsheet	Greenwhite zinc plating	bulkpacking

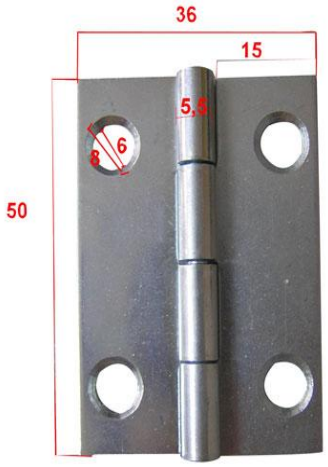

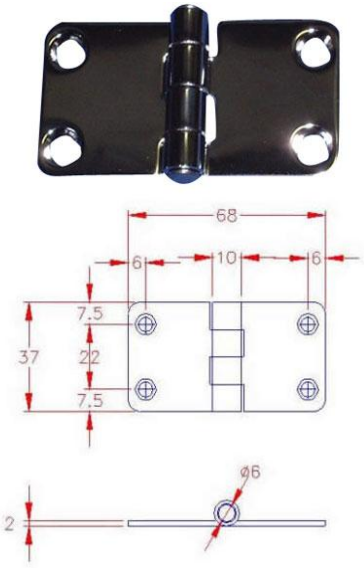

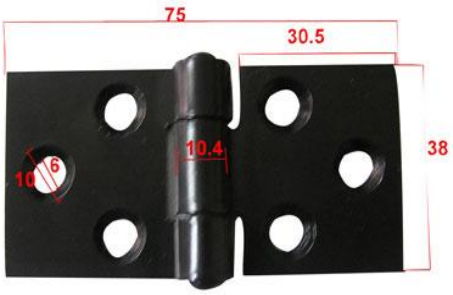

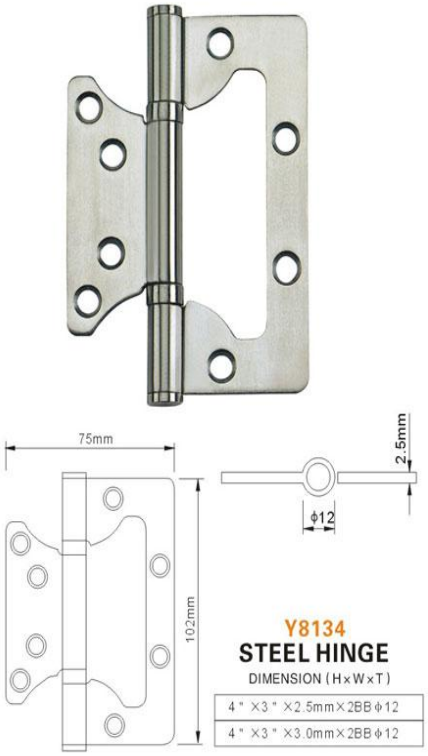

Y8134
STEEL HINGE
DIMENSION (H×W×T)

4 " ×3 " ×2.5mm×2BB ϕ12
4 " ×3 " ×3.0mm×2BB ϕ12

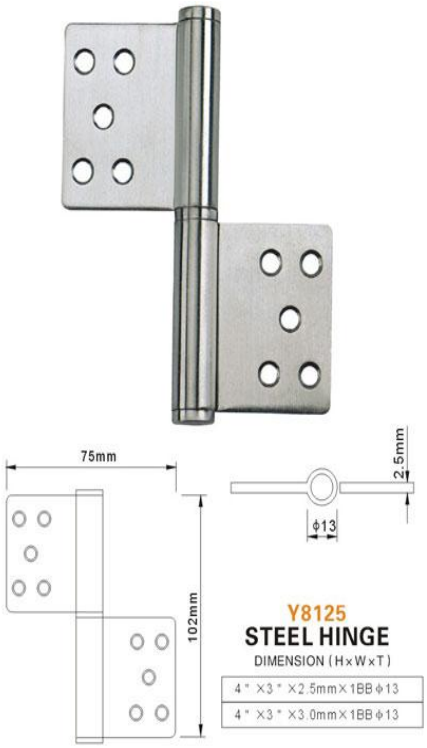

Y8125
STEEL HINGE
DIMENSION (H×W×T)

4 " ×3 " ×2.5mm×1BB ϕ13
4 " ×3 " ×3.0mm×1BB ϕ13

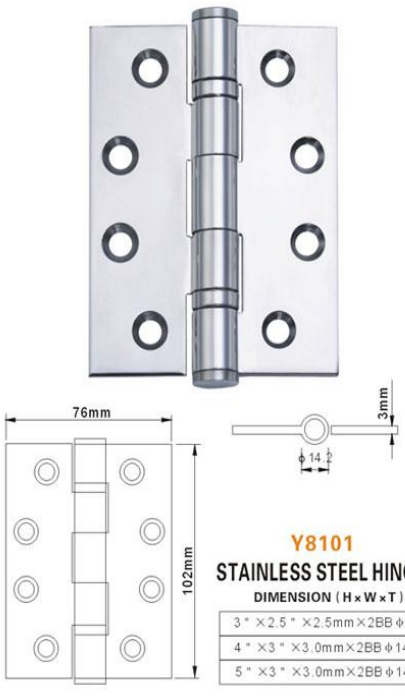

Y8101
STAINLESS STEEL HINGE
DIMENSION (H×W×T)

3 " ×2.5 " ×2.5mm×2BB ϕ12.5
4 " ×3 " ×3.0mm×2BB ϕ14.2
5 " ×3 " ×3.0mm×2BB ϕ14.2

DOOR BOLT


FC-501
FC-502
FC-503
FC-504
FC-505
FC-506
FC-507
FC-508
FC-509
FC-510
FC-511
FC-512


FC-513
FC-514
FC-515
FC-516

Bracket 2

Shelf Bracket


YW-01001


YW-01003


YW-01003


YW-01004


YW-01005


YW-01013


YW-01012


YW-01011


YW-01010


YW-01009


YW-01008


YW-01007

Bed Hinge

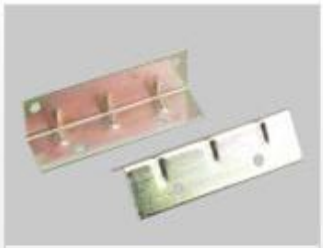

YW-03010



YW-03009

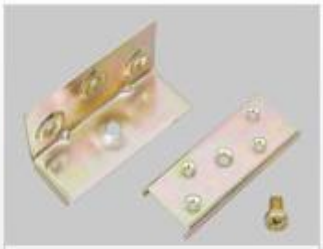

YW-03008

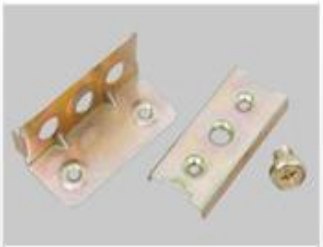

YW-03007



YW-03006



YW-03005



YW-03004

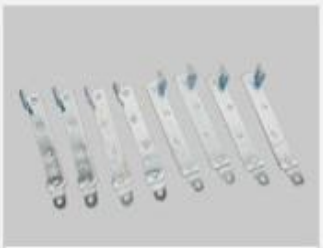

YW-03003



YW-03002



YW-03001

Pull



YW-09010



YW-09009

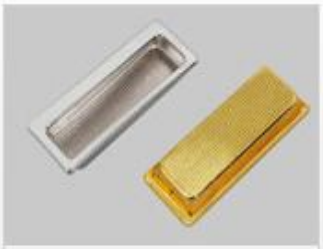

YW-09008



YW-09007



YW-09006



YW-09005



YW-09004



YW-09003



YW-09002



YW-09001

Hasps & Stple



YW-08010



YW-08009



YW-08008



YW-08007



YW-08006



YW-08005



YW-08004



YW-08003



YW-08002



YW-08001

Corner Brace



YW-05020



YW-05019



YW-05018



YW-05017



YW-05016



YW-05015



YW-05014



YW-05013



YW-05012



YW-05011



YW-05010



YW-05009



YW-05008



YW-05007



YW-05006



YW-05005



YW-05004



YW-05003



YW-05002



YW-05001

Door Hinge



YW-07015

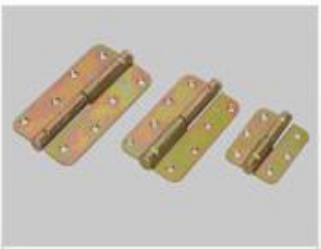

YW-07014

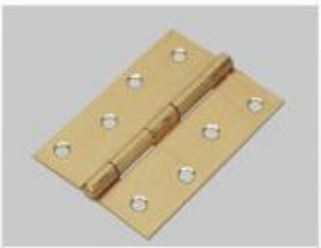

YW-07013



YW-07012

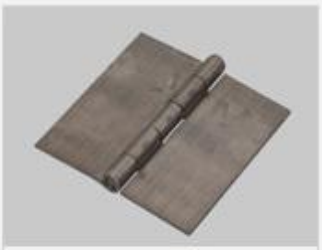

YW-07011



YW-07010



YW-07009



YW-07008



YW-07006



YW-07005

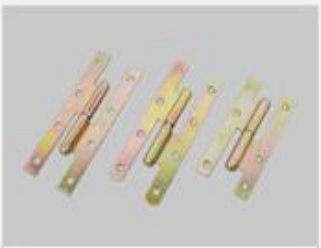

YW-07003



YW-07002



YW-07001

Drawer Slider



YW-02003



YW-02002



YW-02001

Tower Bolt



YW-04040



YW-04039



YW-04038

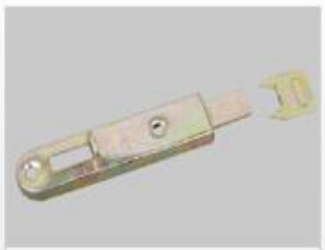

YW-04037



YW-04036



YW-04035



YW-04034



YW-04033



YW-04032



YW-04031



YW-04030



YW-04029



YW-04028



YW-04027



YW-04026



YW-04025



YW-04024



YW-04023



YW-04022



YW-04021



YW-04020



YW-04019



YW-04018



YW-04017



YW-04016



YW-04015



YW-04014



YW-04013



YW-04012



YW-04011



YW-04010



YW-04009



YW-04008



YW-04007



YW-04006



YW-04005



YW-04004



YW-04003



YW-04002



YW-04001

Distribution Board



YW-11005



YW-11004



YW-11003



YW-11002



YW-11001



YW-10042



YW-10041



YW-10040



YW-10039



YW-10038



YW-10037

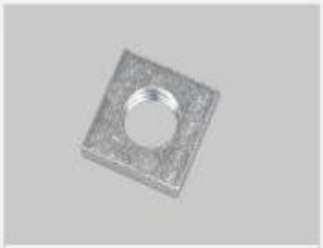

YW-10036



YW-10035



YW-10034



YW-10033



YW-10032



YW-10031



YW-10030



YW-10029



YW-10028



YW-10027



YW-10026



YW-10025



YW-10024



YW-10023



YW-10022



YW-10021



YW-10020



YW-10019



YW-10018



YW-10017



YW-10016



YW-10015



YW-10014



YW-10013



YW-10012



YW-10011



YW-10010



YW-10009



YW-10008



YW-10006



YW-10005



YW-10003



YW-10002



YW-10001

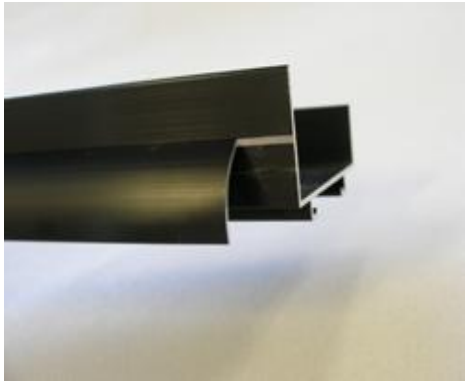

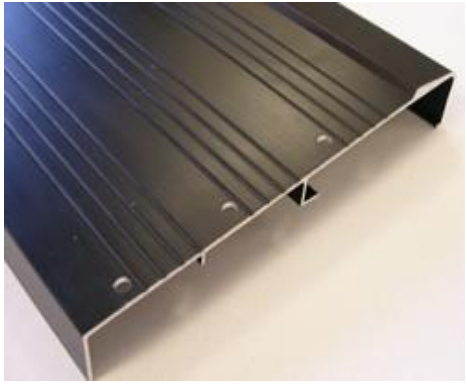

Aluminum Molding Series 铝型材系列



HLLXC-6001



HLLXC-6002



HLLXC-6003



HLLXC-6004



HLLXC-6017

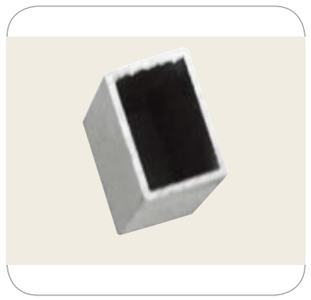

HLLXC-6018



HLLXC-6019



HLLXC-6020



HLLXC-6005



HLLXC-6006

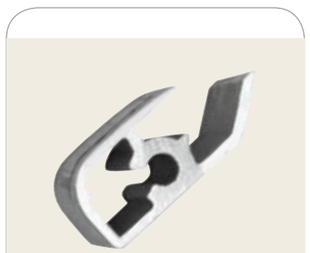

HLLXC-6007



HLLXC-6008



HLLXC-6021



HLLXC-6022



HLLXC-6023

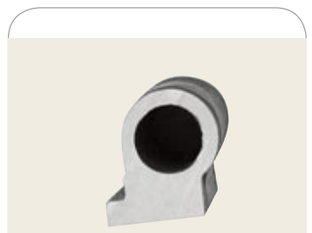

HLLXC-6024



HLLXC-6009

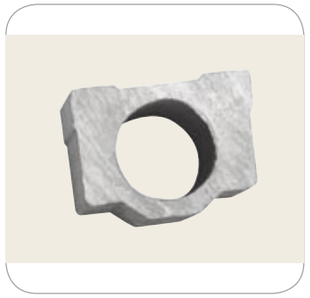

HLLXC-6010

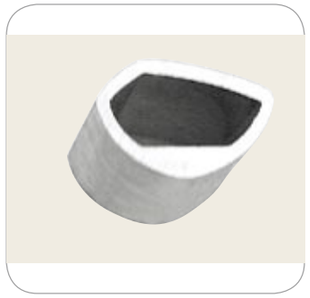

HLLXC-6011



HLLXC-6012



HLLXC-6025



HLLXC-6026



HLLXC-6027



HLLXC-6028



HLLXC-6013

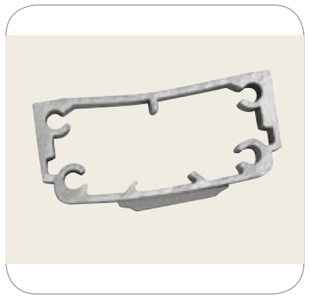

HLLXC-6014



HLLXC-6015



HLLXC-6016



HLLXC-6029



HLLXC-6030



HLLXC-6031



HLLXC-6032

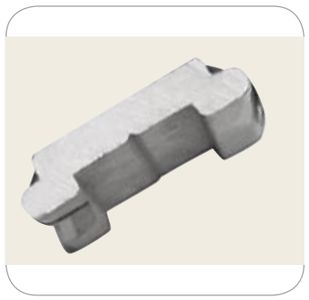

HLLXC-6033



HLLXC-6034



HLLXC-6035

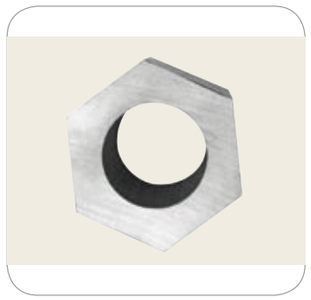

HLLXC-6036



HLLXC-6037



HLLXC-6038



HLLXC-6039



HLLXC-6040



HLLXC-6041

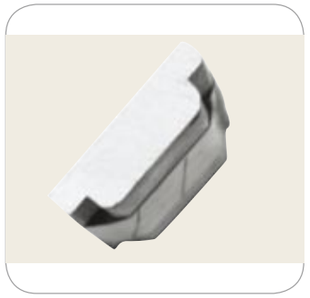

HLLXC-6042



HLLXC-6043

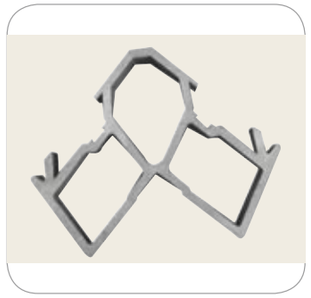

HLLXC-6044





产品涂层-部分色谱

Product coating-partial chromatogram



◎本色谱颜色仅供参考，以实物为准，可按客户要求定做其他颜色。

Color of this chromatogram is for reference only.Please take the real products as criterion. Other colors are apt to the customer's orders.

Zamac Glass Holder



Number	C868L	C868S
Height	41mm	35mm

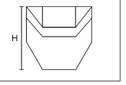



Number	C866L	C866S
A.A.	11mm	7mm
Length	50mm	38mm





Number	C1120L	C1120S
A.A.	12mm	10mm
Length	49mm	39mm
Width	19mm	17mm
Height	35mm	29mm





Number	C870L	C870S
Length	80mm	52mm

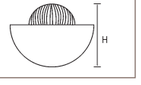



Number	C867B	C867A
Length	54mm	54mm
Width	54mm	54mm

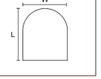



Number	C872L	C872S
Length	40mm	40mm
A.A.	10mm	8mm

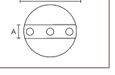



Number	C873L	C873S
A.A.	10mm	8mm
Height	56mm	45mm

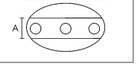



Number	C880XL	C880L	C880M	C880S
Length	78mm	60mm	55mm	40mm
Height	105mm	75mm	55mm	40mm

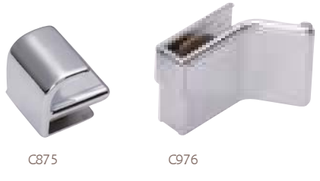

Number	C875	C976
A.A.	5.5mm	6.5mm
Length	26mm	30mm
Height	25mm	41mm

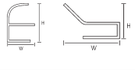

Zamac Glass Holder



Number	C975
A.A.	7mm
Length	16mm
Width	21mm
Height	17mm





Number	C879
A.A.	10mm
Length	⌀ 24mm
Height	27mm





Number	C1107
A.A.	8mm
Length	⌀ 22mm
Height	21mm

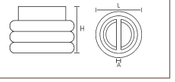



Number	C1108
A.A.	8 m m
Length	⌀ 25mm
Height	18mm





Number	C1106
A.A.	9mm
Length	⌀ 20mm
Height	21mm





Number	C1104
A.A.	13mm
Length	⌀ 25mm
Height	23mm





Number	C1101
A.A.	9mm
Length	48mm
Height	31mm

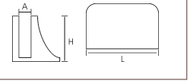



Number	C1102
A.A.	14mm
Length	45mm
Height	31mm

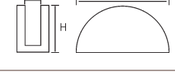



Number	C974
A.A.	8mm
Length	35mm
Width	29mm
Height	25mm



Zamac Glass Hinge



Number	C878
A.A.	5.5mm
Length	32mm
Height	21mm





Number	C971
A.A.	5.5mm
Length	40mm
Width	34mm
Height	34mm

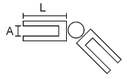



Number	C970
A.A.	5.5mm
Length	22mm
Width	34mm
Height	34mm

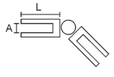



Number	C876
A.A.	5.5mm
Length	49mm
Width	49mm
Height	21mm

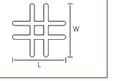



Number	C877
A.A.	5.5mm
Length	49mm
Width	32mm
Height	21mm

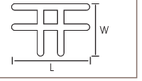



Number	C964
A.A.	5.5mm
Length	27mm
Width	26mm

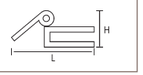



Number	C965
A.A.	5.5mm
Length	40mm

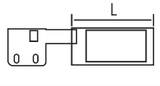



Number	C865L
A.A.	5.5mm
Length	50mm

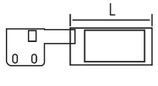



Number	C865S
A.A.	5.5mm
Length	40mm

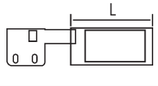

Zamac Glass Holder



Number	C1114
Length	28mm
Width	14mm
Height	14mm





Number	C1115
Length	28mm
Width	12mm
Height	12mm





Number	C1113
Length	28mm
Width	15mm
Height	15mm





Number	C1112
Length	28mm
Width	12mm
Height	14mm

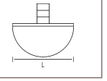



Number	C1105
A.A.	9mm
Length	18mm
Height	16mm

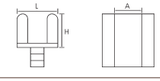



Number	C1103
A.A.	9mm
Length	21mm
Height	16mm

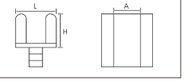



Number	C1109
Length	25mm
Width	30mm
Height	9mm

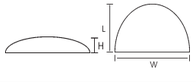



Number	C1110
Length	18mm
Width	16mm
Height	18mm

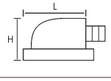



Number	C1116
A.	4mm
Length	51mm
Height	24mm

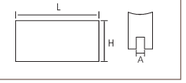

Zamac Sofa Leg



Number	C672		
Width	⌀ 50mm	⌀ 50mm	⌀ 50mm
Height	100mm	150mm	200mm



Number	C559			ALUMINIUM SOFA LEG
Width	50mm	50mm	50mm	50mm
Height	80mm	100mm	120mm	150mm



Number	C673			PLASTIC SOFA LEG
Height	90mm	120mm	150mm	



Number	C686S	C686L	C686XL
Width	⌀ 38mm	⌀ 38mm	⌀ 60mm
Height	80mm	100mm	120mm



Number	C990			
Width	⌀ 50mm	⌀ 50mm	⌀ 50mm	⌀ 50mm
Height	80mm	100mm	120mm	150mm



Number	C671			
Width	⌀ 50mm	⌀ 50mm	⌀ 50mm	⌀ 50mm
Height	80mm	100mm	120mm	150mm

Zamac Sofa Leg



Number	C556	
Height	100mm	



Number	C557	
Height	100mm	



Number	C699	
Height	100mm	



Number	C687	
Height	100mm	

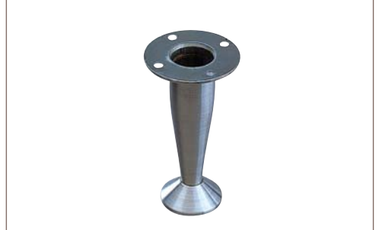

Number	C695	
Height	100mm	



Number	C696	
Height	100mm	



Number	C697	
Height	60mm	



Number	C795S	C795L
Width	⌀ 34mm	⌀ 35mm
Height	100mm	120mm



Number	C979	
Width	⌀ 30mm	
Height	100mm	

Zamac Sofa Leg



Number C674BS
Plate 63mm
Height 80mm





Number C674BL
Plate 63mm
Height 100mm





Number C685
Plate 63mm
Width ⌀ 50mm
Height 100mm





Number C671B
Plate 63mm
Width ⌀ 50mm
Height 100mm





Number C796S C796L
Height 100mm 120mm





Number C698
Height 100mm



Furniture Casters



Number C959
Width ⌀ 50mm
Height 65mm





Number C958
Width ⌀ 49mm
Height 62mm





Number C957
Width ⌀ 49mm
Height 80mm

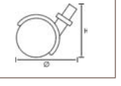



Number C956
Width ⌀ 50mm
Height 74mm

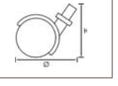



Number C955
Width ⌀ 69mm
Height 48mm





Number C688
Length 100mm
Height 100mm



Zamac Hook



Number	C657
Length	118mm
Width	108mm



Number	C634
Length	146mm
Width	97mm



Number	C635
Length	150mm
Width	97mm



Number	C985
Length	139mm
Width	114mm
Height	60mm



Number	C768
Length	145mm
Width	69mm
Height	55mm



Number	C743
Length	135mm
Width	75mm



Number	C642
Length	145mm
Width	103mm



Number	C641
Length	132mm
Width	92mm



Number	C608
Length	134mm
Width	102mm

Zamac Hook



Number	C607L	C607S
Length	184mm	75mm
Width	70mm	65mm



Number	C636L	C636S
Length	175mm	85mm
Width	77mm	75mm
Height	75mm	23mm



Number	C789L	C789S
Length	160mm	56mm
Width	73mm	73mm
Height	75mm	23mm



Number	C920L	C920S
Length	150mm	57mm
Width	77mm	77mm
Height	63mm	32mm



Number	C825L	C825S
Length	120mm	45mm
Width	75mm	75mm
Height	74mm	28mm



Number	C899L	C899S
Length	160mm	55mm
Width	74mm	74mm
Height	75mm	23mm



Number	C658-2
Length	142mm
Width	108mm



Number	C658-1
Length	142mm
Width	108mm



Number	C928
Length	145mm
Width	28mm
Height	89mm

Zamac Hook



Number	C600L	C600S
Length	140mm	68mm
Width	50mm	50mm
Height	72mm	21mm



Number	C780L	C780S
Length	142mm	70mm
Width	42mm	42mm
Height	69mm	22mm



Number	C786L	C786S
Length	150mm	150mm
Width	45mm	45mm
Height	66mm	66mm



Number	C611L	C611S
Length	175mm	80mm
Width	77mm	75mm



Number	C1117L	C1117S
Length	140mm	66mm
Width	55mm	55mm
Height	73mm	26mm



Number	C614
Width	25mm
Height	90mm



Number	C986L	C986S
Length	119mm	44mm
Width	100mm	59mm
Height	54mm	36mm



Number	C666	C610
Length	60mm	60mm
Width	50mm	50mm



Number	C637
Length	175mm
Width	77mm

Zamac Hook



Number	C744
Length	110mm
Width	68mm



Number	C748
Length	50mm
Height	20mm



Number	C728
Length	23mm
Width	36mm



Number	C746
Length	136mm
Height	26mm



Number	C747
Length	102mm
Height	24mm



Number	C749
Length	84mm
Width	31mm



Number	C745
Length	45mm
Width	71mm



Number	C926
Length	43mm
Width	53mm



Number	C923
Length	30mm
Width	46mm
Height	24mm

Zamac Hook



Number C644S
Length 53mm
Width 95mm





Number C644L
Length 98mm
Width 130mm





Number C994
Length 155mm
Width 39mm
Height 60mm





Number C969
Length 160mm
Width 73mm
Height 75mm

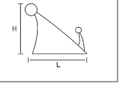



Number C968
Length 155mm
Width 28mm
Height 75mm

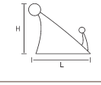



Number C987
Length 130mm
Width 95mm
Height 41mm

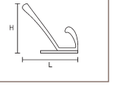



Number C989
Length 84mm
Width 29mm
Height 47mm

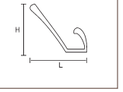



Number C612
Length 37mm
Width 78mm





Number C613
Length 46mm
Width 96mm



Zamac Hook



Number C729
Length 145mm
Height 135mm

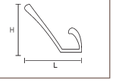



Number C859
Length 145mm
Width 49mm





Number C860
Length 110mm
Width 52mm





Number C861
Length 82mm
Width ⌀ 80mm





Number C977
Length 100mm
Width 49mm
Height 110mm





Number C978
Length 77mm
Width 52mm
Height 115mm





Number C659
Length 147mm
Height 70mm





Number C668
Length 68mm
Width 150mm

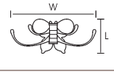



Number C767
Length 46mm
Width ⌀ 24mm



Zamac Hook



Number	C195
Length	85mm
Width	55mm
Height	30mm

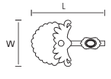



Number	C125
Length	70mm
Width	43mm
Height	28mm

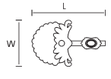



Number	C133
Length	110mm
Width	59mm
Height	32mm

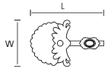



Number	C134
Length	80mm
Width	36mm
Height	28mm

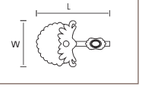



Number	C157	C158
Length	130mm	82mm
Width	68mm	39mm
Height	35mm	28mm

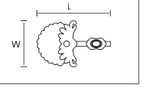



Number	C606
Length	67mm
Width	31mm
Height	45mm





Number	C992L	C992S
Length	41mm	30mm
Width	⌀ 23mm	⌀ 14mm
Height	52mm	41mm





Number	C991L	C991S
Length	56mm	32mm
Width	⌀ 23mm	⌀ 14mm
Height	65mm	43mm





Number	C993L	C993S
Length	40mm	32mm
Width	⌀ 23mm	⌀ 14mm
Height	51mm	41mm



Zamac Hook



Number	C952
⌀	25mm
Length	165mm
Width	50mm
Height	50mm





Number	C953
⌀	25mm
Length	215mm
Width	50mm
Height	50mm





Number	C951
⌀	25mm
Length	140mm
Width	95mm
Height	30mm





Number	C950
⌀	25mm
Length	144mm
Width	70mm
Height	30mm





Number	C949
⌀	25mm
Length	136mm
Width	83mm
Height	31mm





Number	C954
Length	
Width	
Height	





Number	C190	C188	C189
Length	38mm	73mm	150mm
Width	35mm	35mm	35mm





Number	C766
Length	181mm
Width	101mm
Height	86mm



Number	C143
Length	120mm

Zamac Hook



Number	C664
Length	160mm
Height	45mm



Number	C665
Length	143mm
Height	53mm



Number	C661
Length	143mm
Height	60mm



Number	C660
Length	143mm
Height	57mm



Number	C662
Length	57mm
Height	60mm



Number	C633
Length	145mm
Height	67mm



Number	C663
Length	143mm
Height	53mm



Number	C927
Length	143mm
Height	53mm



Number	C679
Length	160mm
Height	52mm

Zamac Hook



Number	C174
Length	128mm
Height	38mm



Number	C929
Length	77mm
Height	75mm
	⌀ 36mm



C629



C626



C625



C627

Number	C629	C626	C625	C627
Length	3″	2.5″	3.5″	2 3/4″
Height	24mm	23mm	25mm	24mm



Number	C655
Length	260mm



Number	C656
Length	300mm



Number	C680-4	C680-5	C680-6	C680-7	C680-8
	245mm	265mm	315mm	365mm	415mm
Length	280mm	300mm	350mm	400mm	450mm
Width	62mm	62mm	62mm	62mm	62mm
Height	32mm	32mm	32mm	32mm	32mm

Zamac Hook



Number	C773-4	C773-3	C773-2	C773-1
	310mm	230mm	150mm	70mm
Length	340mm	260mm	180mm	100mm
Width	33mm	33mm	33mm	33mm
Height	38mm	38mm	38mm	38mm



Number	C777-4	C777-3	C777-2	C777-1
	310mm	230mm	150mm	70mm
Length	340mm	260mm	180mm	100mm
Width	28mm	28mm	28mm	28mm
Height	43mm	43mm	43mm	43mm

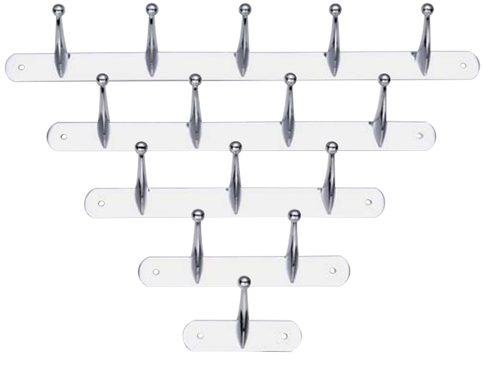

Number	C771-5	C771-4	C771-3	C771-2	C771-1
	390mm	310mm	230mm	150mm	70mm
Length	420mm	340mm	260mm	180mm	100mm
Width	33mm	33mm	33mm	33mm	33mm
Height	38mm	38mm	38mm	38mm	38mm



Number	C788-4	C788-3	C788-2	C788-1
	310mm	230mm	150mm	70mm
Length	340mm	260mm	180mm	100mm
Width	48mm	48mm	48mm	48mm
Height	58mm	58mm	58mm	58mm

Zamac Hook

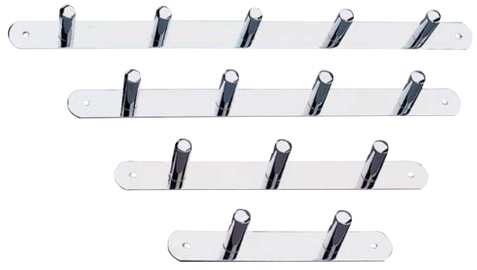

Number	C776-5	C776-4	C776-3	C776-2
	390mm	310mm	230mm	150mm
Length	420mm	340mm	260mm	180mm
Width	28mm	28mm	28mm	28mm
Height	43mm	43mm	43mm	43mm



Number	C770-4	C770-3	C770-2	C770-1
	310mm	230mm	150mm	70mm
Length	340mm	260mm	180mm	100mm
Width	28mm	28mm	28mm	28mm
Height	43mm	43mm	43mm	43mm



Number	C772-5	C772-4	C772-3	C772-2
	390mm	310mm	230mm	150mm
Length	420mm	340mm	260mm	180mm
Width	28mm	28mm	28mm	28mm
Height	43mm	43mm	43mm	43mm



Number	C774-4	C774-3	C774-2	C774-1
	310mm	230mm	150mm	70mm
Length	340mm	260mm	180mm	100mm
Width	28mm	28mm	28mm	28mm
Height	43mm	43mm	43mm	43mm

Zamac Hook

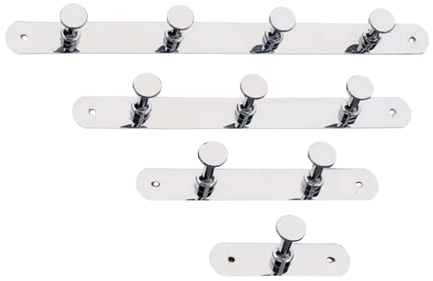

Number	C785-4	C785-3	C785-2	C785-1
	310mm	230mm	150mm	70mm
Length	340mm	260mm	180mm	100mm
Width	28mm	28mm	28mm	28mm
Height	43mm	43mm	43mm	43mm

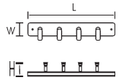

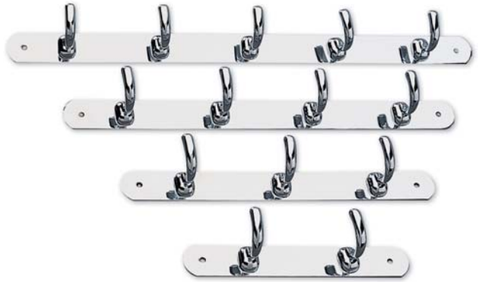

Number	C787-5	C787-4	C787-3	C787-2
	390mm	310mm	230mm	150mm
Length	420mm	340mm	260mm	180mm
Width	37mm	37mm	37mm	37mm
Height	48mm	48mm	48mm	48mm

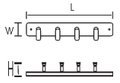



Number	C778-4	C778-3	C778-2	C778-1
	310mm	230mm	150mm	70mm
Length	340mm	260mm	180mm	100mm
Width	28mm	28mm	28mm	28mm
Height	45mm	45mm	45mm	45mm

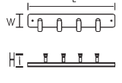



Number	C784-5	C784-4	C784-3	C784-2
	390mm	310mm	230mm	150mm
Length	420mm	340mm	260mm	180mm
Width	58mm	58mm	58mm	59mm
Height	35mm	35mm	35mm	35mm

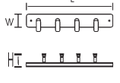

Zamac Hook

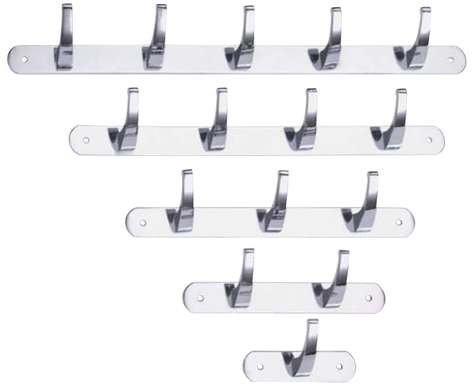

Number	C782-5	C782-4	C782-3	C782-2	C782-1
	390mm	310mm	230mm	150mm	70mm
Length	420mm	340mm	260mm	180mm	100mm
Width	37mm	37mm	37mm	37mm	37mm
Height	48mm	48mm	48mm	48mm	48mm

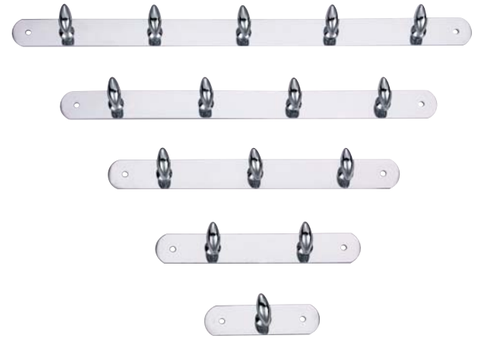

Number	C781-5	C781-4	C781-3	C781-2	C781-1
	390mm	310mm	230mm	150mm	70mm
Length	420mm	340mm	260mm	180mm	100mm
Width	37mm	37mm	37mm	37mm	37mm
Height	48mm	48mm	48mm	48mm	48mm

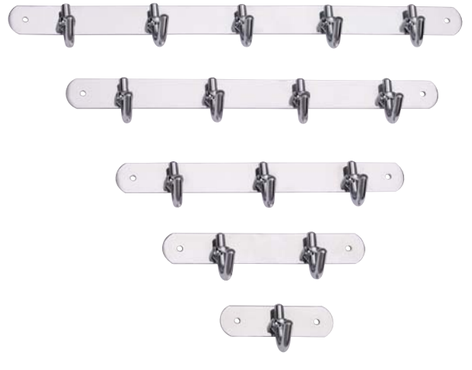

Number	C779-5	C779-4	C779-3	C779-2	C779-1
	390mm	310mm	230mm	150mm	70mm
Length	420mm	340mm	260mm	180mm	100mm
Width	58mm	58mm	58mm	59mm	59mm
Height	35mm	35mm	35mm	35mm	35mm



Number	C669
Length	240mm
Width	150mm

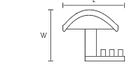

Zamac Tube Holder



Number C678L/S

⌀ 18mm
⌀ 25mm

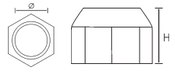



Number C652

Length 42mm
Height 20mm





Number C945

⌀ 22mm
Length 56mm
Width 25mm
Height 26mm

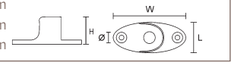



Number C939

⌀ 19mm

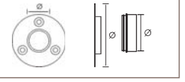



Number C940

⌀ 20mm

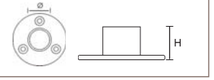



Number C654

⌀ 25mm

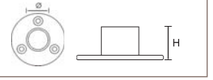



Number C675

⌀ 25mm

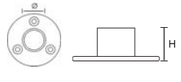



Number C900

⌀ 15mm ⌀ 18mm ⌀ 20mm ⌀ 25mm ⌀ 28mm

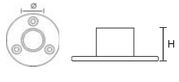

Zamac Tube Holder



Number C941L C942S

Width ⌀ 28mm ⌀ 25mm
Height 35mm 30mm





Number C653S C653L

Width ⌀ 12mm ⌀ 12mm
Height 50mm 90mm





Number C676

⌀ 22mm

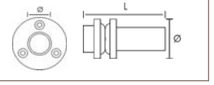



Number C677

⌀ 35mm





Number C760L C760S

Length 95mm 83mm
Height 76mm 35mm





Number C761S C761L

Length 64mm 80mm
Height 48mm 51mm

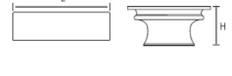



暗铰链 Concealed Hinge



JL-261 直角
二段力铰链
P. 094



JL-263 直角
二段力铰链
P. 095



JL-261 中弯
二段力铰链
P. 094



JL-263 中弯
二段力铰链
P. 095



JL-261 大弯
二段力铰链
P. 094



JL-263 大弯
二段力铰链
P. 095



JL-261 不锈钢直角
二段力铰链
P. 096



JL-262 不锈钢直角
二段力铰链
P. 097



JL-261 不锈钢中弯
二段力铰链
P. 096



JL-262 不锈钢中弯
二段力铰链
P. 097



JL-261 不锈钢大弯
二段力铰链
P. 096



JL-262 不锈钢大弯
二段力铰链
P. 097

暗铰链 Concealed Hinge



JL-265 铁
JL-267 不锈钢 直角
直臂液压暗铰链
P. 098



JL-266 铁
JL-268 不锈钢 直角
直臂液压暗铰链
P. 099



JL-265 铁
JL-267 不锈钢 中弯
中弯液压暗铰链
P. 098



JL-266 铁
JL-268 不锈钢 中弯
中弯液压暗铰链
P. 099



JL-265 铁
JL-267 不锈钢 大弯
大弯液压暗铰链
P. 098



JL-266 铁
JL-268 不锈钢 大弯
大弯液压暗铰链
P. 099



JL-756 直角
二段力铰链
P. 100



JL-766 直角
二段力铰链
P. 101



JL-756 中弯
二段力铰链
P. 100



JL-766 中弯
二段力铰链
P. 101



JL-756 大弯
二段力铰链
P. 100



JL-766 大弯
二段力铰链
P. 101

暗铰链 Concealed Hinge





JL-768 直角(移位)
二段力铰链
P. 102



JL-768 中弯(移位)
二段力铰链
P. 102



JL-768 大弯(移位)
二段力铰链
P. 102

道轨 Door latch

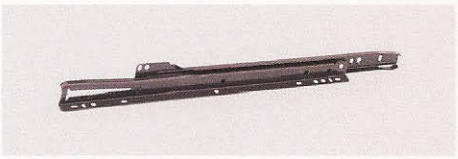

二节超滑托底道轨
P. 106

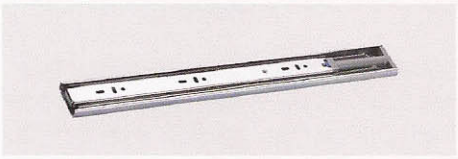

三节缓冲滚珠道轨
P. 109

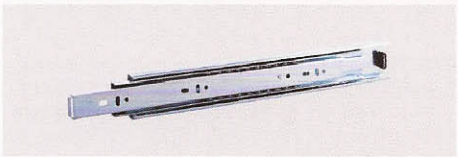

三节滚珠道轨
P. 110

家具锁 Furniture Lock



CTS-138-22
短芯柜锁
P. 114



CTS-338-22
斜口自动柜锁
P. 115



BLS-001-22
玻璃锁
P. 115



BLS-407
单门玻璃锁
P. 116



BLS-409
双玻璃锁
P. 116



CTS-103
钩锁
P. 117



CTS-105
移门锁
P. 117



CTS-300-20
正面三连锁
P. 118

家具配件 Furniture Accessories



GJ-50X80
家具脚
P. 119



MX-030
衣管座
P. 120



MX-018
MX-016
法兰拉丝钢
衣管座
P. 120



MX-031
法兰座
P. 121



MX-032
圆形线盒
P. 120



MX-019
MX-022
MX-025
八角法兰座
P. 120



MX-027
层板托
P. 121



MX-029
层板托
P. 121





柜门的功能
The Function of Cupboard Door

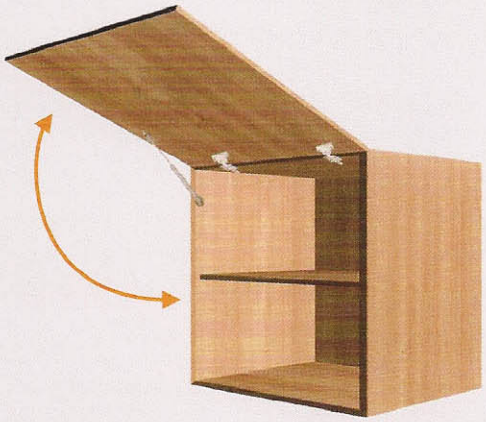

上翻柜门
Open cupboard door upwardly

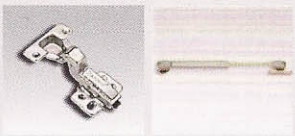

一扇门=2只铰链+1支气撑
One door=two concealed hinges+one furniture airing support

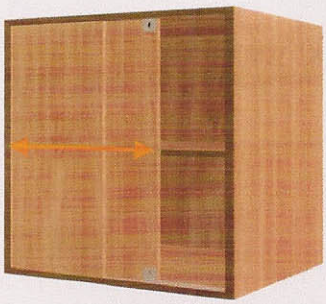

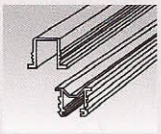

二扇门=2付铝轨+2套趟门轮
Two doors=two pairs of Aluminiumum sliding rails+two pairs of sliding door rollers

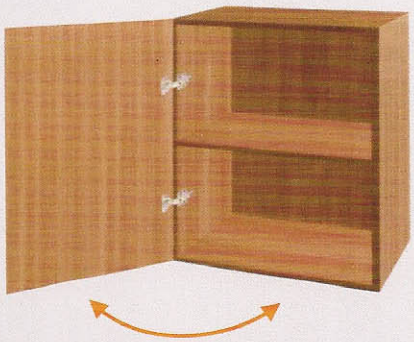

推拉柜门
Push and pull cupboard door

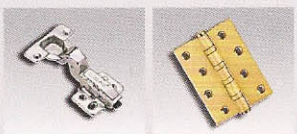

一扇门=2只铰链或2只铜芯铰
One door=two concealed hinges or two brass core hinges

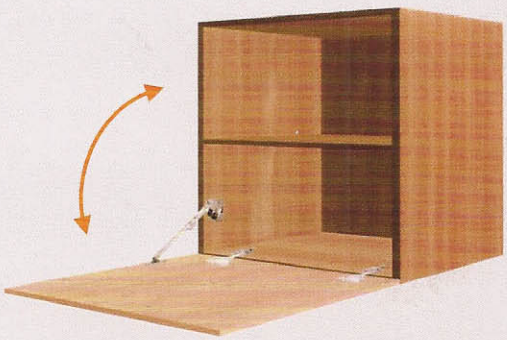

下翻柜门
Open cupboard door downwardly



一扇门=2只铰链+1支吊撑
One door=two concealed hinges+one furniture hanging suport

暗铰链安装技术
The Installation Technology of Concealed Hinge

柜门开启角度
Cupboard door opening angle

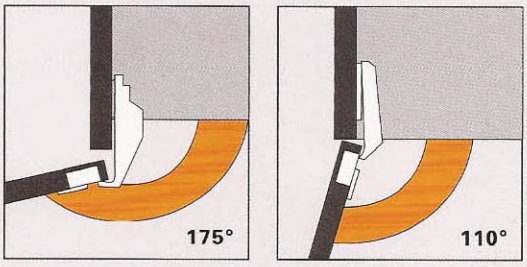

门高度与铰链安装数量
The matching quantity of concealed hinge with door height

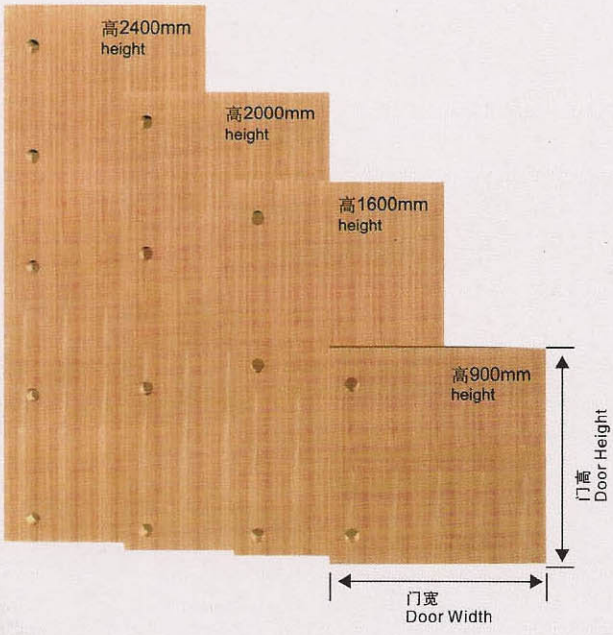

注:D值不少于90mm，门宽不超过600mm
Remarks:Data D is not less than 90mm, and door width is not over than 600mm

柜门最厚不超过18mm
Max thickness of cupboard door is not more than 18mm

柜门安装方式
Cupboard door installation method

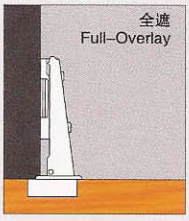



全遮
门板全部覆盖住柜侧板，两者之间有一个间隙，以便门可以顺畅地打开。

Full-Overlay
The plank covers the side plate of the cupboard doorcompletly, witha gap between them, in order to open thedoor smoothly.

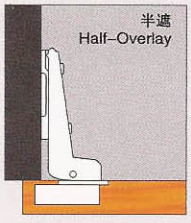

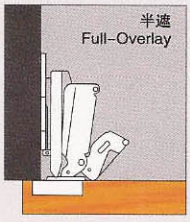

半遮
在这种情况下，两扇门共用一个侧板。它们之间有一个所要求的最小间隙。每扇门的覆盖距离相应地减少，需要采用铰臂弯曲的铰链。

Half-Overlay
In this case, two doors use one side plate, with a required minimal gap between them, so the covered distance of each door is decreased accordingly, therefore, the curve-armedhinge is needed.

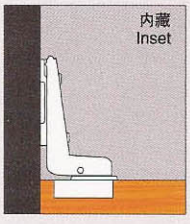

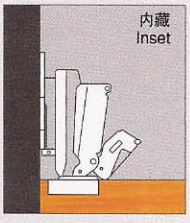

内藏
在这种情况下，门位于柜内，在柜侧板旁。它也需要一个间隙，以便门可以顺畅地打开。需要采用铰臂非常弯曲的铰链。

Inset
In this case, the door is fixed by the side plate of the inner cupboard. It also needs a gap, in order to open the door smoothly. A hinge with very quite curved arm is needed.

暗铰链安装技术
The Installation Technology of Concealed Hinge

标准余位
Standard space



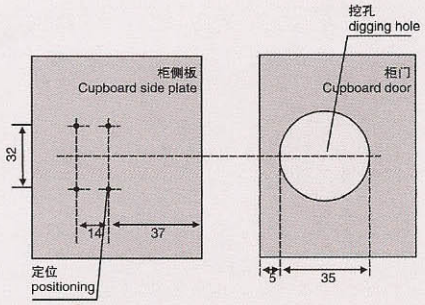

三维调节柜门示意
Indication of three dimensional adjusting of the cupboard door

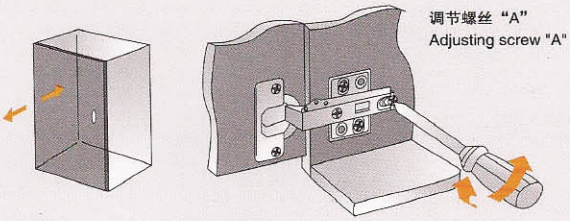

三维调节之前后调节只需调节螺丝 “A” 可以改变门板与柜体旁板的间隙。
Front and back adjusting of the three dimensional adjusting Only screw"A" should be adjusted to change the gap between the door plank and the side plate of the cupboard body.

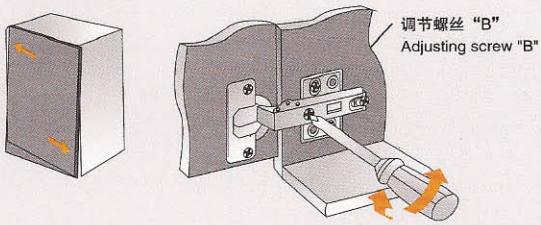

三维调节之左右调节
调节螺丝 “B” 可以改变门板相对于柜体旁板的覆盖量
Left and right adjusting of the three dimensional adjusting
Adjusting screw "B" can change the coverage of the door plank relative to the side plate of the cupboard.

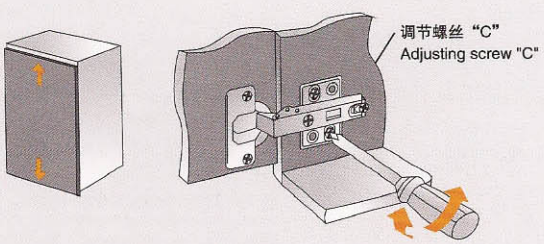

三维调节之垂直调节
调节铰链底板上的螺丝 “C” 可以校正门板的垂直及上下间隙。
Vertical adjusting of the three dimensional adjusting Adjusting the screw "C" on the hinge base plate can rectify the vertical and upper–and–lower gaps of the door pland.

安装步骤
Installation steps

1 柜侧板
Cupboard side plate

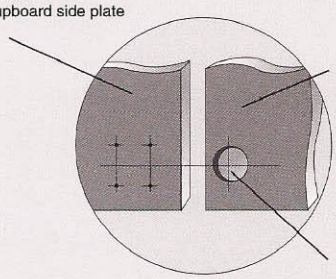

挖孔定位
digging and positioning

2 柜侧板
Cupboard side plate

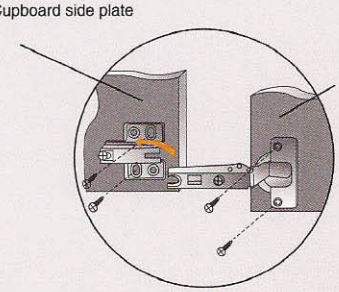

安装底座及铰杯
Install base and hinge cup

3 柜侧板
Cupboard side plate

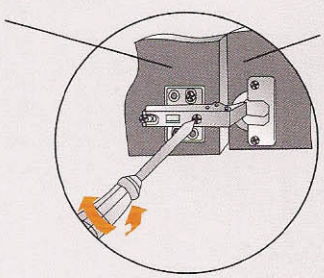

三维调节理想位置
The ideal place of three dimensional adjusting

JL-261 直角

二段力铰链
Two Way Concealed Hinge



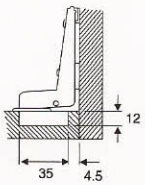

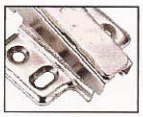

固定
Fixed

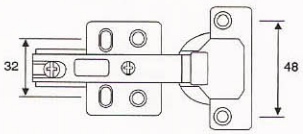

标准技术表
Standard Technical Information

1、柜门开启角度
Cupboard Door Opening Angle

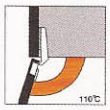

2、柜门安装方式
Cupboard Door Installation Method



表面处理: 镀镍
主要材质: 冷轧钢板
适合门厚: 14~22毫米
开启角度: 115°
最大承重: 8kg/2只
适用范围: 各式木质柜门
主要功能: 二段力、快拆式、带饰盖、开合轻柔

Surface Treatment: Nickel Plated
Main Materials: Cold-rolled Steel
Max Thickness Of Door: 14–22mm
Open The Angle: 105°
Max Bearing Capacity: 8kg/2pcs
Range Of Application: Various Wood Furniture Doors
Main Functions: Two Way Force, Quick Dismounting, With Cover, Easy Opening And Closing

JL-261 中弯

二段力铰链
Two Way Concealed Hinge



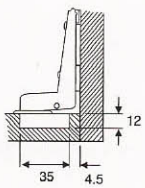

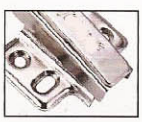

固定
Fixed

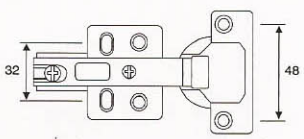

标准技术表
Standard Technical Information

1、柜门开启角度
Cupboard Door Opening Angle

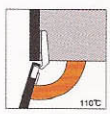

2、柜门安装方式
Cupboard Door Installation Method



表面处理: 镀镍
主要材质: 冷轧钢板
适合门厚: 14~22毫米
开启角度: 115°
最大承重: 8kg/2只
适用范围: 各式木质柜门
主要功能: 二段力、快拆式、带饰盖、开合轻柔

Surface Treatment: Nickel Plated
Main Materials: Cold-rolled Steel
Max Thickness Of Door: 14–22mm
Open The Angle: 105°
Max Bearing Capacity: 8kg/2pcs
Range Of Application: Various Wood Furniture Doors
Main Functions: Two Way Force, Quick Dismounting, With Cover, Easy Opening And Closing

JL-261 大弯

二段力铰链
Two Way Concealed Hinge



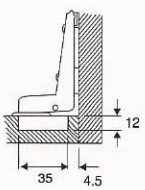



固定
Fixed

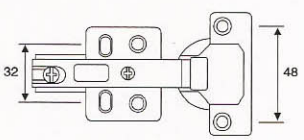

标准技术表
Standard Technical Information

1、柜门开启角度
Cupboard Door Opening Angle

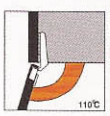

2、柜门安装方式
Cupboard Door Installation Method



表面处理: 镀镍
主要材质: 冷轧钢板
适合门厚: 14~22毫米
开启角度: 115°
最大承重: 8kg/2只
适用范围: 各式木质柜门
主要功能: 二段力、快拆式、带饰盖、开合轻柔

Surface Treatment: Nickel Plated
Main Materials: Cold-rolled Steel
Max Thickness Of Door: 14–22mm
Open The Angle: 105°
Max Bearing Capacity: 8kg/2pcs
Range Of Application: Various Wood Furniture Doors
Main Functions: Two Way Force, Quick Dismounting, With Cover, Easy Opening And Closing

JL–263 直角

二段力铰链
Two Way Concealed Hinge

表面处理: 镀镍
主要材质: 冷轧钢板
适合门厚: 14–22毫米
开启角度: 115°
最大承重: 8kg/2只
适用范围: 各式木质柜门
主要功能: 二段力、快拆式、
带饰盖、开合轻柔

Surface Treatment: Nickel Plated
Main Materials: Cold–rolled Steel
Max Thickness Of Door: 14–22mm
Open The Angle: 105°
Max Bearing Capacity: 8kg/2pcs
Range Of Application: Various Wood Furniture Doors
Main Functions: Two Way Force, Quick Dismounting, With Cover, Easy Opening And Closing

标准技术表
Standard Technical Information

1、柜门开启角度
Cupboard Door Opening Angle

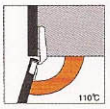

2、柜门安装方式
Cupboard Door Installation Method



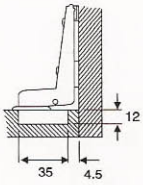

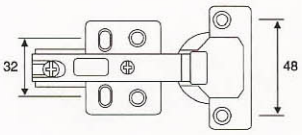



自卸
Self–discharging

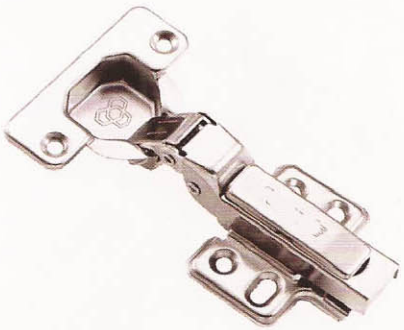

JL–263 中弯

二段力铰链
Two Way Concealed Hinge

表面处理: 镀镍
主要材质: 冷轧钢板
适合门厚: 14–22毫米
开启角度: 115°
最大承重: 8kg/2只
适用范围: 各式木质柜门
主要功能: 二段力、快拆式、
带饰盖、开合轻柔

Surface Treatment: Nickel Plated
Main Materials: Cold–rolled Steel
Max Thickness Of Door: 14–22mm
Open The Angle: 105°
Max Bearing Capacity: 8kg/2pcs
Range Of Application: Various Wood Furniture Doors
Main Functions: Two Way Force, Quick Dismounting, With Cover, Easy Opening And Closing

标准技术表
Standard Technical Information

1、柜门开启角度
Cupboard Door Opening Angle

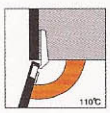

2、柜门安装方式
Cupboard Door Installation Method



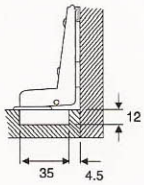

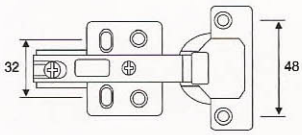



自卸
Self–discharging

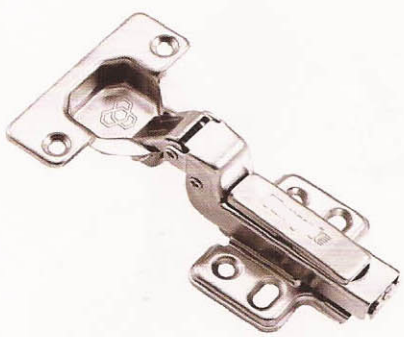

JL–263 大弯

二段力铰链
Two Way Concealed Hinge

表面处理: 镀镍
主要材质: 冷轧钢板
适合门厚: 14–22毫米
开启角度: 115°
最大承重: 8kg/2只
适用范围: 各式木质柜门
主要功能: 二段力、快拆式、
带饰盖、开合轻柔

Surface Treatment: Nickel Plated
Main Materials: Cold–rolled Steel
Max Thickness Of Door: 14–22mm
Open The Angle: 105°
Max Bearing Capacity: 8kg/2pcs
Range Of Application: Various Wood Furniture Doors
Main Functions: Two Way Force, Quick Dismounting, With Cover, Easy Opening And Closing

标准技术表
Standard Technical Information

1、柜门开启角度
Cupboard Door Opening Angle

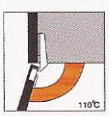

2、柜门安装方式
Cupboard Door Installation Method



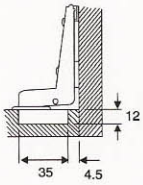

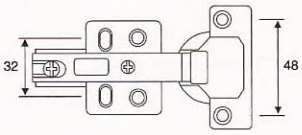



自卸
Self–discharging

JL-261 不锈钢直角

二段力铰链

Two Way Concealed Hinge



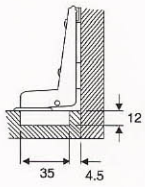

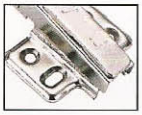

固定
Fixed

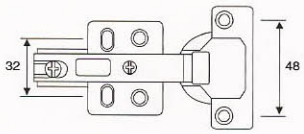

标准技术表
Standard Technical Information

1、柜门开启角度
Cupboard Door Opening Angle

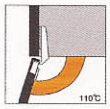

2、柜门安装方式
Cupboard Door Installation Method



表面处理: 钢色
主要材质: 不锈钢
适合门厚: 14~22毫米
开启角度: 115°
最大承重: 8kg/2只
适用范围: 各式木质柜门
主要功能: 二段力、快拆式、带饰盖、开合轻柔

Surface Treatment: Steel Color
Main Materials: Stainless Steel
Max Thickness Of Door: 14–22mm
Open The Angle: 105°
Max Bearing Capacity: 8kg/2pcs
Range Of Application: Various Wood Furniture Doors
Main Functions: Two Way Force, Quick Dismounting, With Cover, Easy Opening And Closing

JL-261 不锈钢中弯

二段力铰链

Two Way Concealed Hinge



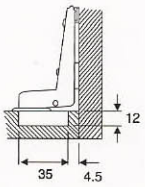

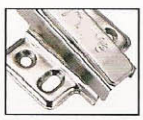

固定
Fixed

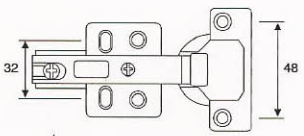

标准技术表
Standard Technical Information

1、柜门开启角度
Cupboard Door Opening Angle

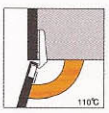

2、柜门安装方式
Cupboard Door Installation Method



表面处理: 钢色
主要材质: 不锈钢
适合门厚: 14~22毫米
开启角度: 115°
最大承重: 8kg/2只
适用范围: 各式木质柜门
主要功能: 二段力、快拆式、带饰盖、开合轻柔

Surface Treatment: Steel Color
Main Materials: Stainless Steel
Max Thickness Of Door: 14–22mm
Open The Angle: 105°
Max Bearing Capacity: 8kg/2pcs
Range Of Application: Various Wood Furniture Doors
Main Functions: Two Way Force, Quick Dismounting, With Cover, Easy Opening And Closing

JL-261 不锈钢大弯

二段力铰链

Two Way Concealed Hinge



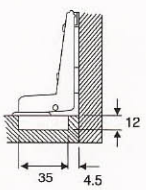



固定
Fixed

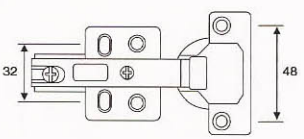

标准技术表
Standard Technical Information

1、柜门开启角度
Cupboard Door Opening Angle

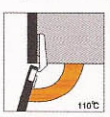

2、柜门安装方式
Cupboard Door Installation Method

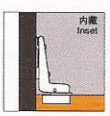

表面处理: 钢色
主要材质: 不锈钢
适合门厚: 14~22毫米
开启角度: 115°
最大承重: 8kg/2只
适用范围: 各式木质柜门
主要功能: 二段力、快拆式、带饰盖、开合轻柔

Surface Treatment: Steel Color
Main Materials: Stainless Steel
Max Thickness Of Door: 14–22mm
Open The Angle: 105°
Max Bearing Capacity: 8kg/2pcs
Range Of Application: Various Wood Furniture Doors
Main Functions: Two Way Force, Quick Dismounting, With Cover, Easy Opening And Closing

JL-262 不锈钢直角

二段力铰链
Two Way Concealed Hinge

表面处理: 钢色
主要材质: 不锈钢
适合门厚: 14-22毫米
开启角度: 115°
最大承重: 8kg/2只
适用范围: 各式木质柜门
主要功能: 二段力、快拆式、带饰盖、开合轻柔

Surface Treatment: Steel Color
Main Materials: Stainless Steel
Max Thickness Of Door: 14-22mm
Open The Angle: 105°
Max Bearing Capacity: 8kg/2pcs
Range Of Application: Various Wood Furniture Doors
Main Functions: Two Way Force, Quick Dismounting, With Cover, Easy Opening And Closing

标准技术表
Standard Technical Information

1、柜门开启角度
Cupboard Door Opening Angle

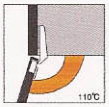

2、柜门安装方式
Cupboard Door Installation Method



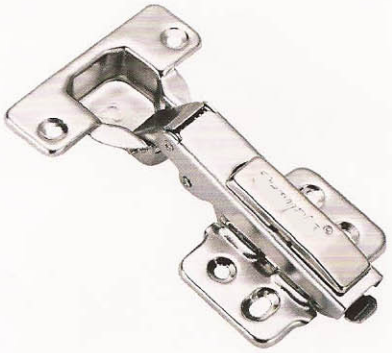

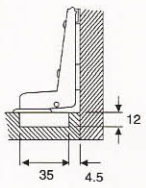

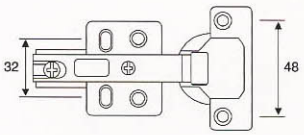



自卸
Self-discharging

JL-262 不锈钢中弯

二段力铰链
Two Way Concealed Hinge

表面处理: 钢色
主要材质: 不锈钢
适合门厚: 14-22毫米
开启角度: 115°
最大承重: 8kg/2只
适用范围: 各式木质柜门
主要功能: 二段力、快拆式、带饰盖、开合轻柔

Surface Treatment: Steel Color
Main Materials: Stainless Steel
Max Thickness Of Door: 14-22mm
Open The Angle: 105°
Max Bearing Capacity: 8kg/2pcs
Range Of Application: Various Wood Furniture Doors
Main Functions: Two Way Force, Quick Dismounting, With Cover, Easy Opening And Closing

标准技术表
Standard Technical Information

1、柜门开启角度
Cupboard Door Opening Angle

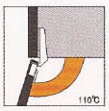

2、柜门安装方式
Cupboard Door Installation Method



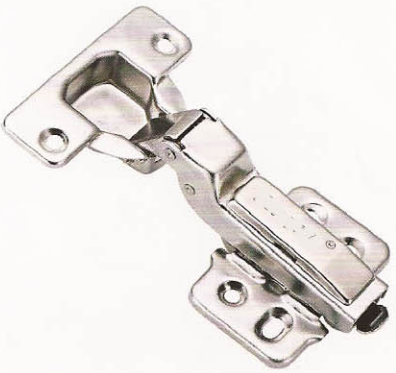

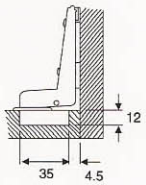

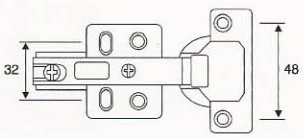



自卸
Self-discharging

JL-262 不锈钢大弯

二段力铰链
Two Way Concealed Hinge

表面处理: 钢色
主要材质: 不锈钢
适合门厚: 14-22毫米
开启角度: 115°
最大承重: 8kg/2只
适用范围: 各式木质柜门
主要功能: 二段力、快拆式、带饰盖、开合轻柔

Surface Treatment: Steel Color
Main Materials: Stainless Steel
Max Thickness Of Door: 14-22mm
Open The Angle: 105°
Max Bearing Capacity: 8kg/2pcs
Range Of Application: Various Wood Furniture Doors
Main Functions: Two Way Force, Quick Dismounting, With Cover, Easy Opening And Closing

标准技术表
Standard Technical Information

1、柜门开启角度
Cupboard Door Opening Angle

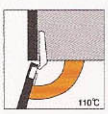

2、柜门安装方式
Cupboard Door Installation Method

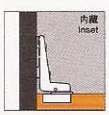

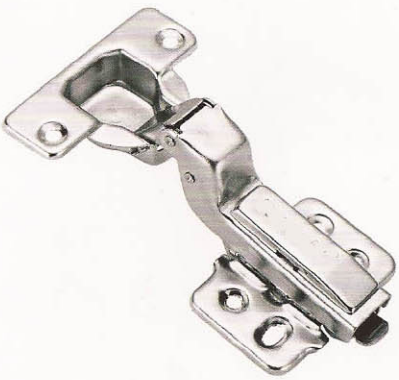

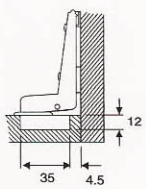

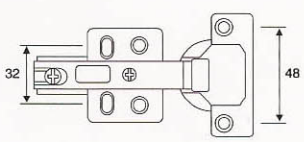



自卸
Self-discharging

JL-265 铁
JL-267 不锈钢 直角

直臂液压暗铰链
Hydraulic concealed hinge

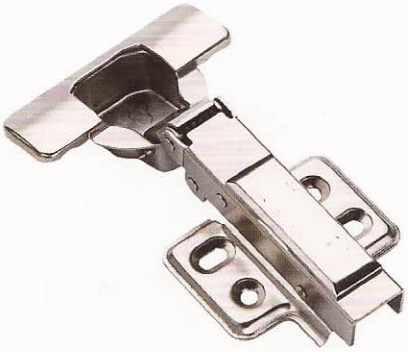

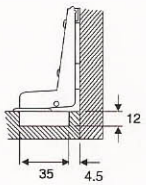

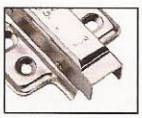

固定
Fixed

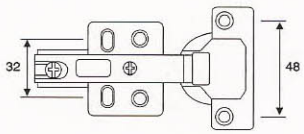

标准技术表
Standard Technical Information

1、柜门开启角度
Cupboard Door Opening Angle

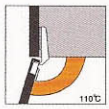

2、柜门安装方式
Cupboard Door Installation Method



表面处理: 钢色
主要材质: 铁/不锈钢
适合门厚: 14~22毫米
开启角度: 115°
最大承重: 8kg/2只
适用范围: 各式木质柜门
主要功能: 柜门扇开合轻柔，自动缓慢关门,静音

Surface Treatment: Steel Color
Main Materials: Iron,Stainless Steel
Max Thickness Of Door: 14–22mm
Open The Angle: 105°
Max Bearing Capacity: 8kg/2pcs
Range Of Application: Various Wood Furniture Doors
Main Functions: Door Leaf Opening/closing, Auto Slowly Closing, Mute

JL-265 铁
JL-267 不锈钢 直角

中弯液压暗铰链
Hydraulic concealed hinge

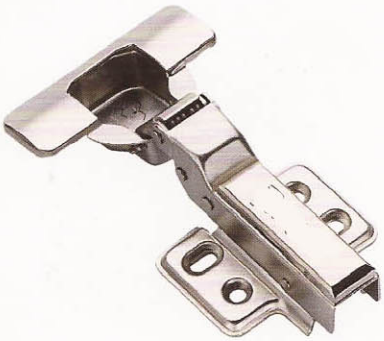

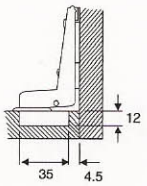



固定
Fixed

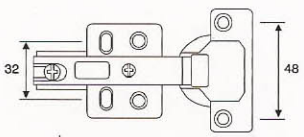

标准技术表
Standard Technical Information

1、柜门开启角度
Cupboard Door Opening Angle

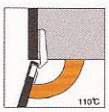

2、柜门安装方式
Cupboard Door Installation Method



表面处理: 钢色
主要材质: 铁/不锈钢
适合门厚: 14~22毫米
开启角度: 115°
最大承重: 8kg/2只
适用范围: 各式木质柜门
主要功能: 柜门扇开合轻柔，自动缓慢关门,静音

Surface Treatment: Steel Color
Main Materials: Iron,Stainless Steel
Max Thickness Of Door: 14–22mm
Open The Angle: 105°
Max Bearing Capacity: 8kg/2pcs
Range Of Application: Various Wood Furniture Doors
Main Functions: Door Leaf Opening/closing, Auto Slowly Closing, Mute

JL-265 铁
JL-267 不锈钢 大弯

大弯液压暗铰链
Hydraulic concealed hinge

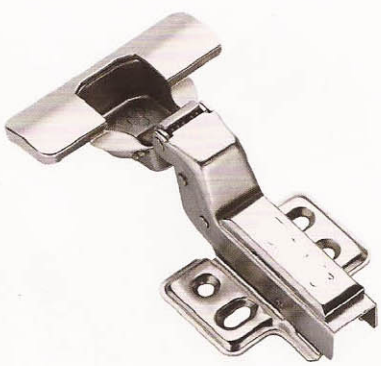

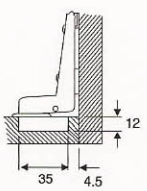

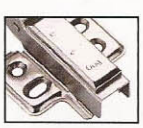

固定
Fixed

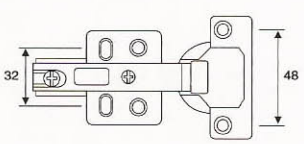

标准技术表
Standard Technical Information

1、柜门开启角度
Cupboard Door Opening Angle

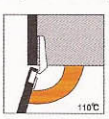

2、柜门安装方式
Cupboard Door Installation Method

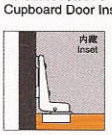

表面处理: 钢色
主要材质: 铁/不锈钢
适合门厚: 14~22毫米
开启角度: 115°
最大承重: 8kg/2只
适用范围: 各式木质柜门
主要功能: 柜门扇开合轻柔，自动缓慢关门,静音

Surface Treatment: Steel Color
Main Materials: Iron,Stainless Steel
Max Thickness Of Door: 14–22mm
Open The Angle: 105°
Max Bearing Capacity: 8kg/2pcs
Range Of Application: Various Wood Furniture Doors
Main Functions: Door Leaf Opening/closing, Auto Slowly Closing, Mute

JL-266 铁
JL-268 不锈钢 直角

直臂液压暗铰链
Hydraulic concealed hinge

表面处理: 钢色
主要材质: 铁/不锈钢
适合门厚: 14~22毫米
开启角度: 115°
最大承重: 8kg/2只
适用范围: 各式木质柜门
主要功能: 柜门扇开合轻柔，自动缓慢关门,静音

Surface Treatment: Steel Color
Main Materials: Iron,Stainless Steel
Max Thickness Of Door: 14–22mm
Open The Angle: 105°
Max Bearing Capacity: 8kg/2pcs
Range Of Application: Various Wood Furniture Doors
Main Functions: Door Leaf Opening/closing, Auto Slowly Closing, Mute

标准技术表
Standard Technical Information

1、柜门开启角度
Cupboard Door Opening Angle

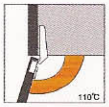

2、柜门安装方式
Cupboard Door Installation Method



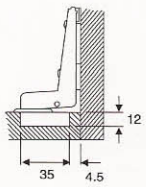

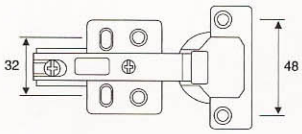

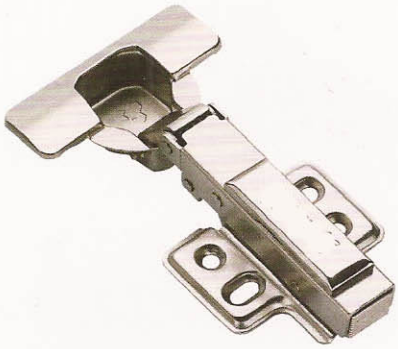



自卸
Self-discharging

JL-266 铁
JL-268 不锈钢 中弯

中弯液压暗铰链
Hydraulic concealed hinge

表面处理: 钢色
主要材质: 铁/不锈钢
适合门厚: 14~22毫米
开启角度: 115°
最大承重: 8kg/2只
适用范围: 各式木质柜门
主要功能: 柜门扇开合轻柔，自动缓慢关门,静音

Surface Treatment: Steel Color
Main Materials: Iron,Stainless Steel
Max Thickness Of Door: 14–22mm
Open The Angle: 105°
Max Bearing Capacity: 8kg/2pcs
Range Of Application: Various Wood Furniture Doors
Main Functions: Door Leaf Opening/closing, Auto Slowly Closing, Mute

标准技术表
Standard Technical Information

1、柜门开启角度
Cupboard Door Opening Angle

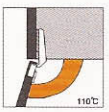

2、柜门安装方式
Cupboard Door Installation Method



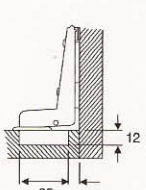

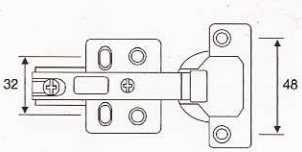

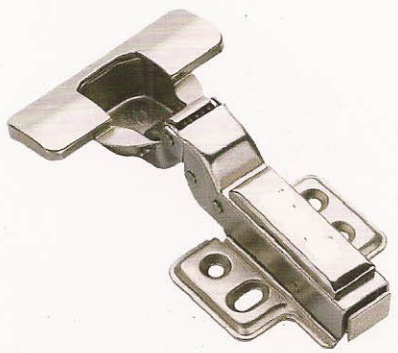

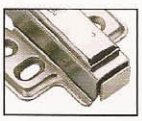

自卸
Self-discharging

JL-266 铁
JL-268 不锈钢 大弯

大弯液压暗铰链
Hydraulic concealed hinge

表面处理: 钢色
主要材质: 铁/不锈钢
适合门厚: 14~22毫米
开启角度: 115°
最大承重: 8kg/2只
适用范围: 各式木质柜门
主要功能: 柜门扇开合轻柔，自动缓慢关门,静音

Surface Treatment: Steel Color
Main Materials: Iron,Stainless Steel
Max Thickness Of Door: 14–22mm
Open The Angle: 105°
Max Bearing Capacity: 8kg/2pcs
Range Of Application: Various Wood Furniture Doors
Main Functions: Door Leaf Opening/closing, Auto Slowly Closing, Mute

标准技术表
Standard Technical Information

1、柜门开启角度
Cupboard Door Opening Angle

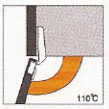

2、柜门安装方式
Cupboard Door Installation Method



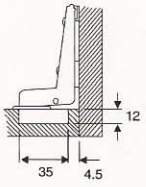

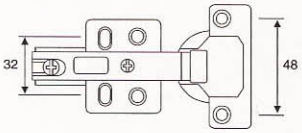



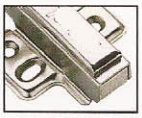

自卸
Self-discharging

JL-756 直角

二段力铰链
Two Way Concealed Hinge

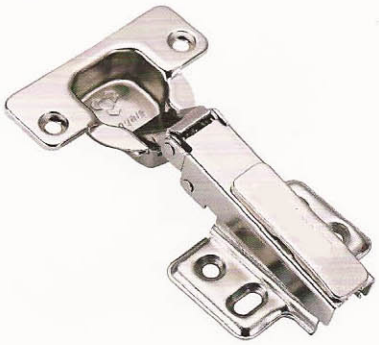

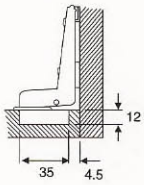



固定
Fixed

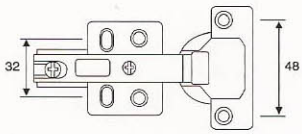

标准技术表
Standard Technical Information

1、柜门开启角度
Cupboard Door Opening Angle

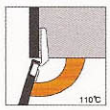

2、柜门安装方式
Cupboard Door Installation Method



表面处理: 镀镍
主要材质: 冷轧钢板
适合门厚: 14~22毫米
开启角度: 115°
最大承重: 8kg/2只
适用范围: 各式木质柜门
主要功能: 二段力、快拆式、带饰盖、开合轻柔

Surface Treatment: Nickel Plated
Main Materials: Cold-rolled Steel
Max Thickness Of Door: 14–22mm
Open The Angle: 105°
Max Bearing Capacity: 8kg/2pcs
Range Of Application: Various Wood Furniture Doors
Main Functions: Two Way Force, Quick Dismounting, With Cover, Easy Opening And Closing

JL-756 中弯

二段力铰链
Two Way Concealed Hinge



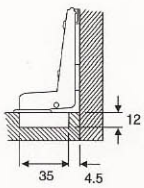



固定
Fixed

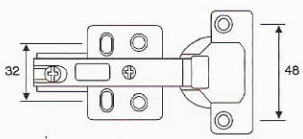

标准技术表
Standard Technical Information

1、柜门开启角度
Cupboard Door Opening Angle

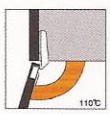

2、柜门安装方式
Cupboard Door Installation Method



表面处理: 镀镍
主要材质: 冷轧钢板
适合门厚: 14~22毫米
开启角度: 115°
最大承重: 8kg/2只
适用范围: 各式木质柜门
主要功能: 二段力、快拆式、带饰盖、开合轻柔

Surface Treatment: Nickel Plated
Main Materials: Cold-rolled Steel
Max Thickness Of Door: 14–22mm
Open The Angle: 105°
Max Bearing Capacity: 8kg/2pcs
Range Of Application: Various Wood Furniture Doors
Main Functions: Two Way Force, Quick Dismounting, With Cover, Easy Opening And Closing

JL-756 大弯

二段力铰链
Two Way Concealed Hinge



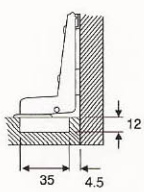

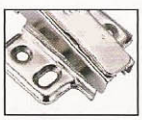

固定
Fixed

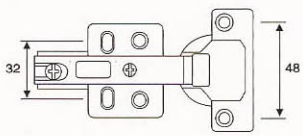

标准技术表
Standard Technical Information

1、柜门开启角度
Cupboard Door Opening Angle

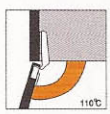

2、柜门安装方式
Cupboard Door Installation Method



表面处理: 镀镍
主要材质: 冷轧钢板
适合门厚: 14~22毫米
开启角度: 115°
最大承重: 8kg/2只
适用范围: 各式木质柜门
主要功能: 二段力、快拆式、带饰盖、开合轻柔

Surface Treatment: Nickel Plated
Main Materials: Cold-rolled Steel
Max Thickness Of Door: 14–22mm
Open The Angle: 105°
Max Bearing Capacity: 8kg/2pcs
Range Of Application: Various Wood Furniture Doors
Main Functions: Two Way Force, Quick Dismounting, With Cover, Easy Opening And Closing

JL–766 直角

二段力铰链
Two Way Concealed Hinge

表面处理: 镀镍
主要材质: 冷轧钢板
适合门厚: 14~22毫米
开启角度: 115°
最大承重: 8kg/2只
适用范围: 各式木质柜门
主要功能: 二段力、快拆式、带饰盖、开合轻柔

Surface Treatment: Nickel Plated
Main Materials: Cold–rolled Steel
Max Thickness Of Door: 14–22mm
Open The Angle: 105°
Max Bearing Capacity: 8kg/2pcs
Range Of Application: Various Wood Furniture Doors
Main Functions: Two Way Force, Quick Dismounting, With Cover, Easy Opening And Closing

标准技术表
Standard Technical Information

1、柜门开启角度
Cupboard Door Opening Angle

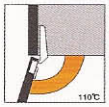

2、柜门安装方式
Cupboard Door Installation Method





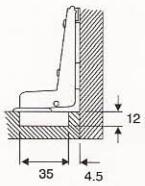

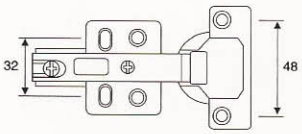



自卸
Self–discharging

JL–766 中弯

二段力铰链
Two Way Concealed Hinge

表面处理: 镀镍
主要材质: 冷轧钢板
适合门厚: 14~22毫米
开启角度: 115°
最大承重: 8kg/2只
适用范围: 各式木质柜门
主要功能: 二段力、快拆式、带饰盖、开合轻柔

Surface Treatment: Nickel Plated
Main Materials: Cold–rolled Steel
Max Thickness Of Door: 14–22mm
Open The Angle: 105°
Max Bearing Capacity: 8kg/2pcs
Range Of Application: Various Wood Furniture Doors
Main Functions: Two Way Force, Quick Dismounting, With Cover, Easy Opening And Closing

标准技术表
Standard Technical Information

1、柜门开启角度
Cupboard Door Opening Angle

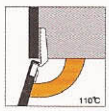

2、柜门安装方式
Cupboard Door Installation Method



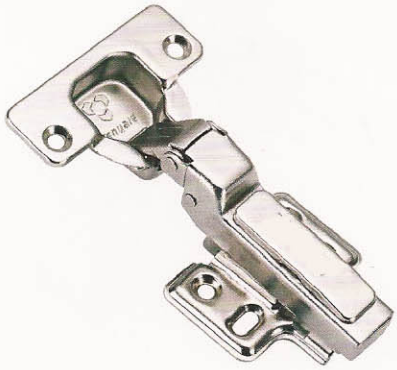

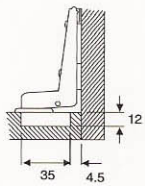

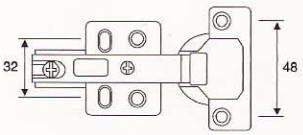

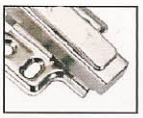

自卸
Self–discharging

JL–766 大弯

二段力铰链
Two Way Concealed Hinge

表面处理: 镀镍
主要材质: 冷轧钢板
适合门厚: 14~22毫米
开启角度: 115°
最大承重: 8kg/2只
适用范围: 各式木质柜门
主要功能: 二段力、快拆式、带饰盖、开合轻柔

Surface Treatment: Nickel Plated
Main Materials: Cold–rolled Steel
Max Thickness Of Door: 14–22mm
Open The Angle: 105°
Max Bearing Capacity: 8kg/2pcs
Range Of Application: Various Wood Furniture Doors
Main Functions: Two Way Force, Quick Dismounting, With Cover, Easy Opening And Closing

标准技术表
Standard Technical Information

1、柜门开启角度
Cupboard Door Opening Angle

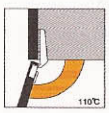

2、柜门安装方式
Cupboard Door Installation Method

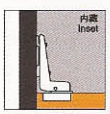

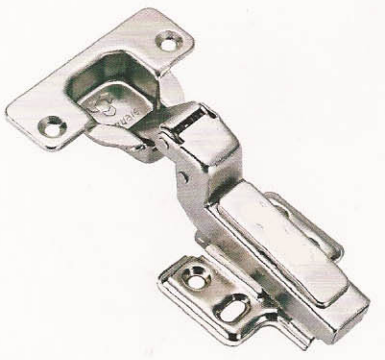

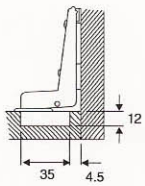

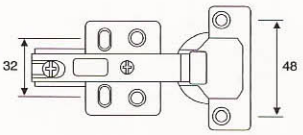



自卸
Self–discharging

JL-768 直角(移位)

二段力铰链
Two Way Concealed Hinge

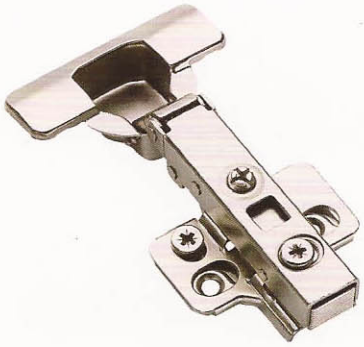

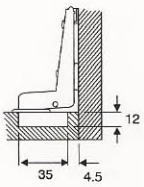

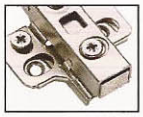

自卸
Self-discharging

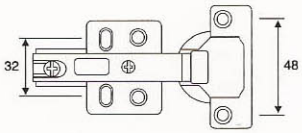

标准技术表
Standard Technical Information

1、柜门开启角度
Cupboard Door Opening Angle

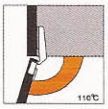

2、柜门安装方式
Cupboard Door Installation Method



表面处理: 镀镍
主要材质: 冷轧钢板
适合门厚: 14-22毫米
开启角度: 115°
最大承重: 8kg/2只
适用范围: 各式木质柜门
主要功能: 二段力、快拆式、带饰盖、开合轻柔

Surface Treatment: Nickel Plated
Main Materials: Cold-rolled Steel
Max Thickness Of Door: 14-22mm
Open The Angle: 105°
Max Bearing Capacity: 8kg/2pcs
Range Of Application: Various Wood Furniture Doors
Main Functions: Two Way Force, Quick Dismounting, With Cover, Easy Opening And Closing

JL-768 中弯(移位)

二段力铰链
Two Way Concealed Hinge



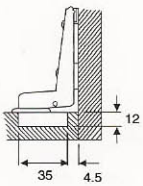

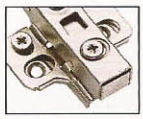

自卸
Self-discharging

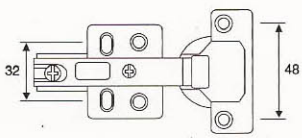

标准技术表
Standard Technical Information

1、柜门开启角度
Cupboard Door Opening Angle

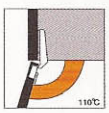

2、柜门安装方式
Cupboard Door Installation Method



表面处理: 镀镍
主要材质: 冷轧钢板
适合门厚: 14-22毫米
开启角度: 115°
最大承重: 8kg/2只
适用范围: 各式木质柜门
主要功能: 二段力、快拆式、带饰盖、开合轻柔

Surface Treatment: Nickel Plated
Main Materials: Cold-rolled Steel
Max Thickness Of Door: 14-22mm
Open The Angle: 105°
Max Bearing Capacity: 8kg/2pcs
Range Of Application: Various Wood Furniture Doors
Main Functions: Two Way Force, Quick Dismounting, With Cover, Easy Opening And Closing

JL-768 大弯(移位)

二段力铰链
Two Way Concealed Hinge



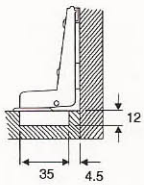

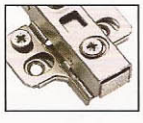

自卸
Self-discharging

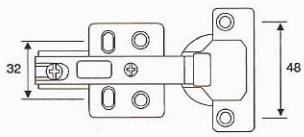

标准技术表
Standard Technical Information

1、柜门开启角度
Cupboard Door Opening Angle

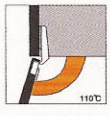

2、柜门安装方式
Cupboard Door Installation Method

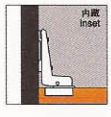

表面处理: 镀镍
主要材质: 冷轧钢板
适合门厚: 14-22毫米
开启角度: 115°
最大承重: 8kg/2只
适用范围: 各式木质柜门
主要功能: 二段力、快拆式、带饰盖、开合轻柔

Surface Treatment: Nickel Plated
Main Materials: Cold-rolled Steel
Max Thickness Of Door: 14-22mm
Open The Angle: 105°
Max Bearing Capacity: 8kg/2pcs
Range Of Application: Various Wood Furniture Doors
Main Functions: Two Way Force, Quick Dismounting, With Cover, Easy Opening And Closing

托底式道轨安装技术
The Installation Technology of Bracket type Slide Rail

安装尺寸图
Installation dimension

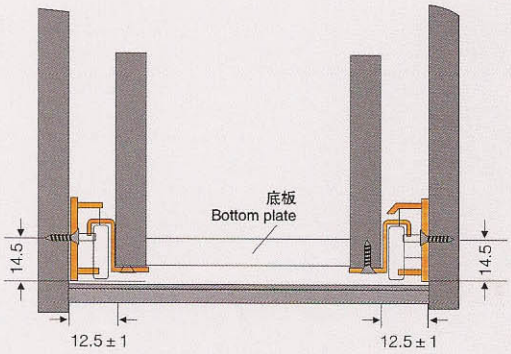

托底式道轨抽屉
The drawer with bracket type slide rail

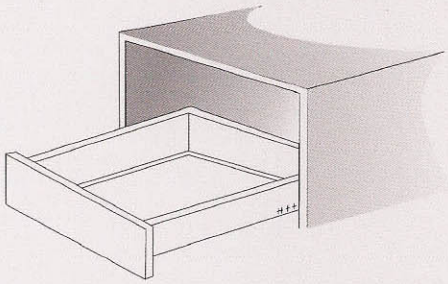

产品特点
Product Characteristics

1、道轨安装托夹在抽屉底部。
2、道轨滑入至50mm时会自行没入关闭。
3、道轨安装简易，并可把抽屉整体取出。
4、特备双停止位，抽屉拉出时易停位。

1.Brace clamp of slide rail is installed at the bottom of drawer.
2.It will self-closed when the slide rail move to the point of 50mm.
3.The installation of slide rail is very easy and the drawer can be took out in whole.
4.Special double stopping position, it's easy to stop when pull the drawer.

安装示意
Installation indication

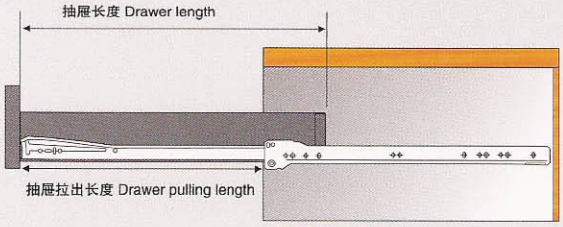

安装方式
Installation method

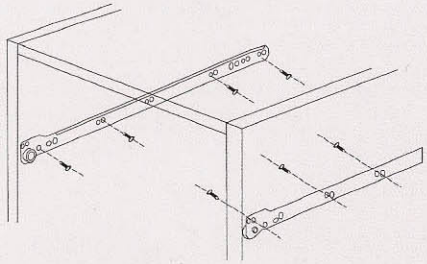

❶ 安装双固定轨在水平平行位置，(建议每支轨安装4粒自攻螺丝。)
Install double fixed rails too the horizontal position,
(four automaticscrews for each rail is suggested).

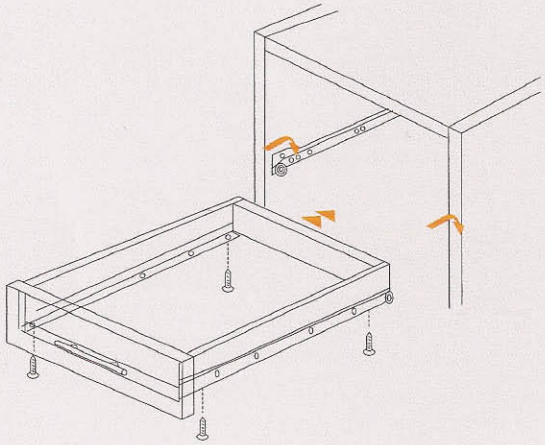

❷ 安装托底轨在抽屉下部。
Fix bracket type slide rail to the drawer bottom.

钢侧板道轨安装技术

The Installation Technology of Steel Slide plate Slide Rail

安装示意

Installation indication

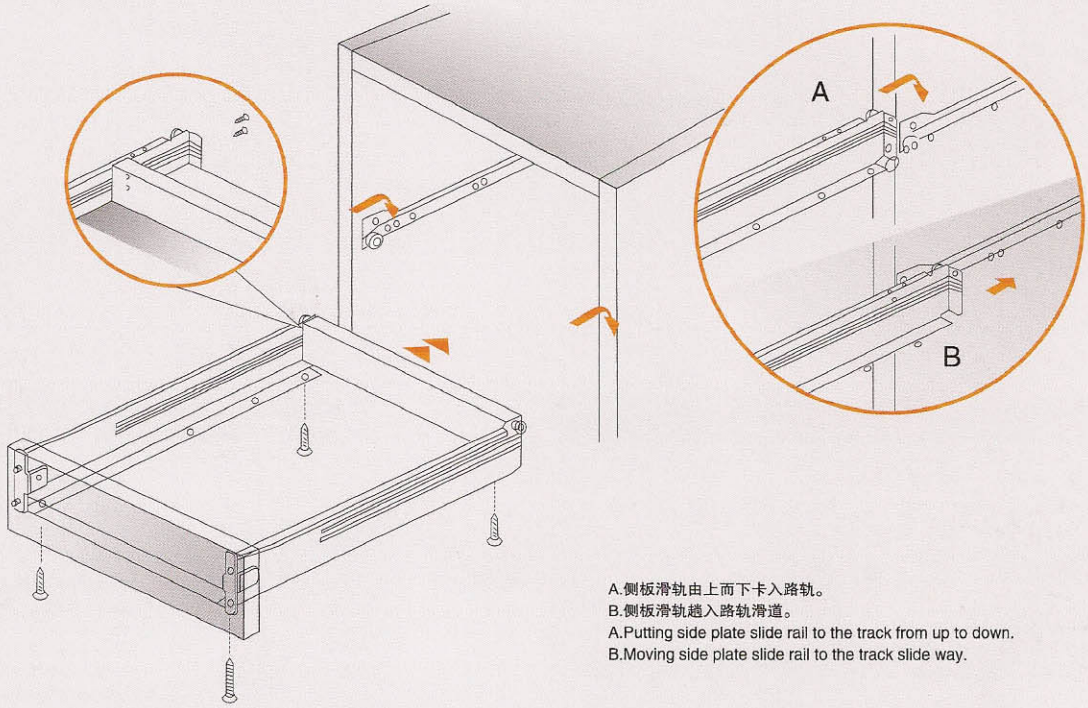

A.侧板滑轨由上而下卡入路轨。
B.侧板滑轨趟入路轨滑道。
A.Putting side plate slide rail to the track from up to down.
B.Moving side plate slide rail to the track slide way.

Installation of installation steps

1.将调整位固定在面板上（左、右）。
Fixing the adjusting position to the faceplate(left/righe).

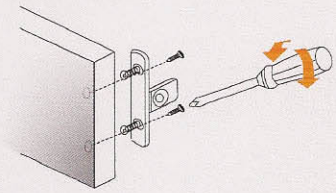

2.将面板插进侧板滑轨中。
Inserting faceplate to the slide rail.

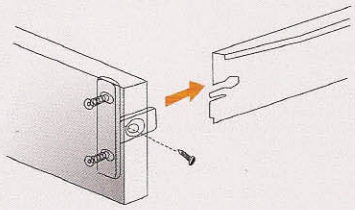

3、用工具拧紧固定螺丝。
Screwing down the fixing screw by tools.

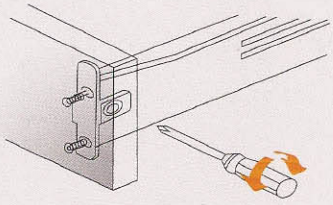

4、安装侧板滑轨底板及后板。
Installing the bottom plate and back plate of side plate slide rail.

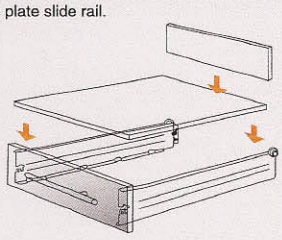

5、安装固定轨在固定位置（左右，CR、CL）
Installing the fixing rail at fixing position(left and right, CR.CL)

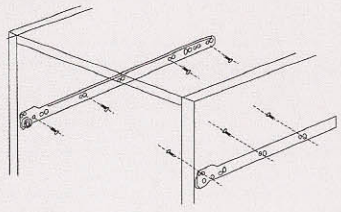

6、调整抽屉面板至适合位置。
Adjusting the faceplate of drawer to the suitable place.

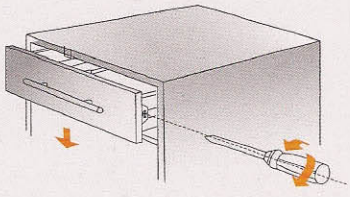

二节超滑托底道轨
Two Festival Super Smooth Slide Rail

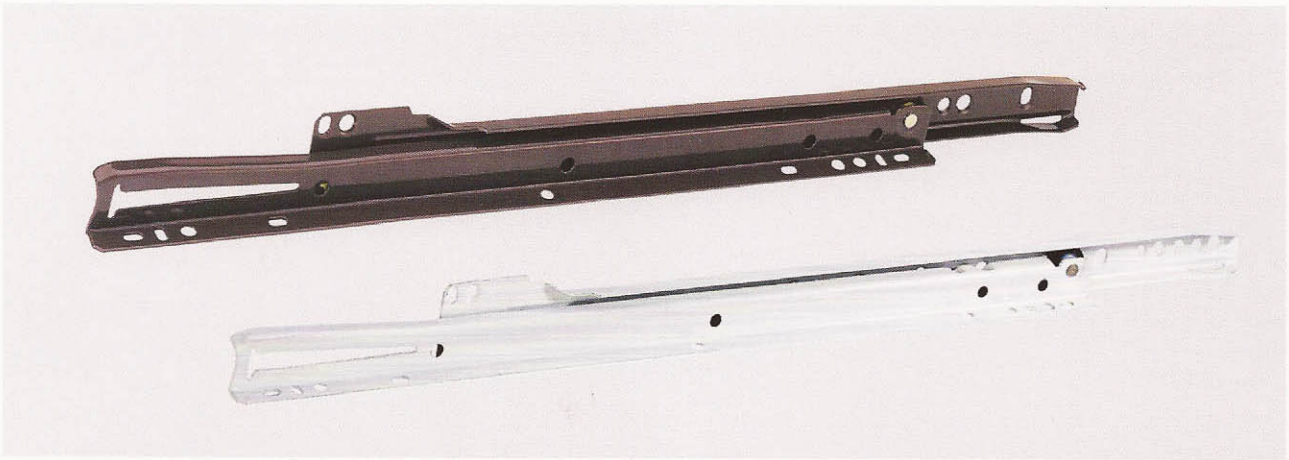

产品属性 Product Features

- 表面处理: 白色 / Finish: White
- 主要材质: 冷轧钢板 / Materials: Cold-rolled steel
- 最大承重: 25kg / Max Weight: 25kg
- 适用范围: 各式抽屉 / Available for: All kinds of drawers
- 特性: 静音滑动顺畅 / Features: Smooth and silence

产品规格：10" 12" 14" 16" 18" 20" 22" 24"
Dimension of product:10" 12" 14" 16" 18" 20" 22" 24"

32 system

25kg

超滑轮
Super smooth slide roller

产品特性：
独特而平滑坚固的滑轮，可使滑行减少摩擦，确保有效顺滑。
Product Characteristics:
Unique smooth and steady slide roller, which can reduce the frication and become more smooth therefore.

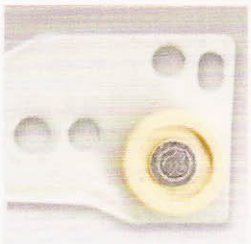

安装孔位示意图
The indication of installation

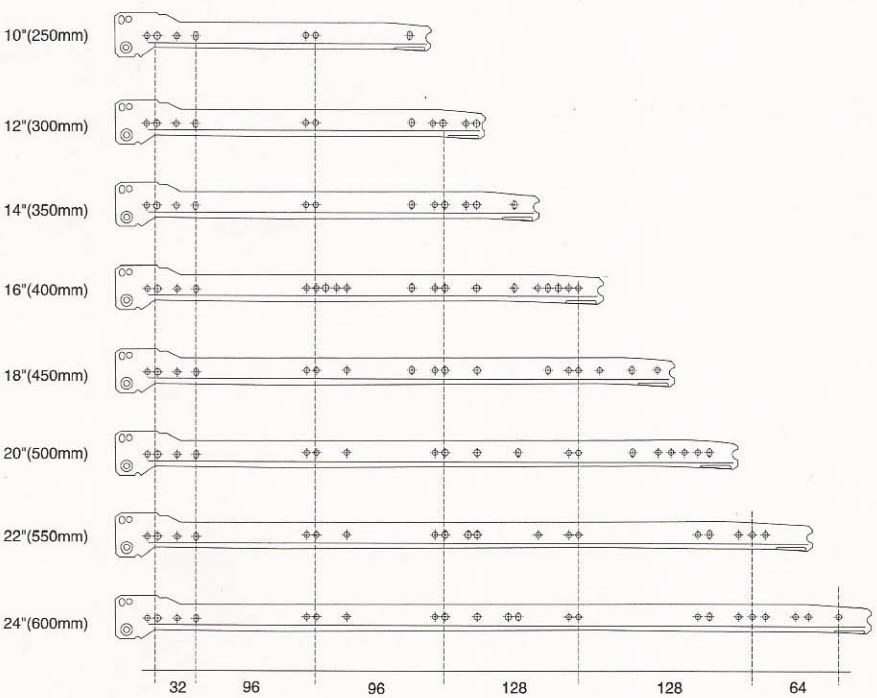

二节超滑托底道轨
Two Festival Super Smooth Slide Rail

二节超滑托底道轨安装示意图
Installation Indication Of Two Festival Super Smooth Slide Rail

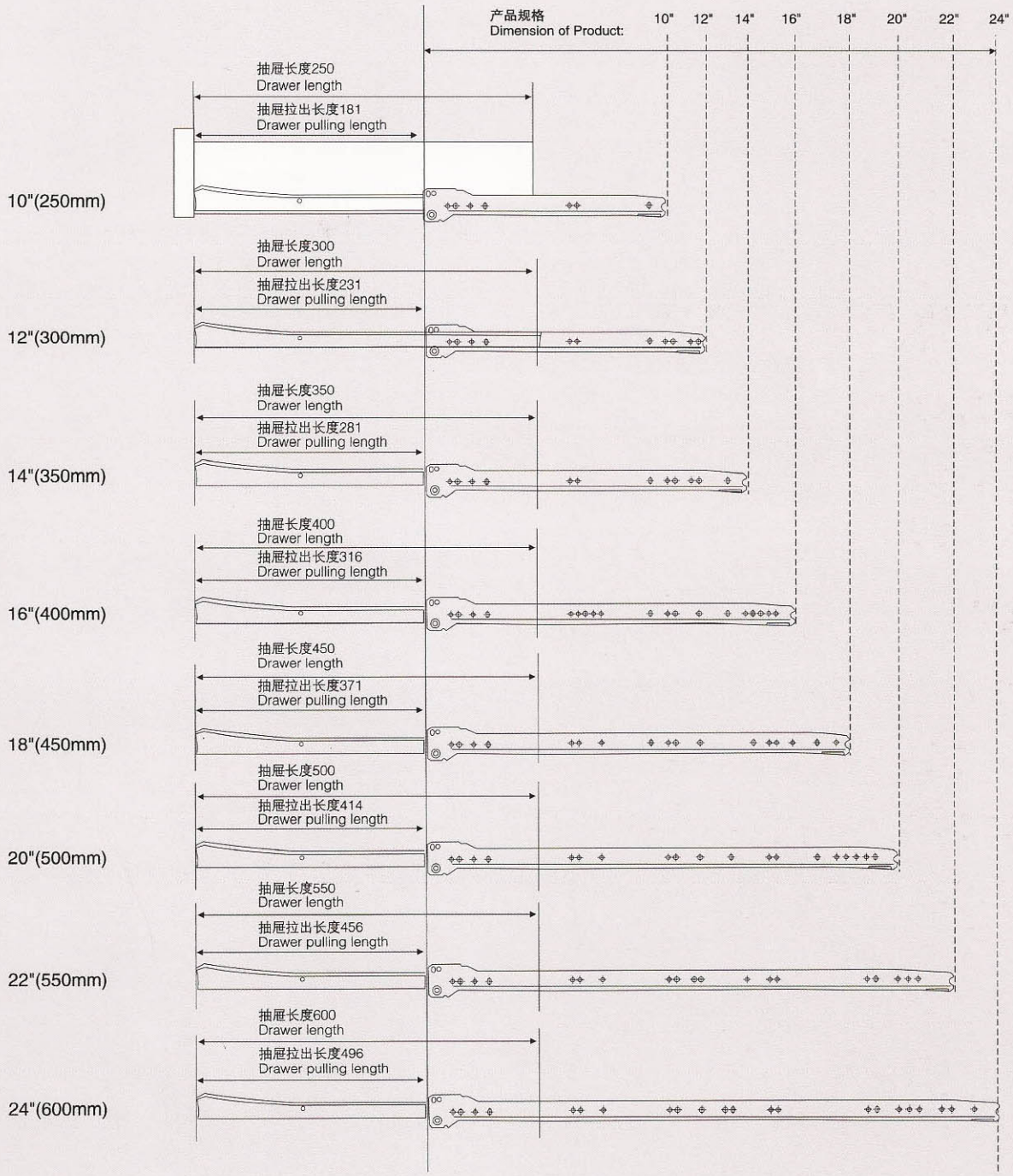

最小柜深=抽屉长度+3
Minimal depth of cupboard = Drawer length+3

三节滚珠道轨安装技术
Installation Technology of Three Linked Ball Bearing Slides

二节滚珠道轨抽屉
The drawer with two linked ball bearing slides

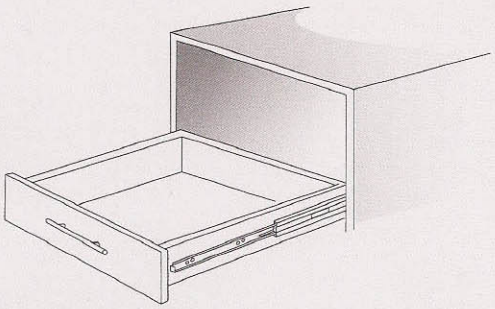

安装尺寸图
Installation dimension

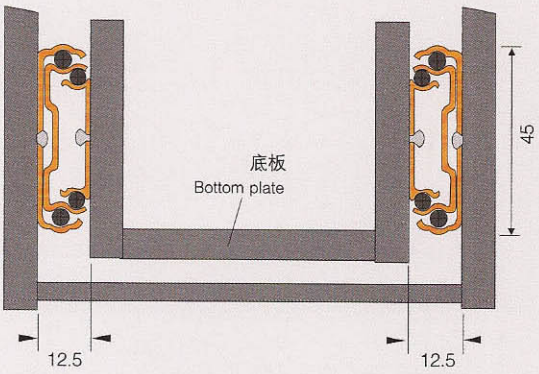

产品特点
Product Characteristics

1.道轨安装于抽屉侧板中间。
2.道轨滑入至尾端可无声定位。
3.道轨安装简易，抽屉可通过拆卸杆平行整体取出。
4.特备防脱钩停止位，抽屉不易脱出。
5.抽屉可完全抽出，便于取放大件物品。

1.Fix the slide rail to the middle of the drawer side plate.
2.It can be positioned silently when the slide rail move to the end.
3.The installation of slide rail is very easy, and the whole drawer can betook out in parallel z by dismounting the rod.
4.With stopping position and anti-hooking devices, the drawer is not easy to be moved out.
5.As drawer can be moved out in whole, so that it's convenient to move large articles.

安装示意
Installation indication

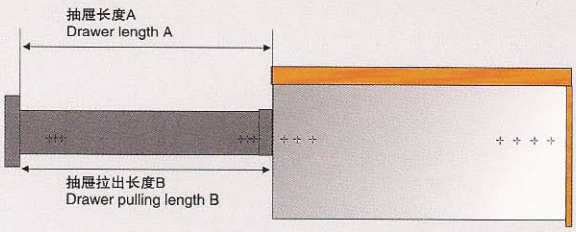

安装方式
Installation method

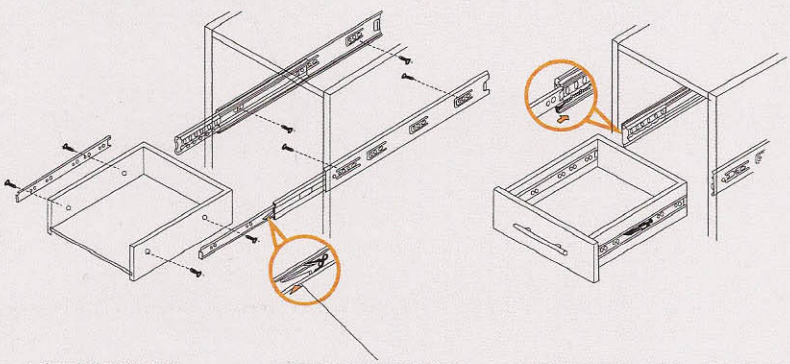

1.水平安装双外固定轨
Fixing the double outer fixing rail in horizontal.

取下抽屉时请按下拆卸杆
Taking drawer off, please press dismounting rod.

2.安装内固定轨于抽屉上，并卡住中间固定轨平行越滑入即可
Install the inner fixing rail to the drawer, and locking the middle fixing rail in order to move in horizontal.

道轨内结婚图
Inner structure of rail

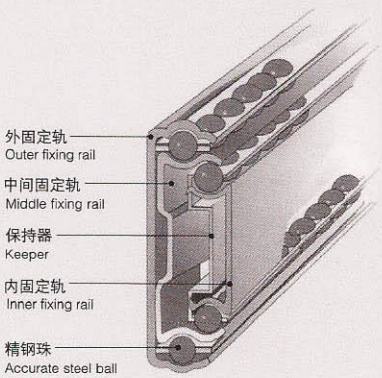

三节缓冲滚珠道轨

soudless Semi-automatic Drawer Slide



产品属性 Product Features

- 表面处理: 白色、咖啡色、米黄色;
  Finish: White
- 主要材质: 冷轧钢板
  Materials: Cold-rolled steel
- 最大承重: 25kg
  Max Weight: 25kg
- 适用范围: 各式抽屉
  Available for: All kinds of drawers
- 特性: 静音滑动顺畅
  Features: Smooth and silence

32 system

25kg

三节轨安装示意图

The Installation installation

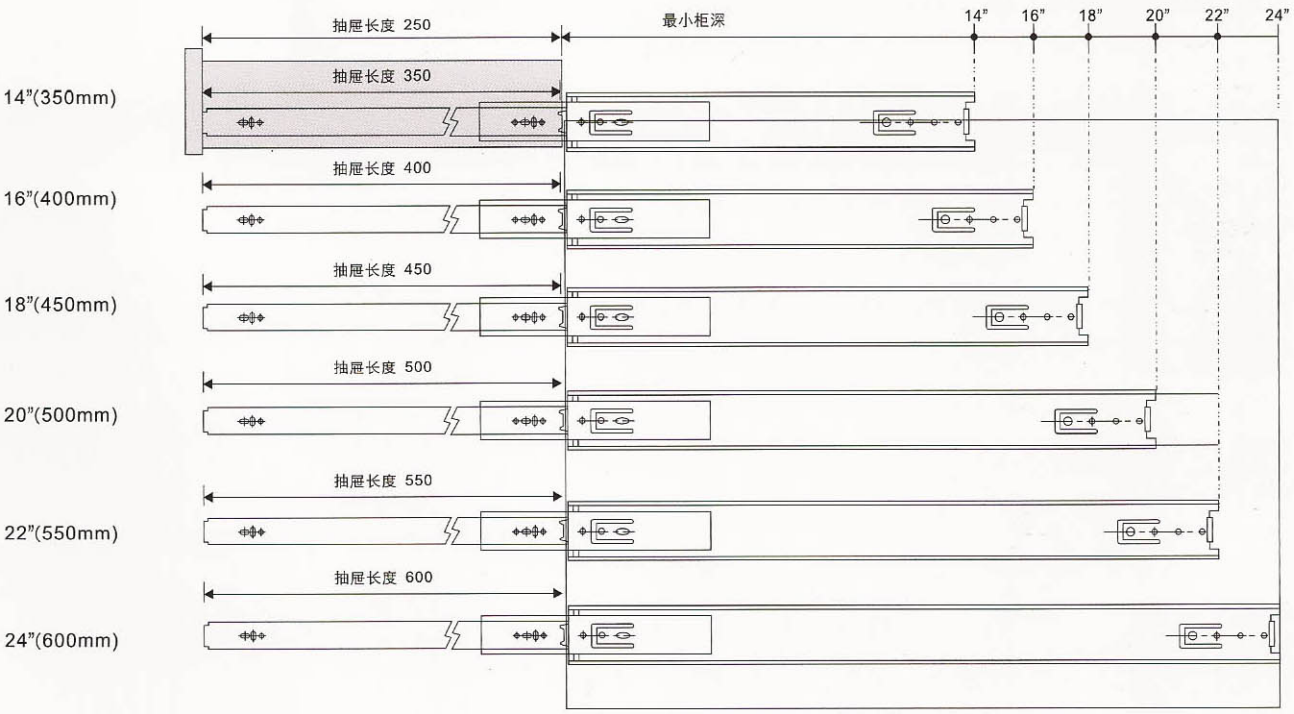

最小柜深=抽屉长度+3

Minimal depth of cupboard = Drawer length+3

三节滚珠道轨
Three Linked Ball Bearing Slides

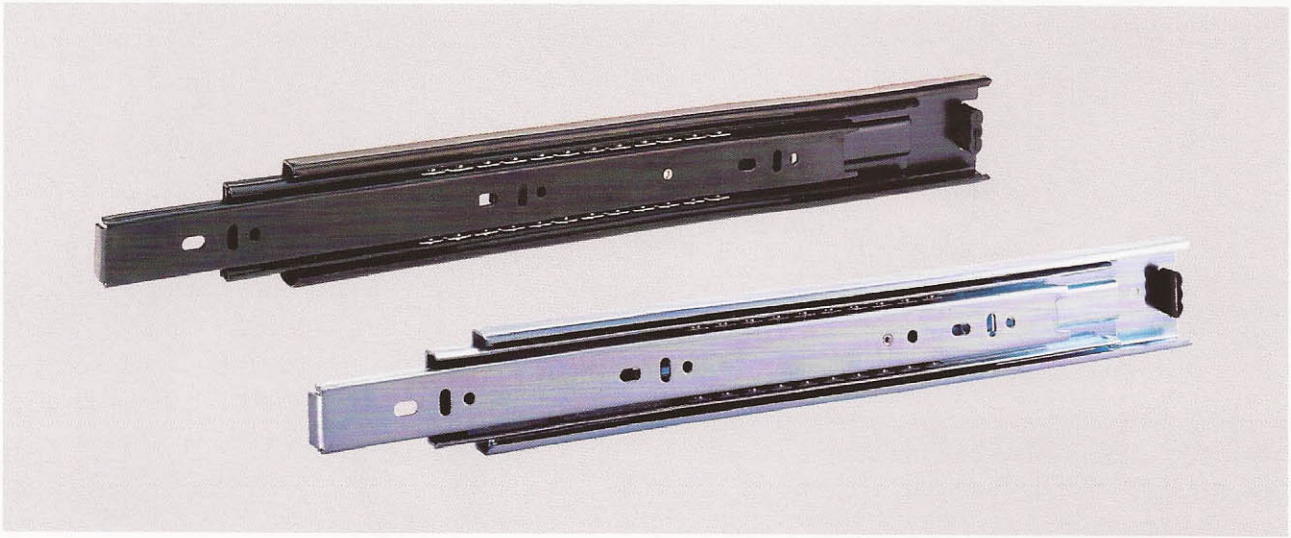

产品属性 Product Features

- 表面处理: 镀蓝锌、黑色
  Finish: Blue Zinc Plated Black
- 主要材质: 冷轧钢板
  Materials: Cold-rolled steel
- 最大承重: 45kg
  Max Weight: 45kg
- 适用范围: 各式抽屉
  Available for: All kinds of drawers
- 特性: 静音滑动顺畅
  Features: Smooth and silence

产品规格：10" 12" 14" 16" 18" 20" 22" 24"
Dimension of product:10" 12" 14" 16" 18" 20" 22" 24"

45kg

规格 dimension / 尺寸 size	10"	12"	14"	16"	18"	20"	22"	24"
L1								610
L2		160						160
L3								128
L4				64	128	64	64	64
L5			68	50	32		68	68
L6								

安装孔位示意图
Installation indication
(英制尺寸) Inches

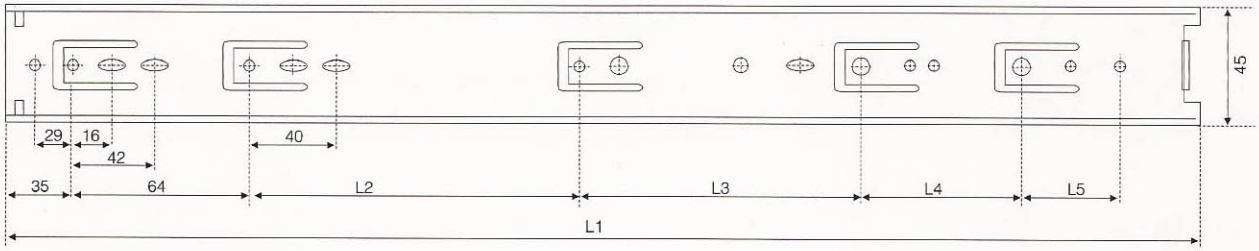

三节滚珠道轨
Three Linked Ball Bearing Slides

三节滚珠道轨安装示意图
Installation Indication Of Three Linked Balll Bearing Slides

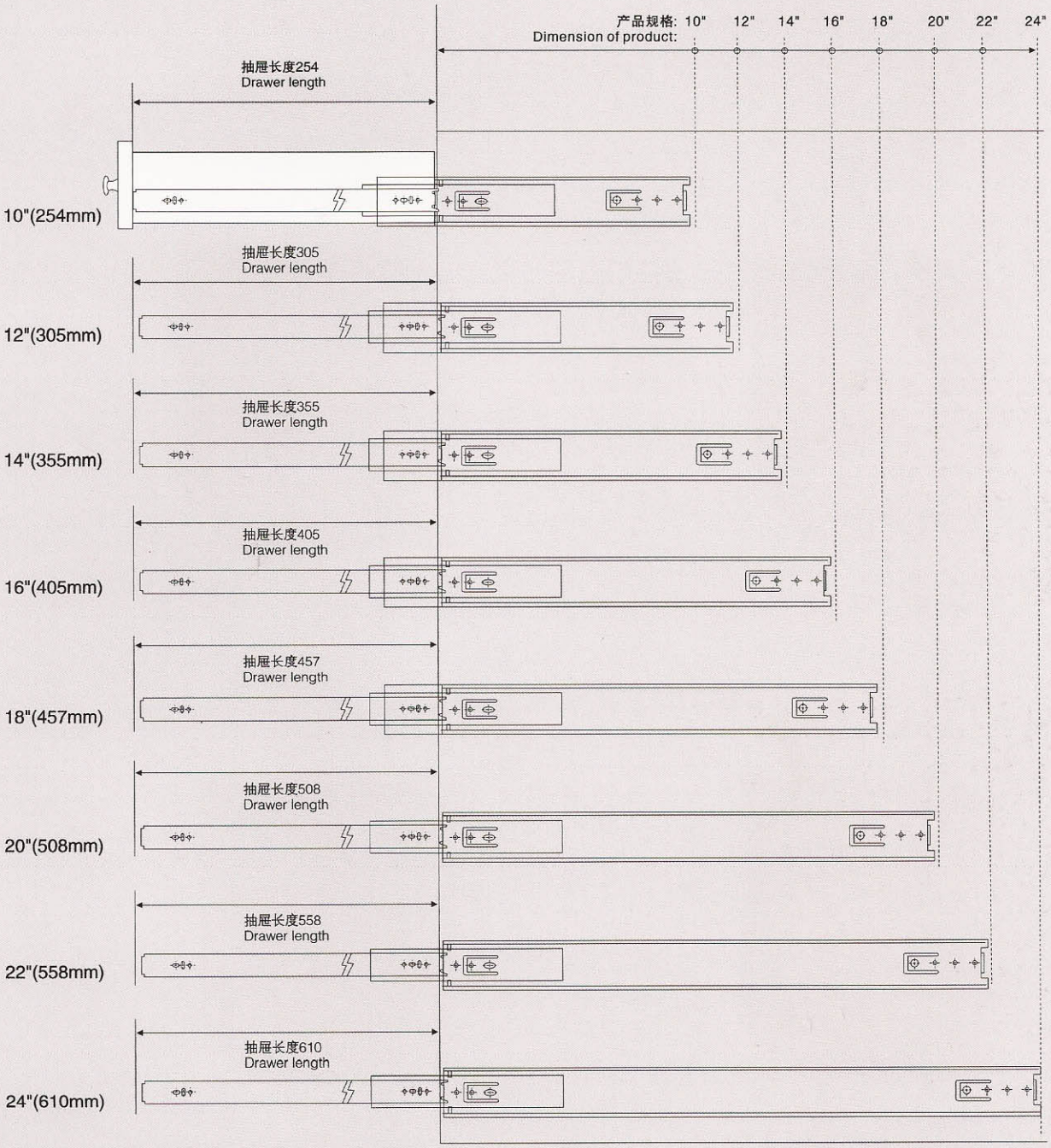

最小柜深=抽屉长度+3
Minimal depth of cupboard = Drawer length+3

家具锁的应用
The Application of Furniture Lock

抽屉类
Drawer

家具的各式抽屉是不可缺少的部分，家具锁系列提供了多种的款式，配合不同造型及功能的抽屉。
Drawers of furniture is necessary, there are various furniture locks matching with diff erent designs and functions of drawers.

长芯锁可使面板遮盖柜边
Long cylinder cebinet lock can make the faceplate cover the cupboard.

短芯锁可使面板嵌入柜边
Short cylinder cabinet lock can embed faceplate to cupboard.



遮盖式
Covered type



嵌入式
Embedded type

正侧三连锁可同时控制三个抽屉
Front three-linked lock can control three drawers at the same time.

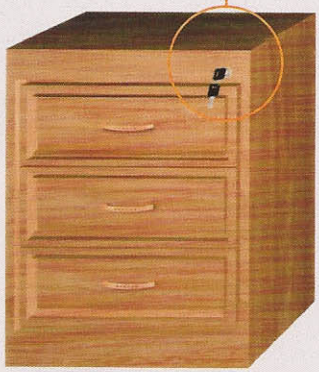

正面三连锁抽屉
Drawer with front three-linked lock



侧面三连锁抽屉
Drawer with side three-linked lock

抽屉选配产品: 道轨系列产品
Matching product of drawer:slide rail series

家具锁的应用
The Application of Furniture Lock

柜门类
Cupboard Door

家具锁系列提供了多种的功能，配合不同造型及材料的柜门。
Furniture lock series provide various functions, suitable for cupboard doors with different designs and materials.

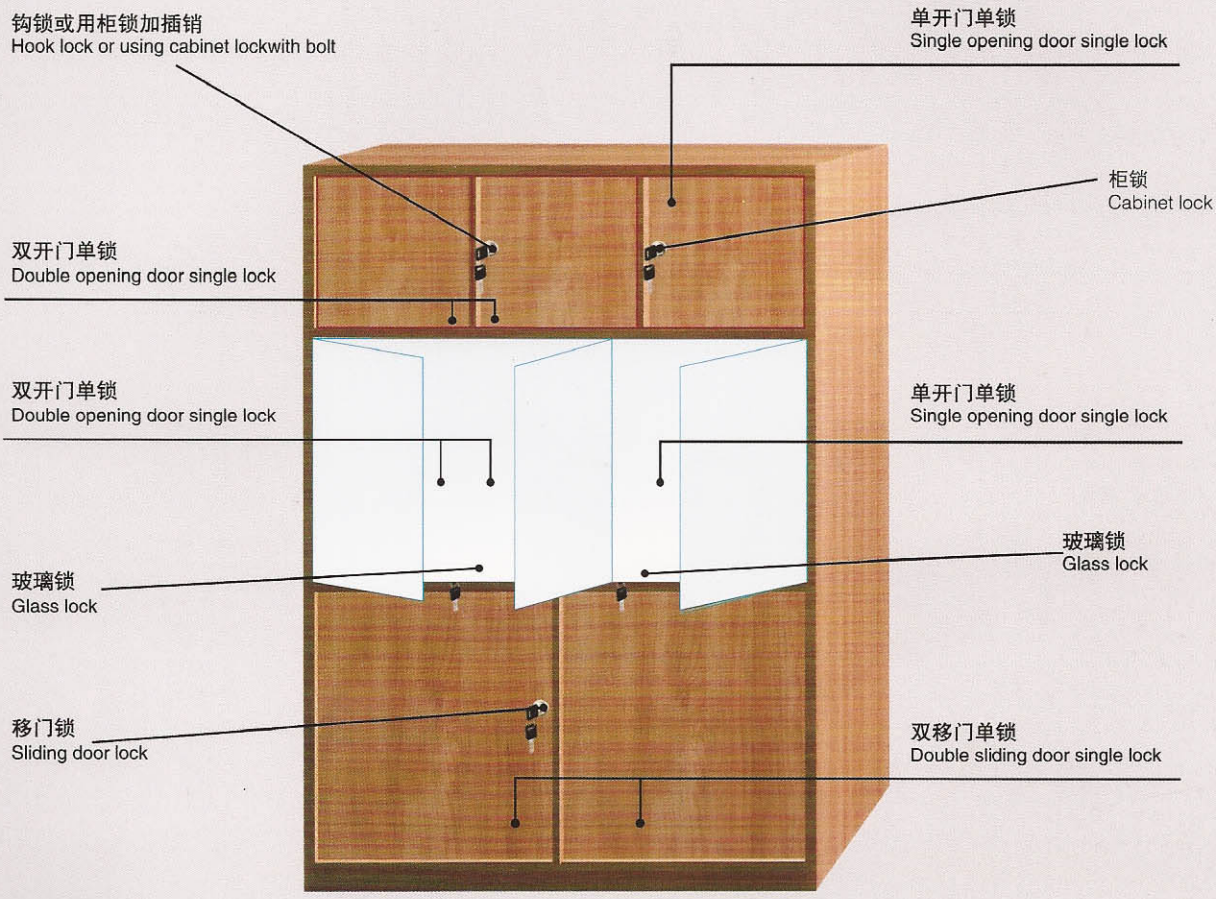

选配产品:
木门—暗铰链、铜合页、铜芯铰
玻璃—暗铰链、门铰
移门—趟门轮

Matching products:
wooden door–concealed hinge,brass hinge,brass core hinge
glass–concealed hinge,door hinge
sliding door–sliding door whee



玻璃门锁安装位置
Fixing position of glass door lock



木柜门锁安装位置
Fixing position of wooden cupboard door

CTS-138-22

短芯柜锁
Short Cylinder Cabiner Lock

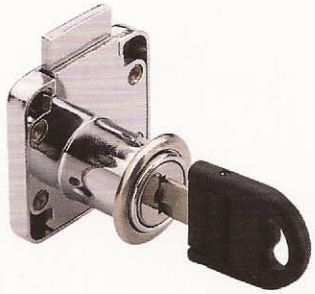

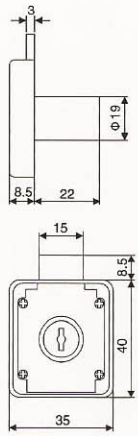

安装方式
Installation Method

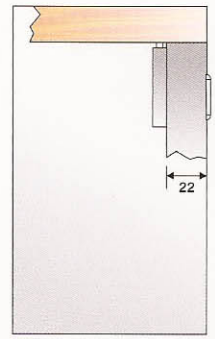

表面处理: 亮铬
主要材质: 锌合金
最大厚度: 22mm
适合范围: 各种抽屉
主要功能: 耐用、牢固、互开率低

Surface Treatment: Polished Chrome
Main Materials: Zinc alloy
Max Thickness: 22mm
Range Of Application: All Kinds Of Drawers
Main Functions: practical,durable and low interopening

CTS-138-30

长芯柜锁
Long Cylinder Cabiner Lock

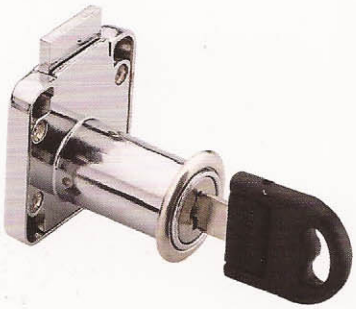

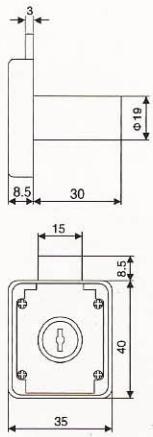

安装方式
Installation Method

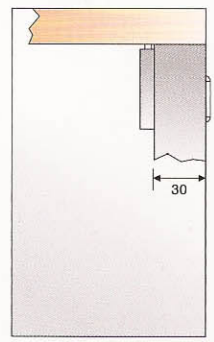

表面处理: 亮铬
主要材质: 锌合金
最大厚度: 30mm
适合范围: 各种抽屉
主要功能: 耐用、牢固、互开率低

Surface Treatment: Polished Chrome
Main Materials: Zinc alloy
Max Thickness: 30mm
Range Of Application: All Kinds Of Drawers
Main Functions: practical,durable and low interopening



CTS–338–22

斜口自动柜锁
Angled Auto Cabinet Lock

表面处理: 亮铬
主要材质: 锌合金
最大厚度: 22mm
适合范围: 各种抽屉
主要功能: 关闭时，自动上锁、耐用、牢固、互开率低

Surface Treatment: Polished Chrome
Main Materials: Zinc alloy
Max Thickness: 22mm
Range Of Application: All Kinds Of Drawers
Main Functions: automatic locking when close it, practical,durable and low interopening

安装方式
Installation Method

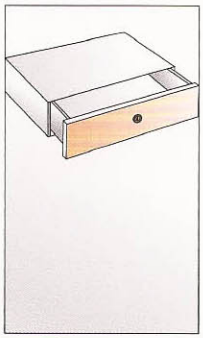

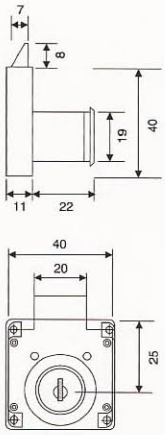

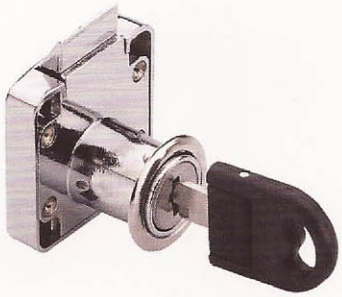

CTS–338–30

斜口自动柜锁
Angled Auto Cabinet Lock

表面处理: 亮铬
主要材质: 锌合金
最大厚度: 22mm
适合范围: 各种抽屉
主要功能: 关闭时，自动上锁、耐用、牢固、互开率低

Surface Treatment: Polished Chrome
Main Materials: Zinc alloy
Max Thickness: 22mm
Range Of Application: All Kinds Of Drawers
Main Functions: automatic locking when close it, practical,durable and low interopening

安装方式
Installation Method

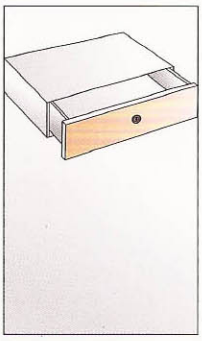

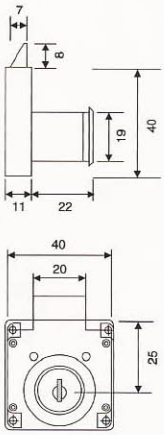

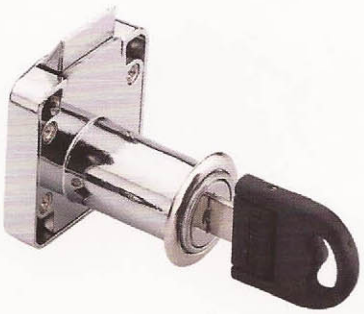

BLS–001–22

玻璃锁
Short Cylinder Cabiner Lock

表面处理: 亮铬
主要材质: 锌合金
最大厚度: 22mm
适合范围: 各种抽屉
主要功能: 固定玻璃、木层板

Surface Treatment: Polished Chrome
Main Materials: Zinc Alloy
Max Thickness: 22mm
Range Of Application: All Kinds Of Drawers
Main Functions: Fixed Glass, Wood Lamintes

安装方式
Installation Method

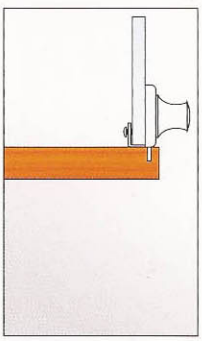

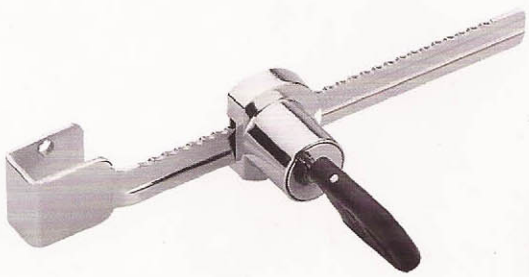

BLS–407

单门玻璃锁
Single Door Glass Lock



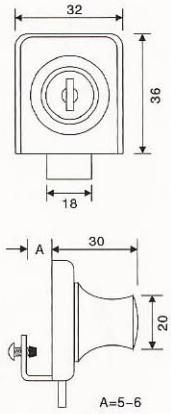

安装方式
Installation Method

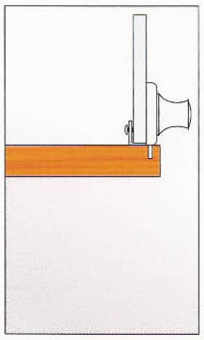

表面处理: 亮铬
主要材质: 锌合金
最大厚度: 5–6mm
适合范围: 各种玻璃柜门、单扇门
主要功能: 锁定玻璃柜门、带有拉手、美观耐用、牢固、互开率低

Surface Treatment: Polished Chrome
Main Materials: Zinc alloy
Max Thickness: 5–6mm
Range Of Application: Lock Glass Cabinet Doors
Main Functions: Lock Glass Cabiner Doors With Handle, Elegant, Practical And Low Interopening

BLS–408

单玻璃锁
Single Door Glass Lock



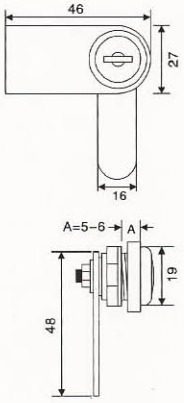

安装方式
Installation Method

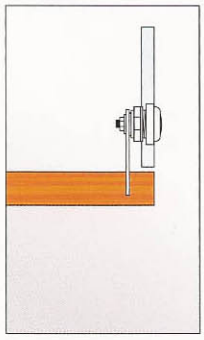

表面处理: 亮铬
主要材质: 锌合金
最大厚度: 5–6mm
适合范围: 各种玻璃柜门、单扇门
主要功能: 锁定玻璃柜门、美观耐用、牢固、互开率低

Surface Treatment: Polished Chrome
Main Materials: Zinc alloy
Max Thickness: 5–6mm
Range Of Application: Lock Glass Cabinet Doors
Main Functions: Lock Glass Cabiner Doors With Handle, Elegant, Practical And Low Interopening

BLS–409

双玻璃锁
Double Door Glass Lock



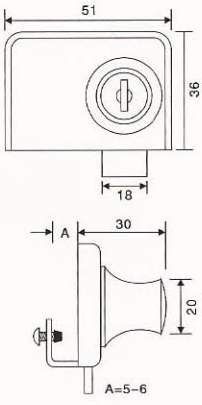

安装方式
Installation Method

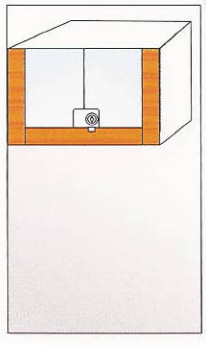

表面处理: 亮铬
主要材质: 锌合金
最大厚度: 5–6mm
适合范围: 各种玻璃柜门、单扇门
主要功能: 锁定玻璃柜门、带有拉手、美观耐用、牢固、互开率低

Surface Treatment: Polished Chrome
Main Materials: Zinc alloy
Max Thickness: 5–6mm
Range Of Application: Lock Glass Cabinet Doors
Main Functions: Lock Glass Cabiner Doors With Handle, Elegant, Practical And Low Interopening

CTS-103

钩锁
Hook Lock

表面处理: 亮铬
主要材质: 锌合金
最大厚度: 22mm
适合范围: 各种抽屉
主要功能: 耐用、牢固、互开率低

Surface Treatment: Polished Chrome
Main Materials: Zinc Alloy
Max Thickness: 22mm
Range Of Application: All Kinds Of Drawers
Main Functions: Elegant, Practical And Low Interopening

安装方式
Installation Method

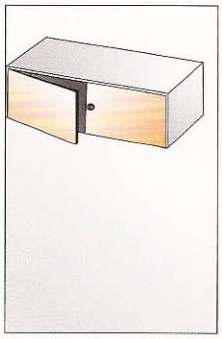

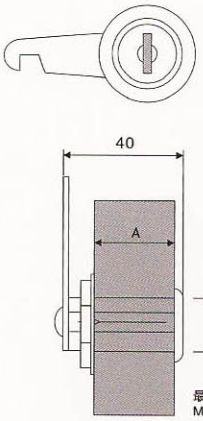

最大厚度A=22
Max thickness A=22



CTS-202

钩锁
Hook Lock

表面处理: 亮铬
主要材质: 锌合金
最大厚度: 22mm
适合范围: 各种抽屉
主要功能: 耐用、牢固、互开率低

Surface Treatment: Polished Chrome
Main Materials: Zinc Alloy
Max Thickness: 22mm
Main Functions: Elegant, Practical And Low Interopening

安装方式
Installation Method

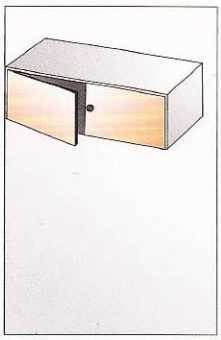



CTS-105

移门锁
Sliding Door Lock

表面处理: 亮铬
主要材质: 锌合金
最大厚度: 20mm
适合范围: 各种抽屉
主要功能: 耐用、牢固、互开率低

Surface Treatment: Polished Chrome
Main Materials: Zinc Alloy
Max Thickness: 20mm
Main Functions: Elegant, Practical And Low Interopening

安装方式
Installation Method

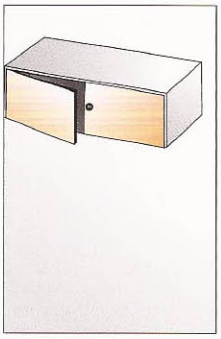



CTS-300-20

正面三连锁
Front Three-linked Lock



安装方式
Installation Method

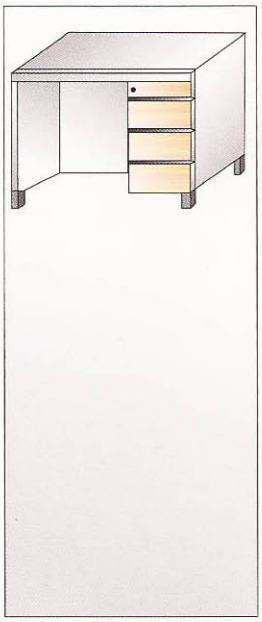

表面处理:
钢拉丝
主要材质:
锌合金、铝合金
最大厚度:
20mm
适合范围:
三连抽屉
主要功能:
可以三个抽屉同时上锁

Surface Treatment:
Polished Chrome
Main Materials:
Zinc Alloy, Aluminiumum Alloy
Range Of Application:
20mm
Main Functions:
Front Three-linked Lock

正面三连锁特点:

锁头安装于柜正面板，连杆于柜侧板，锁卡片准确安装于抽屉侧板，这样只需锁头牵动连杆，即可把三个并列的抽屉锁定。

Characteristics Of Three-linked Lock:

Lock head is fixed on the front faceplare of cupboard, and lonk rod on the side plare of cupboard, lock card on the drawer side plare accurately, therefore, the three juxtapose drawers will be locked br the way of lock head affecting link rod.

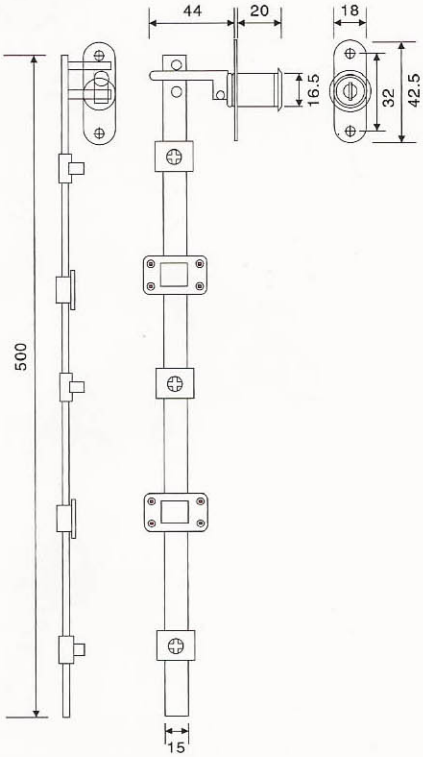

安装示意图
Installation Indication

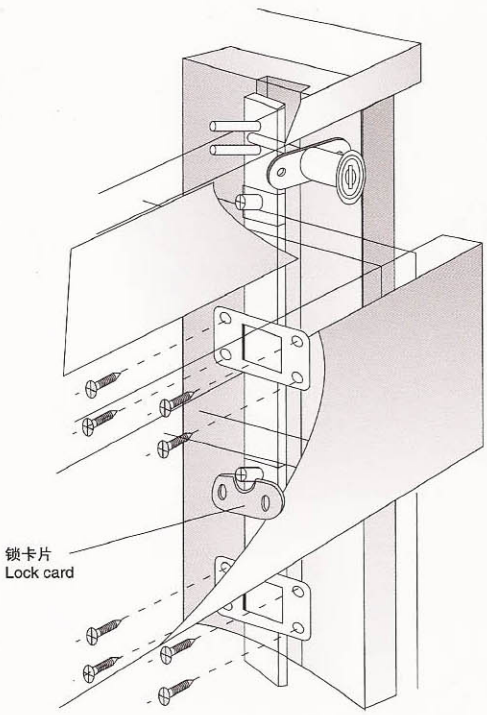

GJ–50X80

家具脚
Furniture Leg

表面处理: 砂银、青古铜、红古铜、镍拉丝
主要材质: 铝合金、锌合金
最大承重: 200kg/4只
适用范围: 各种台、柜
主要功能: 美观实用、平稳牢固

Surface Treatment: CL/AB/AC/L
Main Materials: Aluminium Alloy, Zinc Alloy
Max Bearing Capacity: 200kg/4只
Range Of Application: All Kinds Of DesksAnd Cabinets
Main Functions: Beauty And Pratical, Steady and Durable

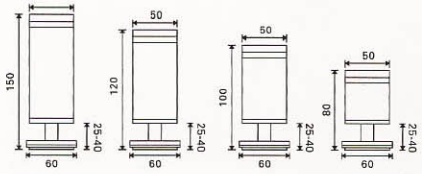



GJ–50X100

家具脚
Furniture Leg

表面处理: 砂银、青古铜、红古铜、镍拉丝
主要材质: 铝合金、锌合金
最大承重: 200kg/4只
适用范围: 各种台、柜
主要功能: 美观实用、平稳牢固

Surface Treatment: CL/AB/AC/L
Main Materials: Aluminium Alloy, Zinc Alloy
Max Bearing Capacity: 200kg/4只
Range Of Application: All Kinds Of DesksAnd Cabinets
Main Functions: Beauty And Pratical, Steady and Durable

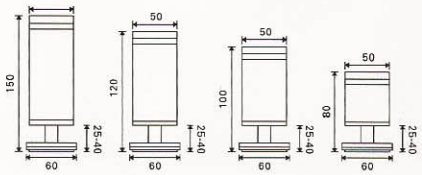



GJ–50X120

家具脚
Furniture Leg

表面处理: 砂银、青古铜、红古铜、镍拉丝
主要材质: 铝合金、锌合金
最大承重: 200kg/4只
适用范围: 各种台、柜
主要功能: 美观实用、平稳牢固

Surface Treatment: CL/AB/AC/L
Main Materials: Aluminium Alloy, Zinc Alloy
Max Bearing Capacity: 200kg/4只
Range Of Application: All Kinds Of DesksAnd Cabinets
Main Functions: Beauty And Pratical, Steady and Durable

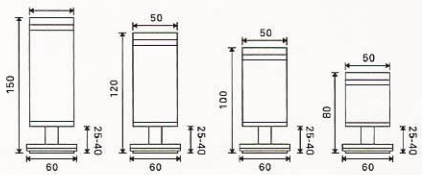



GJ–50X150

家具脚
Furniture Leg

表面处理: 砂银、青古铜、红古铜、镍拉丝
主要材质: 铝合金、锌合金
最大承重: 200kg/4只
适用范围: 各种台、柜
主要功能: 美观实用、平稳牢固

Surface Treatment: CL/AB/AC/L
Main Materials: Aluminium Alloy, Zinc Alloy
Max Bearing Capacity: 200kg/4只
Range Of Application: All Kinds Of DesksAnd Cabinets
Main Functions: Beauty And Pratical, Steady and Durable

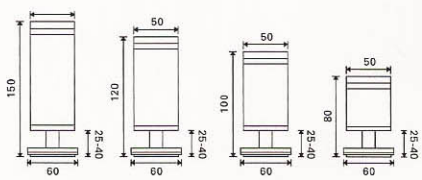





MX–030

衣管座
Clothing Tube Holder

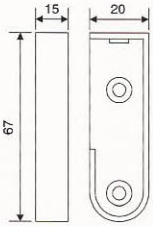

表面处理: 亮白
主要材质: 锌合金
最大承重: 20kg
适用范围: 各式衣柜
主要功能: 与衣管配用、美观、安装简便

Surface Treatment: White
Main Materials: Zinc Alloy
Max Bearing Capacity: 20kg
Range Of Application: All Kinds Of Wardrobes
Main Functions: Match With Clothing Tube, Beautiful And Easy To Install



MX–018
MX–016 法兰拉丝钢

衣管座
Clothing Tube Holder

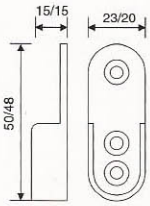

表面处理: 拉丝钢
主要材质: 锌合金
最大承重: 20kg
适用范围: 各式衣柜
主要功能: 与衣管配用、美观、安装简便

Surface Treatment: Chrome Polished
Main Materials: Zinc Alloy
Max Bearing Capacity: 20kg
Range Of Application: All Kinds Of Wardrobes
Main Functions: Match With Clothing Tube, Beautiful And Easy To Install

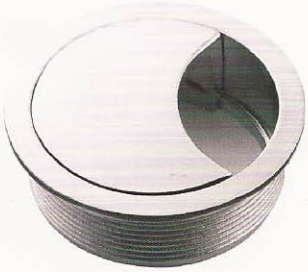

MX–032

圆形线盒
Round Wire Case

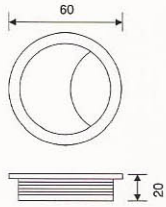

表面处理: 亮白
主要材质: 锌合金
适用范围: 适用各种办公台面
主要功能: 装饰台面、安装简便、美观、实用

Surface Treatment: White
Main Materials: Zinc Alloy
Range Of Application: All Kinds Of Office Desks
Main Functions: Decoration Desks Easy To Install, Beautiful And Durable



MX–019
MX–022
MX–025

八角法兰座
Eight Corner Flange Seat

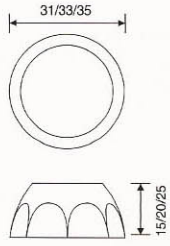

表面处理: 亮白
主要材质: 锌合金
最大承重: 20kg
适用范围: 各式衣柜
主要功能: 与衣管配用、美观、安装简便

Surface Treatment: White
Main Materials: Zinc Alloy
Max Bearing Capacity: 20kg
Range Of Application: All Kinds Of Wardrobes
Main Functions: Match With Clothing Tube, Beautiful And Easy To Install

MX-027

层板托
Laminate Care

表面处理: 亮白
主要材质: 锌合金
最大承重: 200kg/4只
适用范围: 各种玻璃层板、木层板
主要功能: 美观实用、平稳牢固

Surface Treatment: White
Main Materials: Zinc Alloy
Max Bearing Capacity: 200kg/4只
Range Of Application: All Kinds Of Glass Tier And Wooden Plywood
Main Functions: Elegant And Practical

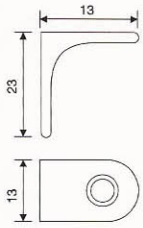

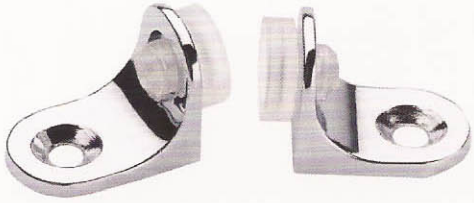

MX-028

层板托
Laminate Care

表面处理: 亮白
主要材质: 锌合金
最大承重: 200kg/4只
适用范围: 各种玻璃层板、木层板
主要功能: 美观实用、平稳牢固

Surface Treatment: White
Main Materials: Zinc Alloy
Max Bearing Capacity: 200kg/4只
Range Of Application: All Kinds Of Glass Tier And Wooden Plywood
Main Functions: Elegant And Practical

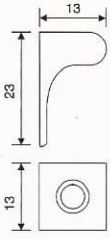

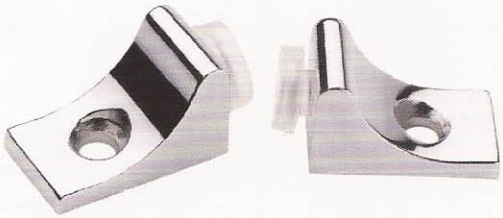

MX-029

层板托
Laminate Care

表面处理: 亮白
主要材质: 锌合金
最大承重: 200kg/4只
适用范围: 各种玻璃层板、木层板
主要功能: 美观实用、平稳牢固

Surface Treatment: White
Main Materials: Zinc Alloy
Max Bearing Capacity: 200kg/4只
Range Of Application: All Kinds Of Glass Tier And Wooden Plywood
Main Functions: Elegant And Practical

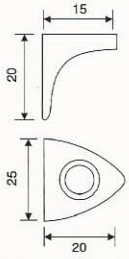



MX-031

法兰座
Flange Seat

表面处理: 亮白
主要材质: 锌合金
最大承重: 20kg
适用范围: 各式衣柜
主要功能: 与衣管配用、美观、安装简便

Surface Treatment: White
Main Materials: Zinc Alloy
Max Bearing Capacity: 20kg
Range Of Application: All Kinds Of Wardrobes
Main Functions: Match With Clothing Tube, Beautiful And Easy To Install

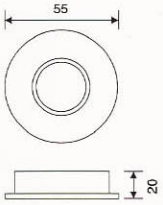





铝材橱柜拉手 Aluminum Cabinet Handle



LS-8040
铝材橱柜拉手
P. 127



LS-8201
铝材橱柜拉手
P. 127

锌合金家具拉手 Zinc Alloy Furniture Handle



LS-8525
锌合金家具拉手
P. 131



LS-8507
锌合金家具拉手
P. 133



LS-8536
锌合金家具拉手
P. 133



LS-8516
锌合金家具拉手
P. 134



LS-8506
锌合金家具拉手
P. 136



LS-8178 S L
锌合金家具拉手
P. 141

锌合金橱柜拉手 Zinc Alloy Cabinet Handle



LS-8253
锌合金橱柜拉手
P. 128



LS-8330
锌合金橱柜拉手
P. 128

铝镁合金橱柜拉手 Aluminum-magnesium Alloy Cabinet Handle



LS-8532
铝镁合金橱柜拉手
P. 142



LS-8584
铝镁合金橱柜拉手
P. 142



LS-8351
铝镁合金橱柜拉手
P. 143



LS-8529
铝镁合金橱柜拉手
P. 145



LS-8550
铝镁合金橱柜拉手
P. 143

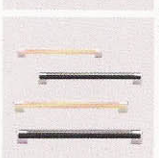

LS-8223
铝镁合金橱柜拉手
P. 144



铝型材家具拉手 Aluminum-Profile Furniture Handle

LS-8043

P. 147



LS-8042

P. 147

陶瓷拉手 Ceramic Handle



LS-81639
陶瓷拉手

P. 157



LS-81622
陶瓷拉手

P. 158



LS-81621
陶瓷拉手

P. 157



LS-81631
陶瓷拉手

P. 159



LS-81608
陶瓷拉手

P. 159



LS-81205
陶瓷拉手

P. 160

欧式古典家具拉手 Europan-style Classical Furniture Handle



LS-8076 S L
欧式古典家具拉手

P. 150

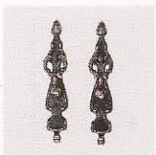

LS-8177 S L
欧式古典家具拉手

P. 150



LS-8204
欧式古典家具拉手

P. 151



LS-8078 S L
欧式古典家具拉手

P. 151



LS-8205 L S
欧式古典家具拉手

P. 152



LS-8080
欧式古典家具拉手

P. 152



LS-8259
欧式古典家具拉手

P. 153



LS-8178
欧式古典家具拉手

P. 153



LS-8040

铝材橱柜拉手Aluminum Cabinet Handle

表面处理：
氧化铝
主要材质：
铝合金
适用范围：
各式家具门扇、抽屉
主要特点：
美观、耐用

Finish:
A
Material:
Aluminum Alloy
Available For:
Various Furniture Doors And Drawers
Features:
Elegant And Durable

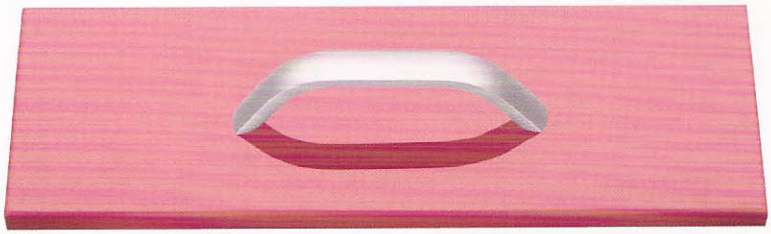

D	L	B	H
96			
128			
160			
192			
256			

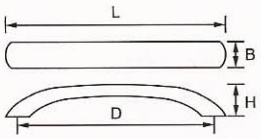

可选表面处理
Optional surface treatment



A 氧化铝

LS-8201

铝材橱柜拉手 Aluminum Cabinet Handle

表面处理：
氧化铝
主要材质：
铝合金
适用范围：
各式家具门扇、抽屉
主要特点：
美观、耐用

Finish:
A
Material:
Aluminum Alloy
Available For:
Various Furniture Doors And Drawers
Features:
Elegant And Durable

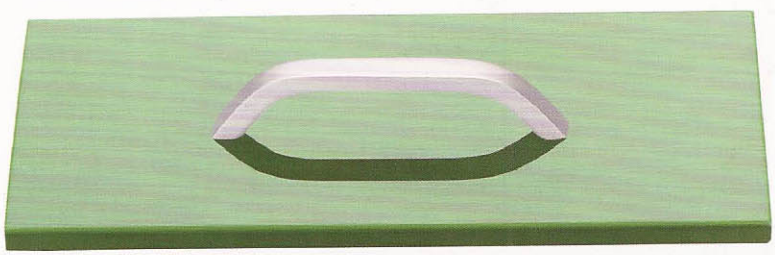

D	L	B	H
96			
128			
160			
192			
256			
320			

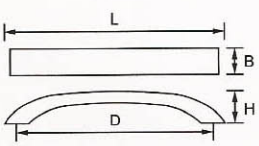

可选表面处理
Optional surface treatment



A 氧化铝

LS-8253

锌合金橱柜拉手 Zinc Alloy Cabinet Handle



表面处理：
拉丝、亮铬
主要材质：
锌合金
适用范围：
各式家具门扇、抽屉
主要特点：
美观、耐用

Finish:
SSS,SP
Material:
Zinc Alloy
Available For:
Various Furniture Doors And Drawers
Features:
Elegant And Durable

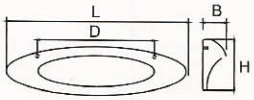

D	L	B	H
128	163	19.5	29

可选表面处理
Optional surface treatment


SSS 拉丝


SP 亮铬

LS-8330

锌合金橱柜拉手 Zinc Alloy Cabinet Handle



表面处理：
K金/拉丝，亮铬/拉丝
主要材质：
锌合金
适用范围：
各式家具门扇、抽屉
主要特点：
美观、耐用

Finish:
KG/SSS, SP/SSS
Material:
Zinc Alloy
Available For:
Various Furniture Doors And Drawers
Features:
Elegant And Durable

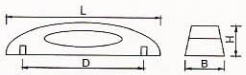

D	L	B	H
64	85	15	35
96	118	15	35
128	150	15	35
160			

可选表面处理
Optional surface treatment


KG K金
SSS 拉丝


SP 亮铬
SSS 拉丝

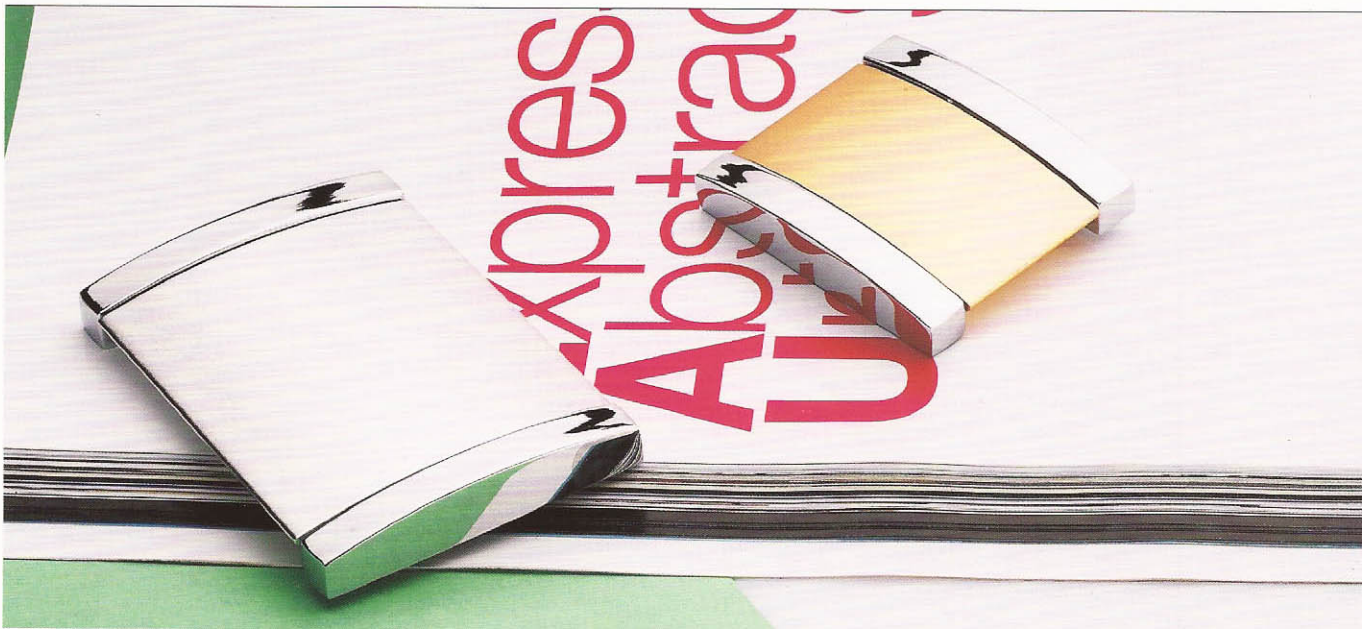

LS-8305

锌合金橱柜拉手 Zinc Alloy Cabinet Handle

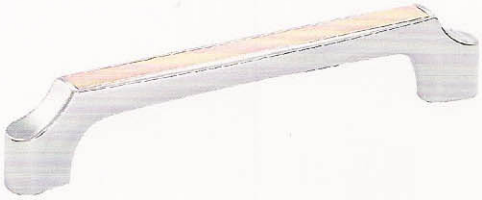

表面处理：
亮铬/磨砂珍珠铬，亮铬/玫瑰金
主要材质：
锌合金
适用范围：
各式家具门扇、抽屉
主要特点：
美观、耐用

Finish:
SP/PE, SP/CP
Material:
Zinc Alloy
Available For:
Various Furniture Doors And Drawers
Features:
Elegant And Durable

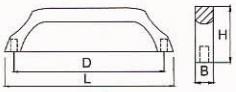

D	L	B	H
64	85	13	28
96	114	13	28
128	146	13	28
160	176	13	28

可选表面处理
Optional surface treatment


SP 亮铬
PE 磨砂珍珠铬


SP 亮铬
CP 玫瑰金

LS-8306

锌合金橱柜拉手 Zinc Alloy Cabinet Handle



表面处理：
亮铬/磨砂珍珠铬，亮铬/玫瑰金
主要材质：
锌合金
适用范围：
各式家具门扇、抽屉
主要特点：
美观、耐用

Finish:
SP/PE, SP/CP
Material:
Zinc Alloy
Available For:
Various Furniture Doors And Drawers
Features:
Elegant And Durable

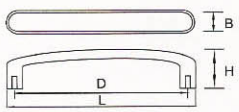

D	L	B	H
64	82	13	26
96	114	13	26
128	146	13	26
160	176	13	26

可选表面处理
Optional surface treatment


SP 亮铬
PE 磨砂珍珠铬


SP 亮铬
CP 玫瑰金

LS-8261

锌合金橱柜拉手 Zinc Alloy Cabinet Handle

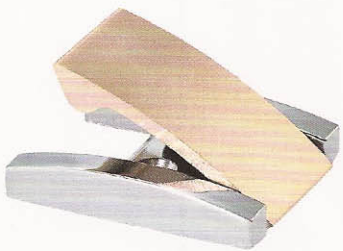

表面处理：
亮铬/磨砂珍珠铬，亮铬/玫瑰金
主要材质：
锌合金
适用范围：
各式家具门扇、抽屉
主要特点：
美观、耐用

Finish:
SP/PE, SP/CP
Material:
Zinc Alloy
Available For:
Various Furniture Doors And Drawers
Features:
Elegant And Durable

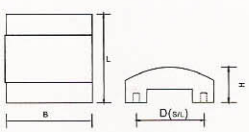

D	L	B	H
S	38	48	9
L	70	48	9

可选表面处理
Optional surface treatment


SP 亮铬
PE 磨砂珍珠铬


SP 亮铬
CP 玫瑰金

LS-8292

铝合金橱柜拉手 Aluminum Alloy Cabinet Handle



表面处理：
亮铬/哑铬
主要材质：
铝合金
适用范围：
各式家具门扇、抽屉
主要特点：
美观、耐用

Finish:
SP/SC
Material:
Aluminum Alloy
Available For:
Various Furniture Doors And Drawers
Features:
Elegant And Durable

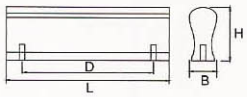

D	L	B	H
32	52	13	17
64	84	13	17
96	116	13	17
128	148	13	17
160	180	13	17

可选表面处理
Optional surface treatment



SP 亮铬
SC 哑铬

LS-8293

铝合金橱柜拉手 Aluminum Alloy Cabinet Handle



表面处理：
亮铬/哑铬
主要材质：
铝合金
适用范围：
各式家具门扇、抽屉
主要特点：
美观、耐用

Finish:
SP/SC
Material:
Aluminum Alloy
Available For:
Various Furniture Doors And Drawers
Features:
Elegant And Durable

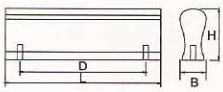

D	L	B	H
32	52	19	21
64	84	19	21
96	116	19	21
128	148	19	21
160	180	19	21

可选表面处理
Optional surface treatment



SP 亮铬
SC 哑铬

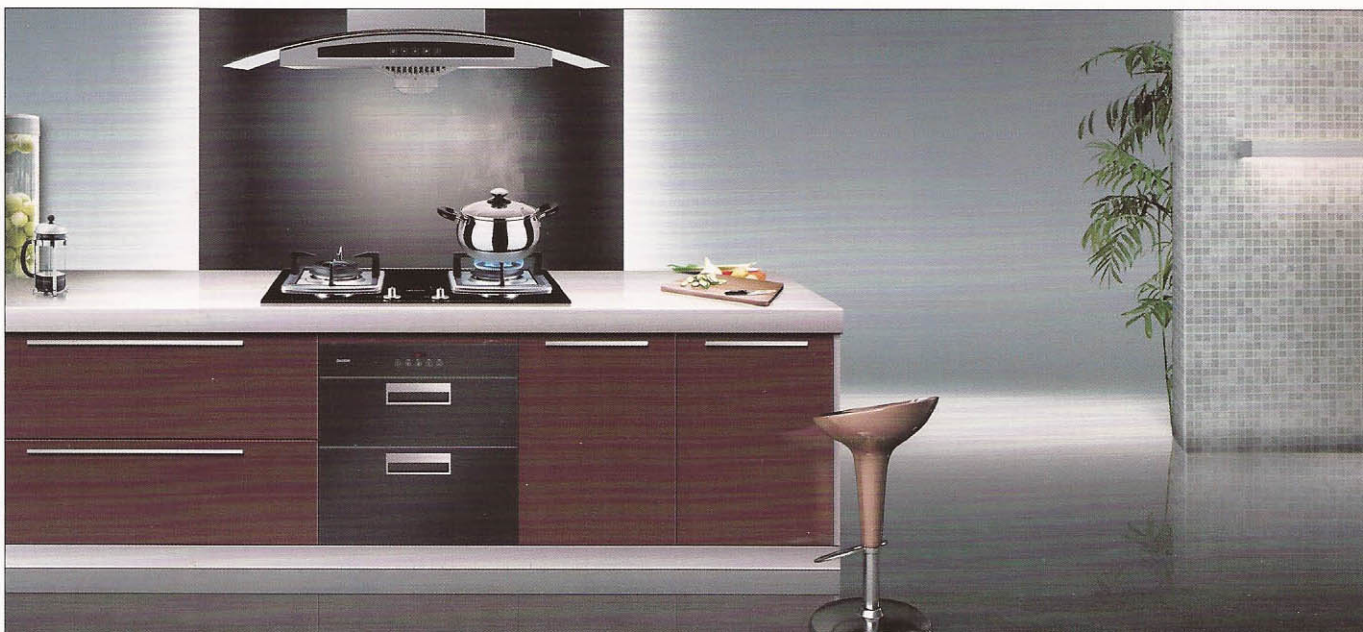

LS-8525

锌合金家具拉手 Zinc Alloy Furniture Handle

表面处理：
青古铜，K金
主要材质：
锌合金
适用范围：
各式家具门扇、抽屉
主要特点：
美观、耐用

Finish:
AB, KG
Material:
Zinc Alloy
Available For:
Various Furniture Doors And Drawers
Features:
Elegant And Durable

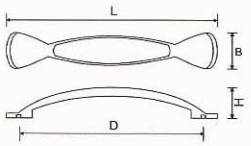

D	L	B	H
96	118	12	20
128	152	14	23



可选表面处理
Optional surface treatment

AB 青古铜　　KG K金

LS-8528

锌合金家具拉手 Zinc Alloy Furniture Handle

表面处理：
青古铜，哑光黄古铜
主要材质：
锌合金
适用范围：
各式家具门扇、抽屉
主要特点：
美观、耐用

Finish:
AB, ACC
Material:
Zinc Alloy
Available For:
Various Furniture Doors And Drawers
Features:
Elegant And Durable

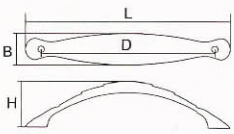

D	L	B	H
96	114	17.5	25
128			

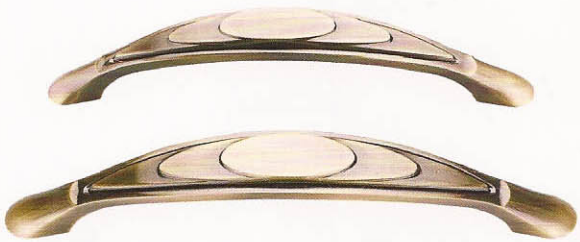

可选表面处理
Optional surface treatment

AB 青古铜　　ACC 哑光黄古铜

LS-8551

锌合金家具拉手 Zinc Alloy Furniture Handle

表面处理：
青古铜，哑光黄古铜
主要材质：
锌合金
适用范围：
各式家具门扇、抽屉
主要特点：
美观、耐用

Finish:
AB, ACC
Material:
Zinc Alloy
Available For:
Various Furniture Doors And Drawers
Features:
Elegant And Durable

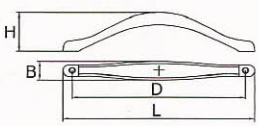

D	L	B	H
96	109	12	24.5
128	12	13.9	28.6



可选表面处理
Optional surface treatment

AB 青古铜　　ACC 哑光黄古铜



LS-8308

锌合金家具拉手 Zinc Alloy Furniture Handle

表面处理：
亮铬，K金
主要材质：
锌合金
适用范围：
各式家具门扇、抽屉
主要特点：
美观、耐用

Finish:
SP, KG
Material:
Zinc Alloy
Available For:
Various Furniture Doors And Drawers
Features:
Elegant And Durable

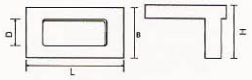

D	L	B	H
16	46	20	25

可选表面处理
Optional surface treatment

SP 亮铬　KG K金



LS-8307

锌合金家具拉手 Zinc Alloy Furniture Handle

表面处理：
亮铬，K金
主要材质：
锌合金
适用范围：
各式家具门扇、抽屉
主要特点：
美观、耐用

Finish:
SP, KG
Material:
Zinc Alloy
Available For:
Various Furniture Doors And Drawers
Features:
Elegant And Durable

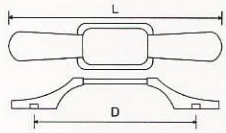

D	L	B	H
64	98		22
96	130		22

可选表面处理
Optional surface treatment

SP 亮铬　KG K金

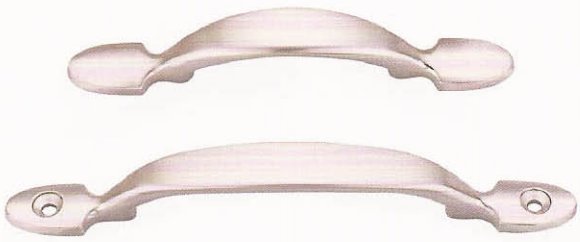

LS-8513

锌合金家具拉手 Zinc Alloy Furniture Handle

表面处理：
拉丝
主要材质：
锌合金
适用范围：
各式家具门扇、抽屉
主要特点：
美观、耐用

Finish:
SSS
Material:
Zinc Alloy
Available For:
Various Furniture Doors And Drawers
Features:
Elegant And Durable

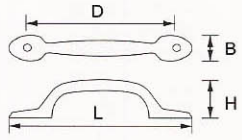

D	L	B	H
64	131	16	24
96	162	16	25

可选表面处理
Optional surface treatment

SSS 拉丝

LS-8507

锌合金家具拉手 Zinc Alloy Furniture Handle



表面处理：
亮铬/磨砂珍珠金，亮铬/磨砂珍珠铬
主要材质：
锌合金
适用范围：
各式家具门扇、抽屉
主要特点：
美观、耐用

Finish:
SP/PB, SP/PE
Material:
Zinc Alloy
Available For:
Various Furniture Doors And Drawers
Features:
Elegant And Durable

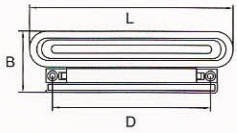

D	L	B	H
32	60	31	8
64	92	31	8
96	124	31	8

可选表面处理
Optional surface treatment

SP 亮铬
PB 磨砂珍珠金

SP 亮铬
PE 磨砂珍珠铬

LS-8536

锌合金家具拉手 Zinc Alloy Furniture Handle

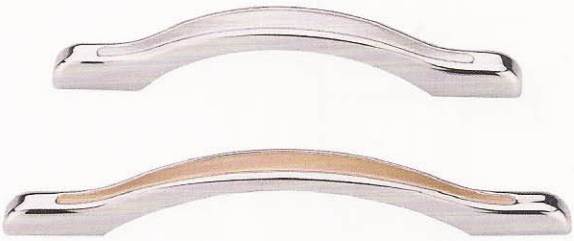

表面处理：
亮铬/磨砂珍珠金，亮铬/磨砂珍珠铬
主要材质：
锌合金
适用范围：
各式家具门扇、抽屉
主要特点：
美观、耐用

Finish:
SP/PB, SP/PE
Material:
Zinc Alloy
Available For:
Various Furniture Doors And Drawers
Features:
Elegant And Durable

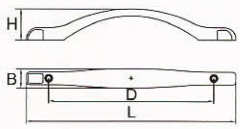

D	L	B	H
64	98	13	22
96	130	13.5	23.5
128	162.3	15	24.2

可选表面处理
Optional surface treatment

SP 亮铬
PB 磨砂珍珠金

SP 亮铬
PE 磨砂珍珠铬

LS-8538

锌合金家具拉手 Zinc Alloy Furniture Handle



表面处理：
亮铬/磨砂珍珠金，亮铬/磨砂珍珠铬
主要材质：
锌合金
适用范围：
各式家具门扇、抽屉
主要特点：
美观、耐用

Finish:
SP/PB, SP/PE
Material:
Zinc Alloy
Available For:
Various Furniture Doors And Drawers
Features:
Elegant And Durable

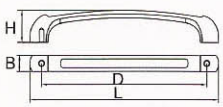

D	L	B	H
64	82	12	23
96	114	12	24
128	146	12.1	25

可选表面处理
Optional surface treatment

SP 亮铬
PB 磨砂珍珠金

SP 亮铬
PE 磨砂珍珠铬

LS-8516

锌合金家具拉手 Zinc Alloy Furniture Handle

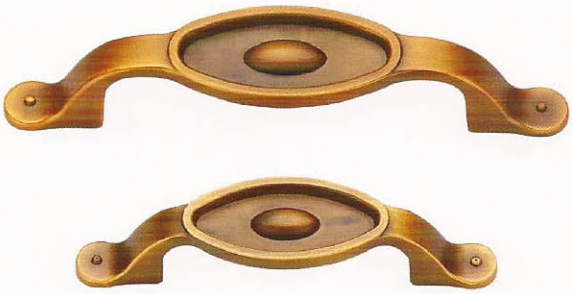

表面处理：
哑光黄古铜
主要材质：
锌合金
适用范围：
各式家具门扇、抽屉
主要特点：
美观、耐用

Finish:
ACC
Material:
Zinc Alloy
Available For:
Various Furniture Doors And Drawers
Features:
Elegant And Durable

D	L	B	H
64			
96	131.1	26.35	25.70

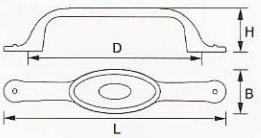

可选表面处理
Optional surface treatment



ACC 哑光黄古铜

LS-8527/8537

锌合金家具拉手 Zinc Alloy Furniture Handle

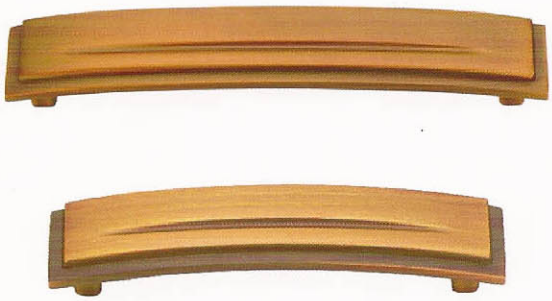

LS-8527

LS-8537

表面处理：
哑光黄古铜
主要材质：
锌合金
适用范围：
各式家具门扇、抽屉
主要特点：
美观、耐用

Finish:
ACC
Material:
Zinc Alloy
Available For:
Various Furniture Doors And Drawers
Features:
Elegant And Durable

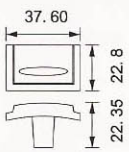

D	L	B	H
96	115.4	23	22.39
128	147	23	21.59

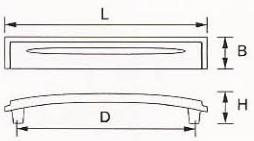

可选表面处理
Optional surface treatment



ACC 哑光黄古铜

LS-8539

锌合金家具拉手 Zinc Alloy Furniture Handle

表面处理：
亮镍/拉丝，亮铬/磨砂珍珠金，亮铬/磨砂珍珠铬
主要材质：
锌合金
适用范围：
各式家具门扇、抽屉
主要特点：
美观、耐用

Finish:
J/SSS, SP/PB, SP/PE
Material:
Zinc Alloy
Available For:
Various Furniture Doors And Drawers
Features:
Elegant And Durable

D	L	B	H
64	82	13	21.5
96	114	13	23
128	145.8	12.9	23.7

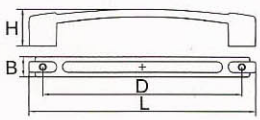

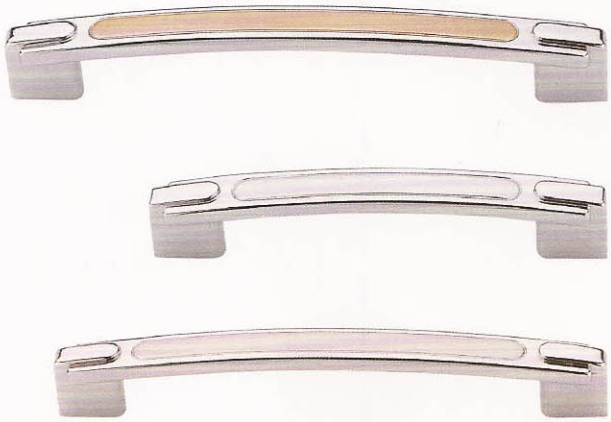

可选表面处理
Optional surface treatment


J/SSS
亮镍/拉丝


SP 亮铬
PB 磨砂珍珠金


SP 亮铬
PE 磨砂珍珠铬

LS-8335

锌合金家具拉手 Zinc Alloy Furniture Handle

表面处理：
亮镍/拉丝，亮铬/磨砂珍珠金，亮铬/磨砂珍珠铬
主要材质：
锌合金
适用范围：
各式家具门扇、抽屉
主要特点：
美观、耐用

Finish:
J/SSS, SP/PB, SP/PE
Material:
Zinc Alloy
Available For:
Various Furniture Doors And Drawers
Features:
Elegant And Durable

D	L	B	H
64	84	11.5	22.5
96	120	12.5	23.5
128	156.2	13.6	24.6

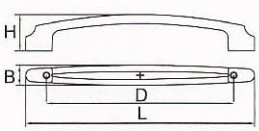

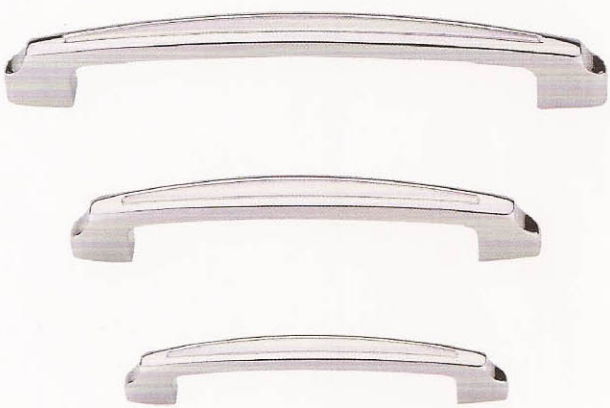

可选表面处理
Optional surface treatment


J/SSS
亮镍/拉丝


SP 亮铬
PB 磨砂珍珠金


SP 亮铬
PE 磨砂珍珠铬

LS-8506/LS-8336

锌合金家具拉手 Zinc Alloy Furniture Handle



LS-8506



LS-8336

表面处理：
青古铜、哑光黄古铜
主要材质：
锌合金
适用范围：
各式家具门扇、抽屉
主要特点：
美观、耐用

Finish:
AB, ACC
Material:
Zinc Alloy
Available For:
Various Furniture Doors And Drawers
Features:
Elegant And Durable

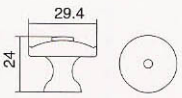

D	L	B	H
96	121.9	16.8	25.9
128	159.1	17.6	29.5

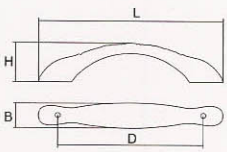

可选表面处理
Optional surface treatment



AB 青古铜



ACC 哑光黄古铜



LS-8518/LS-8535

锌合金家具拉手 Zinc Alloy Furniture Handle

表面处理：
哑光黄古铜
主要材质：
锌合金
适用范围：
各式家具门扇、抽屉
主要特点：
美观、耐用

Finish:
ACC
Material:
Zinc Alloy
Available For:
Various Furniture Doors And Drawers
Features:
Elegant And Durable

D	L	B	H
96	119.1	19.4	22.9
128	158.8	21.2	25

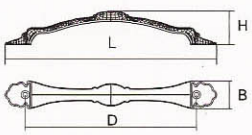



LS-8518



LS-8535

可选表面处理
Optional surface treatment



ACC 哑光黄古铜

LS-8328/LS-8338

锌合金家具拉手 Zinc Alloy Furniture Handle

表面处理：
青古铜、哑光黄古铜
主要材质：
锌合金
适用范围：
各式家具门扇、抽屉
主要特点：
美观、耐用

Finish:
AB, ACC
Material:
Zinc Alloy
Available For:
Various Furniture Doors And Drawers
Features:
Elegant And Durable



D	L	B	H
96	120.6	18.3	22.1
128	160.5	23.7	30.7

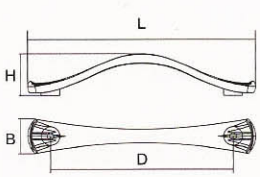





LS-8328



LS-8338

可选表面处理
Optional surface treatment



AB 青古铜



ACC 哑光黄古铜

LS-8063

锌合金家具拉手 Zinc Alloy Furniture Handle



表面处理：
拉丝，亮镍/拉丝，K金/金拉丝
主要材质：
锌合金
适用范围：
各式家具门扇、抽屉
主要特点：
美观、耐用

Finish:
SSS, J/SSS, KG/CS
Material:
Zinc Alloy
Available For:
Various Furniture Doors And Drawers
Features:
Elegant And Durable

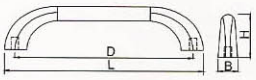

D	L	B	H
64	76	8	23
96	107	11	23
128	140	13	25
192	200	13	25
288	300	13	25

可选表面处理
Optional surface treatment


SSS 拉丝


J 亮镍
SSS 拉丝


KG K金
CS 金拉丝

LS-8285

锌合金家具拉手 Zinc Alloy Furniture Handle



表面处理：
拉丝，氧化铝
主要材质：
锌合金
适用范围：
各式家具门扇、抽屉
主要特点：
美观、耐用

Finish:
SSS, A
Material:
Zinc Alloy
Available For:
Various Furniture Doors And Drawers
Features:
Elegant And Durable

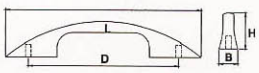

D	L	B	H
64	92	21	23
96	125	23	26
128	160	25	30

可选表面处理
Optional surface treatment


SSS 拉丝


A 氧化铝

LS-8069 S M

锌合金家具拉手 Zinc Alloy Furniture Handle



表面处理：
拉丝，亮镍/拉丝
主要材质：
锌合金
适用范围：
各式家具门扇、抽屉
主要特点：
美观、耐用

Finish:
SSS, J/SSS
Material:
Zinc Alloy
Available For:
Various Furniture Doors And Drawers
Features:
Elegant And Durable

可选表面处理
Optional surface treatment


SSS 拉丝


J 亮镍
SSS 拉丝

LS-8262 S L

锌合金家具拉手 Zinc Alloy Furniture Handle

表面处理：
拉丝
主要材质：
锌合金
适用范围：
各式家具门扇、抽屉
主要特点：
美观、耐用

Finish:
SSS
Material:
Zinc Alloy
Available For:
Various Furniture Doors And Drawers
Features:
Elegant And Durable

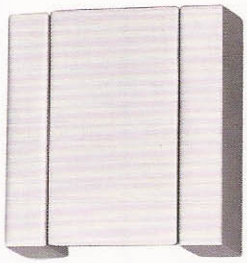

可选表面处理
Optional surface treatment



SSS 拉丝

LS-8268 S L

锌合金家具拉手 Zinc Alloy Furniture Handle

表面处理：
拉丝
主要材质：
锌合金
适用范围：
各式家具门扇、抽屉
主要特点：
美观、耐用

Finish:
SSS
Material:
Zinc Alloy
Available For:
Various Furniture Doors And Drawers
Features:
Elegant And Durable



可选表面处理
Optional surface treatment



SSS 拉丝

LS-8084

锌合金家具拉手 Zinc Alloy Furniture Handle

表面处理：
粉色，黑色，紫罗兰，钻石白
主要材质：
锌合金
适用范围：
各式家具门扇、抽屉
主要特点：
美观、耐用

Finish:
SP/CW
Material:
Zinc Alloy
Available For:
Various Furniture Doors And Drawers
Features:
Elegant And Durable



可选表面处理
Optional surface treatment



SP 亮铬
CW 白水晶

LS-8510

22K锌合金家具拉手 22K Zinc Alloy Furniture Handle



表面处理：
K金
主要材质：
锌合金
适用范围：
各式家具门扇、抽屉
主要特点：
美观、耐用

Finish:
KG
Material:
Zinc Alloy
Available For:
Various Furniture Doors And Drawers
Features:
Elegant And Durable

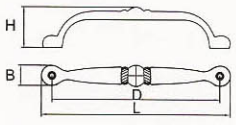

D	L	B	H
96	111	15	30
128	144	12.9	31

可选表面处理
Optional surface treatment

KG K金

LS-8512

22K锌合金家具拉手 22K Zinc Alloy Furniture Handle



表面处理：
K金
主要材质：
锌合金
适用范围：
各式家具门扇、抽屉
主要特点：
美观、耐用

Finish:
KG
Material:
Zinc Alloy
Available For:
Various Furniture Doors And Drawers
Features:
Elegant And Durable

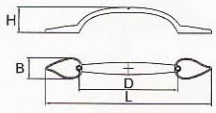

D	L	B	H
64	129	20	24
96	161.4	20.5	25.3

可选表面处理
Optional surface treatment

KG K金

LS-8511

22K锌合金家具拉手 22K Zinc Alloy Furniture Handle



表面处理：
K金
主要材质：
锌合金
适用范围：
各式家具门扇、抽屉
主要特点：
美观、耐用

Finish:
KG
Material:
Zinc Alloy
Available For:
Various Furniture Doors And Drawers
Features:
Elegant And Durable

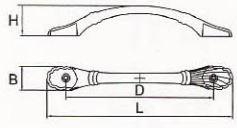

D	L	B	H
96	128	20	25
128	161	20	26

可选表面处理
Optional surface treatment

KG K金

LS-8178 S L

22K锌合金家具拉手 22K Zinc Alloy Furniture Handle



表面处理：
K金
主要材质：
锌合金
适用范围：
各式家具门扇、抽屉
主要特点：
美观、耐用

Finish:
KG
Material:
Zinc Alloy
Available For:
Various Furniture Doors And Drawers
Features:
Elegant And Durable

可选表面处理
Optional surface treatment

KG K金

LS-8259/LS-8267

22K锌合金家具拉手 22K Zinc Alloy Furniture Handle



表面处理：
K金
主要材质：
锌合金
适用范围：
各式家具门扇、抽屉
主要特点：
美观、耐用

Finish:
KG
Material:
Zinc Alloy
Available For:
Various Furniture Doors And Drawers
Features:
Elegant And Durable

可选表面处理
Optional surface treatment

KG K金

LS-8179 S L

22K锌合金家具拉手 22K Zinc Alloy Furniture Handle



表面处理：
K金
主要材质：
锌合金
适用范围：
各式家具门扇、抽屉
主要特点：
美观、耐用

Finish:
KG
Material:
Zinc Alloy
Available For:
Various Furniture Doors And Drawers
Features:
Elegant And Durable

可选表面处理
Optional surface treatment

KG K金

LS-8532

铝镁合金橱柜拉手
Aluminum-magnesium Alloy Cabinet Handle



表面处理：
亮铬/磨砂珍珠铬，亮铬/磨砂珍珠金，亮铬/无光黑
主要材质：
铝合金
适用范围：
各式家具门扇、抽屉
主要特点：
美观、耐用

Finish:
SP/PE, SP/PB, SP/W
Material:
Aluminum Alloy
Available For:
Various Furniture Doors And Drawers
Features:
Elegant And Durable

D	L	B	H
64			
96			
128			

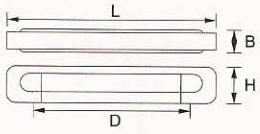

可选表面处理
Optional surface treatment


SP 亮铬
PE 磨砂珍珠铬


SP 亮铬
PB 磨砂珍珠金


SP 亮铬
W 无光黑

LS-8584

铝镁合金橱柜拉手
Aluminum-magnesium Alloy Cabinet Handle



表面处理：
亮铬/磨砂珍珠铬，亮铬/磨砂珍珠金，亮铬/无光黑
主要材质：
铝合金
适用范围：
各式家具门扇、抽屉
主要特点：
美观、耐用

Finish:
SP/PE, SP/PB, SP/W
Material:
Aluminum Alloy
Available For:
Various Furniture Doors And Drawers
Features:
Elegant And Durable

D	L	B	H
96			
128			

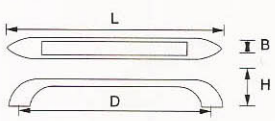

可选表面处理
Optional surface treatment


SP 亮铬
PE 磨砂珍珠铬


SP 亮铬
PB 磨砂珍珠金


SP 亮铬
W 无光黑

LS-8351

铝镁合金橱柜拉手
Aluminum-magnesium Alloy Cabinet Handle

表面处理：
亮铬/磨砂珍珠铬，亮铬/磨砂珍珠金，亮铬/无光黑
主要材质：
铝合金
适用范围：
各式家具门扇、抽屉
主要特点：
美观、耐用

Finish:
SP/PE, SP/PB, SP/W
Material:
Aluminum Alloy
Available For:
Various Furniture Doors And Drawers
Features:
Elegant And Durable



D	L	B	H
64	75.48	14	16.5
96	107.28	14	16.5
128	139.47	14	16.5

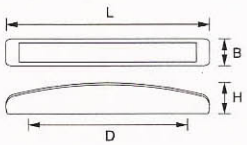

可选表面处理
Optional surface treatment



LS-8550

铝镁合金橱柜拉手
Aluminum-magnesium Alloy Cabinet Handle

表面处理：
亮铬/磨砂珍珠铬，亮铬/磨砂珍珠金，亮铬/无光黑
主要材质：
铝合金
适用范围：
各式家具门扇、抽屉
主要特点：
美观、耐用

Finish:
SP/PE, SP/PB, SP/W
Material:
Aluminum Alloy
Available For:
Various Furniture Doors And Drawers
Features:
Elegant And Durable

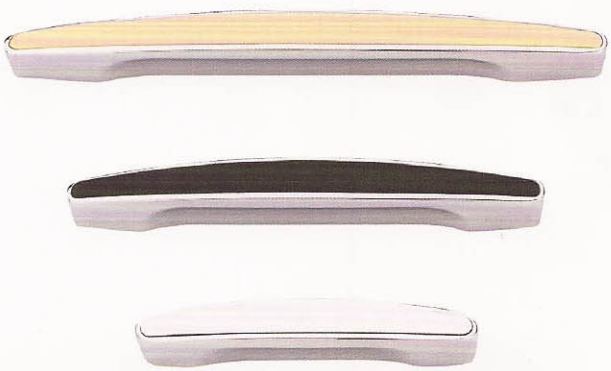

D	L	B	H
64	85.26	12.71	17.09
96	121.46	12.50	16.98
128	157.81	14.10	16.98

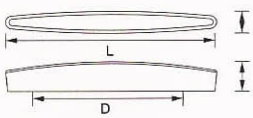

可选表面处理
Optional surface treatment



LS-8552

铝镁合金橱柜拉手
Aluminum-magnesium Alloy Cabinet Handle

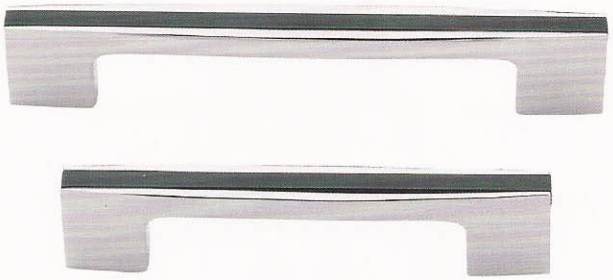

表面处理：
亮铬/磨砂珍珠铬，亮铬/磨砂珍珠金，亮铬/无光黑
主要材质：
铝合金
适用范围：
各式家具门扇、抽屉
主要特点：
美观、耐用

Finish:
SP/PE, SP/PB, SP/W
Material:
Aluminum Alloy
Available For:
Various Furniture Doors And Drawers
Features:
Elegant And Durable

D	L	B	H
96	117	13	25
128	150.4	14	25.8

可选表面处理
Optional surface treatment


SP 亮铬
PE 磨砂珍珠铬


SP 亮铬
PB 磨砂珍珠金


SP 亮铬
W 无光黑

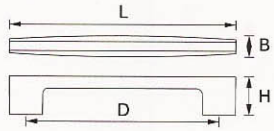

LS-8223

铝镁合金橱柜拉手
Aluminum-magnesium Alloy Cabinet Handle

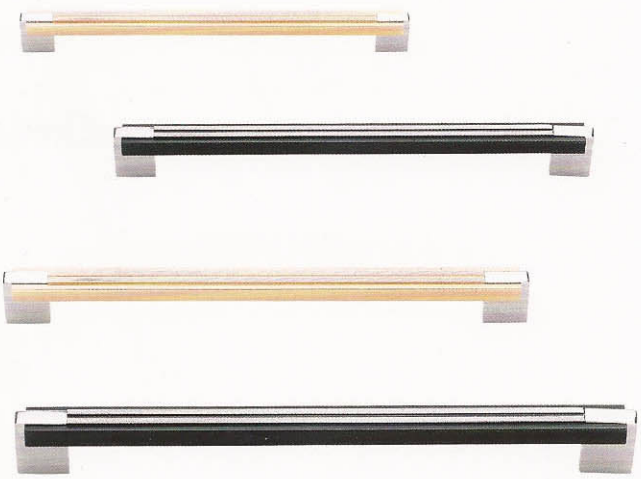

表面处理：
亮铬/磨砂珍珠铬，亮铬/磨砂珍珠金，亮铬/无光黑
主要材质：
铝合金
适用范围：
各式家具门扇、抽屉
主要特点：
美观、耐用

Finish:
SP/PE, SP/PB, SP/W
Material:
Aluminum Alloy
Available For:
Various Furniture Doors And Drawers
Features:
Elegant And Durable

D	L	B	H
96			
128			
160			
192			

可选表面处理
Optional surface treatment


SP 亮铬
PE 磨砂珍珠铬


SP 亮铬
PB 磨砂珍珠金


SP 亮铬
W 无光黑

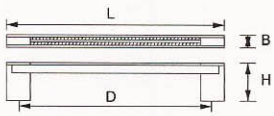

LS-8230

铝镁合金橱柜拉手
Aluminum-magnesium Alloy Cabinet Handle

表面处理：
亮铬/磨砂珍珠铬
主要材质：
铝镁合金
适用范围：
各式家具门扇、抽屉
主要特点：
美观、耐用

Finish:
SP/PE
Material:
Aluminum-magnesium Alloy
Available For:
Various Furniture Doors And Drawers
Features:
Elegant And Durable

D	L	B	H
64			
96			
128			

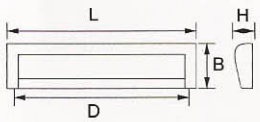



可选表面处理
Optional surface treatment



SP 亮铬
PE 磨砂珍珠铬

LS-8529

铝镁合金橱柜拉手
Aluminum-magnesium Alloy Cabinet Handle

表面处理：
亮铬/磨砂珍珠铬
主要材质：
铝镁合金
适用范围：
各式家具门扇、抽屉
主要特点：
美观、耐用

Finish:
SP/PE
Material:
Aluminum-magnesium Alloy
Available For:
Various Furniture Doors And Drawers
Features:
Elegant And Durable

D	L	B	H
96			
128			
160			

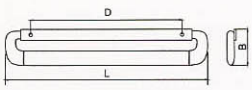

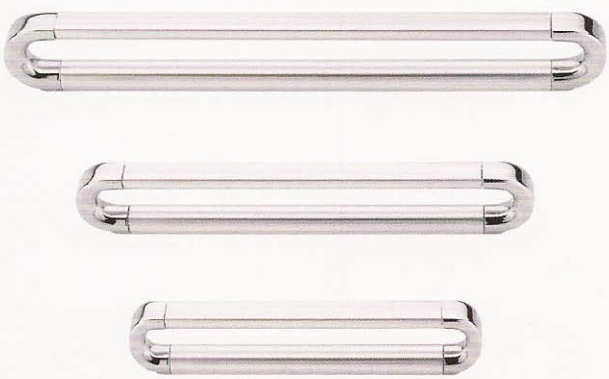

可选表面处理
Optional surface treatment



SP 亮铬
PE 磨砂珍珠铬

LS-8603

铝镁合金橱柜拉手 Aluminum-magnesium Alloy Cabinet Handle



表面处理：
亮铬/磨砂珍珠铬
主要材质：
铝镁合金
适用范围：
各式家具门扇、抽屉
主要特点：
美观、耐用

Finish:
SP/PE
Material:
Aluminum-magnesium Alloy
Available For:
Various Furniture Doors And Drawers
Features:
Elegant And Durable

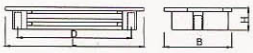

D	L	B	H
64	76	44	16
96	108	44	16
128	140	44	16

可选表面处理
Optional surface treatment



SP 亮铬
PE 磨砂珍珠铬

LS-8049

铝镁合金橱柜拉手 Aluminum-magnesium Alloy Cabinet Handle



表面处理：
亮铬/磨砂珍珠铬
主要材质：
铝镁合金
适用范围：
各式家具门扇、抽屉
主要特点：
美观、耐用

Finish:
SP/PE
Material:
Aluminum-magnesium Alloy
Available For:
Various Furniture Doors And Drawers
Features:
Elegant And Durable

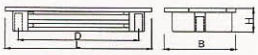

D	L	B	H
64	78	38	12.5
96	110	38	12.5
128	142	38	12.5
160	174	38	12.5

可选表面处理
Optional surface treatment



SP 亮铬
PE 磨砂珍珠铬

LS-8191

铝镁合金橱柜拉手 Aluminum-magnesium Alloy Cabinet Handle



表面处理：
亮铬/磨砂珍珠铬
主要材质：
铝镁合金
适用范围：
各式家具门扇、抽屉
主要特点：
美观、耐用

Finish:
SP/PE
Material:
Aluminum-magnesium Alloy
Available For:
Various Furniture Doors And Drawers
Features:
Elegant And Durable

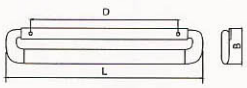

D	L	B	H
64	118	38	10
96	150	38	10
128	182	38	10
160	214	38	10

可选表面处理
Optional surface treatment



SP 亮铬
PE 磨砂珍珠铬

LS-8043

家具拉手 Furniture Handle

表面处理：
氧化铝，氧化铝/喷木纹
主要材质：
铝镁合金
适用范围：
各式家具门扇、抽屉
主要特点：
美观、耐用

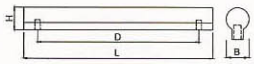

Finish:
A, A/Y
Material:
Aluminum-magnesium Alloy
Available For:
Various Furniture Doors And Drawers
Features:
Elegant And Durable

D	L	B	H
32	40	13	18
64	75	13	18
96	110	13	18
128	150	13	18
160	200	13	18



可选表面处理
Optional surface treatment


A 氧化铝


A 氧化铝
Y 喷木纹

LS-8042

家具拉手 Furniture Handle

表面处理：
氧化铝，氧化铝/喷木纹
主要材质：
铝镁合金
适用范围：
各式家具门扇、抽屉
主要特点：
美观、耐用

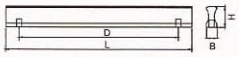

Finish:
A, A/Y
Material:
Aluminum-magnesium Alloy
Available For:
Various Furniture Doors And Drawers
Features:
Elegant And Durable

D	L	B	H
32	40	8.5	16.5
64	75	8.5	16.5
96	110	8.5	16.5
128	150	8.5	16.5
160	200	8.5	16.5



可选表面处理
Optional surface treatment


A 氧化铝


A 氧化铝
Y 喷木纹

LS-8187

锌合金家具拉手 Zinc Alloy Furniture Handle

表面处理：
拉丝，磨砂珍珠铬，K金，亮铬
主要材质：
锌合金
适用范围：
各式家具门扇、抽屉
主要特点：
美观、耐用

Finish:
SSS, PE, KG, SP
Material:
Aluminum Alloy
Available For:
Various Furniture Doors And Drawers
Features:
Elegant And Durable

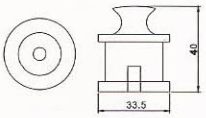







LS-8187 圆

LS-8187 方

可选表面处理
Optional surface treatment


SSS 拉丝


PE 磨砂珍珠铬


KG K金


SP 亮铬



LS–8013

铝镁合金橱柜拉手
Aluminum–magnesium Alloy Cabinet Handle

D	L	B	H
96	127	15	28
128	159	15	28
160	191	15	28
192	223	15	28
224	255	15	28

可选表面处理
Optional surface treatment



SP 亮铬
PE 磨砂珍珠铬

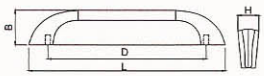

表面处理： 亮铬/磨砂珍珠铬
主要材质： 铝镁合金
适用范围： 各式家具门扇、抽屉
主要特点： 美观、耐用

Finish: SP/PE
Material: Aluminum–magnesium Alloy
Available For: Various Furniture Doors And Drawers
Features: Elegant And Durable



LS–8028

铝镁合金橱柜拉手
Aluminum–magnesium Alloy Cabinet Handle

D	L	B	H
96	103	13	22
128	135	13	22
160	167	13	22
192	199	13	22
256	263	13	22

可选表面处理
Optional surface treatment



SP 亮铬
PE 磨砂珍珠铬

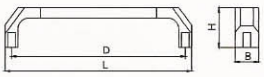

表面处理： 亮铬/磨砂珍珠铬
主要材质： 铝镁合金
适用范围： 各式家具门扇、抽屉
主要特点： 美观、耐用

Finish: SP/PE
Material: Aluminum–magnesium Alloy
Available For: Various Furniture Doors And Drawers
Features: Elegant And Durable



LS–8017

铝镁合金橱柜拉手
Aluminum–magnesium Alloy Cabinet Handle

D	L	B	H
96	118	10.5	28
128	150	10.5	28
160	182	10.5	28
192	214	10.5	28
256	278	10.5	28

可选表面处理
Optional surface treatment



SP 亮铬
PE 磨砂珍珠铬

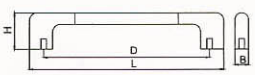

表面处理： 亮铬/磨砂珍珠铬
主要材质： 铝镁合金
适用范围： 各式家具门扇、抽屉
主要特点： 美观、耐用

Finish: SP/PE
Material: Aluminum–magnesium Alloy
Available For: Various Furniture Doors And Drawers
Features: Elegant And Durable



LS–8023

铝镁合金橱柜拉手
Aluminum–magnesium Alloy Cabinet Handle

D	L	B	H
96	105	15	23.5
128	137	15	23.5
160	169	15	23.5
192	201	15	23.5
224	233	15	23.5

可选表面处理
Optional surface treatment



SP 亮铬
PE 磨砂珍珠铬

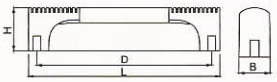

表面处理： 亮铬/磨砂珍珠铬
主要材质： 铝镁合金
适用范围： 各式家具门扇、抽屉
主要特点： 美观、耐用

Finish: SP/PE
Material: Aluminum–magnesium Alloy
Available For: Various Furniture Doors And Drawers
Features: Elegant And Durable

LS-81609

水晶拉手
Crystal handle



表面处理： 亮铬/白水晶、亮铬/蓝水晶
主要材质： 水晶+锌合金
适用范围： 各式家具门扇、抽屉
主要特点： 美观、耐用

Finish: SP/CW , SP/CB
Material: Crystal+Zinc Alloy
Available For: Various Furniture Doors And Drawers
Features: Elegant And Durable

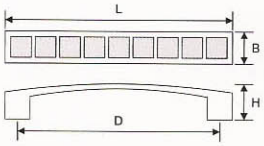

D	L	B	H
64	75	15	25
96	111	15	25
128	147	15	25

可选表面处理
Optional surface treatment



SP 亮铬 CW 白水晶　SP 亮铬 CB 蓝水晶

LS-81606

水晶拉手
Crystal handle



表面处理： 亮铬/白水晶、亮铬/蓝水晶
主要材质： 水晶+锌合金
适用范围： 各式家具门扇、抽屉
主要特点： 美观、耐用

Finish: SP/CW , SP/CB
Material: Crystal+Zinc Alloy
Available For: Various Furniture Doors And Drawers
Features: Elegant And Durable

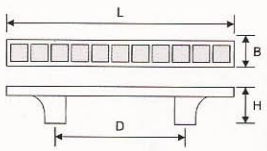

D	L	B	H
64	99	25	21
96	135	25	21
128	172	25	21

可选表面处理
Optional surface treatment



SP 亮铬 CW 白水晶　SP 亮铬 CB 蓝水晶

LS-81618

水晶拉手
Crystal handle



表面处理： 亮铬/白水晶、亮铬/蓝水晶
主要材质： 水晶+锌合金
适用范围： 各式家具门扇、抽屉
主要特点： 美观、耐用

Finish: SP/CW , SP/CB
Material: Crystal+Zinc Alloy
Available For: Various Furniture Doors And Drawers
Features: Elegant And Durable

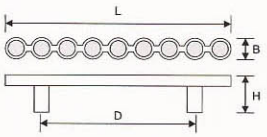

D	L	B	H
64	109	14	25
96	141	14	25

可选表面处理
Optional surface treatment

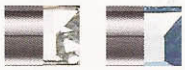

SP 亮铬 CW 白水晶　SP 亮铬 CB 蓝水晶

LS-81106/81103/81108

水晶拉手
Crystal handle



LS-81108

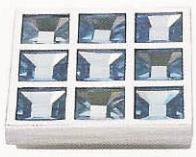

LS-81106

表面处理： 亮铬/白水晶、亮铬/蓝水晶
主要材质： 水晶+锌合金
适用范围： 各式家具门扇、抽屉
主要特点： 美观、耐用

Finish: SP/CW , SP/CB
Material: Crystal+Zinc Alloy
Available For: Various Furniture Doors And Drawers
Features: Elegant And Durable



LS-81103

可选表面处理
Optional surface treatment



SP 亮铬 CW 白水晶　SP 亮铬 CB 蓝水晶

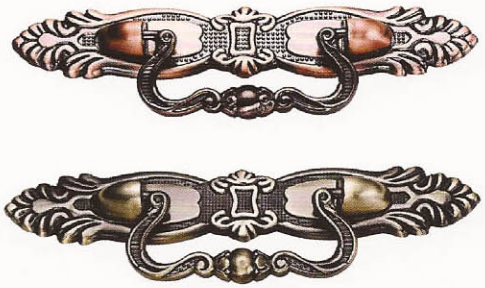

LS-8076 S L

欧式古典家具拉手 Europan-style Classical Furniture Handle

表面处理：
青古铜，红古铜
主要材质：
锌合金
适用范围：
各式家具门扇、抽屉
主要特点：
美观、耐用

Finish:
AB, AC
Material:
Zinc Alloy
Available For:
Various Furniture Doors And Drawers
Features:
Elegant And Durable

可选表面处理
Optional surface treatment

AB 青古铜　AC 红古铜



LS-8177 S L

欧式古典家具拉手 Europan-style Classical Furniture Handle

表面处理：
青古铜，红古铜
主要材质：
锌合金
适用范围：
各式家具门扇、抽屉
主要特点：
美观、耐用

Finish:
AB, AC
Material:
Zinc Alloy
Available For:
Various Furniture Doors And Drawers
Features:
Elegant And Durable

可选表面处理
Optional surface treatment

AB 青古铜

AC 红古铜



LS-8203

欧式古典家具拉手 Europan-style Classical Furniture Handle

表面处理：
青古铜，红古铜
主要材质：
锌合金
适用范围：
各式家具门扇、抽屉
主要特点：
美观、耐用

Finish:
AB, AC
Material:
Zinc Alloy
Available For:
Various Furniture Doors And Drawers
Features:
Elegant And Durable

可选表面处理
Optional surface treatment

AB 青古铜

AC 红古铜

LS–8204

欧式古典家具拉手 Europan–style Classical Furniture Handle

表面处理：
青古铜，红古铜
主要材质：
锌合金
适用范围：
各式家具门扇、抽屉
主要特点：
美观、耐用

Finish:
AB, AC
Material:
Zinc Alloy
Available For:
Various Furniture Doors And Drawers
Features:
Elegant And Durable



可选表面处理
Optional surface treatment

AB 青古铜

AC 红古铜

LS–8078 S L

欧式古典家具拉手 Europan–style Classical Furniture Handle

表面处理：
青古铜，红古铜
主要材质：
锌合金
适用范围：
各式家具门扇、抽屉
主要特点：
美观、耐用

Finish:
AB, AC
Material:
Zinc Alloy
Available For:
Various Furniture Doors And Drawers
Features:
Elegant And Durable



可选表面处理
Optional surface treatment

AB 青古铜

AC 红古铜

LS–8196

欧式古典家具拉手 Europan–style Classical Furniture Handle

表面处理：
青古铜，红古铜
主要材质：
锌合金
适用范围：
各式家具门扇、抽屉
主要特点：
美观、耐用

Finish:
AB, AC
Material:
Zinc Alloy
Available For:
Various Furniture Doors And Drawers
Features:
Elegant And Durable



可选表面处理
Optional surface treatment

AB 青古铜

AC 红古铜

LS-8175

欧式古典家具拉手 Europan-style Classical Furniture Handle

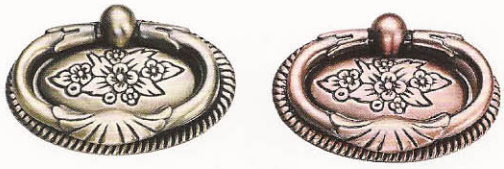

表面处理：
青古铜，红古铜
主要材质：
锌合金
适用范围：
各式家具门扇、抽屉
主要特点：
美观、耐用

Finish:
AB, AC
Material:
Zinc Alloy
Available For:
Various Furniture Doors And Drawers
Features:
Elegant And Durable

可选表面处理
Optional surface treatment

AB 青古铜　AC 红古铜

LS-8205 L S

欧式古典家具拉手 Europan-style Classical Furniture Handle



表面处理：
青古铜，红古铜
主要材质：
锌合金
适用范围：
各式家具门扇、抽屉
主要特点：
美观、耐用

Finish:
AB, AC
Material:
Zinc Alloy
Available For:
Various Furniture Doors And Drawers
Features:
Elegant And Durable

可选表面处理
Optional surface treatment

AB 青古铜　AC 红古铜

LS-8080

欧式古典家具拉手 Europan-style Classical Furniture Handle

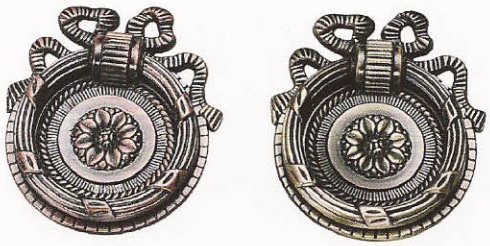

表面处理：
青古铜，红古铜
主要材质：
锌合金
适用范围：
各式家具门扇、抽屉
主要特点：
美观、耐用

Finish:
AB, AC
Material:
Zinc Alloy
Available For:
Various Furniture Doors And Drawers
Features:
Elegant And Durable

可选表面处理
Optional surface treatment

AB 青古铜　AC 红古铜

LS-8259/LS-8267

欧式古典家具拉手 Europan-style Classical Furniture Handle

表面处理：
青古铜，红古铜，K金
主要材质：
锌合金
适用范围：
各式家具门扇、抽屉
主要特点：
美观、耐用

Finish:
AB, AC, KG
Material:
Zinc Alloy
Available For:
Various Furniture Doors And Drawers
Features:
Elegant And Durable

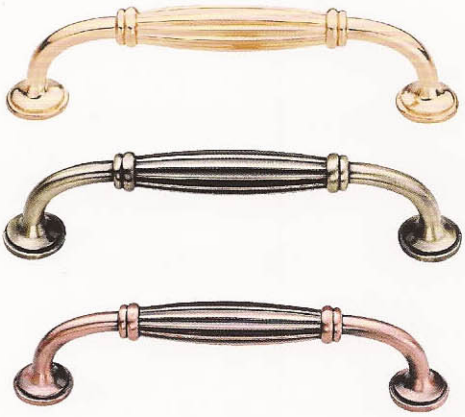

LS-8259 128

可选表面处理
Optional surface treatment

AB 青古铜　AC 红古铜　KG K金



LS-8267

LS-8178/LS-8179

欧式古典家具拉手 Europan-style Classical Furniture Handle

表面处理：
青古铜，红古铜，K金
主要材质：
锌合金
适用范围：
各式家具门扇、抽屉
主要特点：
美观、耐用

Finish:
AB, AC, KG
Material:
Zinc Alloy
Available For:
Various Furniture Doors And Drawers
Features:
Elegant And Durable



LS-8178 S L

可选表面处理
Optional surface treatment

AB 青古铜　AC 红古铜　KG K金



LS-8179 S L

LS-8274/LS-8279

欧式古典家具拉手 Europan-style Classical Furniture Handle



LS-8274 64 96

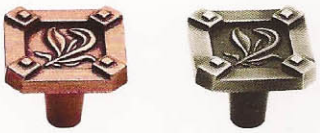

LS-8279

表面处理：
青古铜，红古铜
主要材质：
锌合金
适用范围：
各式家具门扇、抽屉
主要特点：
美观、耐用

Finish:
AB, AC
Material:
Zinc Alloy
Available For:
Various Furniture Doors And Drawers
Features:
Elegant And Durable

可选表面处理
Optional surface treatment

AB 青古铜　AC 红古铜

LS-8077/LS-8286

欧式古典家具拉手 Europan-style Classical Furniture Handle

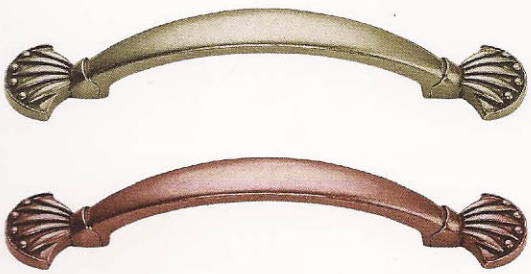

LS-8077



LS-8286

表面处理：
青古铜，红古铜
主要材质：
锌合金
适用范围：
各式家具门扇、抽屉
主要特点：
美观、耐用

Finish:
AB, AC
Material:
Zinc Alloy
Available For:
Various Furniture Doors And Drawers
Features:
Elegant And Durable

可选表面处理
Optional surface treatment

AB 青古铜　AC 红古铜

LS-8255/LS-8275

欧式古典家具拉手 Europan-style Classical Furniture Handle

表面处理：
青古铜，红古铜
主要材质：
锌合金
适用范围：
各式家具门扇、抽屉
主要特点：
美观、耐用

Finish:
AB, AC
Material:
Zinc Alloy
Available For:
Various Furniture Doors And Drawers
Features:
Elegant And Durable





LS-8255 64 96



LS-8275

可选表面处理
Optional surface treatment



AB 青古铜



AC 红古铜

LS-8269/LS-8277

欧式古典家具拉手 Europan-style Classical Furniture Handle

表面处理：
青古铜，红古铜
主要材质：
锌合金
适用范围：
各式家具门扇、抽屉
主要特点：
美观、耐用

Finish:
AB, AC
Material:
Zinc Alloy
Available For:
Various Furniture Doors And Drawers
Features:
Elegant And Durable





LS-8269 64 96



LS-8277

可选表面处理
Optional surface treatment



AB 青古铜



AC 红古铜

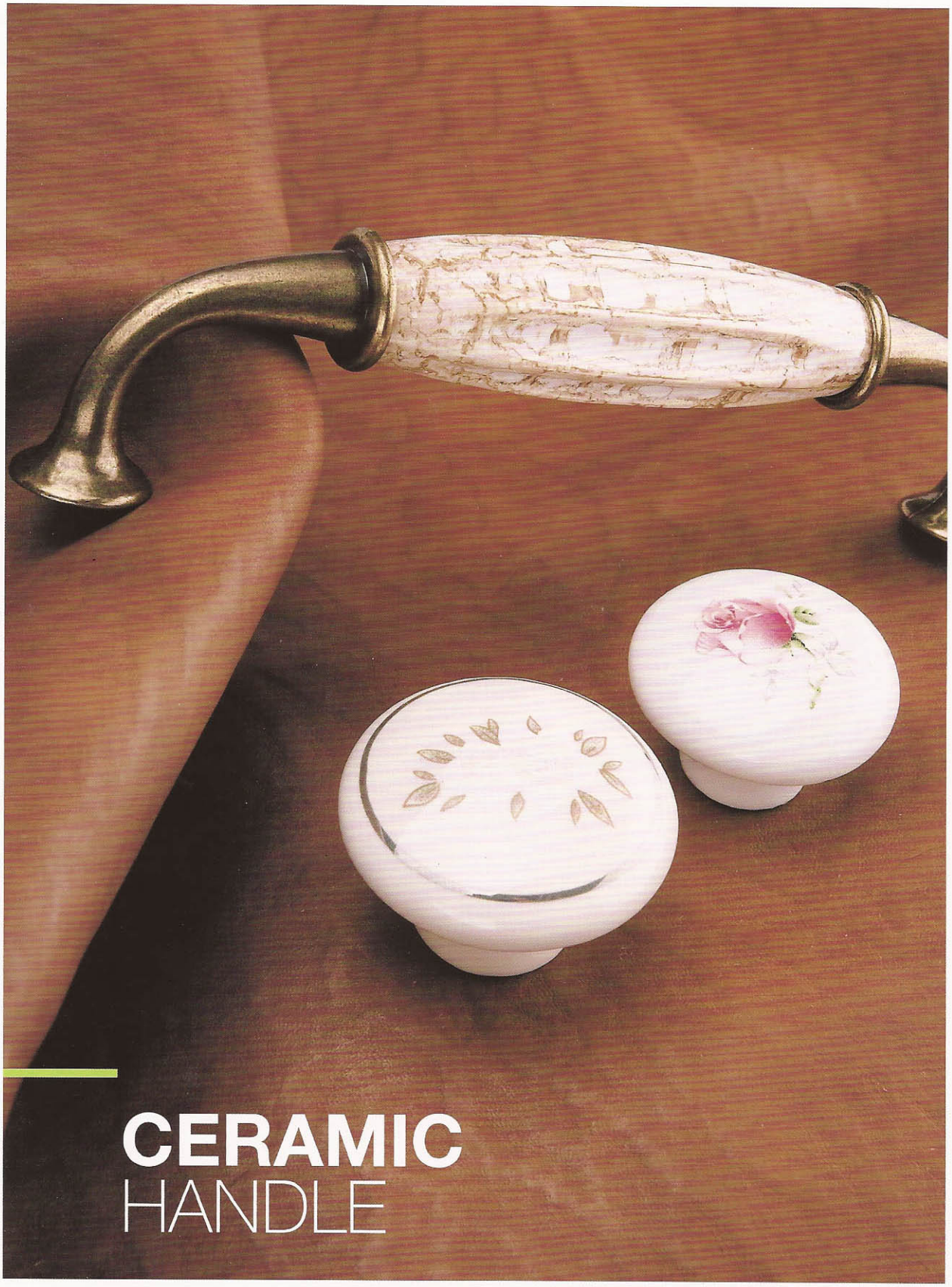

CERAMIC HANDLE

LS-81639

陶瓷拉手 Ceramic Handle

表面处理：

主要材质：
陶瓷
适用范围：
各式家具门扇、抽屉
主要特点：
美观、耐用

Finish:

Material:
Ceramic
Available For:
Various Furniture Doors And Drawers
Features:
Elegant And Durable

D	L	B	H
128	144	18	32

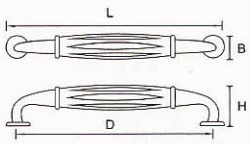



C02

ZO



W01

22KA



C03

ZO

LS-81621

陶瓷拉手 Ceramic Handle

表面处理：

主要材质：
陶瓷
适用范围：
各式家具门扇、抽屉
主要特点：
美观、耐用

Finish:

Material:
Ceramic
Available For:
Various Furniture Doors And Drawers
Features:
Elegant And Durable

D	L	B	H
76	120	20	31

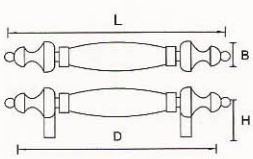



W02

22KA



W02

ZACC



ZACC

W05



W04

22KA



W01

22KA

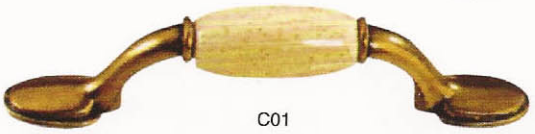

C01

ZACC



W02

ZO



W07

22KA

LS-81622

陶瓷拉手 Ceramic Handle

表面处理：

主要材质：
陶瓷
适用范围：
各式家具门扇、抽屉
主要特点：
美观、耐用

Finish:

Material:
Ceramic
Available For:
Various Furniture Doors And Drawers
Features:
Elegant And Durable

D	L	B	H
76	124	20	32

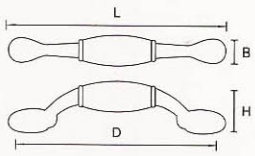



W01

ZO

LS-81632

陶瓷拉手系列 Ceramic Handle Series

表面处理：

主要材质：
陶瓷
适用范围：
各式家具门扇、抽屉
主要特点：
美观、耐用

Finish:

Material:
Ceramic
Available For:
Various Furniture Doors And Drawers
Features:
Elegant And Durable

D	L	B	H
100			

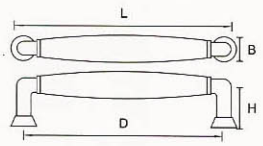

LS-81608

陶瓷拉手 Ceramic Handle

表面处理：

主要材质：
陶瓷
适用范围：
各式家具门扇、抽屉
主要特点：
美观、耐用

Finish:

Material:
Ceramic
Available For:
Various Furniture Doors And Drawers
Features:
Elegant And Durable

D	L	B	H
128	37	36	30

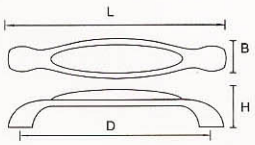



W06

E



W05

22KA



W04

ZP

LS-81631

陶瓷拉手 Ceramic Handle

表面处理：

主要材质：
陶瓷
适用范围：
各式家具门扇、抽屉
主要特点：
美观、耐用

Finish:

Material:
Ceramic
Available For:
Various Furniture Doors And Drawers
Features:
Elegant And Durable

D	L	B	H
96	114	20	30

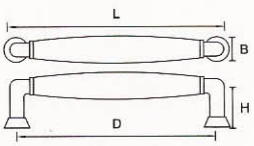

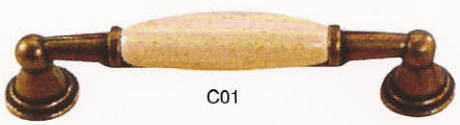

C01

ZACC



W04

ZACC



W05

ZO



W02

ZACC

LS-81205

陶瓷拉手 Ceramic Handle



W03

LS-81205 S



C05

LS-81205 L



W02

LS-81205 L

表面处理：

主要材质：
陶瓷
适用范围：
各式家具门扇、抽屉
主要特点：
美观、耐用

Finish:

Material:
Ceramic
Available For:
Various Furniture Doors And Drawers
Features:
Elegant And Durable

D	L	B	H
	33	33	24
	37	37	27

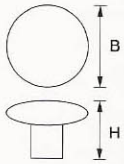

LS-81203

陶瓷拉手系列 Ceramic Handle Series



ZACC/C01



ZACC/W04



ZO/W02



ZO/C03

表面处理：

主要材质：
陶瓷
适用范围：
各式家具门扇、抽屉
主要特点：
美观、耐用

Finish:

Material:
Aluminum Alloy
Available For:
Various Furniture Doors And Drawers
Features:
Elegant And Durable

D	L	B	H
	31	31	24

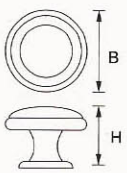

LS-81208/LS-81206

陶瓷拉手 Ceramic Handle

表面处理：

主要材质：
锌合金
适用范围：
各式家具门扇、抽屉
主要特点：
美观、耐用

Finish:

Material:
Zinc Alloy
Available For:
Various Furniture Doors And Drawers
Features:
Elegant And Durable



C03

LS-81208



C03

LS-81206

D	L	B	H
	35	37	32

D1	L1	B1	H1
	31	31	40

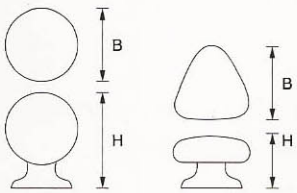



Handle

ALUMINUM HANDLES



Model	C	L	D	H
AW1913	160	170	20	33
	96	106	20	33
	128	138	20	33
	224	234	20	33
	256	266	20	33
	320	330	20	33



Model	C	L	D	H
AW2182	160	170	24	32
	96	106	24	32
	128	138	24	32
	156	168	24	31



Model	C	L	D	H
AW2206	160	203	24	28
	128	173	25	29



Model	C	L	D	H
AW2216	96	114	13	30



Model	C	L	D	H
AW 2227	96	120.5	13	41



Model	C	L	D	H
AW6003	156	170	22	28
	128	140	22	26



Model	C	L	D	H
AW6012	78	101	9	24



Model	C	L	D	H
AW6201	64	79	15	19.5
	96	111	15	19.5
	128	145	15	19.5
	160	175	15	19.5
	192	207	15	19.5



Model	C	L	D	H
AW 6202	64	94	9	16.5
	96	126	9	16.5
	128	158	9	16.5
	160	190	9	16.5
	192	222	9	16.5



Model	C	L	D	H
AW 6203	64	94	9	16.5
	96	126	9	16.5
	128	158	9	16.5
	160	190	9	16.5
	192	222	9	16.5

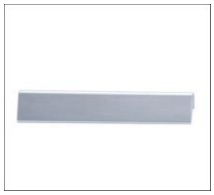

Model	C	L	D	H
AW6205	64	79	22.8	18.5
	96	111	22.8	18.5
	128	143	22.8	18.5
	160	175	22.8	18.5
	192	202	22.8	18.5



Model	C	L	D	H
AW6206	96	120	16	28.5
	128	152	16	28.5
	160	184	16	28.5
	192	216	16	28.5
	224	248	16	28.5



Model	C	L	D	H
AW6207	96	103	20	32
	128	135	20	32
	160	167	20	32
	192	199	20	32
	224	231	20	32



Model	C	L	D	H
AW6208	96	103	20	31
	128	135	20	31
	160	167	20	31
	192	199	20	31
	224	231	20	31



Model	C	L	D	H
AW6209	64	79	14	21
	96	111	14	21
	128	143	14	21
	160	175	14	21
	192	207	14	21



Model	C	L	D	H
AW6210	96	121	20	30
	128	153	20	30
	160	185	20	30
	192	217	20	30
	224	249	20	30



Model	C	L	D	H
AW6211	96	104	25	33
	128	136	25	33
	160	168	25	33
	192	200	25	33
	224	232	25	33



Model	C	L	D	H
AW6212	128	144	16	39
	160	176	16	39
	192	208	16	39
	224	240	16	39



Model	C	L	D	H
AW6213	64	83	42	15.5
	96	116	42	15.5
	128	148	42	15.5



Model	C	L	D	H
AW6215	96	110	16	27
	128	142	16	27
	160	174	16	27
	192	206	16	27
	224	238	16	27



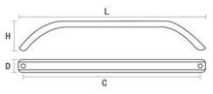

Model	C	L	D	H
AW6216	96	114	20	31
	128	146	20	31
	160	178	20	31
	192	210	20	31
	224	242	20	31



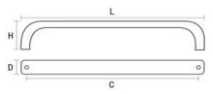

Model	C	L	D	H
AW6217	96	104	16	28.5
	128	136	16	28.5
	160	168	16	28.5
	192	200	16	28.5
	224	232	16	28.5



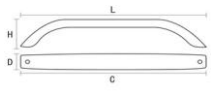

Model	C	L	D	H
AW6218	96	107	18	25
	128	142	18	25
	160	174	18	25
	192	206	18	25
	224	238	18	25



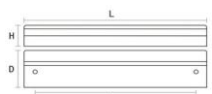

Model	C	L	D	H
AW6219	64	79	44	19
	96	111	44	19
	128	143	44	19
	160	175	44	19
	192	207	44	19



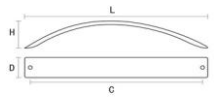

Model	C	L	D	H
AW6220	128	150	25	28.5
	160	190	25	28.5
	192	230	25	28.5
	224	265	25	28.5

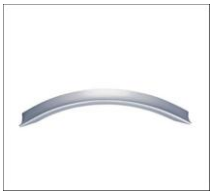

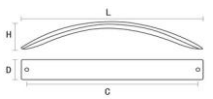

Model	C	L	D	H
AW6221	128	152	22.5	29
	160	190	22.5	29
	192	230	22.5	29
	224	265	22.5	29



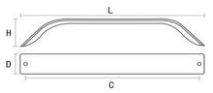

Model	C	L	D	H
AW6222	128	145	25	30
	160	177	25	30
	192	207	25	30
	224	241	25	30



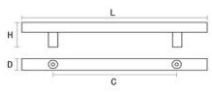

Model	C	L	D	H
AW6223	96	156	12	31
	128	188	12	31
	160	220	12	31
	192	252	12	31
	224	284	12	31



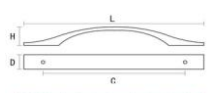

Model	C	L	D	H
AW6225	96	150	17.8	23.8
	128	198	20	25.5



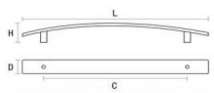

Model	C	L	D	H
AW6226	96	150	17.8	23.8



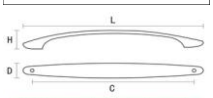

Model	C	L	D	H
AW6227	160	190	27.8	23.8



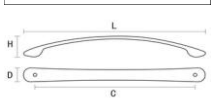

Model	C	L	D	H
AW6242	160	190	32	25

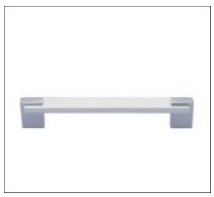

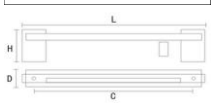

Model	C	L	D	H
AW6229	96	107	28	16.8
	128	139	28	16.8
	160	171	28	16.8
	192	203	28	16.8
	224	235	28	16.8

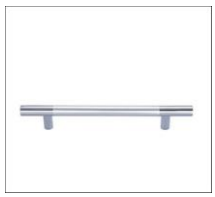

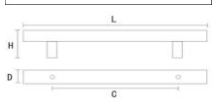

Model	C	L	D	H
AW6230	96	152	32	13
	128	184	32	13
	160	216	32	13
	192	248	32	13
	224	280	32	13

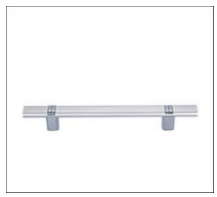

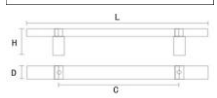

Model	C	L	D	H
AW6231	64	104	19	29
	96	156	19	29
	128	188	19	29
	160	220	19	29
	192	252	19	29



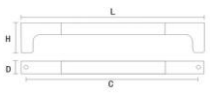

Model	C	L	D	H
AW6232	96	105	23	15
	128	137	23	15
	160	169	23	15
	192	201	23	15
	224	233	23	15



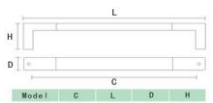

Model	C	L	D	H
AW6233	96	108	27	22
	128	140	27	22
	160	172	27	22
	192	204	27	22
	224	236	27	22



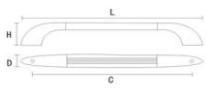

Model	C	L	D	H
AW6235	96	128	25	15
	128	160	25	15
	160	192	25	15
	192	224	25	15
	224	256	25	15



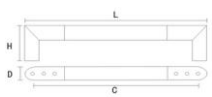

Model	C	L	D	H
AW6236	96	109	13	33
	128	141	13	33
	160	173	13	33
	192	205	13	33
	224	237	13	33



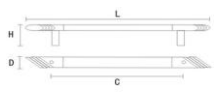

Model	C	L	D	H
AW6237	96	156	25	15
	128	188	25	15
	160	220	25	15
	192	252	25	15
	224	284	25	15





Model	C	L	D	H
AW6238	96	113	32	19.5
	128	145	32	19.5
	160	177	32	19.5
	192	209	32	19.5
	224	241	32	19.5



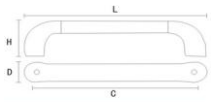

Model	C	L	D	H
AW6239	96	122	31	20.5
	128	154	31	20.5
	160	186	31	20.5
	192	218	31	20.5
	224	250	31	20.5



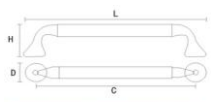

Model	C	L	D	H
AW6240	96	114	28	17
	128	146	28	17
	160	178	28	17
	192	210	28	17
	224	242	28	17



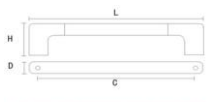

Model	C	L	D	H
AW6241	96	108	27.5	11
	128	140	27.5	11
	160	172	27.5	11
	192	204	27.5	11
	224	236	27.5	11



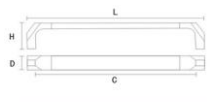

Model	C	L	D	H
AW6242	96	103	22	13
	128	135	22	13
	160	167	22	13
	192	199	22	13
	224	231	22	13



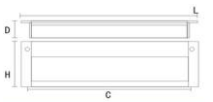

Model	C	L	D	H
AW6243	64	91	46	15.5
	96	123	46	15.5
	128	155	46	15.5
	160	187	46	15.5
	192	219	46	15.5



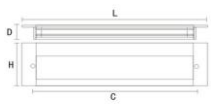

Model	C	L	D	H
AW6245	64	90	38	13
	96	111	38	13
	128	144	38	13
	160	176	38	13
	192	208	38	13



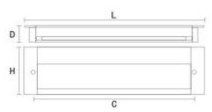

Model	C	L	D	H
AW6246	64	76	44	15.5
	96	108	44	15.5
	128	140	44	15.5
	160	172	44	15.5
	192	204	44	15.5



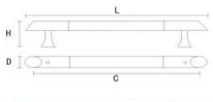

Model	C	L	D	H
AW6247	96	138	28	10
	128	170	28	10
	160	202	28	10
	192	234	28	10
	224	266	28	10



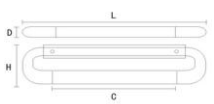

Model	C	L	D	H
AW6248	32	87	39.5	10.5
	64	119	39.5	10.5
	96	151	39.5	10.5
	128	183	39.5	10.5
	160	215	39.5	10.5

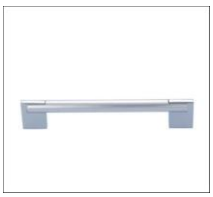

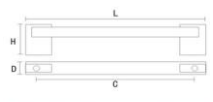

Model	C	L	D	H
AW6249	96	118	28.5	11.5
	128	140	28.5	11.5
	160	172	28.5	11.5
	192	204	28.5	11.5
	224	236	28.5	11.5



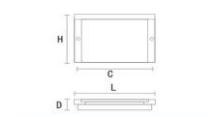

Model	C	L	D	H
AW6250	32	48	35	10
	64	80	35	10



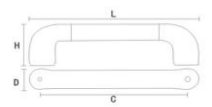

Model	C	L	D	H
AW6251	96	108	33	20.5
	128	140	33	20.5
	160	172	33	20.5
	192	204	33	20.5
	224	236	33	20.5

STEEL AND STAINLESS STEEL HANDLES



Model	C	L	D	H
AW 1761	96		10	32
	128		10	32
	160		10	32
	192		10	32



Model	C	L	D	H
AW2180	156	181	22	44
	256	281	22	44
	356	381	22	44
	456	481	22	44
	632	657	22	44
	N	N+25	22	44

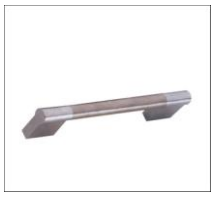

Model	C	L	D	H
AW2181	156	179	22	44
	256	279	22	44
	356	379	22	44
	N	N+23	22	44



Model	C	L	D	H
AW2185	156	190	30	42
	256	290	30	42
	356	390	30	42
	456	490	30	42
	N	N+34	30	42



Model	C	L	D	H
AW2186	96	116	10	38
	128	148	10	38
	160	180	10	38
	256	276	10	38
	N	N+20	10	38
	144	157	12	34



Model	C	L	D	H
AW2187	96	123	14	36
	128	155	14	36
	156	183	14	36
	256	283	14	36
	356	383	14	36
	N	N+27	14	36



Model	C	L	D	H
AW2187B	156	184	15	37
	256	284	15	37
	306	334	15	37
	N	N+28	15	37



Model	C	L	D	H
AW2189	128	136	20	30
	160	168	20	30
	192	200	20	30
	544	552	20	30
	N	N+8	20	30



Model	C	L	D	H
AW2191	96	111	13	32
	128	143	13	32
	N	N+15	13	32



Model	C	L	D	H
AW 2226	160	172	13	36



Model	C	L	D	H
AW2282	64	104	12（10）	
	96	156	12（10）	
	128	188	12（10）	
	160	220	12（10）	
	N	N+M	12（10）	32



Model	C	L	D	H
A W 2285	96	106	10	30
	128	138	10	30



Model	C	L	D	H
AW2501	96	104	18	38
	128	138	18	38



Model	C	L	D	H
AW2502	96	113	20	40
	128	145	20	40



Model	C	L	D	H
AW2503		35	35	55



Model	C	L	D	H
AW2504		45	45	36
		33	33	36
		35	30	36



Model	C	L	D	H
AW2505		55	20	35
		63	23	36
	单孔	100	26	52



Model	C	L	D	H
AW2506	128	153	23	53
	96	116	23	53



Model	C	L	D	H
AW2507		55	20	35
		63	23	36
		72	24	38
		100	26	52



Model	C	L	D	H
AW2511	96	108	22	43
	128	140	22	43



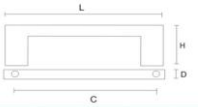

Model	C	L	D	H
AW2800	128	144	16	34
	N	N+16	16	34



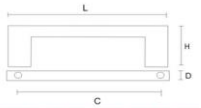

Model	C	L	D	H
AW2801	128	140	12	28
	N	N+12	12	28





Model	C	L	D	H
AW2802	128	144	16	42
	N	N+16	16	42



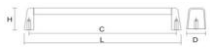

Model	C	L	D	H
AWG0001	128	139	28	38
	160	171	28	38
	224	235	28	38
	320	331	28	38
	N	N+11	28	38



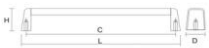

Model	C	L	D	H
AWG0002	128	138	22	34
	160	170	22	34
	192	202	22	34
	256	266	22	34
	320	330	22	34
	N	N+10	22	34

CERAMIC AND CRYSTAL HANDLES



Model	C	L	D	H
AW1401		29	25	39



Model	C	L	D	H
AW1410		28	25	38
		32	26	46



Model	C	L	D	H
AW1411		30	26	46



Model	C	L	D	H
AW9518	76	96	13.3	28



Model	C	L	D	H
AW9504	64	79	19	35
	96	111	19	35
	128	143	19	35



Model	C	L	D	H
AW9506	64	112	20	32
	96	144	20	32
	128	176	20	32



Model	C	L	D	H
AW9508A	64	81	20	33
	96	113	20	33
	128	143	18	33



Model	C	L	D	H
AW9511	96	108	25	37



Model	C	L	D	H
AW9515		37	29	37



Model	C	L	D	H
AW9515		37	29	37



Model	C	L	D	H
AW9516	78	128	21.5	25



Model	C	L	D	H
AW9518	96	116	28	20



Model	C	L	D	H
AW9521	96	128	25.5	22.5



Model	C	L	D	H
AW9802		34	21	29



Model	C	L	D	H
AW9807		38	19	28
		32	19	26



Model	C	L	D	H
AW9815				



Model	C	L	D	H
		30	16	27

WOODEN HANDLES



Model	C	L	D	H
AW1610	64	86	9	23
	96	125	10	26
	128	178	14	27



Model	C	L	D	H
AW2213	160	190	19	28



Model	C	L	D	H
AW9002	64	101	14	27
	96	130	15	30



Model	C	L	D	H
AW9003	96	111	16	25
Model	C	L	D	H
AW9003	64	80	16	22



Model	C	L	D	H
AW9004	64	75	11	26
	96	112	12	28



Model	C	L	D	H
AW9006	64	83	16	33
	96	115	16	33
	128	147	16	33



Model	C	L	D	H
AW9009	64	90	16	35
	96	122	16	35
	128	154	16	35



Model	C	L	D	H
AW9013	64	80	16	33
	96	112	16	33
	128	144	16	33
	160	176	16	33



Model	C	L	D	H
AW9015	64	74	16	30
	96	106	16	30
	128	138	16	30



Model	C	L	D	H
AW9016	96	126	12	28



Model	C	L	D	H
AW9017	64	74	12	30
	96	106	12	30
	128	138	12	30



Model	C	L	D	H
AW9019	128	137	20	25



Model	C	L	D	H
AW9020	64	114	14	35
	96	146	14	35
	128	178	14	35



Model	C	L	D	H
AW9022	64	88	16	31
	96	120	16	31
	128	152	16	31



Model	C	L	D	H
AW9023	64	84	15	32
	96	114	15	32
	128	138	15	32



Model	C	L	D	H
AW9024	64	88	12	33



Model	C	L	D	H
AW9025	64	77	13	33
	96	109	13	33
	128	141	13	33



Model	C	L	D	H
AW9026	96	122	14	28



Model	C	L	D	H
AW9039	64	94	15	33
	96	126	15	33
	128	158	15	33



Model	C	L	D	H
AW9040	64	85	17	23
	96	116	16	25



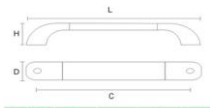

Model	C	L	D	H
AW9041	64	75	10	23
	96	107	11	28





Model	C	L	D	H
AW9201		25	22	32



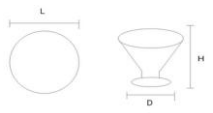

Model	C	L	D	H
AW9205		29	19	30



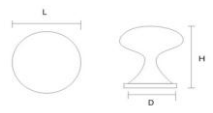

Model	C	L	D	H
AW9217		32	23	25



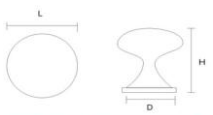

Model	C	L	D	H
AW9218		25	17	23



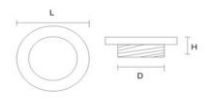

Model	C	L	D	H
AW9219		43	34	15



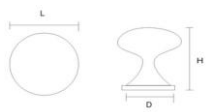

Model	C	L	D	H
AW9220		33	17	36



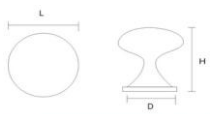

Model	C	L	D	H
AW9221		35	32	41



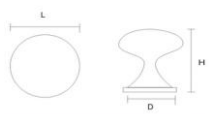

Model	C	L	D	H
AW9222		50	44	51





Model	C	L	D	H
AW9223		40	26	31



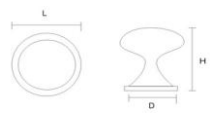

Model	C	L	D	H
AW9225		40	27	27



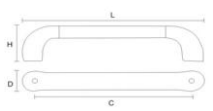

Model	C	L	D	H
AW9226	96	133	22	30



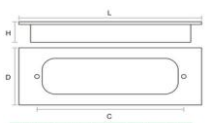

Model	C	L	D	H
AW9227	102	109	17	46



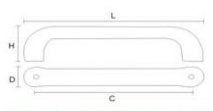

Model	C	L	D	H
AW9228	96	126	16	23



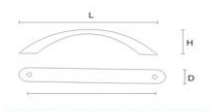

Model	C	L	D	H
AW9229	128	160	11	30
	96	128	11	26

DOOR HANDLES



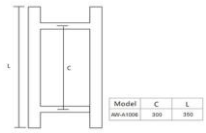

Model	C	L
AW-A1006	300	350





Model	C	L
AW-A1201	280	415





Model	C	L
AW-A8001	210	320
	280	400
	335	500
	450	600

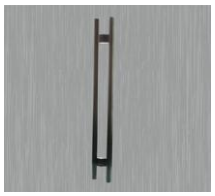

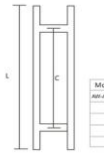

Model	C	L
AW-A9012	550	800
	700	1000
	900	1200
	1100	1500
	1400	1800



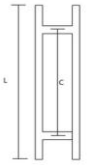

Model	C	L
AW-A8013	550	800
	700	1000
	900	1200
	1100	1500
	1400	1800



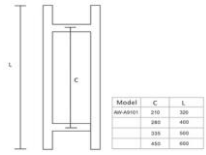

Model	C	L
AW-A8101	210	320
	280	400
	335	500
	450	600



AW5123

Model	C	L	D	H
AW5123	32	76	35	56



AW5129

Model	C	L	D	H
AW8129	33	80	120	35



AW5130

Model	C	L	D	H
AW5130	28	73	26	83



Model	C	L	D	H
AW5152	30	53	18	56

AW5152



Model	C	L	D	H
AW5161		10	60	30

AW5161



Model	C	L	D	H
AW5162		25	17	40

AW5162



AW5163

Model	C	L	D	H
AW5163	19	76	48	45



AW8235

Model	C	L	D	H
AW8235	3J	270	48	38
	4J	370	48	38
	5J	470	48	38
	6J	570	48	38
	7J	670	48	38
	8J	770	48	38



AW8236

Model	C	L	D	H
AW8236	3J	270	48	38
	4J	370	48	38
	5J	470	48	38
	6J	570	48	38
	7J	670	48	38
	8J	770	48	38



Model	C	L	D	H
AW8237	3J	270	48	38
	4J	370	48	38
	5J	470	48	38
	6J	570	48	38
	7J	670	48	38
	8J	770	48	38

AW8237



Model	C	L	D	H
AW8806	32	19	65	14

AW8806



Model	C	L	D	H
AW8809	40*40*40*40	50	73	122

AW8809



AW8830

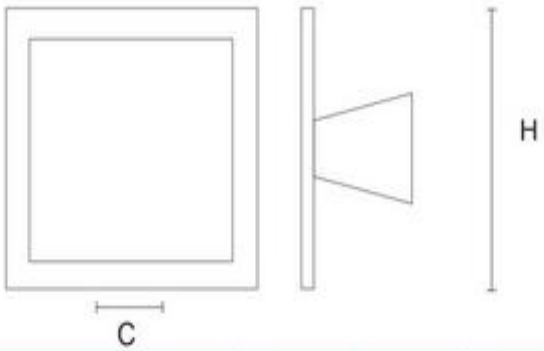

Model	C	L	D	H
AW 8830		89.5	89.5	7.4



AW-A1023 CP

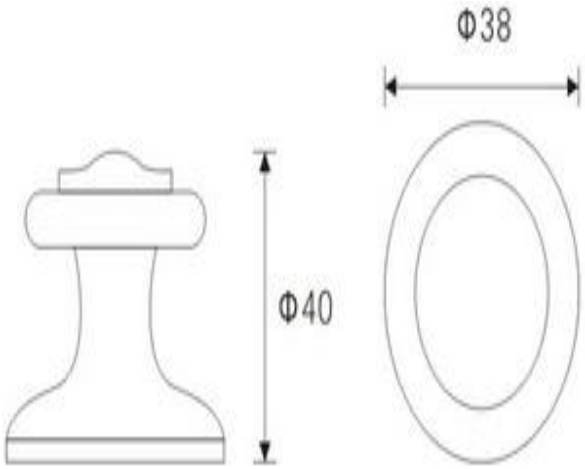

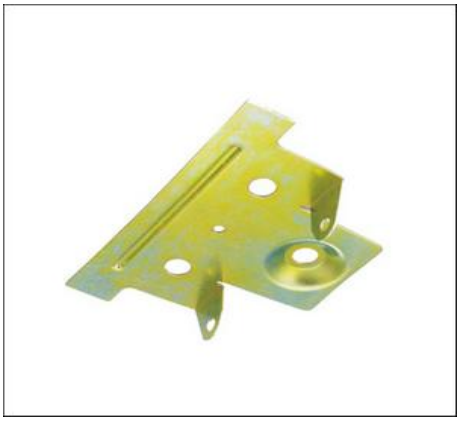

AW8810



AW8812



AW-N601



AW-N602



AW-N603



AW-N605



AW-N606



AW-N607



AW-N608



AW-N610



AW-N611



AW-N612



JF-3624



AWN-2077



AWN-2078



AWN-2079



AWN-3067



AWN-3068



AWN-3069



AWN-6017



AWN-6018



AWN-6019



80101



80102



80103



80106

Handle

ZAMAC HANDLES



Model	C	L	D	H
AW 1141	64	97	15	22
	96	125	12	20



Model	C	L	D	H
AW 1145	64	87	10	25
	96	120	11	28



Model	C	L	D	H
AW 1157	64	76	10	20
	96	110	11	24



Model	C	L	D	H
AW 1160	64	80	11	20
	96	112	12	22



Model	C	L	D	H
AW 1162	64	85	8	22
	96	117	8	24



Model	C	L	D	H
AW 1165	64	104	18	25
	96	140	21	29



Model	C	L	D	H
AW 1201	64	90	8	20
	96	118	11	22



Model	C	L	D	H
AW 1256	160	185	25	26



Model	C	L	D	H
AW 1259	96	114	22	30



Model	C	L	D	H
AW 1259-2		75	20	19



Model	C	L	D	H
AW 1260		65	19	16



Model	C	L	D	H
AW 1261	64	72	15	26



Model	C	L	D	H
AW 1266	128	160	23	25
	96	122	19	23



Model	C	L	D	H
AW 1277	64	122	24	26



Model	C	L	D	H
AW 1278	64	123	22	30



Model	C	L	D	H
AW 1280	96	150	21	27



Model	C	L	D	H
AW 1289	96	125	20	22



Model	C	L	D	H
AW 1290	128	167	22	28
	96	133	16	22



Model	C	L	D	H
AW 1291	128	163	14	28
	96	126	12	24



Model	C	L	D	H
AW 1292	128	138	25	28
	96	103	8	27



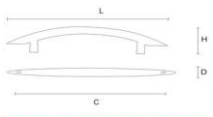

Model	C	L	D	H
AW 1293	128	196	12	30



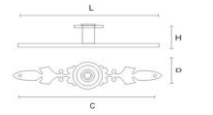

Model	C	L	D	H
AW 1295		98	25	25



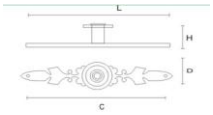

Model	C	L	D	H
AW 1296		86	17	24



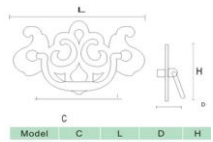

Model	C	L	D	H
AW 1297	76	135	24	65



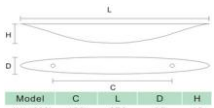

Model	C	L	D	H
AW 1298L	128	270	25	16
	96	165	22	18
	16	39.5	22.6	17
	32	62.3	25	17



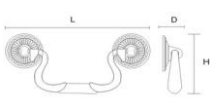

Model	C	L	D	H
AW 1299	74	102	28	49



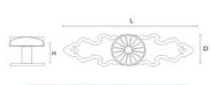

Model	C	L	D	H
AW 1306B		78	28	23



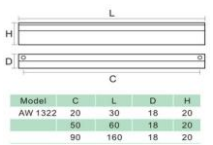

Model	C	L	D	H
AW 1322	20	30	18	20
	50	60	18	20
	90	160	18	20



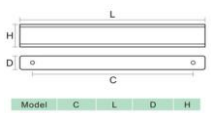

Model	C	L	D	H
AW 1323	64	71	10	20



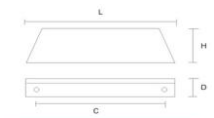

Model	C	L	D	H
AW 1325	96	113	24	23





Model	C	L	D	H
AW 1326		30	16	24





Model	C	L	D	H
AW1327		30	20	25



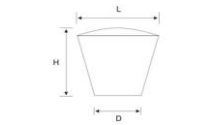

Model	C	L	D	H
AW 1336		33	22	30



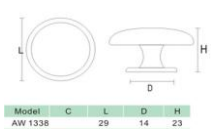

Model	C	L	D	H
AW 1338		29	14	23



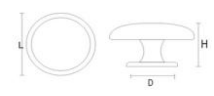

Model	C	L	D	H
AW 1338		32		23

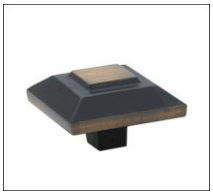

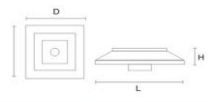

Model	C	L	D	H
AW 1347		37	37	26





Model	C	L	D	H
AW 1349A		39		40





Model	C	L	D	H
AW 1350		23	12	25

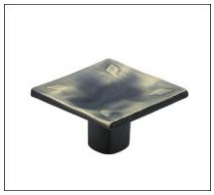

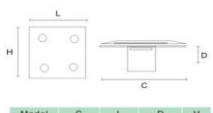

Model	C	L	D	H
AW 1355		30	30	18



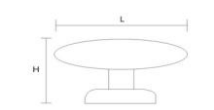

Model	C	L	D	H
AW1359		38	12	23



Model	C	L	D	H
AW1361-S		13	13	23.3
AW1361-M		25	25	30
AW1361-L		28	28	35



Model	C	L	D	H
AW 1362		16		25



Model	C	L	D	H
AW 1365M		17.5		25



Model	C	L	D	H
AW1367		28	20	23



Model	C	L	D	H
AW 1370		32		23.5



Model	C	L	D	H
AW1660	96	120	9	20



Model	C	L	D	H
AW1701A	128	157	16	28
	96	122	17	23



Model	C	L	D	H
AW1701B	128	154	17	26
	96	125	17	25



Model	C	L	D	H
AW1701D	128	147	11	23
	96	116	11	20



Model	C	L	D	H
AW1071E	96	114	13	22



Model	C	L	D	H
AW1702	96	130	14	29



Model	C	L	D	H
AW1703	128	185	22	20
	96	135	17	23



Model	C	L	D	H
AW1704	128	166	22	30
	96	131	22	26



Model	C	L	D	H
AW1705	160	190	20	23
	192	220	21	23



Model	C	L	D	H
AW1706	128	163	21	28
	96	120	17	24



Model	C	L	D	H
AW1707	128	163	25	25



Model	C	L	D	H
AW1708	128	150	12	25
	96	110	10	28



Model	C	L	D	H
AW1710	128	135	14	30
	96	106	12	29



Model	C	L	D	H
AW1716	160	190	25	26



Model	C	L	D	H
AW1718	96	185	14	25



Model	C	L	D	H
AW 1719	128	200	35	32
	64	110	9	24
	96	137	11	23



Model	C	L	D	H
AW1720	160	200	30	30
	128	166	27	29
	64	92	20	27
	96	125	20	27



Model	C	L	D	H
AW 1724	160	168	23	27



Model	C	L	D	H
AW1725	128	151	16	30



Model	C	L	D	H
AW1726	128	150	11	27
	192	224	14	32



Model	C	L	D	H
AW1727	224	270	14	33



Model	C	L	D	H
AW 1728	128	153	10	28
	96	115	10	28



Model	C	L	D	H
AW 1730	128	136	21	26



Model	C	L	D	H
AW 1731	128	144	16	31
	192	210	20	30



Model	C	L	d	h
AW 1732	128	143	22	26



Model	C	L	D	H
AW2120	96	118	15	24
	64	86	12	23



Model	C	L	D	H
AW 1743	160	191	24	24



Model	C	L	d	h
AW 1745	128	133	12	30
	96	101	12	28



Model	C	L	D	H
AW1749	128	170	22	27



Model	C	L	D	H
AW 1751	128	190	18	25



Model	C	L	D	H
Aw1752	160	178	18	26



Model	C	L	D	H
AW 1753	128	143	16	33



Model	C	L	D	H
AW1755	128	190	18	21



Model	C	L	D	H
AW1759	75	130	18	25



Model	C	L	D	H
AW1760	64	95	10	24
	96	142	12	24



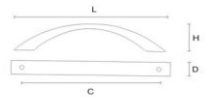

Model	C	L	D	H
AW 1763	128	155	28	27



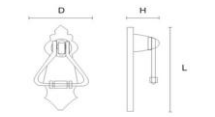

Model	C	L	D	H
AW1770		65	25	20





Model	C	L	D	H
AW1771	64	82	57	21



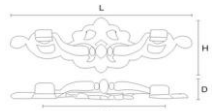

Model	C	L	D	H
AW 1772	82	124	50	12



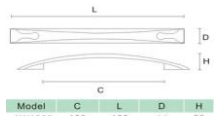

Model	C	L	D	H
AW1800	128	150	14	29
	96	117	13	20



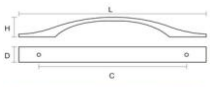

Model	C	L	D	H
AW1801	96	138	18	28



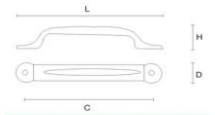

Model	C	L	D	H
AW 1804	96	133	23	25



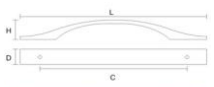

Model	C	L	D	H
AW812	128	185	19	23



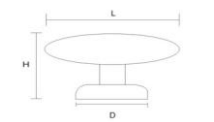

Model	C	L	D	H
AW1815A		56	22	33



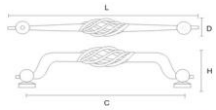

Model	C	L	D	H
AW 1816	164	180	23	50



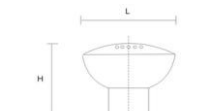

Model	C	L	D	H
AW1819		35	11	18



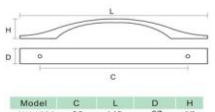

Model	C	L	D	H
AW 1820	96	143	27	27



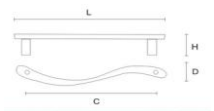

Model	C	L	D	H
AW1821	128	142	20	20
	96	108	20	20



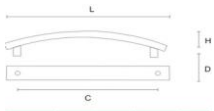

Model	C	L	D	H
AW1822	128	165	10	24



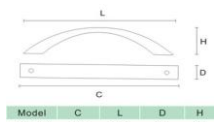

Model	C	L	D	H
AW1826	160	185	20	30
	128	153	20	30
	96	118	18	24



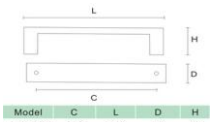

Model	C	L	D	H
AW 1827	128	145	15	25
	160	187	20	23
	96	114	14	27



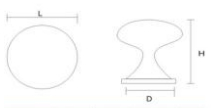

Model	C	L	D	H
AW1860		32	16	27



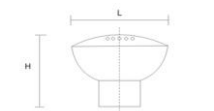

Model	C	L	D	H
AW1862		30	14	20



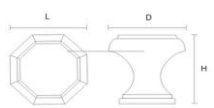

Model	C	L	D	H
AW 1863		33	18	24



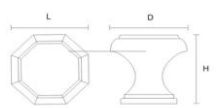

Model	C	L	D	H
AW 1863		33	18	24



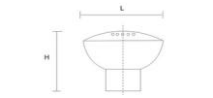

Model	C	L	D	H
AW1864B		27	12	24
AW1864A		32	14	26



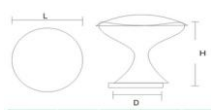

Model	C	L	D	H
AW1867		22	13	14



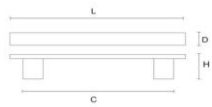

Model	C	L	D	H
AW1901	128	160	14	23
	160	192	14	23
	96	128	14	23



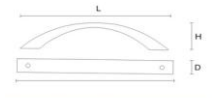

Model	C	L	D	H
AW1902	128	138	12	30
	96	105	11	27



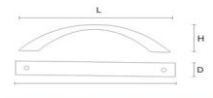

Model	C	L	D	H
AW1902B	96	110	15	31
	128	142	14	34



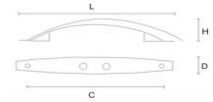

Model	C	L	D	H
AW1903	128	155	18	27
	96	126	14	24
	160	190	17	29



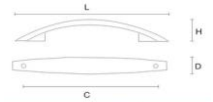

Model	C	L	D	H
AW1905	96	142	8	23



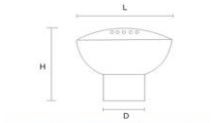

Model	C	L	D	H
AW1906		26	12	23



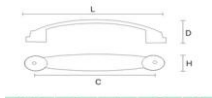

Model	C	L	D	H
AW1907	64	83	17	23
	96	142	26	26



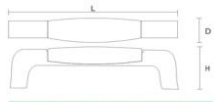

Model	C	L	D	H
AW 1908	128	144	18	31



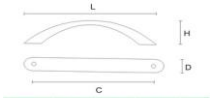

Model	C	L	D	H
AW1909	128	152	17	30
	64	85	15	24
	96	112	11	28



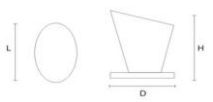

Model	C	L	D	H
AW 1910		28	20	20



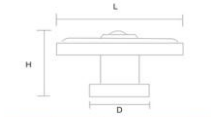

Model	C	L	D	H
AW1911		33	18	30



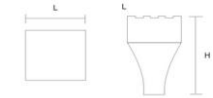

Model	C	L	D	H
AW1912		21		28



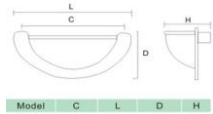

Model	C	L	D	H
AW 1915	76	94	38	24



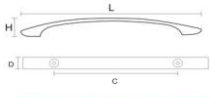

Model	C	L	D	H
AW1916	224	265	20	27



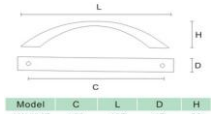

Model	C	L	D	H
AW1917	160	187	17	26
	192	220	17	25
	224	255	17	26



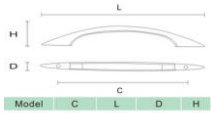

Model	C	L	D	H
AW1918	64	105	20	22
	96	152	22	23



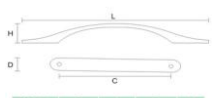

Model	C	L	D	H
AW1919	96	131	20	23



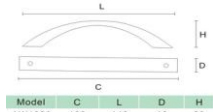

Model	C	L	D	H
AW1920	128	148	10	29
	64	76	8	21
	96	110	10	26



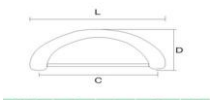

Model	C	L	D	H
AW1921	96	120	22	10



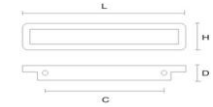

Model	C	L	D	H
AW1922	160	200	10	37



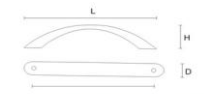

Model	C	L	D	H
AW1923	64	80	10	24
	96	112	10	27
	128	143	11	30
	160	175	10	27



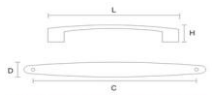

Model	C	L	D	H
AW1925	96	118	14	28



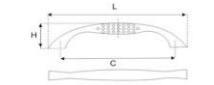

Model	C	L	D	H
AW1926	64	80	10	25
	96	115	12	32



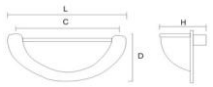

Model	C	L	D	H
AW1927	64	80	34	34



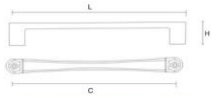

Model	C	L	D	H
AW1928	160	178	20	30





Model	C	L	D	H
AW1929		30	15	23





Model	C	L	D	H
AW1930	128	138	10	26
	96	135	10	26



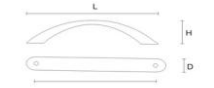

Model	C	L	D	H
AW1931	96	106	7	25
	128	162	12	28





Model	C	L	D	H
AW1932	128	155	9	26





Model	C	L	D	H
AW1933		30	16	29



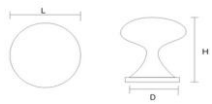

Model	C	L	D	H
AW1935		30	17	29



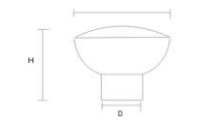

Model	C	L	D	H
AW1936		30	14	28



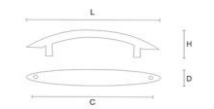

Model	C	L	D	H
AW1938	128	164	13	30



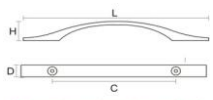

Model	C	L	D	H
AW 1939	96	130	20	26



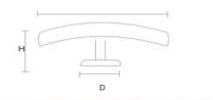

Model	C	L	D	H
AW1940		76	14	32



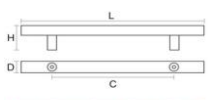

Model	C	L	D	H
AW1941	128	190	8	25



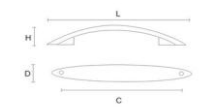

Model	C	L	D	H
AW1943	96	125	10	23



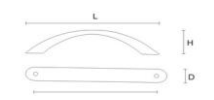

Model	C	L	D	H
AW1950	96	114	11	24



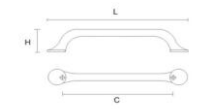

Model	C	L	D	H
AW1962	64	88	16	27
	96	123	14	27



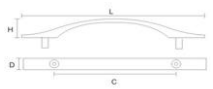

Model	C	L	D	H
AW1969	64	93	12	22
	96	139	12	23



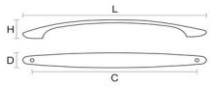

Model	C	L	D	H
AW1972	64	75	12	20
	96	110	15	25



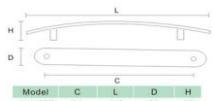

Model	C	L	D	H
AW1977	64	110	20	22
	96	158	27	23
	128	160	26	22



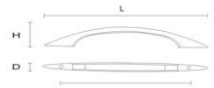

Model	C	L	D	H
AW1983	64	86	8	18
	96	119	10	18



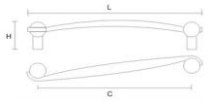

Model	C	L	D	H
AW1985	64	78	14	21
	96	110	18	25



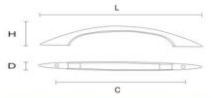

Model	C	L	D	H
AW1993	64	88	9	24
	96	123	11	26



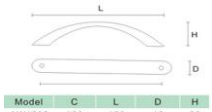

Model	C	L	D	H
AW1998	128	150	12	26
	64	79	9	21
	96	112	10	25



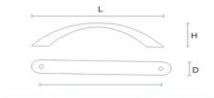

Model	C	L	D	H
AW1999	64	77	9	24
	96	115	10	26



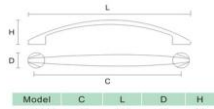

Model	C	L	D	H
AW2002	128	155	17	26
	64	83	13	23
	96	117	15	22





Model	C	L	D	H
AW2007	96	105	12	24



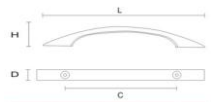

Model	C	L	D	H
AW2013	64	80	15	23
	96	113	18	25



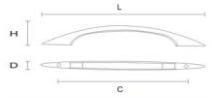

Model	C	L	D	H
AW2016	64	83	10	22
	96	118	11	22
	160	190	12	22



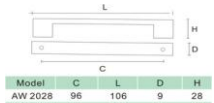

Model	C	L	D	H
AW 2028	96	106	9	28
	160	170	9	28
	256	292	9	28
	128	169	9	28
	224	235	9	28



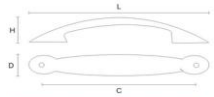

Model	C	L	D	H
AW2031	64	80	14	24
	96	118	14	22
	128	150	14	26



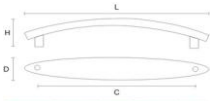

Model	C	L	D	H
AW2032	64	85	14	21
	96	117	16	26





Model	C	L	D	H
AW2033	128	143	44	18





Model	C	L	D	H
AW2036	96	105	18	32



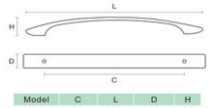

Model	C	L	D	H
AW2040	64	88	14	22
	96	122	15	23



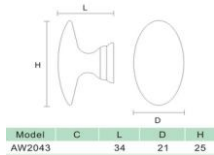

Model	C	L	D	H
AW2043		34	21	25



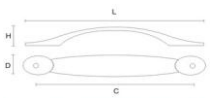

Model	C	L	D	H
AW 2048	96	108	12	29



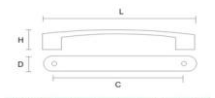

Model	C	L	D	H
AW2049	64	74	12	22
	96	105	15	24



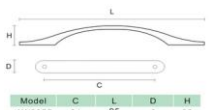

Model	C	L	D	H
AW2055	64	95	6	22
	96	125	8	21
	128	158	9	21



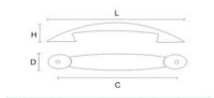

Model	C	L	D	H
AW2060	128	155	26	30



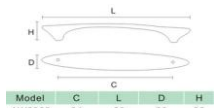

Model	C	L	D	H
AW2062	64	83	20	28
	96	121	20	28



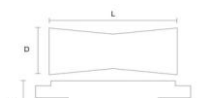

Model	C	L	D	H
AW 2064A		41	24	23



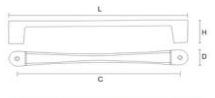

Model	C	L	D	H
AW 2064B	96	107	24	21



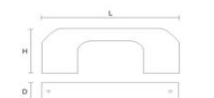

Model	C	L	D	H
AW 2068	32	50	9	26



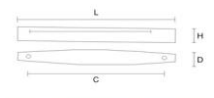

Model	C	L	D	H
AW 2069	128	208	9	22



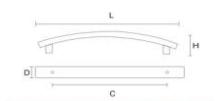

Model	C	L	D	H
AW2070	128	180	17	25
	64	100	14	22
	96	140	15	22



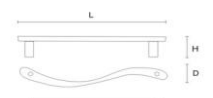

Model	C	L	D	H
AW2072	64	138	22	22



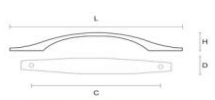

Model	C	L	D	H
AW 2073	128	152	22	30



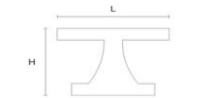

Model	C	L	D	H
AW 2075		39	32	30



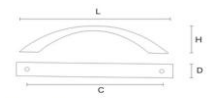

Model	C	L	D	H
AW2077	160	190	21	25



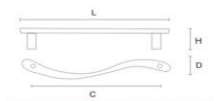

Model	C	L	D	H
AW 2078	96	105	23	25
	128	140	23	25



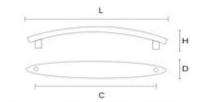

Model	C	L	D	H
AW2079	128	156	18	12



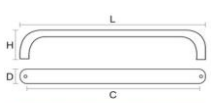

Model	C	L	D	H
AW2081	101.6	110	8	30



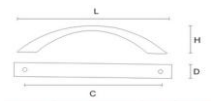

Model	C	L	D	H
AW2082	96	121	12	28
	128	153	12	28



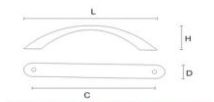

Model	C	L	D	H
AW2083	96	112	10	29



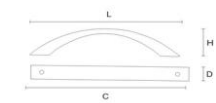

Model	C	L	D	H
AW2085	160	195	22	29



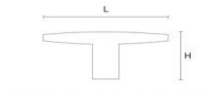

Model	C	L	D	H
AW 2095		32		25



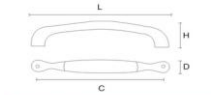

Model	C	L	D	H
AW2115	64	80	14	24
	96	110	16	25



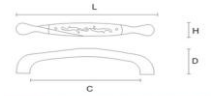

Model	C	L	D	H
AW2120	96	118	15	24
	64	86	12	23



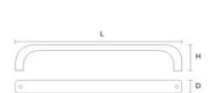

Model	C	L	D	H
AW 2122	64	73	10	24
	96	105	11	27



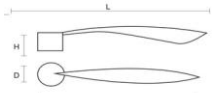

Model	C	L	D	H
AW 2127	96	123	18	28



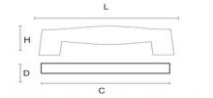

Model	C	L	D	H
AW 2128	128	148	10	28



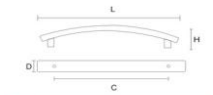

Model	C	L	D	H
AW 2129	128	158	10	25



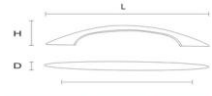

Model	C	L	D	H
AW 2130	128	145	11.7	26



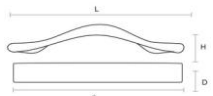

Model	C	L	D	H
AW 2131	128	149	23	29



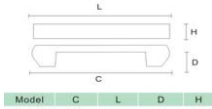

Model	C	L	D	H
AW 2133	128	158	20	33



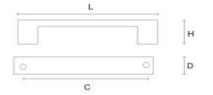

Model	C	L	D	H
AW 2135	160	167	27.5	30

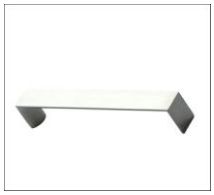

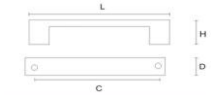

Model	C	L	D	H
AW 2136	128	136	19	27.5



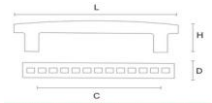

Model	C	L	D	H
AW 2138	128	170	16	29



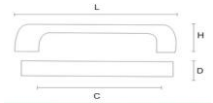

Model	C	L	D	H
AW 2139	96	118	18	29

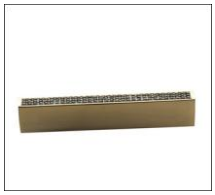



Model	C	L	D	H
AW 2141	96	108	14	24



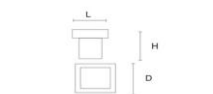

Model	C	L	D	H
AW 2142		14	14	23



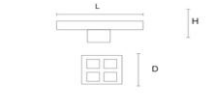

Model	C	L	D	H
AW 2143		25.5	26.5	23



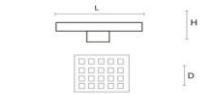

Model	C	L	D	H
AW 2145	16	50	50	23



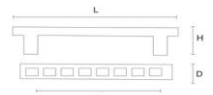

Model	C	L	D	H
AW 2146	64	98	14	23



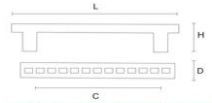

Model	C	L	D	H
AW 2147	96	135	15	19



Model	C	L	D	H
AW 2150	96	106	12	24



Model	C	L	D	H
AW 2152	76	108	12.5	27



Model	C	L	D	H
AW 2153	64	105	13	20



Model	C	L	D	H
AW 2155	64	109.5	9.5	20



Model	C	L	D	H
AW 2156	96	116.5	16.5	24



Model	C	L	D	H
AW 2157	96	134.5	13	24



Model	C	L	D	H
AW 2159		45	16	22



Model	C	L	D	H
AW 2160		27.5		22



Model	C	L	D	H
AW 2161		26.5	12	27



Model	C	L	D	H
AW 2162	128	138	11.5	20



Model	C	L	D	H
AW 2163		30		23



Model	C	L	D	H
AW 2165		26		18



Model	C	L	D	H
AW 2166		30		25



Model	C	L	D	H
AW 2167		32		25



Model	C	L	D	H
AW 2168		38		27



Model	C	L	D	H
AW 2169	76	92.5	24	30



Model	C	L	D	H
AW 2170	76	111	16	30



Model	C	L	D	H
AW 2172	76	103.5	17.3	27



Model	C	L	D	H
AW 2175	192	217	18	28

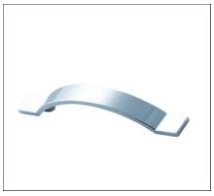

Model	C	L	D	H
AW 2176	96	145	19.5	28



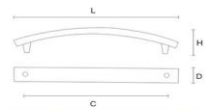

Model	C	L	D	H
AW 2201	128	168	16	35
	160	200	17	35
	256	300	17	36



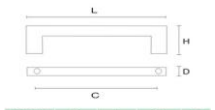

Model	C	L	D	H
AW 2202	160	172	10	38
	192	205	9	37



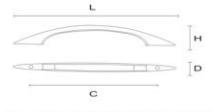

Model	C	L	D	H
AW 2203	128	160	18	27



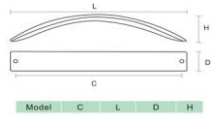

Model	C	L	D	H
AW 2205	160	185	18	30



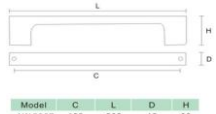

Model	C	L	D	H
AW 2207	160	200	19	30



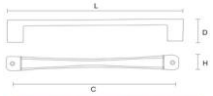

Model	C	L	D	H
AW 2208	192	205	15	27.9



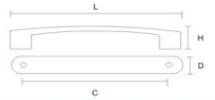

Model	C	L	D	H
AW 2209	160	180	23	28



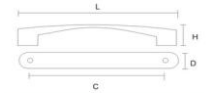

Model	C	L	D	H
AW 2210	192	210	12	22



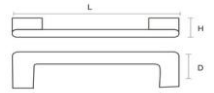

Model	C	L	D	H
AW 2211	160	177	12	30





Model	C	L	D	H
AW 2212	32	80		38



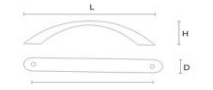

Model	C	L	D	H
AW2219	128	167	19	30



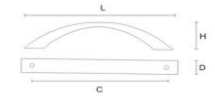

Model	C	L	D	H
AW2220	160	195	22	28



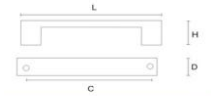

Model	C	L	D	H
AW2221	128	182	26	28



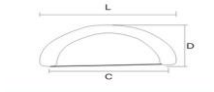

Model	C	L	D	H
AW 2225	128	176.5	14	30



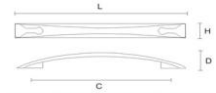

Model	C	L	D	H
AW 2230	128	164	10.4	23



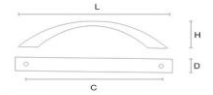

Model	C	L	D	H
AW2291	64	86	12	23
	96	120	13	25



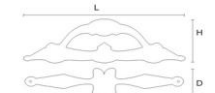

Model	C	L	D	H
AW3113	64	103	25	35



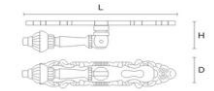

Model	C	L	D	H
Aw3115		107	21	15



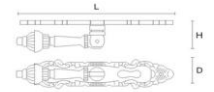

Model	C	L	D	H
AW3115A		107	21	15



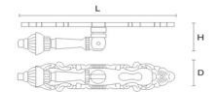

Model	C	L	D	H
AW3117		121	25	17



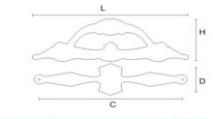

Model	C	L	D	H
AW 3132	96	120	43	37



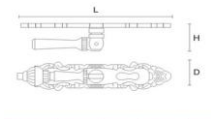

Model	C	L	D	H
AW 3134		120	25	17



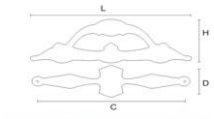

Model	C	L	D	H
AW 3151	96	153	42	41



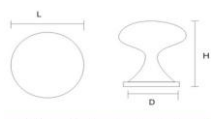

Model	C	L	D	H
AW3506B		31	32	30



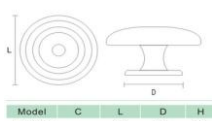

Model	C	L	D	H
AW3506C		35	21	25



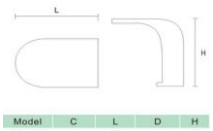

Model	C	L	D	H
AW 3513		23		23



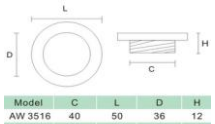

Model	C	L	D	H
AW 3516	40	50	36	12
	34	40	26	10
	54	57	40	12



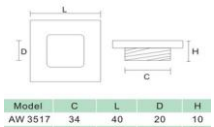

Model	C	L	D	H
AW 3517	34	40	20	10
	38	46	26	11
	55	57	36	11



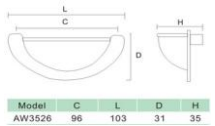

Model	C	L	D	H
AW3526	96	103	31	35



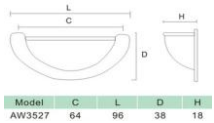

Model	C	L	D	H
AW3527	64	96	38	18



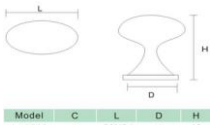

Model	C	L	D	H
Aw3529		38X24	11	40



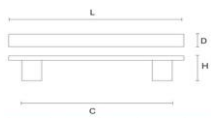

Model	C	L	D	H
AW1755	96	140	14	18.5



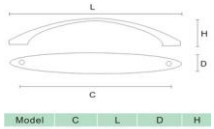

Model	C	L	D	H
AW1702	96	130	14	29



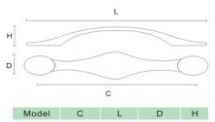

Model	C	L	D	H
AW 2173	128	157		23





Model	C	L	D	H
AW1755	128	150	13	21



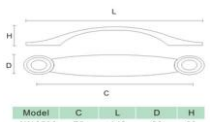

Model	C	L	D	H
AW 3536	76	140	20	23

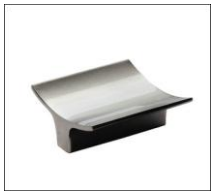

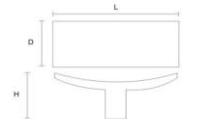

Model	C	L	D	H
AW 2064A	32	43	21	44



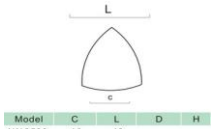

Model	C	L	D	H
AW 3538	16	40		



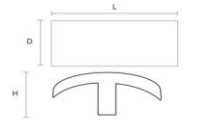

Model	C	L	D	H
AW 2064A		50	25	22



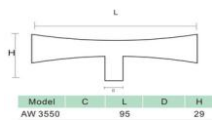

Model	C	L	D	H
AW 3550		95		29

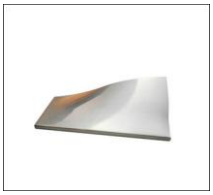

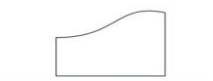

Model	C	L	D	H
AW 3551	32	75	36	21





Model	C	L	D	H
AW 3552	32			25





Model	C	L	D	H
AW 1338	35			30



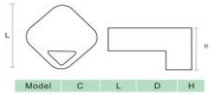

Model	C	L	D	H
AW 3556	30	30		16





Model	C	L	D	H
AW 3557	38			33





Model	C	L	D	H
AW 1338	37			30





Model	C	L	D	H
AW 3559	38			24





Model	C	L	D	H
AW 3561		63	34	20



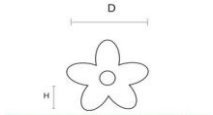

Model	C	L	D	H
AW 3561			42	24





Model	C	L	D	H
Aw3562		30	18	22





Model	C	L	D	H
Aw3563		18	10	18



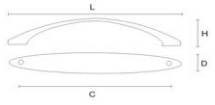

Model	C	L	D	H
AW 3565	96	119	15	20



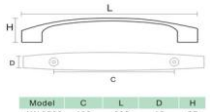

Model	C	L	D	H
AW 3566	192	202	16	27





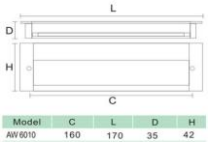

Model	C	L	D	H
AW 6010	160	170	35	42





Model	C	L	D	H
AW8811	32	70	70	20



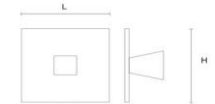

Model	C	L	D	H
AW8819	32	60	12	21



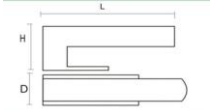

Model	C	L	D	H
AW 8831		89.5	25	43



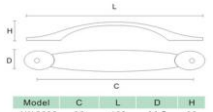

Model	C	L	D	H
AW 9690	96	109	14.5	30





Model	C	L	D	H
AW 9691		32.5		30





Model	C	L	D	H
AW 9691		32.5		30



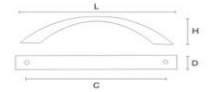

Model	C	L	D	H
AW 9697	96	126	19.4	25



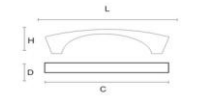

Model	C	L	D	H
AW 9698	128	163	14.5	30



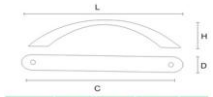

Model	C	L	D	H
AW 9701	128	158	13	30



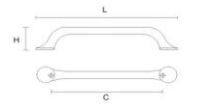

Model	C	L	D	H
AW 9702	96	131	14	28.5



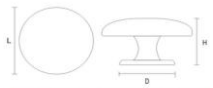

Model	C	L	D	H
AWL0001		25	23	23



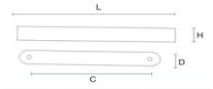

Model	C	L	D	H
AWL0002	96	124	13	13

Flush Hinge



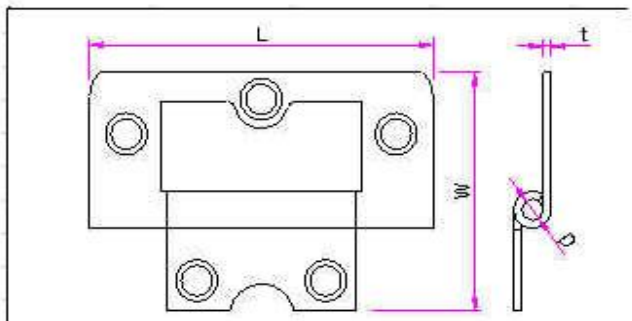

规格	L	W	D	t	孔数
1.5"	38.1	30.4	2.6	1.0	4
2"	50.8	35.3	3.2	1.2	4
2.5"	63.5	38	3.2	1.4	5
3"	76.2	52	4.5	1.6	6

Flush hinge-America



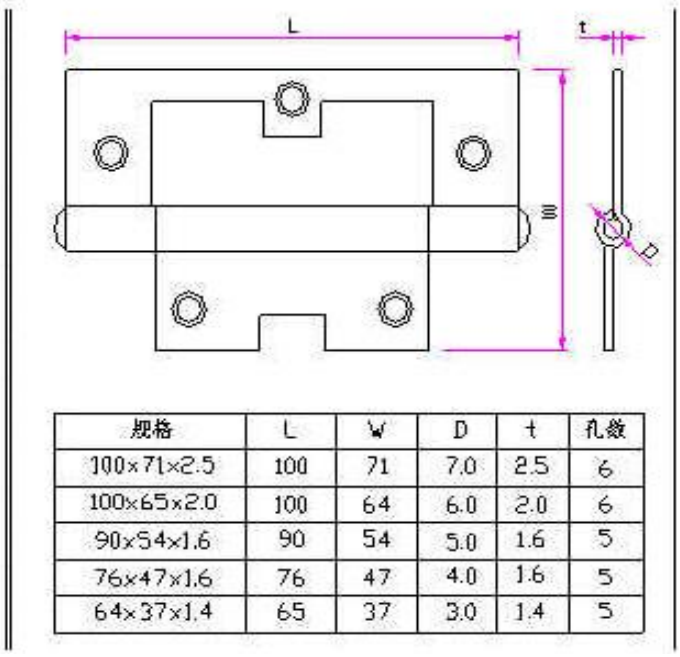

规格	L	W	D	t	孔数
100×71×2.5	100	71	7.0	2.5	6
100×65×2.0	100	64	6.0	2.0	6
90×54×1.6	90	54	5.0	1.6	5
76×47×1.6	76	47	4.0	1.6	5
64×37×1.4	65	37	3.0	1.4	5

Flush hinge-Australia



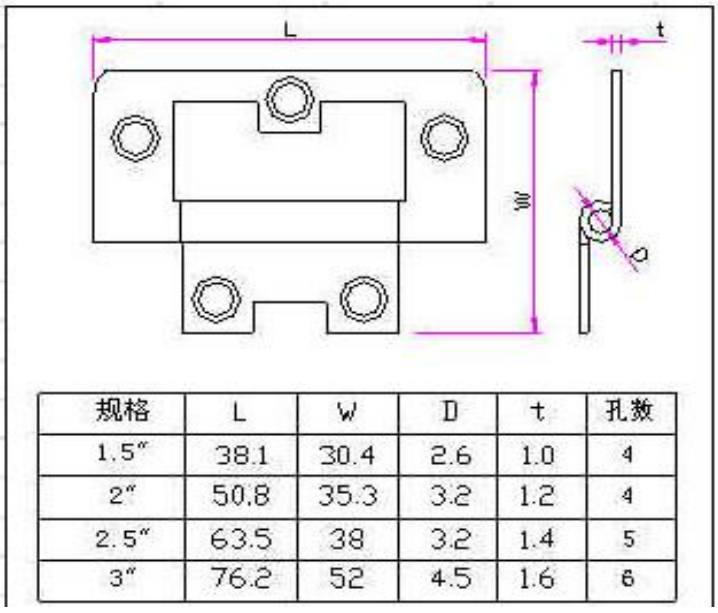

规格	L	W	D	t	孔数
1.5"	38.1	30.4	2.6	1.0	4
2"	50.8	35.3	3.2	1.2	4
2.5"	63.5	38	3.2	1.4	5
3"	76.2	52	4.5	1.6	6

Flush hinge-UK


evian

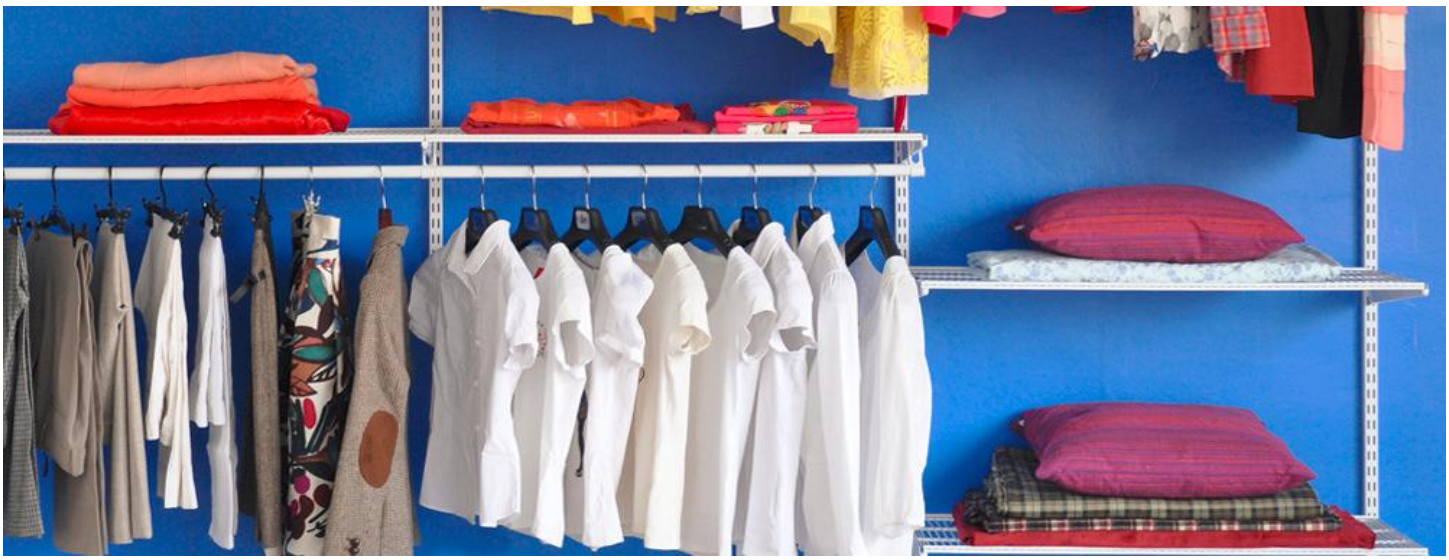

Bracket

122004

B Style Bracket



Size	Dimensions			Color
	L1	L2	W	
5"x 6"	125	150	30	White Brown Grey Black
6"x 8"	150	200	30	
8"x 10"	200	250	33	
10"x 12"	250	300	33	

122005

C Style Bracket



Size	Dimensions			Color
	L1	L2	W	
3"x 4"	75	100	31	White Brown Grey Black
5"x 6"	125	150	21	
6"x 8"	150	200	26	
8"x 10"	203	250	31	

122006

Heavy Duty Bracket



Size	Dimensions			Color
	L1	L2	W	
8.5"x 12"	210	300	30	White Brown Grey Black Galvanized
11"x 16"	270	400	30	
13"x 20"	330	500	30	

702001

European Style Bracket



Size	Dimensions			Color
	L1	L2	W	
3"x 4"	75	100	31	White Brown Grey Black
4"x 5"	100	125	33	
5"x 6"	125	150	34	
6"x 7"	150	175	35	
6"x 8"	150	200	36	
7"x 9"	175	225	38	
8"x 9"	200	225	39	
8"x 10"	200	250	39	
10"x 12"	250	300	44	
12"x 14"	300	350	47	
14"x 16"	350	400	50	
16"x 18"	400	450	55	

702002

A Style Bracket



Size	Dimensions			Color
	L1	L2	W	
3.5"x 5"	82	120	22	White Brown Grey Black
5"x 7"	120	170	24	
6"x 9"	155	220	24	
7.5"x 11"	190	270	24	
9"x 13"	220	320	27	
11"x 15"	270	370	27	

702003

Ordinary Style Bracket



Size	Dimensions			Color
	L1	L2	W	
3"x 4"	75	100	31	White Brown Grey Black
4"x 5"	100	125	33	
5"x 6"	125	150	34	
6"x 8"	150	200	36	
8"x 10"	200	250	39	
10"x 12"	250	300	43	
12"x 14"	300	350	47	
14"x 16"	350	400	50	













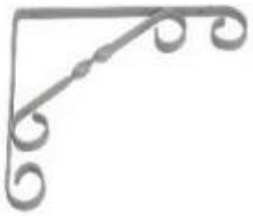






















Wall Shelf

123002

European Style Double Slot Bracket



Size: 120mm, 170mm, 220mm, 270mm, 320mm, 370mm, 470mm

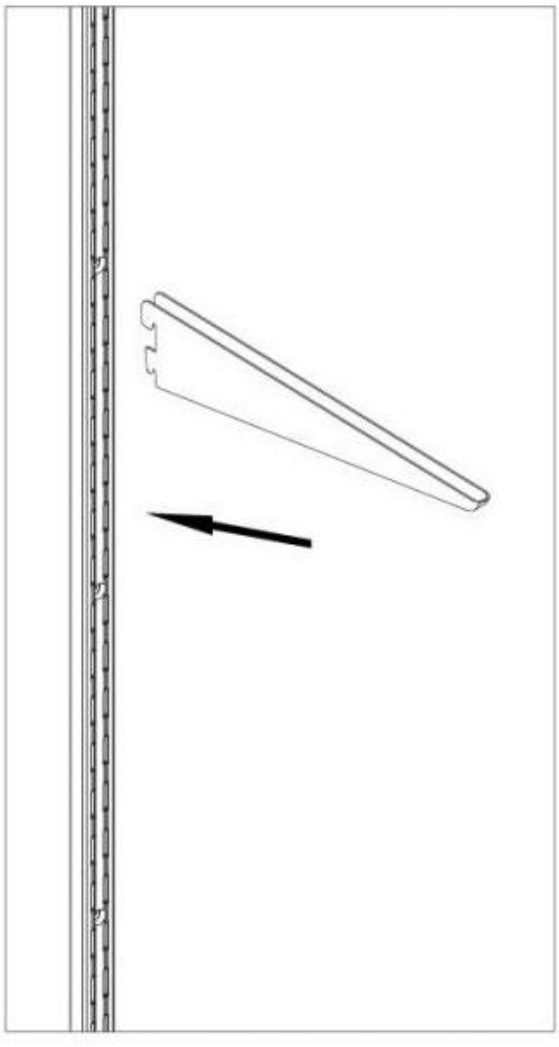

123202

European Style Double Slot Wall Rail



Size: 950mm, 1400mm, 2000mm, 2060mm, 2290mm

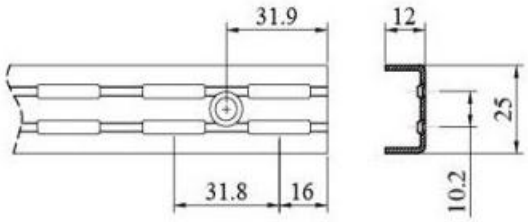

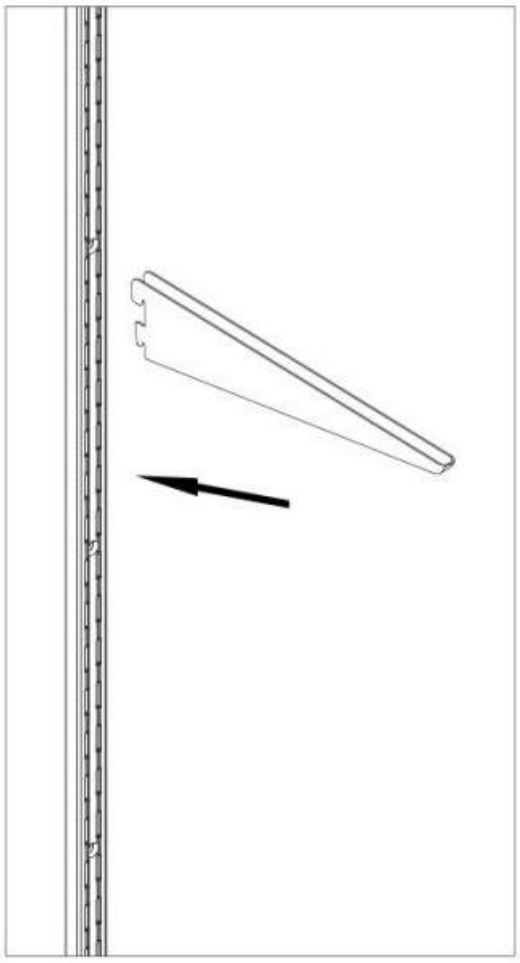

705001

European Style Slot Bracket(left, right)



Size: 180mm, 230mm, 280mm, 330mm, 380mm, 480mm

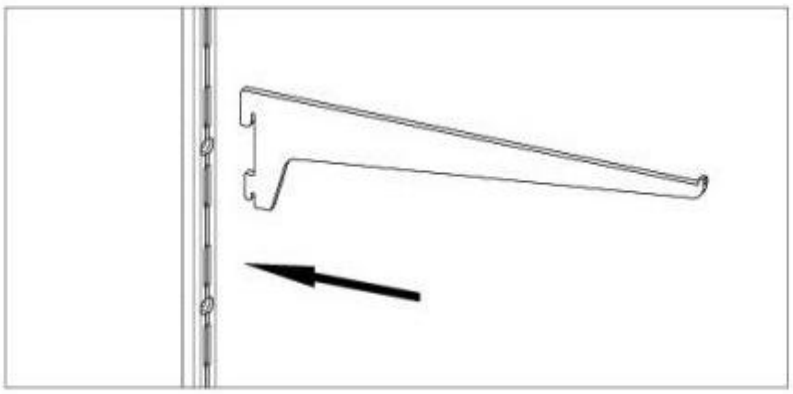

903001

American Style Double Slot Bracket



Size: 125mm, 170mm, 220mm, 270mm, 320mm, 365mm, 470mm

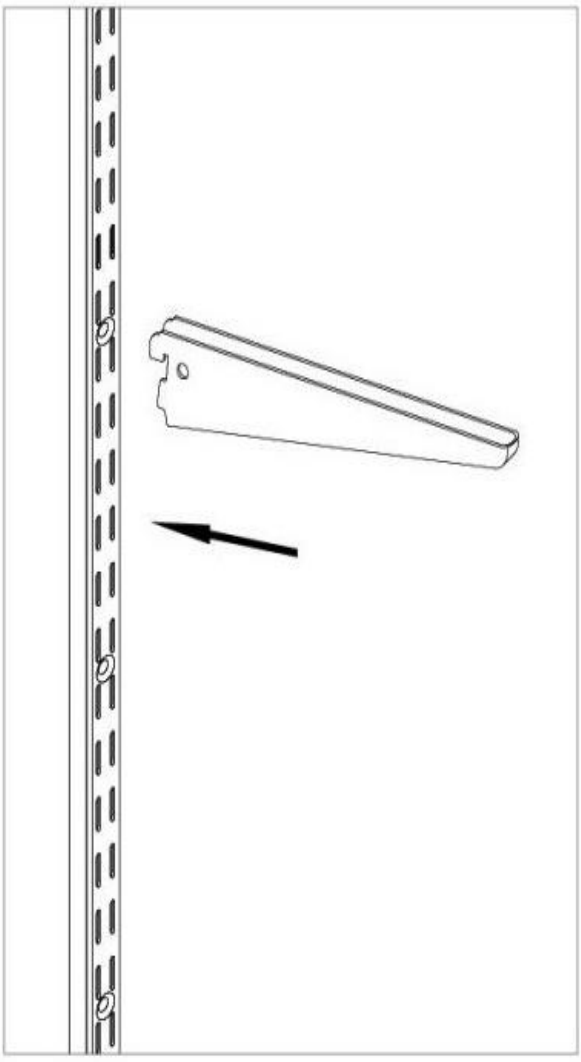

903201

American Style Double Slot Wall Rail



Size: 640mm, 960mm, 1280mm, 1600mm, 1920mm

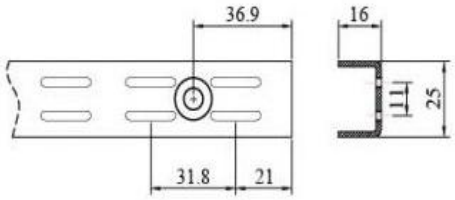

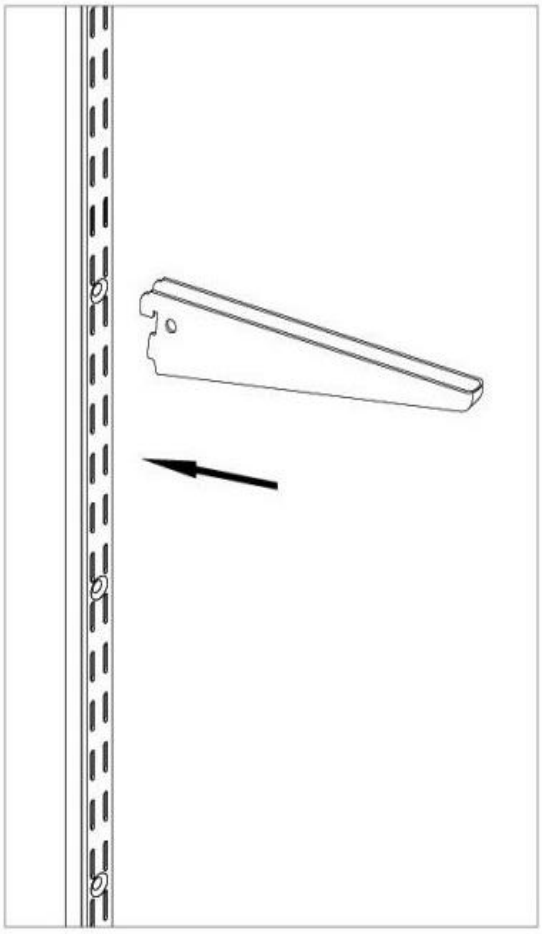

905002

European Style Single Slot Bracket



Size: 150mm, 200mm, 250mm, 300mm, 350mm, 400mm, 500mm, 600mm

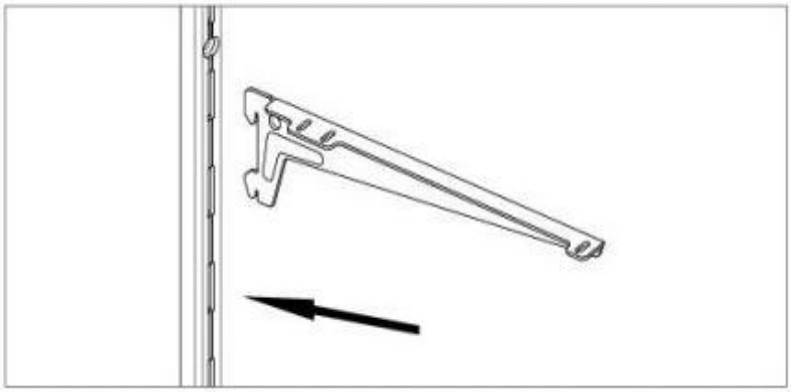















Closet System

136302

Hanging Double Slot Wall Rail



Size: 600mm-2200mm

136303

Double Slot Shelf Bracket



Size: 420mm

136304

Shelf Bracket With Hook



Size: 305mm

156501

Hang Track



Size: 1016mm, 2032mm

156502

Hanging Double Slot Wall Rail



Size: 1200mm, 2000mm

Hang Track



Size: 1015mm










Accessories

130001

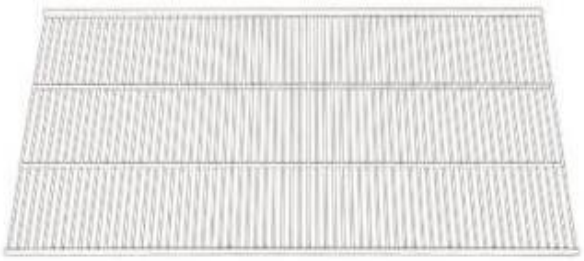

Size: 900×405mm, 800×405mm

130002



Size: 906× Φ24mm

130003



Size: 87×25.5×1.4mm

150004



Size: 800×20×35mm, 1000×20×35mm

150005



Size: 41×20.6×40mm

150006

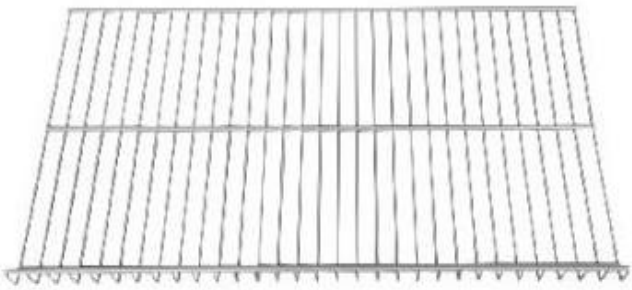

Size: 801×415×37mm

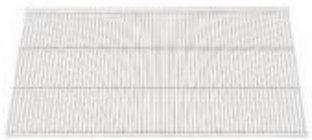




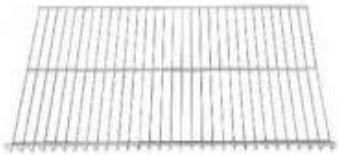
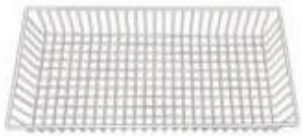










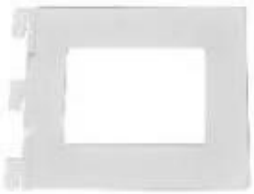










Drawer Slide

701002

D5D Style Drawer Slide



Botton mounted with self-closing
Thickness: 1.0mm/1.2mm
Loading: 25kgs
Size: 250mm-600mm



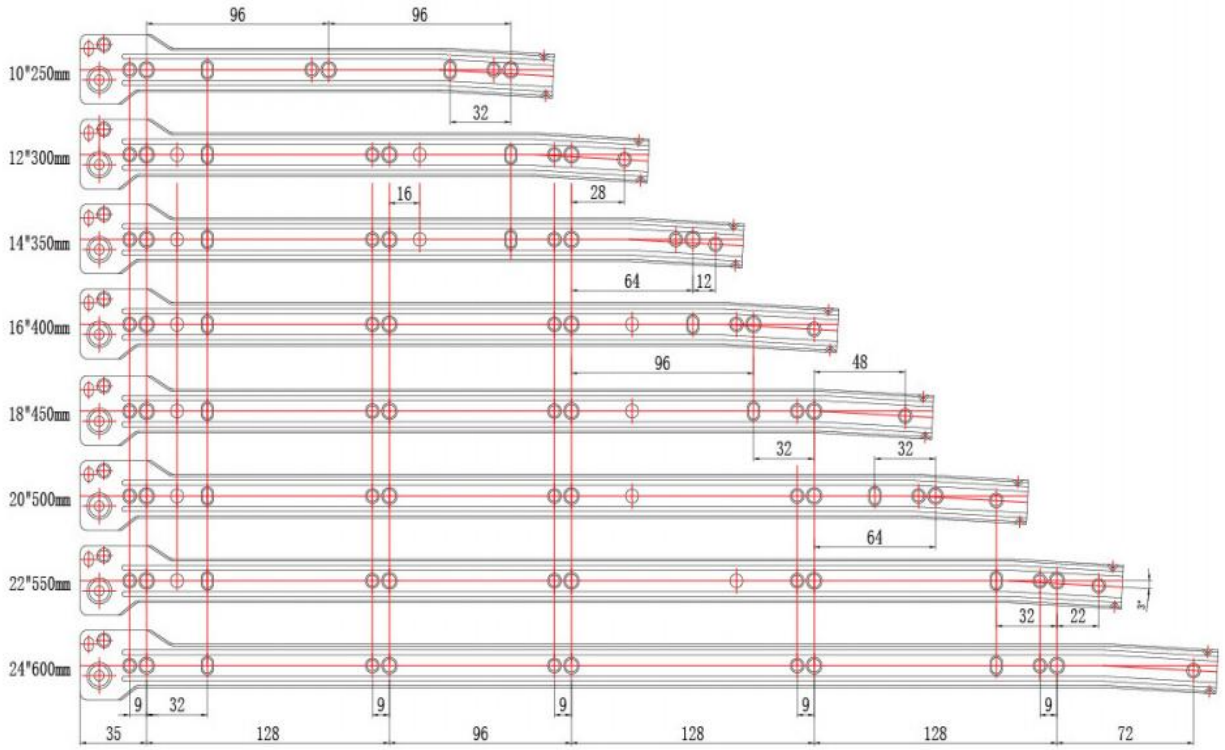

701012

F210 Style Drawer Slide



Botton mounted
Thickness: 1.0mm/1.2mm
Loading: 25kgs
Size: 350mm, 400mm



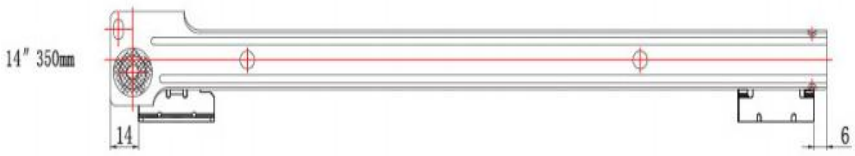



901001

K604 Style Drawer Slide



Botton mounted with self-closing,
Clamp on
Thickness: 1.0mm/1.2mm
Loading: 25kgs
Size: 250mm-800mm



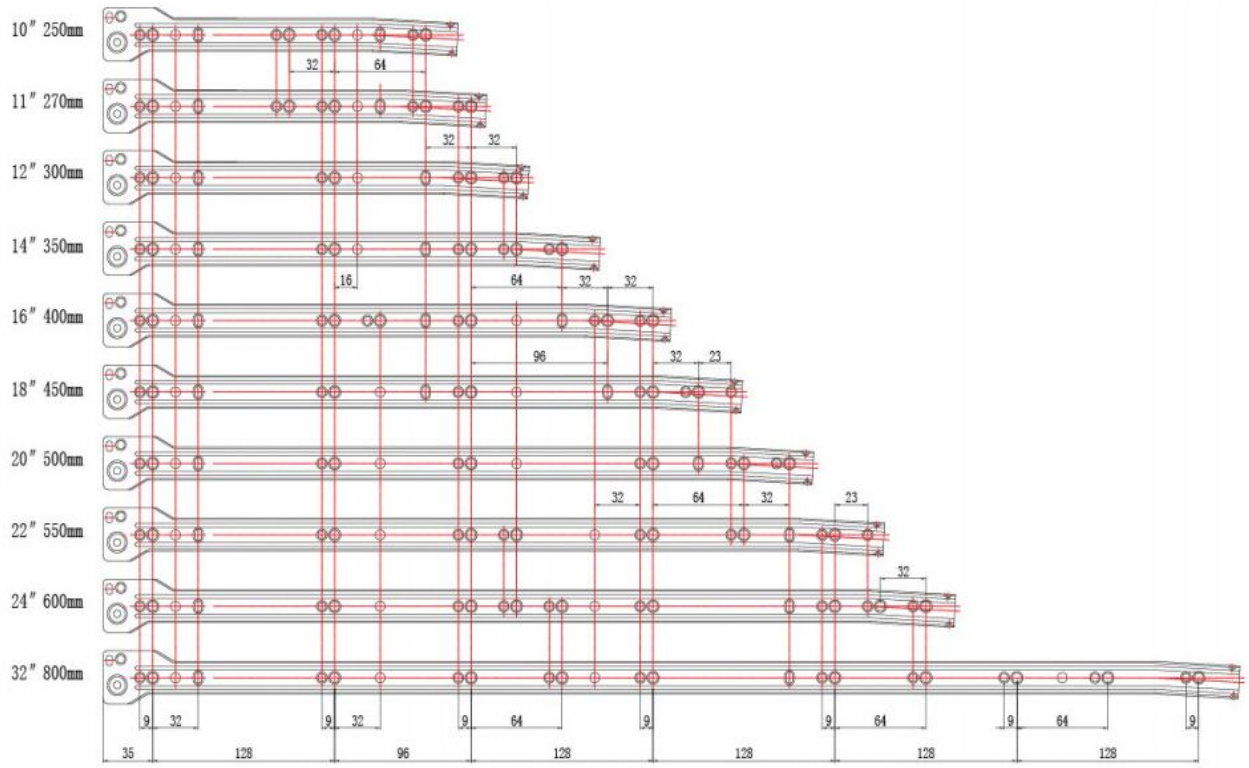

901002

P604 Style Drawer Slide



Botton mounted with self-closing
Thickness: 1.0mm/1.2mm
Loading: 25kgs
Size: 250mm-800mm



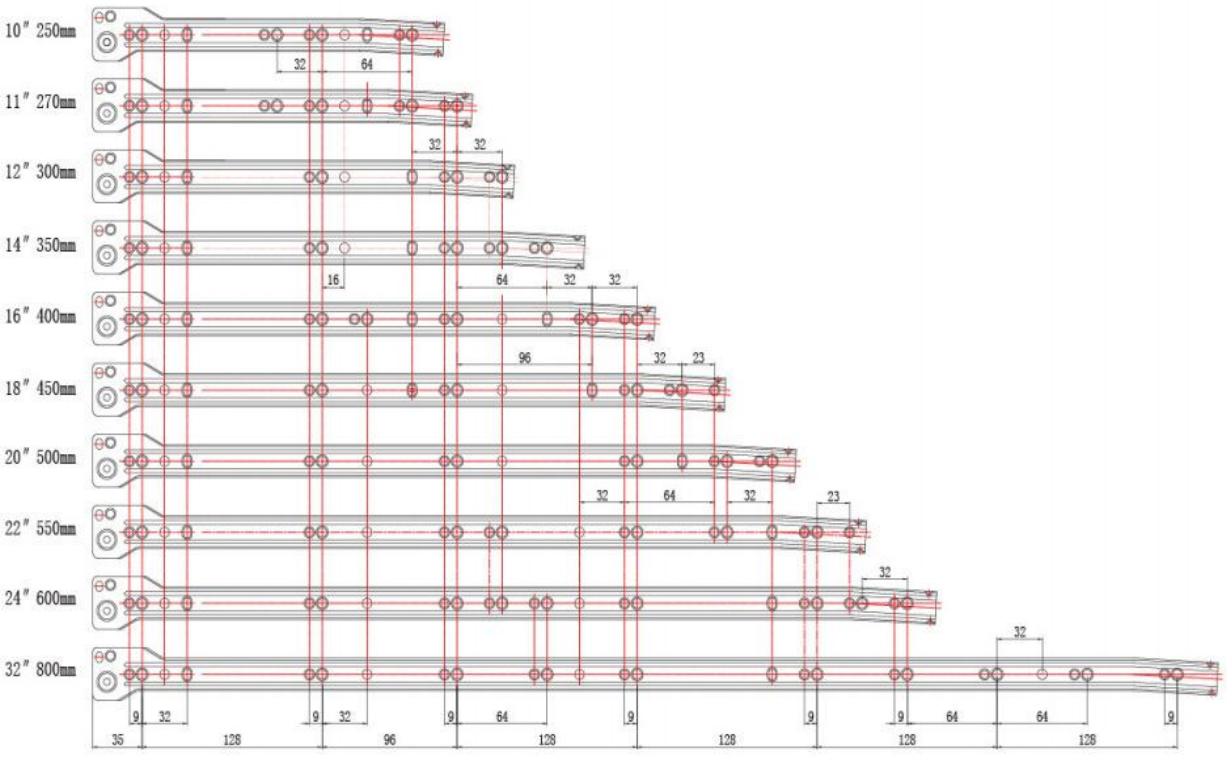

13099

Ebasket Slide



Thickness: 1.0mm
Loading: 15kgs
Size: 340mm, 560mm

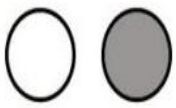

White Grey

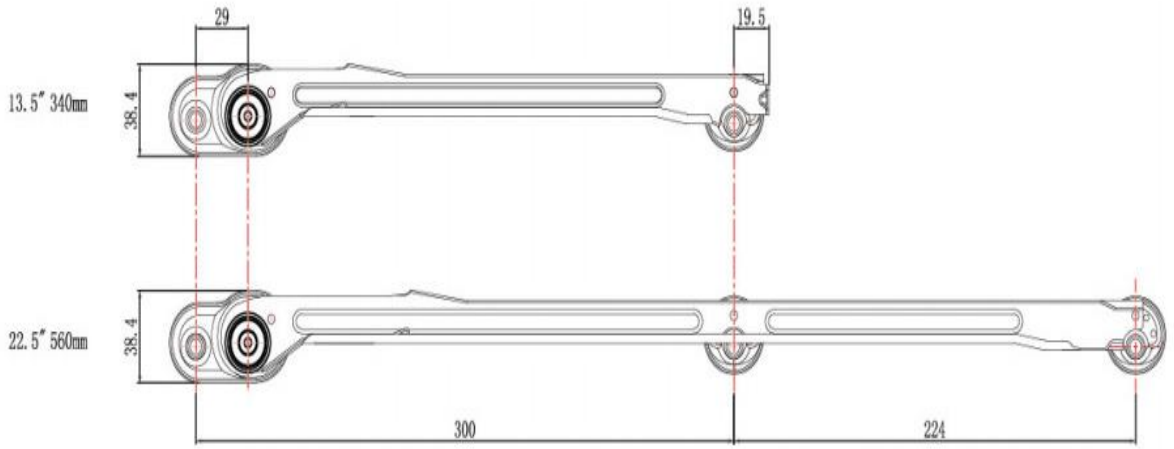

18787

E450 Style Drawer Slide



Botton mounted with self-closing
Thickness: 1.0mm
Loading: 25kgs
Size:450mm



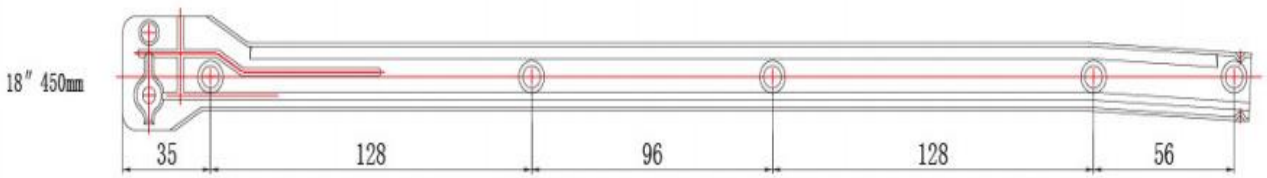












Anti-shock leveler



Category:Anti-shock leveler

Details



Part No.	Base dia.	H	Stem thread	Colour	Material
110760	1-3/8"	0.7"	5/16"-18Sx1"	Black/Nature	Nylon/HDPE
110761	1-3/8"	0.7"	M8x25mm	Black/Nature	Nylon/HDPE



Part No.	Base dia.	H	Stem thread	Colour	Material
111070	38mm	35mm	1/4"-20Sx1/2"	Black	Nylon
111071	38mm	35mm	5/16"-18Sx1"	Black	Nylon
111072	38mm	35mm	3/8"-16Sx1"	Black	Nylon
111073	38mm	35mm	M6x13mm	Black	Nylon
111074	38mm	35mm	M8x25mm	Black	Nylon
111075	38mm	35mm	M10x25mm	Black	Nylon



Part No.	Base dia.	H	Stem thread	Colour	Material
111120	38mm	28.5mm	1/4"-20Sx1/2"	Black	Nylon
111121	38mm	28.5mm	5/16"-18Sx1"	Black	Nylon
111122	38mm	28.5mm	3/8"-16Sx1"	Black	Nylon
111123	38mm	28.5mm	M6x13mm	Black	Nylon
111124	38mm	28.5mm	M8x25mm	Black	Nylon
111125	38mm	28.5mm	M10x25mm	Black	Nylon

缓冲减震可更换螺杆调整脚

Buffer Shock Absorption Stem Thread-Switchable Leveler



Part No.	Base dia.	H	Stem thread	Colour	Material
111080	38mm	28.5mm	1/4"-20Sx1/2"	Black	Nylon
111081	38mm	28.5mm	5/16"-18Sx1"	Black	Nylon



111084	38mm	28.5mm	M8x25mm	Black	Nylon
111085	38mm	28.5mm	M10x25mm	Black	Nylon

Felt base leveler



Category:**felt base leveler**

Details

Leveler with injection felt base

The felt base allows the furnitur to slide easily over tile or wood flooring without the annoying screeching sound And it can prevent floor damage or scratching by the hard glide.



Part No.	Diameter	Height	Stem thread	Colour	PCS/card	Packing
140080	18mm	9mm	1/4"-20SX1"	white and grey	/	BULK
140081	18mm	9mm	5/16"-18SX1"	white and grey	/	BULK

* Material: HDPE + felt



Part No.	Diameter	Height	Stem thread	Colour	PCS/card	Packing

140021	25.4mm	11mm	5/16"-18SX1	Brown and grey	/	BULK

* Material: HDPE + felt



Part No.	Diameter	Colour	PCS/card	Packing
140060	22mm	Brown and white	/	BULK

* Material: HDPE + felt

Industrial leveler



Category:**Industrial Levelers**

Details

Steel Industrial Levelers



Part No.	Base Diameter	Stem thread	Material
250010	30mm	M10x30mmL	Carbon steel
250011	50mm	M16x50mmL	Carbon steel
250012	80mm	M16x50mmL	Carbon steel
250013	80mm	M16x100mmL	Carbon steel
250014	80mm	M20x75mmL	Carbon steel
250015	100mm	M20x100mmL	Carbon steel



Part No.	Base Diameter	Stem thread	Material
250100	30mm	M10x30mmL	Carbon steel
250101	50mm	M16x50mmL	Carbon steel
250102	80mm	M16x50mmL	Carbon steel
250103	80mm	M16x100mmL	Carbon steel
250104	80mm	M20x75mmL	Carbon steel
250105	100mm	M20x100mmL	Carbon steel
250106	60mm	M18x100mmL	Carbon steel

Nylon Turn Industrial Levelers



Part No.	Base Diameter	Stem thread	Material
250040	80mm	M16x50mmL	Carbon steel
250041	80mm	M16x100mmL	Carbon steel
250042	80mm	M20x100mmL	Carbon steel
250043	100mm	M16x50mmL	Carbon steel
250044	100mm	M16x100mmL	Carbon steel
250045	100mm	M20x100mmL	Carbon stee
250046	100mm	M20x100mmL	Carbon steel
250047	123mm	M20x100mmL	Carbon steel
250048	123mm	M24x100mmL	Carbon steel



Part No.	Base Diameter	Stem thread	Material
250020	50mm	M8x50mmL	Carbon steel
250021	50mm	M8x100mmL	Carbon steel
250022	50mm	M10x30mmL	Carbon steel
250023	50mm	M10x50mmL	Carbon steel
250024	50mm	M10x100mmL	Carbon steel
250025	50mm	M12x50mmL	Carbon stee
250026	50mm	M12x100mmL	Carbon steel
250027	60mm	M10x100L	Carbon steel
250028	60mm	M12x50mmL	Carbon steel



250030	80mm	M16x50mmL	Carbon steel
250031	80mm	M16x100mmL	Carbon steel
250032	80mm	M20x100mmL	Carbon steel

Swivel Industrial Levelers



Part No.	Base Diameter	Stem thread	Material
250050	50mm	M8x50mmL	Carbon steel
250051	50mm	M8x100mmL	Carbon steel
250052	50mm	M10x30mmL	Carbon steel
250053	50mm	M10x60mmL	Carbon steel
250054	50mm	M10x100mmL	Carbon steel
250055	50mm	M12x60mmL	Carbon stee
250056	50mm	M12x100mmL	Carbon steel
250057	60mm	M10x100mmL	Carbon steel
250058	60mm	M12x60mmL	Carbon steel
250059	60mm	M12x100mmL	Carbon steel
250060	80mm	M16x60mmL	Carbon steel
250061	80mm	M16x100mmL	Carbon steel
250062	80mm	M20x100mmL	Carbon steel

Related tags:

Injection base type



Category:**Injection type**

Details





Part No.	Base dia.	H	Stem thread	Colour	Material
110010	7/8"	10.6mm	M7x14.8mm	Black	Nylon/HDPE



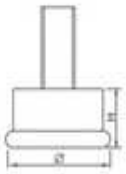

Part No.	Base dia.	H	Stem thread	Colour	Material
110020	7/8"	2/5"	1/4"-20Sx0.5315"	Black	Nylon/HDPE
110021	7/8"	2/5"	M6x13.5mm	Black	Nylon/HDPE



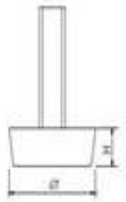

Part No.	Base dia.	H	Stem thread	Colour	Material
110030	7/8"	1/4"	1/4"-20Sx1"	Black/Nature	Nylon/HDPE
110031	7/8"	3/8"	1/4"-20Sx1.5"	Black/Nature	Nylon/HDPE



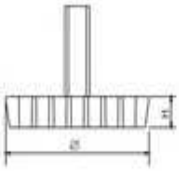

Part No.	Base dia.	H	Stem thread	Colour	Material
110040	1"	1/4"	1/4"-20Sx0.75"	Grey/Black	Nylon/HDPE
110041	1"	1/4"	5/16"-18Sx1"	Grey/Black	Nylon/HDPE





Part No.	Base dia.	H	Stem thread	Colour	Material
110050	1-3/8"	1/4"	1/4"-20Sx0.75"	Grey/Black	Nylon/HDPE
110051	1-3/8"	1/4"	1/4"-20Sx1"	Grey/Black	Nylon/HDPE
110052	1-3/8"	1/4"	5/16"-18Sx1.181"	Grey/Black	Nylon/HDPE
110053	1-3/8"	1/4"	5/16"-18Sx1.732"	Grey/Black	Nylon/HDPE





Part No.	Base dia.	H	Stem thread	Colour	Material
110060	1"	3/8"	1/4"-20Sx0.875"	Nature/Black	Nylon/HDPE
110061	1"	3/8"	1/4"-20Sx1"	Nature/Black	Nylon/HDPE
110062	1"	3/8"	1/4"-20Sx1.5"	Nature/Black	Nylon/HDPE
110063	1"	3/8"	5/16"-18Sx0.875"	Nature/Black	Nylon/HDPE
110064	1"	3/8"	5/16"-18Sx1"	Nature/Black	Nylon/HDPE
110065	1"	3/8"	5/16"-18Sx1.5"	Nature/Black	Nylon/HDPE
110067	1"	3/8"	1/4"-20Sx1.732"	Nature/Black	Nylon/HDPE



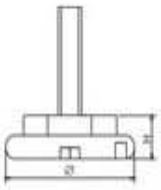

Part No.	Base dia.	H	Stem thread	Colour	Material
110070	1"	3/8"	5/16"-18Sx1"	Nature/Black	Nylon/HDPE
110071	1"	3/8"	5/16"-18Sx1.5"	Nature/Black	Nylon/HDPE
110072	1"	3/8"	3/8"-16Sx1.5"	Nature/Black	Nylon/HDPE
110073	1"	3/8"	3/8"-16Sx2"	Nature/Black	Nylon/HDPE
110080	1-3/8"	2/5"	5/16"-18Sx1"	Nature/Black	Nylon/HDPE
110081	1-3/8"	2/5"	5/16"-18Sx1.5"	Nature/Black	Nylon/HDPE
110082	1-3/8"	2/5"	3/8"-16Sx1.5"	Nature/Black	Nylon/HDPE
110083	1-3/8"	2/5"	3/8"-16Sx2"	Nature/Black	Nylon/HDPE
110084	1-3/8"	2/5"	1/4"-20Sx1"	Nature/Black	Nylon/HDPE



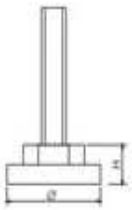

Part No.	Base dia.	H	Stem thread	Colour	Material
110100	1-3/10"	2/5"	1/4"-20Sx1.5"	Nature/Black	Nylon/HDPE
110101	1-3/10"	2/5"	5/16"-18Sx1.5"	Nature/Black	Nylon/HDPE
110102	1-3/10"	2/5"	3/8"-16Sx1.5"	Nature/Black	Nylon/HDPE



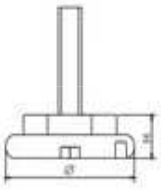

Part No.	Base dia.	H	Stem thread	Colour	Material
110090	1"	3/8"	1/4"-20Sx1"	Nature/Black	Nylon/HDPE
110091	1"	3/8"	1/4"-20Sx1.5"	Nature/Black	Nylon/HDPE
110092	1"	3/8"	5/16"-18Sx1"	Nature/Black	Nylon/HDPE
110093	1"	3/8"	5/16"-18Sx1.5"	Nature/Black	Nylon/HDPE



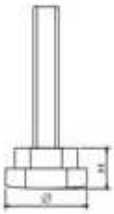

Part No.	Base dia.	H	Stem thread	Colour	Material
110110	1"	3/8"	5/16"-18Sx1"	Nature/Black	Nylon/HDPE
110111	1"	3/8"	5/16"-18Sx1.5"	Nature/Black	Nylon/HDPE
110112	1"	3/8"	5/16"-18Sx2"	Nature/Black	Nylon/HDPE





Part No.	Base dia.	H	Stem thread	Colour	Material
110120	1.14"	1/2"	1/4"-20Sx0.787"	Nature/Black	Nylon/HDPE
110121	1.14"	1/2"	1/4"-20Sx1.5"	Nature/Black	Nylon/HDPE
110122	1.14"	1/2"	M6x20mm	Nature/Black	Nylon/HDPE
110123	1.14"	1/2"	M6x38mm	Nature/Black	Nylon/HDPE



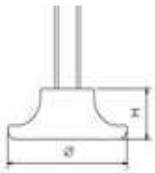

Part No.	Base dia.	H	Stem thread	Colour	Material
110190	1-1/8"	0.455"	M6x50.8mm	Chear	PC



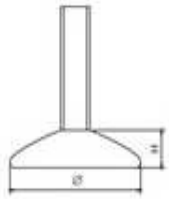

Part No.	Base dia.	H	Stem thread	Colour	Material
110140	1-1/2"	19/64"	5/16"-18Sx1"	Nature/Black	Nylon/HDPE
110141	1-1/2"	19/64"	5/16"-18Sx1.5"	Nature/Black	Nylon/HDPE
110142	1-1/2"	19/64"	3/8"-16Sx1"	Nature/Black	Nylon/HDPE
110143	1-1/2"	19/64"	3/8"-16Sx1.5"	Nature/Black	Nylon/HDPE



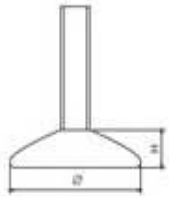

Part No.	Base dia.	H	Stem thread	Colour	Material
110130	1-5/8"	7/16"	5/16"-18Sx1"	Nature/Black	Nylon/HDPE
110131	1-5/8"	7/16"	5/16"-18Sx1.5"	Nature/Black	Nylon/HDPE
110132	1-5/8"	7/16"	3/8"-16Sx1"	Nature/Black	Nylon/HDPE
110133	1-5/8"	7/16"	3/8"-16Sx1.5"	Nature/Black	Nylon/HDPE
110134	28mm	7/16"	1/4"-20Sx7/8"	Nature/Black	Nylon/HDPE
110135	28mm	7/16"	1/4"-20Sx1"	Nature/Black	Nylon/HDPE
110136	28mm	7/16"	5/16"-18Sx7/8"	Nature/Black	Nylon/HDPE
110137	28mm	7/16"	5/16"-18Sx1"	Nature/Black	Nylon/HDPE



Part No.	Base dia.	H	Stem thread	Colour	Material
110750	1-1/4"	0.4"	3/8"-16Sx1"	Black	TPR
110751	1-1/4"	0.4"	3/8"-16Sx1.5"	Black	TPR
110752	1-1/4"	0.4"	3/8"-16Sx2"	Black	TPR
110753	1-1/4"	0.4"	5/16"-18Sx3/4"	Black	TPR



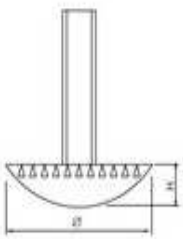

Part No.	Base dia.	H	Stem thread	Colour	Material
110150	3/4"	1/4"	1/4"-20Sx1"	Brown/Black	Nylon/HDPE
110151	3/4"	1/4"	1/4"-20Sx1.5"	Brown/Black	Nylon/HDPE
110152	3/4"	1/4"	1/4"-20Sx2"	Brown/Black	Nylon/HDPE
110153	3/4"	1/4"	M6x25mm	Brown/Black	Nylon/HDPE
110154	3/4"	1/4"	M6x38.1mm	Brown/Black	Nylon/HDPE
110155	3/4"	1/4"	M6x50.8mm	Brown/Black	Nylon/HDPE
110160	7/8"	1/4"	1/4"-20Sx1"	Brown/Black	Nylon/HDPE
110161	7/8"	1/4"	1/4"-20Sx1.5"	Brown/Black	Nylon/HDPE
110162	7/8"	1/4"	1/4"-20Sx2"	Brown/Black	Nylon/HDPE
110163	7/8"	1/4"	M6x25mm	Brown/Black	Nylon/HDPE
110164	7/8"	1/4"	M6x38.1mm	Brown/Black	Nylon/HDPE
110165	7/8"	1/4"	M6x50.8mm	Brown/Black	Nylon/HDPE
110170	1"	1/4"	1/4"-20Sx1"	Brown/Black	Nylon/HDPE
110171	1"	1/4"	1/4"-20Sx1.5"	Brown/Black	Nylon/HDPE

110174	1"	1/4"	M6x38.1mm	Brown/Black	Nylon/HDPE
110175	1"	1/4"	M6x50.8mm	Brown/Black	Nylon/HDPE
110180	1-1/8"	1/4"	1/4"-20Sx1"	Brown/Black	Nylon/HDPE
110181	1-1/8"	1/4"	1/4"-20Sx1.5"	Brown/Black	Nylon/HDPE
110182	1-1/8"	1/4"	1/4"-20Sx2"	Brown/Black	Nylon/HDPE
110183	1-1/8"	1/4"	M6x25mm	Brown/Black	Nylon/HDPE
110184	1-1/8"	1/4"	M6x38.1mm	Brown/Black	Nylon/HDPE
110185	1-1/8"	1/4"	M6x50.8mm	Brown/Black	Nylon/HDPE



Part No.	Base dia.	H	Stem thread	Colour	Material
111100	25mm	7mm	M8x22mm	GREY	Nylon



Part No.	Base dia.	H	Stem thread	Colour	Material
110790	0.71"	1/4"	3/8"-16Sx1"	Black	Nylon/HDPE
110791	0.71"	1/4"	3/8"-16Sx1.5"	Black	Nylon/HDPE



Part No.	Base dia.	H	Stem thread	Colour	Material
110820	2.28"	4/5"	3/8"-16Sx1"	Gray/Black	Nylon
110821	2.28"	4/5"	3/8"-16Sx1.5"	Gray/Black	Nylon
110822	2.28"	4/5"	3/8"-16Sx2"	Gray/Black	Nylon
110823	2.28"	4/5"	3/8"-16Sx3"	Gray/Black	Nylon



Part No.	Base dia.	H	Stem thread	Colour	Material
110810	2-1/2"	11/16"	3/8"-16Sx1.1"	Black	Nylon
110811	2-1/2"	11/16"	3/8"-16Sx1.424"	Black	Nylon
110812	2-1/2"	11/16"	3/8"-16Sx1.85"	Black	Nylon
110813	2-1/2"	11/16"	3/8"-16Sx3.39"	Black	Nylon



Part No.	Base dia.	H	Stem thread	Colour	Material
110980	30mm	14mm	M8x25mm	Black/Grey	Nylon/HDPE
110981	30mm	14mm	5/16"-18Sx1"	Black/Grey	Nylon/HDPE





Part No.	Base dia.	H	Stem thread	Colour	Material
110260	1.85"	1"	3/8"-16Sx3"	Brown	Nylon
110261	1.85"	1"	3/8"-16Sx3.5"	Brown	Nylon



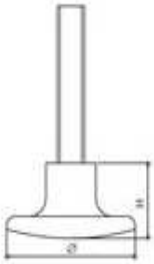

Part No.	Base dia.	H	Stem thread	Colour	Material
111020	50mm	17mm	M8x25mm	Black/Nature	Nylon/HDPE
111021	50mm	17mm	5/16"-18Sx1"	Black/Nature	Nylon/HDPE



Part No.	Base dia.	H	Stem thread	Colour	Material
111090	25mm	8.5mm	1/2"-20Sx1/2"	Black	Nylon
111091	25mm	8.5mm	5/16"-18Sx1"	Black	Nylon
111092	25mm	8.5mm	3/8"-16Sx1"	Black	Nylon
111093	25mm	8.5mm	M6x13mm	Black	Nylon
111094	25mm	8.5mm	M8x25mm	Black	Nylon
111095	25mm	8.5mm	M10x25mm	Black	Nylon

Innovation Leveler



Details

Introduction of Base-Switchable Leveler



Antislip Base Steel Base Teflon Base Felt Base Nylon Base

We integrate four major base styles into one product, our base switchable leveler. Its patent pending now. The four styles of base:

1) Metal Base: for stone/cement floor;

2) Teflon Base: for application of slide on carpet/wood floor;

3) Felt Base: for wood/ceramic floor;

4) Nylon Base: for wood/ceramic/carpet floor;

The base can be installed on the upper part(threaded stud+plastic cover) in seconds. By this method, we canbuild/ship leveler rapidly according to customer needs. Also if our customer buys bases and upper parts from us,they can provide customized levelers quickly to the market or provide end user the options they want.

Base dia.	Stem thread	Length of stem thread		
25.4mm	1/4"-20S	1"	1.5"	
	5/16"-18S	1"	1.5"	2"
	3/8"-16S	1"	1.5"	2"
	M6	25mm	38mm	50mm
	M8	25mm	38mm	50mm
	M10	25mm	38mm	50mm

Base dia.	Stem thread	Length of stem thread		
35mm	1/4"-20S	1"	1.5"	
	5/16"-18S	1"	1.5"	2"
	3/8"-16S	1"	1.5"	2"
	M6	25mm	38mm	50mm
	M8	25mm	38mm	50mm
	M10	25mm	38mm	50mm

Introduction of Base-Switchable Leveler





Antislip Base | Steel Base | Teflon Base | Felt Base | Nylon Base

We integrate four major base styles into one product, our base switchable leveler. Its patent pending now. The four styles of base:

1) Metal Base: for stone/cement floor;
2) Teflon Base: for application of slide on carpet/wood floor;
3) Felt Base: for wood/ceramic floor;
4) Nylon Base: for wood/ceramic/carpet floor;

The base can be installed on the upper part(threaded stud+plastic cover) in seconds. By this method, we canbuild/ship leveler rapidly according to customer needs. Also if our customer buys bases and upper parts from us,they can provide customized levelers quickly to the market or provide end user the options they want.

Base dia.	Stem thread	Length of stem thread		
25.4mm	1/4"-20S	1"	1.5"	
	5/16"-18S	1"	1.5"	2"
	3/8"-16S	1"	1.5"	2"
	M6	25mm	38mm	50mm
	M8	25mm	38mm	50mm
	M10	25mm	38mm	50mm

Base dia.	Stem thread	Length of stem thread		
35mm	1/4"-20S	1"	1.5"	
	5/16"-18S	1"	1.5"	2"
	3/8"-16S	1"	1.5"	2"
	M6	25mm	38mm	50mm
	M8	25mm	38mm	50mm
	M10	25mm	38mm	50mm

Introduction of Base-Switchable And Pintle Glide



Antislip Base | Felt Base | Teflon Base | Nylon Base | 金属底 Steel Base

Part no.	Base dia.	Pintle	Length of pintle
111130	25.4mm	7/16"	7/8"
111131	35mm	7/16"	7/8"





We integrate four major base styles into one product, our base switchable leveler. Its patent pending now. The four styles of base:

1) Metal Base: for stone/cement floor;
2) Teflon Base: for application of slide on carpet/wood floor;
3) Felt Base: for wood/ceramic floor;
4) Nylon Base: for wood/ceramic/carpet floor;

The base can be installed on the upper part(threaded stud+plastic cover) in seconds. By this method, we canbuild/ship leveler rapidly according to customer needs. Also if our customer buys bases and upper parts from us,they can provide customized levelers quickly to the market or provide end user the options they want.

Introduction of Base-Switchable And Pintle Swivel Glide



Antislip Base | Felt Base | Teflon Base | Nylon Base | Steel Base

Part no.	Base dia.	Stem thread	Length of stem thread
111140	25.4mm	7/16"	7/8"
111141	35mm	7/16"	7/8"



Metal base Injection





Details





Part No.	Base dia.	H	Stem thread	Colour	Material
110210	19mm	0.394"	1/4"-20Sx0.25"	Nickel plated	Steel and HDPE
110211	19mm	0.394"	1/4"-20Sx1"	Nickel plated	Steel and HDPE
110220	22mm	0.394"	1/4"-20Sx0.25"	Nickel plated	Steel and HDPE
110221	22mm	0.394"	1/4"-20Sx1"	Nickel plated	Steel and HDPE
110230	24mm	0.394"	1/4"-20Sx0.25"	Nickel plated	Steel and HDPE
110231	24mm	0.394"	1/4"-20Sx1"	Nickel plated	Steel and HDPE
110232	24mm	0.394"	1/4"-20Sx1.5"	Nickel plated	Steel and HDPE
110233	24mm	0.394"	5/16"-18Sx1"	Nickel plated	Steel and HDPE
110234	24mm	0.394"	5/16"-18Sx1.5"	Nickel plated	Steel and HDPE
110240	27mm	0.394"	1/4"-20Sx0.25"	Nickel plated	Steel and HDPE
110241	27mm	0.394"	1/4"-20Sx1"	Nickel plated	Steel and HDPE
110242	27mm	0.394"	1/4"-20Sx1.5"	Nickel plated	Steel and HDPE
110243	27mm	0.394"	5/16"-18Sx1"	Nickel plated	Steel and HDPE
110244	27mm	0.394"	5/16"-18Sx1.5"	Nickel plated	Steel and HDPE
110250	30mm	0.394"	1/4"-20Sx0.25"	Nickel plated	Steel and HDPE
110251	30mm	0.394"	1/4"-20Sx1"	Nickel plated	Steel and HDPE
110252	30mm	0.394"	1/4"-20Sx1.5"	Nickel plated	Steel and HDPE
110253	30mm	0.394"	5/16"-18Sx1"	Nickel plated	Steel and HDPE
110254	30mm	0.394"	5/16"-18Sx1.5"	Nickel plated	Steel and HDPE



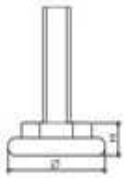

Part No.	Base dia.	H	Stem thread	Colour	Material
110270	27mm	2/5"	1/4"-20Sx1"	Nickel plated	Steel and HDPE
110271	27mm	2/5"	1/4"-20Sx1.5"	Nickel plated	Steel and HDPE
110272	27mm	2/5"	5/16"-18Sx1"	Nickel plated	Steel and HDPE
110273	27mm	2/5"	5/16"-18Sx1.5"	Nickel plated	Steel and HDPE



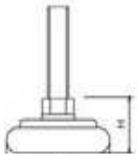

Part No.	Base dia.	H	Stem thread	Colour	Material
110280	1-1/4"	0.58"	5/16"-18Sx1"	Zinc plated	Steel and Nylon
110281	1-1/4"	0.58"	5/16"-18Sx1.5"	Zinc plated	Steel and Nylon
110283	1-1/4"	0.58"	3/8"-16Sx1"	Zinc plated	Steel and Nylon

Pintle glide



Category:**Pintle Glide**

Details

Pintle Glide



Part No.	Base dia.	Stem thread	Colour	Material
111150	25.4mm	7/16"	7/8" (22mm)	Iron/Nylon
111151	28.5mm	7/16"	7/8" (22mm)	Iron/Nylon
111152	32mm	7/16"	7/8" (22mm)	Iron/Nylon
111153	35mm	7/16"	7/8" (22mm)	Iron/Nylon
111154	43mm	7/16"	7/8" (22mm)	Iron/Nylon



Part No.	Base dia.	Stem thread	Colour	Material
111160	28.5mm	7/16"	7/8" (22mm)	Iron/Nylon
111161	32mm	7/16"	7/8" (22mm)	Iron/Nylon
111162	43mm	7/16"	7/8" (22mm)	Iron/Nylon



Part No.	Base dia.	Stem thread	Colour	Material
111170	25.4mm	7/16"	7/8" (22mm)	Iron/Nylon
111171	35mm	7/16"	7/8" (22mm)	Iron/Nylon
111172	43mm	7/16"	7/8" (22mm)	Iron/Nylon
111173	55mm	7/16"	7/8" (22mm)	Iron/Nylon

Pintle Swivel Glide



Part No.	Base dia.	Stem thread	Colour	Material
111180	1-1/4"	7/16"	7/8" (22mm)	Iron/Nylon

Pure metal Leveler



Category:**Pure metal Leveler**

Details



Part No.	Base dia.	H	Stem thread	Colour	Material
110830	0.87"	0.15"	3/8"-16Sx1-1/8"	Zinc plated	Steel
110831	0.87"	0.15"	3/8"-16Sx1-1/2"	Zinc plated	Steel
110832	0.87"	0.15"	3/8"-16Sx2-1/2"	Zinc plated	Steel



Part No.	Base dia.	H	Stem thread	Colour	Material
110840	1.386"	0.256"	3/8"-16Sx1.22"	Zinc plated	Steel
110841	1.386"	0.256"	3/8"-16Sx1-83"	Zinc plated	Steel



Part No.	Base dia.	H	Stem thread	Colour	Material
110850	1.18"	0.24"	3/8"-16Sx2.4"	Zinc plated	Steel
110851	1.18"	0.24"	3/8"-16Sx3"	Zinc plated	Steel



Part No.	Base dia.	H	Stem thread	Colour	Material
110860	1-11/16"	1/4"	3/8"-16Sx2.875"	Black Oxide	Steel
110861	1-11/16"	1/4"	3/8"-16Sx3"	Black Oxide	Steel
110862	1-11/16"	1/4"	3/8"-16Sx3.874"	Black Oxide	Steel



Part No.	Base dia.	H	Stem thread	Colour	Material
110970	19mm	1/4"	1/4"-20Sx32mm	Nickel plated	Steel



Part No.	Base dia.	H	Stem thread	Colour	Material
111030	30mm	5mm	3/8"-16Sx1.5"	Black Zinc plated	Steel



Part No.	Base dia.	H	Stem thread	Colour	Material
111040	40mm	15mm	1/2"-13Sx1"	Black Zinc plated	Steel
111041	40mm	15mm	3/8"-16Sx1"	Black Zinc plated	Steel



Part No.	Base dia.	H	Stem thread	Colour	Material
110930	1-3/8"	0.12"	3/8"-16Sx2"	Black Oxide	Steel
110931	1-3/8"	0.12"	3/8"-16Sx3"	Black Oxide	Steel
110932	1-3/8"	0.12"	3/8"-16Sx3.874"	Black Oxide	Steel



Part No.	Base dia.	H	Stem thread	Colour	Material
110940	17mm	1/4"	3/8"-16Sx2"	Zinc plated	Steel
110941	17mm	1/4"	3/8"-16Sx3"	Zinc plated	Steel
110942	17mm	1/4"	3/8"-16Sx3.5"	Zinc plated	Steel



Part No.	Base dia.	H	Stem thread	Colour	Material
110950	32mm	1/4"	M8x38mm	Nickel plated	Steel



New

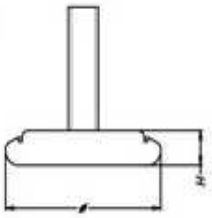

Part No.	Base dia.	H	Stem thread	L	Colour	Material
111190	1-1/2"	0.375"	5/16"-18S	1"1.5"2"2.5"3"	Zinc plated	Iron
111191	1-1/2"	0.375"	3/8"-16S	1"1.5"2"2.5"3"	Zinc plated	Iron
111192	2"	0.375"	3/8"-16S	1"1.5"2"2.5"3"	Zinc plated	Iron
111193	2"	0.375"	1/2"-13S	1"1.5"2"2.5"3"	Zinc plated	Iron

Rivted type Leveler



Category:**Rivted type**

Details



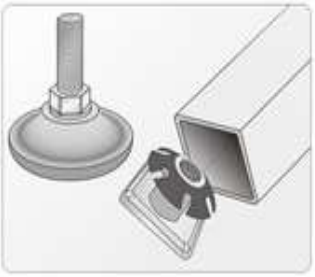

Part No.	Base dia.	H	Stem thread	Length of stem thread			Colour	Material
110310	25.4mm	0.56"	1/4"-20S	1"	1.5"	2"	Nature/Black	Nylon/HDPE
110311	25.4mm	0.638"	5/16"-18S	1"	1.5"	2"	Nature/Black	Nylon/HDPE
110312	25.4mm	14.2mm	M6	25mm	38mm	50mm	Nature/Black	Nylon/HDPE
110313	25.4mm	16.2mm	M8	25mm	38mm	50mm	Nature/Black	Nylon/HDPE
110314	28.5mm	0.49"	1/4"-20S	1"	1.5"	2"	Nature/Black	Nylon/HDPE
110315	28.5mm	0.57"	5/16"-18S	1"	1.5"	2"	Nature/Black	Nylon/HDPE
110316	28.5mm	12.5mm	M6	25mm	38mm	50mm	Nature/Black	Nylon/HDPE
110317	28.5mm	14.5mm	M8	25mm	38mm	50mm	Nature/Black	Nylon/HDPE
110318	32mm	0.57"	1/4"-20S	1"	1.5"	2"	Nature/Black	Nylon/HDPE
110319	32mm	0.65"	5/16"-18S	1"	1.5"	2"	Nature/Black	Nylon/HDPE
110320	32mm	0.65"	3/8"-16S	1"	1.5"	2"	Nature/Black	Nylon/HDPE
110321	32mm	14.5mm	M6	25mm	38mm	50mm	Nature/Black	Nylon/HDPE
110322	32mm	16.5mm	M8	25mm	38mm	50mm	Nature/Black	Nylon/HDPE
110323	32mm	16.5mm	M10	25mm	38mm	50mm	Nature/Black	Nylon/HDPE
110324	35mm	0.472"	1/4"-20S	1"	1.5"	2"	Nature/Black	Nylon/HDPE
110325	35mm	0.472"	5/16"-18S	1"	1.5"	2"	Nature/Black	Nylon/HDPE
110326	35mm	0.492"	3/8"-16S	1"	1.5"	2"	Nature/Black	Nylon/HDPE
110327	35mm	12mm	M6	25mm	38mm	50mm	Nature/Black	Nylon/HDPE
110328	35mm	12mm	M8	25mm	38mm	50mm	Nature/Black	Nylon/HDPE
110329	35mm	12.5mm	M10	25mm	38mm	50mm	Nature/Black	Nylon/HDPE
110330	43mm	0.57"	1/4"-20S	1"	1.5"	2"	Nature/Black	Nylon/HDPE
110331	43mm	0.65"	5/16"-18S	1"	1.5"	2"	Nature/Black	Nylon/HDPE
110332	43mm	0.65"	3/8"-16S	1"	1.5"	2"	Nature/Black	Nylon/HDPE
110333	43mm	14.5mm	M6	25mm	38mm	50mm	Nature/Black	Nylon/HDPE
110334	43mm	16.5mm	M8	25mm	38mm	50mm	Nature/Black	Nylon/HDPE
110335	43mm	16.5mm	M10	25mm	38mm	50mm	Nature/Black	Nylon/HDPE



Part No.	Base dia.	H	Stem thread	Length of stem thread			Colour	Material
110350	25.4mm	0.46"	1/4"-20S	1"	1.5"	2"	Nature/Black	Nylon/HDPE
110351	25.4mm	0.46"	5/16"-18S	1"	1.5"	2"	Nature/Black	Nylon/HDPE
110352	25.4mm	11.7mm	M6	25mm	38mm	50mm	Nature/Black	Nylon/HDPE
110353	25.4mm	11.7mm	M8	25mm	38mm	50mm	Nature/Black	Nylon/HDPE
110354	28.5mm	0.393"	1/4"-20S	1"	1.5"	2"	Nature/Black	Nylon/HDPE
110355	28.5mm	0.393"	5/16"-18S	1"	1.5"	2"	Nature/Black	Nylon/HDPE
110356	28.5mm	10mm	M6	25mm	38mm	50mm	Nature/Black	Nylon/HDPE
110357	28.5mm	10mm	M8	25mm	38mm	50mm	Nature/Black	Nylon/HDPE
110358	32mm	0.472"	1/4"-20S	1"	1.5"	2"	Nature/Black	Nylon/HDPE
110359	32mm	0.472"	5/16"-18S	1"	1.5"	2"	Nature/Black	Nylon/HDPE
110360	32mm	0.492"	3/8"-16S	1"	1.5"	2"	Nature/Black	Nylon/HDPE
110361	32mm	12mm	M6	25mm	38mm	50mm	Nature/Black	Nylon/HDPE
110362	32mm	12mm	M8	25mm	38mm	50mm	Nature/Black	Nylon/HDPE
110363	32mm	12.5mm	M10	25mm	38mm	50mm	Nature/Black	Nylon/HDPE
110364	35mm	0.472"	1/4"-20S	1"	1.5"	2"	Nature/Black	Nylon/HDPE
110365	35mm	0.472"	5/16"-18S	1"	1.5"	2"	Nature/Black	Nylon/HDPE
110366	35mm	0.492"	3/8"-16S	1"	1.5"	2"	Nature/Black	Nylon/HDPE
110367	35mm	12mm	M6	25mm	38mm	50mm	Nature/Black	Nylon/HDPE
110368	35mm	12mm	M8	25mm	38mm	50mm	Nature/Black	Nylon/HDPE
110369	35mm	12.5mm	M10	25mm	38mm	50mm	Nature/Black	Nylon/HDPE
110370	43mm	0.512"	1/4"-20S	1"	1.5"	2"	Nature/Black	Nylon/HDPE
110371	43mm	0.512"	5/16"-18S	1"	1.5"	2"	Nature/Black	Nylon/HDPE
110372	43mm	0.531"	3/8"-16S	1"	1.5"	2"	Nature/Black	Nylon/HDPE
110373	43mm	13mm	M6	25mm	38mm	50mm	Nature/Black	Nylon/HDPE
110374	43mm	13mm	M8	25mm	38mm	50mm	Nature/Black	Nylon/HDPE
110375	43mm	13.5mm	M10	25mm	38mm	50mm	Nature/Black	Nylon/HDPE



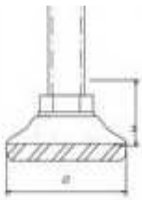



110510	28.5mm	0.512"	1/4"-20S	1"	1.5"	2"	Nature/Black	Nylon/HDPE
110511	28.5mm	0.59"	5/16"-18S	1"	1.5"	2"	Nature/Black	Nylon/HDPE
110512	28.5mm	13mm	M6	25mm	38mm	50mm	Nature/Black	Nylon/HDPE
110513	28.5mm	15mm	M8	25mm	38mm	50mm	Nature/Black	Nylon/HDPE
110514	32mm	0.59"	1/4"-20S	1"	1.5"	2"	Nature/Black	Nylon/HDPE
110515	32mm	0.669"	5/16"-18S	1"	1.5"	2"	Nature/Black	Nylon/HDPE
110516	32mm	0.669"	3/8"-16S	1"	1.5"	2"	Nature/Black	Nylon/HDPE
110517	32mm	15mm	M6	25mm	38mm	50mm	Nature/Black	Nylon/HDPE
110518	32mm	17mm	M8	25mm	38mm	50mm	Nature/Black	Nylon/HDPE
110519	32mm	17mm	M10	25mm	38mm	50mm	Nature/Black	Nylon/HDPE
110560	43mm	0.63"	1/4"-20S	1"	1.5"	2"	Nature/Black	Nylon/HDPE
110561	43mm	0.709"	5/16"-18S	1"	1.5"	2"	Nature/Black	Nylon/HDPE
110562	43mm	0.709"	3/8"-16S	1"	1.5"	2"	Nature/Black	Nylon/HDPE
110563	43mm	16mm	M6	25mm	38mm	50mm	Nature/Black	Nylon/HDPE
110564	43mm	18mm	M8	25mm	38mm	50mm	Nature/Black	Nylon/HDPE
110565	43mm	18mm	M10	25mm	38mm	50mm	Nature/Black	Nylon/HDPE



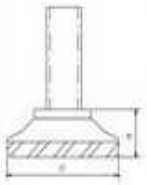



Part No.	Base dia.	H	Stem thread	Length of stem thread			Colour	Material
110570	28.5mm	0.413"	1/4"-20S	1"	1.5"	2"	Nature/Black	Nylon/HDPE
110571	28.5mm	0.413"	5/16"-18S	1"	1.5"	2"	Nature/Black	Nylon/HDPE
110572	28.5mm	10.5mm	M6	25mm	38mm	50mm	Nature/Black	Nylon/HDPE
110573	28.5mm	10.5mm	M8	25mm	38mm	50mm	Nature/Black	Nylon/HDPE
110574	32mm	0.492"	1/4"-20S	1"	1.5"	2"	Nature/Black	Nylon/HDPE
110575	32mm	0.492"	5/16"-18S	1"	1.5"	2"	Nature/Black	Nylon/HDPE
110576	32mm	0.512"	3/8"-16S	1"	1.5"	2"	Nature/Black	Nylon/HDPE
110577	32mm	12.5mm	M6	25mm	38mm	50mm	Nature/Black	Nylon/HDPE
110578	32mm	12.5mm	M8	25mm	38mm	50mm	Nature/Black	Nylon/HDPE
110579	32mm	13mm	M10	25mm	38mm	50mm	Nature/Black	Nylon/HDPE
110580	43mm	0.531"	1/4"-20S	1"	1.5"	2"	Nature/Black	Nylon/HDPE
110581	43mm	0.531"	5/16"-18S	1"	1.5"	2"	Nature/Black	Nylon/HDPE
110582	43mm	0.551"	3/8"-16S	1"	1.5"	2"	Nature/Black	Nylon/HDPE
110583	43mm	13.5mm	M6	25mm	38mm	50mm	Nature/Black	Nylon/HDPE
110584	43mm	13.5mm	M8	25mm	38mm	50mm	Nature/Black	Nylon/HDPE
110585	43mm	14mm	M10	25mm	38mm	50mm	Nature/Black	Nylon/HDPE



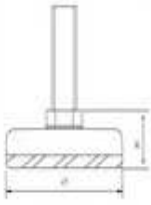



Part No.	Base dia.	H	Stem thread	Length of stem thread			Colour	Material
110390	25.4mm	0.49"	1/4"-20S	1"	1.5"	2"	Nature/Black	Nylon/HDPE
110391	25.4mm	0.57"	5/16"-18S	1"	1.5"	2"	Nature/Black	Nylon/HDPE
110392	25.4mm	12.5mm	M6	25mm	38mm	50mm	Nature/Black	Nylon/HDPE
110393	25.4mm	14.5mm	M8	25mm	38mm	50mm	Nature/Black	Nylon/HDPE
110394	35mm	0.689"	1/4"-20S	1"	1.5"	2"	Nature/Black	Nylon/HDPE
110395	35mm	0.768"	5/16"-18S	1"	1.5"	2"	Nature/Black	Nylon/HDPE
110396	35mm	0.768"	3/8"-16S	1"	1.5"	2"	Nature/Black	Nylon/HDPE
110397	35mm	17.5mm	M6	25mm	38mm	50mm	Nature/Black	Nylon/HDPE
110398	35mm	19.5mm	M8	25mm	38mm	50mm	Nature/Black	Nylon/HDPE
110399	35mm	19.5mm	M10	25mm	38mm	50mm	Nature/Black	Nylon/HDPE
110400	43mm	0.728"	1/4"-20S	1"	1.5"	2"	Nature/Black	Nylon/HDPE
110401	43mm	0.807"	5/16"-18S	1"	1.5"	2"	Nature/Black	Nylon/HDPE
110402	43mm	0.807"	3/8"-16S	1"	1.5"	2"	Nature/Black	Nylon/HDPE
110403	43mm	0.85"	1/2"-13S	1.5"	2"	2.5"	Nature/Black	Nylon/HDPE
110404	43mm	18.5mm	M6	25mm	38mm	50mm	Nature/Black	Nylon/HDPE
110405	43mm	20.5mm	M8	25mm	38mm	50mm	Nature/Black	Nylon/HDPE
110406	43mm	20.5mm	M10	25mm	38mm	50mm	Nature/Black	Nylon/HDPE



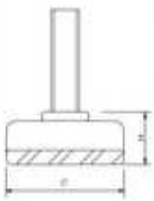

Part No.	Base dia.	H	Stem thread	Length of stem thread			Colour	Material
110450	25.4mm	0.393"	1/4"-20S	1"	1.5"	2"	Nature/Black	Nylon/HDPE
110451	25.4mm	0.393"	5/16"-18S	1"	1.5"	2"	Nature/Black	Nylon/HDPE
110452	25.4mm	10mm	M6	25mm	38mm	50mm	Nature/Black	Nylon/HDPE
110453	25.4mm	10mm	M8	25mm	38mm	50mm	Nature/Black	Nylon/HDPE
110454	35mm	0.59"	1/4"-20S	1"	1.5"	2"	Nature/Black	Nylon/HDPE
110455	35mm	0.59"	5/16"-18S	1"	1.5"	2"	Nature/Black	Nylon/HDPE
110456	35mm	0.61"	3/8"-16S	1"	1.5"	2"	Nature/Black	Nylon/HDPE
110457	35mm	15mm	M6	25mm	38mm	50mm	Nature/Black	Nylon/HDPE
110458	35mm	15mm	M8	25mm	38mm	50mm	Nature/Black	Nylon/HDPE
110459	35mm	15.5mm	M10	25mm	38mm	50mm	Nature/Black	Nylon/HDPE
110460	43mm	0.63"	1/4"-20S	1"	1.5"	2"	Nature/Black	Nylon/HDPE
110461	43mm	0.63"	5/16"-18S	1"	1.5"	2"	Nature/Black	Nylon/HDPE
110462	43mm	0.65"	3/8"-16S	1"	1.5"	2"	Nature/Black	Nylon/HDPE
110463	43mm	0.673"	1/2"-13S	1.5"	2"	2.5"	Nature/Black	Nylon/HDPE
110464	43mm	16mm	M6	25mm	38mm	50mm	Nature/Black	Nylon/HDPE
110465	43mm	16mm	M8	25mm	38mm	50mm	Nature/Black	Nylon/HDPE
110466	43mm	16.5mm	M10	25mm	38mm	50mm	Nature/Black	Nylon/HDPE
110467	43mm	17mm	M12	38mm	50mm	65mm	Nature/Black	Nylon/HDPE



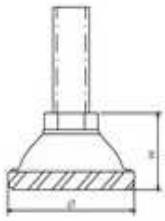

Part No.	Base dia.	H	Stem thread	Colour	Material
110290	1-3/8"	0.7"	3/8"-16Sx1"	Nature	Nylon/HDPE
110291	1-3/8"	0.7"	3/8"-16Sx1.5"	Nature	Nylon/HDPE
110292	1-3/8"	0.7"	3/8"-16Sx2"	Nature	Nylon/HDPE
110293	1-3/8"	0.7"	M10x25mm	Nature	Nylon/HDPE
110294	1-3/8"	0.7"	M10x38.1mm	Nature	Nylon/HDPE
110295	1-3/8"	0.7"	M10x50.8mm	Nature	Nylon/HDPE



Part No.	Base dia.	H	Stem thread	Colour	Material
111000	48mm	0.4"	5/16"-18Sx1"	Black/Nature	Nylon/HDPE
111001	48mm	0.4"	5/16"-18Sx1.5"	Black/Nature	Nylon/HDPE
111002	48mm	0.4"	5/16"-18Sx2"	Black/Nature	Nylon/HDPE
111003	48mm	0.4"	3/8"-16Sx1"	Black/Nature	Nylon/HDPE
111004	48mm	0.4"	3/8"-16Sx1.5"	Black/Nature	Nylon/HDPE
111005	48mm	0.4"	3/8"-16Sx2"	Black/Nature	Nylon/HDPE



Part No.	Base dia.	H	Stem thread	Colour	Material
110800	2-1/2"	0.5"	5/16"-18Sx1"	Black/Nature	Nylon/HDPE
110801	2-1/2"	0.5"	5/16"-18Sx1.5"	Black/Nature	Nylon/HDPE
110802	2-1/2"	0.5"	5/16"-18Sx2"	Black/Nature	Nylon/HDPE
110803	2-1/2"	0.5"	3/8"-16Sx1"	Black/Nature	Nylon/HDPE
110804	2-1/2"	0.5"	3/8"-16Sx1.5"	Black/Nature	Nylon/HDPE
110805	2-1/2"	0.5"	3/8"-16Sx2"	Black/Nature	Nylon/HDPE



Part No.	Base dia.	H	Stem thread	Colour	Material
110990	40mm	0.5"	5/16"-18Sx1"	Black/Nature	Nylon/HDPE
110991	40mm	0.5"	5/16"-18Sx1.5"	Black/Nature	Nylon/HDPE



110993	40mm	0.5"	3/8"-16Sx1"	Black/Nature	Nylon/HDPE
110994	40mm	0.5"	3/8"-16Sx1.5"	Black/Nature	Nylon/HDPE
110995	40mm	0.5"	3/8"-16Sx2"	Black/Nature	Nylon/HDPE



Part No.	Base dia.	H	Stem thread	Colour	Material
110770	1-11/16"	0.5"	3/8"-16Sx1.5"	Black/Nature	Nylon/HDPE
110771	1-11/16"	0.5"	3/8"-16Sx2"	Black/Nature	Nylon/HDPE



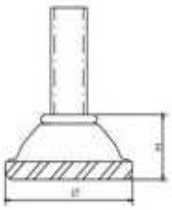

Part No.	Base dia.	H	Stem thread	Colour	Material
110300	1-3/8"	1/2"	3/8"-16Sx1"	Nature	Nylon/HDPE
110301	1-3/8"	1/2"	3/8"-16Sx1.5"	Nature	Nylon/HDPE
110302	1-3/8"	1/2"	3/8"-16Sx2"	Nature	Nylon/HDPE
110303	1-3/8"	1/2"	M10x25mm	Nature	Nylon/HDPE
110304	1-3/8"	1/2"	M10x38.1mm	Nature	Nylon/HDPE
110305	1-3/8"	1/2"	M10x50.8mm	Nature	Nylon/HDPE
110306	1-3/8"	1/2"	5/16"-18Sx1"	Nature	Nylon/HDPE



Part No.	Base dia.	H	Stem thread	L	Colour	Material
111100	1-3/8"	0.55"	1/4"-20S	1"/1.5"/2"/2.5"/3"	Black	PP
111101	1-3/8"	0.55"	5/16"-18S	1"/1.5"/2"/2.5"/3"	Black	PP
111102	1-3/8"	0.55"	3/8"-16S	1"/1.5"/2"/2.5"/3"	Black	PP
111103	2"	0.55"	1/4"-20S	1"/1.5"/2"/2.5"/3"	Black	PP
111104	2"	0.55"	5/16"-18S	1"/1.5"/2"/2.5"/3"	Black	PP
111105	2"	0.55"	3/8"-16S	1"/1.5"/2"/2.5"/3"	Black	PP

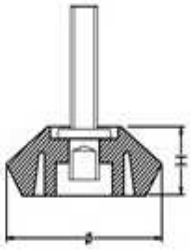



Part No.	Base dia.	H	Stem thread	L	Colour	Material
111110	1-1/8"	0.55"	1/4"-20S	1"/1.5"/2"/2.5"/3"	Black	PP
111111	1-1/8"	0.55"	5/16"-18S	1"/1.5"/2"/2.5"/3"	Black	PP
111112	1-1/8"	0.55"	3/8"-16S	1"/1.5"/2"/2.5"/3"	Black	PP



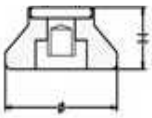

Swivel Leveler



Category:**Swivel Leveler**

Details



Part No.	Base dia.	Stem thread	Colour	Material
110870	1-1/8"	1/4"-20Sx0.5"	Nature	Nylon/HDPE
110871	1-1/8"	1/4"-20Sx1"	Nature	Nylon/HDPE
110872	1-1/8"	5/16"-18Sx1"	Nature	Nylon/HDPE
110873	1-1/8"	5/16"-18Sx1.5"	Nature	Nylon/HDPE
110874	1-1/8"	3/8"-16Sx1"	Nature	Nylon/HDPE
110875	1-1/8"	3/8"-16Sx1"	Nature	Nylon/HDPE



Part No.	Base dia.	Stem thread	Colour	Material
110880	1-1/8"	1/4"-20Sx1"	Black	Nylon/HDPE



Part No.	Base dia.	Stem thread	Colour	Material
110890	1-1/2"	3/8"-16Sx1.5"	Nature	Nylon/HDPE
110891	1-1/2"	3/8"-16Sx1"	Nature	Nylon/HDPE
110892	1-1/2"	3/8"-16Sx2.5"	Nature	Nylon/HDPE
110893	1-1/2"	3/8"-16Sx3"	Nature	Nylon/HDPE



Part No.	Base dia.	Stem thread	Colour	Material
110900	1-1/8"	1/4"-20Sx1"	Nature	Nylon/HDPE
110901	1-1/8"	1/4"-20Sx1.5"	Nature	Nylon/HDPE



Part No.	Base dia.	Stem thread	Colour	Material
110910	1-1/4"	3/8"-16Sx1"	Nature	Nylon/HDPE
110911	1-1/4"	3/8"-16Sx1.5"	Nature	Nylon/HDPE
110912	1-1/4"	3/8"-16Sx2"	Nature	Nylon/HDPE
110913	1-1/4"	5/16"-18Sx1"	Nature	Nylon/HDPE
110914	1-1/4"	5/16"-18Sx1.5"	Nature	Nylon/HDPE
110915	1-1/4"	5/16"-18Sx2"	Nature	Nylon/HDPE



Part No.	Base dia.	Stem thread	Colour	Material
110920	1-1/8"	1/4"-20Sx0.5"	Nature	Nylon/HDPE
110921	1-1/8"	1/4"-20Sx1"	Nature	Nylon/HDPE



Part No.	Base dia.	Stem thread	Colour	Material
111050	1-11/16"	3/8"-16Sx1-1/4"	Zinc plated	Steel



Part No.	Base dia.	Stem thread	Colour	Material
111060	30mm	1/4"-20Sx1"	Zinc plated	Steel



Part No.	Base dia.	Stem thread	Colour	Material
110960	26mm	1/4"	Black	Nylon





Part No.	Base dia.	H	Stem thread	L	Colour	Material
110300	1-3/4"	0.413"	1/4"-20S	1".1.5".2".2.5".3"	Zinc plated	Iron/pp
110301	1-3/4"	0.413"	5/16"-18S	1".1.5".2".2.5".3"	Zinc plated	Iron/pp
110300	1-3/4"	0.413"	3/8"-16S	1".1.5".2".2.5".3"	Zinc plated	Iron/pp

With stem bolt



Category:**With stem bolt**

Details

Adjustable leveler with PTFE surface

PTFE film color options: grey, brown and yellow

For metal frame furniture and fit for the carpet very well.



Part No.	Sepcification			PCS/card	Packing
	Base Diameter		Stem bolt		
HPT-T2206	Ø	22mm	M6X25mm	/	BULK
HPT-T2214	Ø	7/8"	1/4"-20SX1"L	/	BULK
HPT-T2806	Ø	28mm	M6X25mm	/	BULK
HPT-T2814	Ø	1 7/64"	1/4"-20SX1"L	/	BULK



Part No.	Sepcification			PCS/card	Packing
	Length	Width	Stem bolt		
HPT-T3080	30mm	30mm	M8X25mm	/	BULK
HPT-T3081	30mm	30mm	M8X35mm	/	BULK
HPT-T3010	30mm	30mm	M10X25mm	/	BULK
HPT-T3011	30mm	30mm	M10X35mm	/	BULK
HPT-T4081	40mm	40mm	M8X25mm	/	BULK
HPT-T4082	40mm	40mm	M8X35mm	/	BULK
HPT-T4010	40mm	40mm	M10X25mm	/	BULK
HPT-T4011	40mm	40mm	M10X35mm	/	BULK











ZML1006



ZML1007



ZML1008



ZML1009



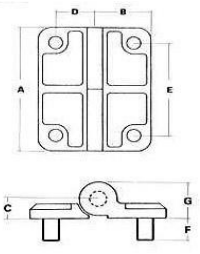



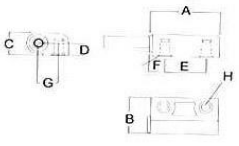



ZML1018



型号：1019



型号：1020



型号：1021



型号：1022



















ZML1017











Description.: **U-BOLT KIT Set**

Each Set Contains:

1 - Square bend U-Bolts with 8" No. 11 N.C thread 5/8

2 - Lock Washers

2 - Hex Nuts

1 -1/2" x 1 1/2" x 6" Tie Bars **(weight 1.15Lbs or 0.522 Kg.)**

Note: the weight are for 12" U-Bolt - weight 1.96Lbs or 0.890 Kg.

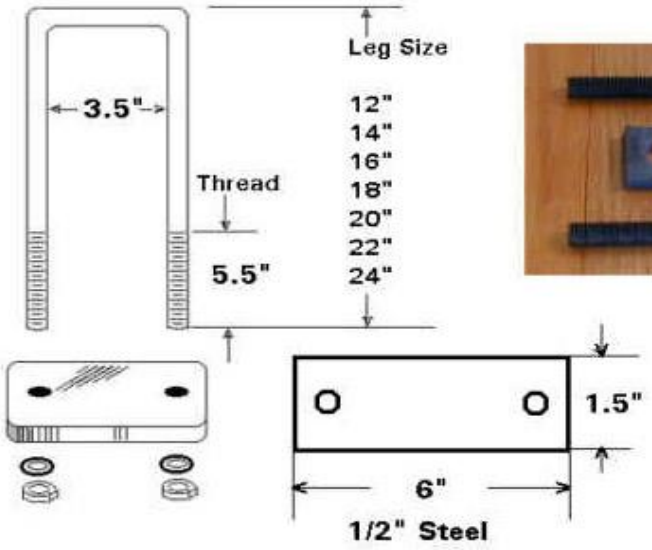















ZML1005







ZML1001



ZML1002



ZML1003



ZML1004



ZML1011











ZML1012



ZML1013



ZML1014



ZML1015



ZML1016







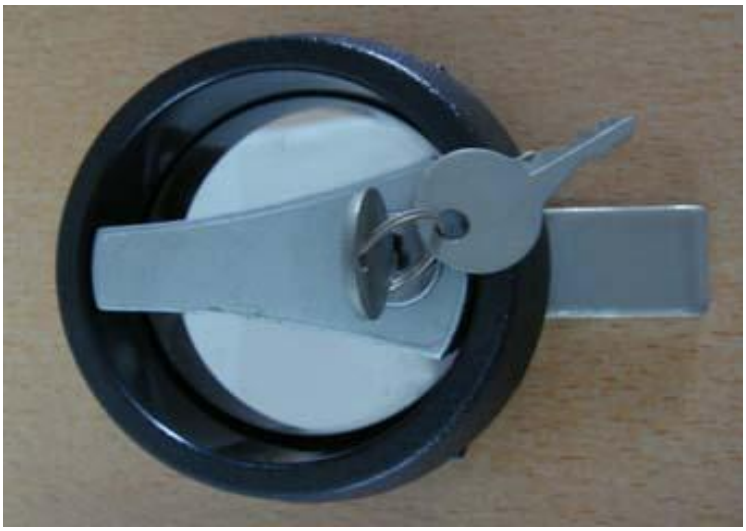



ZML1010





型号：1023



型号：1024



ZML1027





Hinge





Locking Gear

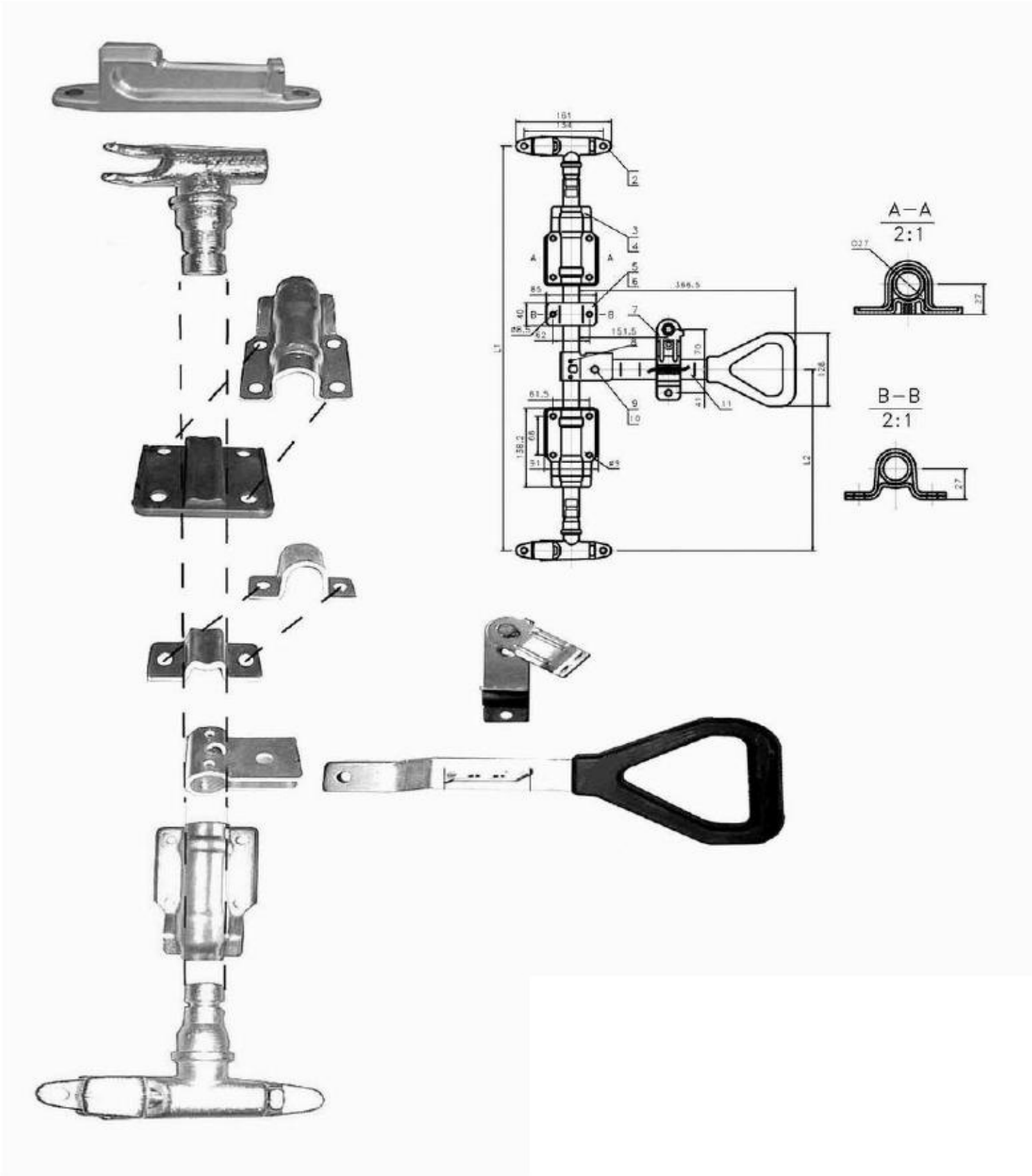

Continuous Hinges



HY01



HY02



HY03



HY04



HY05



HY06



HY07



HY08

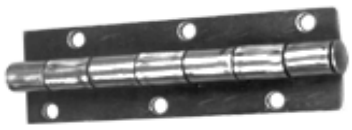

HY09



HY10



HY11



HY12



HY13



HY14



HY15



HY16



HY17

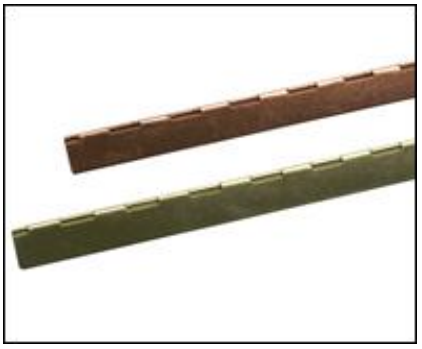

HY18



HY19



HY20



HY21



HY22



规格	型号
8*10	40、50
10*12	60
10*11.5	70
13*16	80
16*20	100
16*20	120
20*25	140
20*25	160
23*28	180
23*28	200
28*36	260



表面处理
Surface Finishing



亮光铬 YS01
Bright Chrome



哑光铬 YS02
Matt Chrome



镀白锌 YS03
White Zinc



镀彩锌 YS04
Color Chrome



亮光黑YS05
Bright Black



哑光黑YS06
Matt Black

左右开门示意
RH/LH sketch map

左开门把手左旋/LH.CW

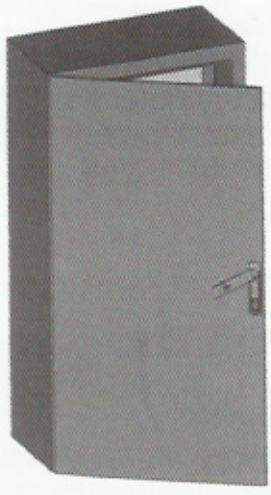

左开门(Z)/Left-hand

右开门把手左旋/RH.CCW



右开门(Y)/Right-hand

产品型号含义标注说明
Product model designation method

MS □□□/S□□□□/□/□

- 门锁
- 系列及设计序列号（附件）
- 钢栓：1、单点 2、二点 3、三点
- 钢栓开孔代号：A：□7 B：□8 C：□10 D：单点异型钢栓 E：8×8腰型 F：13×9腰型 G：14×8.8腰型 H：16×10腰型
- 中心距离：
- 打弯高度：见钢栓系列 注：钢栓中心距L尺寸和开孔尺寸相同，则尾部用A、B、C…顺序区合。
- 左右开门代号：Z左开门 Y右开门
- 面色处理：见图2

注：刚栓开孔代号；中心距离；打弯高度，这里所列的是本公司认为常规的.如用户有特别需要可按用户所需填写,本公司会和用户沟通协商解决.
Steel cam bore code,center distance,bending height。The regular specifications of the company.In case of special need.the user may fill in what you require and the company will discuse the detail with user.

标准订单规范及说明：

为用户书写产品规格简化、及时正确地传达用户的需求，订单书写特约如下：

1.用户可在书写产品规格简化、及时正确地传达用户地需求,订单书写特约如下:

2.运用产品型号约定书写方法详例:

MS807-3/S 10S1C3900/Y/YS01

MS705B-3/S 8S1B5006/Y/YS05

Standand form of orders

For conernience of providing correct product specs,the following rules will apply when submitting an order:

1.The user may use agreed codes to stand for its required product when ordering.

2.Examples of filling out an order using agreed product models:

MSMS807-3/S 10S1C3900/Y/YS01

MS705B-3/S 8S1B5006/Y/YS05

RoHS
Compliant

ROHS指令号2002/95/EG，是限制电子电器设备使用有害物质含量的欧洲指令。规定自2006年7月1日起新投入使用的在电子电气产品中禁止或限制使用铅、汞、镉、六价铬、多溴联苯或多溴二苯醚的含量浓度。

The EC-directive 2002/95/EG on the restriction of certain substances in electrical and electronic equipment dated 27 January 2003, referred to as RoHS (Restriction of Hazardous Substances), rules the concentrations of substances as lead, mercury, cadmium, hexavalent chromium and brominated flame retardants for electrical and electronic equipment that are put into operation from the 1 July 2006 and after.

IP等级的含义

防水・防尘规格在IEC60529(国际电气标准会议))中，是为了标识对电机机械器具的保护级(IP等级)所制定的。IP后面的两个数字中，左侧的表示防尘等级，右侧的表示防水等级。例如(IP54)表示的是：防尘等级为5级，防水等级为4级。另外，如仅用IP标准表示防水等级的时候则写成(IPx5)的形式。0或X表示没有防护，数字越大表示防护级别越高。

Waterproof & Dustproof specifications were established in IEC60529 (International Electrical Conference), an IP code is a rating assigned to a product that indicates its level of ingress protection. IP codes have the format IPxx, the first number in the sequence signifies the degree of protection against the entry of foreign solid objects. The second number signifies the degree of protection against the entry of moisture. The letter X may be used as an alternative for zero. The protection is greater as the number is higher.

第一位数字代表防止固体外物侵入的防护等级
The first numeral in an IP code indicates the degree of protection from solid foreign objects.

0或X 无防护	Not evaluated
1 防止≥Ø50mm的固体侵入	≥50.0 mm diameter object
2 防止≥Ø12.5mm的固体侵入	≥12.5 mm diameter object
3 防止≥Ø2.5mm的固体侵入	≥2.5 mm diameter object
4 防止≥Ø1.0mm的固体侵入	≥1.0 mm diameter object
5 防尘	Dust-protected
6 防尘，密闭	Dust-tight

第二位数字代表防水防护等级
字代表防水防护等级
The second numeral in an IP code indicates the degree of protection from moisture.

0或X 无防护	Not evaluated
1 防止垂直水滴侵入	Dripping water: vertical
2 防止15° 倾斜的水滴侵入	Dripping water: 15° tilt
3 防止喷洒水侵入	Spraying water
4 防止飞溅水侵入	Splashing water
5 防止喷射水侵入	Jetting water
6 防止强力喷射水侵入	Powerful jetting water
7 置于水中时，可短时间防水	Temporary immersion
8 长时间置于水中时，可防水	Continuous immersion

止口基体高度说明
GR/BH Instruction

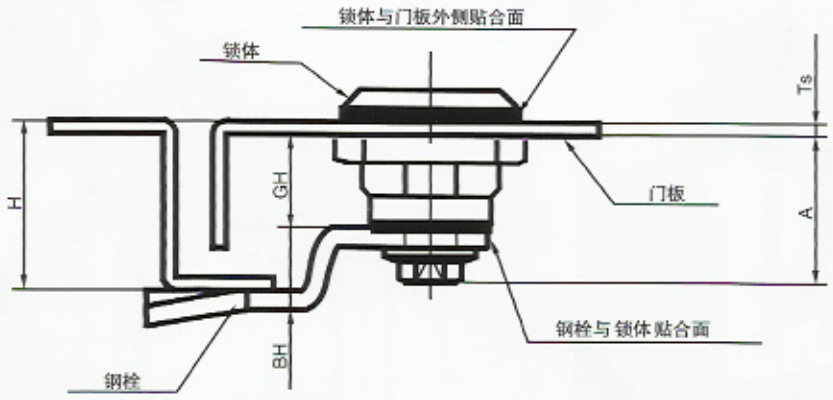

基体高度GH；基体与门板外侧贴合面到刚栓与基体贴合面的距离A尺寸随Ts尺寸改变而改变，GH高度从门板外侧面计算；止口高度H=GH+BH;

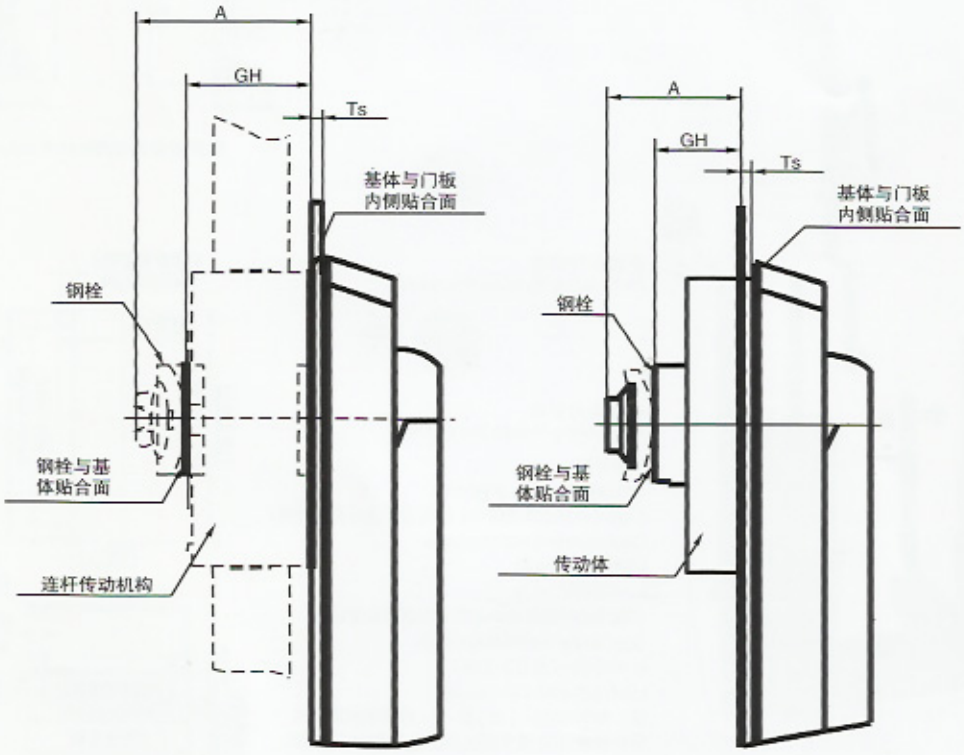

基本高度GH：基本与门板内侧贴合面到刚栓与锁体贴合面的距离A尺寸随Ts尺寸改变而改变，GH高度从门板内侧面计算；一般情况下，其产品为两体可分离结构，止口高度=GH+BH。

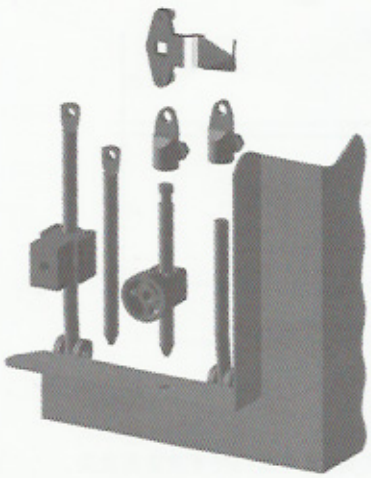

刚栓连动连杆安装示意
Rod assembling by can driving

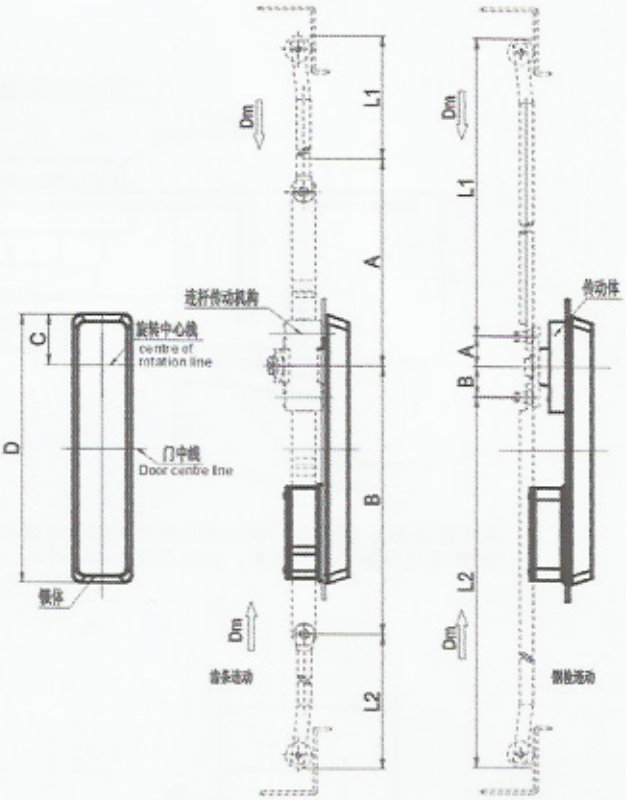

连杆安装图示/Sketch map

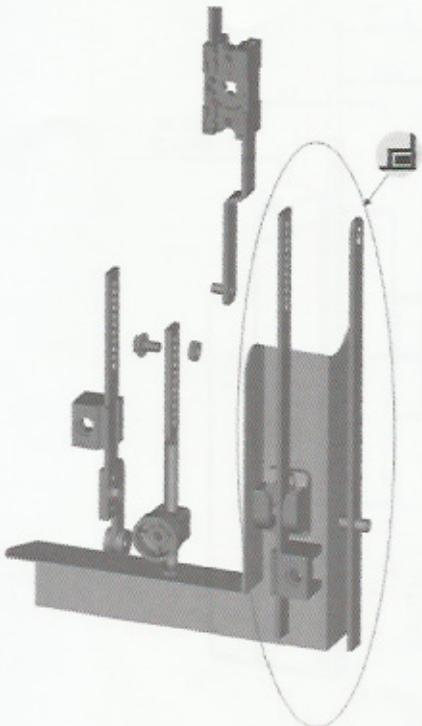

密封条外安装
Assmbling outside the gasket

密封条内安装
Assmbling inside the gasket

连杆计算
Calculate the legth of the rod
门板中心与锁体旋转中心线重合的连杆长度计算：
Door centre=centre of rotation
L1=F/2-A+(Dm-2)
L2=F/2-B+(Dm-2)
门板中心与锁体中心线重合的连杆长度计算：
Door centre=centre of lock body
L1=F/2-[A+(D/2-C)]+(Dm-2)
L2=F/2-[B-(D/2-C)]+(Dm-S)
注：如有连接杆（如L2-1），应剪掉连接件的有效长度;其计算方法仅供参考,使用时应考虑连杆的实际安装条件;
Dm:传动伸缩行程代号
F:门框开口高度

齿条连动连杆安装示意
Rod assenbling by latch mechanism driving

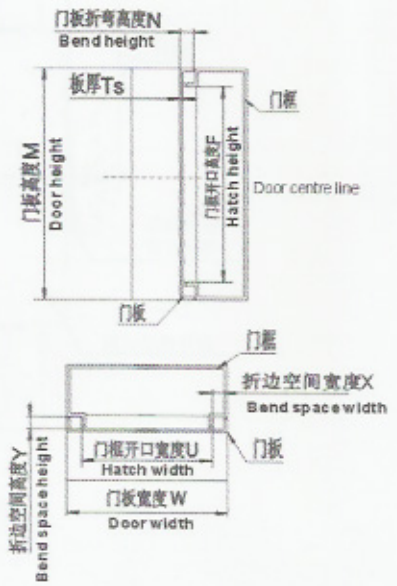

连杆锁系列安装示意

适合门板厚度TS=2mm

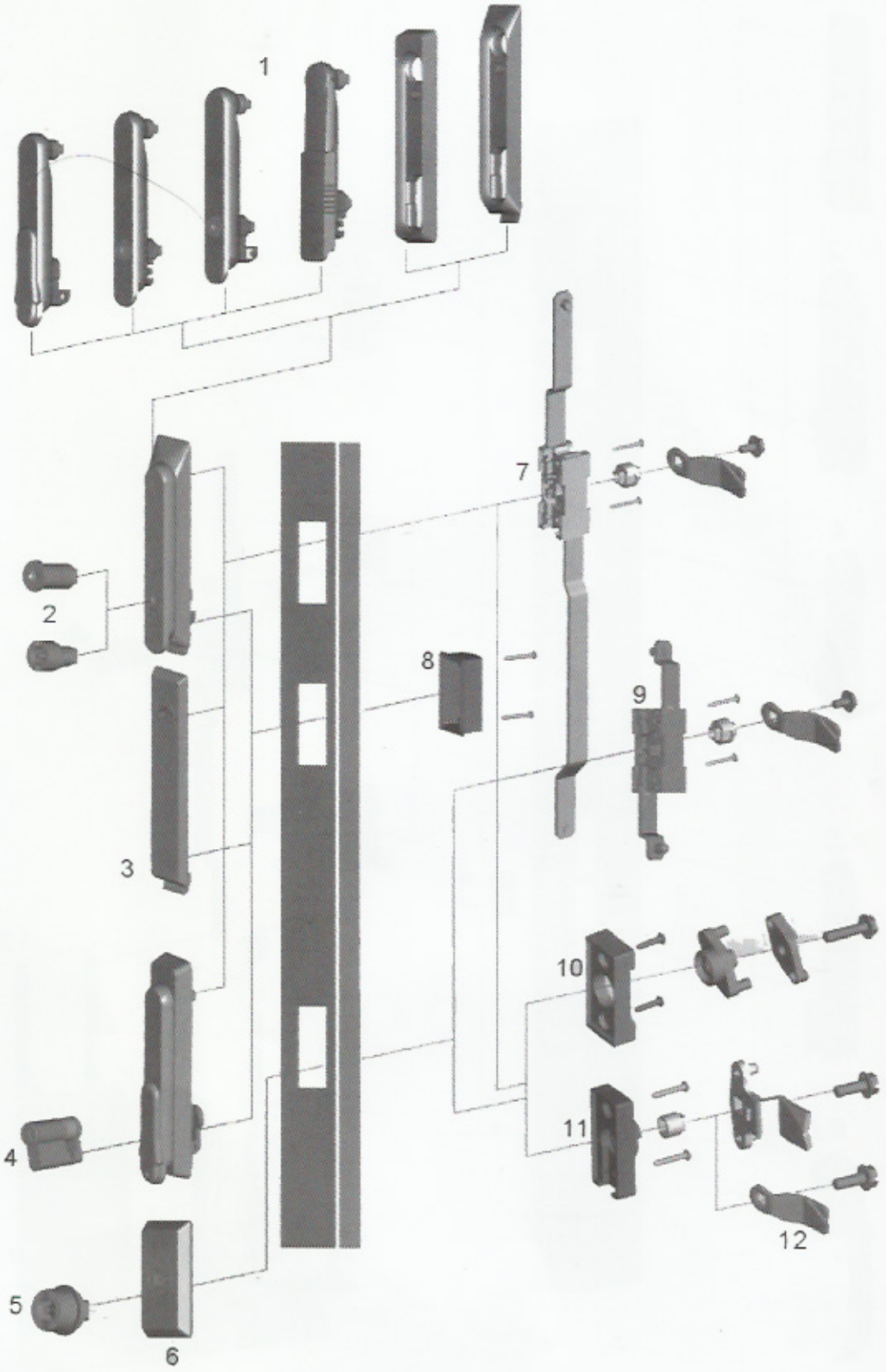

连杆锁系列安装示意

适用门板厚度TE=1-4mm

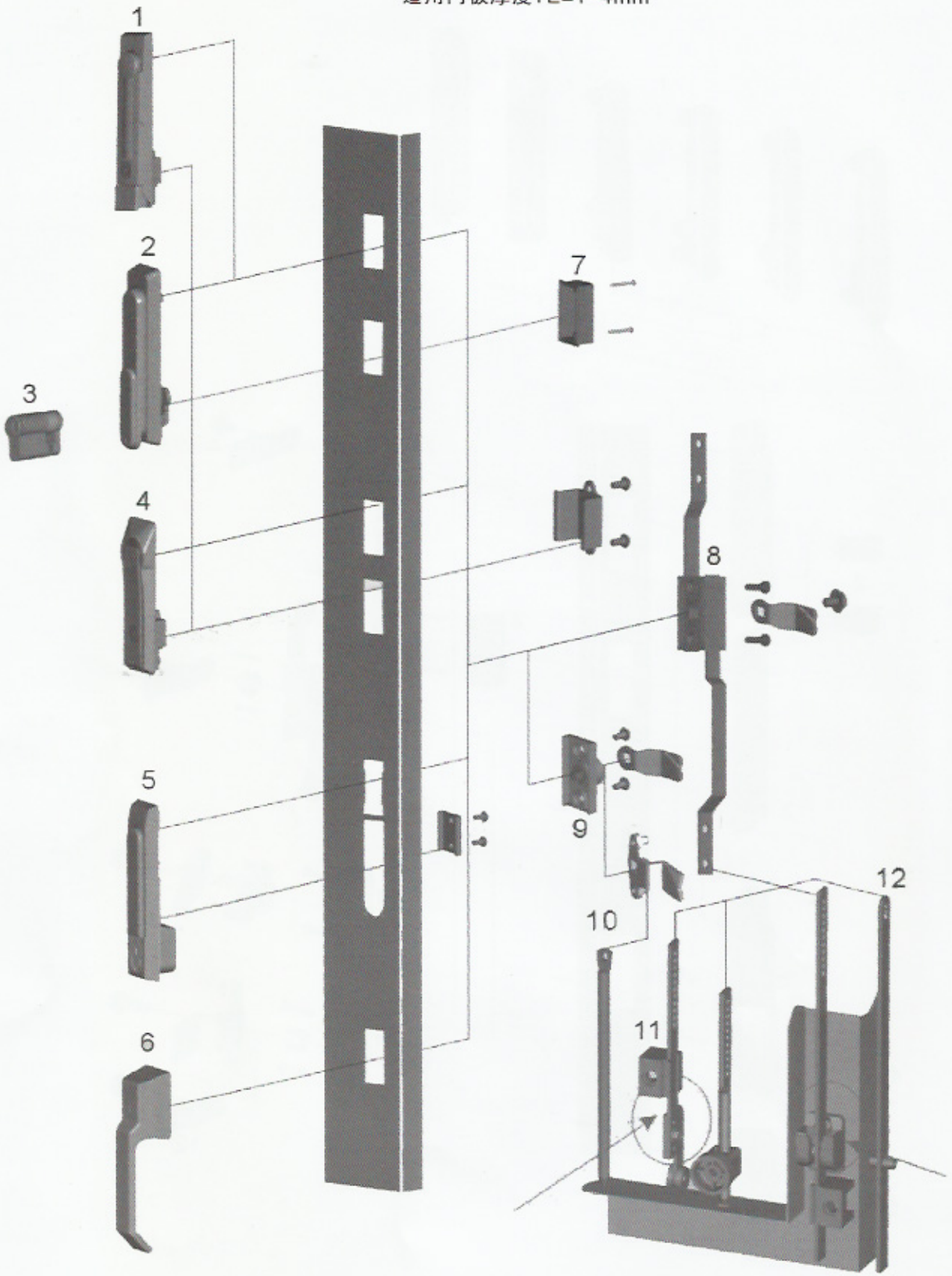

RP-005-1
RP-005-2
130° 内铰链



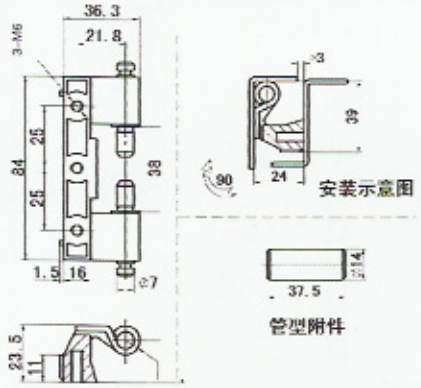

RP-006
加强筋连接件



RP-007-1
RP-007-2
左右挂件



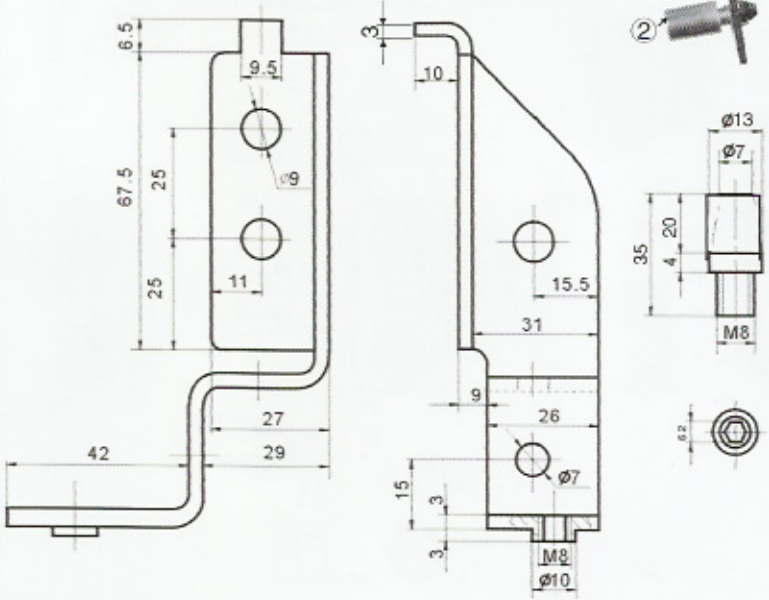

RP-009-1
RP-009-2
侧板附件



GBB46-76
6×20 配置螺钉 ②

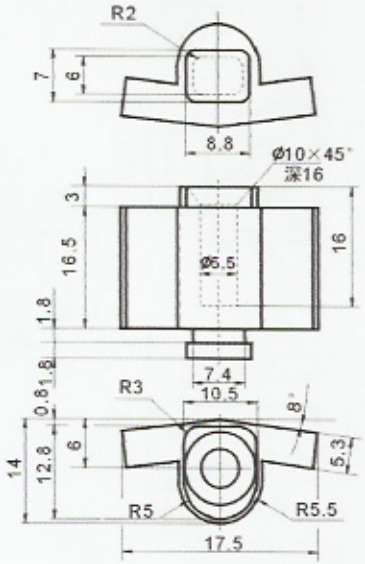

RP-008-1
RP-008-2
安装板附件



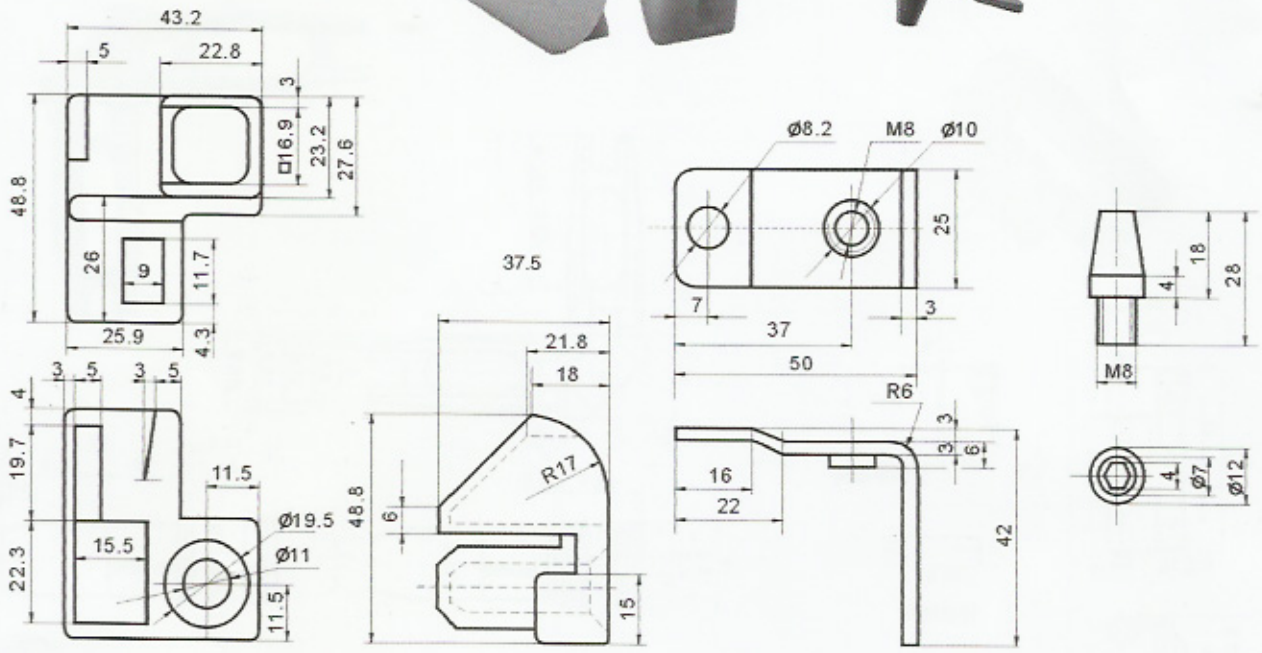

RP-010-1
RP-010-2
底板附件

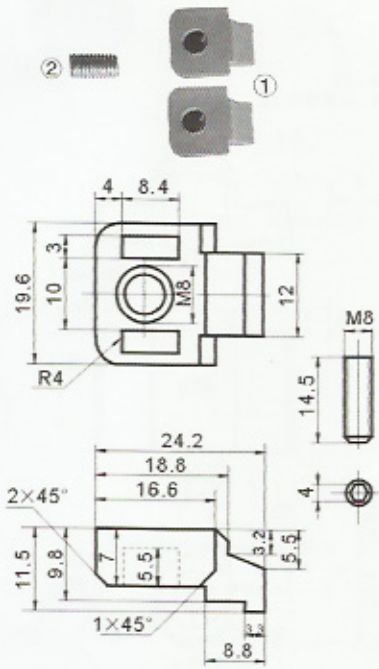

RP-003
AE箱铰链



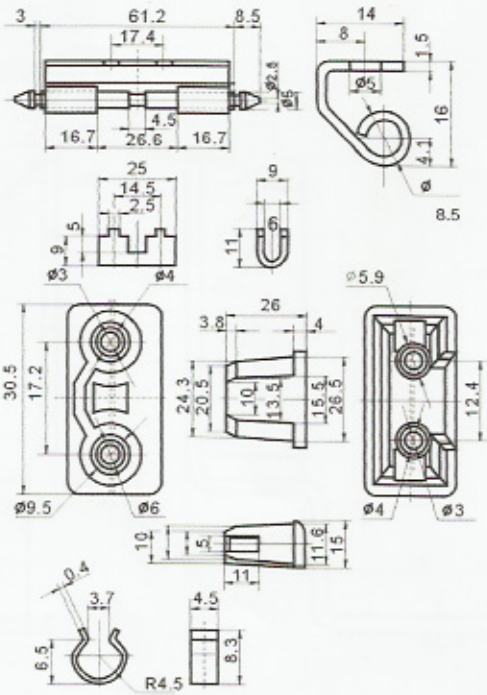

RP-011
锁总成



RP-001
AE箱锁



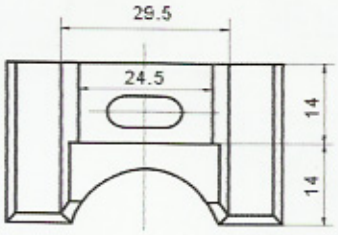

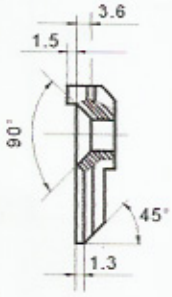

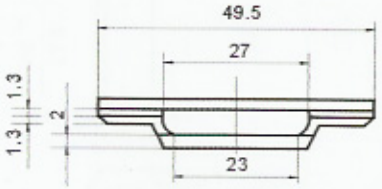

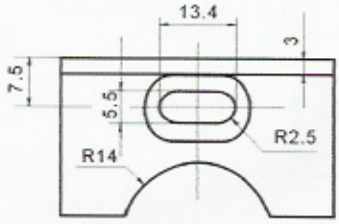

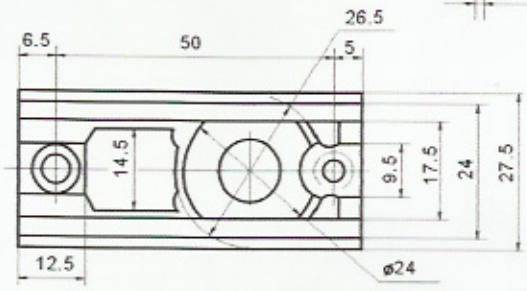

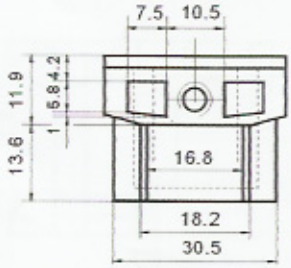

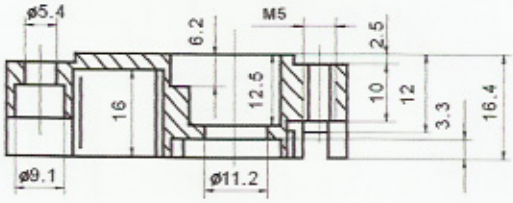

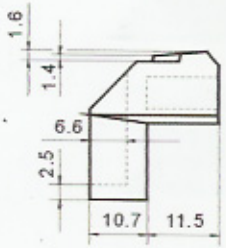

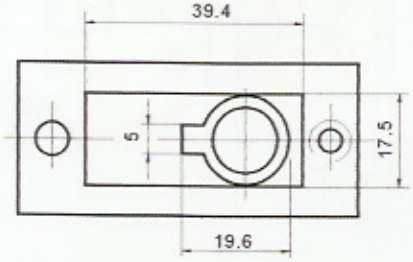

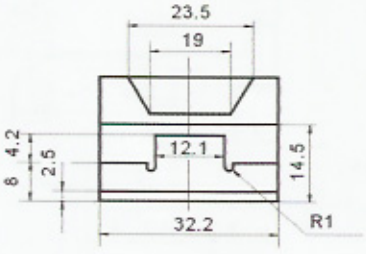

RP-012-1
摇把手



RP-013
加强筋螺母



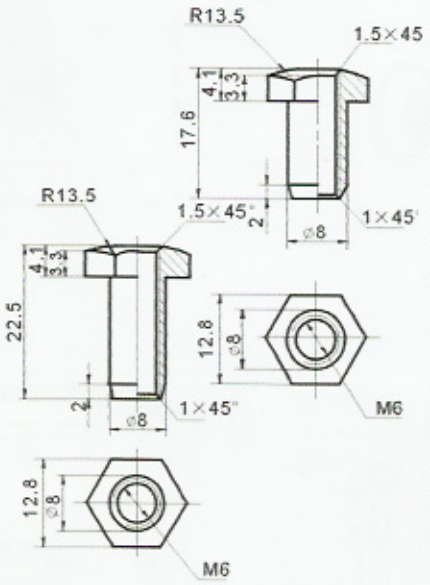

RP-017-1
RP-017-2
方螺母

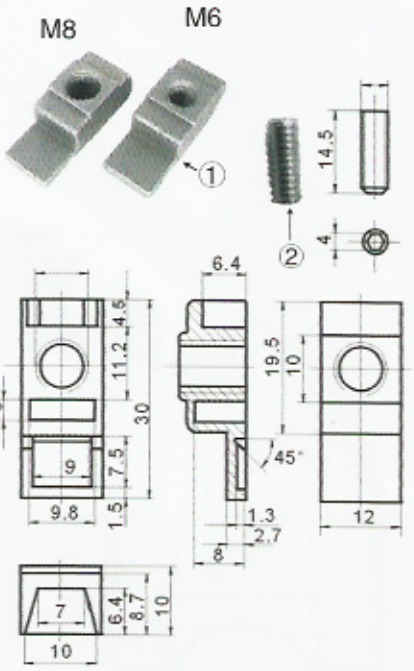

RP-014-1
RP-014-2
后板螺丝

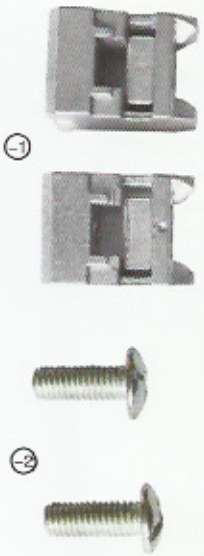

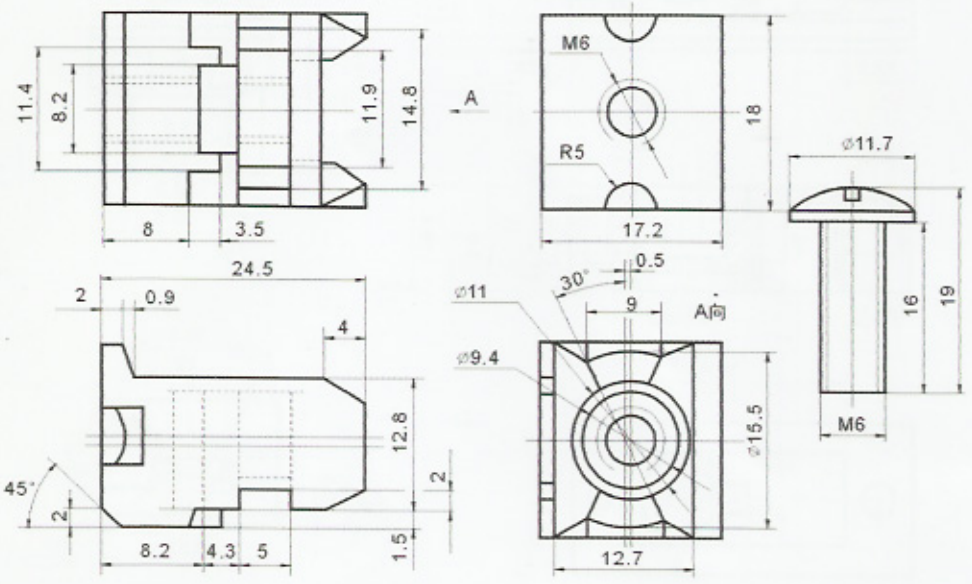

RP-015-1
锌合金连接块

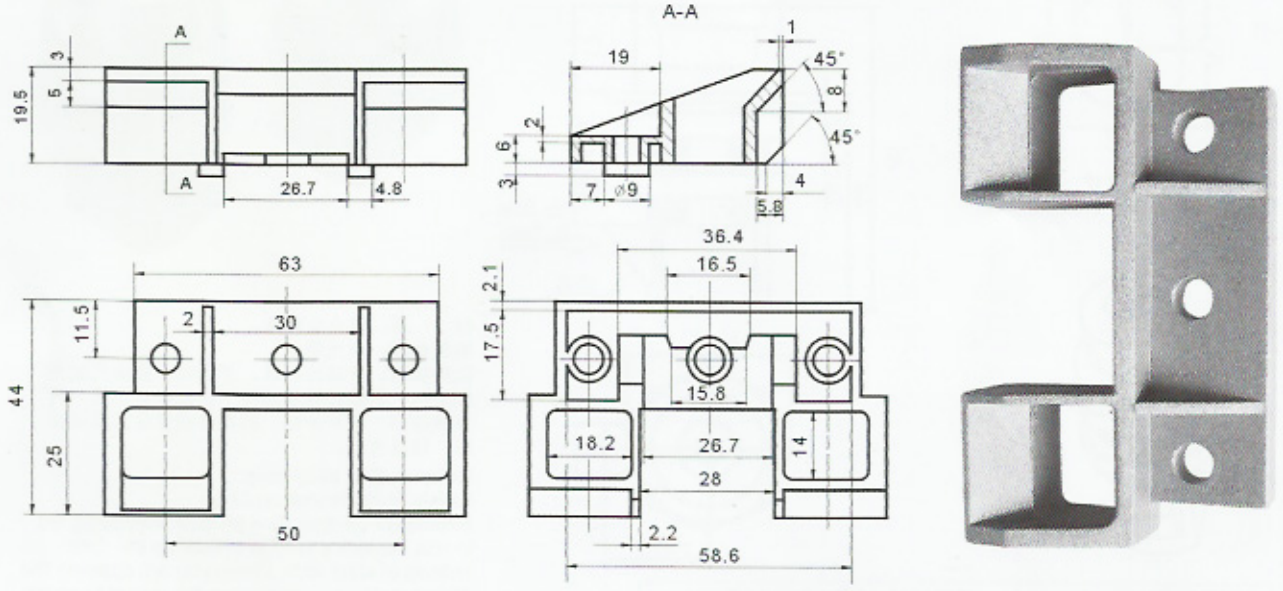

RP-016-1
型钢角部件
RP-016-2
型钢角部件

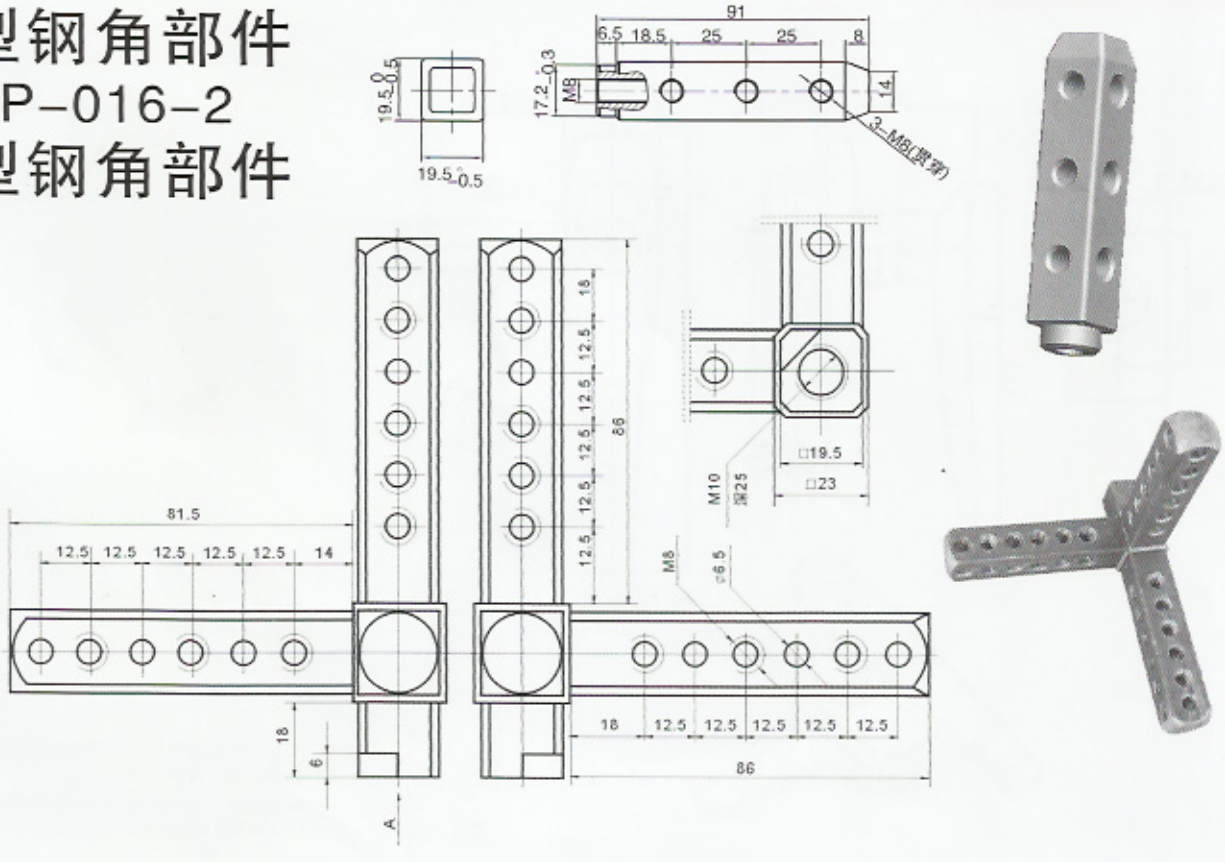

MX-01

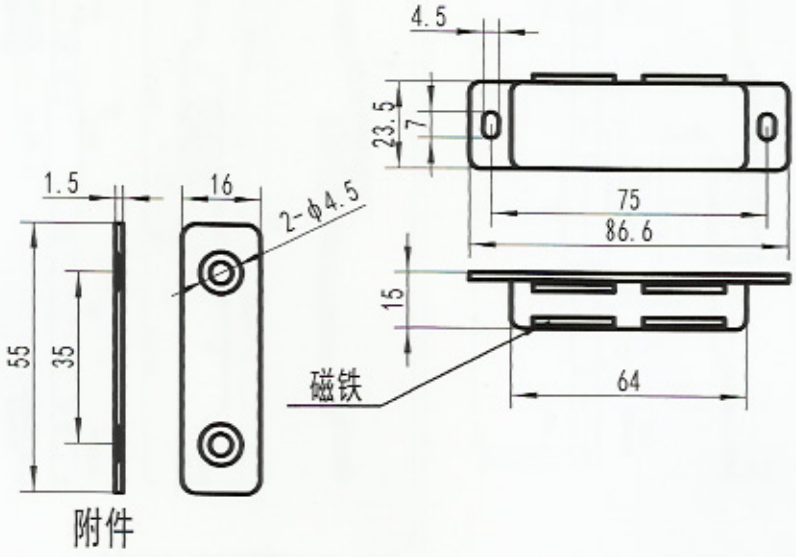



材质及表面处理：Q235壳体，钕铁硼磁铁。
表面镀白锌。
Material and finishing: Q235 housing,
NdFeB magnet. White zinc coated.

MX-02

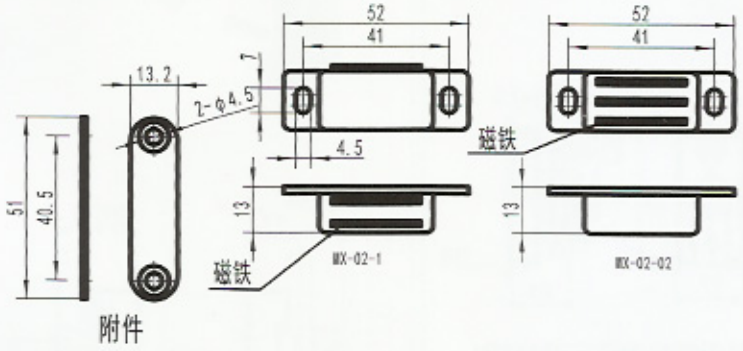



材质及表面处理：Q235壳体，钕铁硼磁铁。
表面镀白锌。
Material and finishing: Q235 housing,
NdFeB magnet. White zinc coated.

MB1系列

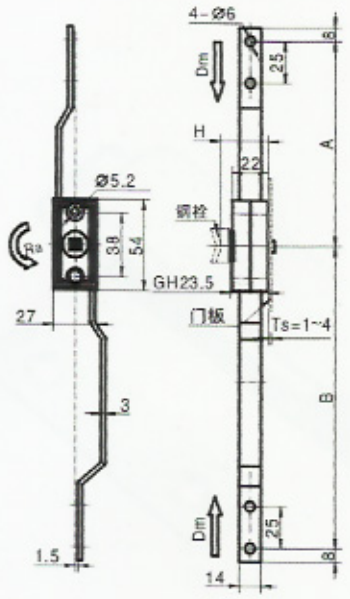

传动机构代号	Dm	Ra	A	B	结构特征
●MB11	15	90°	122	180	带钢栓
MB12	15	90°	122	180	无钢栓
MB13	20	115°	130	188	带钢栓
MB14	23	120°	130	188	无钢栓

MB2系列

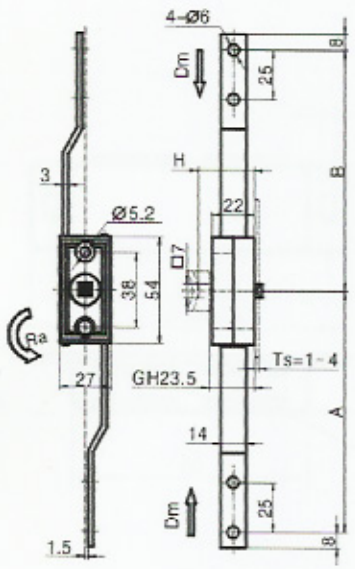

传动机构代号	Dm	Ra	A	B	结构特征
●MB31	15	90°	122	122	带钢栓
MB34	23	135°	138	130	无钢栓

MB4系列

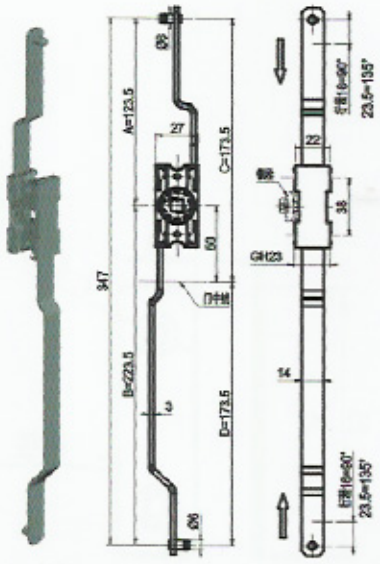

注:图示默认传动机构,关闭状态;其旋转角度135°
无钢栓传动机构,默认配用钢栓编号S1B3500;
钢栓开孔口8mm,无钢栓机构一般适用于密封条外安装。

传动机构代号	Dm	Ra	A	B	C	D	结构特征
● MB43	23.5	135°	123.5	223.5	173.5	173.5	带钢栓
MB44	23.5	135°	123.5	223.5	173.5	173.5	无钢栓

MB5系列

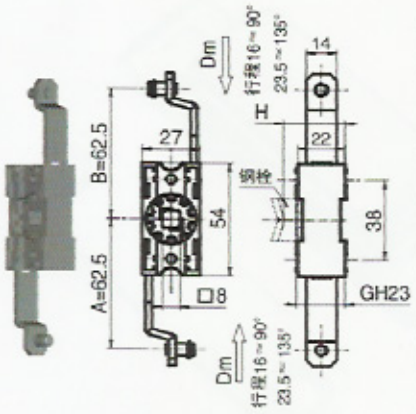

注:图示默认传动机构,关闭状态;其旋转角度135°
无钢栓传动机构,默认配用钢栓编号S1B3500;
钢栓开孔口8mm,无钢栓机构一般适用于密封条外安装。

传动机构代号	Dm	Ra	A	B	结构特征
MB51	23.5	135°	62.5	62.5	带钢栓
MB52	23.5	135°	62.5	62.5	无钢栓

MB92-Y
MB92-Z

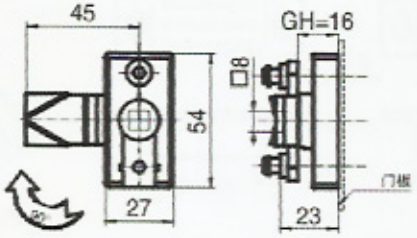

默认配用钢栓编号S3B4510;

MB94



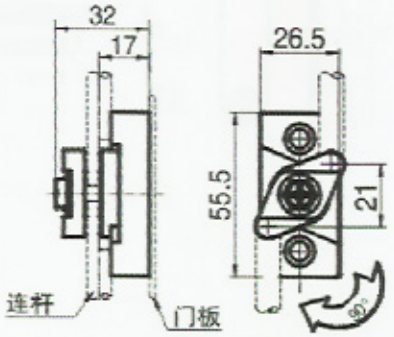

LG001-1



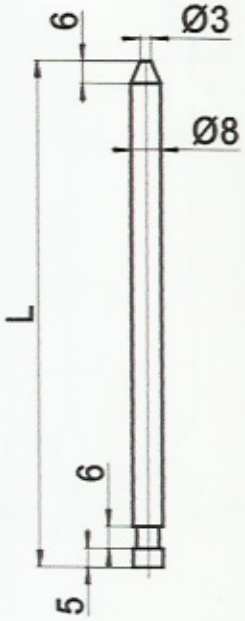

镀锌钢，锥头圆连杆

连杆代号ROD CODE	L
LG001-1-1100	1100
LG001-1-1000	100
LG001-1-900	900
LG001-1-800	800
LG001-1-700	700
LG001-1-600	600
LG001-1-500	500

LG001-2



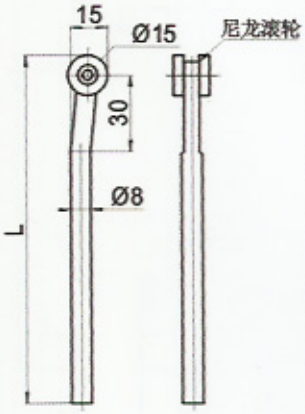

镀锌钢圆连杆，带白色PA滚轮

连杆代号ROD CODE	L
LG001-2-1100	1100
LG001-2-1000	100
LG001-2-900	900
LG001-2-800	800
LG001-2-700	700
LG001-2-600	600
LG001-2-500	500

LG001-3

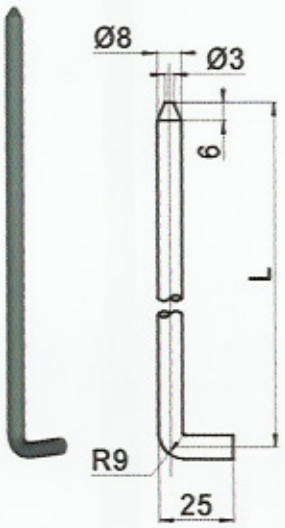

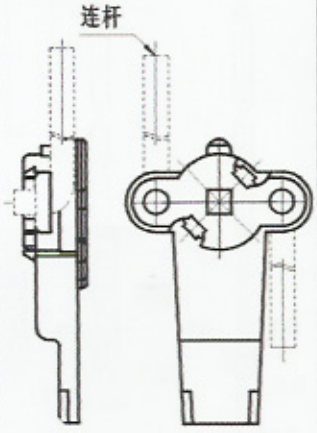

使用例

镀锌钢打扁带齿连杆，锌合金连接头，PA滚轮，密封条外安装，附件选用请参考附件圈：

连杆代号ROD CODE	L
LG001-3-1100	1100
LG001-3-900	900
LG001-3-800	800
LG001-3-700	700
LG001-3-600	600
LG001-3-500	500
LG001-3-400	400

LG002-1



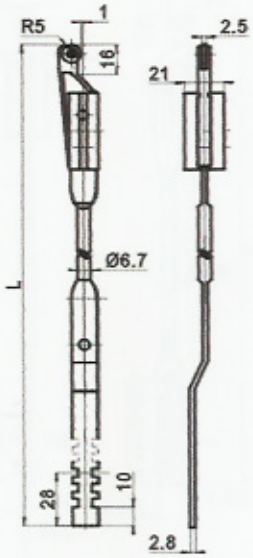

镀锌钢可调圆连杆，锌合金连接头，PA滚轮，密封条外安装，附件选用请参考附件圈。

连杆代号ROD CODE	L
LG002-1-1100	1100
LG002-1-1000	100
LG002-1-900	900
LG002-1-800	800
LG002-1-700	700
LG002-1-600	600
LG002-1-500	500

LG002-2



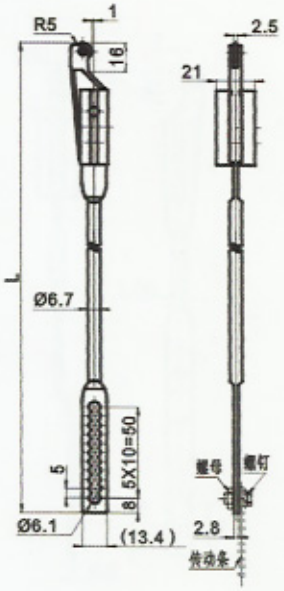

注：用螺钉与扁式传动条连接固定，连杆可通过变换固定孔调节长度；每调动一孔可调节5mm。
镀锌钢可调圆连杆，锌合金连接头，PA滚轮，密封条外安装，附件选用请参考附件图。

连杆代号ROD CODE	L
LG002-2-1100	1100
LG002-2-1000	100
LG002-2-900	900
LG002-2-800	800
LG002-2-700	700
LG002-2-600	600
LG002-2-500	500

LG003



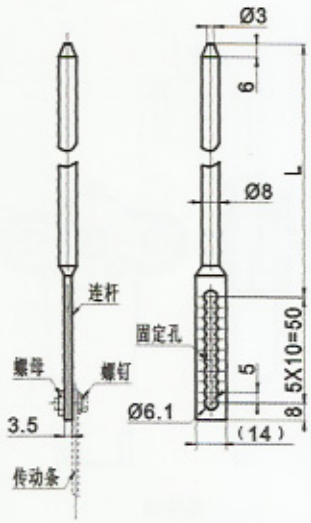

注：用螺钉与扁式传动条连接固定，连杆可通过变换固定孔调节长度；每调动一孔可调节5mm。
镀锌钢可调圆连杆，附件选用请参考附件图。

连杆代号ROD CODE	L
LG003-1000	1000
LG003-900	900
LG003-800	800
LG003-700	700
LG003-600	600
LG003-500	500
LG003-400	400

LG004

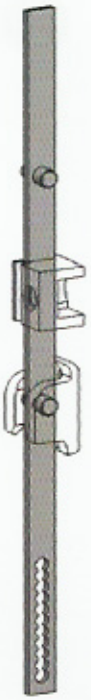

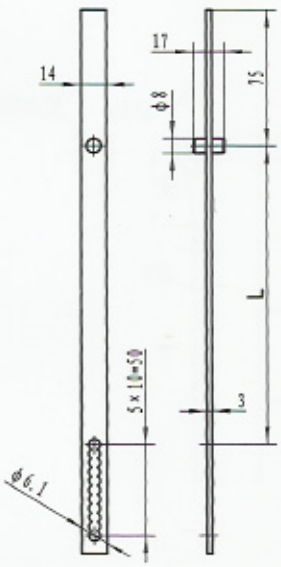

镀锌钢可调扁连杆,附近选用请参考附件图

连杆代号ROD CODE		L
LG004-A1000	LG004-A1000	100
LG004-900	LG004-900	900
LG004-800	LG004-800	800
LG004-700	LG004-700	700
LG004-600	LG004-600	600
LG004-500	LG004-500	500
LG004-400	LG004-400	400

LG005



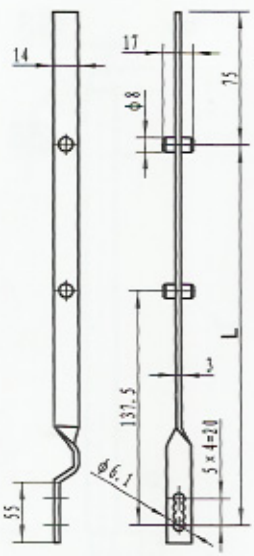

镀锌钢可调扁连杆,附近选用请参考附件图

连杆代号ROD CODE		L
LG005-A1000	LG005-A1000	100
LG005-900	LG005-900	900
LG005-800	LG005-800	800
LG005-700	LG005-700	700
LG005-600	LG005-600	600
LG005-500	LG005-500	500
LG005-400	LG005-400	400

LG006



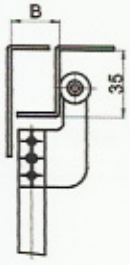

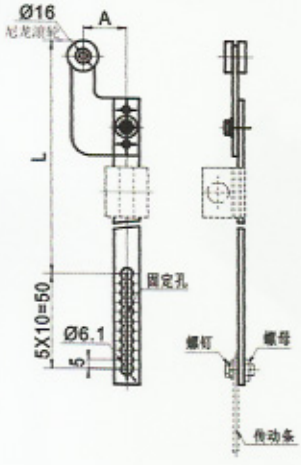

镀锌钢可调扁连杆,附近选用请参考附件图

连杆代号ROD CODE		L
A=18.5 B=20	A=22.5 B=25	
LG006-A1000	LG006-A1000	100
LG006-900	LG006-900	900
LG006-800	LG006-800	800
LG006-700	LG006-700	700
LG006-600	LG006-600	600
LG006-500	LG006-500	500
LG006-400	LG006-400	400

LG007-A



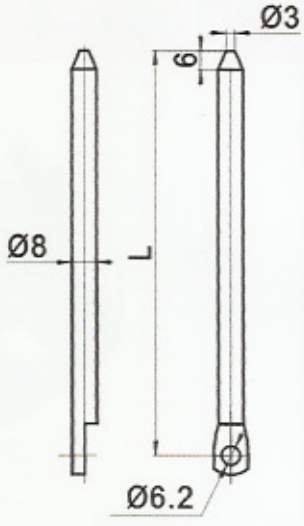

镀锌钢，锥头带孔圆连杆

连杆代号ROD CODE	L
LG007-1100	1100
LG007-1000	100
LG007-900	900
LG007-800	800
LG007-700	700
LG007-600	600
LG007-500	500
LG007-400	400

LG007-B



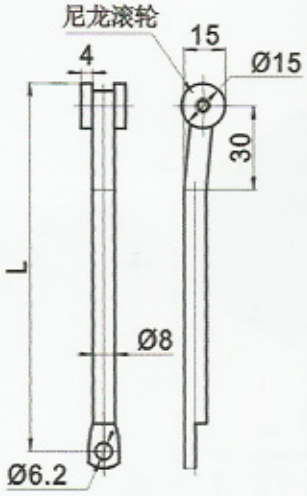

镀锌钢圆连杆，带白色PA滚轮

连杆代号ROD CODE	L
LG007-1100	1100
LG007-1000	100
LG007-900	900
LG007-800	800
LG007-700	700
LG007-600	600
LG007-500	500
LG007-400	400

LG010

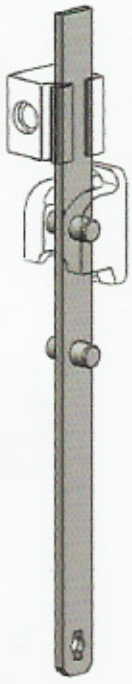

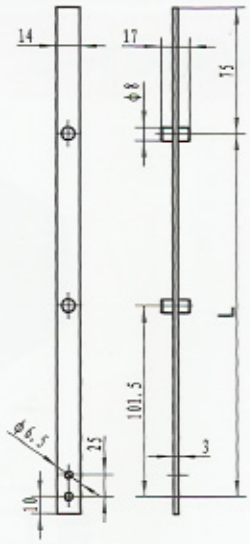

镀锌钢可调扁连杆,附近选用请参考附件图

连杆代号ROD CODE		L
LG010-A1000	LG010-A1000	100
LG010-900	LG010-900	900
LG010-800	LG010-800	800
LG010-700	LG010-700	700
LG010-600	LG010-600	600
LG010-500	LG010-500	500
LG010-400	LG010-400	400

RG001-1



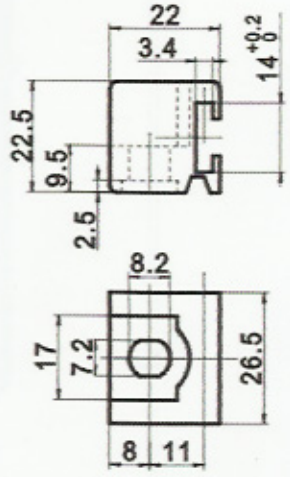

黑色PA导向件，可用M6X16-20焊柱螺钉固定

RG001-2



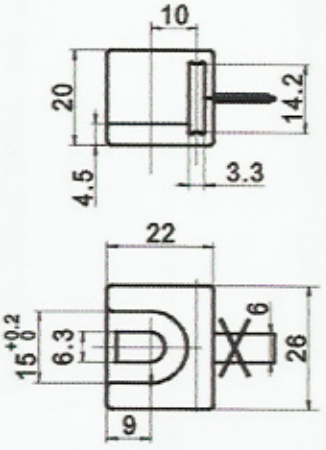

黑色PA导向件，可用M6X16-M6X20焊柱螺钉固定，连接带可去除

RG001-3



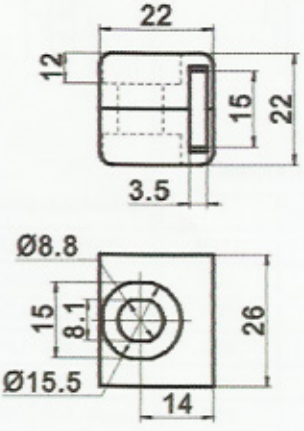

黑色PA导向件，镀锌钢螺母，可用M6X16-M6X20焊柱螺钉固定

RG001-4



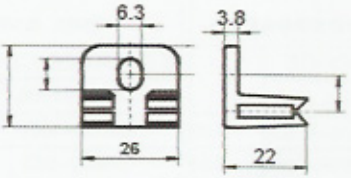

黑色PA导向件，可用M6X12焊柱螺钉固定

RG002



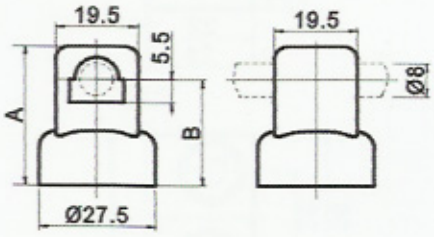

黑色PA导向件，内嵌镀锌螺母

RG002-A



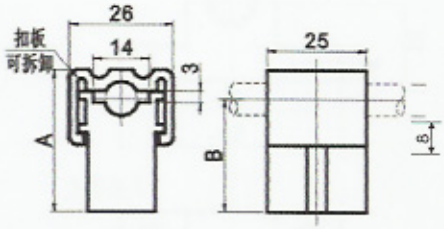

黑色PA导向件，内嵌镀锌螺母，可用于扁连杆

RG002	RG002-1	RG002-2	RG002-3	RG002-A	RG002-A1	RG002-A2
A	32	38	42	A	31	37
B	24	30	34	B	24	30
焊接螺钉规格	M16*16	M6*20	M6*20	焊接螺钉规格	M6*20-20	M6*20-20

RG003-1



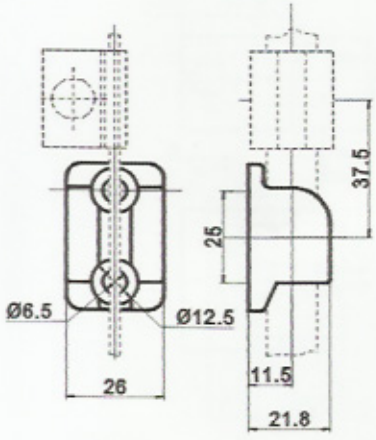

黑色ZDC固定扣，适用与带锁销扁连杆

RG003-6



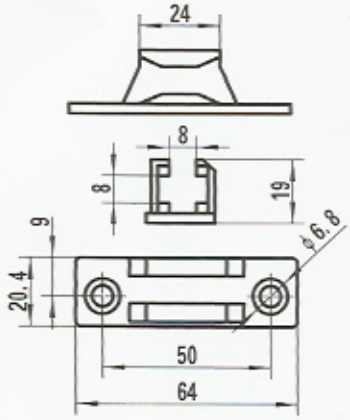

黑色ZDC固定扣

RG004-1

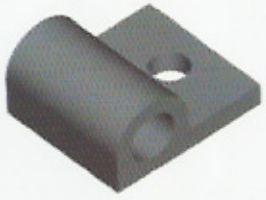

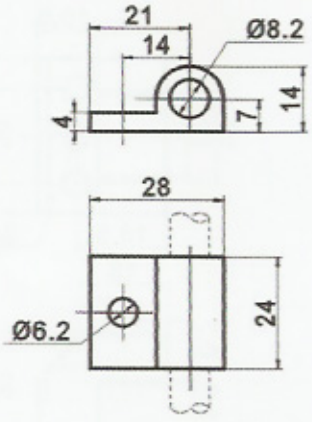

PA导向件

RG004-2

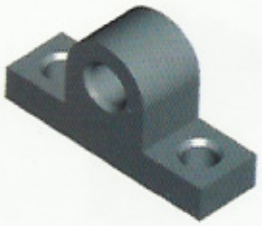

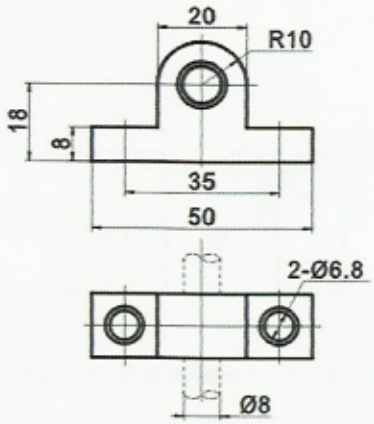

PA向导件

RG004-3

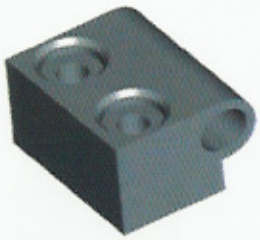

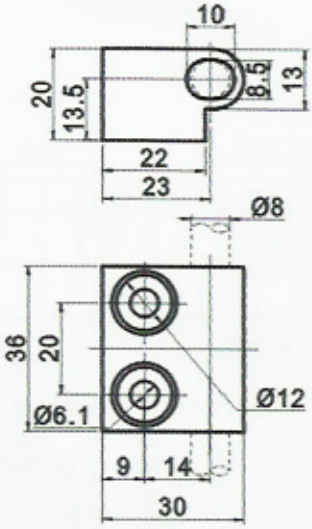

黑色ABS向导件

RG005-1



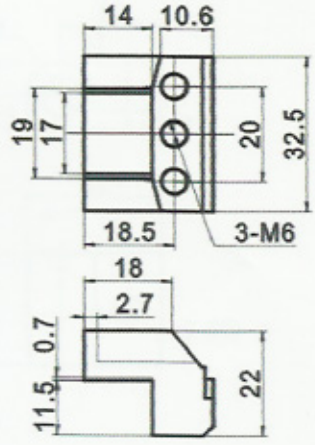

ZDC固定扣，与LG002-1/2连杆配套使用

RG006-2



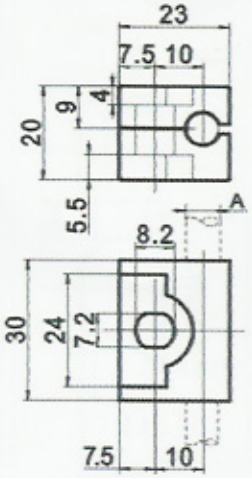

黑色PA导向件

产品型号（MODEL）	A
RG006-2	Φ8
RG006-2A	Φ6.5-7

RG005-2



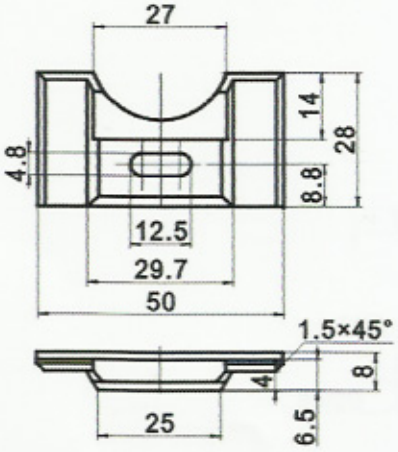

钢栓固定扣，与S1A4103钢栓配套使用

RG006-1



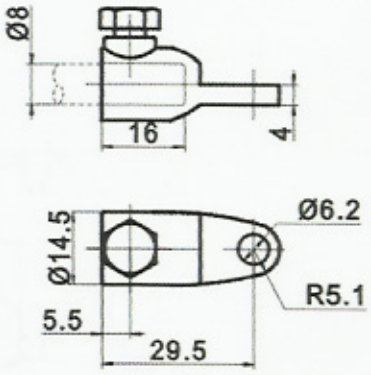

镀锌ZDC连杆连接件，镀锌钢M6紧固螺钉

WP001



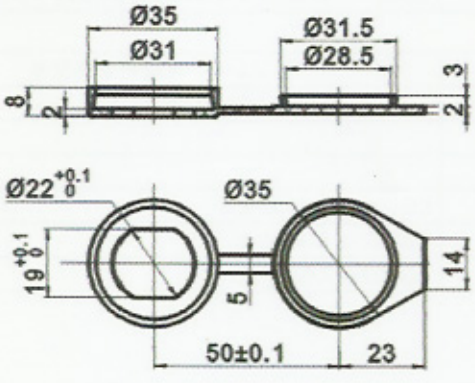

黑色PA防水盖

WP002



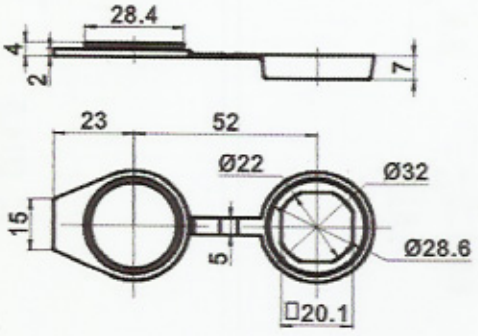

黑色PA防水盖

连杆附件选配

连杆导向件代号	可配用连杆型号
RG001-1	LG004 LG005 LG006 LG010
RG001-2	LG004 LG005 LG006 LG010
RG001-3	LG004 LG005 LG006 LG010
RG002	LG001-1 LG001-2 LG001-3 LG007-4
RG002-A	LG002-A LG001-1 LG001-2 LG001-3 LG007-A LG007-B
RG004-1	LG001-1 LG001-2 LG001-3 LG003 LG007-A
RG004-2	LG001-1 LG001-2 LG001-3 LG007-A
RG004-3	LG001-1 LG001-2 LG001-3 LG003 LG007-A
RG006-2	LG002-1 LG002-2
RG006-2A	LG001-1 LG001-2 LG001-3 LG003 LG007-A LG007-B

固定代扣号	可配用连杆型号
RG003-1	LG004 LG005 LG010
RG003-2	
RG003-3	
RG005-1	LG002-1 LG002-2
RG005-2	LG002-1 LG002-2
RG006-1	LG002-1 LG001-2

WP003



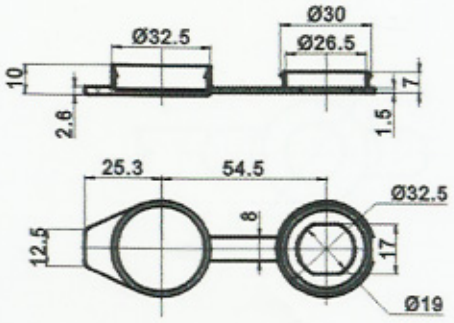

黑色PA防水盖

WP004



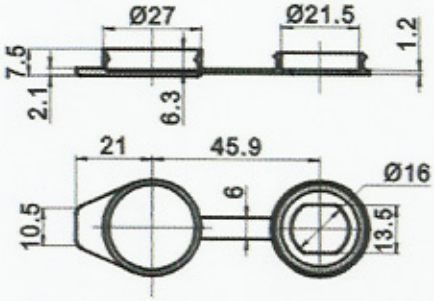

黑色PA防水盖

HP001



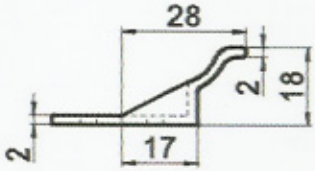

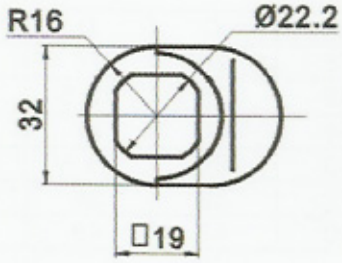

黑色PA防拉攀

吊环



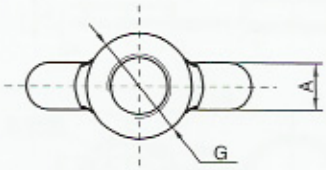

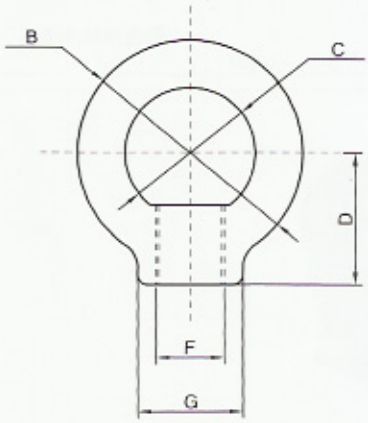

吊环内螺纹

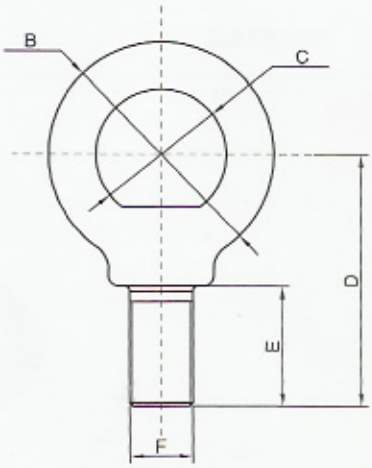

吊环外螺纹

材质及表面处理：碳钢，镀锌。
Material and finish:Zinc-plated steel.

吊环代号	A	B	C	D	E	F	G
DHW8	8	36	20	18	16	M8	20
DHW10	10	45	25	22.5	20	M10	25
DHW12	12	54	30	27	27	M12	30
DHW16	14	63	35	31.5	23	M16	35
DHW20	17	72	38	36	33	M20	40
DHW24	21	90	48	45	40	M24	50

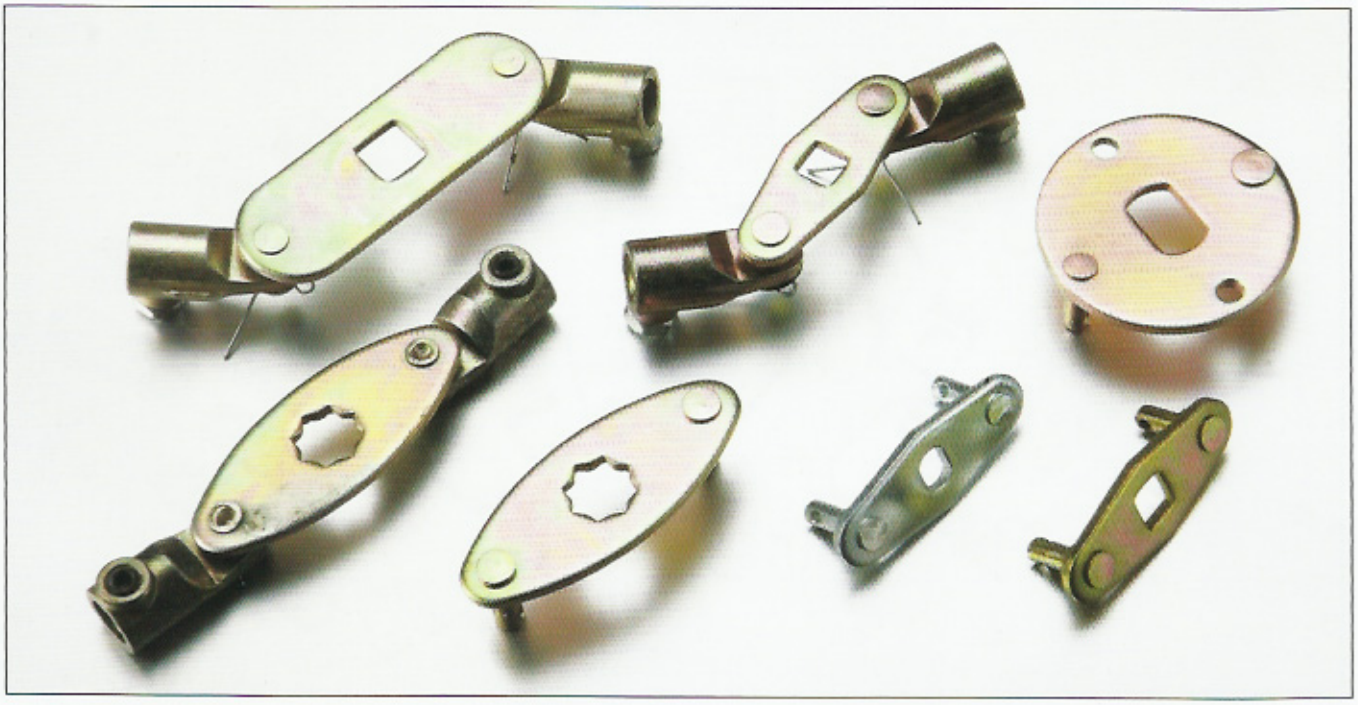

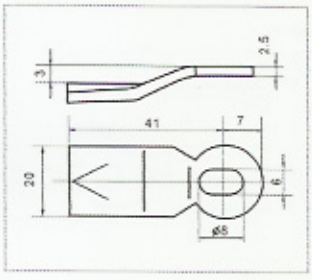

S1E4103

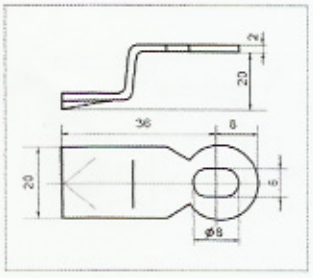

S1E3620(反向)

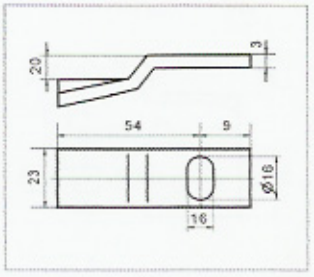

S1H5420

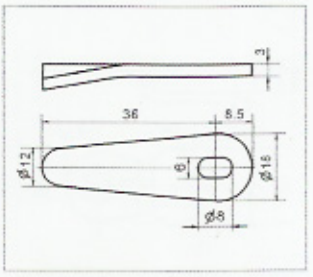

S1E3600

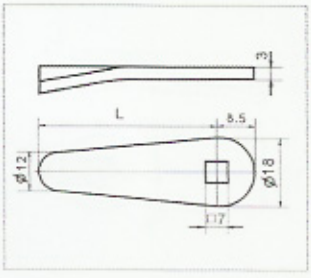

S1A系列钢栓

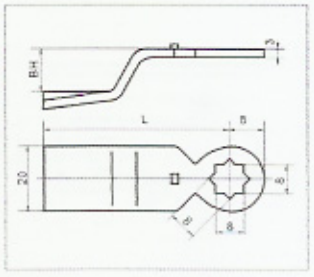

S1B系列钢栓A

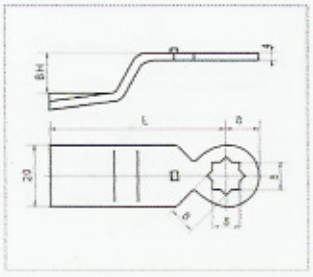

S1B系列钢栓B

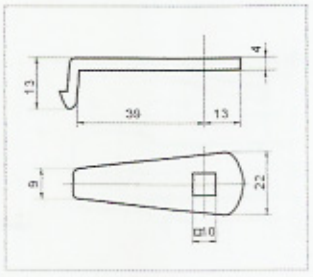

S1C3900

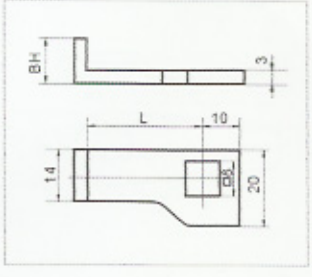

S1B系列钢栓C

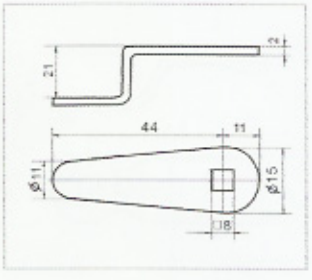

S1B4421

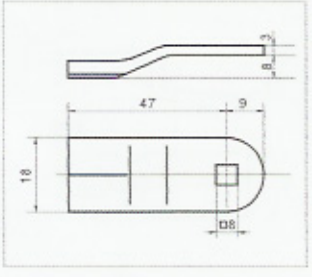

S1B系列钢栓（反向）

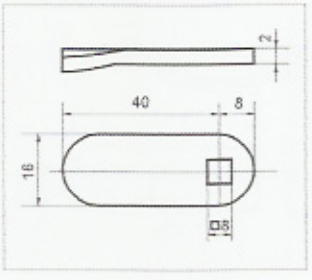

S1B系列钢栓K

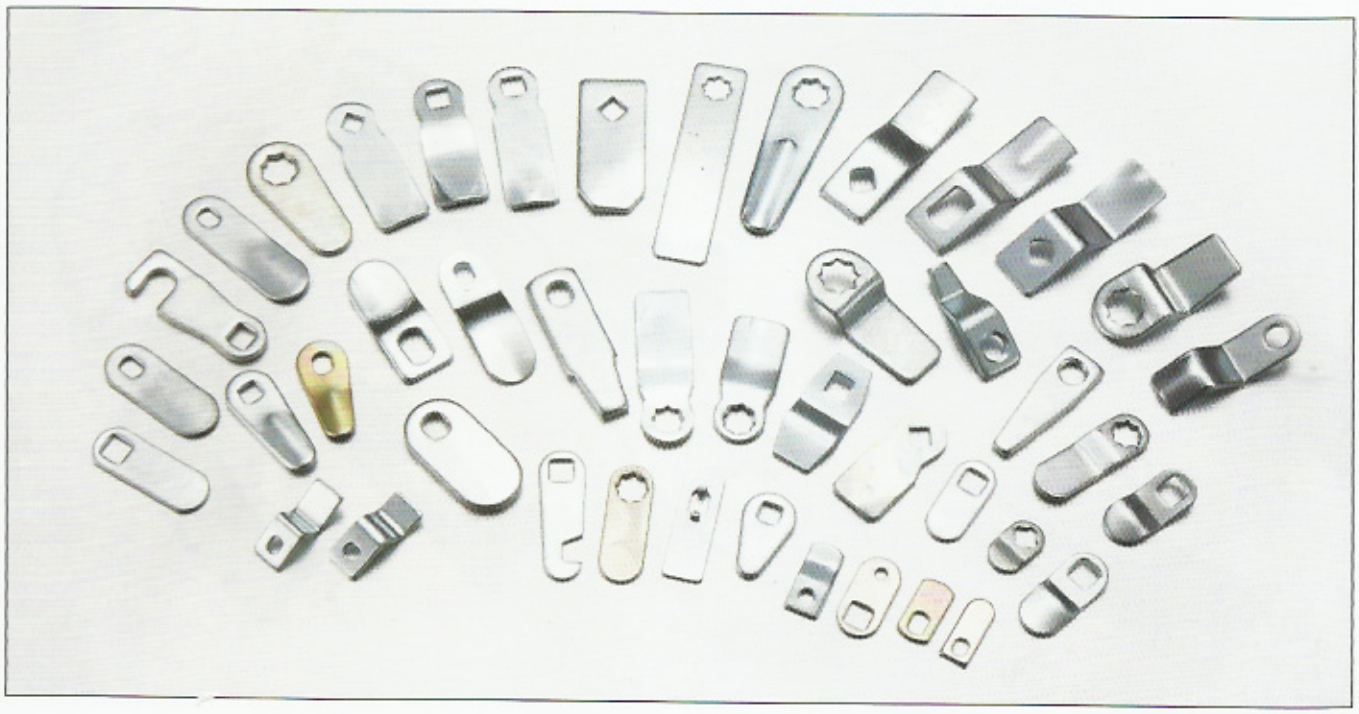

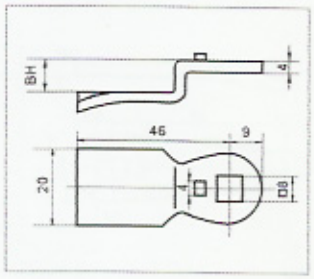

S1B系列钢栓D

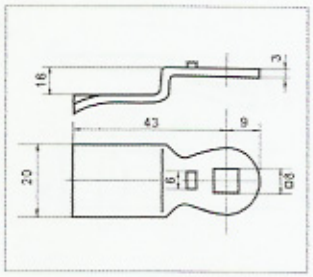

S1B4316

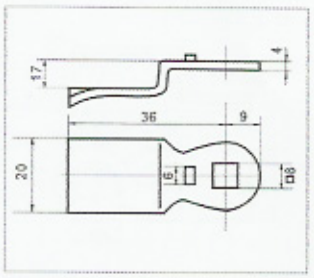

S1B3617

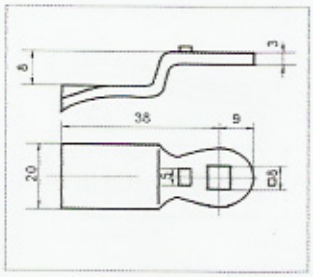

S1B3808

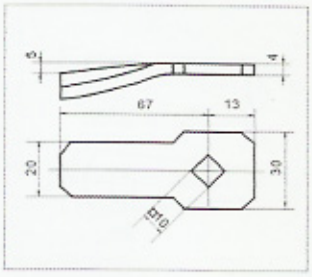

S1C6705

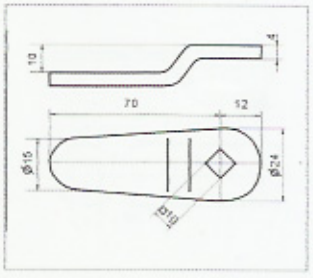

S1C7010

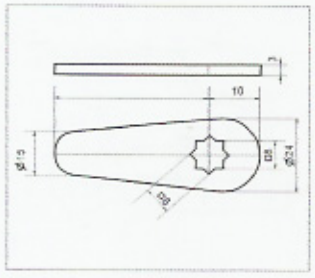

S1B8500

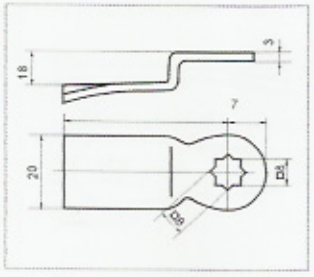

S1B5418

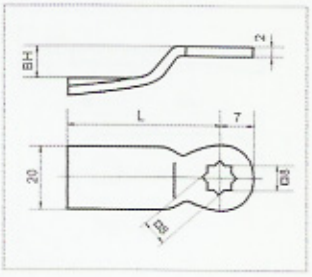

S1B系列钢栓E

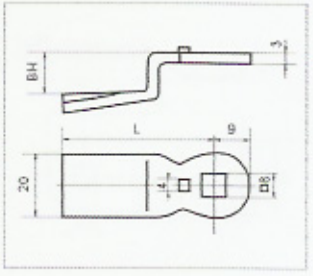

S1B系列钢栓F

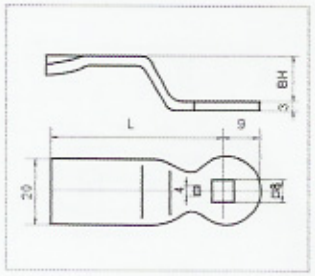

S1B系列钢栓A（反向）

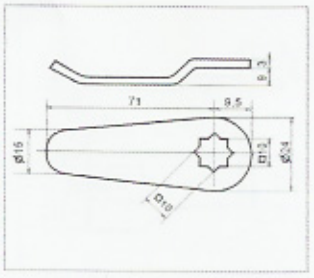

S1C7109（反向）

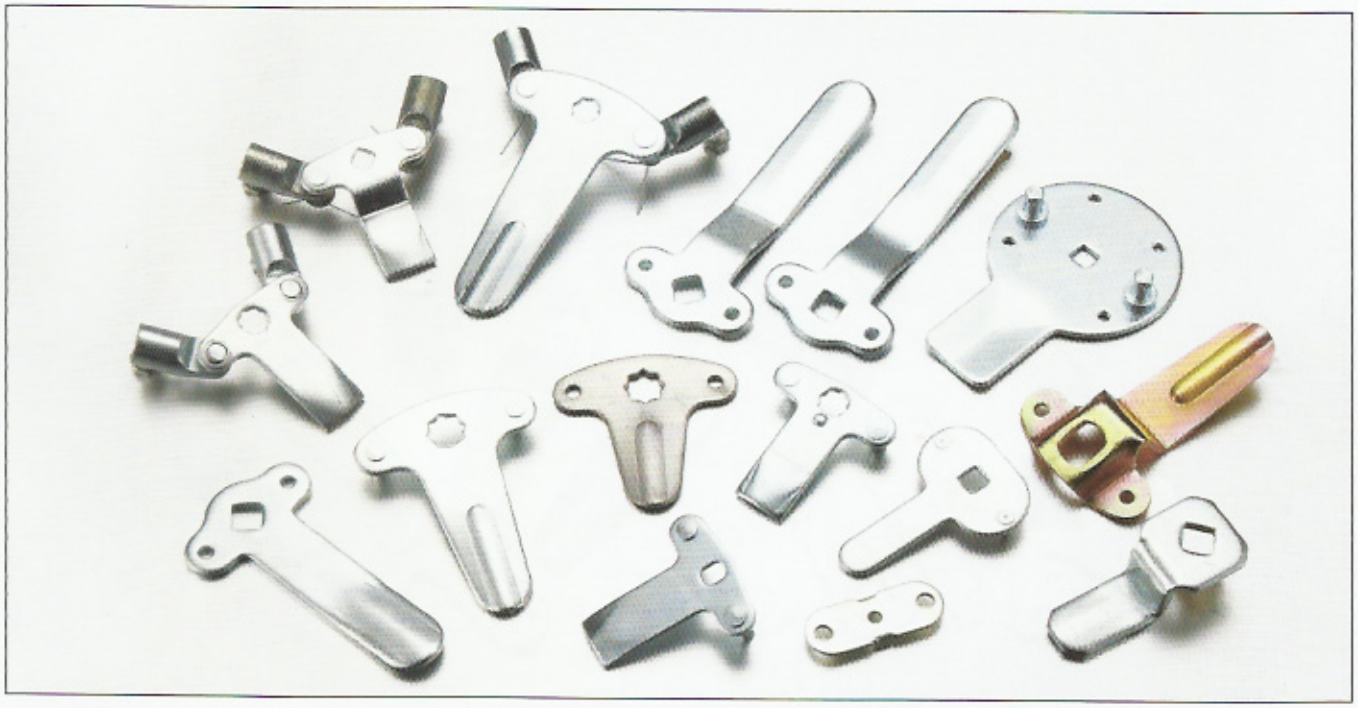

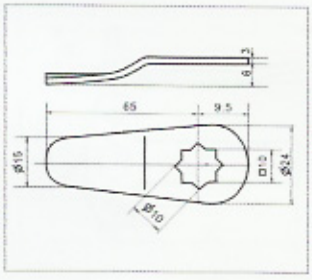

S1C系列钢栓（反向）

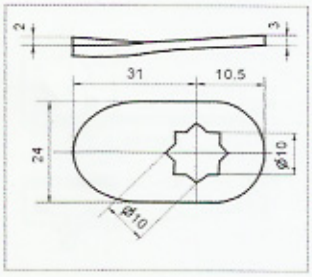

S1C3102

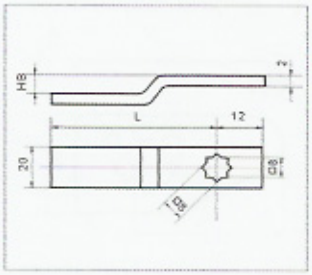

S1B系列钢栓H

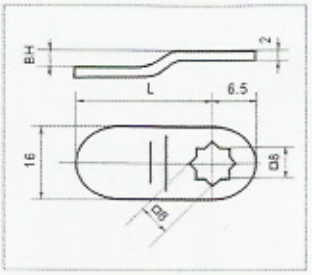

S1B系列钢栓G

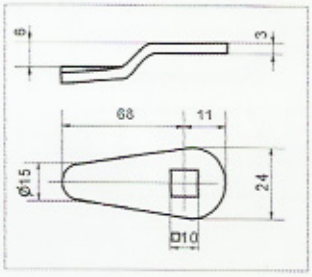

S1C6819

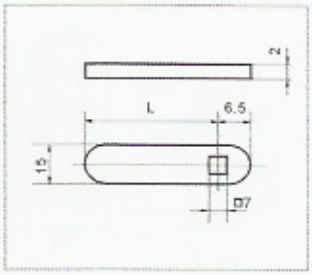

S1A系列钢栓A

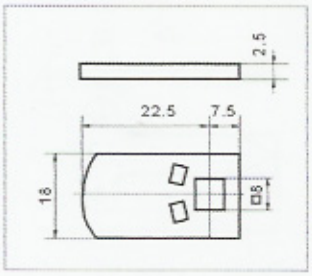

S1B2200

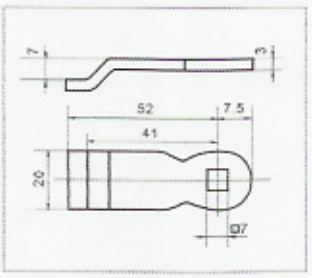

S1A5207

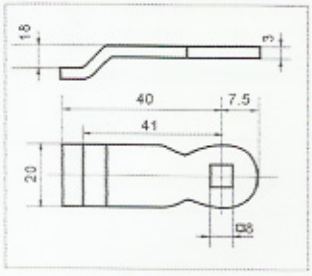

S1B4018

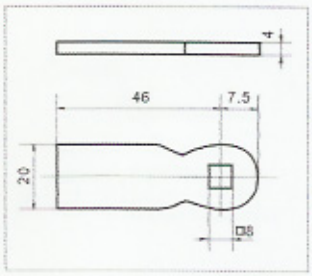

S1B4600

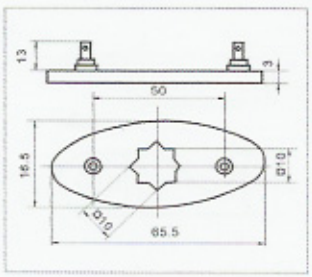

S2C2500A

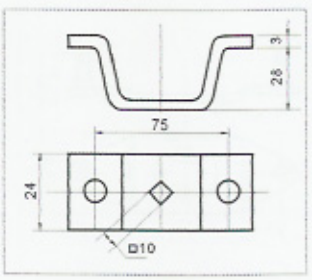

S2C3628

附件系列

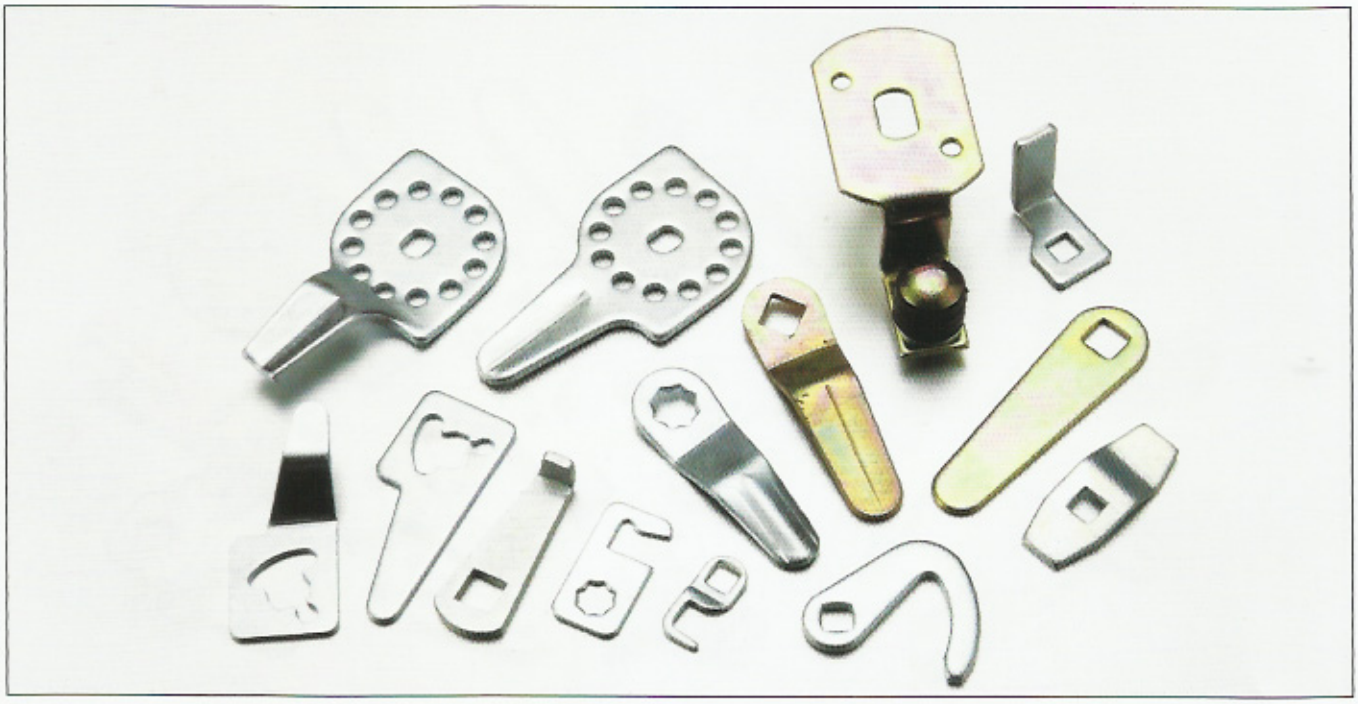

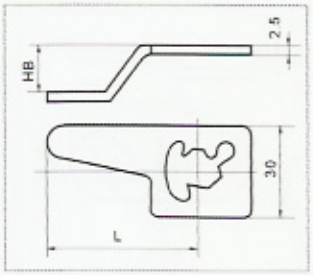

S1D系列钢栓A

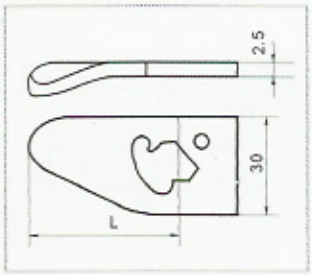

S1D系列钢栓B

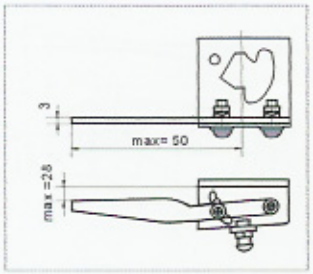

S1D5028

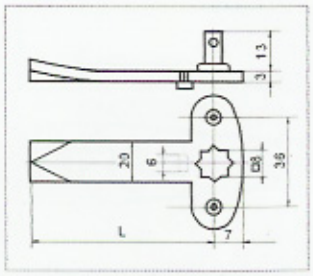

S3B系列钢栓A

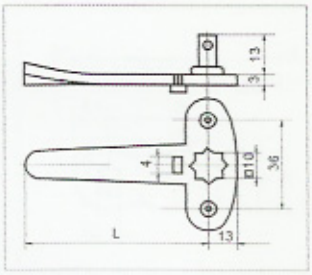

S3C8900

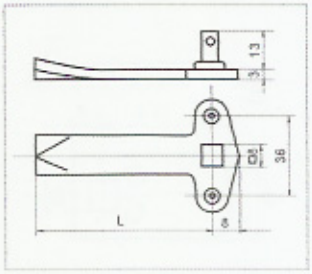

S3B系列钢栓B

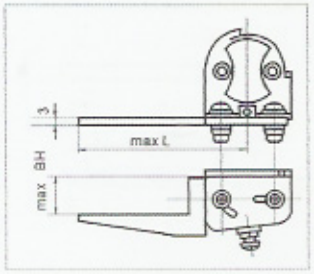

S3B系列钢栓C

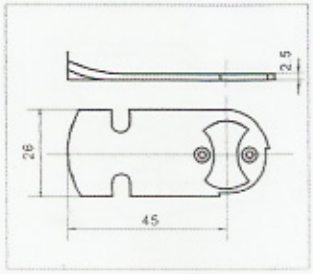

S1D4500

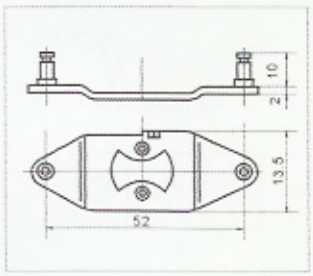

S2D2600

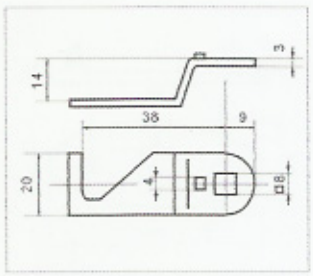

S2C3814

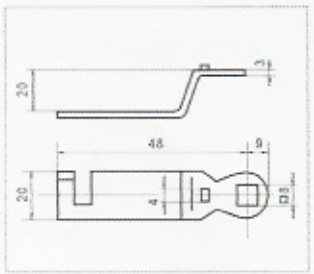

S1D4820

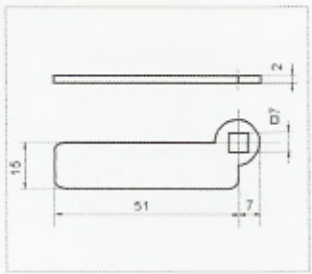

S1D5100



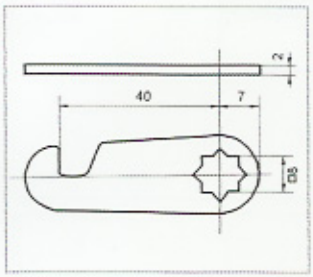

S1D4000

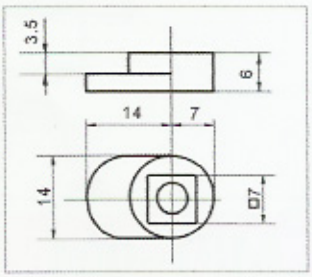

S1A1403

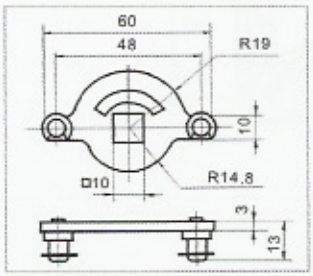

S2C2400

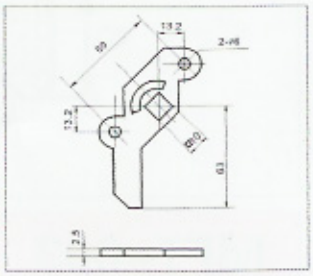

S3C6300

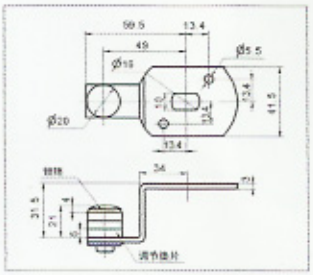

S3H6000系列钢栓

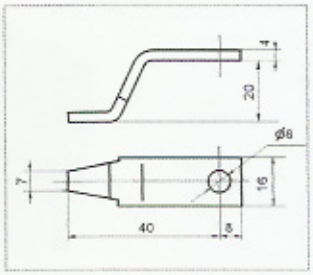

S1D4020

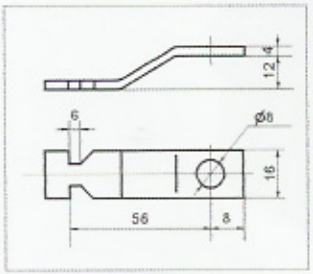

S1D5608

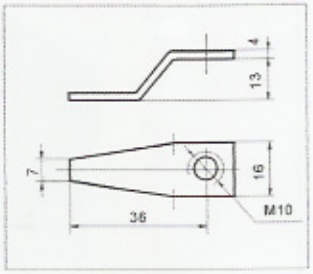

S1D3613

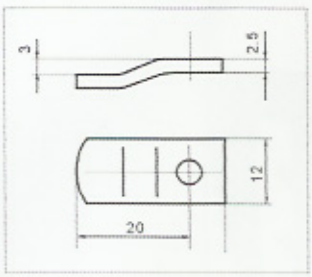

S1D2003

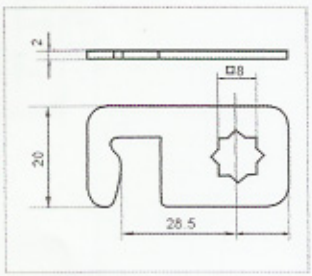

S1D2800

MFT-001



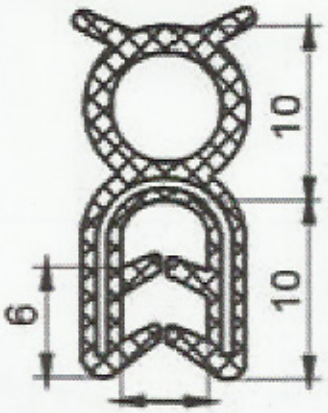

MFT-002



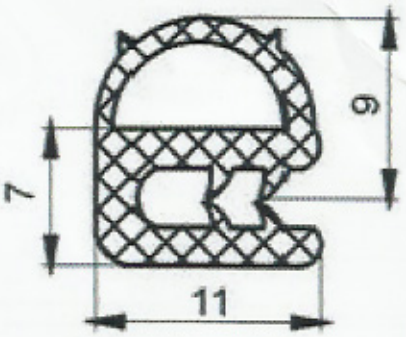

MFT-003



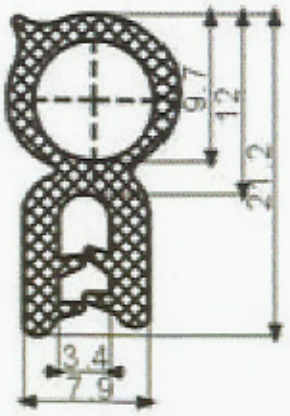

MFT-004



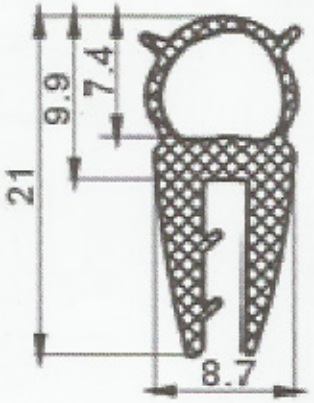

MFT-005



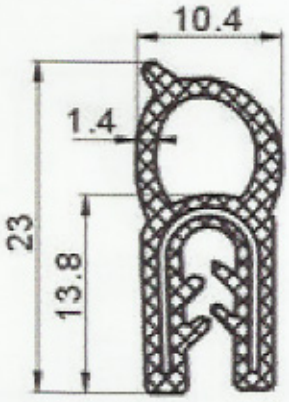

MFT-007



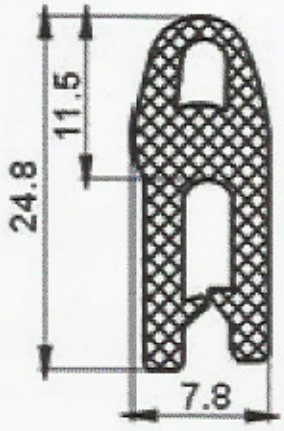

MFT-009



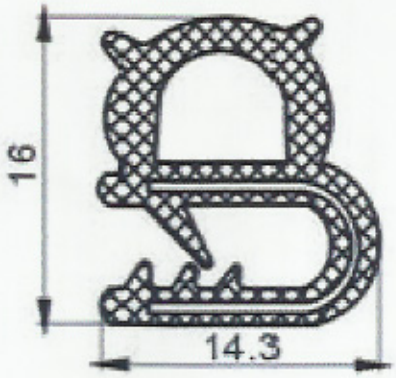

MFT-010



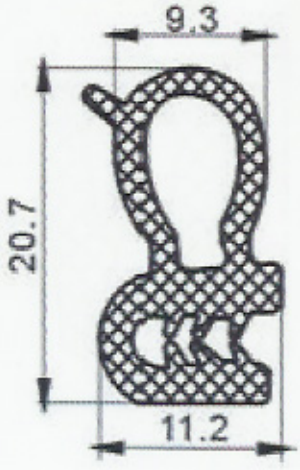

MFT-011



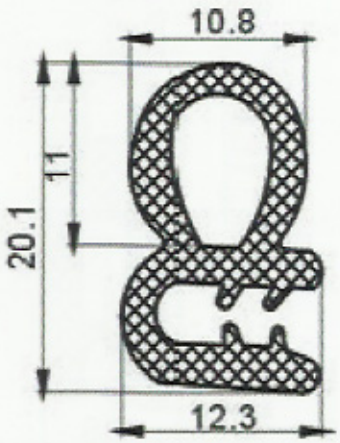

MFT-012



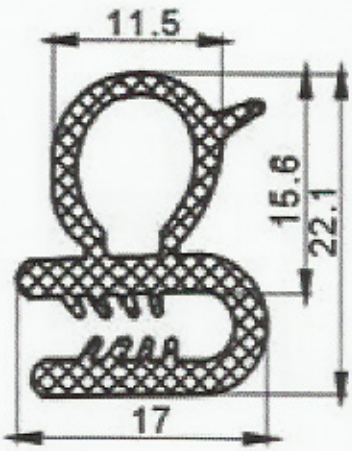

MFT-015



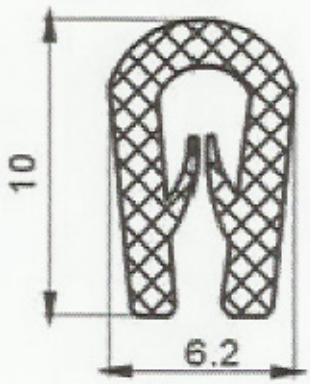

MFT-016



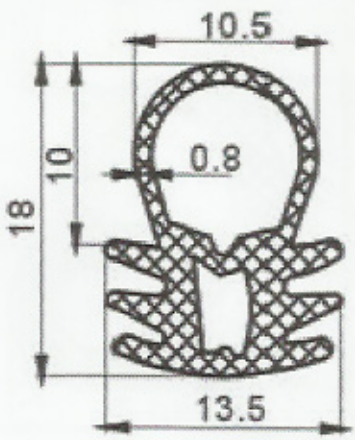

MFT-017



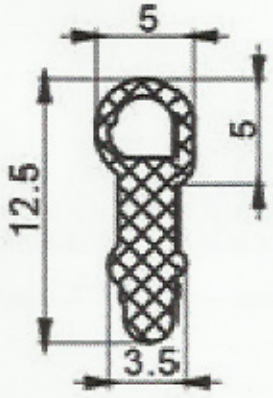

MFT-018



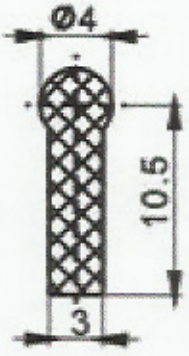

MFT-019



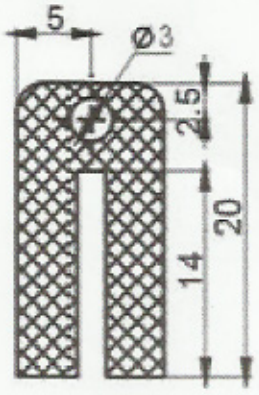

MFT-020



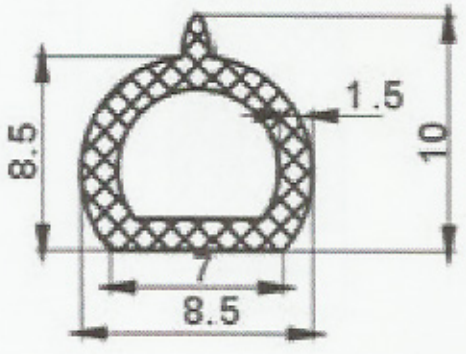

MFT-025



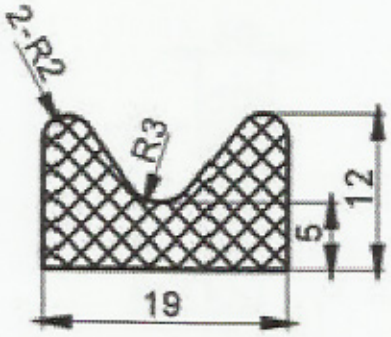

MFT-026



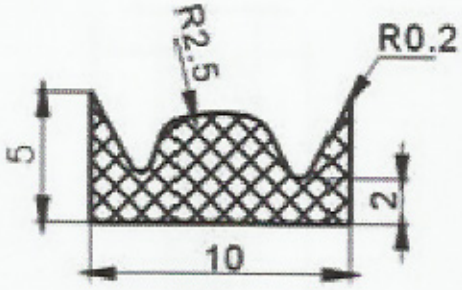

MFT-027



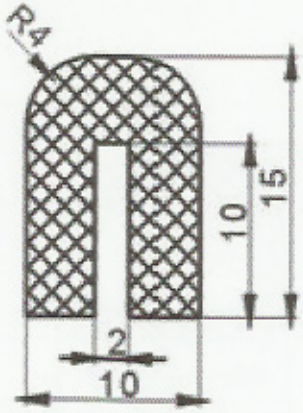

MFT-028



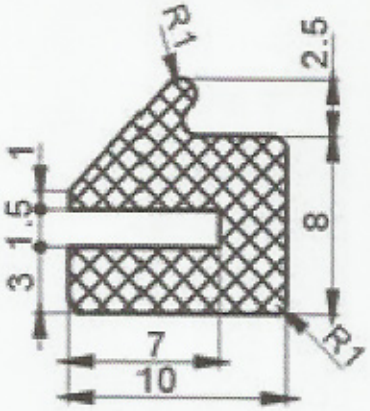

MFT-029



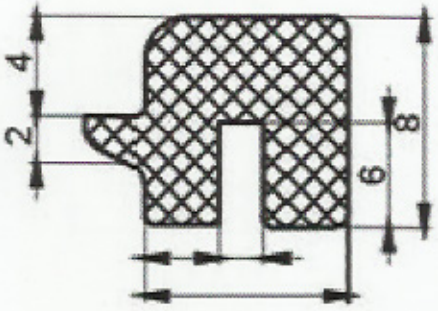

MFT-031



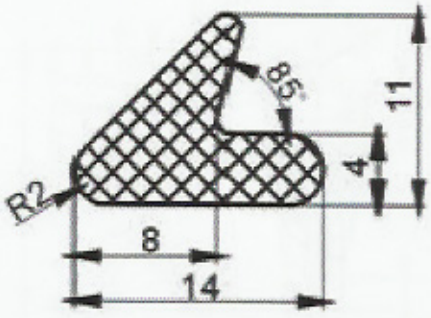

MFT-032



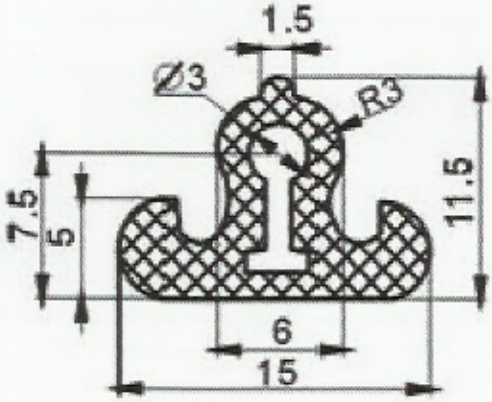

MFT-034



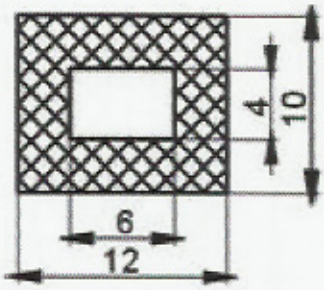

MFT-036



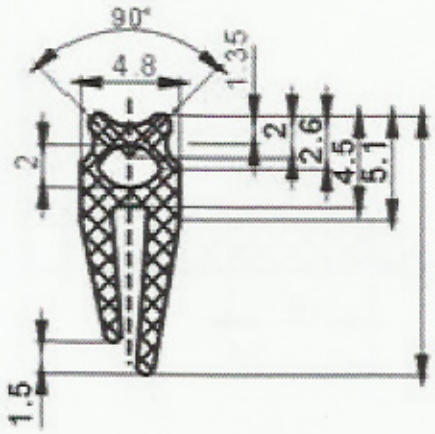

MFT-037



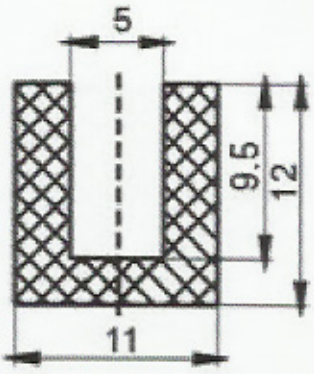

MFT-038



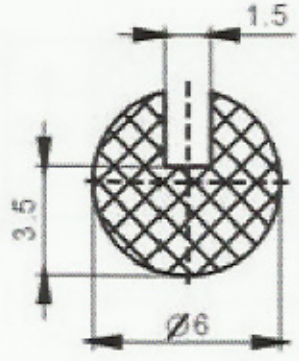

MFT-039



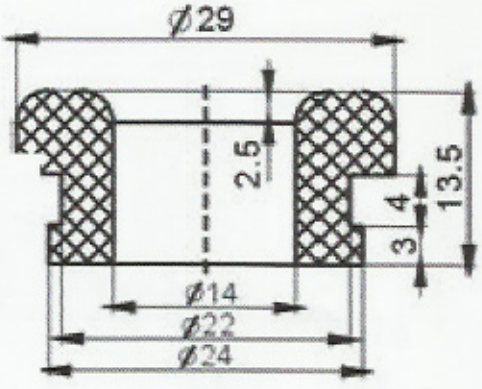

MFT-041



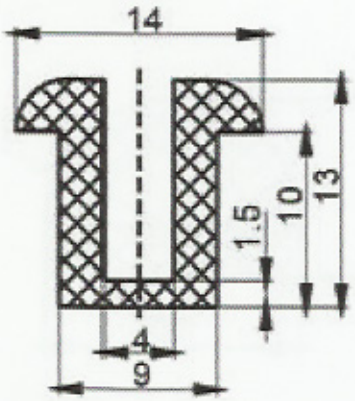

MFT-042



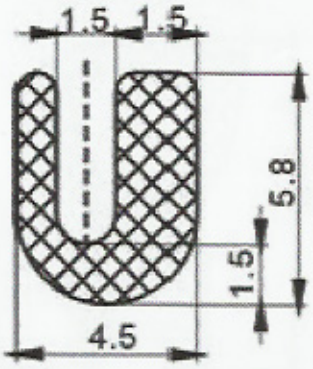

MFT-043



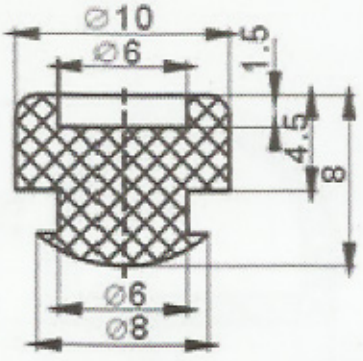

MFT-045



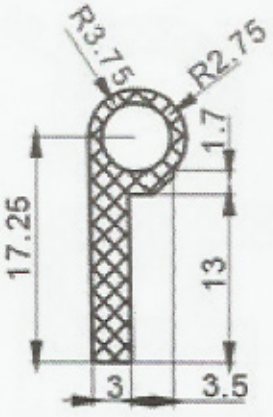

MFT-047



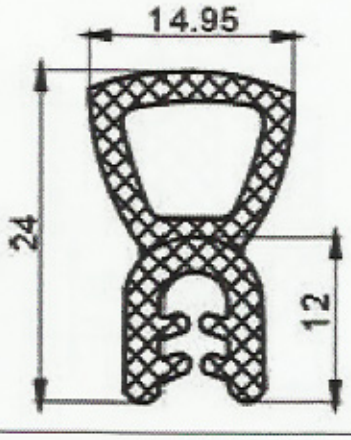

MFT-048



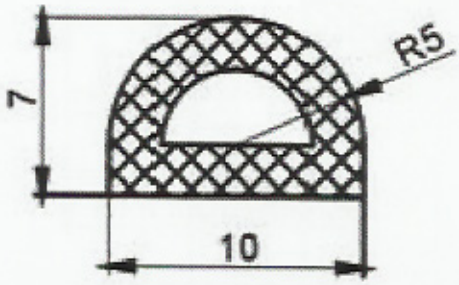

MFT-049



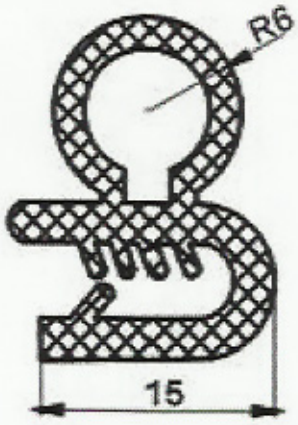

MFT-050



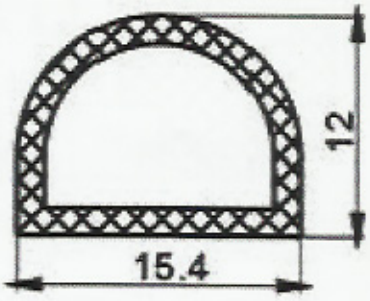

MFT-051



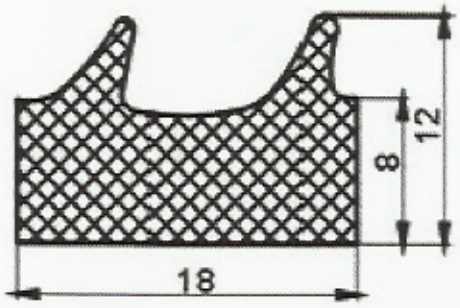

MFT-054



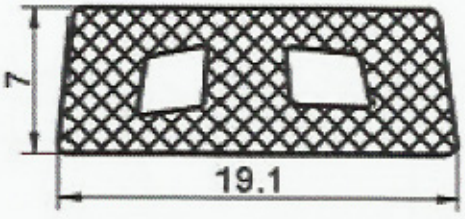

MFT-055



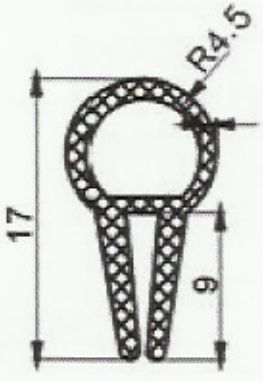

MFT-056



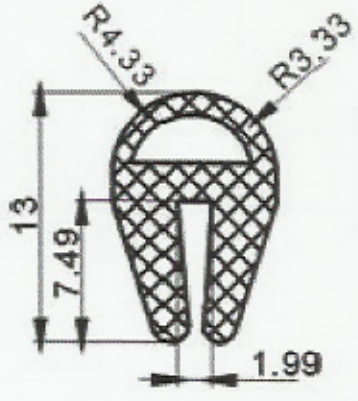

MFT-058



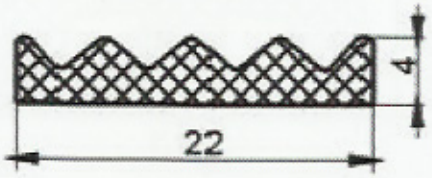

MFT-059



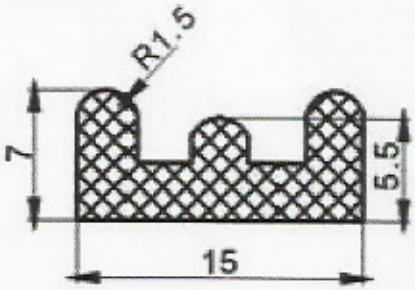

MFT-060



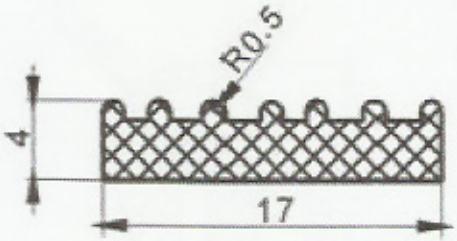

MFT-065



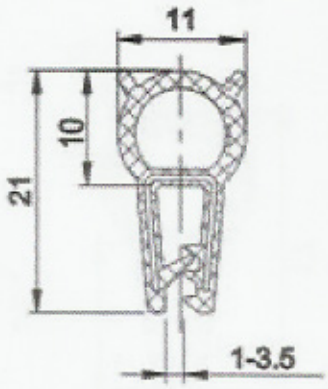

MFT-067



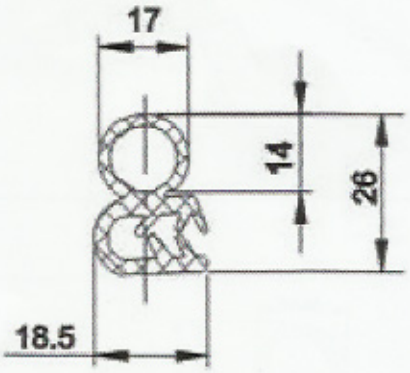

MFT-068



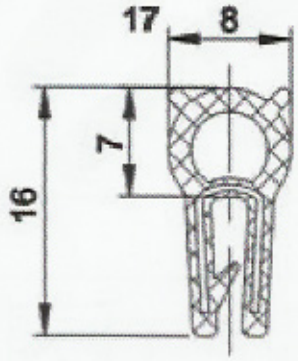

MFT-069



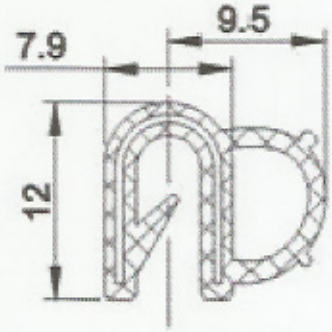

MFT-070



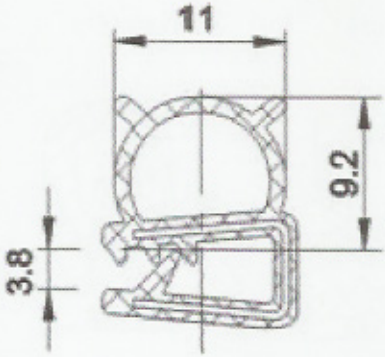



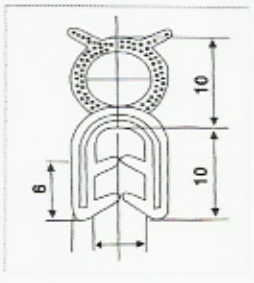

MTF-071

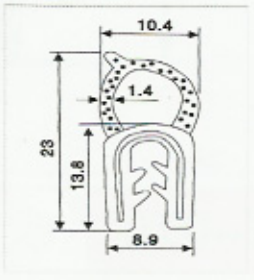

MTF-072

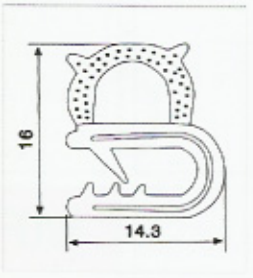

MTF-073

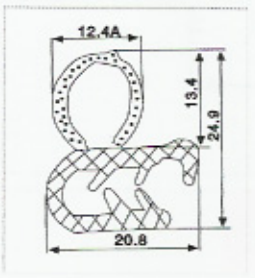

MTF-074



MTF-075

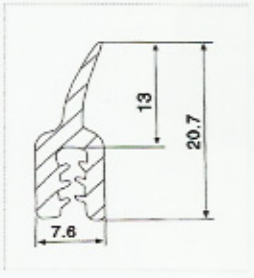

MTF-076

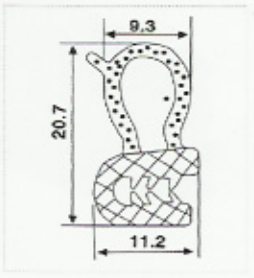

MTF-077

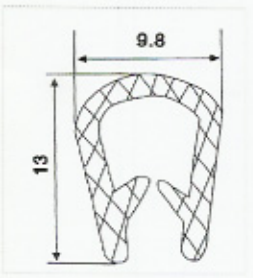

MTF-078

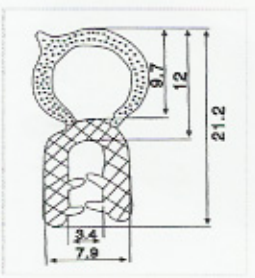

MTF-079

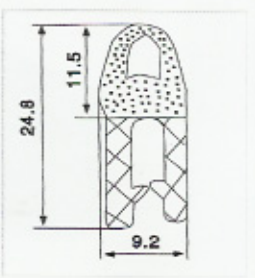

MTF-080

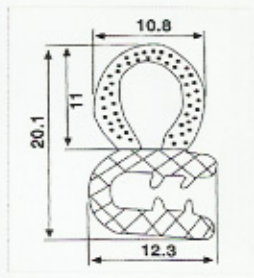

MTF-081

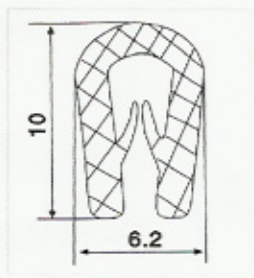

MTF-082

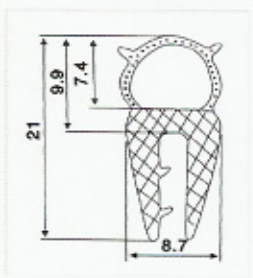

MTF-083

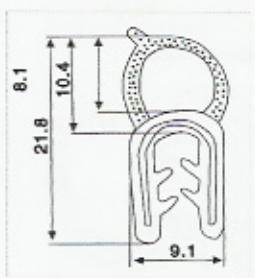

MTF-084

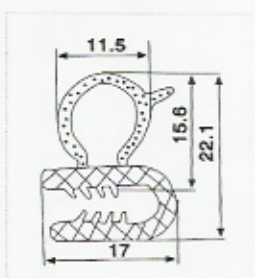

MTF-085



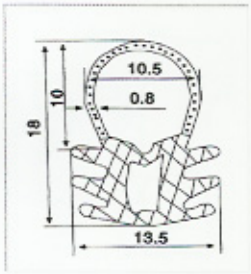

MTF-086

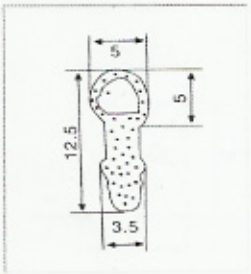

MTF-087



MTF-088

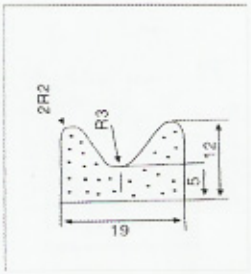

MTF-089



MTF-090

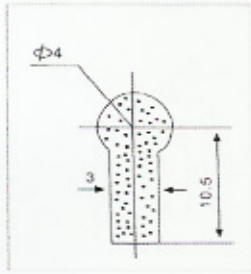

MTF-091

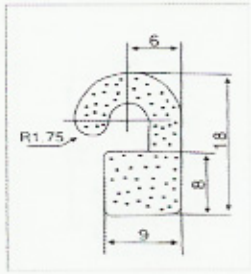

MTF-092

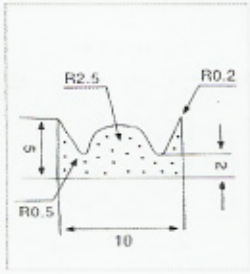

MTF-093

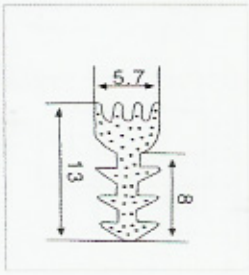

MTF-094

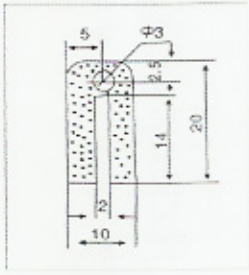

MTF-095

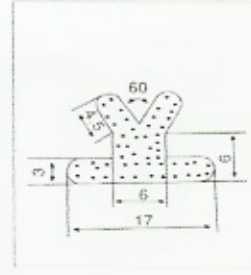

MTF-096

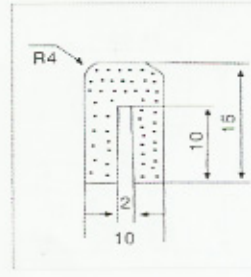

MTF-097

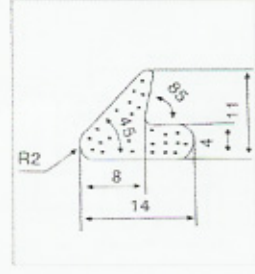

MTF-098

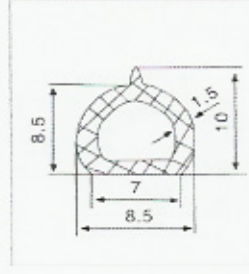

MTF-099

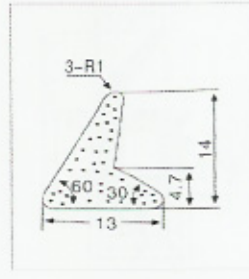

MTF-100



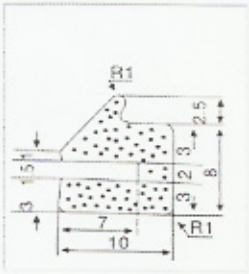

MTF-101

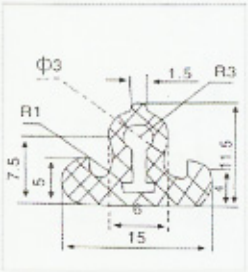

MTF-102

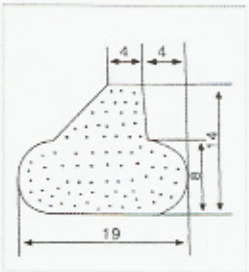

MTF-103

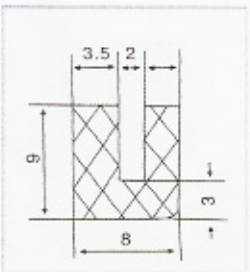

MTF-104

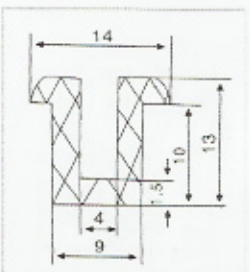

MTF-105

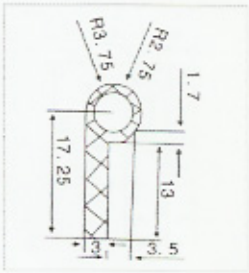

MTF-106

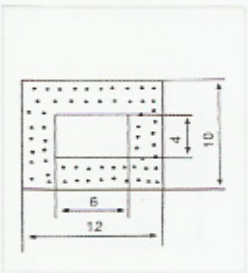

MTF-107

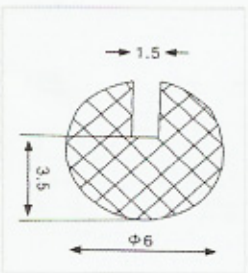

MTF-108

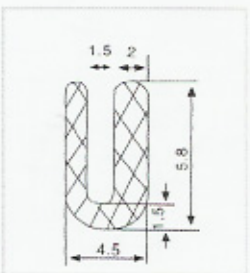

MTF-109

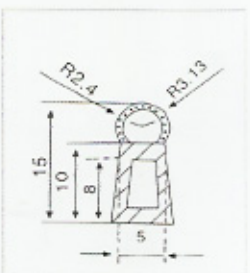

MTF-110

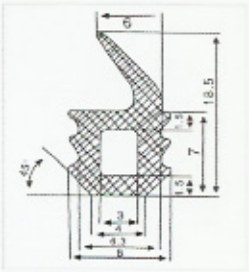

MTF-111

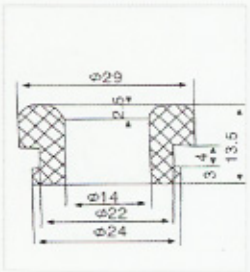

MTF-112

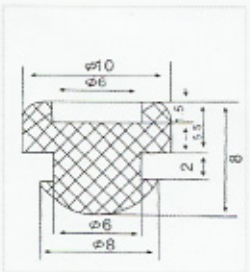

MTF-113

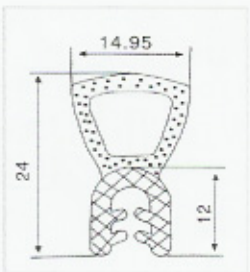

MTF-114

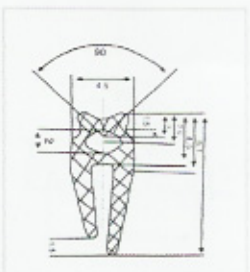

MTF-115

密封条系列



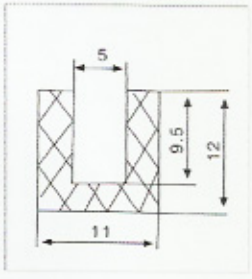

MTF-116

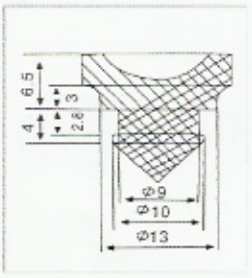

MTF-117

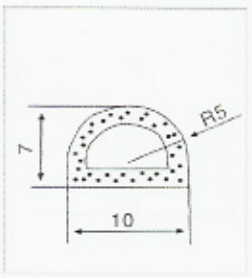

MTF-118

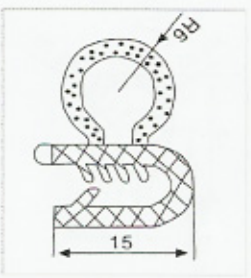

MTF-119

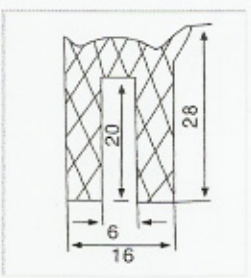

MTF-120

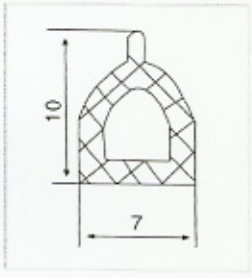

MTF-121

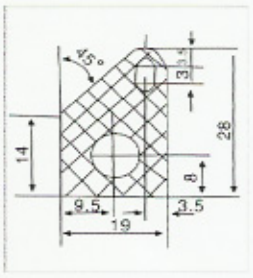

MTF-122

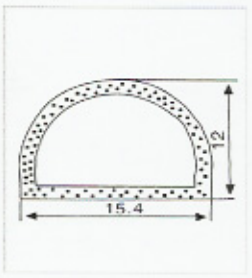

MTF-123

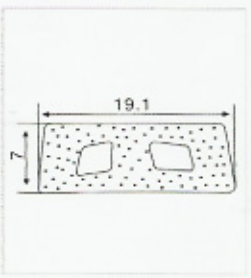

MTF-124

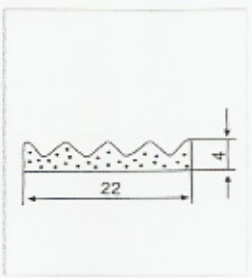

MTF-125

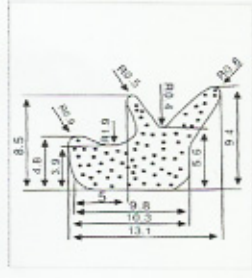

MTF-126



MTF-127



MTF-128

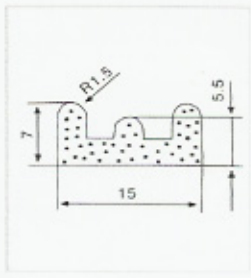

MTF-129

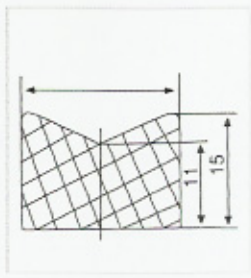

MTF-130



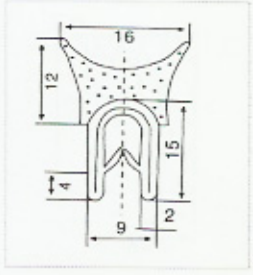

MTF-131



MTF-132

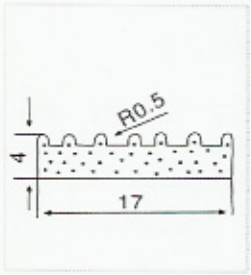

MTF-133

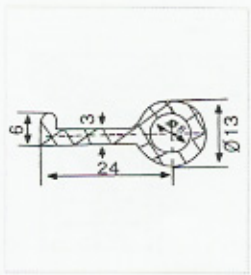

MTF-134

TX80

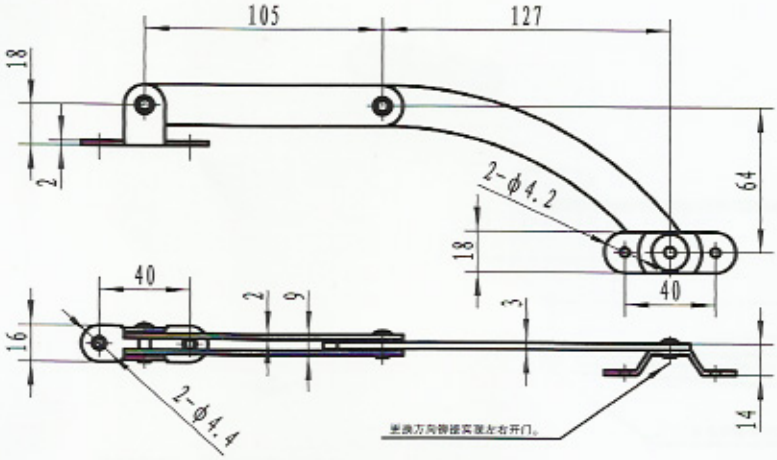



TX80-1

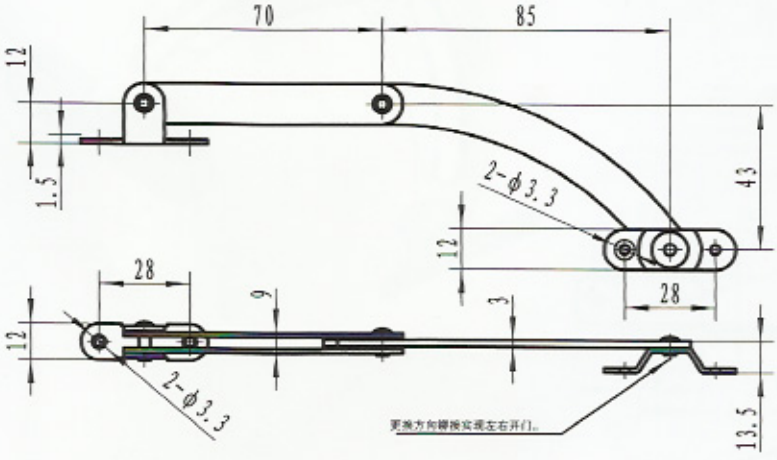



TX80-2

材质及表面处理：镀铬钢板。
Material and finishing: Carbon steel, bright chrome plated.

TX90-1



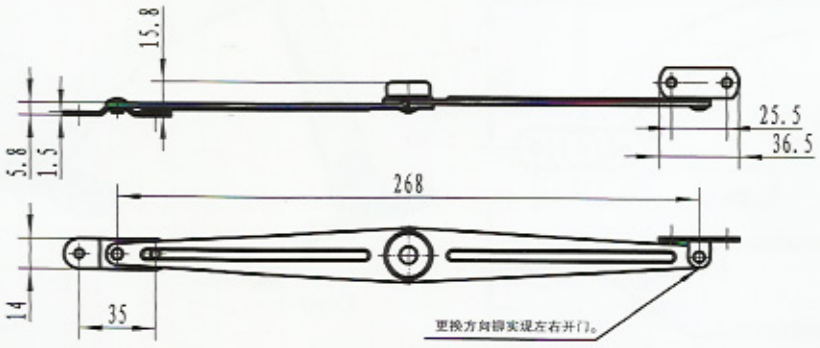

材质及表面处理：镀铬钢板。
Material and finishing: Carbon steel, bright chrome plated.

TX90-2



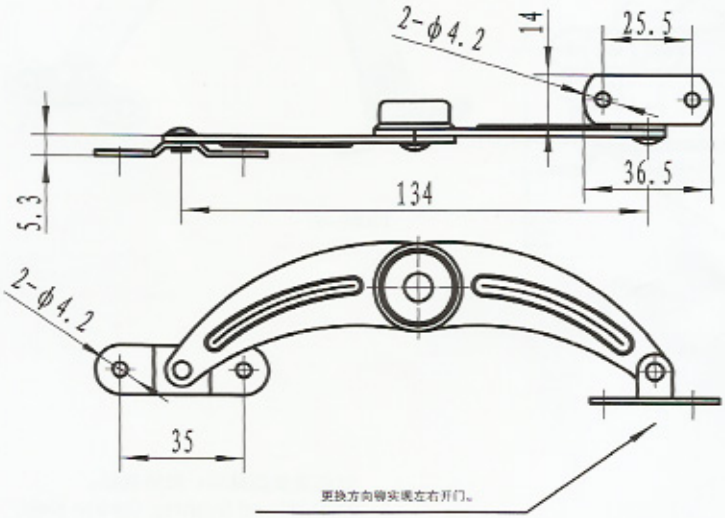

材质及表面处理：镀铬钢板。
Material and finishing: Carbon steel, bright chrome plated.

TX90-3

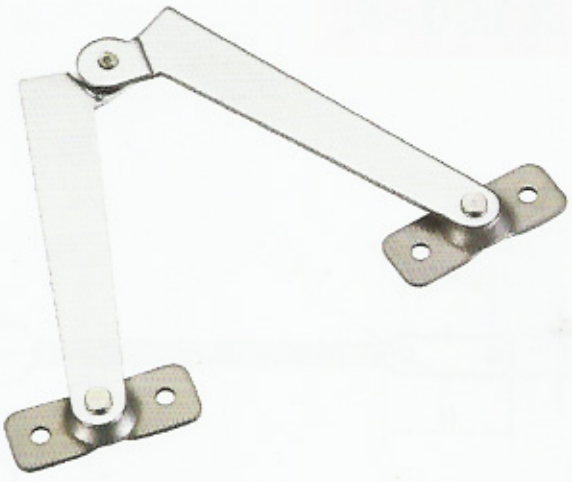

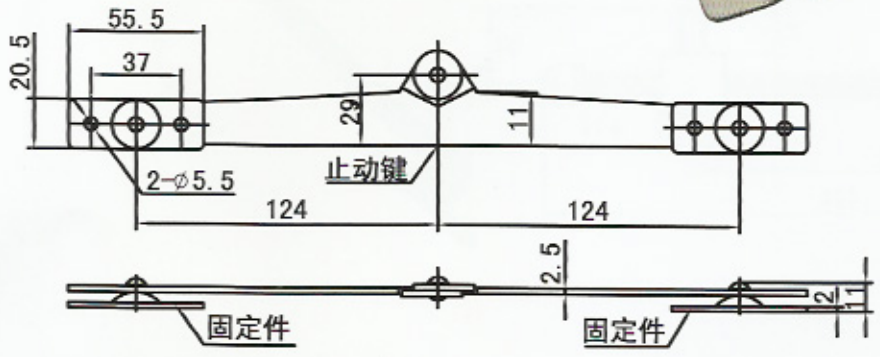

材质及表面处理：镀铬钢板。
Material and finishing: Carbon steel, bright chrome plated.

TX90-4

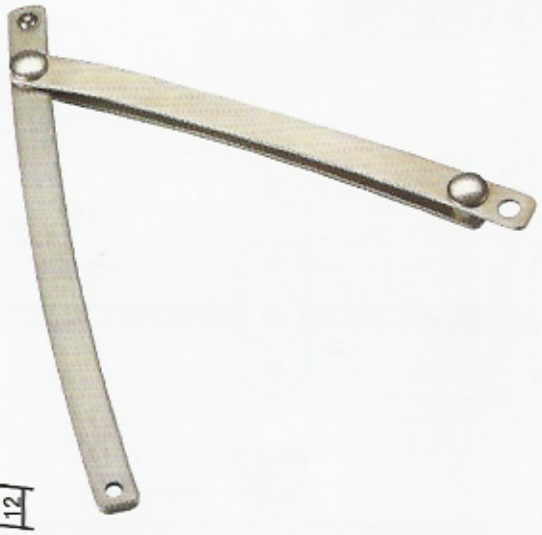

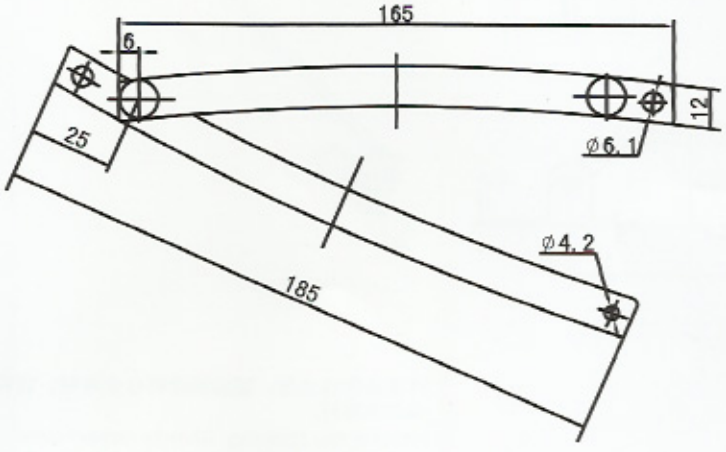

材质及表面处理：不锈钢。
Material and finish: stainless steel.

TX100-A

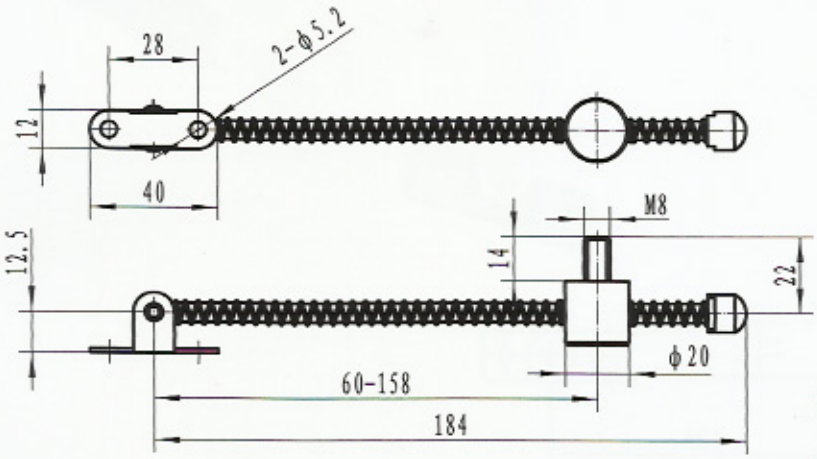



材质及表面处理：钢制弹簧杆子，表面镀亮铬。
Material and finish: Steel spring and rod, bright chrome coated.

TX100-B

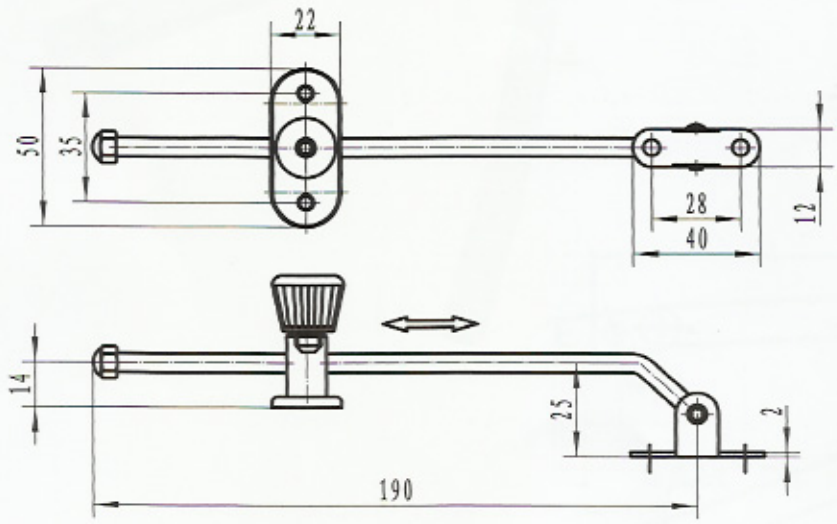



材质及表面处理：镀铬钢配锌合金旋钮；镀锌钢嵌体螺钉。
Material and finishing: Chrome coated steel body and embedded screw, zinc alloy knob.

LS501-1

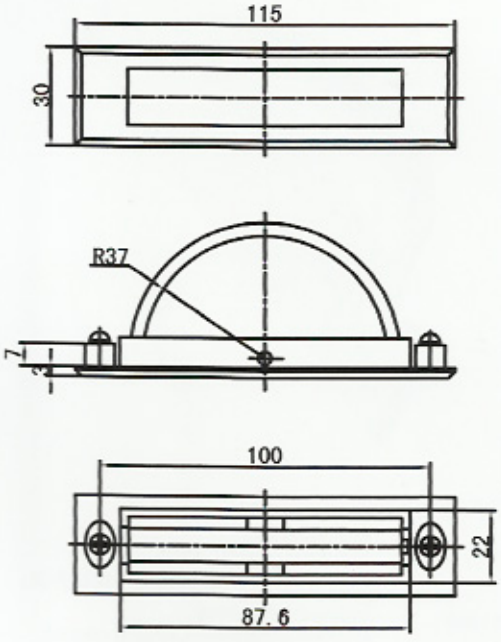

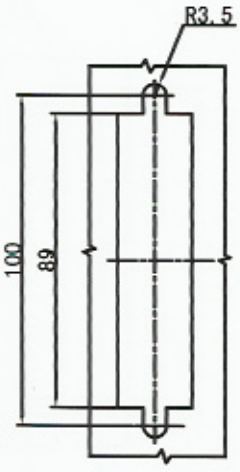

开孔尺寸
Panel Drlling Dimensions



材质:锌合金。
表面处理：镀铬、喷塑。
结构功能：通过螺钉固定，安装方便；
Material :zinc alloy.
Surface treatment: Chrome coated, Powder coated.
Structure and feature: Fixed by screw, convenient to install.

LS501-2

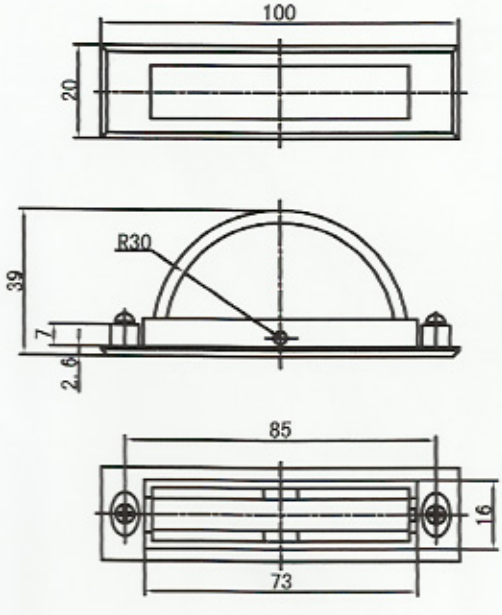

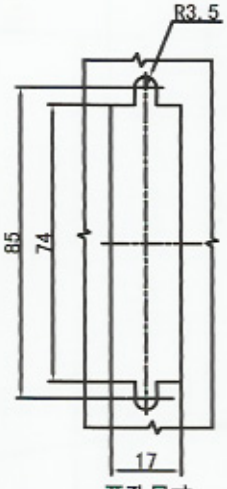

开孔尺寸
Panel Drlling Dimensions



材质:锌合金。
表面处理：镀铬、喷塑。
结构功能：通过螺钉固定，安装方便；
Material :zinc alloy.
Surface treatment: Chrome coated, Powder coated.
Structure and feature: Fixed by screw, convenient to install.

LS501-3

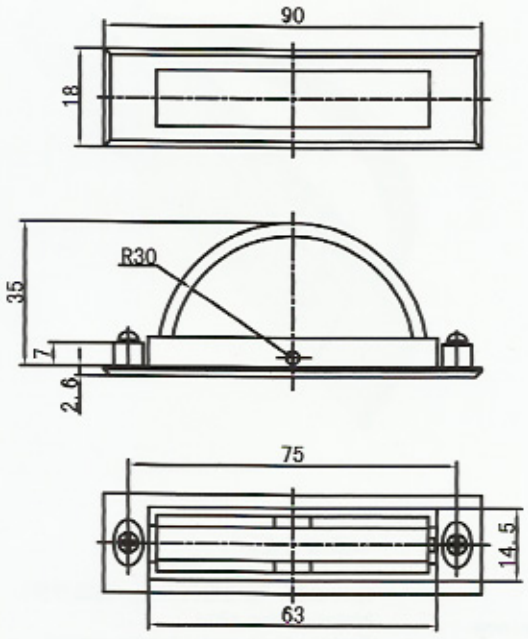

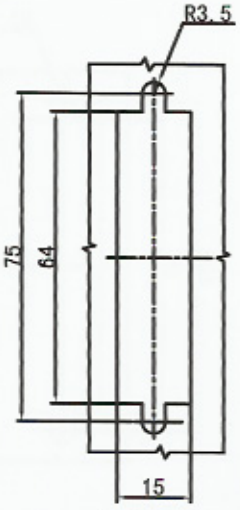

开孔尺寸
Panel Drlling Dimensions



材质:锌合金。
表面处理：镀铬、喷塑。
结构功能：通过螺钉固定，安装方便；
Material :zinc alloy.
Surface treatment: Chrome coated, Powder coated.
Structure and feature: Fixed by screw, convenient to install.

LS502-1

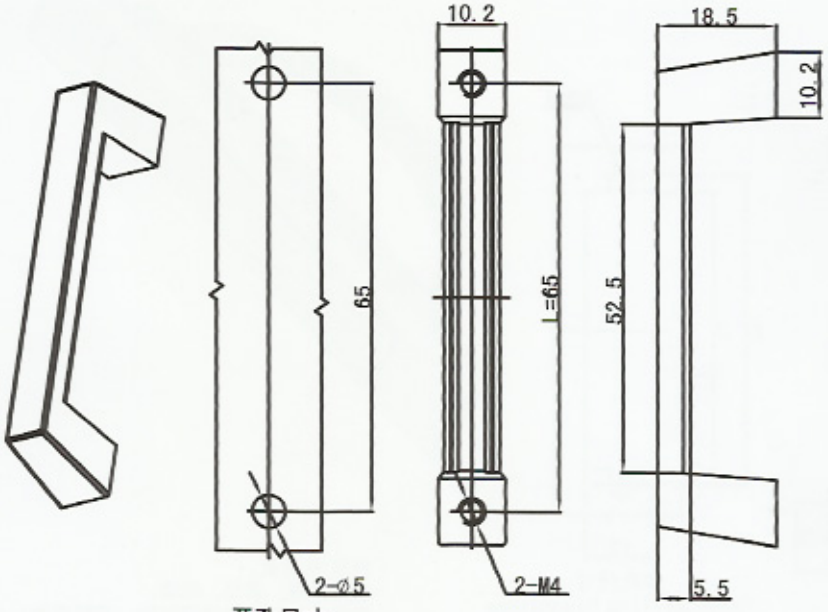

开孔尺寸
Panel Drlling Dimensions



材质及表面处理：亚光锌合金拉手。
Material and finishing: Matt zinc alloy handle.

LS502

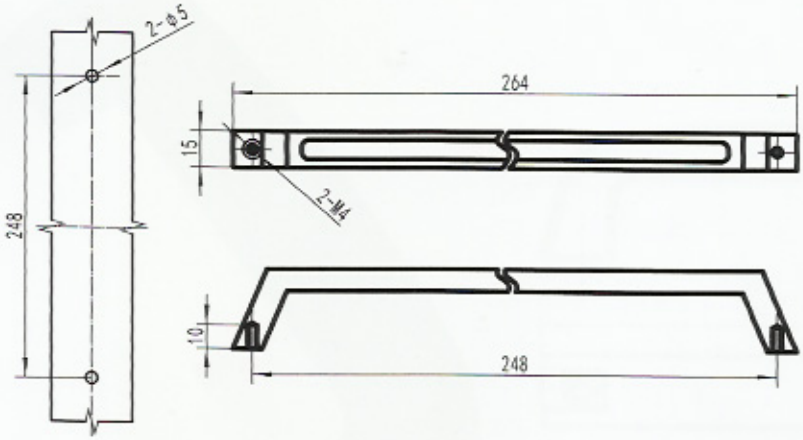

开孔尺寸



材料及表面处理：黑色喷塑锌合金。
Material and finishing: Black powder coated zinc alloy.

LS505

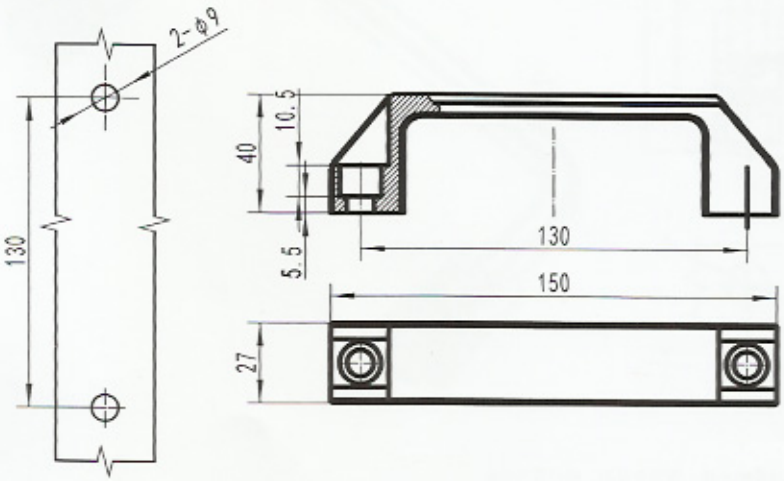

开孔尺寸



材质及表面处理：黑色ABS。
Material and finishing: Black ABS.

LS505-1

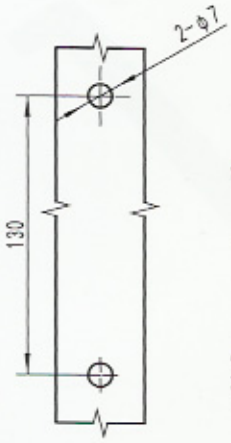

开孔尺寸

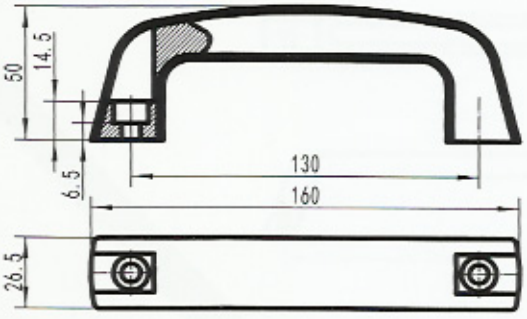



材质及表面处理：黑色ABS。
Material and finishing: Black ABS.

LS506

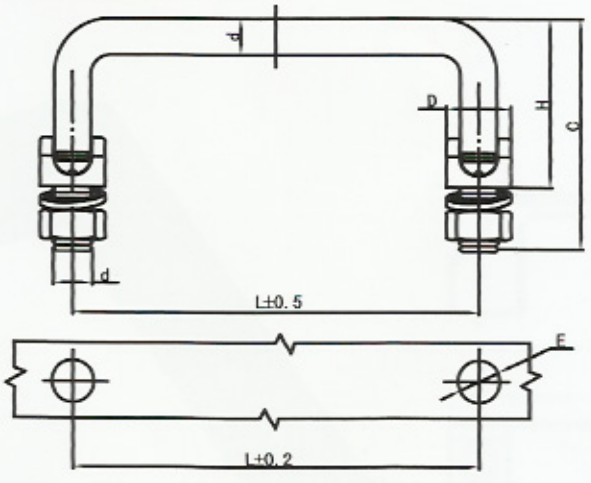

开孔尺寸
Panel Drilling Dimensions



注：●标注为默认常用规格，如高度H,C,长度L有特殊要求及其他未注●的规格，请另外说明，起订量500 ■

产品型号（MODEL）			产品型号（MODEL）		
A=M10 B=Φ9 C=57.5 D=Φ16 H=41.5 E=Φ11 Ts=1-2			A=M6 B=Φ6 C=45 D=Φ11 H=32 E=Φ7 Ts=1-5		
尺寸L	不锈钢	A3钢(镀铬)	尺寸L	不锈钢	A3钢（镀铬）
90	LS506-S90	LS506-90	60	LS506-S60	LS506-60
100	LS506-S100	▪LS506-100	70	LS506-S70	LS506-70
135	LS506-S135	▪LS506-135	90	LS506-S90	LS506-90
155	LS506-S155	LS506-155	122	LS506-S122	LS506-122

材质及表面处理：普通钢镀铬。
Material and finishing: Chrome coated steel.

LS507

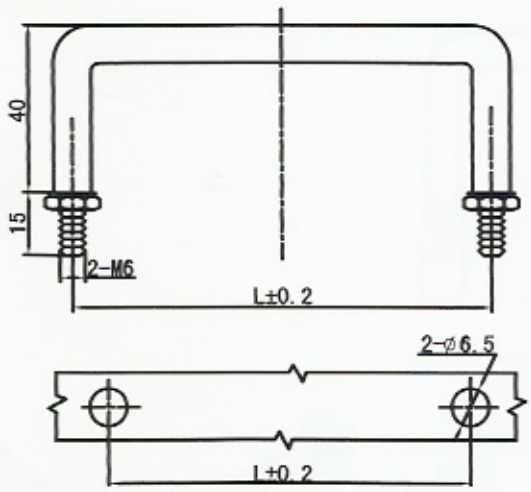

开孔尺寸
Panel Drilling Dimensions



注：●标注为默认常用规格，如高度H,C,长度L有特殊要求及其他未注●的规格，请另外说明，起订量500 ■

产品型号（MODEL）A=15 H=40		
尺寸L	不锈钢	A3钢（镀铬）
90	LS506-S90	LS506-90
100	LS506-S100	·LS506-100
155	LS507-S150	LS507-150

材质及表面处理：普通钢镀铬。
Material and finishing: Chrome coated steel.

LS508

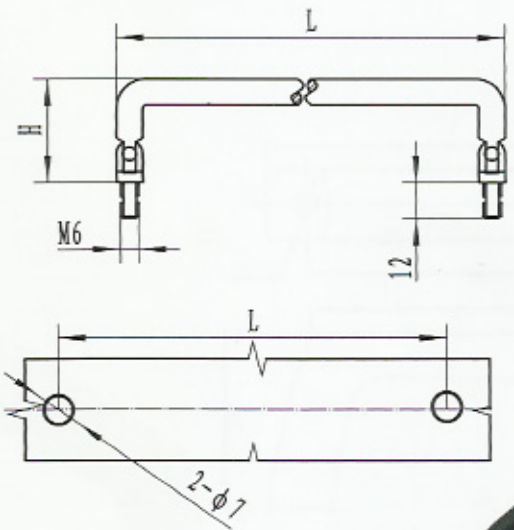

H=41.5 E=φ11 TS=1~2	
L=160	LS508-160
L=155	LS508-155
L=149	LS508-149
L=135	LS508-135
L=122	LS508-122
L=119	LS508-119
L=102	LS508-102
L=90	LS508-90
L=84	LS508-84
L=70	LS508-70
L=60	LS508-60
L=55	LS508-55
特征描述	产品型号



材料及表面处理：Q235镀亮铬，喷塑。
Material and finishing: Q235 bright chrome, powder coated.

LS509

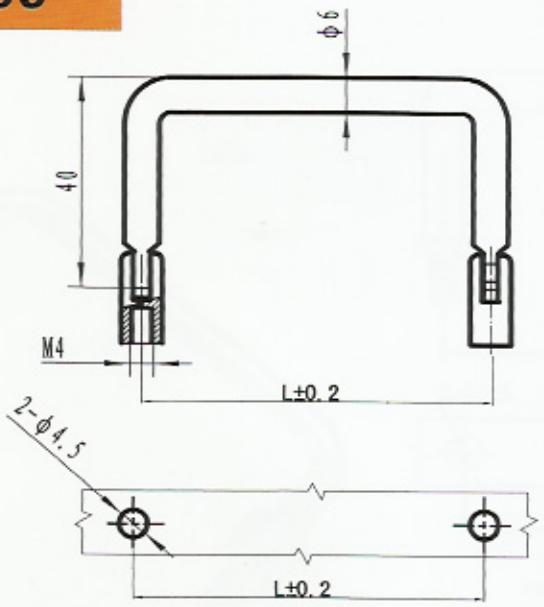

开孔尺寸
Panel Drlling Dimensions



注：●标注为默认常用规格，如高度H,C,长度L有特殊要求及其他未注●的规格，请另外说明，起订量500 ■

产品型号（MODEL）A=12.5 H=44		
尺寸L	不锈钢	镀铬冷轧钢
60	LS509-S60	LS509-60
70	LS509-S70	·LS509-70

材质及表面处理：普通钢镀铬。
Material and finishing: Chrome coated steel.

LS514-2

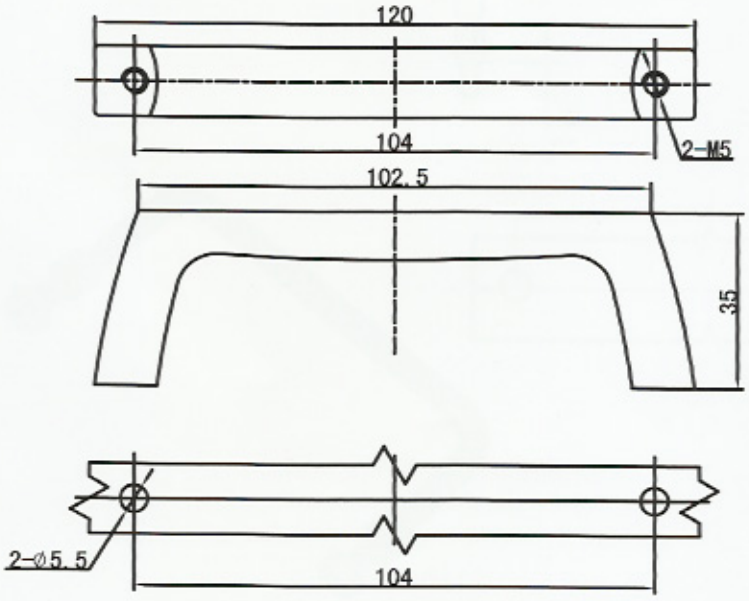

开孔尺寸
Panel Drlling Dimensions



材质及表面处理：灰白锌合金拉手。
Material and finish:Gray powder coated ZDC hinge.

LS515

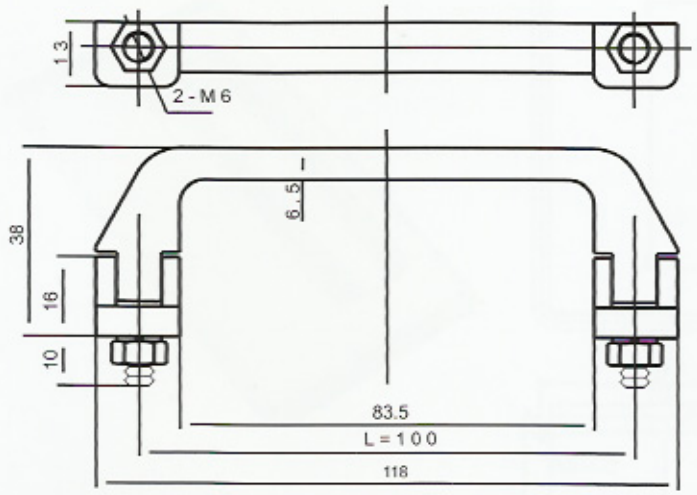



材质及表面处理：锌合金，拉手表面亚光。
Material and finish:Zinc alloy hinge,Matt surface.

LS516

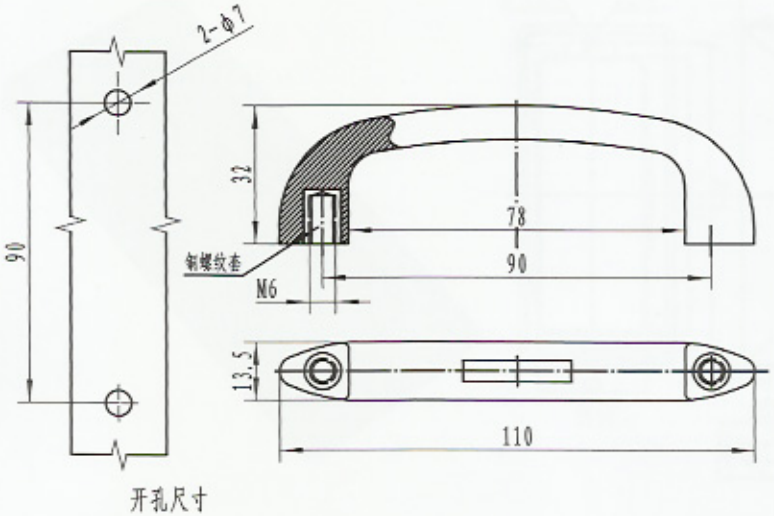

开孔尺寸



材料及表面处理：ABS拉手，H59螺纹嵌件。
Material and finishing: ABS handle, H59 embedded screw.

LS530



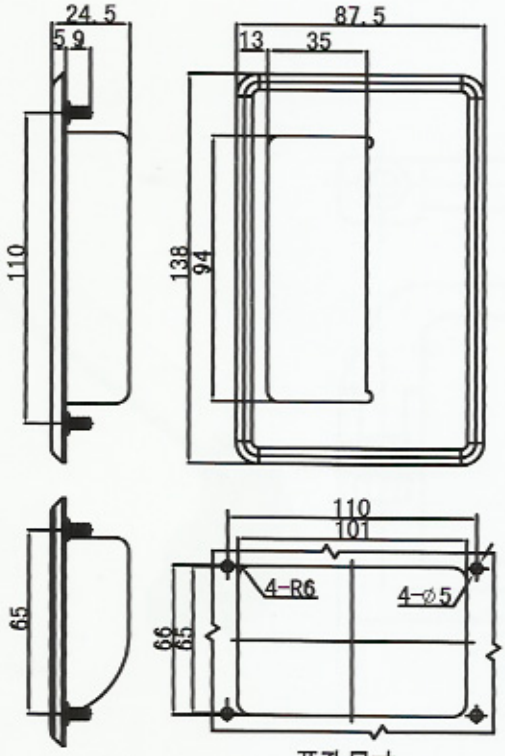

开孔尺寸
Panel Drlling Dimensions



材质及表面处理：镜面抛光不锈钢拉手。
Material and finish:Mirror polish stainless steel hinge.

LS531



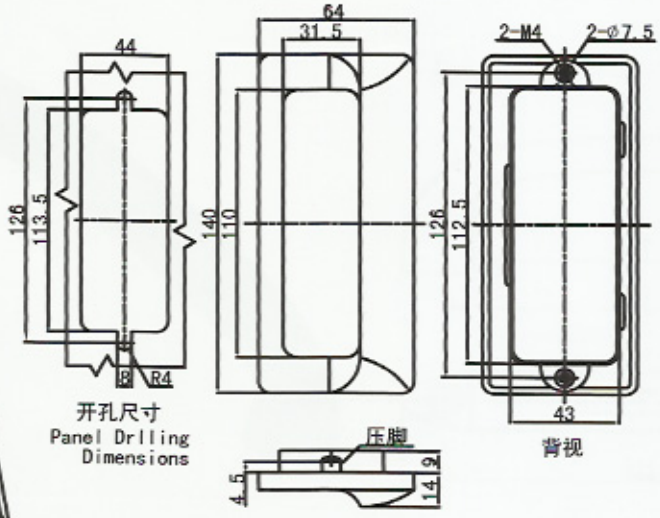

开孔尺寸
Panel Drlling Dimensions

背视



材质及表面处理：塑料拉手。
Material and finish:Plastic hinge.

LS532



安装示意图
Installation Diagram





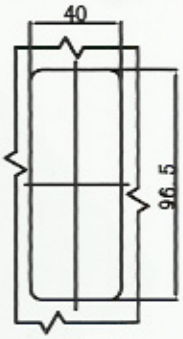

开孔尺寸
Panel Drlling Dimensions





产品型号（MODEL)	门板厚度(Ts)
LS532-1	1.0
LS532-2	1.2
LS532-3	1.6
LS532-4	2.0
LS532-5	2.3

材质及表面处理：ABS塑料手柄。
Material and finishing: ABS handle.

LS533

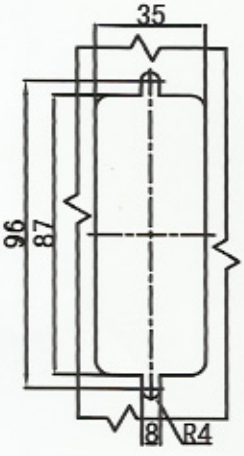

开孔尺寸
Panel Drlling
Dimensions

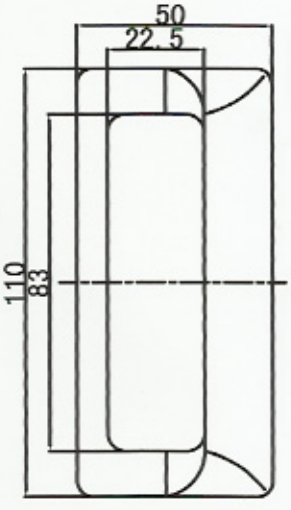

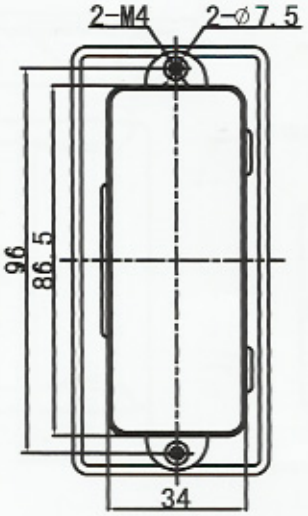

背视

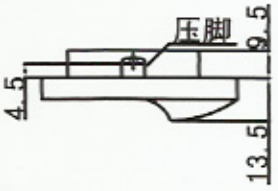



材质及表面处理：锌合金镀铬。
Material and finishing: Chrome plated zinc alloy.

LS534



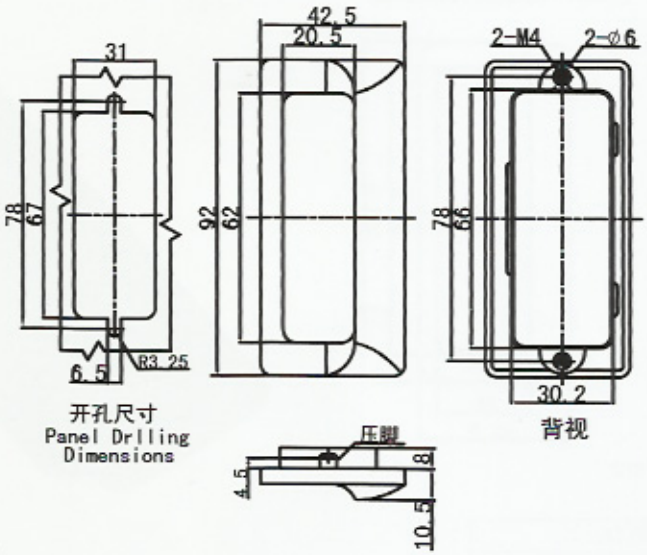



材质及表面处理：塑料拉手。
Material and finish:Plastic hinge.

LS535



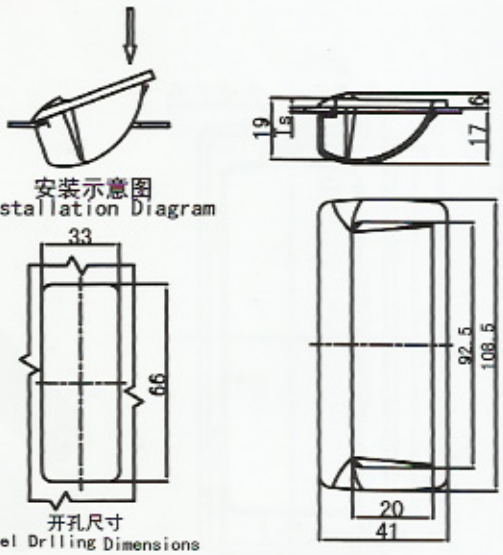



产品型号（MODEL)	门板厚度(Ts)
JL535-1	1.0
JL535-2	1.2
JL535-3	1.6
JL535-4	2.0
JL535-5	2.3

材质及表面处理：塑料拉手。
Material and finish:Plastic hinge.

LS536

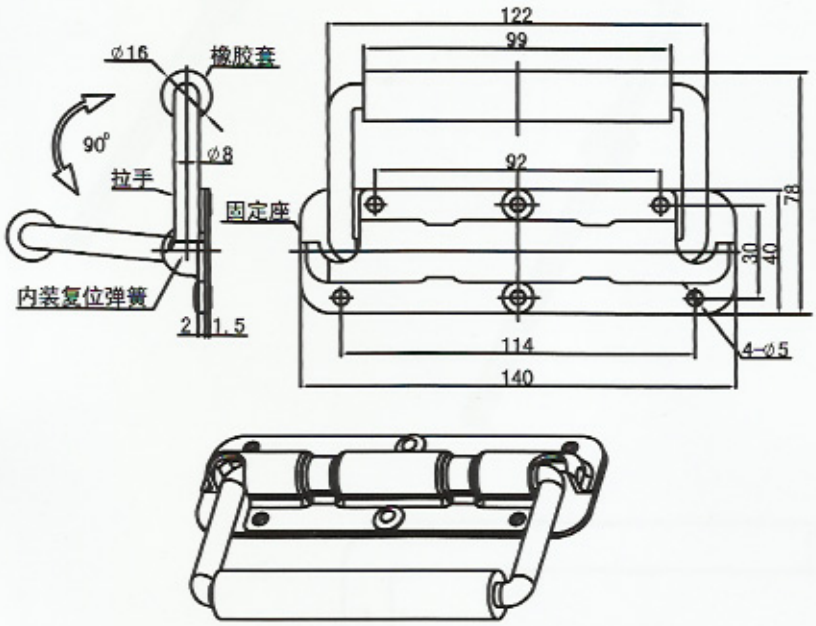



材质及表面处理：镀铬钢、配橡胶套管。
Material and finishing: Chrome plated steel, rubber tube.

LS537

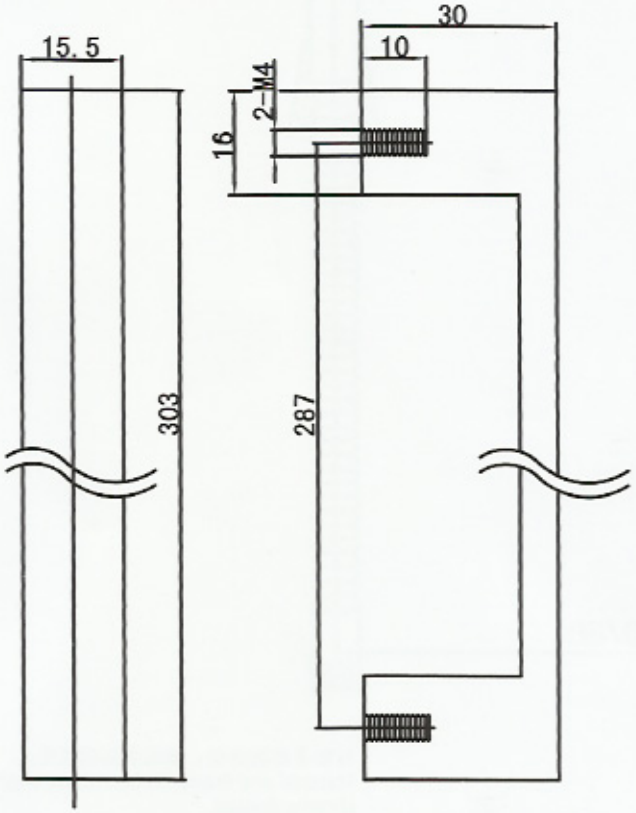



材质及表面处理：不锈钢,表面拉丝。
Material and finish:Stainless steel surface drawing.

LS538



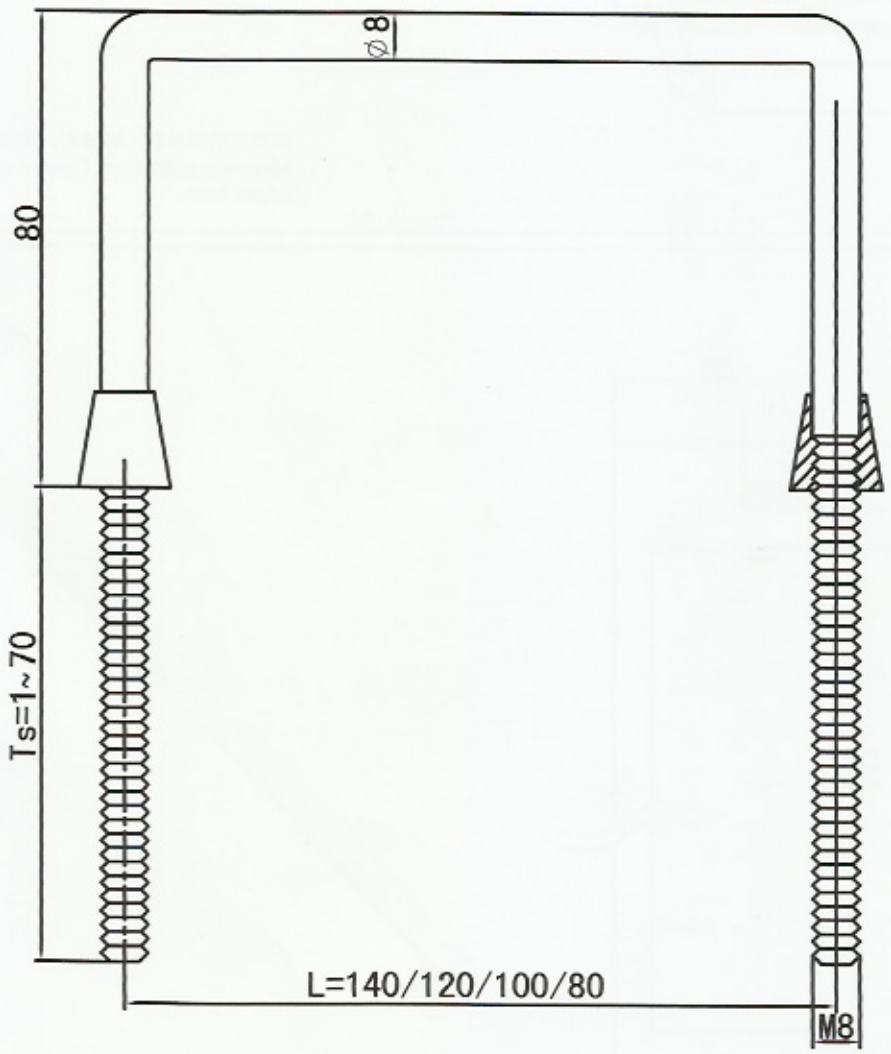

材质及表面处理：碳钢表面镀亮铬。
Material and finish: carbon steel, bright chrome coated.

DKS

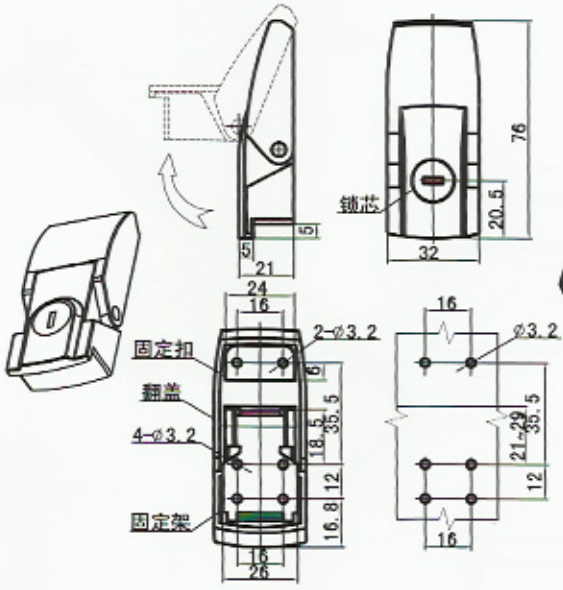

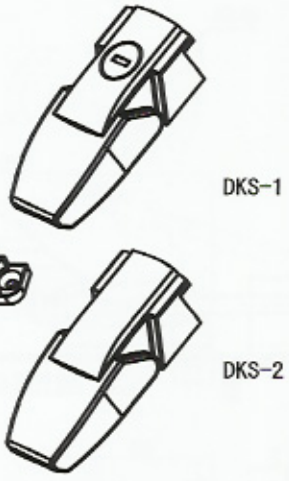

DKS-1



DKS-1

DKS-2



DKS-2

产品型号（MODEL）	特征描述(SPECIFICATION)
DKS-1	不带锁/Without key cylinder
DKS-2	带锁芯/with key cylinder

材质:锌合金锁体、固定扣，钢制固定架。
表面处理：亚光铬、亮光铬、喷塑。
Material: Zinc alloy housing, buckle, stainless steel mount.
Finishing: Matt or bright chrome, and powder coated.

DK603-1

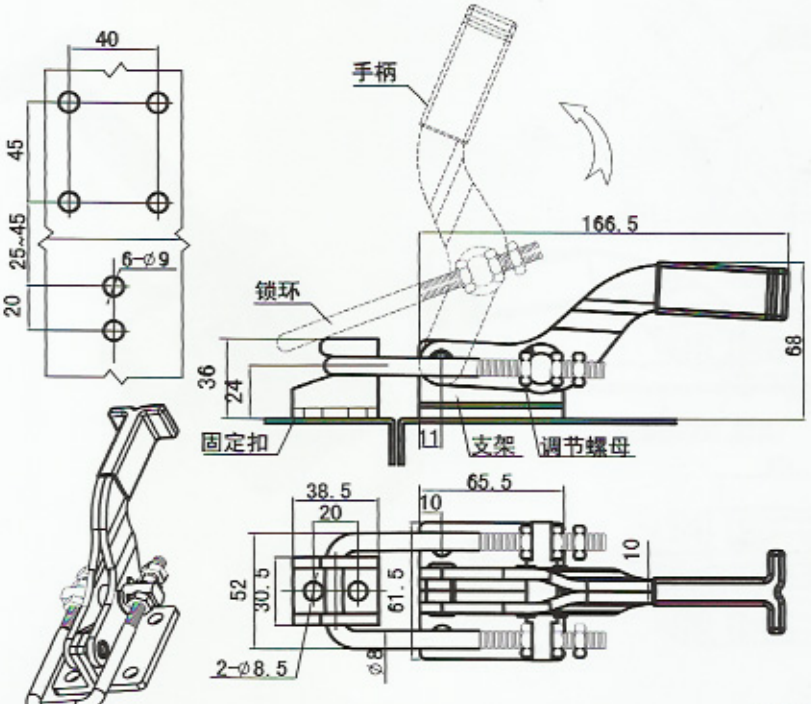



材质及表面处理：镀锌钢、不锈钢扣体，把手带塑料套。
Material and finishing: Zinc plated stainless steel housing, handle with plastic cover.

DK603-2

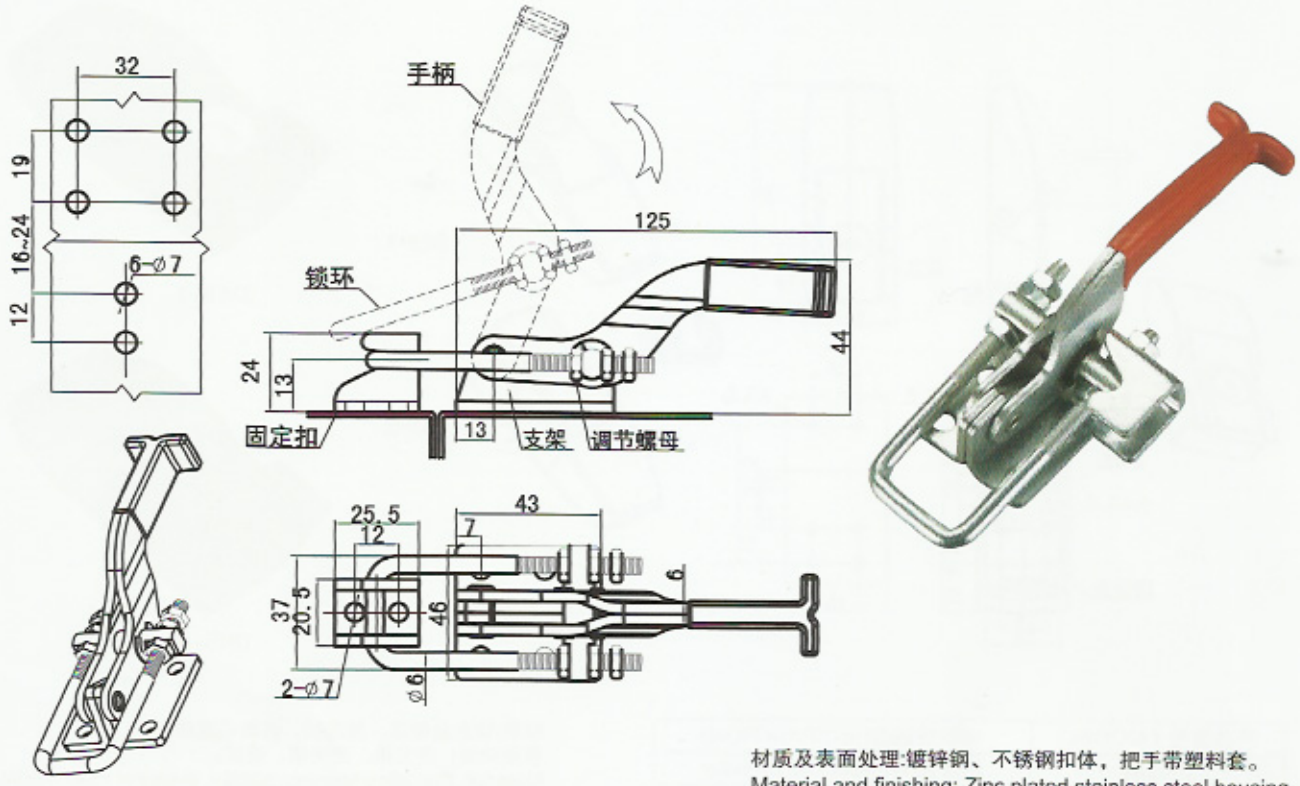

材质及表面处理:镀锌钢、不锈钢扣体，把手带塑料套。
Material and finishing: Zinc plated stainless steel housing, handle with plastic cover.

DK603-3

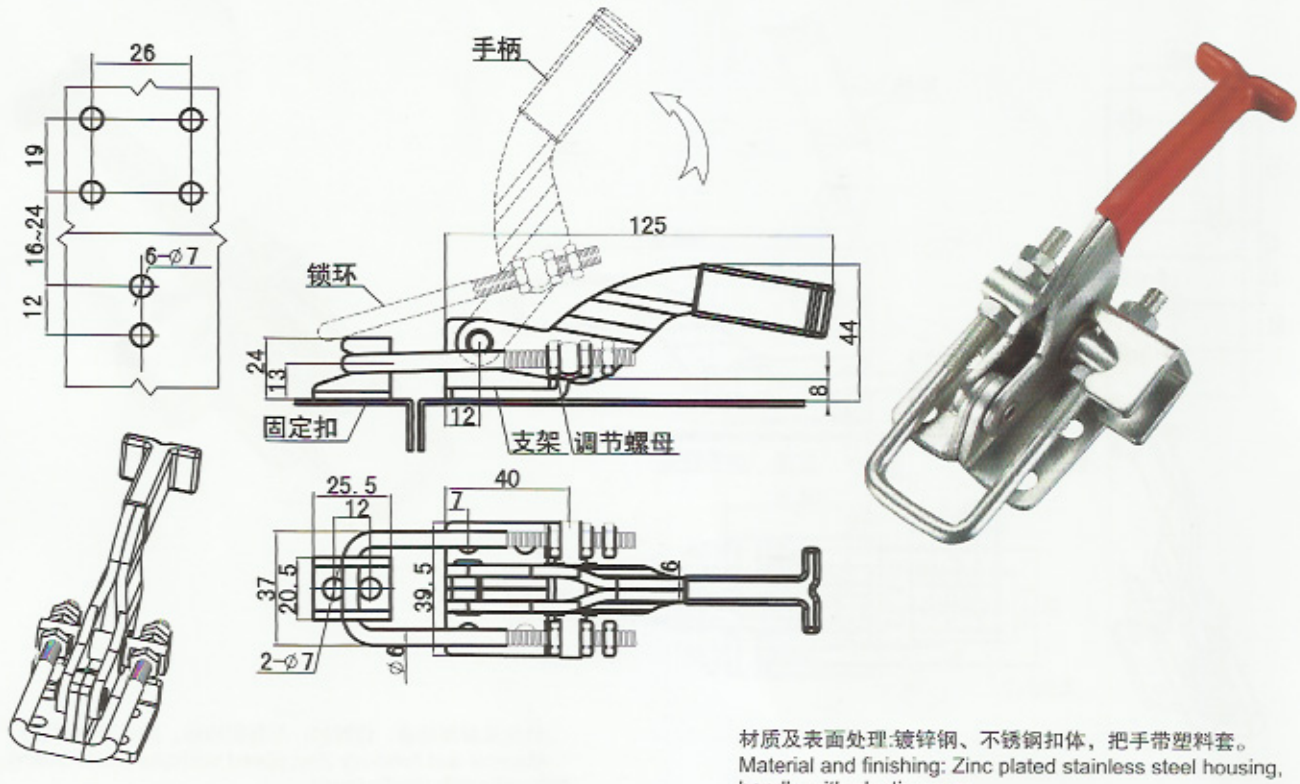

材质及表面处理:镀锌钢、不锈钢扣体，把手带塑料套。
Material and finishing: Zinc plated stainless steel housing, handle with plastic cover.

DK603-4

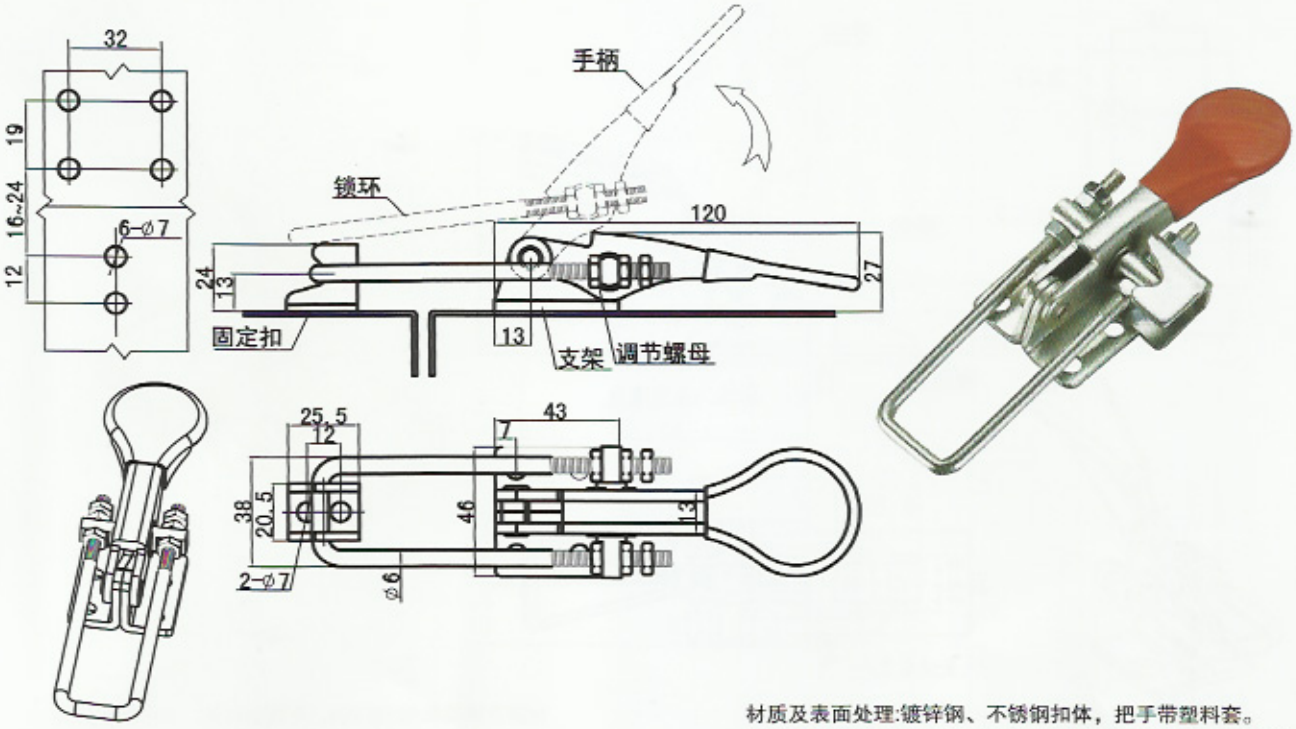

材质及表面处理:镀锌钢、不锈钢扣体，把手带塑料套。
Material and finishing: Zinc plated stainless steel housing, handle with plastic cover.

DK603-5

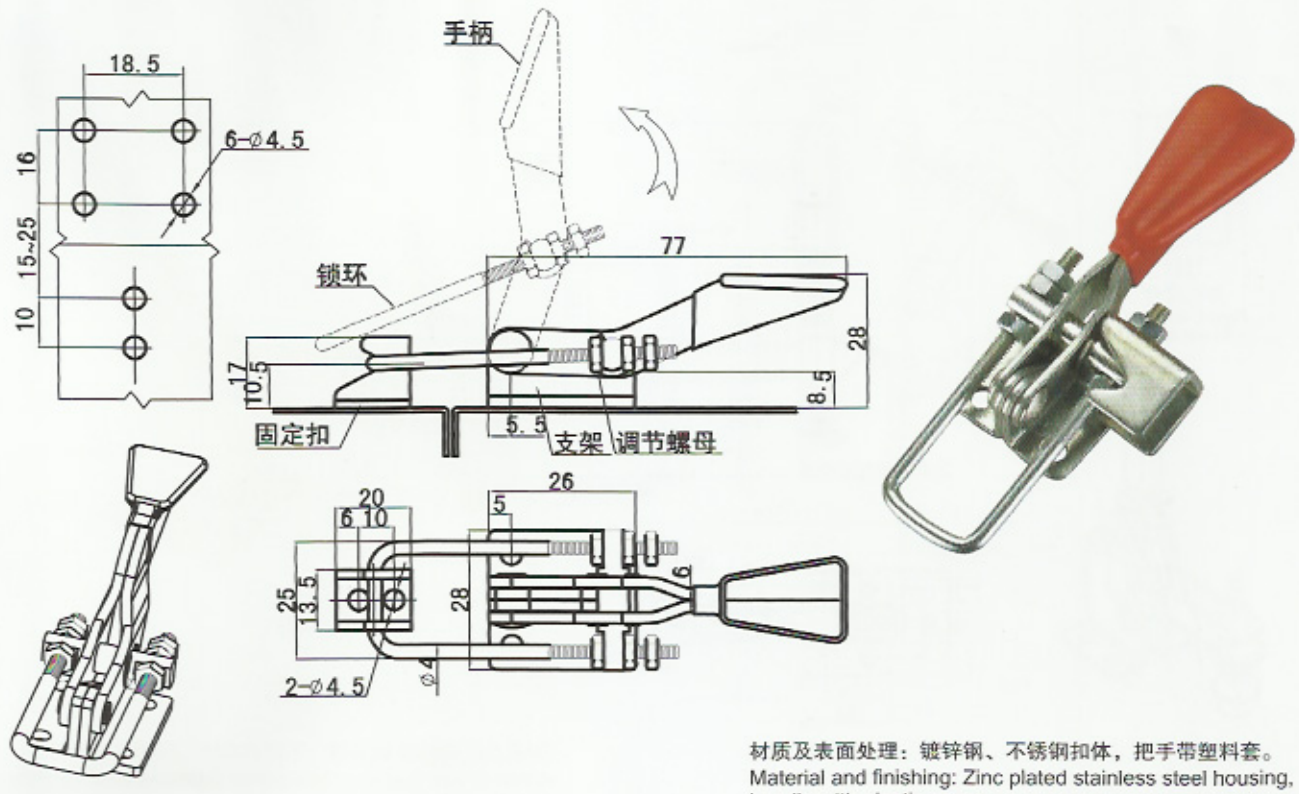

材质及表面处理：镀锌钢、不锈钢扣体，把手带塑料套。
Material and finishing: Zinc plated stainless steel housing, handle with plastic cover.

DK603-6

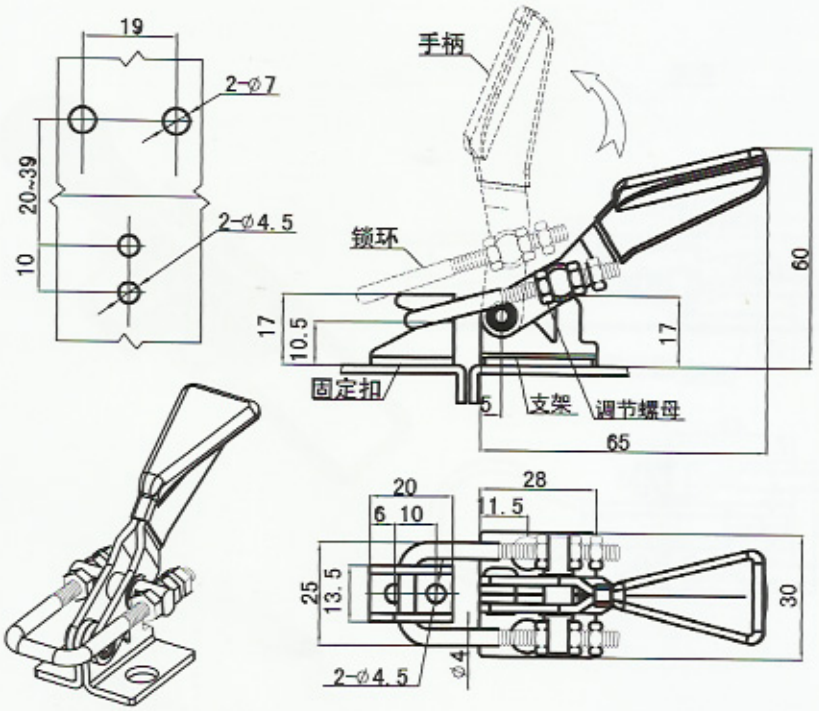



材质及表面处理:镀锌钢、不锈钢扣体，把手带塑料套。
Material and finishing: Zinc plated stainless steel housing, handle with plastic cover.

DK603-7

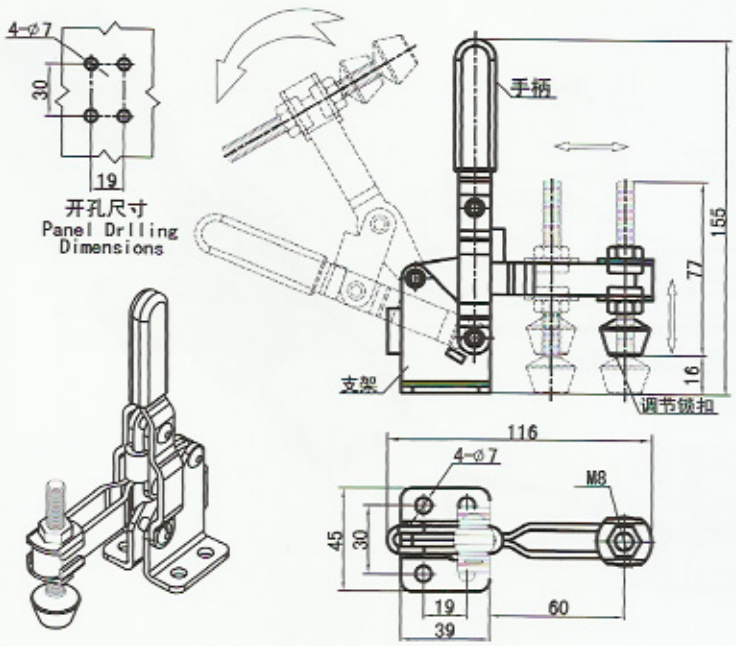



材质及表面处理:镀锌钢、不锈钢扣体，把手带塑料套。
Material and finishing: Zinc plated stainless steel housing, handle with plastic cover.

DK603-8

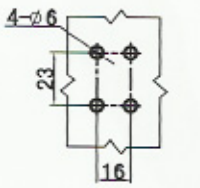

开孔尺寸
Panel Drilling Dimensions

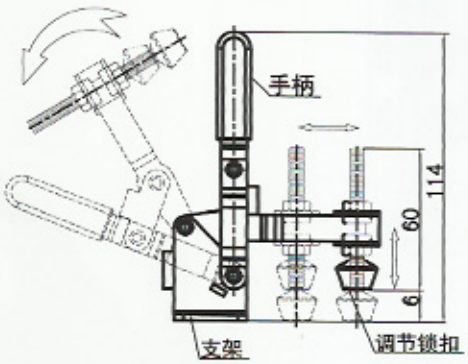

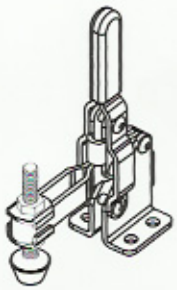

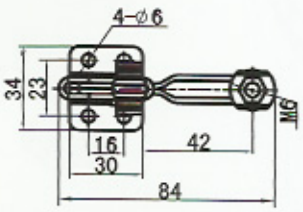

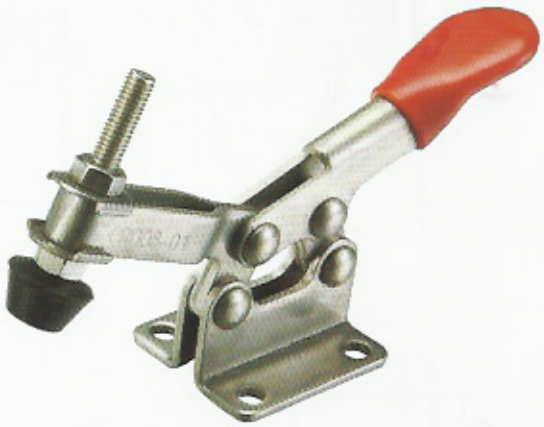

材质及表面处理:镀锌钢、不锈钢扣体，把手带塑料套。
Material and finishing: Zinc plated stainless steel housing, handle with plastic cover.

DK603-9

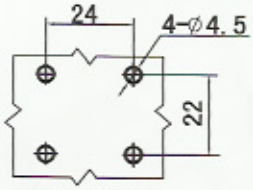

开孔尺寸
Panel Drilling Dimensions

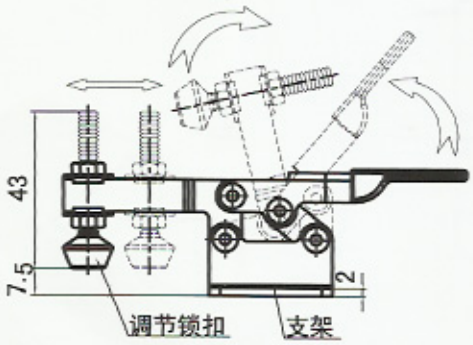

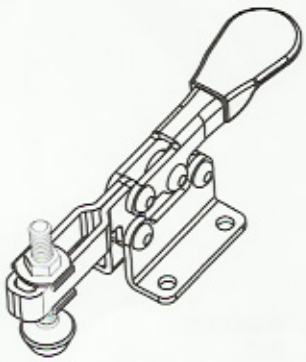

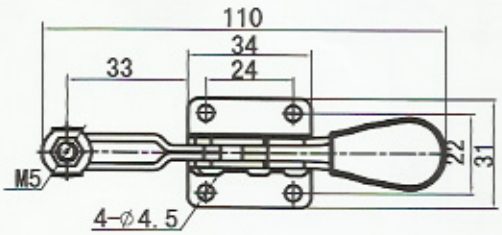



材质及表面处理:镀锌钢、不锈钢扣体，把手带塑料套。
Material and finishing: Zinc plated stainless steel housing, handle with plastic cover.

DK603-10

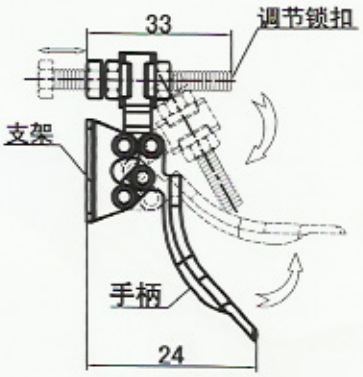

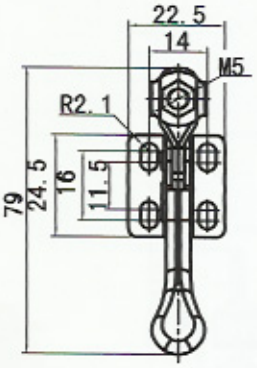

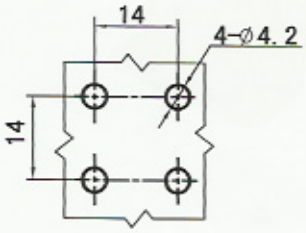

开孔尺寸
Panel Drilling Dimensions

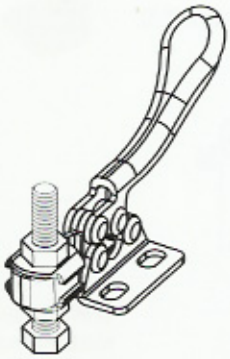

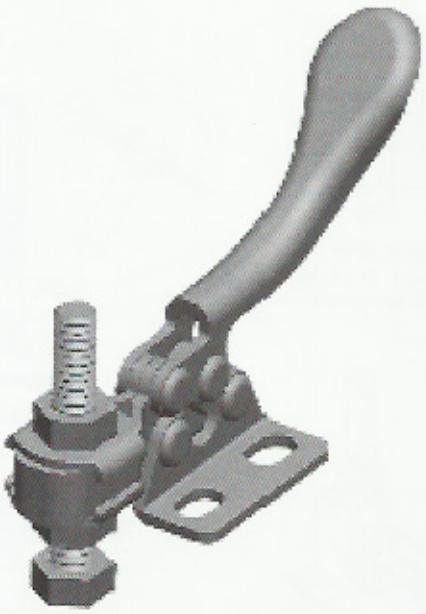

材质及表面处理:镀锌钢、不锈钢扣体，把手带塑料套。
Material and finishing: Zinc plated stainless steel housing, handle with plastic cover.

DK604

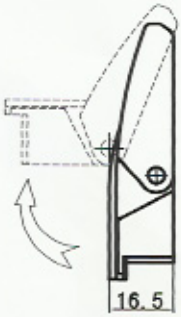

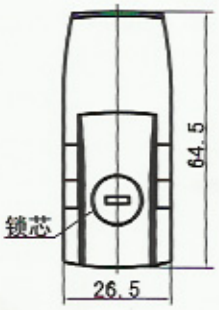

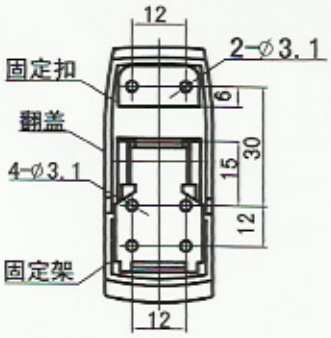

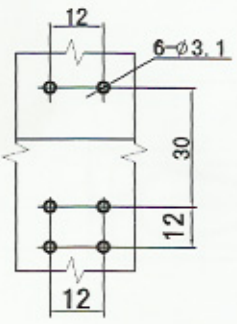



产品型号（MODEL）	特征描述(SPECIFICATION)
DK604-1	不带锁/without key cylinder
DK604-2	带锁芯/with key cylinder

材质:锌合金锁体、固定扣，钢制固定架。
表面处理:亚光铬、亮光铬、喷塑。
Material: Zinc alloy housing, buckle, stainless steel mount.
Finishing: Matt or bright chrome, and powder coated.

DK605

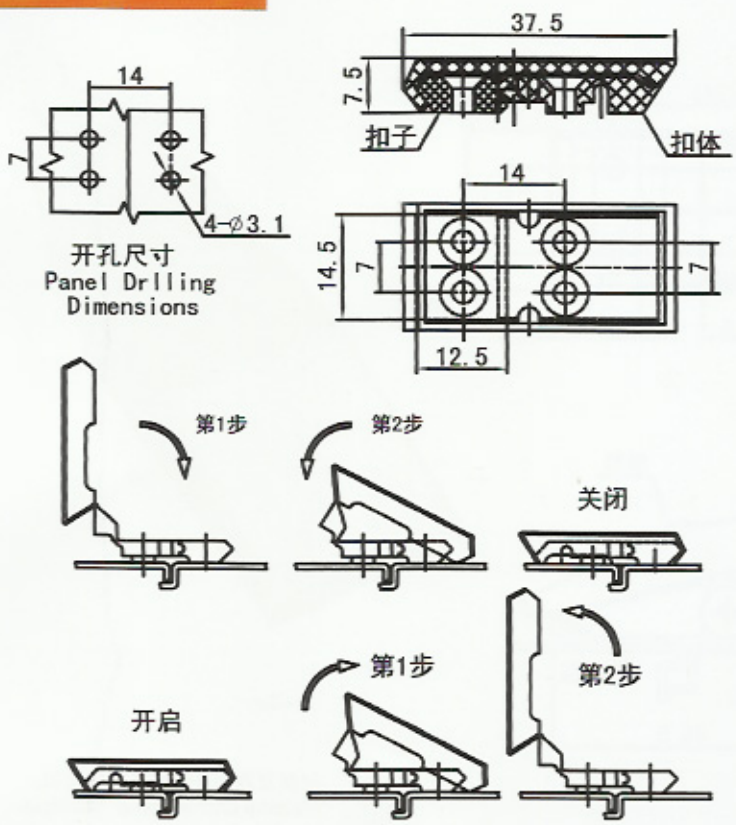



材质及表面处理：聚丙烯扣体。
Material and finish: Plolypropylene buckle body.

DK606

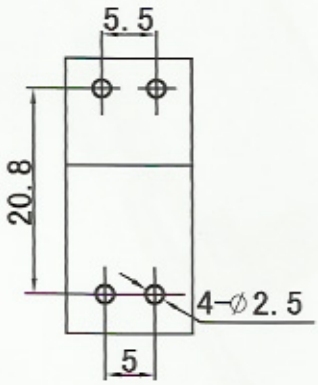

开孔尺寸
Panel Drlling
Dimensions

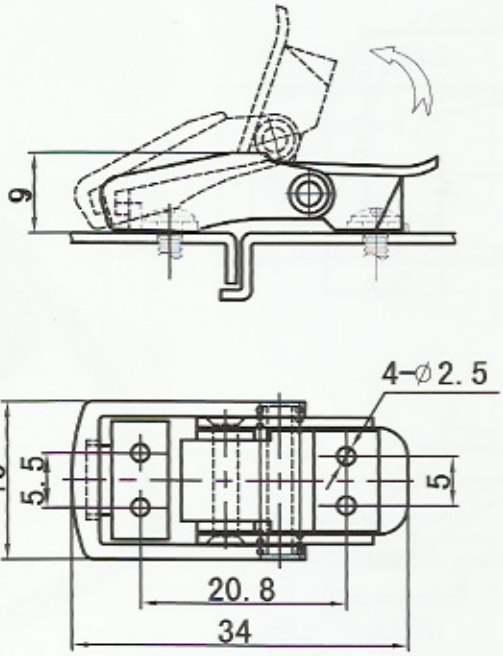



材质及表面处理：锌合金、钢制锁体；钢制电容漆（黑色）。
Material and finishing: Zinc alloy or stainless steel housing; black electric melting paint.

DK607

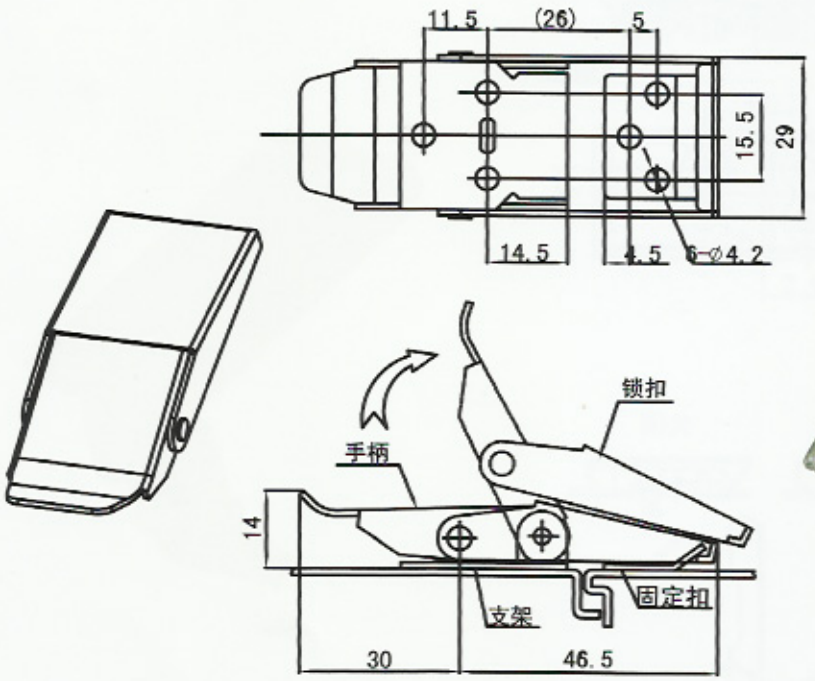



材质及表面处理：不锈钢搭扣。
Material and finishing: Stainless steel toggle.

DK607-1

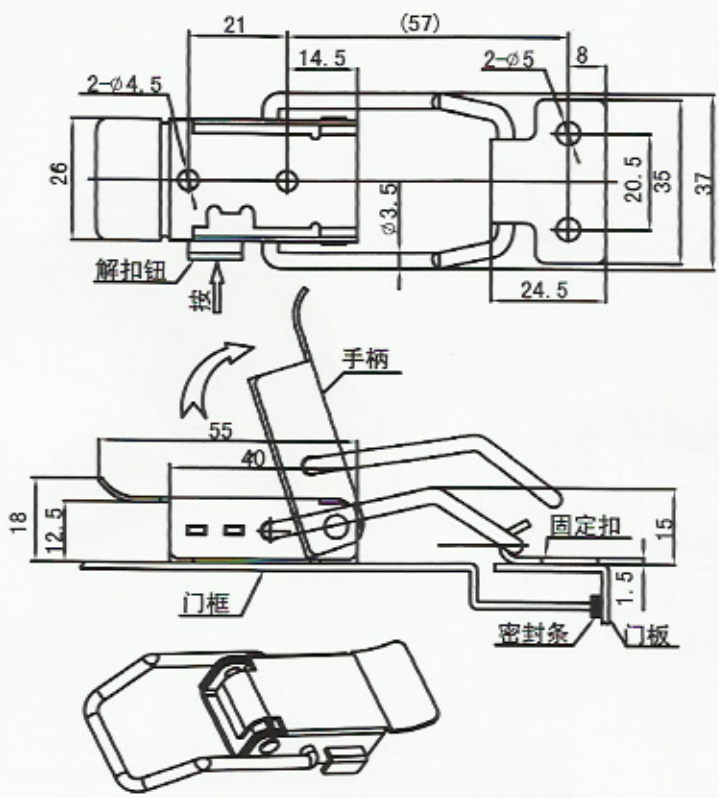



材质及表面处理：不锈钢搭扣。
Material and finishing: Stainless steel toggle.

DK607-2

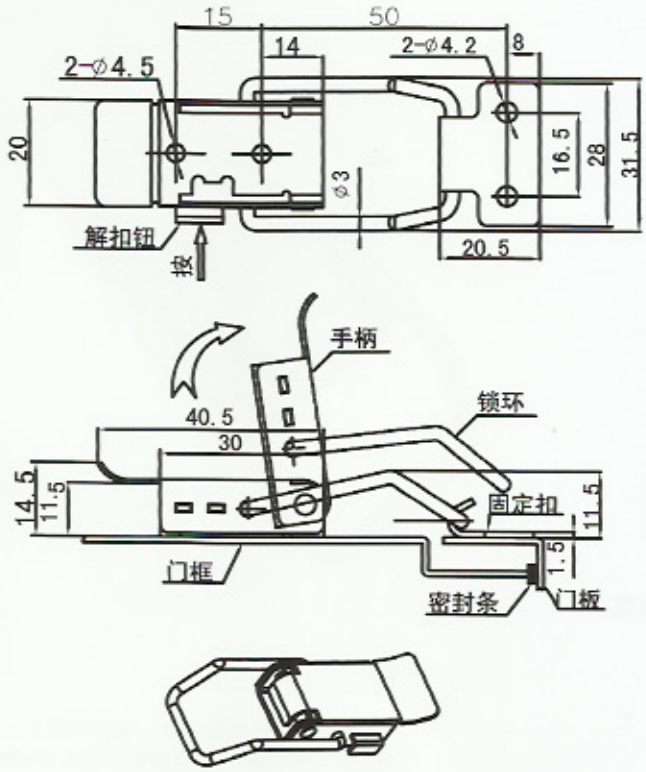



材质及表面处理：不锈钢搭扣。
Material and finishing: Stainless steel toggle.

DK607-3

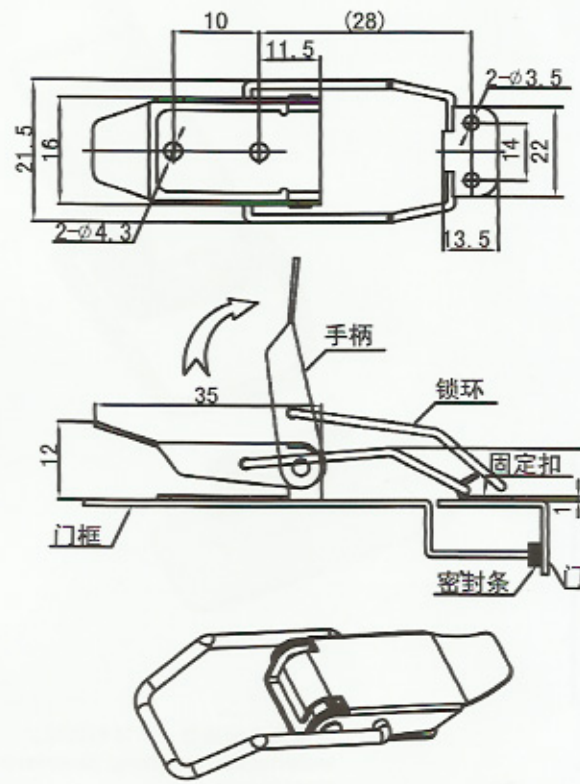



材质及表面处理：镀锌钢搭扣。
Material and finishing: Zinc coated steel toggle.

DK607-4

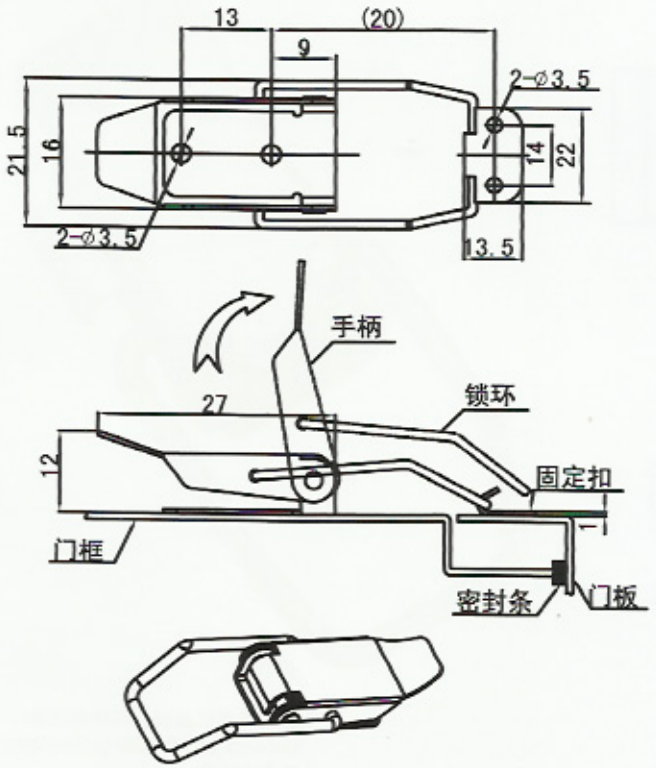



材质及表面处理：镀锌钢搭扣。
Material and finishing: Zinc coated steel toggle.

DK607-5

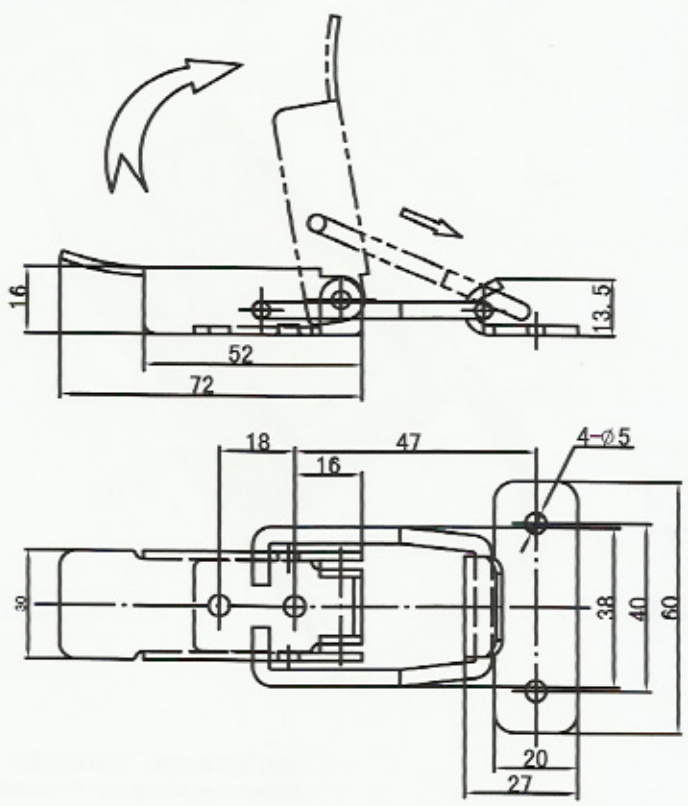



材质及表面处理：不锈钢搭扣。
Material and finishing: Stainless steel toggle.

DK607-6

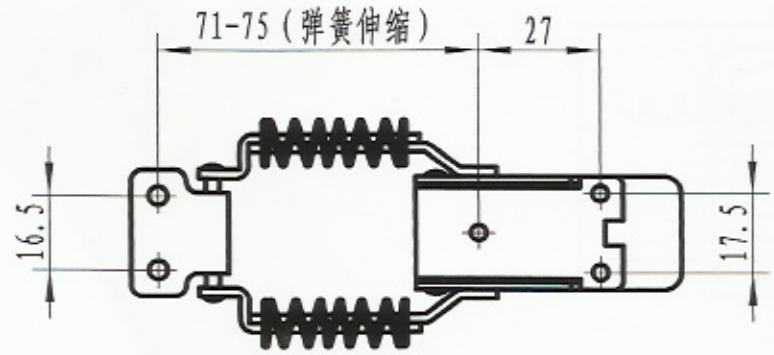

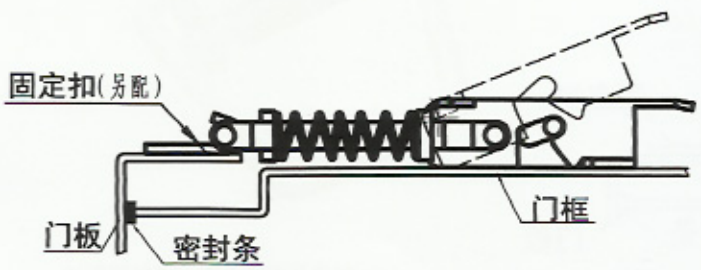



材质及表面处理：304不锈钢表面拉丝。
Material and finishing: 304 stainless steel surface drawing.

DK607-7

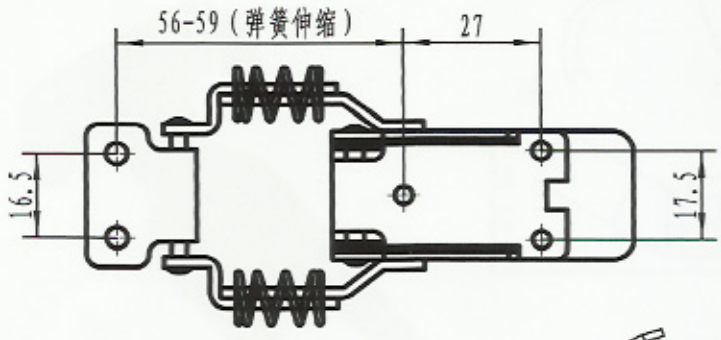

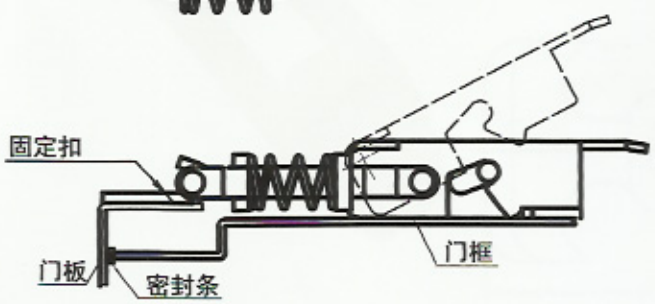



材质及表面处理：304不锈钢表面拉丝。
Material and finishing: 304 stainless steel surface drawing.

DK609

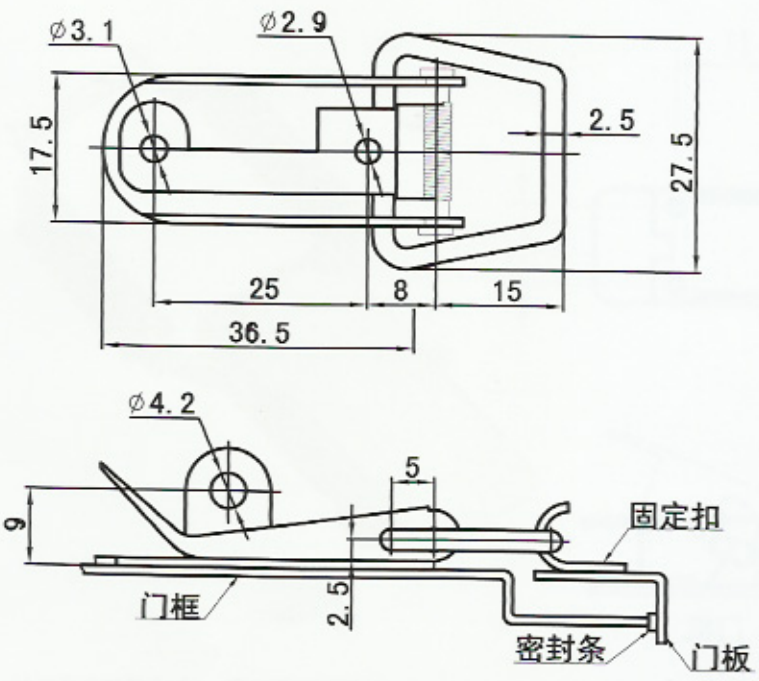



材质及表面处理：镀锌钢搭扣。
Material and finishing: Zinc plated steel toggle.

DK610

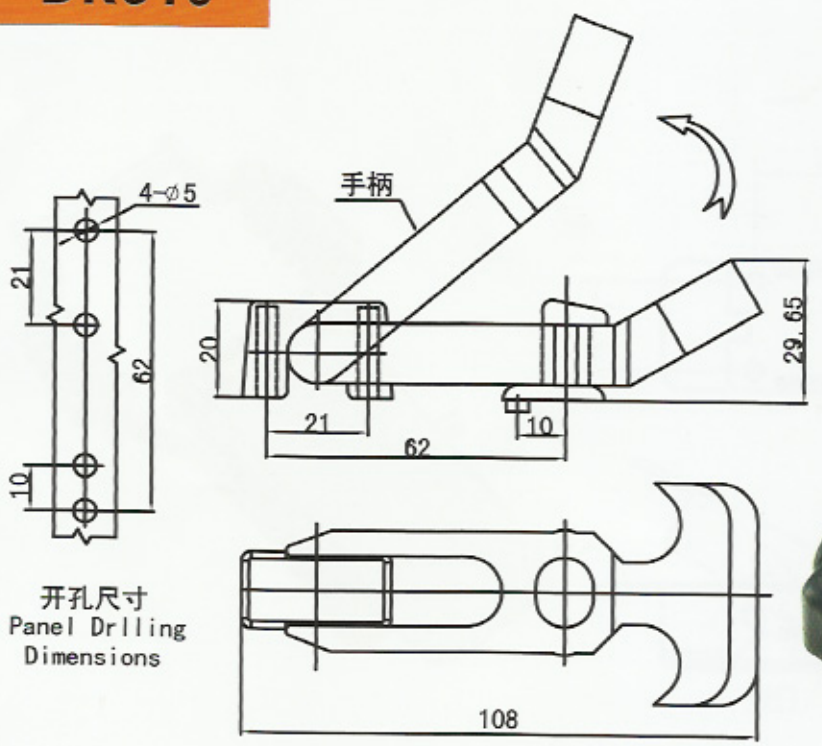

开孔尺寸
Panel Drilling Dimensions



材质及表面处理：黑色橡胶基座、把手、固定扣。
Material and finishing: Black rubber base, handle, and buckle.

DK611

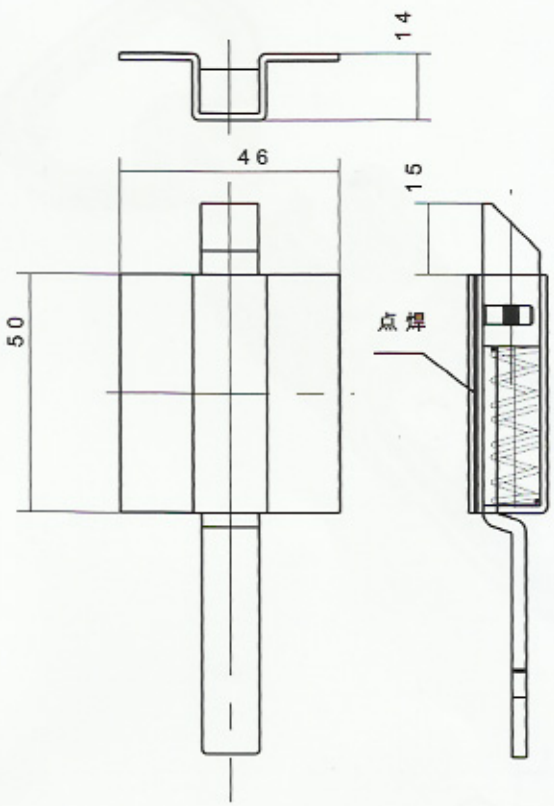

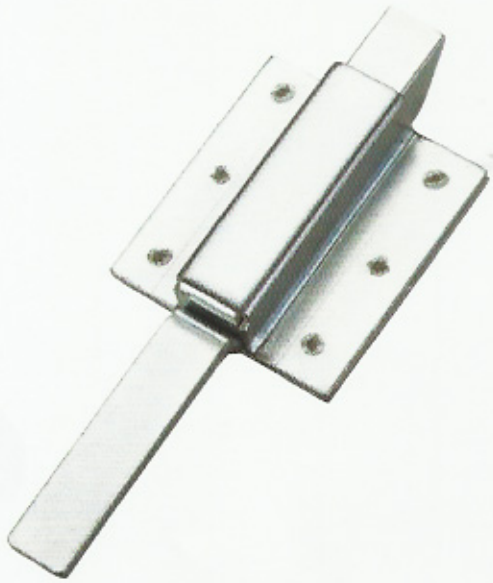

材质及表面处理：Q235表面镀白锌。
Material and finishing: Q235 white zinc coating.

DK615

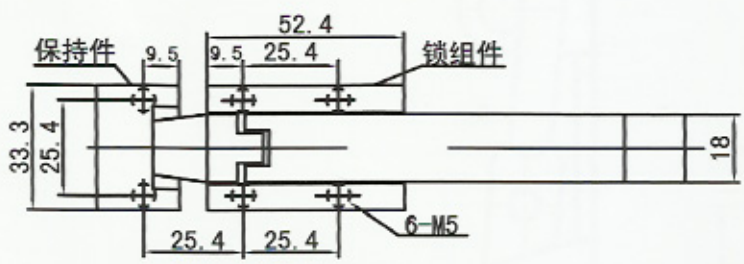

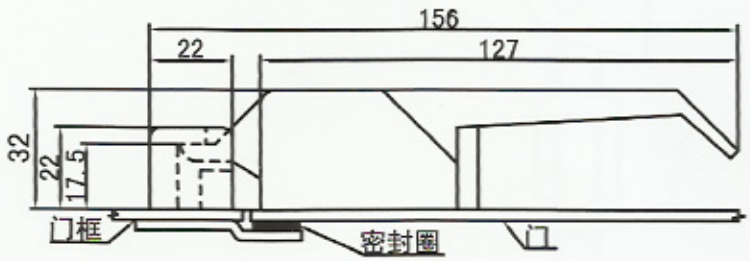



产品型号（MODEL）	特征描述(SPECIFICATION)
DK615-1	带锁芯/with key cylinder
DK615-2	无锁芯/without key cylinder

材质及表面处理：黑色锌合金基座、把手、固定扣；不锈钢钢销子.
Material and finish: Black ZDC housing, handle and catch; stainless steel pin.

DK619



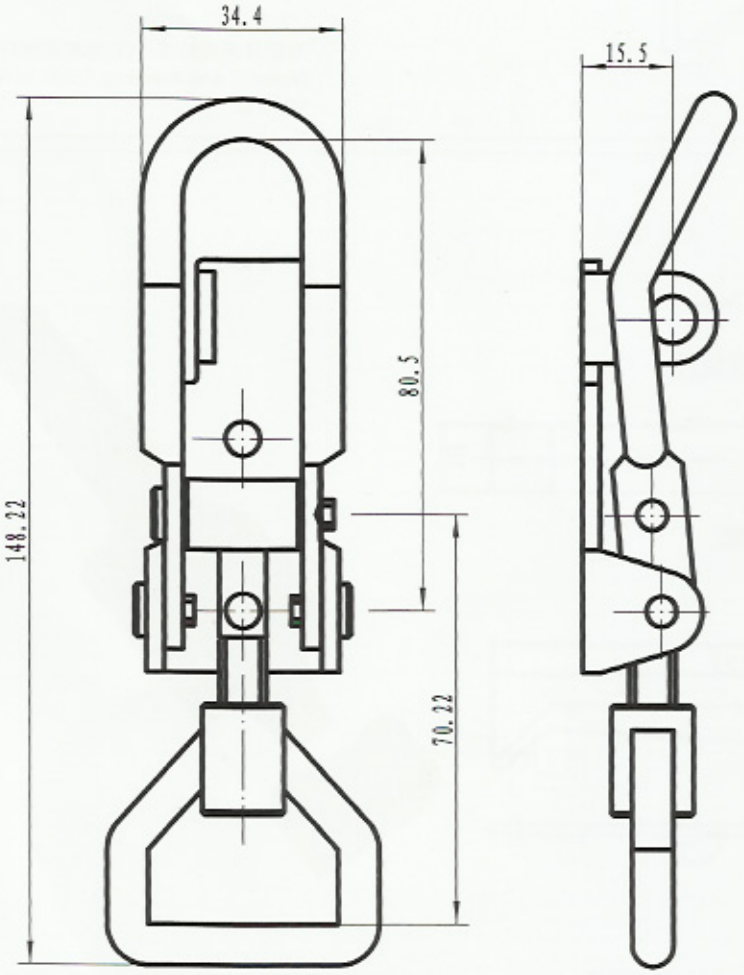

材质及表面处理：Q235表面镀白锌。
Material and finishing: Q235 white zinc coating.

JL042



安装示意图
Installation Diagram

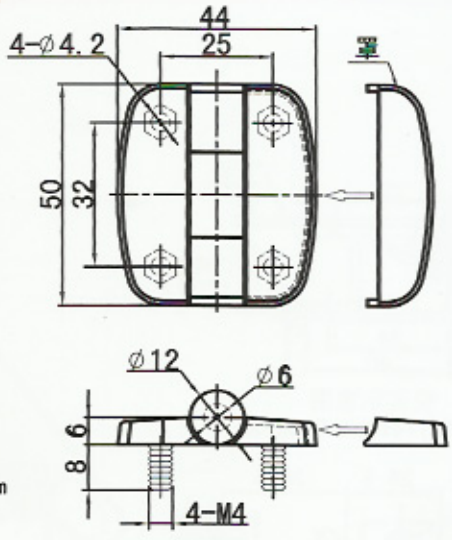



材质及表面处理：喷沙黑色锌合金铰链体，镀镍钢销子。
Material and finishing: Black sandblasting zinc alloy housing,nickel plated steel pin.

JL102

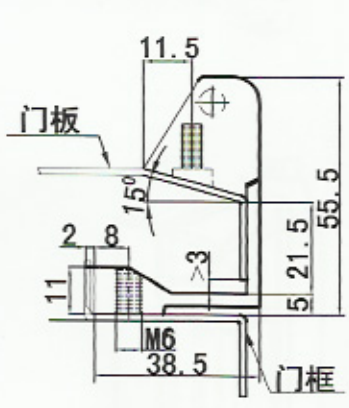

安装示意图
Installation Diagram

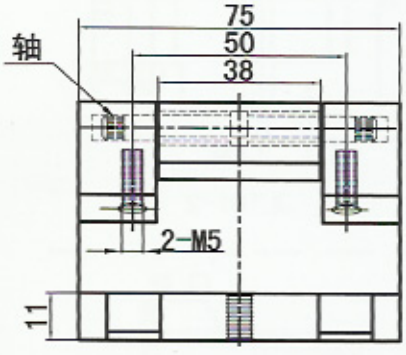



材质：锌合金压铸而成。
表面处理：喷塑或氧化处理。
结构功能：主要适用于门边带15° 斜面的柜体上。
Material: Zinc alloy housing.
Finishing: Powder coated or oxidizing treatment.
Structure and feature: Mainly used on 15 °inclined cabinet door.

JL102-1

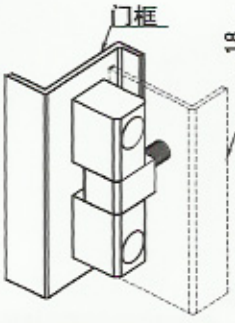

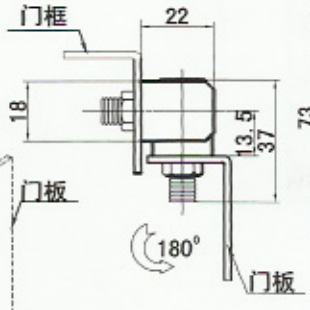

安装示意图
Installation Diagram

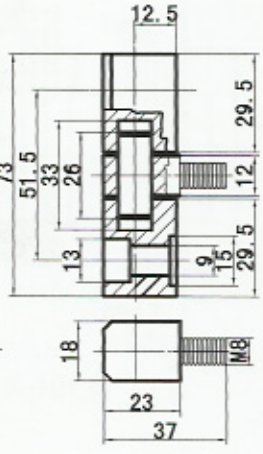

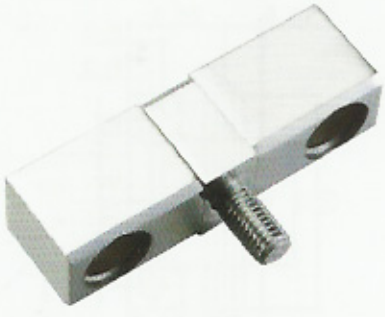

材质：铁质。
表面处理：镀铬。
结构功能：适用于各种外搭门电柜，螺丝大小和螺丝位置由用户决定。
Material: steel.
Finishing: Chrome coating.
Structure and feature: Applicable for outdoor cabinet door, user could decide the size and position of the screw.

JL101-1 JL101-2 JL101-3 JL101-4

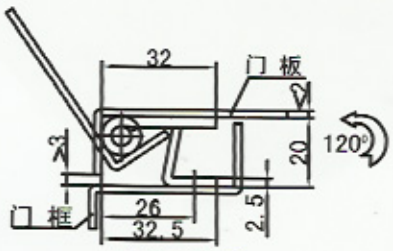

安装示意图
Installation Diagram

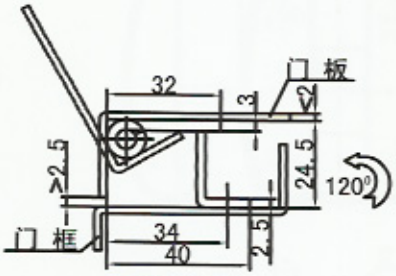

安装示意图
Installation Diagram

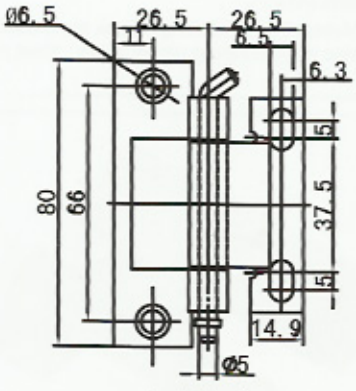

JL101-1

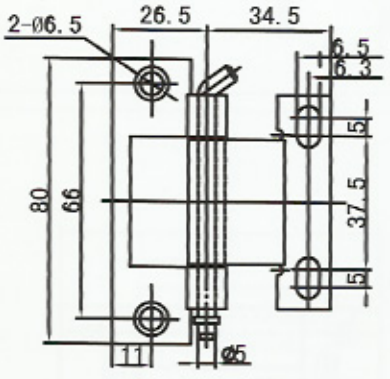

JL101-2



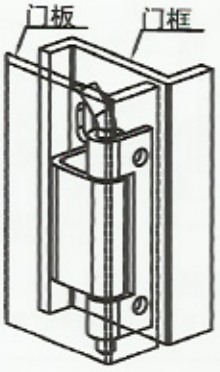

安装示意图
Installation Diagram

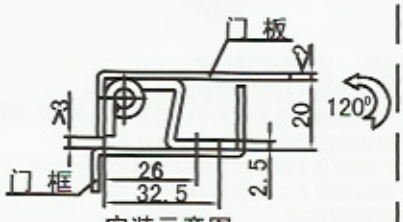

安装示意图
Installation Diagram

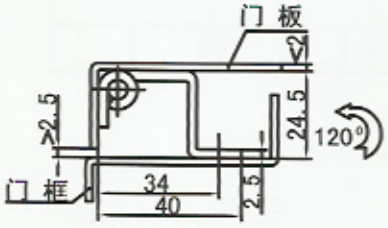

安装示意图
Installation Diagram

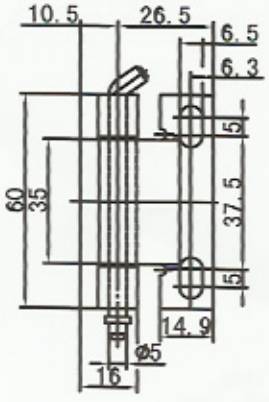

JL101-3

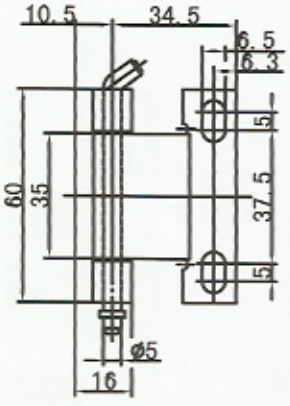

JL101-4

材质及表面处理：镀锌钢铰链;不锈钢铰链。
Material and finishing: Zinc coated steel, stainless steel.

JL102-2

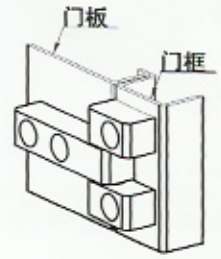

安装示意图
Installation Diagram

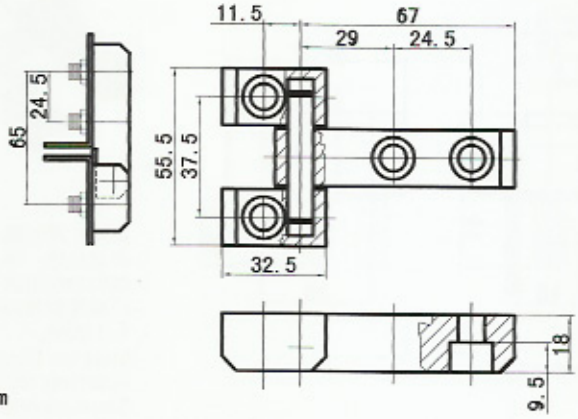

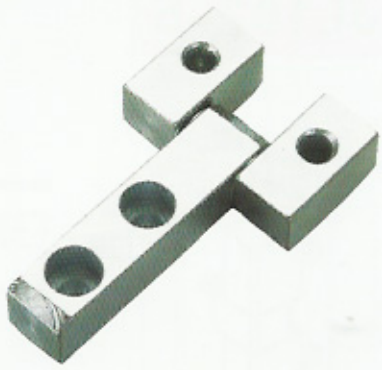

材质：精铁制作。
表面处理：镀锌。
结构功能：适用于大型箱件门板。厚：18mm。
Material: Refined iron.
Finishing: Zinc coating.
Structure and feature: Applicable for huge cabinet door. Thickness: 18mm.

JL102-3

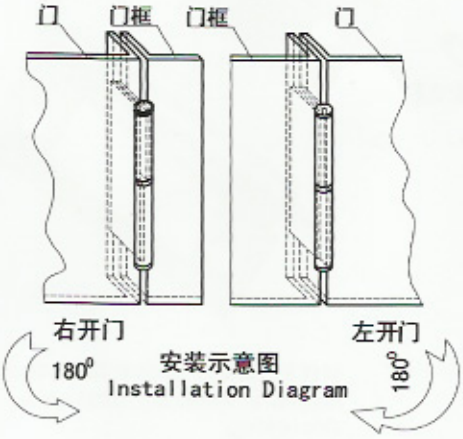

安装示意图
Installation Diagram

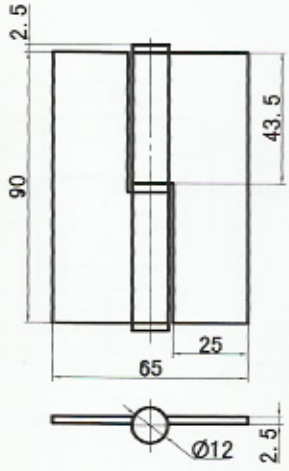



材质：全冷轧钢板。
表面处理：镀锌。
结构功能：可脱卸,分左右开门。
Material: Cold rolled strip steel.
Finishing: Zinc coating.
Structure and feature: Detachable, note RH or LH while ordering.

JL102-4

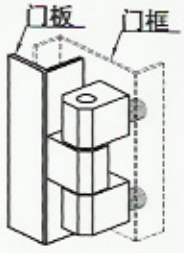

安装示意图
Installation Diagram

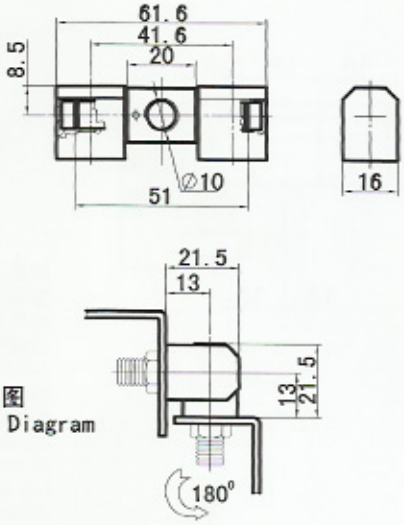



材质：锌合金。
表面处理：喷塑或镀铬。
结构功能：左右开门通用，转动角180°。
Material: Zinc alloy.
Finishing: Powder or chrome coated.
Structure and feature: Applicable for RH and LH, turning angle is about 180°.

JL102-5

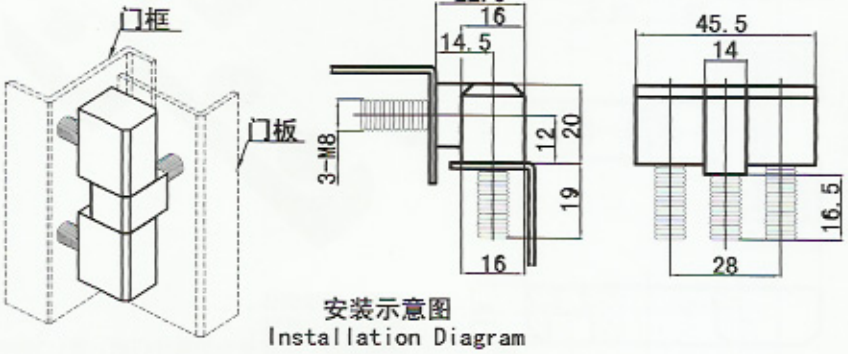

安装示意图
Installation Diagram

中心距 JL102-5A= JL102-5B= (30)



材质：冷扎钢。
表面处理：亮光铬（CP01）。
结构功能用途：明铰链，左右开门通用，门板转动角度约180度，适用门板厚度：1~15MM。
Material: Cold rolled strip steel.
Finishing: Bright chrome coated.
Structure and feature: It mounts outside of the door frame, applicable for RH and LH, turning angle is about 180°. Panel thickness: 1~15mm.

JL102-6

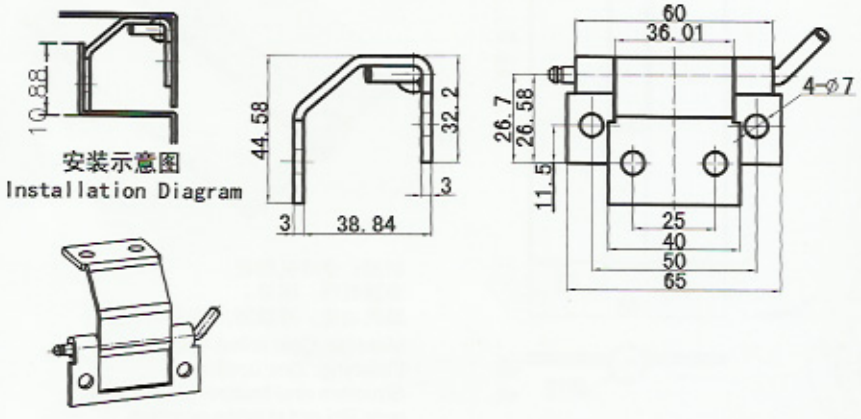

安装示意图
Installation Diagram

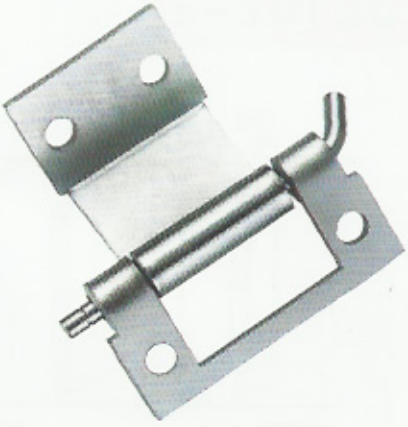

材质及表面处理:Q235表面镀白锌。
Material and finishing: Q235 white zinc coating.

JL102-8

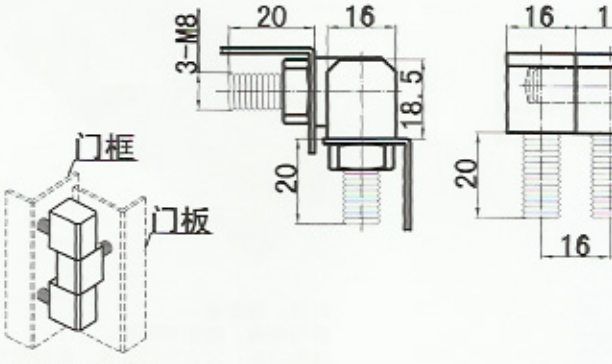

安装示意图
Installation Diagram



材质：冷扎钢。
表面处理：亮光铬（CP01）。
结构功能用途：明铰链，左右开门通用，门板转动角度约180度，适用门板厚度：1~15MM。
Material: Cold rolled strip steel.
Finishing: Bright chrome coated.
Structure and feature: It mounts outside of the door frame, applicable for RH and LH, turning angle is about 180°. Panel thickness: 1~15mm.

JL102A

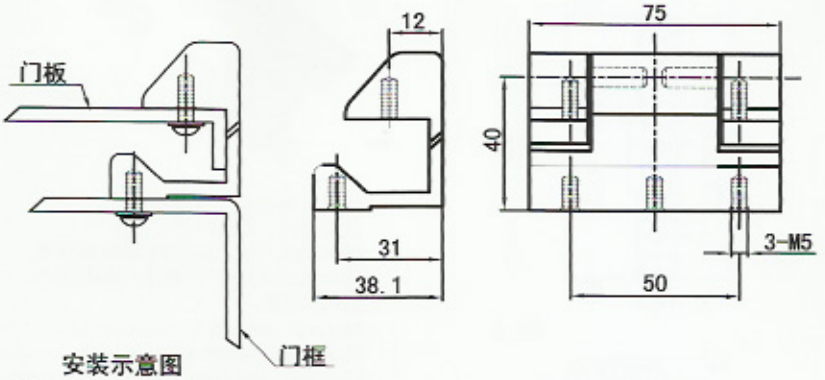

安装示意图
Installation Diagram

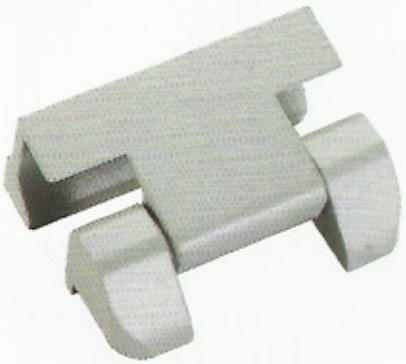

材质及表面处理:锌合金材质表面喷塑。
Material and finishing: Zinc coated steel, powder coated.

JL103

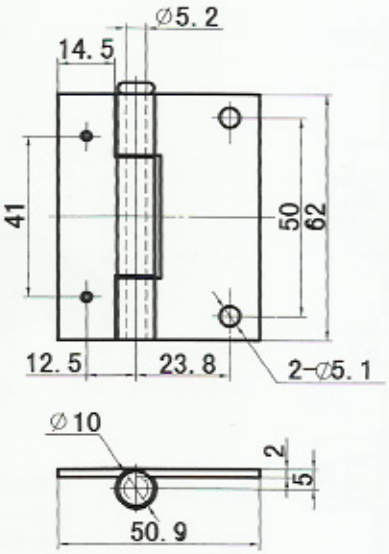



材质及表面处理:Q235表面镀白锌。
Material and finishing: Q235 white zinc coating.

JL125

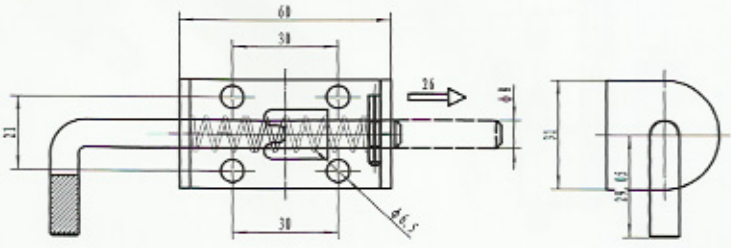



材质及表面处理：304不锈钢铰链。
Material and finish:304 Stainless steel hinge.

JL201-1

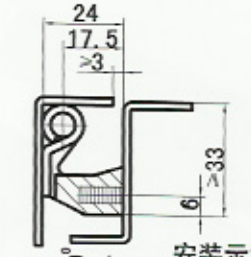

安装示意图
Installation Diagram

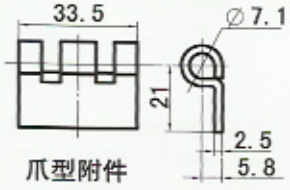

爪型附件

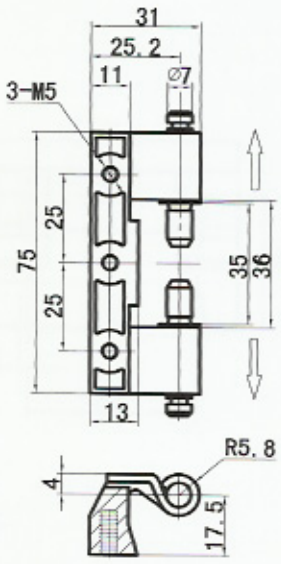



材质：锌合金、钢制钢栓。
表面处理：喷塑喷砂。
结构功能用途：暗铰链,插销靠弹簧钢丝限位,左右开门通用,门板转动角度约120度。

Material: Zinc alloy, stainless steel pin.
Finishing: Sandblasting powder coating.
Structure and feature: The pin is limited by steel wire. Applicable for RH and LH, and cabinet door turning angle is about 120°.

JL201-1A

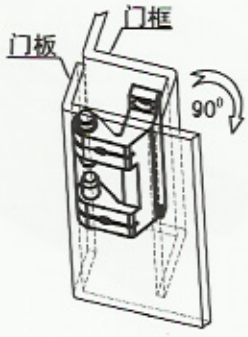

安装示意图
Installation Diagram

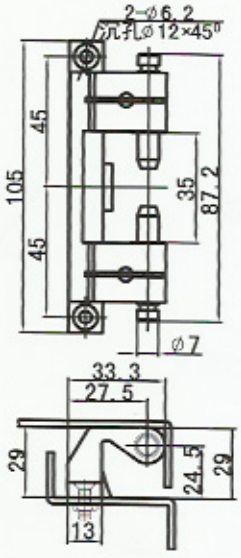



材质及表面处理：镀铬锌合金铰链。
Material and finishing: Chrome plated zinc alloy.

JL201-2

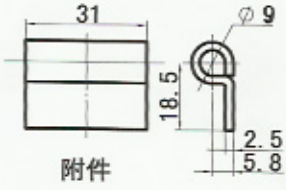

附件

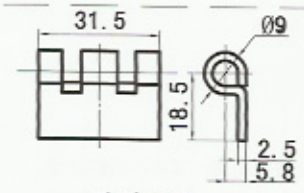

爪型附件

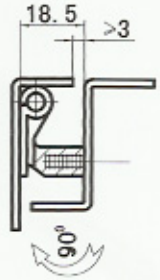

安装示意图
Installation Diagram

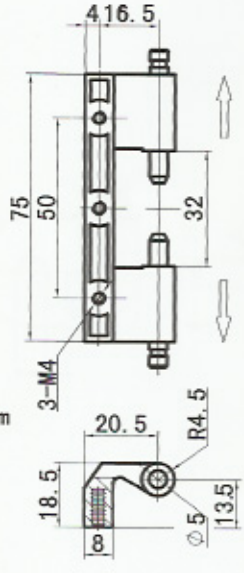



材质及表面处理：黑色锌合金铰链，镀锌钢销子及附件。

Material and finishing: Black powder coated zinc alloy hinge,zinc plated pin and accessories.

JL201-3

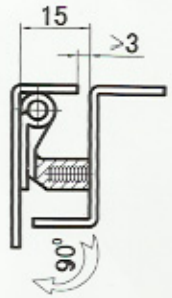

安装示意图
Installation Diagram

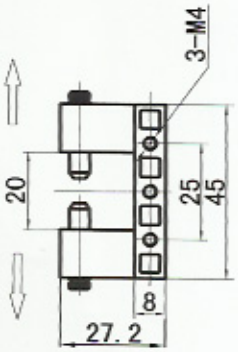

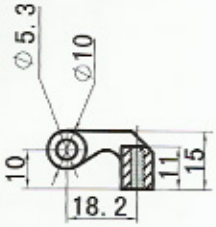



材质及表面处理：黑色锌合金铰链，镀锌钢销子及附件。
Material and finishing: Black powder coated zinc alloy hinge,zinc plated pin and accessories.

JL201-4

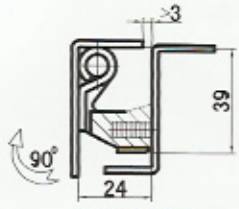

安装示意图
Installation Diagram

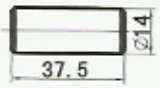

管型附件

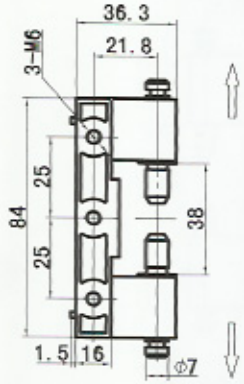



材质及表面处理：黑色锌合金铰链，镀锌钢销子及附件。
Material and finishing: Black powder coated zinc alloy hinge,zinc plated pin and accessories.

JL201-5

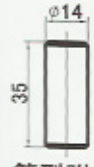

管型附件

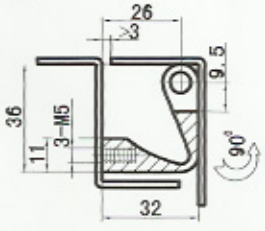

安装示意图
Installation Diagram

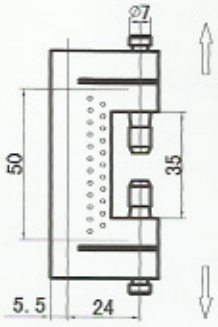

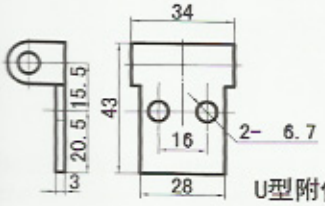

U型附件

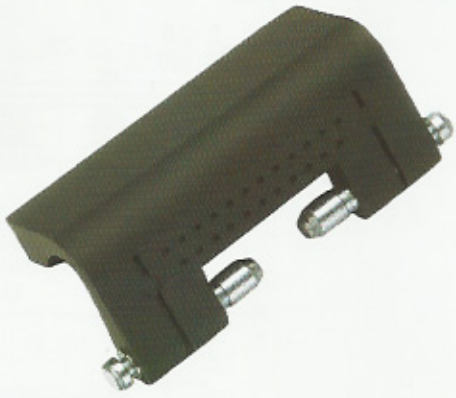

材质及表面处理：黑色锌合金铰链，镀锌钢销子及附件。
Material and finishing: Black powder coated zinc alloy hinge,zinc plated pin and accessories.

JL201-6

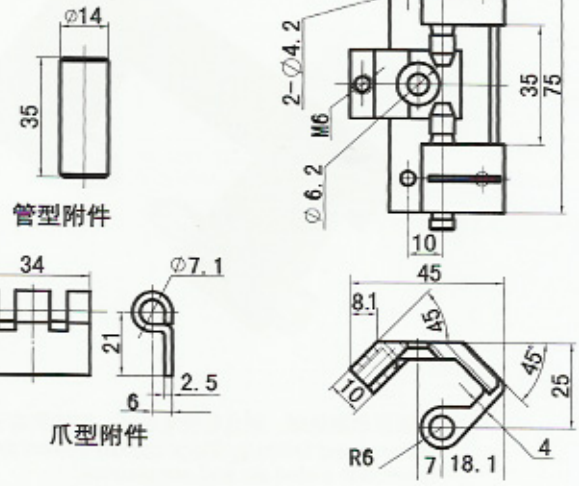



材质及表面处理：黑色锌合金铰链，镀锌钢销子及附件。
Material and finishing: Black powder coated zinc alloy hinge, zinc plated pin and accessories.

JL201-7

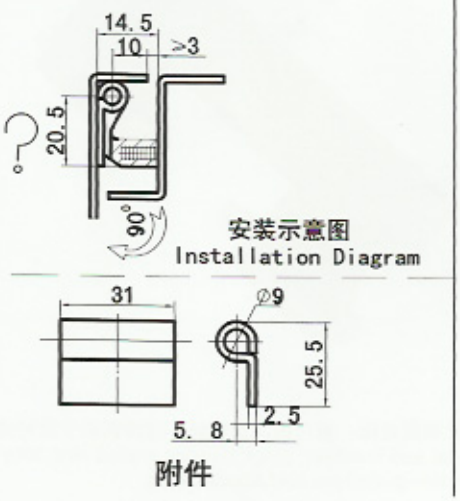

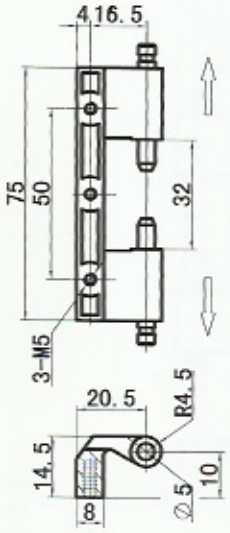

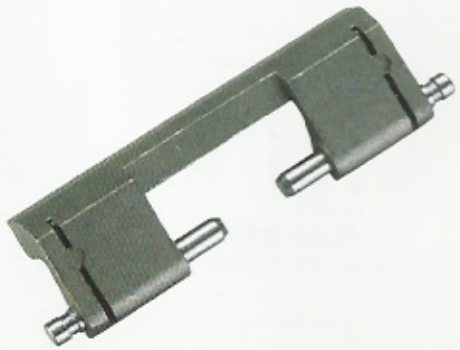

材质及表面处理：黑色锌合金铰链，镀锌钢销子及附件。
Material and finishing: Black powder coated zinc alloy hinge, zinc plated pin and accessories.

JL201-8

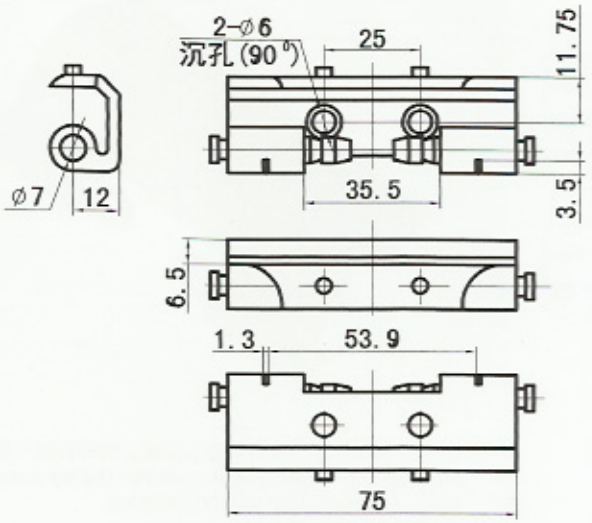



材质及表面处理：黑色锌合金铰链，镀锌钢销子及附件。
Material and finishing: Black powder coated zinc alloy hinge, zinc plated pin and accessories.

JL201-9

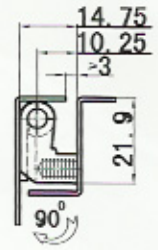

安装示意图
Installation Diagram

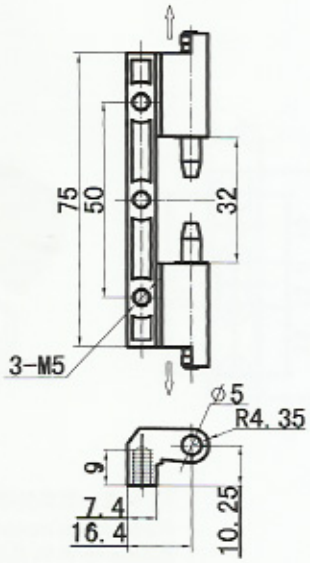



材质及表面处理：黑色锌合金铰链，镀锌钢销子及附件。
Material and finishing: Black powder coated zinc alloy hinge, zinc plated pin and accessories.

JL202-2

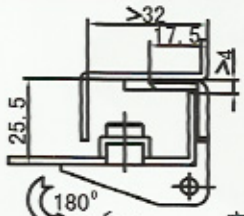

安装示意图
Installation Diagram

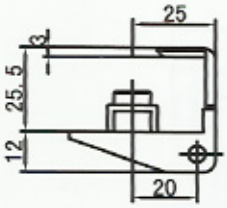

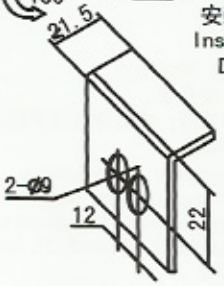

门板开孔

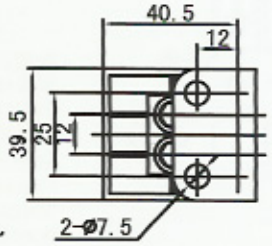



材质及表面处理：孔雀绿锌合金铰链;孔雀绿冷轧钢铰链;镀锌钢压板、螺钉。
Material and finishing: Malachite green zinc alloy or cold rolled strip steel; zinc plated steel plate and screw.

JL203-1



安装示意图
Installation Diagram



CL203-1-Z

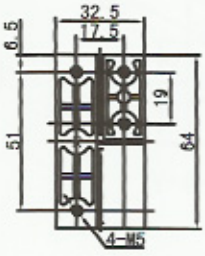

CL203-1-Y





安装示意图
Installation Diagram

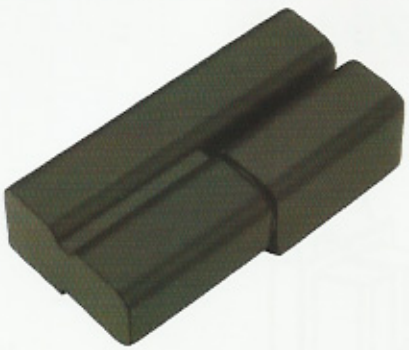

材质：锌合金铰链、尼龙垫片。
表面处理：喷塑、亚光铬。
结构功能用途：明铰链有左右开门之分，Ⅰ型门板转动角度180度；Ⅱ型门板转动角度约120度。
Meterial:Zinc alloy hinge,nyion spacer.
Finishing: Powder, matt chrome plating.
Structure and feature: It mounts inside of the door frame, please note RH or LH while ordering, model I turning angle is about 180°, and model II turning angle is about 120°.

JL203-2

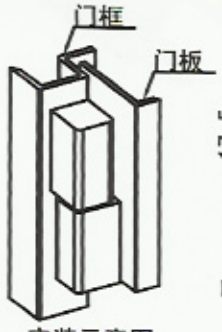

安装示意图
Installation Diagram

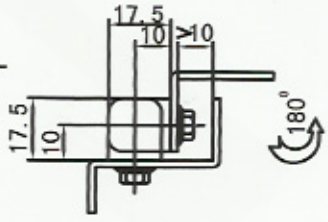

安装示意图
Installation Diagram

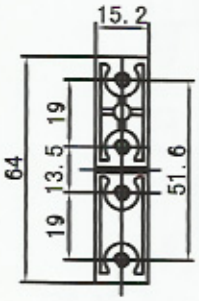



注:材质、表面处理、结构功能及用途请参考JL203-1。
Remark:For material,finish.structure and applications, please refer to JL203-1.

JL203-3

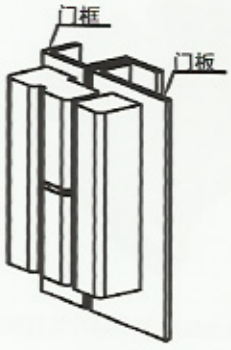

安装示意图
Installation Diagram



CL203-3-Z

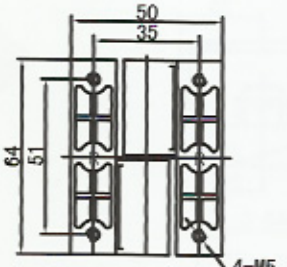

CL203-3-Y





材质：锌合金铰链、尼龙垫片。
表面处理：喷塑、亚光铬。
结构功能用途：明铰链；铰链有左右开门之分，门板转动角度约180度。

Material: Zinc alloy hinge, nylon spacer.
Finishing: Powder, matt chrome coated.
Structure and feature: It mounts outside of the door frame, applicable for RH and LH, turning angle is about 180°.

JL203-4



安装示意图
Installation Diagram



CL203-4-Z

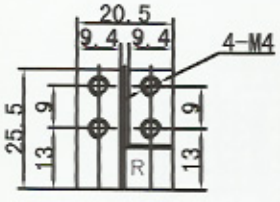

CL203-4-Y

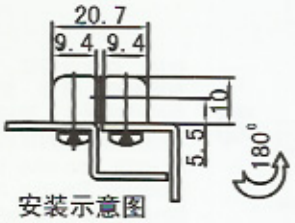

安装示意图
Installation Diagram



材质：锌合金，尼龙垫片。
表面处理：喷塑、亚光铬。
结构功能用途：明铰链；铰链有左右开门之分，门板转动角度约180度。

Material: Zinc alloy housing, nylon spacer.
Finishing: Powder, matt chrome coated.
Structure and feature: It mounts inside of the door frame, applicable for RH and LH, turning angle is about 180°.

JL204-1 JL204-2

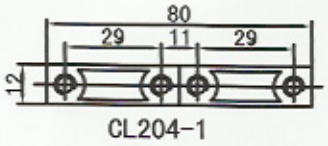

CL204-1

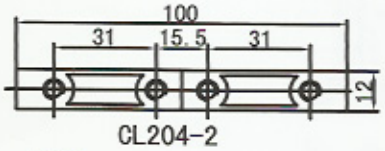

CL204-2

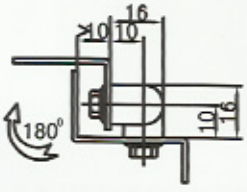



安装示意图
Installation Diagram

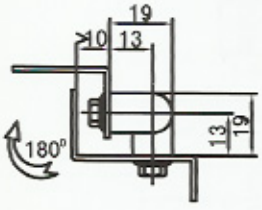



材质：锌合金动静铰链、镀镍钢销子。
表面处理：亮光铬。
结构功能用途：明铰链；左右开门通用，门板转动角度约90度。

Material: Zinc alloy housing, nickel plated steel pin.
Finishing: Bright chrome plated.
Structure and feature: It mounts inside of the door frame, applicable for RH and LH, turning angle is about 90°.

JL204A



安装示意图
Installation Diagram

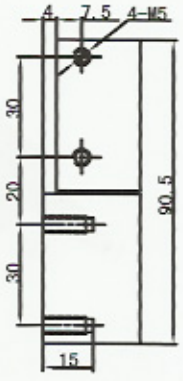

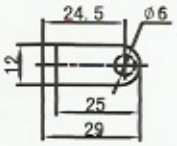



材质及表面处理：黑色锌合金铰链体,镀镍钢销子。

Material and finishing: Black powder zinc alloy hinge,nickel plated steel pin.

JL205

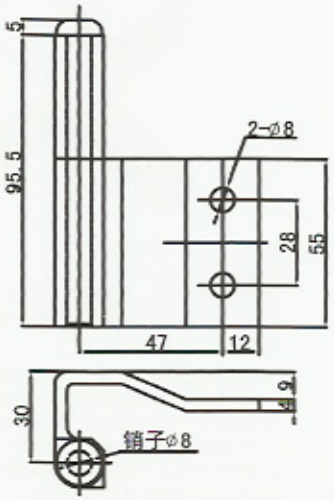

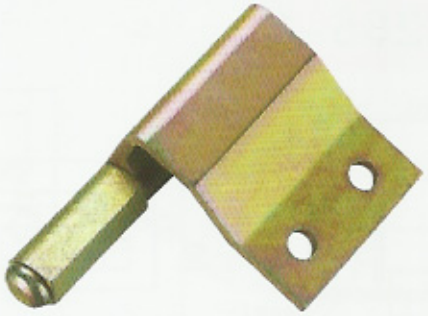

材质：方块支架锌合金，上部铁块可焊接。
结构功能用途：结合JL202及JL203的综合设计，可适用于较大柜门的承受力,且装卸方便,有左右开门区分。

Material: Zinc square mount, the steel plate could be welded with the mount.
Structure and feature: Combined the advantages of JL202 and JL203, applicable for supporting heavy cabinet door, and it is easy to install,please note RH or LH while ordering.

JL205-1

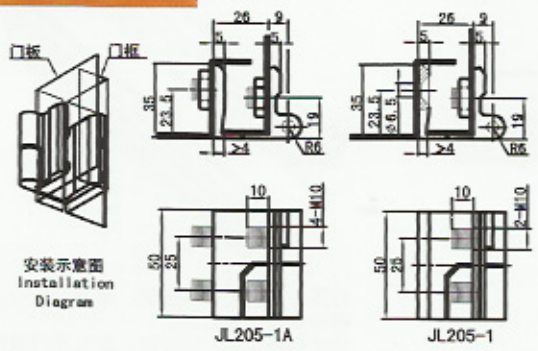

产品型号（MODEL）	特征描述(SPECIFICATION)
JL205-1-Y	单面螺柱 右开门
JL205-1-Z	单面螺柱 左开门
JL205-1A-Y	双面螺柱 右开门
JL205-1A-Z	双面螺柱 左开门

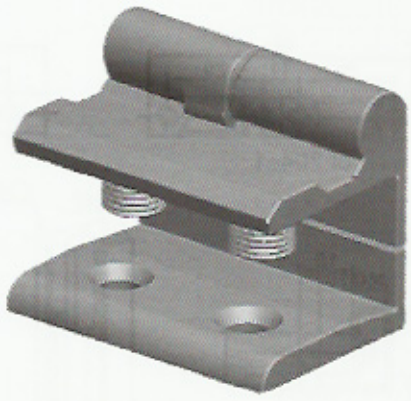

材质及表面处理：黑色锌合金铰链体,镀镍钢销子。
Material and finishing: Black powder zinc alloy hinge,nickel plated steel pin.

JL205-3

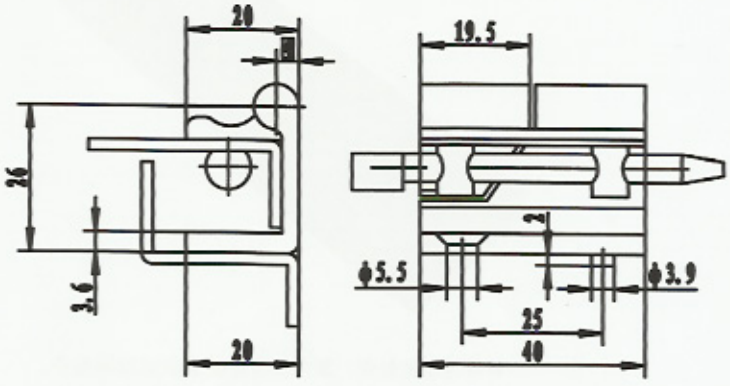



材质及表面处理:黑色锌合金铰链;铜垫片;
尼龙销子;有左右开门区分。
Material and finishing: Black powder zinc alloy hinge, copper spacer,nylon pin, please note RH or LH while ordering.

JL206-1

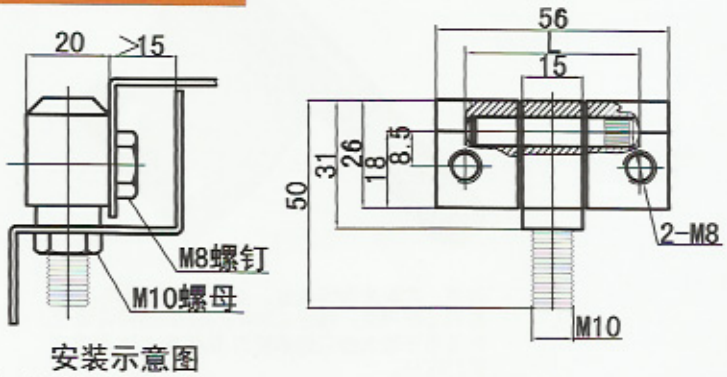

安装示意图
Installation Diagram

产品型号（MODEL）	中心距L
JL206-1	40
JL206-2	42



材质：普通冷轧钢。
表面处理：亮光铬。
结构功能用途：明铰链；左右开门通用，
门板转动角度约180度；适用于门板厚度：
1.2~1.5mm。

Material: Cold rolled strip steel.
Finishing: Bright chrome plated.
Structure and feature: It mounts outside of the door frame, applicable for RH and LH, turning angleis about 180°; applicable door thickness: 1.2~1.5mm.

JL206A

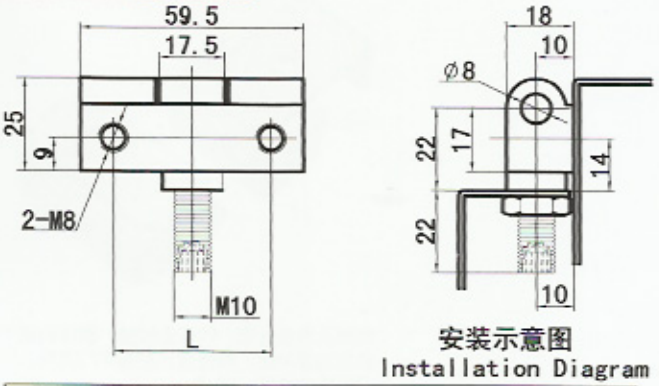

安装示意图
Installation Diagram

产品型号（MODEL）	中心距 L
JL206A-1	42
JL206A-2	40
JL206A-3	36



材质：锌合金铰链，镶嵌铁螺钉、镀锌钢销子。
表面处理：亮光铬。
结构功能用途：明铰链；左右开门通用，门板转动角度约180度；适用于门板厚度：1~10mm。
Material: Zinc alloy hinge, mounted steel screw, zinc coated steel pin.
Finishing: Bright chrome plated.
Structure and feature: It mounts outside of the door frame, applicable for RH and LH, turning angle is about 180°; applicable door thickness: 1~10mm.

JL206B

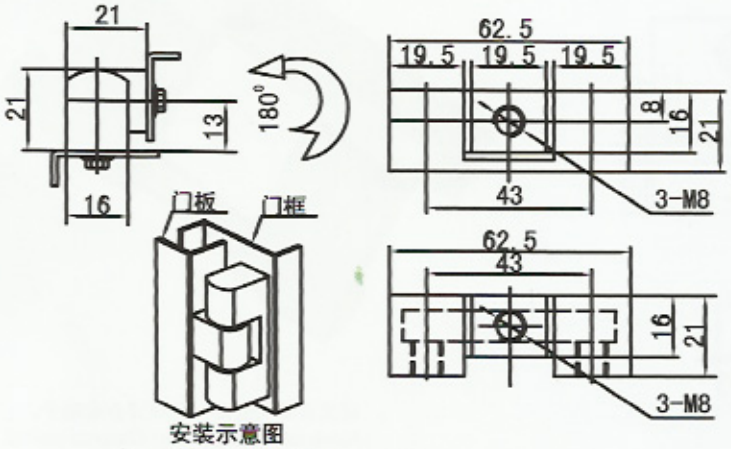

安装示意图
Installation Diagram



材质：锌合金铰链，镶嵌铁螺钉、镀锌钢销子。
表面处理：亮光铬。
结构功能用途：明铰链；左右开门通用，门板转动角度约180度；适用于门板厚度：1~10mm。
Material: Zinc alloy hinge, mounted steel screw, zinc coated steel pin.
Finishing: Bright chrome plated.
Structure and feature: It mounts outside of the door frame, applicable for RH and LH, turning angle is about 180°; applicable door thickness: 1~10mm.

JL206D

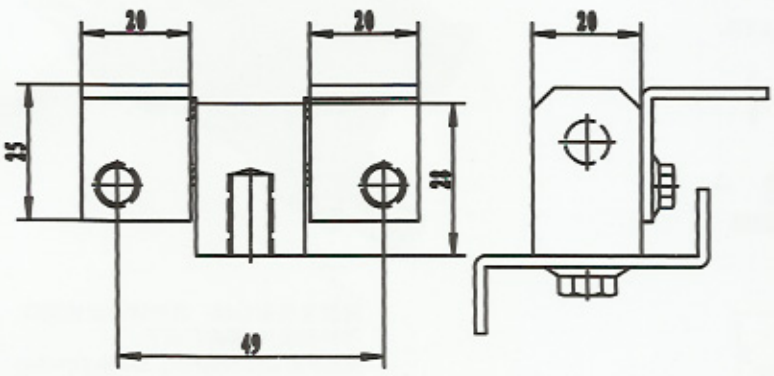



材质：不锈钢。
表面处理：亮光铬(CPO1)。
结构功能用途：明铰链；左右开门通用，门板转动角度约180度；适用于门板厚度：1~15mm。
Material: stainless steel.
Finishing: Bright chrome plated (CP01).
Structure and feature: It mounts outside of the door frame, applicable for RH and LH, turning angle is about 180°; applicable door thickness: 1~15mm.

JL207

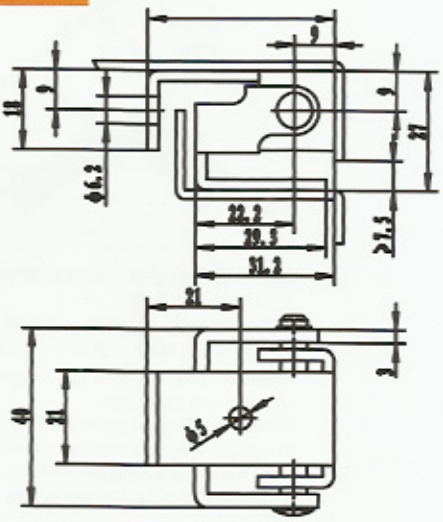



材质及表面处理：锌合金铰链，镀锌钢销子。
结构功能用途：暗铰链；左右开门通用，
门板转动角度：90度。
Material and finishing: Zinc alloy hinge, zinc coated steel pin.
Structure and feature: It mounts inside of the door frame, applicable for RH and LH, turning angle is about 90°.

JL207A

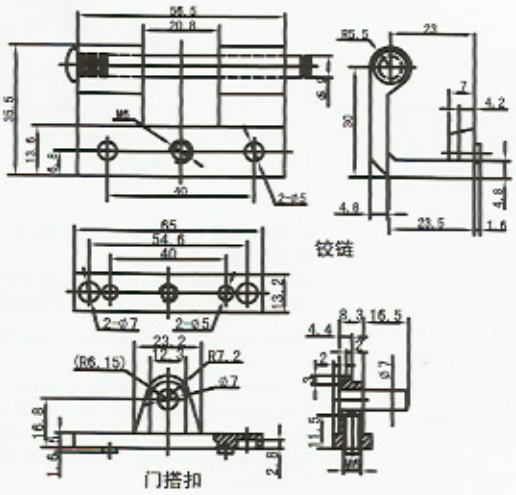

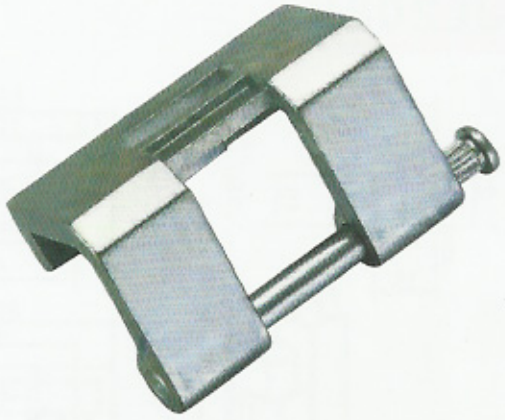

材质及表面处理：镀铬锌合金销子。
Material and finishing: Chrome plated zinc alloy pin.

JL207B

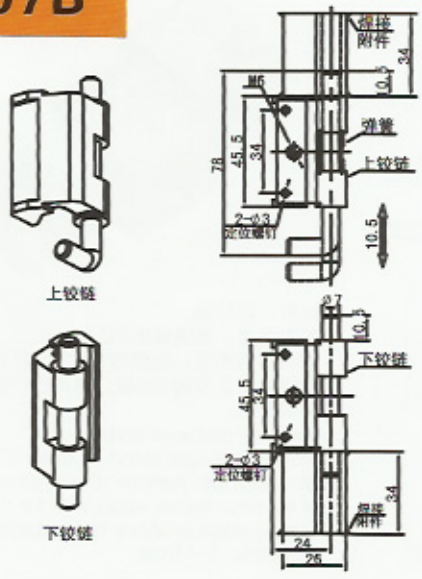

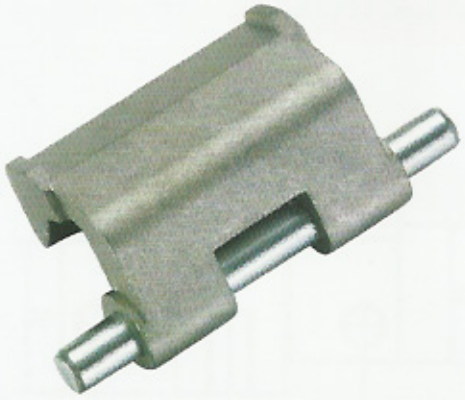

材质及表面处理：黑色锌合金铰链体，
不锈钢垫片,镀镍钢销子。
Material and finishing: Black powder zinc alloy hinge, stainless steel spacer, nickel plated steel pin.

JL209

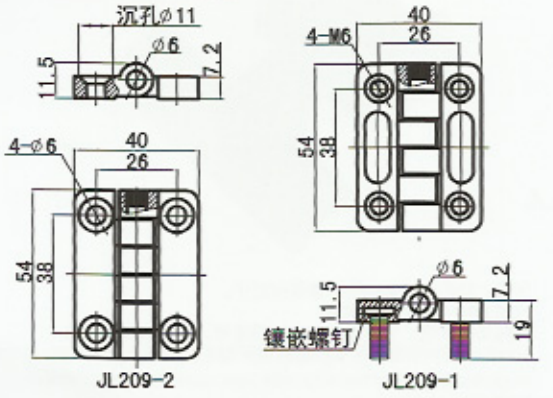

产品型号（MODEL）	特征描述（SPECICATION）
JL209-1	无螺钉
JL209-2	带螺钉



材质：锌合金动静铰链，分不锈钢和镀镍钢销子种，镀镍镶嵌螺钉。
表面处理：亚光铬、喷塑。
结构功能用途：明铰链；左右开门通用，门板转动角度约180度；适用于门板厚度：1.2~6mm。
Material: Zinc alloy housing, stainless steel or nickel plated steel pin,nickel plated screw.
Finishing: Powder, matt chrome coated.
Structure and feature: It mounts outside of the door frame, applicable for RH and LH, turning angle is about 180°; applicable door thickness: 1.2~6mm.

JL210

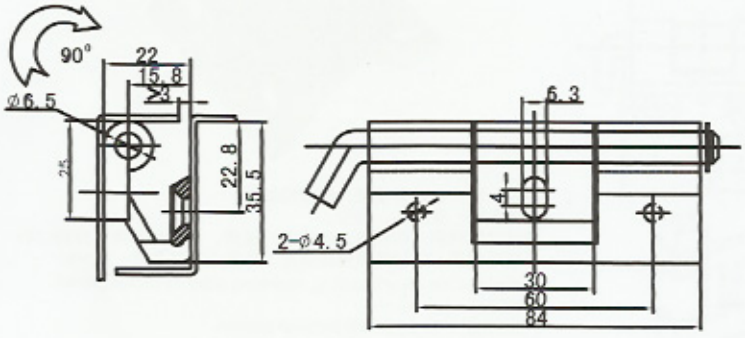



材质及表面处理：黑色锌合金铰链;镀镍铜销子;尼龙垫套。
Material and finish:Black powder coated ZDC hinge; Nickle-plating steel shaft;PA set.

JL211

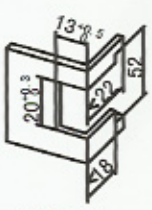

门板开孔
Preparing Door Hole

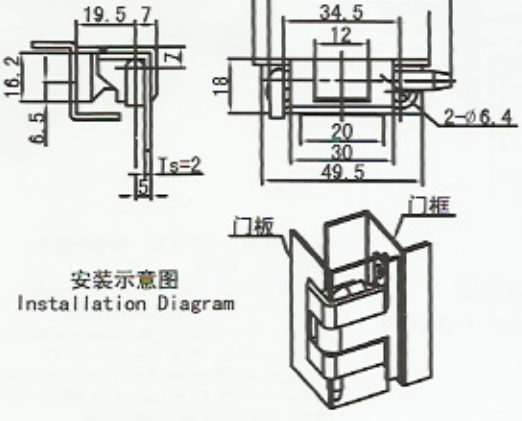

安装示意图
Installation Diagram



材质：锌合金动静铰链，镀镍铜销子。
表面处理：亚光铬、喷塑。
结构功能用途：明铰链；左右开门通用，门板转动角度约180度；门板靠销子与动铰链内侧面固定。适用门板厚度：2mm。
Material: Zinc alloy housing, stainless steel or nickel plated steel pin.
Finishing: Powder, matt chrome coated.
Structure and feature: It mounts outside of the door frame, applicable for RH and LH, turning angle is about 180°; the cabinet door is fixed by pin and hinge on inner frame. Applicable door thickness is 2mm.

JL211A

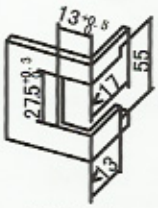

门板开孔
Preparing
Door Hole

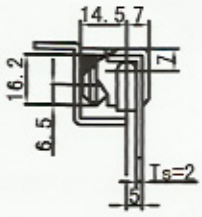

安装示意图
Installation Diagram

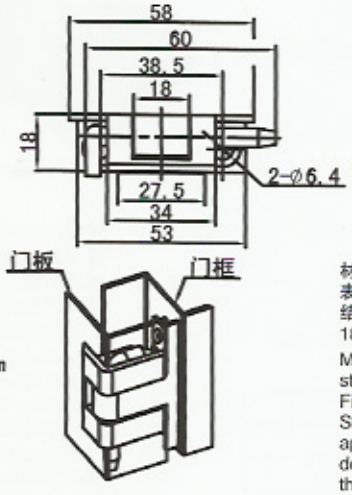



材质：锌合金动静铰链，镀镍铜销子。
表面处理：亚光铬、喷塑。
结构功能用途：明铰链；左右开门通用，门板转动角度约180度；门板靠销子与动铰链内侧面固定。适用于门板厚度：2mm。
Material: Zinc alloy housing, stainless steel or nickel plated steel pin.
Finishing: Powder, matt chrome coated.
Structure and feature: It mounts outside of the door frame, applicable for RH and LH, turning angle is about 180°; the cabinet door is fixed by pin and hinge on inner frame. Applicable door thickness is 2mm.

JL212

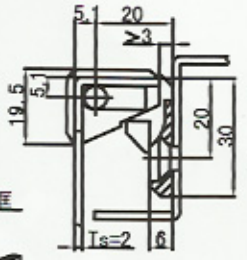

安装示意图
Installation Diagram



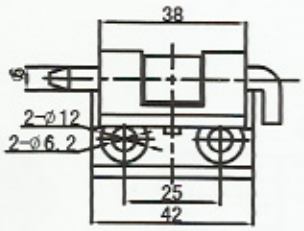



门板开孔
Preparing Door Hole



材质：锌合金动静铰链，镀镍铜销子。
表面处理：亚光铬、喷塑。
结构功能用途：明铰链；左右开门通用，门板转动角度约180度；门板靠销子与动铰链内侧面固定。适用于门板厚度：2mm。
Material: Zinc alloy housing, stainless steel or nickel plated steel pin.
Finishing: Powder, matt chrome coated.
Structure and feature: It mounts outside of the door frame, applicable for RH and LH, turning angle is about 180°; the cabinet dooris fixed by pin and hinge on inner frame. Applicable door thickness is 2mm.

JL214

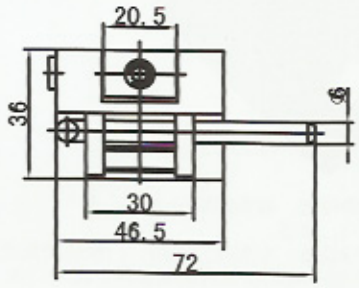

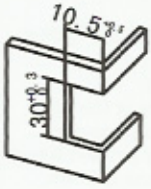

门板开孔
Preparing
Door Hole

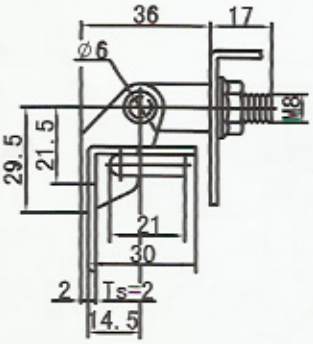

安装示意图
Installation Diagram



材质：锌合金动静铰链，镀镍铜销子。
表面处理：无光黑。
结构功能用途：明铰链；左右开门通用，门板转动角度约180度；门板靠销子与动铰链内侧面固定。
Material: Zinc alloy hinge, nickel plated steel pin.
Finishing: Mate black powder coated.
Structure and feature: It mounts outside of the door frame, applicable for RH and LH, turning angle is about 180°; the cabinet door is fixed by pin and hinge on inner frame.

JL214-1

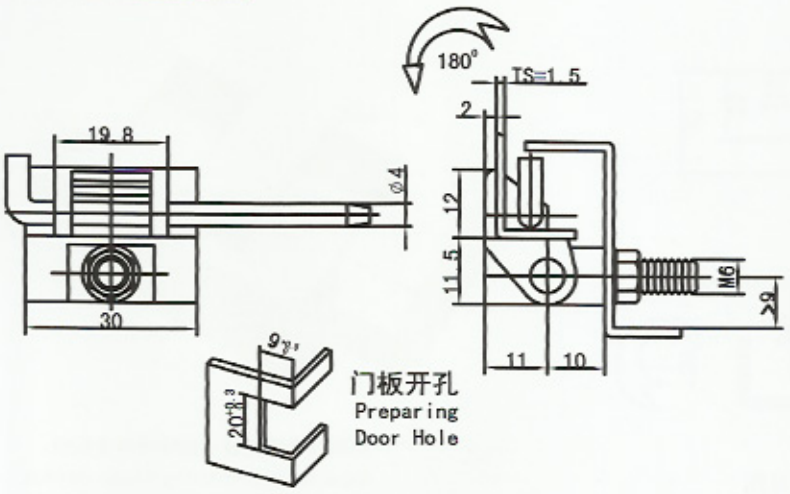

门板开孔
Preparing
Door Hole



材质及表面处理：黑色锌合金铰链体,镀镍钢销子。
Material and finishing: Black powder zinc alloy hinge, nickel plated steel pin.

JL217

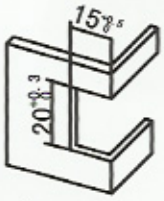

门板开孔
Preparing
Door Hole

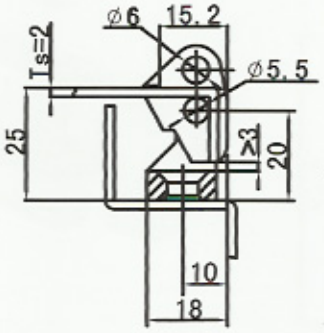

安装示意图
Installation Diagram

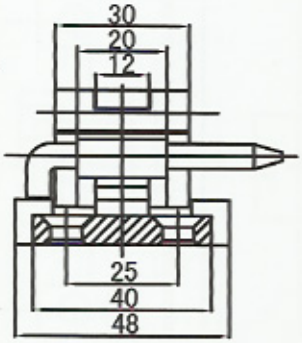



材质：锌合金动静铰链，镀镍钢销子。
表面处理：喷塑。
结构功能用途：明铰链；左右开门通用，门板转动角度约180度；门板靠销子与动铰链内侧面固定。
Material: Zinc alloy hinge, nickel plated steel pin.
Finishing: Powder coated.
Structure and feature: It mounts outside of the door frame, applicable for RH and LH, turning angle is about 180°; the cabinet door is fixed by pin and hinge on inner frame.

JL217A

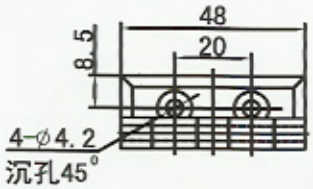

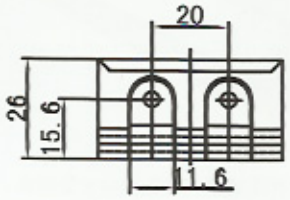

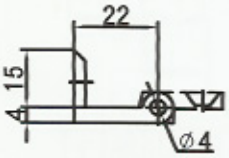

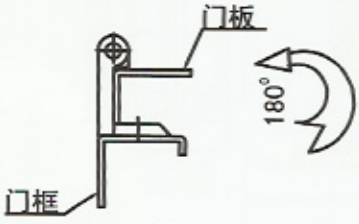

安装示意图
Installation Diagram



材质及表面处理：锌合金铰链,表面镀锌或黑色喷塑。
Material and finishing: zinc alloy hinge, black powder or zinc plated.

JL218

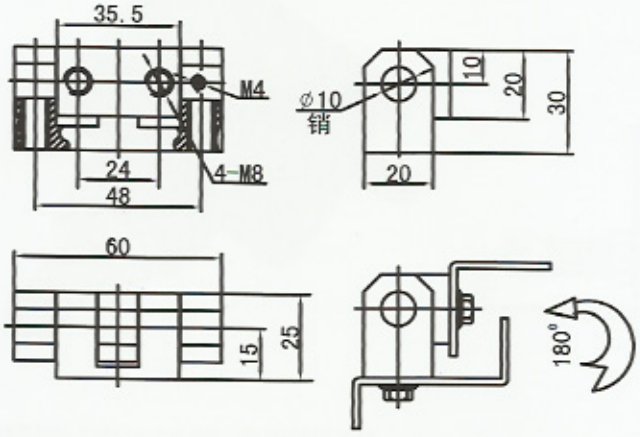

安装示意图
Installation Diagram



材质及表面处理：镀铬锌合金铰链。
Material and finishing:Bright chrome plating ZDC hinge,with embed screw.

JL218A

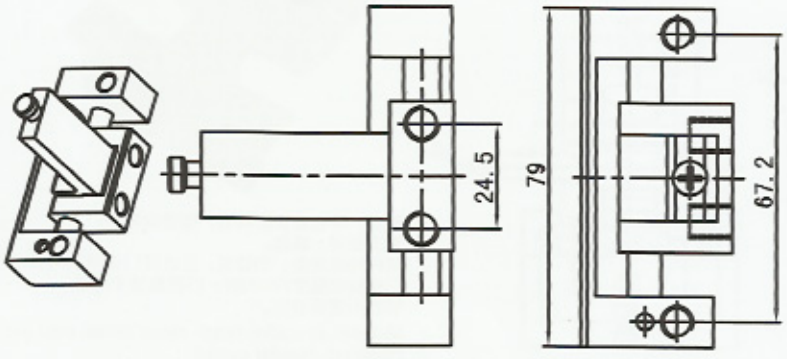

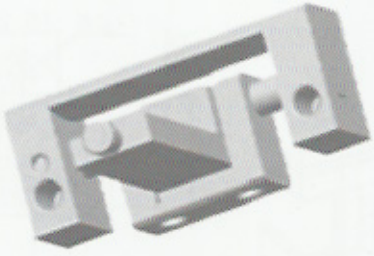

材质:锌合金、钢制钢销;
表面处理：喷塑、喷砂。
Material: Zinc alloy, steel pin.
Finishing: Powder coated, sandblasting.

JL219

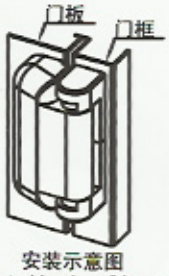

安装示意图
Installation Diagram



JL219-2
JL219-4

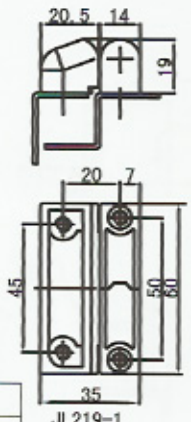

JL219-1
JL219-3

产品型号（MODEL）	特征描述(SPECIFICATION)
JL219-1	常规无阻尼
JL219-2	常规无阻尼
JL219-3	阻尼式铰链 Damped
JL219-4	阻尼式铰链 Damped



材质及表面处理：黑色锌合金铰链体，
镀镍钢销子。
Material and finishing: Black powder zinc alloy hinge, nickel plated steel pin.

JL219A



安装示意图
Installation Diagram

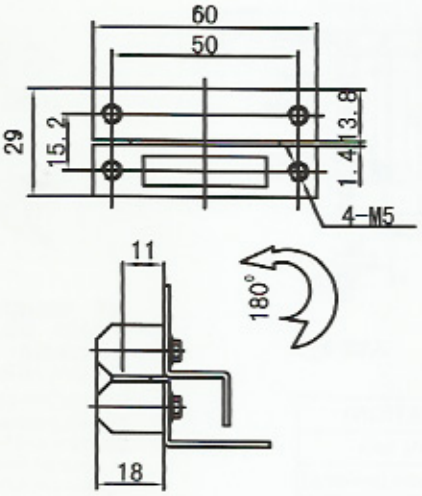



材质及表面处理：黑色或亚光锌合金铰链。
Material and finishing: Black or matt powderzinc alloy hinge.

JL219B



安装示意图
Installation Diagram

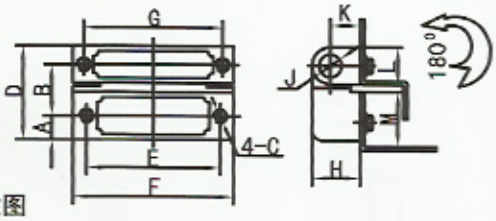

注:有密封要求时请另说明,螺钉孔部位可配密封圈

产品型号（MODEL）	结构	A	B	C	D	E	F	G	H	J	K	L	M
JL219B-1	常规无阻尼/Undamped	8	20	M5	35	45	60	50	18	8	11	14	18
JL219B-1R	阻尼式铰链/Damped	8	20	M5	35	45	60	50	18	8	11	14	18
JL219B-2	常规无阻尼/Undamped	4	13	M4	22	22	30	22	13	5	8	10	9
JL219B-2R	阻尼式铰链/Damped	4	13	M4	22	22	30	22	13	5	8	10	9
JL219B-3	常规无阻尼/Undamped	4	18.5	M4	27.5	22	30	22	13	5	8	10	14.5
JL219B-3R	阻尼式铰链/Damped	4	18.5	M4	27.5	22	30	22	13	5	8	10	14.5



材质及表面处理：黑色锌合金铰链体，镀镍钢销子。
Material and finishing: Black powder zinc alloyhinge, nickel plated steel pin.

JL222

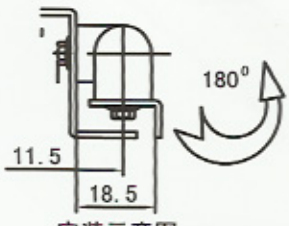

安装示意图

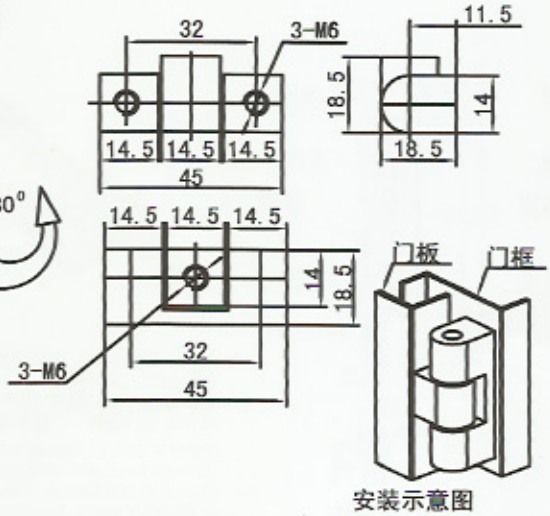

安装示意图
Installation Diagram



材质：锌合金静铰链，不锈钢销子,塑料垫圈。
表面处理：麻面黑,亚光铬。
结构功能用途：明铰链；左右开门通用，门板转动角度约180度；门板靠销子与动铰链内侧面固定。
Material: Zinc alloy hinge, stainless steel pin, plastic spacer.
Finishing: Black powder, matt chrome coated.
Structure and feature: It mounts inside of the door frame, applicable for RH and LH, turningangle is about 180°; the cabinet door is fixed by pin and hinge on inner frame.

JL225

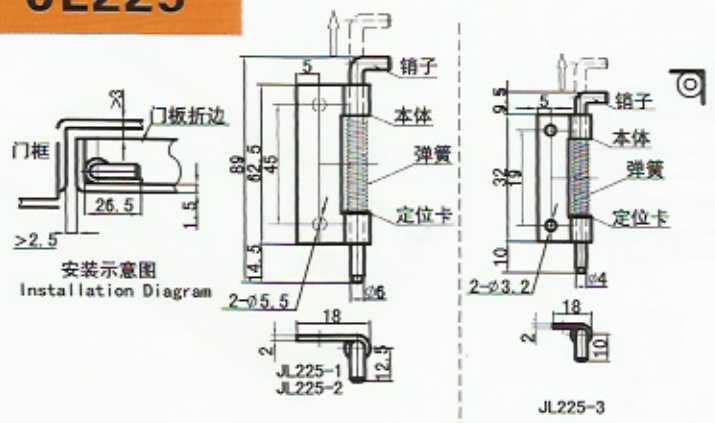

产品型号（MODEL）	特征描述(SPECIFICATION)
JL225-1	带安装孔/With installing hole
JL225-2	无安装孔（焊接）/Without hole (welding)



材质：镀锌铰链，不锈钢弹簧。
表面处理：镀彩锌。
结构功能用途：插销式暗铰链；调换插销方向可实现左右开门通用，门板转动角度：180度。

Meterial:Zinc plated steel hinges,stainless steel spring.
Surface treament:color zinc plated.
Structure and feature: This hinge with pin mounts inside of the door frame, turning the direction of the pin to fit for RH and LH, turning angle is about 180°

JL225-4

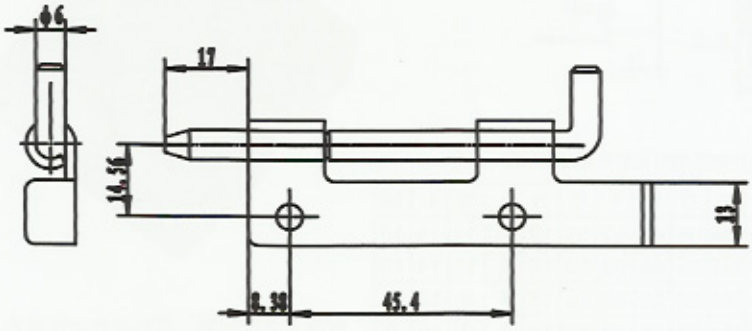

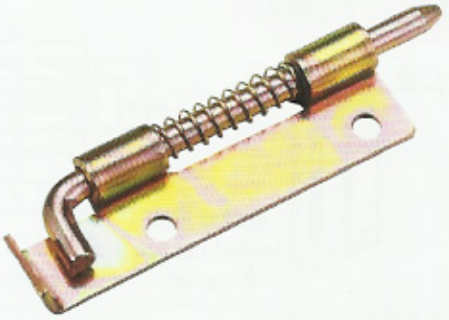

材质：镀锌铰链，不锈钢弹簧。
表面处理：镀彩锌。
结构功能用途：插销式暗铰链；调换插销方向可实现左右开门通用，门板转动角度：180度。

Meterial:Zinc plated steel hinges,stainless steel spring.
Surface treament:color zinc plated.
Structure and feature: This hinge with pin mounts inside of the door frame, turning the direction of the pin to fit for RH and LH, turning angle is about 180°

JL225A

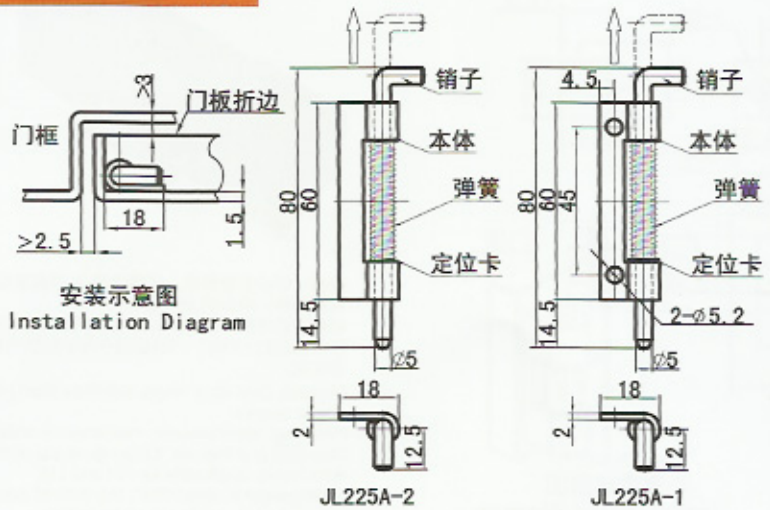



材质：镀锌铰链，不锈钢弹簧。
表面处理：镀彩锌。
结构功能用途：插销式暗铰链；调换插销方向可实现左右开门通用，门板转动角度：180度。

Meterial:Zinc plated steel hinges,stainless steel spring.
Surface treament:color zinc plated.
Structure and feature: This hinge with pin mounts inside of the door frame, turning the direction of the pin to fit for RH and LH, turning angle is about 180°

JL230



门板开孔
Preparing Door Hole

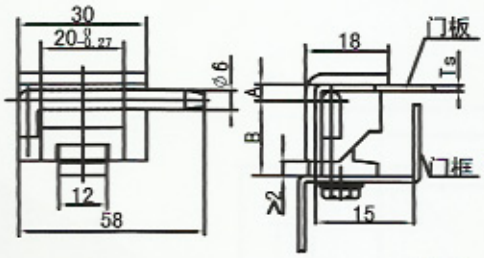

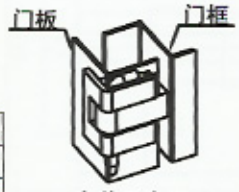

安装示意图
Installation Diagram

产品型号（MODEL）	门板厚度(Ts)	A	B
JL230-1	1.5	4.6	15
JL230-2	2	2	15
JL230A-1	1.5	4.6	17
JL230A-2	2	5.1	17



材质及表面处理：黑色锌合金铰链体,镀镍钢销子。
Material and finishing: Black powder zinc alloy hinge, nickel plated steel pin.

JL230B



安装示意图
Installation Diagram

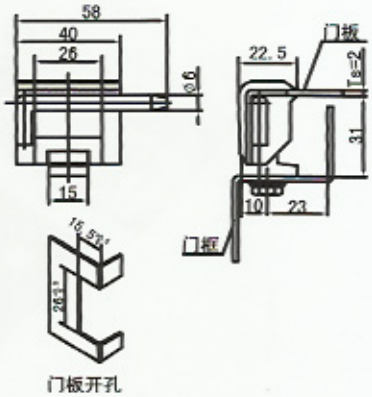

门板开孔

序号	零件名称	尺寸L
1	尼龙销（短）	57
2	尼龙销（长）	78



材质及表面处理：黑色锌合金铰链体,镀镍钢销子。
Material and finishing: Black powder zinc alloy hinge, nickel plated steel pin.

JL233



安装示意图
Installation Diagram

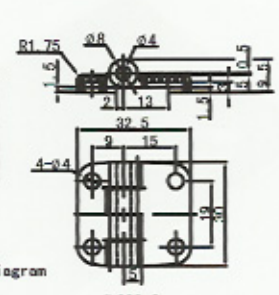

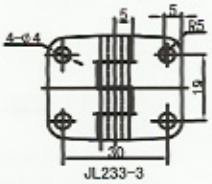

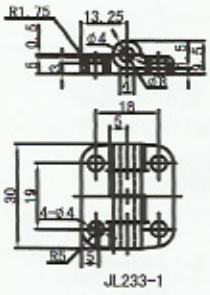





材质及表面处理：黑色锌合金铰链体,镀镍钢销子。
Material and finishing: Black powder zinc alloy hinge, nickel plated steel pin.

JL233-3A-2

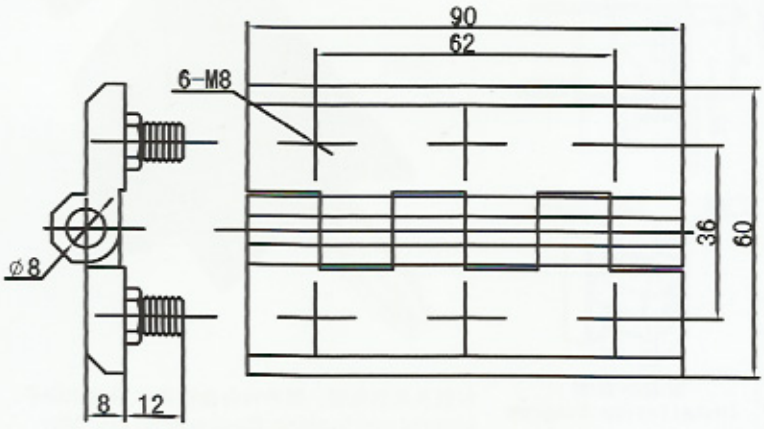



材质及表面处理：锌合金。
Material and finishing: Zinc alloy hinge.

JL233A-1 JL233A-B



安装示意图
Installation Diagram

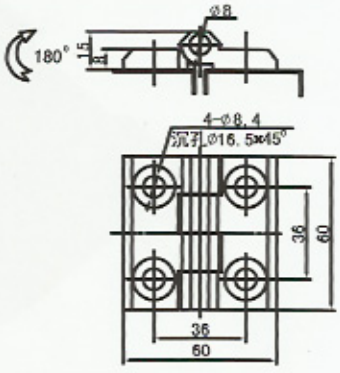

产品型号（MODEL）	门板厚度(Ts)
JL233A-1	锌合金型/Zinc alloy
JL233A-B	不锈钢型/Stainless steel



材质及表面处理:不锈钢铰链,锌合金铰链.
Material and finishing: Stainless steel, zinc alloy.

JL233A-2

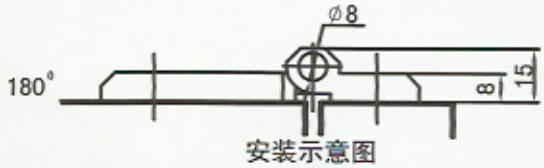

安装示意图
Installation Diagram

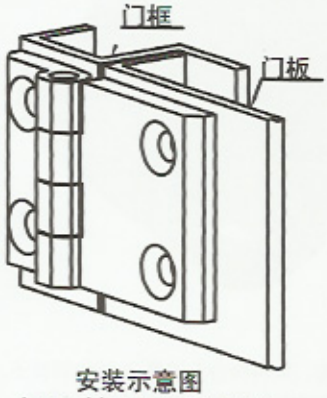

安装示意图
Installation Diagram

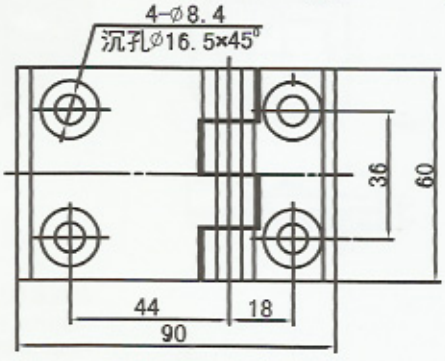



材质及表面处理：黑色锌合金铰链体，
镀镍钢销子。
Material and finishing: Black powder zinc alloy hinge,nickel plated steel pin.

JL233A-3

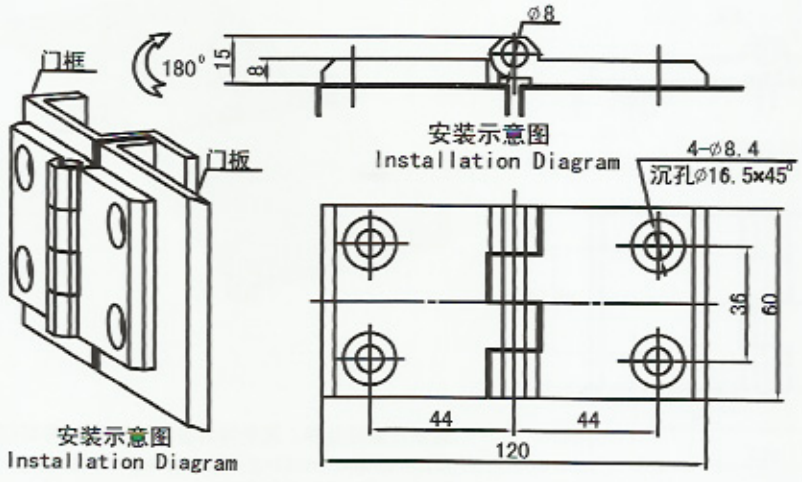



材质及表面处理：黑色锌合金铰链体，镀镍钢销子。
Material and finishing: Black powder zinc alloy hinge, nickel plated steel pin.

JL233B-1

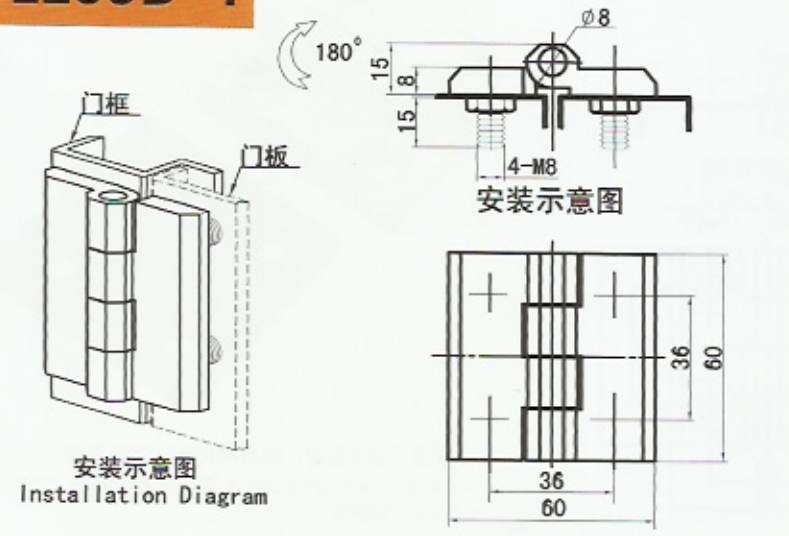



材质及表面处理：黑色锌合金铰链体，带嵌件螺钉。
Material and finishing: Black powder zinc alloy hinge with embedded screw.

JL233B-2

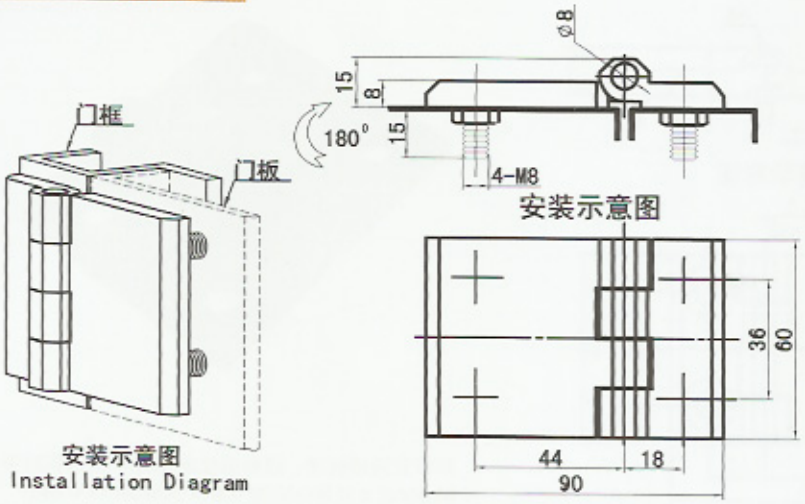



材质及表面处理：黑色锌合金铰链体，带嵌件螺钉。
Material and finishing: Black powder zinc alloy hinge with embedded screw.

JL233B-3

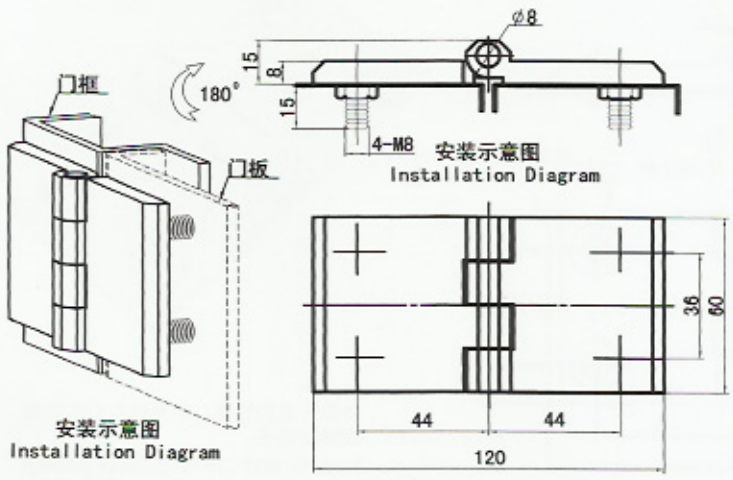

安装示意图
Installation Diagram



材质及表面处理：黑色锌合金铰链体,带嵌件螺钉。
Material and finishing: Black powder zinc alloy hinge with embedded screw.

JL233C-1

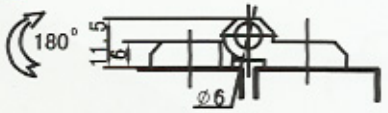

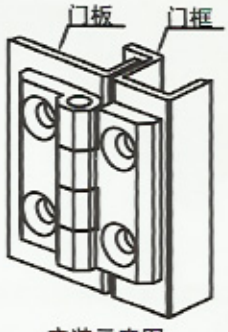

安装示意图
Installation Diagram

安装示意图

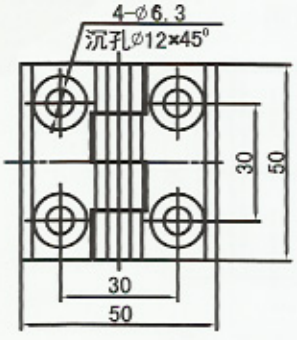



材质及表面处理：黑色锌合金铰链体,不锈钢铰链。
Material and finish:Black Zinc alloy hinge, Stainless steel hinges.

JL233C-2

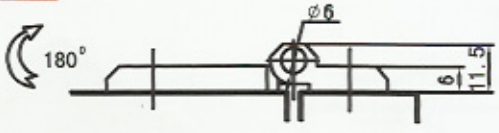

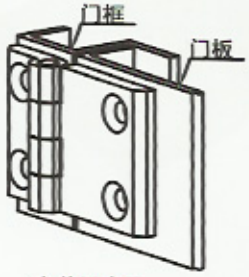

安装示意图
Installation Diagram

安装示意图

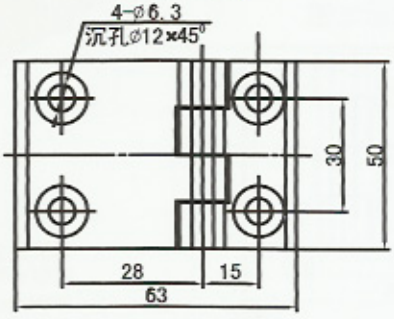



材质及表面处理：黑色锌合金铰链体,镀镍钢销子。
Material and finishing: Black powder zinc alloy hinge, nickel plated steel pin.

JL233C-3

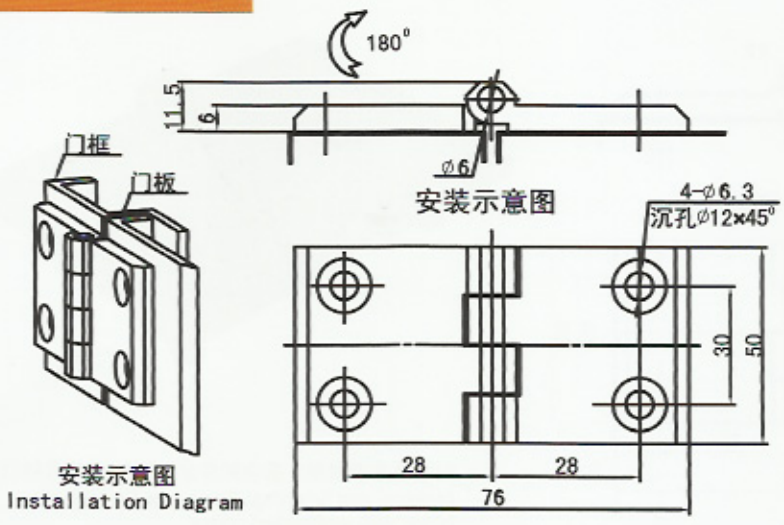

安装示意图
Installation Diagram



材质及表面处理：黑色锌合金铰链体,镀镍钢销子。
Material and finishing: Black powder zinc alloy hinge, nickel plated steel pin.

JL233D-1

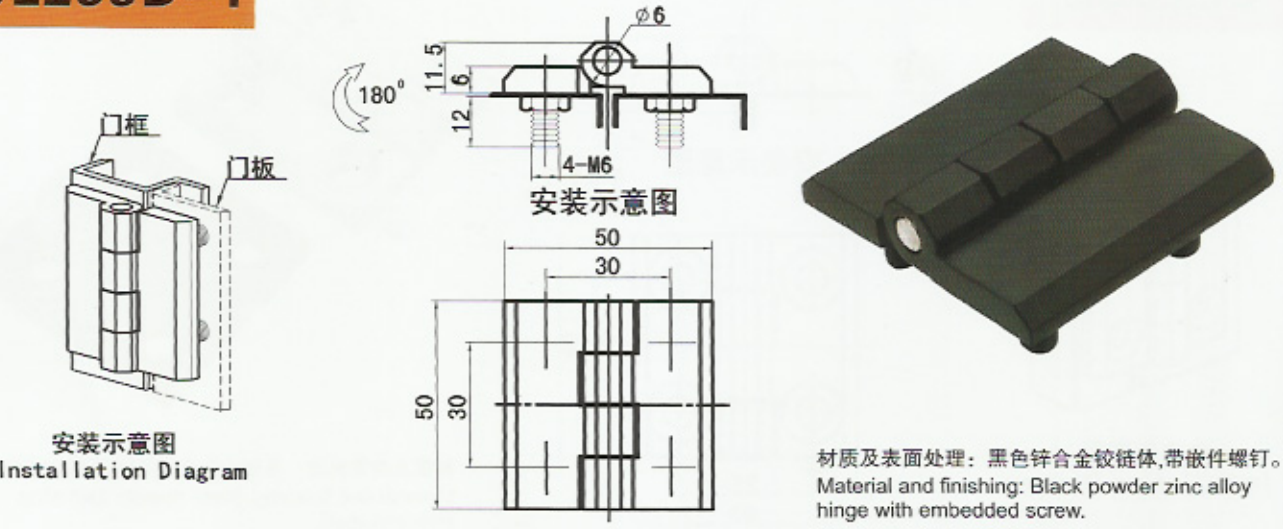

安装示意图
Installation Diagram

材质及表面处理：黑色锌合金铰链体,带嵌件螺钉。
Material and finishing: Black powder zinc alloy hinge with embedded screw.

JL233D-2

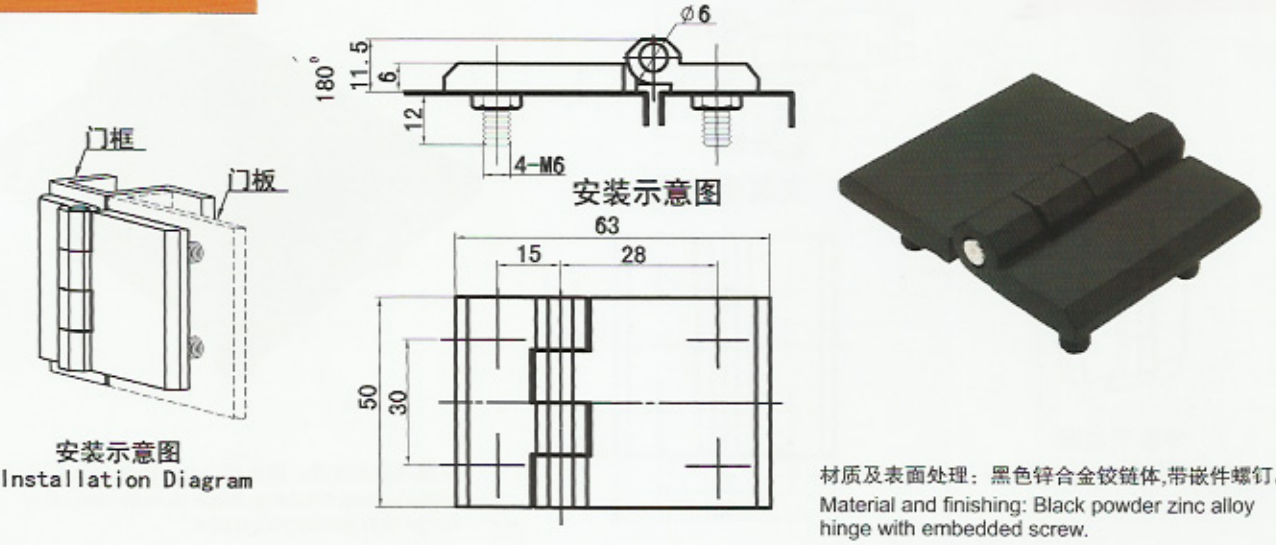

安装示意图
Installation Diagram

材质及表面处理：黑色锌合金铰链体,带嵌件螺钉。
Material and finishing: Black powder zinc alloy hinge with embedded screw.

JL233D-3

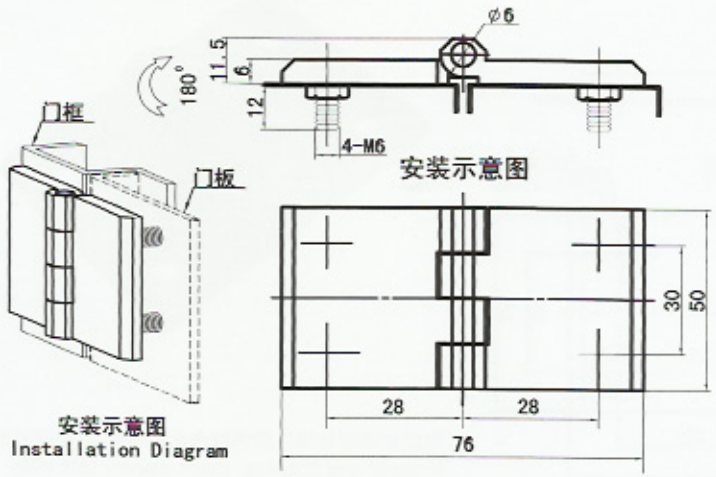

安装示意图
Installation Diagram



材质及表面处理：黑色锌合金铰链体,带嵌件螺钉。
Material and finishing: Black powder zinc alloy hinge with embedded screw.

JL233E

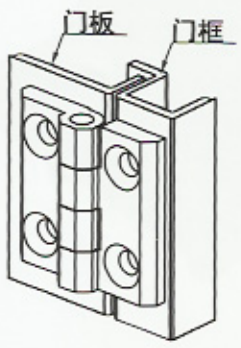

安装示意图
Installation Diagram

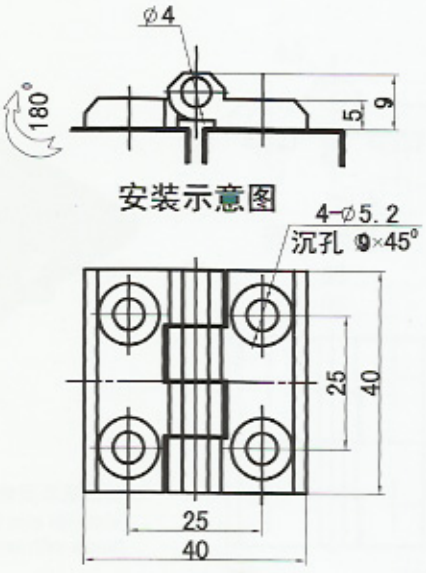



材质及表面处理：黑色锌合金铰链体,不锈钢铰链。
Material and finishing: Black powder zinc alloy, stainless steel.

JL233F



安装示意图
Installation Diagram

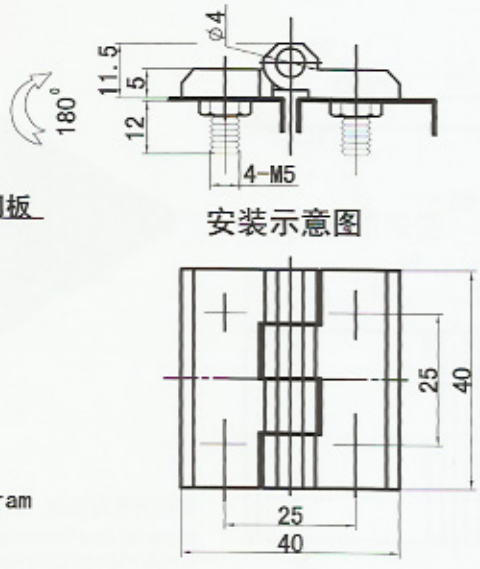



材质及表面处理：黑色锌合金铰链体,带嵌件螺钉。
Material and finishing: Black powder zinc alloy hinge with embedded screw.

JL233G

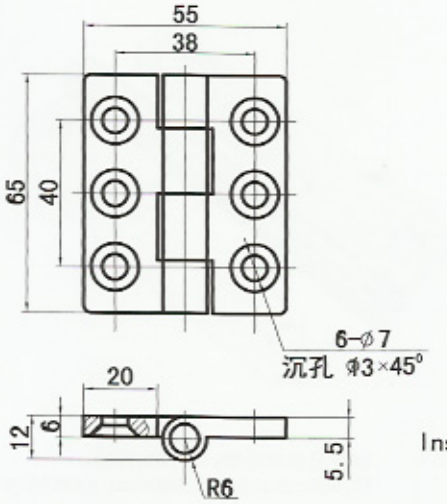

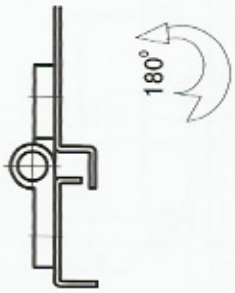

安装示意图
Installation Diagram



材质及表面处理：黑色锌合金铰链体，镀镍钢销子。
Material and finish:Black power coated ZDC hinge; nickel-plating steel shaft.

JL233H

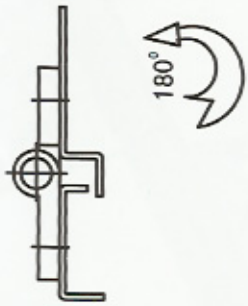

安装示意图
Installation Diagram

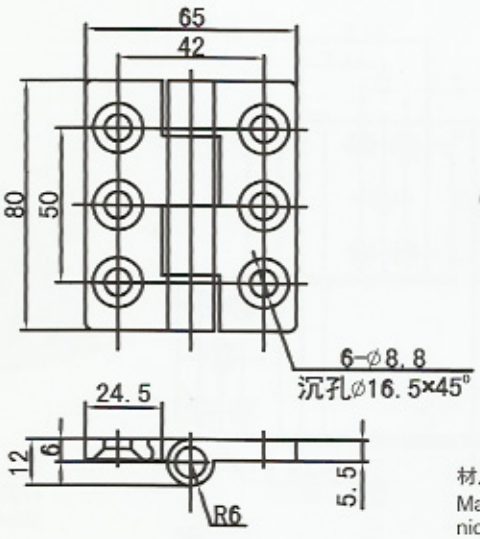



材质及表面处理：黑色锌合金铰链体,镀镍钢销子。
Material and finish:Black power coated ZDC hinge; nickel-plating steel shaft.

JL233I

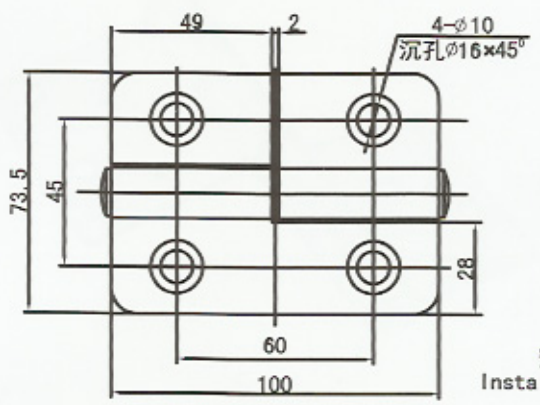



安装示意图
Installation Diagram



材质及表面处理：冷轧钢喷塑或全不锈钢镜面。
结构功能:脱卸式铰链有左右开门之分.一般用于重型柜门.
Material and finishing: Black powder cold rolled steel or mirror-polish stainless steel.
Structure and feature: Please note RH or LH while ordering this life-off hinge, and it usually used for heavy cabinet door.

JL233J

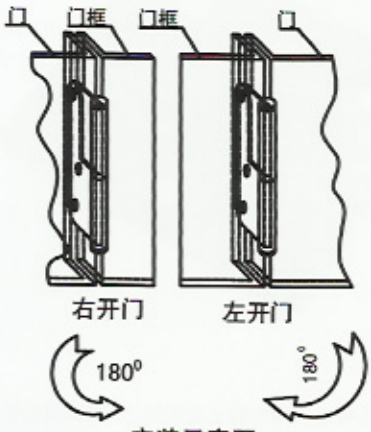

安装示意图
Installation Diagram

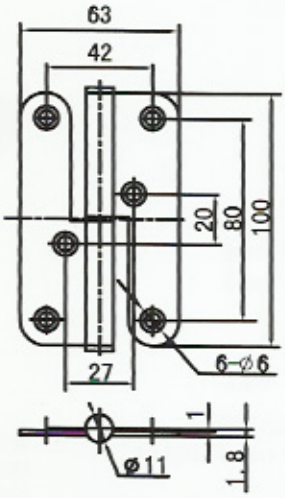



材质及表面处理：不锈钢铰链。
Material and finish:Stainless steel hinge.

JL233J-1

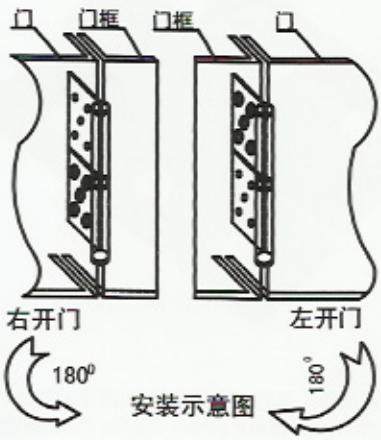

安装示意图

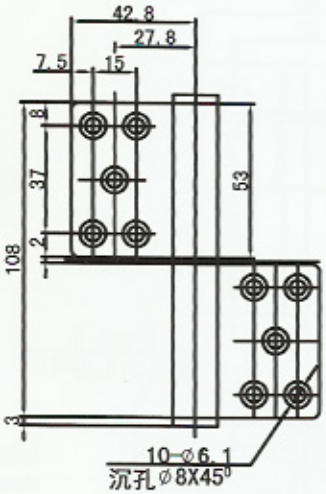



材质及表面处理：不锈钢铰链。
Material and finish:Stainless steel hinge.

JL233J-3

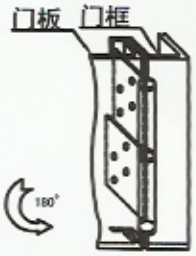

安装示意图
Installation Diagram

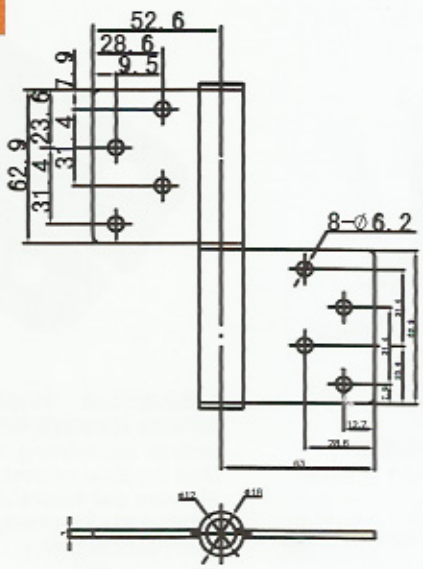

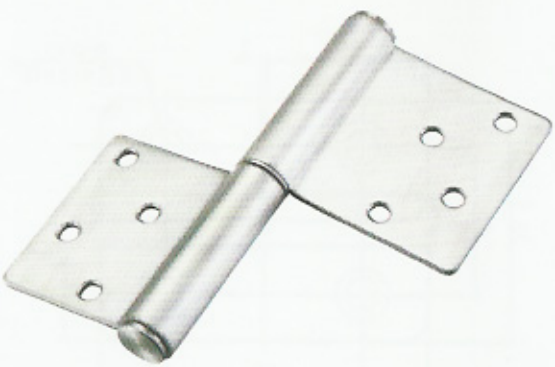

材质及表面处理：不锈钢铰链。
Material and finish:Stainless steel hinge.

JL233J-4

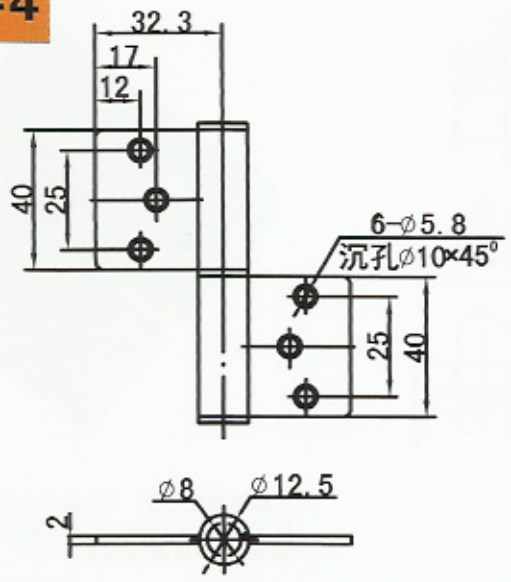



材质及表面处理：不锈钢铰链。
Material and finish:Stainless steel hinge.

JL233K

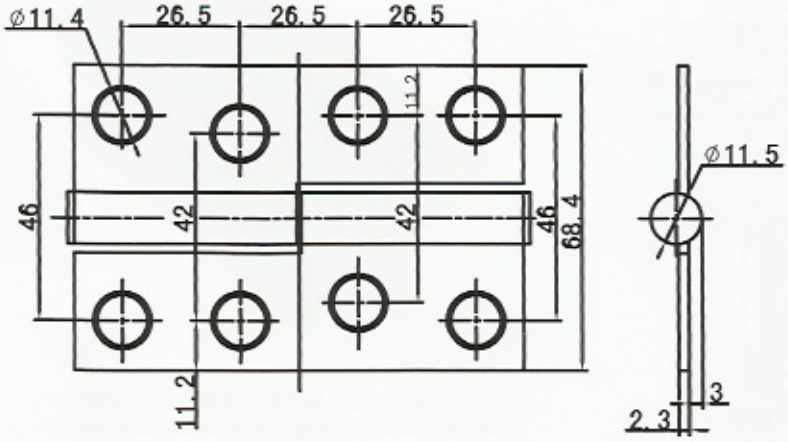



材质及表面处理：不锈钢铰链。
Material and finish:Stainless steel hinge.

JL233L

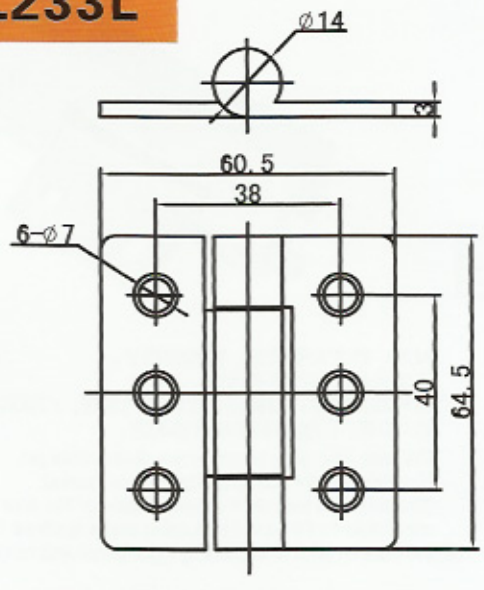



材质及表面处理：冷轧锈钢、喷塑。
Material and finishing: Black powder coated cold rolled stainless steel.

JL234

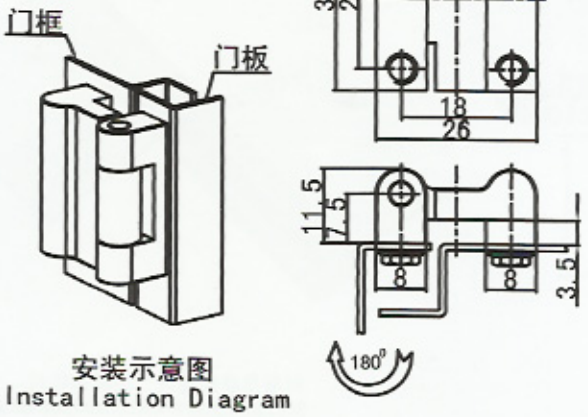

安装示意图
Installation Diagram



材质及表面处理：黑色锌合金铰链体,镀镍钢销子。
Material and finishing: Black powder zinc alloy hinge, nickel plated steel pin.

JL236

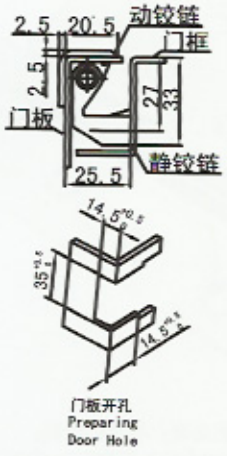

门板开孔
Preparing Door Hole

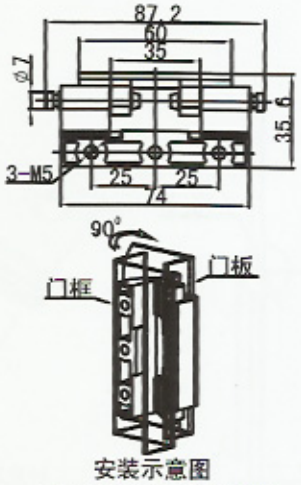

安装示意图
Installation Diagram



材质及表面处理：黑色锌合金铰链体,镀镍钢销子。
Material and finishing: Black powder zinc alloy hinge, nickel plated steel pin.

JL237

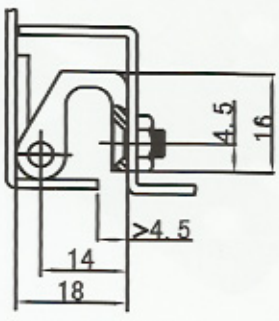

安装示意图
Installation Diagram

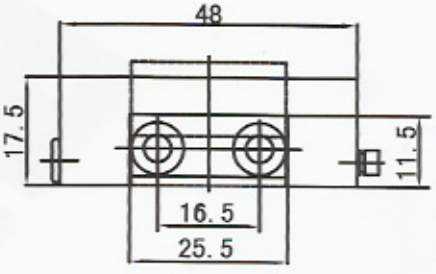

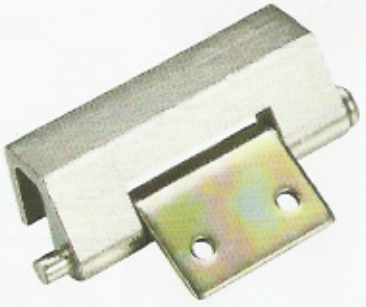

材质：锌合金静铰链，镀镍钢销子。
表面处理：喷沙镀亮光铬。
结构功能用途：暗铰链；左右开门通用，门板转动角度约120度；门板与动铰链焊接固定。

Material: Zinc alloy hinge, nickel plated steel pin.
Finishing: Bright sandblasting chrome coated.
Structure and feature: It mounts inside of the door frame, applicable for RH and LH, turning angle is about 120°; the cabinet door is welded by door panel and hinge.

JL238

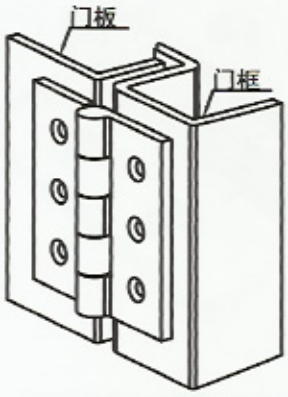

安装示意图
Installation Diagram

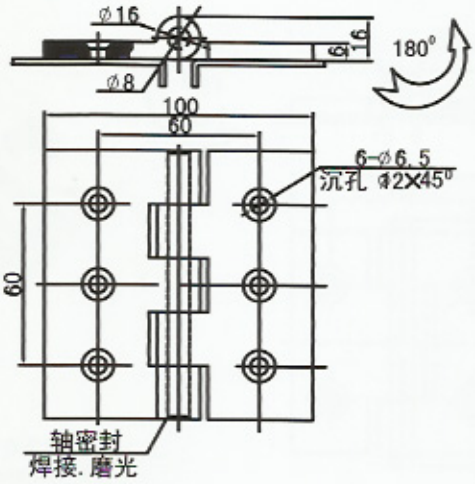



材质及表面处理：镜面抛光不锈钢铰链。
Material and finish:Mirror polish stainless steel hinge.

JL239

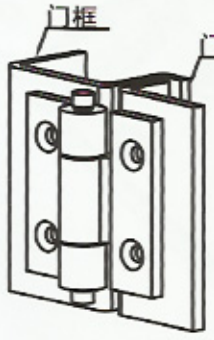

安装示意图
Installation Diagram

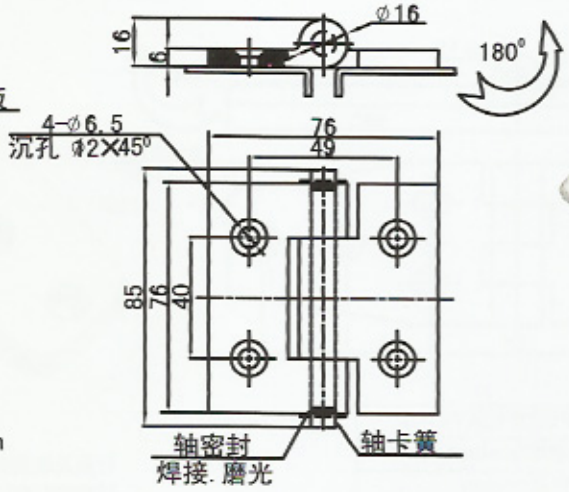



材质及表面处理：镜面抛光不锈钢铰链。
Material and finish:Mirror polish stainless steel hinge.

JL240

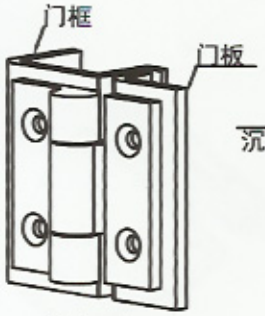

安装示意图
Installation Diagram

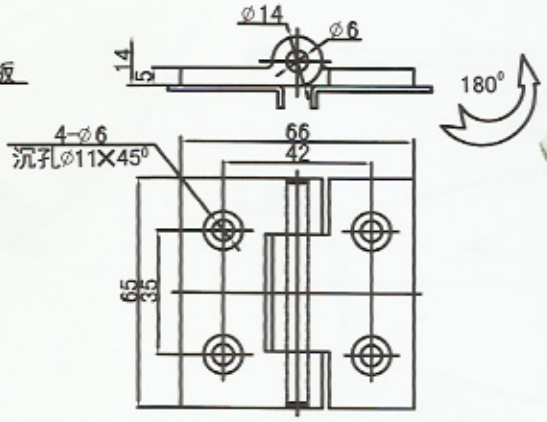



材质及表面处理：镜面抛光不锈钢铰链。
Material and finish:Mirror polish stainless steel hinge.

JL241

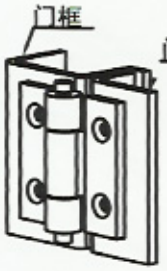

安装示意图
Installation Diagram

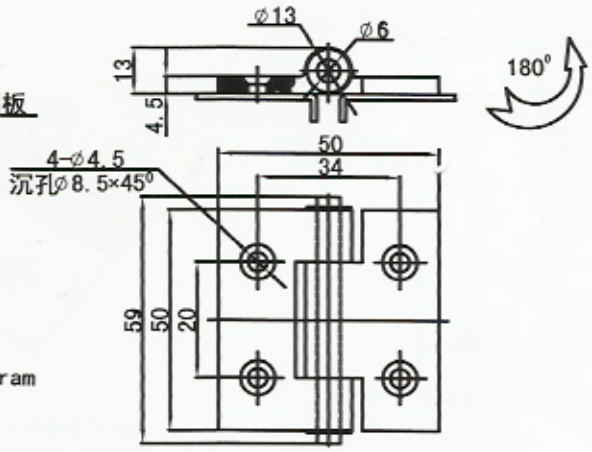



材质及表面处理：镜面抛光不锈钢铰链。
Material and finish:Mirror polish stainless steel hinge.

JL242

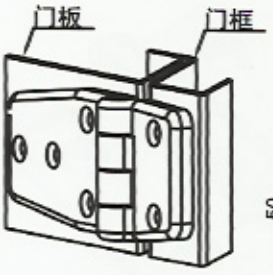

安装示意图
Installation Diagram

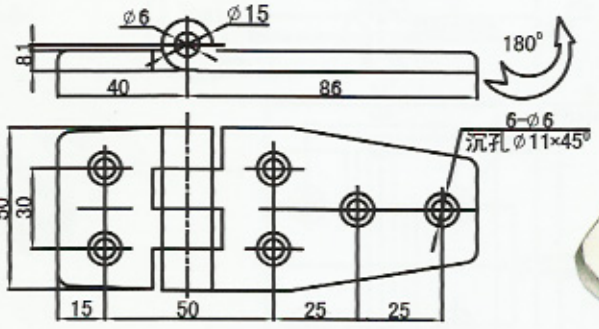

产品型号（MODEL)	特征描述(SPECIFICATION)
JL242-1	不锈钢型/Stainless steel
JL242-2	塑料型/Nylon



材质及表面处理：尼龙铰链；不锈钢铰链。
Material and finishing: Nylon or stainless steel.

JL242A

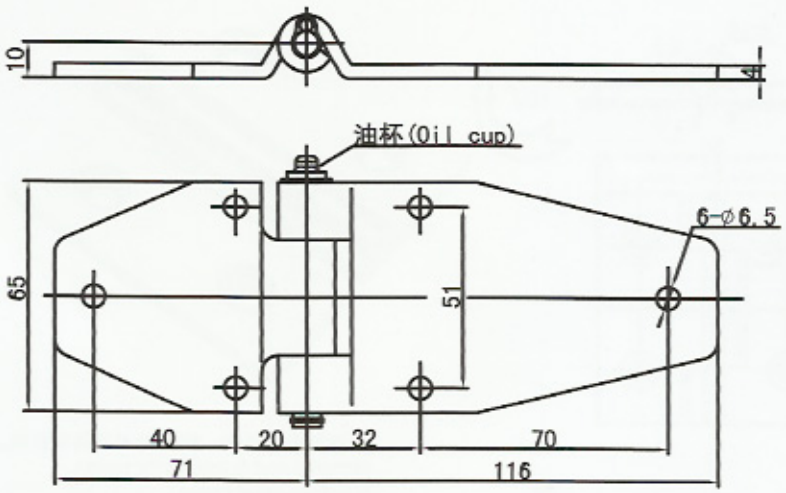

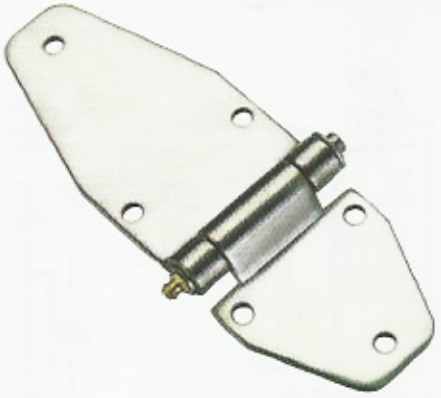

材质及表面处理：不锈钢铰链;镀锌钢铰链。
Material and finishing: Nylon, stainless steel.

JL243

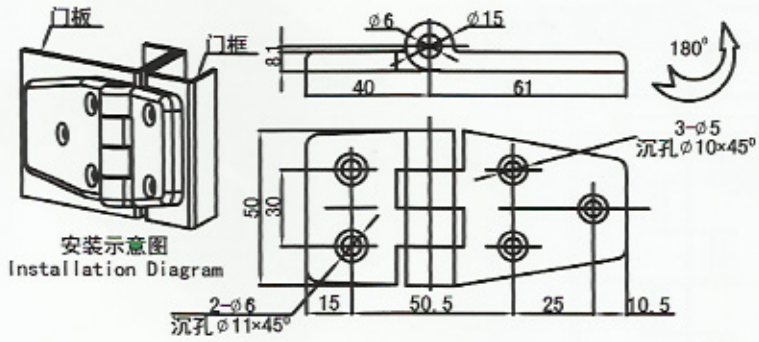



产品型号（MODEL）	特征描述(SPECIFICATION)
JL243-1	不锈钢型/Stainless steel
JL243-2	塑料型/Nylon

材质及表面处理：不锈钢铰链。
Material and finishing: stainless steel hinge.

JL243A

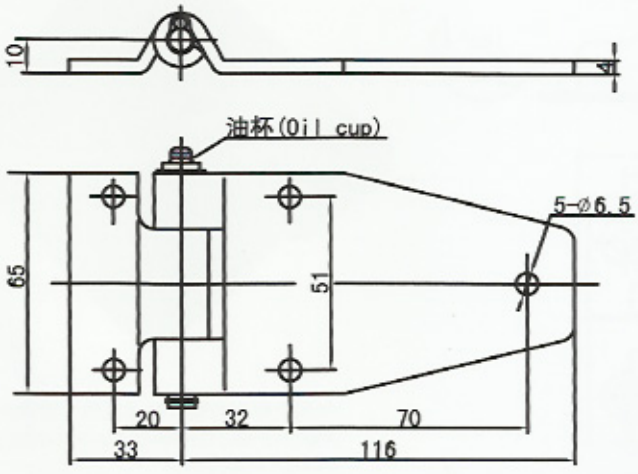



材质及表面处理：不锈钢铰链;镀锌钢铰链。
Material and finish:Stainless steel hinge;
zinc-plating steel hinge.

JL244

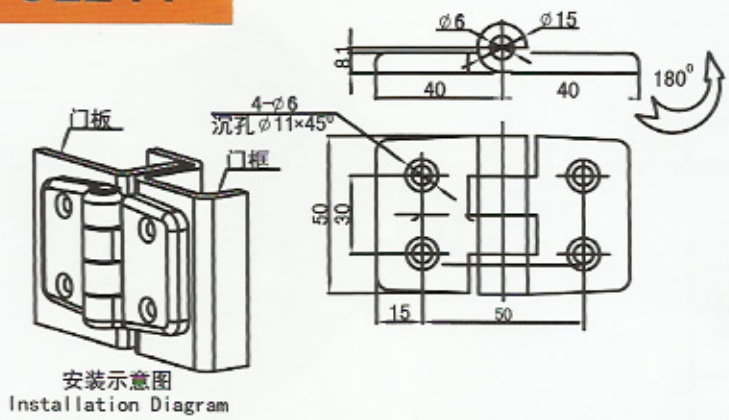



产品型号（MODEL）	特征描述(SPECIFICATION)
JL244-1	不锈钢型/Stainless steel
JL244-2	塑料型/Nylon

材质及表面处理：不锈钢铰链。
Material and finishing: stainless steel hinge.

JL245

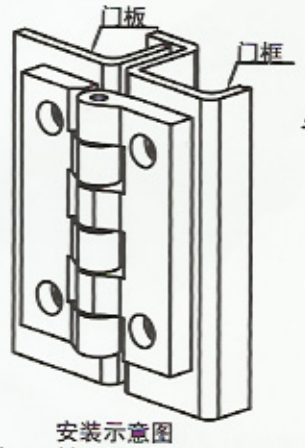

安装示意图
Installation Diagram

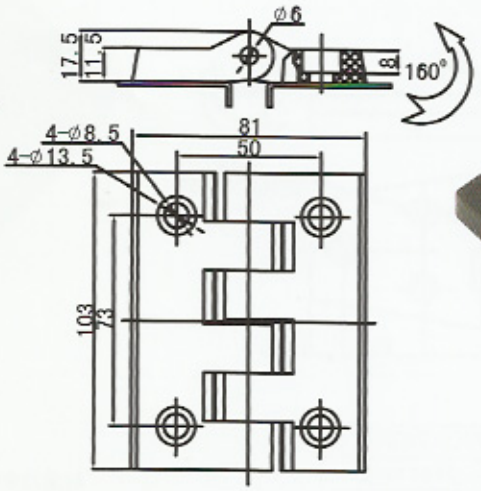



材质及表面处理：尼龙铰链；镀镍钢销子。
Material and finishing: Nylon hinge, nickel coated steel pin.

JL245A

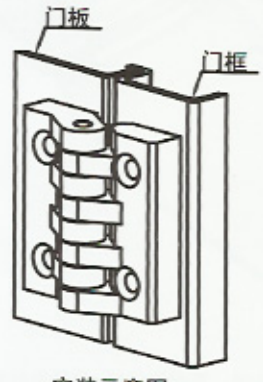

安装示意图
Installation Diagram

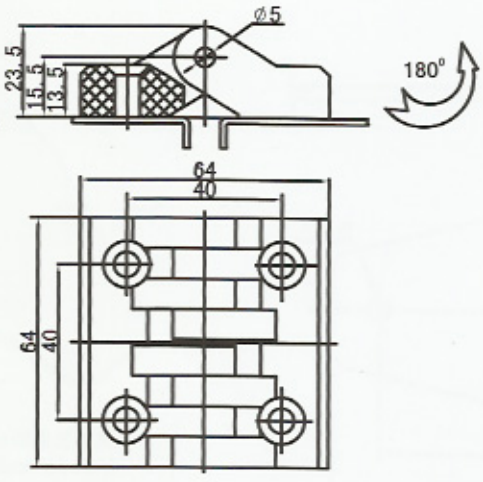

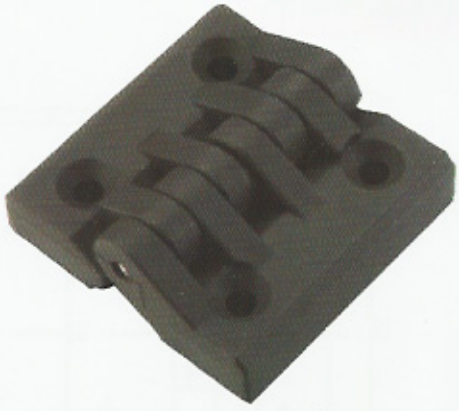

材质及表面处理：尼龙铰链；镀镍钢销子。
Material and finishing: Nylon hinge, nickel coated steel pin.

JL245B

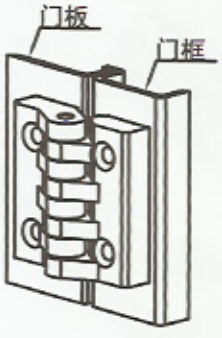

安装示意图
Installation Diagram

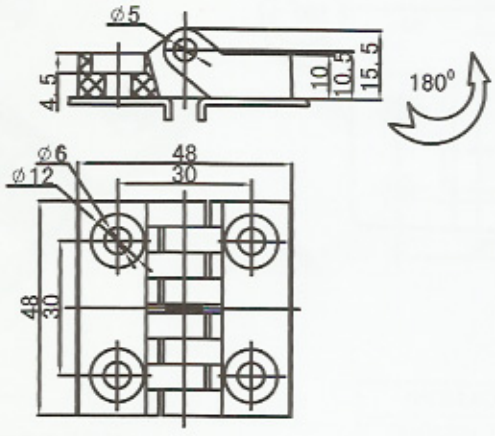



材质及表面处理：尼龙铰链；镀镍钢销子。
Material and finishing: Nylon hinge, nickel coated steel pin.

JL245C

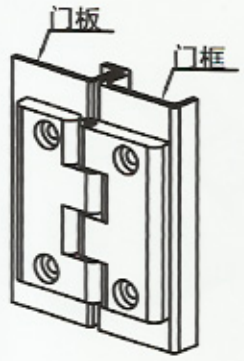

安装示意图
Installation Diagram

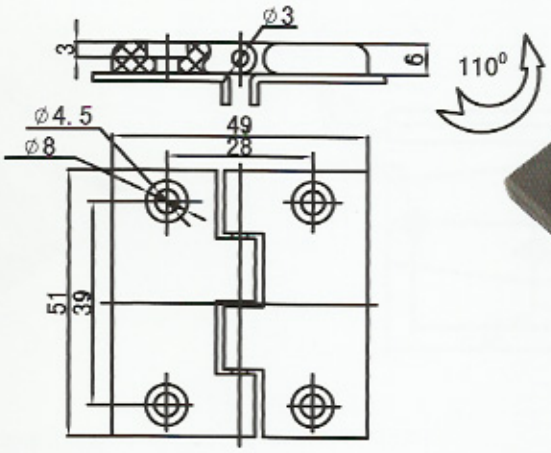

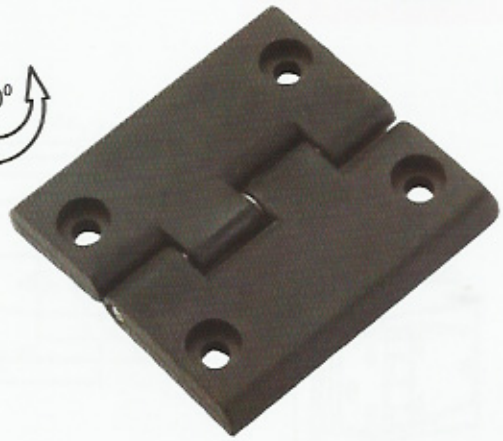

材质及表面处理：尼龙铰链；镀镍钢销子。
Material and finishing: Nylon hinge, nickel coated steel pin.

JL246

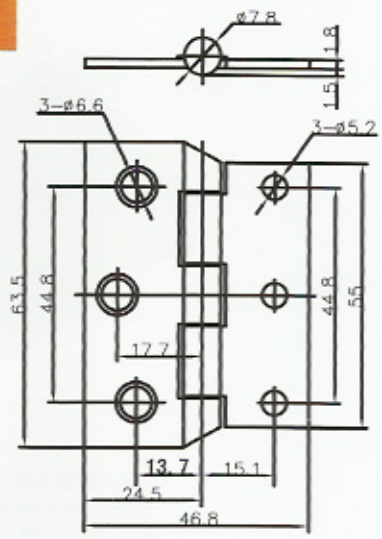



材质及表面处理：不锈钢铰链。
Material and finish:Stainless steel hinge.

JL247-1

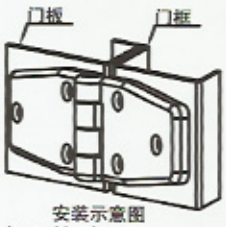

安装示意图
Installation Diagram

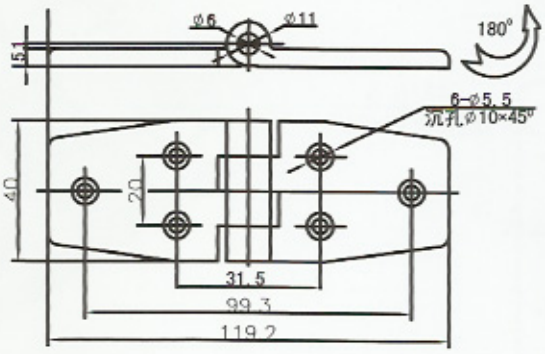



材质及表面处理：锌合金铰链，表面喷塑。
Material and finishing: Zinc alloy hinge, powder coated.

JL247-2

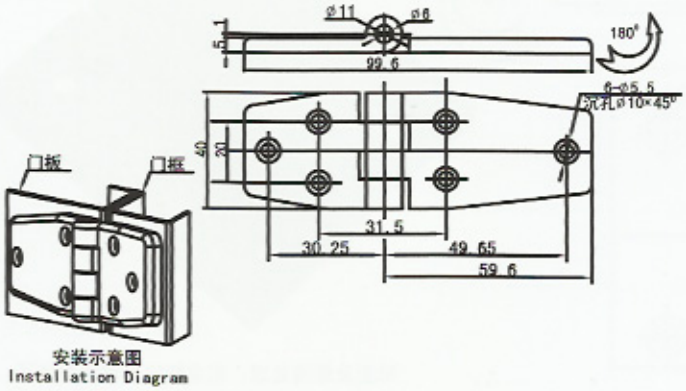

安装示意图
Installation Diagram



材质及表面处理：锌合金铰链，表面喷塑。
Material and finishing: Zinc alloy hinge, powder coated.

JL247-3

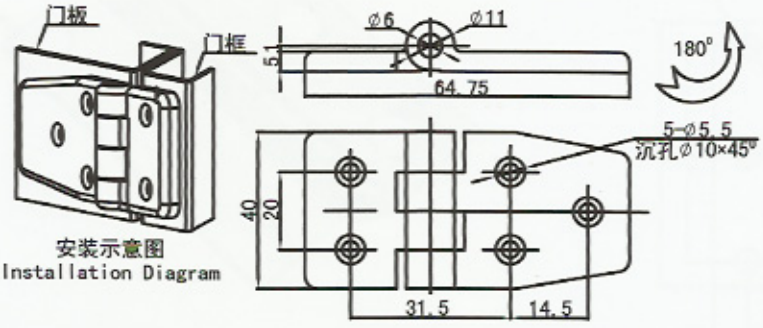

安装示意图
Installation Diagram



材质及表面处理：锌合金铰链，表面喷塑。
Material and finishing: Zinc alloy hinge, powder coated.

JL247-4

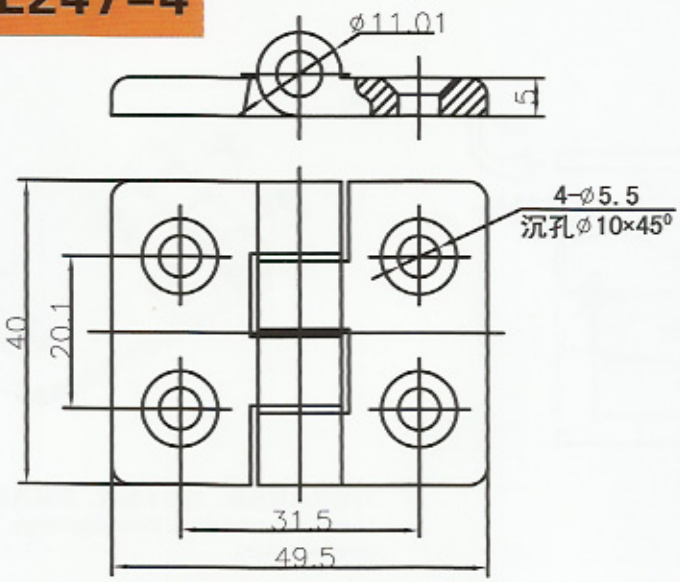



材质及表面处理：锌合金铰链，表面喷塑。
Material and finishing: Zinc alloy hinge, powder coated.

JL248

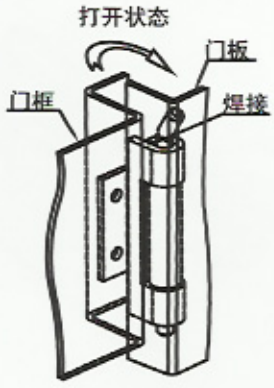

安装示意图
Installation Diagram

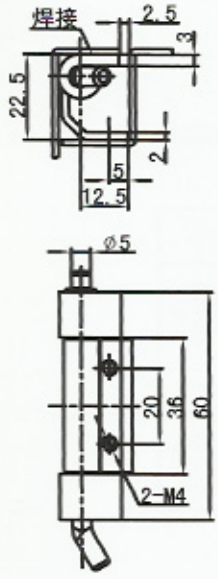



材质及表面处理：不锈钢、镀锌铰链。
Material and finish:Stainless steel hinge, zinc plated steel hinge.

JL249

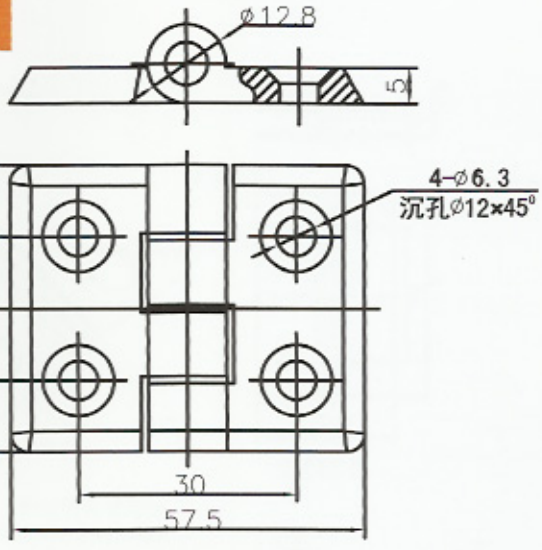



材质及表面处理：不锈钢铰链。
Material and finish:Stainless steel hinge.

JL252

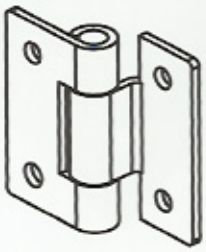

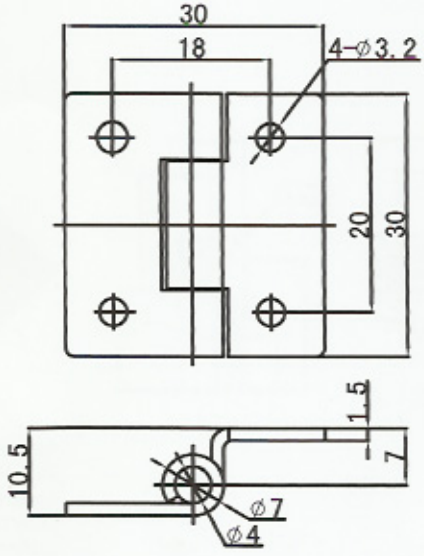



材质及表面处理：不锈钢铰链。
Material and finish:Stainless steel hinge.

JL253-1

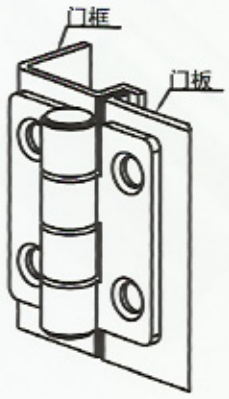

安装示意图
Installation Diagram

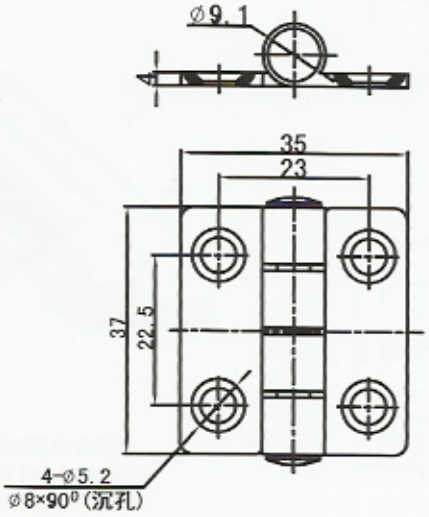



材质及表面处理：不锈钢铰链。
Material and finish:Stainless steel hinge.

JL253-2

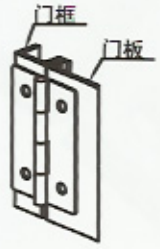

安装示意图
Installation Diagram

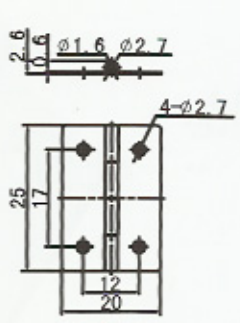

JL253-2A

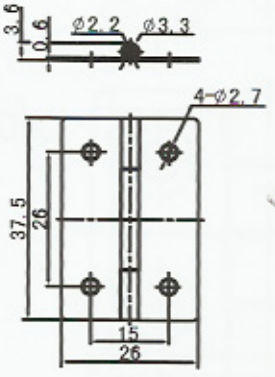

JL253-2



材质及表面处理：不锈钢铰链。
Material and finish:Stainless steel hinge.

JL254

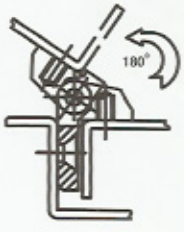

安装示意图
Installation Diagram

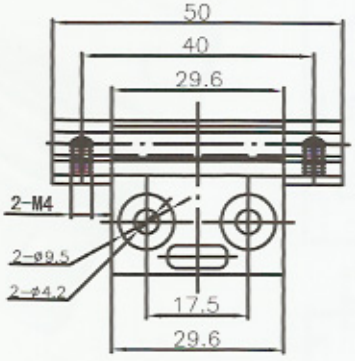

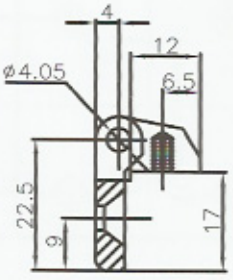



材质及表面处理：黑色锌合金铰链体,不锈钢垫片,镀镍钢销子。
Material and finishing: Black powder zinc alloy hinge, stainless steel spacer, nickel plated steel pin.

JL255



门板开孔
Preparing Door Hole



安装示意图
Installation Diagram

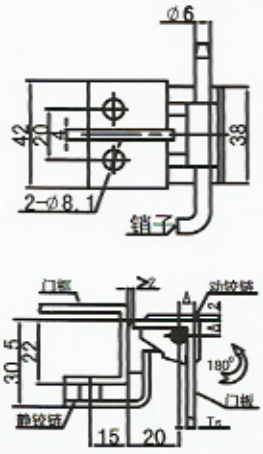



产品型号（MODEL）	门板厚度(Ts)	A
JL255-1	1.5	4.6
JL255-2	2	5.1
JL255-3	3	6.1

材质及表面处理：黑色锌合金铰链体,不锈钢垫片,镀镍钢销子。
Material and finishing: Black powder zinc alloy hinge, stainless steel spacer, nickel plated steel pin.

JL256

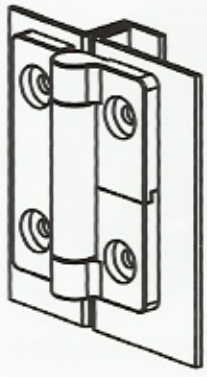

安装示意图
Installation Diagram

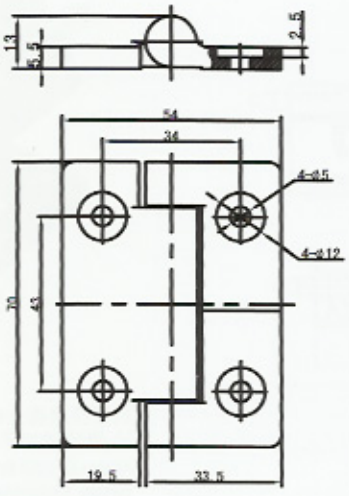



材质及表面处理：亚光锌合金铰链体(阻尼型),不锈钢垫片，不锈钢销子。
Material and finishing: Matt chrome plated zinc alloy hinge with resistance, stainless steel spacer and pin.

JL256A

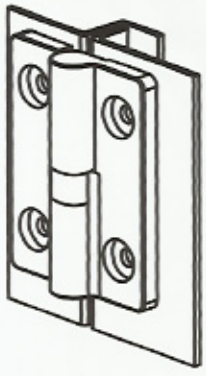

安装示意图
Installation Diagram

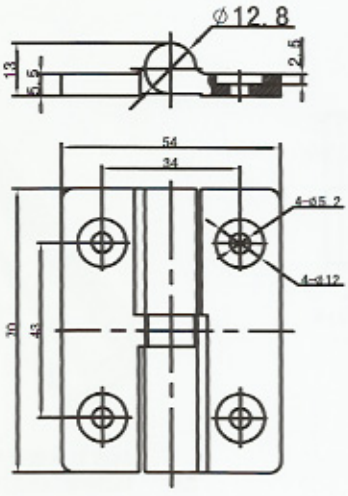



材质及表面处理：亚光锌合金铰链体(阻尼型),不锈钢垫片，不锈钢销子。
Material and finishing: Matt chrome plated zinc alloy hinge with resistance, stainless steel spacer and pin.

JL257

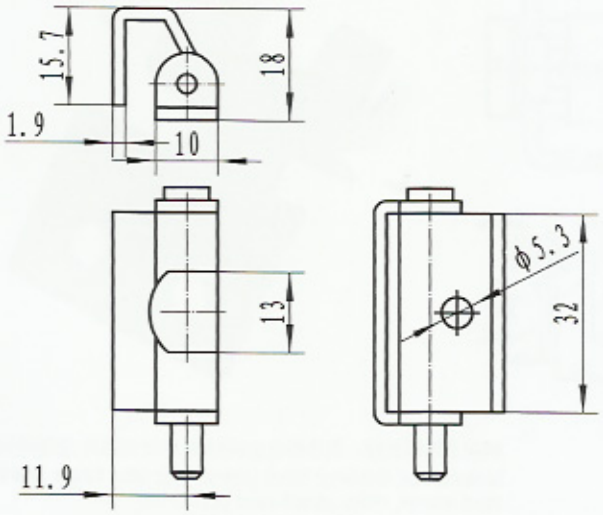



材质及表面处理：镀锌钢铰链。
Material and finish:Zinc-plating steel hinge.

JL264

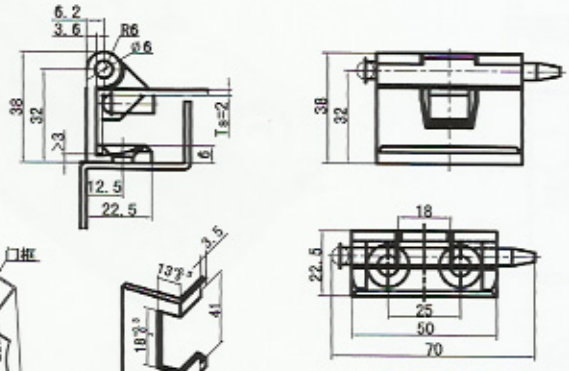



材质及表面处理：黑色锌合金铰链体,不锈钢垫片,镀镍钢销子。
Material and finishing: Black powder zinc alloy hinge, stainless steel spacer, nickel plated steel pin.

JL270-1~4

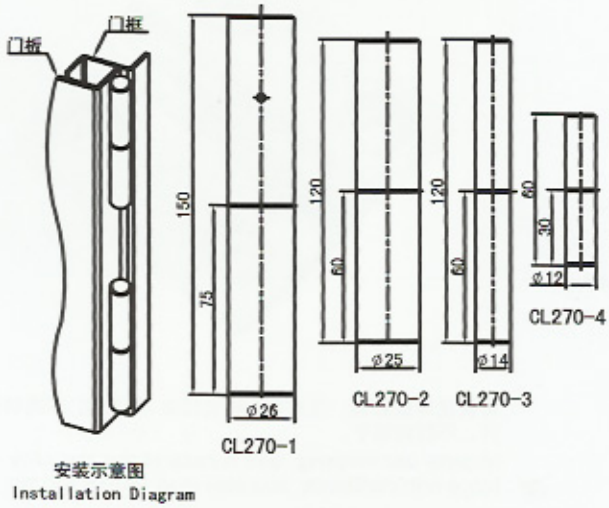



材质及表面处理：镀锌钢铰链。
Material and finish:Zinc-plating steel hinge.

JL272

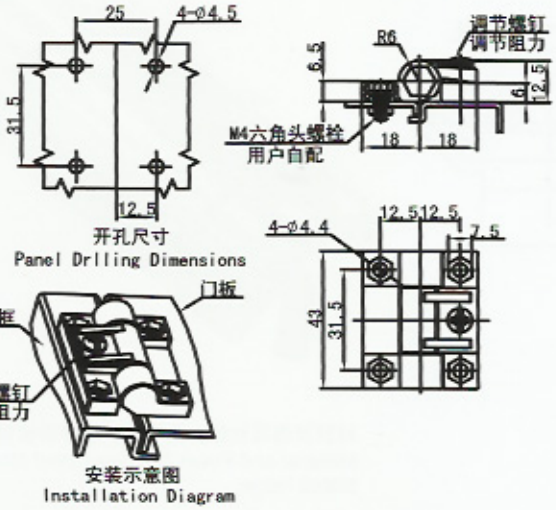



材质及表面处理：黑色尼龙铰链,镀锌钢螺钉，聚碳酸酯转轴。
Material and finishing: Black nylon hinge, zinc plated steel screw, Polycarbonate pin.

JL274

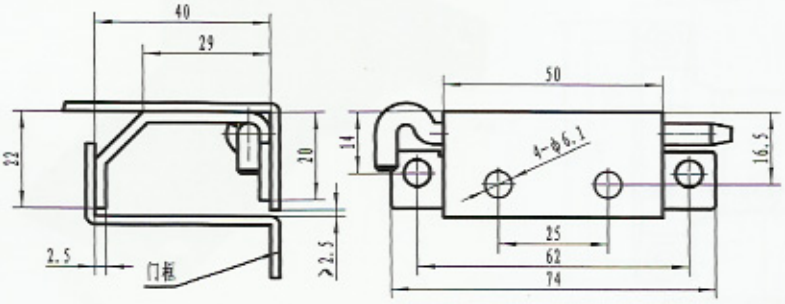

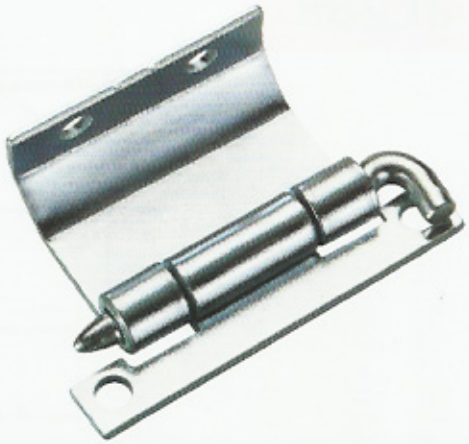

材质及表面处理：镀锌钢铰链。
Material and finish:Zinc-plating steel hinge.

JL275-1

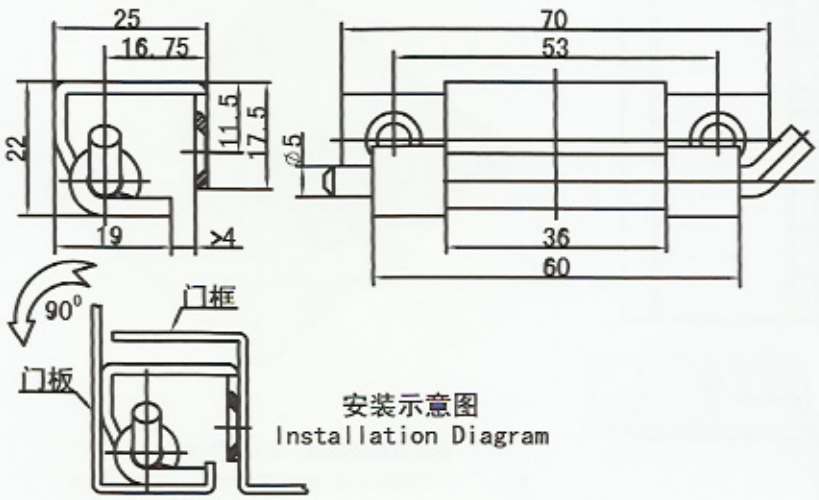

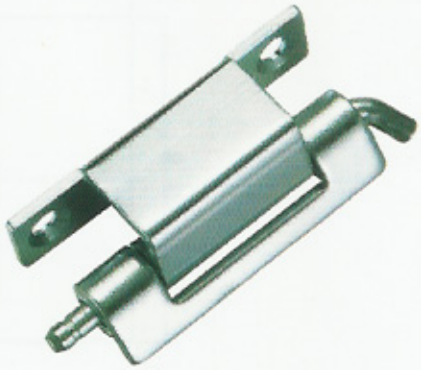

材质及表面处理：不锈钢、镀锌钢铰链。
Material and Finish:Stainless steel hinge,zinc plated hinge.

JL275-2

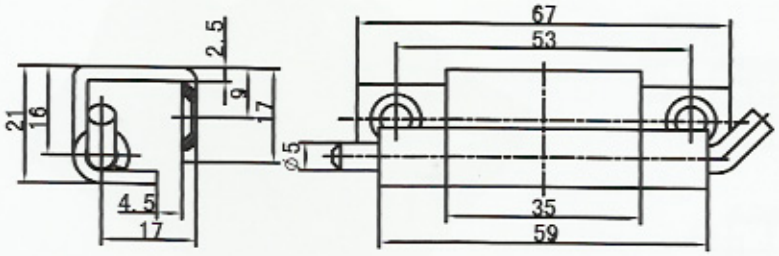

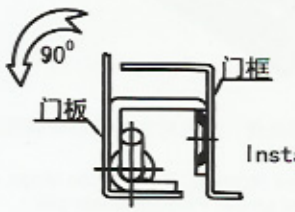

安装示意图
Installation Diagram



材质及表面处理：不锈钢、镀锌钢铰链。
Material and Finish:Stainless steel hinge,zinc plated hinge.

JL288

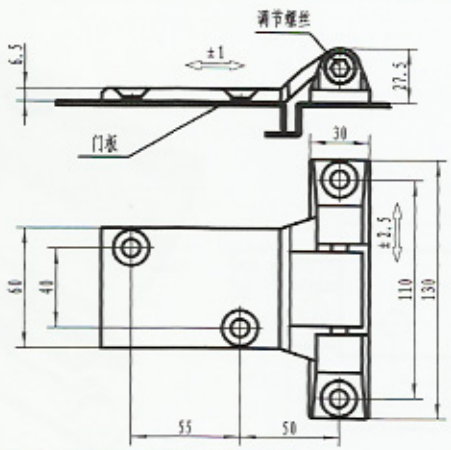

产品型号（MODEL）	特征描述(SPECIFICATION)
JL288-Z	适用左开门/Left hand
JL288-Y	适用右开门/Right hand



材质及表面处理:黑色锌合金铰链;不锈钢转轴.
Material and finish:Black powder coated ZDC hinge;stainless steel shaft.

JL374

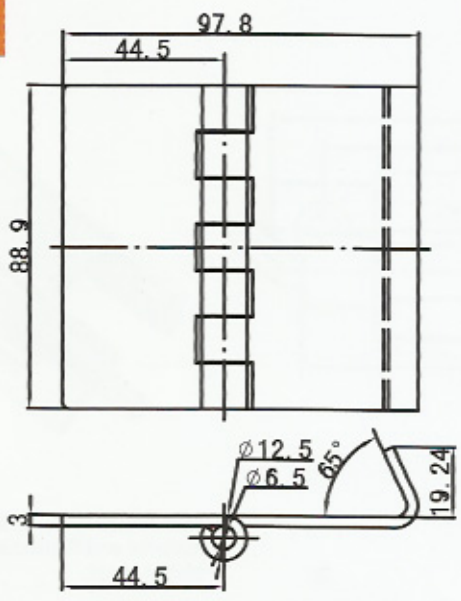

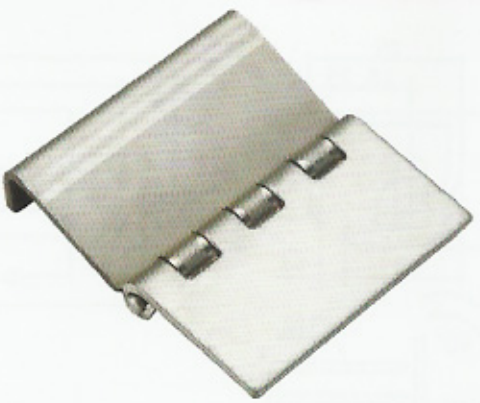

材质及表面处理：不锈钢铰链。
Material and finish:Stainless steel hinge.

JL375

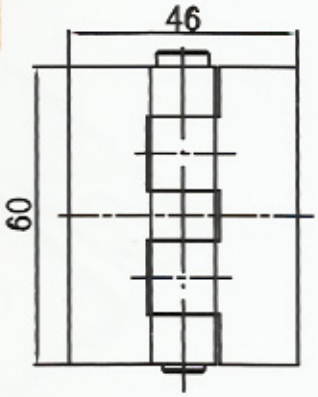

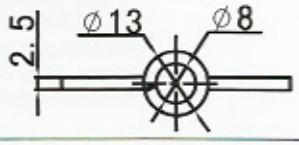



材质及表面处理：不锈钢铰链。
Material and finish:Stainless steel hinge.

JL376

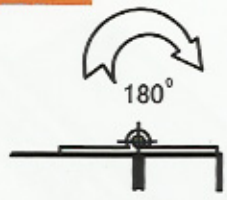

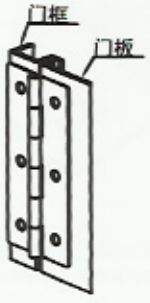

安装示意图
Installation Diagram

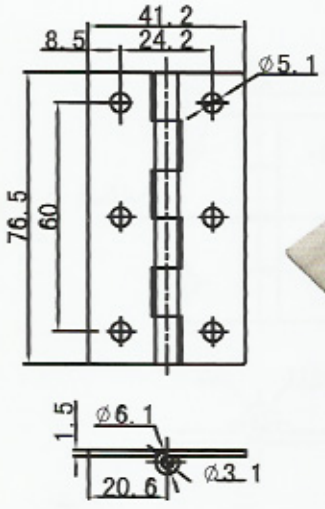



材质及表面处理：不锈钢铰链。
Material and finish:Stainless steel hinge.

JL376-1

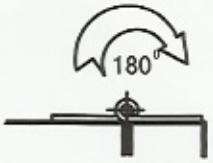



安装示意图
Installation Diagram

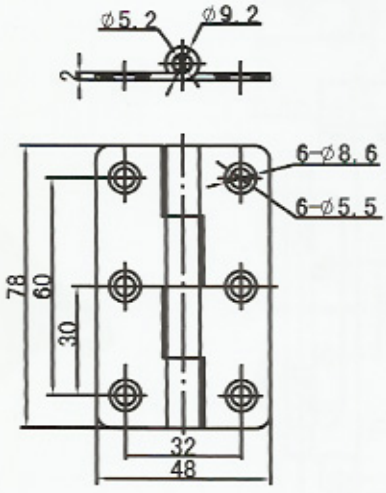



材质及表面处理：不锈钢铰链。
Material and finish:Stainless steel hinge.

JL376-2



安装示意图
Installation Diagram

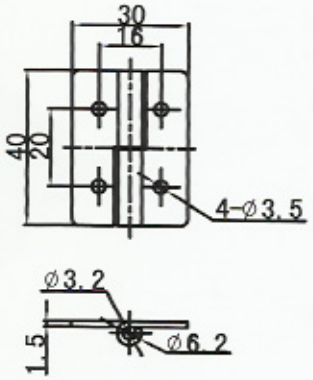



材质及表面处理：不锈钢铰链，分左右开门，可脱卸。
Material and finish: Stainless steel hinge, please notify LH or RH while ordering, detachable parts.

JL376-3



安装示意图
Installation Diagram

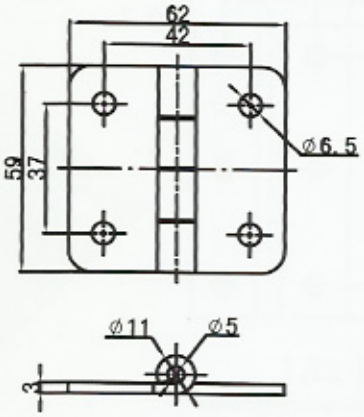

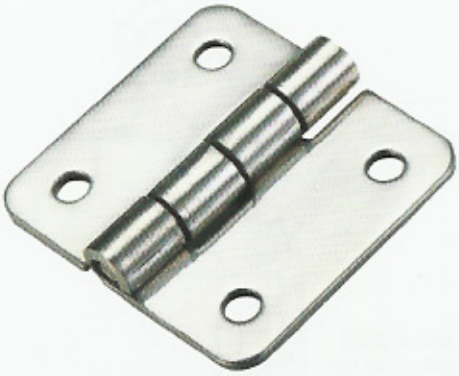

材质及表面处理：不锈钢铰链。
Material and finish:Stainless steel hinge.

JL377



安装示意图
Installation Diagram

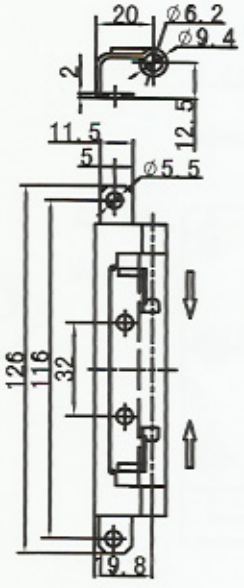



材质及表面处理：不锈钢铰链。
Material and finish:Stainless steel hinge.

JL377-1

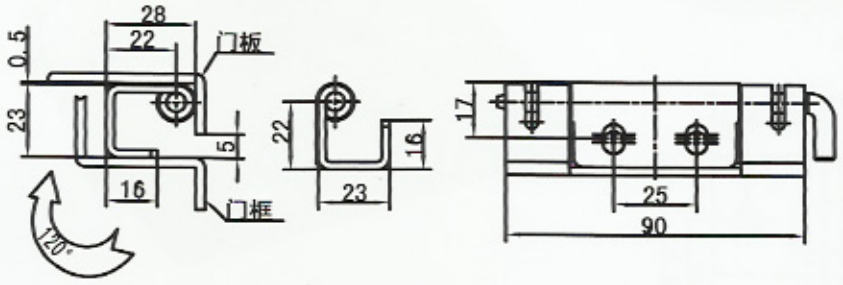

Installation Diagram



材质及表面处理：不锈钢铰链。
Material and finish:Stainless steel hinge.

JL378

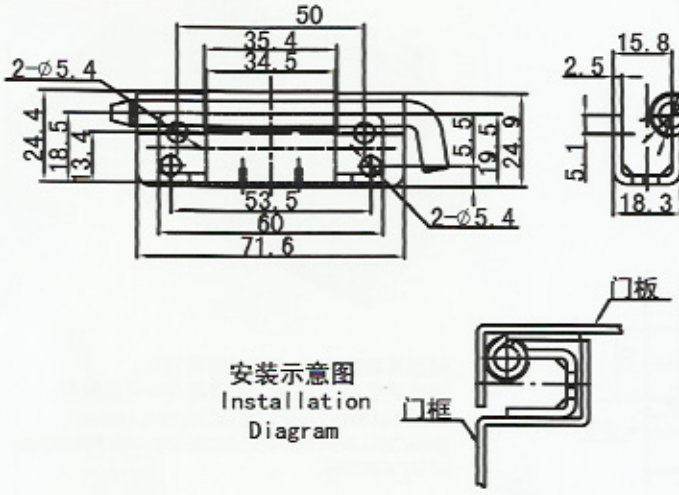

安装示意图
Installation Diagram



材质及表面处理：304不锈钢。
结构功能:可开启120°。
Material and finishing: 304 stainless steel.
Structure and feature: Open angle: 120°.

JL379

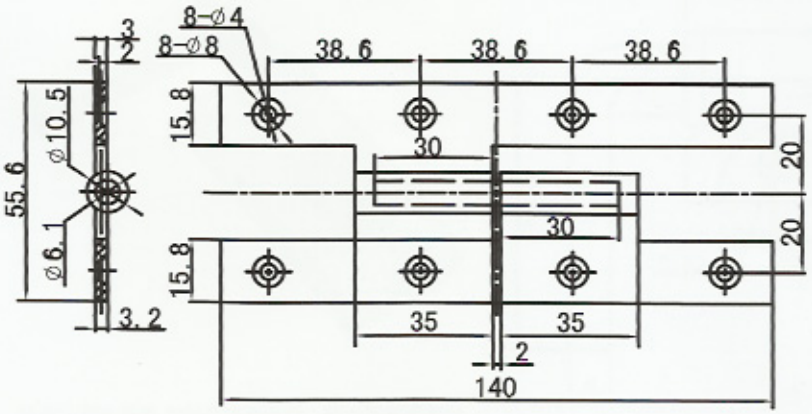

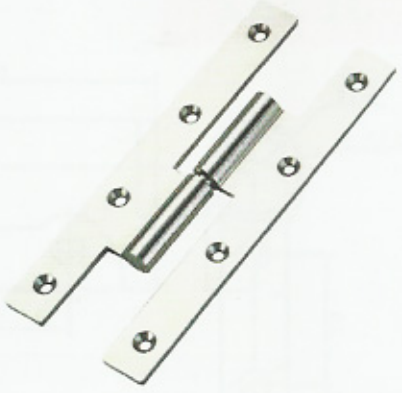

材质及表面处理：锌合金铰链,表面镀镍,分左右开门,可脱卸。
Material and finishing: Removable zinc alloy hinge, nickel coated, please note RH or LH while ordering.

JL380

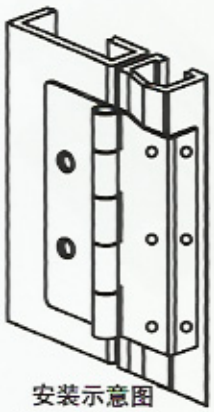

安装示意图
Installation Diagram

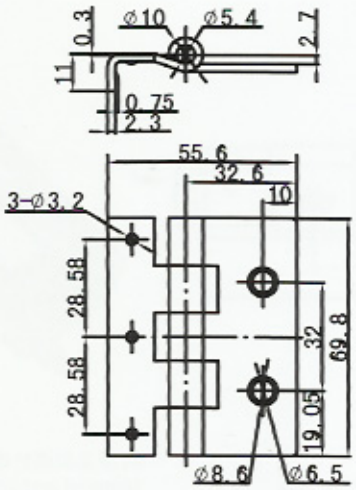

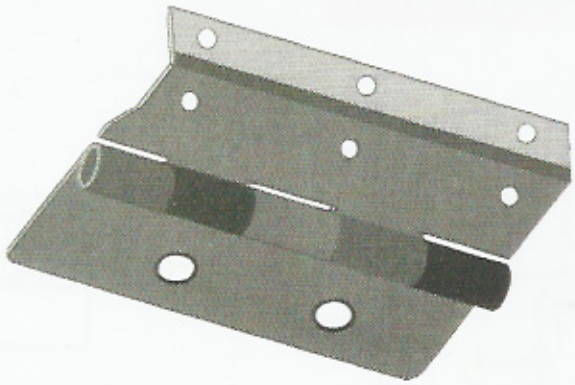

材质及表面处理：碳钢铰链。
结构功能:带65° 斜度门框焊接铰链。
Material and finishing: carbon steel hinge.
Structure and feature: This welding hinge is used on 65°incline door frame.

JL381

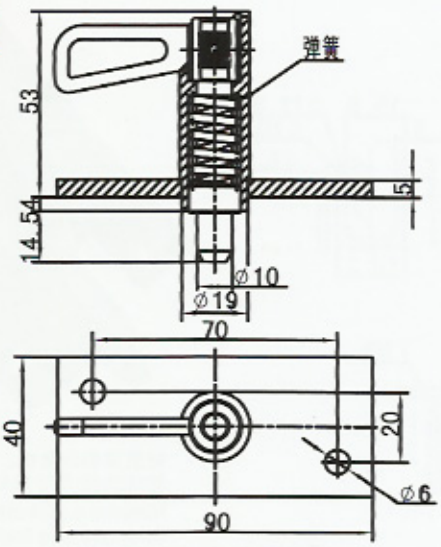



材质及表面处理：Q235表面镀锌。
结构功能:闭门插销，可焊接或M6螺丝装配。
Material and finishing: Q235 zinc coated.
Structure and feature: Installing with M6 screw or by welding.

JL382

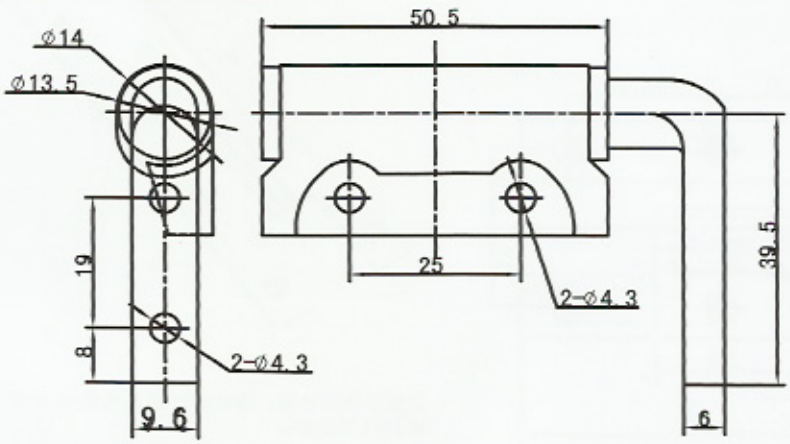

此铰链左右为一副配合使用



材质及表面处理：锌合金阻尼铰链 表面电镀或喷塑。
Material and finishing: Damping zinc alloy hinge, lectric plating or powder coated.

JL505-1



安装示意图
Installation Diagram

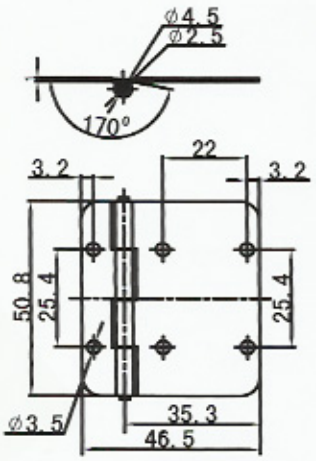



材质及表面处理：钢制铰链表面电镀或喷塑。
Material and finishing: Stainless steel hinge with electric-plating or powder coated.

JL505-2

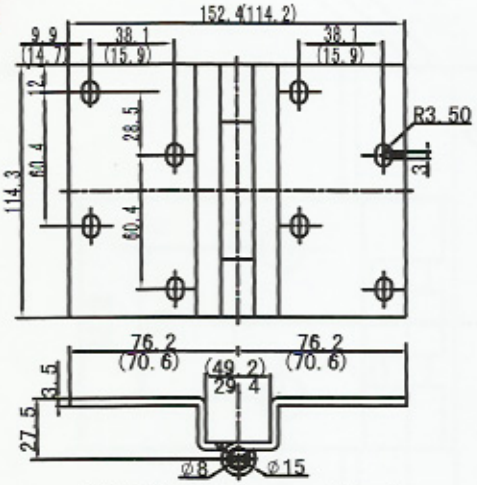

带括号的尺寸为JL505-3的尺寸



材质及表面处理：钢制铰链表面电镀或喷塑。
Material and finishing: Stainless steel hinge with electric-plating or powder coated.

JL14104

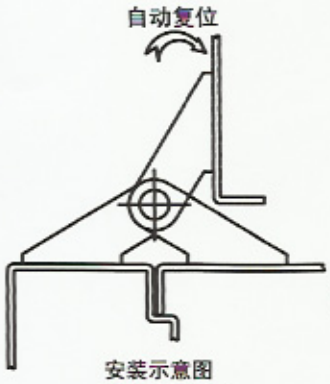

安装示意图
Installation Diagram

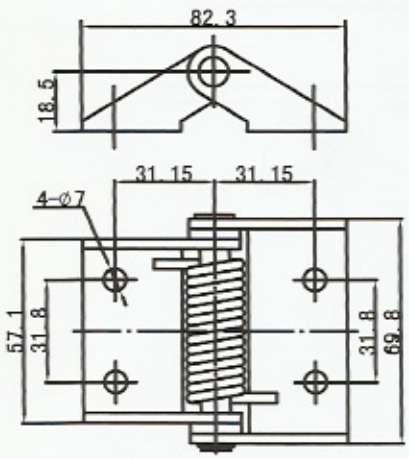



材质及表面处理：钢制铰链，表面镀锌，具自复位功能。
Material and finishing: steel hinge, zinc plating, auto-reset feature.

JL383



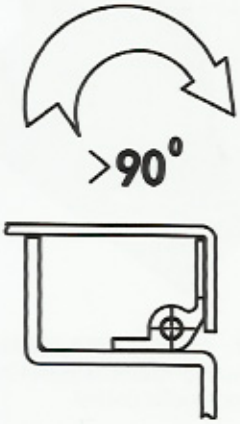

安装示意图
Installation Diagram

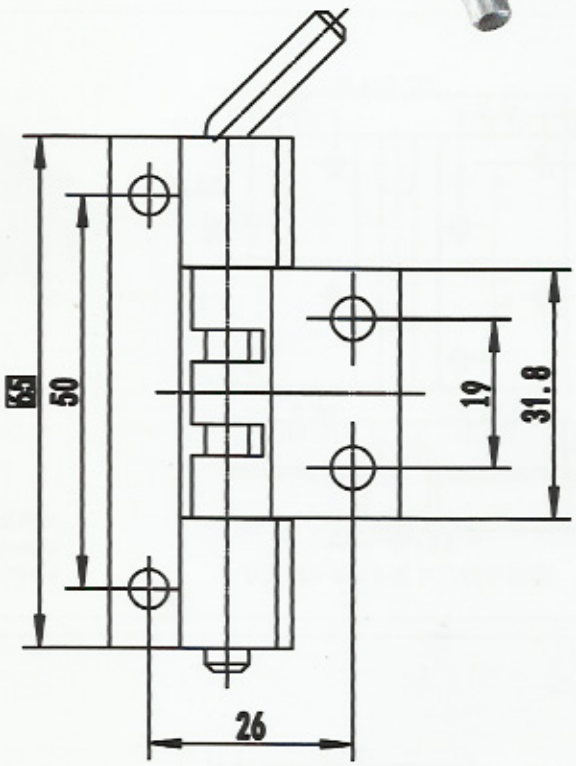

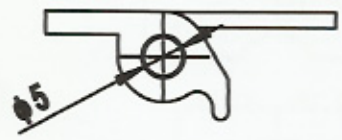

材质及表面处理：Q235表面镀锌。
Material and finishing: Q235 zinc coated.

MS856A MS856B

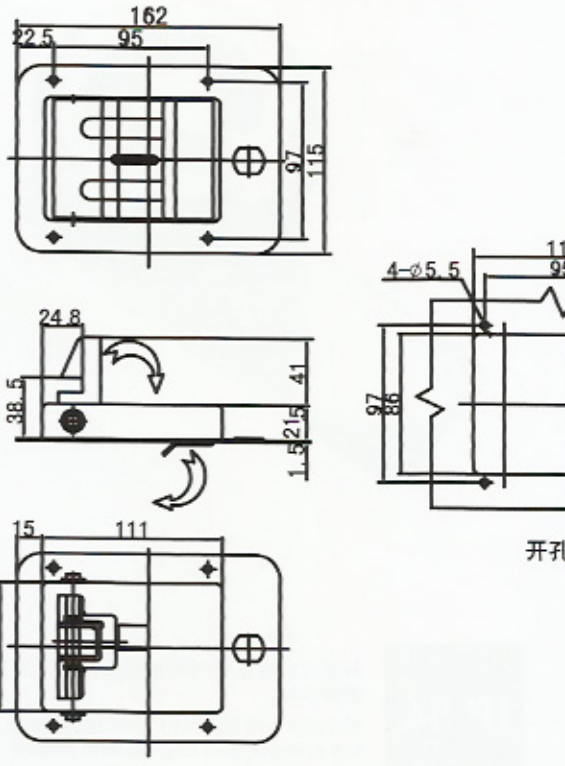

开孔尺寸



MS856A

MS856B

材质及表面处理:黑色冷轧钢面板、把手;
镀锌钢锁舌; 黑色锌合金锁头。

Material and finishing: Black powder coated stainless steel panel and handle; zinc coated steel cam; black powder coatedzinc alloy cylinder body.

MS858

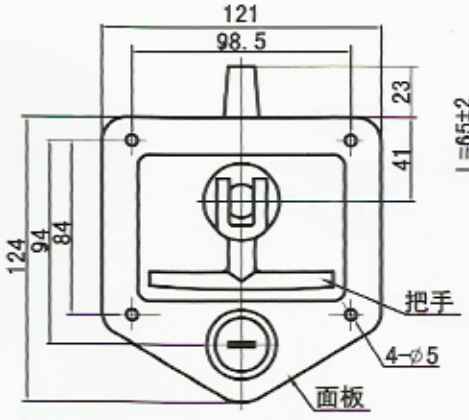

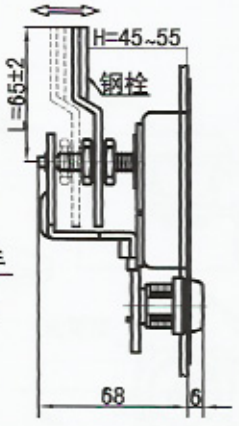

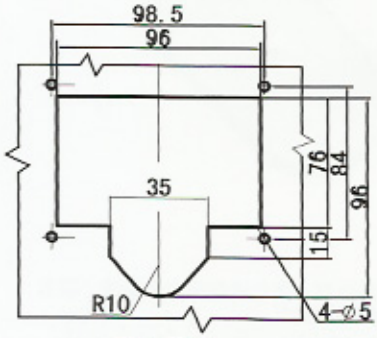

开孔尺寸

Panel Drilling Dimensions



材质及表面处理:镜面抛光不锈钢面板。

Material and finishing:Mirror-polish stainless steel panel.

MS858A

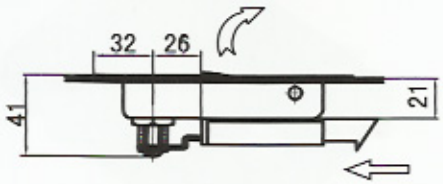



安装示意图

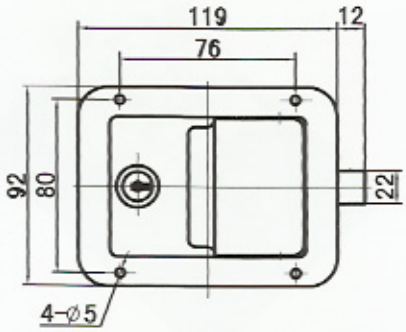

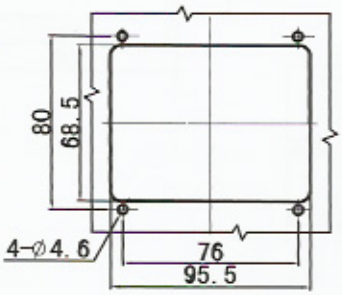

开孔尺寸



材质及表面处理:镜面抛光不锈钢面板。
Material and finishing:Mirror-polish stainless steel panel.

MS858B

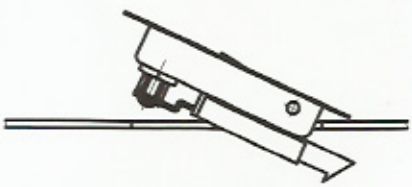

安装示意图

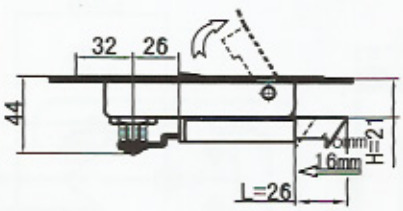

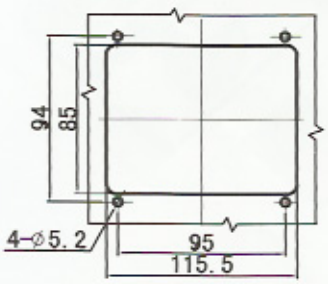

开孔尺寸
Panel Drilling Dimensions

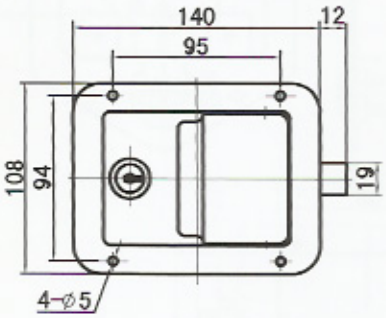



材质及表面处理:镜面抛光不锈钢面板。
Material and finishing:Mirror-polish stainless steel panel.

MS858-3

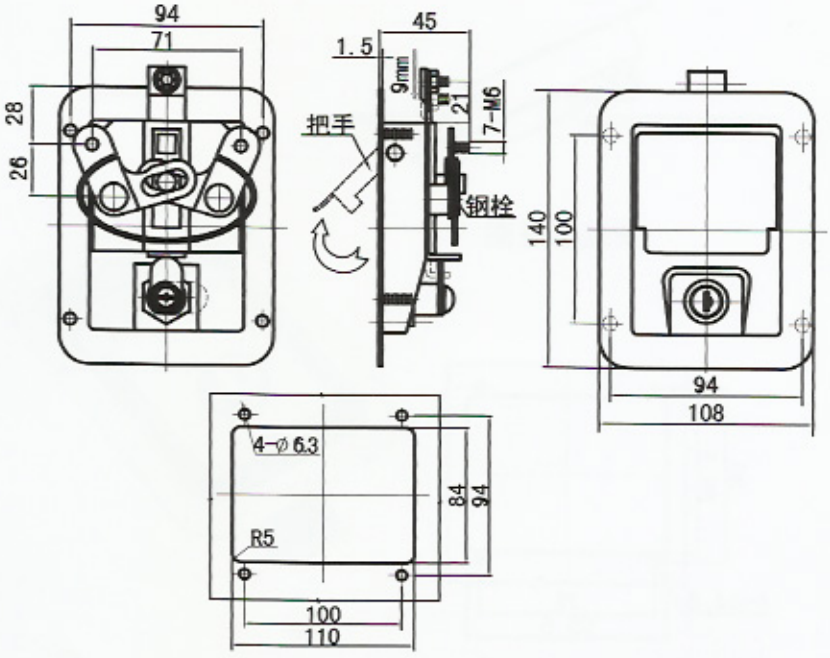

开孔尺寸
Panel Drlling Dimensions



材质及表面处理：镜面抛光不锈钢面板，黑色喷塑。
Material and finishing: Mirror-polish stainless steel or black powder coated.

MS858-4

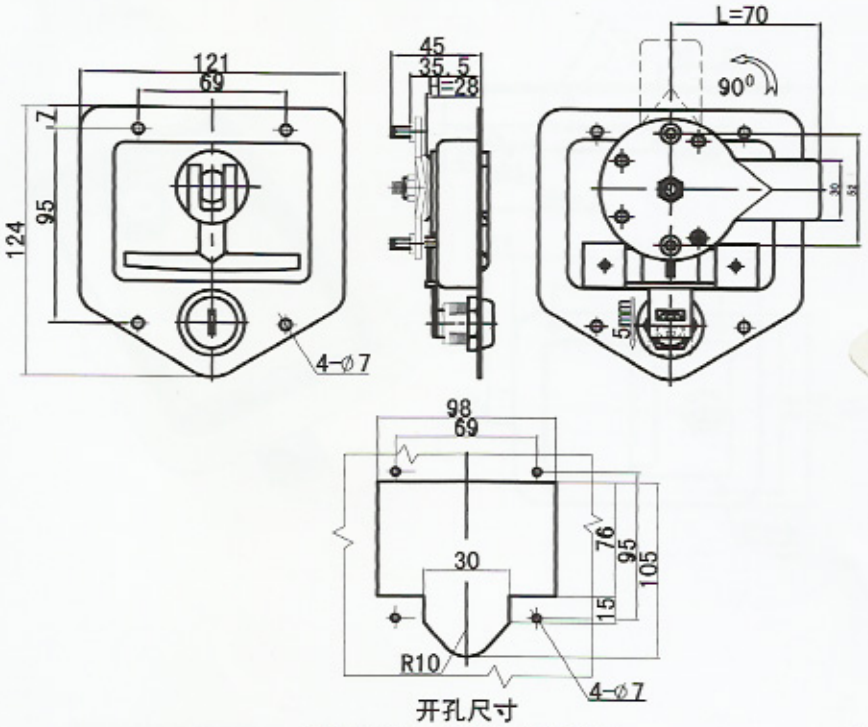

开孔尺寸
Panel Drlling Dimensions



材质及表面处理:镜面抛光不锈钢面板。
Material and finishing:Mirror-polish stainless steel panel.

MS858-5

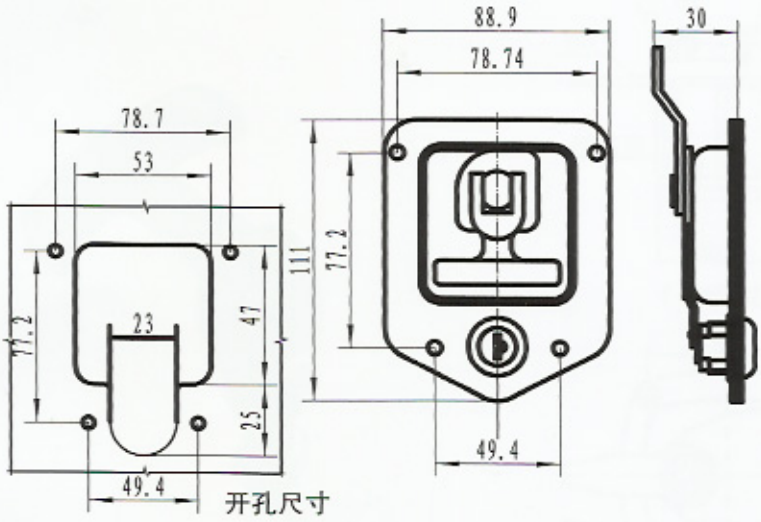

开孔尺寸



材质及表面处理:碳钢表面镀白锌面板。
Material and finishing: Zinc coated carbon steel panel.

MS858D

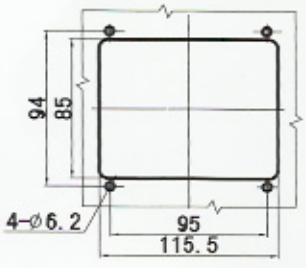

开孔尺寸
Panel Drilling Dimensions

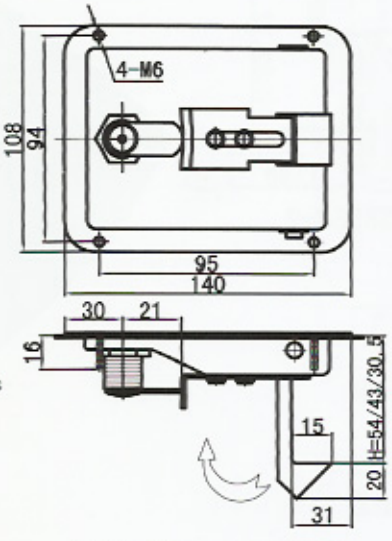

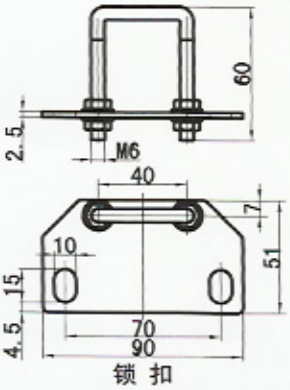

锁 扣



材质及表面处理：镜面抛光不锈钢面板，黑色喷塑。
Material and finishing: Mirror-polish stainless steel or black powder coated.

MS858C

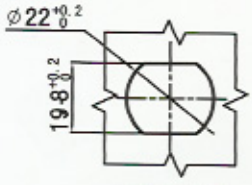

开孔尺寸
Panel Drilling Dimensions

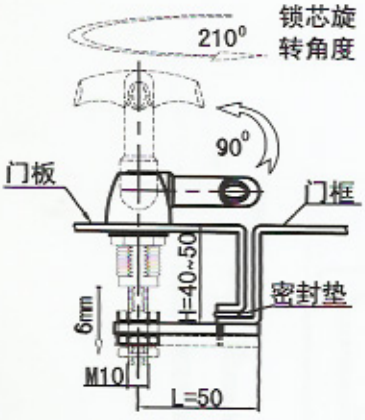

MS858C-1



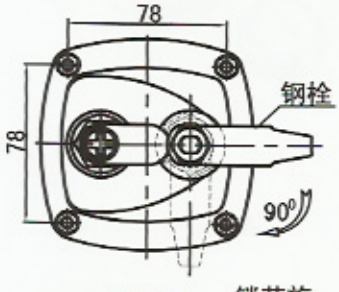

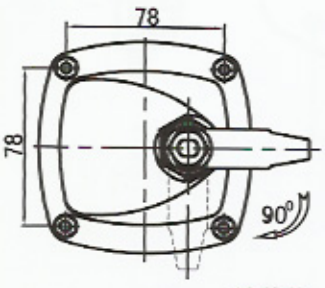

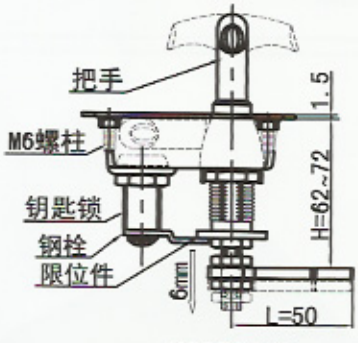

MS858C-3

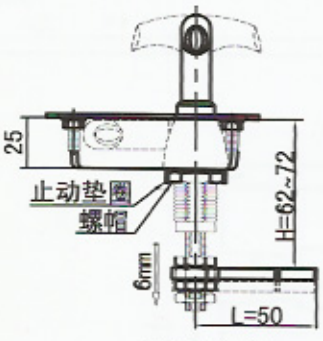

MS858C-2



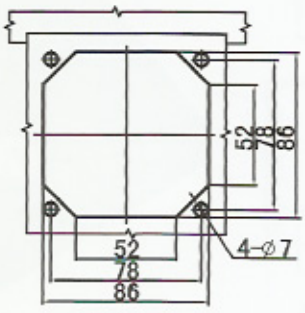

开孔尺寸
Panel Drilling Dimensions

产品型号（MODEL）	特征描述(SPECIFICATION)
MS858C-1	无锁壳 压缩型
MS858C-2	带锁壳 无钥匙锁 压缩型
MS858C-3	带锁壳 带钥匙锁 压缩型

材质及表面处理：钢制锁壳、钢栓，锌合金锁把手。镀锌、喷塑(黑色)。
Material and finishing: Stainless steel housing, zinc alloy handle. Zinc and black powder coated.

MS866-3

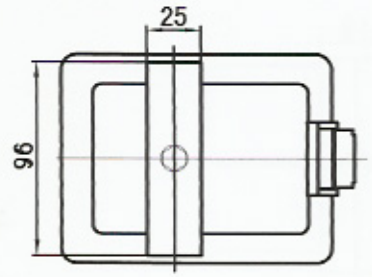

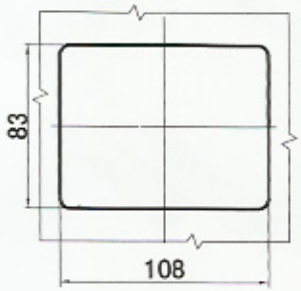

开孔尺寸
Panel Drlling Dimensions

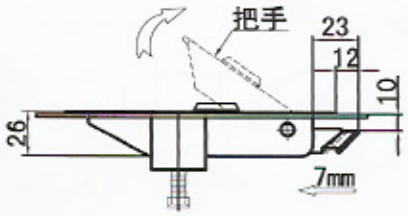

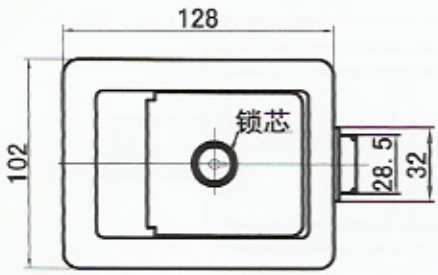



材质及表面处理:钢制面板，表面黑色，喷塑。
Material and finishing: Stainless steel panel, black powder coated.

MS866-4

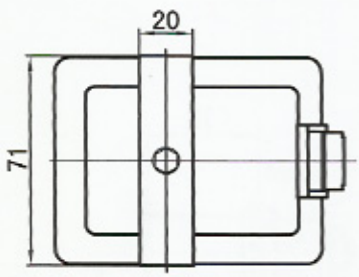

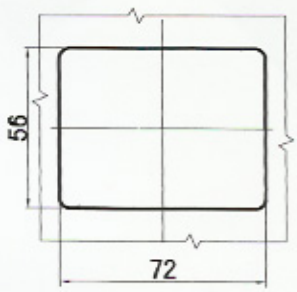

开孔尺寸
Panel Drlling
Dimensions

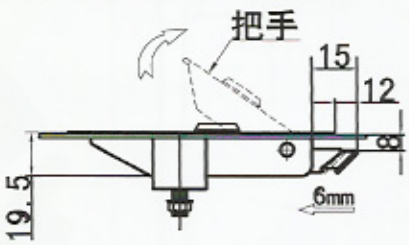

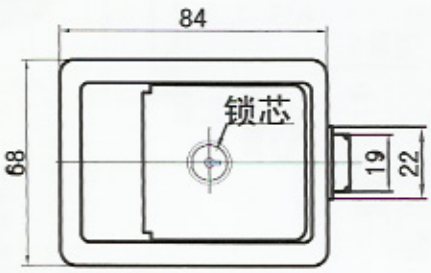



材质及表面处理:钢制面板，表面黑色，喷塑。
Material and finishing: Stainless steel panel, black powder coated.

MS866-5

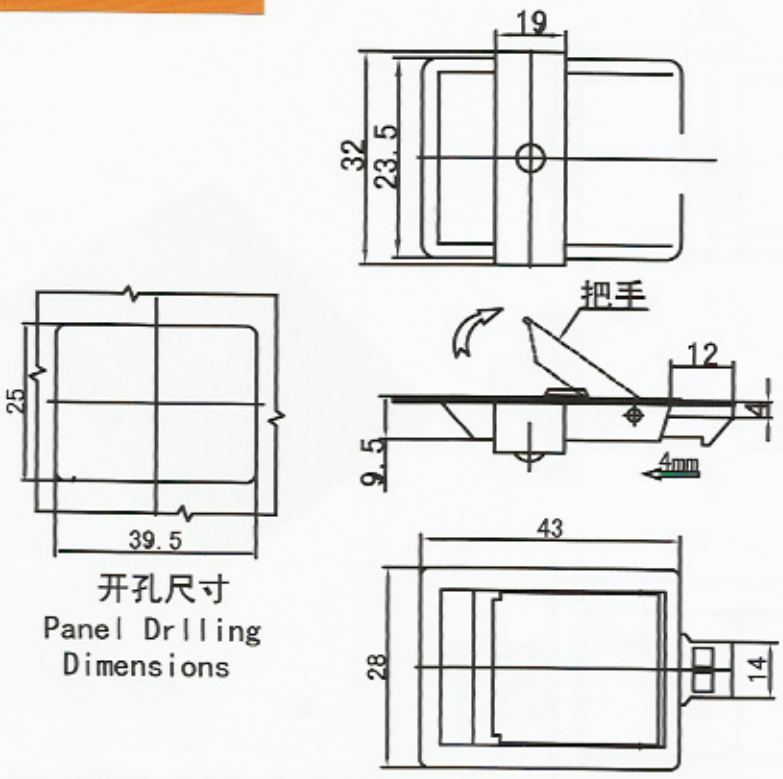

开孔尺寸
Panel Drilling Dimensions



材质及表面处理:镜面抛光不锈钢面板。
Material and finishing: Mirror-polish stainless steel panel.

MS868

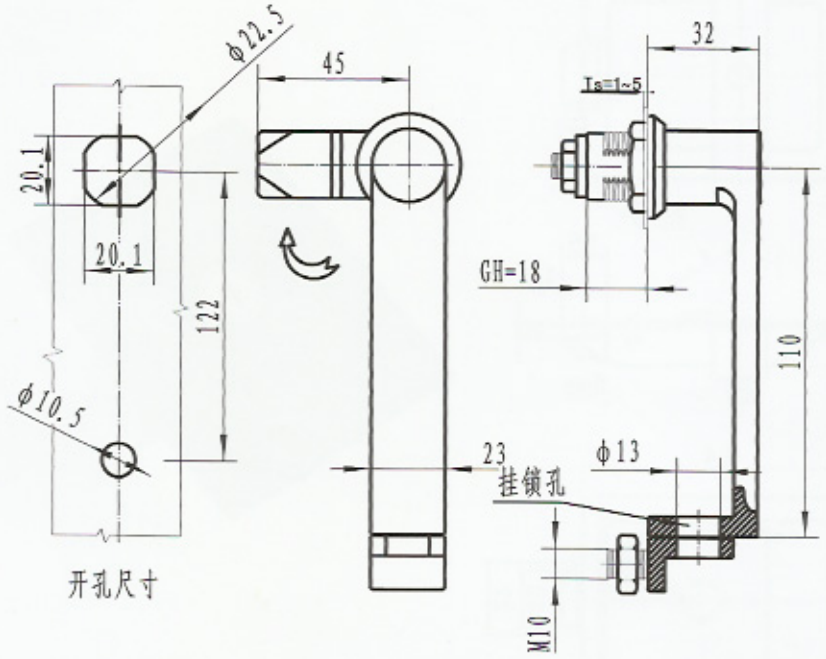

开孔尺寸



材质：锌合金锁体、钢制钢栓。
表面处理：镀铬、镀锌。
结构功能：锁体旋转180度可左右开门。
Material: Zinc alloy housing, steel cam.
Finishing: Chrome & Zinc Coating.
Structure and feature: Turning the handle by 180°to open the door on either side.

注：默认S3B系列钢栓。即H=18+8；
钢栓开孔口8*8，可选用三点、两点或单点钢栓，详见钢栓列表

MS875-1 MS875-2

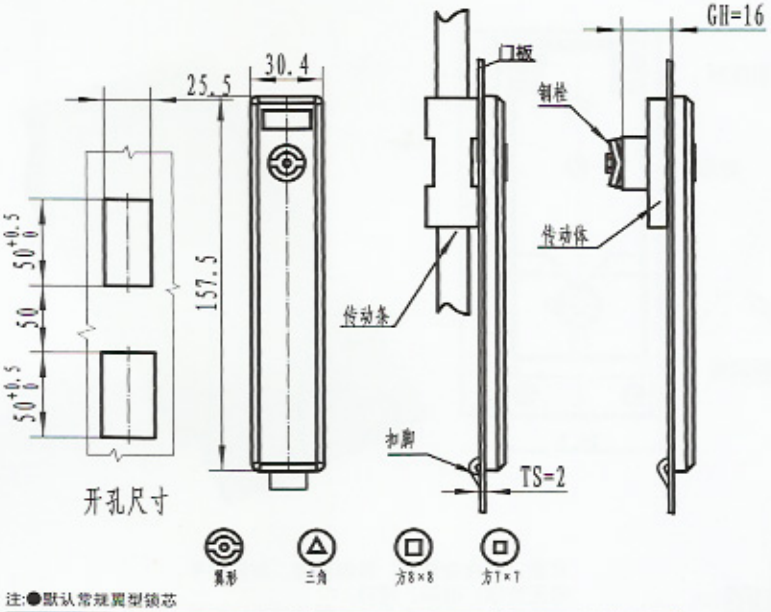



配件选用：钢栓传动条机构Mb9系列P30
齿条传动机构MB4系列P31

注:●默认常规翼型锁芯

特征描述(SPECIFICATION)	齿条连动式型号	钢栓连动式型号
●翼型	MS875-1-4	MS875-2-4
三角型8mm	MS875-1-3	MS875-2-3
口7*7	MS875-1-2	MS875-2-2
口8*8	MS875-1-1	MS875-2-1

材质及表面处理：黑色PA面板;镀锌钢栓、传动条；镀铬锌合金锁芯。
Material and finishing: Black PA panel; zinc coated steel cam, drive stripe; chrome plated zinc alloy key cylinder.

MS875A-1 MS875A-2

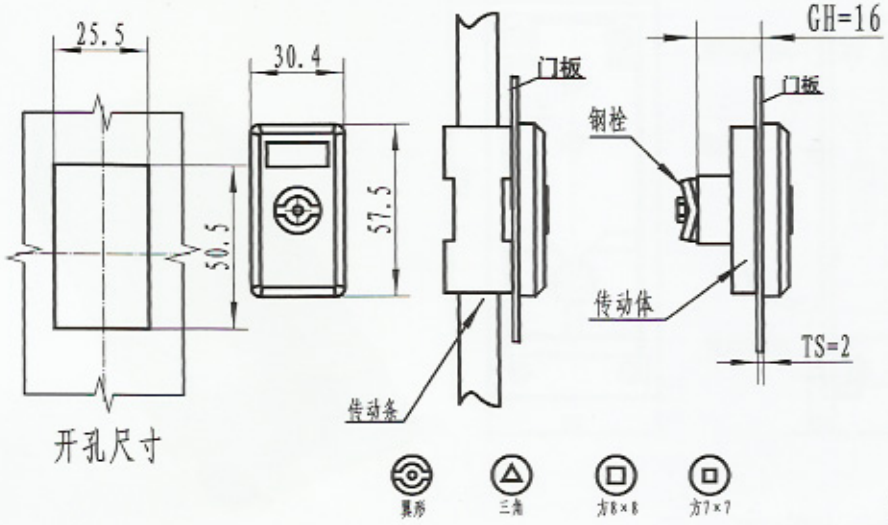



配件选用：钢栓传动条机构Mb9系列P30
齿条传动机构MB4系列P31

注:●默认常规翼型锁芯

特征描述(SPECIFICATION)	齿条连动式型号	钢栓连动式型号	配用钥匙
●翼型	MS875-1-4	MS875-2-1	K15-1 K15-1F K15-1A
三角型8mm	MS875-1-3	MS875-2-2	K15-3 K15-6F
口7*7	MS875-1-2	MS875-2-3	K15-6 K15-6F
口8*8	MS875-1-1	MS875-2-4	K15-4 K15-4F

IP 54

材质及表面处理：黑色PA面板;镀锌钢栓、传动条；镀铬锌合金锁芯。
Material and finishing: Black PA panel, zinc- plating steel cam and drive strip. Bright chrome coated zinc alloy key cylinder.

MS888-1(窄边)

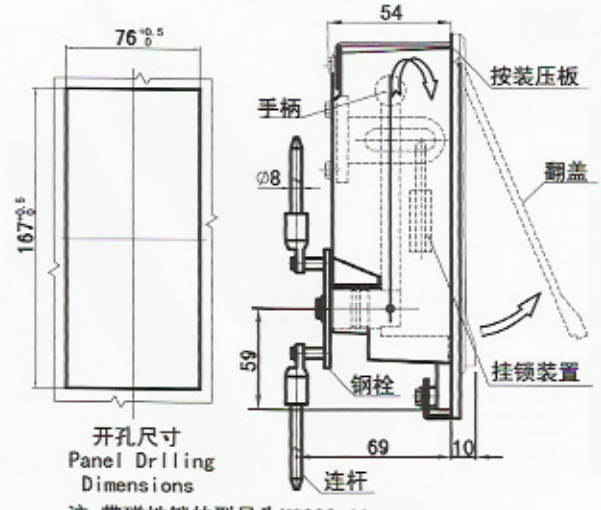

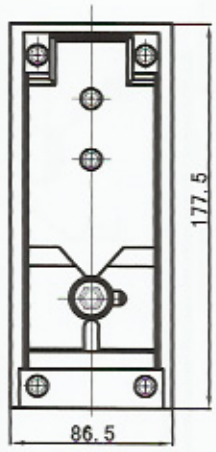



注:带磁性锁的型号为MS888-1A

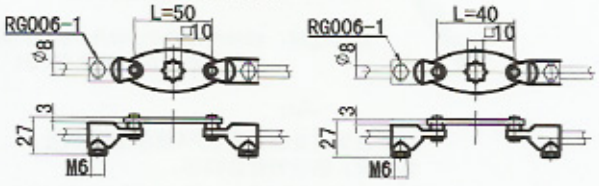

注：带磁性锁的型号为MS888-1A

材质：铝合金锁体、钢制钢栓、旋转拉手。
表面处理：喷塑、镀锌。
结构功能：该锁盒为户外箱式变电站专用，可两点、三点锁紧柜门外加挂锁，磁性结构可锁住防护盖。

Material: Aluminum alloy housing, steel cam and handle.
Finishing: powder, zinc coating.
Structure and feature: This lock is designed for using at box substations. Two-point or three-point system is available with padlock. The magnet is able to lock the protecting cover.

MS888-1(宽边)

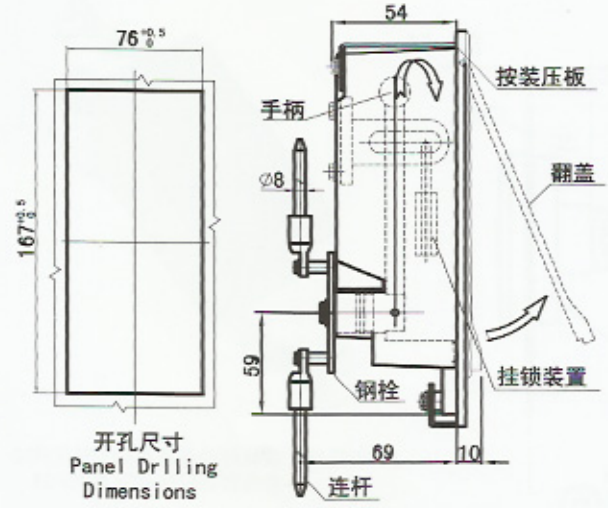

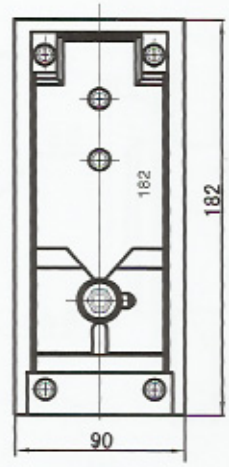



注:带磁性锁的型号为MS888-1A

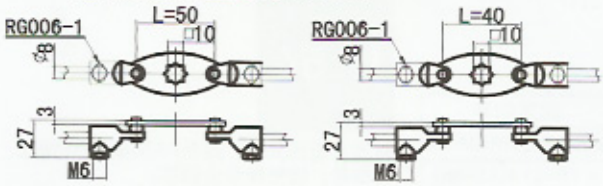

注:带磁性锁的型号为MS888-1A

注:材质、表面处理、结构功能，刚栓选用请参考FMS888-1（窄边），门锁。

Remark: Any description about material, structure function and surface finishing, please refer to MS888-1(small).

MS888A

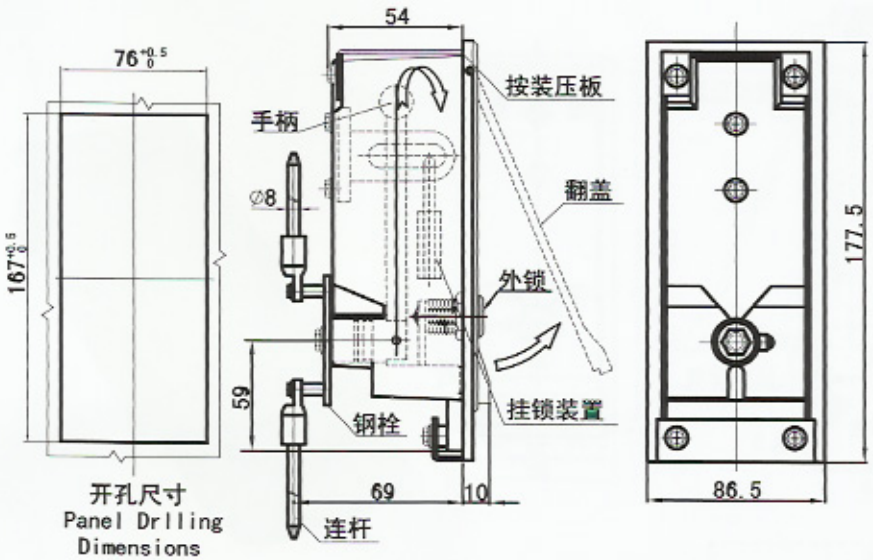

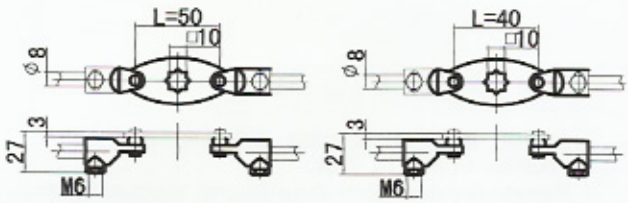



注:材质、表面处理、结构功能，钢栓选用请参考FMS888-1（窄边），门锁。

Remark: Any description about material, structure function and surface finishing, please refer to MS888-1(small).

MS888-2

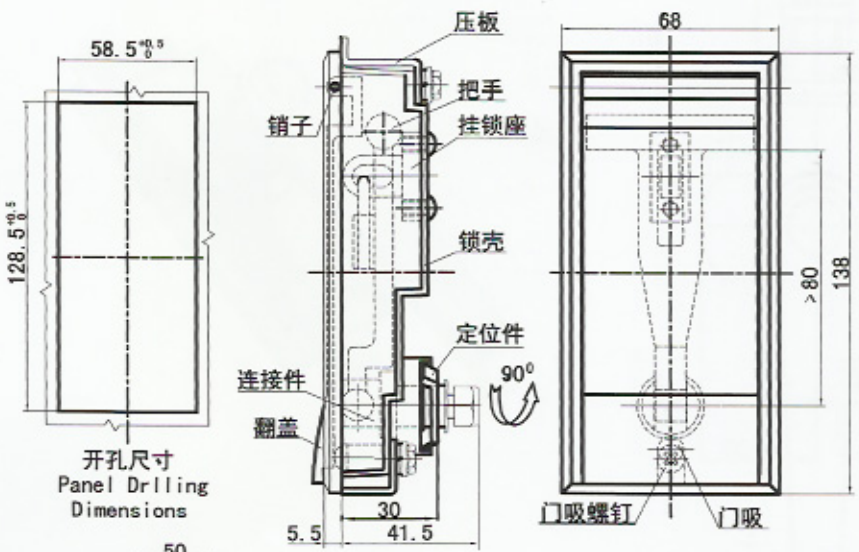

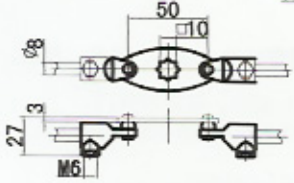



注:材质、表面处理、结构功能，钢栓选用请参考FMS888-1（窄边），门锁。

Remark: Any description about material, structure function and surface finishing, please refer to MS888-1(small).

MS889

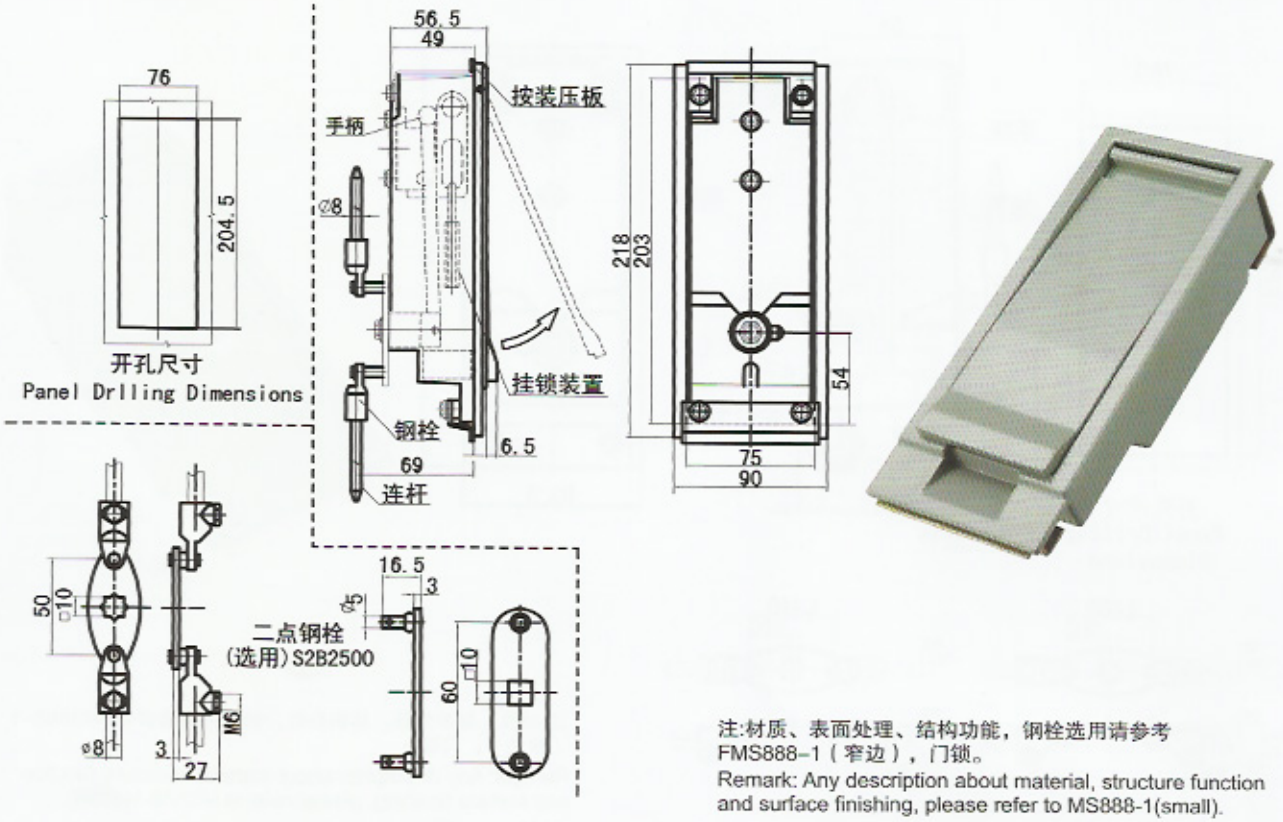

注:材质、表面处理、结构功能，钢栓选用请参考FMS888-1（窄边），门锁。
Remark: Any description about material, structure function and surface finishing, please refer to MS888-1(small).

MS891

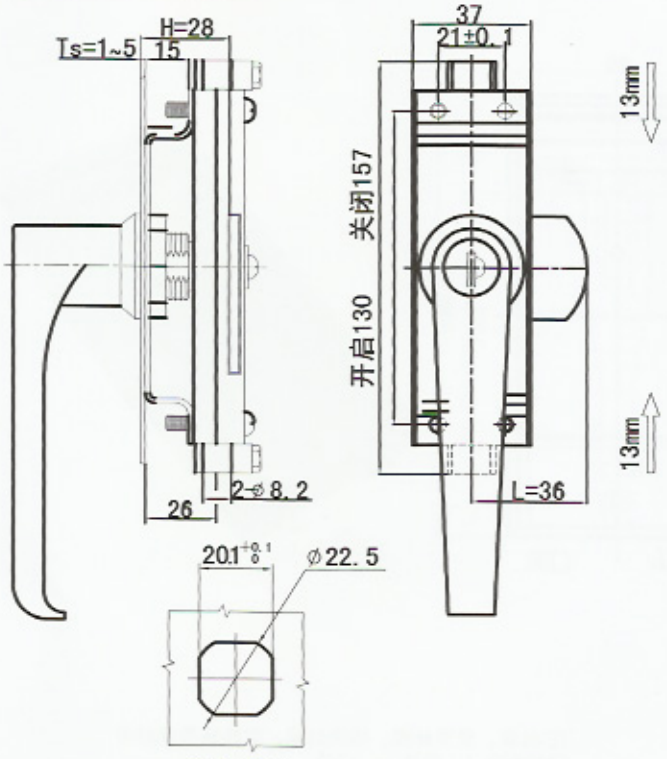

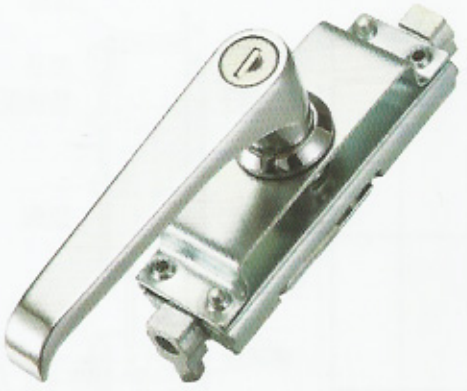

材质：锌合金手柄、钢质传动件、螺母、锁体、钢栓。
表面处理：镀铬、镀锌。
结构功能：锁体旋转180° 安装，可左右开门。
Material: Zinc alloy handle, steel drive stripe, nut, housing, and cam.
Finishing:Chrome & Zinc Coating;
Structure and feature: To open on either side, the lock body need to rotate 180° while installing.

挂锁

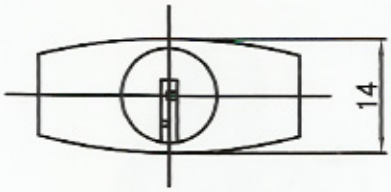

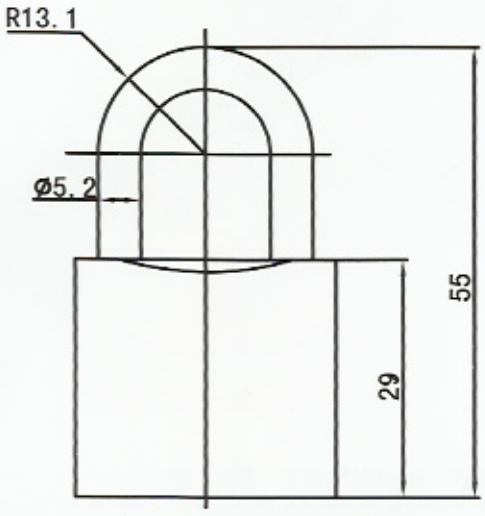



材质：半铜、锁芯全铜、锁体铁。
表面处理：喷铜。
Material: Copper key cylinder, steel body.
Finishing: Copper coated.

MS913

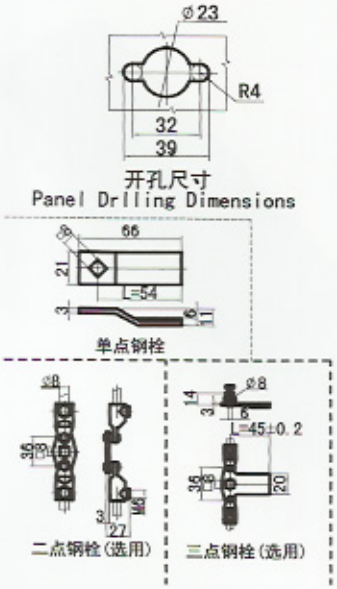

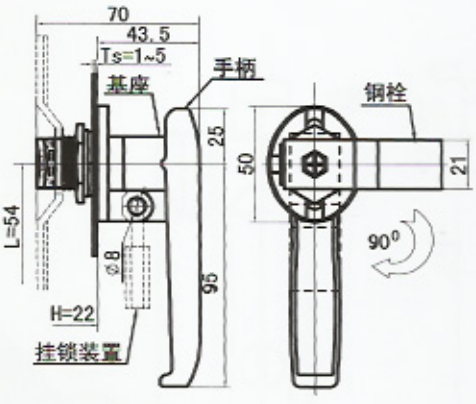

注：通过改变基座及钢栓的放置角度，实现左右开门；





产品型号（MODEL）	特征描述(SPECIFICATION)
MS913	无钥匙
MS913-2	常规钥匙
MS913-2A	月亮型铜锁芯

材质及表面处理：镀铬锌合金把手、基座，镀锌钢钢栓；分左右开门。
Material and finishing: Bright chrome-plating ZDC handle and housing; Zinc-plating Steel cam; please note LH or RH while ordering.

MS913A

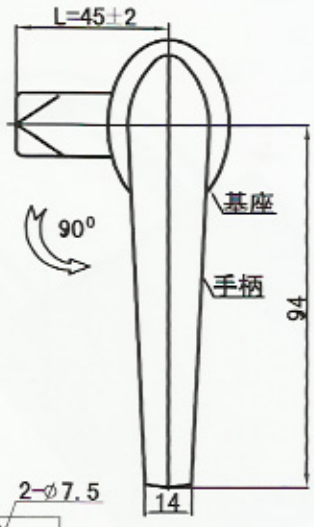

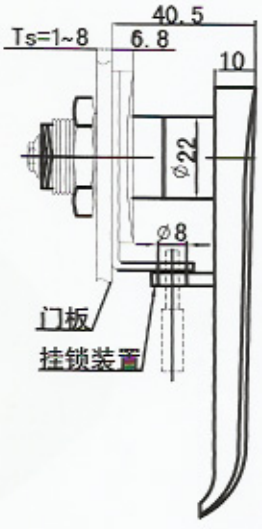



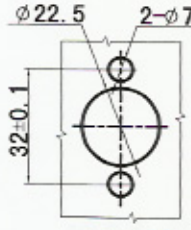

开孔尺寸
Panel Drlling Dimensions

材质及表面处理：镀铬锌合金把手、基座，镀锌钢栓；分左右开门。
Material and finish:Bright chrome-plating ZDC handle and housing; Zinc-plating Steel cam.

MS1011

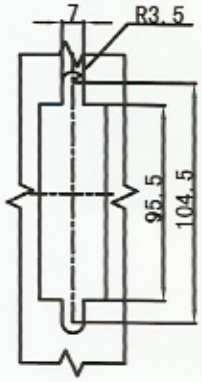

开孔尺寸
Panel Drlling Dimensions

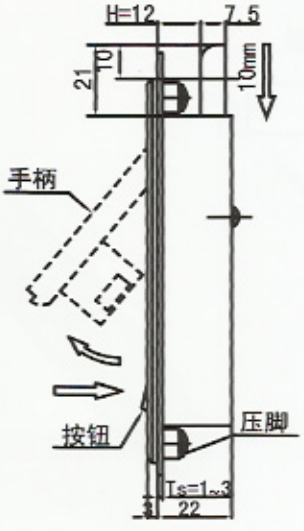

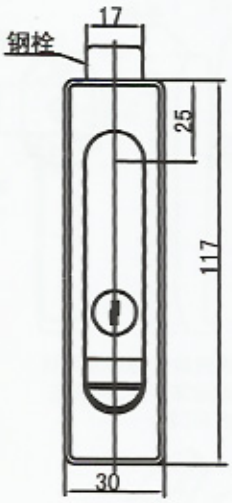



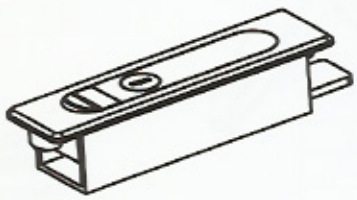

材质：锌合金锁体、钢栓、钢制底壳。
表面处理：亚光铬、喷塑。
结构功能:开关用平面弹出锁舌。
Material: Zinc alloy housing, steel cam, base.
Finishing: Matt chrome and powder coated.
Structure and feature:The bolt is ejected on a plane when opening or closing the door.

MS1012

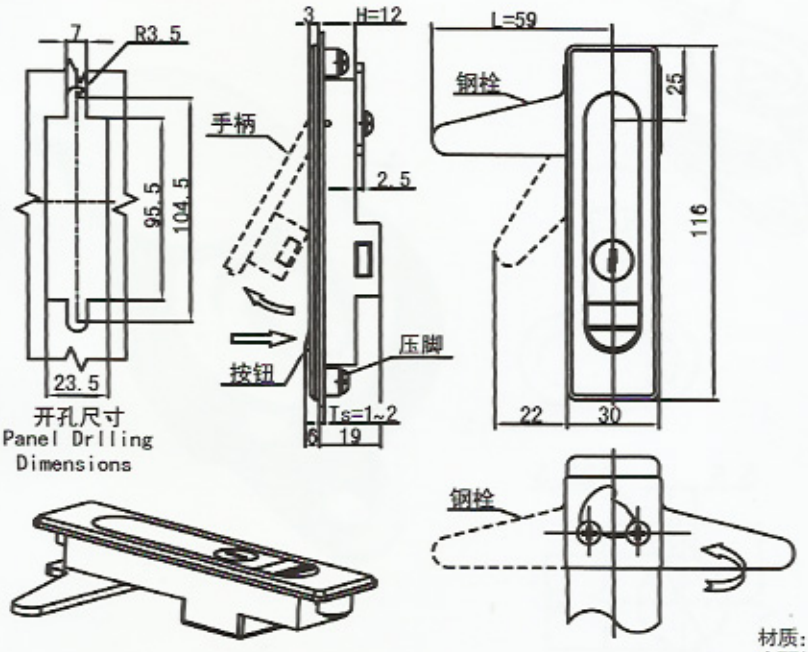



材质：锌合金锁体、铜制钢栓。
表面处理：亚光铬(喷塑)、镀锌。
结构功能:钢栓翻转180度,实现左右开门(适用于平钢栓)。

Material: Zinc alloy housing, steel cam.
Finishing: Matt chrome, powder and zinc plated.
Structure and feature: Turning the steel cam by 180°to open the door on either side (applicable for flat steel cam).

注：钢栓翻转180° ，实现左右开门（适用于平钢栓）。

MS1019

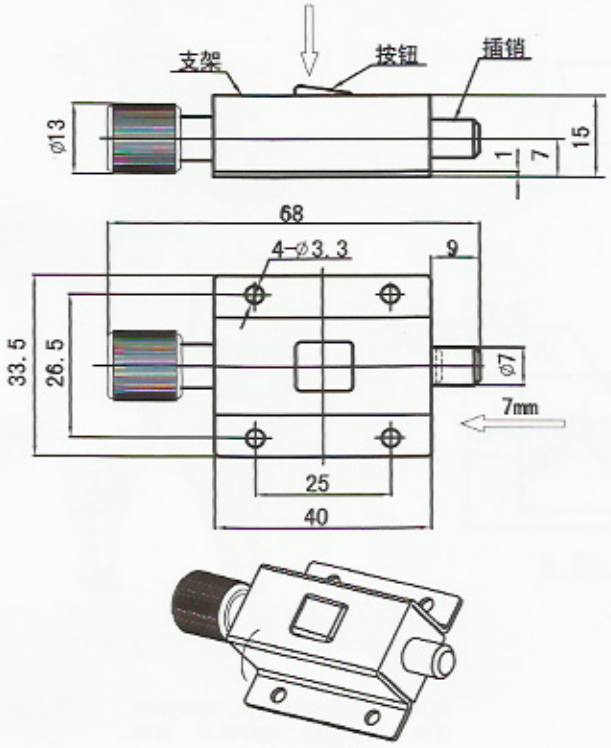

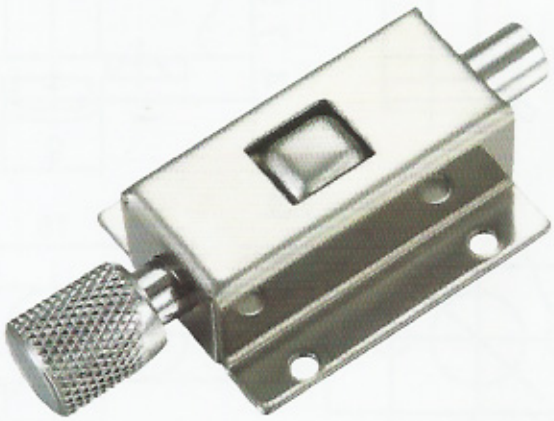

材质：不锈钢固定架、按钮、带塑料套镀锌钢插销。
表面处理：镀铬、镀锌。

Material: stainless steel mount, button, and zinc coated steel bolt with plastic cover.
Finishing: Chrome and zinc coated.

注：MS1019-1拉开插销打开，按下按钮锁住。
MS1019-2推进插销锁住，按下按钮打开。

MS1031

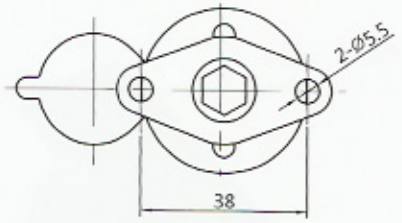





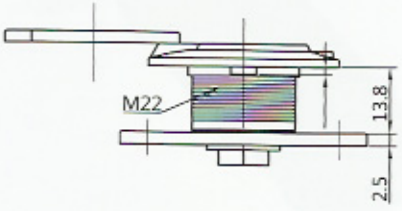

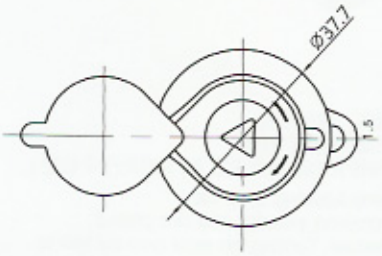

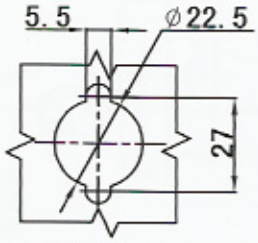

开孔尺寸
Panel Drlling Dimensions



材质:铝合金锁体、钢制钢栓;
表面处理:喷塑、镀锌。
Material: Zinc alloy housing, steel cam.
Finishing:Zinc and PVC Coating.

MS1032



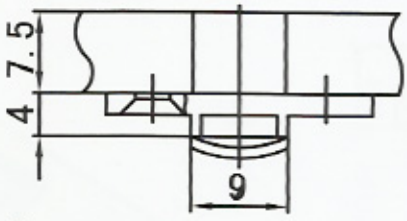

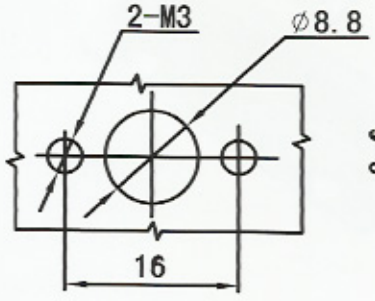

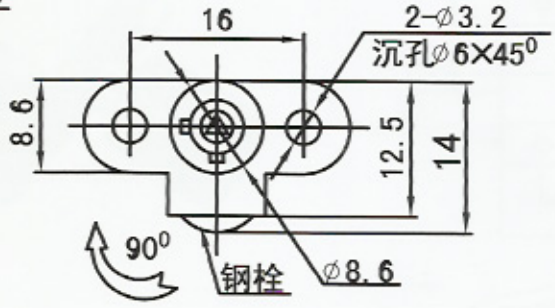

开孔尺寸
Panel Drlling
Dimensions





材质：锌合金锁体钥匙，钢制钢栓。
表面处理：喷塑、喷砂镀铬、镀锌。
Material: Zinc alloy housing, key, steel cam.
Finishing: Black powder, sandblasting chrome, and zinc coated.

MS1067

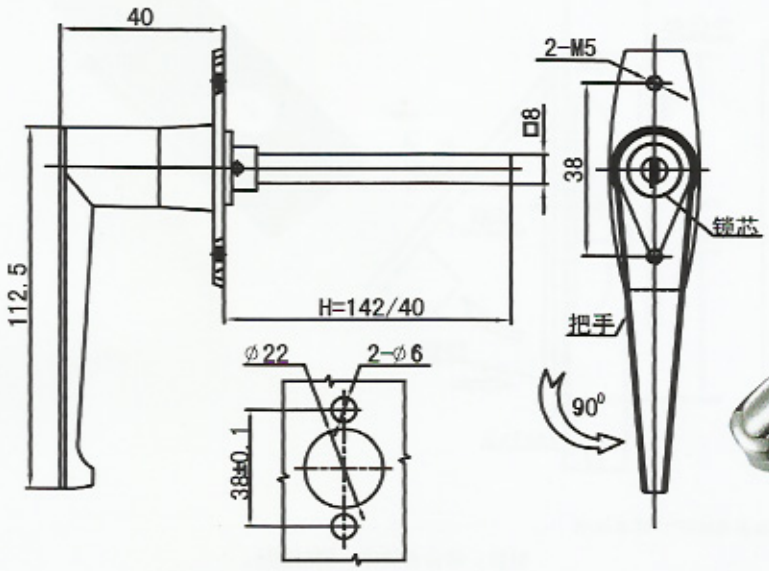

开孔尺寸
Panel Drilling Dimensions



材质及表面处理：镀铬锌合金把手、基座；镀锌钢钢栓;分左右开门。

Material and finishing: Chrome plated zinc alloy handle, base; zinc plated steel cam; please note RH or LH while ordering.

MS4001

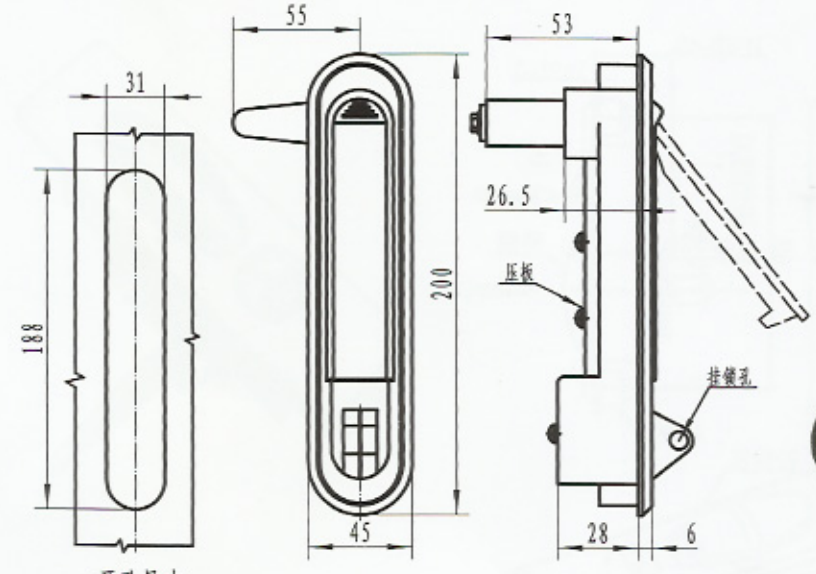

开孔尺寸



钢栓选用单点S1C系列；
三点钢栓选用S3C4500系列。
注：可选择二点钢栓。

注：改变定位件及刚栓的放置角度。
实现左右开门。

产品型号（MODEL）	特征描述(SPECIFICATION)
MS4001-1	单点钢栓
MS4001-2	三点钢栓

IP 65

材质：锌合金锁体钥匙，钢制钢栓。
表面处理：喷塑、喷砂镀铬、镀锌。

Material: Zinc alloy housing, key, steel cam.
Finishing: Powder, sandblasting chrome, and zinc coated.

MS4003

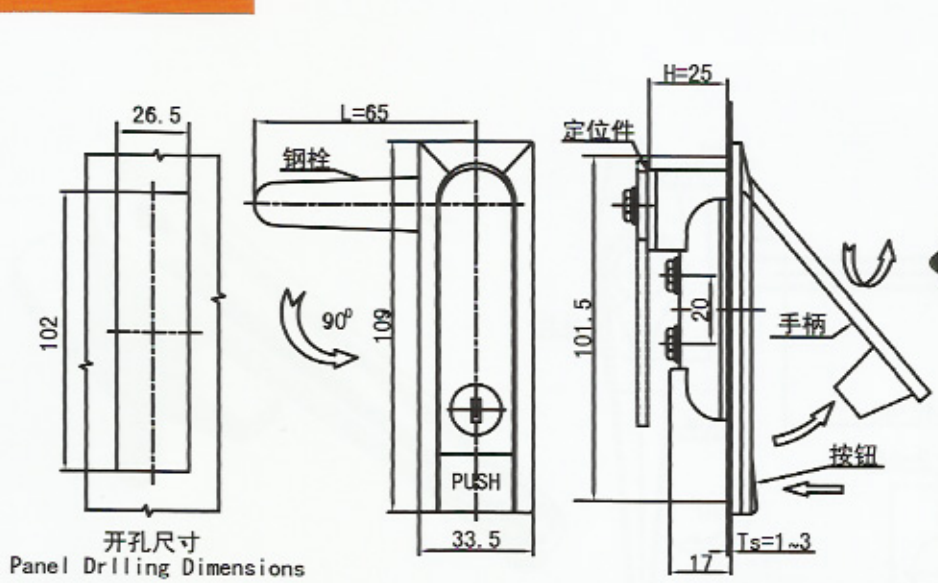

开孔尺寸
Panel Drilling Dimensions



注：钢栓选用请参考MS713样本说明



定位件

注：改变定位件及钢栓的放置方向可实现左右开门。

材质：锌合金锁体、钢制钢栓。
表面处理：亚光铬（细砂喷塑）、镀锌。
结构功能：定位件转90度刚栓转180度可左右开门。

Material: Zinc alloy housing, steel cam.
Finishing: Matt chrome (sandblasting powder coated), zinc plated.
Structure and feature: Turning the locator by 90°,and steel cam by 180°to open the door on either side.

DQO-1

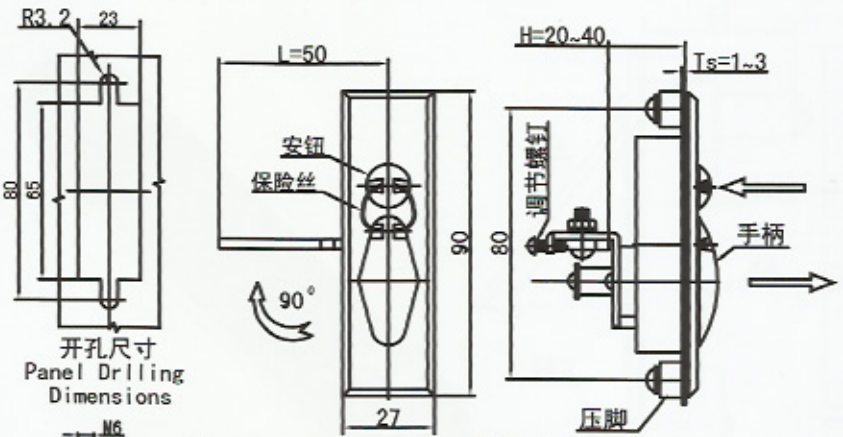

开孔尺寸
Panel Drilling Dimensions



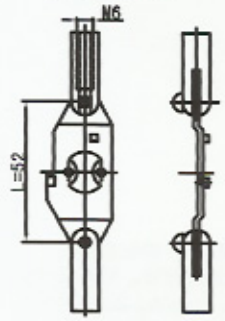

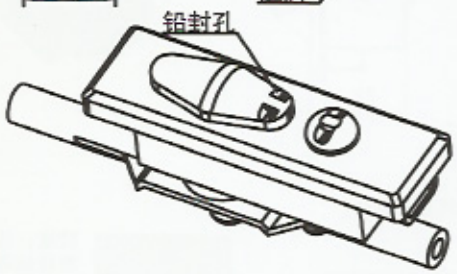

注：二点钢栓（选用）S2D2600系列

材质：锌合金锁体、钢制钢栓。
表面处理：镀铬、镀锌。
结构功能：按钮按下，手柄能自动弹出，旋转手柄可开启90°。

Material: Zinc alloy housing, steel cam.
Finishing: Zinc & Chrome Coating.
Structure and feature: Press the button and the handle will eject automatically, and turn the handle by 90°to open the door.

DQO-2

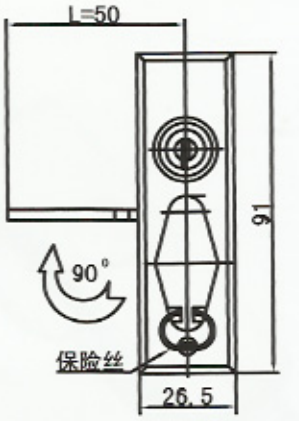

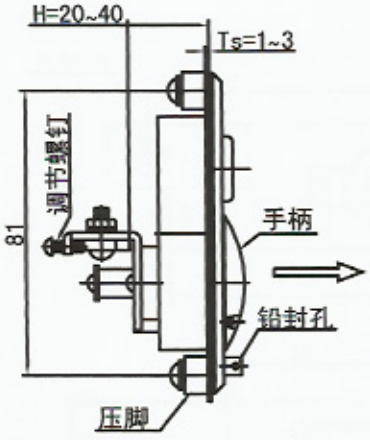



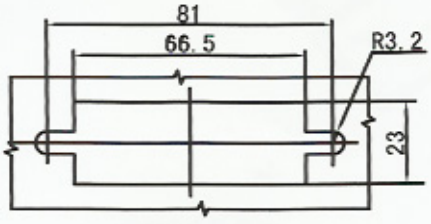



注：二点钢栓（选用）S2D2600系列

材质：锌合金锁体、钢制钢栓。
表面处理：镀铬、镀锌。
结构功能：按钮按下，手柄能自动弹出，旋转手柄可开启90°。

Material: Zinc alloy housing, steel cam.
Finishing: Zinc & Chrome Coating.
Structure and feature: Press the button and the handle will eject automatically, and turn the handle by 90°to open the door.

DHC-01

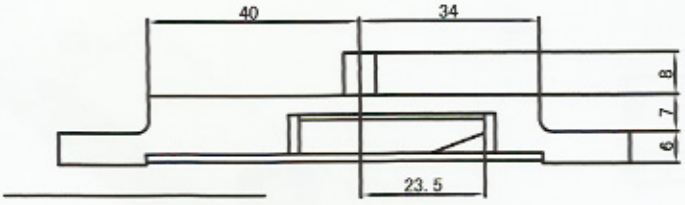

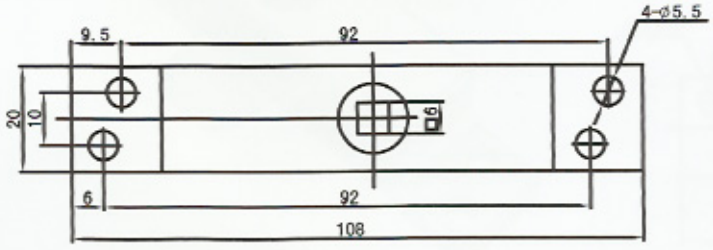



材质:锌合金锁体;
表面处理：镀锌。

Material: Zinc alloy housing.
Finishing:Chrome Coating.

DHC-02

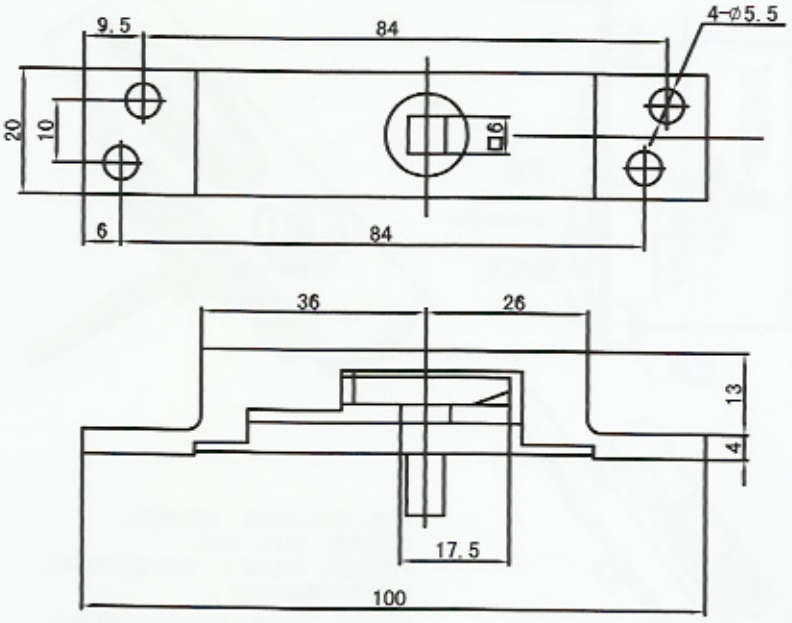



材质:锌合金锁体;
表面处理：镀锌。
Material: Zinc alloy housing.
Finishing:Chrome Coating.

DHC-03

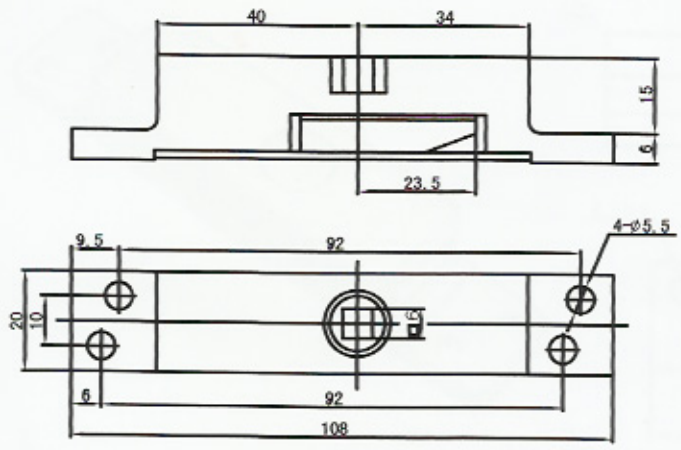



材质:锌合金锁体;
表面处理：镀锌。
Material: Zinc alloy housing.
Finishing:Chrome Coating.

DHC-04

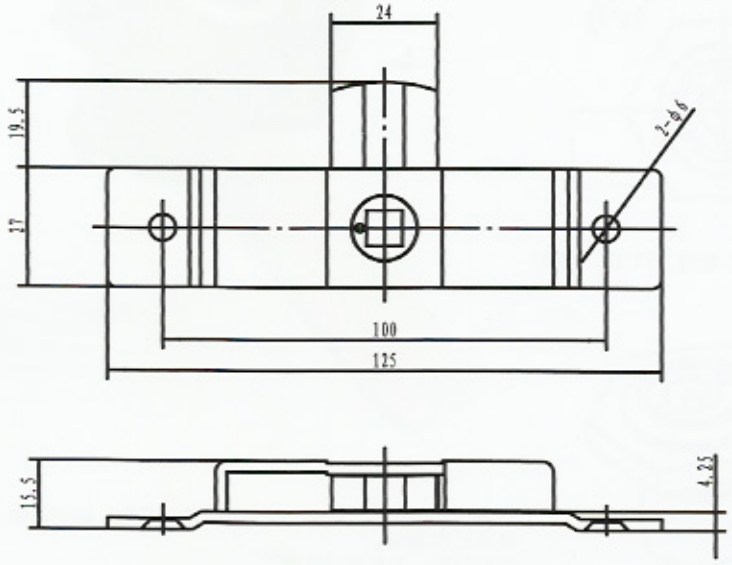



材质:锌合金锁体;
表面处理：镀锌。
Material: Zinc alloy housing.
Finishing:Chrome Coating.

DHC-05

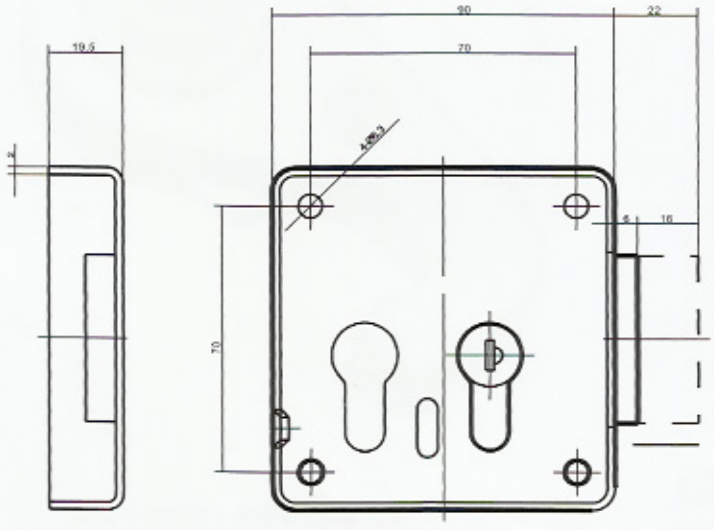

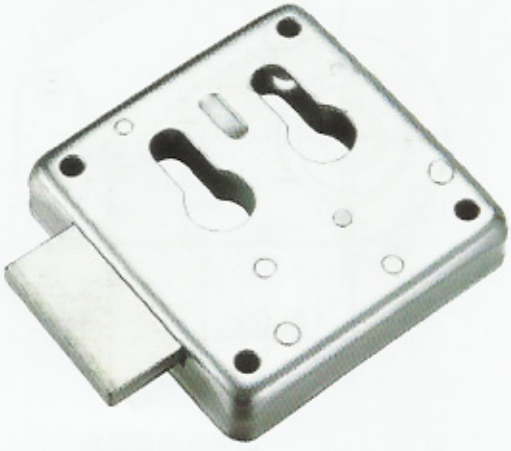

材质及表面处理:钢制锁体，锌合金锁舌。
配锁芯后锁舌伸缩16mm实现闭锁。
Material and finishing: Steel housing, zinc alloy cam. The cam stretches 16mm to open or lock the door after equipped with key cylinder.

GCS

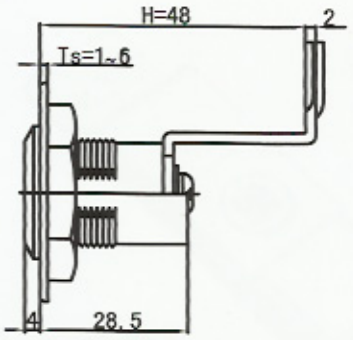

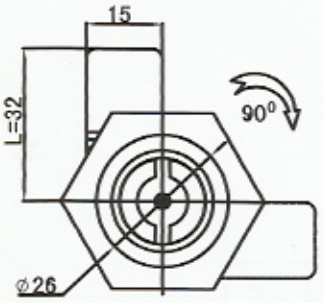

注：单点钢栓（选用）S1D系列钢栓



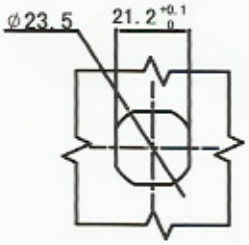

开孔尺寸
Panel Drilling Dimensions

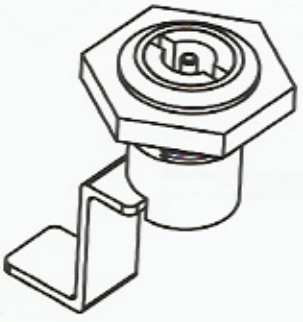

材质：ABS锁体、螺母、锌合金锁芯、钥匙、钢制钢栓。
表面处理:镀锌。
结构功能：左右开门通用。

Material: ABS housing, and nut; zinc alloy key cylinder, and key; steel cam.
Finishing: Zinc Coating.
Structure and Feature: Applicable for opening the door on either side.

GS-1

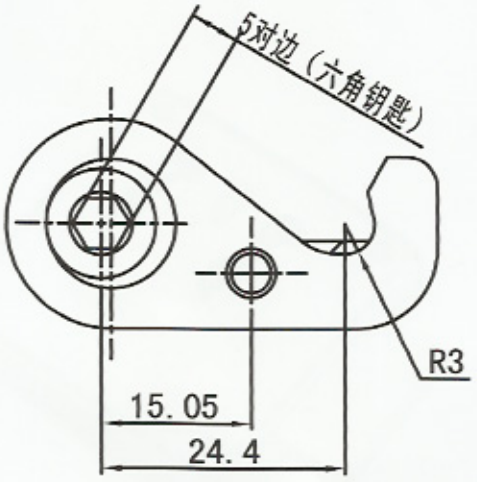

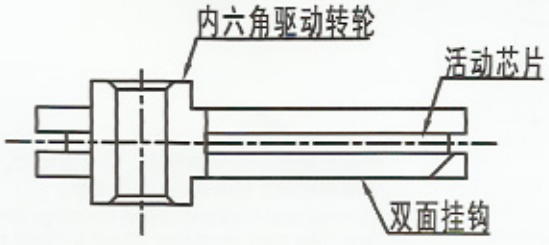



材质:转轮粉末冶金（HRC30）挂钩。
ST-12钢板镀白锌。
表面处理：ST-12钢板镀白锌。
功能特点：由内六角钥匙驱动。

Material: Powder metallurgy (HRC30) hook.
Finishing: ST-12 white zinc plated steel.
Structure and feature: Operating with hexagonal socket key.

FCMS

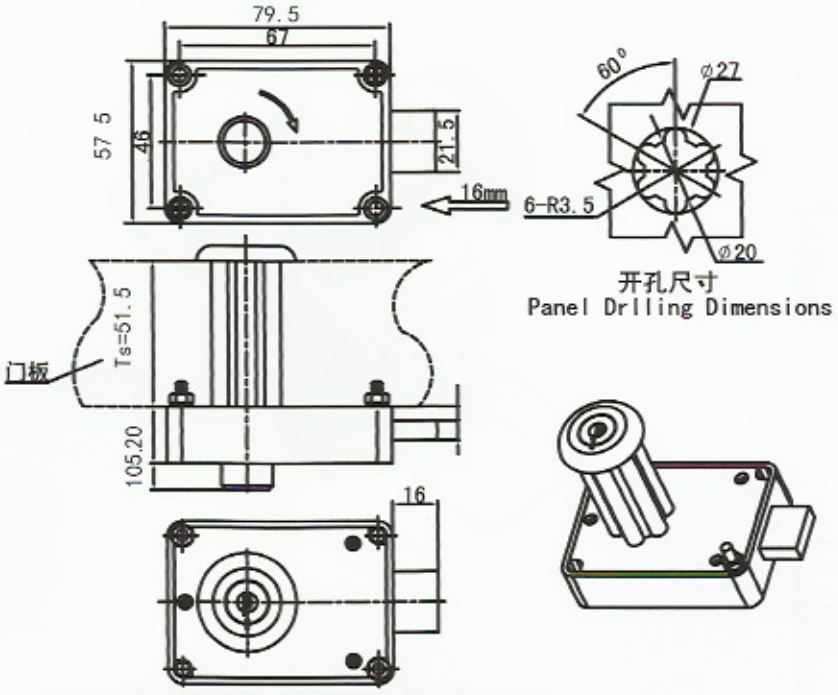



材质:锌合金锁体,钢制连接板。
表面处理:镀铬。
结构功能：两面都能开启，关闭。
Material :Material: Zinc alloy housing, stainless steel connecting panel.
Finshing:Chrome Coating.
Structure Function:Both Side Can Open & Lock.

MSWT



安装示意图
Installation Diagram

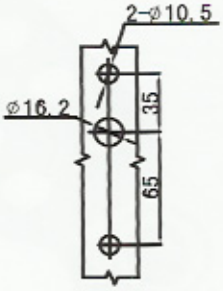



翼型锁芯

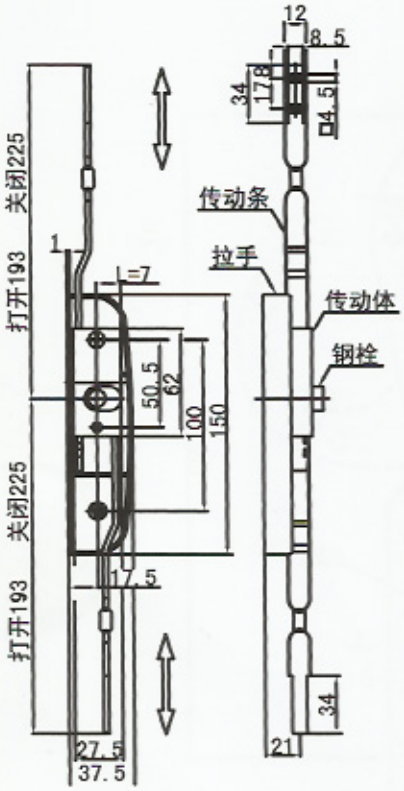



材质及表面处理:塑料拉手,镀锌钢转动条,镀锌锌合金锁芯、钢栓。
Material and finishing: Plastic handle, zinc coated steel drive stripe, zinc coated zinc alloy key cylinder, steel cam.

MKS

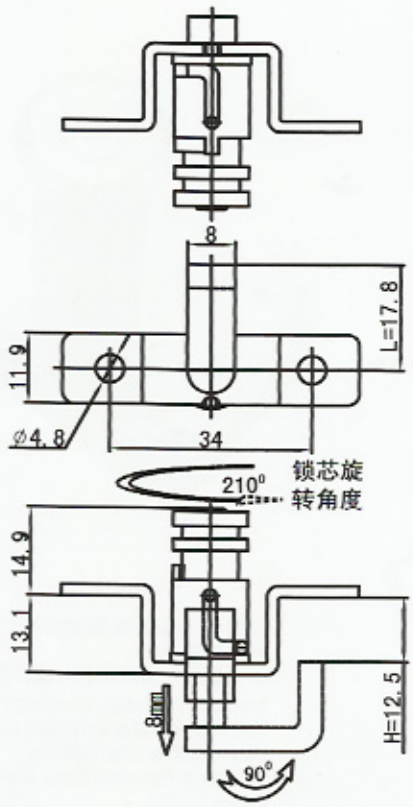



材质及表面处理：锌合金转舌，钢质支架，表面镀白锌。
Material and finishing: Zinc alloy cam, steel bracket, white zinc coated.

挂钩锁

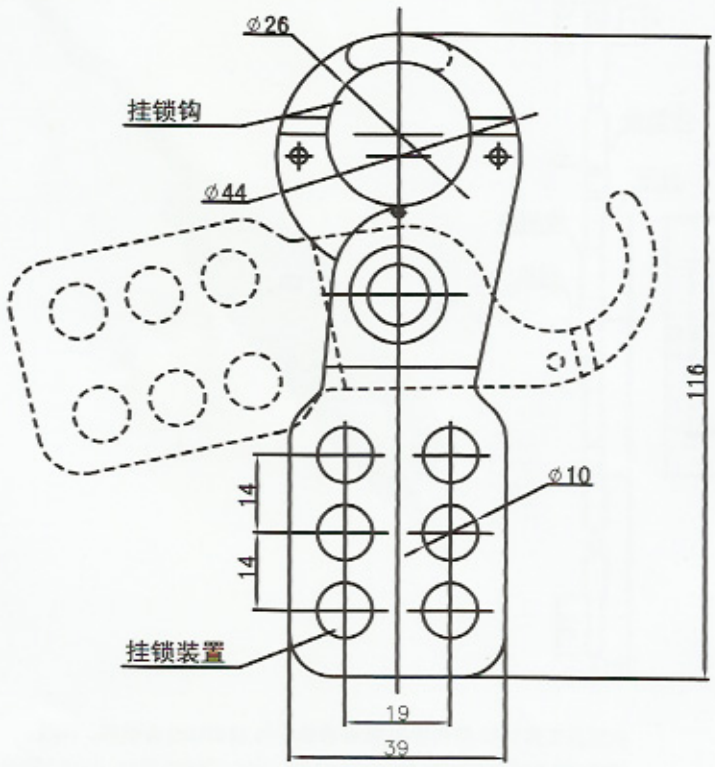



材质及表面处理：钢制结构，镀锌，尾部红色浸塑。
Material and finishing: Stainless steel housing, zinc coated, covered with red rubber.

MS210

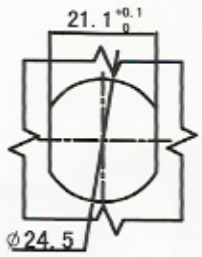

开孔尺寸
Panel Drilling Dimensions

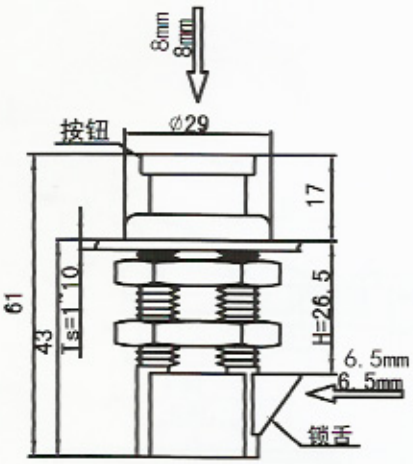



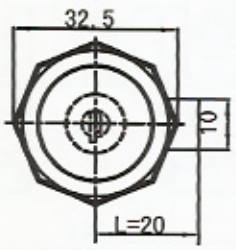



产品型号（MODEL）	特征描述（SPECIFICATION）
NS210-1	带锁芯/with key cylinder
NS210-2	无锁芯/without key cylinder

材　　质：锌合金锁体。
表面处理：亚光铬。
结构功能：无刚栓设计，开启时，直接用锁舌扣住门，钥匙旋转然后按下扭带锁舌收缩，可直接拉门，放开按钮，锁舌自动复位，旋转钥匙，锁住柜门。

Material: Zinc alloy body.
Finish: Matt chrome coating.
Structure Function: The product was designed to use the lock's tongue to lock up the door instead of steel cam. When you are opening the door, turn the key and press the button to shrink the tongue. Releasing the button, then the tongue restores to original place automatically, and turning the key to lock the door.

MS303

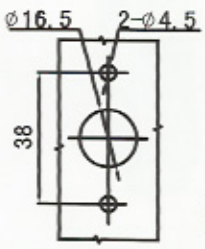

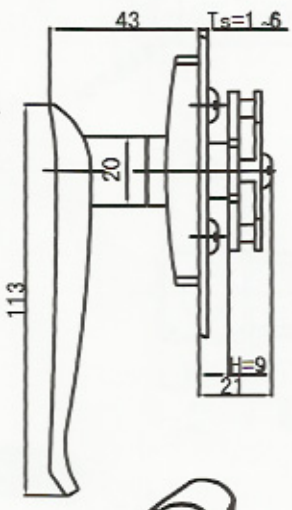

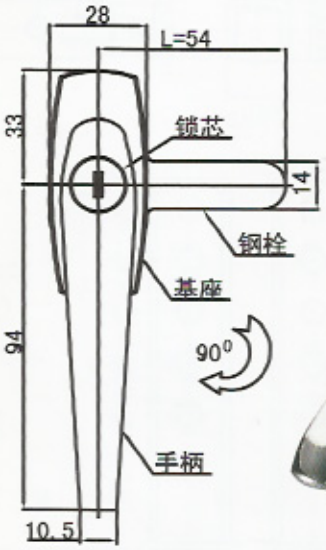

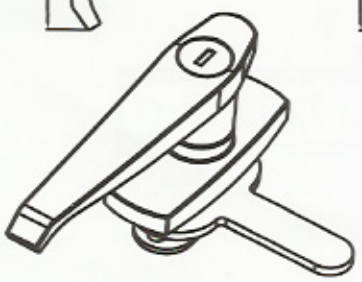



材质：锌合金锁体、钢制钢栓。
表面处理：镀铬、镀锌。

Material: Zinc alloy housing, steel cam.
Finishing: chrome or zinc coated.

MS301 MS302

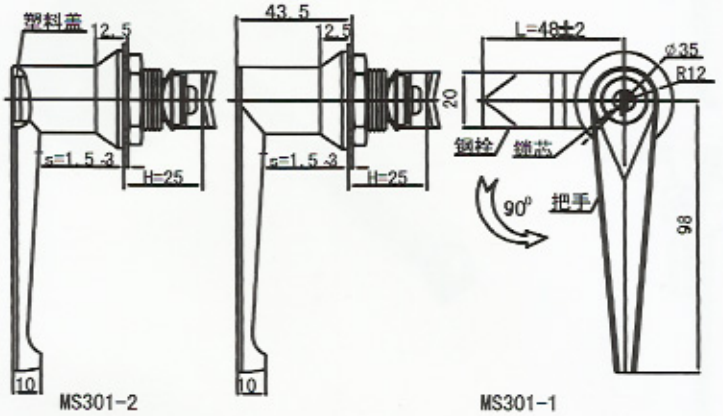

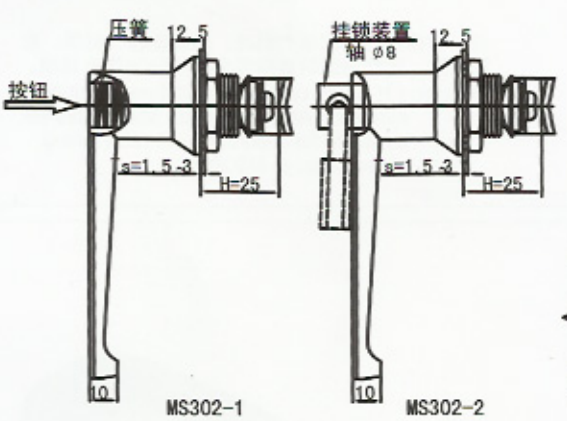

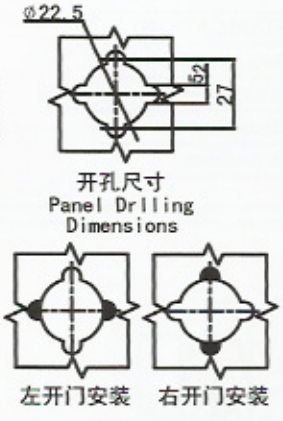



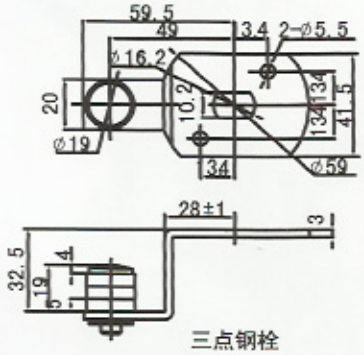

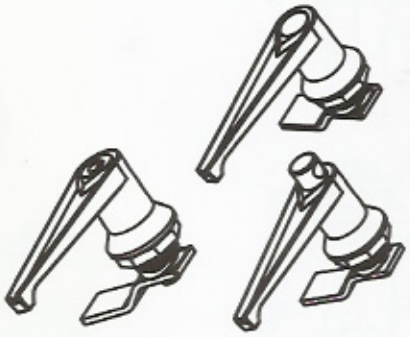

注：单点钢栓（选用）S1H系列钢栓5115

产品型号（MODEL）	特征描述（SPECIFICATION）
MS301-1	带锁芯/with key cylinder
MS301-2	无锁芯/without key cylinder
MS302-1	按钮型/with button
MS302-2	挂锁型/with padlock

材　　质：锌合金锁体、螺母、钢制钢栓、ABS盖子。
表面处理：镀铬、镀锌。
结构功能：L型把手、基座旋转90°可实现左右开门，可配三点式钢栓。

Material: Zinc alloy housing, steel cam, ABS cover.
Structure function: L-handle, 90° turning, LH & RH, three-point cam available.

MS304

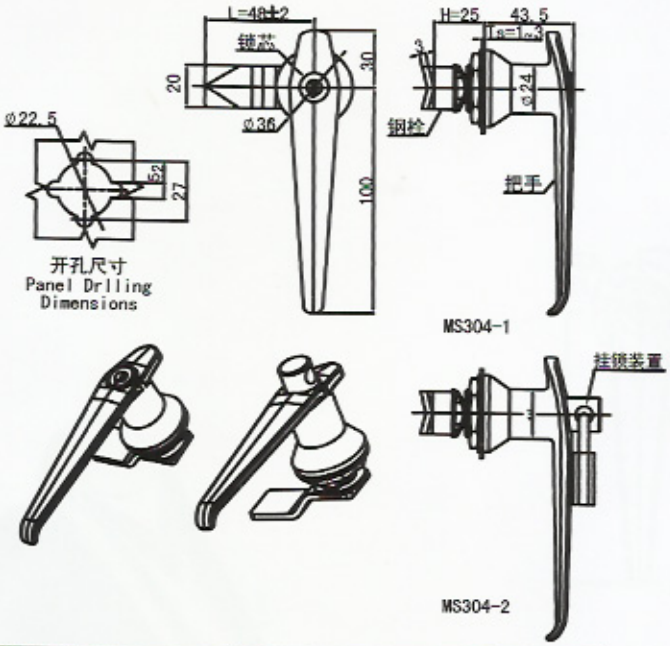



产品型号（MODEL）	特征描述（SPECIFICATION）
MS304-1	带锁芯/with key cylinder
MS304-2	无锁芯/without key cylinder
MS304-3	按钮型/with button
MS304-4	挂锁型/with padlock

注：变换左右开门单点钢栓，三点钢栓、材质、表面处理、结构功能的选用请参考MS301样本说明。

Remark: LH & RH, one-point and three-point cams available. Any description about material, structure function and surface finishing please refer to MS301.

MS305

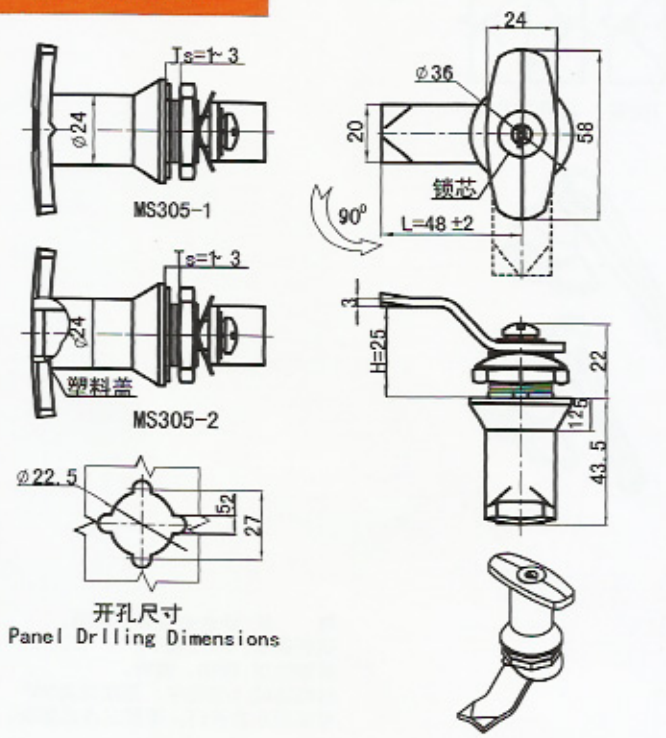



产品型号（MODEL）	特征描述（SPECIFICATION）
MS305-1	带锁芯/with key cylinder
MS305-2	无锁芯/without key cylinder

注：变换左右开门单点钢栓，三点钢栓、材质、表面处理、结构功能的选用请参考MS301样本说明。

Remark: LH & RH, one-point and three-point cams available. Any description about material, structure function and surface finishing please refer to MS 301.

MS305-H

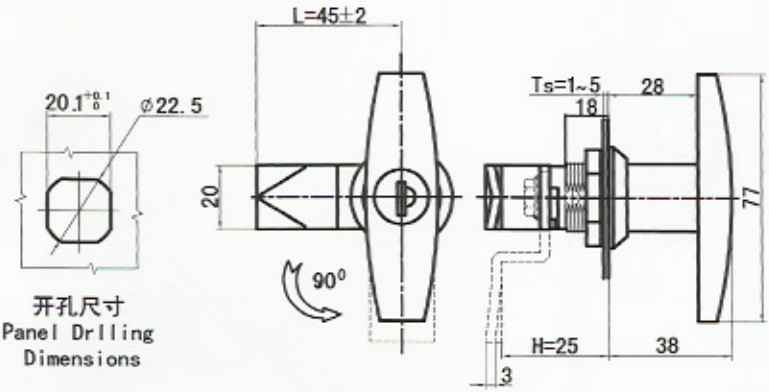

开孔尺寸
Panel Drilling Dimensions

注:单点钢栓(选用)S1B4316
单点钢栓(选用)S3B系列钢栓

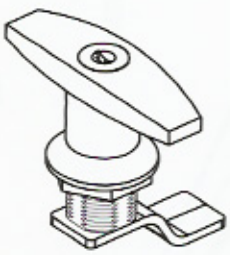



产品型号(MODEL)	特征描述(SPECIFICATION)
MS305-H-1	带锁芯/with key cylinder
MS305-H-2	无锁芯/without key cylinder

材　　质：锌合金锁体、钢制钢栓。
表面处理：镀铬、镀锌、喷塑。
结构功能：钥匙插入口带有防尘功能。

Material: Zinc alloy housing, steel cam.
Finishing: chrome, zinc, or powder coated.
Structure function: Key cylinder is dust-proof.

MS306

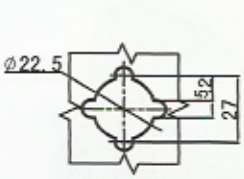

开孔尺寸
Panel Drilling Dimensions

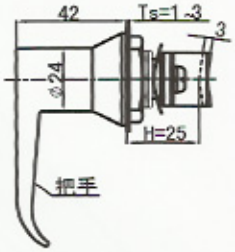

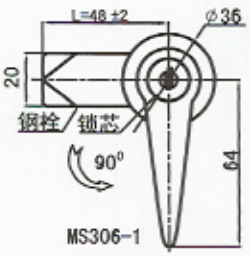

MS306-1



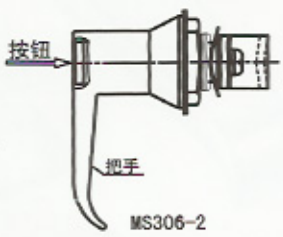

MS306-2

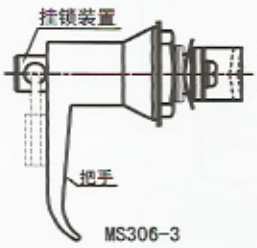

MS306-3



产品型号(MODEL)	特征描述(SPECIFICATION)
MS306-1	带锁芯/with key cylinder
MS306-2	无锁芯/without key cylinder
MS306-3	挂锁型/with padlock
MS306-4	按钮型/按钮型/with button

注：变换左右开门单点钢栓，三点钢栓、材质、表面处理、结构功能的选用请参考MS301样本说明。

Remark: LH & RH, one-point and three-point cams available. Any description about material, structure function and surface finishing please refer to MS 301.

MS307

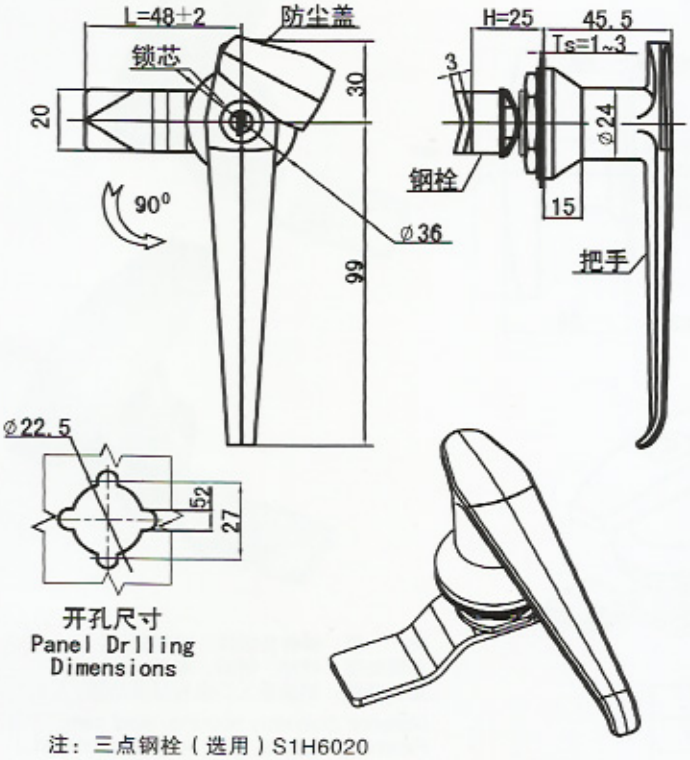



注：三点钢栓（选用）S1H6020
Remark: three-point cam available, model: S1H6020

注：变换左右开门单点钢栓，三点钢栓、材质、表面处理、结构功能的选用请参考MS301样本说明。

Remark: LH & RH, one-point and three-point cams available. Any description about material, structure function and surface finishing please refer to MS 301.

MS308

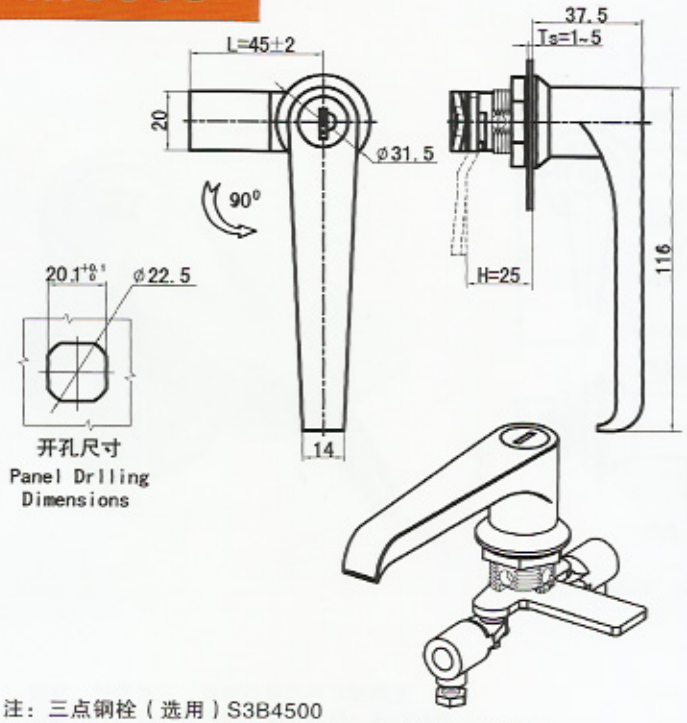



注：三点钢栓（选用）S3B4500
Remark: three-point cam available, model: S3B4500

产品型号（MODEL）	特征描述（SPECIFICATION）
MS308	不锈钢、无锁芯
MS308-B	常规

材质及表面处理：镀铬锌合金，不锈钢锁体，镀锌钢，不锈钢钢栓。

Material and finish: chrome plated zinc alloy, stainless body,zinc plated steel,stainless steel cam.

MS309

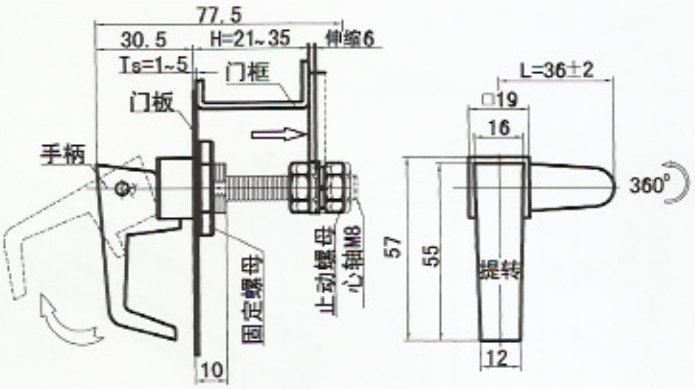



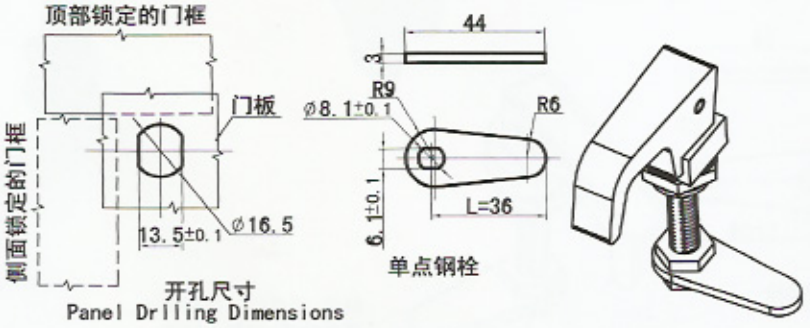

材质：锌合金锁体、钢制钢栓。
表面处理：镀铬、喷塑、镀锌。
结构功能：小型压缩性门锁，压缩量为4mm左右,止口高度可调节。

Material: Zinc Alloy Housing, Steel Latch.
Finishing: Chrome Coating, Zinc Coating.
Structure and feature: Compression Lock, 4mm compression amount, Adjustable height.

MS309A

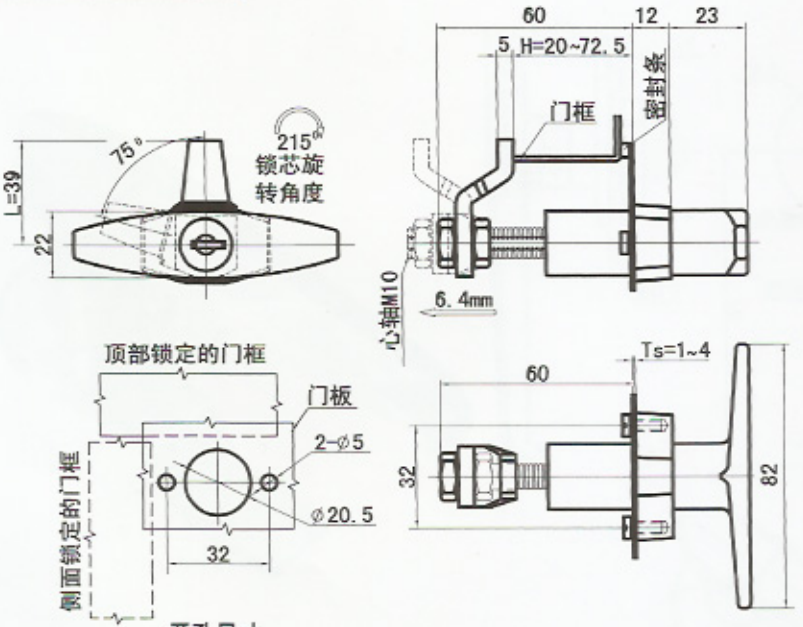



产品型号（MODEL）	特征描述（SPECIFICATION）
MS309A-1	带锁芯/with key cylinder
MS309A-2	无锁芯/without key cylinder

IP 54

材质：锌合金锁体、钢制钢栓。
表面处理：无光黑。
结构功能：压缩性门锁，止口高度可调节。

Material: Zinc alloy housing, steel cam.
Finishing: Matt black.
Structure function: compression lock, adjustable height.

MS309-1

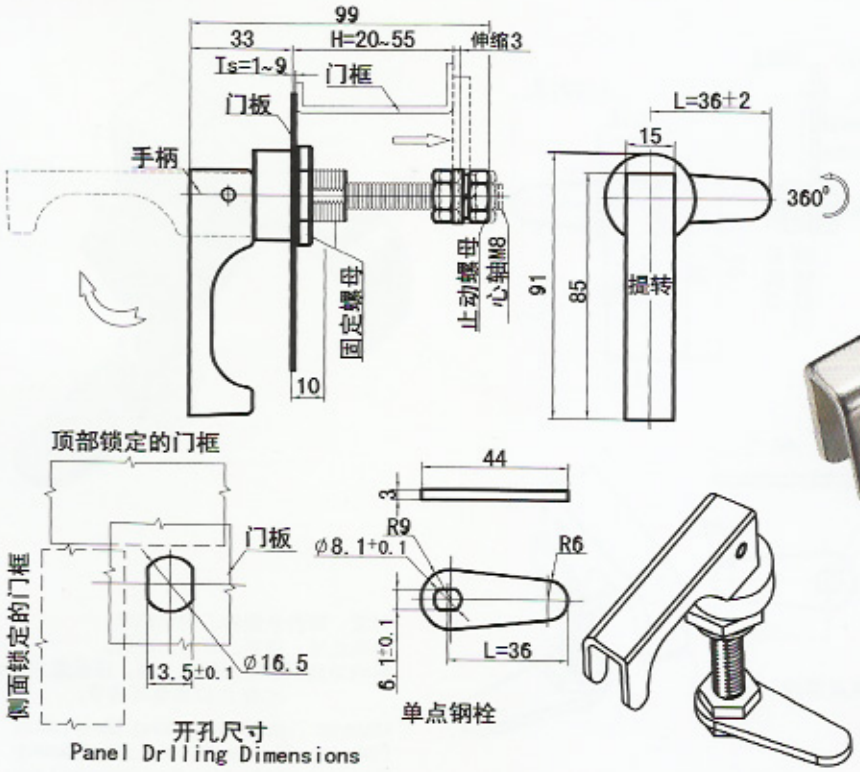



材质: 冷轧钢、钢制钢栓。
表面处理: 镀镍、镀锌。
Material: Zinc alloy housing, steel cam.
Finishing: Nickel & Zinc Coating.

MS317

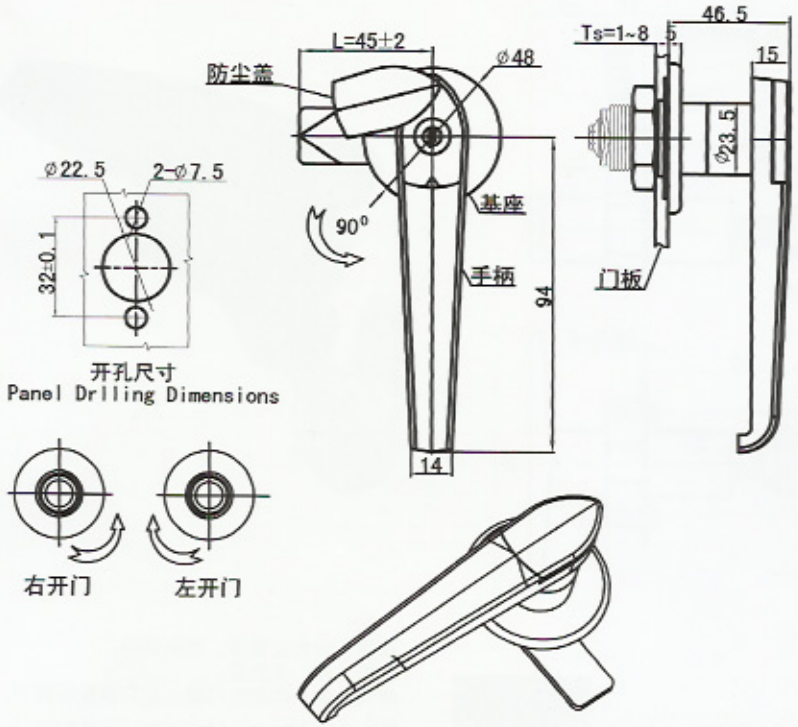



材质: 锌合金锁体、钢制钢栓。
表面处理: 镀铬、镀锌。
Material: Zinc alloy housing, steel cam.
Finishing: Chromes & Zinc Coating.

注: 单点钢栓（选用）S1B7300.
三点钢栓（选用）S3C8900.

MS703



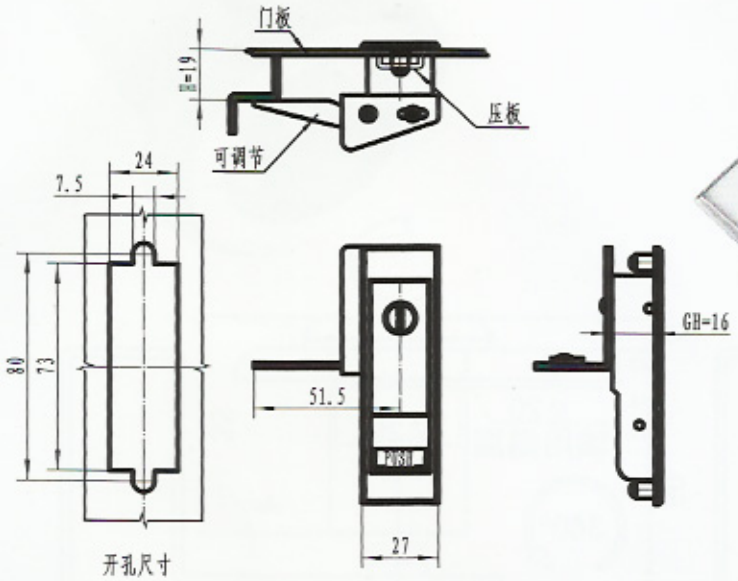

材质及表面处理: 镀铬锌合金锁体; 镀锌钢栓。
结构功能: 左右开门通用。

Material and finishing: chrome alloy housing, zinc coating cam.
Structure function: LH &RH.

MS704A MS704C

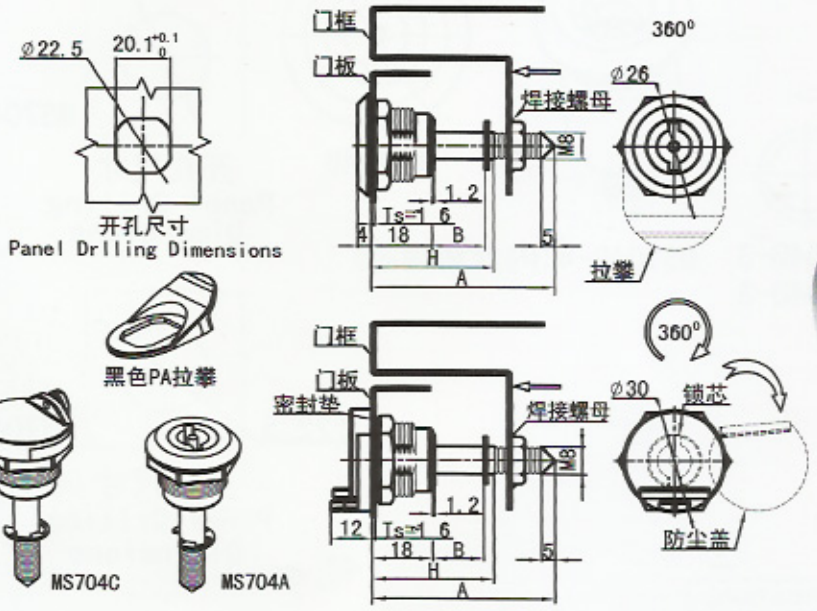



规格代码（MODEL）		尺寸（DIMENSION）		
配拉攀	铅封型（Lead Sealing）	A	B	C
MS704A-1/34	MS704C-1/34	54	13.5	34
MS704A-2/28	MS704C-2/28	46	7.5	28
MS704A-3/23	MS704C-3/23	40	2.5	23

材质: 锌合金锁体、螺帽。
表面处理: 镀铬、喷塑。

Material : Zinc Alloy Housing,Steel Nut.
Finishing: Chrome & powder coated.

MS704B MS704D



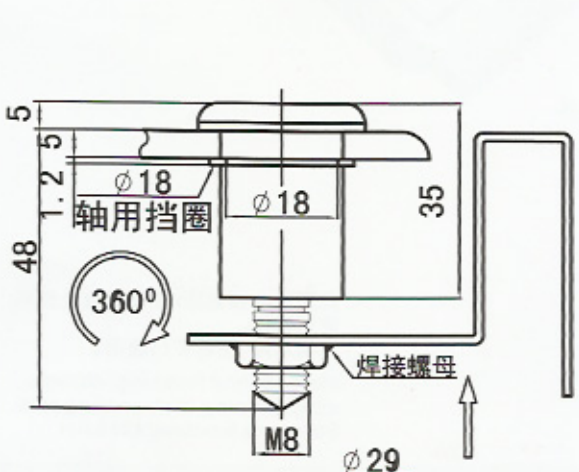

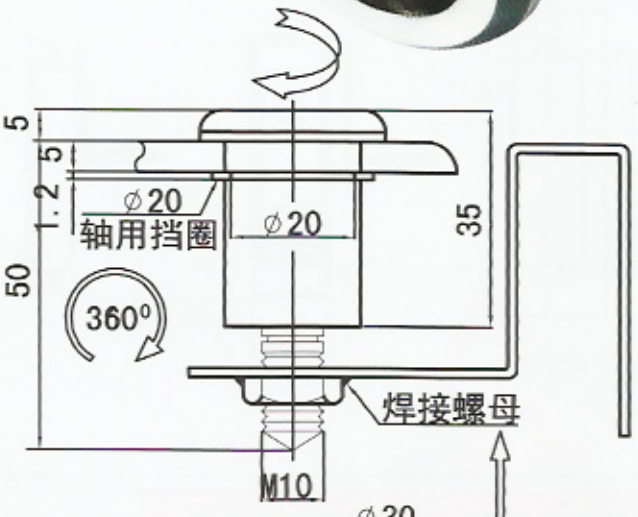





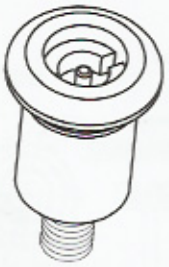



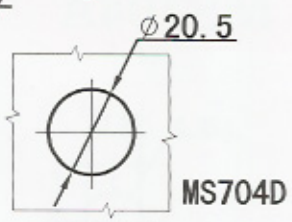

开孔尺寸
Panel Drlling Dimensions

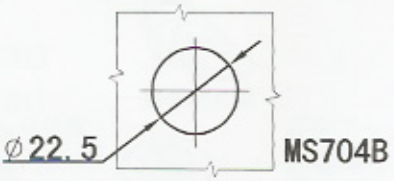

开孔尺寸
Panel Drlling Dimensions

产品型号（MODEL）	特征描述（SPECIFICATION）
MS704B-1	翼型锁芯
MS704B-2	方型锁芯
MS704B-3	一字型锁芯
MS704D-1	翼型锁芯
MS704D-2	方型锁芯
MS704D-3	一字型锁芯

材质：锌合金钥匙。镀锌钢锁芯、锁体。
表面处理：镀铬、喷塑。
结构功能：左右开门通用，螺杆式锁芯，可调节板锁紧度。

Material: Zinc alloy key & housing.
Finishing: Chrome & powder coated.
Structure function: LH & RH, screw key cylinder, adjustable tightness.

MS705



螺帽拆装安装示意图

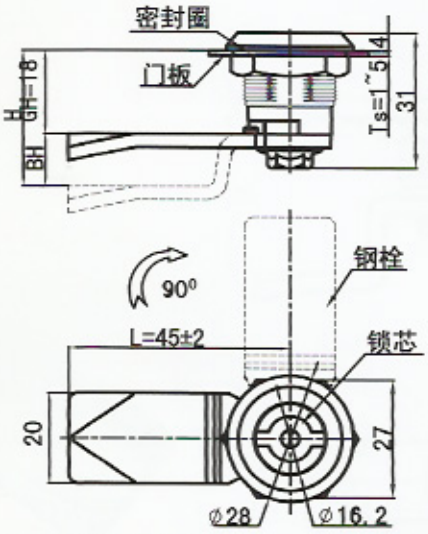



注：此图尺寸包括内定位、外定位、不锈钢705门锁。

-1	-2	-3	-4	-4A	-5	-6
-1B(不锈钢) 翼形	-2B(不锈钢) S型	-3B(不锈钢) 三角型8mm	-4B(不锈钢) □8×8	带槽□8×8	□6×6	□7×7

-7	-8	-9	-10	-11	-12	-13
内六角10mm	一字槽型	外六角11mm	内六角8mm	扁圆型	圆角三角型8mm	三角型7mm

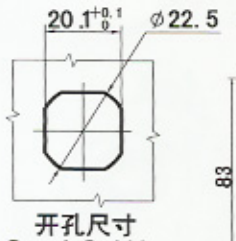

开孔尺寸
Panel Drilling Dimensions

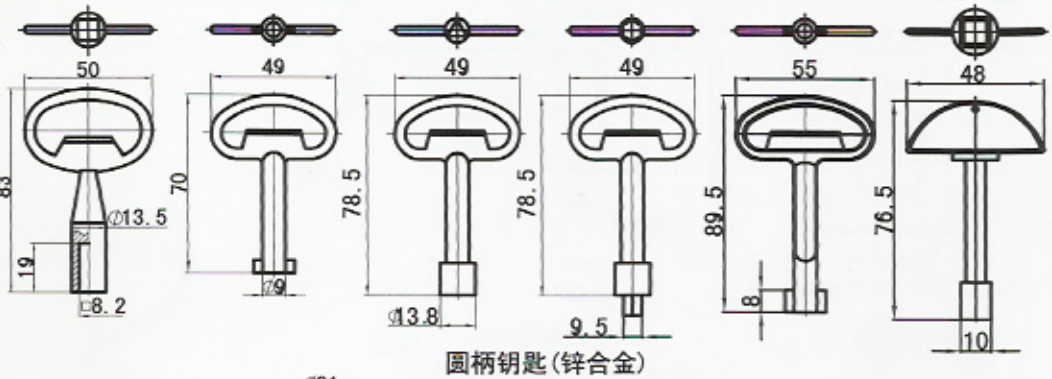

圆柄钥匙(锌合金)



黑色PA拉攀
HP001拉攀(选用)

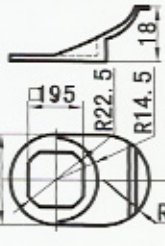



黑色PA防水盖
WP002防水盖(选用)

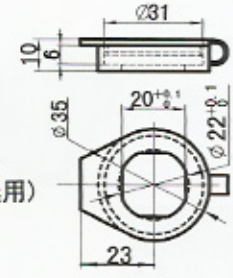



黑色钢制拉攀

注：常规止口高度•25　注：单点刚栓（选用）S1B系列刚栓F

产品型号（MODEL）	止口高度 H							
MS705	18	20	•25	30	40	45	50	55	60

IP 54

材质：锌合金锁体、钢制钢栓、橡胶密封圈。
表面处理：亮光、喷塑、喷砂镀铬、镀锌。
结构功能：密封防水平面锁，锁体转180度安装可左右开门,设内定位。

Material: Zinc Alloy Housing, steel cam, rubber seal.
Finishing: Bright chrome, powder & zinc coating.
Structure function: water-proof housing, 180°turning angle, LH &RH.

MS705A

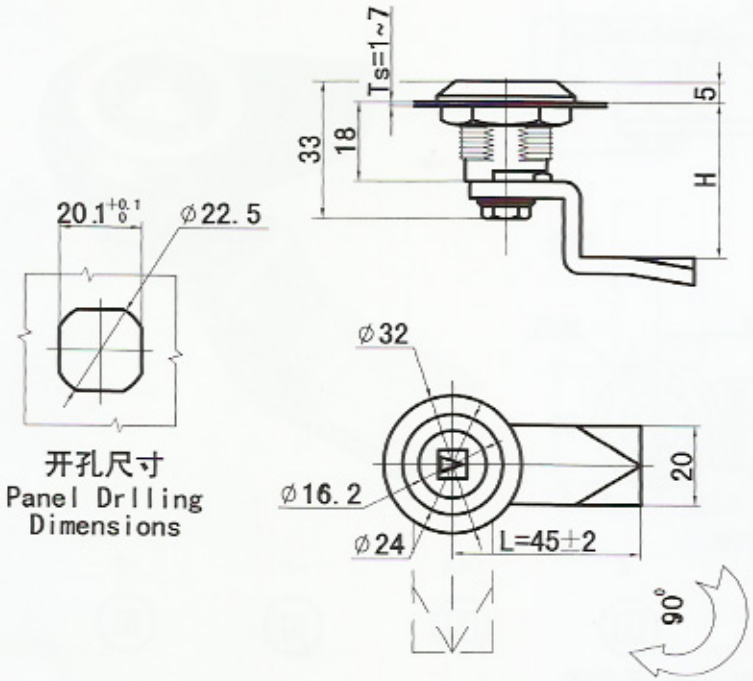

开孔尺寸
Panel Drlling Dimensions



注：钢栓选用、锁芯选用请参考MS705样本说明

注：材质、表面处理、结构功能的选用请参考MS705样本说明。
Remark: Any description about material, structure function and surface finishing, please refer to MS 705.

MS705-3A

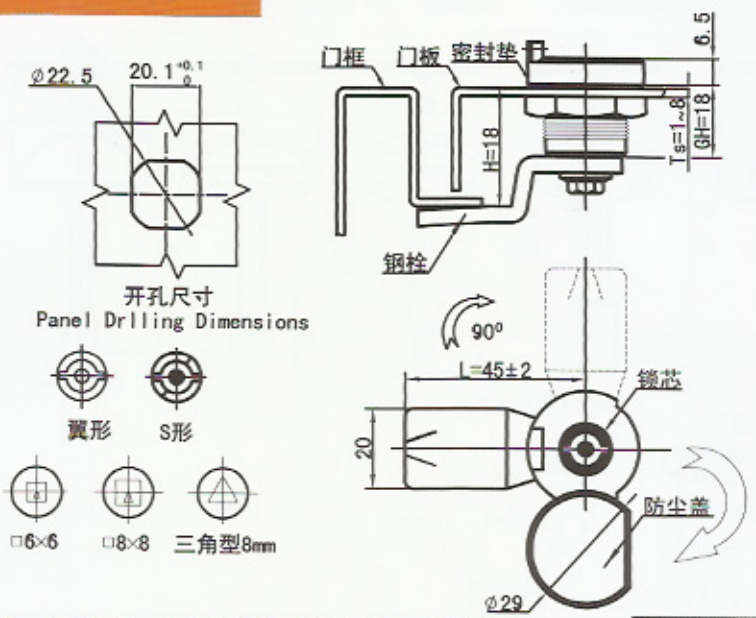

开孔尺寸
Panel Drlling Dimensions

翼形 S形

□6×6 □8×8 三角型8mm



注：钢栓选用、锁芯选用请参考MS705样本说明

产品型号（MODEL）	特征描述（SPECIFICATION）
MS705-3A-1	翼型锁芯
MS705-3A-2	S型锁芯
MS705-3A-3	方型8x8锁芯
MS705-3A-4	方型8x8锁芯
MS705-3A-5	三角型锁芯8mm

IP 54

注：材质、表面处理、结构功能的选用请参考MS705样本说明。
Remark: Any description about material, structure function and surface finishing, please refer to MS 705.

MS705-3B

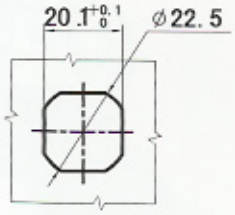

开孔尺寸
Panel Drlling Dimensions

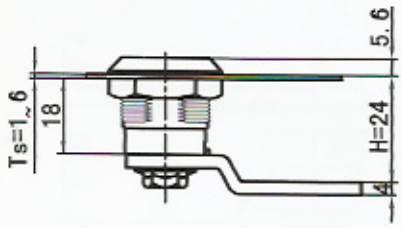



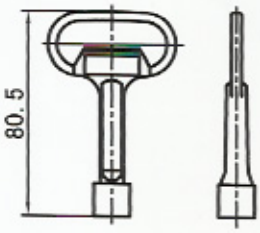

钥 匙

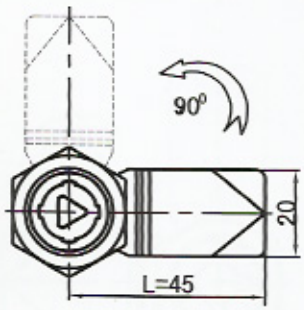





开启动作示意图

注：材质、表面处理、结构功能的选用请参考MS705样本说明。
Remark: Any description about material, structure function and surface finishing, please refer to MS 705.

MS705-3C

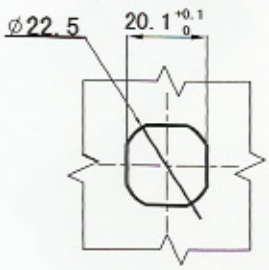

开孔尺寸
Panel Drlling Dimensions

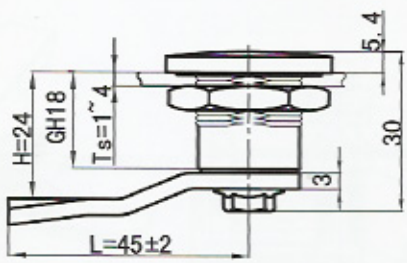



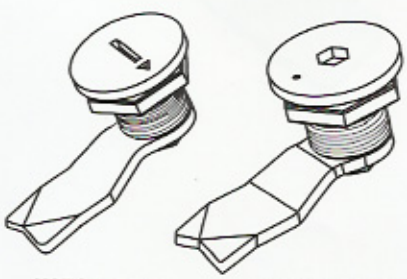

MS705-3C-1　　MS705-3C-2

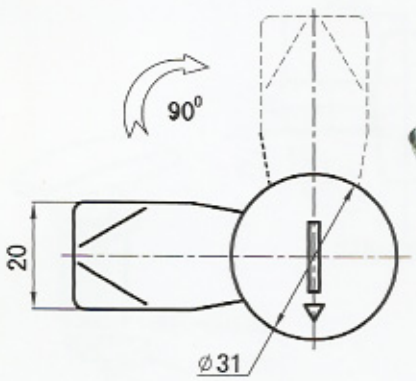

注: 单点刚栓(选用)S1B系列刚栓F,无定位。

产品型号（MODEL）	特征描述（SPECIFICATION）
MS705-3C-1	一字槽型/Slot
MS705-3C-2	内六角型/Hexagon

注：材质、表面处理、结构功能的选用请参考MS705样本说明。
Remark: Any description about material, structure function and surface finishing, please refer to MS 705.

MS705-3E

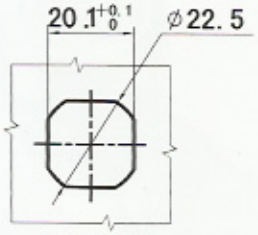

开孔尺寸
Panel Drlling Dimensions

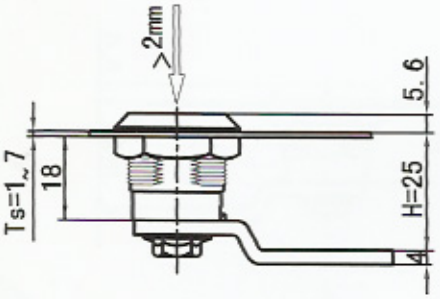





开启动作示意图

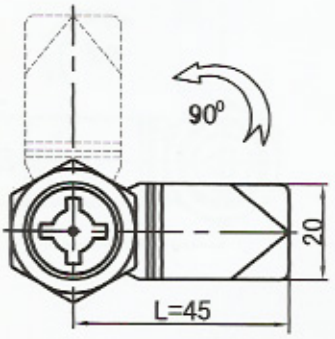

注：材质、表面处理、结构功能的选用请参考MS705样本说明。
Remark: Any description about material, structure function and surface finishing, please refer to MS 705.

MS705-3U

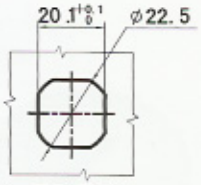

开孔尺寸
Panel Drlling Dimensions

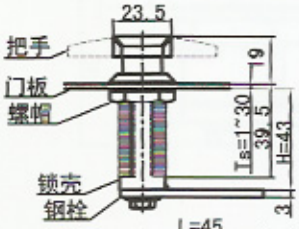



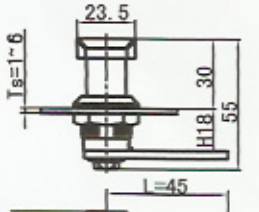

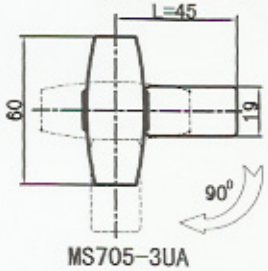

MS705-3UA

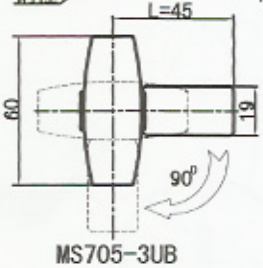

MS705-3UB

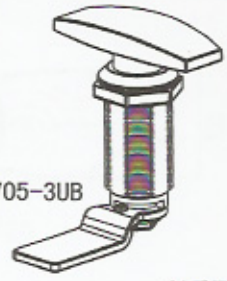



材质及表面处理：锌合金锁体、把手，钢制钢栓。
喷塑（黑色）镀锌。
Material and finishing: zinc alloy housing and handle, steel cam, black powder & zinc coating.

MS705B

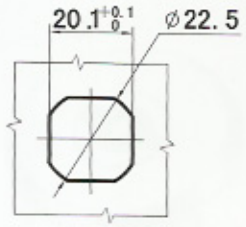

开孔尺寸
Panel Drlling
Dimensions



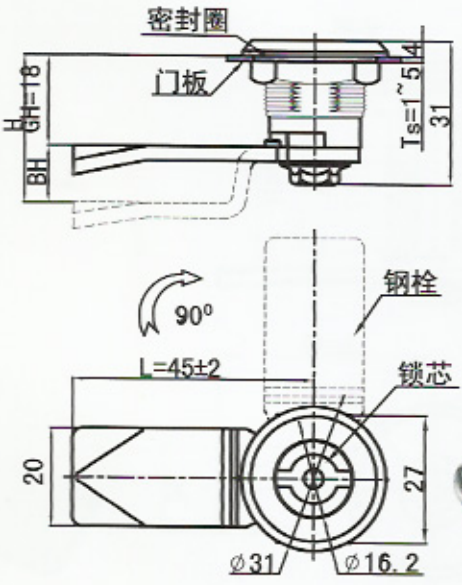



注：锁芯（选用）请参考MS705样本
钢栓（选用）请参考MS705样本

注：材质、表面处理、结构功能的选用请参考MS705样本说明。
Remark: Any description about material, structure function and surface finishing, please refer to MS 705.

MS705C

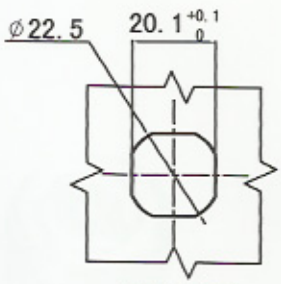

开孔尺寸
Panel Drlling Dimensions



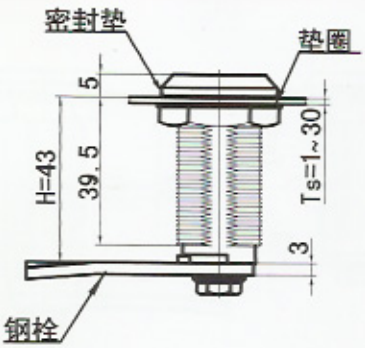

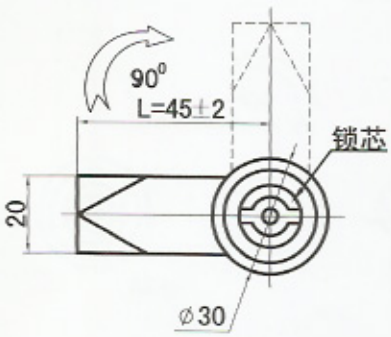



注：单点钢栓（选用）S1B系列钢栓F

注：材质、表面处理、结构功能的选用请参考MS705样本说明。
Remark: Any description about material, structure function and surface finishing, please refer to MS 705.

MS705D

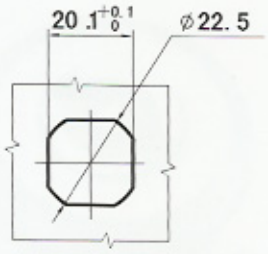

开孔尺寸
Panel Drlling Dimensions

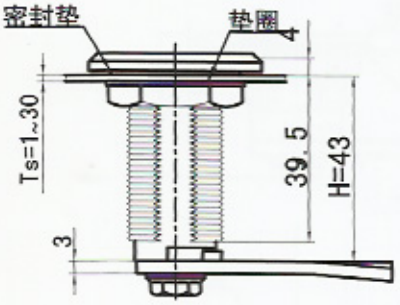

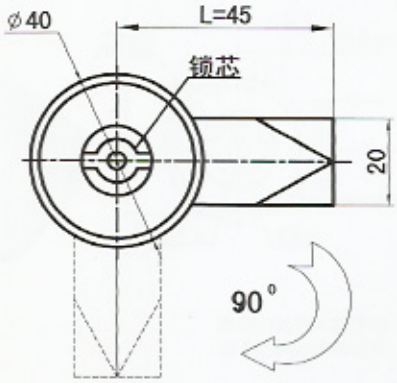





注：单点钢栓（选用）S1B系列钢栓F

注：材质、表面处理、结构功能的选用请参考MS705样本说明。
Remark: Any description about material, structure function and surface finishing, please refer to MS 705.

MS705D-1 MS705D-2 MS705D-3

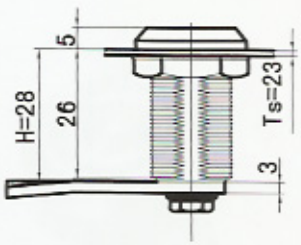

MS705D-1

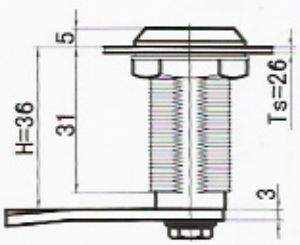

MS705D-2

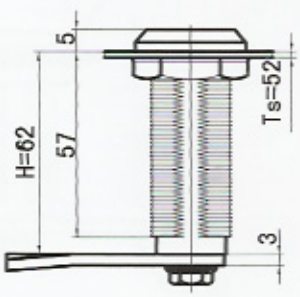

MS705D-3

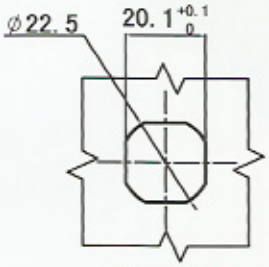

开孔尺寸
Panel Drlling Dimensions



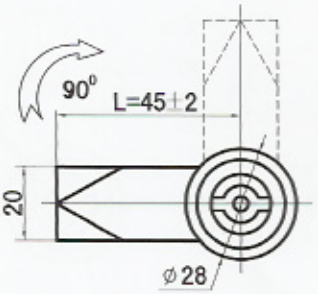



注：锁芯（选用）请参考MS705样本
单点钢栓（选用）S1B系列钢栓F,无定位.

注：材质、表面处理、结构功能的选用请参考MS705样本说明。
Remark: Any description about material, structure function and surface finishing, please refer to MS 705.

MS705E

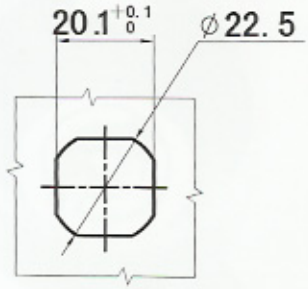

开孔尺寸
Panel Drilling Dimensions

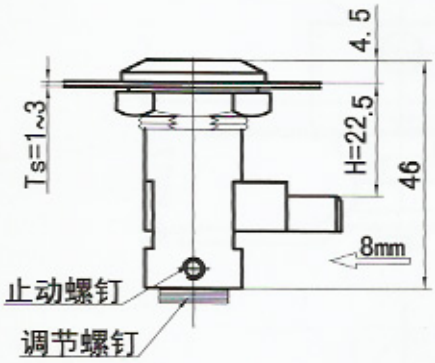



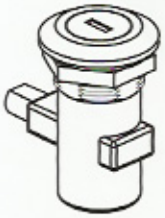

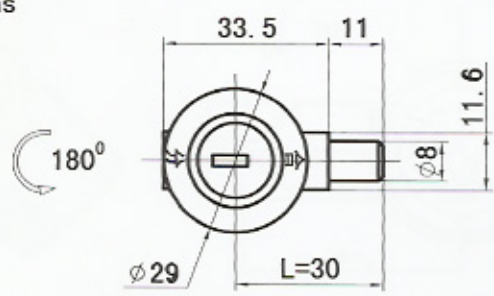

材质：锌合金锁体、不锈钢罩，钢制钢栓。
表面处理：镀铬。
结构功能：锁舌平移，插销式门锁，锁体安装部转180度即能左右开门。
Material: Zinc alloy body, stainless steel cover, and steel cam.
Finishing: Chrome Coating.
Structure Function: Pin-type door lock, with horizontal-maving bolt. Turn the mountingpart of lock by 180° to open the door on either side.

MS705F

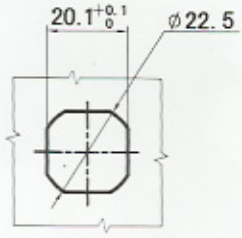

开孔尺寸
Panel Drilling Dimensions

注：钢栓选用请参考MS705样本说明



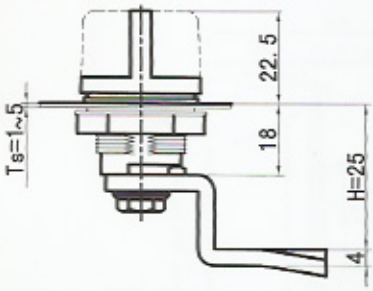

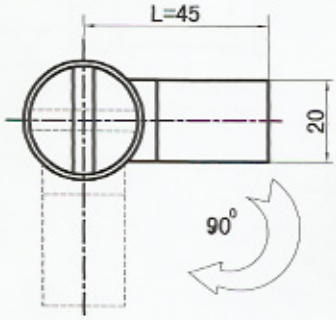



材质：锌合金锁体，钢制钢栓。
表面处理：电熔漆。
结构功能：无锁芯，按钮旋转型锁。锁体安装部转180度即能左右开门。
Material: Zinc Alloy body , Steel Latch, Stainless steel Cover.
Finishing: Chrome & Zinc Coating.
Structure Function: Without key cylinder, press to rotate. Turn 180°to open either side.

MS705J

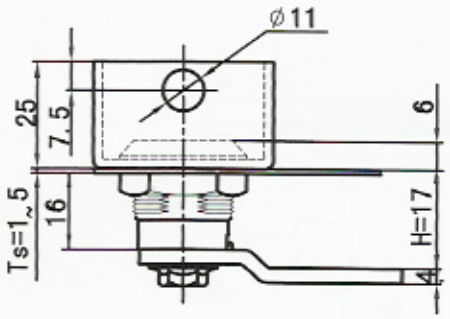

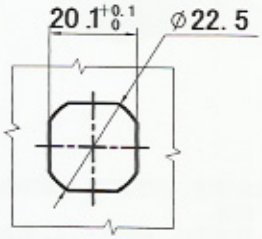

开孔尺寸
Panel Drilling Dimensions

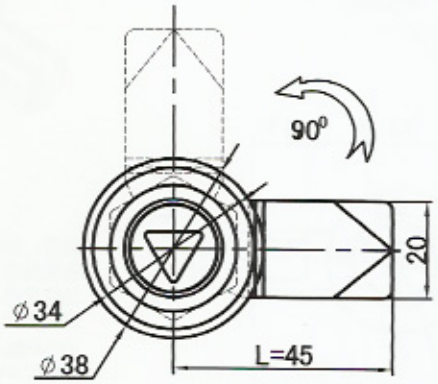



注：材质、表面处理、结构功能的选用请参考MS705样本说明。
Remark: Any description about material, structure function and surface finishing, please refer to MS 705.

MS705H

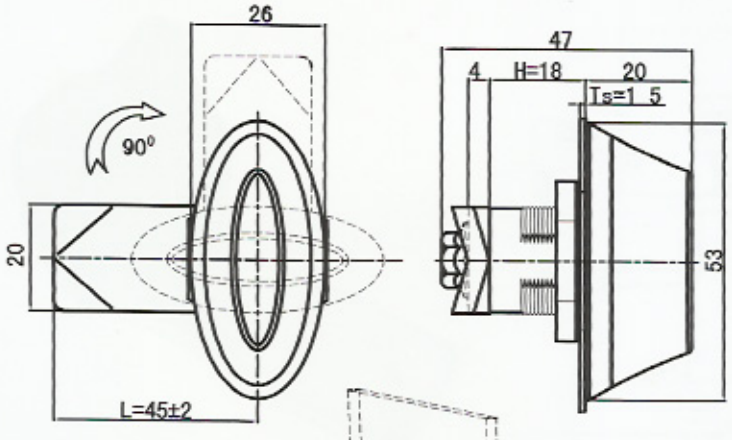

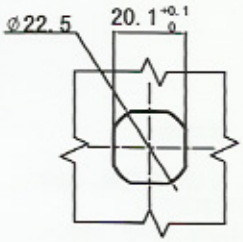

开孔尺寸
Panel Drilling Dimensions

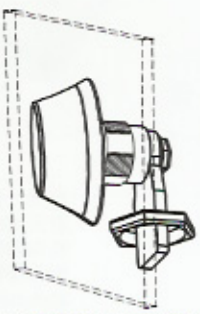

螺帽拆装安装示意图



材质：锌合金锁体、板前部分包塑，钢制钢栓。
表面处理：镀锌。
结构功能：锁体转180度即能左右开门。

Material: Zinc alloy body, steel cam, PVC cover.
Finishing: Zinc Coating.
Structure Function: Turn 180°to open either side.

MS705-K02

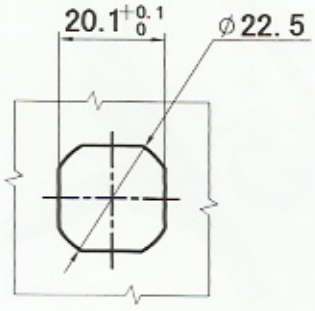

开孔尺寸
Panel Drlling Dimensions

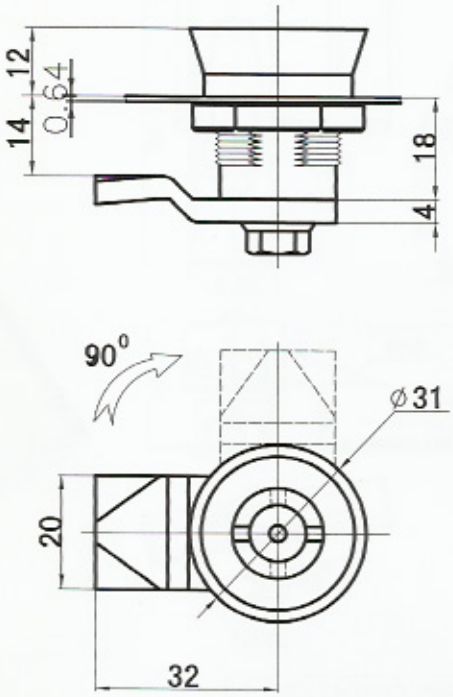



材质及表面处理:锌合金锁体,钢制钢栓。
表面孔雀绿喷塑。
Material and finishing: Zinc alloy housing, steel cam, green powder coating.

MS706

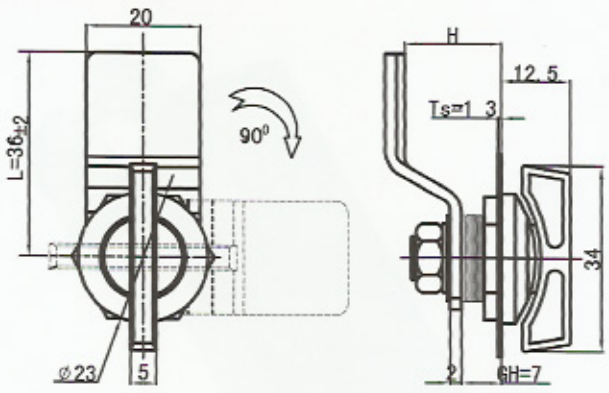

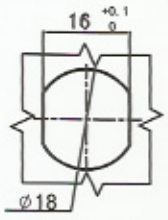

开孔尺寸
Panel Drlling Dimensions





材质：锌合金锁体，钢制钢栓。
表面处理：镀铬。
结构功能：金属手柄拉手式，无需钥匙，直接开启柜门，锁体结构相同MS705。左右开门只需把钢栓旋转180度即能左右开门。
Material: Zinc Alloy body, Steel cam, Stainless steel Cover.
Finishing: Chrome & Zinc Coating.
Structure function: Without key cylinder, press to rotate. Turn 180°to open either side.

产品型号（MODEL）	止口高度 H	中心距 L
MS706	12	39
MS708	15	36

MS707

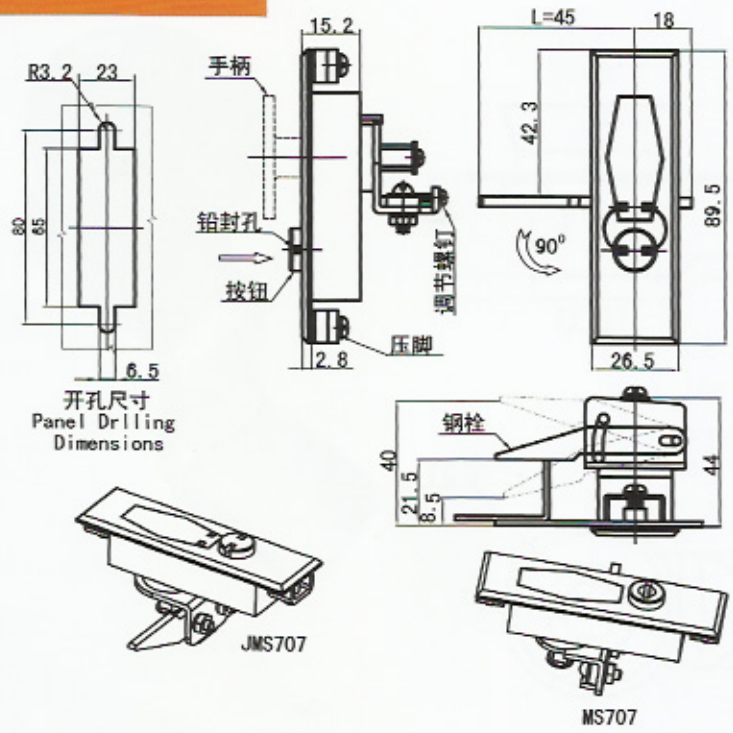



产品型号（MODEL）	特征描述（SPECIFICATION）
MS707	带锁芯/with key cylinder
JMS707	带铅封式按钮/with button

材质:锌合金锁体、钢制钢栓。
表面处理：喷沙镀镍。
Material: Zinc alloy housing, steel cam.
Finishing: Nickel Coating.

MS708

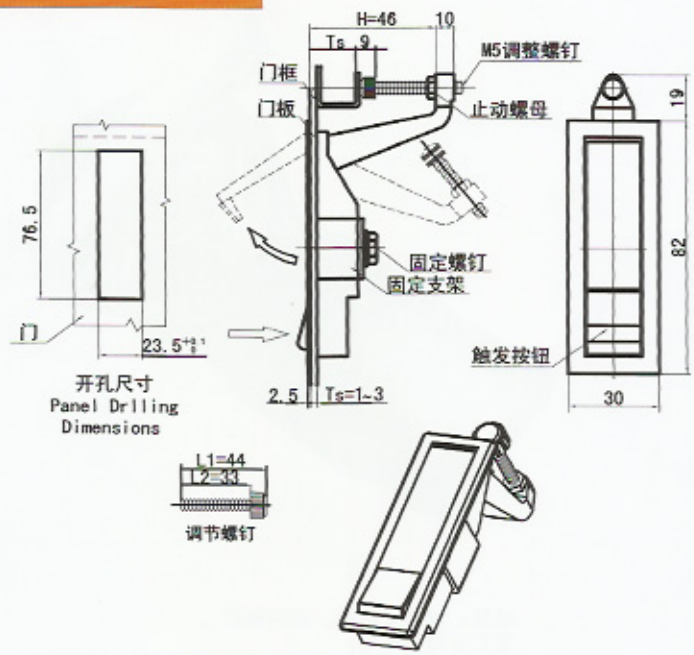



产品型号（MODEL）	调节螺钉L2	门板厚度Ts
MS708-1	33	15~36
MS708-2	22	20~36
MS708-3	28	25~36
MS708-4	25	30~36

材质:锌合金锁体、包塑钢螺钉。
表面处理：喷沙镀铬。
Material: Zinc alloy housing, steel screw with plastic cover.
Finishing: Sandblasting chrome coated.

MS708A

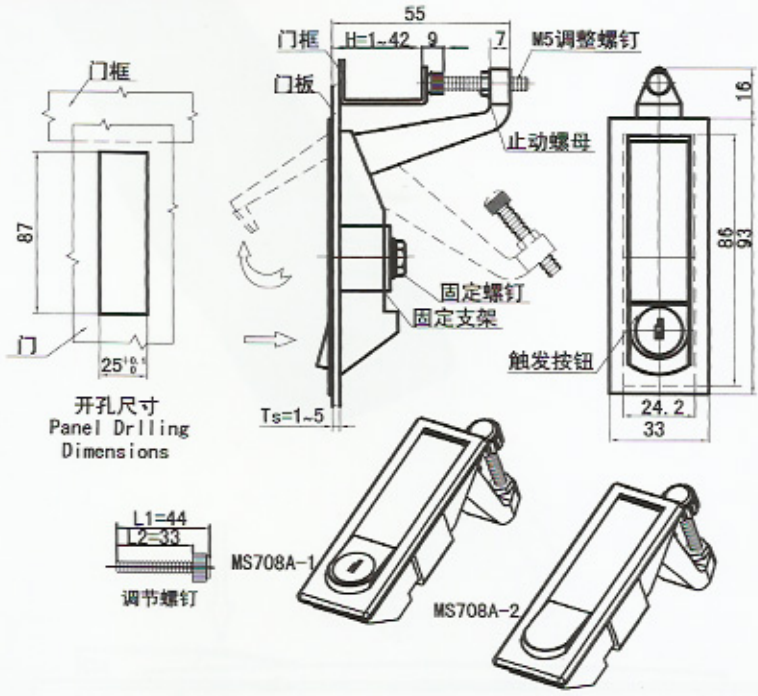



产品型号（MODEL）	特征描述(SPECIFICATION)
MS708A-1	带锁芯/with key cylinder
MS708A-2	无锁芯/without key cylinder

注:L1L2(产品型号顺序)、材质、表面处理的选用请参考MS708。
Remark: Any description about material, structure function and surface finishing, please refer to MS708.

MS708B

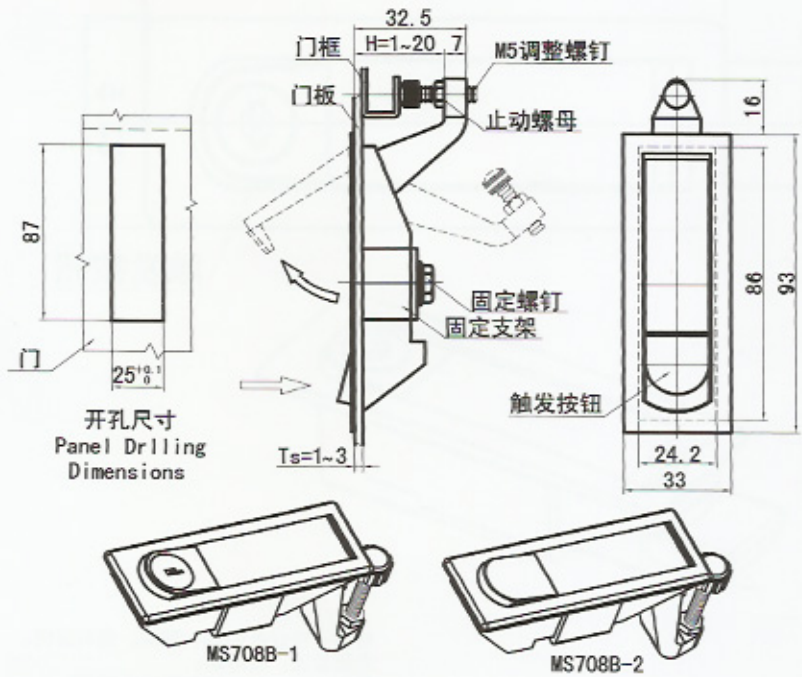



产品型号（MODEL）	特征描述(SPECIFICATION)
MS708B-1	带锁芯/with insert
MS708B-2	无锁芯/without insert

注:L1L2(产品型号顺序)、材质、表面处理的选用请参考MS708。
Remark: Any description about material, structure function and surface finishing, please refer to MS708.

MS708C



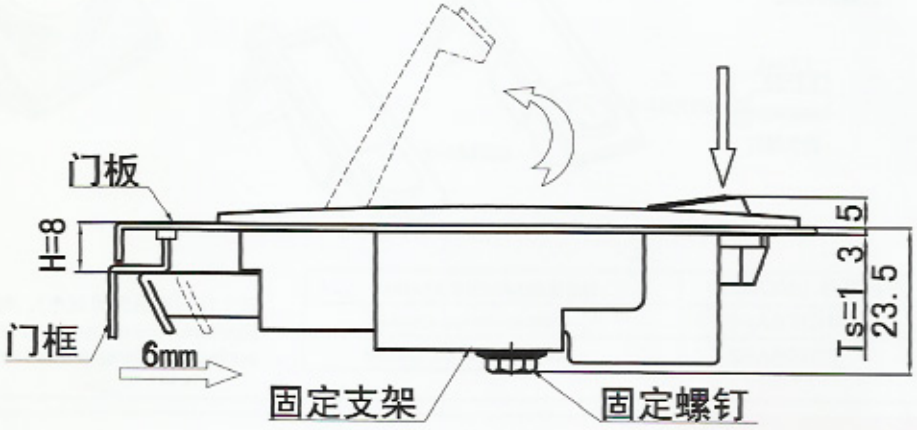

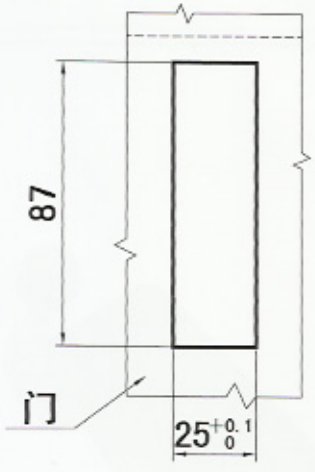

开孔尺寸
Panel Drlling Dimensions

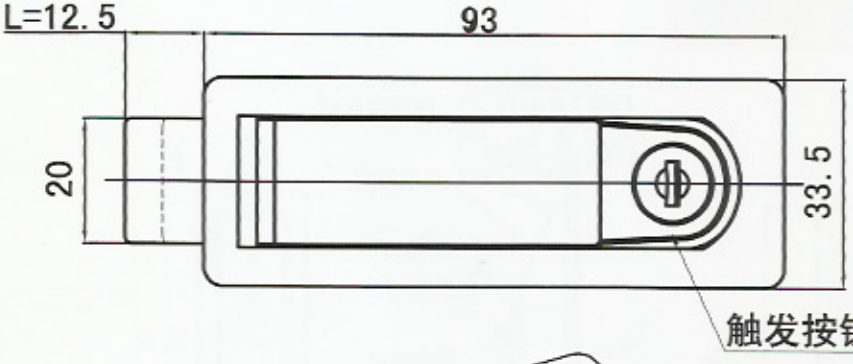

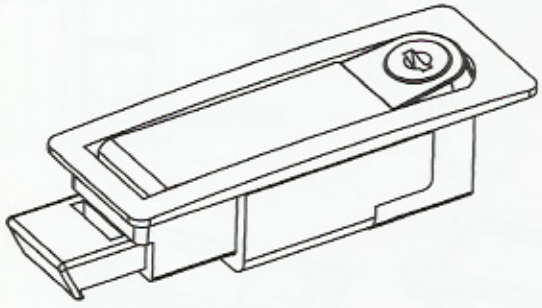

材质：锌合金锁体、钢栓、钢制底壳。
表面处理：喷砂黑。
结构功能：开关用平面弹出锁舌。

Material: Zinc alloy housing, steel cam, stainless steel base cover.
Finishing: Black blast.
Structure and feature: The cam will be ejected while pressing the button.

MS710

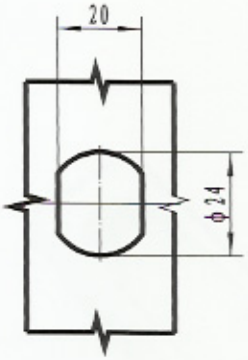

开孔尺寸
Panel Drlling
Dimensions



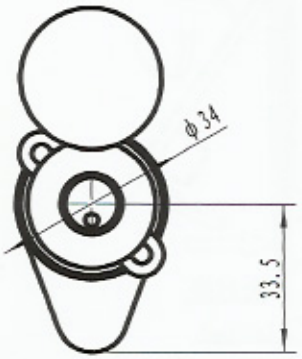



材质：锌合金锁体，钢制钢栓；
表面处理：镀铬、镀锌。
Material: Zinc alloy housing, steel cam.
Finishing:Chrome and Zinc Coating.

MS710A

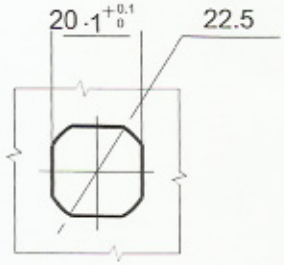

开孔尺寸
Panel Drlling
Dimensions

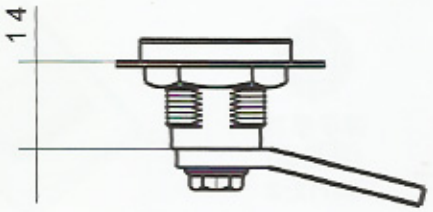

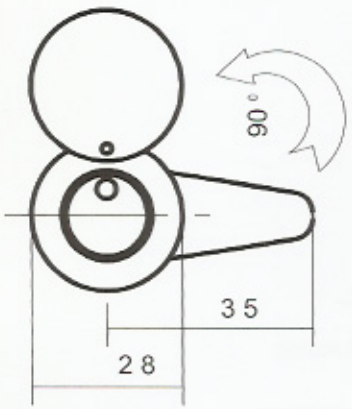



材质及表面处理：锌合金锁体，不锈钢盖板，
钢制刚栓。表面镀镍。
Material and finishing: Zinc alloy housing,
stainless steel cover, steel cam. Nickel coated.

MS712

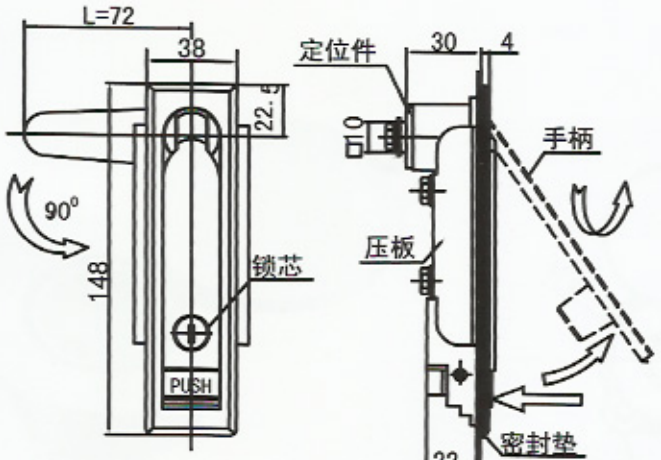

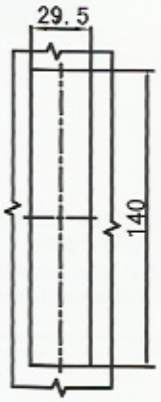

开孔尺寸
Panel Drilling Dimensions

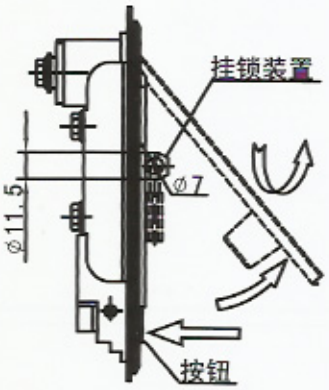

MS712-3



定位件

注：改变定位件及钢栓的放置方向可实现左右开门；



带防尘盖
钥片锁芯
MS712-1



弹子锁芯
(防盗型)
MS712-2



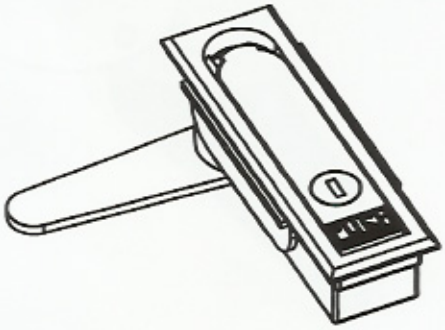

注：单点钢栓（选用）S1C7200 三点钢栓（选用）S3C系列8800

产品型号（MODEL）	特征描述(SPECIFICATION)
MS712-1	带防尘盖钥片锁芯
MS712-2	弹子锁芯(防盗型)
MS712-3	挂锁装置

材质：锌合金锁体、钢制钢栓。
表面处理：哑光铬。
Material: Zinc alloy housing, steel cam.
Finishing: Matt chrome.

MS713

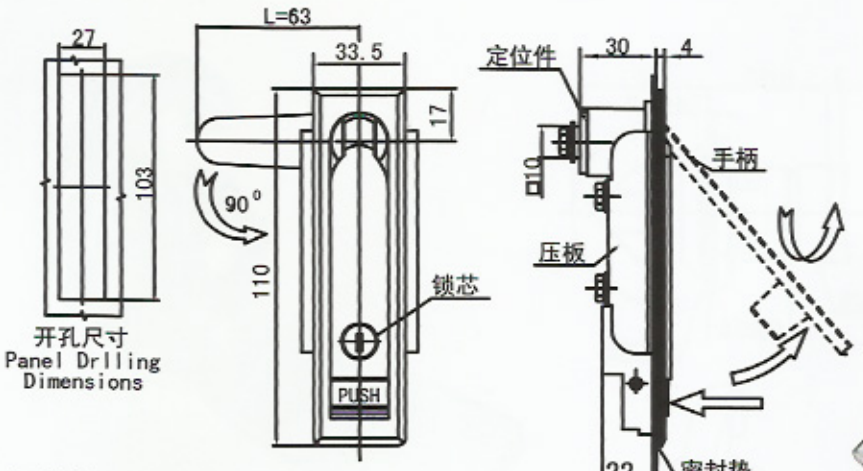

注：单点钢栓（选用）S1C系列钢栓S1C6300
三点钢栓（选用）S3C系列8900



定位件

注：改变定位件及钢栓的位置
方向可实现左右开门。

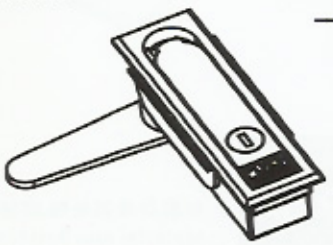



材质：锌合金锁体、钢制钢栓。
表面处理：哑光铬。
Material: Zinc alloy housing, steel cam.
Finishing: Matt chrome.

MS714-2

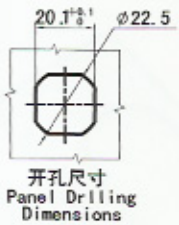

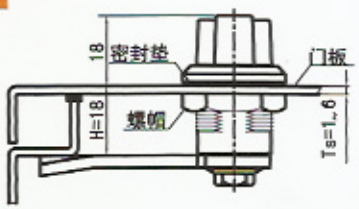



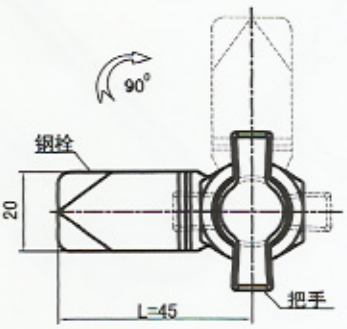

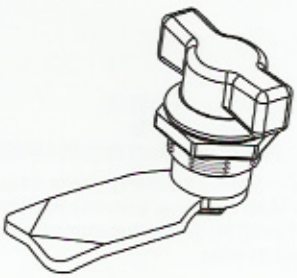

IP 54



材质及表面处理：塑料把手，锌合金锁体，钢制钢栓。
Material: Plastic handle, zinc alloy housing, steel cam.

MS715

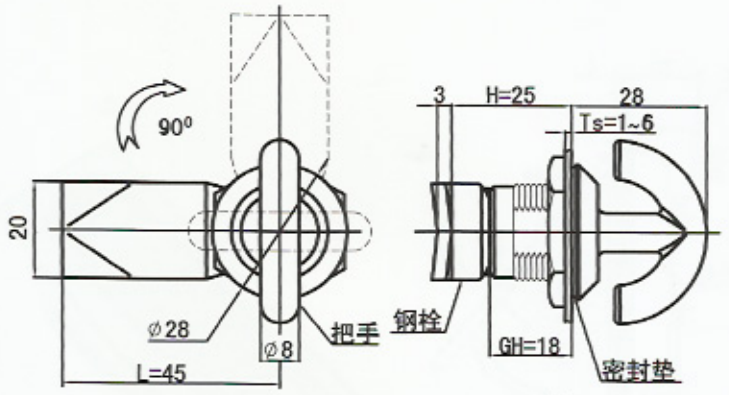

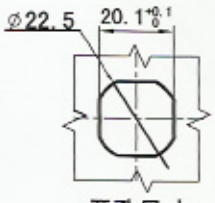

开孔尺寸
Panel Drlling Dimensions





IP 54

注：钢栓（选用）请参考MS705，无定位。

材质及表面处理:镀铬锌合金基座、把手；镀锌钢栓。
Material and finishing: bright chrome zinc coating housing and handle, Zinc coating steel cam.

MS717

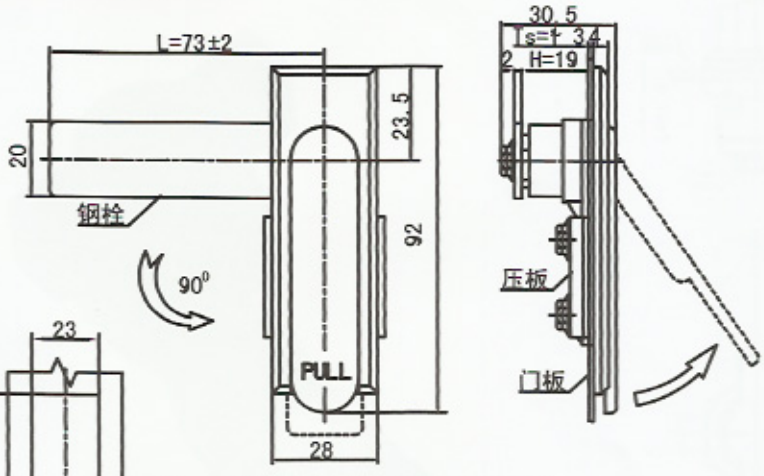



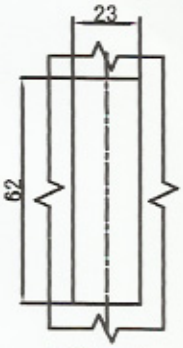

开孔尺寸
Panel Drlling Dimensions

注：单点钢栓（选用）S1B系列钢栓H.7300



注：改变定位件及钢栓的放置方向可实现左右开门。

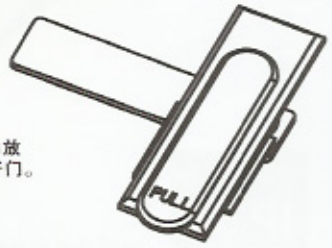

材质：锌合金锁体、钢制钢拴。
表面处理：亚光铬、电熔漆。
结构功能：内定位件转90度刚栓转180度可左右开门。
Material: Zinc alloy housing, steel cam.
Finishing: Matt chrome, electric melting paint.
Structure function: Inner locator rotates 180°, open on either side.

MS717A

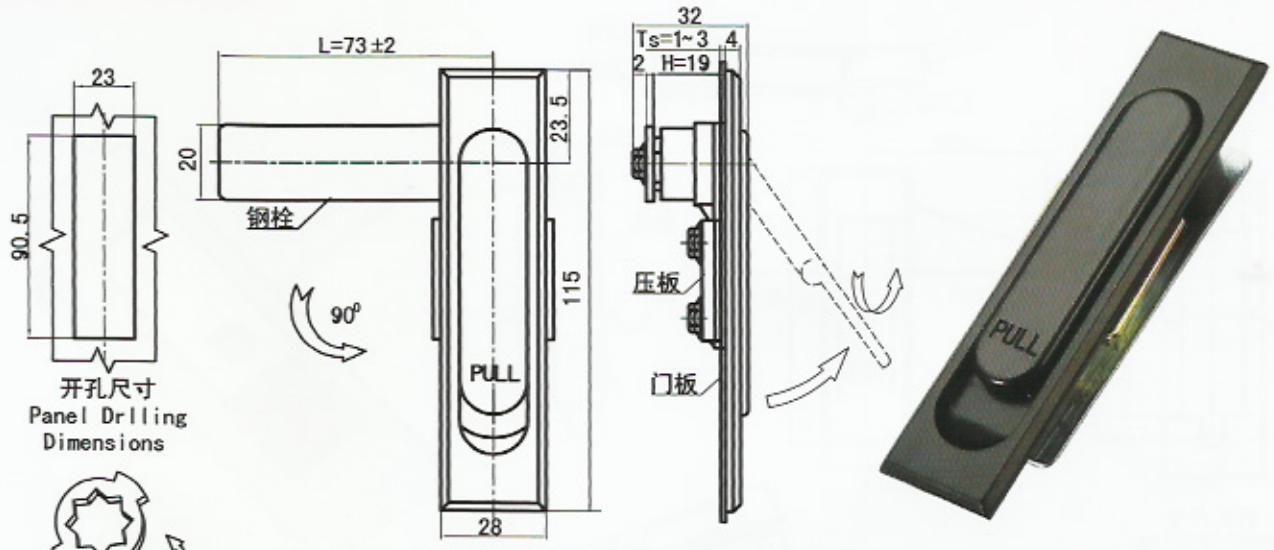

注:单点钢栓(选用)S1B系列钢栓H. 7300

注:改变定位件及钢栓的放置角度，实现左右开门;

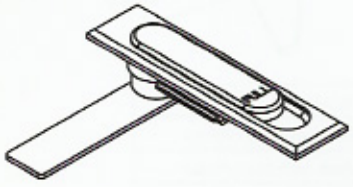

材质：锌合金锁体、钢制钢拴。
表面处理：亚光铬、电熔漆、镀锌。
结构功能：内定位件转90度刚栓转180度可左右开门。

Material: Zinc alloy housing, steel cam.
Finishing: Matt chrome, electric melting paint, and zinc coating.
Structure function: Inner locator rotates 180°, open on either side.

MS718

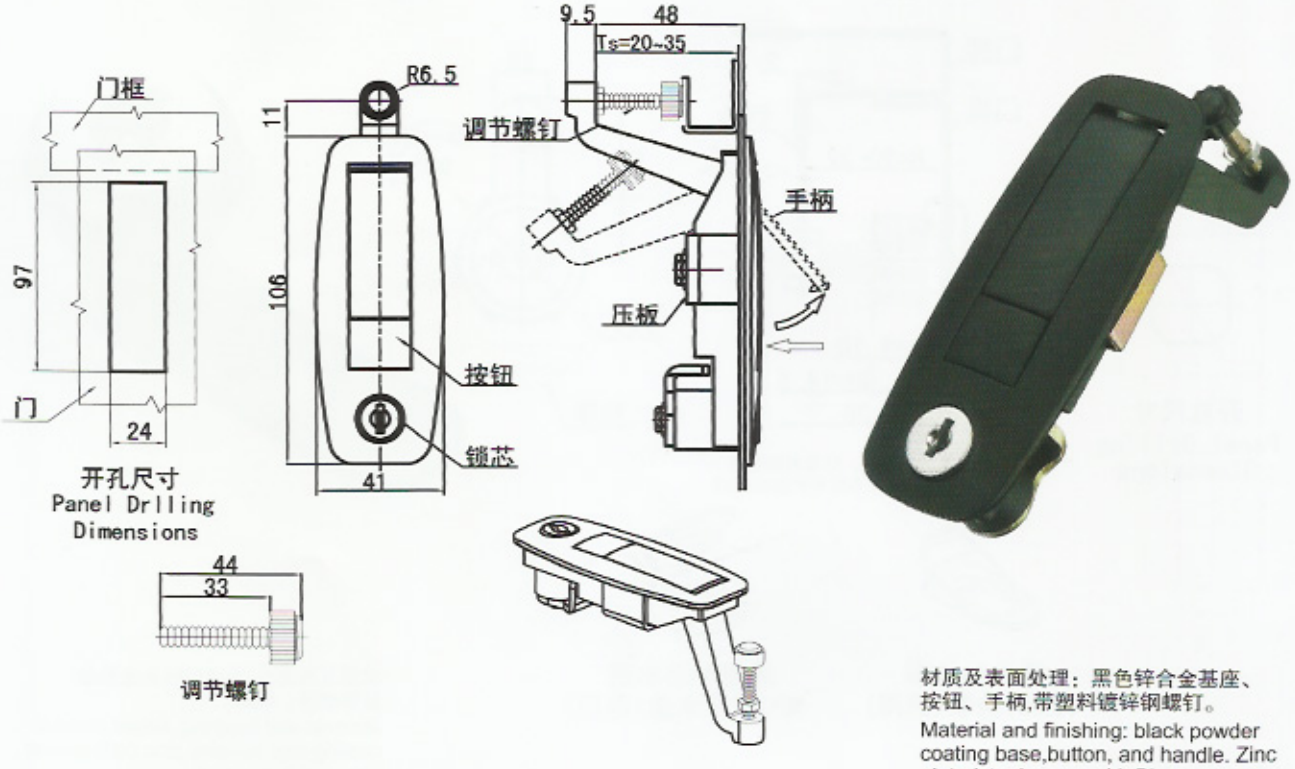

材质及表面处理：黑色锌合金基座、按钮、手柄,带塑料镀锌钢螺钉。

Material and finishing: black powder coating base,button, and handle. Zinc platedsteel screw with Plastic knob.

MS720

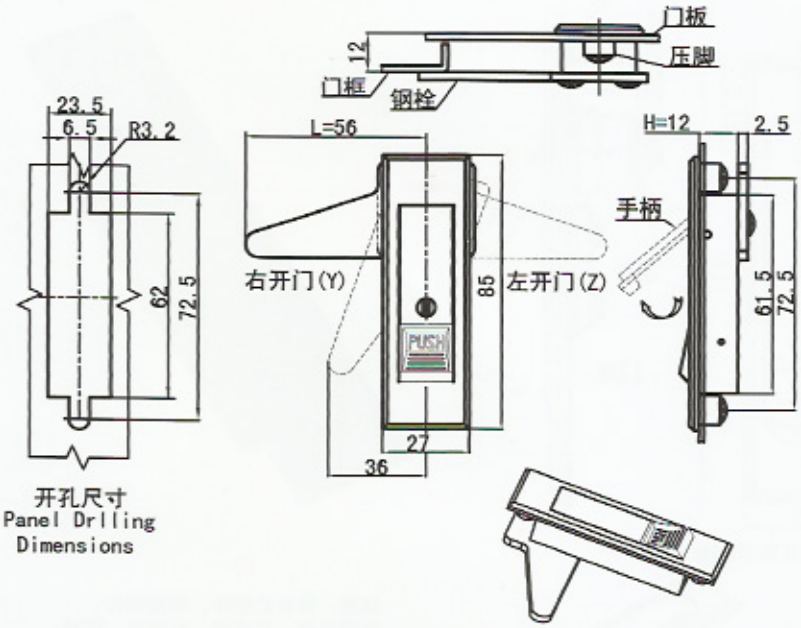

开孔尺寸
Panel Drlling
Dimensions



产品型号（MODEL）	特征描述(SPECIFICATION)
MS720-1	塑料按钮 带锁芯/Plastic button, with key cylinder
MS720-2	塑料按钮 带锁芯/Plastic button, with key cylinder
MS720-3	锌合金按钮 无锁芯/Zinc button, without key cylinder
MS720-4	锌合金按钮 带锁芯/Zinc button, with key cylinder

材质:锌合金锁体、钢制钢栓、塑料按钮。
表面处理：喷沙、镀铬、镀锌。

Material: Zinc alloy housing, steel cam, plastic button.
Finishing: Chrome & zinc coating.

MS721

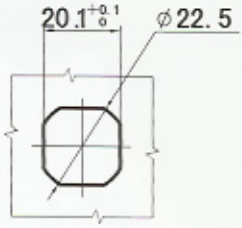

开孔尺寸
Panel Drlling
Dimensions

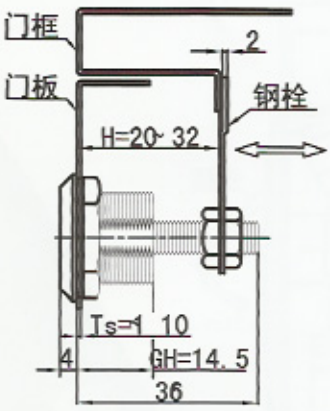

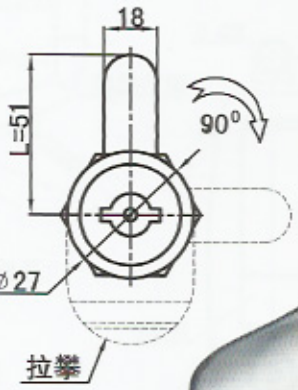

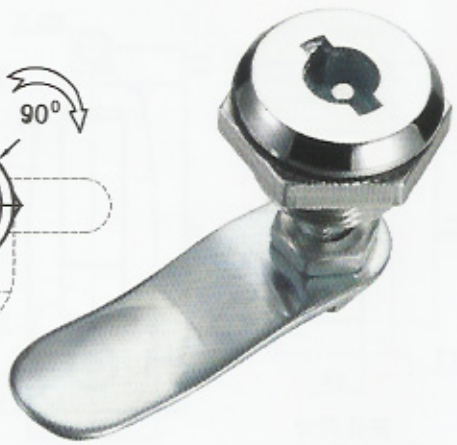

注:此锁分左、右开门，订货时须注明
单点钢栓（选用）S2E系列钢栓4603



黑色PA拉攀
HP001拉攀(选用)



黑色PA防水盖
WP002防水盖(选用)

材质及表面处理:镀铬锌合金基座;
镀锌钢栓、锁芯。

Material and finishing: Bright chrome coating zinc housing,zinc plating steel cam and key cylinder.

MS722

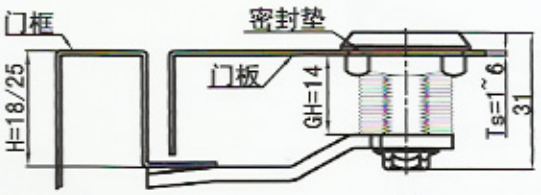

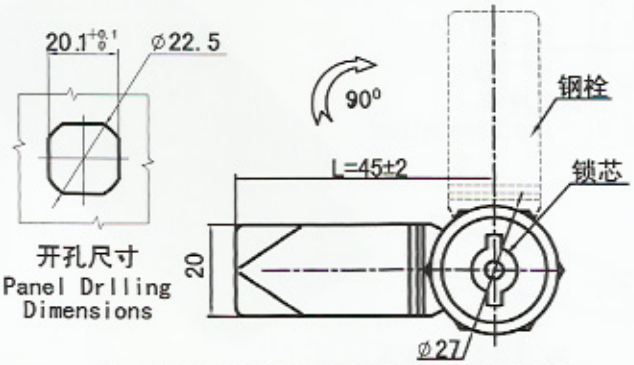

开孔尺寸
Panel Drilling Dimensions

注：单点钢栓(选用)S1B系列钢栓F，无定位.





黑色PA拉攀
HP001拉攀(选用)



黑色PA防水盖
WP002防水盖(选用)

IP 54

材质及表面处理:镀铬锌合金基座;
镀锌钢栓、锁芯。
Material and finishing: Bright chrome coating zinc housing, zinc plating steel cam and key cylinder.

MS724

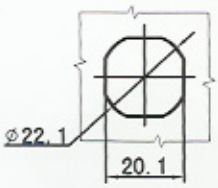

开孔尺寸
Panel Drilling Dimensions

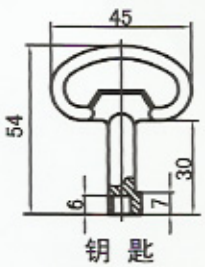

钥 匙

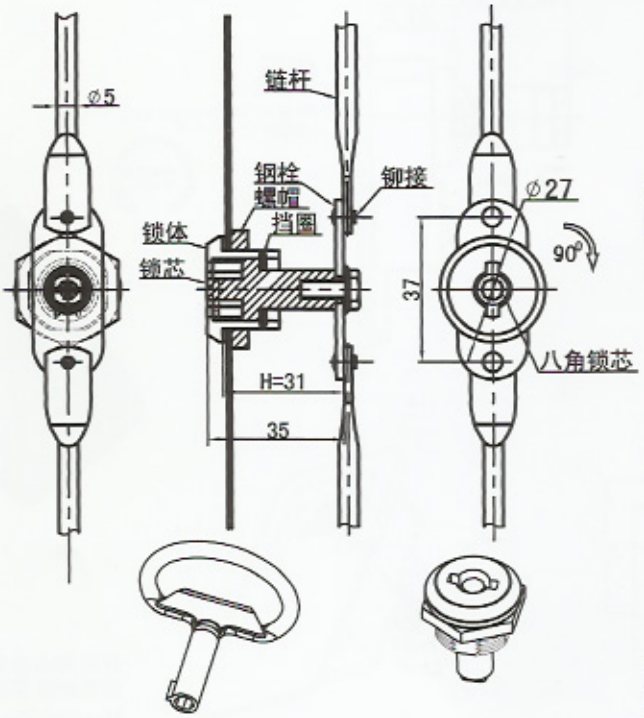



材质及表面处理：锌合金锁体，不锈钢盖板，钢制钢栓。表面镀镍。
Material and finishing: Zinc alloy body, stainless steel cover, steel bolt. Nickel plated.

MS725

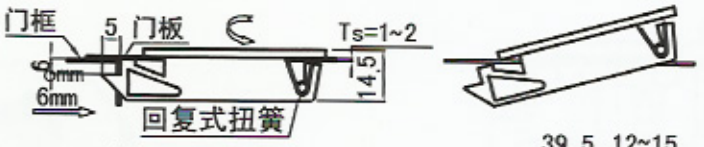



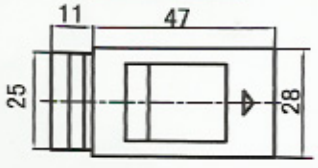

MS725-1

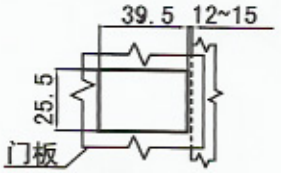

开孔尺寸
Panel Drlling Dimensions



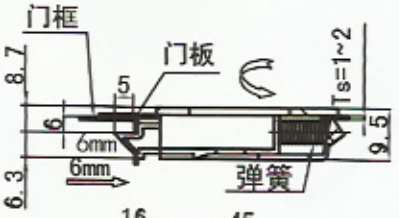

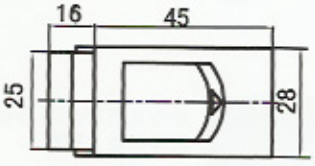

MS725-2

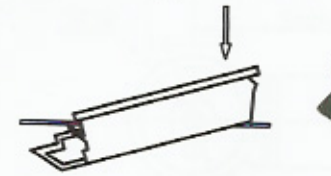

开孔尺寸
Panel Drlling Dimensions

材质及表面处理：尼龙扣体。
Material and Finish:Nyion body.

MS726

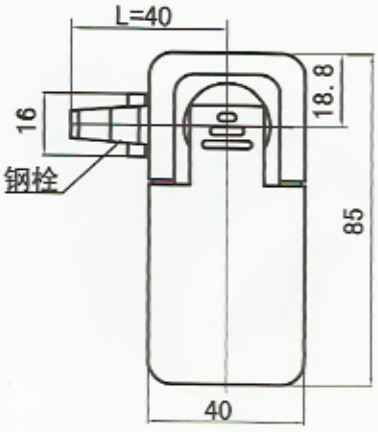

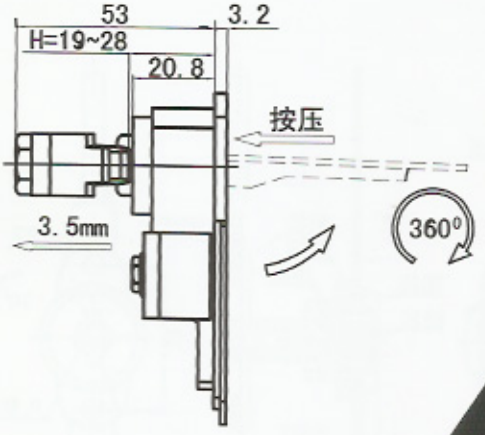



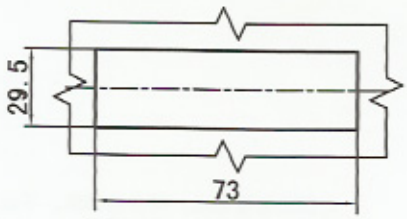

开孔尺寸
Panel Drlling Dimensions

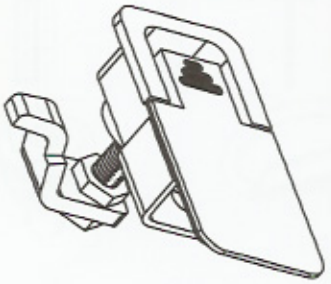

材质:锌合金锁体、钢制钢栓。
表面处理:亚光铬或喷塑、镀锌。
Material: Zinc alloy housing, steel cam.
Finishing: Matt chrome, zinc, or powder coated.

MS726A

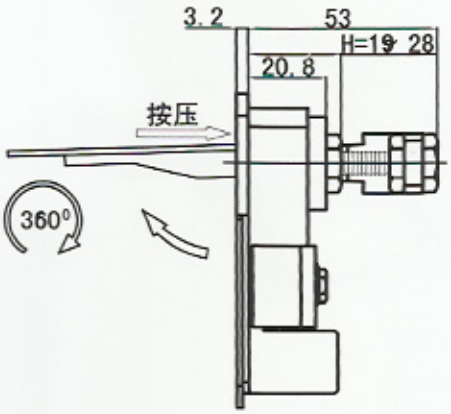

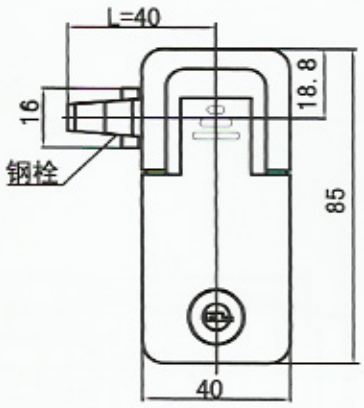

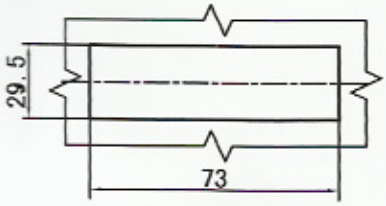

开孔尺寸
Panel Drilling Dimensions

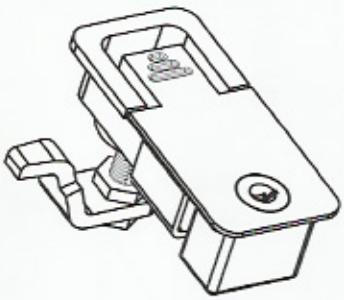



材质:锌合金锁体、钢制钢栓。
表面处理:亚光铬或喷塑、镀锌。
Material: Zinc alloy housing, steel cam.
Finishing: Matt chrome, zinc, or powder coated.

MS727

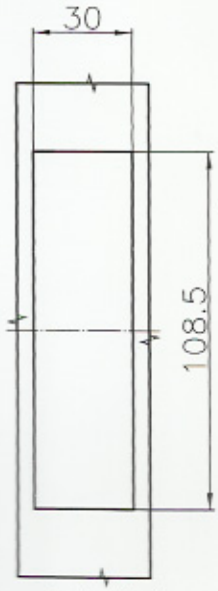

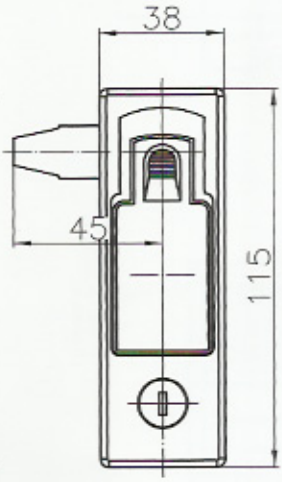

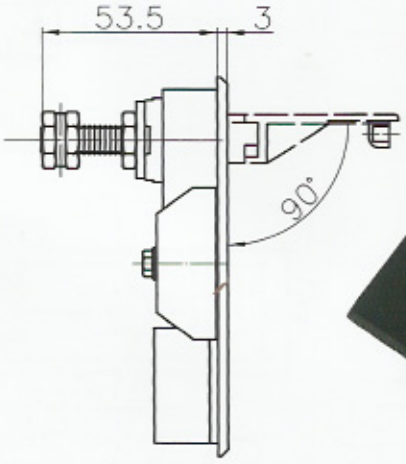

开孔尺寸



注：快速开启，安装方便快捷；调节螺母可适用各种止口范围；有伸缩功能。
Remark: quick installation,adjust nut to fit different dimension.

材质：黑色锌合金基座、镀铬锌合金手柄；镀锌钢栓。
Material and finishing: Black zinc coated housing, zinc coating handle and steel cam.

MS726B



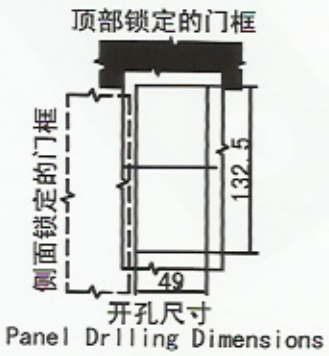

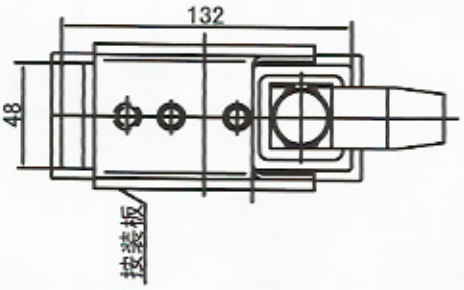

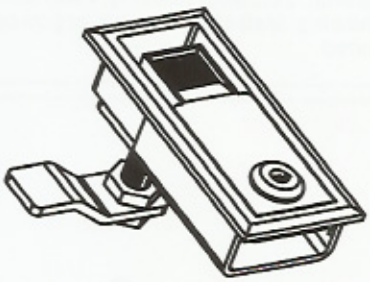

MS726B-1

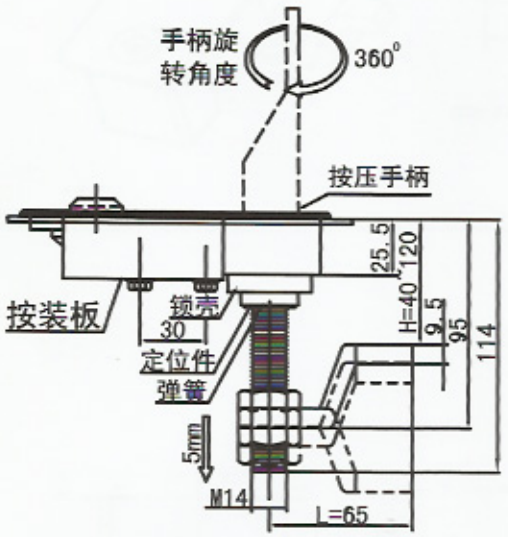

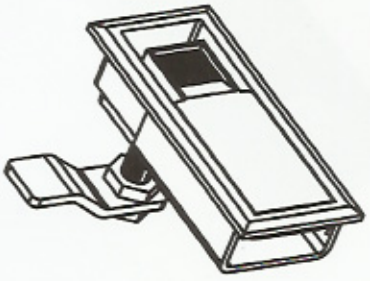

MS726B-2

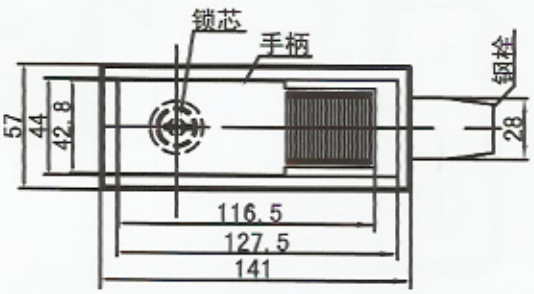

产品型号（MODEL）	特征描述(SPECIFICATION)
MS726B-1	带锁芯/with key cylinder
MS726B-2	无锁芯/without key cylinder

材质：锌合金锁体、钢制钢栓。
表面处理:亚光铬或喷塑、镀锌。

Material: Zinc alloy housing, steel cam.
Finishing: Matt chrome, zinc, or powder coated.

MS728

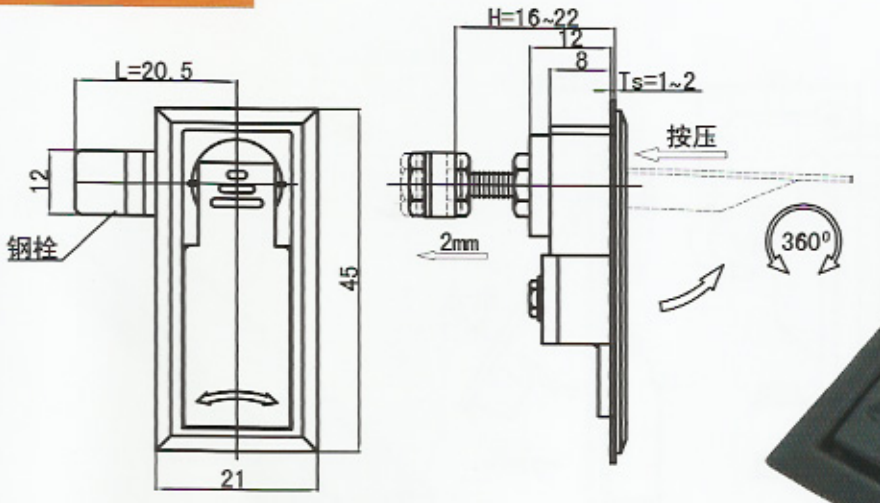



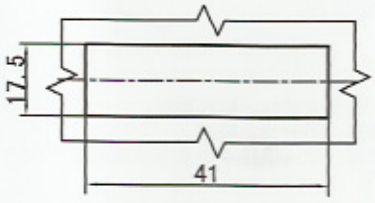

开孔尺寸
Panel Drlling Dimensions

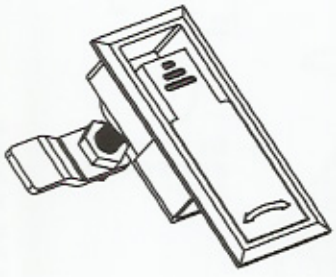

材质:锌合金锁体、钢制钢栓。
表面处理：喷塑、镀锌。
Material:Zinc Alloy Housing,Steel cam.
Finishing:PVC & Zinc Coating.

MS728A



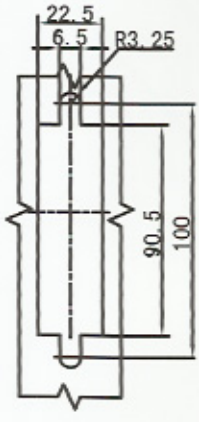

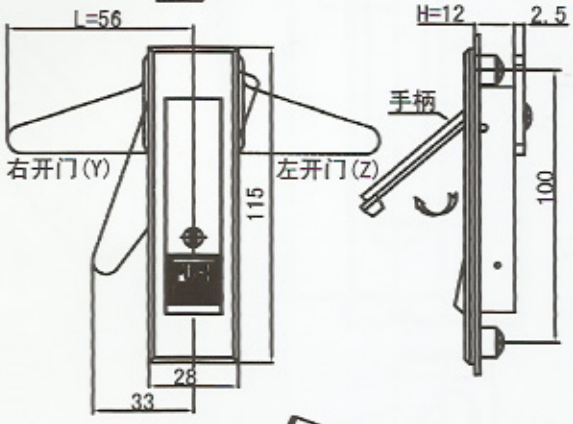

开孔尺寸
Panel Drlling
Dimensions

注:钢栓翻转180°，实现左右开门(适用于平钢栓)





材质、表面处理:喷砂、镀铬锌合金基座、锁芯;
镀锌钢栓；锌合金按钮。
Material and finish: Blast-spraying and bright chrome-plating ZDC housing and insert; ZDC plating steel cam; ZDC button.

MS729

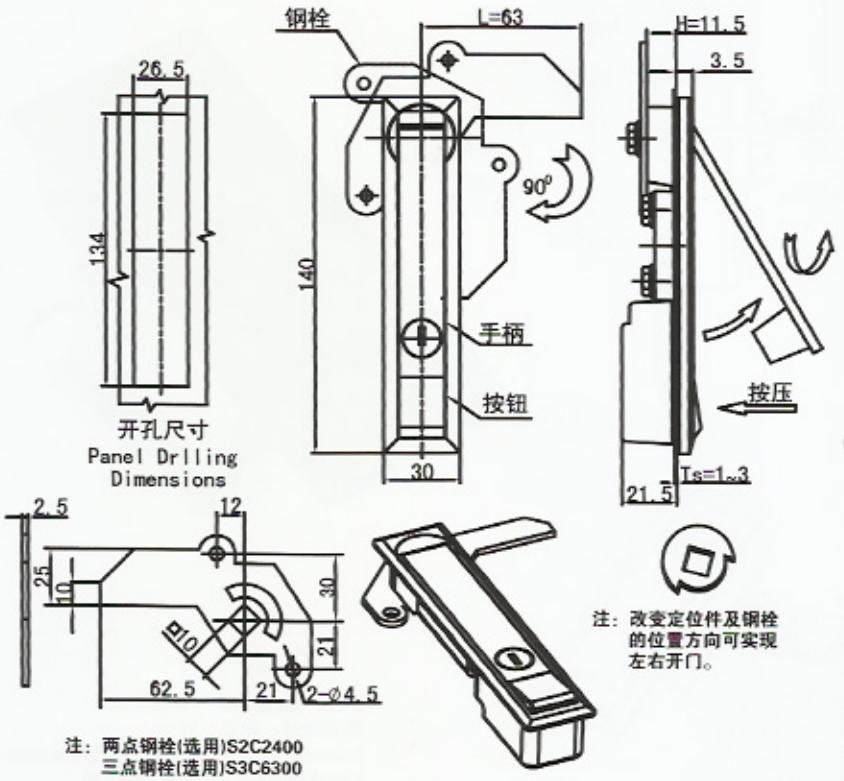

注：两点钢栓(选用)S2C2400
三点钢栓(选用)S3C6300

注：改变定位件及钢栓的位置方向可实现左右开门。



材质：锌合金锁体、钢制钢栓。
表面处理：亚光铬、镀锌。
结构功能：三点钢栓中心距以左面翻到右,可左右开门。

Material : Zinc Alloy Housing, Steel Latch.
Finishing: Grey Chrome & Zinc Coating.
Structure Function: 3-Point latch positing from left to right, open on either side.

MS730

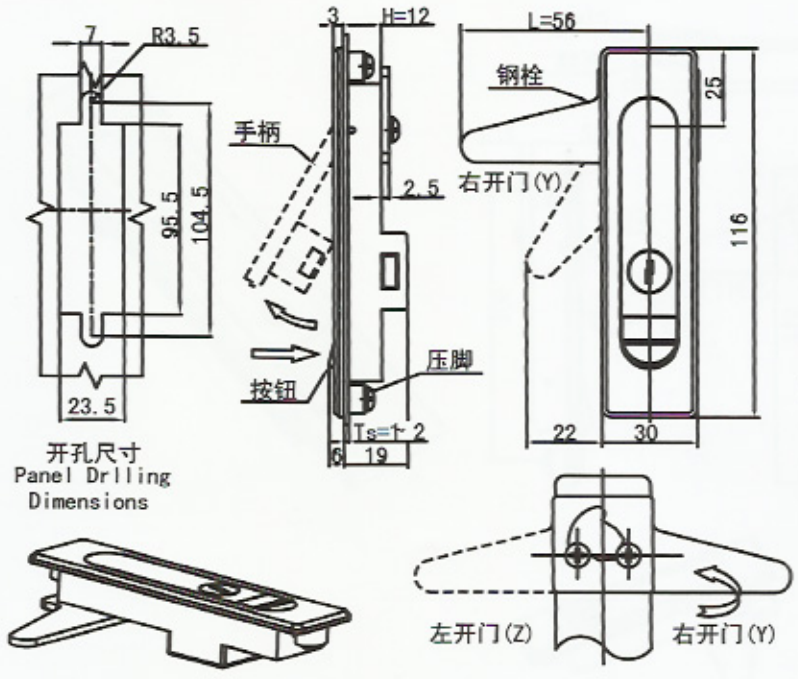

注：钢栓翻转180°，实现左右开门（适用于平钢栓）



材质：锌合金锁体、钢制钢栓。
表面处理：亚光铬或喷塑、镀锌。
结构功能：钢栓翻转180度,可实现左右开门(适用于平钢栓),H大于12mm的钢栓分左右开门。

Material :Zinc Alloy Housing, Steel Latch.
Finishing: Grey Chrome or Inject PVC & Zinc Coating.
Structure function: flat cam rotates 180° to open on either side. The cam's height bigger than 12mm can open on either side.

MS731

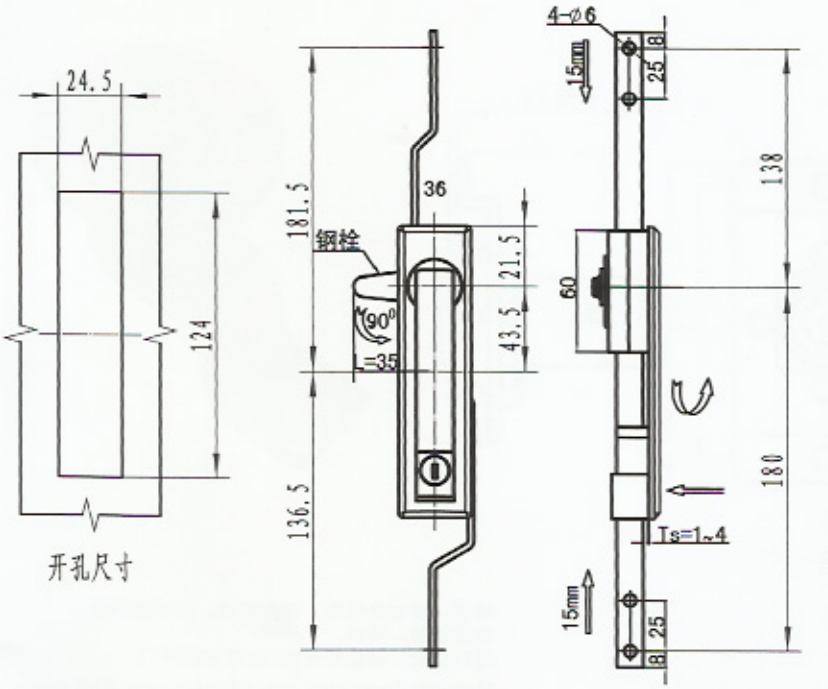



材质：锌合金锁体,钢制钢拴,传动条。
表面处理：喷塑,镀锌。
结构功能：翻转传动体可实现左右开门。

Material: Zinc alloy housing, steel cam, steel drive stripe.
Finishing: Powder & zinc coating.
Structure and feature: Turing drive stripe to open the door on either side.

MS801-1(GMS-1)

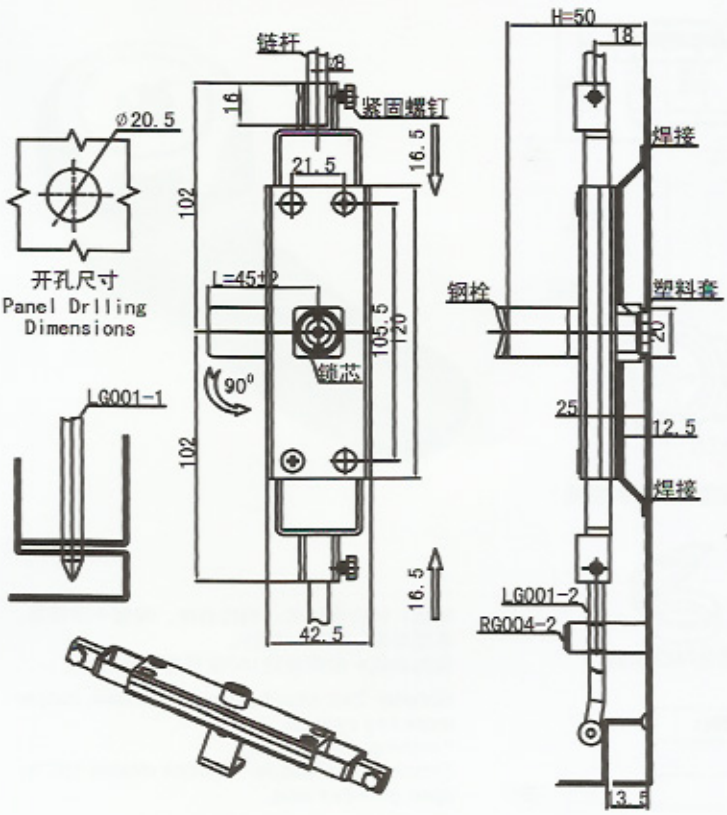

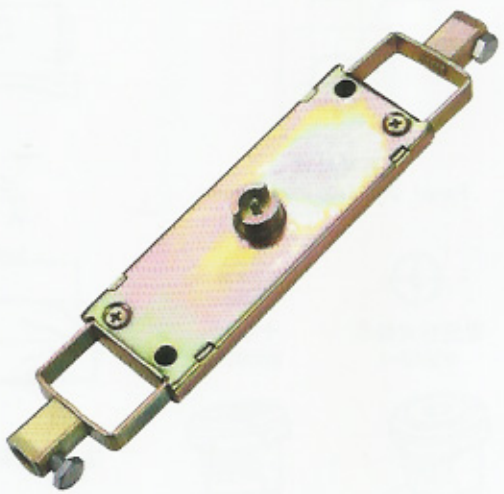

材质：锌合金锁体、钢质钢拴、ABS塑料套。
表面处理：镀锌。
结构功能：左右开门订货请注明。

Material: Zinc alloy housing, steel cam, ABS cover.
Finishing: Zinc coating.
Structure and feature: Please note LH or RH while ordering.

MS801-2(GMS-2)

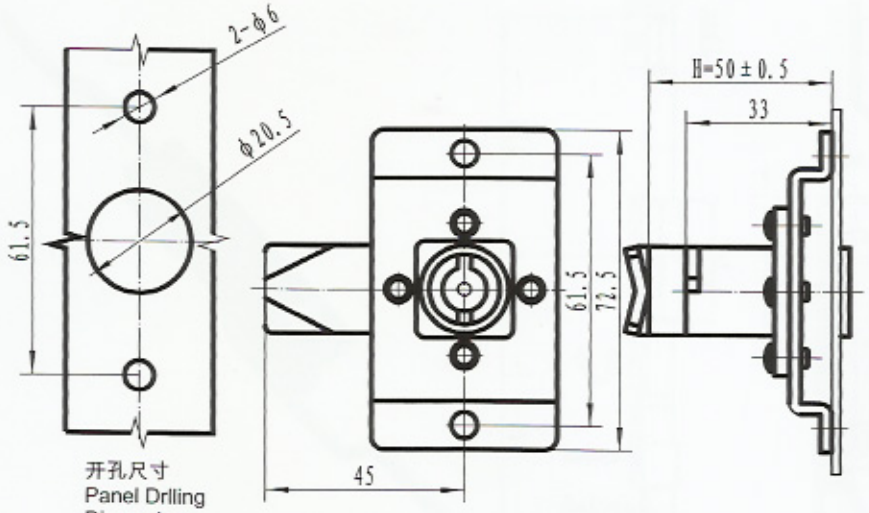

开孔尺寸
Panel Drlling Dimensions



材质：锌合金锁体、钢质钢拴、ABS塑料套。
表面处理：镀锌。
结构功能：锁体旋转180度可左右开门。

Material: Steel latch, zinc alloy housing, ABS cover.
Finishing: Zinc coating.
Structure and feature: Steel latch rotates 180°to open on either side.

MS802

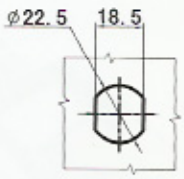

开孔尺寸
Panel Drlling Dimensions



常规钥片锁芯
MS802-1



十字型
MS802-2





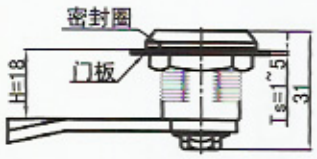

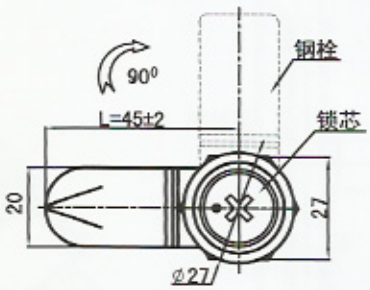

注：单点钢栓(选用)S1E系列钢栓



黑色PA防水盖



材质：锌合金锁体、钢质钢拴、铜制十字锁芯。
表面处理：镀铬、镀锌。
结构功能：锁体旋转180度可左右开门。

Material: Zinc alloy housing, steel cam, copper cross key cylinder.
Finishing: Zinc coating.
Structure and feature: The lock rotates 180°to open on either side.

产品型号（MODEL）	特征描述(SPECIFICATION)
MS802-2	常规钥片锁芯
MS802-3	十字型锁芯

MS802-3

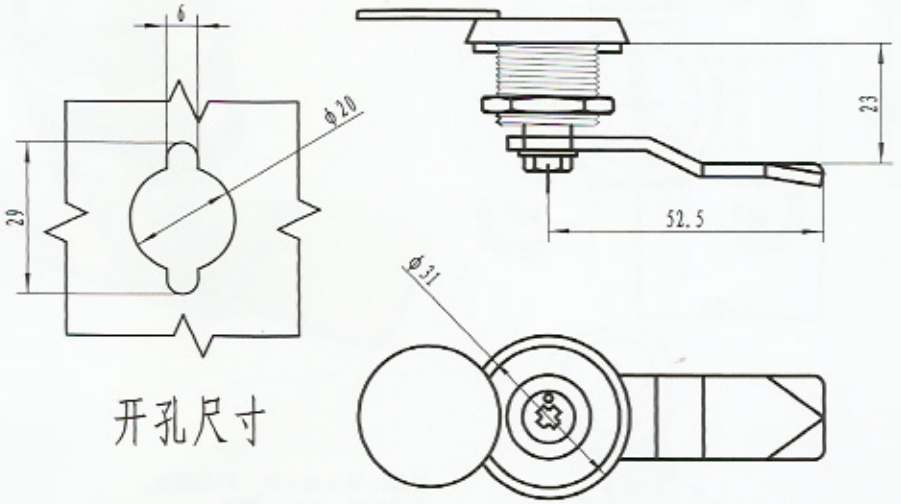



材质：锌合金锁体、钢质钢拴、铜制十字锁芯。
表面处理：镀铬。

Material: Zinc alloy housing, steel cam, copper cross key cylinder.
Finishing: Chrome coating.

MS802A

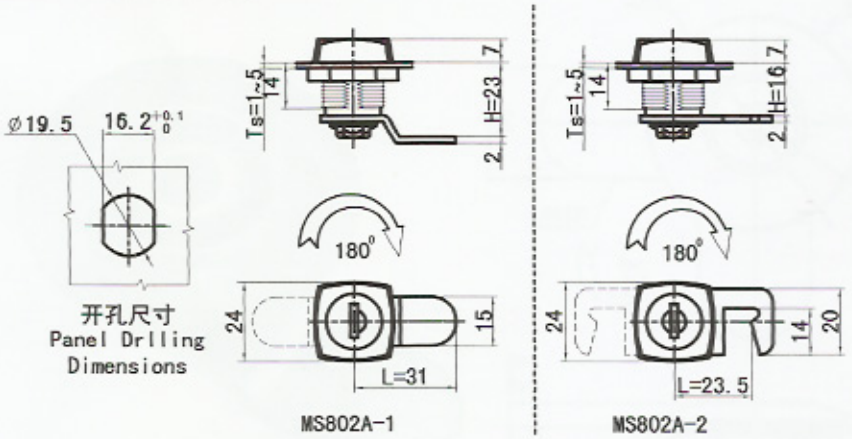



注：MS802A-2单点钢栓(选用)S1D2800

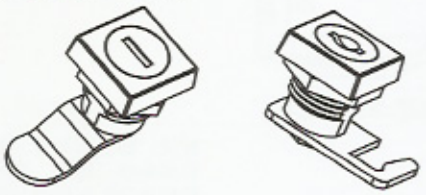

产品型号（MODEL）	特征描述(SPECIFICATION)
MS802A-1	带锁芯/with key cylinder
MS802A-2	无锁芯/without key cylinder

材质：锌合金锁体、钢质钢拴、铜制十字锁芯。
表面处理：镀铬、镀锌。
结构功能：锁体旋转180度可左右开门。

Material: Zinc alloy housing, steel cam, copper cross key cylinder.
Finishing: Chrome, zinc coated.
Structure and feature: The lock rotates 180°to open on either side.

MS803

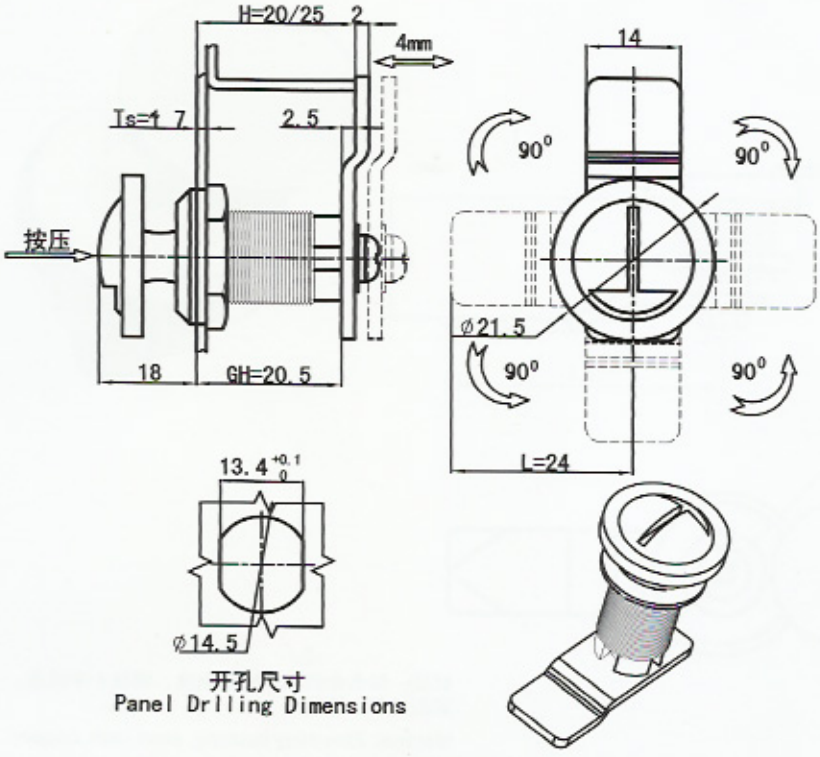



材质：锌合金锁体、钢制钢栓。
表面处理：镀铬、镀锌。
结构功能：锁体旋转90度或180度可左右开门。

Material: Steel Latcht, Zinc Aolly Housing.
Finishing: Zinc & Chrome Coating.
Structure and feature: The lock rotates 90° or 180° to open on either side.

MS804

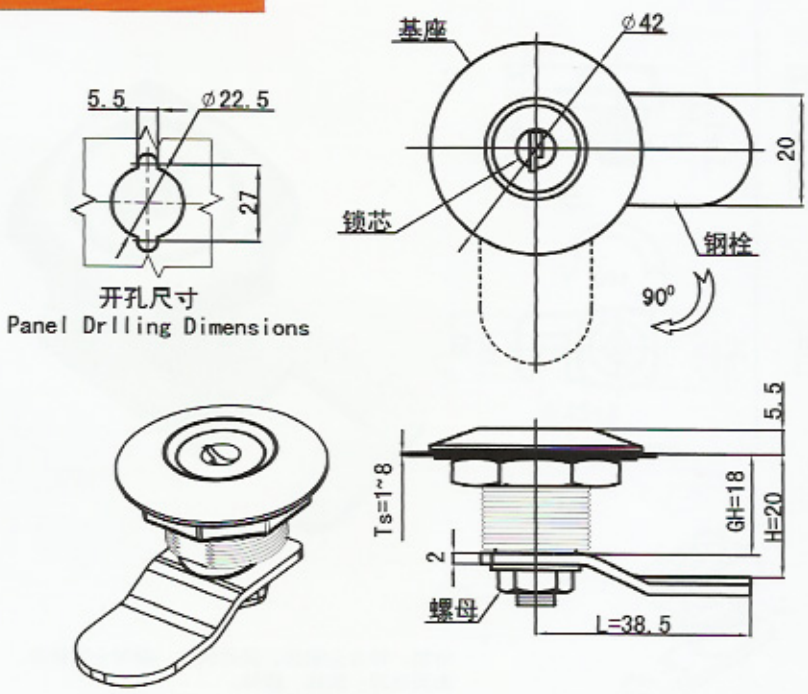



注：单点刚栓（选用）S1E钢栓系列

产品型号（MODEL）	特征描述(SPECIFICATION)
MS804-1	常规钥片锁芯
MS804-2	十字型锁芯

材质：锌合金锁体、板前部分包塑，钢制钢栓。
表面处理：镀铬、镀锌。
结构功能：钢栓转180度可左右开门。

Material: Zinc Alloy Housing, Steel Latch, Panel Inject PVC.
Finishing: Zinc & Chrome Coating.
Structure and feature: The lock rotates 180° to open on either side.

MS805

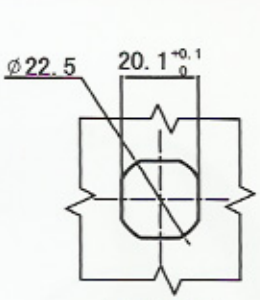

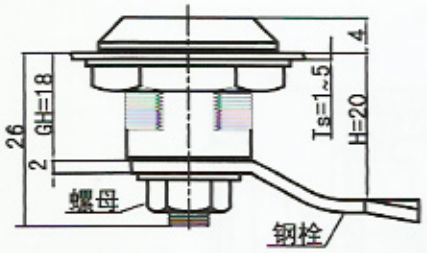



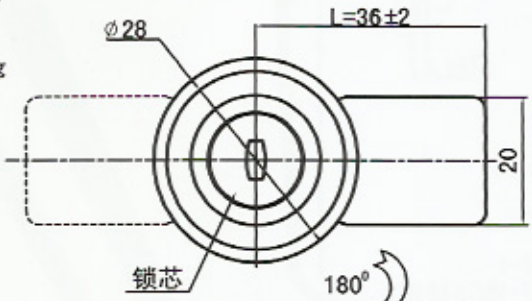

注：单点钢栓(选用)S1B系列钢栓E



黑色PA拉攀



黑色PA防水盖



材质：锌合金锁体、钢制钢栓。
表面处理：镀铬(喷塑)、镀锌。
结构功能：锁体安装部分转180度可左右开门。

Material: Zinc alloy housing, steel cam.
Finishing:Chrome Coating or PVC ,Zinc Coating .
Structure and feature: The lock rotates 180°to open on either side.

MS806

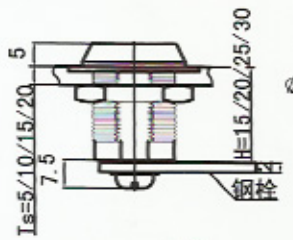

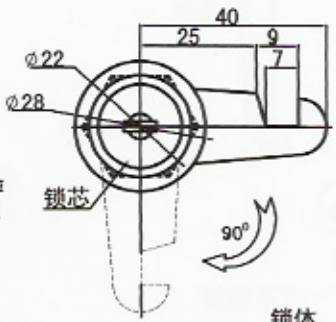

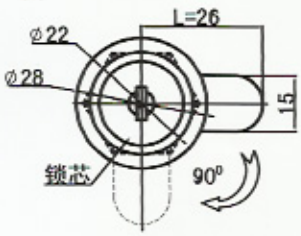

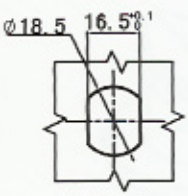

开孔尺寸
Panel Drlling Dimensions

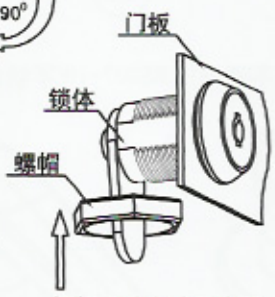

螺帽拆装安装示意图



产品型号 (MODEL)	止口高度 H	中心距 L		
MS806-1	16	•26	34	40
MS806-2	20	•26	34	40
MS806-3	25	•26	34	40
MS806-4	30	34	34	40

材质：锌合金锁体、钢制钢栓。
表面处理：镀铬、镀锌。
结构功能：锁体旋转180度可左右开门。

Material: Steel Latcht, Zinc Aolly Housing.
Finishing:Zinc & Chrome Coating.
Structure and feature: The lock rotates 180° to open on either side.

MS807

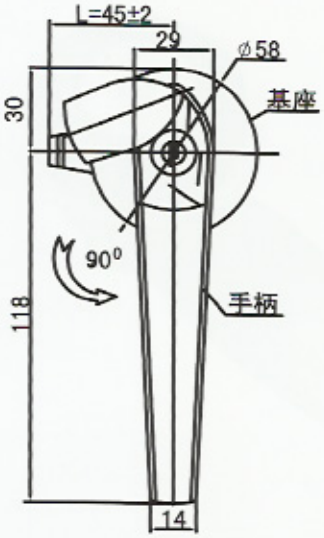

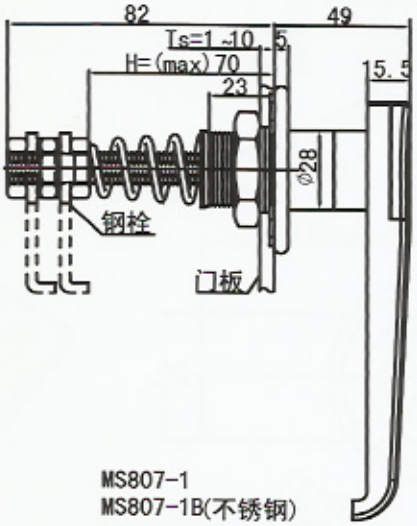

MS807-1
MS807-1B(不锈钢)



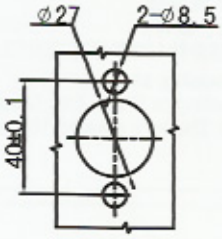

开孔尺寸
Panel Drlling
Dimensions

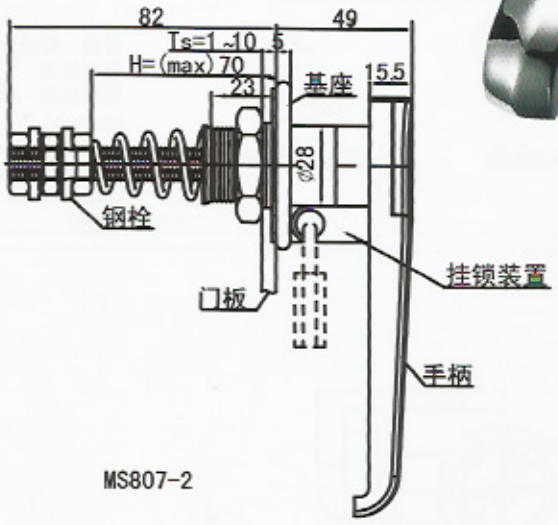

MS807-2

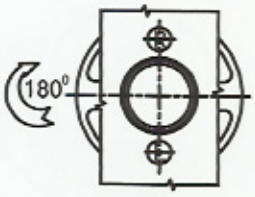

注：MS807-1系列60°、90°左右开门通用的产品规格，通过基座旋转180°安装定位,实现左右开门,图示为产品与门板安装后背示图。



MS807-1
MS807-1B(不锈钢)
MS807-2

MS807-1B(不锈钢)

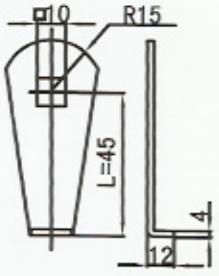

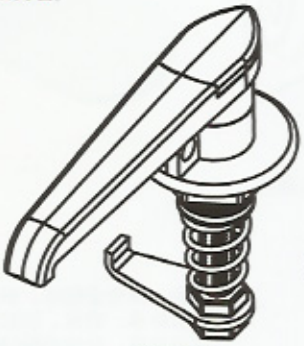

MS807-2



MS807-1
MS807-1B(不锈钢)

材质：锌合金锁体、钢制钢栓。
表面处理：镀铬、镀锌。
结构功能：参考MS807-3。

Material: Zinc alloy housing, steel cam.
Finishing:Zinc & Chrome Coating.
Structure and feature:Refer MS807-3.

MS807-3

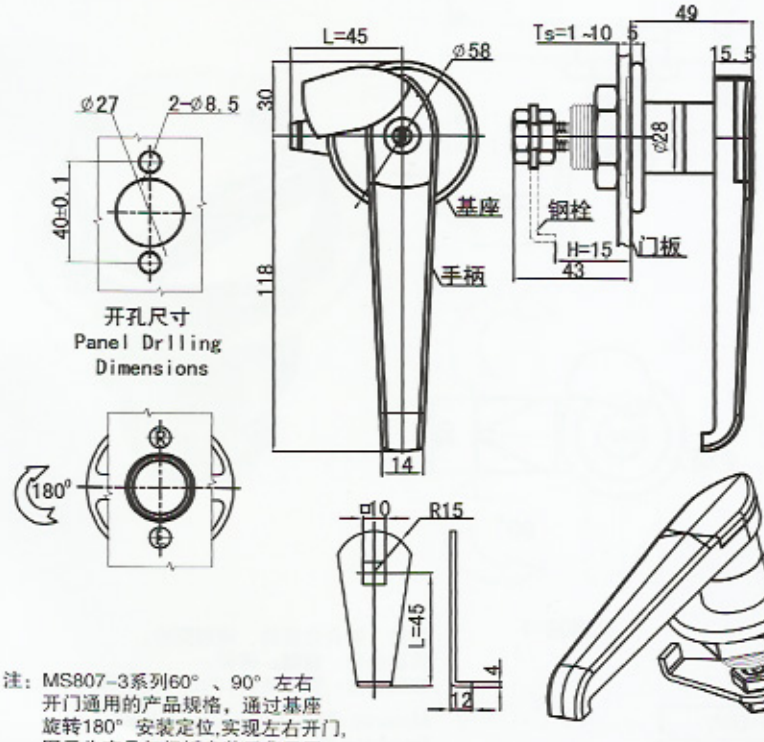



注：MS807-3系列60°、90°左右开门通用的产品规格，通过基座旋转180°安装定位,实现左右开门,图示为产品与门板安装后背示图。

注:三点钢栓(选用)S3C系列

材质：锌合金锁体、钢制钢栓。
表面处理：镀铬、镀锌。

Material: Zinc alloy housing, steel cam.
Finishing: Chrome & Coating Coating .

MS807-4

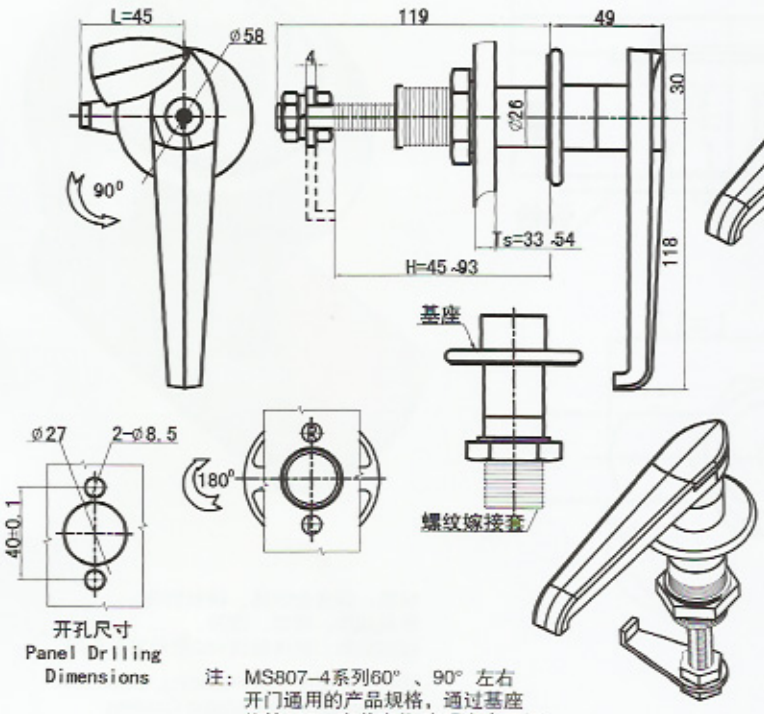



注：MS807-4系列60°、90°左右开门通用的产品规格，通过基座旋转180°安装定位,实现左右开门,图示为产品与门板安装后背示图。

注：材质、表面处理、结构功能，开孔尺寸请参考MS807-3。
Remark:Refer MS807-3.

MS808



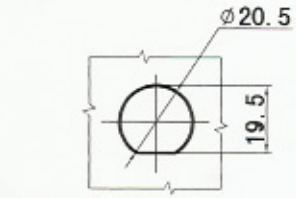

开孔尺寸
Panel Drilling Dimensions

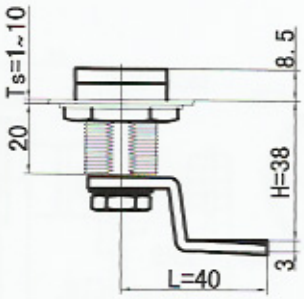

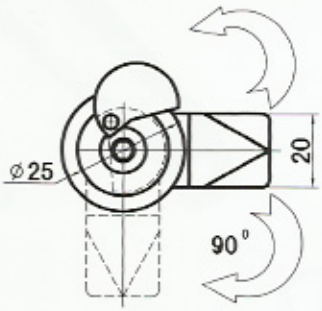

MS808-2

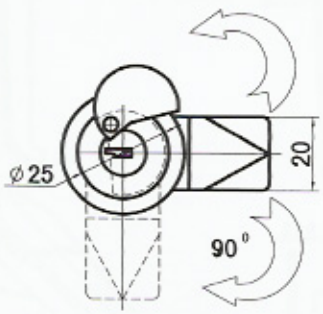

MS808-1



材质：锌合金锁体、钢制钢栓。
表面处理：镀铬、镀锌。
结构功能：锁体旋转180度可左右开门。

Material: Zinc alloy housing, steel cam.
Finishing:Zinc & Chrome Coating.
Structure and feature: The lock rotates 180° to open on either side.

注：单点刚栓（选用）S1B系列刚栓E

产品型号（MODEL)	特征描述(SPECIFICATION)
MS808-1	常规钥片锁芯
MS808-2	内六角型锁芯

MS809

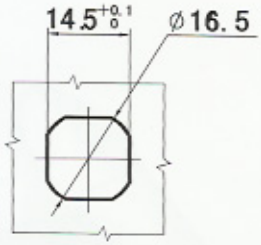

开孔尺寸
Panel Drilling Dimensions

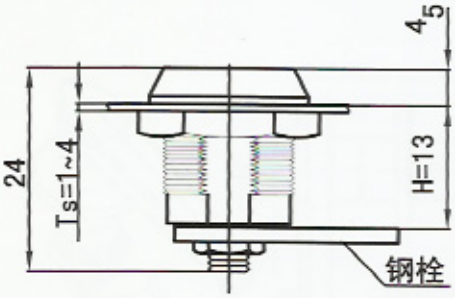

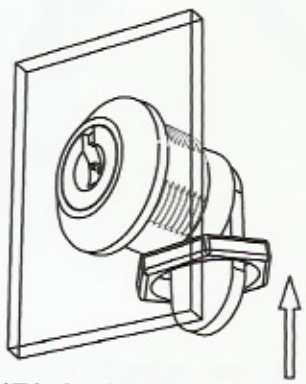

螺帽拆装安装示意图

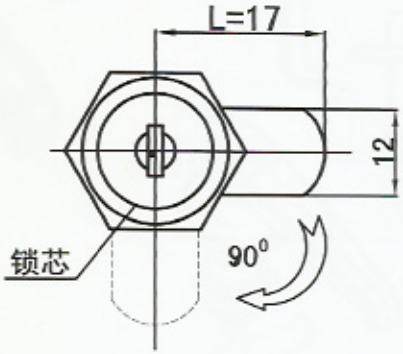



材质：锌合金锁体、钢制钢栓。
表面处理：镀铬、镀锌。
结构功能：锁体旋转180度可左右开门。

Material: Zinc alloy housing, steel cam.
Finishing:Zinc & Chrome Coating.
Structure and feature: The lock rotates 180° to open on either side.

MS810

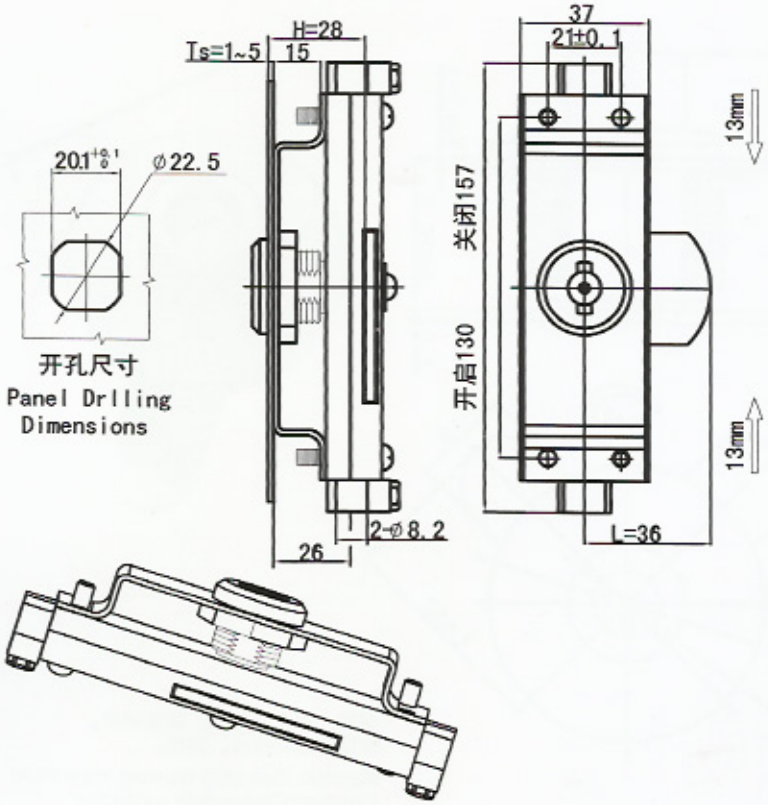



材质：锌合金锁头、螺帽、连接件、铜质锁体、传动件、钢拴。
表面处理：镀铬、镀锌。
结构功能：锁体旋转180度可左右开门。

Material: Zinc alloy cylinder cover, nut, fitting, steel housing, drive stripe, and steel cam.
Structure and feature: The lock rotates 180°to open on either side.

MS811

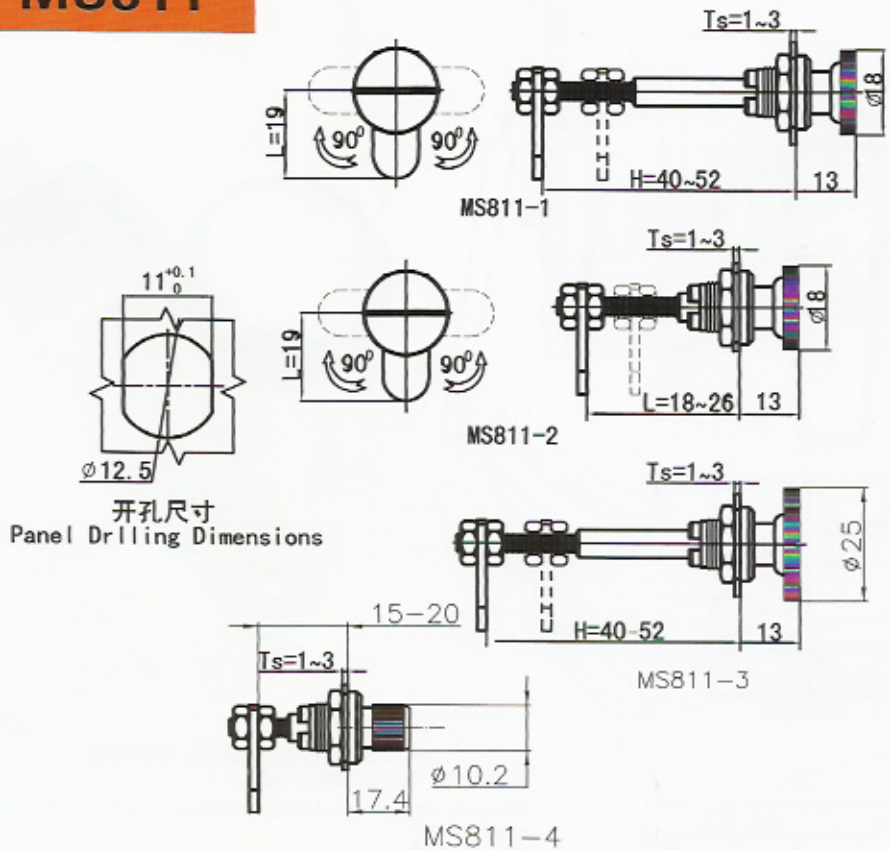



材质：钢制钢栓。
表面处理：镀铬、镀锌。

Material: steel cam.
Finishing:Chrome&Zinc Coating.

MS812A

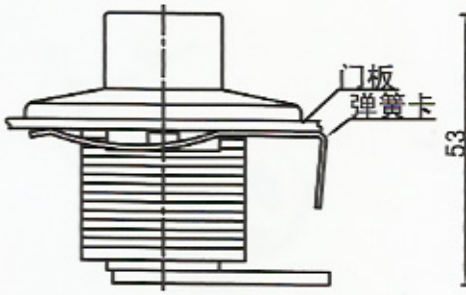

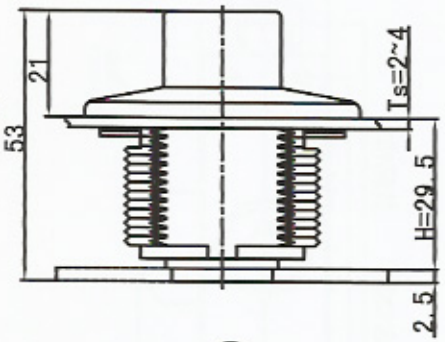



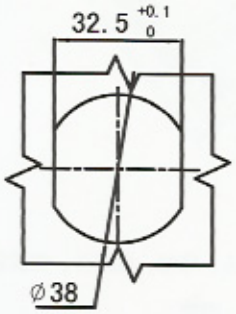

开孔尺寸
Panel Drlling
Dimensions

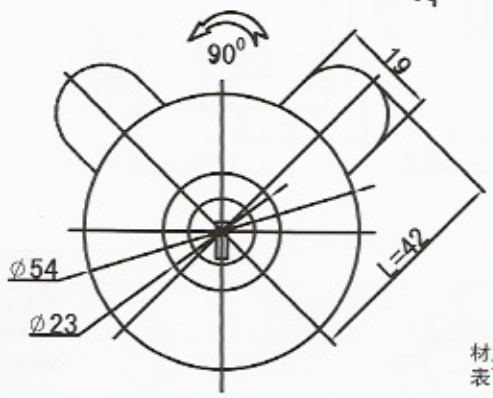

材质：锌合金锁体、钢制钢栓。
表面处理：镀铬、镀锌。

Material: Zinc alloy housing, steel cam.
Finishing:Chrome&Zinc Coating.

MS812-1

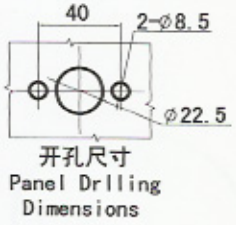

开孔尺寸
Panel Drlling
Dimensions

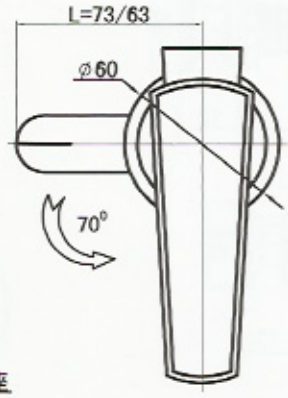

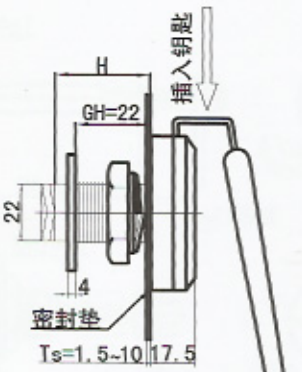



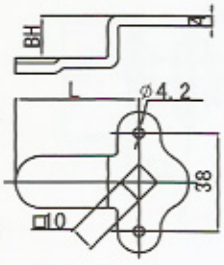

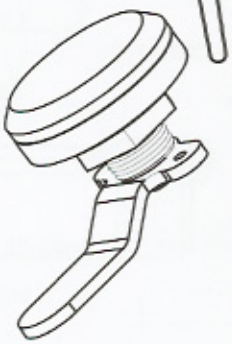



注：90° 通过基座旋转180° 实现左右开门;图示为产品与门板安装后背视图。

注：三点钢栓（选用）S3C系列钢栓

产品型号（MODEL）	止口高度 H			中心距 L		
MS812-1	51	27	0	48	65	86

材质：锌合金锁体、钢制钥匙(包塑)、钢制钢栓。
表面处理：镀铬、镀锌、包塑。

Material: Zinc alloy housing, steel key (cover with PVC), steel cam.
Finishing: Chrome & Zinc coating, PVC covered.

MS812-2

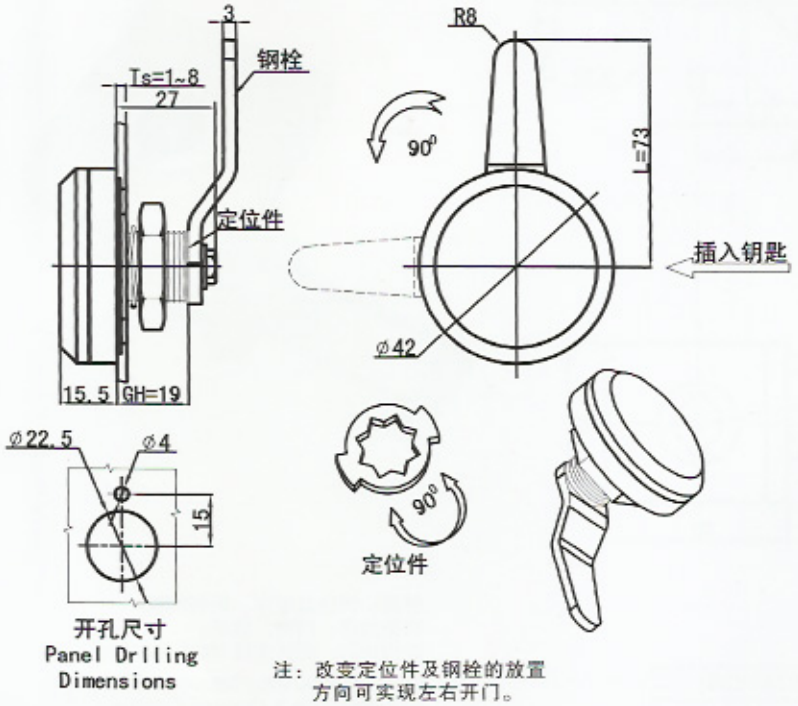

开孔尺寸
Panel Drilling Dimensions

注：改变定位件及钢栓的放置方向可实现左右开门。

注：三点钢栓（选用）S3B系列钢栓B



材质、表面处理选用请参考MS812-1。
Remark: Please refer MS812-1 on material & surface finishing.

MS812-3

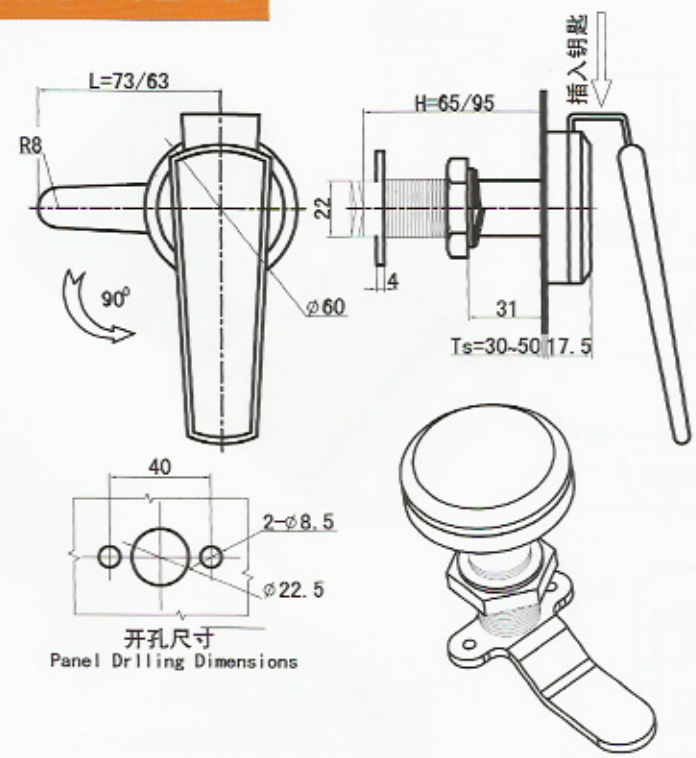

开孔尺寸
Panel Drilling Dimensions

产品型号（MODEL）	止口高度 H	中心距 L
MS812-3	65 95	73 63



材质、表面处理选用请参考MS812-1。
Remark: Please refer MS812-1 on material & surface finishing.

MS813

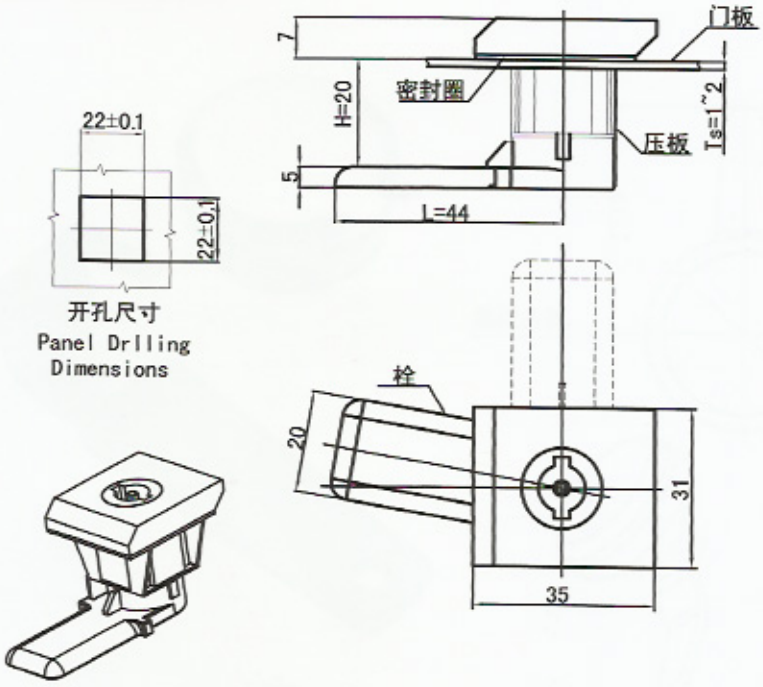

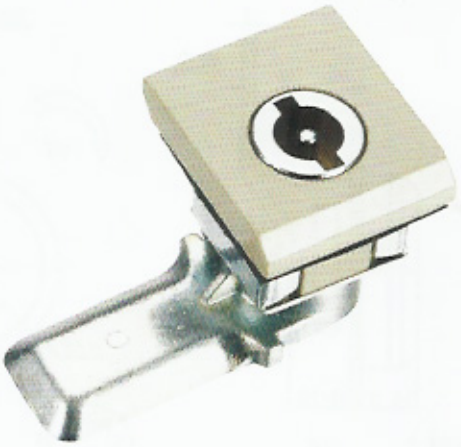

产品型号（MODEL）	特征描述(SPECIFICATION)
MS813-1	翼型锁芯
MS813-2	常规钥片锁芯

材质：锌合金锁体、钢制钢栓。
表面处理：镀铬、镀锌。
结构功能：锁体旋转180度可左右开门。

Material: Zinc alloy housing, steel cam.
Finishing:Zinc & Chrome Coating.
Structure and feature: The lock rotates 180° to open on either side.

MS814

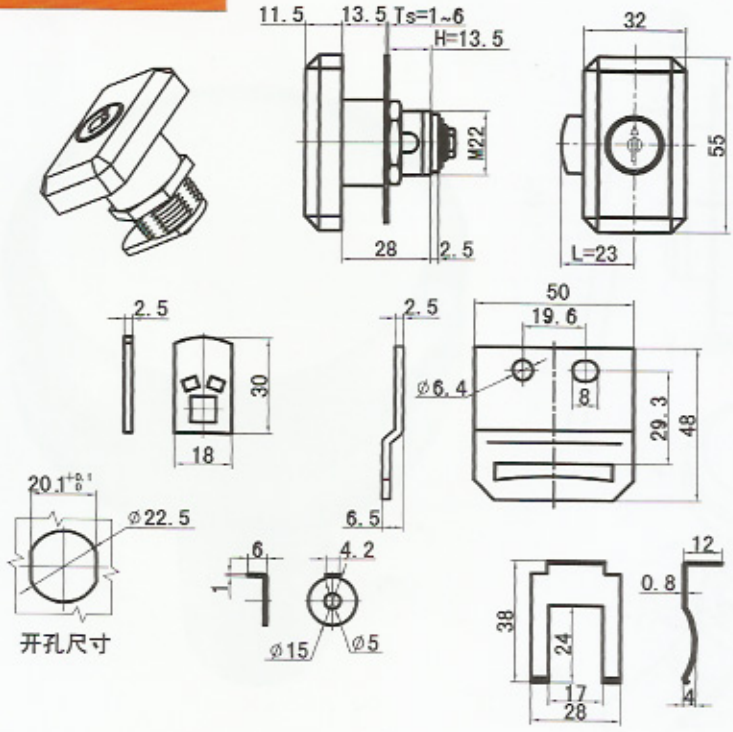

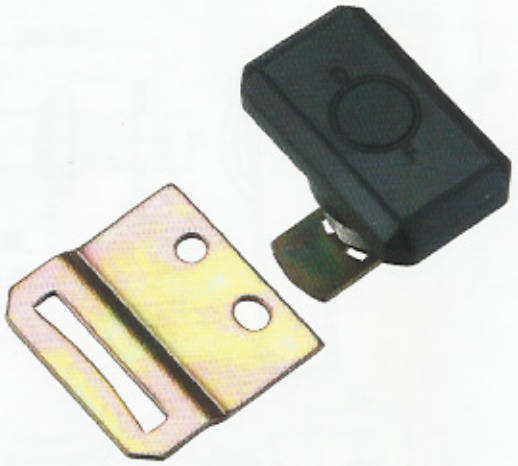

产品型号（MODEL）	特征描述(SPECIFICATION)
MS814-1	带锁芯/with key cylinder
MS814-2	无锁芯/without key cylinder

材质：锌合金锁体、钢制钢栓。
表面处理：镀铬、镀锌。
结构功能：锁体旋转180度可左右开门。

Material: Zinc alloy housing, steel cam.
Finishing:Zinc & Chrome Coating.
Structure and feature: The lock rotates 180° to open on either side.

MS815

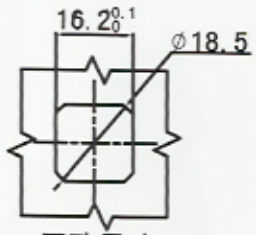

开孔尺寸
Panel Drlling
Dimensions

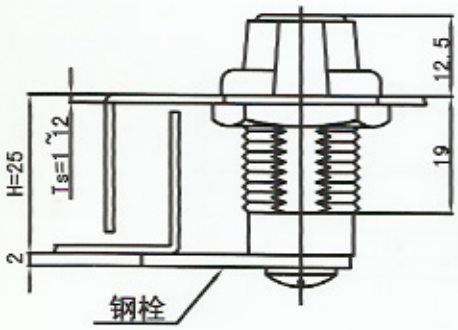



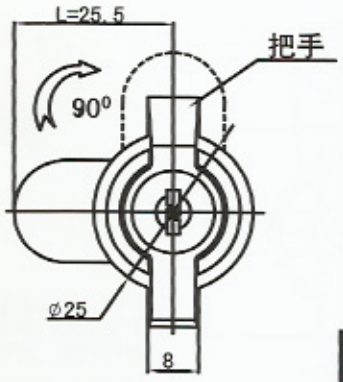



材质：锌合金锁体、钢制钢栓。
表面处理：电熔漆、镀锌。
结构功能：内定位件转90度刚栓转180度可左右开门。

Material: Zinc alloy housing, steel cam.
Finishing: electric melting paint, and zinc coating.
Structure and feature: The inner locator rotates 90°and the cam rotates 180°to open on either side.

IP 65

注：单点刚栓（选用）S1B系列刚栓K

MS815A

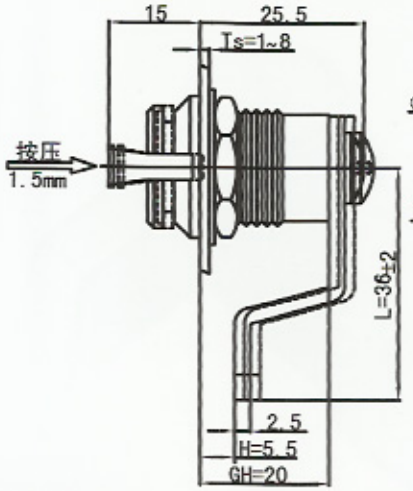

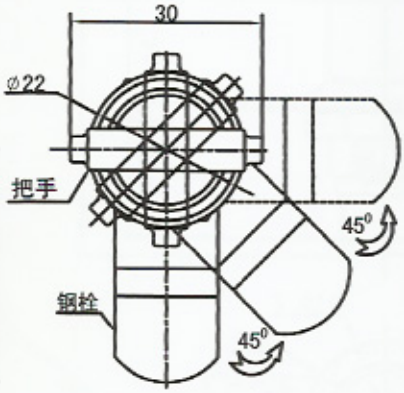



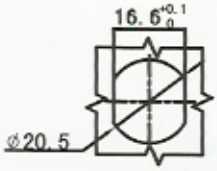

开孔尺寸
Panel Drlling Dimensions



材质：锌合金锁体、钢制钢栓。
表面处理：喷砂镀镍、镀锌。
结构功能：内定位件转90度钢栓转180度可左右开门。

Material: Zinc alloy housing, steel cam.
Finishing: Blast Nickel and zinc coating.
Structure and feature: The inner locator rotates 90°and the cam rotates 180°to open on either side.

MS815B

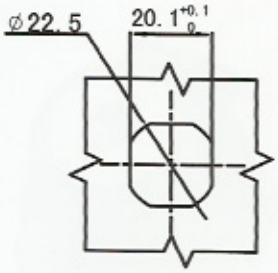

开孔尺寸
Panel Drlling Dimensions

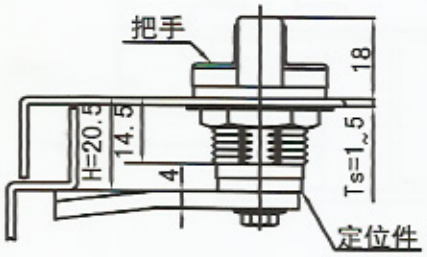

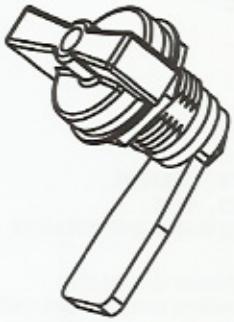

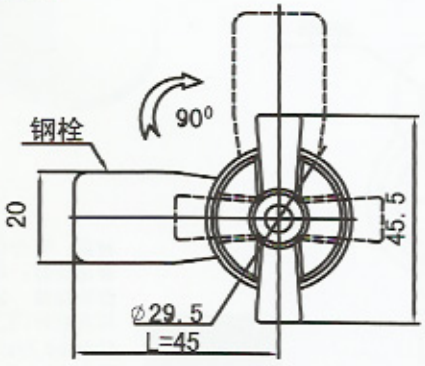



材质：锌合金锁体、钢制钢栓。
表面处理：黑色尼龙、镀锌。
结构功能：内定位件转90度钢栓转180度可左右开门。

Material: Zinc alloy housing, steel cam.
Finishing: Nylon and zinc coating.
Structure and feature: The inner locator rotates 90° and the cam rotates 180°to open on either side.

MS815D

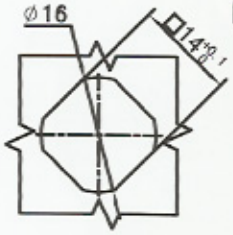

开孔尺寸
Panel Drlling Dimensions

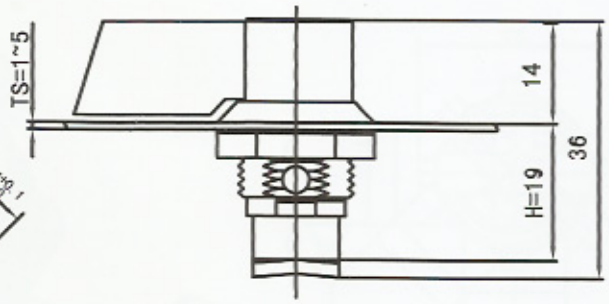

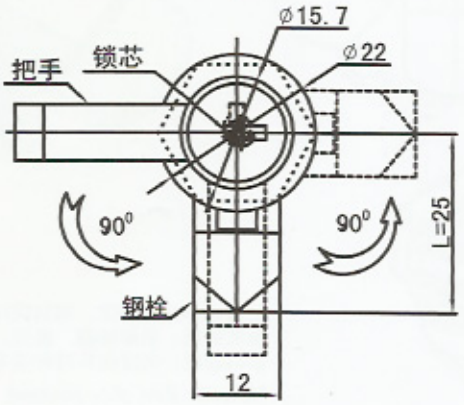



材质及表面处理:锌合金锁体、把手，钢制钢栓。
喷塑（黑色）、镀锌。

Material and finishing: Zinc alloy housing and handle, steel cam. Black powder and zinc coated.

MS815E

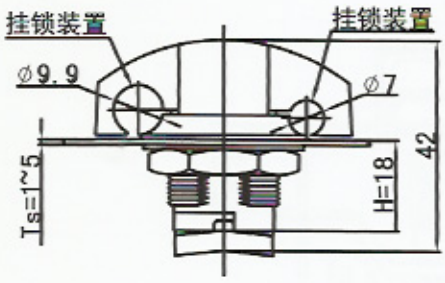

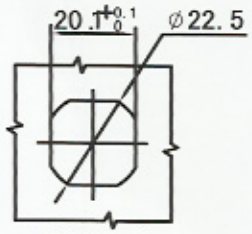

开孔尺寸
Panel Drlling Dimensions

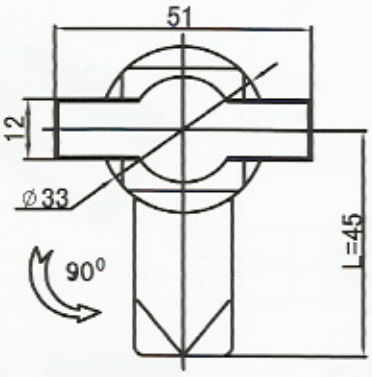



IP 54

材质及表面处理:锌合金锁体、把手，钢制钢栓。
喷塑（黑色）、镀锌。
Material and finishing: Zinc alloy housing and handle, steel cam. Black powder and zinc coated.

MS816



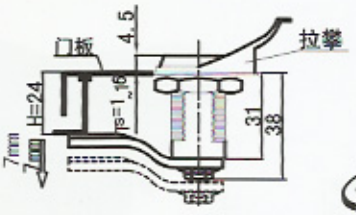

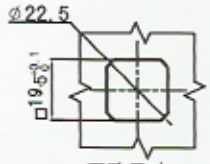

开孔尺寸
Panel Drlling Dimensions



开启动作示意图

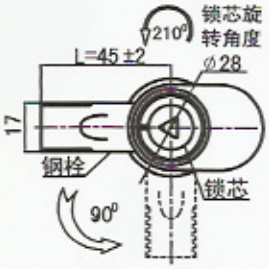



黑色PA拉攀



黑色PA防水盖

注:钥匙及附件选用可参考MS705样本
说明
单点钢栓(选用)S1B系列钢栓(反向)



产品型号（MODEL）	特征描述(SPECIFICATION)
MS816-1	三角锁芯　带塑料拉攀
MS816-1A	三角锁芯　带防水罩
MS816-2	S型锁芯　带塑料拉攀
MS816-2A	S型锁芯　带防水罩
MS816-3	方锁芯　带塑料拉攀
MS816-3A	方锁芯　带防水罩

IP 54

材质：锌合金锁体、钢制钢栓。
表面处理：喷塑、镀铬、镀锌。
Material: Steel cam, Zinc Aolly Housing.
Finishing: Powder coated , Zinc & Chrome Coating.

MS816-1A

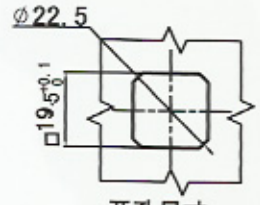

开孔尺寸
Panel Drilling Dimensions

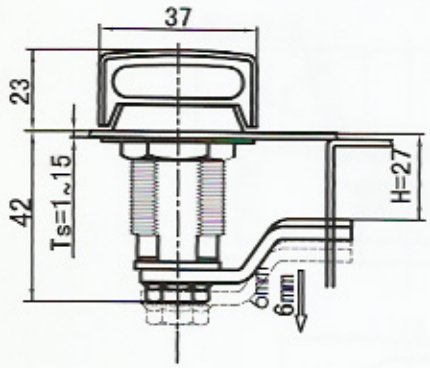

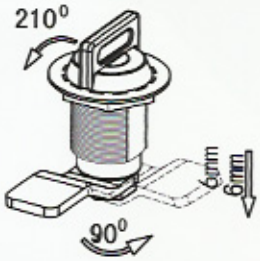

开启动作示意图

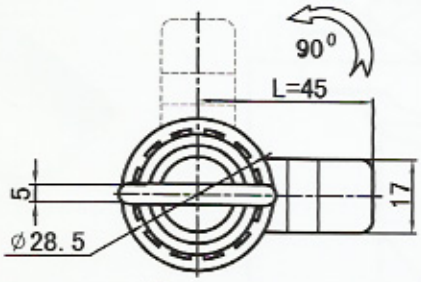

210° 锁芯旋转角度



IP 54

材质及表面处理:锌合金锁体、把手，钢制钢栓。
喷塑（黑色）、镀锌。
Material and finishing: Zinc alloy housing and handle, steel cam. Black powder and zinc coated.

MS816-3S

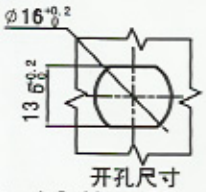

开孔尺寸
Panel Drilling Dimensions

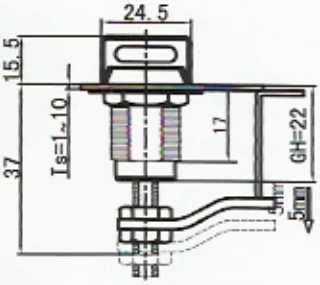



开启动作示意图

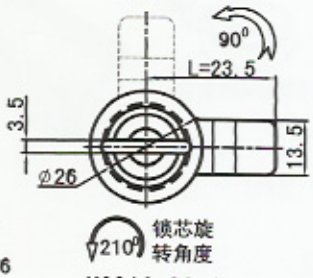

210° 锁芯旋转角度

MS816-3S-1

方型6*6

MS816-3S-2



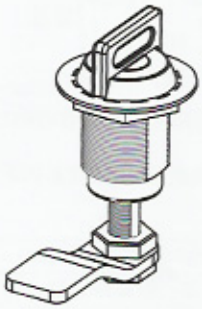

产品型号（MODEL）	特征描述(SPECIFICATION)
MS816-3S-1	把手型(Handle)
MS816-3S-2	方型6*6（Square 6mm）

材质及表面处理:锌合金锁体、把手，钢制钢栓。
喷塑（黑色）、镀锌。
Material and finishing: Zinc alloy housing and handle, steel cam. Black powder and zinc coated.

MS816A



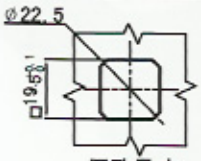

开孔尺寸
Panel Drilling Dimensions

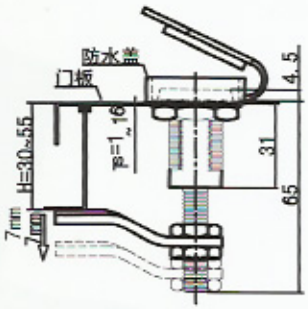



黑色PA拉攀



开启动作示意图

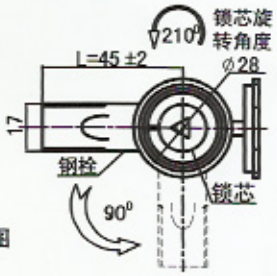



黑色PA防水盖

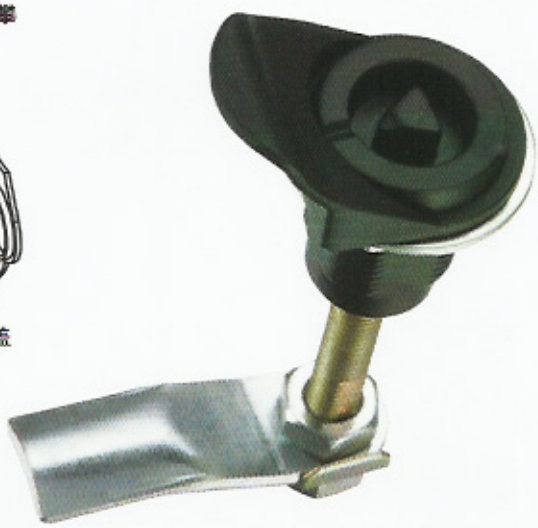

注：钥匙及附件选用可参考MS705样本说明

产品型号（MODEL）	特征描述(SPECIFICATION)
MS816A	三角锁芯　带塑料拉攀
MS816A-1	三角锁芯　带防水罩
MS816A-2	S型锁芯　带塑料拉攀
MS816A-3	S型锁芯　带防水罩
MS816A-5	方锁芯　带塑料拉攀
MS816A-6	方锁芯　带防水罩

注：材质、表面处理选用请参考MS816
Remark：Matrial & Finishing Refer MS816.

MS816B



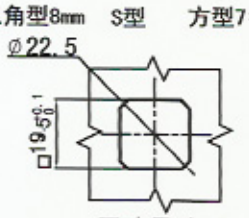

开孔尺寸
Panel Drilling Dimensions

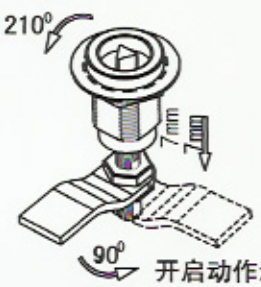

开启动作示意图

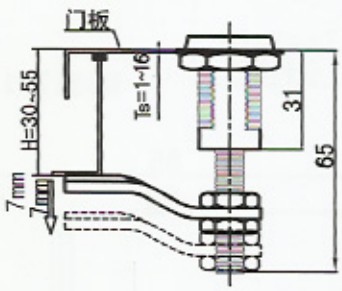

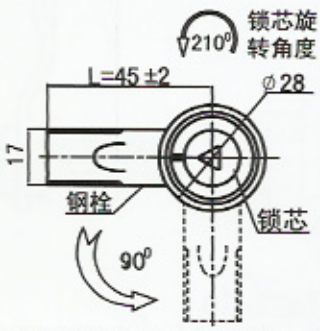

注:钥匙及附件选用可参考MS705样本说明

产品型号（MODEL）	特征描述(SPECIFICATION)
MS816B	三角锁芯　带塑料拉攀
MS816B-1	三角锁芯　带防水罩
MS816B-2	S型锁芯　带塑料拉攀



材质：不锈钢。
Material:Stainless steel.

MS817



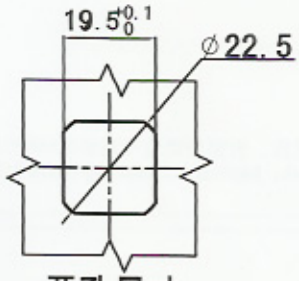

开孔尺寸
Panel Drlling
Dimensions

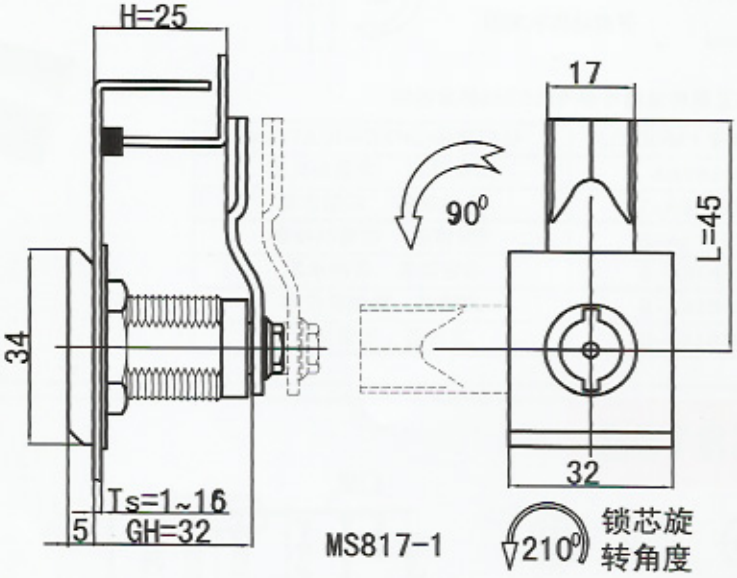

MS817-1

锁芯旋
转角度

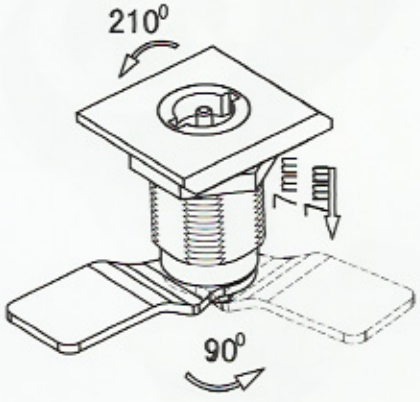

开启动作示意图

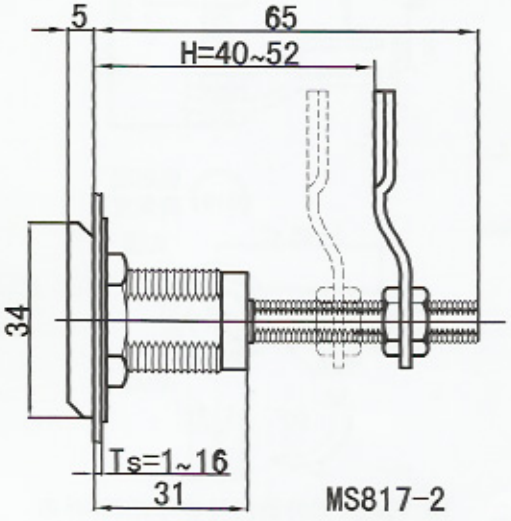

MS817-2

IP 54

材质：锌合金锁体、钢制钢栓。
表面处理：喷塑、镀锌。
Material:Zinc Alloy Housing,Steel Latcht.
Finishing:Zinc & PVC Coating.

MS818

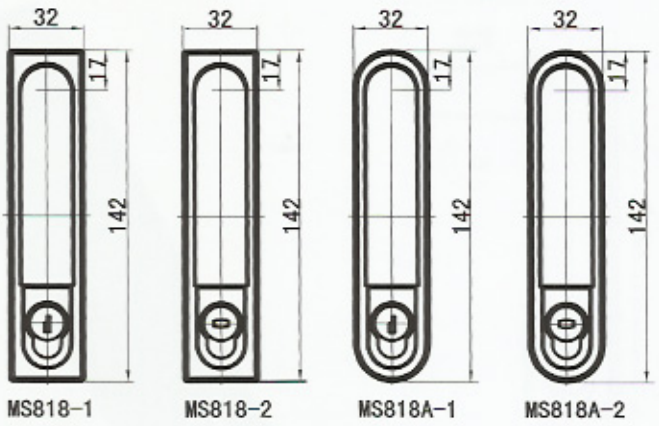

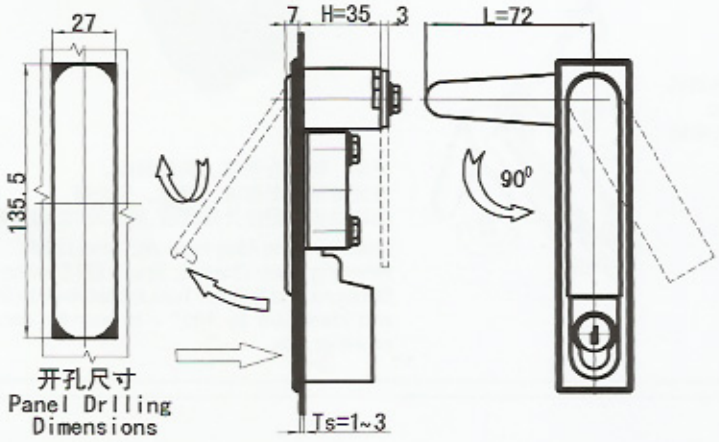





定位件

注:改变定位件及钢栓的放置角度，实现左右开门;



常规钥片锁芯

MS818-1
MS818A-1



带防尘盖钥片锁芯
(特规)
MS818-2
MS818A-2

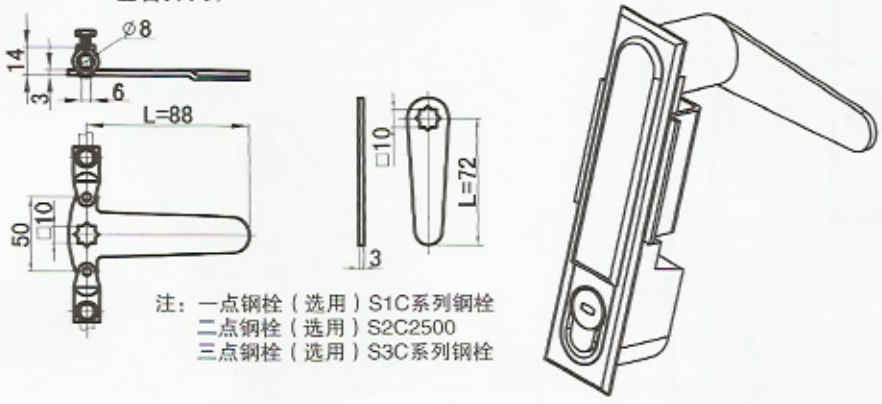

注：一点钢栓（选用）S1C系列钢栓
二点钢栓（选用）S2C2500
三点钢栓（选用）S3C系列钢栓

产品型号（MODEL）	特征描述(SPECIFICATION)
MS818-1	常规钥片锁芯/Standard key cylinder
MS818-2	特规钥片锁芯/Special key cylinder
MS818-3	无锁芯/without key cylinder
MS818A-1	常规钥片锁芯/Standard key cylinder
MS818A-2	特规钥片锁芯/Special key cylinder
MS818A-3	无锁芯/without key cylinder

材质：锌合金锁体、钢制钢栓。
表面处理：电熔漆、镀锌、亚光铬。
结构功能：定位片转90度,钢栓转180度可左右开门。

Material: Zinc Alloy Housing, Steel cam.
Finishing: Grey Chrome, Zinc & ED Coating.
Structure and feature: Turning the locator by 90°, and steel cam by 180°to open the door on either side.

MS819

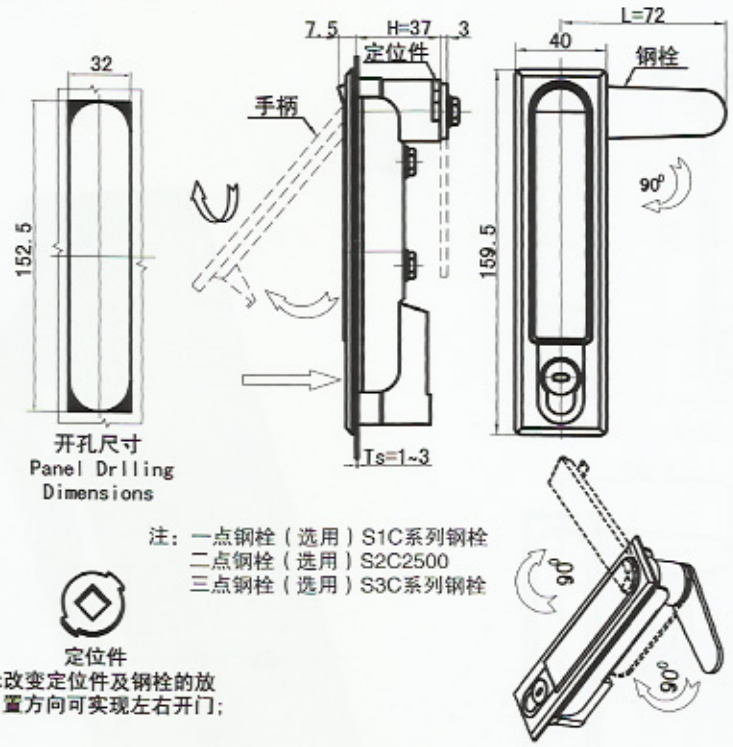

注：一点钢栓（选用）S1C系列钢栓
二点钢栓（选用）S2C2500
三点钢栓（选用）S3C系列钢栓

定位件
注:改变定位件及钢栓的放置方向可实现左右开门;



材质：锌合金锁体、钢制钢栓。
表面处理：电熔漆、镀锌、亚光铬。
结构功能：定位片转90度,钢栓转180度可左右开门。

Material: Zinc Alloy Housing, Steel Latch.
Finishing: Grey Chrome, Zinc & ED Coating.
Structure and feature: Turn the retainer by 90°, and steel cam by 180°, to open the door on either side.

MS821

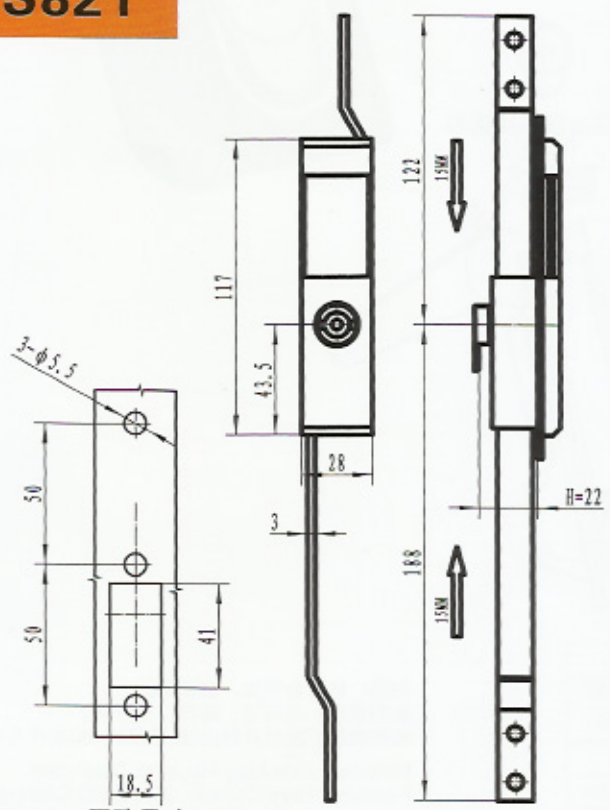

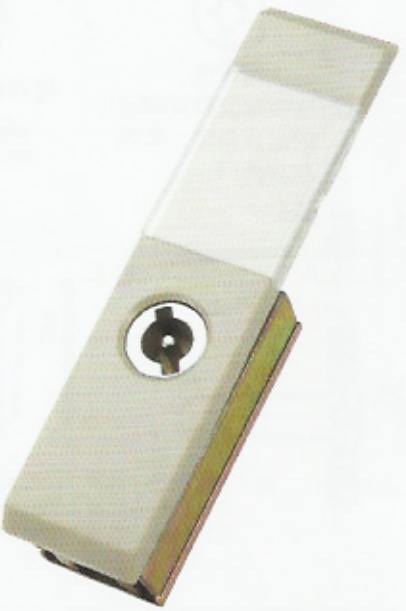

材质：锌合金锁体、ABS面板、钢制钢栓、传动条、橡胶密封条。
表面处理：亚光铬、镀锌。

Material: Zinc Alloy Housing, Steel Latch, ABS Panel, Rubber Seal.
Finishing: Grey Chrome, Zinc Coating.

MS820

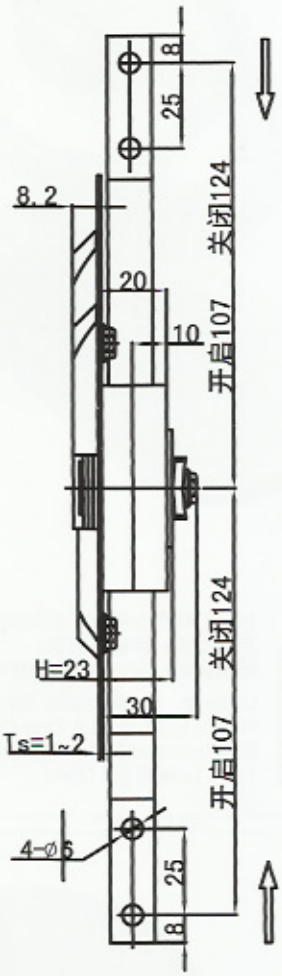

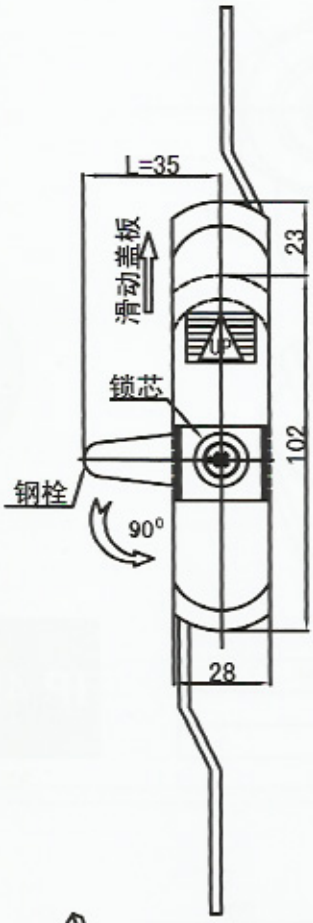



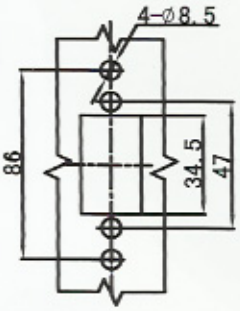

开孔尺寸
Panel Drilling Dimensions



S型
MS820-1



三角型8mm
MS820-2



十字型
MS820-3

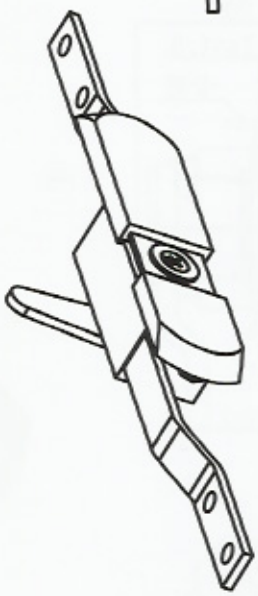

产品型号（MODEL）	特征描述(SPECIFICATION)
MS820-1	S型锁芯
MS820-2	三角型锁芯
MS820-3	十字型锁芯
MS820-4	单点型（无传动机构）

IP 40

材质：锌合金锁体、钢制钢栓、传动条。
表面处理：哑光铬、镀锌。
结构功能：定位片旋转180度可左右开门。

Material: Zinc alloy housing, steel cam, drive stripe.
Finishing: Matt chrome, and zinc coating.
Structure and feature: The locator rotates 180°to open on either side.

MS822

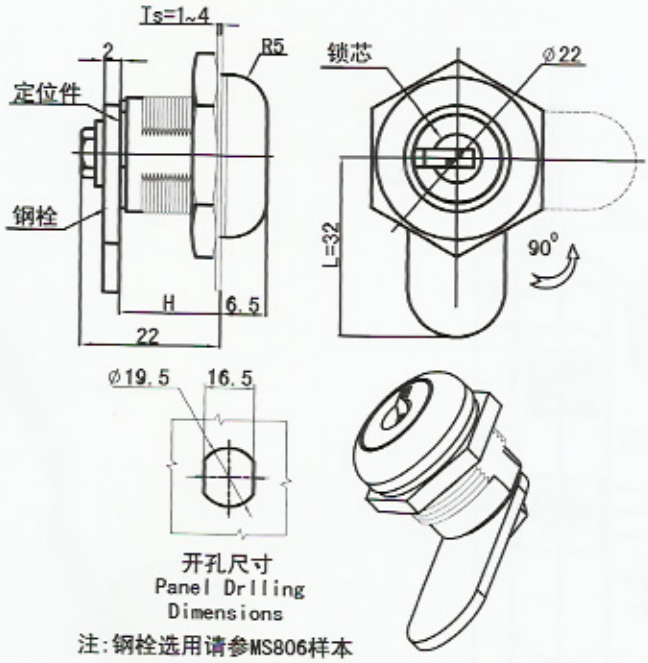

开孔尺寸
Panel Drlling
Dimensions

注:钢栓选用请参MS806样本

产品型号 (MODEL)	锁体高度 GH
MS822-1	16
MS822-2	20



IP 40

材质：锌合金锁体、钢制钢栓。
表面处理：镀铬、镀锌。
结构功能：锁体旋转180度可左右开门。

Material: Steel Latcht Zinc Alloy Housing.
Finishing:Chrome & Zinc Coating.
Structure and feature:Housing Positing Turn 180° Left&Right Open.

MS822A

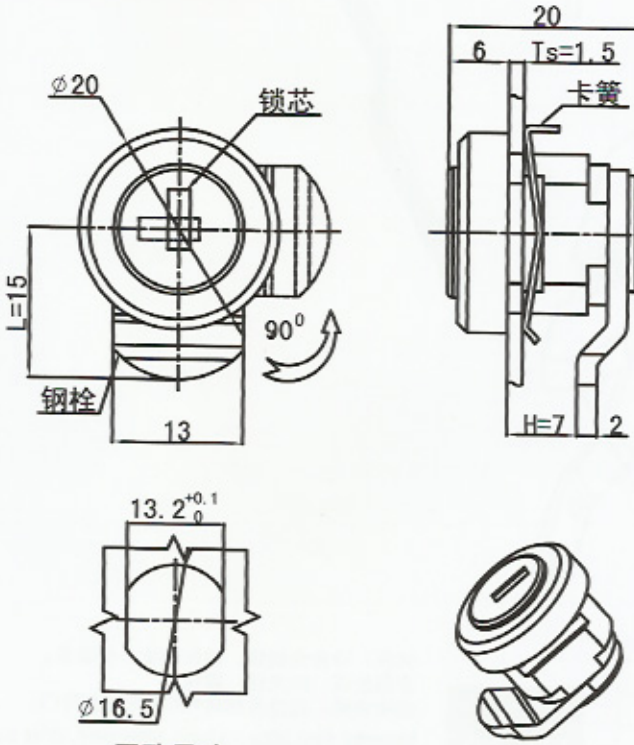

开孔尺寸
Panel Drlling Dimensions



材质：锌合金锁体、钢制钢栓。
表面处理：喷砂黑、镀锌、镀铬。
结构功能：锁体旋转180度可左右开门。

Material: Steel Latch, Zinc Alloy Housing.
Finishing: Black blast, Zinc Coating, Chrome coated.
Structure and feature: Housing Positing Turn 180° Left&Right Open.

MS823

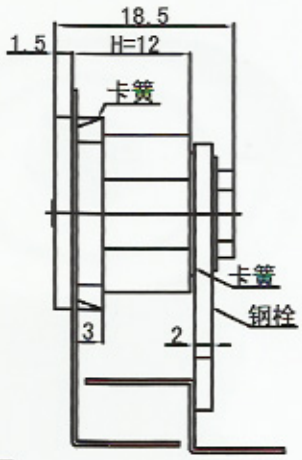

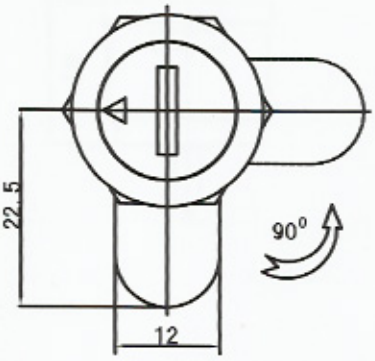



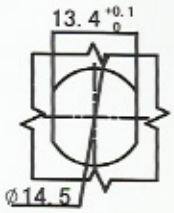

开孔尺寸
Panel Drlling Dimensions



材质：锌合金锁体、钢制钢栓。
表面处理：镀铬、镀锌。
结构功能：锁体旋转180度可左右开门。

Material: Steel Latcht Zinc Alloy Housing.
Finishing:Chrome & Zinc Coating.
Structure and feature:Housing Positing Turn 180° Left&Right Open.

MS823-1

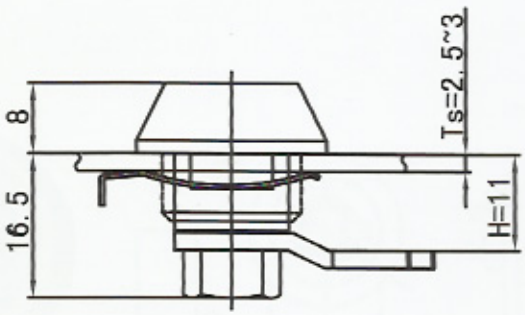

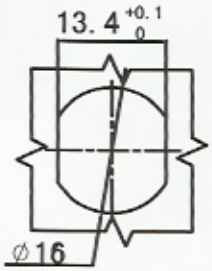

开孔尺寸
Panel Drlling Dimensions

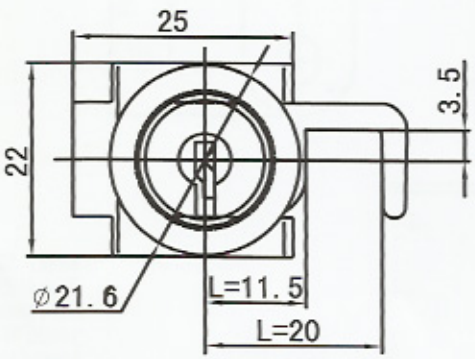



材质及表面处理:锌合金锁体，钢制钢栓。
表面镀亮铬。

Material and finishing: Zinc alloy housing, steel cam.Bright chrome coated.

MS823A

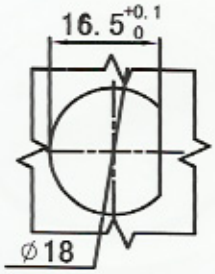

开孔尺寸
Panel Drilling Dimensions

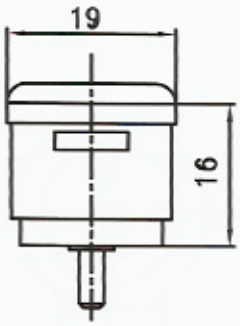



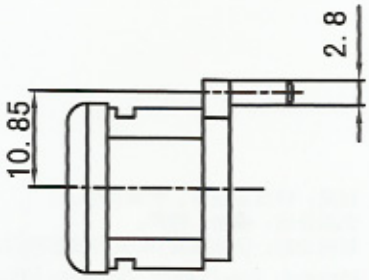



材质：锌合金锁体、钢制钢栓。
表面处理：镀铬、镀锌。
Material: Zinc alloy housing, steel cam.
Finishing:Zinc & Chrome Coating.

MS824

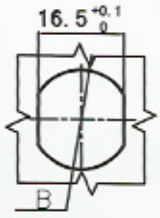

开孔尺寸
Panel Drilling Dimensions

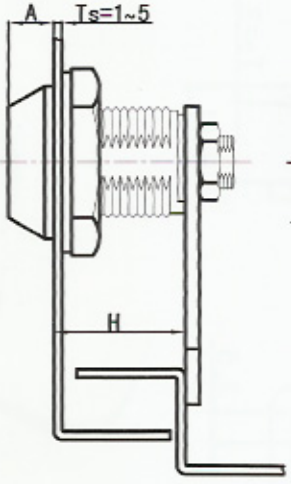

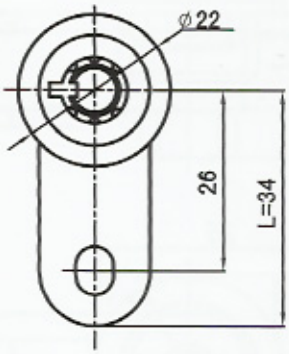

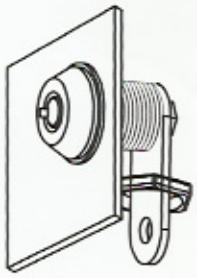

螺帽拆装安装示意图



产品型号（MODEL）	规格 B	止口高度 H	板前高度 A
MS824-1	ϕ19	18 22 25 28	6
MS824-2	ϕ18	16 20 27 32	4

材质：锌合金锁体、钢制钢栓。
表面处理：镀铬、镀锌。
结构功能：定位片翻转90度，钢栓转180度可左右开门。
Material: Zinc Alloy Housing, Steel cam.
Finishing: Grey Chrome, Zinc & ED Coating.
Structure and feature: Turning the locator by 90°,and steel cam by 180°to open the door on either side.

MS825

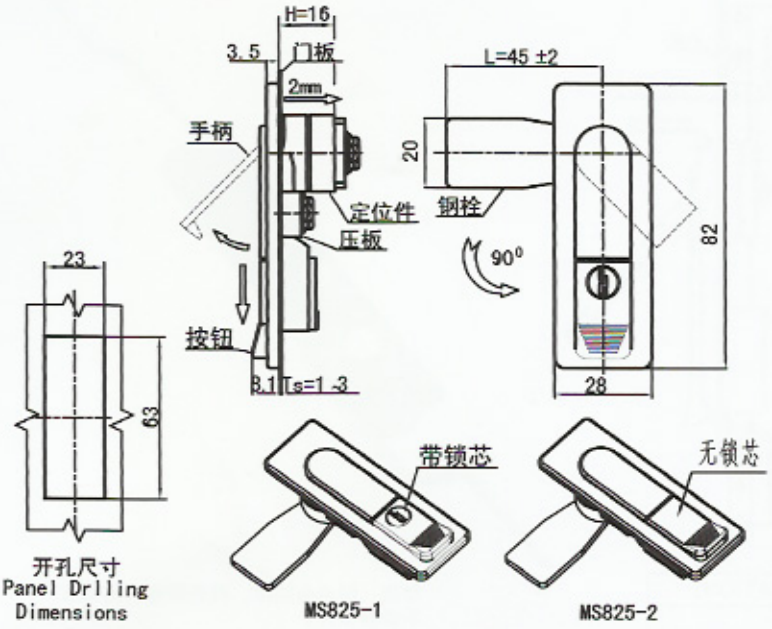



材质：材质：锌合金锁体、镀锌钢质钢拴。
表面处理：亚光铬、无光黑。
结构功能：平面锁，单点钢栓，调换钢栓防线可实现左右开门，钢栓具有收缩功能，有无锁芯及带锁芯两种规格，钢栓旋转角度90度。
Material: Zinc alloy housing, zinc plated steel cam
Finishing: Grey Chrome plated, matt black powder coated.
Structure and feature: This plane lock usually use single-pointcam, and the cam has the function to shrink. open the door on either side by changing the position of cam. There are two models of this lock, with or without the key cylinder. The turning angle of the cam is 90°.

产品型号（MODEL）	特征描述(SPECIFICATION)
MS825-1	带锁芯/with key cylinder
MS825-2	无锁芯/without key cylinder

MS826

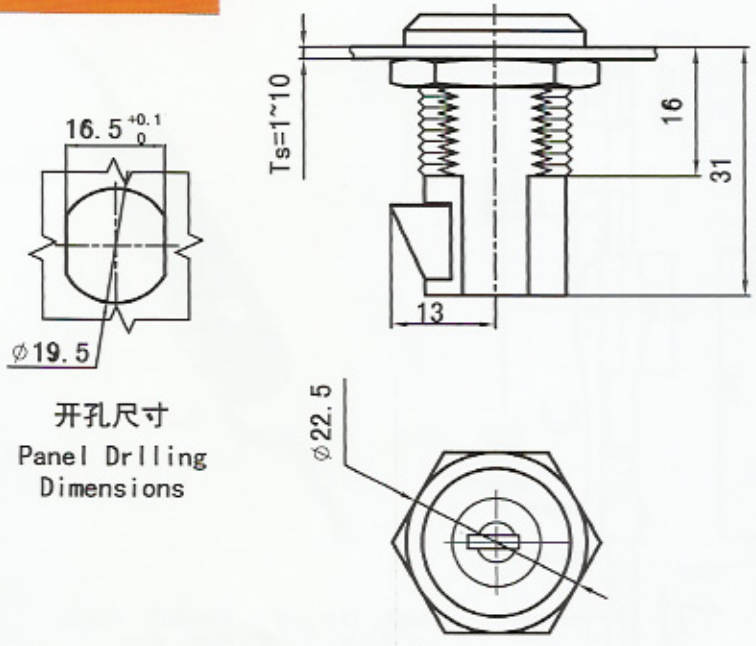





材质及表面处理：锌合金锁体，表面镀亮铬。
Material and Finishing:Zinc alloy lock,chrome plated surface.

MS827

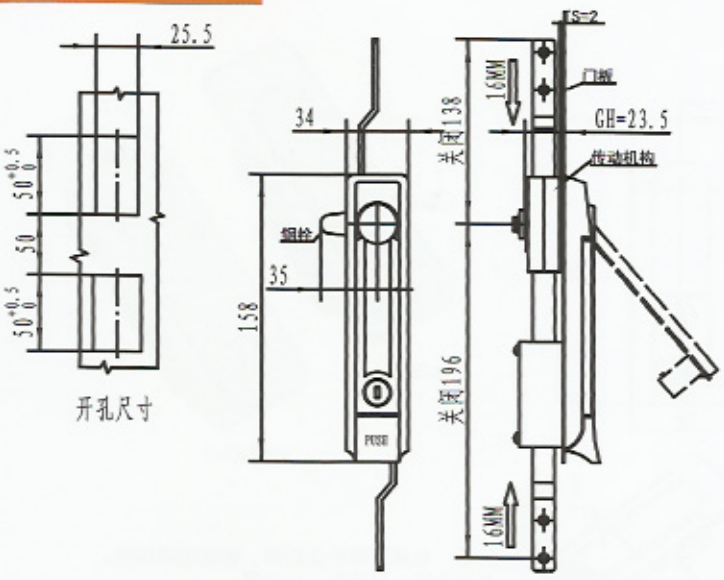



产品型号（MODEL）	特征描述(SPECIFICATION)
MS827-1	带挂锁三点
MS827-2	带挂锁二点
MS827-3	带挂锁单点
MS827A-1	不带挂锁三点
MS827A-2	不带挂锁二点
MS827A-3	不带挂锁单点

材质：锌合金锁体、钢质钢拴、传动条、不锈钢锁栓。
表面处理：喷塑、镀锌。
结构功能：订货写明左右开门。

Material: Zinc alloy housing, steel cam, steel drive stripe, and stainless steel latch.
Finishing:PVC & Zinc Coating.
Structure and feature: Please note LH or RH while ordering.

MS828

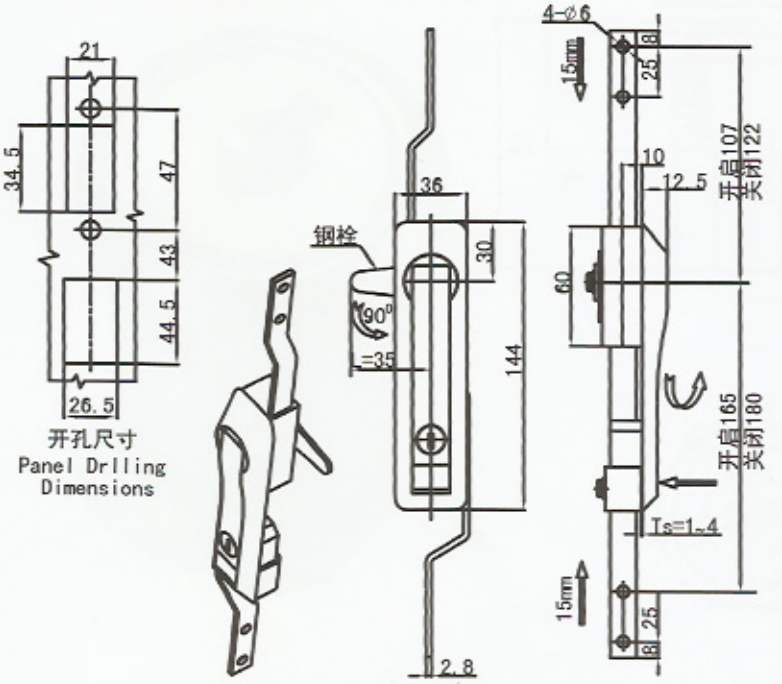



IP 54

材质：锌合金锁体、钢制钢栓、传动条。
表面处理：亚光铬、喷塑、镀锌。
结构功能：传动体与锁体可单独分离，翻转传动体安装，可实现左右开门。

Material: Zinc alloy housing, steel cam, and steel drive stripe.
Finishing: Matt chrome, zinc, or powder coated.
Structure and feature: The drive stripe and the lock could be separated into two parts. While installing, rotates the drive stripe in order to open on either side.

MS828A

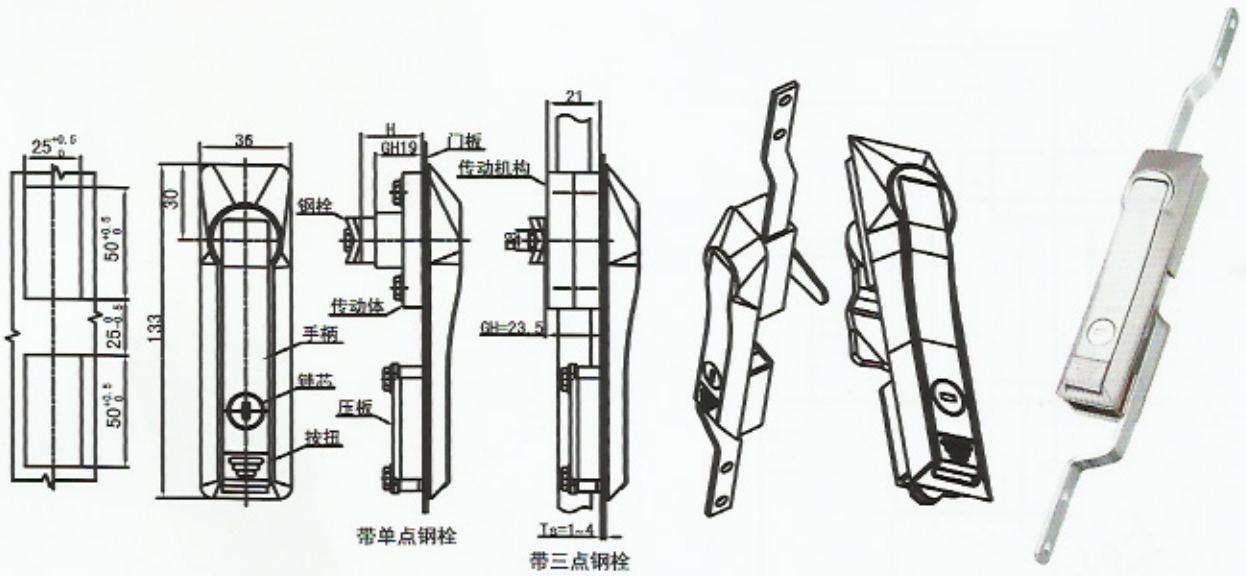

产品型号（MODEL）	特征描述(SPECIFICATION)
MS828A-1	带单点钢栓
MS828A-2	带二点钢栓
MS828A-3	带三点钢栓

材质：锌合金锁体、钢制钢栓、传动条。
表面处理：亚光铬、喷塑、镀锌。
结构功能：订货写明左右开门。

Material: Zinc alloy housing, steel cam, and steel drive stripe.
Finishing: PVC & Zinc Coating.
Structure and feature: Please note LH or RH while ordering.

MS828B

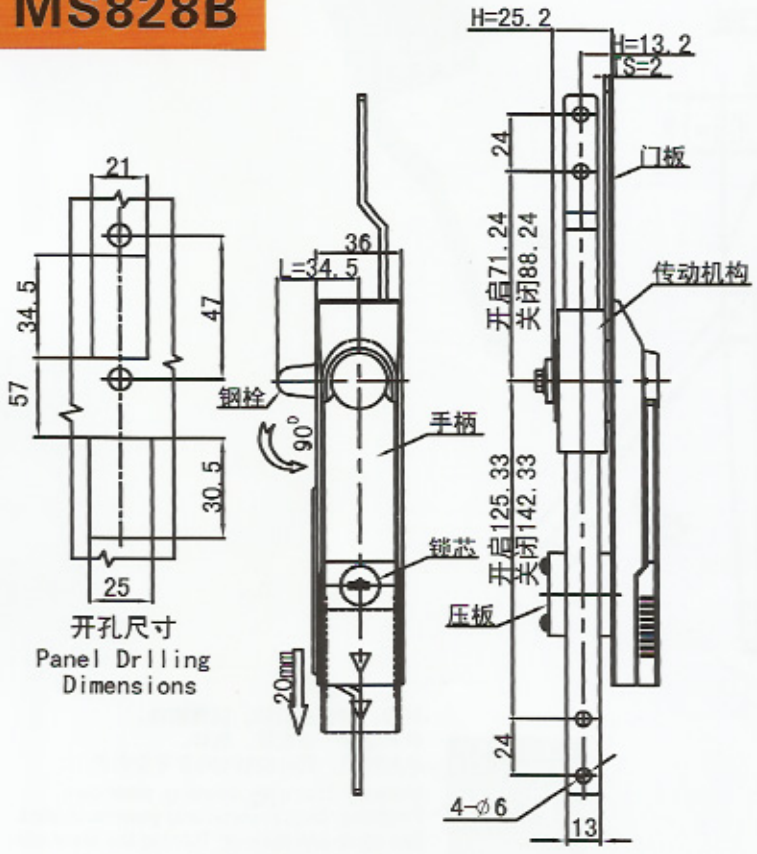



材质：锌合金锁体、钢制钢栓、传动条。
表面处理：亚光铬、喷塑、镀锌。
结构功能：订货写明左右开门。

Material: Zinc alloy housing, steel cam, and steel drive stripe.
Finishing: PVC & Zinc Coating.
Structure and feature: Please note LH or RH while ordering.

MS829

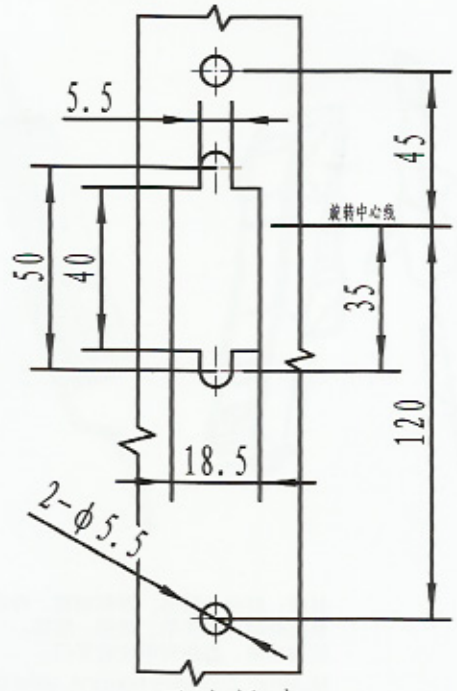

开孔尺寸



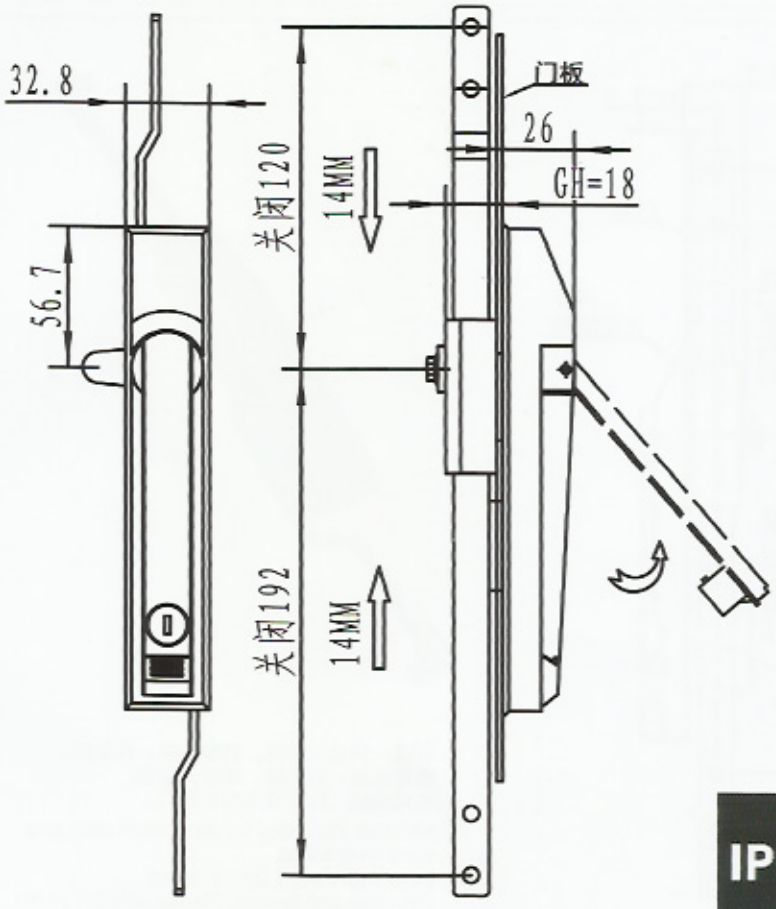

IP 40

材质：锌合金锁体、钢制钢栓。
表面处理：亚光铬、镀锌。
结构功能：钢栓旋转180度可左右开门。

Material: Zinc alloy housing, steel cam.
Finishing: Matt chrome and powder coated.
Structure and feature: Turning the steel cam by 180°to open the door on either side.

MS830

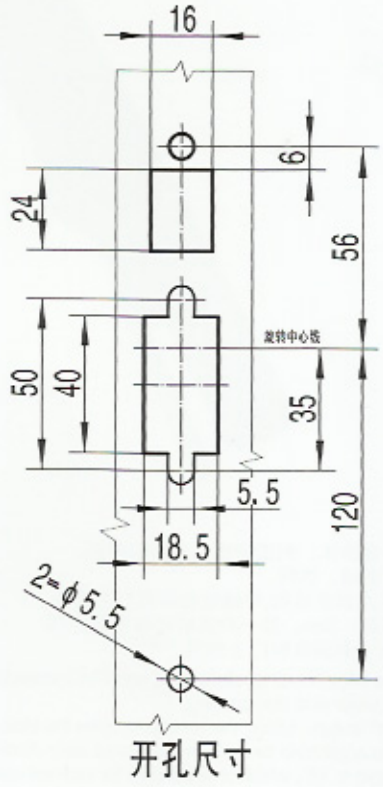

开孔尺寸

注：钢栓选用请参考S1A1403系列

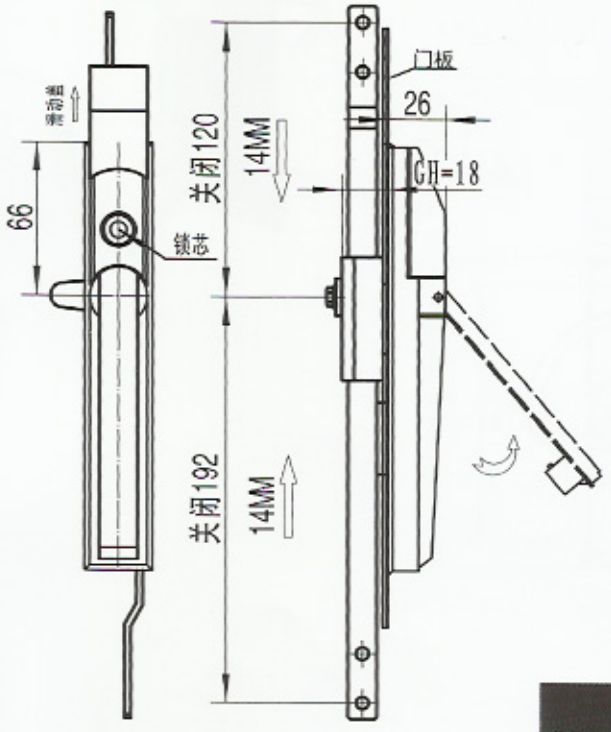

注：型号MS830A为无传动条



IP 40

材质：锌合金锁体、钢制钢栓。
表面处理：亚光铬、喷塑、镀锌。
结构功能：传动体与锁体可单独分离,翻转传动体安装,可实现左右开门。

Material: Zinc alloy housing, steel cam.
Finishing: Zinc, matt chrome and powder coated.
Structure and Feature: The drive stripe and the lock could be separated into two parts.While installing, rotates the drive stripe in order to open on either side.

MS831

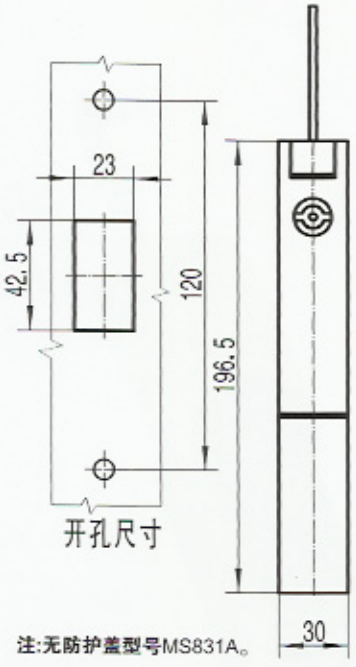

注:无防护盖型号MS831A。

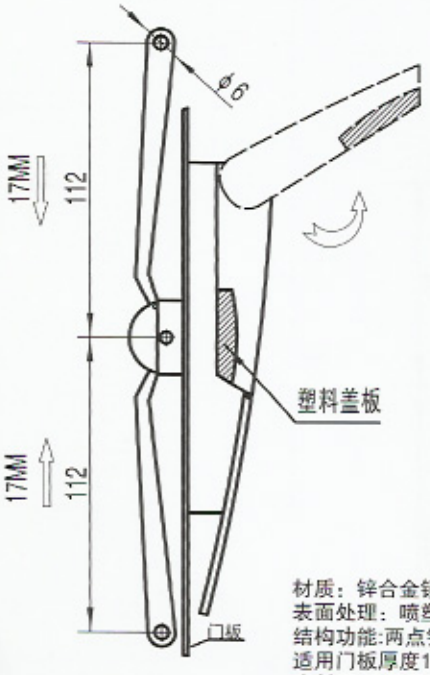



材质：锌合金锁体、钢质钢栓、塑料防护盖。
表面处理：喷塑、镀锌。
结构功能:两点锁住结构,手柄拉起即可打开柜锁,
适用门板厚度1~3mm。另一种规格安装平面为18
度斜面,适用于有斜度柜门上使用。

Material: Zinc alloy housing, steel cam, and PVC protecting cover.
Finishing: Powder and zinc coating.
Structure and feature: Lifting the handle to open the lock, this two-point rod system is applicable for 1~3mm thickness door. Another model's mounting angle is 18°, which is applicable for inclined cabinet door.

MS832



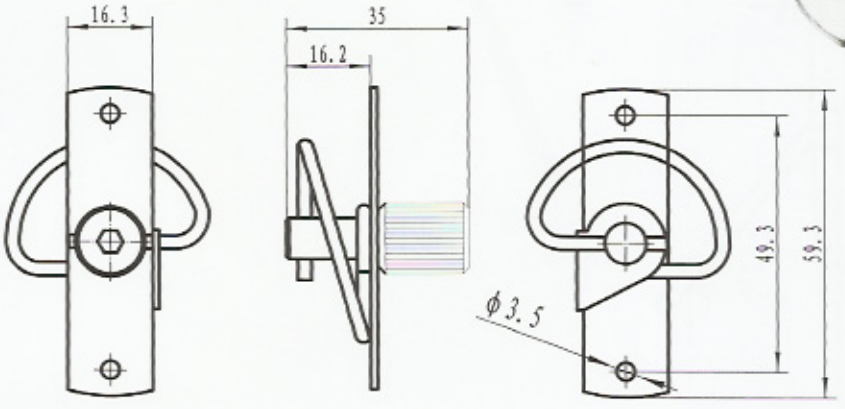



材质及表面处理：304不锈钢或碳钢镀锌
Material and finishing: 304 stainless steel or zinc coated carbon steel.

MS839

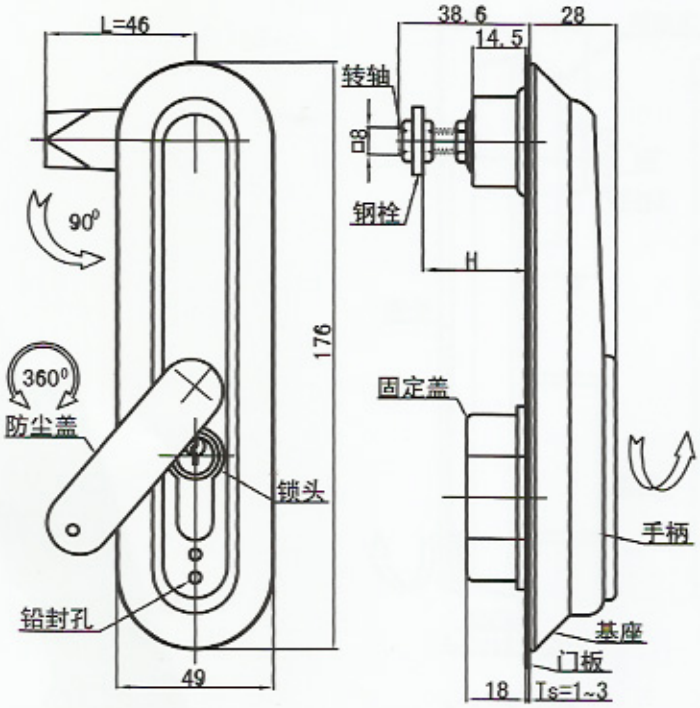



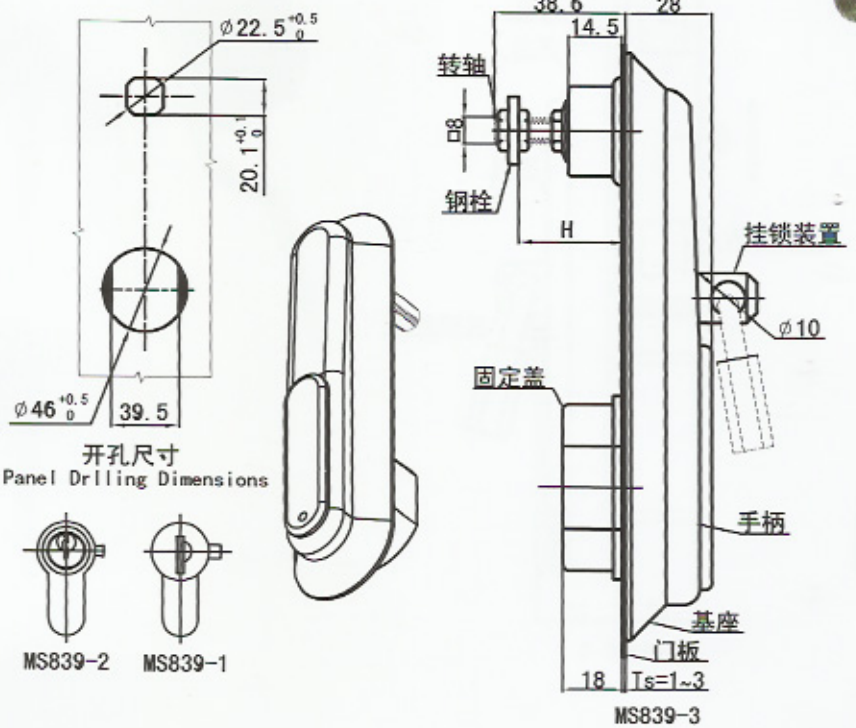

产品型号（MODEL）	特征描述(SPECIFICATION)
MS839-1	带防尘盖钥片锁头
MS839-2	弹子锁头
MS839-3	带挂锁装置

材质及表面处理：锌合金手柄，镀铬锌合金锁头，镀锌钢转轴，PA钢栓。

Material and finishing: Zinc alloy handle, bright chrome zinc plated cylinder,zinc coated steel shaft, PA cam.

MS840

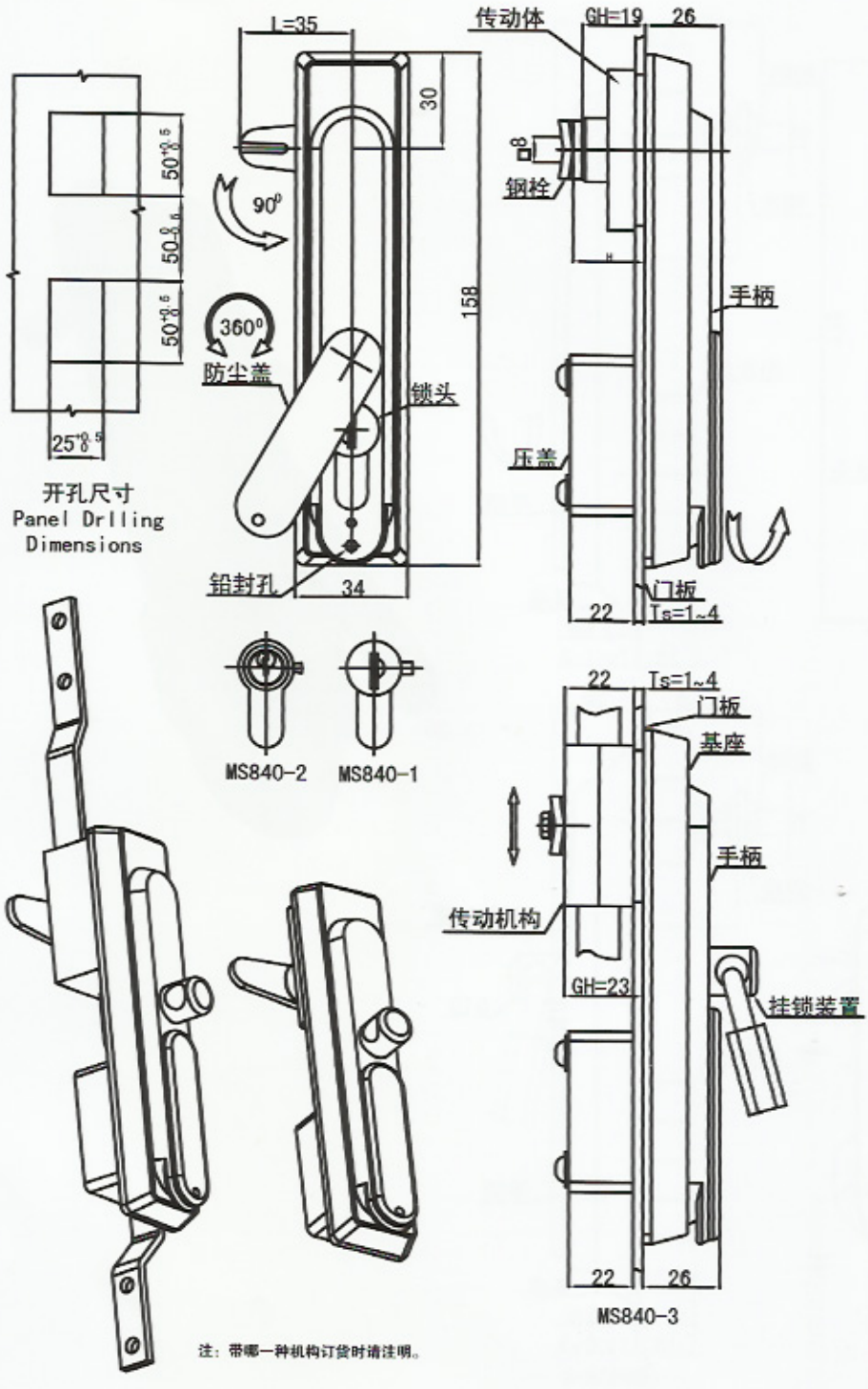



注：带哪一种机构订货时请注明。

产品型号（MODEL）	特征描述(SPECIFICATION)
MS840-1	带防尘盖钥片锁头
MS840-2	弹子锁头
MS840-3	带挂锁装置

IP 54

材质及表面处理：黑色锌合金基座、手柄；镀锌钢栓、传动条；镀铬锌合金锁头。
Material and finishing: Black zinc alloy base, handle; zinc coated steel cam, drive stripe; chrome and zinc plated cylinder body.

MS841

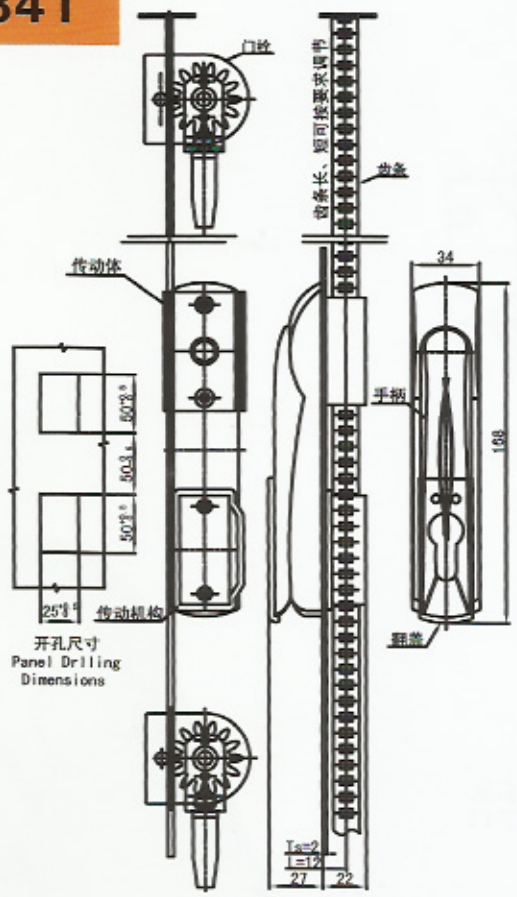



材质及表面处理：锌合金锁体，钢质锁舌传动条，塑料转舌轮。表面喷塑。
Material and finishing: Zinc alloy housing, steel cam and drive stripe, plastic turning tongue. Powder coated.

MS842

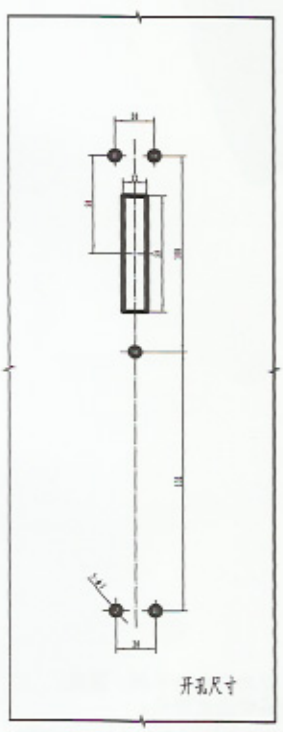

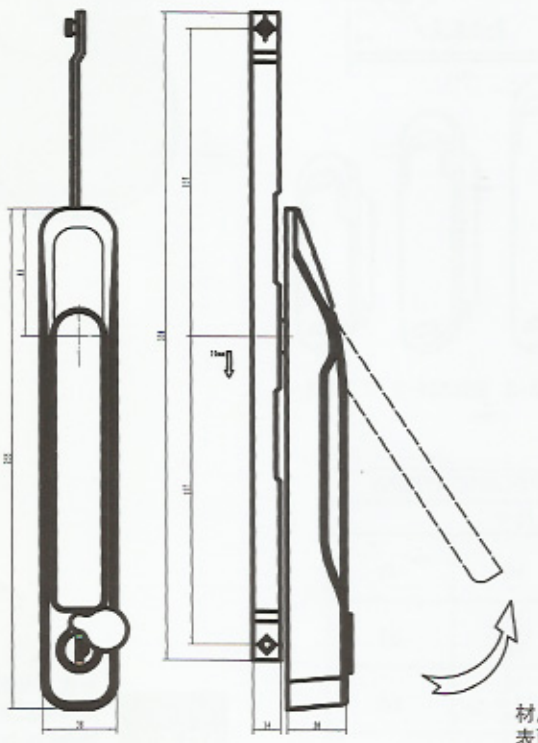



材质及表面处理：锌合金锁体,钢制传动条。表面黑色喷塑。
Material and finishing: Zinc alloy housing, steel drive stripe. Black powder coated.

MS843

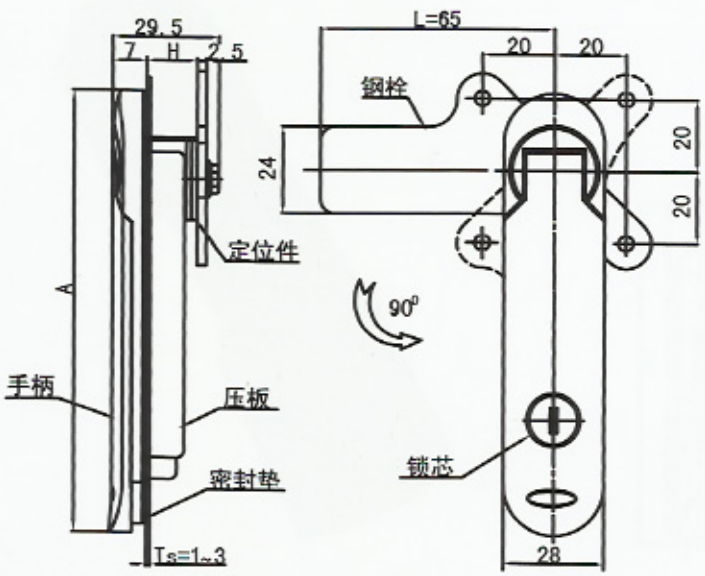

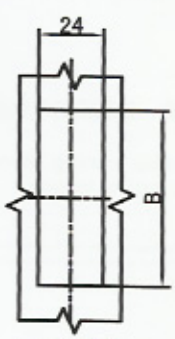

开孔尺寸
Panel Drilling Dimensions



注:改变定位件与钢栓安装位置可调节止口高度H,改变定位件放置方向可实现左右开门.

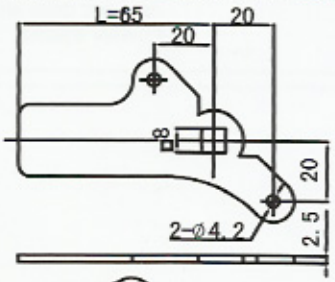

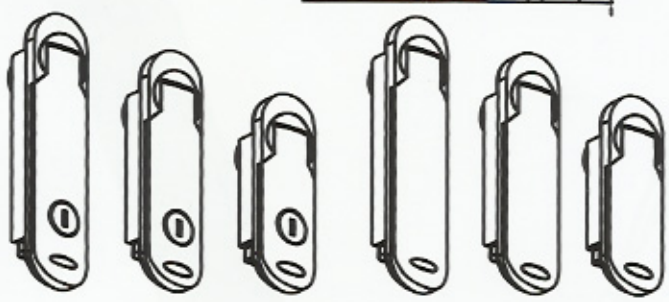

MS843-3 MS843-2 MS843-1 MS843A-3 MS843A-2 MS843A-1



产品型号 (MODEL)		特征描述(SPECIFICATION)		
		尺寸		
带锁芯 (With key cylinder)	无锁芯 (Without key cylinder)	A	H	B
MS843-1	MS843A-1	89	13 14.5 16	63
MS843-2	MS843A-2	107	13 14.5 16	80
MS843-3	MS843A-3	123	13 14.5 16	96

IP 54

材质及表面处理:亚光锌合金手柄、基座,镀锌钢质钢栓;镀铬锌合金锁头。

Material and finishing: Matt zinc alloy handle, base; zinc plated steel cam, and chrome coated zinc alloy cylinder body.

MS845



螺帽拆装安装示意图

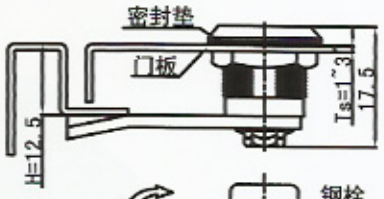

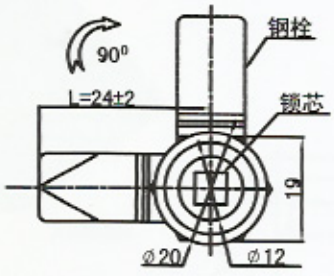

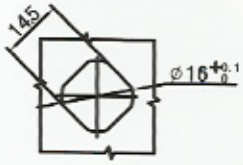

开孔尺寸
Panel Drilling Dimensions



三角型7mm
MS845-1



□6x6
MS845-2

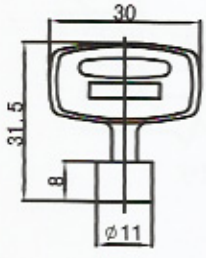

钥匙



产品型号（MODEL)	特征描述(SPECIFICATION)
MS845-1	方型锁芯口6*6
MS845-2	三角型7mm锁芯

IP 54

材质及表面处理:锌合金基座、锁芯,钥匙;镀锌钢栓。

Material and finishing: Zinc alloy base, key cylinder, and key; chrome coated steel cam.

MS845A

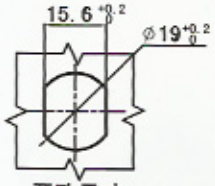

开孔尺寸
Panel Drilling Dimensions

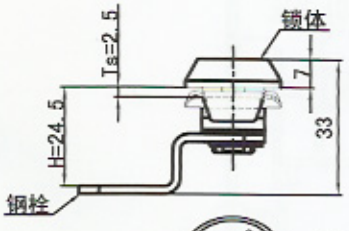

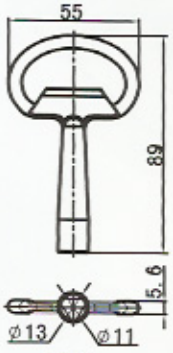

钥匙

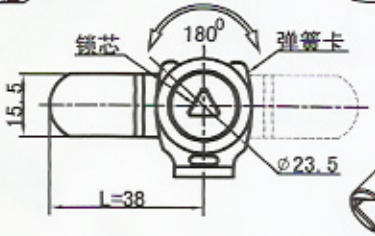

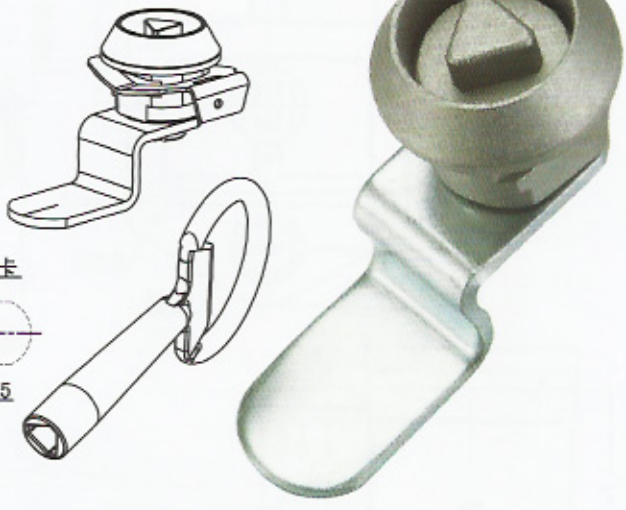

材质及表面处理：黑色喷塑锌合金基座、锁芯、钥匙；镀锌钢拴。

Material and finishing: Black powder coated zinc alloy base, key cylinder, and key; chrome coated steel cam.

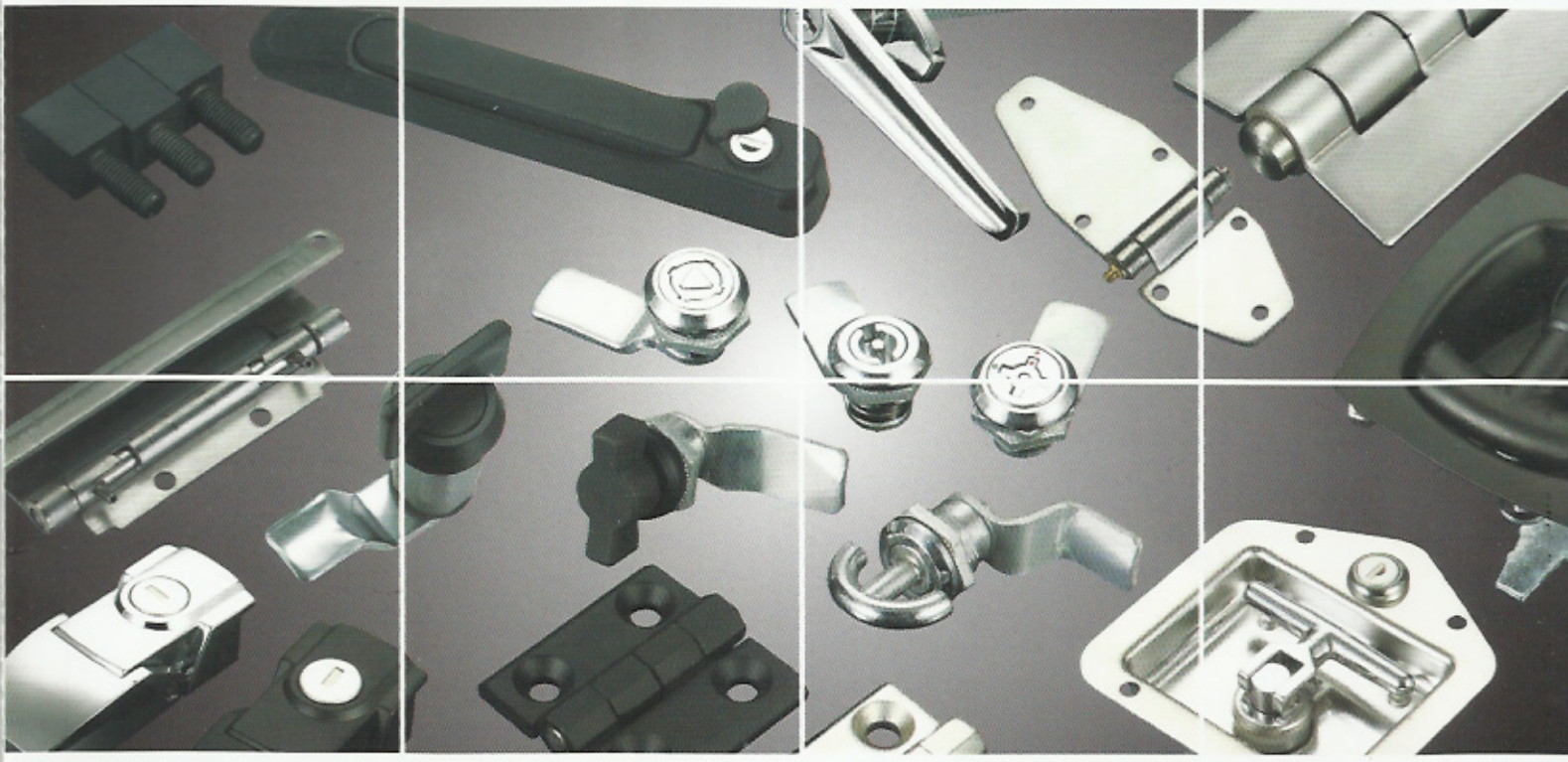



平面拉式柜锁系列 Pulling Plane Lock



MS856A~B
P097



MS858
P097



MS858A
P098



MS858B
P098



MS858-3
P99



MS858-4
P99



MS858-5
P100



MS858D
P100



MS858C
P101



MS866-3
P102



MS866-4
P102

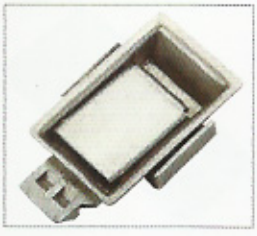

MS866-5
P103



MS888-1
(窄和宽)
P105

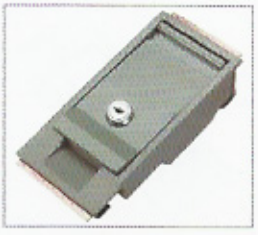

FMS888A
P106

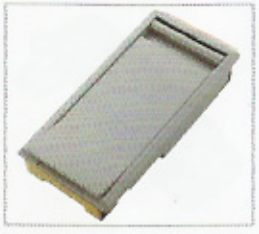

FMC888-2
P106



FMS889
P107

平面锁系列 Plane Lock



MS703
P036



MS707
P047



MS708
P047



MS708A
P048



MS708B
P048



MS708C
P049



MS712
P051



MS713
P051



MS717
P053



MS717A
P054



MS718
P054



MS720
P055



MS726
P057



MS726A
P058



MS726B
P059



MS727
P058



MS728
P060



MS728A
P060



MS729
P061



MS730
P061



MS801-1(GMS-1)
P062



MS810
P070



MS818
P080



MS819
P081



MS825
P086

平面锁系列 Plane Lock



MS827
P087



MS841
P094



MS842
P094



MS843
P095



MS1011
P109



MS1012
P110



MS4001
P112



MS4003
P113



DQO-1
P113



DQO-2
P114



DHC-01
P114



DHC-02
P115



DHC-03
P115



DHC-04
P116

连杆锁 Multipoint Lock



MS731
P062



MS820
P082



MS828
P087



MS827
P087



MS828A
P088

连杆锁 Multipoint Lock



MS828B
P088



MS829
P089



MS830
P090



MS831
P091



MS839
P092



MS841
P094



MS842
P094



MS875-1~2
P104



MS75A-1~2
P104



MSWT
P118

其他门锁系列 Others



MS210
P029



MS725
P057



MS832
P091



挂锁
P108

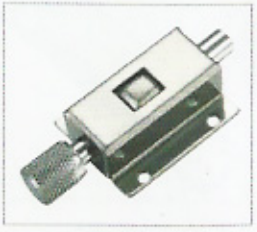

MS1019
P110



MS1032
P111



DHC-05
P116



GS-1
P117



FCMS
P118



挂钩锁
P119



MKS
P119

转舌锁系列 Cam Lock



MS704A MS704C
P036



MS704B MS704D
P037



MS705
P038



MS705A
P039



MS705-3A
P039



MS705-3B
P040



MS705-3C
P040



MS705-3E
P041



MS705-3U
P041



MS705B
P042



MS705C
P042



MS705D
P043



MS705D-1-3
P043



MS705E
P044



MS705F
P044



MS705J
P045



MS705H
P045



MS705–K02
P046



MS706
P046



MS710
P0501



MS710A
P050



MS714–2
P052



MS715
P053



MS721
P055



MS722
P056

转舌锁系列 Cam Lock



MS724
P056



MS801-2(GMS-2)
P063



MS802
P063



MS802-3
P064



MS802A
P064



MS803
P065



MS804
P065



MS805
P066



MS806
P066



MS808
P069



MS809
P069



MS811
P070



MS812A
P071



MS812–1/2/3
P071–072



MS813
P073



MS814
P073



MS815
P074



MS815A
P074



MS815B
P075



MS815D
P075



MS815E
P076



MS816
P076



MS816-1A
P077



MS816-3S
P077



MS816A
P078

转舌锁系列 Cam Lock



MS816B
P078



MS817
P079



MS822
P083



MS822A
P083



MS823
P084



MS823A
P085



MS823-1
P084



MS824
P085



MS826
P086



MS845
P096



MS845A
P096



MS1031
P111



GCS
P117

执手锁系列 Handle Lock



MS303
P029



MS301 MS302
P030



MS304
P031



MS305
P031



MS305-H
P032



MS306
P032



MS307
P033



MS308
P033



MS309
P034



MS309A
P034



MS309-1
P035



MS317
P035



MS807
P067



MS807-3
P068



MS807-4
P068



MS868
P103



MS891
P107



MS913
P107



MS913A
P109



MS1067
P112

门锁系列



MS210
P029



MS303
P029



MS301 MS302
P030



MS304
P031



MS305
P031



MS305–H
P032



MS306
P032



MS307
P033



MS308
P033



MS309
P034



MS309A
P034



MS309–1
P035



MS317
P035



MS703
P036



MS704A MS704C
P036



MS704B MS704D
P037



MS705
P038



MS705A
P039



MS705–3A
P039



MS705–3B
P040



MS705–3C
P040



MS705–3E
P041



MS705–3U
P041



MS705B
P042



MS705C
P042

门锁系列



MS705D
P043



MS705D-1-3
P044



MS705E
P044



MS705F
P044



MS705J
P045



MS705H
P045



MS705-K02
P046



MS706
P046



MS707
P047



MS708
P047



MS708A
P048



MS708B
P048



MS708C
P049



MS710
P050



MS710A
P050



MS712
P051



MS713
P052



MS714-2
P052



MS715
P053



MS717
P053



MS717A
P054



MS718
P054



MS720
P055



MS721
P055



MS722
P056

门锁系列



MS724
P056



MS725
P057



MS726
P057



MS726A
P058



MS726B
P059



MS727
P058



MS728
P060



MS728A
P060



MS729
P061

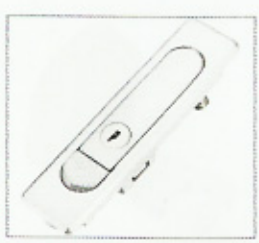

MS730
P061



MS731
P062

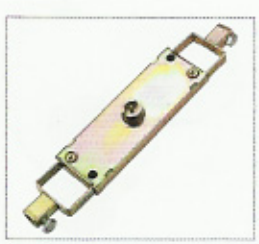

MS801-1(GMS-1)
P062



MS801-2(GMS-2)
P063



MS802
P063



MS802-3
P064



MS802A
P064



MS803
P065



MS804
P065



MS805
P066



MS806
P066



MS807
P067



MS807-3
P068



MS807-4
P068



MS808
P069



MS809
P069

门锁系列



MS810
P070



MS811
P070



MS812A
P071



MS812-1/2/3
P071-072



MS813
P073



MS814
P073



MS815
P074



MS815A
P074



MS815B
P075



MS815D
P075



MS815E
P076



MS816
P076



MS816-1A
P077



MS816-3S
P077



MS816A
P078



MS816B
P078



MS817
P079



MS818
P080



MS819
P081



MS820
P082



MS821
P081



MS822
P083



MS822A
P083



MS823
P084



MS823A
P085

门锁系列



MS823–1
P084



MS824
P085



MS825
P086



MS826
P086



MS827
P087



MS828
P087



MS828A
P088

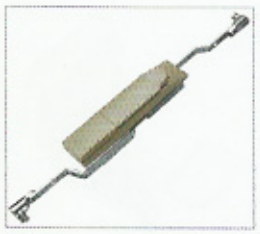

MS828B
P088



MS829
P089



MS830
P090



MS831
P091



MS832
P091



MS839
P092



MS840
P093



MS841
P094



MS842
P094



MS843
P095



MS845
P096



MS845A
P096



MS856A~B
P097



MS858
P097



MS858A
P098



MS858B
P098



MS858–3
P99



MS858–4
P99

门锁系列



MS858-5
P100



MS858D
P100



MS858C
P101



MS866-3
P102



MS866-4
P102



MS866-5
P103



MS868
P103



MS875-1-2
P104



MS875A-1-2
P104

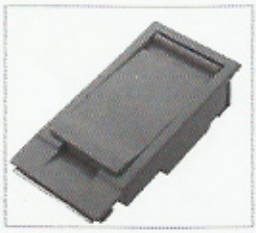

MS888-1
(窄和宽)
P105



MS888A
P106



MS888-2
P106



MS889
P107

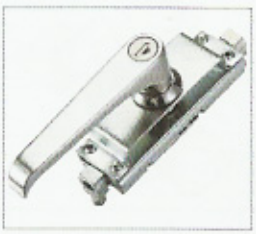

MS891
P107



挂锁
P108



MS913
P107



MS913A
P109



MS1011
P109



MS1012
P110

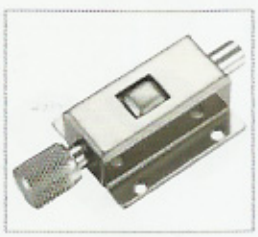

MS1019
P110



MS1031
P111



MS1032
P111



MS1067
P112



MS4001
P112



MS4003
P113

门锁系列



DQO-1
P113



DQO-2
P114



DHC-01
P114



DHC-02
P115



DHC-03
P115



DHC-04
P116



DHC-05
P116



GCS
P117



GS-1
P117



FCMS
P118



MSWT
P118



MKS
P119



挂钩锁
P119

搭扣系列



DKS
P120



DK603-1
P120



DK603-2
P121



DK603-3
P121



DK603-4
P122



DK603-5
P122



DK603-6
P123



DK603-7~8
P123-124



DK603-9
P124



DK603-10
P125

搭扣系列



DK604
P125



DK605
P126



DK606
P126



DK607
P127



DK607-1~4
P127~129



DK607-5
P129



DK607-6
P130



DK607-7
P130



DK609
P1321



DK610
P131

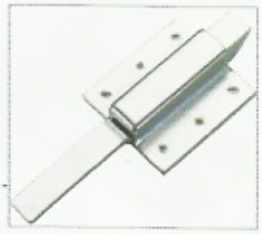

DK611
P132



DK615
P132



DK619
P133

铰链系列



JL042
P134



JL102
P134



JL102-1
P134



JL101-1~4
P135



JL102-2
P136



JL102-3
P136



JL102-4
P136



JL102-5
P137



JL102-6
P137



JL102-8
P137

铰链系列



JL102A
P138



JL103
P138



JL125
P138



JL201-1
P139



JL201-1A
P139



JL201-2
P139



JL201-3
P140



JL201-4
P140



JL201-5
P140



JL201-6
P141

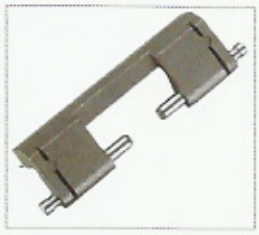

JL201-7
P141

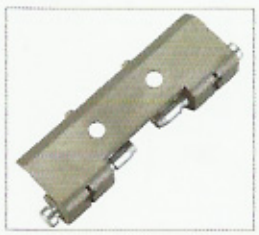

JL201-8
P141



JL201-9
P142



JL202-2
P142



JL203-1
P142



JL203-2
P143



JL203-3
P143



JL203-4
P143



JL204-1 JL204-2
P144



JL204A
P144



JL205
P144



JL205-1
P145



JL205-3
P145

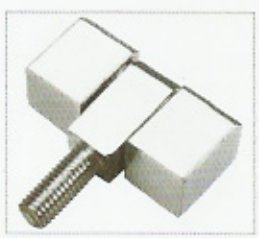

JL206-1
P145



JL206A
P146

铰链系列



JL206B
P146



JL206D
P146



JL207
P147



JL207A
P147

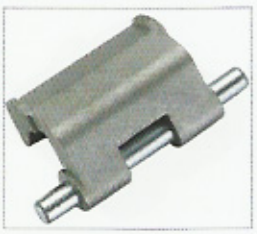

JL207B
P147



JL209
P148



JL210
P148



JL211
P148



JL211A
P149



JL212
P149



JL214
P149



JL214–1
P150



JL217
P150



JL217A
P150



JL218
P151



JL218A
P151



JL219
P151



JL219A
P152



JL219B
P152



JL222
P152



JL225
P153



JL225–4
P153



JL225A
P153



JL230
P154



JL230B
P154

铰链系列



JL233
P154



JL233-3A-2
P155



JL233A-1-B
P155



JL233A-2
P155



JL233A-3
P156



JL233B-1
P156



JL233B-2
P156



JL233B-3
P157



JL233C-1
P157



JL233C-2
P157



JL233C-3
P158



JL233D-1
P158



JL233D-2
P158



JL233D-3
P159



JL233E
P159



JL233F
P159



JL233G
P160



JL233H
P160



JL233I
P160

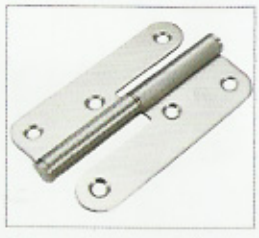

JL233J
P161



JL233J-1
P161



JL233J-3
P161



JL233J-4
P162



JL233K
P162



JL233L
P162

铰链系列



JL234
P163



JL236
P163



JL237
P163



JL238
P164



JL239
P164



JL240
P164



JL241
P165



JL242
P165



JL242A
P165



JL243
P166



JL243A
P166



JL244
P166



JL245
P167



JL245A
P167



JL245B
P167



JL245C
P168



JL246
P168



JL247–1
P168



JL247–2
P169



JL247–3
P169



JL247–4
P169



JL248
P170



JL249
P170



JL252
P170



JL253–1
P171

铰链系列

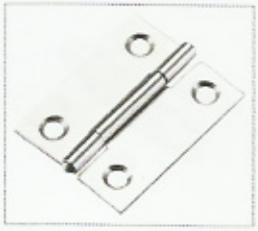

JL253-2
P171



JL254
P171



JL255
P172



JL256
P172



JL256A
P172



JL257
P173



JL264
P173



JL270-1~4
P173



JL272
P174



JL274
P174



JL275-1/JL275-2
P174~P175



JL288
P175



JL374
P175



JL375
P176



JL376
P176



JL376-1
P176



JL376-2
P177

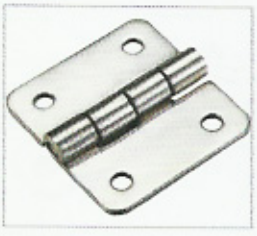

JL376-3
P177



JL377
P177



JL377-1
P178



JL378
P178

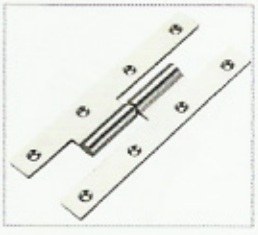

JL379
P178



JL380
P179



JL381
P179



JL382
P179

铰链系列



JL505–1
P180



JL505–2
P180



JL14104
P180

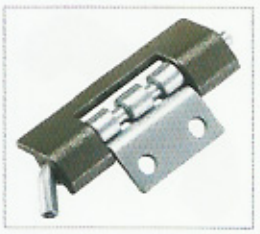

JL383
P181

限位系列

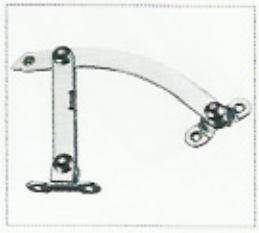

TX80
P182



TX90–1
P183



TX90–2
P183



TX90–3
P184



TX90–4
P184



TX100–A
P185



TX100–B
P185

拉手系列



LS501–1
P186



LS501–2
P186



LS501–3
P187



LS502
P188



LS502–1
P187

拉手系列



LS505
P188



LS505-1
P189



LS506
P189



LS507
P190



LS508
P190



LS509
P191



LS514-2
P191



LS515
P192



LS516
P192



LS530
P193



LS531
P193



LS532
P194



LS533
P194



LS534
P195



LS535
P195



LS536
P196



LS537
P196



LS538
P197

Trailer parts



16 Inch strap Hinge



D-Rings

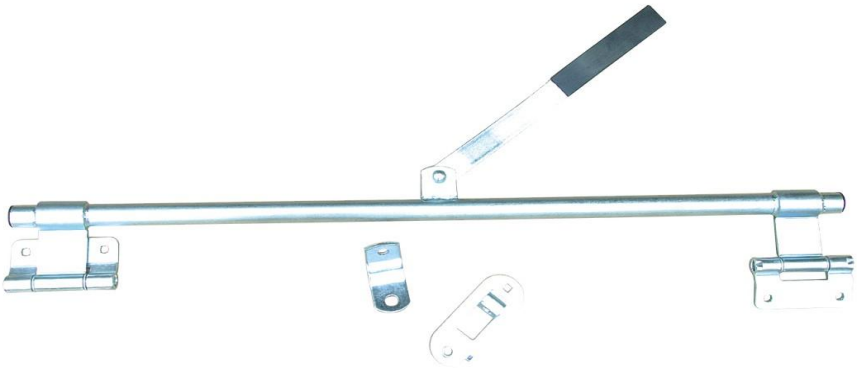

36 & 45 Inch Bar locks



2 x 21-2 Inch Straight



2 Inch AFC-COUPLER



25-16 Inch AFC-COUPLER



2KAFJ(2000# A-Frame Jack)



10 inch swing-up



15 inch swing-up



Galvanized Stand Feet



SPARE PARTS



Spindle Series



Stabilizer



Stand Feet



Weld link





Clamp Spring



Aluminum Alloy Door Case



2K Idler Hub,5 on 4.5



3k Idler hub,5 on 4.5



10 Inch brack drums



Caution Light



Solar Energy Caution Light



Light



Red & Orange Light



CRW_65241-WY



NO:GC6001



NO:GC6004



NO:GC8900



NO:GC8918

Confirmat Screw



XL-FC01



XL-FC02



XL-FC03



XL-FC014



XL-FC05



XL-FC06



XL-FC07



XL-FC08

Furniture Bolt



XL-FB01



XL-FB02



XL-FB03



XL-FB04



XL-FB05



XL-FB06



XL-FB07



XL-FB08



XL-FB09



XL-FB010



XL-FB011



XL-FB012



XL-FB013



XL-FB014



XL-FB015



XL-FB016



XL-FB017



XL-FB018



XL-FB019



XL-FB020



XL-FB021



XL-FB022



XL-FB02



XL-FB024



XL-FB025

Euro Screw



XL-FE01



XL-FE02



XL-FE03



XL-FE04



XL-FE06



XL-FE06



XL-FE07



XL-FE018



XL-FE09



XL-FE10



XL-FE11



XL-FE12



XL-FE13

Shelf Support



XL-FS01



XL-FS02



XL-FS03



XL-FS04



XL-FS05



XL-FS06

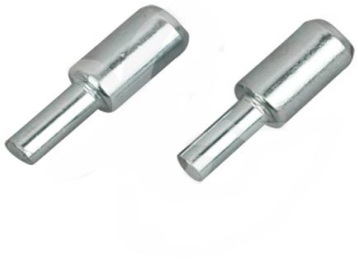

XL-FS07



XL-FS08



XL-FS09



XL-FS10

Allen Key



XL-FK01



XL-FK02



XL-FK03



XL-FK04

Rivet



XL-FR01



XL-FR02



XL-FR03



XL-FR04



XL-FR05

Bolt



XL-B01



XL-B02



XL-B03



XL-B04



XL-B05



XL-B06



XL-B07



XL-B08



XL-B09



XL-B10



XL-B11



XL-B12



XL-B13



XL-B14



XL-B15



XL-B16



XL-B17



XL-B18



XL-B19



XL-B20



XL-B21



XL-B22



XL-B23



XL-B24

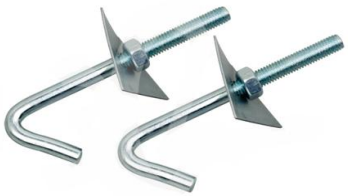

XL-B25



XL-B26



XL-B27

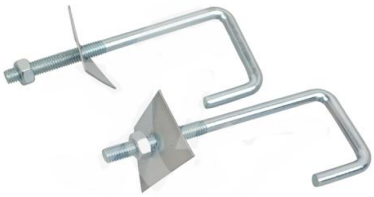

XL-B28



XL-B29



XL-B30



XL-B31



XL-B32

Shelf Tapping



XL-ST01



XL-ST02



XL-ST03



XL-ST04



XL-ST05



XL-ST06



XL-ST07



XL-ST08



XL-ST09



XL-ST10



XL-ST11



XL-ST12



XL-ST13

Hook and Eye Screw



XL-H01



XL-H02



XL-H03



XL-H04



XL-H05



XL-H06



XL-H07

Anchor Bolt



XL-SA01



XL-SA02



XL-SA03



XL-SA04



XL-SA05



XL-SA06



XL-SA07



XL-SA08



XL-SA09



XL-SA10



XL-SA11



XL-SA12



XL-SA13



XL-SA14



XL-SA15



XL-SA16



XL-SA17



XL-SA18



XL-SA19



XL-SA20



XL-SA21



XL-SA22



XL-SA23

Stainless Steel Screw



XL-SS01



XL-SS02



XL-SS03



XL-SS04



XL-SS05



XL-SS06



XL-SS07



XL-SS08



XL-SS09

Washer



XL-W01



XL-W02



XL-W03



XL-W04



XL-W05



XL-W06



XL-W07



XL-W08



XL-W09



XL-W10

Nut



XL-N01



XL-N02



XL-N03



XL-N04



XL-N05



XL-N06



XL-N07



XL-N08

Shelf Bracket



XL-FA01



XL-FA02

Other

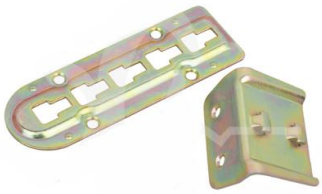

XL-FA05



XL-FA06



XL-FA07



XL-FA08



XL-FA09



XL-FA10



XL-FA11



XL-FA12



XL-FA13



XL-FA14



XL-FA15



XL-FA16



XL-FA17



XL-FA18



XL-FA19



XL-FA20



XL-FA21



XL-FA22



XL-FA23



XL-FA27



XL-FA28



XL-FA29

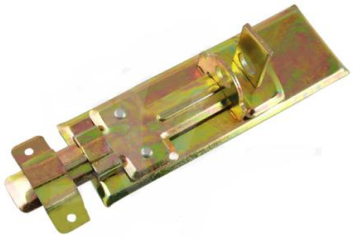

XL-FA30

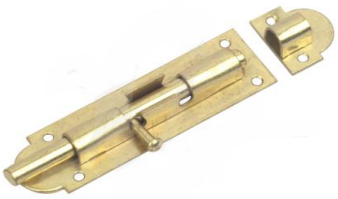

XL-FA31



XL-FA32



XL-FA33

Drawer Slides



XL-FA03



XL-FA04



XL-FA24



XL-FA25



XL-FA26

Snap hooks



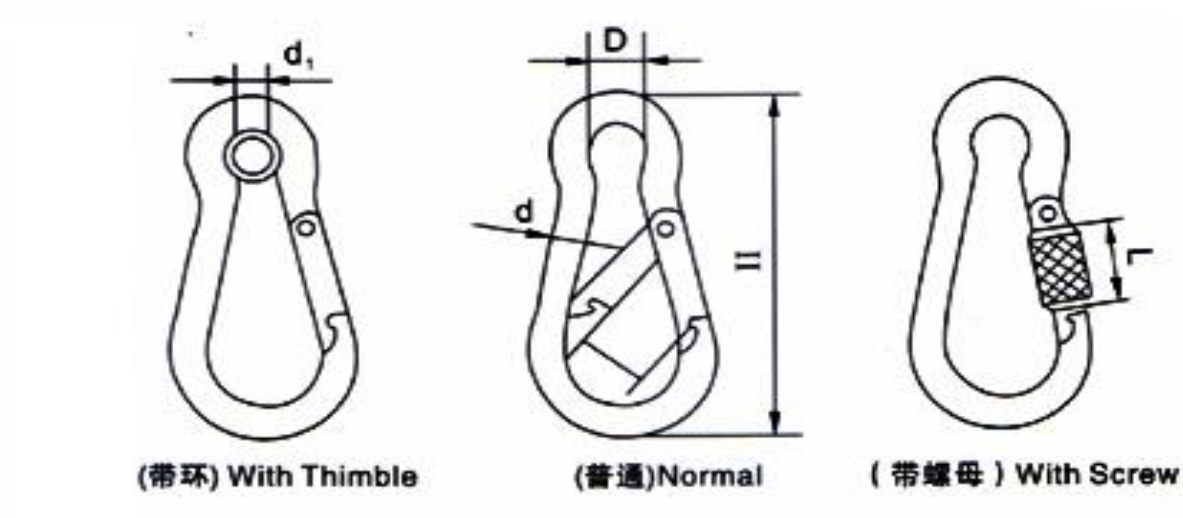

Items	Size mm	d mm	D mm	M mm	H mm	d1 mm	L mm
G010004	4×40	4	8	7	40		
G010005	5×50	5	8	8	50	7	10
G010006	6×60	6	9	8	60	9	12
G010007	7×70	7	10	9	70	9	14
G010008	8×80	8	12	9	80	12	16
G010009	9×90	9	12	11	90	12	18
G010010	10×100	10	15	12	100	14	20
G010011	11×120	11	18	16	120	16	24
G010012	12×140	12	20	19	140	17	27
G010013	13×160	13	22	25	160	22	



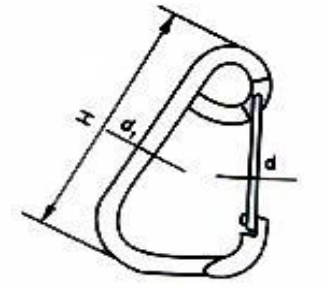

Items	Size mm	d mm	d1 mm	H mm
G020006	6×61	6	2.5	61
G020008	8×81	8	3.5	81
G020010	10×102	10	4	102
G020012	12×122	12	4.5	122



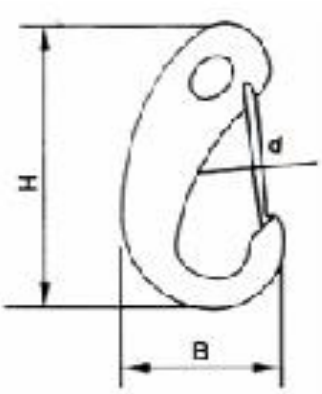

Items	Size mm	d mm	d1 mm	H mm
G030050	50	2.0	25	50
G030070	70	2.5	33	70
G030100	100	3.5	50	100



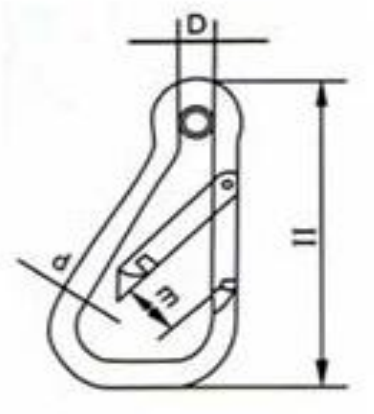

Items	Size mm	d mm	D mm	H mm	m mm
G040006	6×60	6	9	60	11
G040008	8×80	8	11	80	13
G040010	10×100	10	15	100	19
G040011	11×120	11	18	120	22



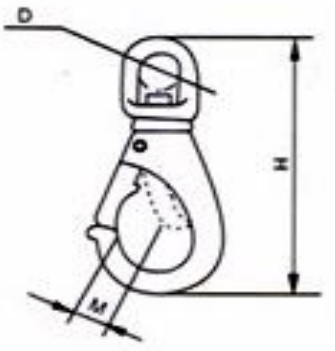

Items	Size mm	D mm	m mm	H mm
G050016	16×85	16	10	85
G050019	19×94	19	12	94
G050022	22×113	22	14	113



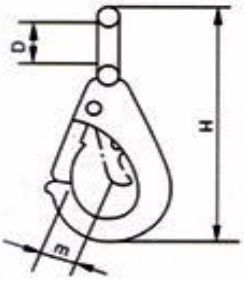

Items	Size mm	D mm	m mm	H mm
G060010	10×53	10	7	53
G060016	16×72	16	10	72
G060019	19×81	19	12	81
G060019-1	19×98	19	14	98



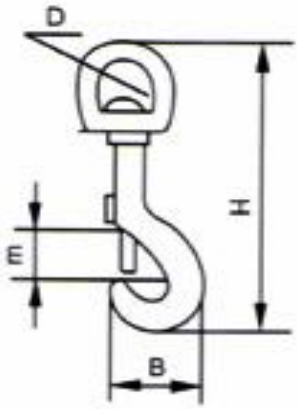

Items	Size mm	D mm	B mm	H mm
G070010	10×74	10	20	74
G070013	13×75	13	20	75
G070016	16×88	16	20	88
G070019	19×90	19	23	90
G070028	28×100	28	25	100
G070032	32×120	32	31	120



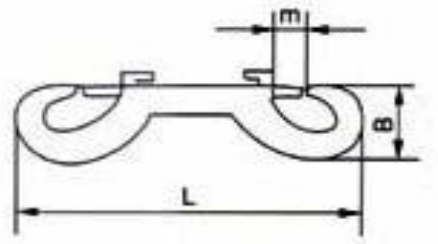

Items	Size mm	B mm	m mm	L mm
G080105	105	26	11	105
G080118	118	26	11	118



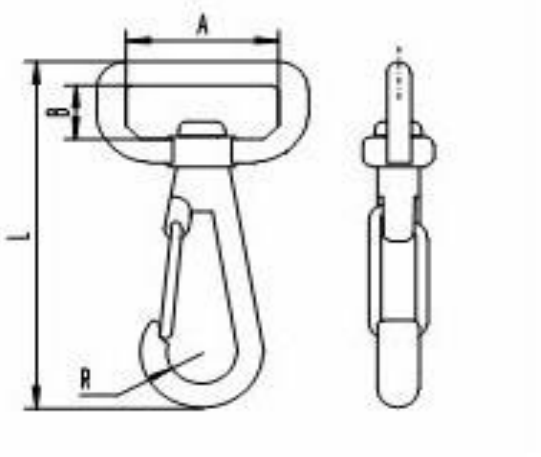

Items	R mm	L mm	A mm	B mm
G090006	6	65	26	10



Turnbuckles



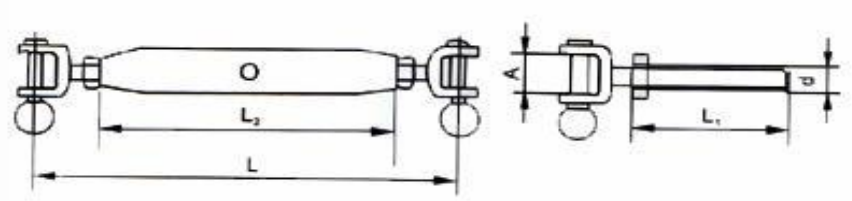

Items	d	A mm	L mm	L1 mm	L2 mm
L120005	M5	7	127	40	80
L120006	M6	8	142	45	90
L120008	M8	11	160	50	100
L120010	M10	12	190	60	115
L120012	M12	14	250	75	150
L120014	M14	14	256	80	160
L120016	M16	18	310	95	190
L120020	M20	20	358	110	218



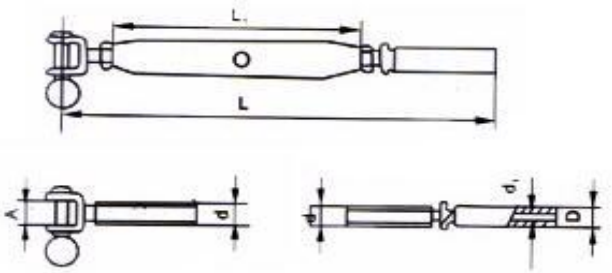

Items	d_1 mm	d	D mm	A mm	L_1 mm	L mm
L120205	2.2	M5	5.50	7	80	150
L120255	2.2	M5	5.50	7	80	150
L120305	3.5	M5	5.50	7	80	163
L120306	3.5	M6	6.35	8	90	235
L120406	4.4	M6	7.50	8	90	245
L120506	5.3	M6	7.50	8	90	217
L120408	4.4	M8	7.50	11	100	268
L120508	5.3	M8	9.00	11	100	275
L120608	6.5	M8	9.00	11	100	252
L120510	5.3	M10	9.00	12	115	305
L120610	6.5	M10	12.58	12	115	320
L120810	8.4	M10	12.58	12	115	275
L120612	6.5	M12	12.58	14	150	390
L120712	7.5	M12	14.20	14	150	398
L120812	8.4	M12	16.00	14	150	403
L120714	7.5	M14	14.20	14	160	336
L120814	8.4	M14	16.00	14	160	351
L120816	8.4	M16	16.00	18	190	345
L121016	10.5	M16	17.80	18	190	367
L121020	10.5	M20	17.80	20	218	407
L121220	12.5	M20	20.00	20	218	412



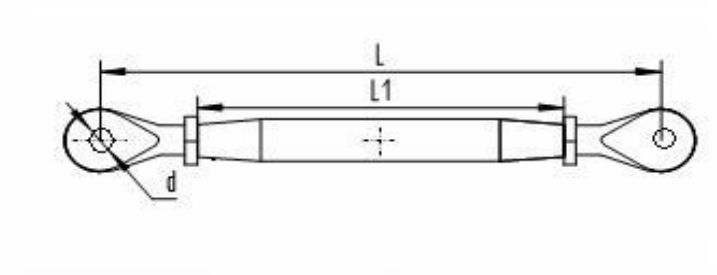

Items	size	L mm	L1 mm	d mm
L130005	M5	126	80	5.5
L130006	M6	134	90	6.5
L130008	M8	150	100	8.5
L130010	M10	175	115	10.5
L130012	M12	210	150	13
L130014	M14	226	160	13
L130016	M16	260	190	14.5
L130020	M20	318	218	19.3



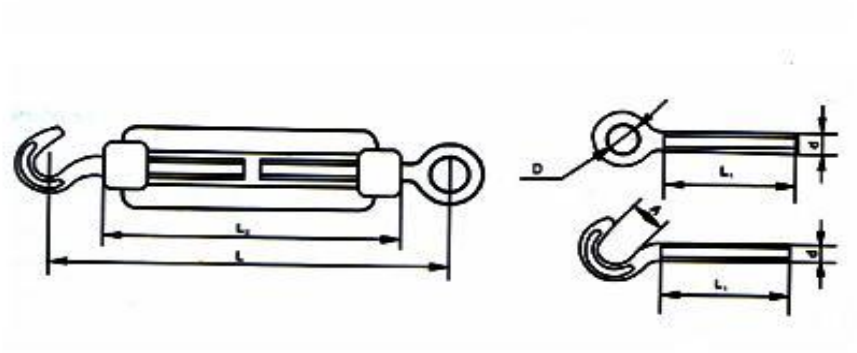

Items	size mm	d	A mm	D mm	L mm	L1 mm	L2 mm
L140005	5	M5	8	10	100	35	70
L140006	6	M6	10	11	130	45	90
L140008	8	M8	12	13	165	60	120
L140010	10	M10	15	17	205	75	150
L140012	12	M12	18	21	270	100	200



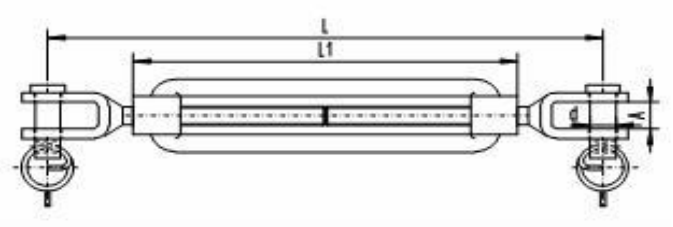

Items	size	d mm	A mm	L mm	L1 mm
L150005	M5	5	7	110	70
L150006	M6	6	8	135	90
L150008	M8	8	11	173	120
L150010	M10	9	12	216	150
L150012	M12	12	14	283	200



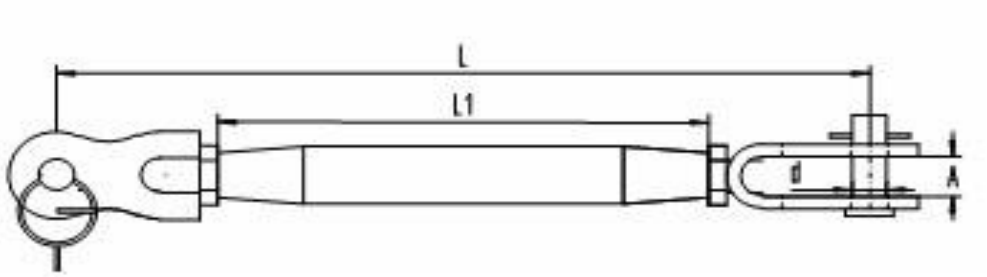

Items	size	d mm	L mm	L1 mm	A mm
L160006	M6	5.8	150	90	10
L160008	M8	7.8	182	110	10

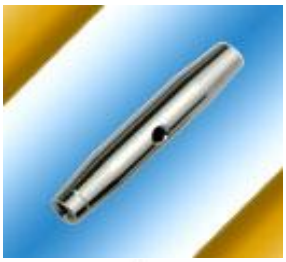

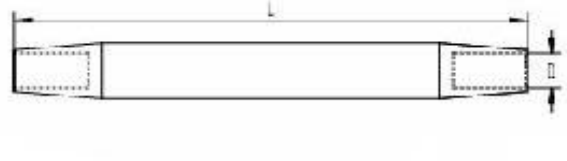

Items	D	L mm
L170005	M5	60
L170005-1	M5	80
L170006	M6	65
L170006-1	M6	90
L170008	M8	80
L170008-1	M8	100
L170010	M10	90
L170010-1	M10	115
L170012	M12	150
L170014	M14	160
L170016	M16	190
L170020	M20	218

Rings



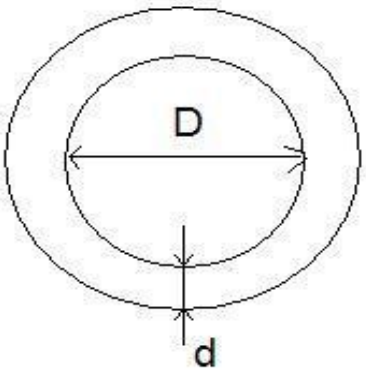

Items	d mm	D mm
H010040	4	25
H010040-1	4	38
H010050	5	25.4
H010050-1	5	31
H010050-2	5	35
H010050-3	5	40
H010060	6	35
H010060-1	6	40
H010063	6.35	25
H010053-1	6.35	38
H010079	7.9	42.5
H010080	8	45
H010080-1	8	51
H010080-2	8	66
H010100	10	50
H010120	12	60



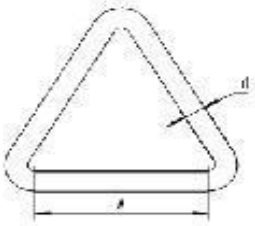

Items	d mm	D mm
H020060	6	46
H020080	8	46



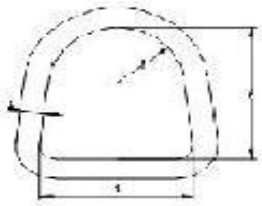

Items	Size	A mm	B mm	R mm
H030060	6mm	28	34	15
H030070	7mm	47	52	22
H030080	8mm	40	46.5	20
H030080-1	8mm	53.5	51	22.5



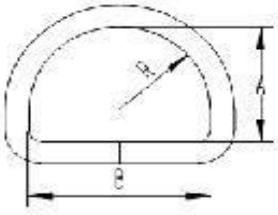

Items	Size	A mm	B mm	R mm
H040040	4mm	21	30	15



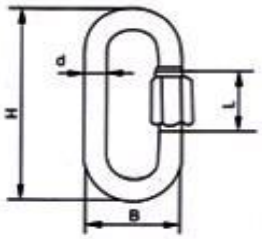

Items	d mm	B mm	H mm	L mm
H050003	3.5	17	36	12
H050004	4	20	42	12.5
H050005	5	23	49	14.5
H050006	6	26	57	17
H050007	7	30	66	20.5
H050008	8	34	75	23
H050009	9	38	80	25



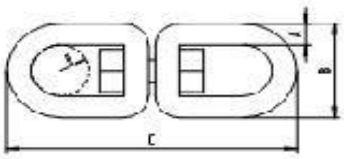

Items	Size	A mm	B mm	C mm	R mm
H060060	6mm	6	26	65	14



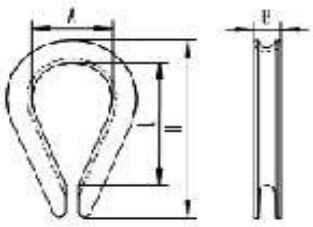

Items	Size	A mm	B mm	L mm	H mm
H070030	1/8"	17	29	33	44
H070040	3/16"	17	29	33	44
H070060	1/4"	17	29	34	48
H070080	5/16"	21	32	39	54
H070090	3/8"	24	38	42	57



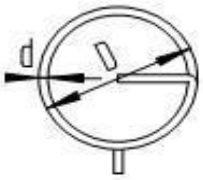

Items	d mm	D mm
H080012	1.2	12
H080012-1	1.2	14
H080016 -2	1.6	16
H080016	1.6	20
H080016-1	1.6	24



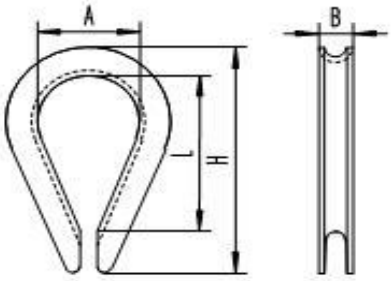

Items	A mm	L mm	H mm	B mm
H110002	9	17	23	5
H110003	10	18	25	6
H110004	11	20	28	8
H110005	13	21	32	9
H110006	15	27	39	10
H110007	19	33	45	11
H110008	22	38	51	13
H110009	24	41	58	14
H110010	27	48	65	16
H110012	29	53	70	17
H110014	32	57	79	19
H110016	40	67	90	22
H110018	45	75	102	25
H110020	52	84	115	27
H110022	56	96	125	30
H110028	76	135	175	36
H110032	88	160	200	41

Clips



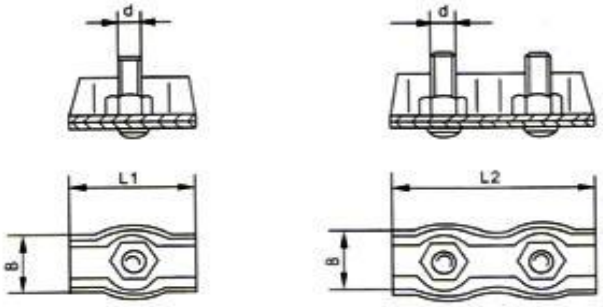

SIZE mm	d mm	B mm	L1 mm	L2 mm
2	M4	13	19	38
3	M4	14.5	20	40
4	M5	17	22	44
5	M5	21	26	52
6	M6	25	30	60
8	M8	32	36	72



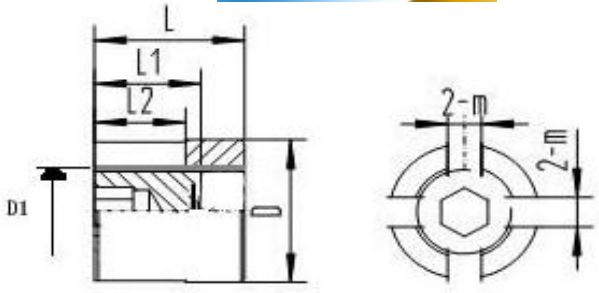

Items	m mm	D mm	L mm	L1 mm	L2 mm	D1 mm
3mm	3.5	20	19	13.5	10.5	M10
4mm	4.2	20	21	13.5	10.5	M12
5mm	5.3	20	23	13.5	10.5	M12



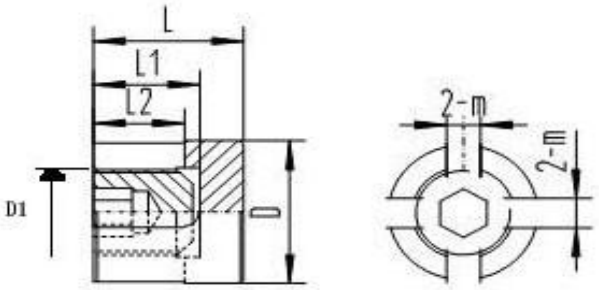

Items	m mm	D mm	L mm	L1 mm	L2 mm	D1 mm
3mm	3.5	20	19	13.5	10.5	M10
3mm	3.5	20	19	13.5	10.5	M12
4mm	4.2	20	19	13.5	10.5	M12



Stud terminals



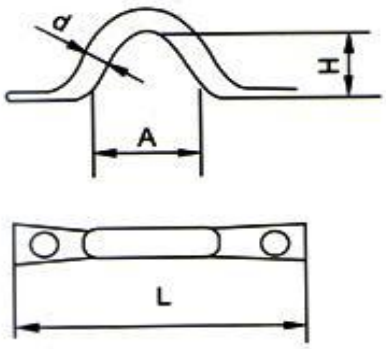

SIZE mm	d mm	A mm	H mm	L mm
4	4	17	10	42
5	5	22	13	50
6	6	24	16	58
8	8	26	16	65



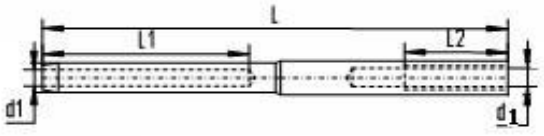

Items	d	d1 mm	L mm	L1 mm	L2 mm
X020005L	M5	4.3	77	50	22
X020005R	M5	4.3	77	50	22
X020006L	M6	5.3	93	60	25
X020006R-1	M6	5.3	93	60	25
X020006R-2	M6	3.5	80	32	35
X020008L	M8	6.3	98	60	30
X020008R	M8	6.3	98	60	30



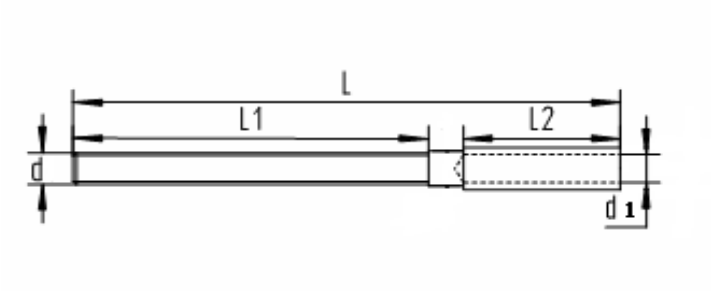

Items	d mm	d_1 mm	L mm	L_1 mm	L_2 mm
X030005	6.35	M5	90	40	20
X030006	7.5	M6	95	45	25
X030008	9.1	M8	120	55	40



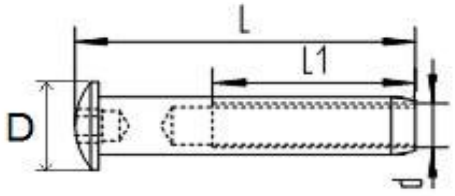

Items	d	D mm	L mm	L1 mm
X040005	M5	12	34.0	20
X040006	M6	12	42.0	25
X040006-1	M6	14	35.0	20
X040008	M8	16	40.0	25



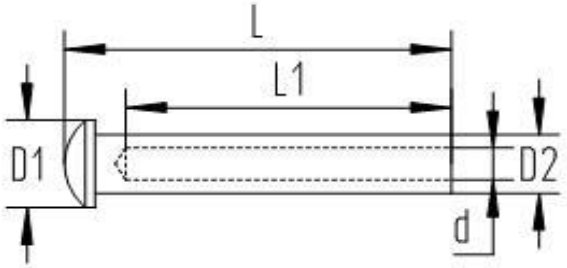

Items	size mm	d mm	D1 mm	D2 mm	L mm	L1 mm
X060003	3mm	3.5	9.5	6.35	38.0	32
X060003-1	3mm	3.5	10.0	6.35	48.5	37
X060004	4mm	4.4	12.5	7.50	54.0	45



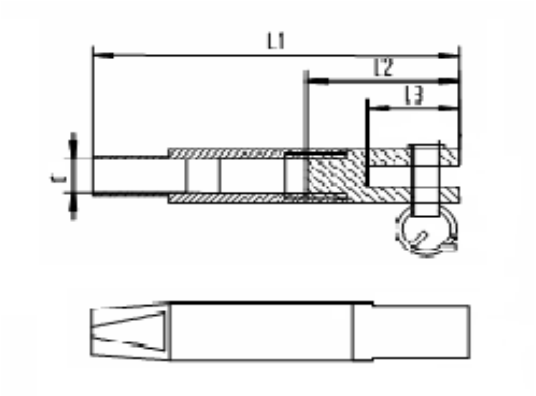

Items	size	d mm	L_1 mm	L_2 mm	L_3 mm
X080006	6mm	7.5	72	30	18



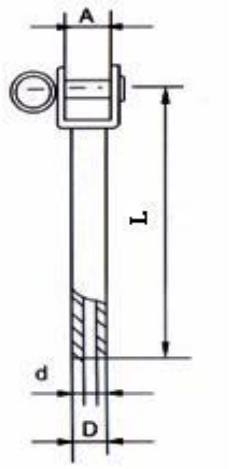

Items	d mm	D mm	A mm	L mm
X100502	2.2	5.5	7	58
X100525	2.8	5.5	7	58
X100503	3.5	6.35	8	65
X100603	3.5	6.35	9	63
X100504	4.4	7.5	7	71
X100604	4.4	7.5	7	73
X100804	4.4	7.5	11	77
X100605	5.3	9.0	9	80
X100805	5.3	9.0	9	84
X100905	5.3	9.0	12	88
X109506	6.5	12.58	14	102
X101106	6.5	12.58	14	106
X101163	6.8	12.58	13	106
X101206	6.5	12.58	14	108
X101207	7.5	14.2	14	117
X101208	8.4	16.0	14	130
X101495	10.0	17.8	18	151
X101410	10.5	17.8	18	151



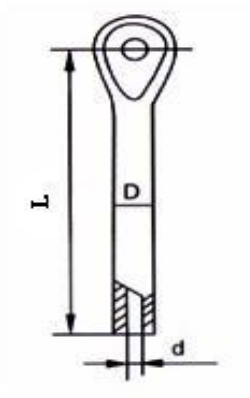

Items	d mm	D mm	L mm
X190002	2.2	5.5	49
X190025	2.8	5.5	49
X190003	3.5	6.35	55
X190004	4.4	7.5	67
X190005	5.3	9.0	76
X190055	5.8	10.7	85
X190006	6.5	12.58	94
X190063	6.8	12.58	95
X190007	7.5	14.2	104
X190008	8.4	16.0	118
X190095	10.0	17.8	140
X190010	10.5	17.8	140
X190012	12.5	20.0	160
X190013	13.5	21.4	181



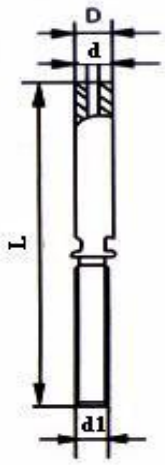

Items	d mm	d1	D mm	L mm
X900204	2.2	M4	4.80	73
X900205	2.2	M5	5.50	87
X902505	2.8	M5	5.50	87
X900305	3.5	M5	5.50	60
X900315	3.5	M5	6.35	90
X900306	3.5	M6	6.35	100
X900406	4.4	M6	7.50	100
X900506	5.3	M6	7.50	73
X900408	4.4	M8	7.50	117
X900508	5.3	M8	9.00	123
X900608	6.5	M8	9.00	88
X900510	5.3	M10	9.00	130
X900610	6.5	M10	12.58	145
X900810	8.4	M10	12.58	103
X900612	6.5	M12	12.58	162
X900712	7.5	M12	14.20	170
X900812	8.4	M12	16.00	185
X901012	10.5	M12	16.00	118
X900714	7.5	M14	14.20	180
X900814	8.4	M14	16.00	194
X900816	8.4	M16	16.00	203
X901016	10.5	M16	17.80	220
X901020	10.5	M20	17.80	230
X901220	12.5	M20	20.00	245
X901024	10.5	M24	24.00	230



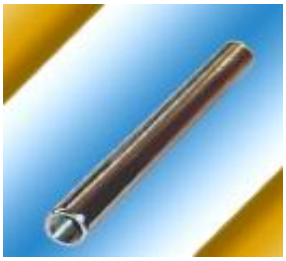



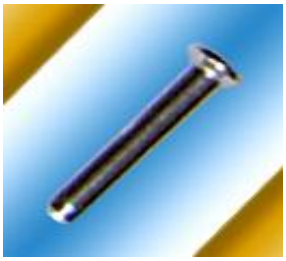





Bolts and Nuts



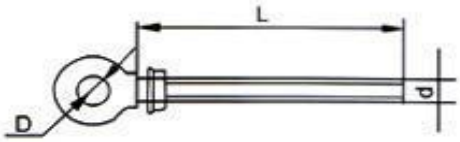

Items	Size mm	d	D mm	L mm
S010006	6×40	M6	16	40
S010006-1	6×60	M6	16	60
S010006-2	6×80	M6	16	80
S010006-3	6×100	M6	16	100
S010008	8×80	M8	20	80
S010008-1	8×100	M8	20	100
S010010	10×100	M10	24	100
S010012	12×120	M12	30	120



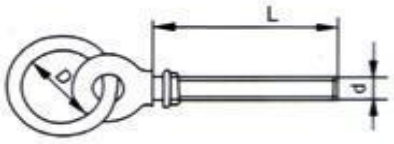

Items	Size	d mm	D mm	L mm
S020006	6×6×35	M6	35	60
S020008	8×8×45	M8	45	60
S020010	10×10×50	M10	50	95
S020012	12×12×60	M12	60	100



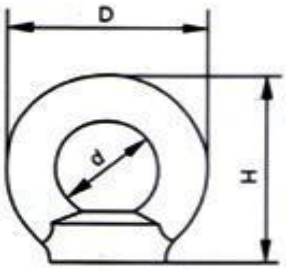

Items	Size	d mm	D mm	H mm
S030006	M6	15	27	27
S030008	M8	20	36	36
S030010	M10	25	45	45
S030012	M12	30	54	53
S030016	M16	35	63	62
S030020	M20	40	72	71
S030024	M24	50	90	90



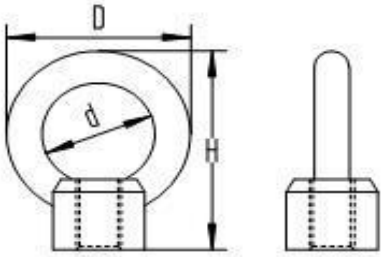

Items	size	d mm	D mm	H mm
S040006	M6	16	26	31
S040008	M8	20	32	39
S040010	M10	24	40	48
S040012	M12	30	50	60



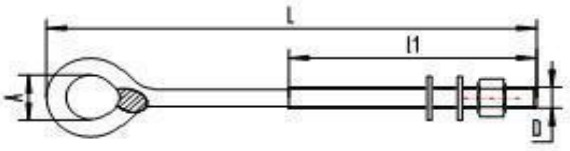

Items	D	L mm	L1 mm	A mm
S060005	M5	57	35	10
S060006	M6	70	45	11
S060008	M8	88	60	13
S060010	M10	40	75	17
S060012	M12	148	100	21



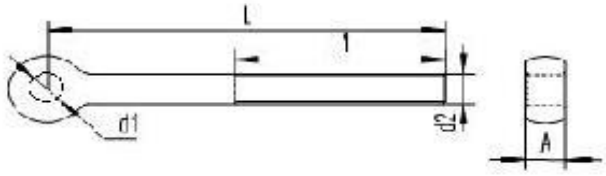

Items	d_1 mm	d_2	L mm	L_1 mm	A mm
S070006	6.2	M6	16	10	7
S070006-1	6.2	M6	20	14	7
S070006-2	6.2	M6	38	18	7
S070006-3	6.2	M6	38	25	7
S070006-4	6.2	M6	68	36	7
S070006-5	6.2	M6	68	60	7



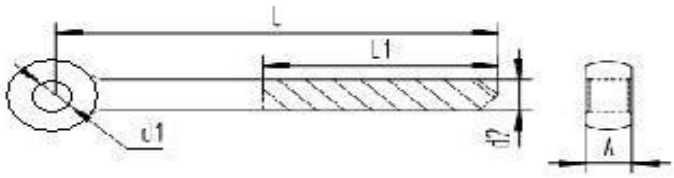

Items	d_1 mm	d_2	L mm	L_1 mm	A mm
S080006	6.2	ST1/4"-11	65	40	7



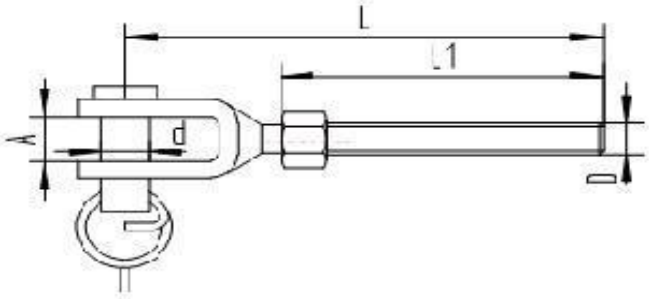

Items	D	L mm	L1 mm	d mm	A mm
S110005	M5	61	40	5	7
S110006	M6	70	47	6	8
S110008	M8	76	50	8	11
S110010	M10	93	60	9	12
S110012	M12	120	78	12	14
S110014	M14	123	80	12	14
S110016	M16	150	97	14	18
S110020	M20	172	113	16	20



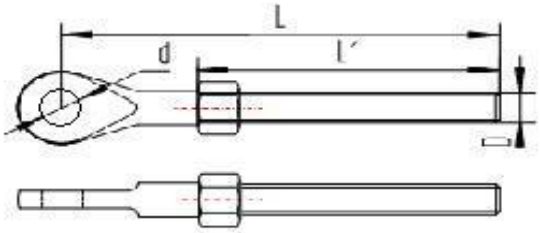

Items	D	d mm	L mm	L1 mm
S120005	M5	5.5	58	40
S120006	M6	6.5	64	47
S120008	M8	8.5	76	56
S120010	M10	10.5	86	63
S120012	M12	13	95	75
S120014	M14	13	104	82
S120016	M16	14.5	118	95
S120020	M20	19.3	143	105



Other



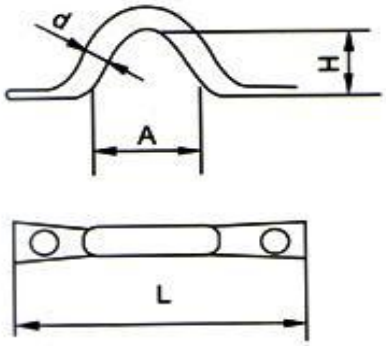

SIZE mm	d mm	A mm	H mm	L mm
4	4	17	10	42
5	5	22	13	50
6	6	24	16	58
8	8	26	16	65



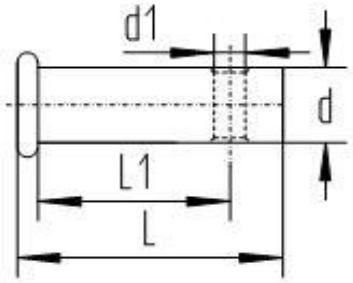

Items	d	d1 mm	L mm	L1 mm	A mm
5mm	5mm	2.5	19	14	2
6mm	6mm	2.5	20	15	2
8mm	8mm	3	26	19	2.5
9mm	9mm	3	28	22	2.5
12mm	12mm	4	35	28	3
14mm	14mm	4	41	34	3
16mm	16mm	4.7	44.5	36	4



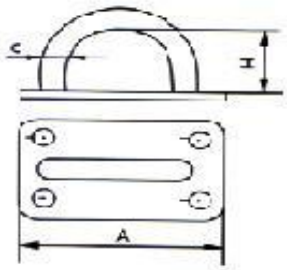

size mm	d mm	A mm	H mm
5×14	5	35	14
6×18	6	40	18
8×20	8	50	20



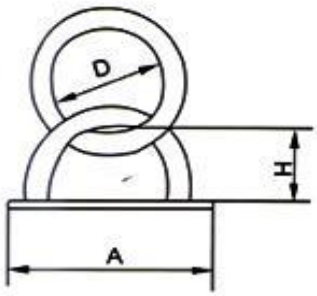

size mm	D mm	A mm	H mm
5×35	35	35	14
6×35	35	40	18
8×45	45	50	20

Shackles



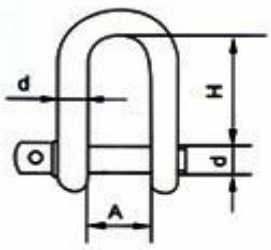

Items	d mm	A mm	H mm
K010004	4	8	16
K010005	5	10	20
K010006	6	12	24
K010008	8	16	32
K010010	10	20	40
K010012	12	24	48
K010014	14	28	56



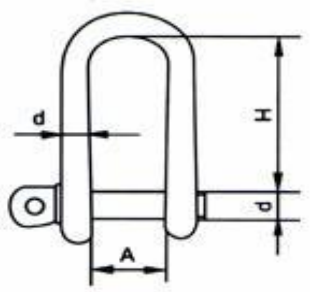

Items	d mm	A mm	H mm
K020004	4	8	30
K020005	5	10	38
K020006	6	12	45
K020008	8	16	62
K020010	10	20	75
K020012	12	24	90



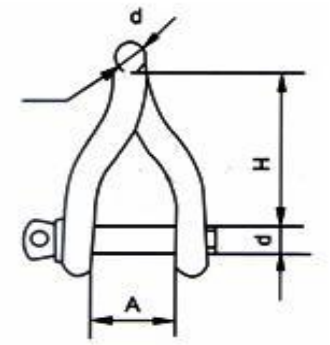

Items	d mm	A mm	H mm
K030005	5	10	30
K030006	6	12	35
K030008	8	16	46
K030010	10	20	56



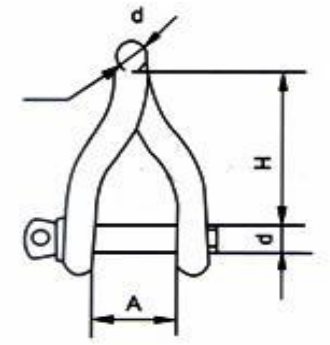

Items	d mm	A mm	H mm
K030005	5	10	30
K030006	6	12	35
K030008	8	16	46
K030010	10	20	56



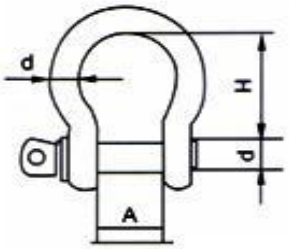

Items	d mm	A mm	H mm
K040004	4	8	14
K040005	5	10	20
K040006	6	12	24
K040008	8	16	32
K040010	10	20	40
K040012	12	24	48
K040014	14	28	56



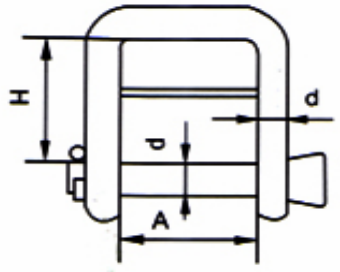

Items	d mm	A mm	H mm
K050005	6	18	37



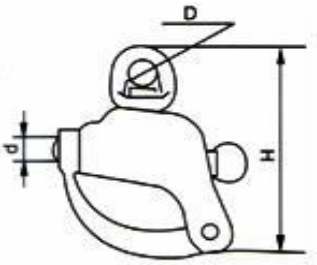

Items	size mm	D mm	d mm	H mm
K060012	12×70	12	6	70
K060016	16×87	16	8	87
K060022	22×128	22	11	128



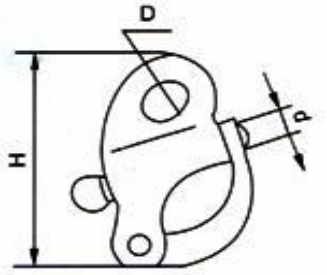

Items	size mm	D mm	d mm	H mm
K070012	12×52	12	6	52
K070016	16×66	16	8	66
K070022	22×96	22	11	96



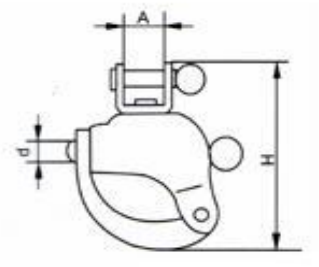

Items	size mm	d mm	A mm	H mm
K080010	10×70	6	13	70
K080013	13×87	8	15	87
K080022	22×128	11	23	128



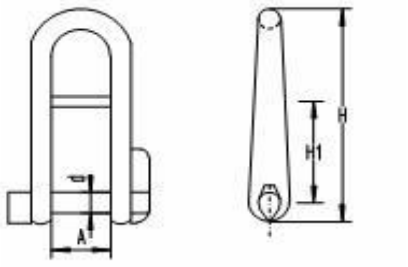

Items	size	d mm	A mm	H1 mm	H mm
K090005	5mm	5	13	25	50
K090006	6mm	6	16	30	60
K090008	8mm	8	22	40	80



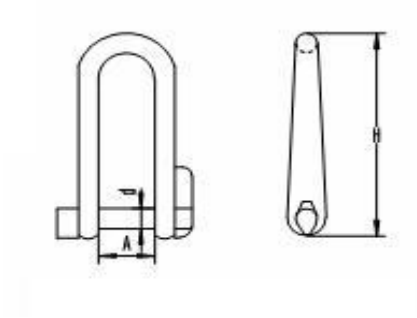

Items	size	d mm	A mm	H mm
K100005	5mm	5	13	50
K100006	6mm	6	16	60
K100008	8mm	8	22	80



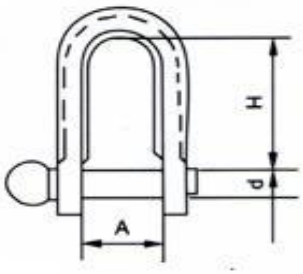

Items	d	A mm	H mm
K150041	M4	10	15
K150042	M4	11	20
K150051	M5	12	17
K150052	M5	16	24
K150053	M5	16	36
K155251	M5	14	25
K155206	M6	16	23
K150062	M6	14	40
K150082	M8	18	42







Flange



























XD1001 MINI AMERICAN TYPE HOSE CLAMP(8MM)



XD1002 MIDDLE AMERICAN TYPE HOSE CLAMP(10MM)



XD1003 LARGE AMERICAN TYPE HOSE CLAMP(12.7MM)



No	Type	Use range	Band	Pack Size	CTN	Weight
				cm	pcs	Kgs
0000#	1/2"	6-13mm	8mm	50x27x11	2000	12.5
#4	5/8"	6-16mm		50x27x11	2000	13.5
#6	3/4"	11-20mm		50x27x12	2000	14.2
#8	7/8"	13-23mm		50x27x12	2000	14.6
#8	1"	16-25mm		50x27x14	2000	15
#10	1-1/16"	14-27mm		50x27x16	2000	15.8
#12	1-1/4"	18-32mm		50x27x20	2000	17.2
#10	1-1/16"	14-27mm	12.7mm	65x27x15	1000	17
#12	1-1/4"	18-32mm		65x27x18	1000	20
#16	1-1/2"	21-38mm		65x27x21	1000	23
#20	1-3/4"	21-44mm		65x27x26	1000	25
#24	2"	27-51mm		50x27x25	500	11.5
#28	2-1/4"	33-57mm		50x27x28	500	12
#32	2-1/2"	40-63mm		50x27x31	500	14.5
#36	2-3/4"	46-70mm		50x27x35	500	15
#40	3"	52-76mm		50x27x39	500	15.5
#44	3-1/4"	59-82mm		50x27x43	500	16
#48	3-1/2"	65-89mm		50x27x45	500	16.5
#52	3-3/4"	72-95mm		50x27x45	500	17
#56	4"	78-101mm		50x30x42	500	17.5
#60	4-1/4"	84-108mm		50x30x45	500	18
#64	4-1/2"	91-114mm		50x30x48	500	18.5
#68	4-3/4"	95-120mm		50x30x48	500	#8
#72	5"	105-127mm		50x30x50	500	19
#80	5-1/2"	118-140mm		60x30x50	500	19.5
#88	6"	130-152mm		60x35x50	500	20
#92	6-1/4"	133-159mm		60x35x50	500	20
#96	6-1/2"	143-165mm		60x40x50	500	21



XD1005A MINI SIZE (8MM)



XD1005B MIDDLE SIZE (10MM)



XD1005C MIDDLE SIZE (12.7MM)

Material:

W1:All parts steel zinc plated.

W2:Band & hosing stainless steel, screw zinc plated.

W4: All parts stainless steel.

No	Type	Use range	Band	Pack Size	CTN	Weigh
				cm	pcs	Kgs
0000#	1/2"	6-13mm	8mm	50x27x11	2000	12.5
#4	5/8"	6-16mm		50x27x11	2000	13.5
#6	3/4"	11-20mm		50x27x12	2000	14.2
#8	7/8"	13-23mm		50x27x12	2000	14.6
#8	1"	16-25mm		50x27x14	2000	15
#10	1-1/16"	14-27mm		50x27x16	2000	15.8
#12	1-1/4"	18-32mm		50x27x20	2000	17.2
#10	1-1/16"	14-27mm	12.7mm	65x27x15	1000	17
#12	1-1/4"	18-32mm		65x27x18	1000	20
#16	1-1/2"	21-38mm		65x27x21	1000	23
#20	1-3/4"	21-44mm		65x27x26	1000	25
#24	2"	27-51mm		50x27x25	500	11.5
#28	2-1/4"	33-57mm		50x27x28	500	12
#32	2-1/2"	40-63mm		50x27x31	500	14.5
#36	2-3/4"	46-70mm		50x27x35	500	15
#40	3"	52-76mm		50x27x39	500	15.5
#44	3-1/4"	59-82mm		50x27x43	500	16
#48	3-1/2"	65-89mm		50x27x45	500	16.5
#52	3-3/4"	72-95mm		50x27x45	500	17
#56	4"	78-101mm		50x30x42	500	17.5
#60	4-1/4"	84-108mm		50x30x45	500	18
#64	4-1/2"	91-114mm		50x30x48	500	18.5
#68	4-3/4"	95-120mm		50x30x48	500	18.5
#72	5"	105-127mm		50x30x50	500	19
#80	5-1/2"	118-140mm		60x30x50	500	19.5
#88	6"	130-152mm		60x35x50	500	20
#92	6-1/4	133-159mm		60x35x50	500	20
#96	6-1/2"	143-165mm		60x40x50	500	21
#100	6-3/4	146-171mm		60x40x50	500	21.5



XD2001 HOUSING TYPE HOSE CLAMP (12.7MM)



XD2002 HOUSING TYPE HOSE CLAMP (14MM)



XD2002 HOUSING TYPE HOSE CLAMP (16MM)

Material:

W1:All parts steel zinc plated.

W2:Band & hosing stainless steel, screw zinc plated.

Dia range (Inch)	Dia range (Mm)	Pcs/bag	Bag/Ctn
1-1/16	14-27	100	10
1-1/4	18-32	100	10
1-1/2	21-38	100	10
1-3/4	21-44	100	10
2	27-51	50	10
2-1/4	33-57	50	10
2-1/2	40-63	50	10
2-3/4	46-70	50	10
3	50-76	50	10
3-1/4	59-82	50	10
3-1/2	65-89	50	10
3-3/4	72-95	50	10
4	78-101	50	10
4-1/4	84-108	50	10
4-1/2	91-114	50	10
5	103-127	25	20
5-1/2	118-140	25	20
6	130-152	25	20
6-1/2	143-165	25	20
7	155-178	25	20

band length (Mm)	Pcs/Ctn
503	200
598	200
678	200
538	200
623	200
738	200
783	200



XD5001



XD5003



XD5004

	band width	thickness	dia
	mm	mm	mm
XD-5001	11.1	10	F15
	11.1		F18
	11.1		F22
	11.8		F28
	11.8		F35
	11.8		F42
	11.8		F54
XD-5002			
	12.7	10	F15
			F18
			F22
			F28
			F35
XD-5003			
	20	10	F32
			F40
			F50
			F63
			F75
			F100
			F125



XD6001



XD6002

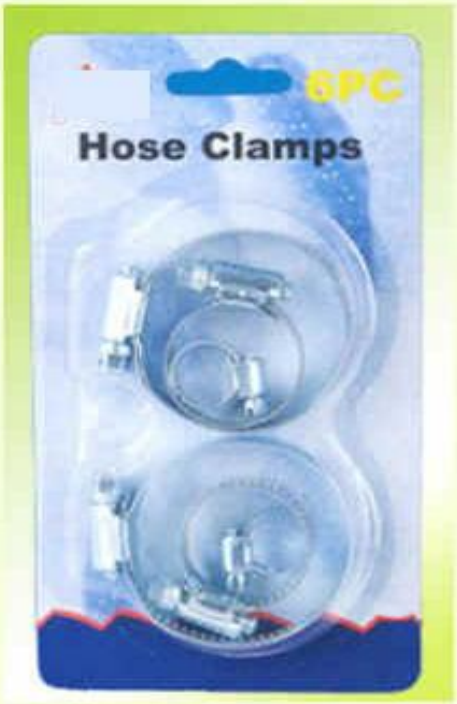

XD6003



XD6004



XD7001



XD7002



XD7003



XD7004



XD3001 GERMANY TYPE HOSE CLAMP (9MM)



XD3002 GERMANY TYPE HOSE CLAMP (12MM)

Material:

W1:All parts steel zinc plated.

W2:Band & hosing stainless steel, screw zinc plated.

W4: All parts stainless steel.

Band Width 9mm	
Dia Range(mm)	Dia Range (in)
8 – 12	5/16 – 1/2
12 –20	1/2 – 3/4
16 – 25	5/18 – 1
20 – 32	3/4 – 1 1/4
25 – 40	1 – 1 5/8
30 – 45*	13/16 – 1 3/4
32 – 50	1 1/4 – 2
40 – 60	1 5/8 – 2 3/8
50 – 70	2 – 2 3/4
60 – 80	2 3/8 – 3 1/8
70 – 90	2 3/4 – 3 1/2
80 – 100	3 1/8 – 4
90 –110	3 1/2 – 4 3/8
100 – 120	4 – 4 3/4
110 – 130	4 3/8 – 5 1/8
120 – 140	4 3/4 – 5 1/2
130 – 150	5 1/8 – 5 7/8
140 – 160	5 1/2 – 6 1/4

Band Width 12mm	
Dia Range(mm)	Dia Range(in)
16 – 25	5/18 – 1
16 – 27	5/16 – 11/16
20 – 32	3/4 – 1 1/4
23 – 35*	7/8 – 13/8
25 – 40	1 – 15/8
30 – 45*	1 3/16 – 1 3/4
32 – 50	1 1/4 – 2
40 – 60	1 5/8 – 2 3/8
50 – 70	2 – 2 3/4
60 – 80	2 3/8 – 3 1/8
70 – 90	2 3/4 – 3 1/2
80 – 100	3 1/8 – 4
90 –110	3 1/2 – 4 3/8
100 – 120	4 – 4 3/4
110 – 130	4 3/8 – 5 1/8
120 – 140	4 3/4 – 5 1/2
130 – 150	5 1/8 – 5 7/8
140 – 160	5 1/2 – 6 1/4



XD4001 BRITISH TYPE HOSE CLAMP (9.5MM)



XD4002 BRITISH TYPE HOSE CLAMP (12MM)

Material:

W1:All parts steel zinc plated.

W2:Band & hosing stainless steel, screw zinc plated.

W4: All parts stainless steel.

use range	pcs/carton	G.W.
mm	pcs	kg
11-16	2000	26
13-20	1800	25
16-22	1600	24
18-25	1400	22
22-30	1200	31
25-35	1000	27.5
30-40	800	23
35-50	600	23.5
40-55	500	20.5
45-60	500	21.5
55-70	700	32
60-80	600	29
70-90	500	26
85-100	450	24.5
90-120	350	21
110-130	300	18.5
120-140	500	34
140-160	500	37
160-180	400	32
180-205	400	35
205-230	300	27
230-255	300	30
255-280	200	23
280-305	200	24