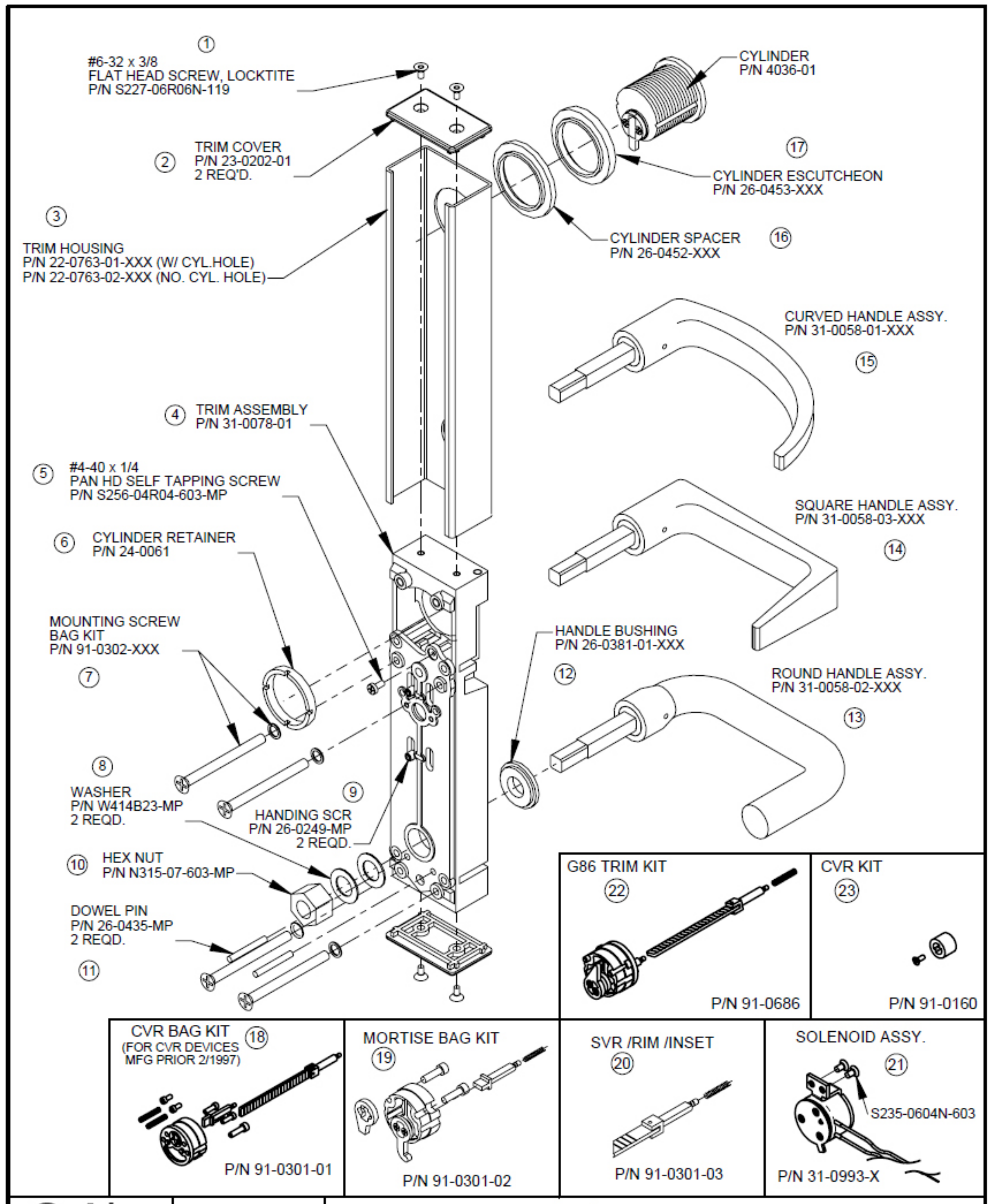

Adams Rite
ASSA ABLOY
260 Santa Fe Street
Pomona, CA 91767
PH: (909) 632-2300
FX: (909) 632-2369

3081/82/83 ENTRY TRIM
REPLACEMENT PARTS LIST

50-226 Rev. L Ecn 11532 Date: 04/19/10