STEP 1

UNFASTEN HEX SCREW AND REMOVE CAM.

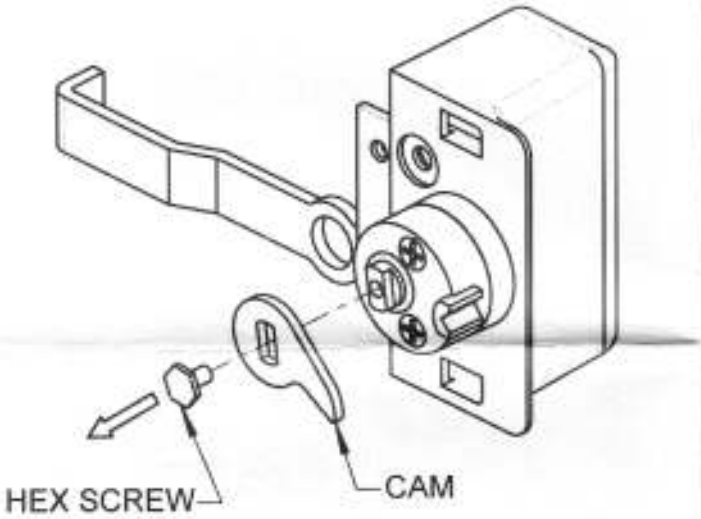

STEP 2

UNFASTEN 2 EA. #6 FLAT HEAD SCREW AND REMOVE MORTISE BASE FLANGE.

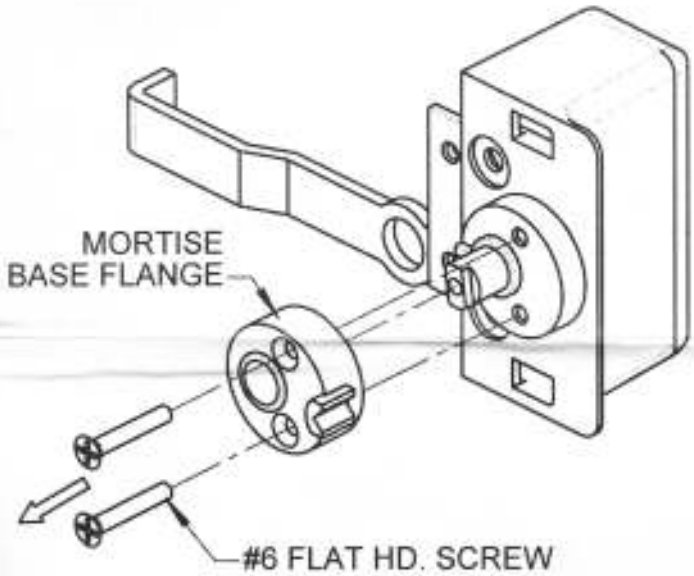

STEP 5

INSERT THE NEW/REQUIRED DOOR THICKNESS DRIVER SHAFT INTO THE MOUNTING BASE.

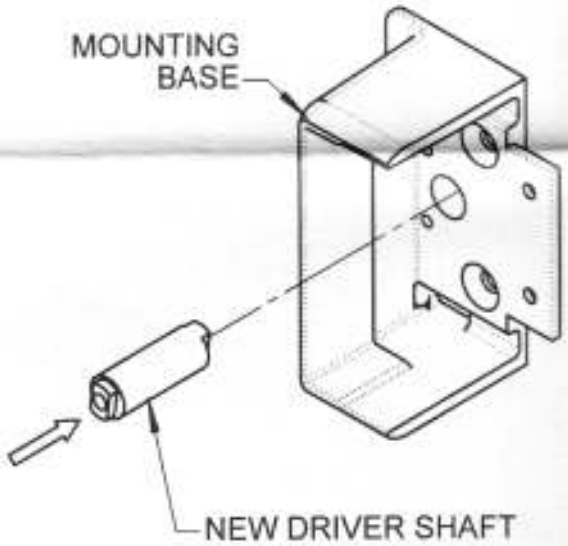

STEP 6

SLIDE THE CRANK ASSY. OVER THE DRIVER SHAFT AND FASTEN THE #6 SEM SCREW ONTO THE DRIVER SHAFT

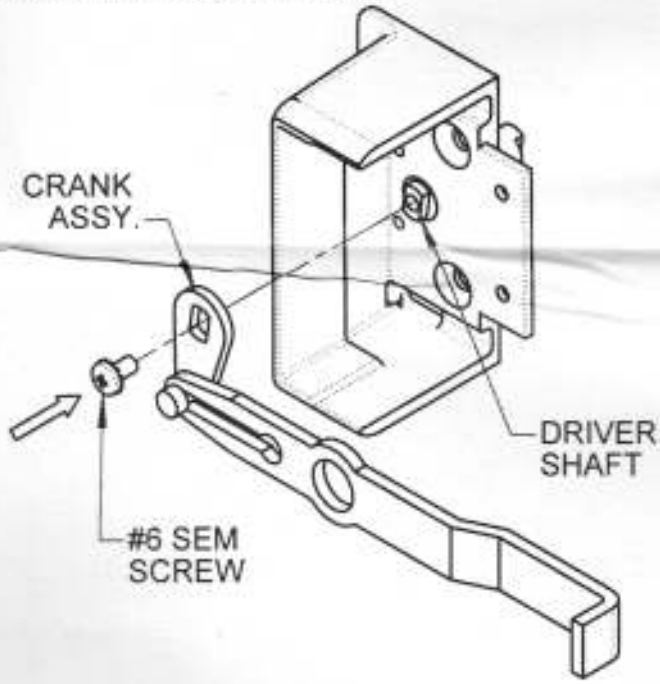

Adams Rite
ASSA ABLOY
www.adamsrite.com
Phone: 800-626-7590
800-872-3267
Fax: 866-582-4641
800-232-7329

MORTISE EXIT THICK DOOR EXTENSION KIT

80-0180-261 Rev. C ECN: 119

PDF processed with CutePDF evaluation edition www.CutePDF.com

STEP 3

UNFASTEN 1 EA. #6 SEM SCREW AND REMOVE CRANK ASSEMBLY.

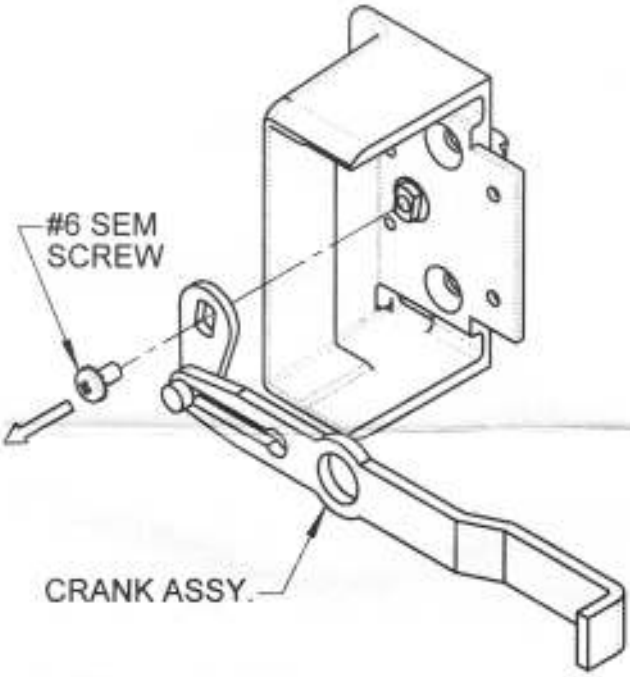

STEP 4

SLIDE DRIVER SHAFT OUT OF MOUNTING BASE.

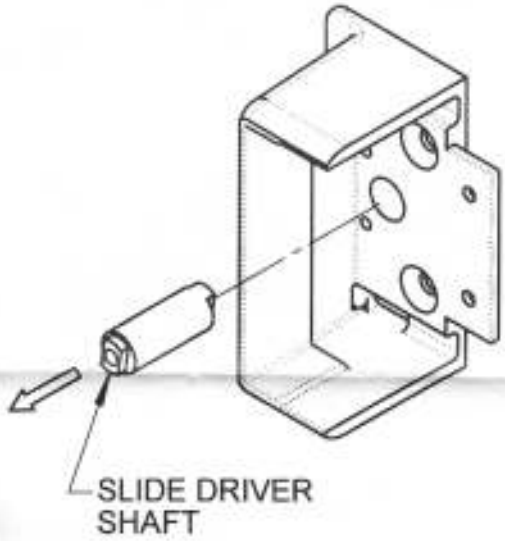

STEP 7

ADD THE ADDITIONAL MORTISE BASE SPACER(S) BETWEEN MORTISE BASE FLANGE AND THE MOUNTING BASE. FASTEN WITH 2 EA. #6 FLAT HEAD SCREWS.

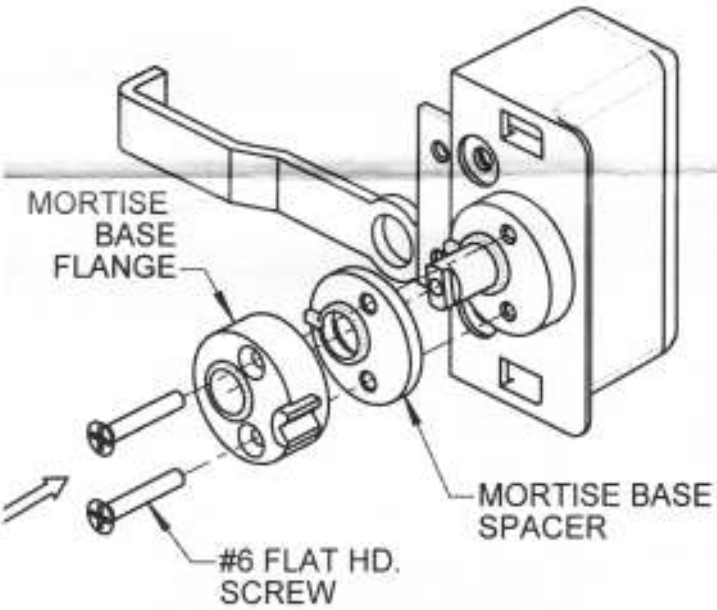

STEP 8

ATTACH CAM ONTO THE DRIVER SHAFT AND FASTEN WITH THE HEX SCREW.

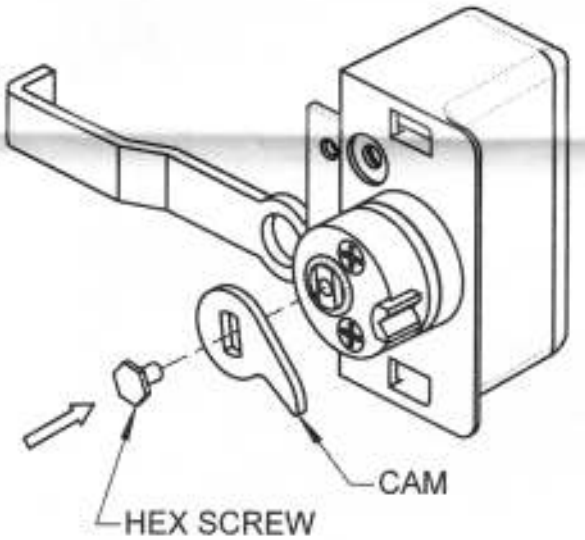

INSTALLATION INSTRUCTIONS

Date: 07-13-12