


Yale

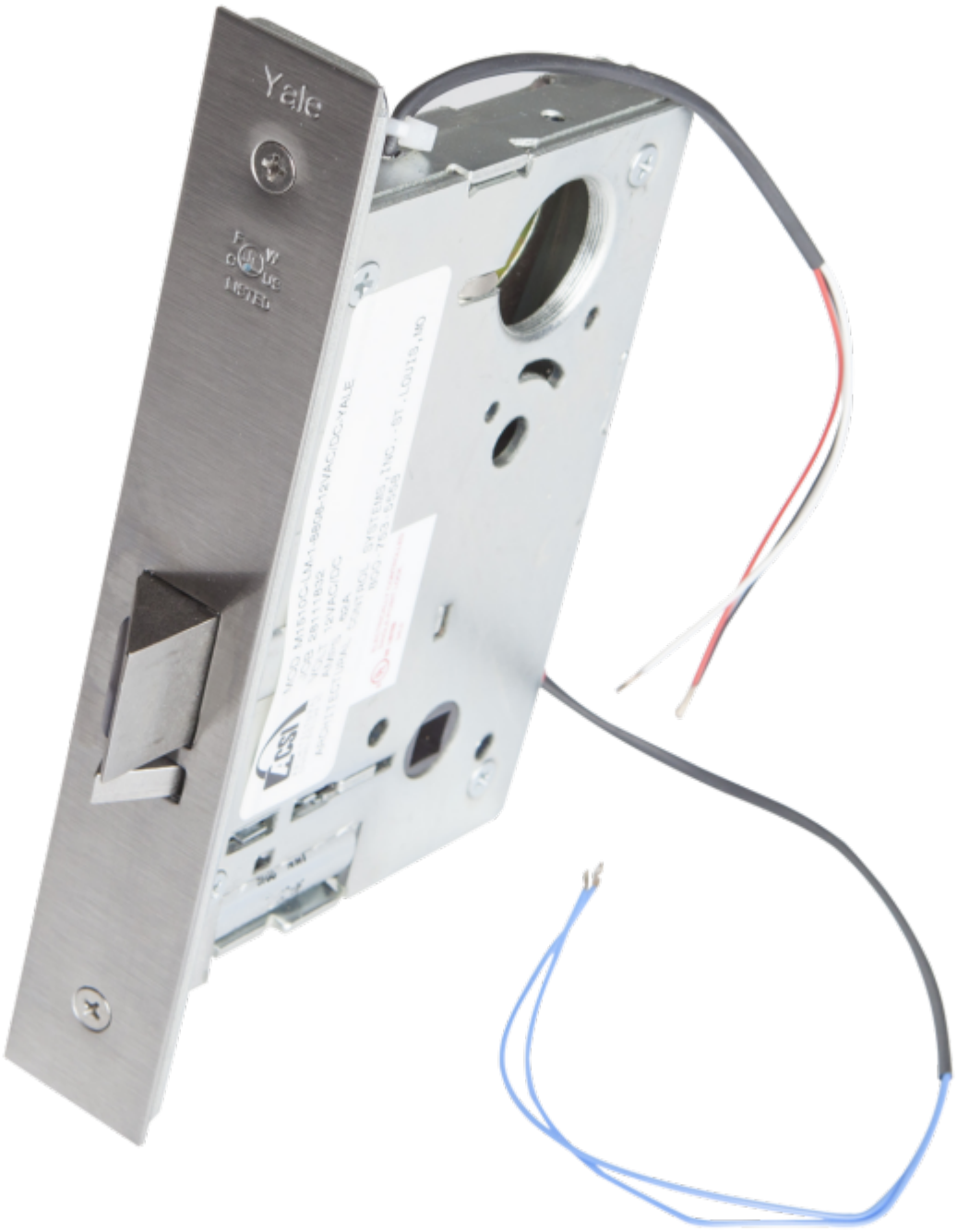
Yale

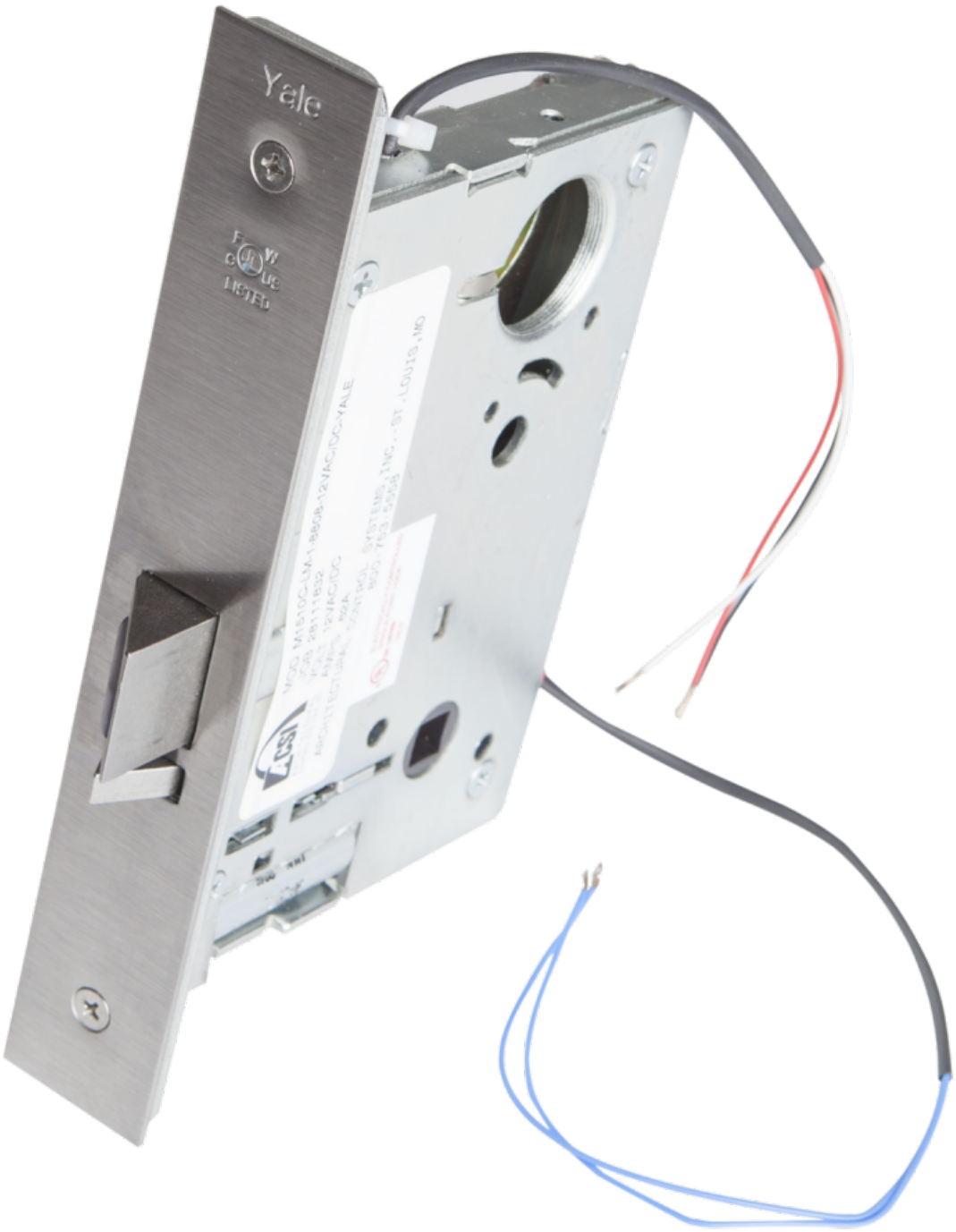
Yale

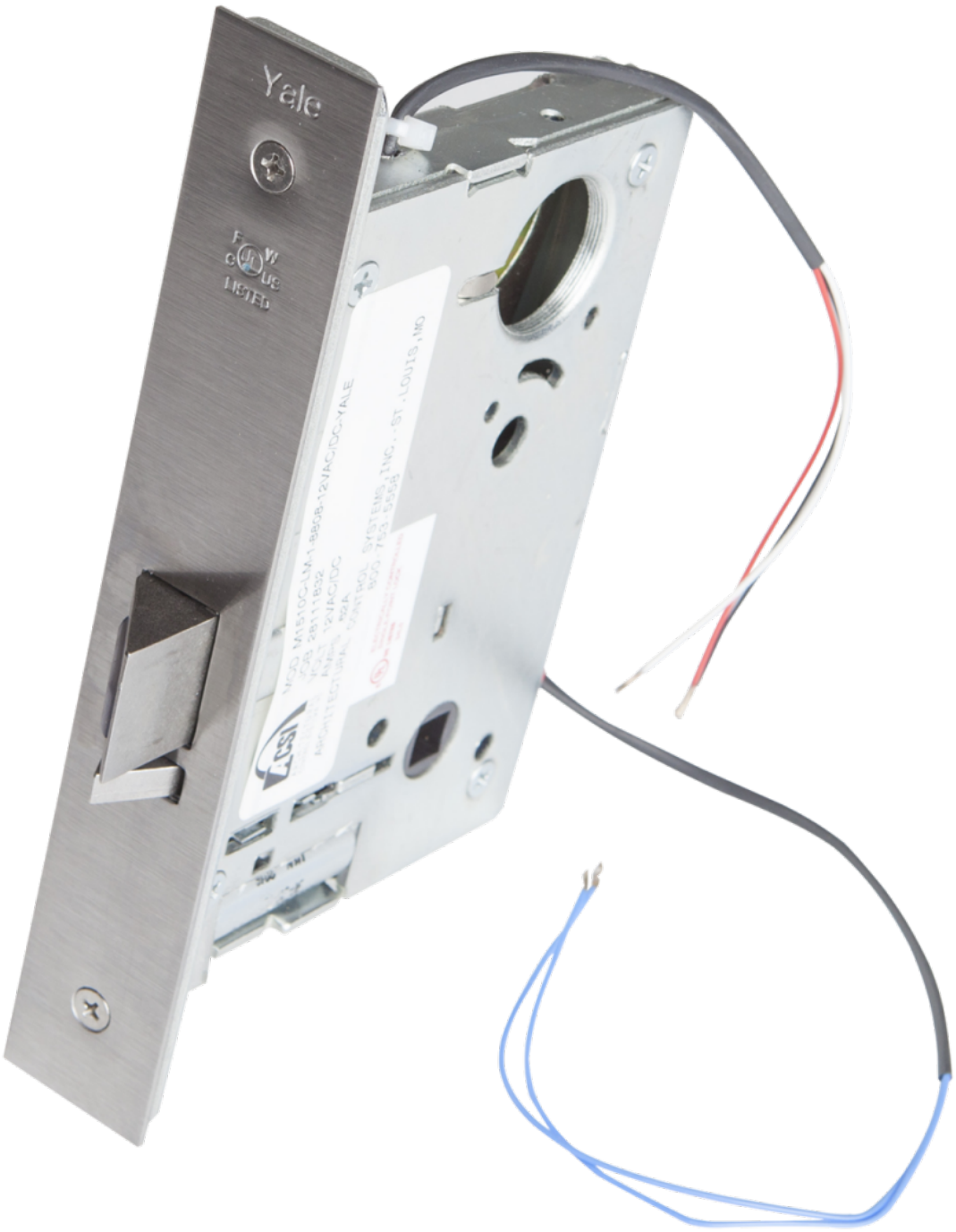
Yale
LISTED

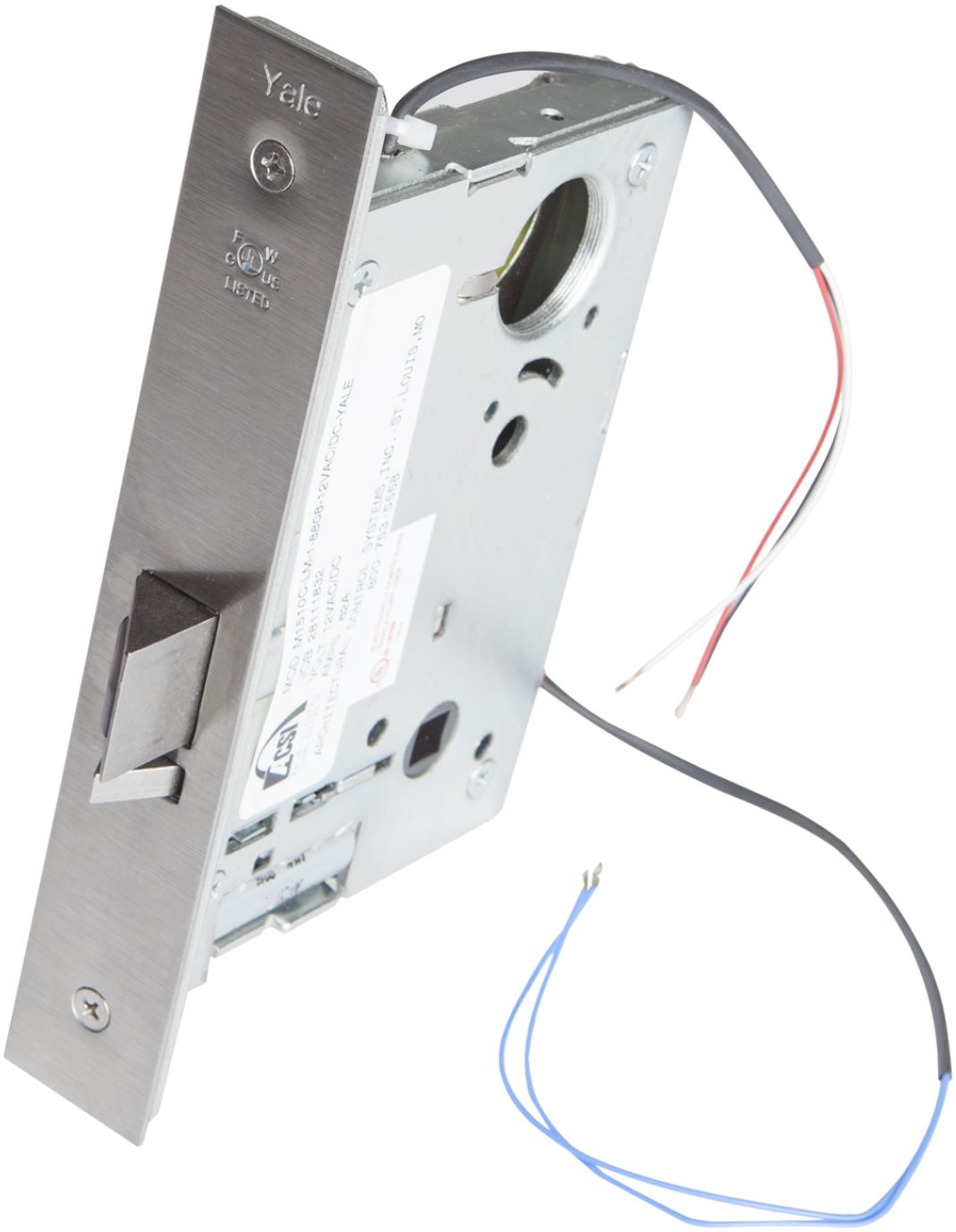
Yale
LISTED



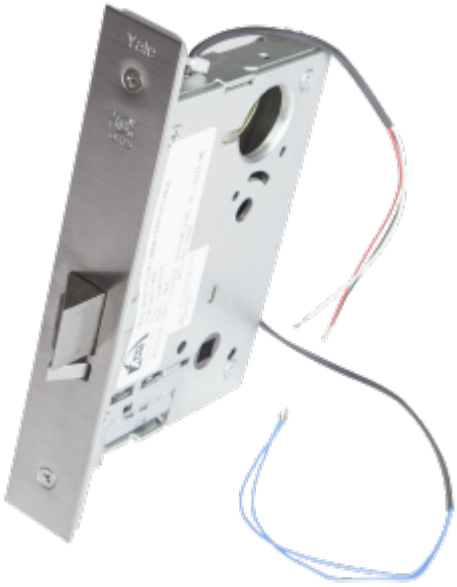
Yale

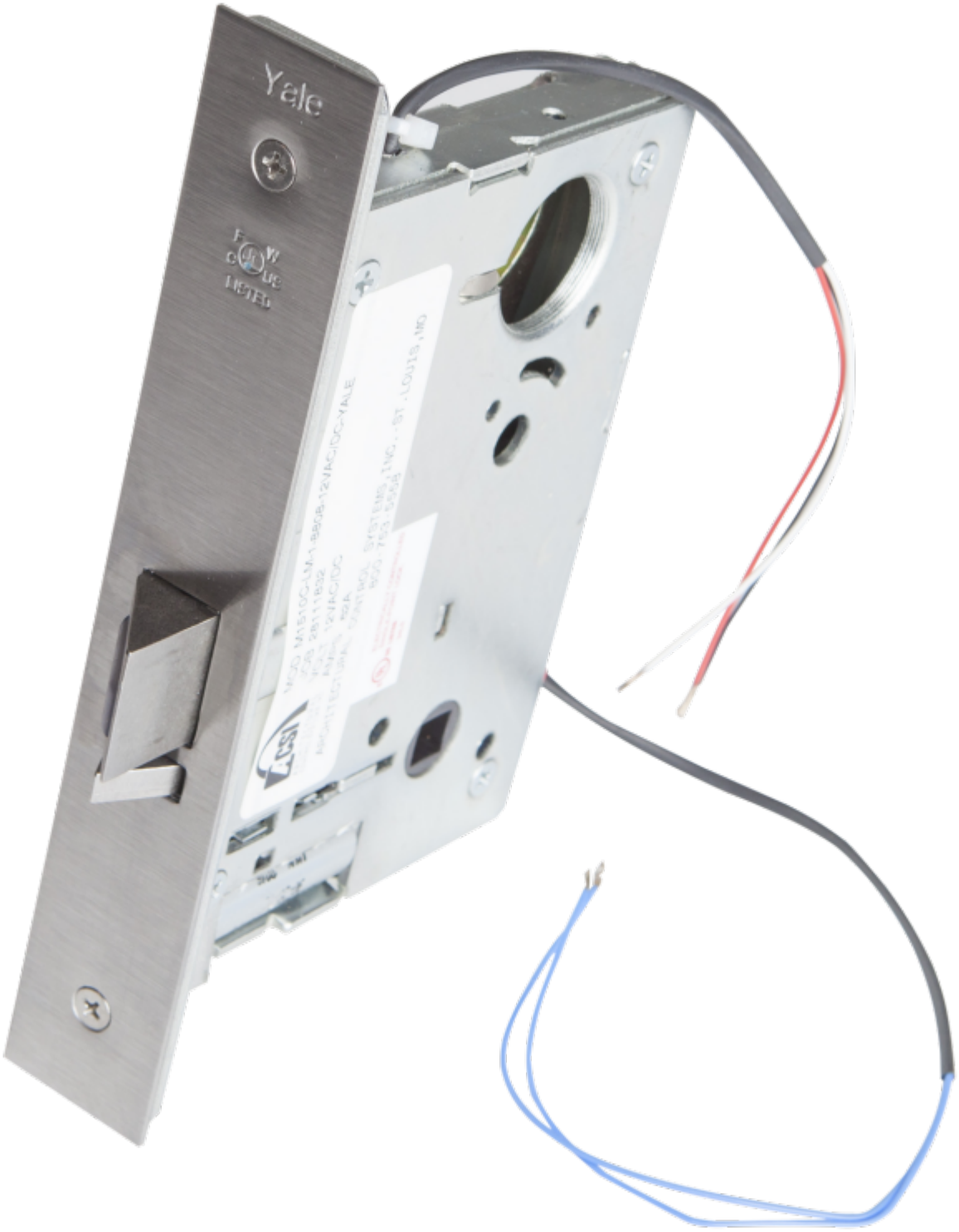
Yale

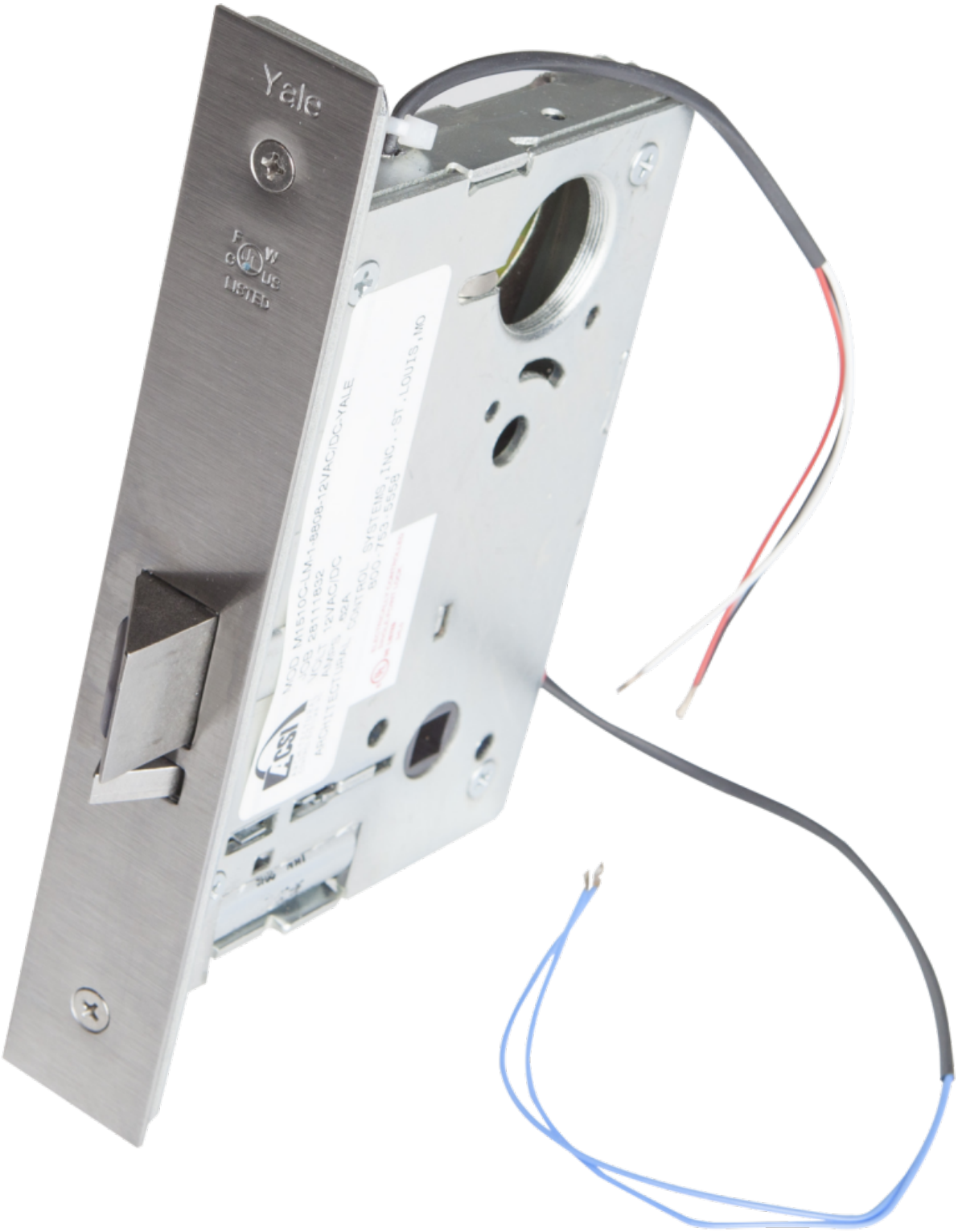
Yale

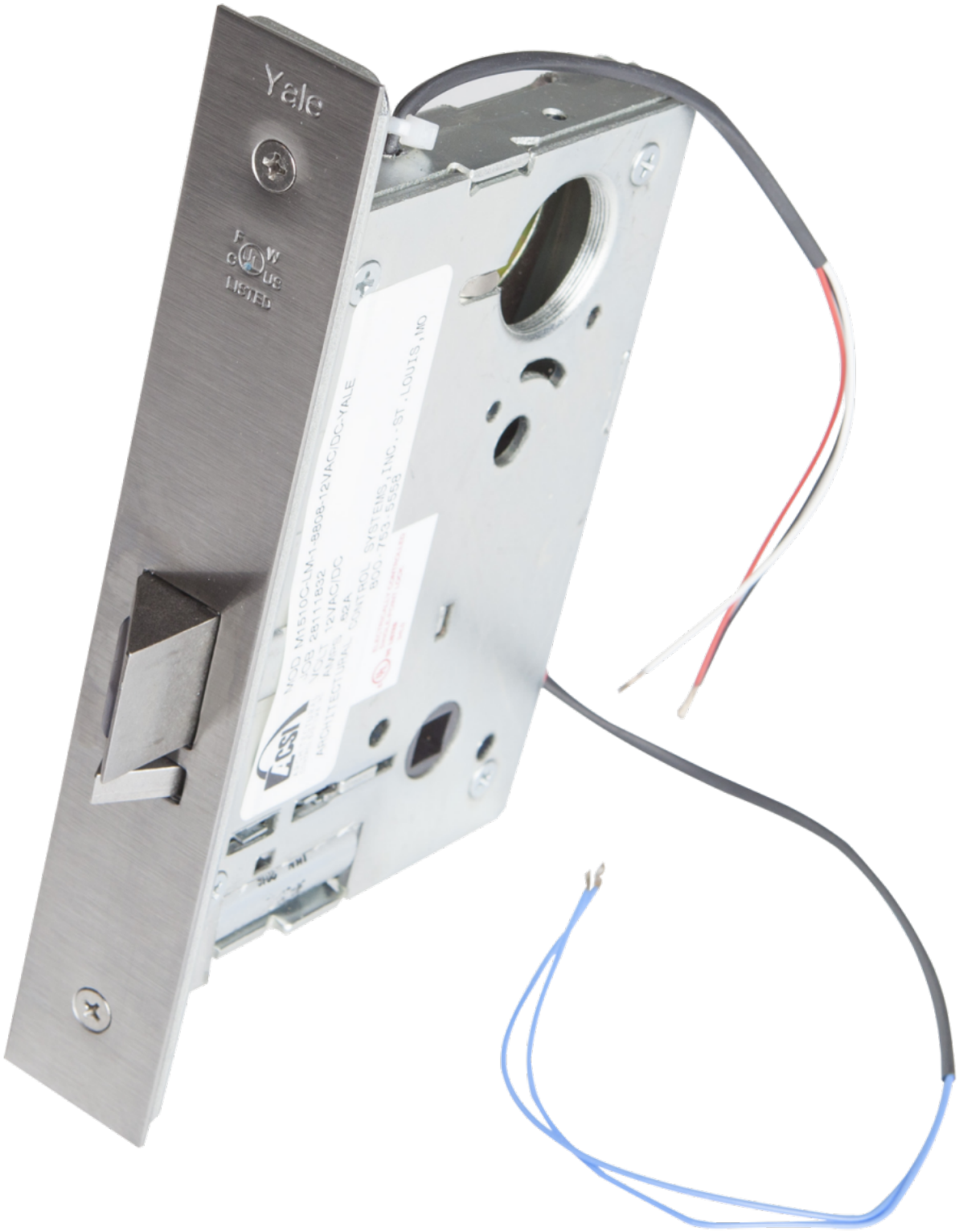
Yale

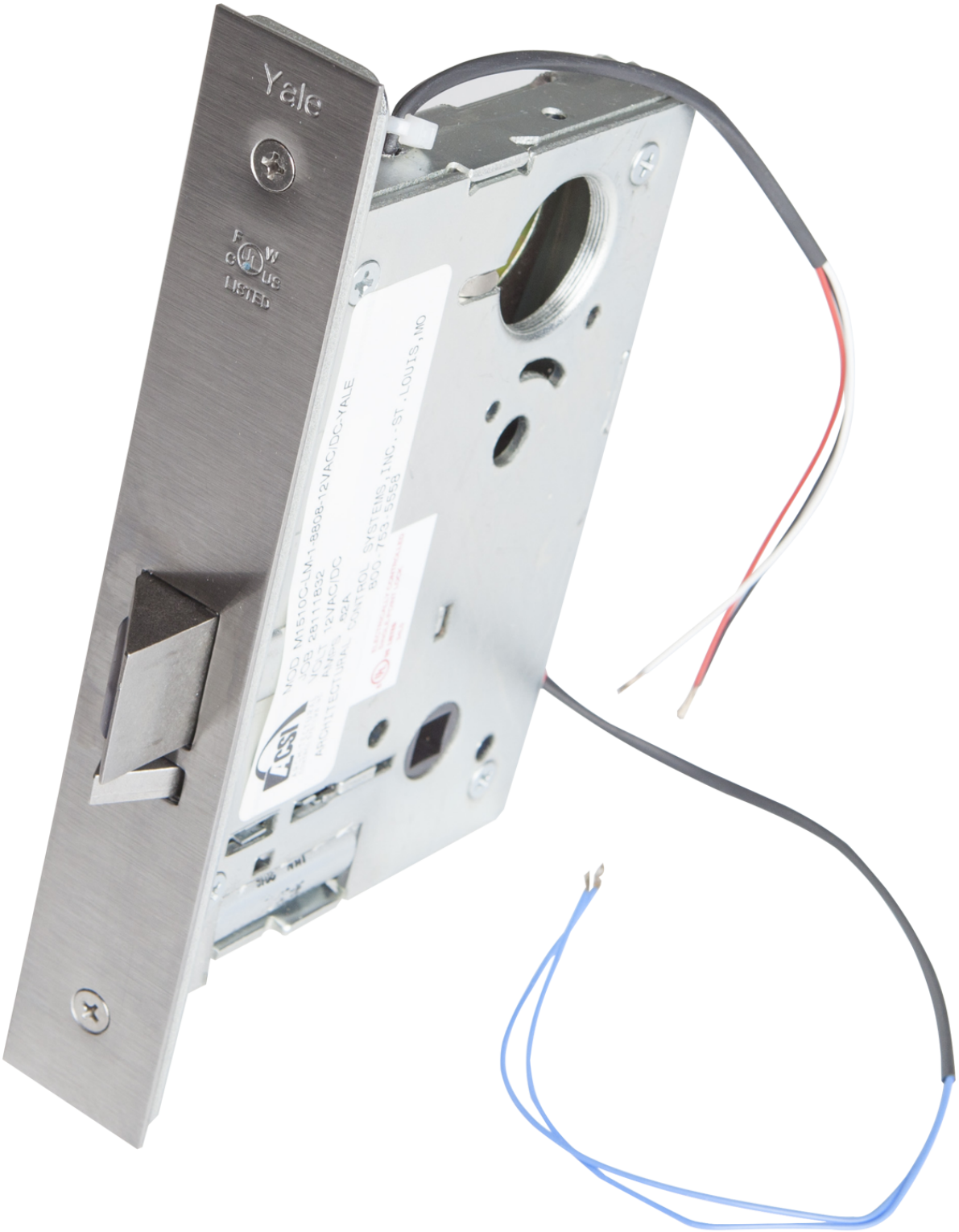
Yale
LISTED

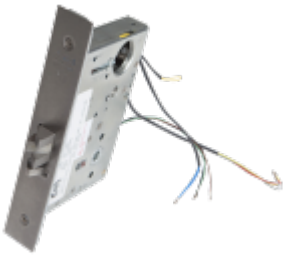

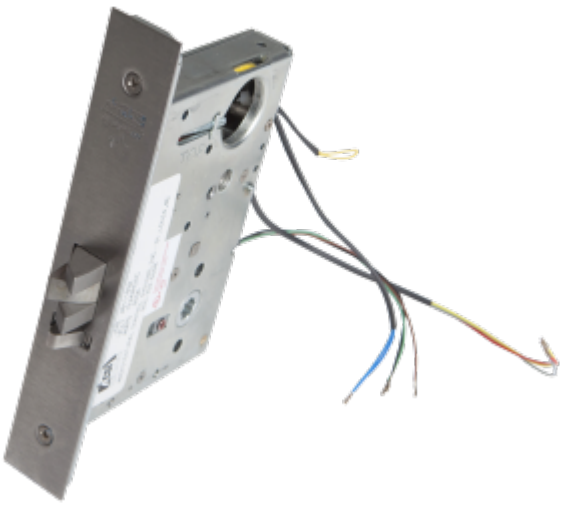

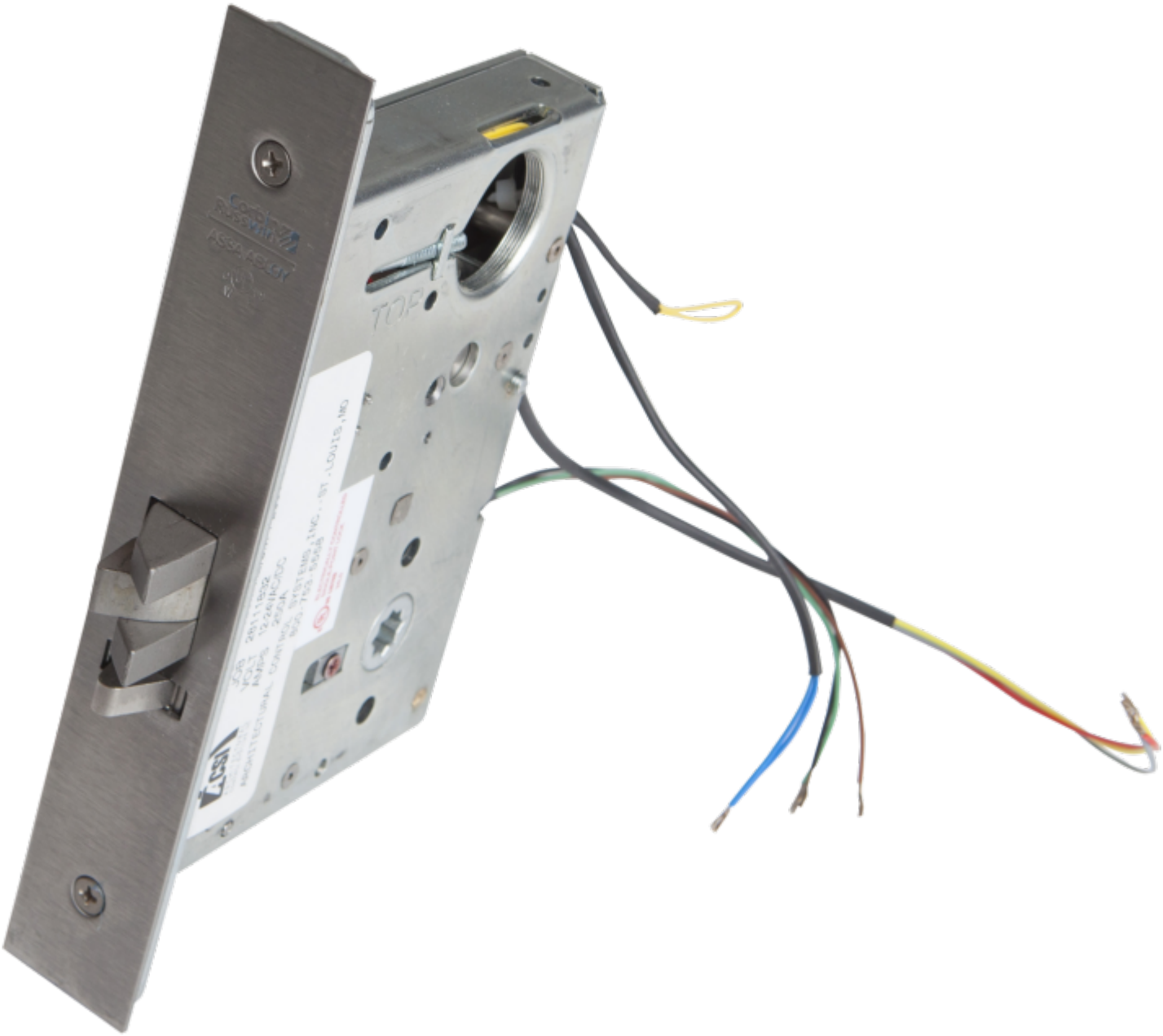
TOP

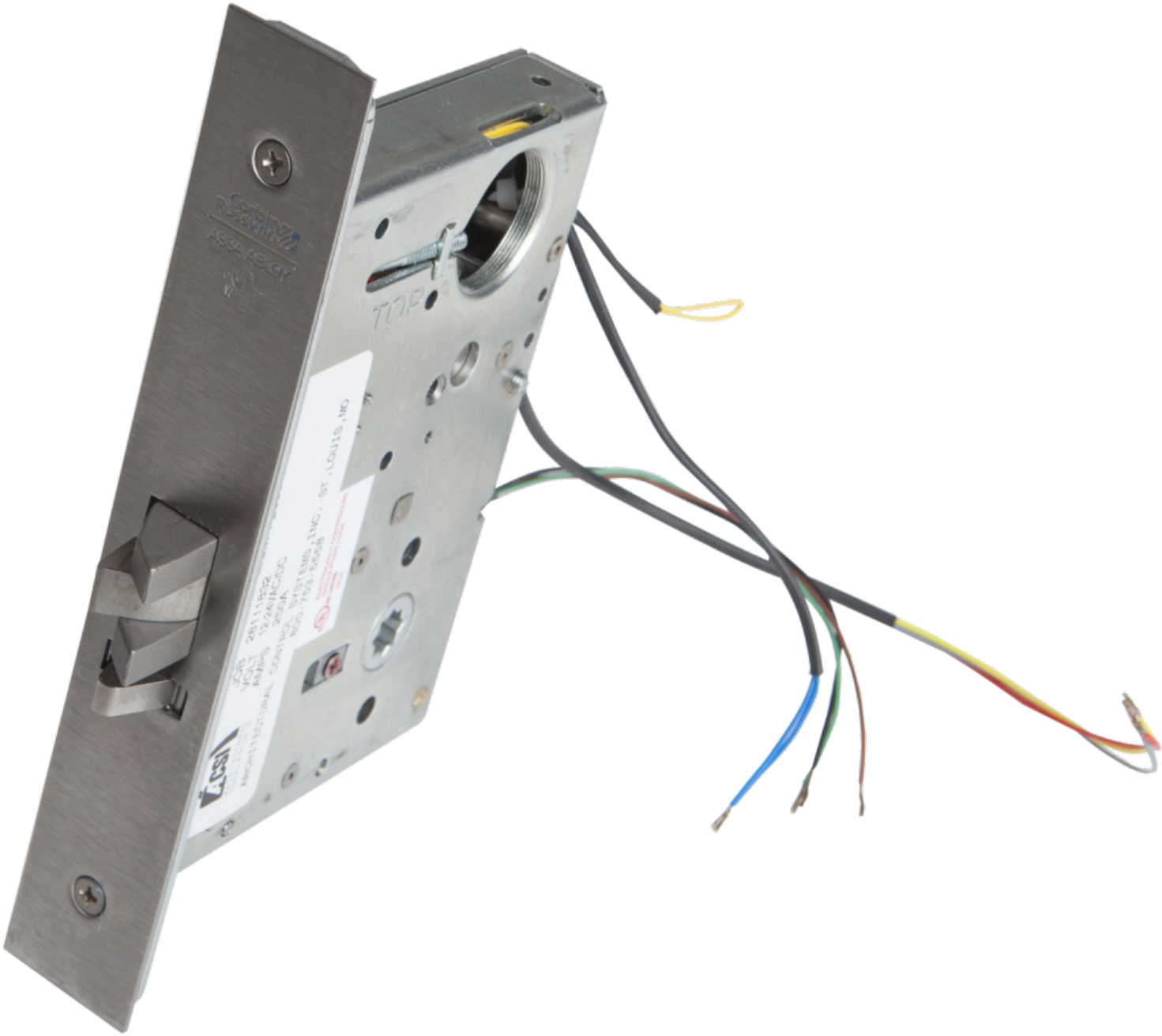
Corbin Russwin
ASSA ABLOY
TOP

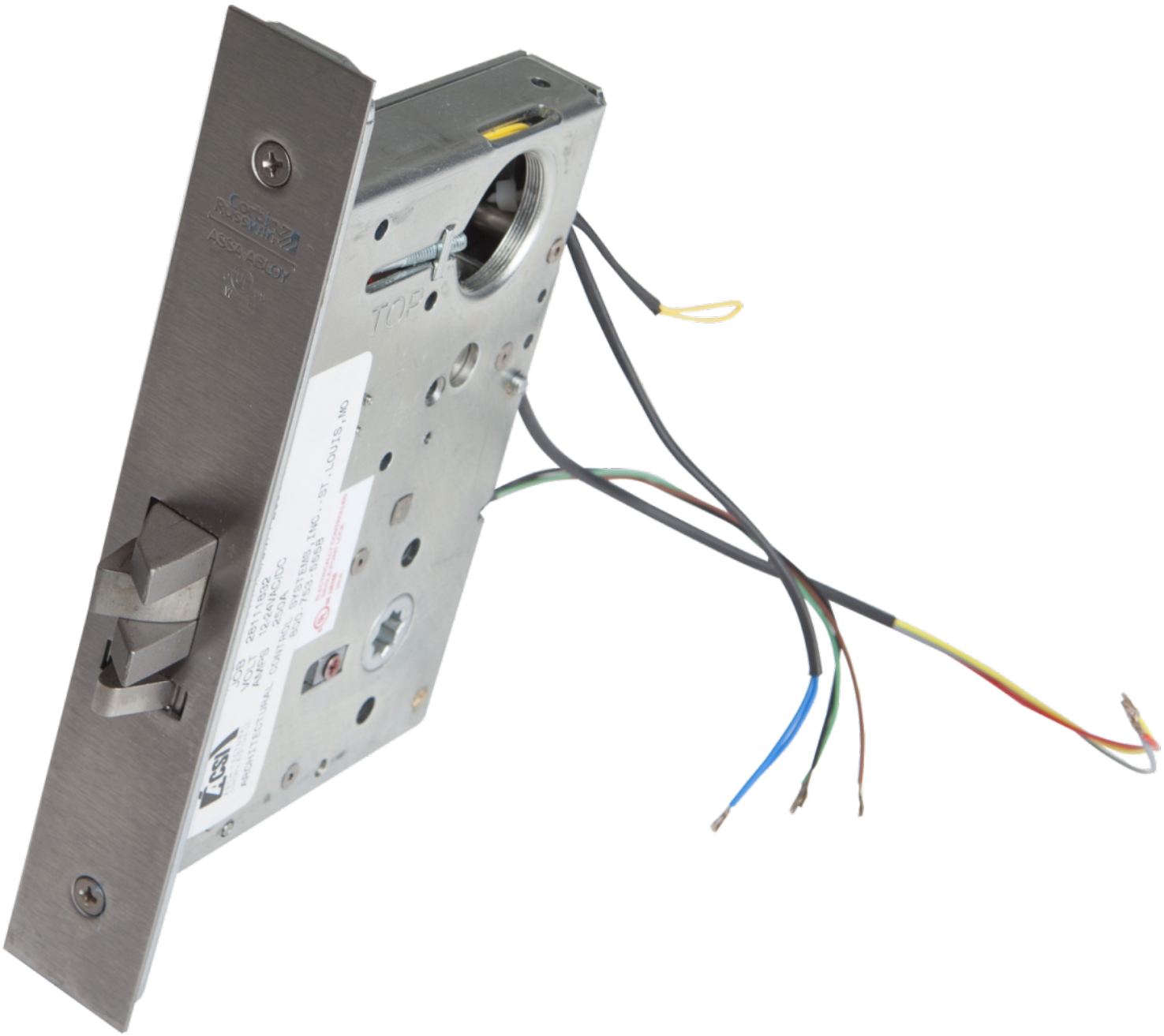
Corbin Russwin
ASSA ABLOY
TOP

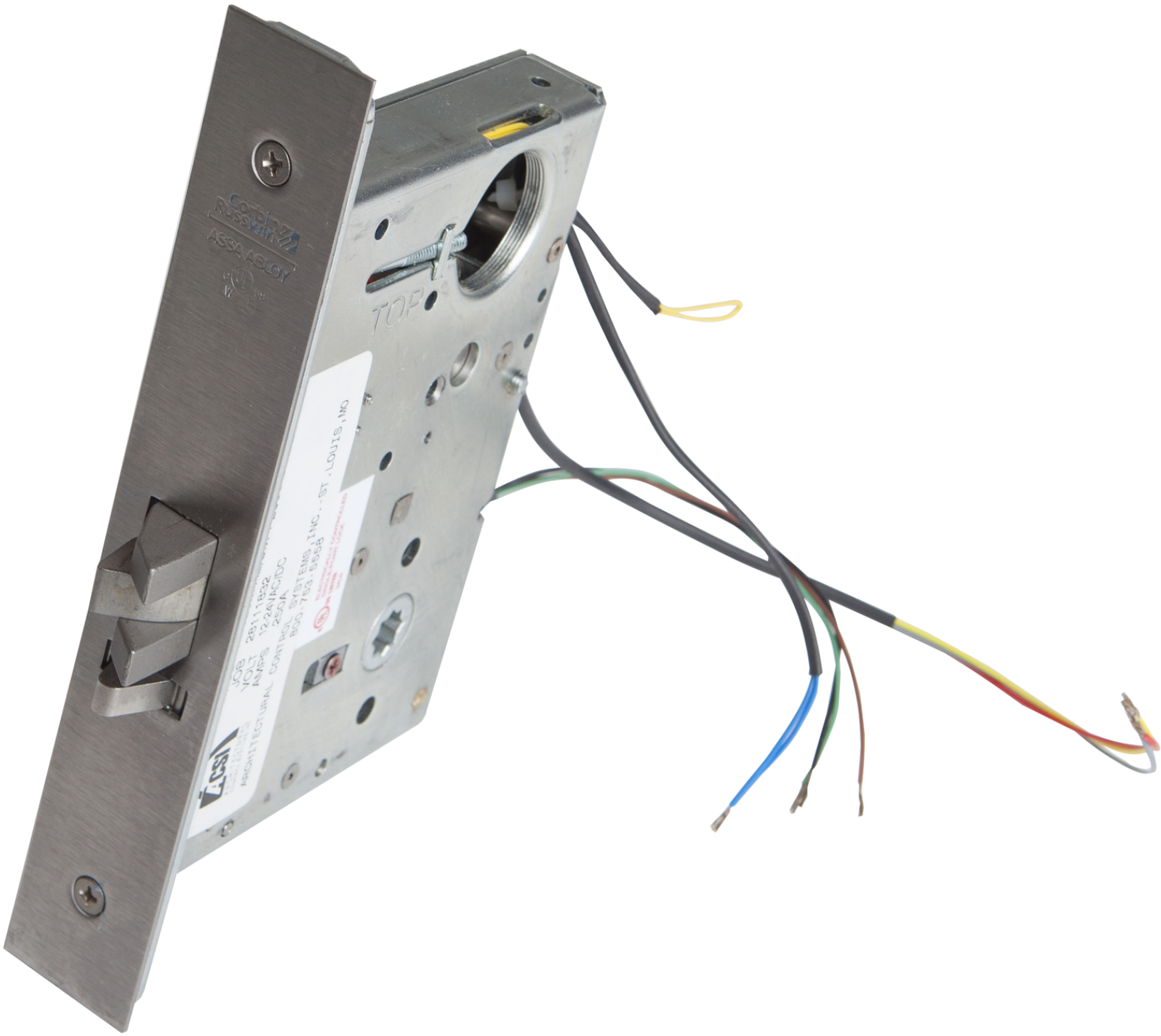
ASSA ABLOY
TOP





































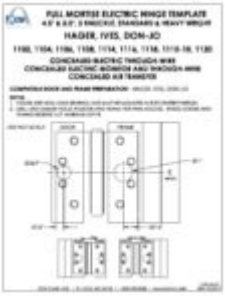
FULL MORTISE ELECTRIC HINGE TEMPLATE
HAGER, IVES, DON-JO
CONCEALED ELECTRIC THROUGH WIRE
CONCEALED ELECTRIC MONITOR AND THROUGH WIRE
CONCEALED AIR TRANSFER

FULL MORTISE ELECTRIC HINGE TEMPLATE

4.5" & 5.0", 5 KNUCKLE, STANDARD & HEAVY WEIGHT

HAGER, IVES, DON-JO

1102, 1104, 1106, 1108, 1114, 1116, 1118, 1110-10, 1120

CONCEALED ELECTRIC THROUGH-WIRE
CONCEALED ELECTRIC MONITOR AND THROUGH-WIRE
CONCEALED AIR TRANSFER

COMPATIBLE DOOR AND FRAME PREPARATION: HAGER, IVES, DON-JO

NOTES:

1. HINGES ARE NON-LOAD BEARING AND MUST BE MOUNTED IN THE CENTER POSITION.
2. DRILL AND DEBURR HOLES IN DOOR AND FRAME FOR WIRE ACCESS. WOOD DOORS AND FRAMES REQUIRE A 3" MINIMUM DEPTH.

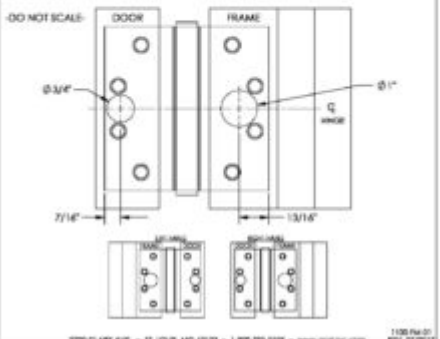

FULL MORTISE ELECTRIC HINGE TEMPLATE

4.5" & 5.0", 5 KNUCKLE, STANDARD & HEAVY WEIGHT

HAGER, IVES, DON-JO

1102, 1104, 1106, 1108, 1114, 1116, 1118, 1110-10, 1120

CONCEALED ELECTRIC THROUGH-WIRE
CONCEALED ELECTRIC MONITOR AND THROUGH-WIRE
CONCEALED AIR TRANSFER

COMPATIBLE DOOR AND FRAME PREPARATION: HAGER, IVES, DON-JO

NOTES:

1. HINGES ARE NON-LOAD BEARING AND MUST BE MOUNTED IN THE CENTER POSITION.
2. DRILL AND DEBURR HOLES IN DOOR AND FRAME FOR WIRE ACCESS. WOOD DOORS AND FRAMES REQUIRE A 2" MINIMUM DEPTH.

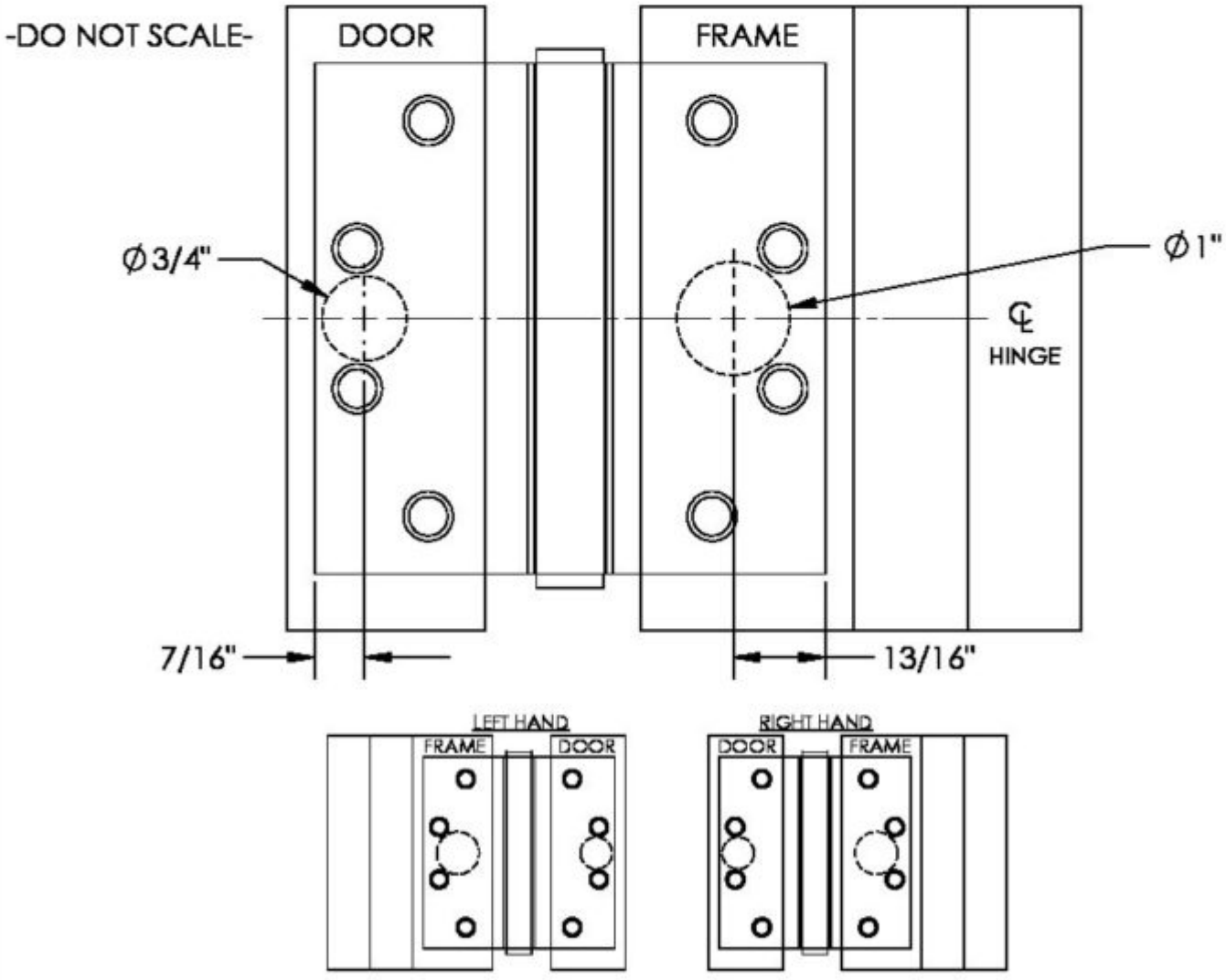

FULL MORTISE ELECTRIC HINGE TEMPLATE

4.5" & 5.0", 5 KNUCKLE, STANDARD & HEAVY WEIGHT

HAGER, IVES, DON-JO

1102, 1104, 1106, 1108, 1114, 1116, 1118, 1110-10, 1120

CONCEALED ELECTRIC THROUGH-WIRE
CONCEALED ELECTRIC MONITOR AND THROUGH-WIRE
CONCEALED AIR TRANSFER

COMPATIBLE DOOR AND FRAME PREPARATION: HAGER, IVES, DON-JO

NOTES:

1. HINGES ARE NON-LOAD BEARING AND MUST BE MOUNTED IN THE CENTER POSITION.
2. DRILL AND DEBURR HOLES IN DOOR AND FRAME FOR WIRE ACCESS. WOOD DOORS AND FRAMES REQUIRE A 2" MINIMUM DEPTH.

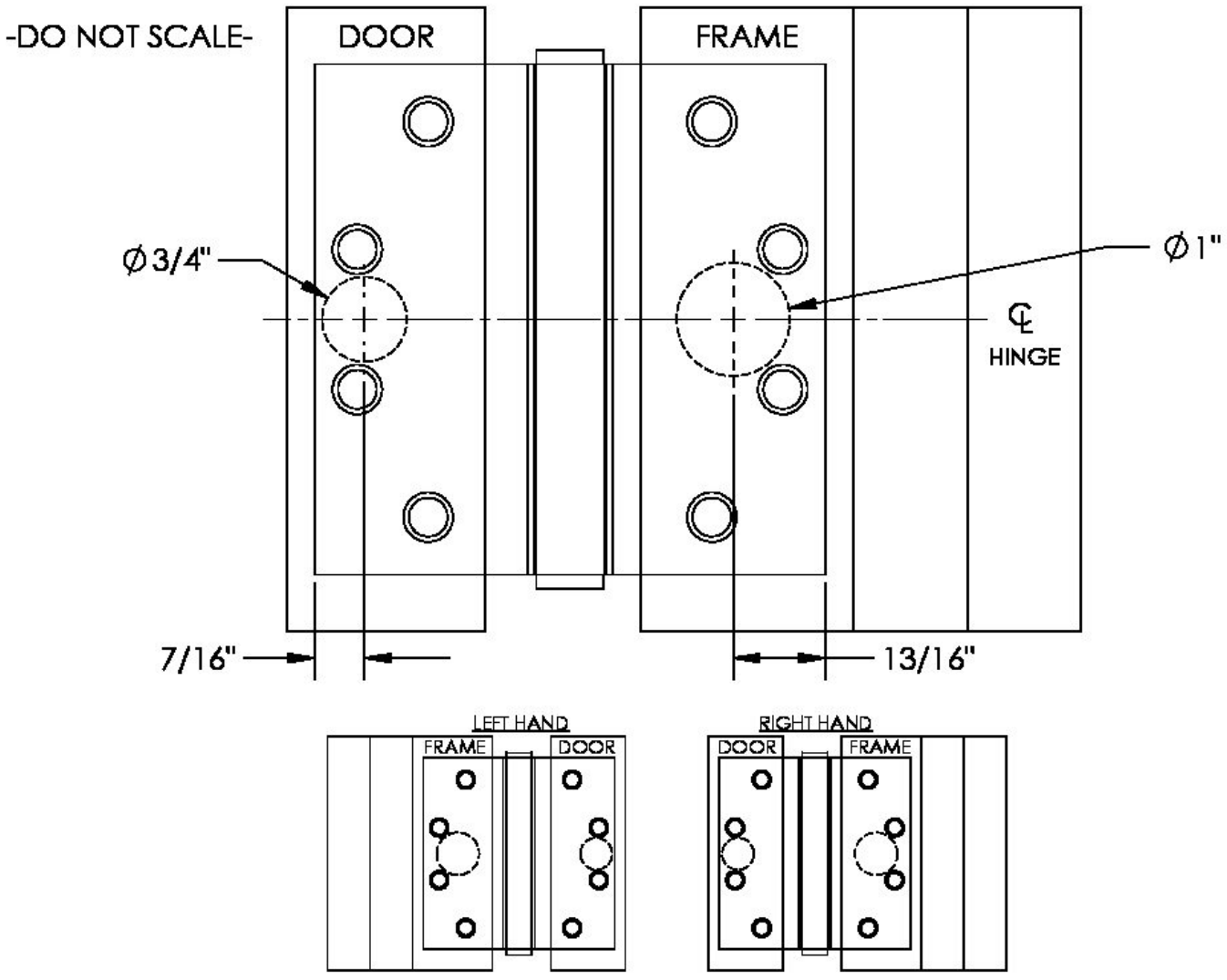

FULL MORTISE ELECTRIC HINGE TEMPLATE

4.5" & 5.0", 5 KNUCKLE, STANDARD & HEAVY WEIGHT

HAGER, IVES, DON-JO

1102, 1104, 1106, 1108, 1114, 1116, 1118, 1110-10, 1120

CONCEALED ELECTRIC THROUGH-WIRE
CONCEALED ELECTRIC MONITOR AND THROUGH-WIRE
CONCEALED AIR TRANSFER

COMPATIBLE DOOR AND FRAME PREPARATION: HAGER, IVES, DON-JO

NOTES:

1. HINGES ARE NON-LOAD BEARING AND MUST BE MOUNTED IN THE CENTER POSITION.
2. DRILL AND DEBURR HOLES IN DOOR AND FRAME FOR WIRE ACCESS. WOOD DOORS AND FRAMES REQUIRE A 2" MINIMUM DEPTH.

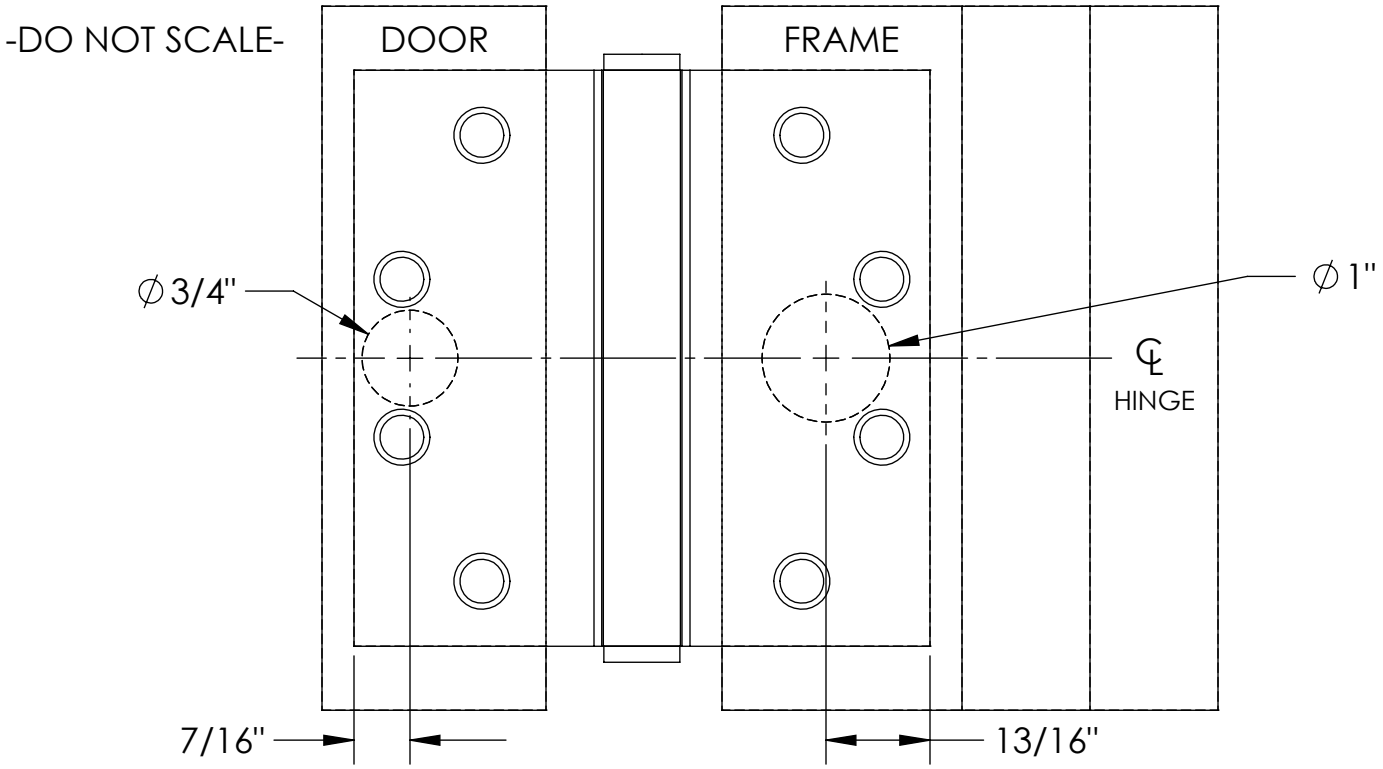

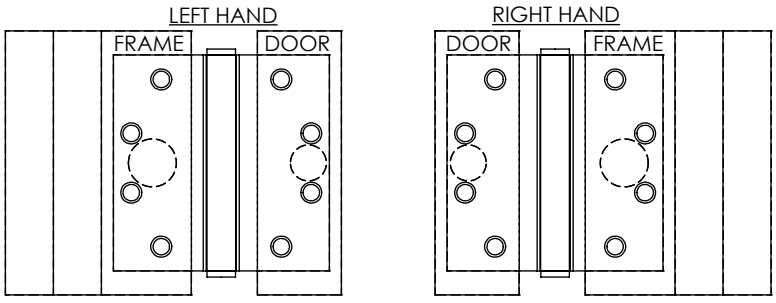

FULL MORTISE ELECTRIC HINGE TEMPLATE

4.5" & 5.0", 3 & 5 KNUCKLE, STANDARD & HEAVY WEIGHT

BOMMER, DON-JO, HAGER, IVES, MCKINNEY, PBB, STANLEY

1110

CONCEALED ELECTRIC MONITOR

COMPATIBLE DOOR AND FRAME PREPARATION: BOMMER, DON-JO, HAGER

NOTES:

1. HINGES ARE NON-LOAD BEARING AND MUST BE MOUNTED IN THE CENTER POSITION.
2. DRILL AND DEBURR HOLE IN FRAME FOR WIRE ACCESS. WOOD FRAMES REQUIRE A 2" MINIMUM DEPTH.

-DO NOT SCALE-

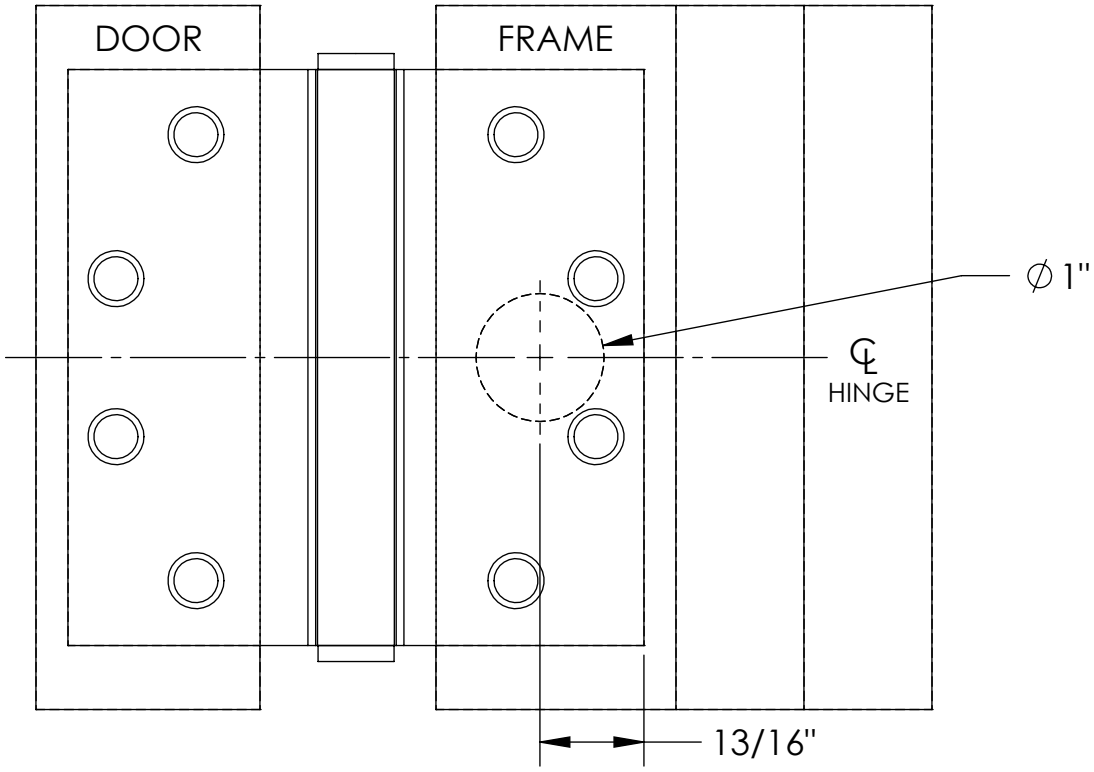

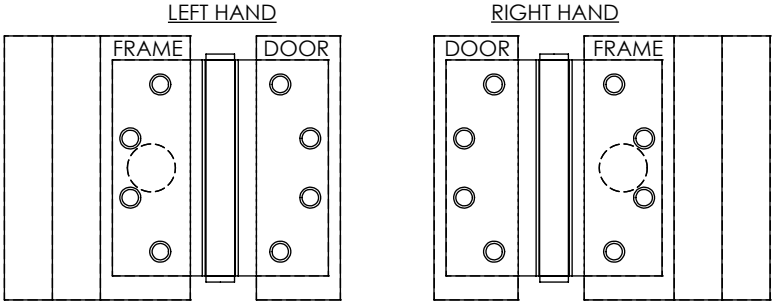

FULL MORTISE ELECTRIC HINGE TEMPLATE

4.5" & 5.0", 2 & 3 & 5 KNUCKLE, STANDARD & HEAVY WEIGHT

BOMMER, DON-JO, HAGER, IVES, MCKINNEY, PBB, STANLEY

E1S

EXPOSED ELECTRIC MONITOR

NOTES:

1. DRILL AND DEBURR HOLE IN FRAME FOR SWITCH CLEARANCE AND WIRE ACCESS. WOOD FRAMES REQUIRE A 2" MINIMUM DEPTH.
2. DRILL AND DEBURR HOLE IN DOOR FOR ADJUSTMENT SCREW CLEARANCE. WOOD DOORS REQUIRE A 3/8" MINIMUM DEPTH.

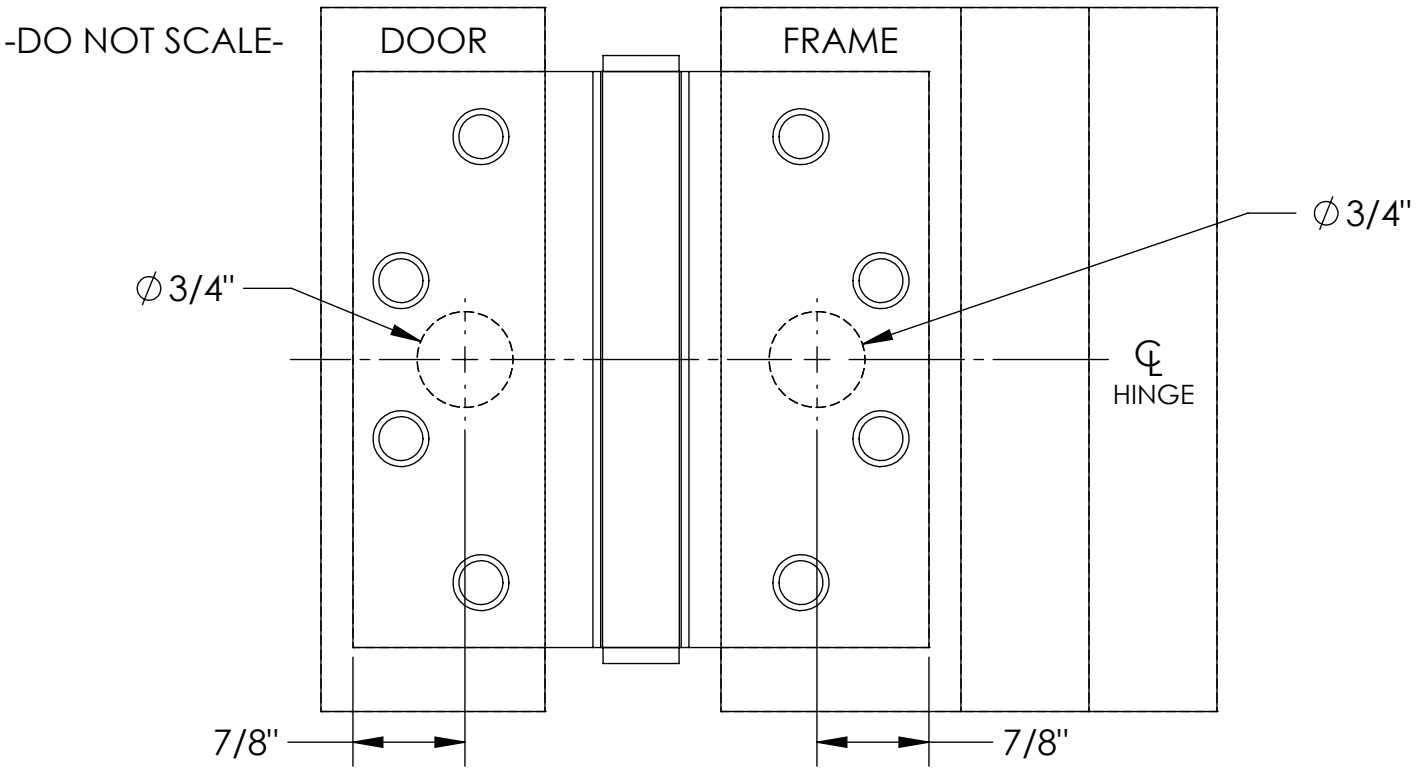

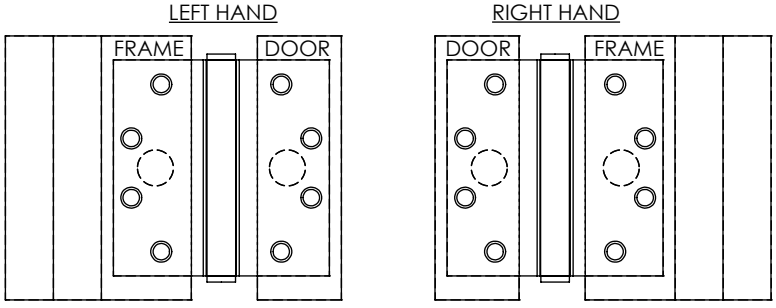

FULL MORTISE ELECTRIC HINGE TEMPLATE
4.5" & 5.0", 5 KNUCKLE, STANDARD & HEAVY WEIGHT

BOMMER, DON-JO, HAGER, IVES, MCKINNEY, PBB, STANLEY

E1S AND 1102, 1104, 1106, 1108

EXPOSED ELECTRIC MONITOR AND THROUGH-WIRE

NOTES:

1. HINGES ARE NON-LOAD BEARING AND MUST BE MOUNTED IN CENTER POSITION.
2. DRILL AND DEBURR HOLES IN FRAME FOR SWITCH CLEARANCE AND WIRE ACCESS. WOOD FRAMES REQUIRE A 2" MINIMUM DEPTH.
3. DRILL AND DEBURR HOLES IN DOOR FOR ADJUSTMENT SCREW CLEARANCE AND WIRE ACCESS. WOOD DOORS REQUIRE A 3/8" MINIMUM DEPTH.

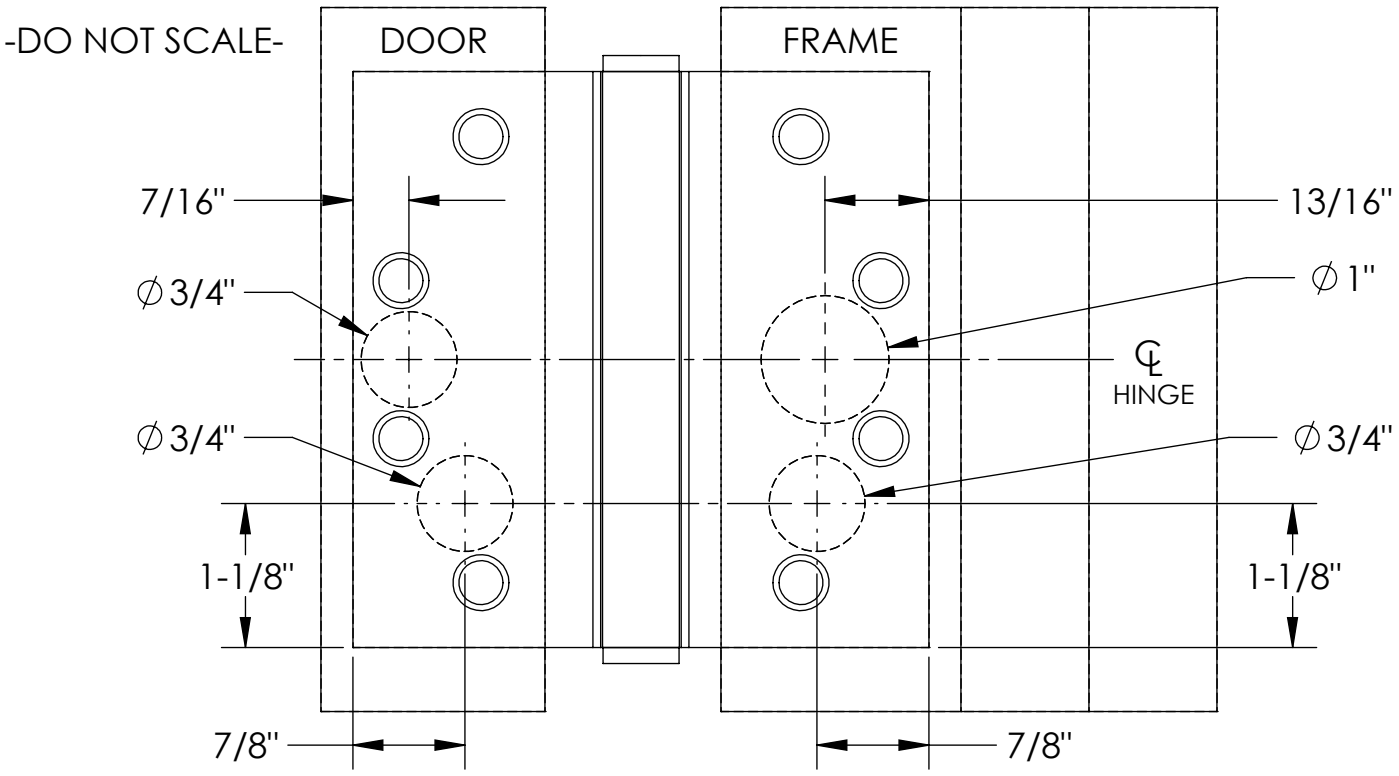

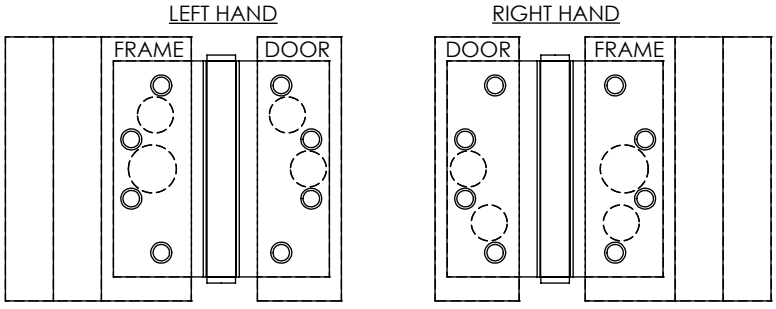

FULL MORTISE ELECTRIC HINGE TEMPLATE
4.5" & 5.0", 5 KNUCKLE, STANDARD & HEAVY WEIGHT

BOMMER, DON-JO, HAGER, IVES, MCKINNEY, PBB, STANLEY

E1S AND 1100-10, 1100-12, 1102x4

EXPOSED ELECTRIC MONITOR AND THROUGH-WIRE

NOTES:

1. HINGES ARE NON-LOAD BEARING AND MUST BE MOUNTED IN CENTER POSITION.
2. DRILL AND DEBURR HOLES IN FRAME FOR SWITCH CLEARANCE AND WIRE ACCESS. WOOD FRAMES REQUIRE A 2" MINIMUM DEPTH.
3. DRILL AND DEBURR HOLES IN DOOR FOR ADJUSTMENT SCREW CLEARANCE AND WIRE ACCESS. WOOD DOORS REQUIRE A 3/8" MINIMUM DEPTH.

-DO NOT SCALE-

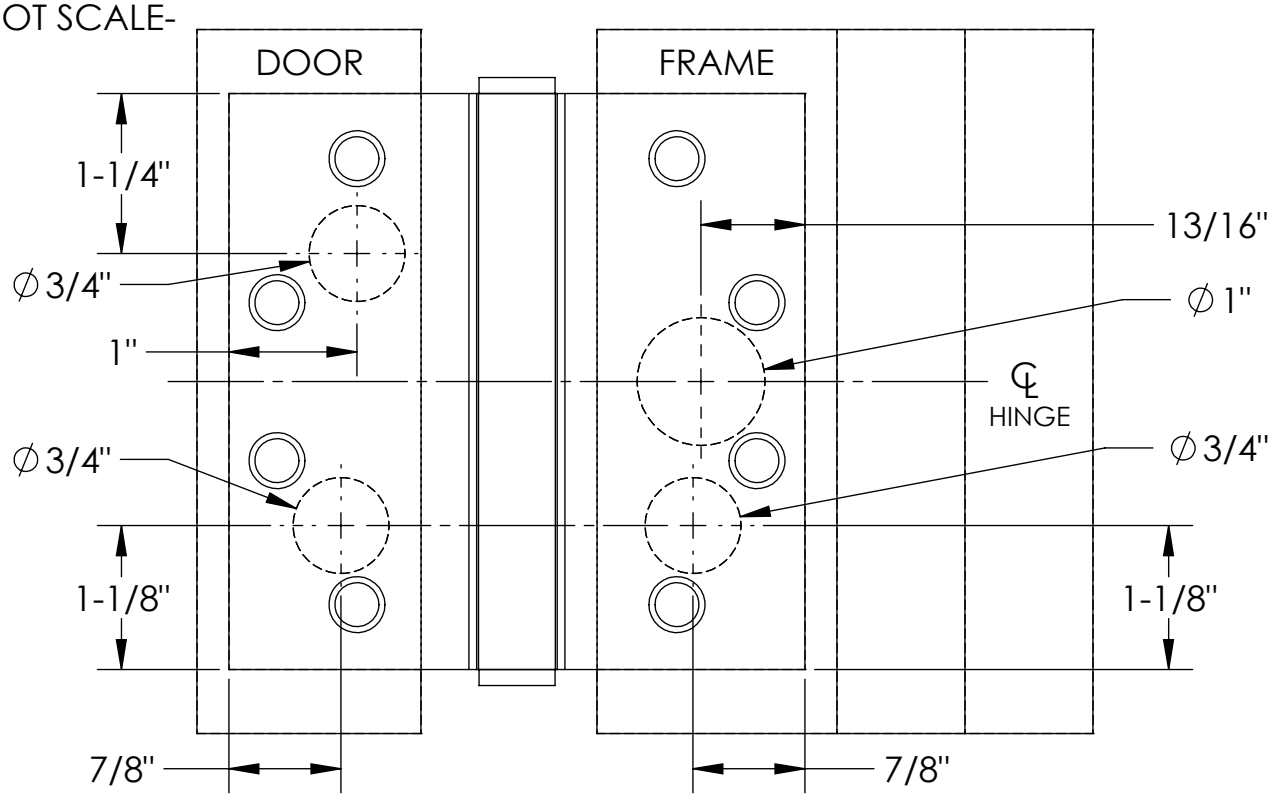

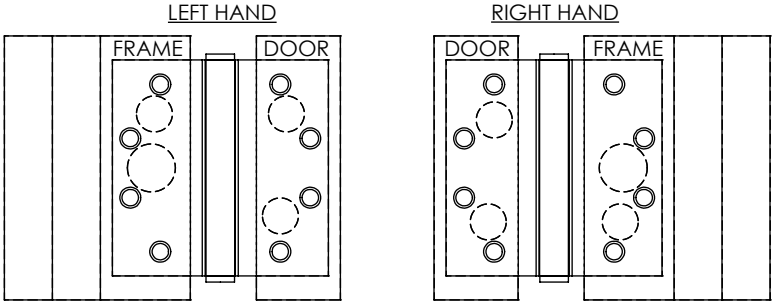

ELECTRIC PIVOT TEMPLATE

3/4" OFFSET INTERMEDIATE PIVOT

ABH, DORMA, IVES, RIXSON

1114, 1116, 1118, 1110-10

EXPOSED MAGNETIC MONITOR AND CONCEALED THROUGH-WIRE

COMPATIBLE DOOR AND FRAME PREPARATION: ABH

NOTES:

1. HINGES ARE NON-LOAD BEARING AND MUST BE MOUNTED IN THE CENTER POSITION.
2. DRILL AND DEBURR HOLES IN FRAME FOR SWITCH CLEARANCE AND WIRE ACCESS.
3. DRILL AND DEBURR HOLES IN DOOR FOR MAGNET CLEARANCE AND WIRE ACCESS.

-DO NOT SCALE-

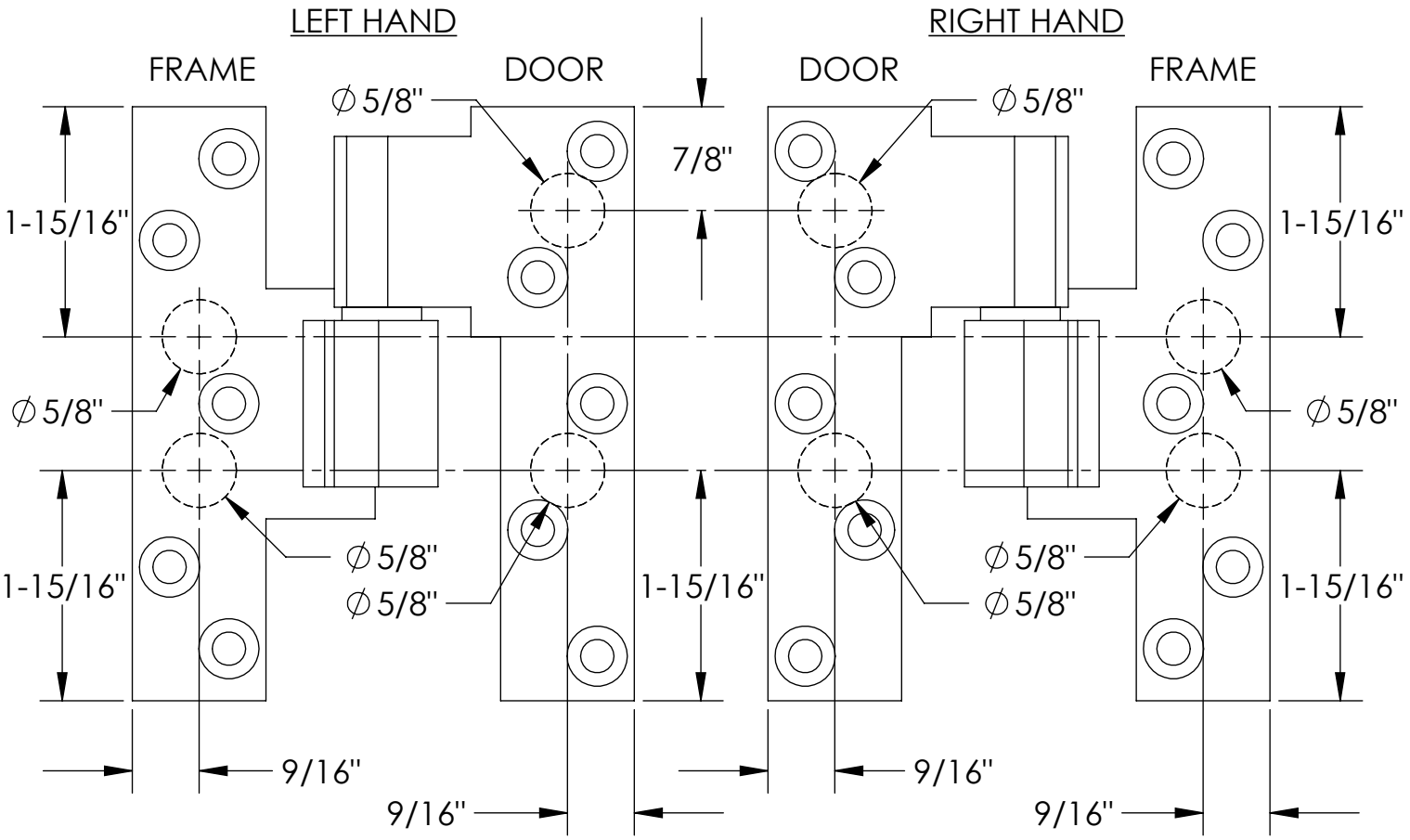

ELECTRIC PIVOT TEMPLATE

POCKET PIVOT

ABH, DORMA, IVES, MCKINNEY, RIXSON

1102, 1104, 1106, 1108, 1100-10, 1100-12, 1102x4

CONCEALED ELECTRIC THROUGH-WIRE

COMPATIBLE DOOR AND FRAME PREPARATION: ABH, IVES, RIXSON

NOTES:

1. DRILL AND DEBURR HOLE IN DOOR FOR WIRE ACCESS.

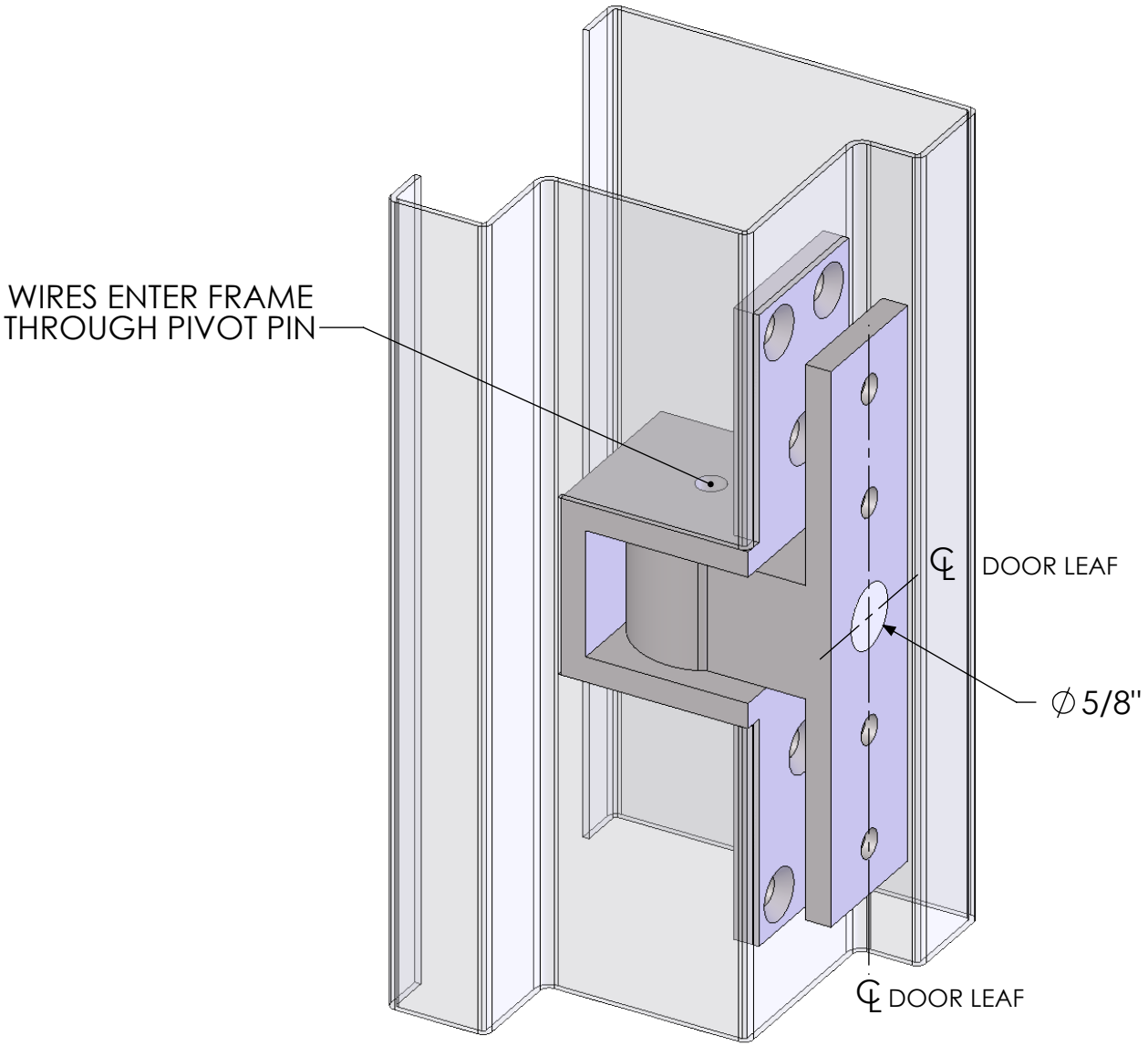

ELECTRIC PIVOT TEMPLATE

CENTER HUNG TOP PIVOT

ABH, DORMA, IVES, RIXSON

1102, 1104, 1106, 1108, 1100-10, 1100-12, 1102x4

CONCEALED ELECTRIC THROUGH-WIRE

COMPATIBLE DOOR AND FRAME PREPARATION: ABH, DORMA, IVES, RIXSON

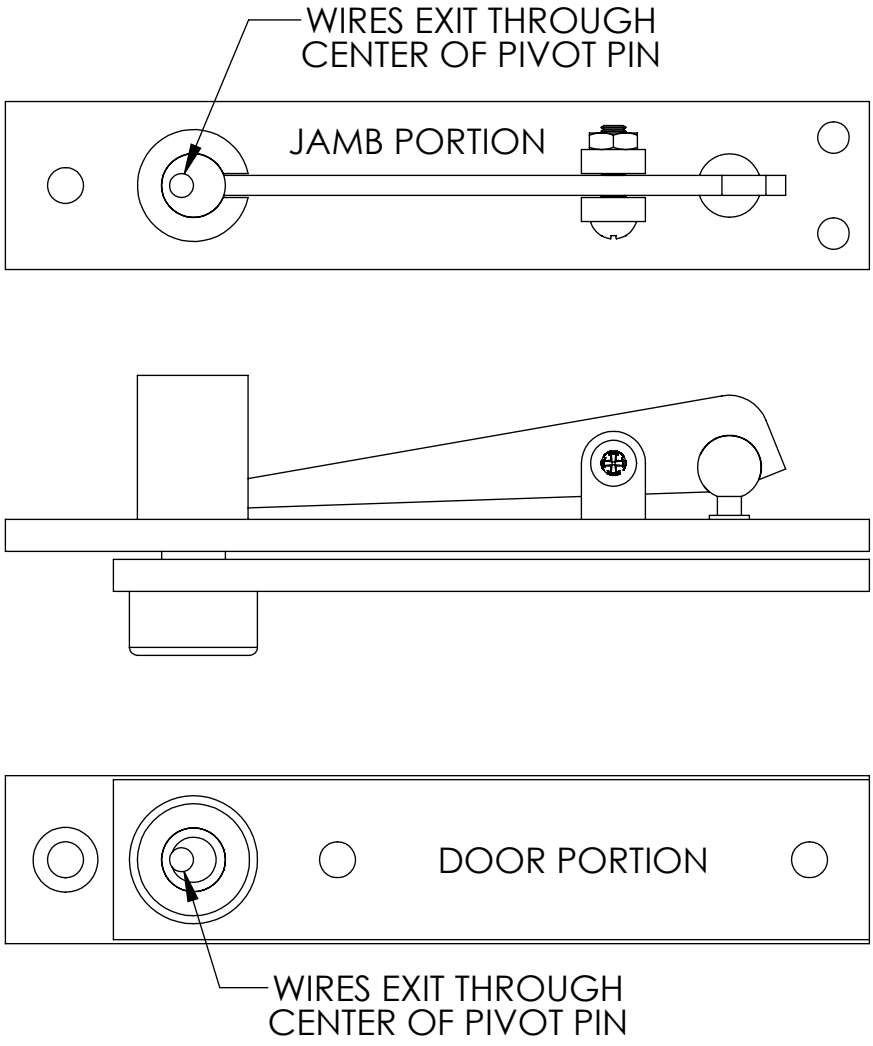

SWING CLEAR ELECTRIC HINGE TEMPLATE

6.5' & 8.0', 3 & 4 HINGES, STANDARD & HEAVY WEIGHT

BOMMER, HAGER, IVES, MCKINNEY, PBB, STANLEY

T4B, T4BB, T4BL, T4BB, T4BB HL, T4BB FL, T4BAB, T4B PBB, T4BL, T4BAB, T4BAA

CONCEALED ELECTRIC THROUGH WIRE

NOTES:

1. [illegible]
2. [illegible]

DOOR SCHEDULE

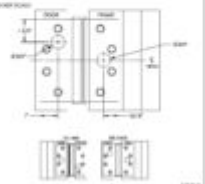

SWING CLEAR ELECTRIC HINGE TEMPLATE

4.5" & 5.0", 3 & 5 KNUCKLE, STANDARD & HEAVY WEIGHT

BOMMER, HAGER, IVES, MCKINNEY, PBB, STANLEY

1102, 1104, 1106, 1108, 1100-10, 1100-12, 1102x4, 1100-PG, 1182, 1182x4, 1182x6

CONCEALED ELECTRIC THROUGH-WIRE

NOTES:

1. HINGES ARE NON-LOAD BEARING AND MUST BE MOUNTED IN THE CENTER POSITION.
2. DRILL AND DEBURR HOLES IN DOOR AND FRAME FOR WIRE ACCESS. WOOD DOORS AND FRAMES REQUIRE A 3" MINIMUM DEPTH.

-DO NOT SCALE-

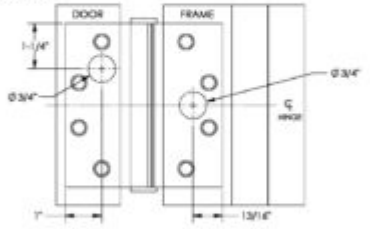



2720 CLARK AVE. – ST. LOUIS, MO 63103 – 1 800 753 0338 – www.csiel.inc.com

1100-SC-01
REV. 09/2020

SWING CLEAR ELECTRIC HINGE TEMPLATE

4.5" & 5.0", 3 & 5 KNUCKLE, STANDARD & HEAVY WEIGHT

BOMMER, HAGER, IVES, MCKINNEY, PBB, STANLEY

1102, 1104, 1106, 1108, 1100-10, 1100-12, 1102x4, 1100-PG, 1182, 1182x4, 1182x6

CONCEALED ELECTRIC THROUGH-WIRE

NOTES:

1. HINGES ARE NON-LOAD BEARING AND MUST BE MOUNTED IN THE CENTER POSITION.
2. DRILL AND DEBURR HOLES IN DOOR AND FRAME FOR WIRE ACCESS. WOOD DOORS AND FRAMES REQUIRE A 2" MINIMUM DEPTH.

-DO NOT SCALE-

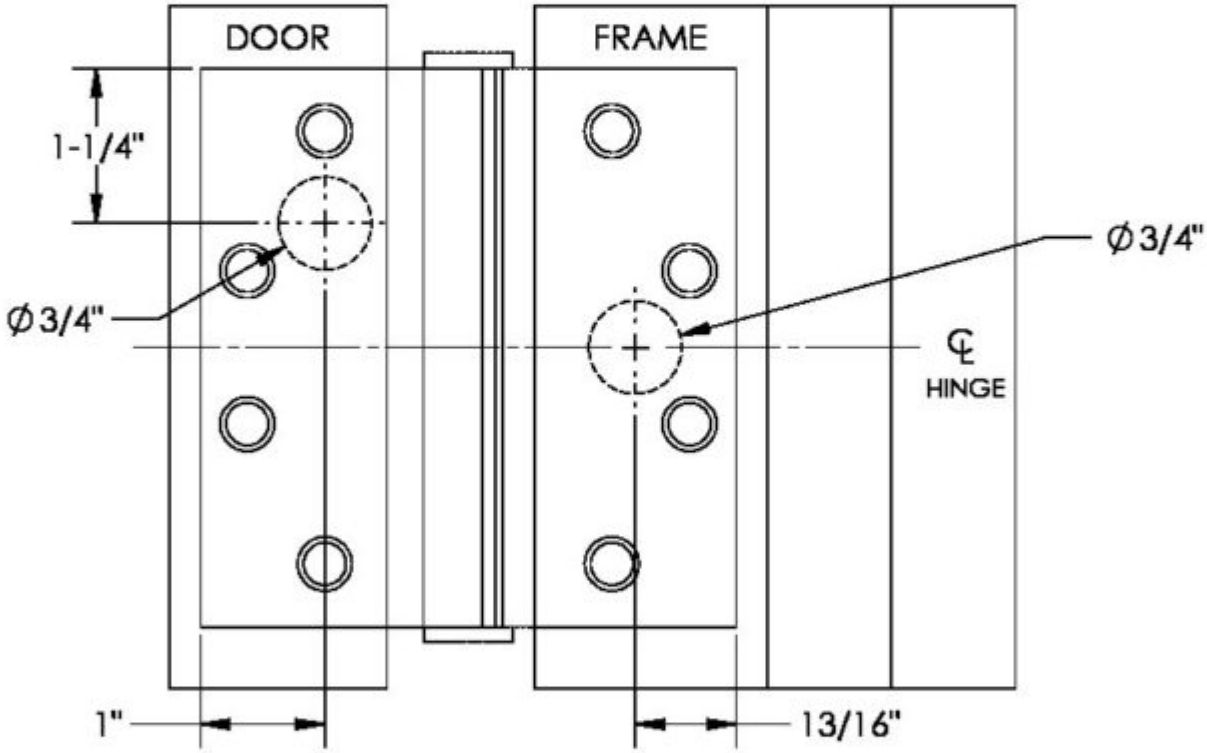

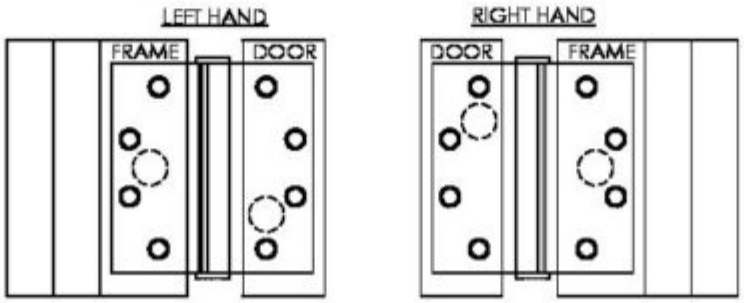

2720 CLARK AVE. ~ ST. LOUIS, MO 63103 ~ 1-800-753-5558 ~ www.acsi-inc.com

1100-SC-01
REV. 09/2020

SWING CLEAR ELECTRIC HINGE TEMPLATE

4.5" & 5.0", 3 & 5 KNUCKLE, STANDARD & HEAVY WEIGHT

BOMMER, HAGER, IVES, MCKINNEY, PBB, STANLEY

1102, 1104, 1106, 1108, 1100-10, 1100-12, 1102x4, 1100-PG, 1182, 1182x4, 1182x6

CONCEALED ELECTRIC THROUGH-WIRE

NOTES:

1. HINGES ARE NON-LOAD BEARING AND MUST BE MOUNTED IN THE CENTER POSITION.
2. DRILL AND DEBURR HOLES IN DOOR AND FRAME FOR WIRE ACCESS. WOOD DOORS AND FRAMES REQUIRE A 2" MINIMUM DEPTH.

-DO NOT SCALE-

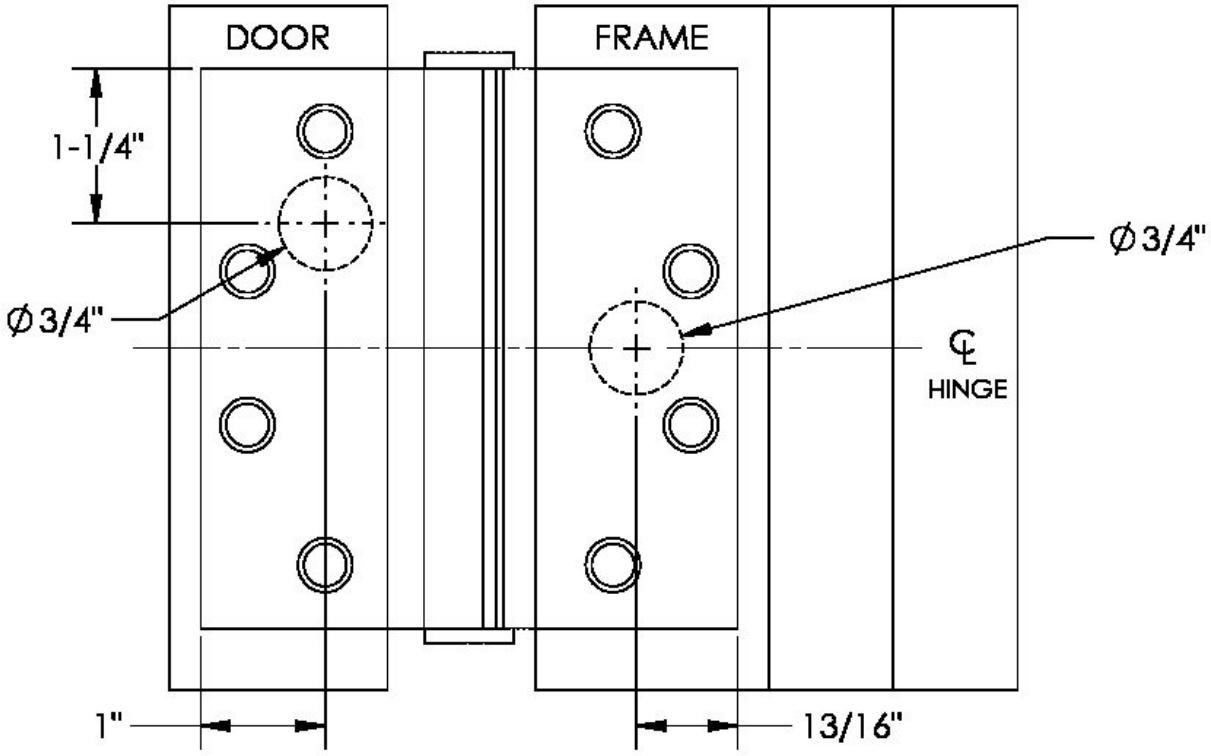

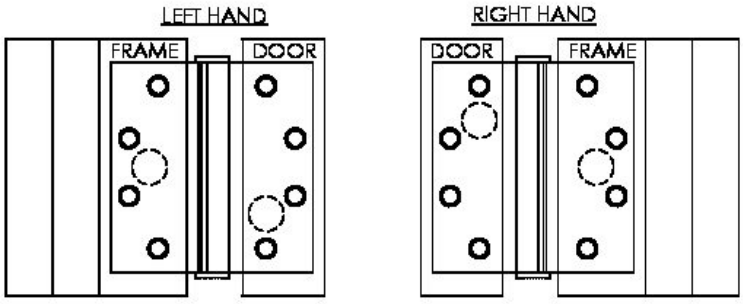

SWING CLEAR ELECTRIC HINGE TEMPLATE

4.5" & 5.0", 3 & 5 KNUCKLE, STANDARD & HEAVY WEIGHT

BOMMER, HAGER, IVES, MCKINNEY, PBB, STANLEY

1102, 1104, 1106, 1108, 1100-10, 1100-12, 1102x4, 1100-PG, 1182, 1182x4, 1182x6

CONCEALED ELECTRIC THROUGH-WIRE

NOTES:

1. HINGES ARE NON-LOAD BEARING AND MUST BE MOUNTED IN THE CENTER POSITION.
2. DRILL AND DEBURR HOLES IN DOOR AND FRAME FOR WIRE ACCESS. WOOD DOORS AND FRAMES REQUIRE A 2" MINIMUM DEPTH.

-DO NOT SCALE-

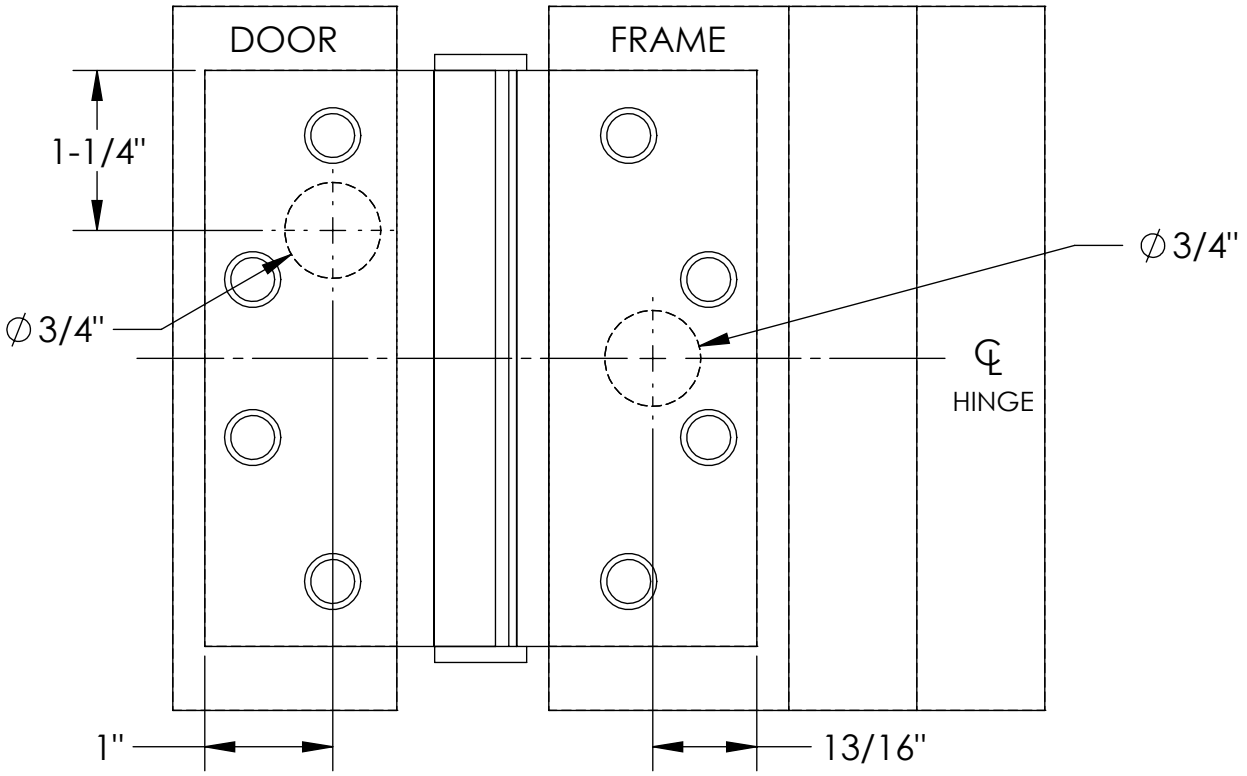

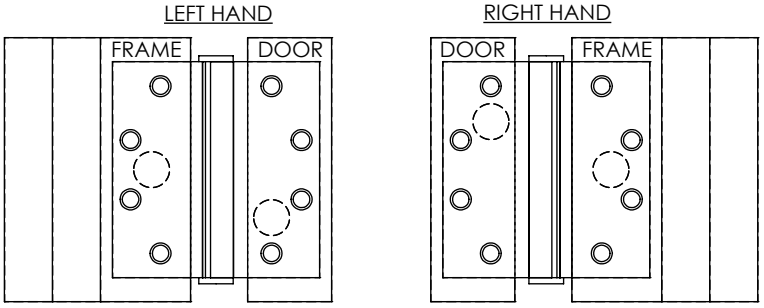





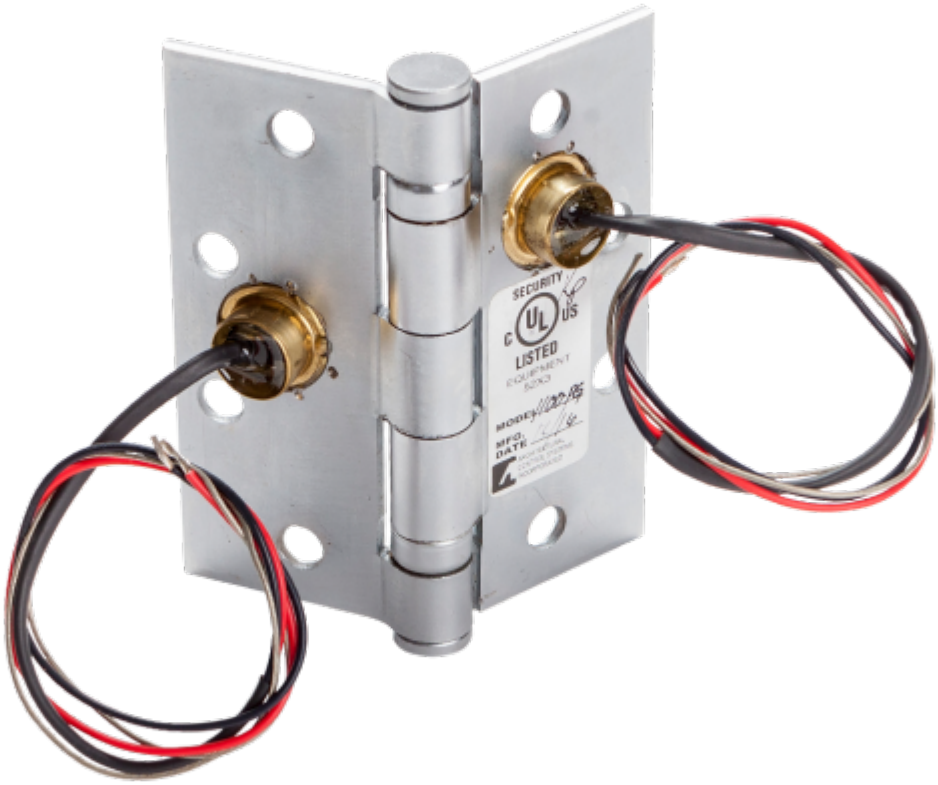
SECURITY
C UL US
LISTED
EQUIPMENT
MODEL
MFG.
DATE

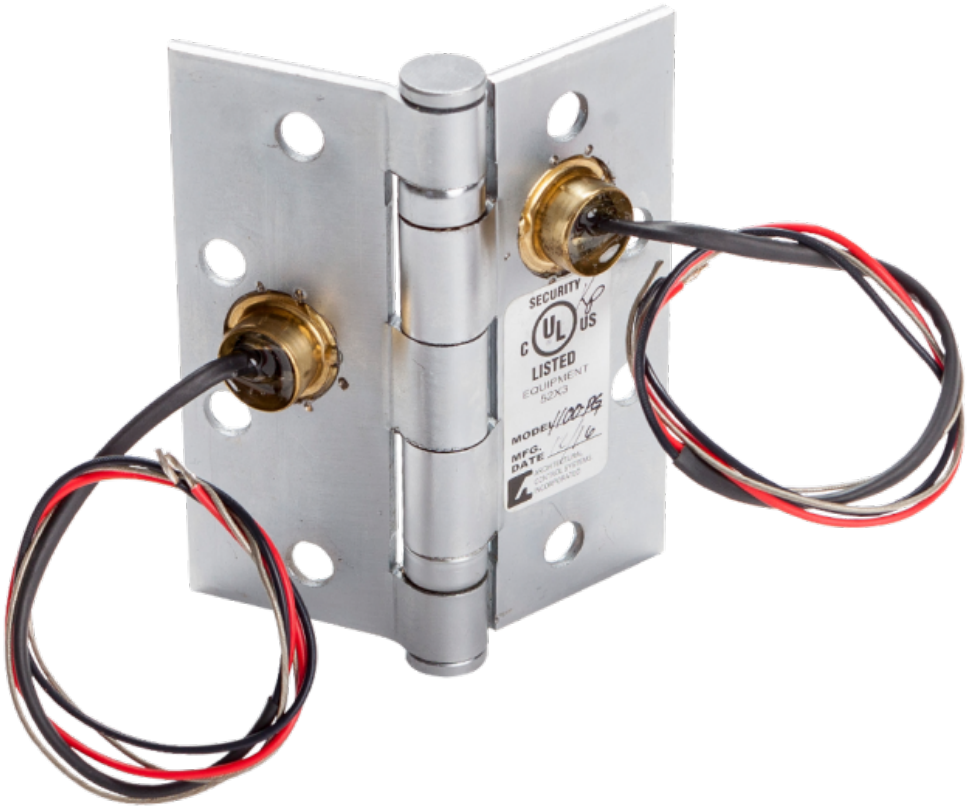
SECURITY
C UL US
LISTED
EQUIPMENT
MODEL
MFG.
DATE

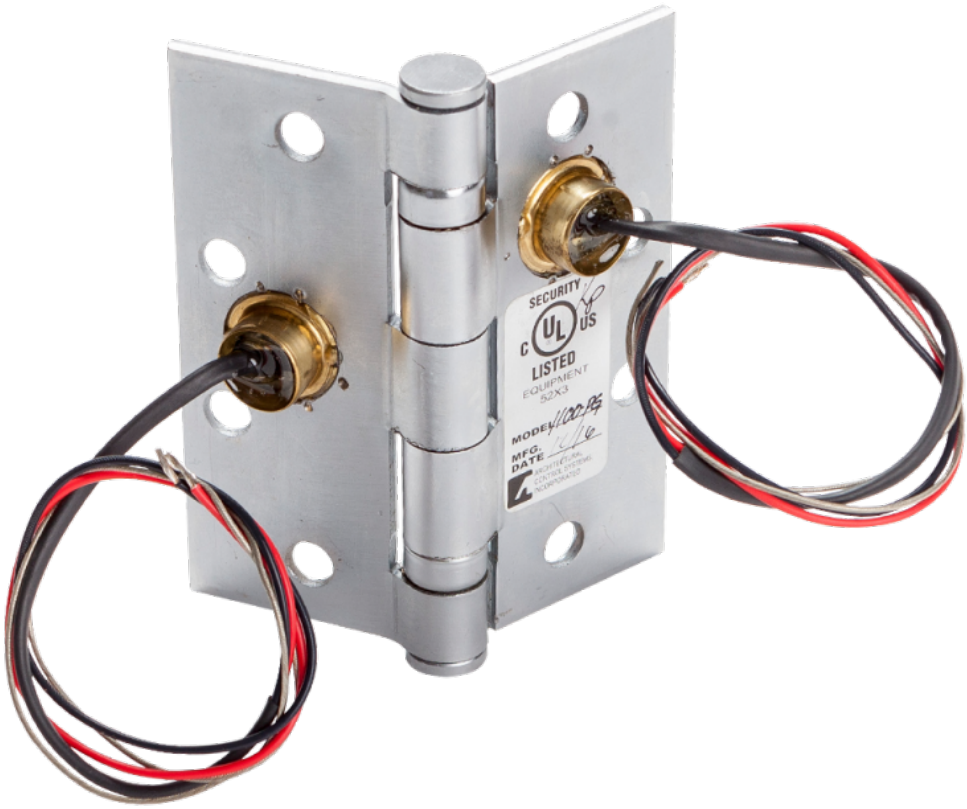
SECURITY
LISTED
EQUIPMENT
52X3
MODEL
MFG.
DATE

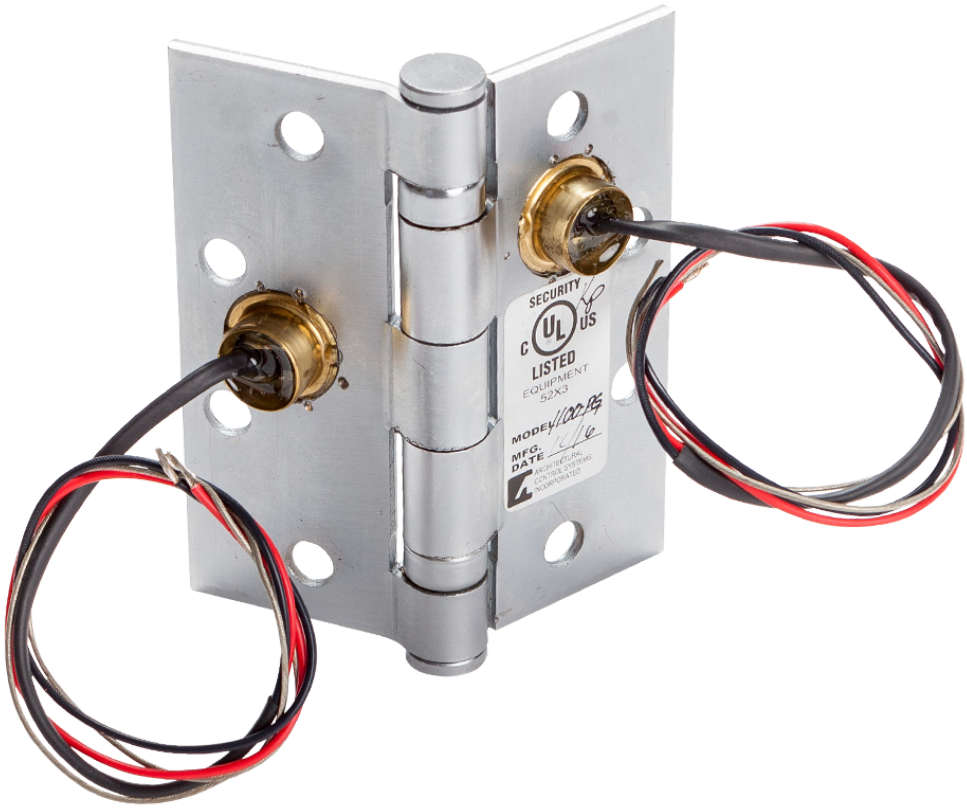
SECURITY
C UL US
LISTED
EQUIPMENT
52X3
MODEL
MFG. DATE






SECURITY
C UL US
LISTED
EQUIPMENT
5203
MODEL
MFD.
DATE


SECURITY
C UL US
LISTED
EQUIPMENT
52X3
MODEL 1102
MFG. DATE 11/16
RESIDENTIAL AND
COMMERCIAL FLEXIBLE
CONNECTOR


SECURITY
C UL US
LISTED
EQUIPMENT
52X3
MODEL 1102
MFG. DATE 11/14
RESIDENTIAL AND
COMMERCIAL FLEXIBLE
CONNECTOR


SECURITY
C UL US
LISTED
EQUIPMENT
52X3
MODEL 1102
MFG. DATE 4/14
RESIDENTIAL AND
COMMERCIAL FLEXIBLE
CONNECTOR






SECURITY
c UL us
LISTED
EQUIPMENT
5223
MODEL 1104
MFG. DATE 12-16


SECURITY
c UL us
LISTED
EQUIPMENT
52X3
MODEL 1104
MFG. DATE 12-16
ARCHITECTURAL CONTROL SYSTEMS INCORPORATED
RESIDENTIAL AND COMMERCIAL FLEXIBLE CONNECTOR


SECURITY
c UL us
LISTED
EQUIPMENT
52X3
MODEL 1104
MFG. DATE 12-16
ARCHITECTURAL CONTROLS, SYSTEMS INCORPORATED
RESIDENTIAL AND COMMERCIAL FLEXIBLE CONNECTOR


SECURITY
c UL us
LISTED
EQUIPMENT
52X3
MODEL 1104
MFG. DATE 12-16
ARCHITECTURAL CONTROL SYSTEMS INCORPORATED
RESIDENTIAL AND COMMERCIAL FLEXIBLE CONNECTOR




SECURITY
LISTED


SECURITY
C UL US
LISTED
EQUIPMENT
52X3
MODEL 1104
MFG. DATE 12-16
ARCHITECTURAL CONTROL SYSTEMS INCORPORATED
RESIDENTIAL AND COMMERCIAL FLEXIBLE CONNECTOR





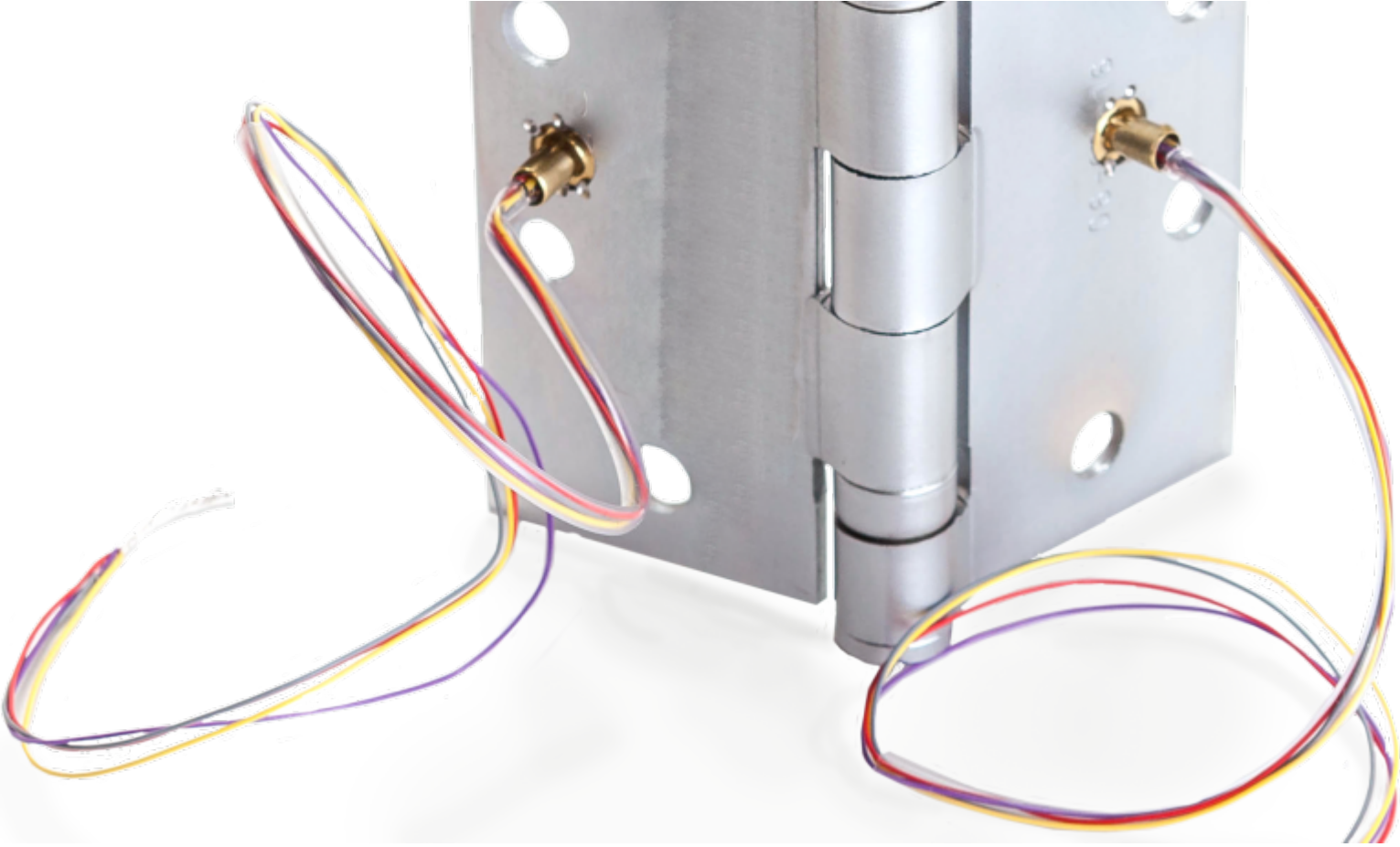

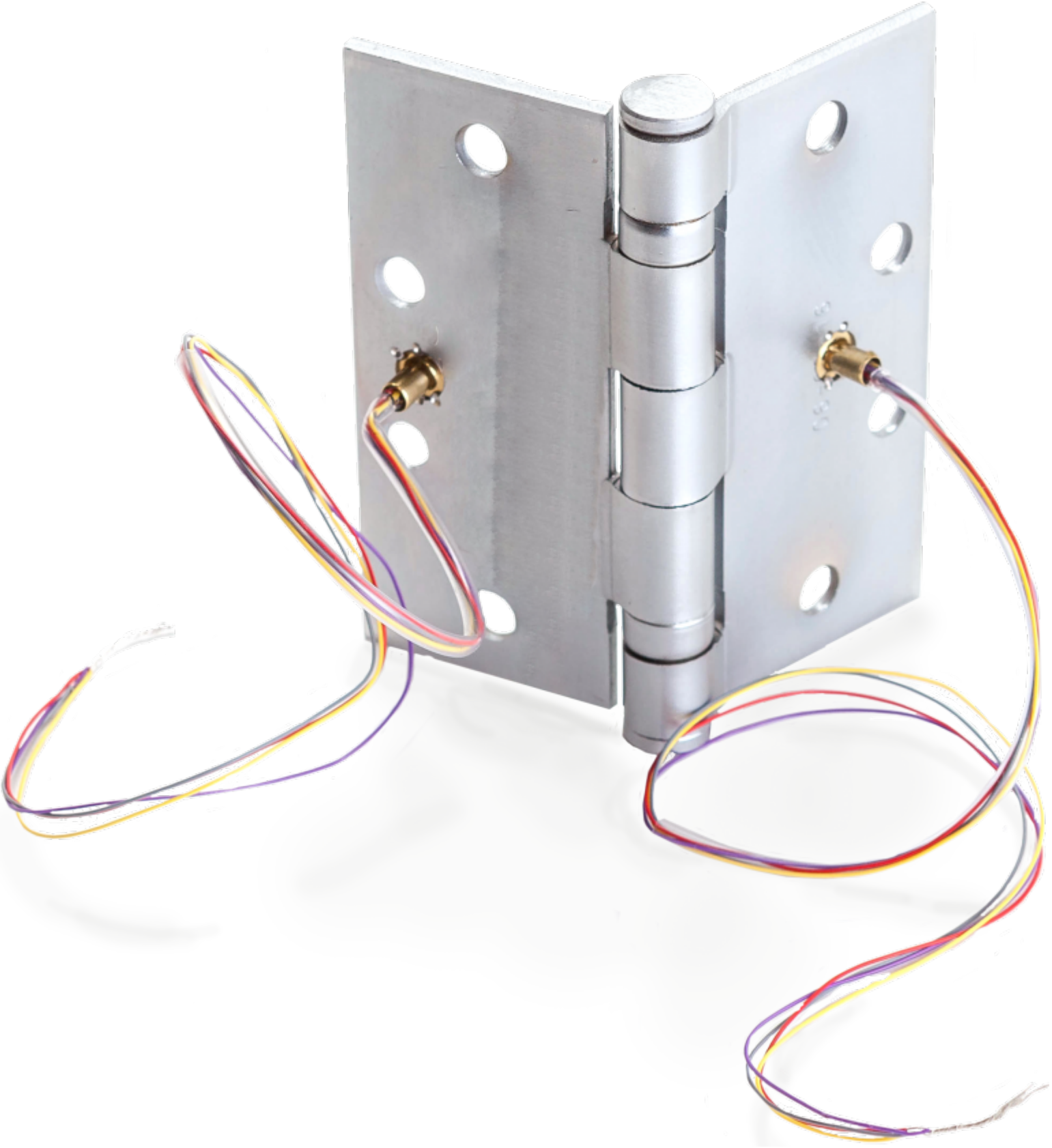

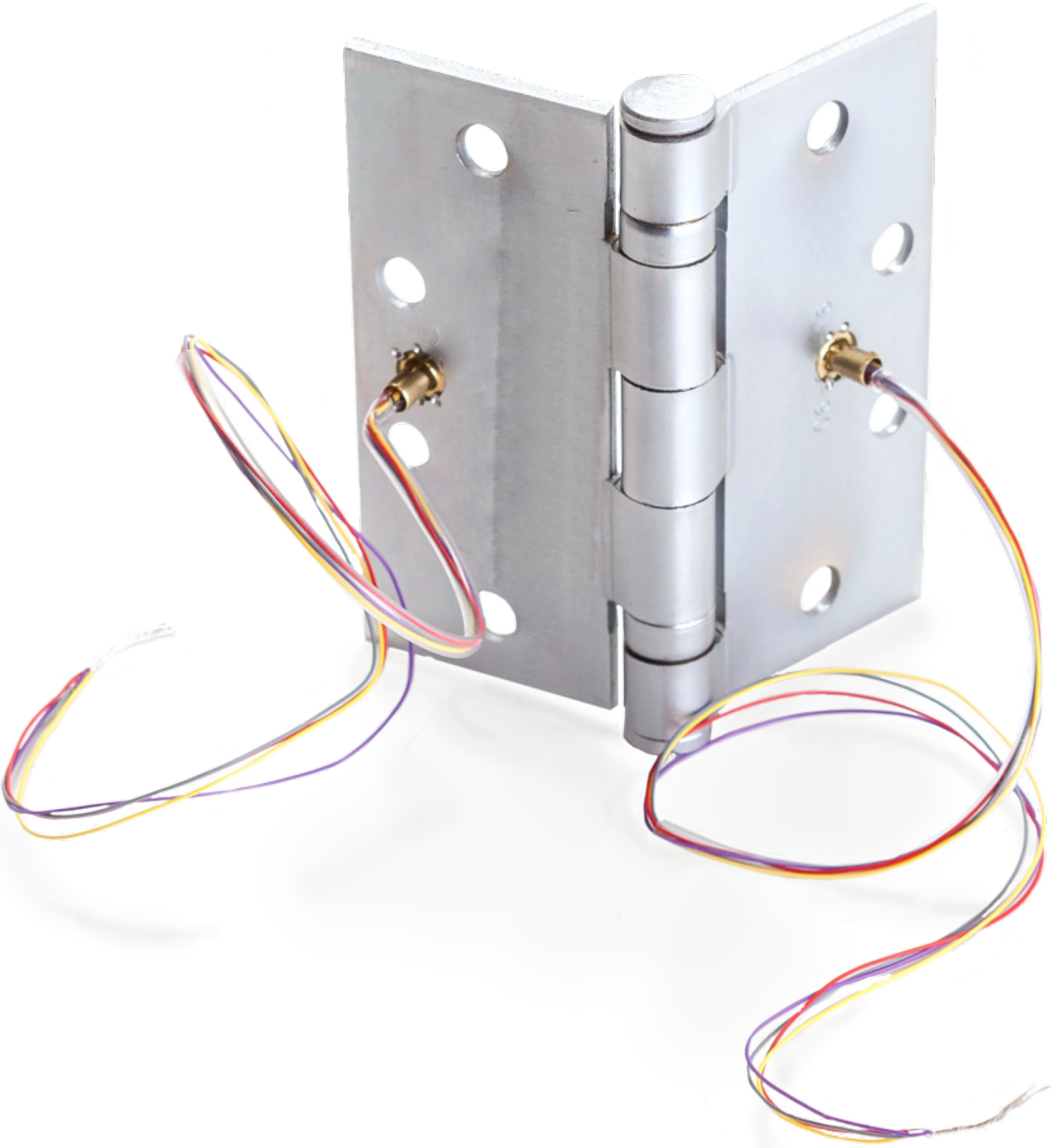

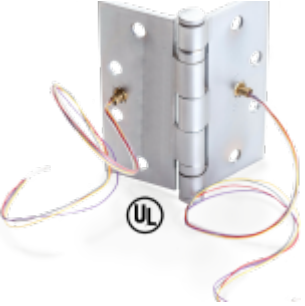

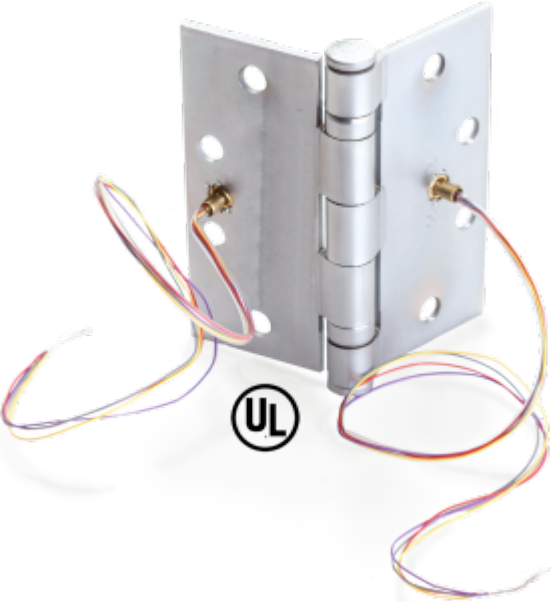

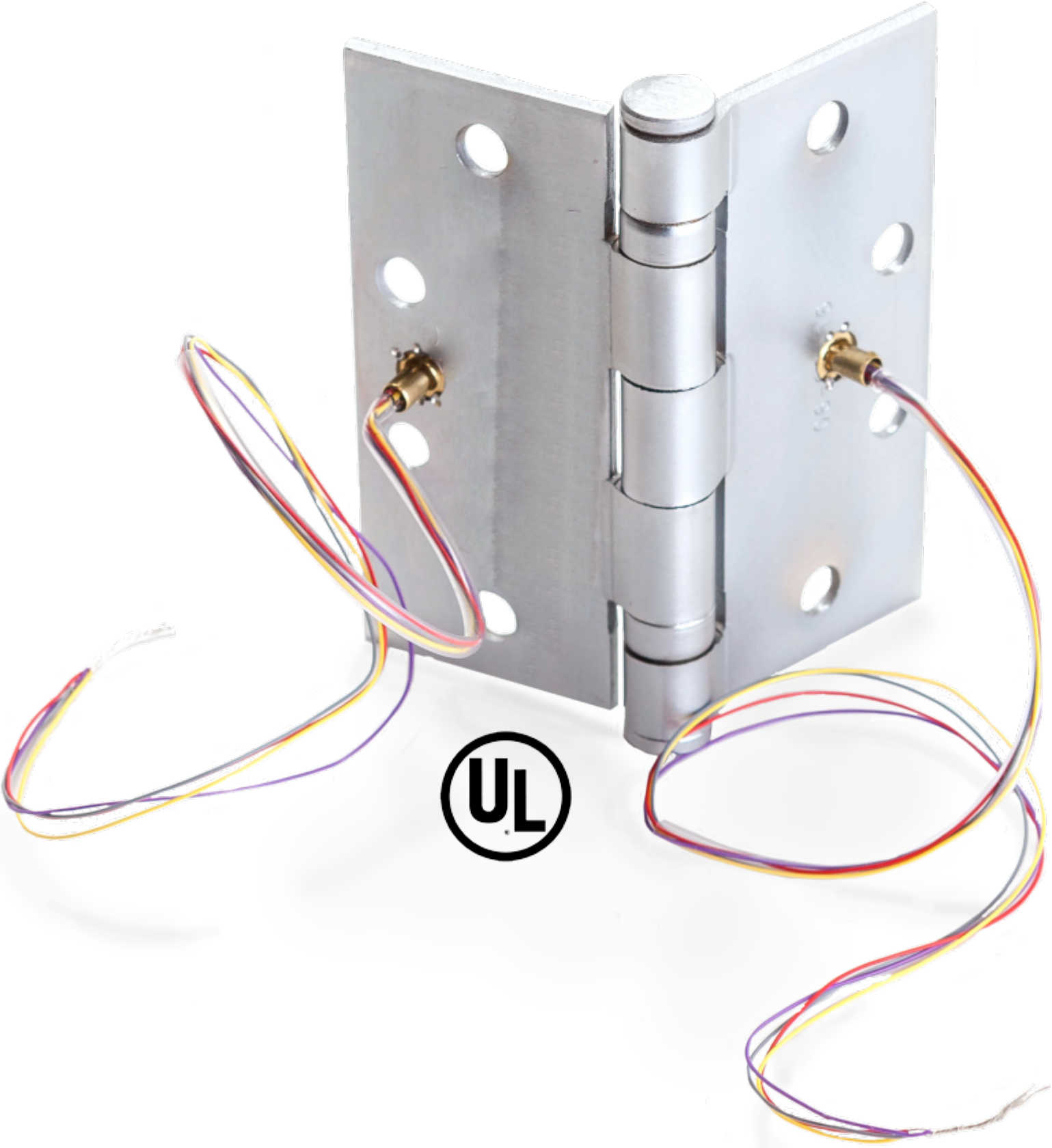

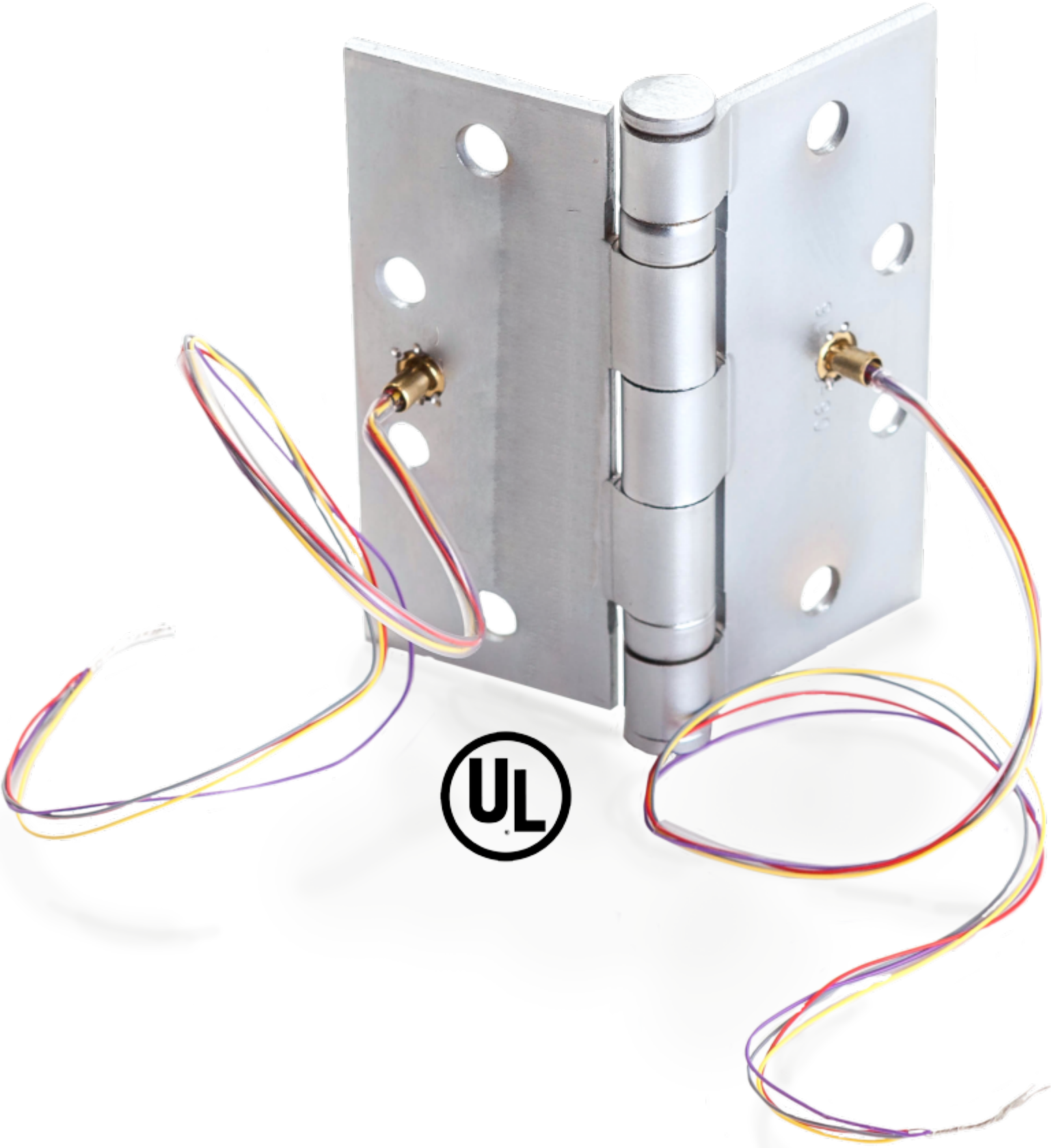


SECURITY
C UL US
LISTED
EQUIPMENT
52X3
MODEL 1104
MFG. DATE 12-16
ARCHITECTURAL CONTROL SYSTEMS INCORPORATED
RESIDENTIAL AND COMMERCIAL FLEXIBLE CONNECTOR


SECURITY
C UL US
LISTED
EQUIPMENT
52X3
MODEL 1104
MFG. DATE 12-16
ARCHITECTURAL CONTROL SYSTEMS INCORPORATED
RESIDENTIAL AND COMMERCIAL FLEXIBLE CONNECTOR








SECURITY
C UL US
LISTED
EQUIPMENT
52X3
MODEL 1104
MFG. DATE 12-16
ARCHITECTURAL CONTROL SYSTEMS INCORPORATED
RESIDENTIAL AND COMMERCIAL FLEXIBLE CONNECTOR






SECURITY
LISTED
MODEL
MFG. DATE


SECURITY
LISTED
MODEL
MFG. DATE


SECURITY
LISTED
MODEL
MFG. DATE


SECURITY
C UL US
LISTED
EQUIPMENT
MODEL
MFG. DATE






SECURITY
LISTED


SECURITY
C UL US
LISTED
EQUIPMENT
MODEL
MFG.
DATE


SECURITY
C UL US
LISTED
EQUIPMENT
52X3
MODEL 1106
MFG. DATE 7/13
RESIDENTIAL AND
COMMERCIAL FLEXIBLE
CONNECTOR


SECURITY
C UL US
LISTED
EQUIPMENT
52X3
MODEL 1106
MFG. DATE 7/12
RESIDENTIAL AND
COMMERCIAL FLEXIBLE
CONNECTOR






SECURITY
c UL us
LISTED
EQUIPMENT
MODEL 1108
MFG. DATE 12-16


SECURITY
c UL us
LISTED
EQUIPMENT
52X3
MODEL 1108
MFG. DATE 12-16


SECURITY
c UL us
LISTED
EQUIPMENT
52X3
MODEL 1108
MFG. DATE 12-16


SECURITY
c UL us
LISTED
EQUIPMENT
52X3
MODEL 1108
MFG. DATE 12-16
ARCHITECTURAL CONTROL SYSTEMS INCORPORATED






SECURITY
LISTED
MODEL
MFG. DATE


SECURITY
C UL US
LISTED
EQUIPMENT
5ZX3
MODEL 110
MFG. DATE 12/16
RESIDENTIAL AND COMMERCIAL DOOR


SECURITY
C UL US
LISTED
EQUIPMENT
52X3
MODEL 1110
MFG. DATE 12/16
RESIDENTIAL AND
COMMERCIAL SWITCH


SECURITY
c UL us
LISTED
EQUIPMENT
52X3
MODEL 1110
MFG. DATE 12/16
RESIDENTIAL AND
COMMERCIAL SWITCH






SECURITY
c UL us
LISTED
EQUIPMENT
MODEL 1114
MFG. DATE 12/16


SECURITY
C UL US
LISTED
EQUIPMENT
MODEL 1114
MFG. DATE 12/16


SECURITY
C UL US
LISTED
EQUIPMENT
52X3
MODEL 1114
MFG. DATE 12/16


SECURITY
C UL US
LISTED
EQUIPMENT
52X3
MODEL 1114
MFG. DATE 12/16






SECURITY
LISTED
EQUIPMENT
MODEL
MFG.
DATE


SECURITY
c UL us
LISTED
EQUIPMENT
52X3
MODEL
MFG. DATE
RESIDENTIAL AND
COMMERCIAL FLEXIBLE
CONNECTOR AND SWITCH


SECURITY
c UL us
LISTED
EQUIPMENT
52X3
MODEL 1116
MFG. DATE 7/12kp
ARCHITECTURAL CONTROL SYSTEMS INCORPORATED
RESIDENTIAL AND COMMERCIAL FLEXIBLE CONNECTOR AND SWITCH


SECURITY
c UL us
LISTED
EQUIPMENT
52X3
MODEL 1116
MFG.
DATE 7/12kp
ARCHITECTURAL
CONTROL SYSTEMS
INCORPORATED
RESIDENTIAL AND
COMMERCIAL FLEXIBLE
CONNECTOR AND SWITCH






SECURITY
c UL us
LISTED
EQUIPMENT
MODEL 1118
MFG. DATE 7/17/19


SECURITY
c UL us
LISTED
EQUIPMENT
52X3
MODEL 1118
MFG.
DATE 7/17/19
ARCHITECTURAL
CONTROL SYSTEMS
INCORPORATED
RESIDENTIAL AND
COMMERCIAL FLEXIBLE
CONNECTOR AND SWITCH


SECURITY
c UL us
LISTED
EQUIPMENT
52X3
MODEL 1118
MFG.
DATE 7/17/19
ARCHITECTURAL
CONTROL SYSTEMS
INCORPORATED
RESIDENTIAL AND
COMMERCIAL FLEXIBLE
CONNECTOR AND SWITCH


SECURITY
c UL us
LISTED
EQUIPMENT
52X3
MODEL 1118
MFG.
DATE 7/17
ARCHITECTURAL
CONTROL SYSTEMS
INCORPORATED
RESIDENTIAL AND
COMMERCIAL FLEXIBLE
CONNECTOR AND SWITCH













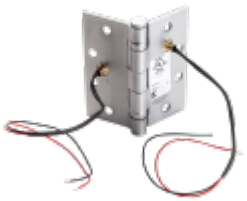

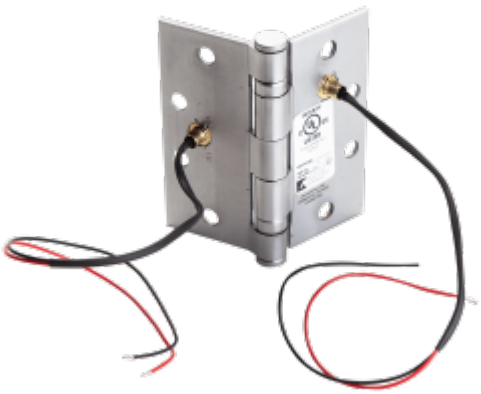

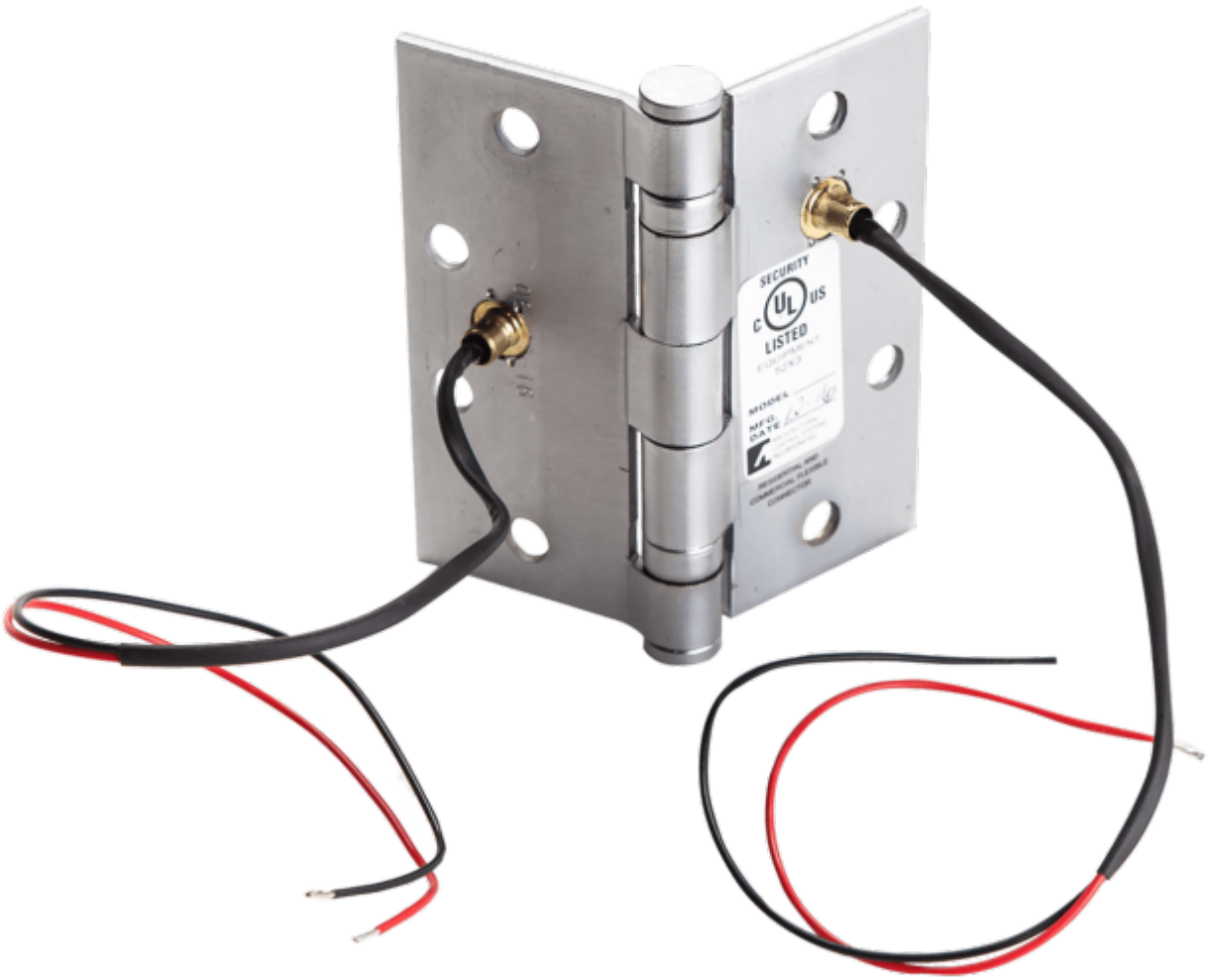
SECURITY
LISTED

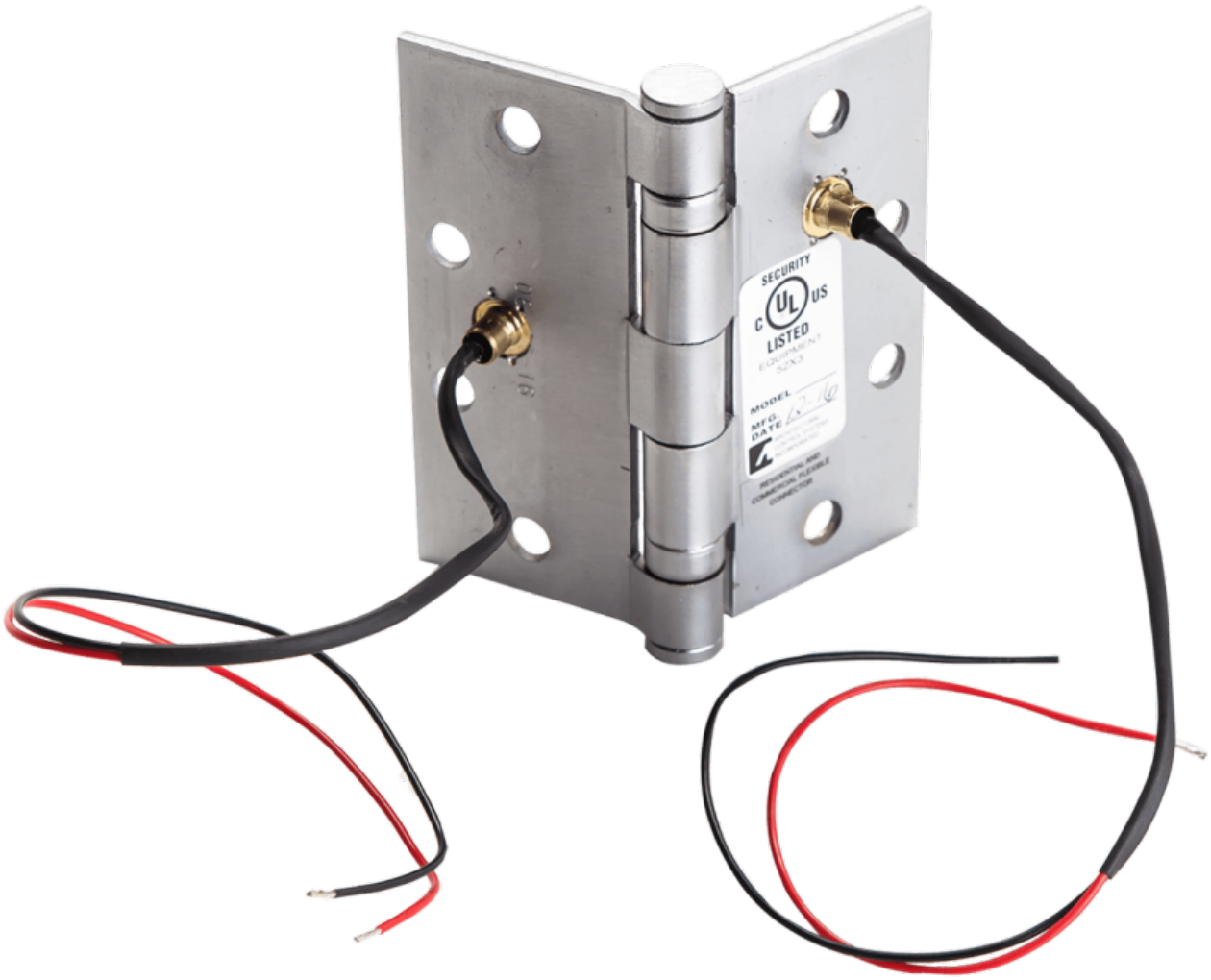
SECURITY
C UL US
LISTED
EQUIPMENT
MODEL
MFG DATE

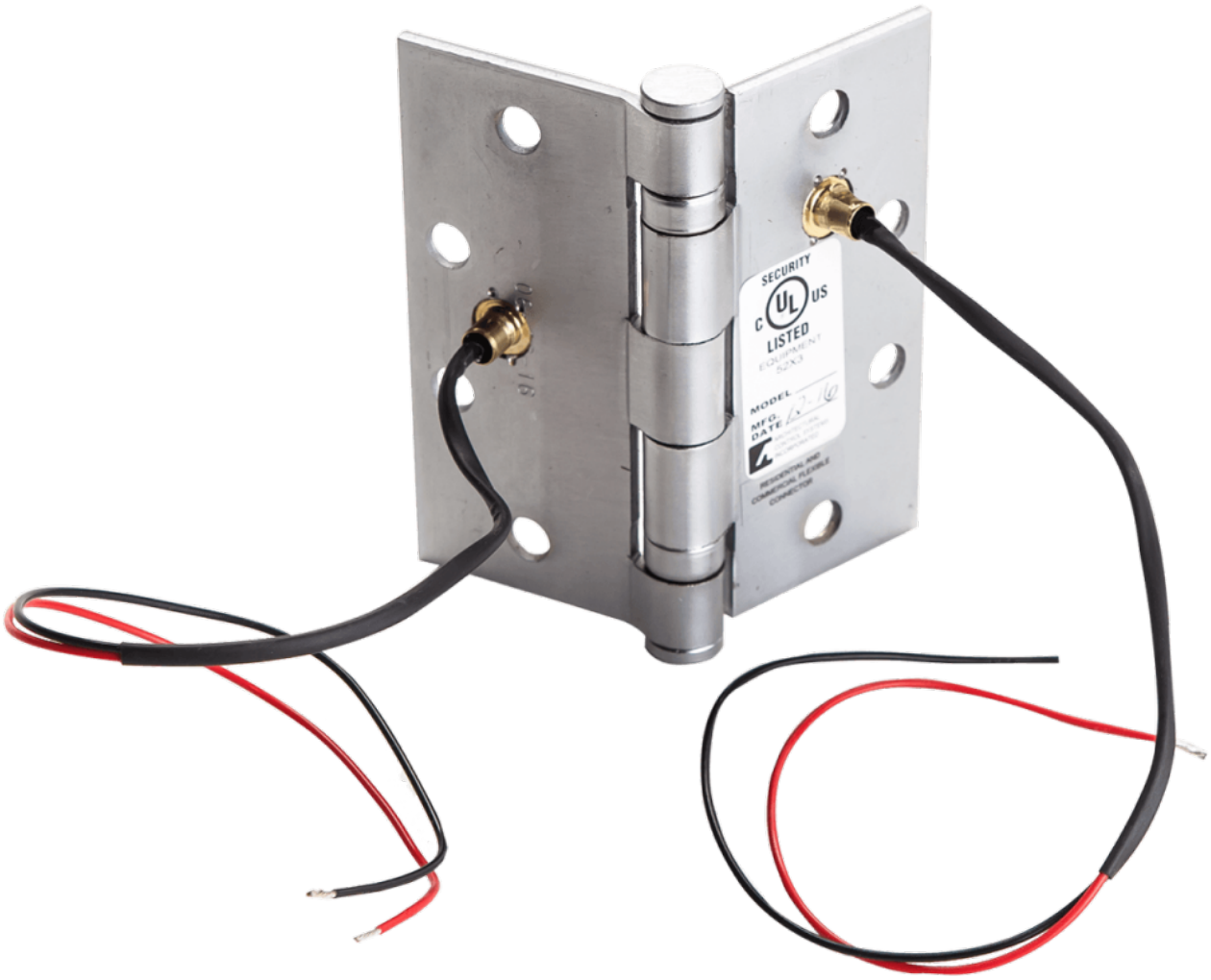
SECURITY
C UL US
LISTED
EQUIPMENT
MODEL
MFG
DATE

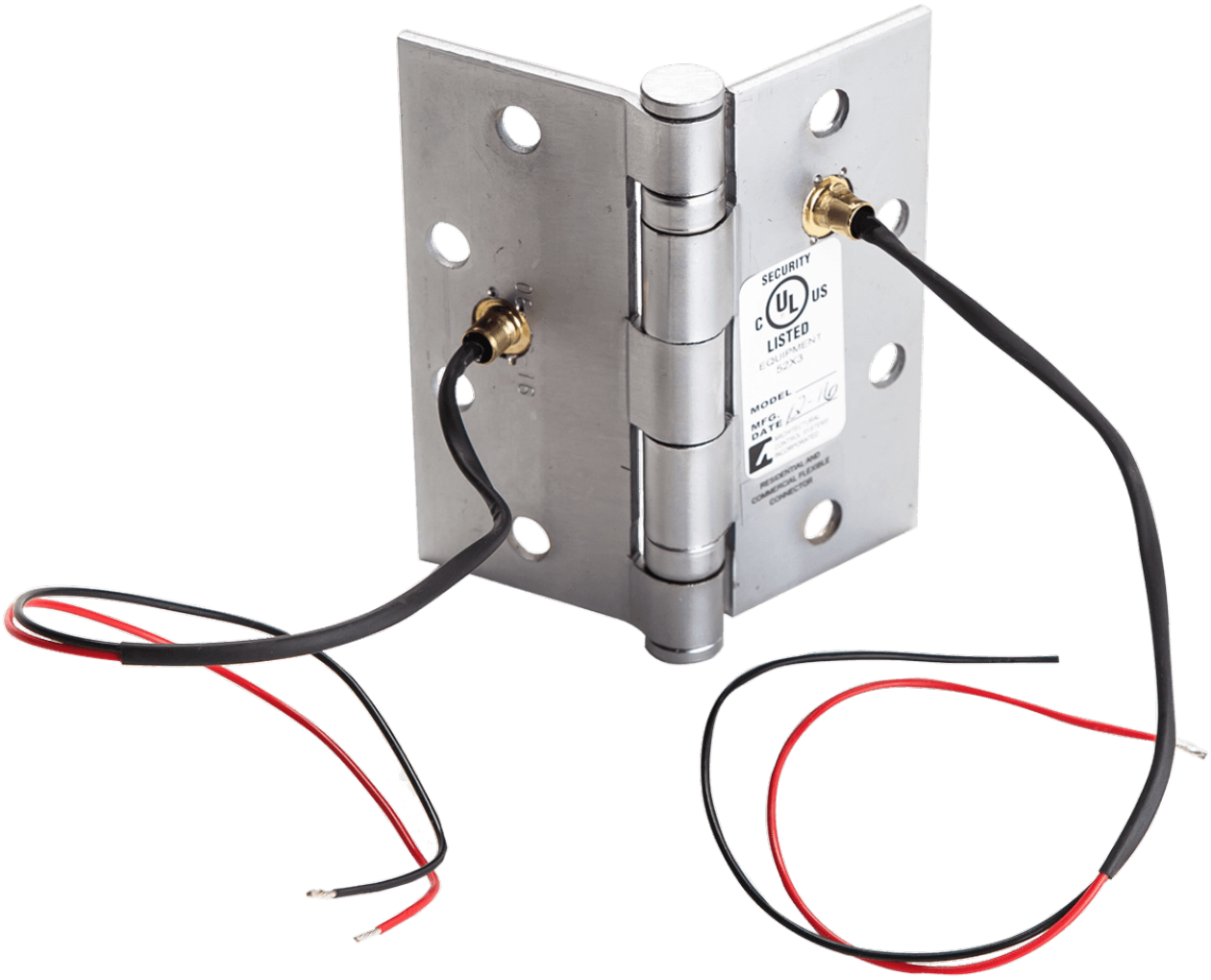
SECURITY
LISTED
MODEL
MFG. DATE






SECURITY
LISTED


SECURITY
C UL US
LISTED
EQUIPMENT
52X3
MODEL
MFG.
DATE
RESIDENTIAL AND
COMMERCIAL FLEXIBLE
CONNECTOR


SECURITY
C UL US
LISTED
EQUIPMENT
52X3
MODEL
MFG. DATE
ACCIDENTAL AND
COMMERCIAL FLEXIBLE
CONNECTOR


SECURITY
C UL US
LISTED
EQUIPMENT
52X3
MODEL
MFG. DATE
RESIDENTIAL AND
COMMERCIAL FLEXIBLE
CONNECTOR





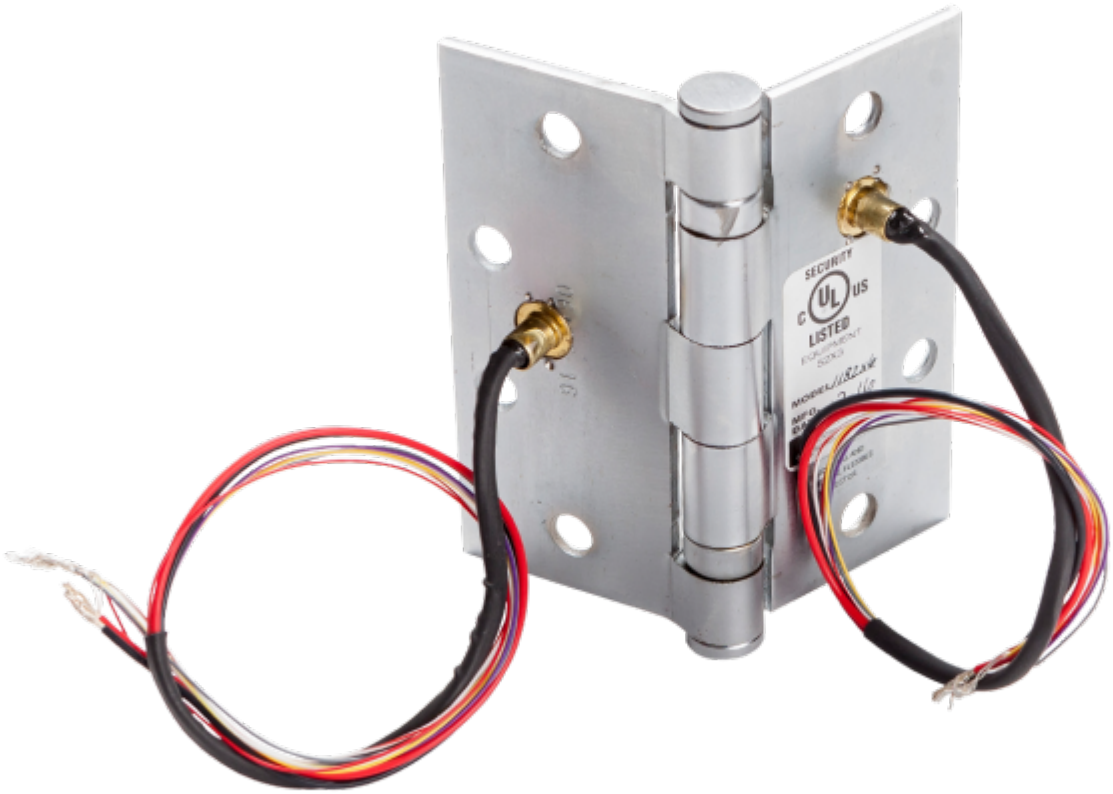
SECURITY
LISTED

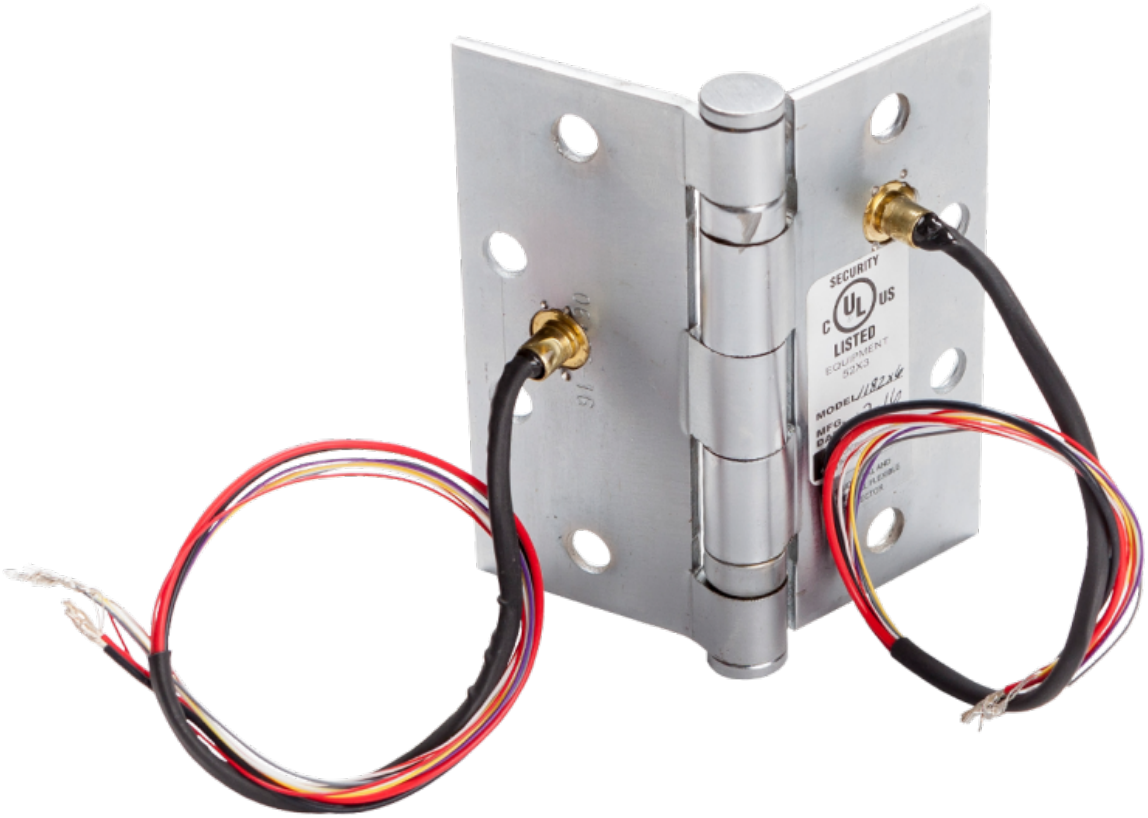
SECURITY
LISTED

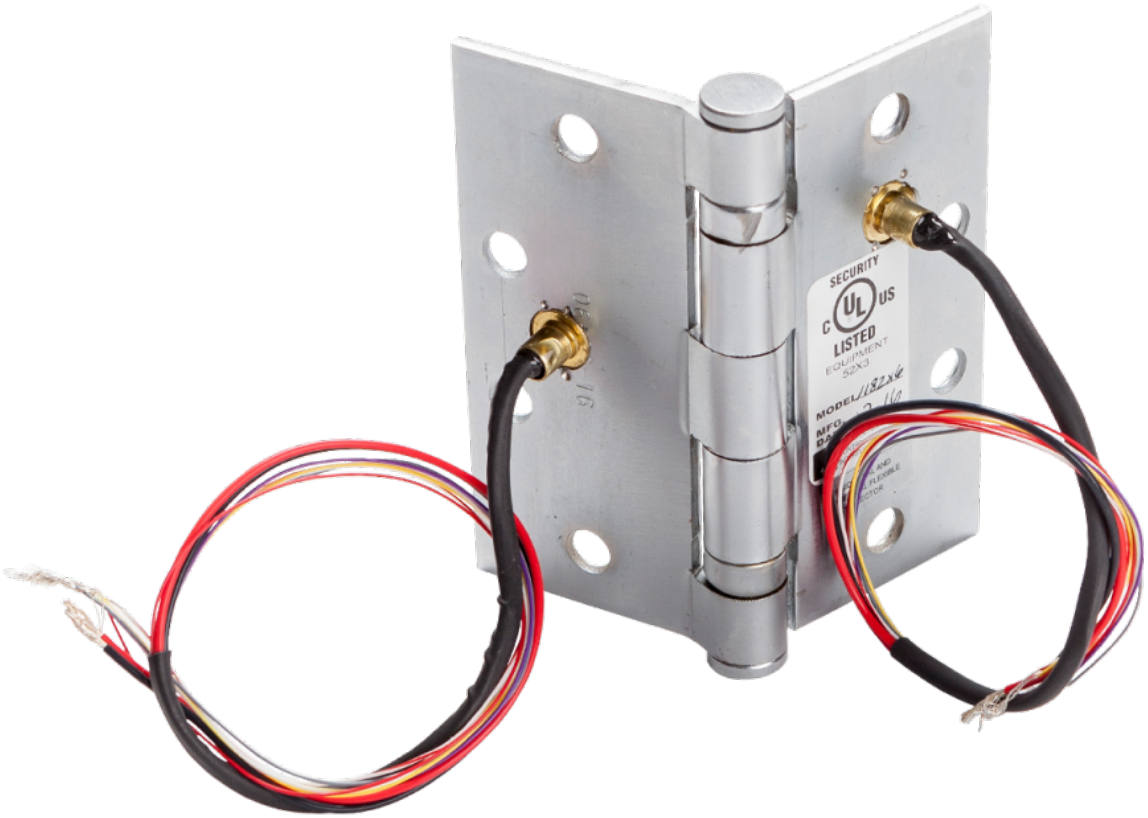
SECURITY
LISTED
EQUIPMENT
52X3

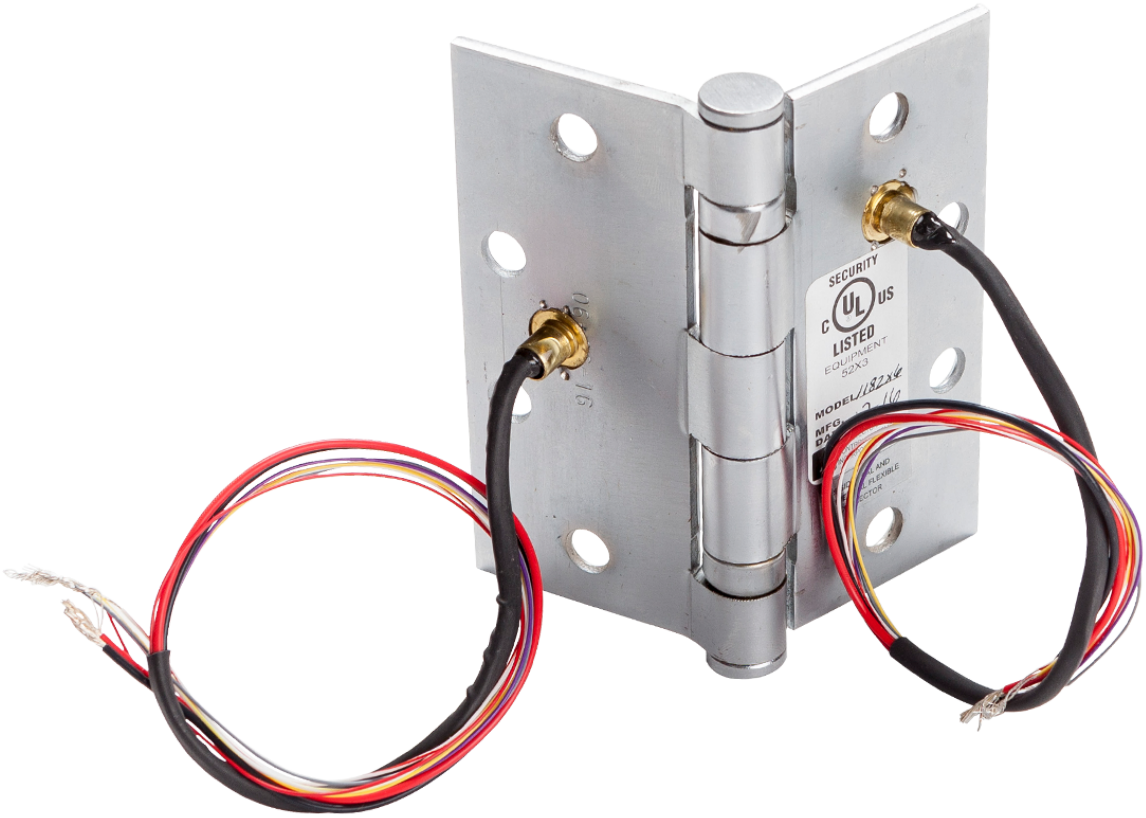
SECURITY
LISTED
EQUIPMENT
52X3






























































PULL HANDLE
EMERGENCY


PULL HANDLE
EMERGENCY


PULL HANDLE
EMERGENCY


PULL HANDLE
EMERGENCY


PULL HANDLE
EMERGENCY


PULL HANDLE
EMERGENCY




1 2 3
4 5 6
7 8 9
* 0 #
IEI


1 2 3
4 5 6
7 8 9
* 0 #
IEI


1 2 3
4 5 6
7 8 9
* 0 #
IEI


1 2 3
4 5 6
7 8 9
* 0 #
IEI


1 2 3
4 5 6
7 8 9
* 0 #
IEI




1 2 3
4 5 6
7 8 9
* 0 #
IEI


1 2 3
4 5 6
7 8 9
* 0 #
IEI


1 2 3
4 5 6
7 8 9
* 0 #
IEI


1 2 3
4 5 6
7 8 9
* 0 #
IEI


1 2 3
4 5 6
7 8 9
* 0 #
IEI



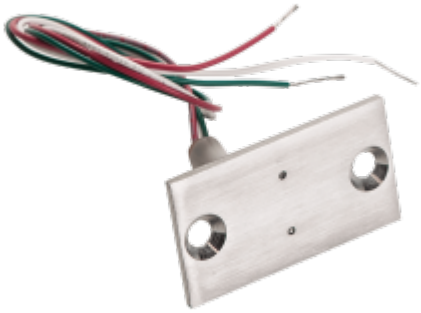

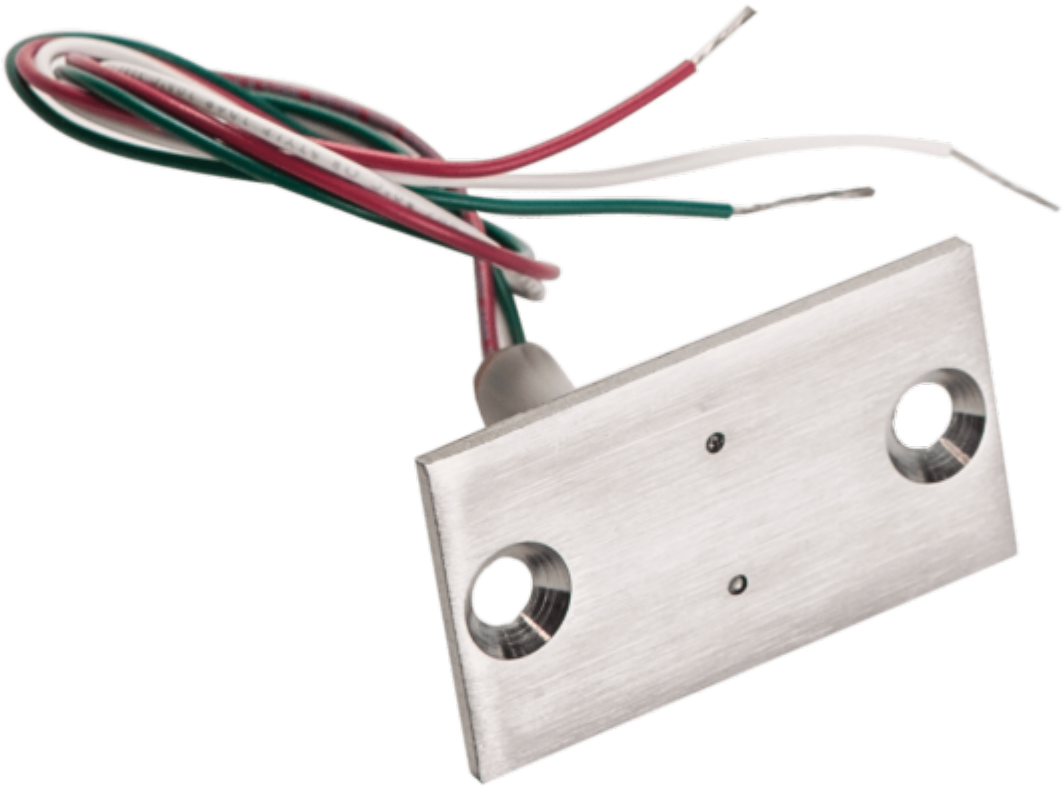

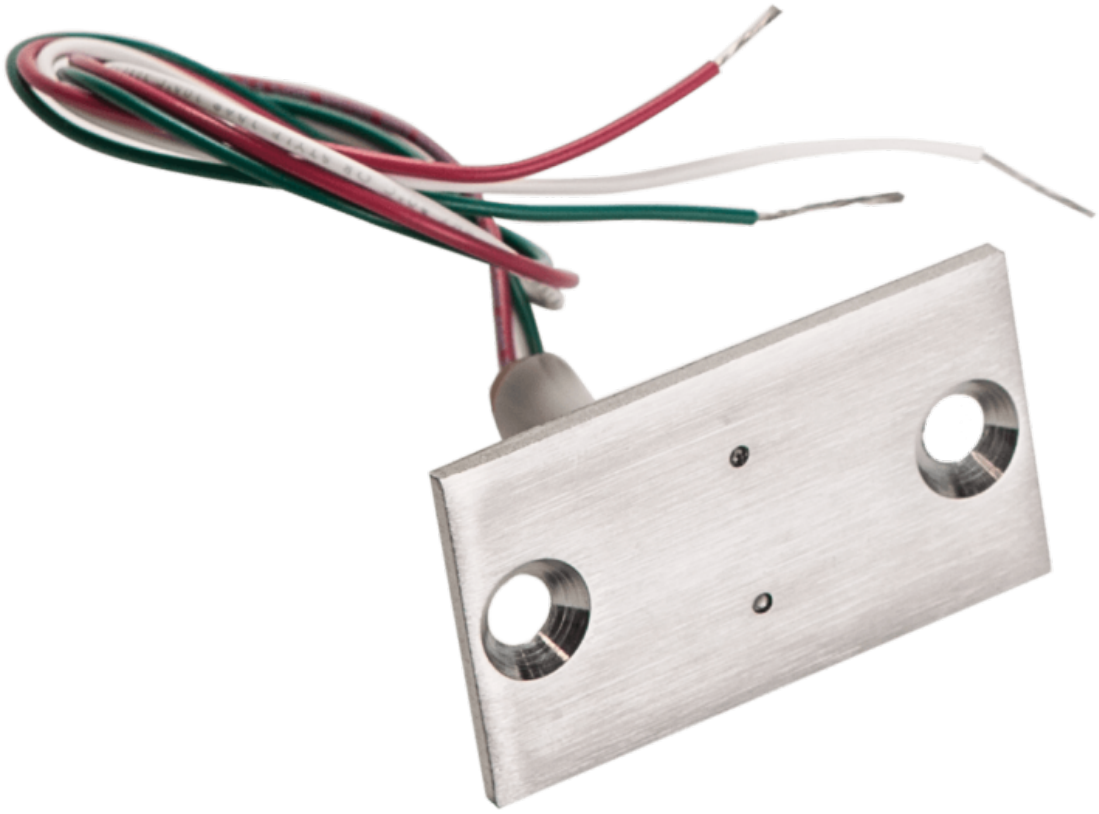

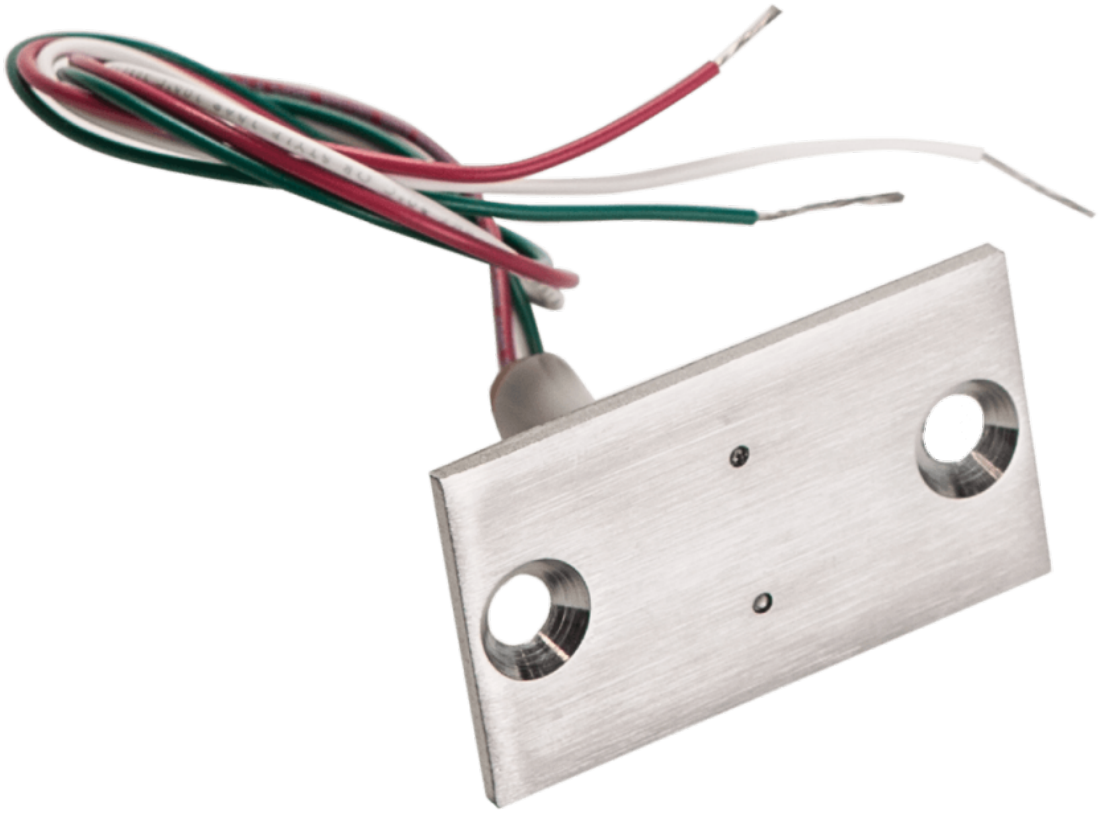

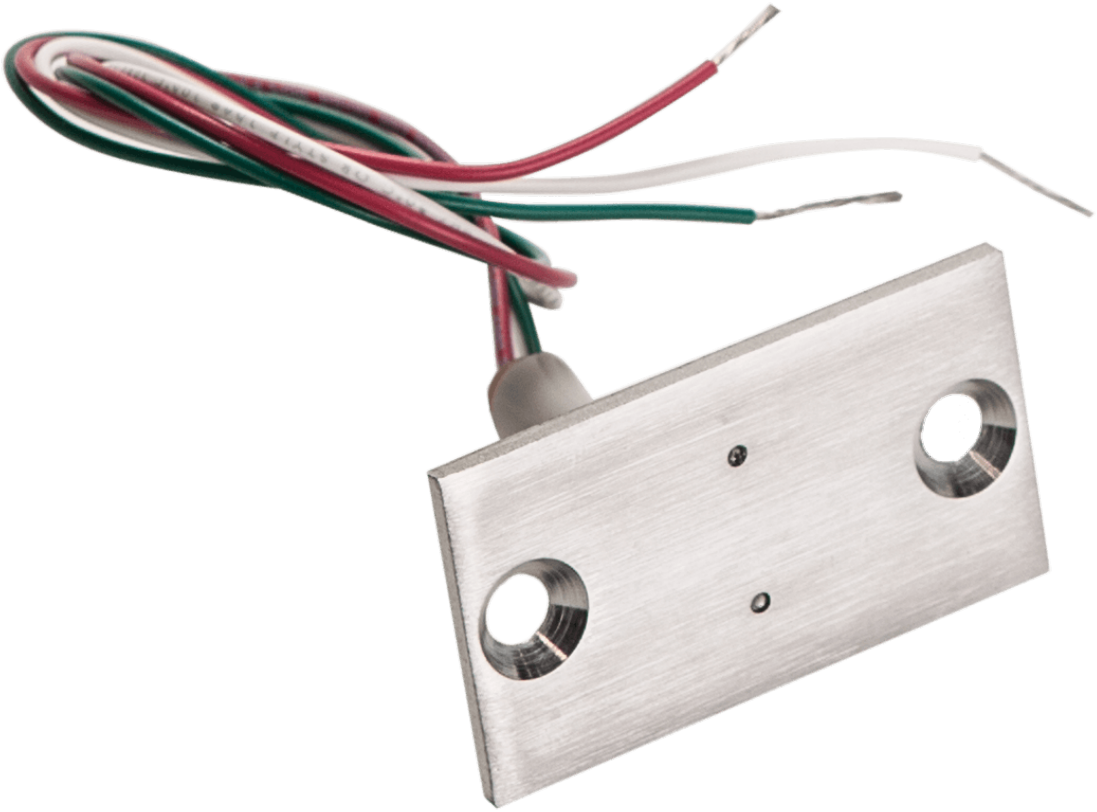




1
2
3
4
5
6
7
8
9
*
0
#
IEI


1
2
3
4
5
6
7
8
9
*
0
#
IEI


1
2
3
4
5
6
7
8
9
*
0
#
IEI


1
2
3
4
5
6
7
8
9
*
0
#
IEI


1
2
3
4
5
6
7
8
9
*
0
#
IEI




1
2 ABC
3 DEF
4 GHI
5 JKL
6 MNO
7 PRS
8 TUV
9 WXY
*
0 OPEN
#
IEI


1
2 ABC
3 DEF
4 GHI
5 JKL
6 MNO
7 PRS
8 TUV
9 WXY
*
0 OPER
#
IEI


1
2 ABC
3 DEF
4 GHI
5 JKL
6 MNO
7 PRS
8 TUV
9 WXY
*
0 OPER
#
IEI


1
2 ABC
3 DEF
4 GHI
5 JKL
6 MNO
7 PRS
8 TUV
9 WXY
*
0 OPER
#
IEI


1
2 ABC
3 DEF
4 GHI
5 JKL
6 MNO
7 PRS
8 TUV
9 WXY
*
0 OPER
#
IEI






1
2 ABC
3 DEF
4 GHI
5 JKL
6 MNO
7 PRS
8 TUV
9 WXY
*
0 OPER
#
IEI


1
2 ABC
3 DEF
4 GHI
5 JKL
6 MNO
7 PRS
8 TUV
9 WXY
*
0 OPER
#
IEI


1
2 ABC
3 DEF
4 GHI
5 JKL
6 MNO
7 PRS
8 TUV
9 WXY
0 OPER
IEI


1
2 ABC
3 DEF
4 GHI
5 JKL
6 MNO
7 PRS
8 TUV
9 WXY
*
0 OPER
#
IEI




1
2
3
4
5
6
7
8
9
0
*
#


1
2
3
4
5
6
7
8
9
0
*
#


1
2
3
4
5
6
7
8
9
0
*
#


1
2
3
4
5
6
7
8
9
0
*
#


1
2
3
4
5
6
7
8
9
0
*
#




1 2 3
4 5 6
7 8 9
* 0 #


1
2
3
4
5
6
7
8
9
*
0
#


1
2
3
4
5
6
7
8
9
*
0
#


1
2
3
4
5
6
7
8
9
*
0
#


1
2
3
4
5
6
7
8
9
*
0
#




1
2
3
4
5
6
7
8
9
*
0
#


1
2
3
4
5
6
7
8
9
*
0
#


1
2
3
4
5
6
7
8
9
*
0
#


1
2
3
4
5
6
7
8
9
*
0
#


1
2
3
4
5
6
7
8
9
*
0
#





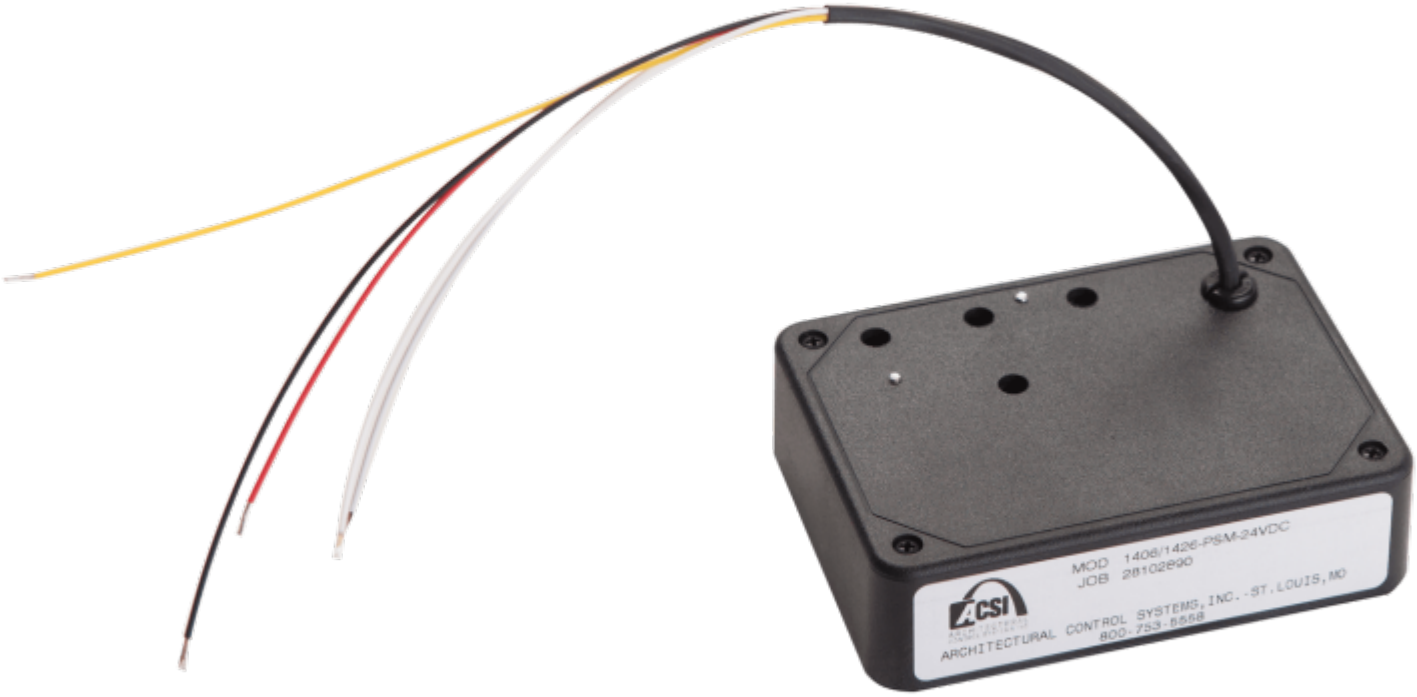
MOD 1406/1426-PSM-24VDC
JOB 28102690
ACSI
ADVANCED
ARCHITECTURAL CONTROL SYSTEMS, INC. - ST. LOUIS, MO
800-753-5558

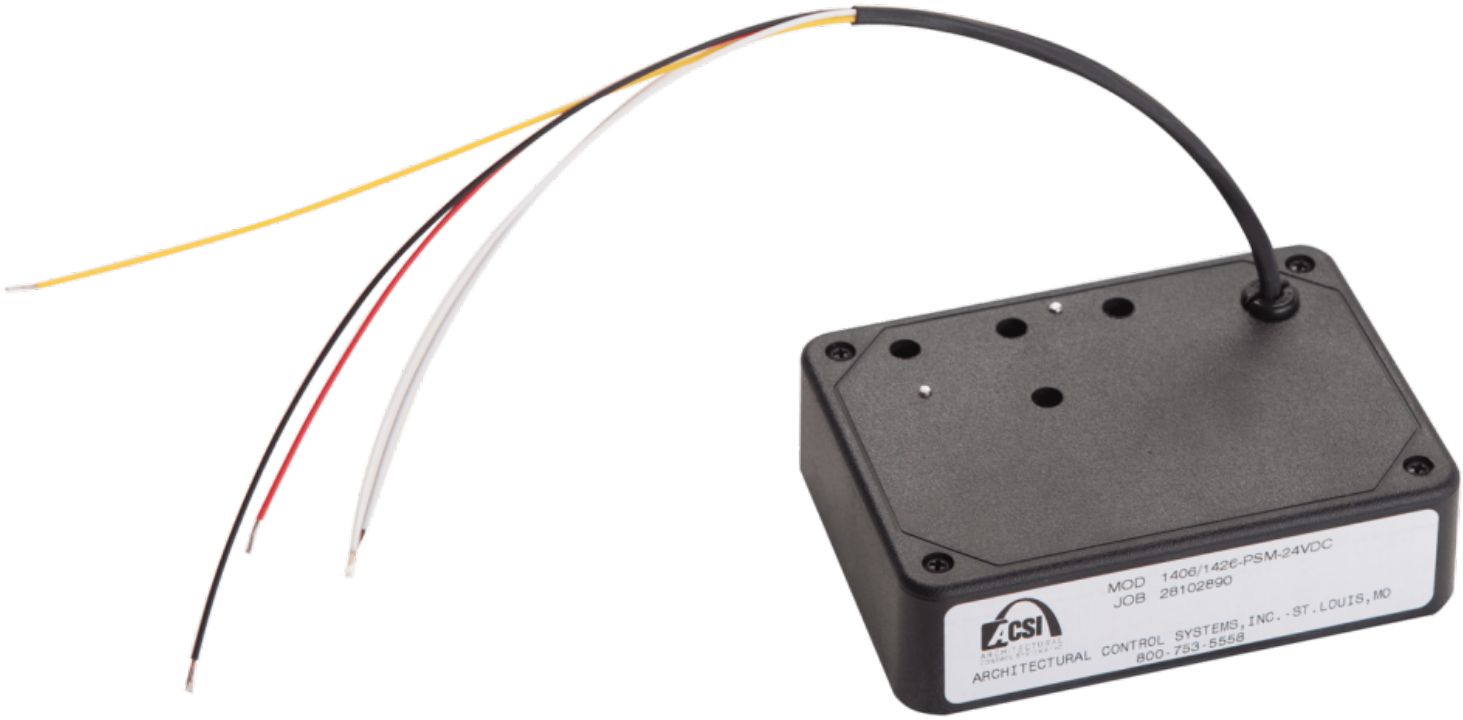
MOD 1406/1426-PSM-24VDC
JOB 28102890
ACSI
ARCHITECTURAL CONTROL SYSTEMS, INC. - ST. LOUIS, MO
800-753-5558

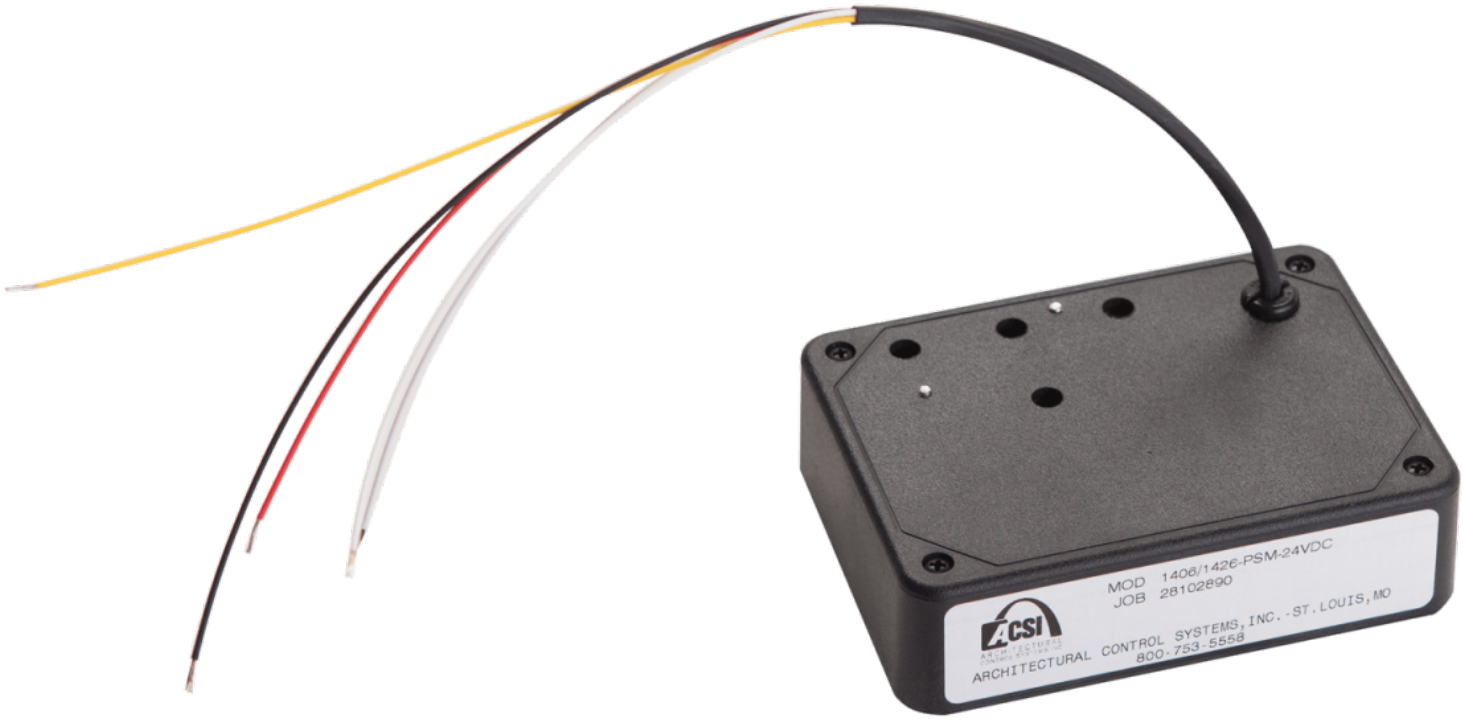
MOD 1406/1426-PSM-24VDC
JOB 28102890
ACSI
ARCHITECTURAL CONTROL SYSTEMS, INC. - ST. LOUIS, MO
800-753-5558

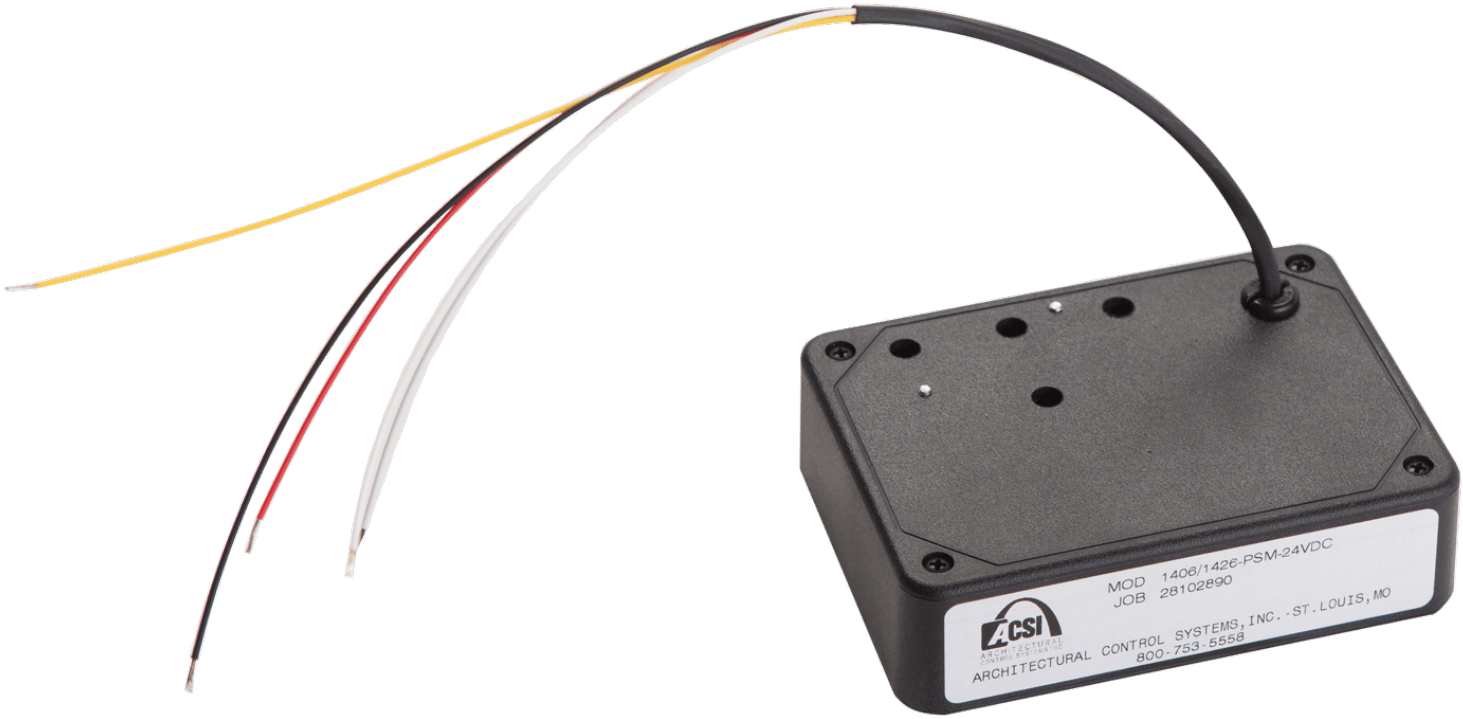
MOD 1406/1426-PSM-24VDC
JOB 28102890
ACSI
ARCHITECTURAL CONTROL SYSTEMS, INC. - ST. LOUIS, MO
800-753-5558



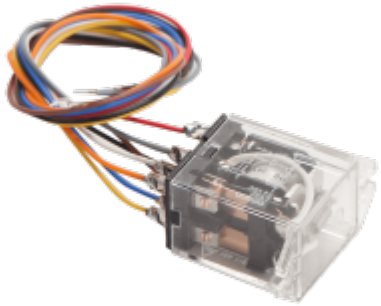

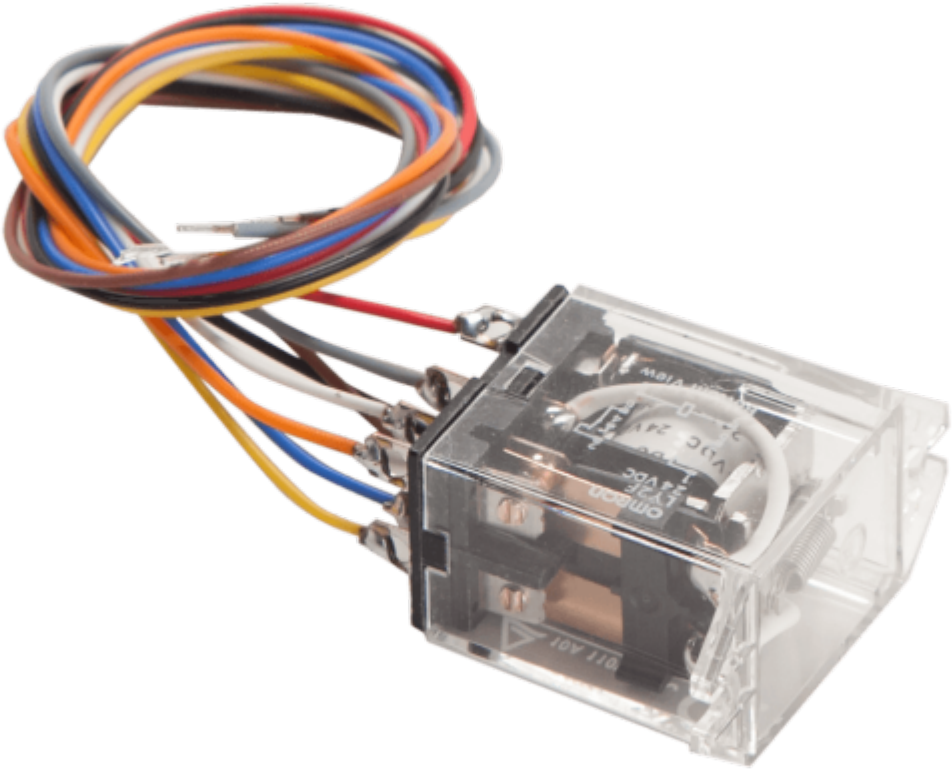

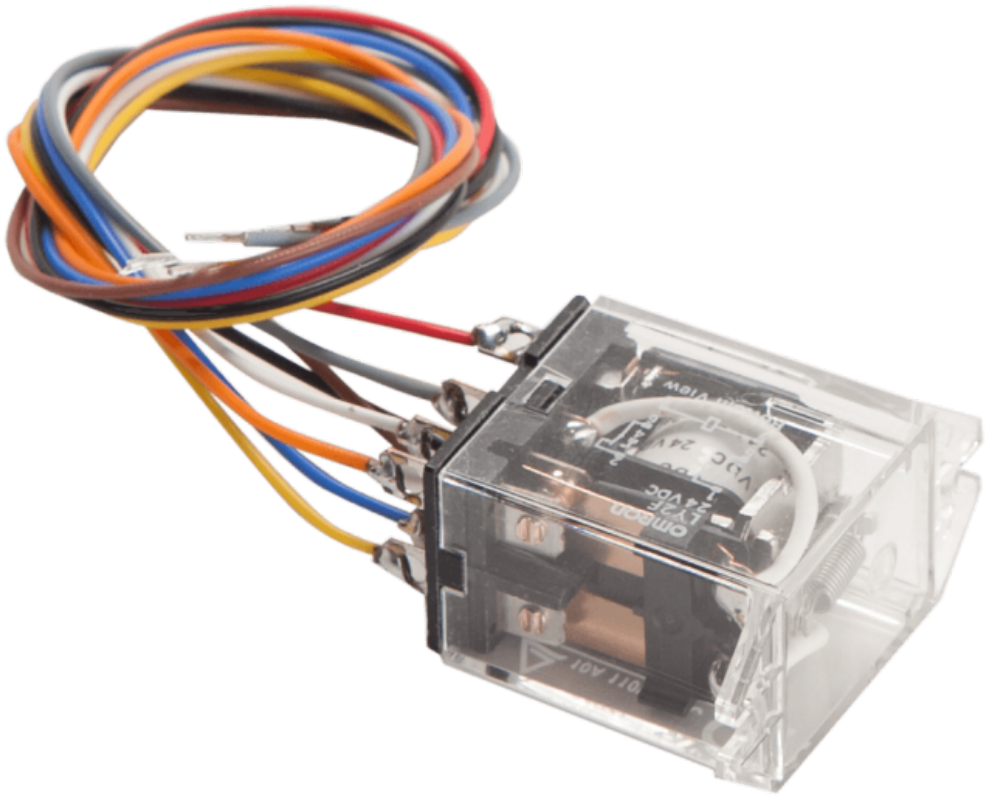
omron
24 VDC

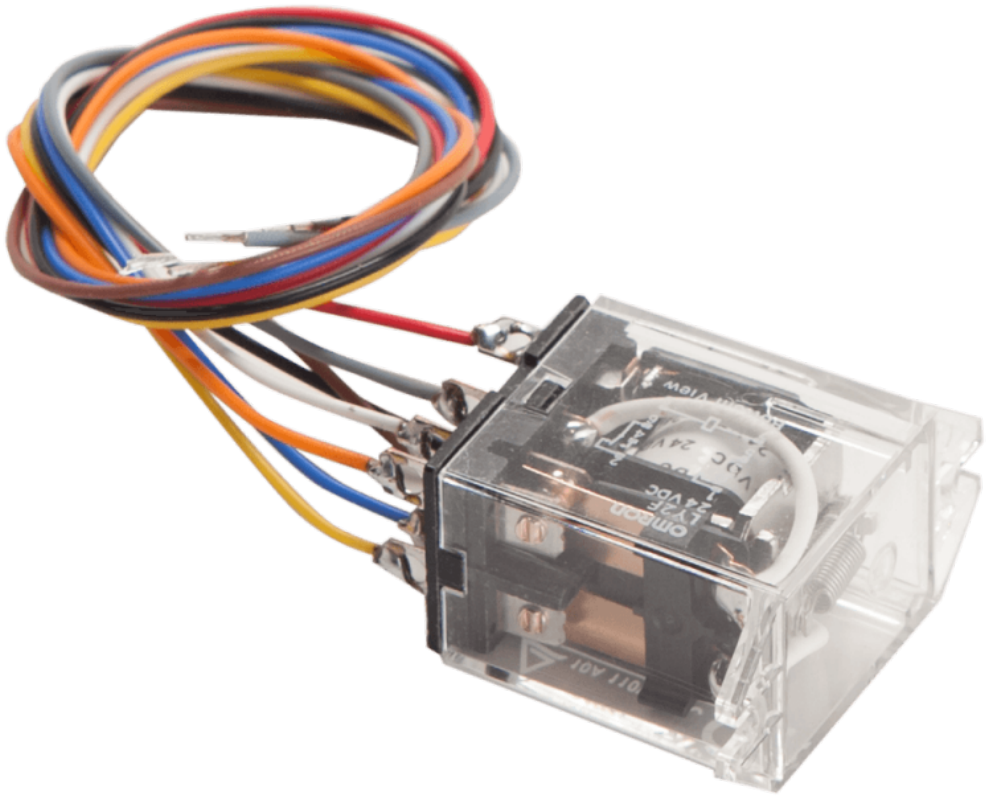
omron
24 VDC

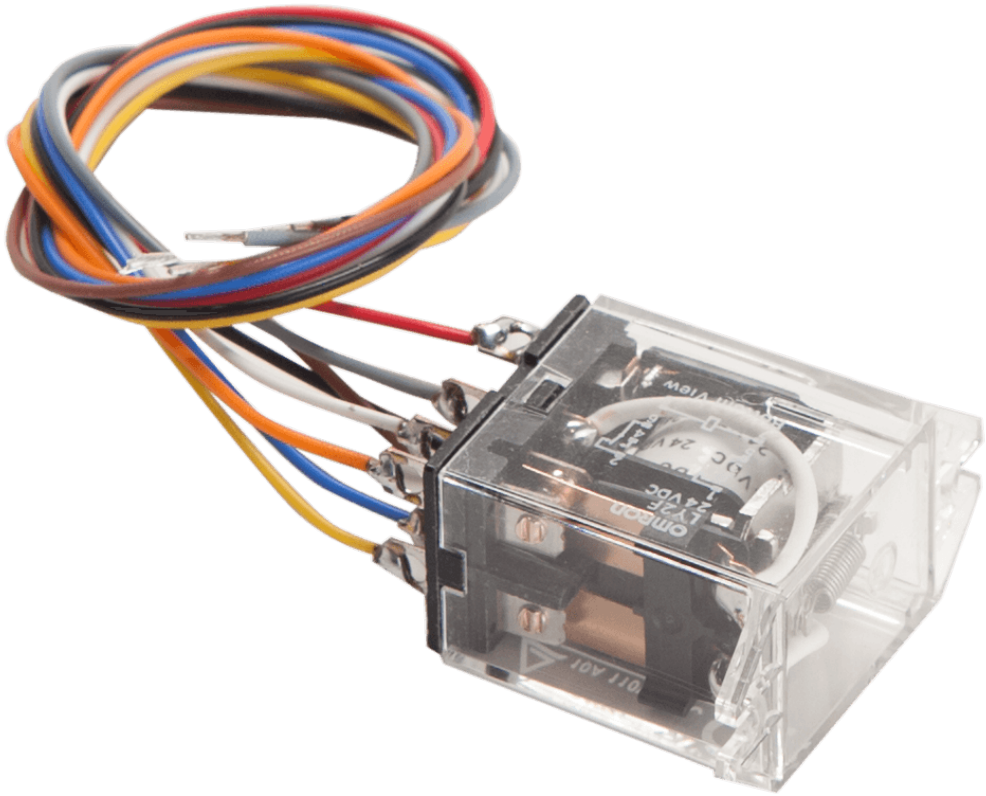
LY2F
24 VDC





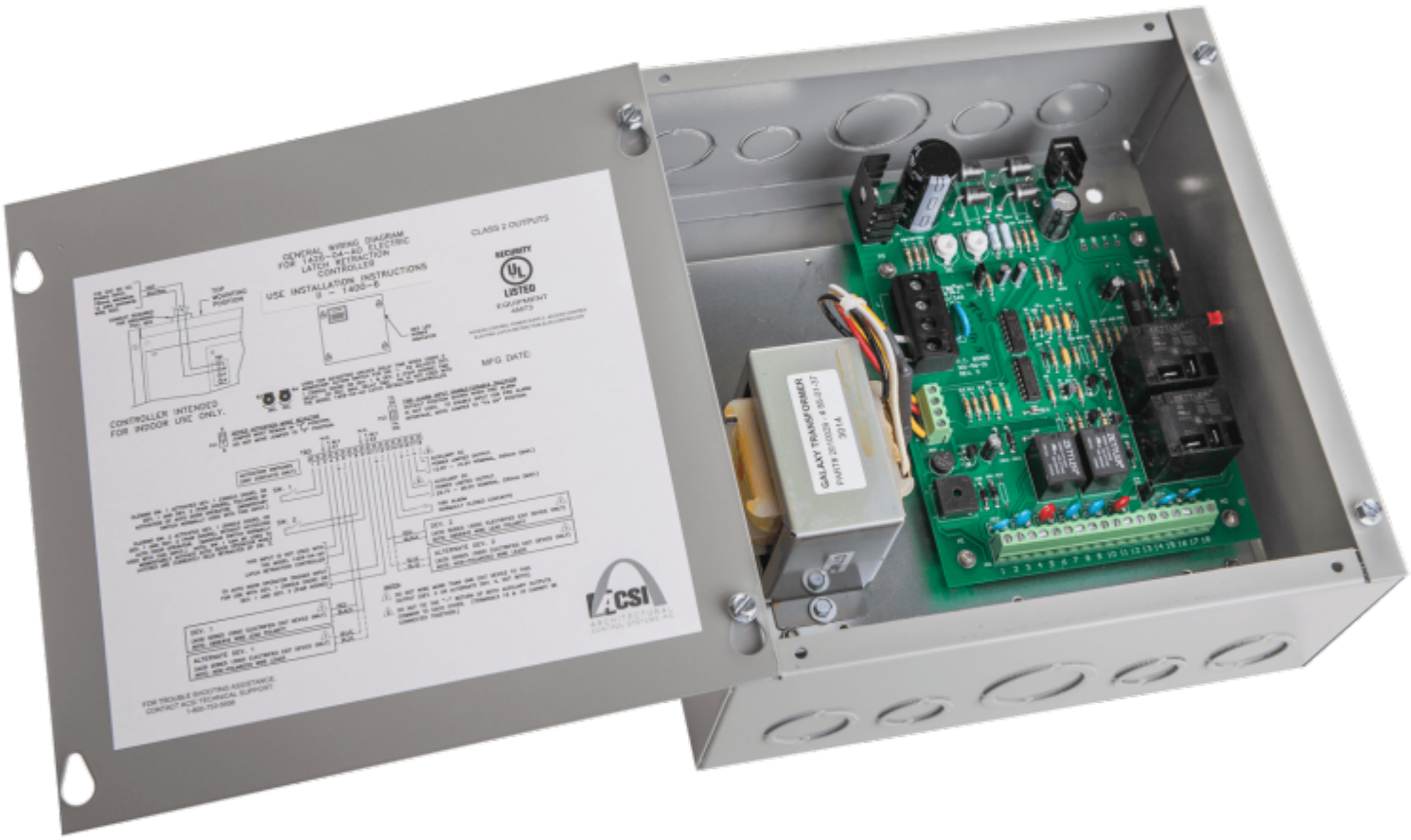
GENERAL WIRING DIAGRAM
FOR 1430-54-RQ ELECTRIC
LATCH RETRACTION
CONTROLLER
USE INSTALLATION INSTRUCTIONS
9 - 1400-6
CLASS 2 OUTPUTS
SECURITY
UL
LISTED
EQUIPMENT
MFG DATE
CONTROLLER INTENDED
FOR INDOOR USE ONLY.
GALAXY TRANSFORMER
ACSI

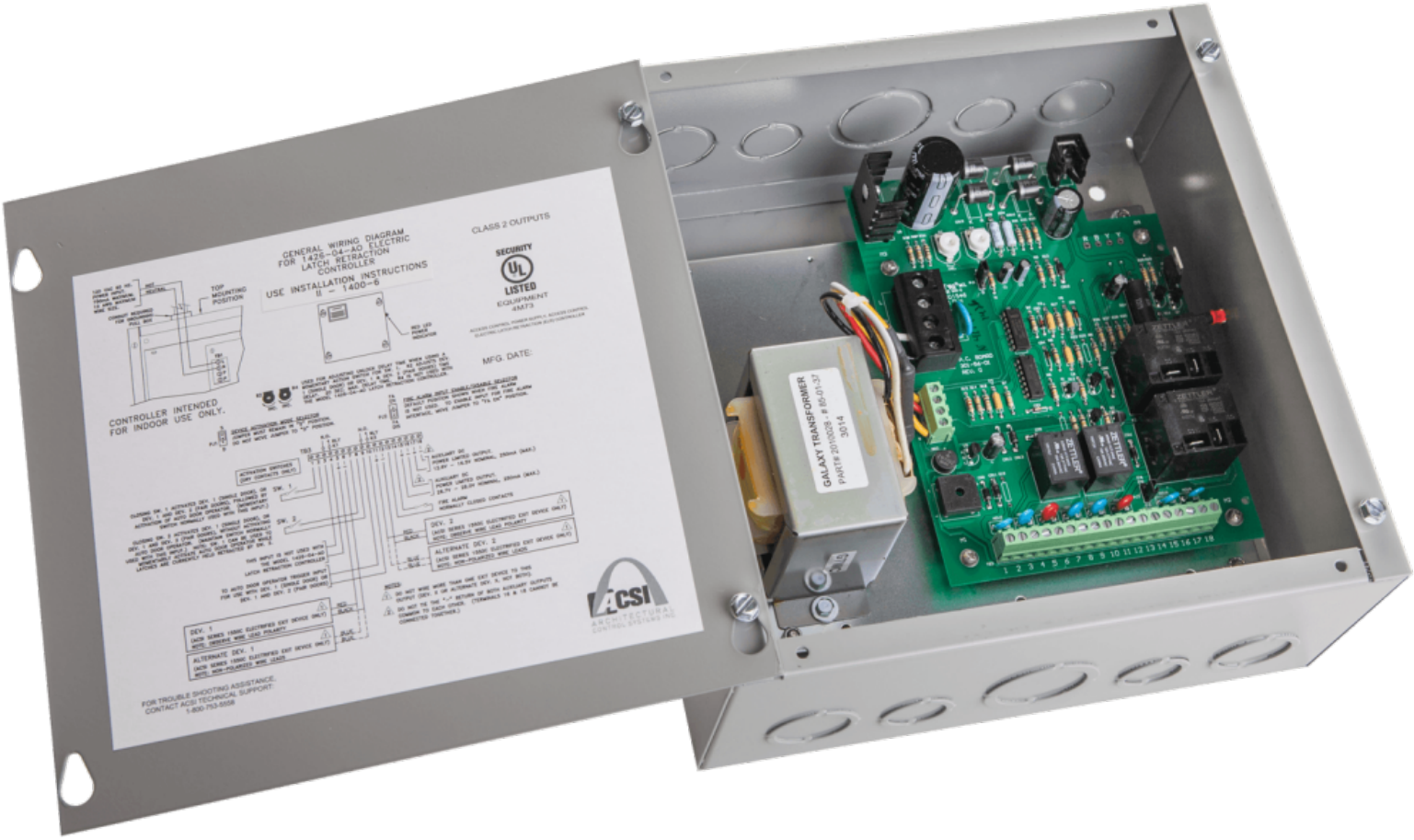
GENERAL WIRING DIAGRAM
FOR 1425-04-AO ELECTRIC
LATCH RETRACTION
CONTROLLER
USE INSTALLATION INSTRUCTIONS
II - 1400-6
CLASS 2 OUTPUTS
SECURITY
UL
LISTED
EQUIPMENT
4M73
MFG. DATE:
CONTROLLER INTENDED
FOR INDOOR USE ONLY.
GALAXY TRANSFORMER
PART# 2010028 # 85-01-57
3014
ACSI
ARCHITECTURAL
CONTROL SYSTEMS INC
FOR TROUBLE SHOOTING ASSISTANCE,
CONTACT ACSI TECHNICAL SUPPORT:
1-800-753-5558

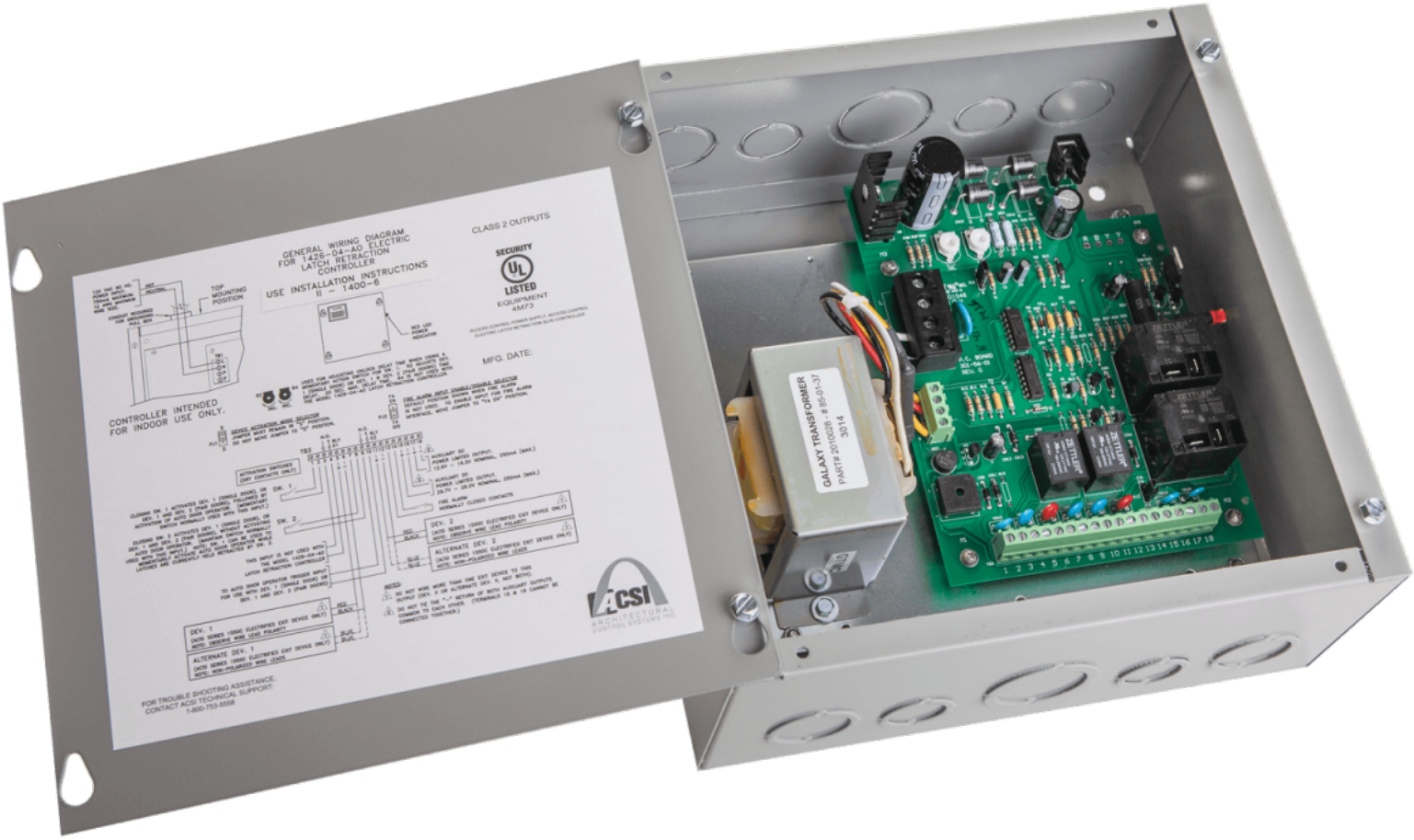
GENERAL WIRING DIAGRAM
FOR 1426-04-AO ELECTRIC
LATCH RETRACTION
CONTROLLER
USE INSTALLATION INSTRUCTIONS
II - 1400-6
CLASS 2 OUTPUTS
SECURITY
UL
LISTED
EQUIPMENT
4M73
MFG. DATE:
CONTROLLER INTENDED
FOR INDOOR USE ONLY.
FOR TROUBLE SHOOTING ASSISTANCE,
CONTACT ACSI TECHNICAL SUPPORT:
1-800-753-5556
ACSI
ARCHITECTURAL
CONTROL SYSTEMS INC
GALAXY TRANSFORMER
PART# 2010028 # 85-01-37
3014

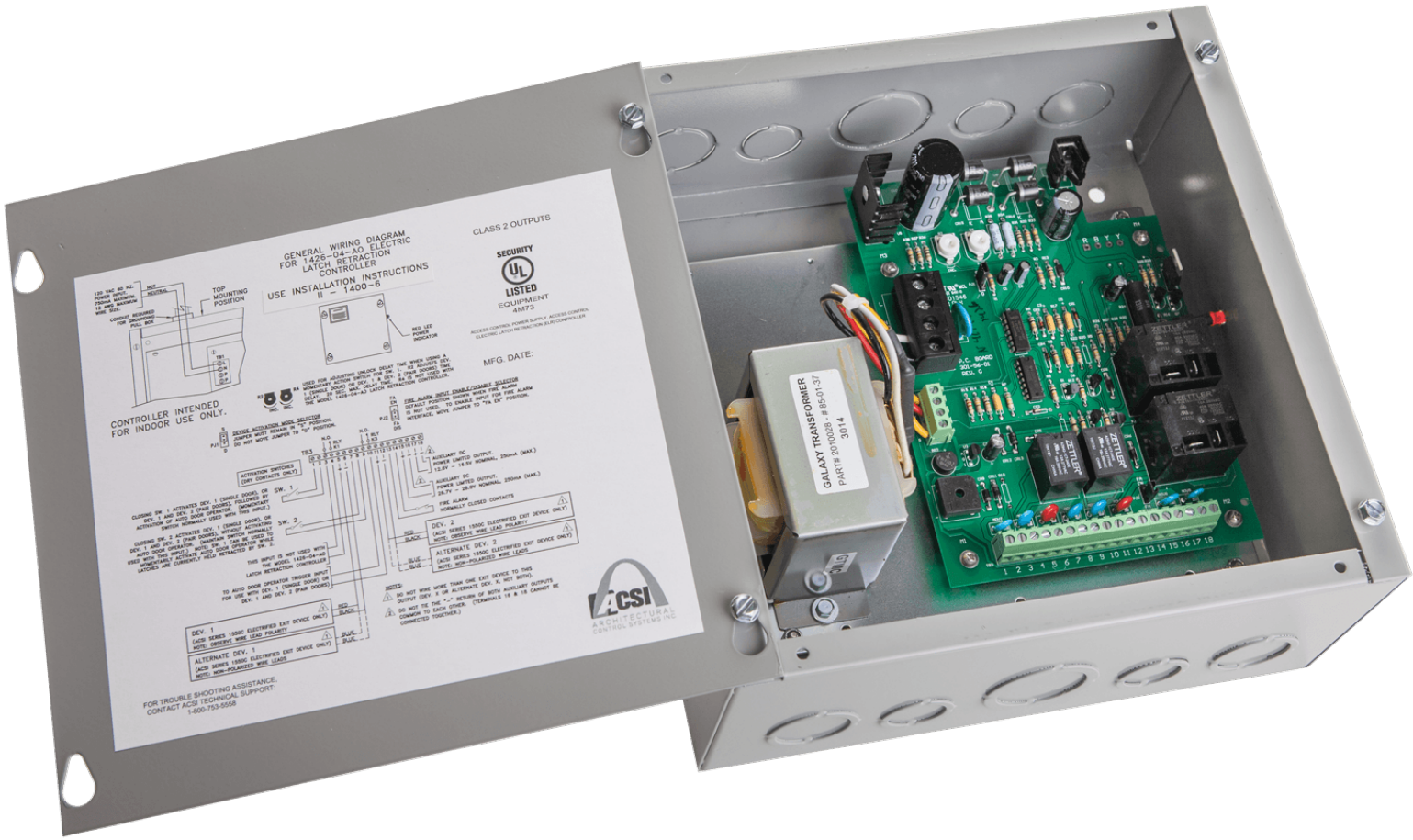
GENERAL WIRING DIAGRAM
FOR 1425-04-AO ELECTRIC
LATCH RETRACTION
CONTROLLER
USE INSTALLATION INSTRUCTIONS
II - 1400-6
CLASS 2 OUTPUTS
SECURITY
LISTED
EQUIPMENT
4M73
MFG. DATE:
CONTROLLER INTENDED
FOR INDOOR USE ONLY.
FOR TROUBLE SHOOTING ASSISTANCE,
CONTACT ACSI TECHNICAL SUPPORT:
1-800-753-5558
GALAXY TRANSFORMER
PART# 20110229 # 85-01-37
3014
ZETTLER
ACSI
ARCHITECTURAL
CONTROL SYSTEMS INC





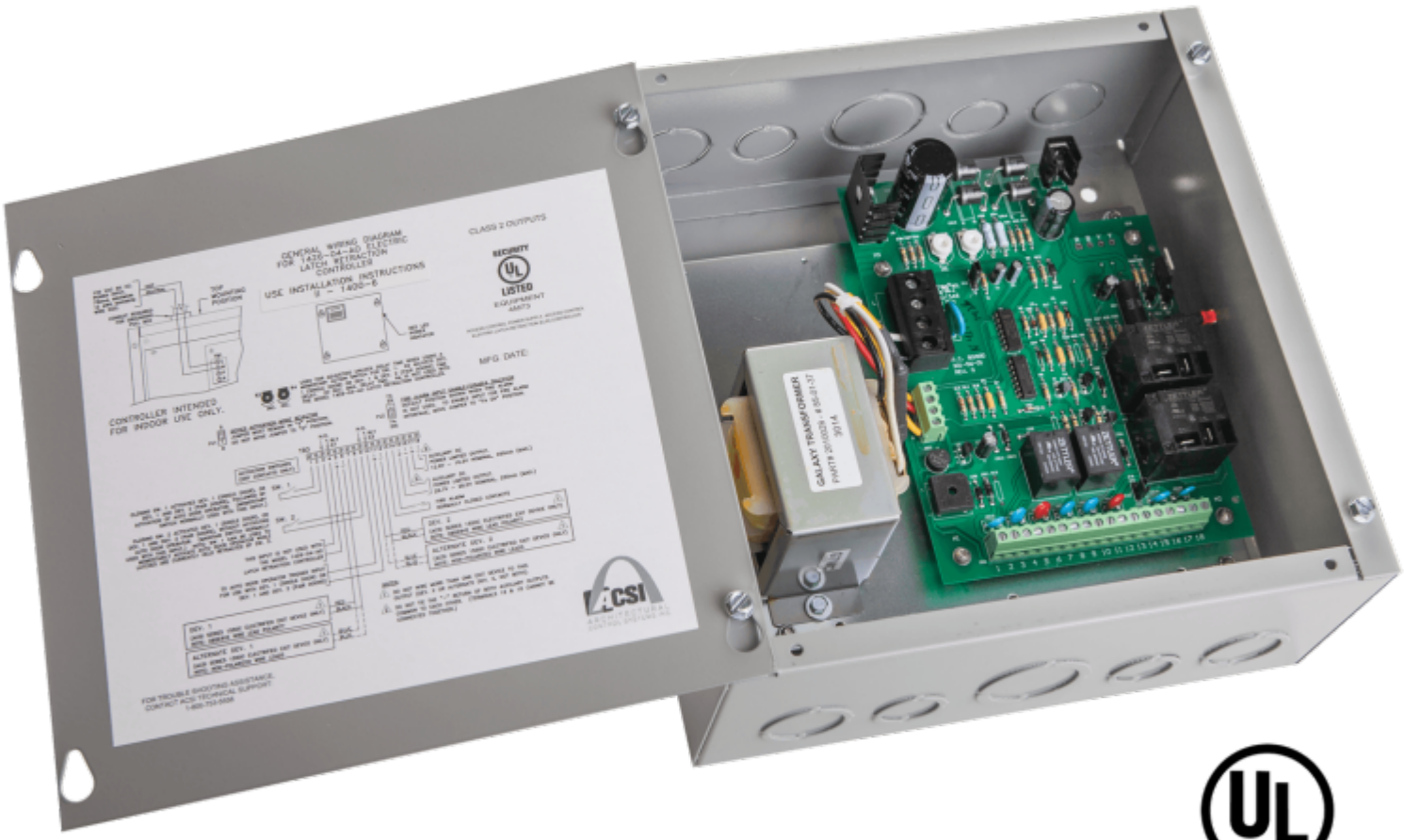
GENERAL WIRING DIAGRAM
FOR 1426-04-AD ELECTRIC
LATCH RETRACTION
CONTROLLER
USE INSTALLATION INSTRUCTIONS
CLASS 2 OUTPUTS
LISTED
MFG DATE
CONTROLLER INTENDED
FOR INDOOR USE ONLY.
ACSI
GALAXY TRANSFORMER

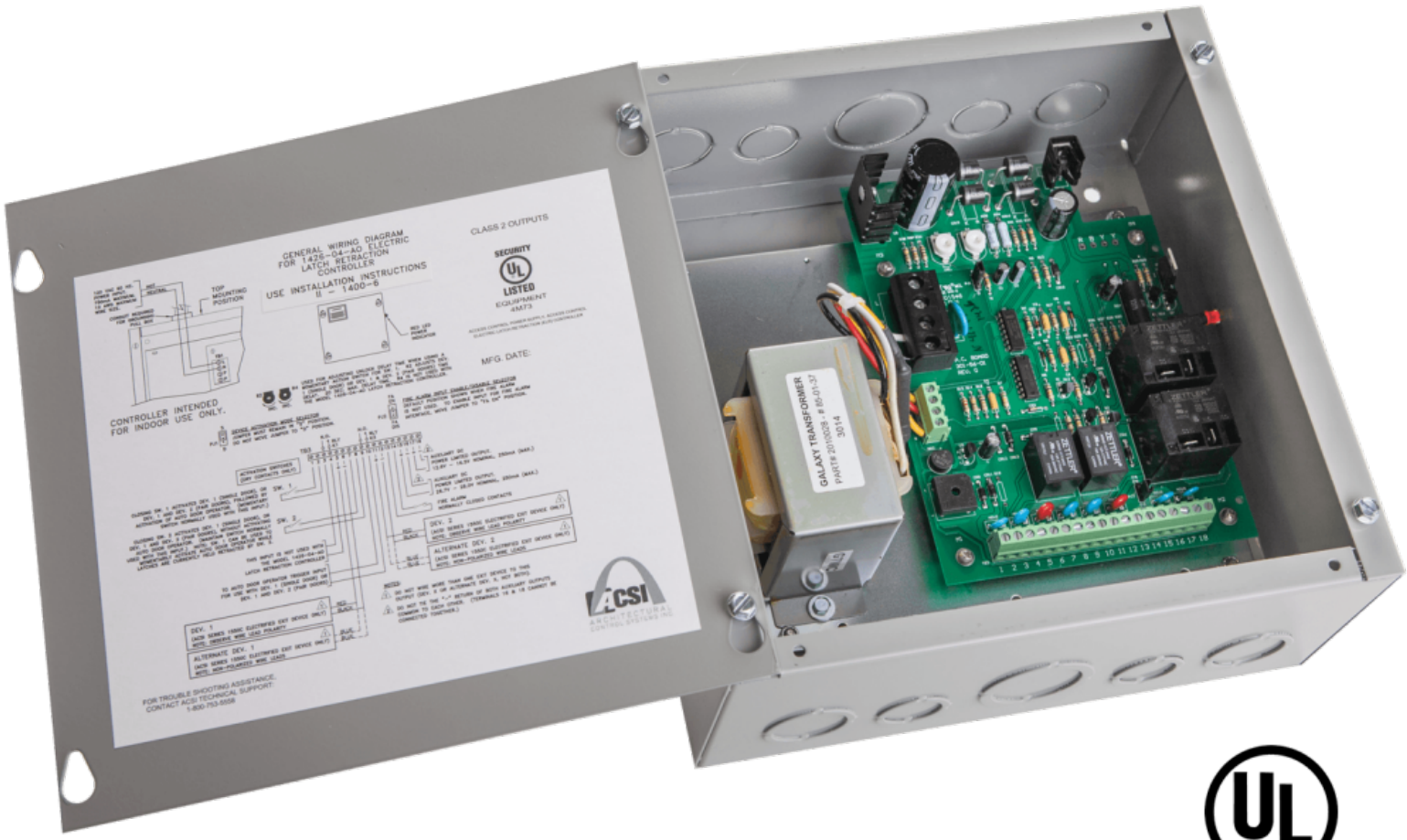
GENERAL WIRING DIAGRAM
FOR 1425-04-AO ELECTRIC
LATCH RETRACTION
CONTROLLER
USE INSTALLATION INSTRUCTIONS
II - 1400-6
CLASS 2 OUTPUTS
SECURITY
UL
LISTED
EQUIPMENT
4M73
MFG. DATE:
CONTROLLER INTENDED
FOR INDOOR USE ONLY.
GALAXY TRANSFORMER
PART# 2010028 # 85-01-57
3014
ACSI
ARCHITECTURAL
CONTROL SYSTEMS INC
FOR TROUBLE SHOOTING ASSISTANCE,
CONTACT ACSI TECHNICAL SUPPORT:
1-800-753-5558

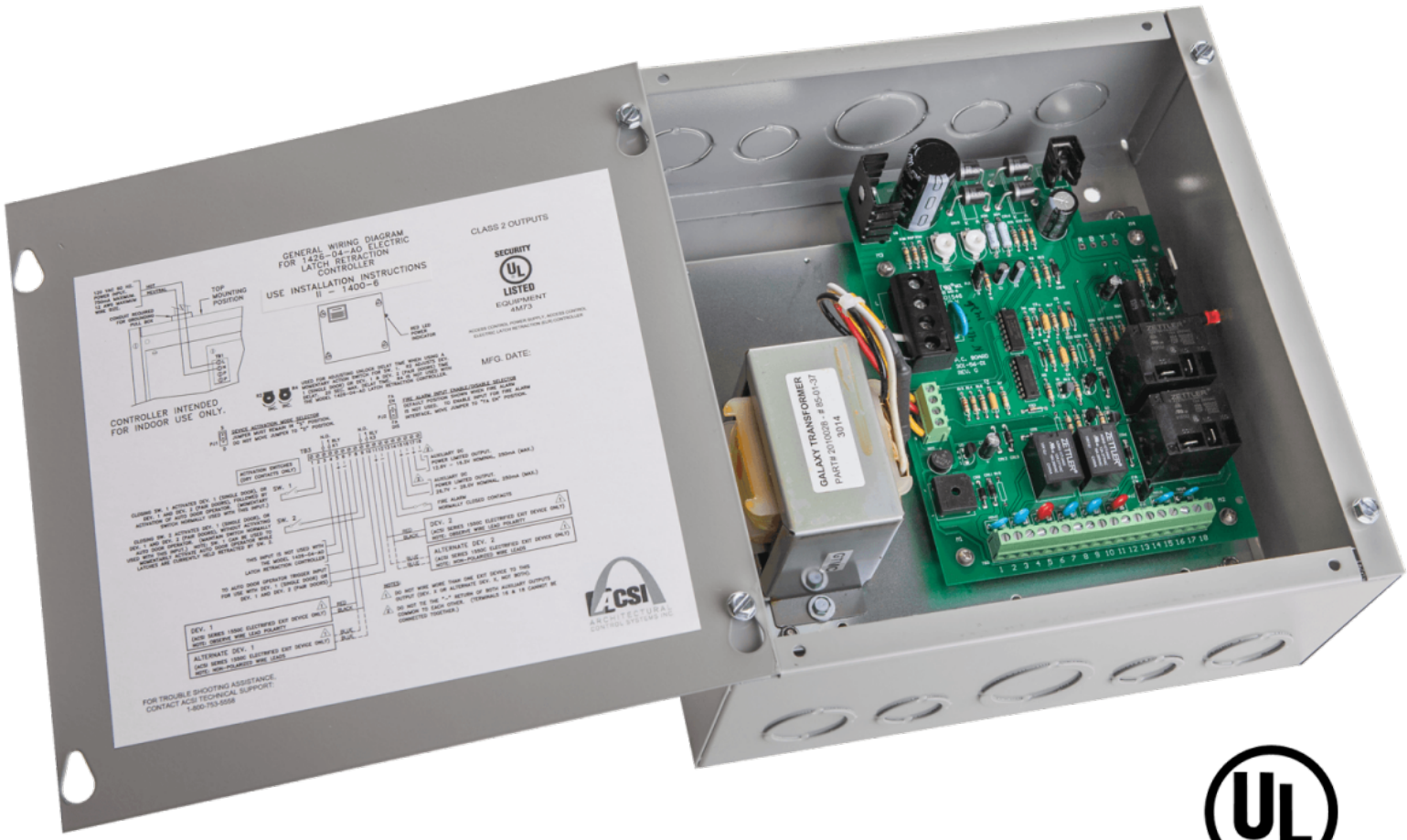
GENERAL WIRING DIAGRAM
FOR 1426-04-AO ELECTRIC
LATCH RETRACTION
CONTROLLER
USE INSTALLATION INSTRUCTIONS
II - 1400-6
CLASS 2 OUTPUTS
SECURITY
LISTED
EQUIPMENT
4M73
MFG. DATE:
CONTROLLER INTENDED
FOR INDOOR USE ONLY.
GALAXY TRANSFORMER
PART# 2010028 # 85-01-37
3014
FOR TROUBLE SHOOTING ASSISTANCE,
CONTACT ACSI TECHNICAL SUPPORT:
1-800-753-5556
ACSI
ARCHITECTURAL
CONTROL SYSTEMS INC

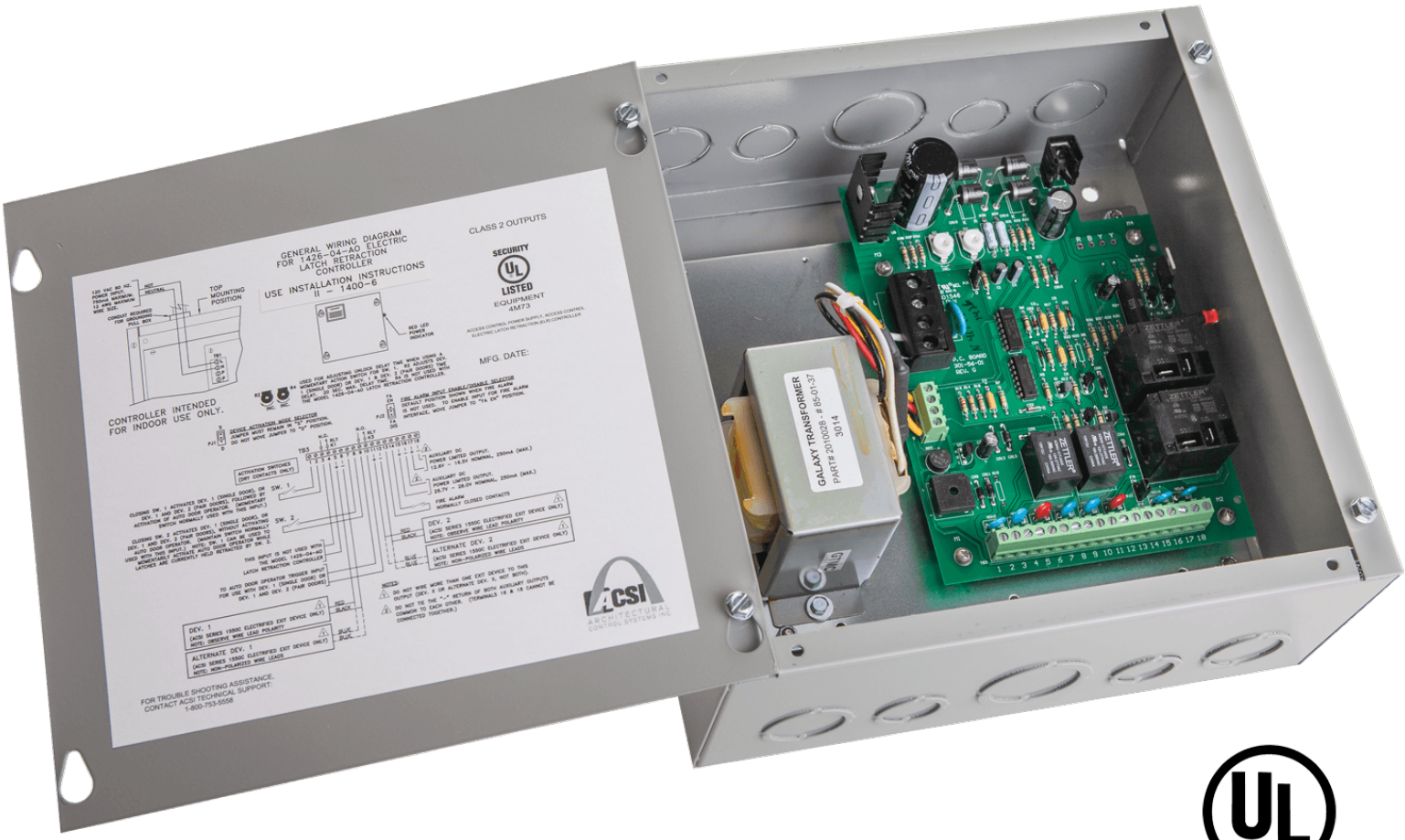
GENERAL WIRING DIAGRAM
FOR 1425-04-AO ELECTRIC
LATCH RETRACTION
CONTROLLER
USE INSTALLATION INSTRUCTIONS
II - 1400-6
CLASS 2 OUTPUTS
SECURITY
LISTED
EQUIPMENT
4M73
MFG. DATE:
CONTROLLER INTENDED
FOR INDOOR USE ONLY.
FOR TROUBLE SHOOTING ASSISTANCE,
CONTACT ACSI TECHNICAL SUPPORT:
1-800-753-5558
GALAXY TRANSFORMER
PART# 20110229 # 85-01-37
3014
ZETTLER
ACSI
ARCHITECTURAL
CONTROL SYSTEMS INC





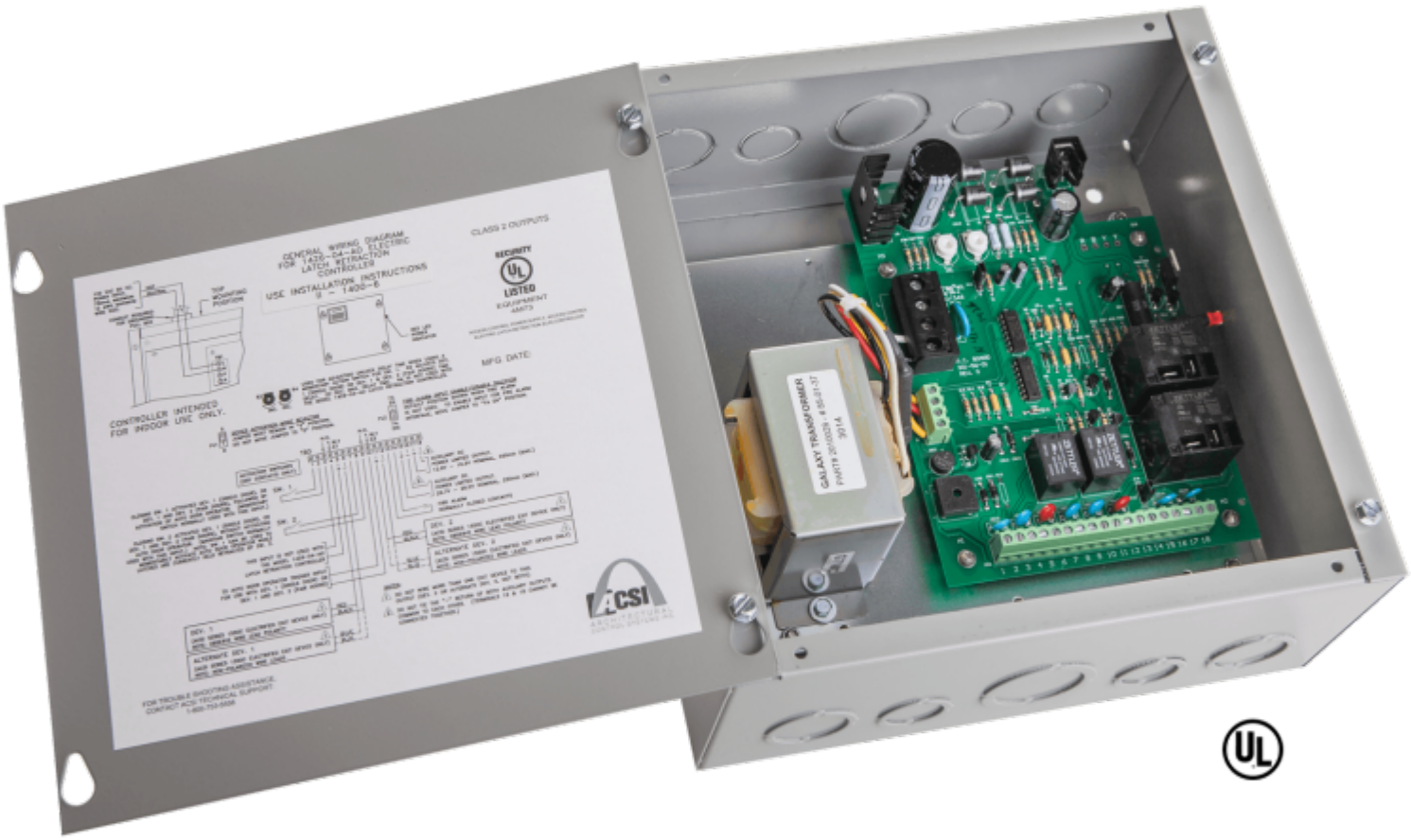
GENERAL WIRING DIAGRAM
FOR 1426-04-AD ELECTRIC
LATCH RETRACTION
CONTROLLER
USE INSTALLATION INSTRUCTIONS
CLASS 2 OUTPUTS
LISTED
MFG DATE
CONTROLLER INTENDED
FOR INDOOR USE ONLY.
ACSI
GALAXY TRANSFORMER

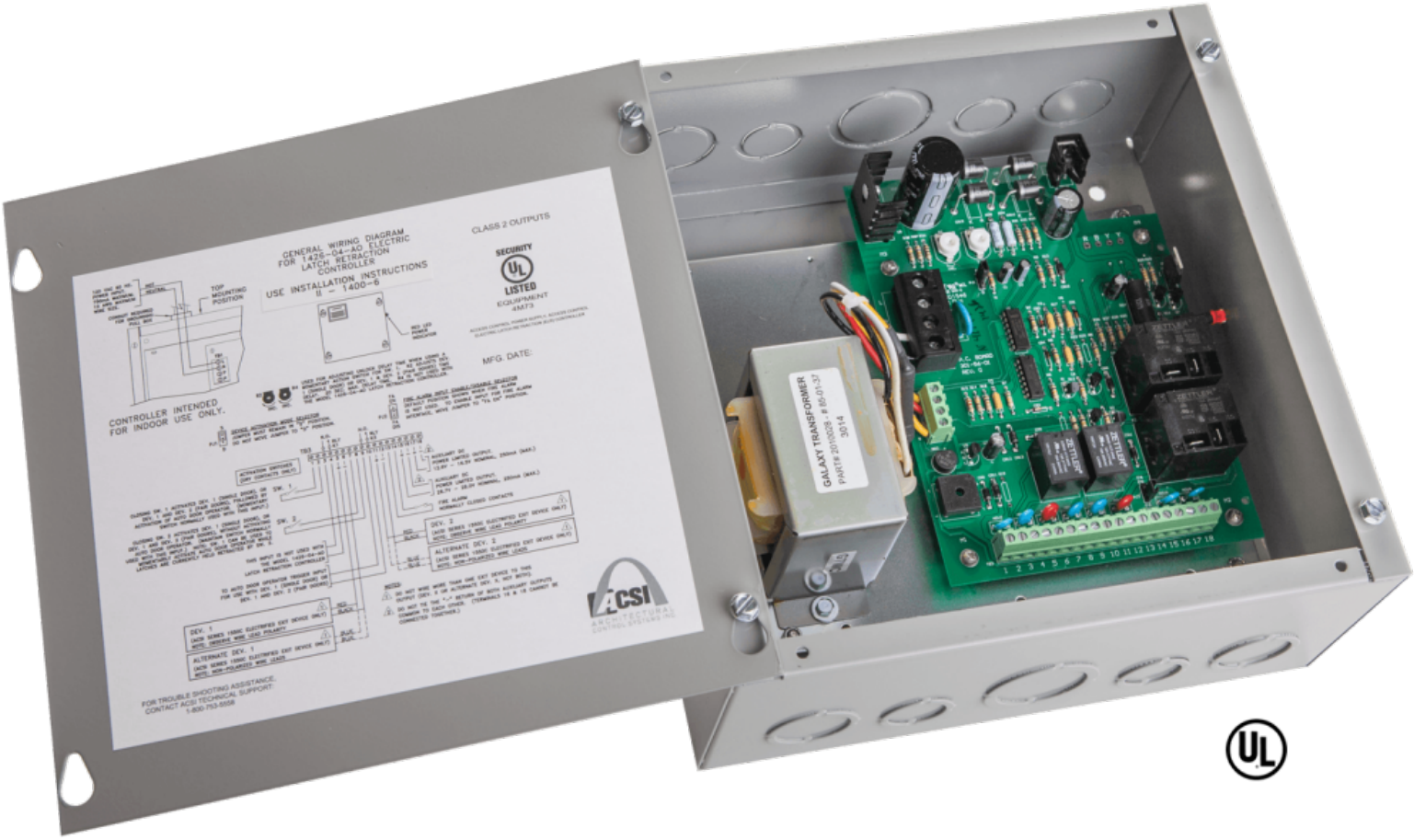
GENERAL WIRING DIAGRAM
FOR 1425-04-AO ELECTRIC
LATCH RETRACTION
CONTROLLER
USE INSTALLATION INSTRUCTIONS
II - 1400-6
CLASS 2 OUTPUTS
SECURITY
LISTED
EQUIPMENT
4M73
MFG. DATE:
CONTROLLER INTENDED
FOR INDOOR USE ONLY.
GALAXY TRANSFORMER
PART# 2010028 # 85-01-37
3014
ACSI
ARCHITECTURAL
CONTROL SYSTEMS INC
FOR TROUBLE SHOOTING ASSISTANCE,
CONTACT ACSI TECHNICAL SUPPORT:
1-800-753-5558

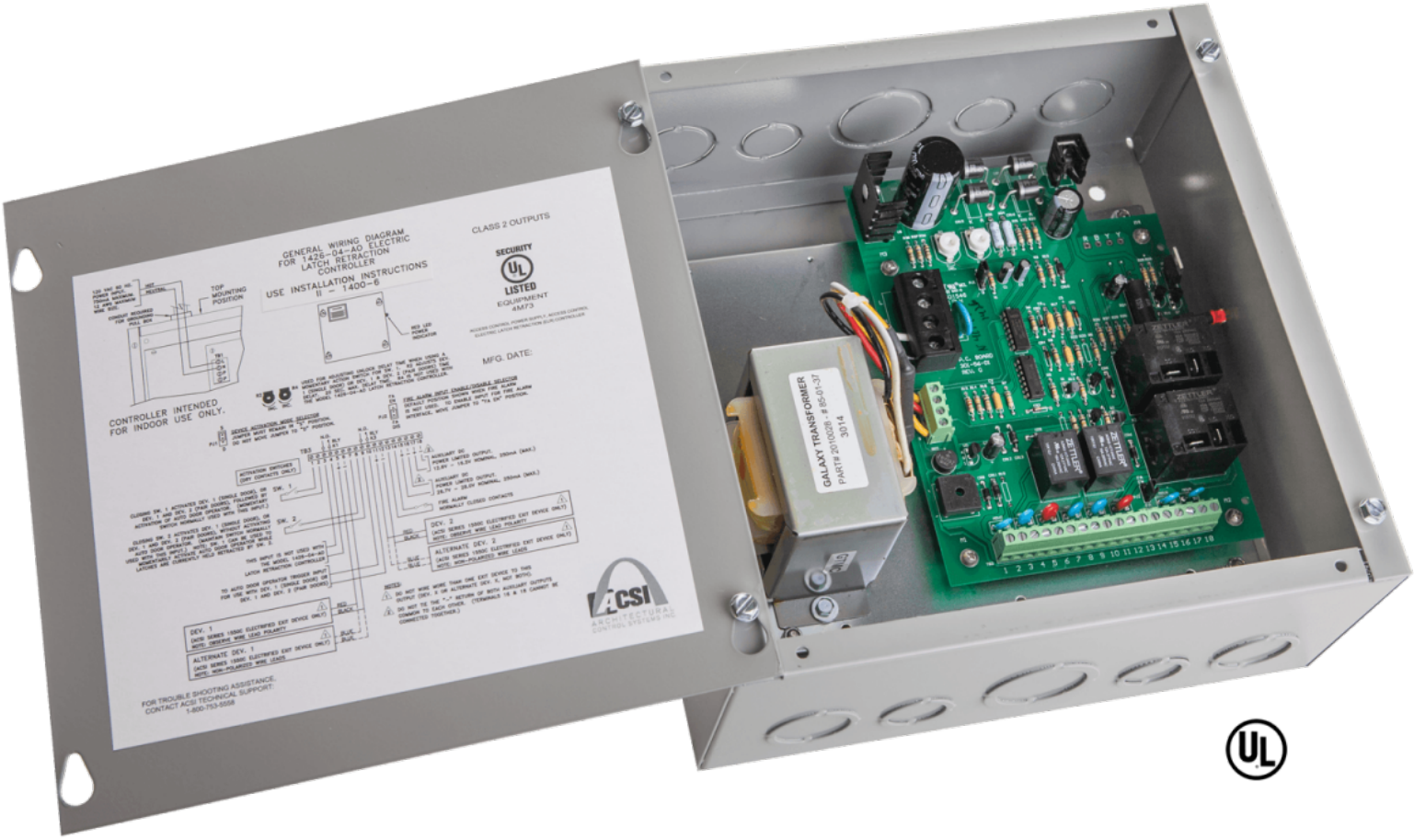
GENERAL WIRING DIAGRAM
FOR 1426-04-AO ELECTRIC
LATCH RETRACTION
CONTROLLER
USE INSTALLATION INSTRUCTIONS
II - 1400-6
CLASS 2 OUTPUTS
SECURITY
LISTED
EQUIPMENT
4M73
MFG. DATE:
CONTROLLER INTENDED
FOR INDOOR USE ONLY.
FOR TROUBLE SHOOTING ASSISTANCE,
CONTACT ACSI TECHNICAL SUPPORT:
1-800-753-5556
GALAXY TRANSFORMER
PART# 2010028 # 85-01-37
3014

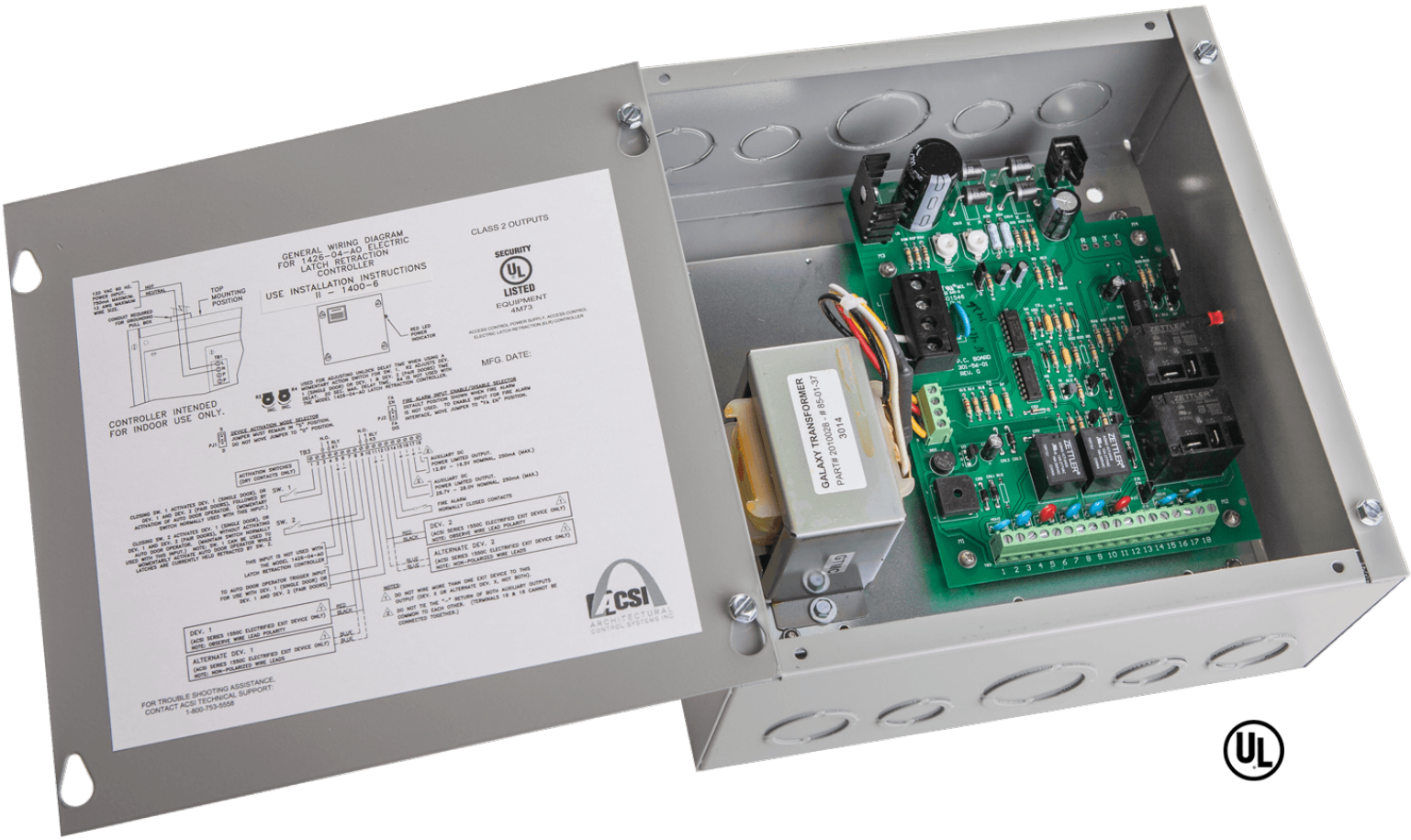
GENERAL WIRING DIAGRAM
FOR 1425-04-AO ELECTRIC
LATCH RETRACTION
CONTROLLER
USE INSTALLATION INSTRUCTIONS
II - 1400-6
CLASS 2 OUTPUTS
SECURITY
LISTED
EQUIPMENT
4M73
MFG. DATE:
CONTROLLER INTENDED
FOR INDOOR USE ONLY.
GALAXY TRANSFORMER
PART# 20110229 # 85-01-37
3014
FOR TROUBLE SHOOTING ASSISTANCE,
CONTACT ACSI TECHNICAL SUPPORT:
1-800-753-5558
ACSI
ARCHITECTURAL
CONTROL SYSTEMS INC





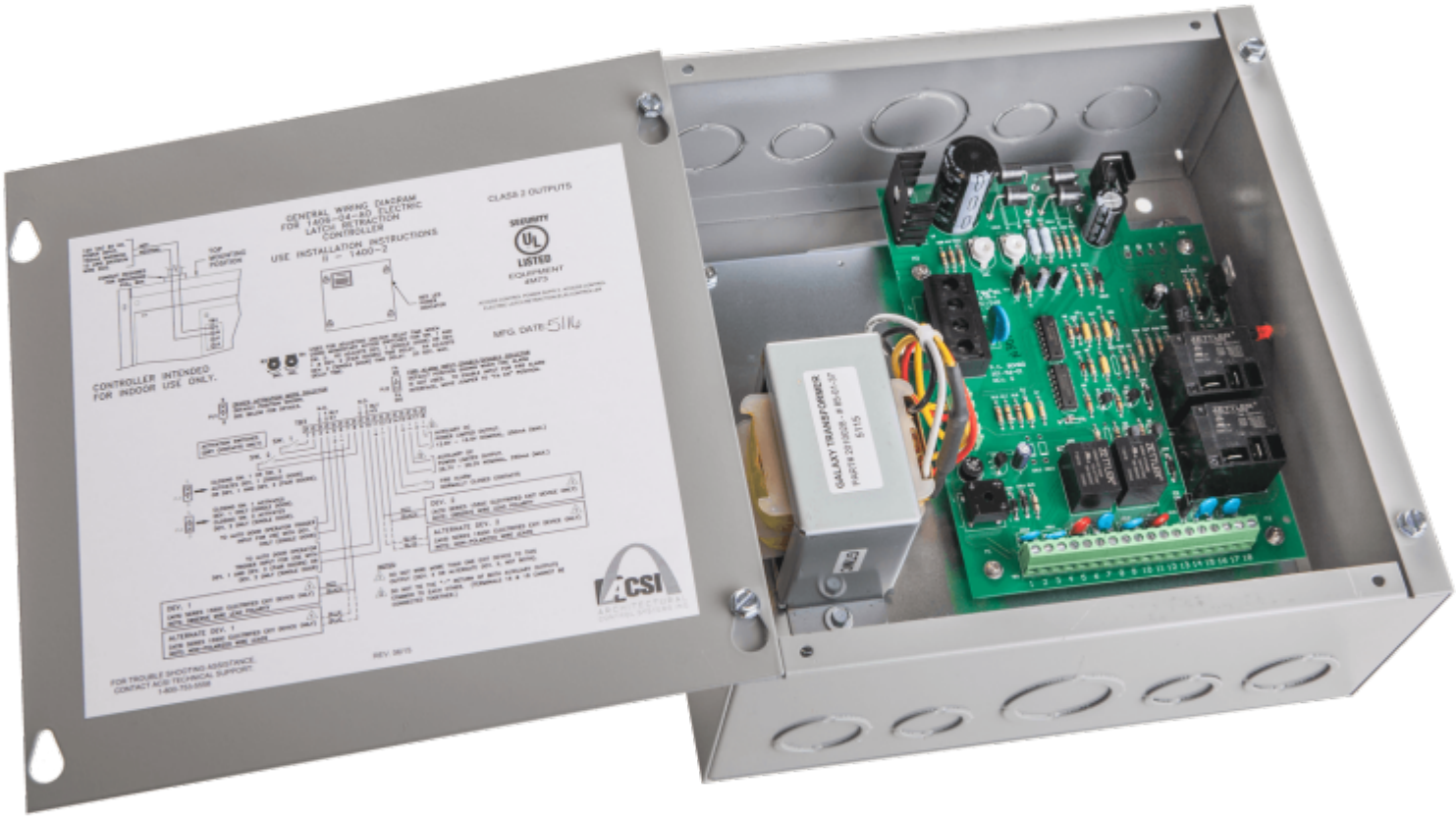
GENERAL WIRING DIAGRAM
FOR 1408-24-80 ELECTRIC
LATCH RETRACTION
CONTROLLER
USE INSTALLATION INSTRUCTIONS
II - 1400-2
CLASS 2 OUTPUTS
SECURITY
UL
LISTED
EQUIPMENT
4M75
MFG. DATE: 5116
CONTROLLER INTENDED
FOR INDOOR USE ONLY.
GALAXY TRANSFORMER
ACSI
FOR TROUBLE SHOOTING ASSISTANCE
CONTACT ACSI TECHNICAL SUPPORT
1-800-753-5558
REV. 3615

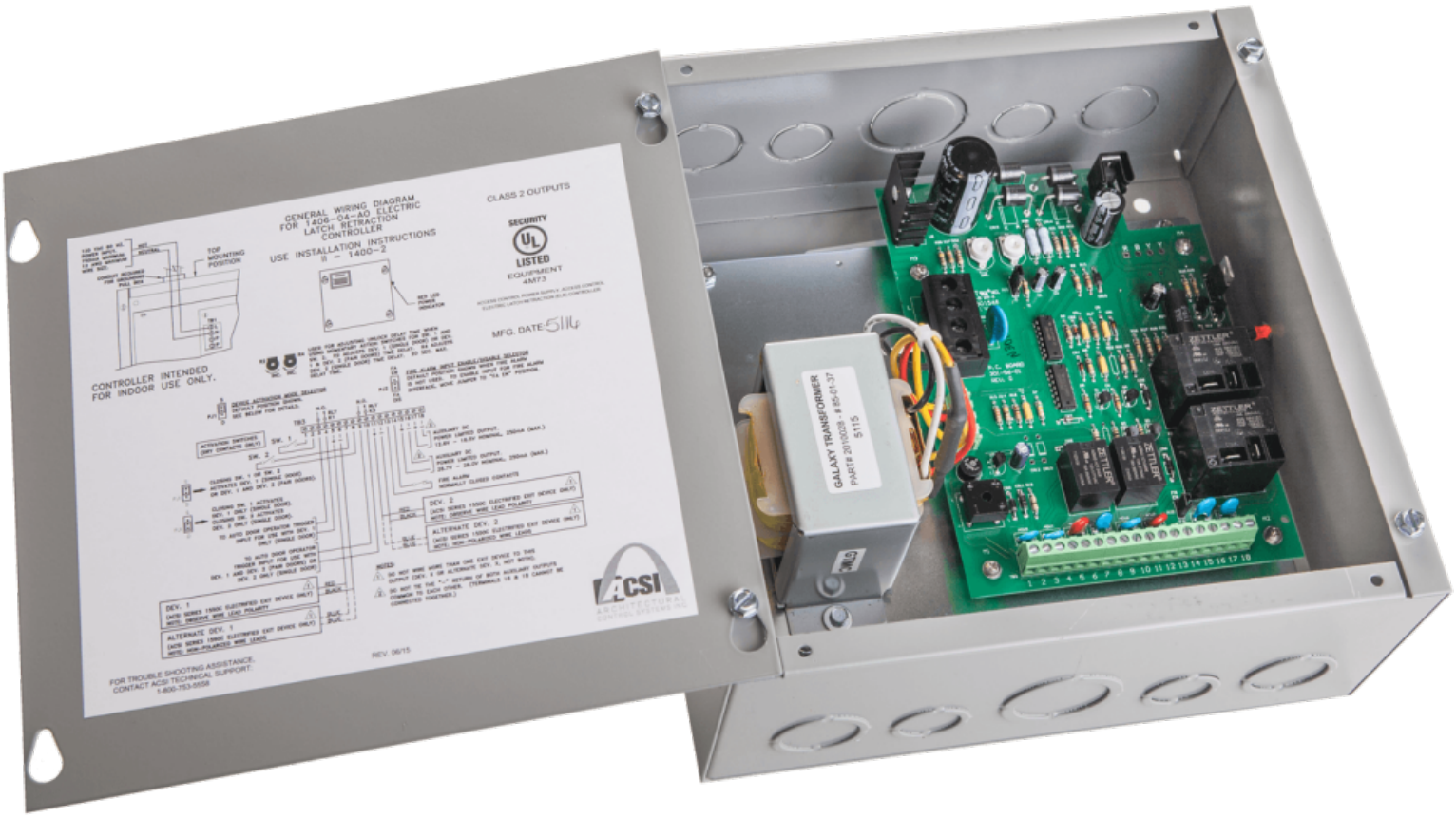
GENERAL WIRING DIAGRAM
FOR 1406-04-A0 ELECTRIC
LATCH RETRACTION
CONTROLLER
USE INSTALLATION INSTRUCTIONS
II - 1400-2
CLASS 2 OUTPUTS
SECURITY
UL
LISTED
EQUIPMENT
4M73
CONTROLLER INTENDED
FOR INDOOR USE ONLY.
MFG. DATE: 5116
GALAXY TRANSFORMER
PART# 2010028 - # 85-01-37
5115
ACSI
FOR TROUBLE SHOOTING ASSISTANCE,
CONTACT ACSI TECHNICAL SUPPORT.
1-800-753-5558
REV. 06/15

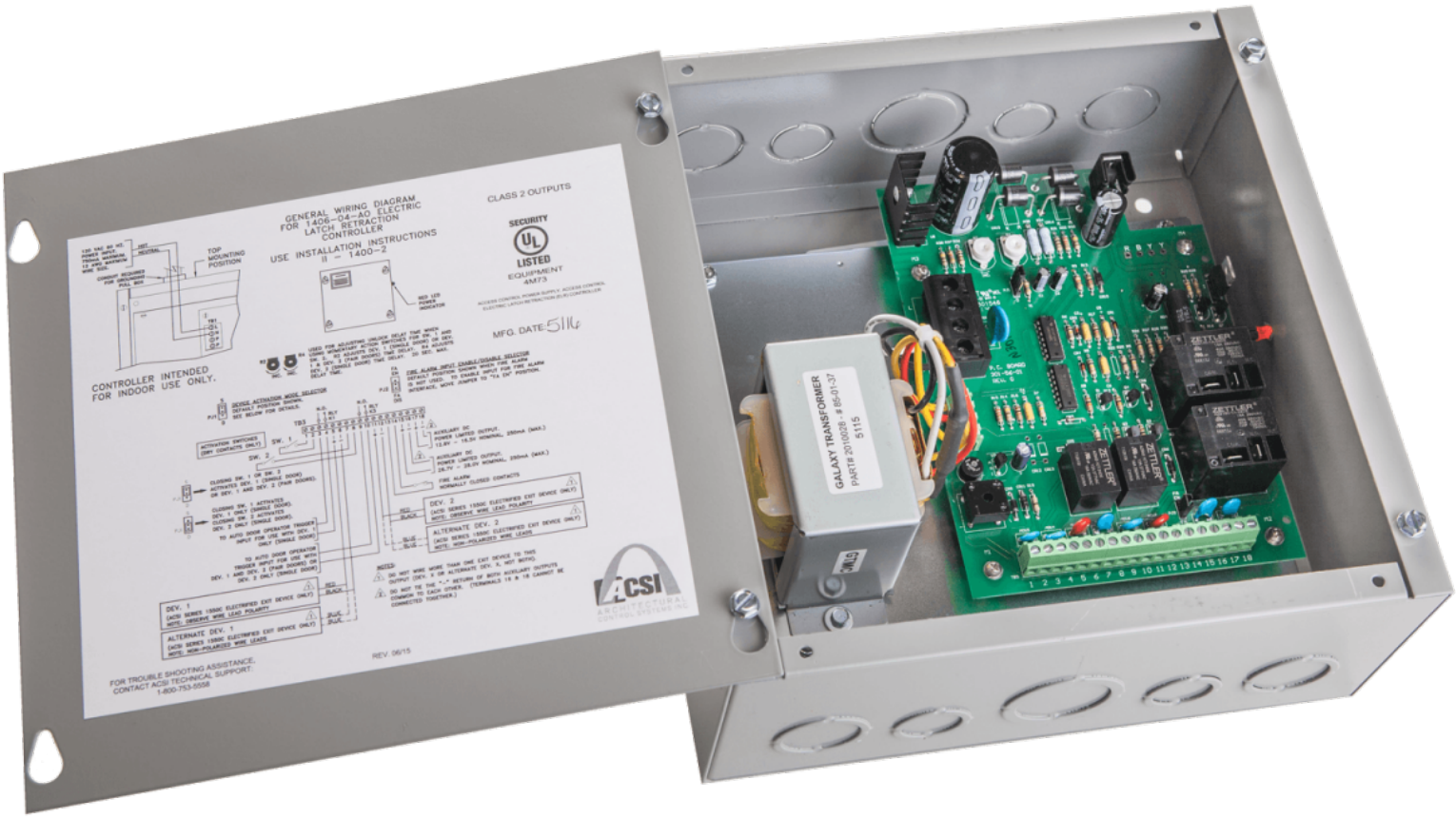
GENERAL WIRING DIAGRAM
FOR 1406-04-AO ELECTRIC
LATCH RETRACTION
CONTROLLER
USE INSTALLATION INSTRUCTIONS
II - 1400-2
CLASS 2 OUTPUTS
SECURITY
UL
LISTED
EQUIPMENT
4M73
MFG. DATE: 5116
CONTROLLER INTENDED
FOR INDOOR USE ONLY.
GALAXY TRANSFORMER
PART# 2010028 # 85-01-37
5115
ACSI
FOR TROUBLE SHOOTING ASSISTANCE,
CONTACT ACSI TECHNICAL SUPPORT.
1-800-753-5558
REV. 06/15

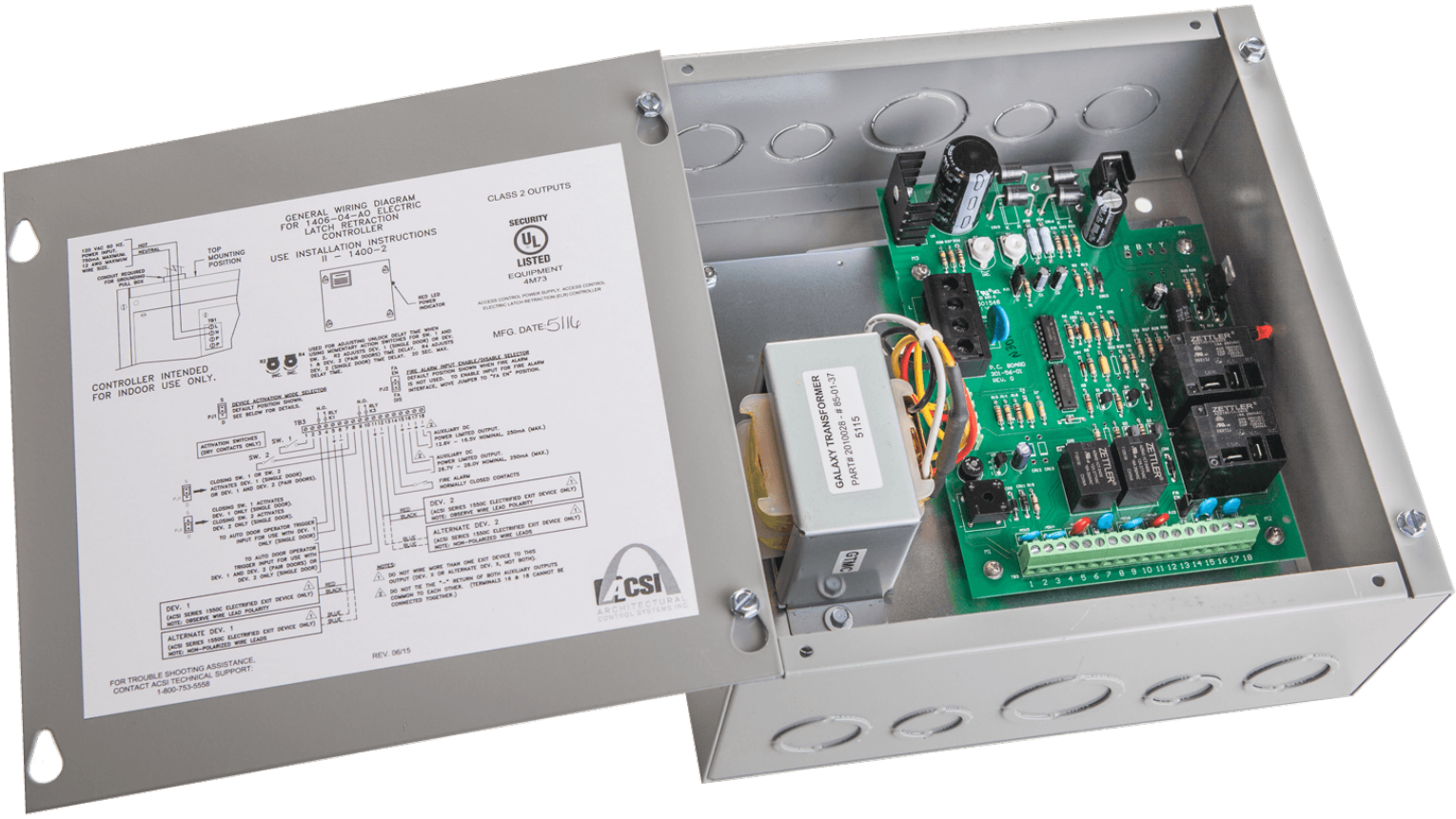
GENERAL WIRING DIAGRAM
FOR 1406-04-AO ELECTRIC
LATCH RETRACTION
CONTROLLER
USE INSTALLATION INSTRUCTIONS
II - 1400-2
CLASS 2 OUTPUTS
SECURITY
UL
LISTED
EQUIPMENT
4M73
MFG. DATE: 5116
CONTROLLER INTENDED
FOR INDOOR USE ONLY.
GALAXY TRANSFORMER
PART# 2010028 - # 85-01-37
5115
FOR TROUBLE SHOOTING ASSISTANCE,
CONTACT ACSI TECHNICAL SUPPORT:
1-800-753-5558
REV. 06/15
ACSI
ARCHITECTURAL
CONTROL SYSTEMS INC
ZETTLER



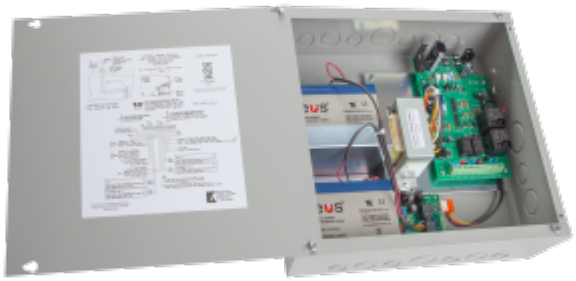

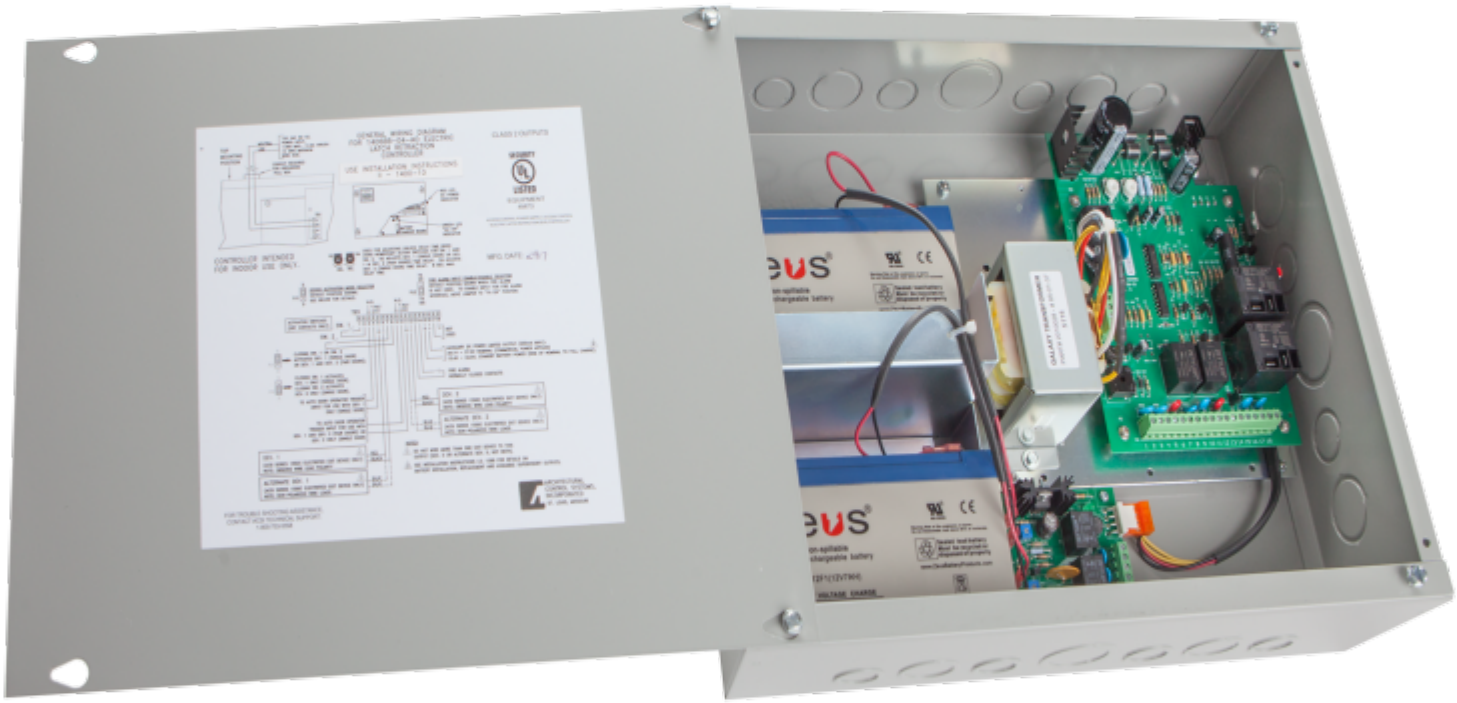

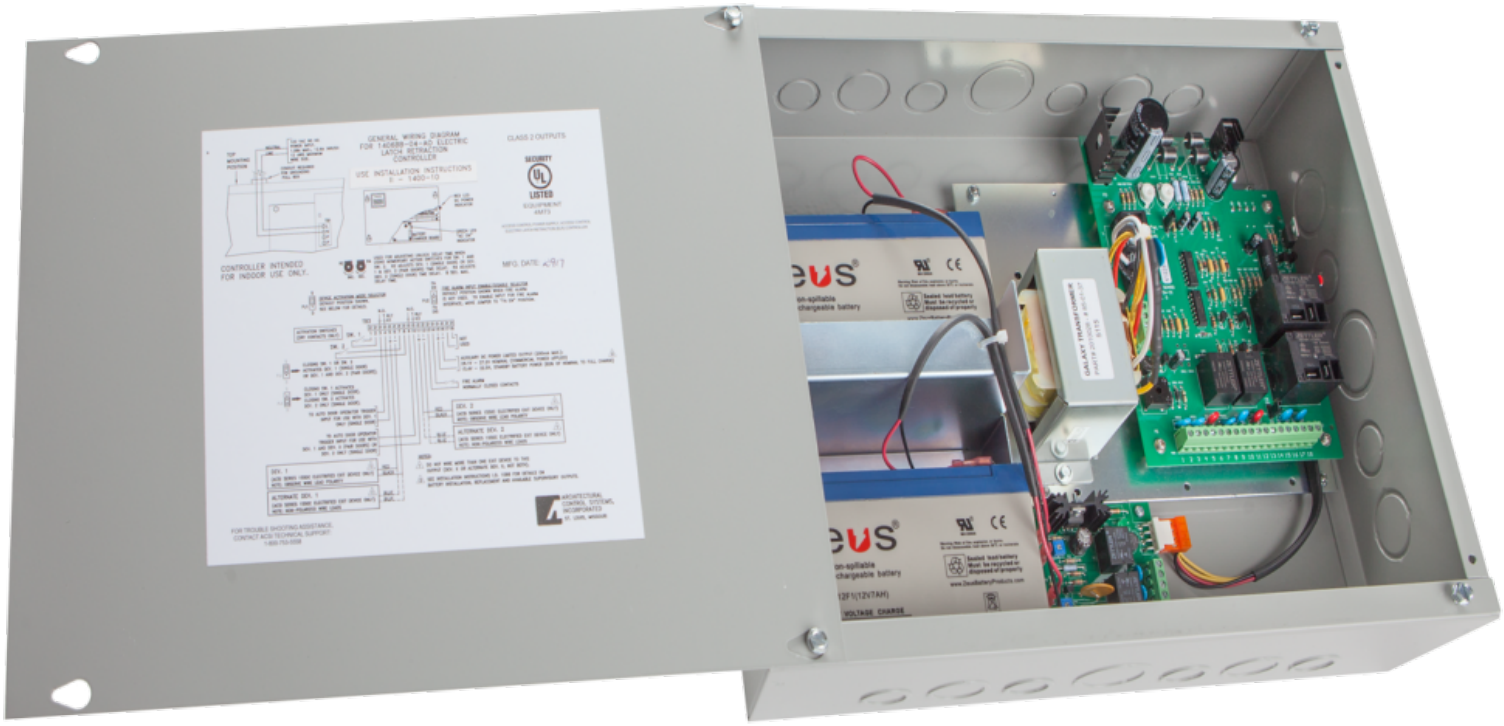
GENERAL WIRING DIAGRAM
FOR 1-40688-24-AO ELECTRIC
LATCH RETRACTION
CONTROLLER
USE INSTALLATION INSTRUCTIONS
CLASS 2 OUTPUTS
CONTROLLER INTENDED
FOR INDOOR USE ONLY.
MFG. DATE:
FOR TROUBLE SHOOTING ASSISTANCE,
CONTACT ACS TECHNICAL SUPPORT
1-800-753-1558
ARCHITECTURAL
CONTROL SYSTEMS,
INCORPORATED
GALAXY TRANSFORMER

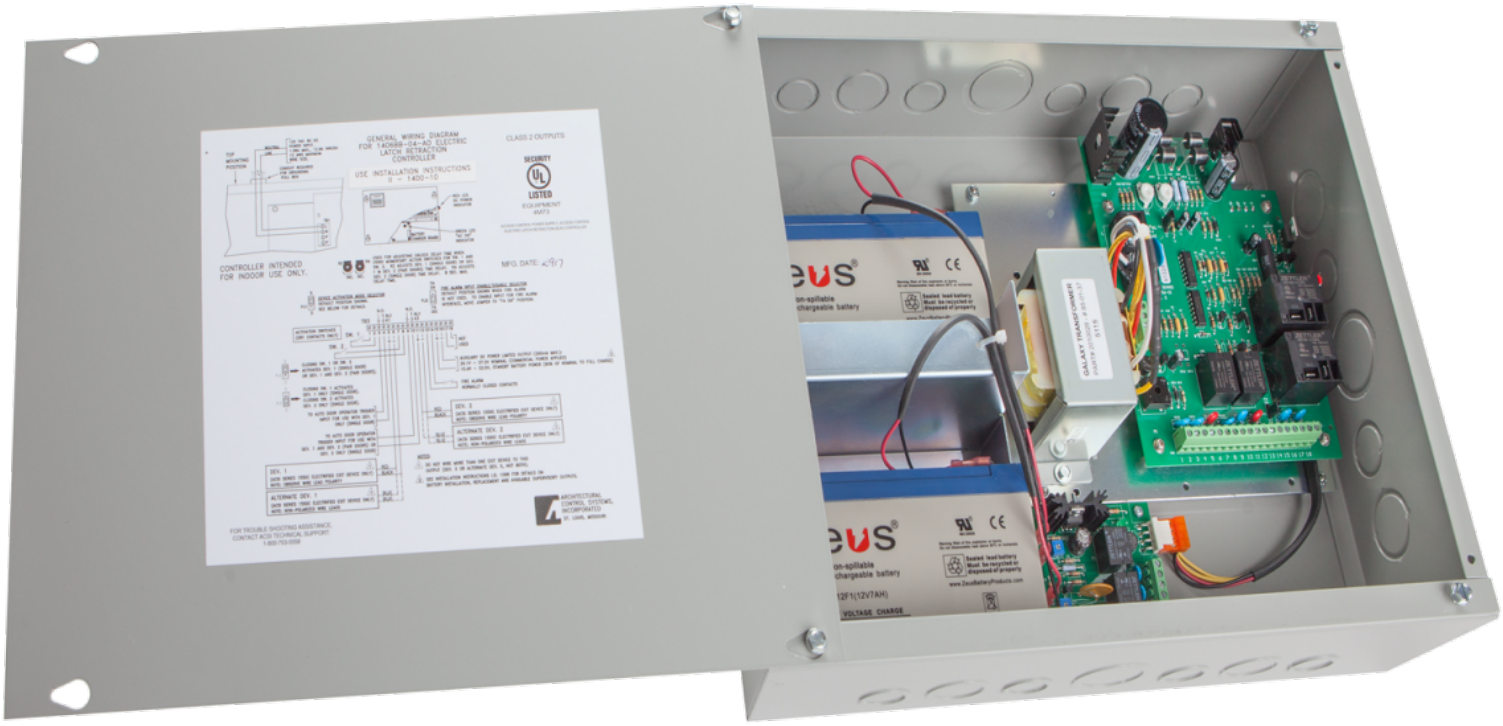
GENERAL WIRING DIAGRAM
FOR 1406BB-04-AO ELECTRIC
LATCH RETRACTION
CONTROLLER
USE INSTALLATION INSTRUCTIONS
8 - 1400-10
CLASS 2 OUTPUTS
SECURITY
LISTED
EQUIPMENT
CONTROLLER INTENDED
FOR INDOOR USE ONLY.
MFG. DATE:
FOR TROUBLE SHOOTING ASSISTANCE,
CONTACT ACS TECHNICAL SUPPORT
1-800-753-1056
ARCHITECTURAL
CONTROL SYSTEMS,
INCORPORATED
ST. LOUIS, MISSOURI
GALAXY TRANSFORMER
eus
on-spillable
chargeable battery
VOLTAGE CHARGE

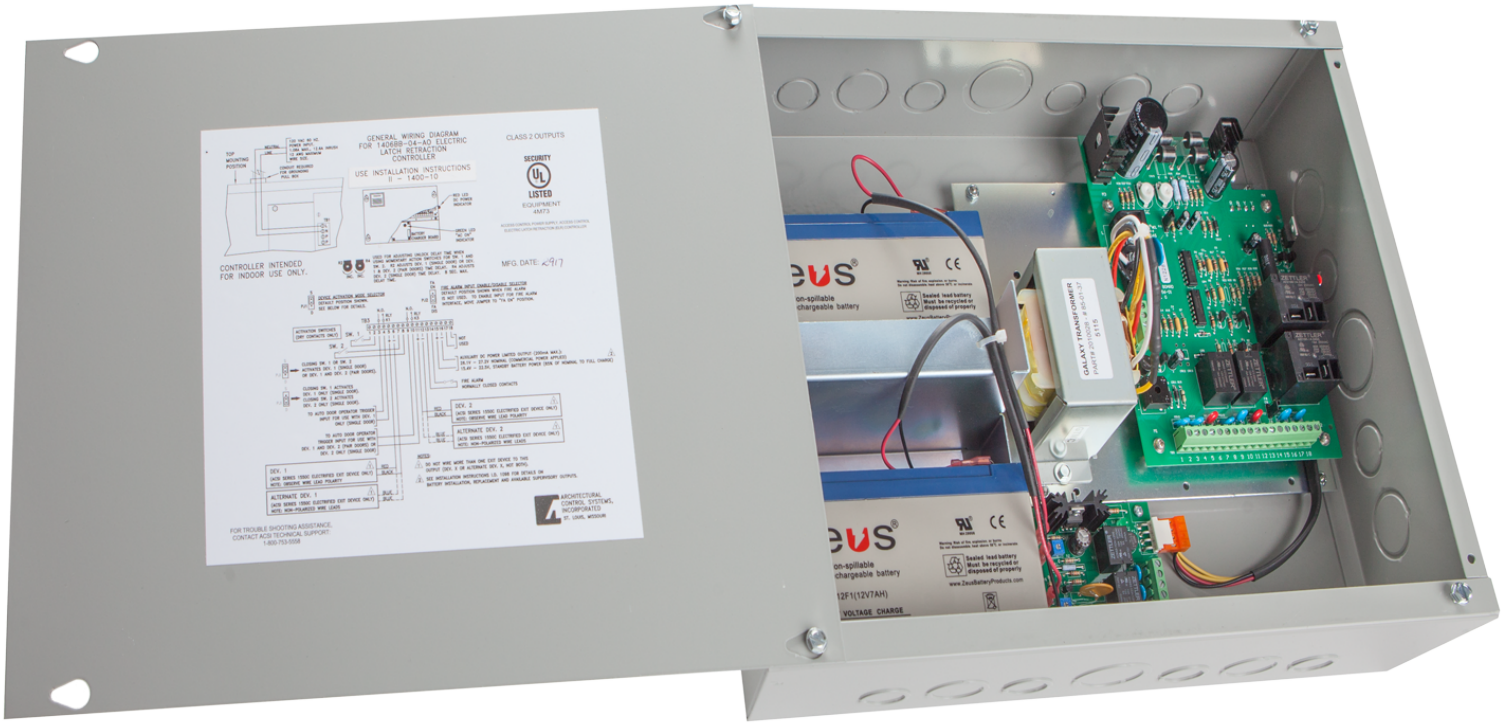
GENERAL WIRING DIAGRAM
FOR 1406BB-04-AO ELECTRIC
LATCH RETRACTION
CONTROLLER
USE INSTALLATION INSTRUCTIONS
II - 1400-10
CLASS 2 OUTPUTS
SECURITY
LISTED
EQUIPMENT
4M73
CONTROLLER INTENDED
FOR INDOOR USE ONLY.
MFG. DATE:
FOR TROUBLE SHOOTING ASSISTANCE,
CONTACT ACSI TECHNICAL SUPPORT:
1-800-753-1558
ARCHITECTURAL
CONTROL SYSTEMS,
INCORPORATED
ST. LOUIS, MISSOURI
GALAXY TRANSFORMER
VOLTAGE CHARGE



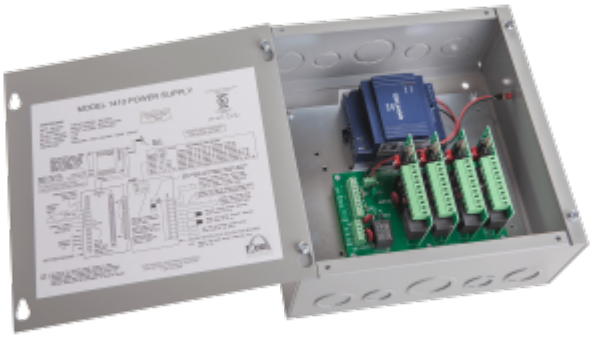
MODEL 1413 POWER SUPPLY

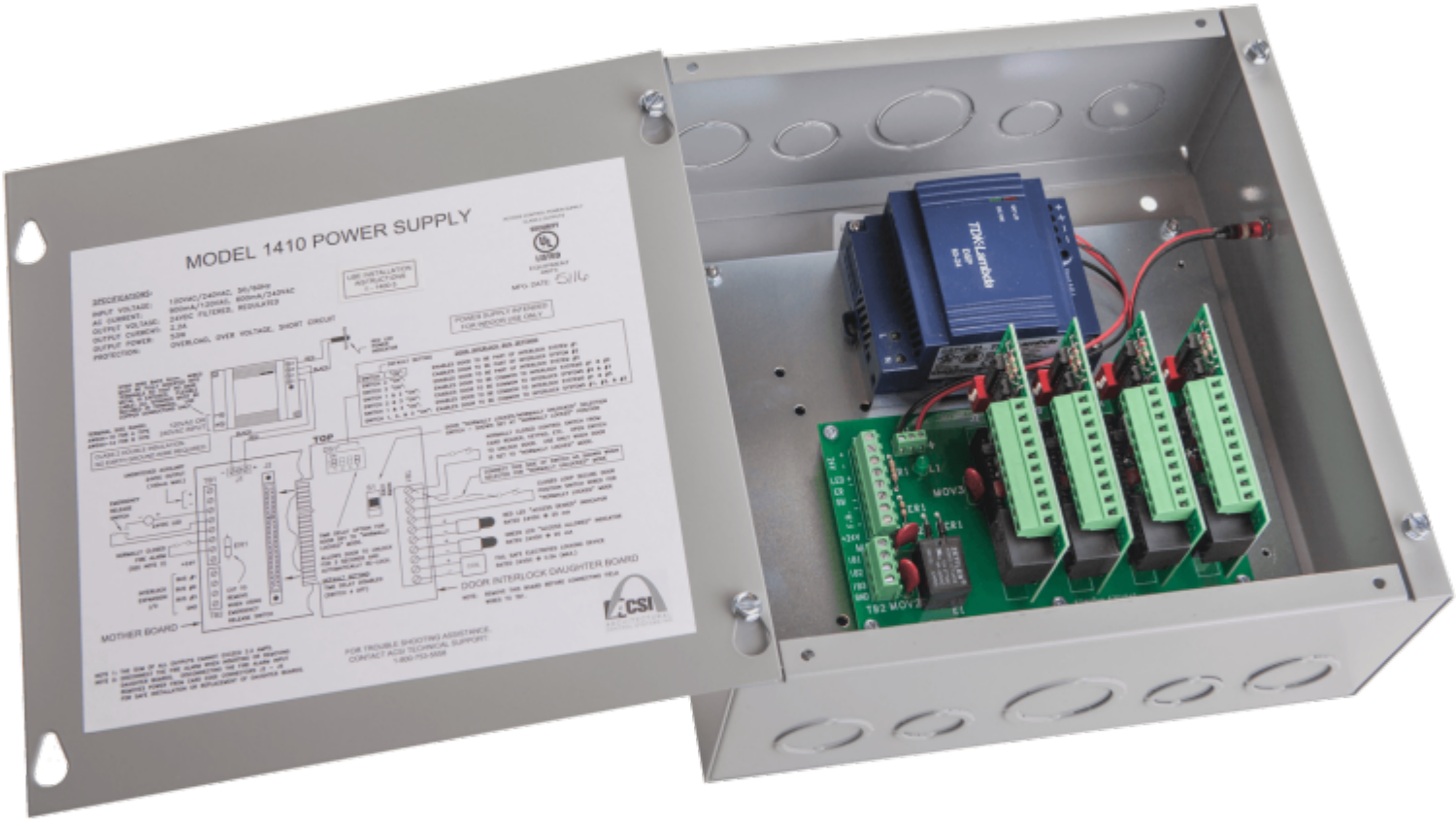
MODEL 1410 POWER SUPPLY
DOOR INTERLOCK DAUGHTER BOARD
MOTHER BOARD
TDK-Lambda

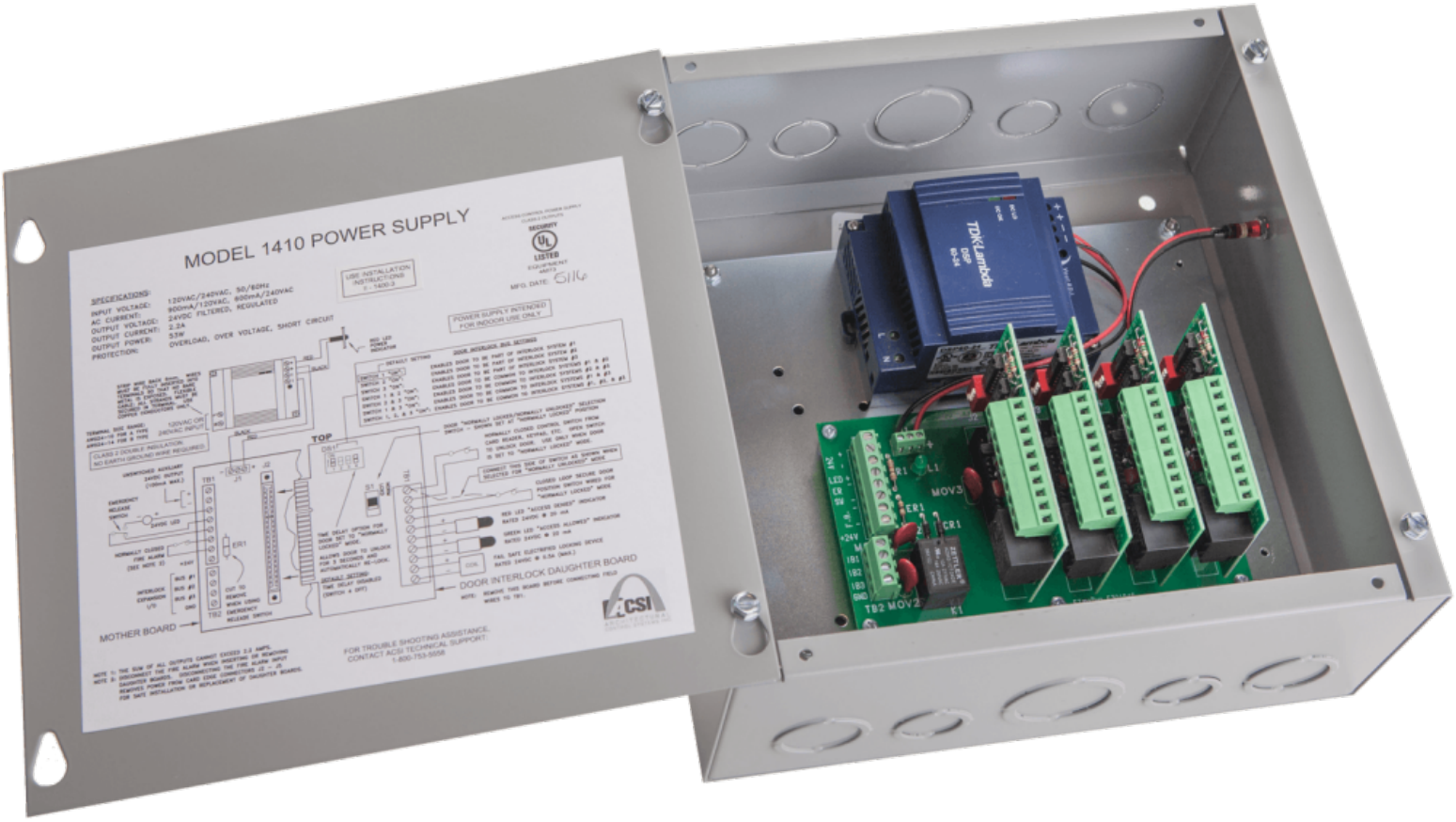
MODEL 1410 POWER SUPPLY
SPECIFICATIONS:
INPUT VOLTAGE: 120VAC/240VAC, 50/60Hz
AC CURRENT: 900mA/120VAC, 600mA/240VAC
OUTPUT VOLTAGE: 24VDC FILTERED, REGULATED
OUTPUT CURRENT: 2.2A
OUTPUT POWER: 53W
PROTECTION: OVERLOAD, OVER VOLTAGE, SHORT CIRCUIT
USE INSTALLATION INSTRUCTIONS
POWER SUPPLY INTENDED FOR INDOOR USE ONLY
MFG. DATE: 5116
TOP
MOTHER BOARD
DOOR INTERLOCK DAUGHTER BOARD
FOR TROUBLE SHOOTING ASSISTANCE, CONTACT ACSI TECHNICAL SUPPORT: 1-800-753-5558
ACSI
TDK-Lambda
MOV3
TB2 MOV2

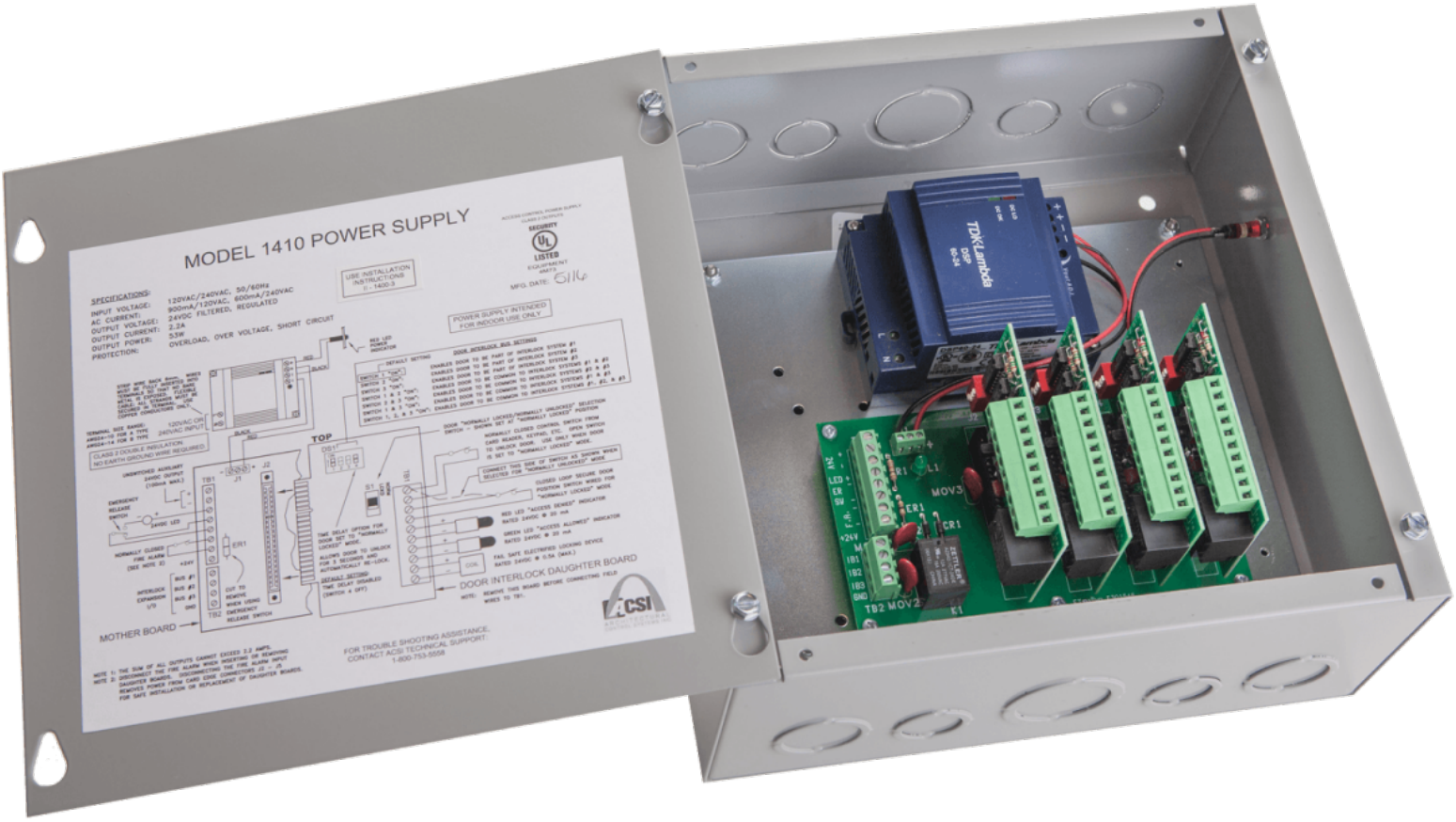
MODEL 1410 POWER SUPPLY
SPECIFICATIONS:
INPUT VOLTAGE: 120VAC/240VAC, 50/60Hz
AC CURRENT: 900mA/120VAC, 600mA/240VAC
OUTPUT VOLTAGE: 24VDC FILTERED, REGULATED
OUTPUT CURRENT: 2.2A
OUTPUT POWER: 53W
PROTECTION: OVERLOAD, OVER VOLTAGE, SHORT CIRCUIT
USE INSTALLATION INSTRUCTIONS I.I. 1400-3
POWER SUPPLY INTENDED FOR INDOOR USE ONLY
MFG. DATE: 5116
TOP
MOTHER BOARD
DOOR INTERLOCK DAUGHTER BOARD
FOR TROUBLE SHOOTING ASSISTANCE, CONTACT ACSI TECHNICAL SUPPORT: 1-800-753-5558
TDK·Lambda
DSP 60-24
MOV3
MOV2
TB2

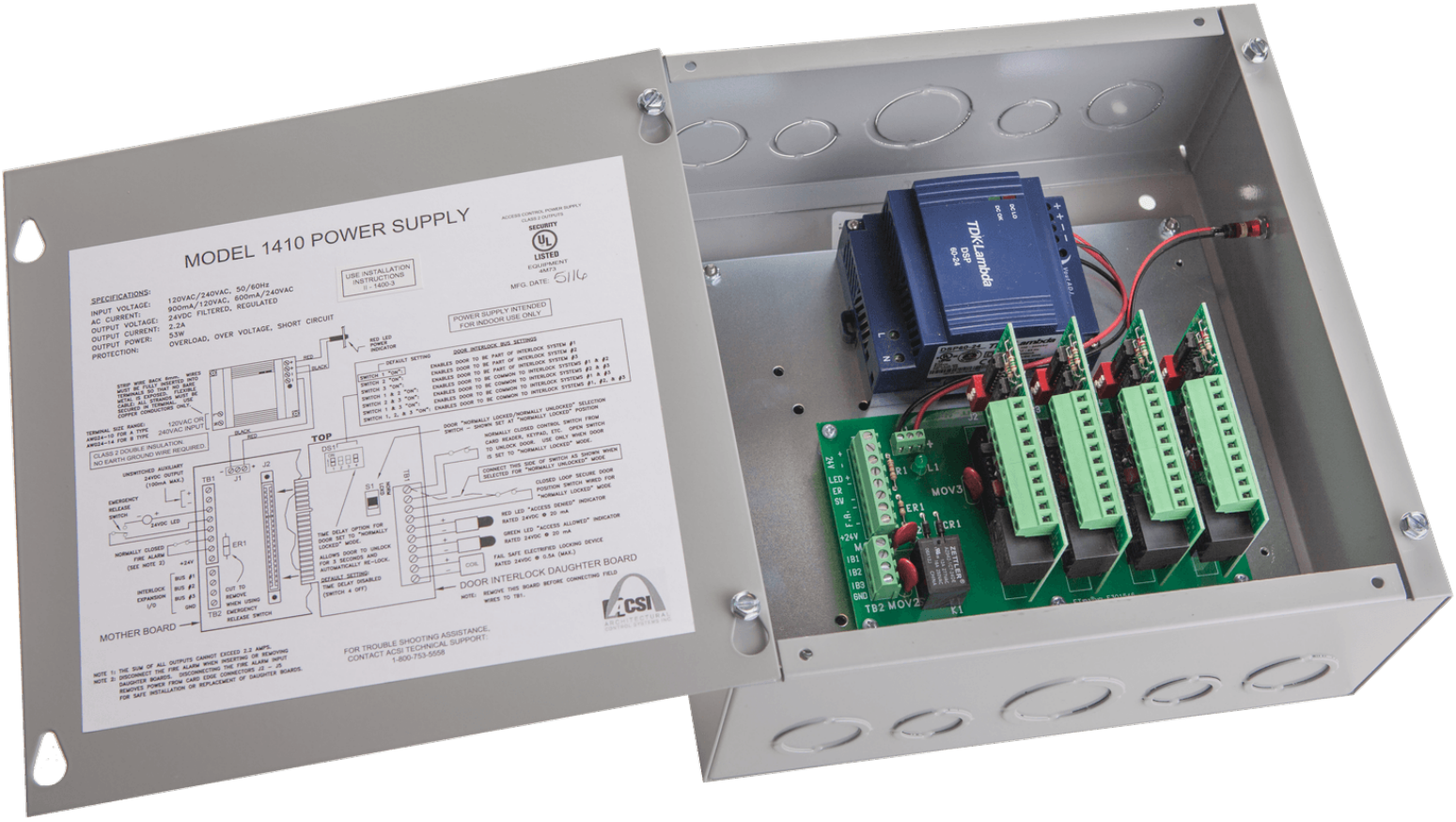
MODEL 1410 POWER SUPPLY
SPECIFICATIONS:
INPUT VOLTAGE: 120VAC/240VAC, 50/60Hz
AC CURRENT: 900mA/120VAC, 600mA/240VAC
OUTPUT VOLTAGE: 24VDC FILTERED, REGULATED
OUTPUT CURRENT: 2.2A
OUTPUT POWER: 53W
PROTECTION: OVERLOAD, OVER VOLTAGE, SHORT CIRCUIT
USE INSTALLATION INSTRUCTIONS I - 1400-3
POWER SUPPLY INTENDED FOR INDOOR USE ONLY
MFG. DATE: 5116
TOP
MOTHER BOARD
DOOR INTERLOCK DAUGHTER BOARD
FOR TROUBLE SHOOTING ASSISTANCE, CONTACT ACSI TECHNICAL SUPPORT: 1-800-753-5558
TDK·Lambda
TB2 MOV2




MODEL 1420 POWER SUPPLY


MODEL 1420 POWER SUPPLY
TDK·Lambda


MODEL 1420 POWER SUPPLY
SPECIFICATIONS:
INPUT VOLTAGE: 120VAC/240VAC, 50/60Hz
AC CURRENT: 800mA/120VAC, 650mA/240VAC
OUTPUT VOLTAGE: 24VDC FILTERED, REGULATED
OUTPUT CURRENT: 2.0A
OUTPUT POWER: 48W
PROTECTION: OVERLOAD, OVER VOLTAGE, SHORT CIRCUIT
USE INSTALLATION INSTRUCTIONS 10-1102
MFG. DATE: 5116
POWER SUPPLY INTENDED FOR INDOOR USE ONLY
TERMINAL SIZE RANGE:
AWG24-10 FOR A TYPE
AWG24-14 FOR B TYPE
120VAC OR 240VAC INPUT
CLASS 2 DOUBLE INSULATION
NO EARTH GROUND WIRE REQUIRED
RED
BLACK
RED LED "POWER" INDICATOR
CONTROL BOARD 24V POWER CONNECTOR J1
CONTROL BOARD I/O CONNECTOR
TB1
TO FAIL SECURE ELECTRIFIED LOCKING DEVICE.
TO FAIL SAFE ELECTRIFIED LOCKING DEVICE.
UNMONITORED AUXILIARY 24VDC OUTPUT.
NOTE: THE SUM OF ALL OUTPUTS CANNOT EXCEED 2 AMPS.
FOR TROUBLE SHOOTING ASSISTANCE, CONTACT ACSI TECHNICAL SUPPORT:
1-800-753-5508
ACSI
TDK·Lambda
ZETTLER


MODEL 1420 POWER SUPPLY
SPECIFICATIONS:
INPUT VOLTAGE: 120VAC/240VAC, 50/60Hz
AC CURRENT: 800mA/120VAC, 600mA/240VAC
OUTPUT VOLTAGE: 24VDC FILTERED, REGULATED
OUTPUT CURRENT: 2.0A
OUTPUT POWER: 48W
PROTECTION: OVERLOAD, OVER VOLTAGE, SHORT CIRCUIT
USE INSTALLATION INSTRUCTIONS I.D. 1152
POWER SUPPLY INTENDED FOR INDOOR USE ONLY
STRIP WIRE BACK 6mm. WIRES MUST BE FULLY INSERTED INTO TERMINALS SO THAT NO BARE METAL IS EXPOSED. FLEXIBLE CABLES ALL STRANDS MUST BE SECURED IN TERMINAL. USE COPPER CONDUCTORS ONLY.
TERMINAL SIZE RANGE: AWG24-10 FOR A TYPE AWG24-14 FOR B TYPE
120VAC OR 240VAC INPUT
CLASS 2 DOUBLE INSULATION. NO EARTH GROUND WIRE REQUIRED
RED
BLACK
RED LED POWER INDICATOR
BLACK
RED
CONTROL BOARD 24V POWER CONNECTOR J1
CONTROL BOARD I/O CONNECTOR
TB1
TO FAIL SECURE ELECTRIFIED LOCKING DEVICE.
TO FAIL SAFE ELECTRIFIED LOCKING DEVICE.
UNSWITCHED AUXILIARY 24VDC OUTPUT.
NOTE: THE SUM OF ALL OUTPUTS CANNOT EXCEED 3 AMPS.
FOR TROUBLE SHOOTING ASSISTANCE, CONTACT ACSI TECHNICAL SUPPORT: 1-800-753-5558
ACSI
TDK·Lambda
DSP 60-24
ZETTLER


MODEL 1420 POWER SUPPLY
SPECIFICATIONS:
INPUT VOLTAGE: 120VAC/240VAC, 50/60Hz
AC CURRENT: 900mA/120VAC, 600mA/240VAC
OUTPUT VOLTAGE: 24VDC FILTERED, REGULATED
OUTPUT CURRENT: 2.0A
OUTPUT POWER: 48W
PROTECTION: OVERLOAD, OVER VOLTAGE, SHORT CIRCUIT
USE INSTALLATION INSTRUCTIONS I.D. 1102
MFG. DATE: 5116
POWER SUPPLY INTENDED FOR INDOOR USE ONLY
STRIP WIRE BACK 6mm. WIRES MUST BE FULLY INSERTED INTO TERMINALS SO NO BARE METAL IS EXPOSED. STRANDS MUST BE SECURED IN TERMINAL. USE COPPER CONDUCTORS ONLY.
TERMINAL SIZE RANGE:
AWG24-10 FOR A TYPE
AWG24-14 FOR B TYPE
120VAC OR 240VAC INPUT
CLASS 2 DOUBLE INSULATION
NO EARTH GROUND WIRE REQUIRED
RED
BLACK
RED LED POWER INDICATOR
BLACK
RED
CONTROL BOARD 24V POWER CONNECTOR J1
CONTROL BOARD I/O CONNECTOR
TB1
RELEASING DEVICE (FIRE ALARM, EMERGENCY RELEASE SWITCH, ETC.)
OPENING SWITCH CONTACTS WILL RELEASE ELECTRIFIED LOCKING DEVICE(S).
NOTE: THIS INPUT IS DISABLED BY DEFAULT - REFER TO INSTALLATION INSTRUCTIONS.
NOTE: THIS INPUT IS DISABLED BY DEFAULT - REFER TO INSTALLATION INSTRUCTIONS.
RELAY N.O. DRY CONTACT OUTPUT TO "DOOR OPEN" ACTIVATION INPUT OF AUTOMATIC DOOR OPERATOR.
MOMENTARY CLOSURE OF CONTACTS WILL ACTIVATE OPERATOR UNIT.
INSIDE ACTIVATION SWITCH FOR ENTRY (HANDICAPPED WALL ACTUATOR, ETC.)
MOMENTARY CLOSURE OF CONTACTS WILL SEQUENTIALLY RELEASE ELECTRIFIED LOCKING DEVICE(S) AND ACTIVATE OPERATOR UNIT.
OUTSIDE ACTIVATION SWITCH FOR ENTRY (HANDICAPPED WALL ACTUATOR, ETC.)
MOMENTARY CLOSURE OF CONTACTS WILL SEQUENTIALLY RELEASE ELECTRIFIED LOCKING DEVICE(S) AND ACTIVATE OPERATOR UNIT.
TO FAIL SECURE ELECTRIFIED LOCKING DEVICE. — BOTH TYPE DEVICES CAN BE CONNECTED AND OPERATED SIMULTANEOUSLY
TO FAIL SAFE ELECTRIFIED LOCKING DEVICE.
UNSWITCHED AUXILIARY 24VDC OUTPUT.
NOTE: THE SUM OF ALL OUTPUTS CANNOT EXCEED 3 AMPS.
FOR TROUBLE SHOOTING ASSISTANCE, CONTACT ACSI TECHNICAL SUPPORT: 1-800-753-5558
ACSI
TDK Lambda
DSP 60-24
ZETTLER





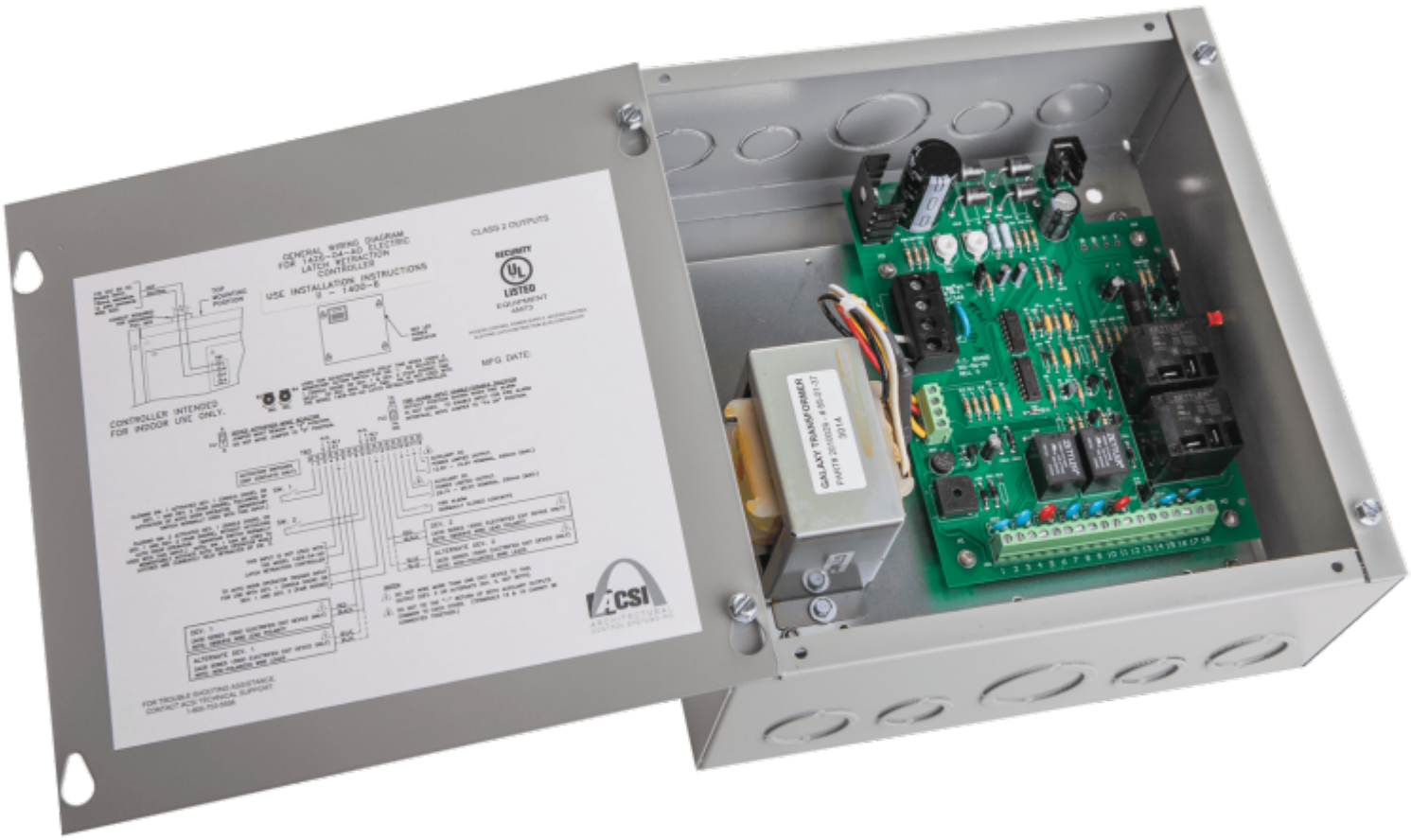
GENERAL WIRING DIAGRAM
FOR 1430-54-RQ ELECTRIC
LATCH RETRACTION
CONTROLLER
USE INSTALLATION INSTRUCTIONS
9 - 1400-6
CLASS 2 OUTPUTS
SECURITY
UL
LISTED
EQUIPMENT
MFG DATE
CONTROLLER INTENDED
FOR INDOOR USE ONLY.
GALAXY TRANSFORMER
ACSI

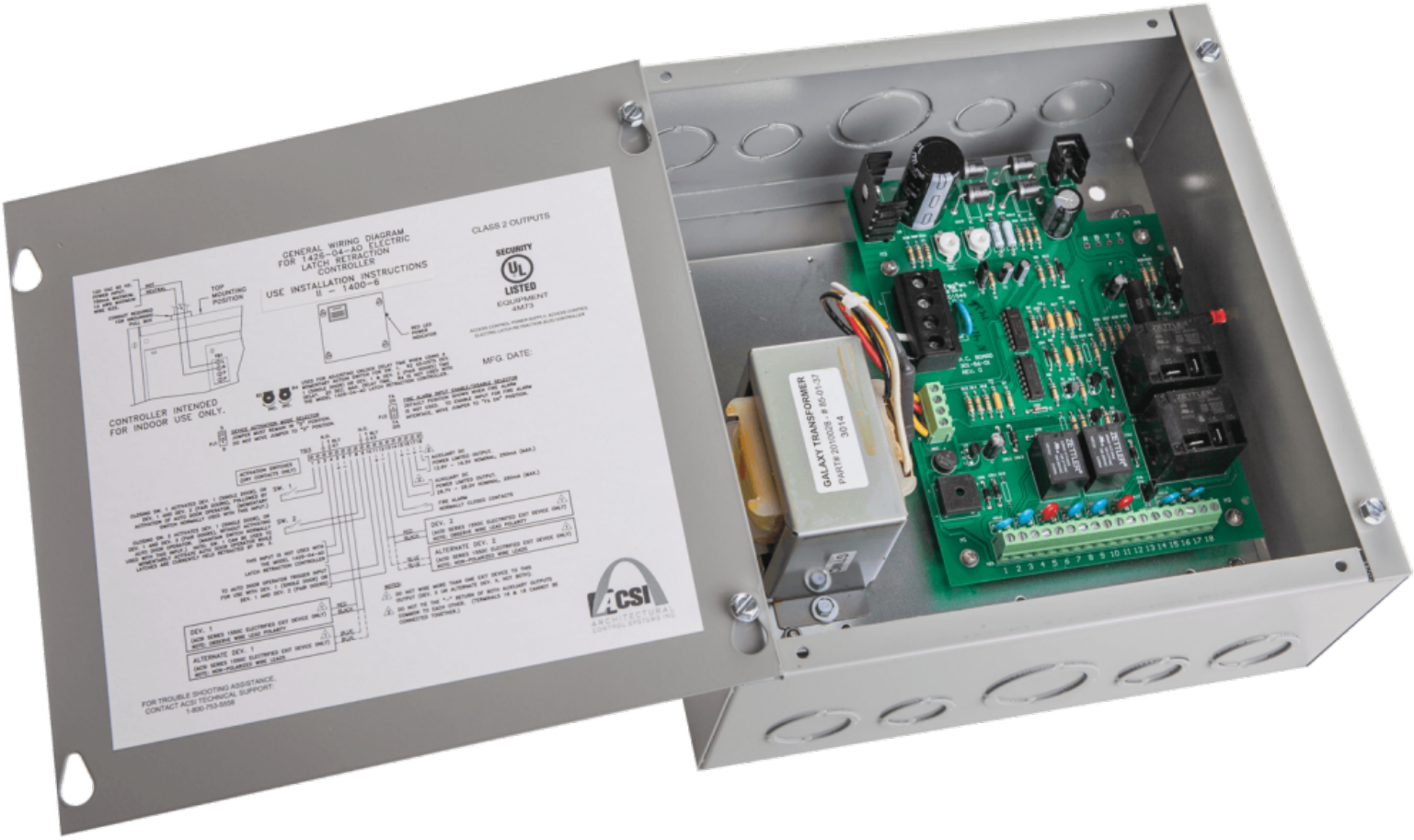
GENERAL WIRING DIAGRAM
FOR 1425-04-AO ELECTRIC
LATCH RETRACTION
CONTROLLER
USE INSTALLATION INSTRUCTIONS
II - 1400-6
CLASS 2 OUTPUTS
SECURITY
UL
LISTED
EQUIPMENT
4M73
MFG. DATE:
CONTROLLER INTENDED
FOR INDOOR USE ONLY.
GALAXY TRANSFORMER
PART# 2010028 # 85-01-57
3014
ACSI
ARCHITECTURAL
CONTROL SYSTEMS INC
FOR TROUBLE SHOOTING ASSISTANCE,
CONTACT ACSI TECHNICAL SUPPORT:
1-800-753-5558

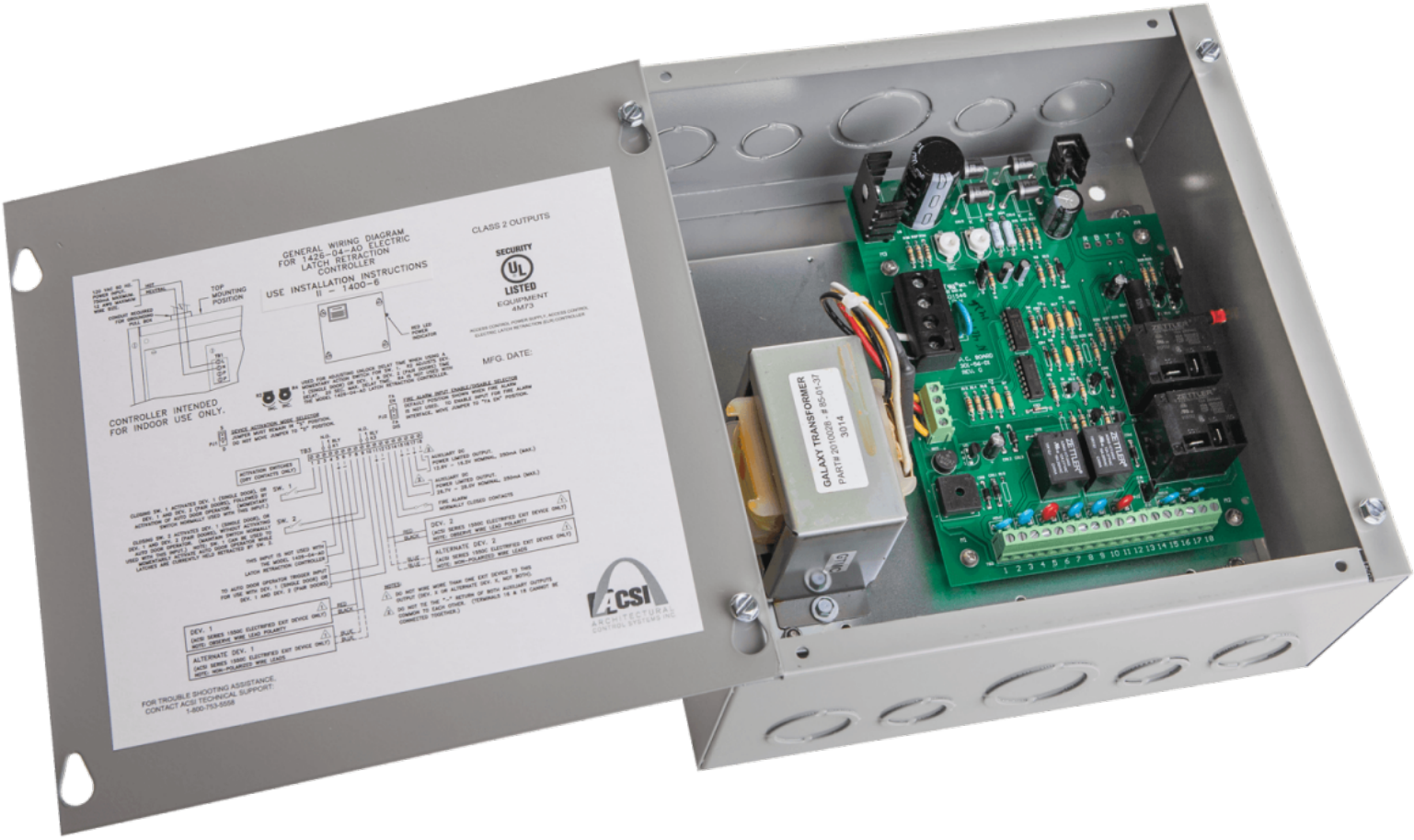
GENERAL WIRING DIAGRAM
FOR 1426-04-AO ELECTRIC
LATCH RETRACTION
CONTROLLER
USE INSTALLATION INSTRUCTIONS
II - 1400-6
CLASS 2 OUTPUTS
SECURITY
UL
LISTED
EQUIPMENT
4M73
MFG. DATE:
CONTROLLER INTENDED
FOR INDOOR USE ONLY.
FOR TROUBLE SHOOTING ASSISTANCE,
CONTACT ACSI TECHNICAL SUPPORT:
1-800-753-5556
ACSI
ARCHITECTURAL
CONTROL SYSTEMS INC
GALAXY TRANSFORMER
PART# 2010028 # 85-01-37
3014

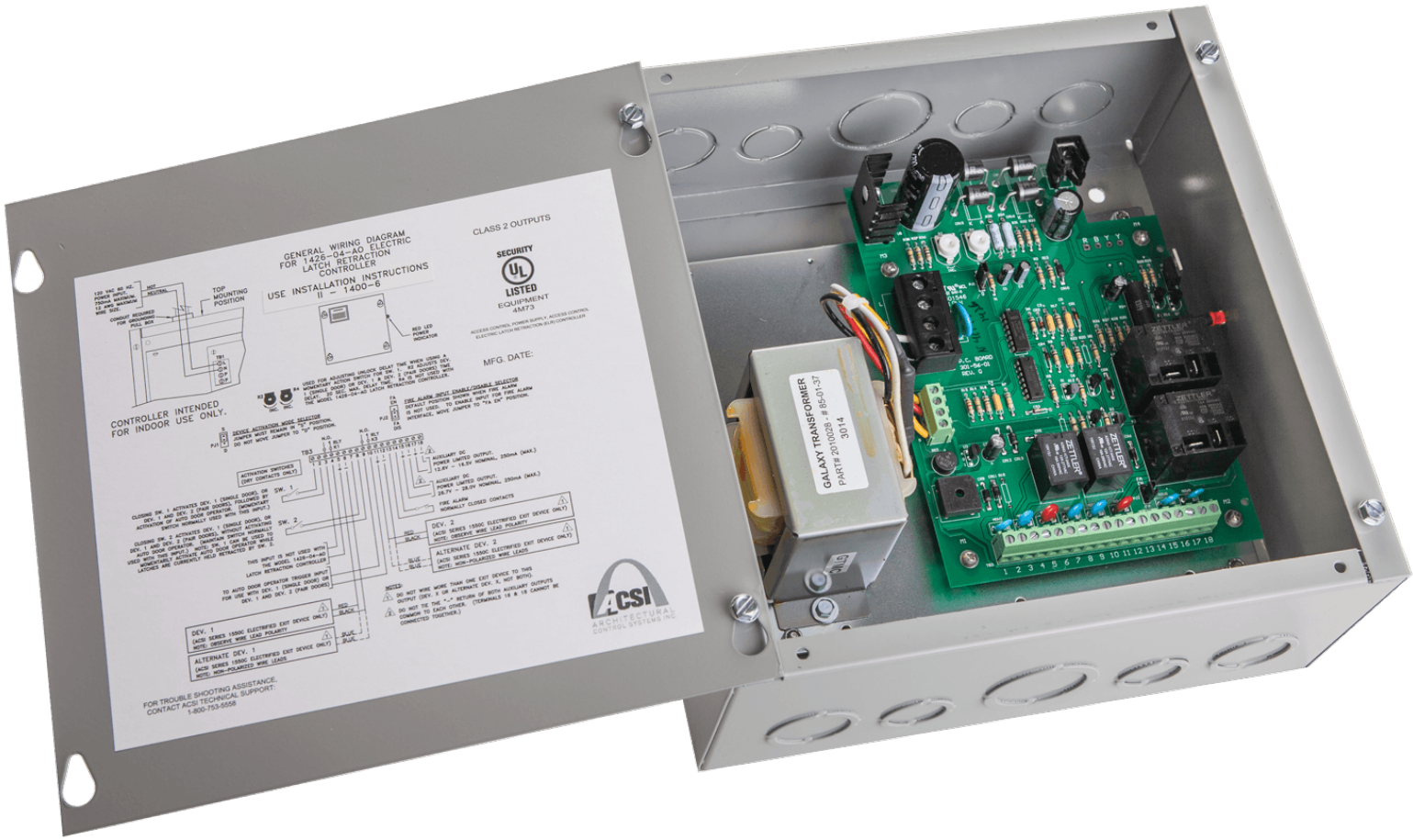
GENERAL WIRING DIAGRAM
FOR 1425-04-AO ELECTRIC
LATCH RETRACTION
CONTROLLER
USE INSTALLATION INSTRUCTIONS
II - 1400-6
CLASS 2 OUTPUTS
SECURITY
UL
LISTED
EQUIPMENT
4M73
MFG. DATE:
CONTROLLER INTENDED
FOR INDOOR USE ONLY.
FOR TROUBLE SHOOTING ASSISTANCE,
CONTACT ACSI TECHNICAL SUPPORT:
1-800-753-5558
GALAXY TRANSFORMER
PART# 20110229 # 85-01-37
3014
ACSI
ARCHITECTURAL
CONTROL SYSTEMS INC



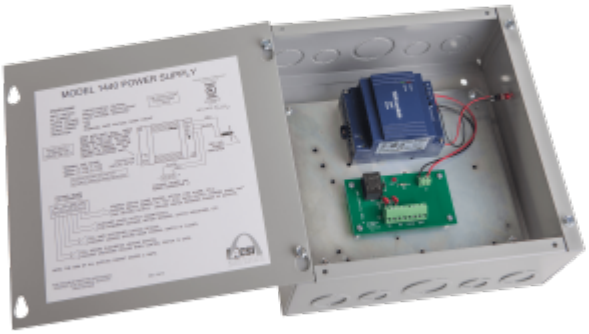
MODEL 1440 POWER SUPPLY

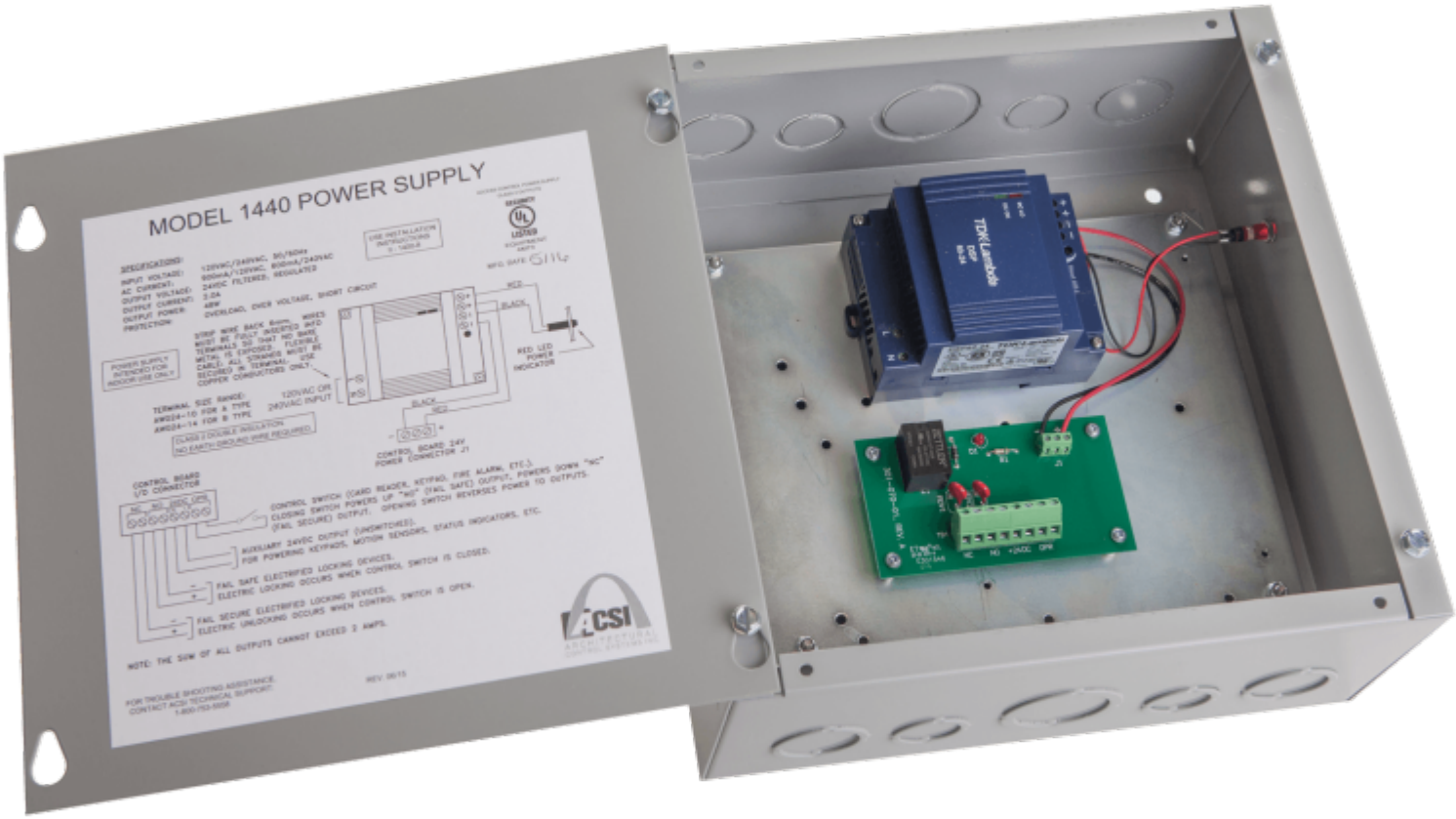
MODEL 1440 POWER SUPPLY
SPECIFICATIONS:
INPUT VOLTAGE: 120VAC/240VAC, 50/60Hz
AC CURRENT: 900mA/120VAC, 800mA/240VAC
OUTPUT VOLTAGE: 24VDC FILTERED, REGULATED
OUTPUT CURRENT: 3.0A
OUTPUT POWER: 48W
PROTECTION: OVERLOAD, OVER VOLTAGE, SHORT CIRCUIT
USE INSTALLATION INSTRUCTIONS
POWER SUPPLY INTENDED FOR INDOOR USE ONLY
STRIP WIRE BACK 6mm. WIRES MUST BE FULLY INSERTED INTO TERMINALS SO THAT NO BARE METAL IS EXPOSED. FLEXIBLE CABLE, ALL STRANDS MUST BE SECURED IN TERMINAL. USE COPPER CONDUCTORS ONLY.
TERMINAL SIZE RANGE:
AWG24-10 FOR A TYPE
AWG24-14 FOR B TYPE
120VAC OR 240VAC INPUT
CLASS 2 DOUBLE INSULATION
NO EARTH GROUND WIRE REQUIRED
RED
BLACK
RED LED POWER INDICATOR
CONTROL BOARD 24V POWER CONNECTOR J1
CONTROL BOARD I/O CONNECTOR
NC NO +24DC GND
CONTROL SWITCH (CARD READER, KEYPAD, FIRE ALARM, ETC.). CLOSING SWITCH POWERS UP "NO" (FAIL SAFE) OUTPUT, POWERS DOWN "NC" (FAIL SECURE) OUTPUT. OPENING SWITCH REVERSES POWER TO OUTPUTS.
AUXILIARY 24VDC OUTPUT (UNSWITCHED). FOR POWERING KEYPADS, MOTION SENSORS, STATUS INDICATORS, ETC.
FAIL SAFE ELECTRIFIED LOCKING DEVICES. ELECTRIC LOCKING OCCURS WHEN CONTROL SWITCH IS CLOSED.
FAIL SECURE ELECTRIFIED LOCKING DEVICES. ELECTRIC UNLOCKING OCCURS WHEN CONTROL SWITCH IS OPEN.
NOTE: THE SUM OF ALL OUTPUTS CANNOT EXCEED 2 AMPS.
FOR TROUBLE SHOOTING ASSISTANCE, CONTACT ACSI TECHNICAL SUPPORT
REV 06/15
ACSI
TDK Lambda

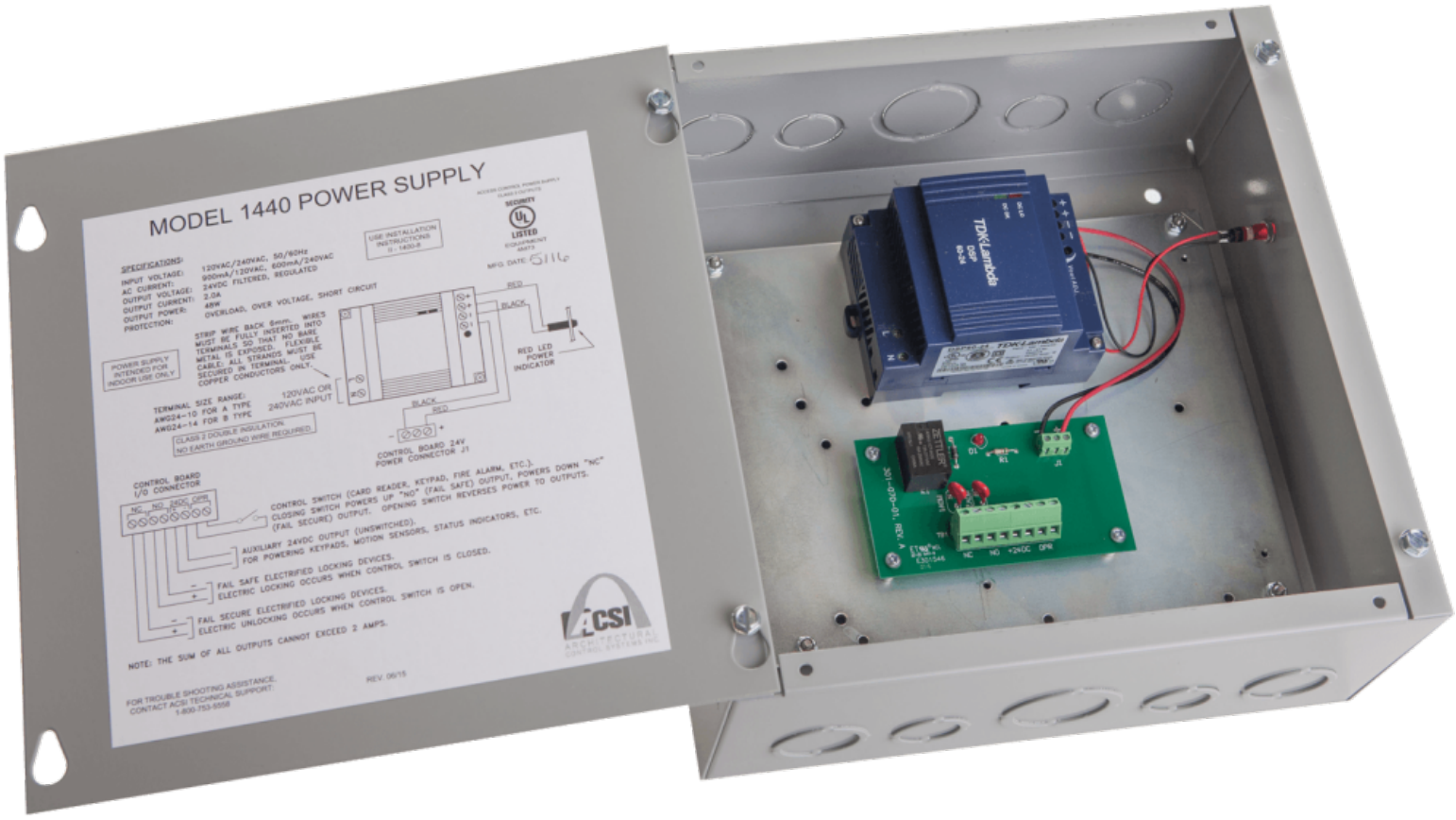
MODEL 1440 POWER SUPPLY
SPECIFICATIONS:
INPUT VOLTAGE: 120VAC/240VAC, 50/60Hz
AC CURRENT: 900mA/120VAC, 600mA/240VAC
OUTPUT VOLTAGE: 24VDC FILTERED, REGULATED
OUTPUT CURRENT: 2.0A
OUTPUT POWER: 48W
PROTECTION: OVERLOAD, OVER VOLTAGE, SHORT CIRCUIT
USE INSTALLATION INSTRUCTIONS
MFG DATE: 5116
POWER SUPPLY INTENDED FOR INDOOR USE ONLY
STRIP WIRE BACK 6mm. WIRES MUST BE FULLY INSERTED INTO TERMINALS SO THAT NO BARE METAL IS EXPOSED. FLEXIBLE CABLE: ALL STRANDS MUST BE SECURED IN TERMINAL. USE COPPER CONDUCTORS ONLY.
TERMINAL SIZE RANGE:
AWG24-10 FOR A TYPE
AWG24-14 FOR B TYPE
120VAC OR 240VAC INPUT
CLASS 2 DOUBLE INSULATION
NO EARTH GROUND WIRE REQUIRED
RED
BLACK
RED LED POWER INDICATOR
CONTROL BOARD 24V POWER CONNECTOR J1
CONTROL BOARD I/O CONNECTOR
NC NO 24DC OPN
CONTROL SWITCH (CARD READER, KEYPAD, FIRE ALARM, ETC.). CLOSING SWITCH POWERS UP "NO" (FAIL SAFE) OUTPUT, POWERS DOWN "NC" (FAIL SECURE) OUTPUT. OPENING SWITCH REVERSES POWER TO OUTPUTS.
AUXILIARY 24VDC OUTPUT (UNSWITCHED). FOR POWERING KEYPADS, MOTION SENSORS, STATUS INDICATORS, ETC.
FAIL SAFE ELECTRIFIED LOCKING DEVICES. ELECTRIC LOCKING OCCURS WHEN CONTROL SWITCH IS CLOSED.
FAIL SECURE ELECTRIFIED LOCKING DEVICES. ELECTRIC UNLOCKING OCCURS WHEN CONTROL SWITCH IS OPEN.
NOTE: THE SUM OF ALL OUTPUTS CANNOT EXCEED 2 AMPS.
FOR TROUBLE SHOOTING ASSISTANCE, CONTACT ACSI TECHNICAL SUPPORT: 1-800-753-5558
REV. 06/15
ACSI
ARCHITECTURAL CONTROL SYSTEMS INC.
TDK-Lambda
DSP
60-24
ZETTLER
301-070-01, REV. A
NC NO +24DC OPN

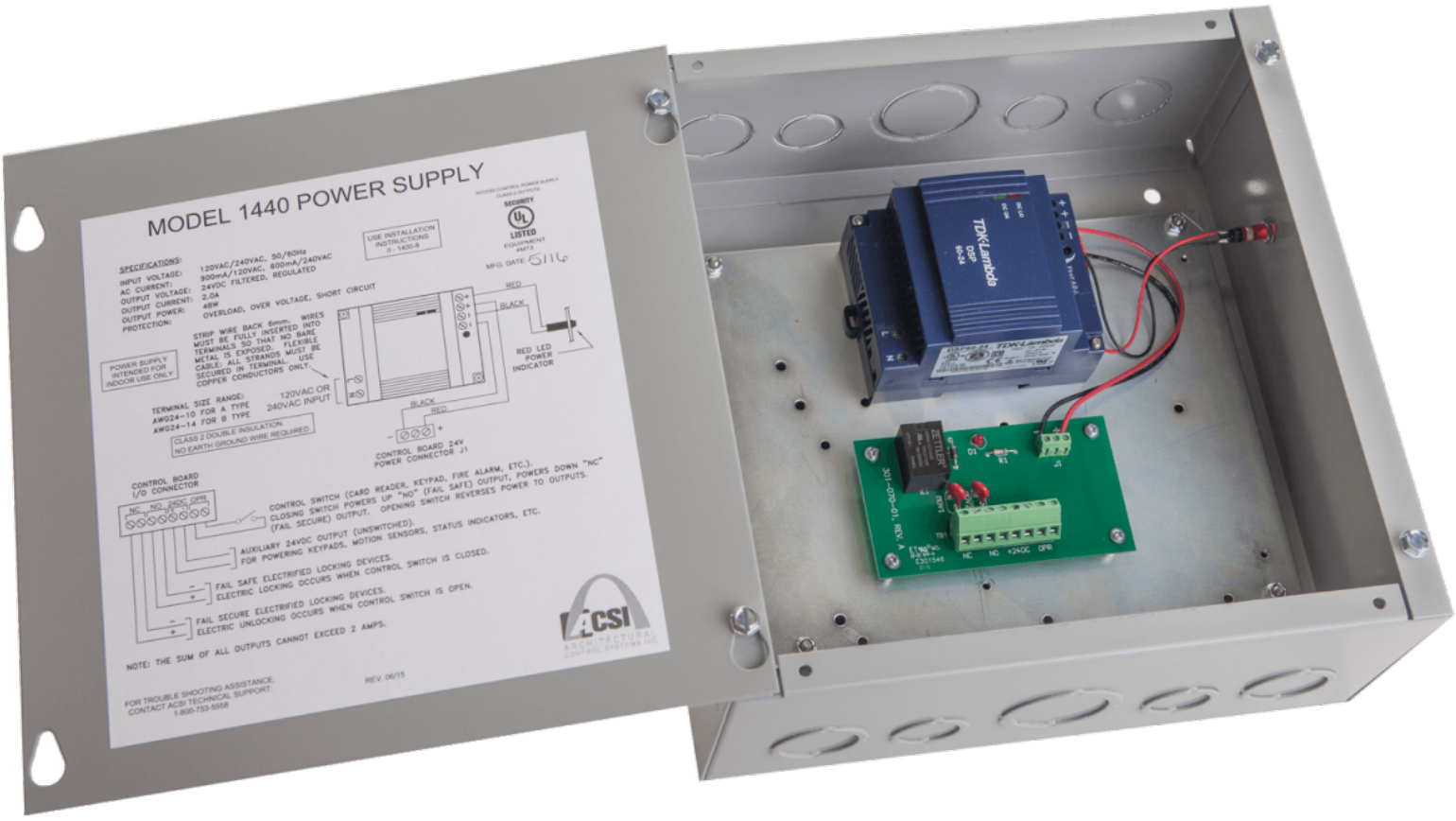
MODEL 1440 POWER SUPPLY
SPECIFICATIONS:
INPUT VOLTAGE: 120VAC/240VAC, 50/60Hz
AC CURRENT: 900mA/120VAC, 600mA/240VAC
OUTPUT VOLTAGE: 24VDC FILTERED, REGULATED
OUTPUT CURRENT: 2.0A
OUTPUT POWER: 48W
PROTECTION: OVERLOAD, OVER VOLTAGE, SHORT CIRCUIT
USE INSTALLATION INSTRUCTIONS II - 1400-8
SECURITY
LISTED
EQUIPMENT
MFG. DATE 5/16
POWER SUPPLY INTENDED FOR INDOOR USE ONLY
STRIP WIRE BACK 6mm. WIRES MUST BE FULLY INSERTED INTO TERMINALS SO THAT NO BARE METAL IS EXPOSED. FLEXIBLE CABLE: ALL STRANDS MUST BE SECURED IN TERMINAL. USE COPPER CONDUCTORS ONLY.
TERMINAL SIZE RANGE:
AWG24-10 FOR A TYPE
AWG24-14 FOR B TYPE
120VAC OR 240VAC INPUT
CLASS 2 DOUBLE INSULATION
NO EARTH GROUND WIRE REQUIRED
RED
BLACK
RED LED POWER INDICATOR
CONTROL BOARD 24V POWER CONNECTOR J1
CONTROL BOARD I/O CONNECTOR
NC NO 24DC OPR
CONTROL SWITCH (CARD READER, KEYPAD, FIRE ALARM, ETC.). CLOSING SWITCH POWERS UP "NO" (FAIL SAFE) OUTPUT, POWERS DOWN "NC" (FAIL SECURE) OUTPUT. OPENING SWITCH REVERSES POWER TO OUTPUTS.
AUXILIARY 24VDC OUTPUT (UNSWITCHED). FOR POWERING KEYPADS, MOTION SENSORS, STATUS INDICATORS, ETC.
FAIL SAFE ELECTRIFIED LOCKING DEVICES. ELECTRIC LOCKING OCCURS WHEN CONTROL SWITCH IS CLOSED.
FAIL SECURE ELECTRIFIED LOCKING DEVICES. ELECTRIC UNLOCKING OCCURS WHEN CONTROL SWITCH IS OPEN.
NOTE: THE SUM OF ALL OUTPUTS CANNOT EXCEED 2 AMPS.
FOR TROUBLE SHOOTING ASSISTANCE, CONTACT ACSI TECHNICAL SUPPORT: 1-800-753-5558
REV. 06/15
ACSI
ARCHITECTURAL CONTROL SYSTEMS INC.
TDK-Lambda
DSP
ZETTLER
301-070-01, REV. A
NC NO +24DC OPR

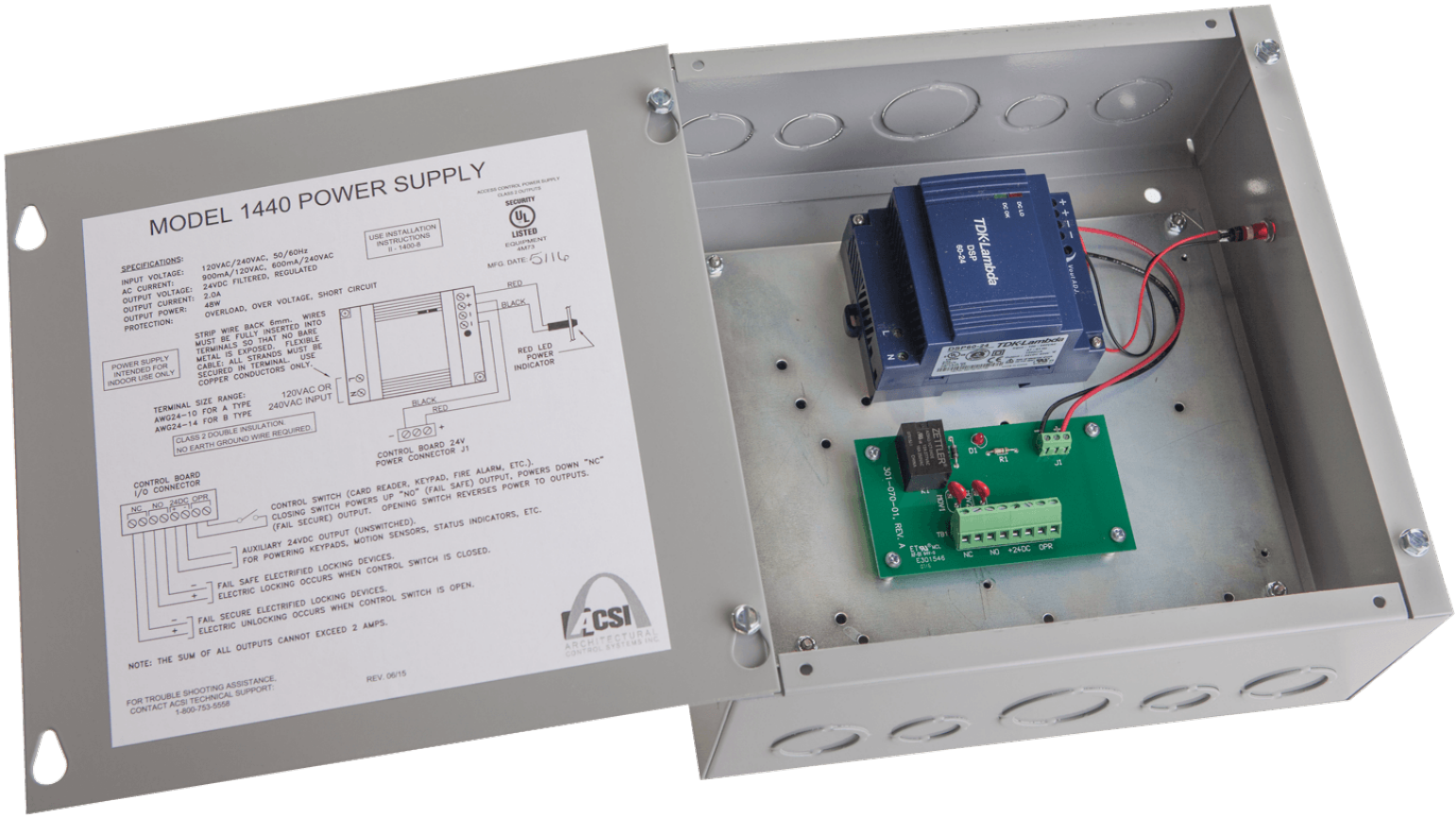
MODEL 1440 POWER SUPPLY
ACCESS CONTROL POWER SUPPLY
CLASS 2 OUTPUTS
SECURITY
UL
LISTED
EQUIPMENT
4M73
USE INSTALLATION INSTRUCTIONS II - 1400-8
MFG. DATE: 5/16
SPECIFICATIONS:
INPUT VOLTAGE: 120VAC/240VAC, 50/60Hz
AC CURRENT: 900mA/120VAC, 600mA/240VAC
OUTPUT VOLTAGE: 24VDC FILTERED, REGULATED
OUTPUT CURRENT: 2.0A
OUTPUT POWER: 48W
PROTECTION: OVERLOAD, OVER VOLTAGE, SHORT CIRCUIT
POWER SUPPLY INTENDED FOR INDOOR USE ONLY
STRIP WIRE BACK 6mm. WIRES MUST BE FULLY INSERTED INTO TERMINALS SO THAT NO BARE METAL IS EXPOSED. FLEXIBLE CABLE: ALL STRANDS MUST BE SECURED IN TERMINAL. USE COPPER CONDUCTORS ONLY.
TERMINAL SIZE RANGE:
AWG24-10 FOR A TYPE
AWG24-14 FOR B TYPE
120VAC OR 240VAC INPUT
CLASS 2 DOUBLE INSULATION.
NO EARTH GROUND WIRE REQUIRED.
RED
BLACK
RED LED POWER INDICATOR
BLACK
RED
CONTROL BOARD 24V POWER CONNECTOR J1
CONTROL BOARD I/O CONNECTOR
NC NO 24DC OPR
CONTROL SWITCH (CARD READER, KEYPAD, FIRE ALARM, ETC.). CLOSING SWITCH POWERS UP "NO" (FAIL SAFE) OUTPUT, POWERS DOWN "NC" (FAIL SECURE) OUTPUT. OPENING SWITCH REVERSES POWER TO OUTPUTS.
AUXILIARY 24VDC OUTPUT (UNSWITCHED). FOR POWERING KEYPADS, MOTION SENSORS, STATUS INDICATORS, ETC.
FAIL SAFE ELECTRIFIED LOCKING DEVICES. ELECTRIC LOCKING OCCURS WHEN CONTROL SWITCH IS CLOSED.
FAIL SECURE ELECTRIFIED LOCKING DEVICES. ELECTRIC UNLOCKING OCCURS WHEN CONTROL SWITCH IS OPEN.
NOTE: THE SUM OF ALL OUTPUTS CANNOT EXCEED 2 AMPS.
ACSI
ARCHITECTURAL CONTROL SYSTEMS INC.
FOR TROUBLE SHOOTING ASSISTANCE, CONTACT ACSI TECHNICAL SUPPORT: 1-800-753-5558
REV. 06/15
TDK·Lambda
DSP
60-24
ZETTLER
301-070-01, REV. A
D1
R1
J1
NC NO +24DC OPR



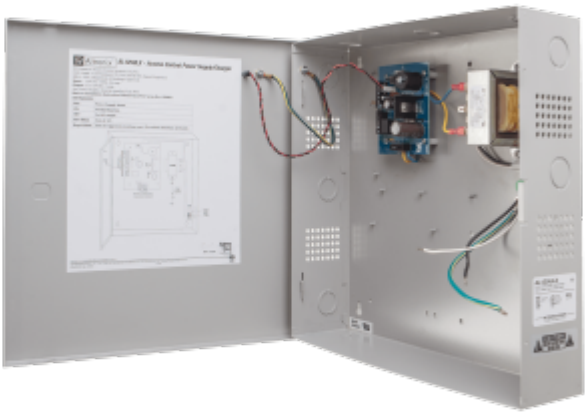

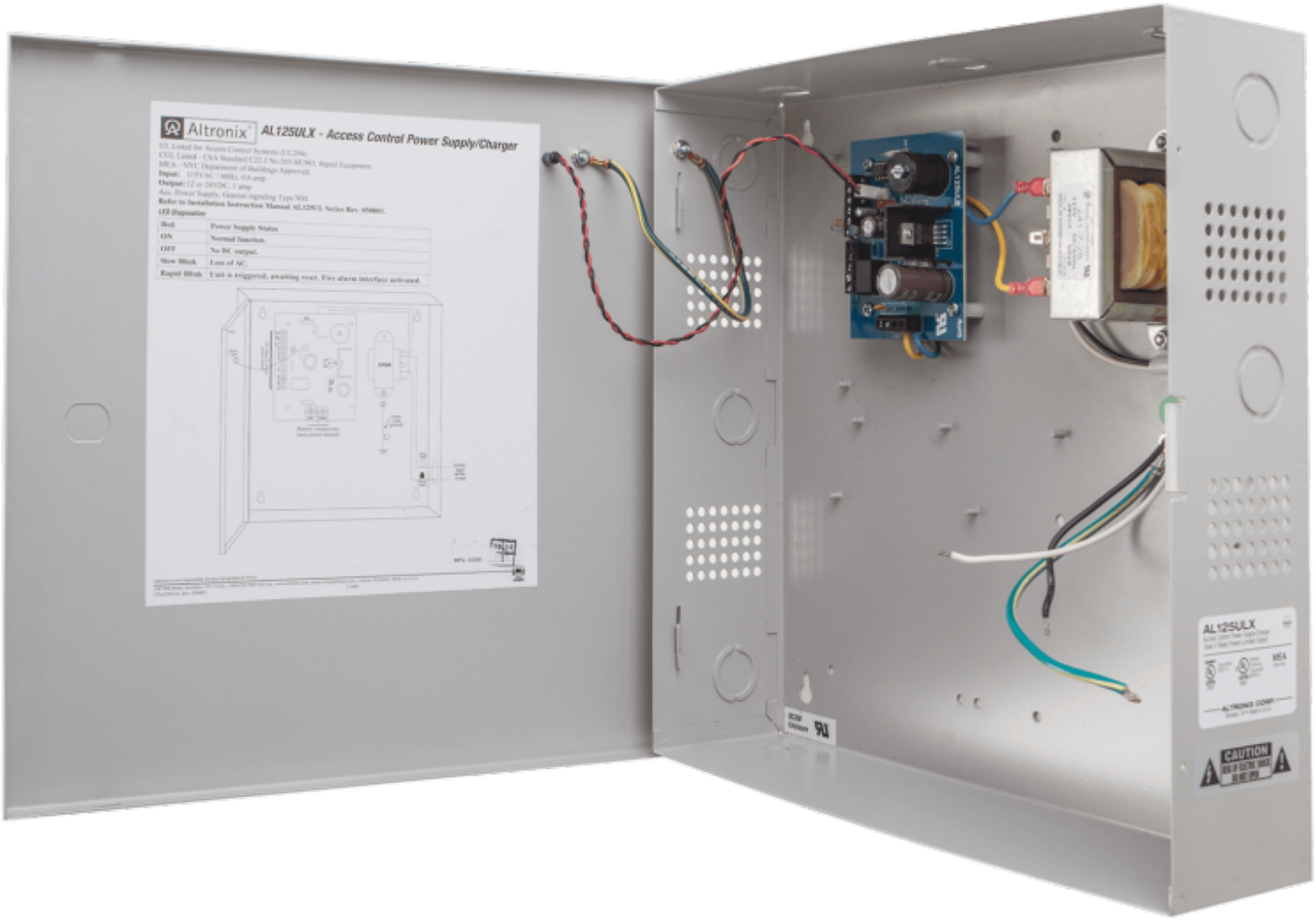
Altronix
AL125ULX - Access Control Power Supply/Charger
AL125ULX

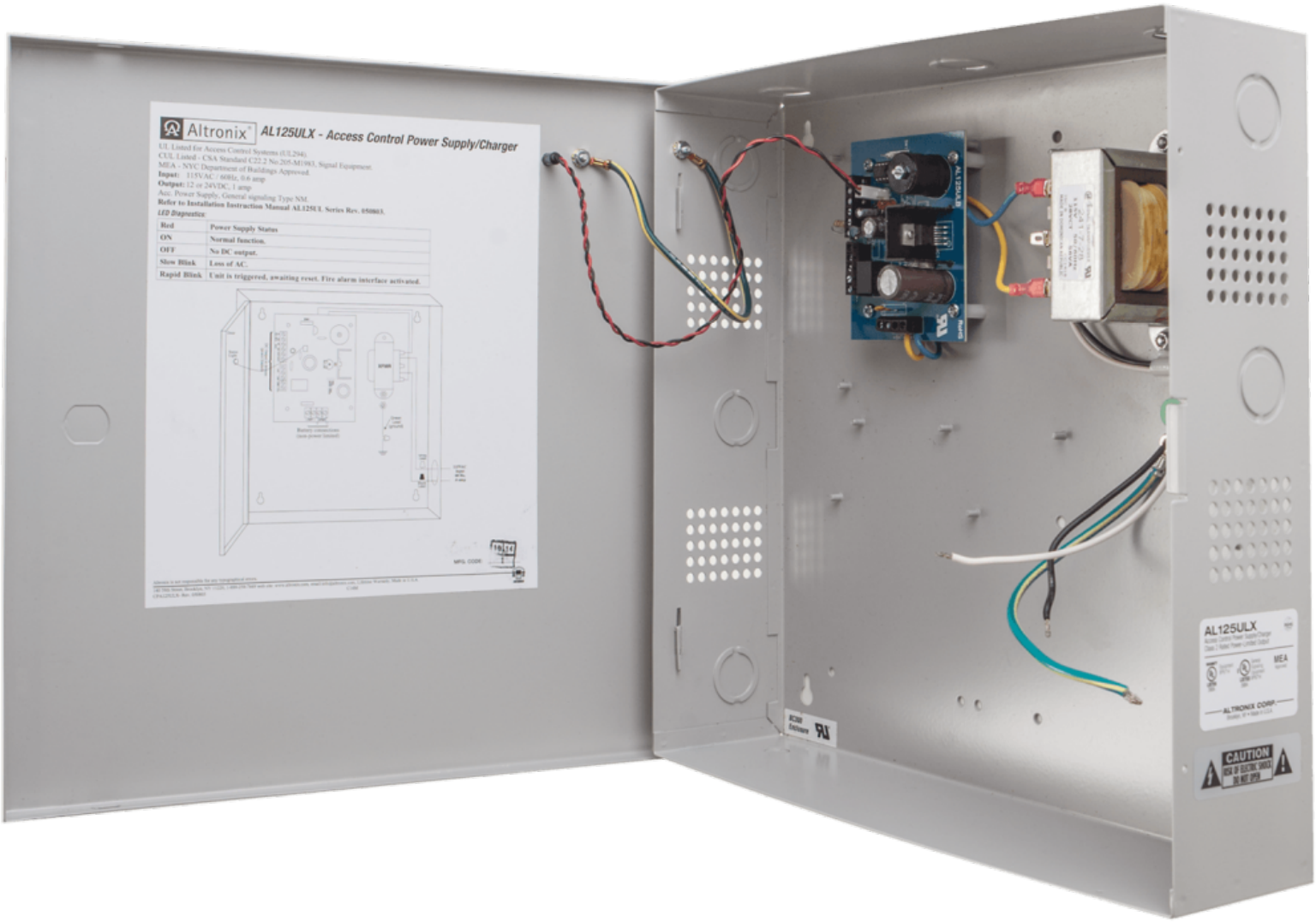
Altronix
AL125ULX - Access Control Power Supply/Charger
UL Listed for Access Control Systems (UL294).
CUL Listed - CSA Standard C22.2 No.205-M1983, Signal Equipment.
MEA - NYC Department of Buildings Approved.
Input: 115VAC / 60Hz, 0.6 amp
Output: 12 or 24VDC, 1 amp
Acc. Power Supply, General signaling Type NM.
Refer to Installation Instruction Manual AL125UL Series Rev. 050803.
LED Diagnostics
Red
Power Supply Status
ON
Normal function.
OFF
No DC output.
Slow Blink
Loss of AC.
Rapid Blink
Unit is triggered, awaiting reset. Fire alarm interface activated.
AL125ULX
MEA
ALTRONIX CORP.
CAUTION
RISK OF ELECTRIC SHOCK
DO NOT OPEN

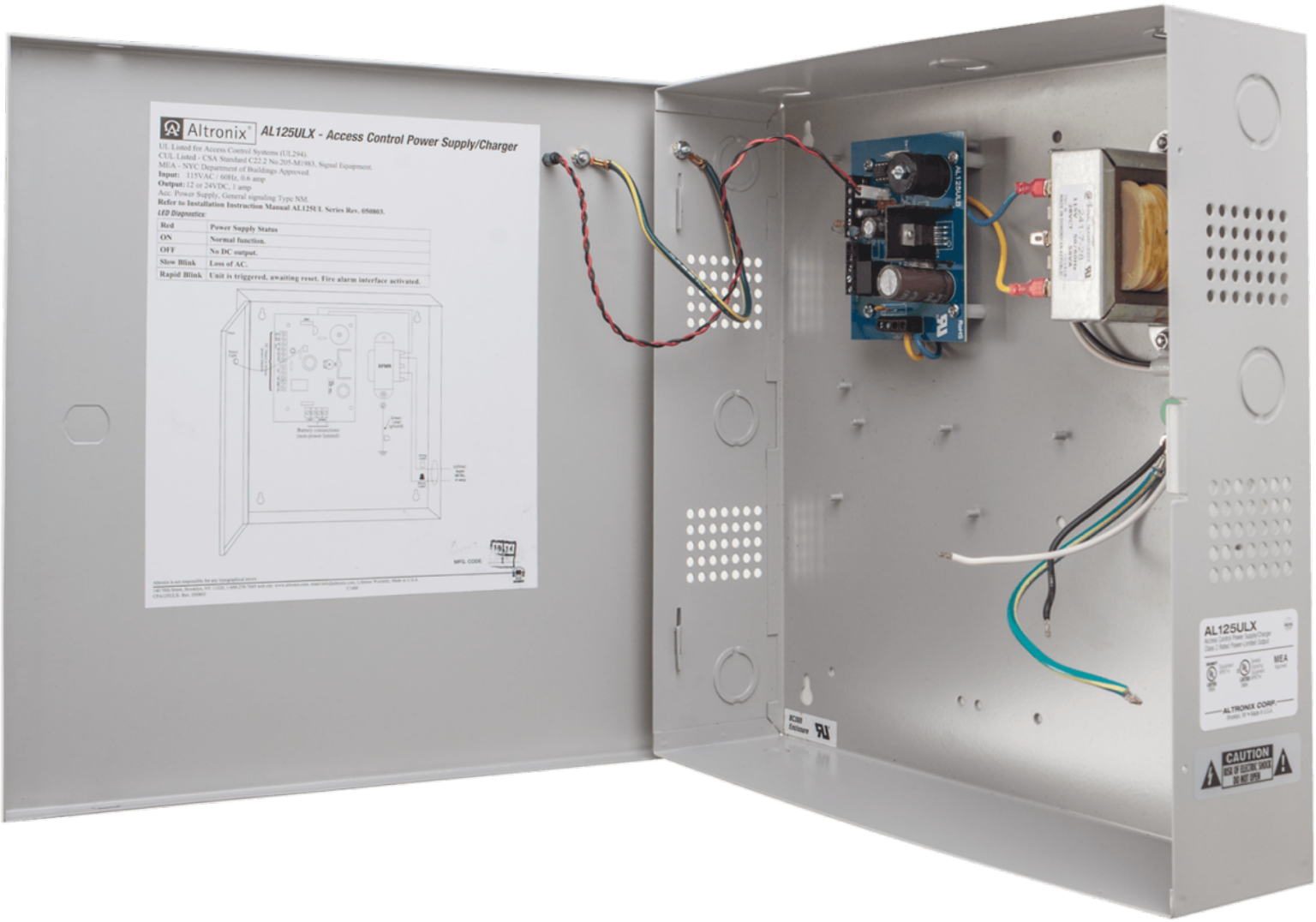
Altronix
AL125ULX - Access Control Power Supply/Charger
UL Listed for Access Control Systems (UL294).
CUL Listed - CSA Standard C22.2 No.205-M1983, Signal Equipment.
MEA - NYC Department of Buildings Approved.
Input: 115VAC / 60Hz, 0.6 amp
Output: 12 or 24VDC, 1 amp
Acc. Power Supply, General signaling Type NM.
Refer to Installation Instruction Manual AL125UL Series Rev. 050803.
LED Diagnostics:
Red | Power Supply Status
ON | Normal function.
OFF | No DC output.
Slow Blink | Loss of AC.
Rapid Blink | Unit is triggered, awaiting reset. Fire alarm interface activated.
AL125ULX
MEA
ALTRONIX CORP.
CAUTION
RISK OF ELECTRIC SHOCK
DO NOT OPEN

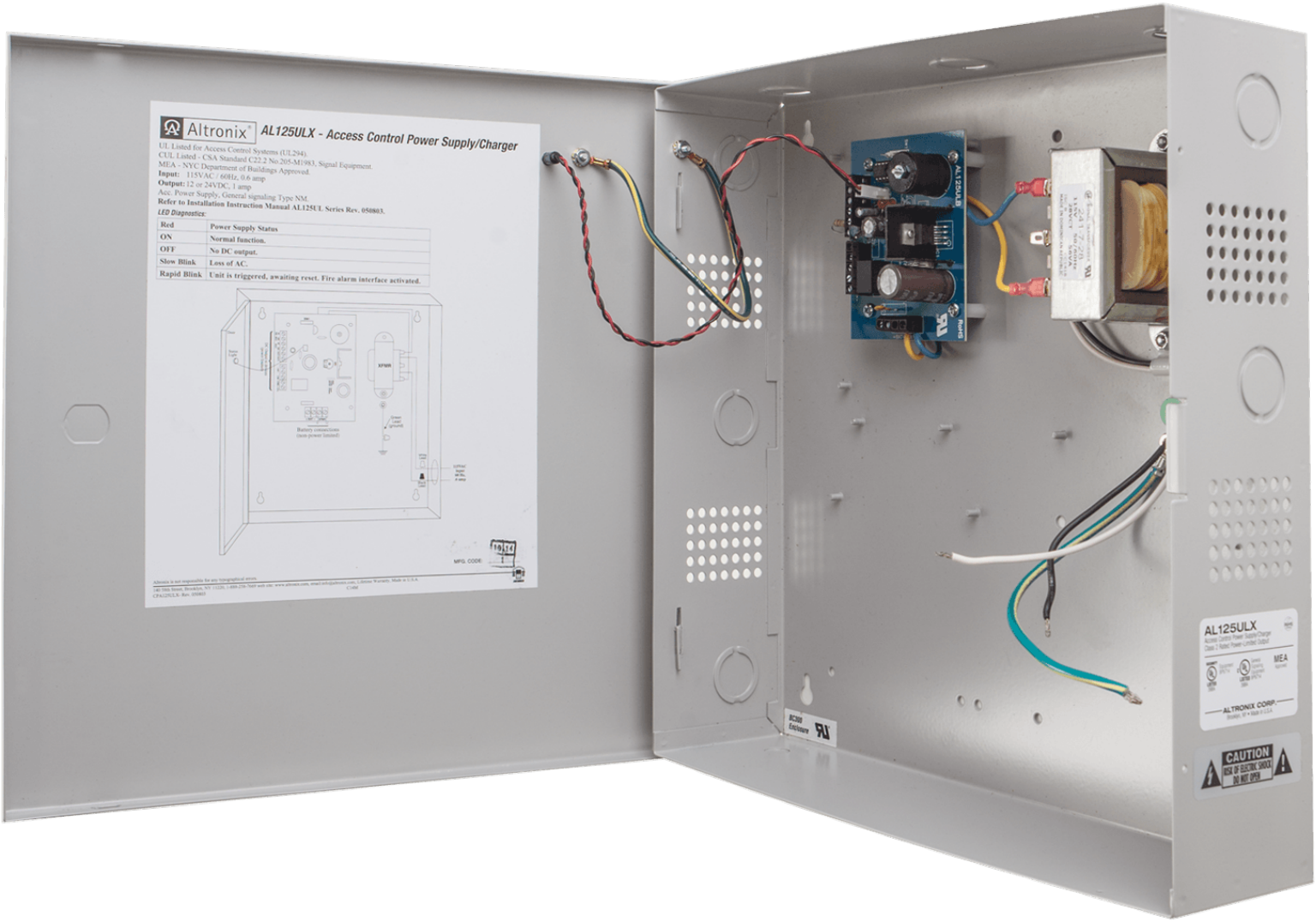
Altronix
AL125ULX - Access Control Power Supply/Charger
UL Listed for Access Control Systems (UL294).
CUL Listed - CSA Standard C22.2 No.205-M1983, Signal Equipment.
MEA - NYC Department of Buildings Approved.
Input: 115VAC / 60Hz, 0.6 amp
Output: 12 or 24VDC, 1 amp
Acc. Power Supply, General signaling Type NM.
Refer to Installation Instruction Manual AL125UL Series Rev. 050803.
LED Diagnostics:
Red | Power Supply Status
ON | Normal function.
OFF | No DC output.
Slow Blink | Loss of AC.
Rapid Blink | Unit is triggered, awaiting reset. Fire alarm interface activated.
XFMR
Battery connections (non-power limited)
MFG. CODE
AL125ULX
ALTRONIX CORP.
MEA
CAUTION
RISK OF ELECTRIC SHOCK
DO NOT OPEN



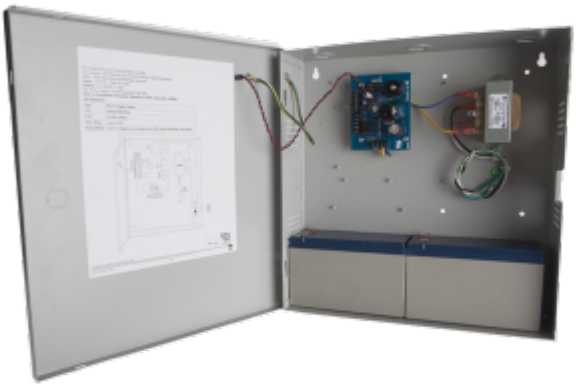

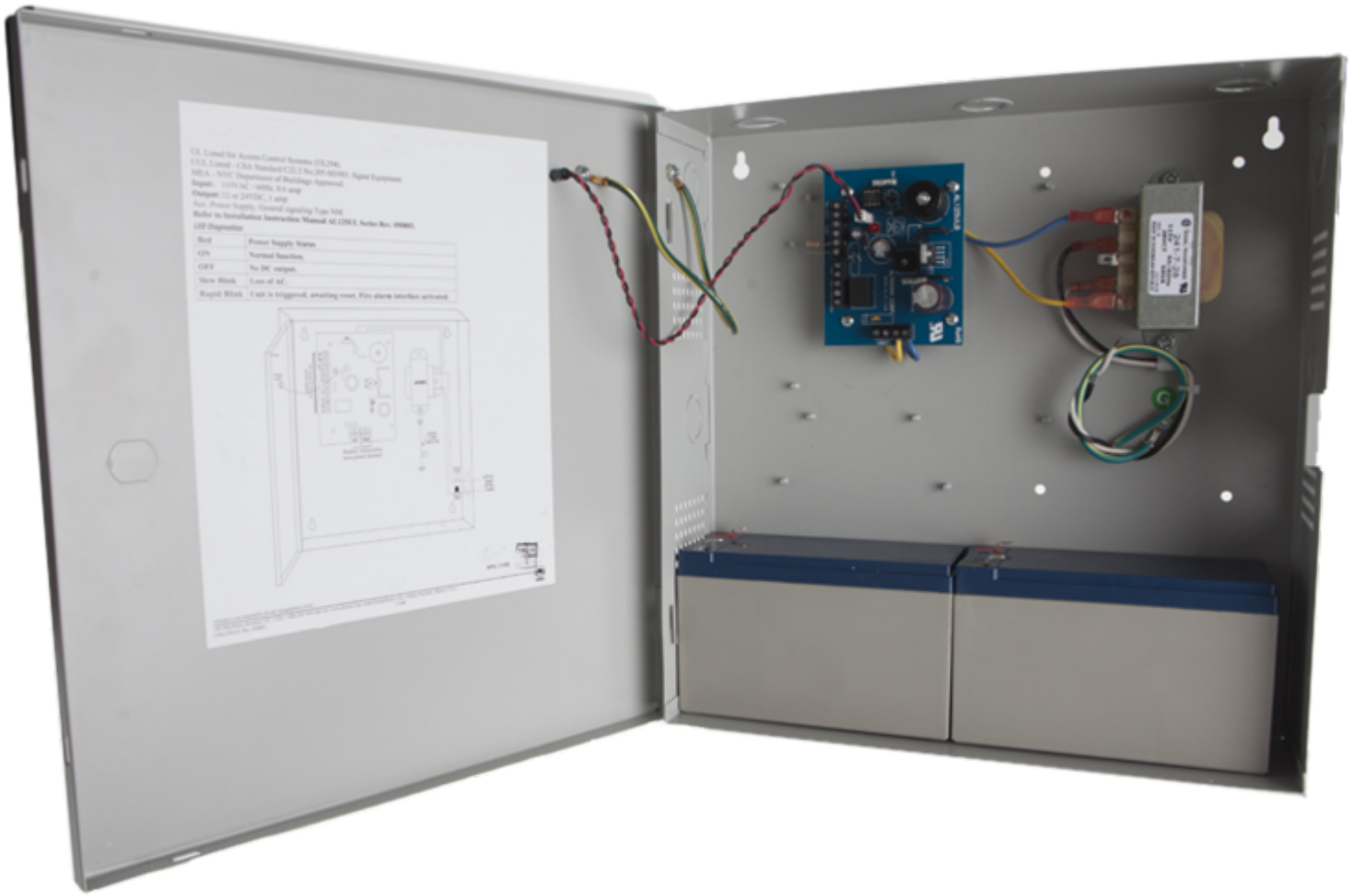

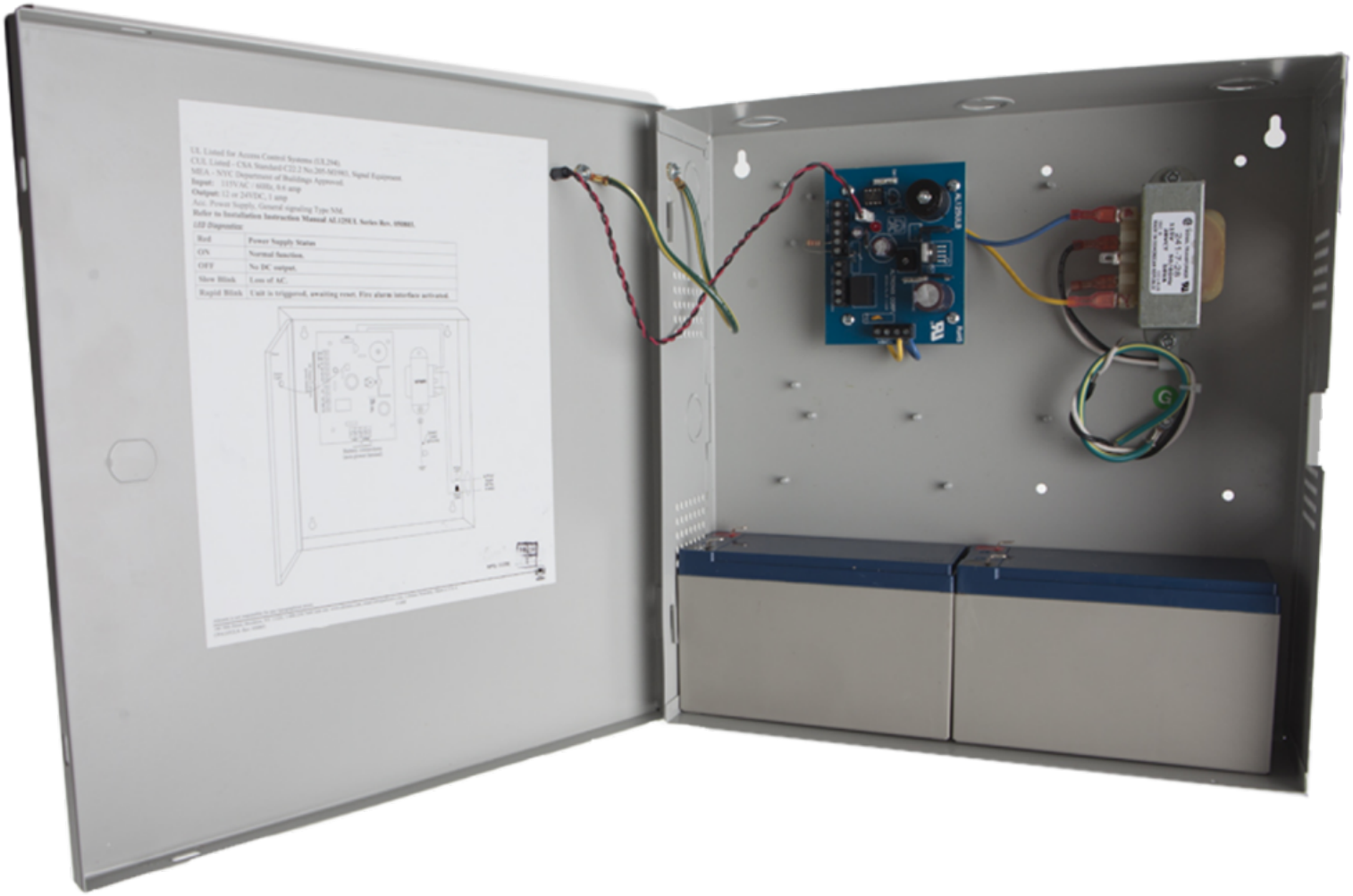
UL Listed for Access Control Systems (UL294).
CUL Listed - CSA Standard C22.2 No.205-M1983, Signal Equipment.
MEA - NYC Department of Buildings Approved.
Input: 115VAC - 60Hz, 0.6 amp
Output: 12 or 24VDC, 1 amp
Acc. Power Supply, General signaling Type NM.
Refer to Installation Instruction Manual AL125EX Series Rev. 050803.
LED Diagnostics:
Red Power Supply Status
ON Normal function.
OFF No DC output.
Slow Blink Loss of AC.
Rapid Blink Unit is triggered, awaiting reset. Fire alarm interface activated.

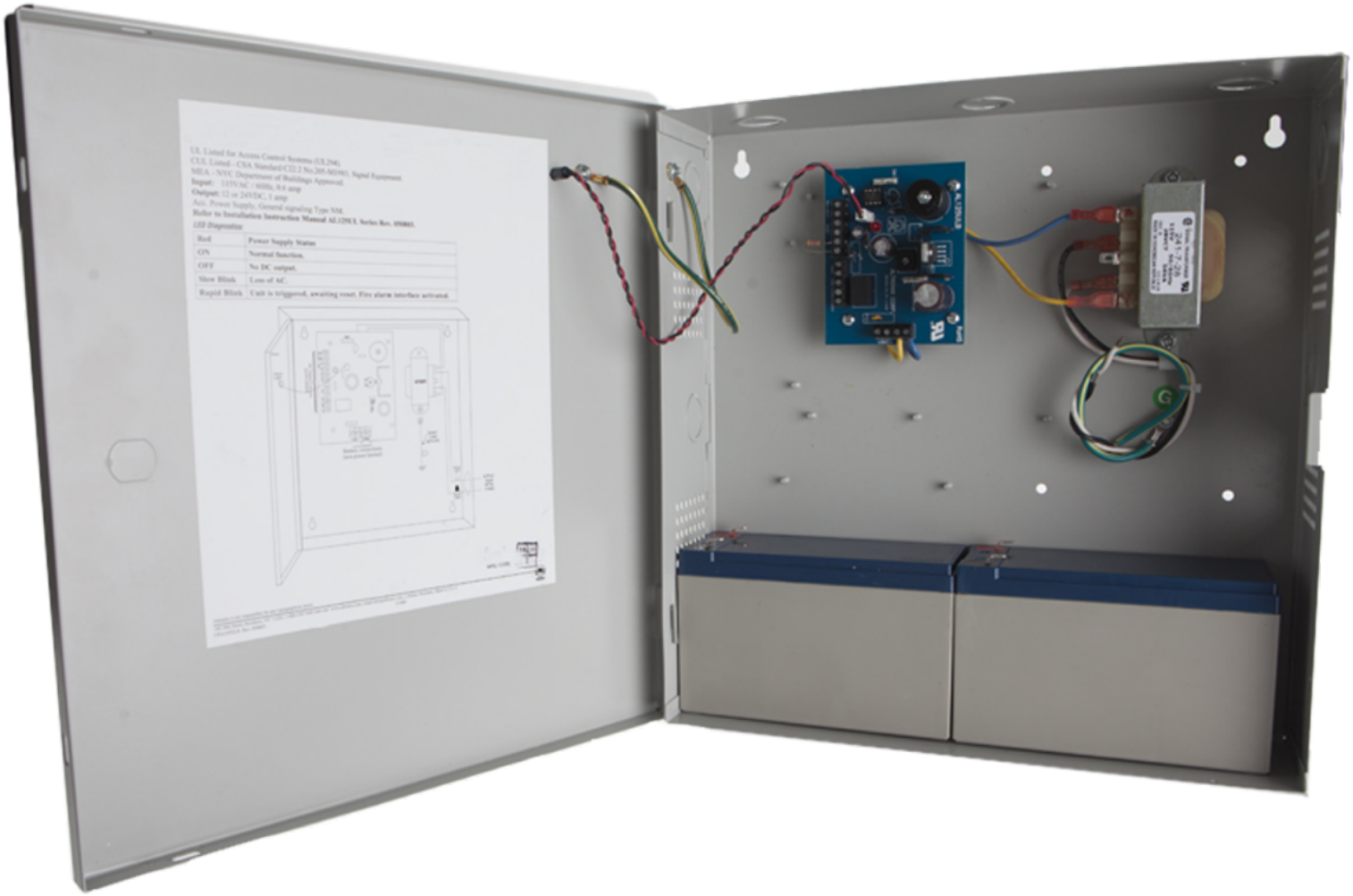
UL Listed for Access Control Systems (UL294).
CUL Listed - CSA Standard C22.2 No.205-M1983, Signal Equipment.
MEA - NYC Department of Buildings Approved.
Input: 115VAC / 60Hz, 0.6 amp
Output: 12 or 24VDC, 1 amp
Acc. Power Supply, General signaling Type NM.
Refer to Installation Instruction Manual AL125UL Series Rev. 050803.
LED Diagnostics
Red Power Supply Status
ON Normal function.
OFF No DC output.
Slow Blink Loss of AC.
Rapid Blink Unit is triggered, awaiting reset. Fire alarm interface activated.

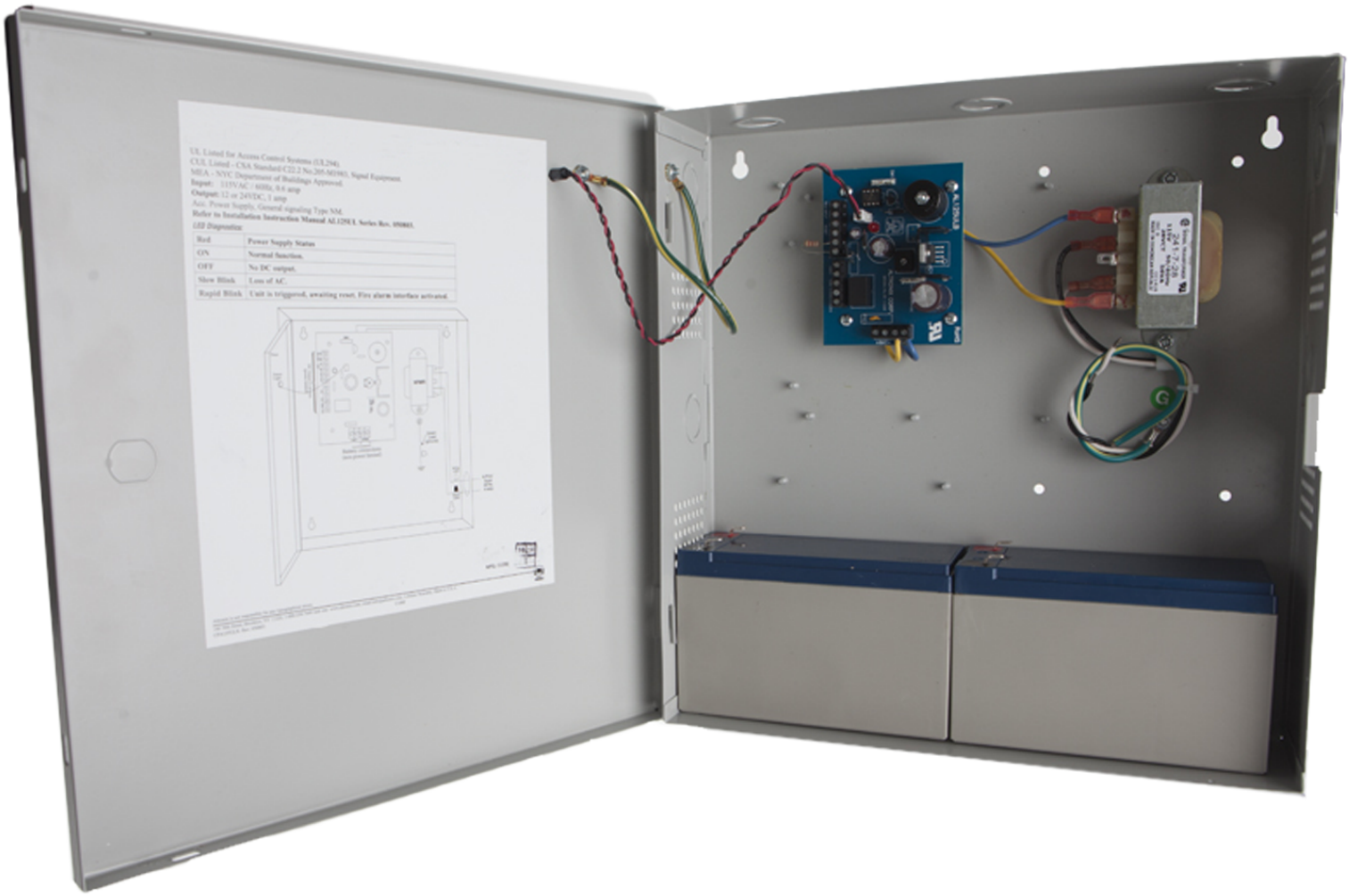
UL Listed for Access Control Systems (UL294).
CUL Listed – CSA Standard C22.2 No.205-M1983, Signal Equipment.
MEA – NYC Department of Buildings Approved.
Input: 115VAC / 60Hz, 0.6 amp
Output: 12 or 24VDC, 1 amp
Acc. Power Supply, General signaling Type NM.
Refer to Installation Instruction Manual AL1250UL Series Rev. 050601.
LED Disposition:
Red | Power Supply Status
ON | Normal function.
OFF | No DC output.
Slow Blink | Loss of AC.
Rapid Blink | Unit is triggered, awaiting reset. Fire alarm interface activated.



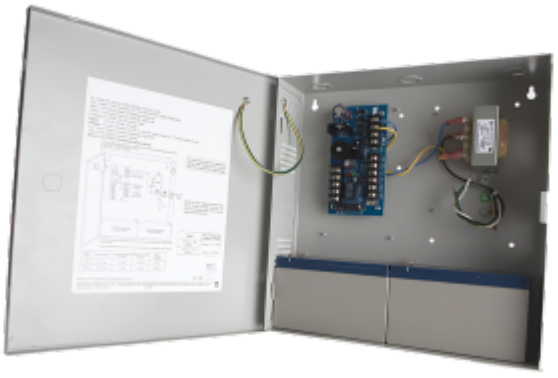

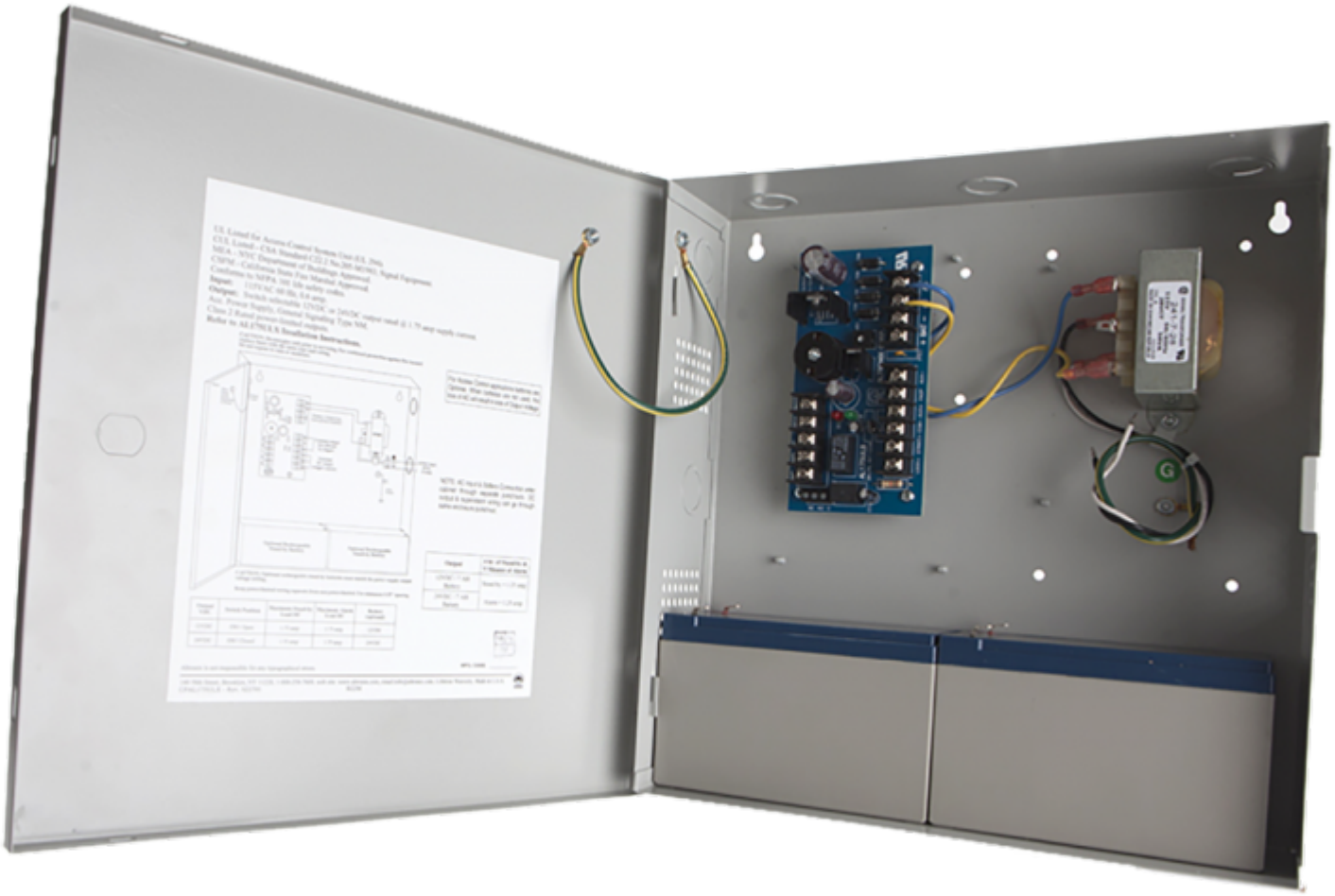

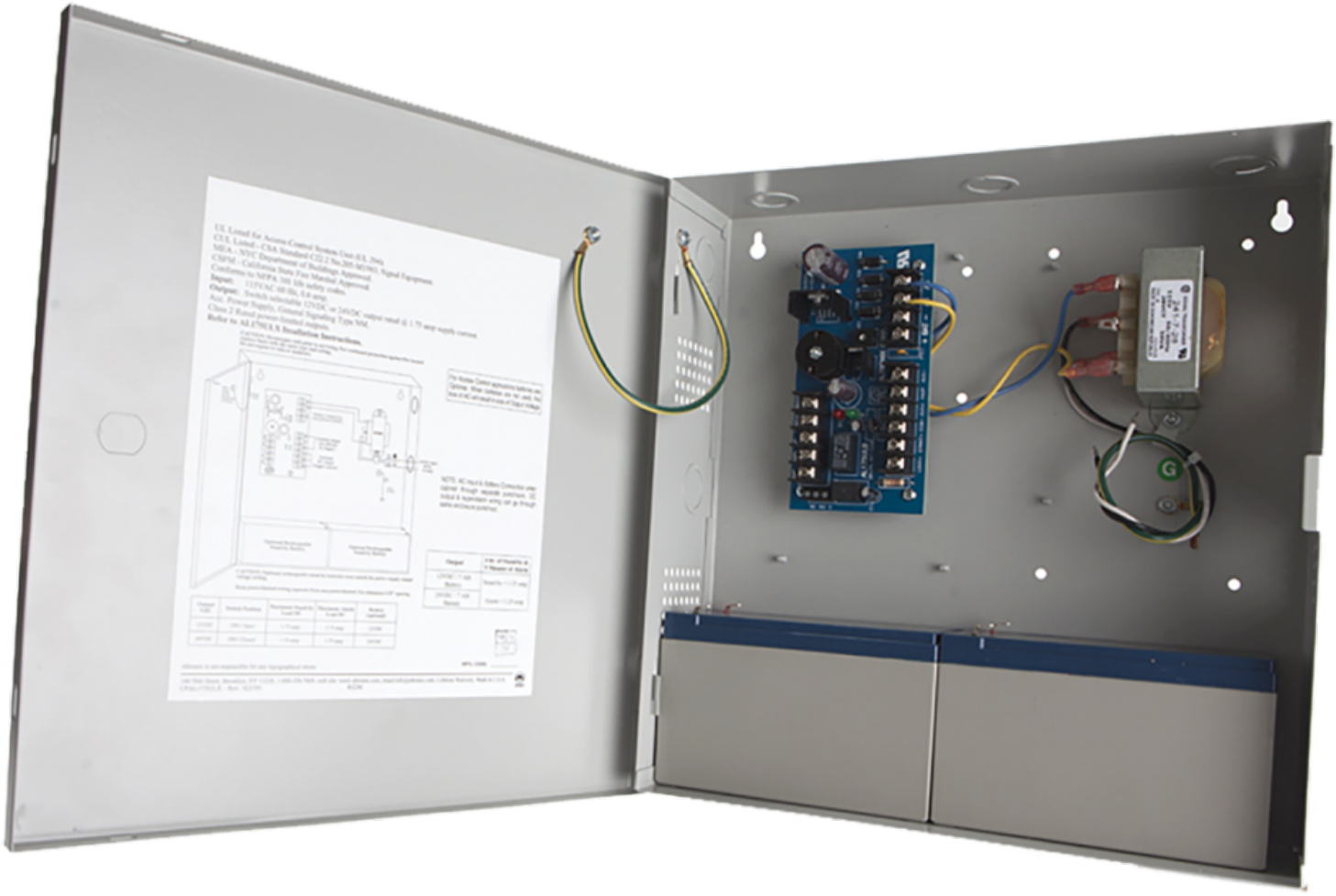

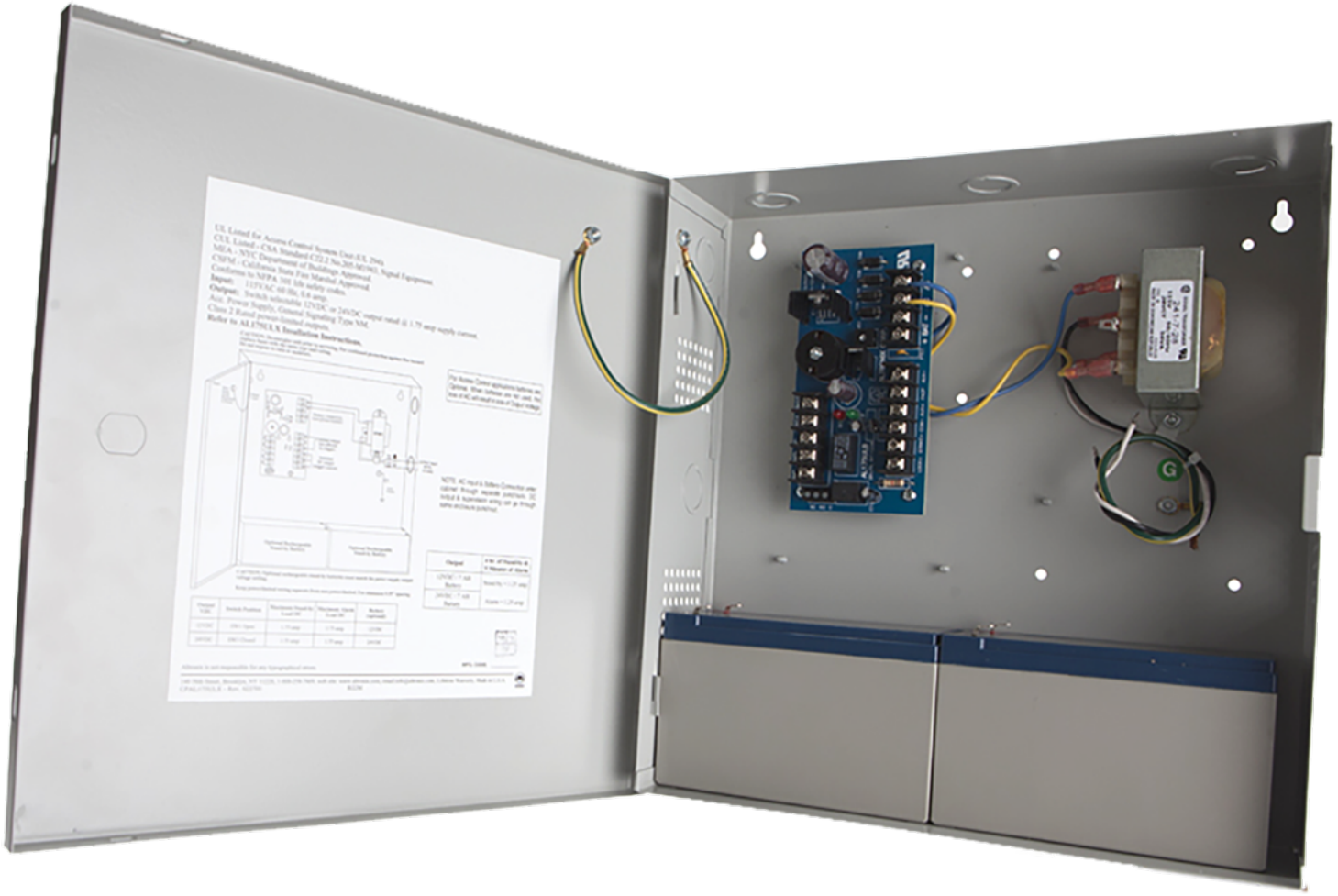
UL Listed for Access Control System Unit (UL 294).
CUL Listed - CSA Standard C22.2 No.205-M1983, Signal Equipment.
MEA - NYC Department of Buildings Approved.
CSFM - California State Fire Marshal Approved.
Conforms to NFPA 70E life safety codes.
Input: 115VAC 60 Hz, 0.6 amp.
Output: Switch selectable 12VDC or 24VDC output rated @ 1.75 amp supply current.
Aux. Power Supply, General Signalling Type NM.
Class 2 Rated power-limited outputs.
Refer to ALE70ULX Installation Instructions.
G

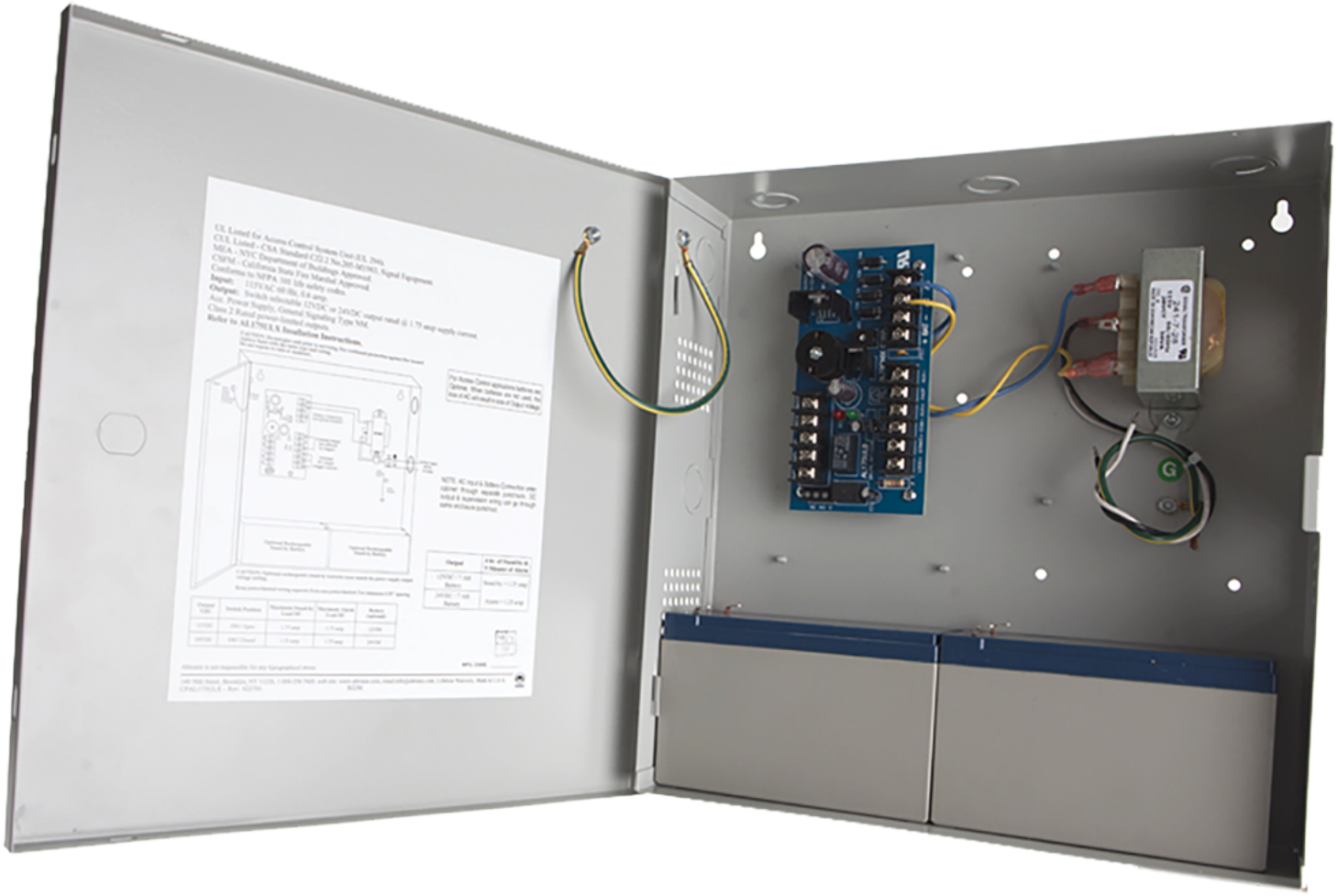
UL Listed for Access Control System Unit (UL 294).
CUL Listed - CSA Standard C22.2 No.205-M1983, Signal Equipment.
MEA - NYC Department of Buildings Approved.
CSFM - California State Fire Marshal Approved.
Conforms to NFPA 70E life safety codes.
Input: 115VAC 60 Hz, 0.6 amp.
Output: Switch selectable 12VDC or 24VDC output rated @ 1.75 amp supply current.
Aux. Power Supply, General Signaling Type NM.
Class 2 Rated power-limited outputs.
Refer to ALE70XLEA Installation Instructions.



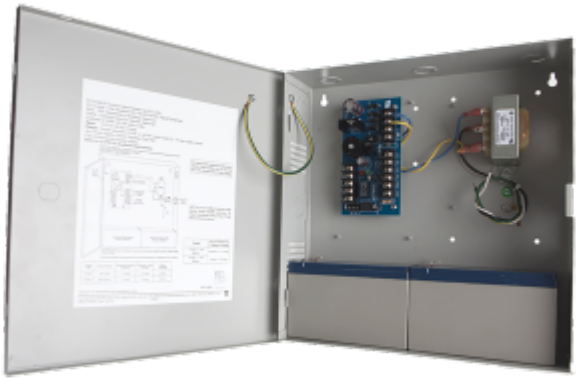

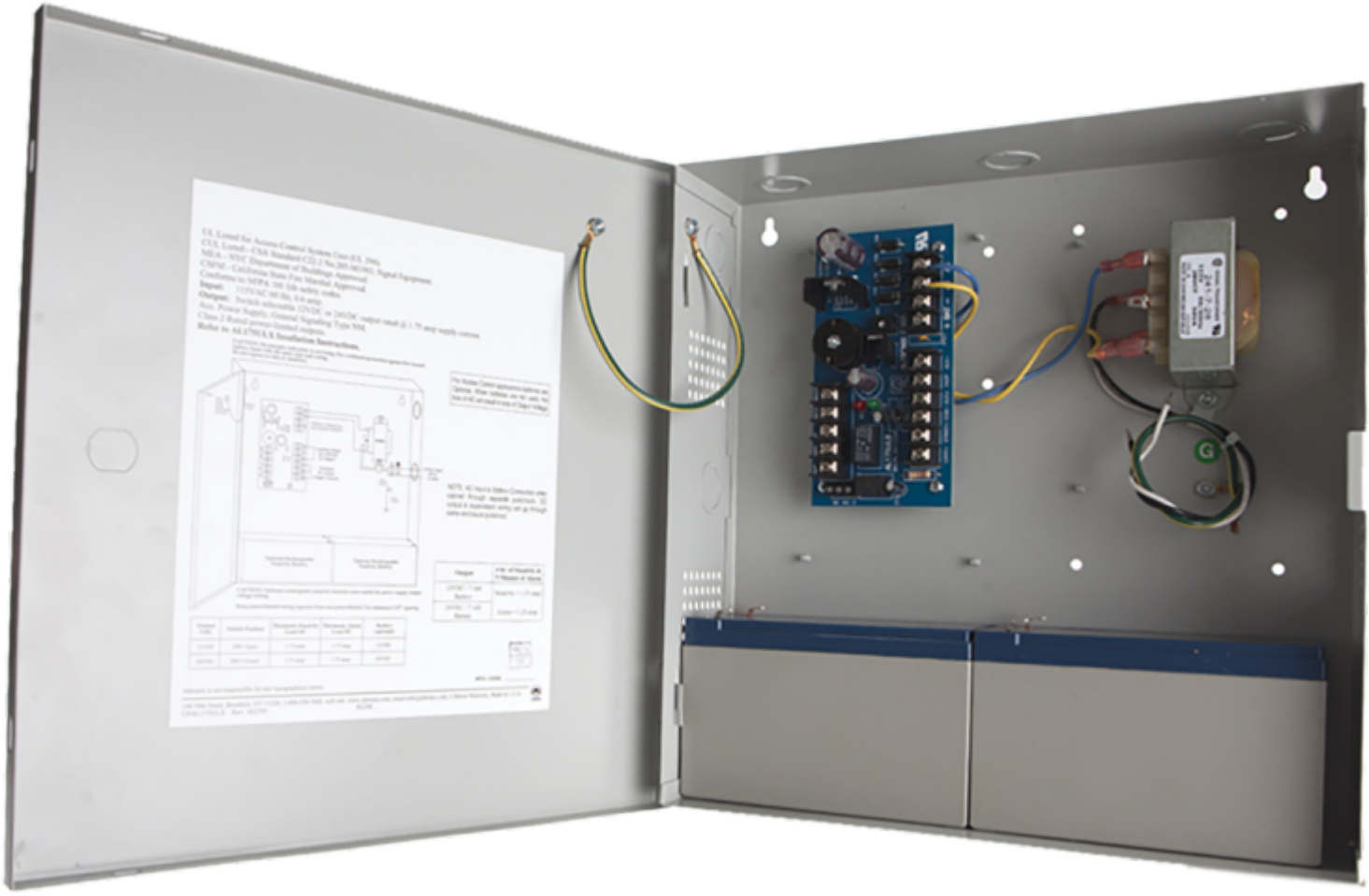

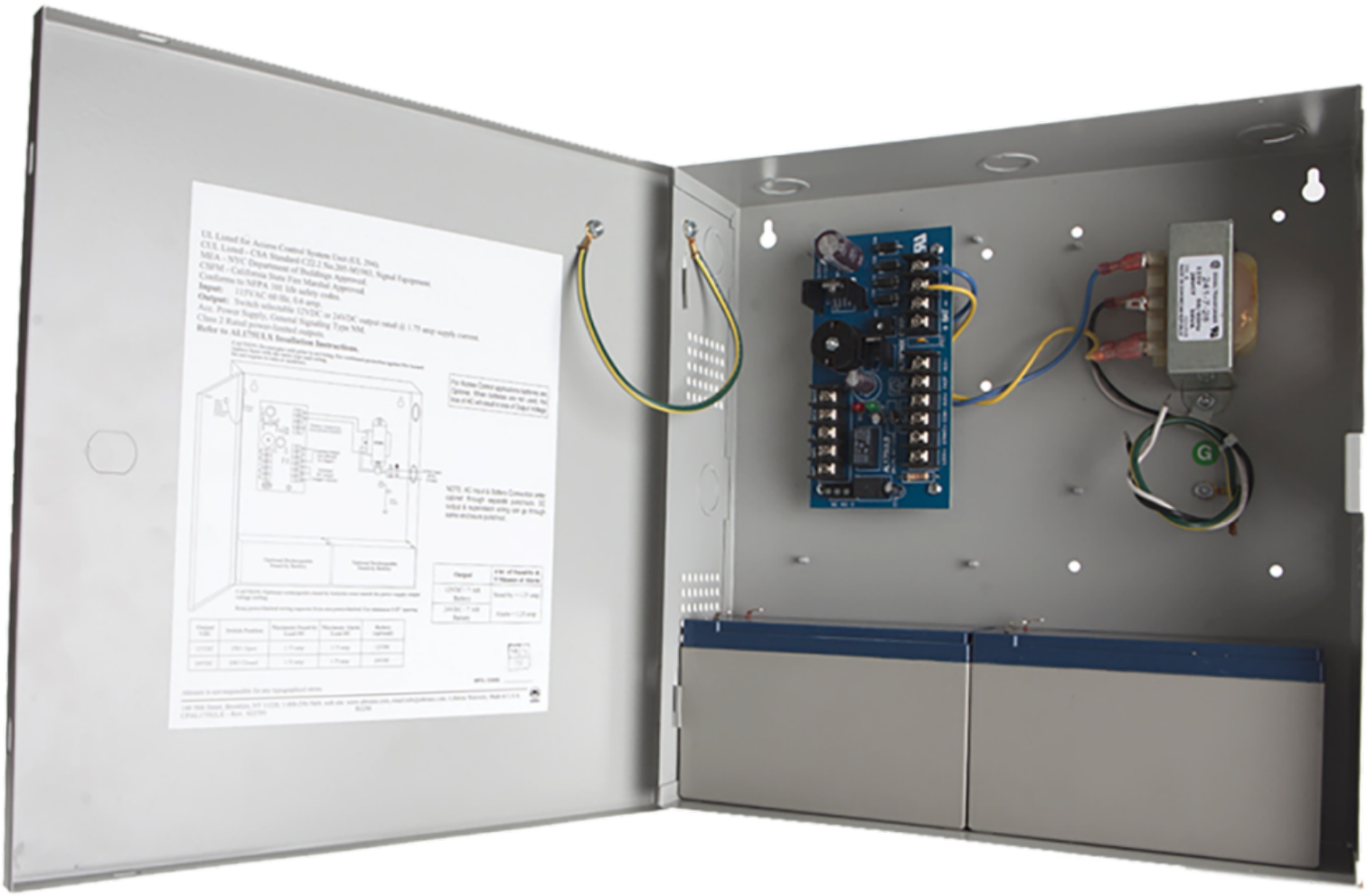

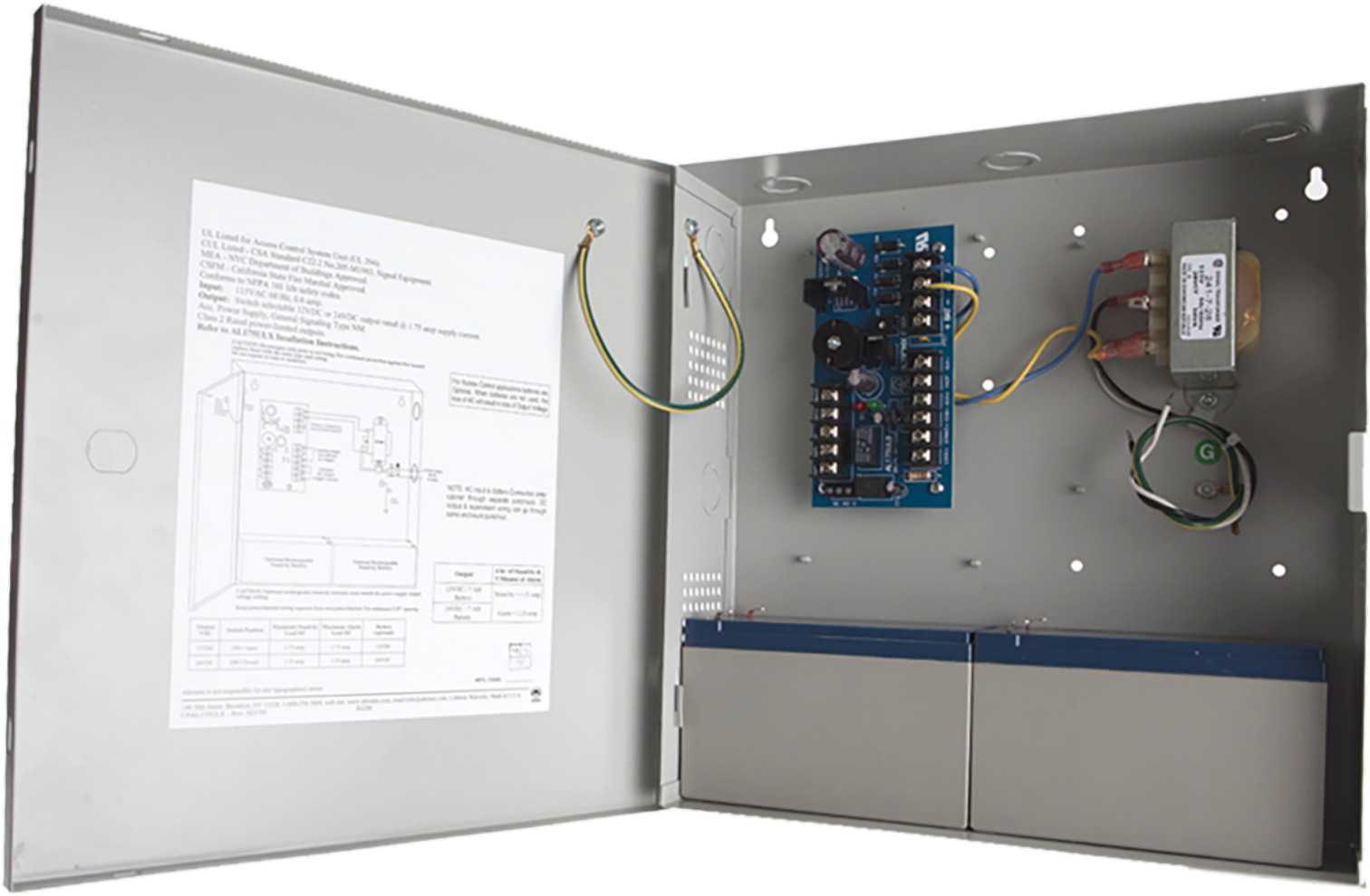
UL Listed for Access Control System Unit (UL 294).
CUL Listed - CSA Standard C22.2 No.205-M1983, Signal Equipment.
MEA - NYC Department of Buildings Approved.
CSFM - California State Fire Marshal Approved.
Conforms to NFPA 101 life safety codes.
Input: 115VAC 60 Hz, 8.6 amp.
Output: Switch selectable 12VDC or 24VDC output rated @ 1.75 amp supply current.
Aux. Power Supply, General Signaling Type NM.
Class 2 Rated power-limited outputs.
Refer to ALTRONIX Installation Instructions.

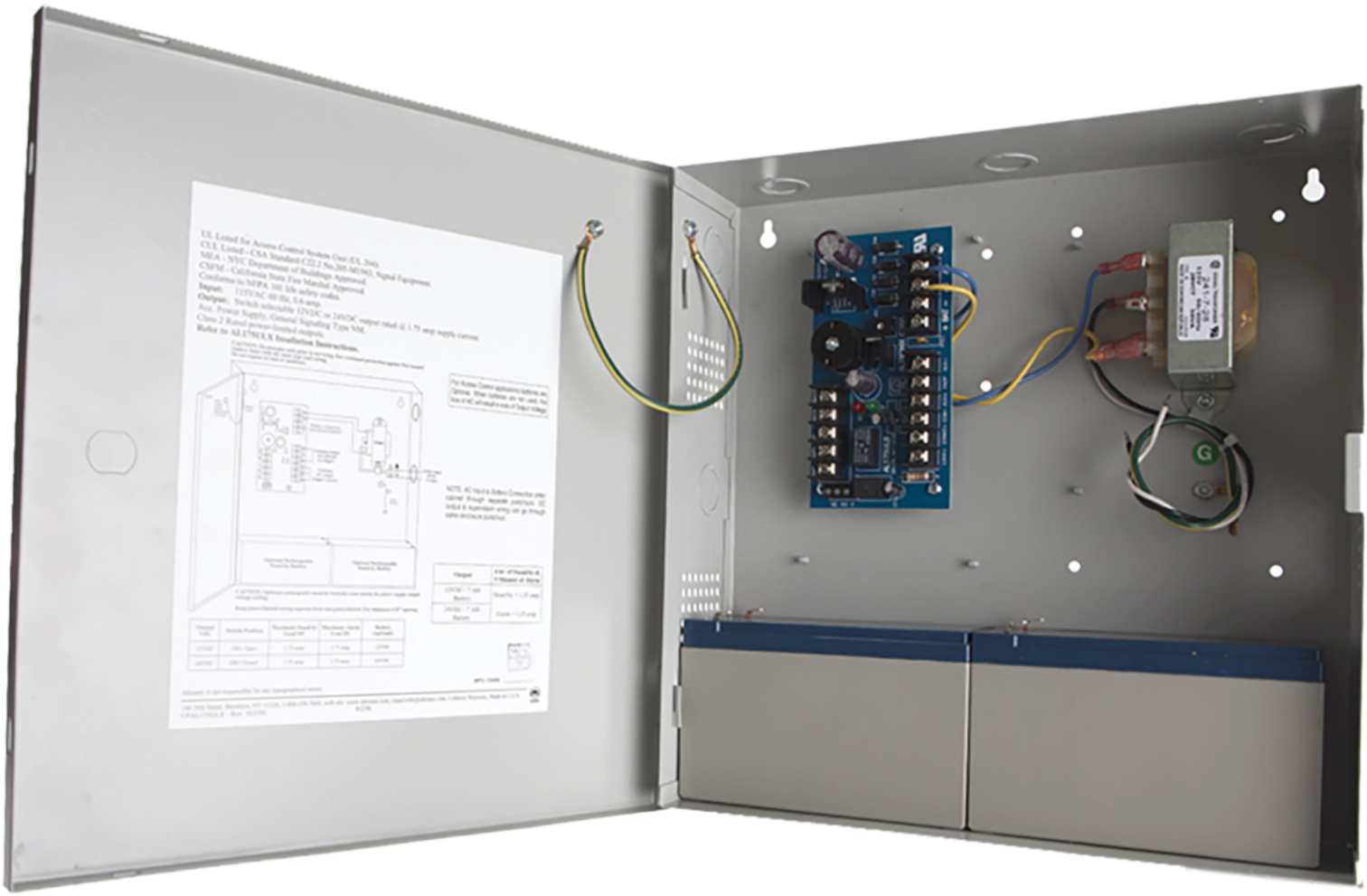
UL Listed for Access Control System Unit (UL 294).
CUL Listed - CSA Standard C22.2 No.205-M1983, Signal Equipment.
MEA - NYC Department of Buildings Approved.
CSFM - California State Fire Marshal Approved.
Conforms to NFPA 101 life safety codes.
Input: 115VAC 60 Hz, 8.6 amp.
Output: Switch selectable 12VDC or 24VDC output rated @ 1.75 amp supply current.
Aux. Power Supply, General Signaling Type NM.
Class 2 Rated power-limited outputs.
Refer to ALTRONIX Installation Instructions.
ALTRONIX
G



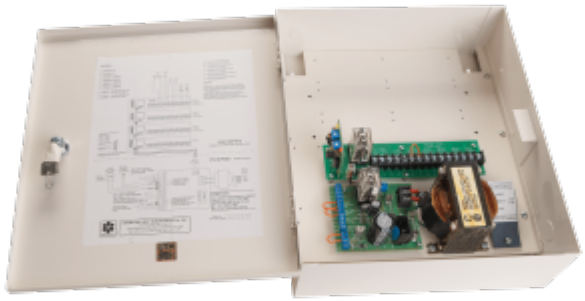

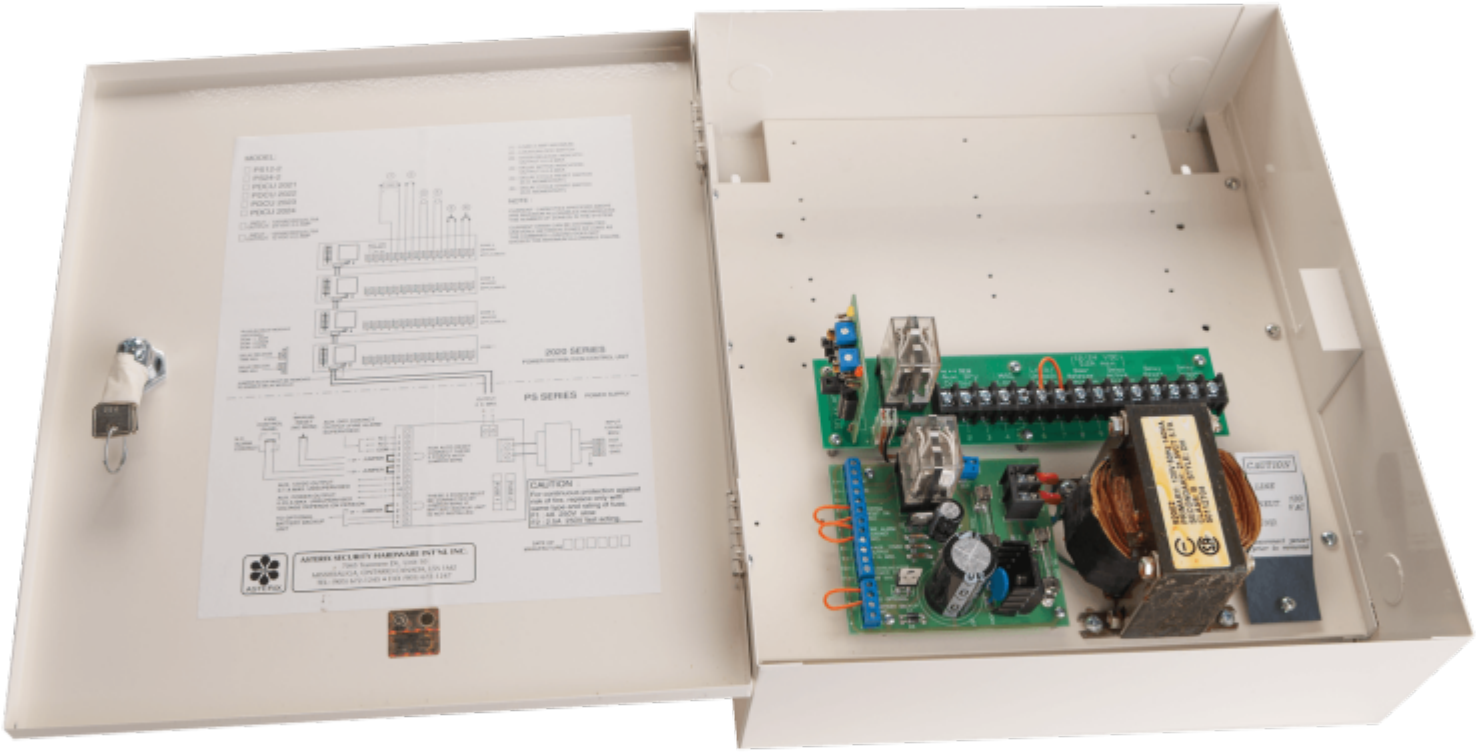
2000 SERIES
PS SERIES
CAUTION

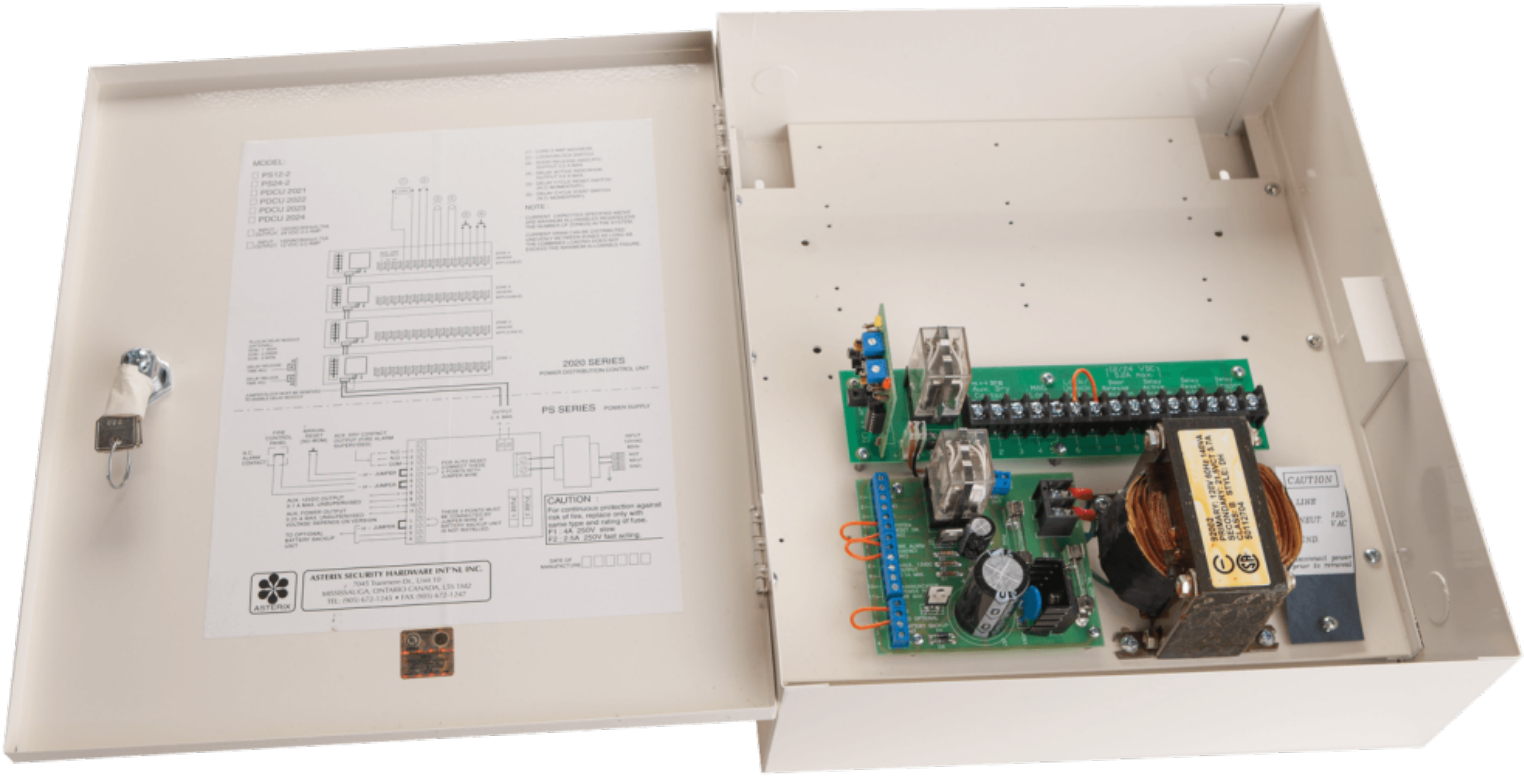
MODEL:
PS12-2
PS24-2
PDCU 2021
PDCU 2022
PDCU 2023
PDCU 2024
2020 SERIES
POWER DISTRIBUTION CONTROL UNIT
PS SERIES POWER SUPPLY
CAUTION
For continuous protection against risk of fire, replace only with same type and rating of fuse.
F1 : 4A 250V slow
F2 : 2.5A 250V fast acting
ASTERIX SECURITY HARDWARE INT'NL INC.
7045 Tranmere Dr. Unit 10
MISSISSAUGA, ONTARIO CANADA, L5S 1M2
TEL: (905) 672-1245 • FAX (905) 672-1247
CAUTION

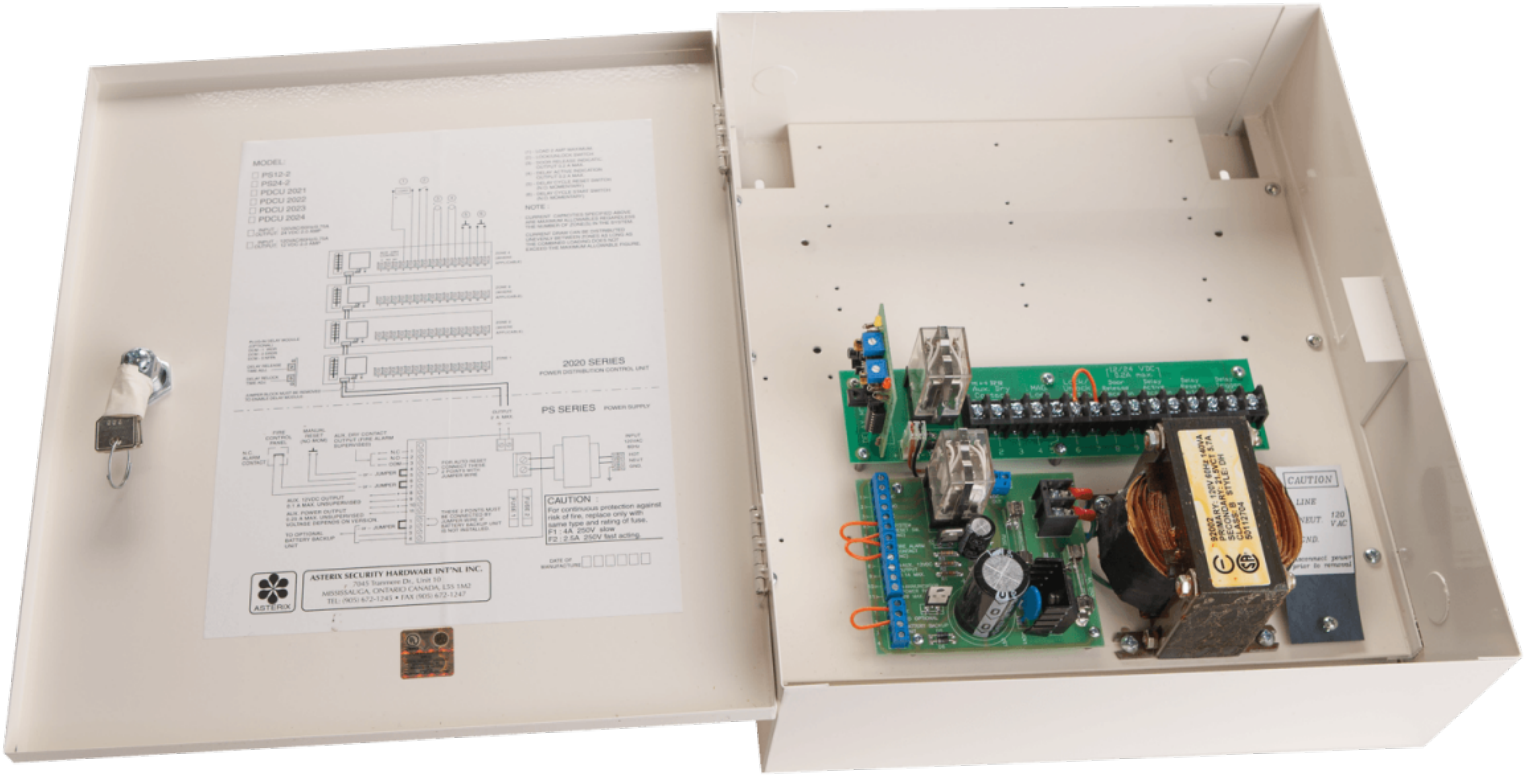
MODEL:
PS12-2
PS24-2
PDCU 2021
PDCU 2022
PDCU 2023
PDCU 2024
2020 SERIES
POWER DISTRIBUTION CONTROL UNIT
PS SERIES POWER SUPPLY
CAUTION
For continuous protection against risk of fire, replace only with same type and rating of fuse.
F1 : 4A 250V slow
F2 : 2.5A 250V fast acting
ASTERIX SECURITY HARDWARE INT'NL INC.
7045 Tranmere Dr. Unit 10
MISSISSAUGA, ONTARIO CANADA, L5S 1M2
TEL: (905) 672-1243 • FAX (905) 672-1247
CAUTION
LINE
NEUT. 120 VAC
GND.

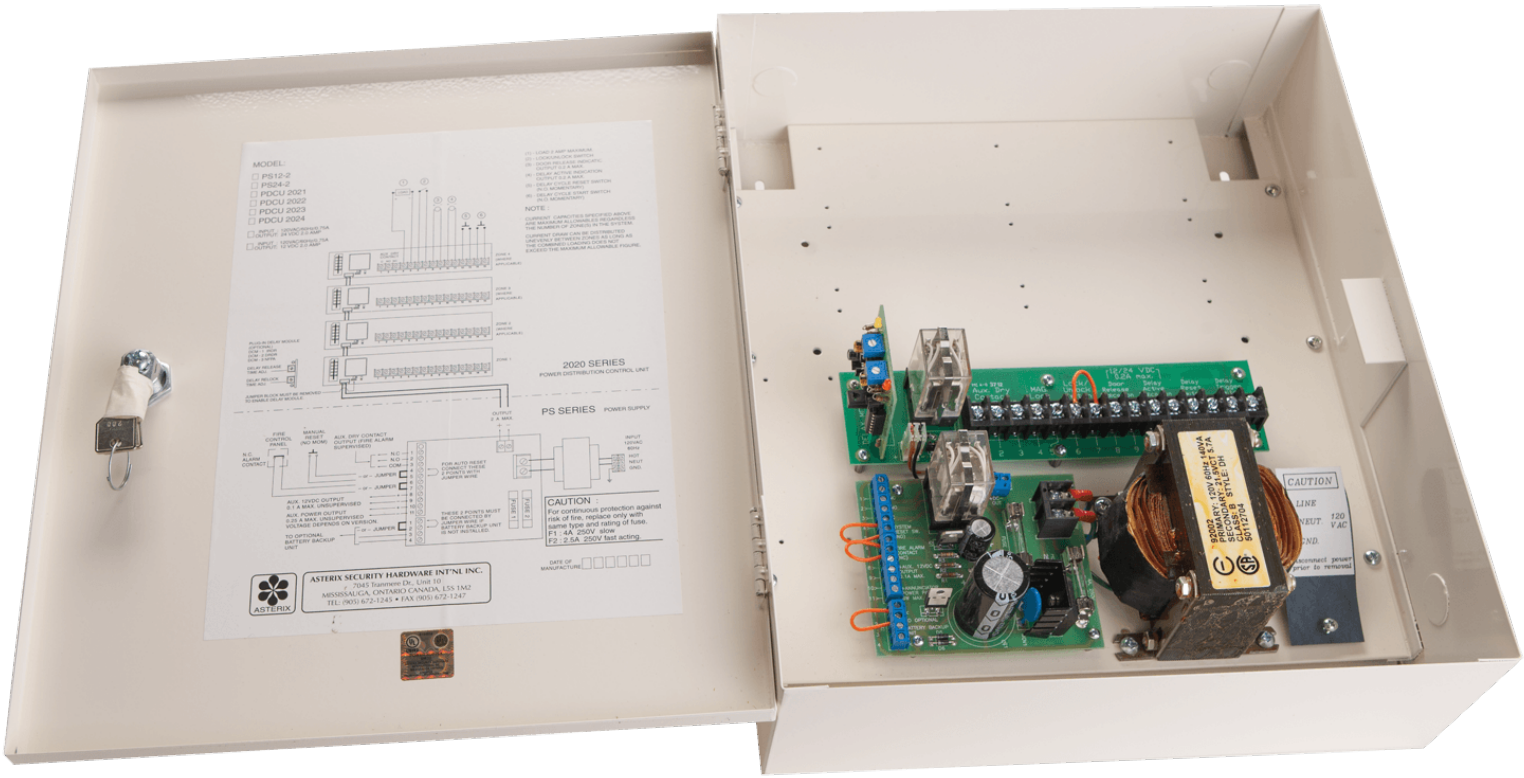
MODEL:
PS12-2
PS24-2
PDCU 2021
PDCU 2022
PDCU 2023
PDCU 2024
2020 SERIES
POWER DISTRIBUTION CONTROL UNIT
PS SERIES POWER SUPPLY
CAUTION
For continuous protection against risk of fire, replace only with same type and rating of fuse.
F1 : 4A 250V slow
F2 : 2.5A 250V fast acting
ASTERIX SECURITY HARDWARE INT'NL INC.
7045 Tranmere Dr., Unit 10
MISSISSAUGA, ONTARIO CANADA, L5S 1M2
TEL: (905) 672-1245 • FAX (905) 672-1247
CAUTION
LINE
NEUT. 120 VAC
GND.



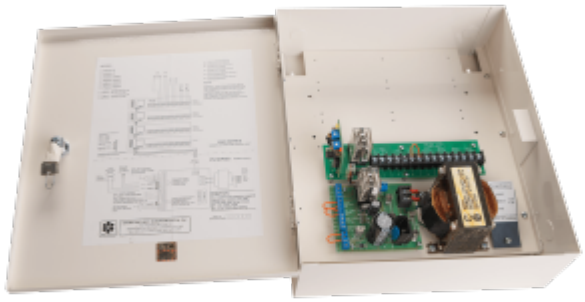

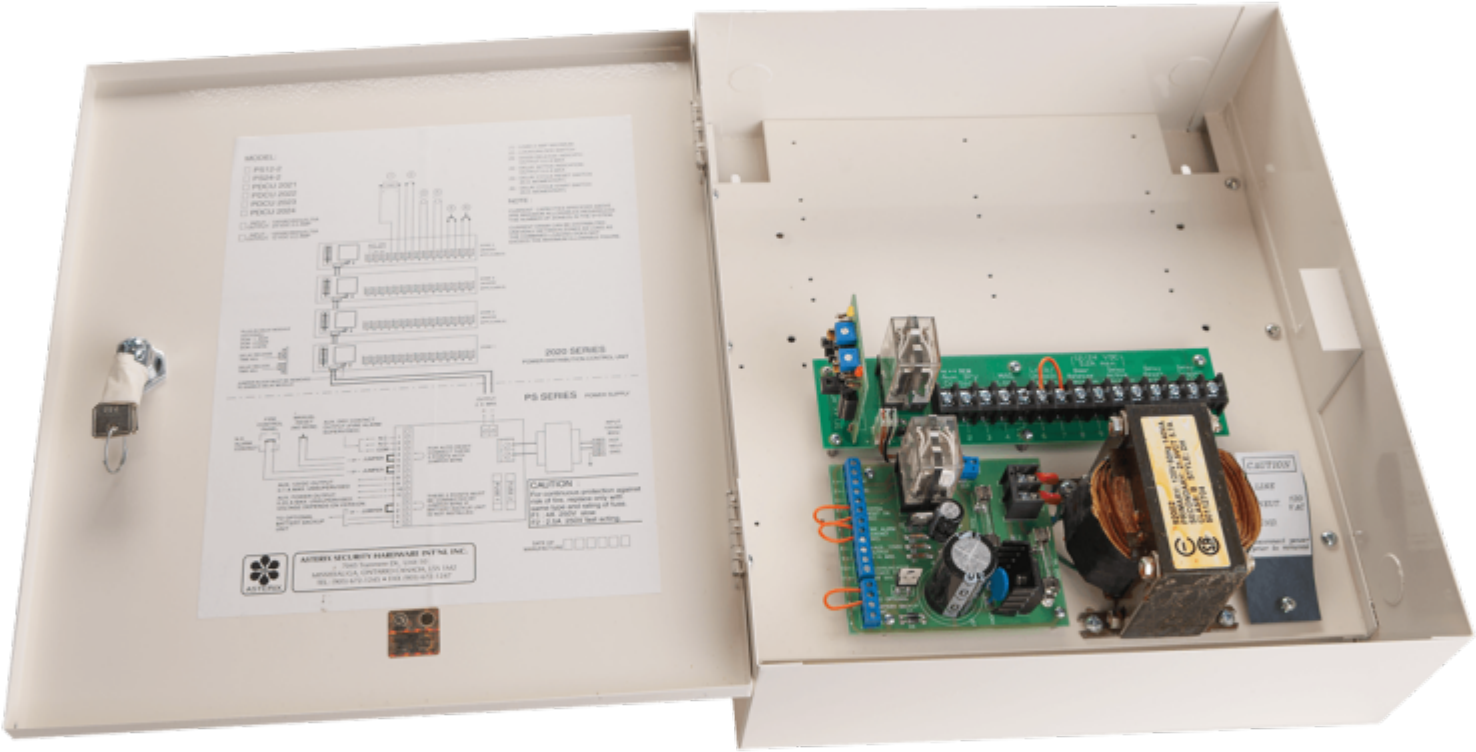
2020 SERIES
PS SERIES
CAUTION

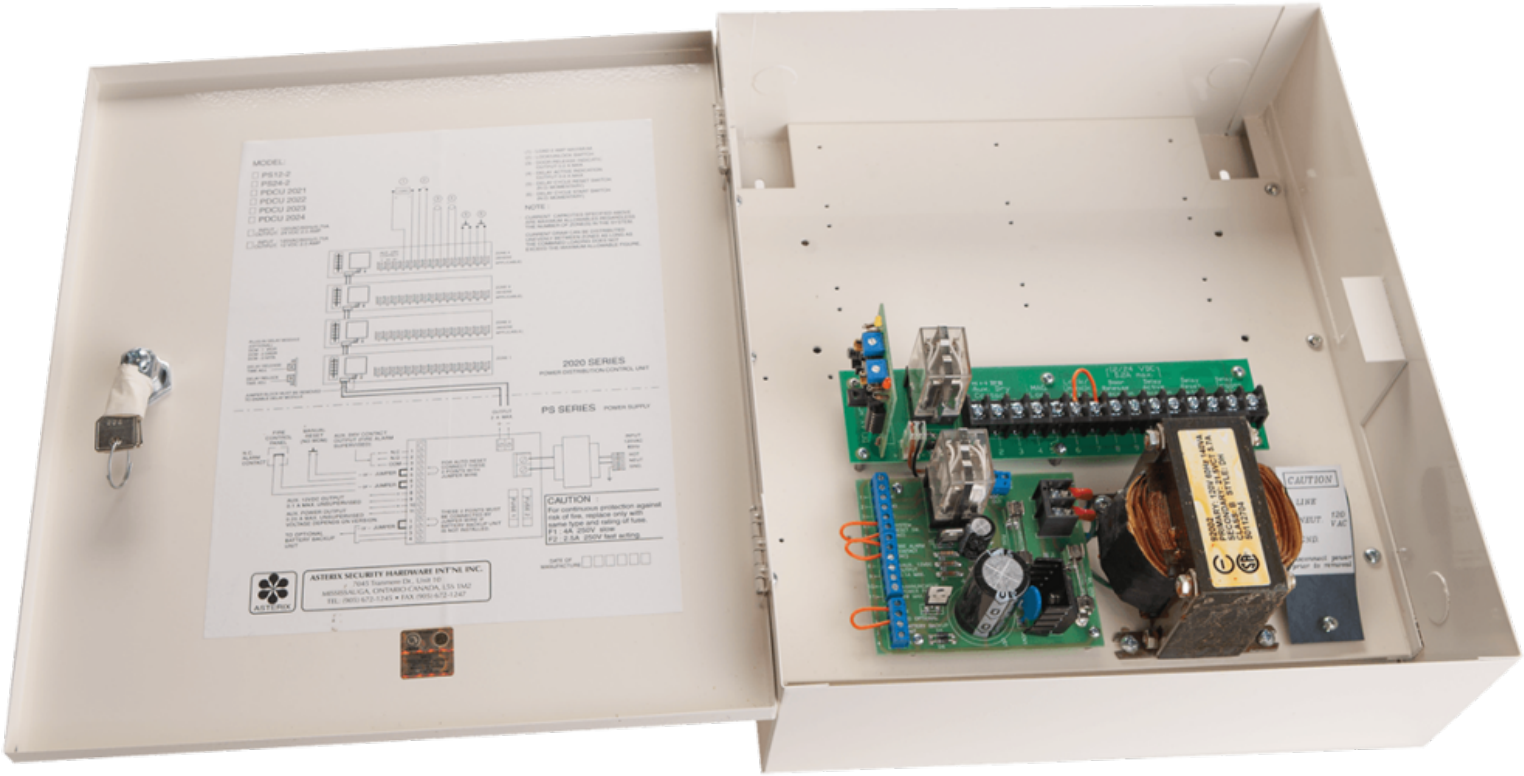
MODEL:
PS12-2
PS24-2
PDCU 2021
PDCU 2022
PDCU 2023
PDCU 2024
2020 SERIES
POWER DISTRIBUTION CONTROL UNIT
PS SERIES POWER SUPPLY
CAUTION
For continuous protection against risk of fire, replace only with same type and rating of fuse.
F1 : 4A 250V slow
F2 : 2.5A 250V fast acting
ASTERIX SECURITY HARDWARE INT'NL INC.
CAUTION

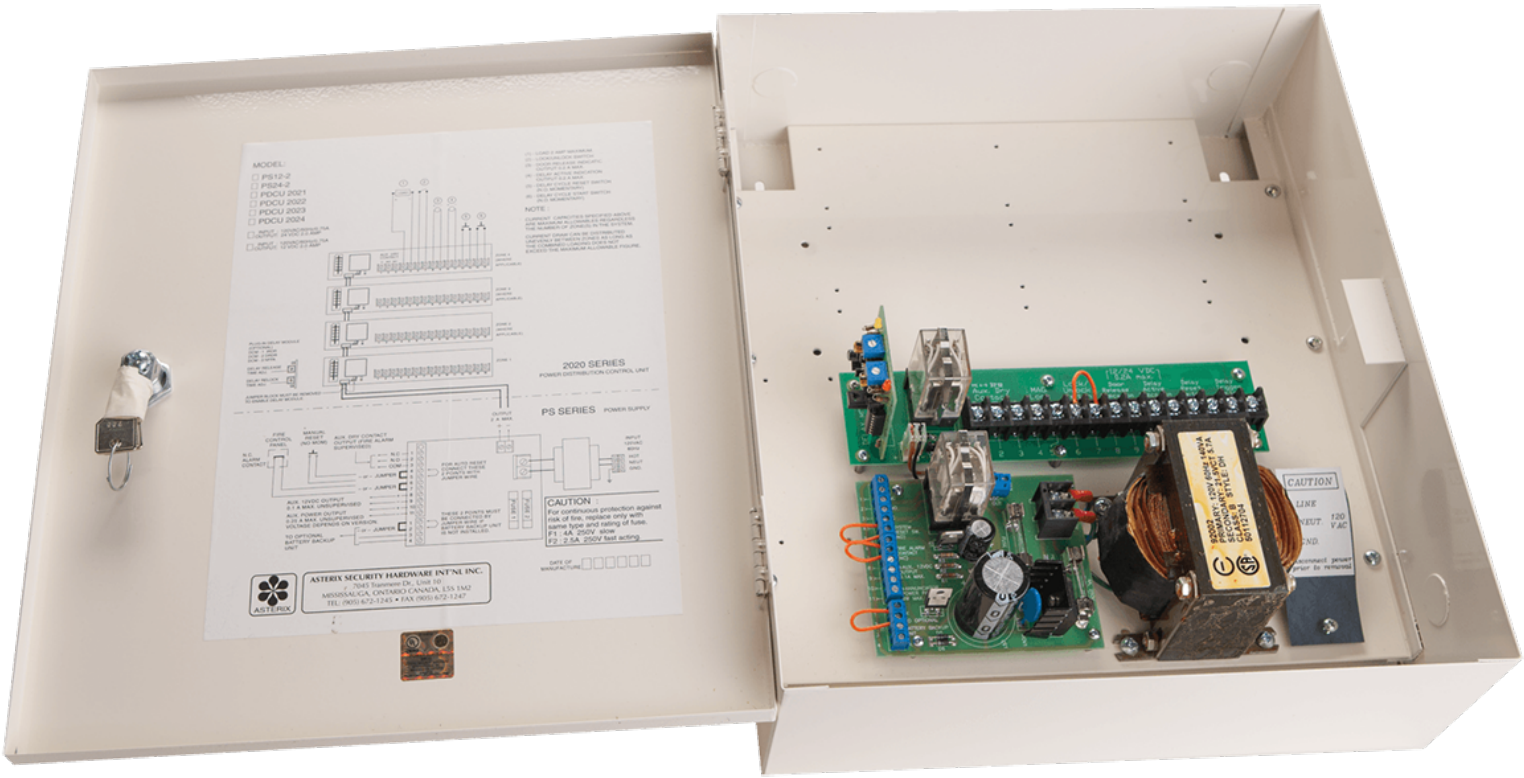
MODEL:
PS12-2
PS24-2
PDCU 2021
PDCU 2022
PDCU 2023
PDCU 2024
2020 SERIES
POWER DISTRIBUTION CONTROL UNIT
PS SERIES POWER SUPPLY
CAUTION
For continuous protection against risk of fire, replace only with same type and rating of fuse.
F1 : 4A 250V slow
F2 : 2.5A 250V fast acting
DATE OF MANUFACTURE
ASTERIX SECURITY HARDWARE INT'NL INC.
7045 Tranmere Dr. Unit 10
MISSISSAUGA, ONTARIO CANADA, L5S 1M2
TEL: (905) 672-1245 • FAX (905) 672-1247
CAUTION

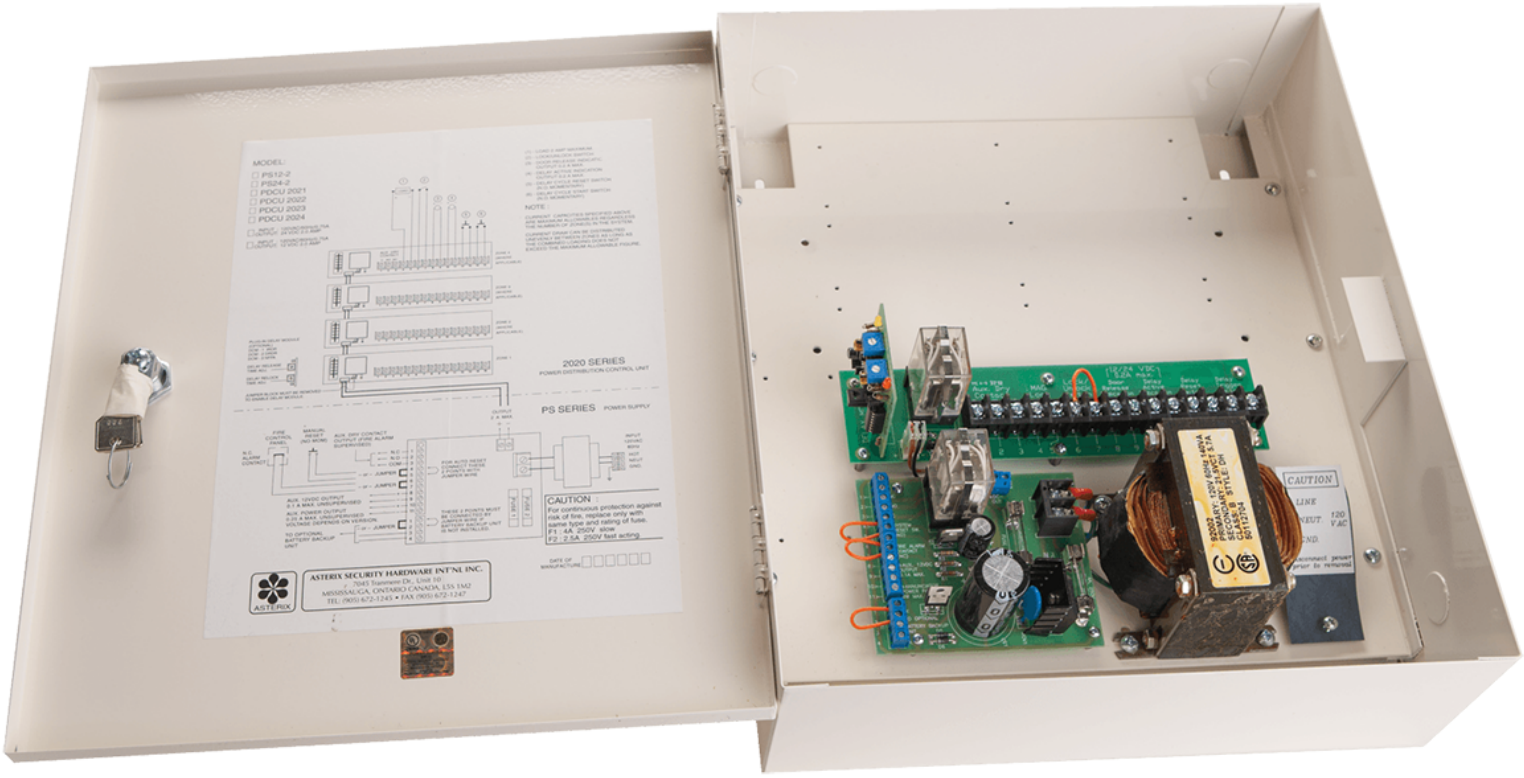
MODEL:
PS12-2
PS24-2
PDCU 2021
PDCU 2022
PDCU 2023
PDCU 2024
2020 SERIES
POWER DISTRIBUTION CONTROL UNIT
PS SERIES POWER SUPPLY
CAUTION
For continuous protection against risk of fire, replace only with same type and rating of fuse.
F1 : 4A 250V slow
F2 : 2.5A 250V fast acting
ASTERIX SECURITY HARDWARE INT'NL INC.
7045 Tranmere Dr., Unit 10
MISSISSAUGA, ONTARIO CANADA, L5S 1M2
TEL: (905) 672-1245 • FAX (905) 672-1247
CAUTION








SCHLAGE
SCHLAGE


SCHLAGE


SCHLAGE






BEST
40H


BEST
40H


BEST
40H


BEST
40H






BEST
40H


BEST
4CH


BEST
4CH


BEST
4CH








PDQ
LISTED FOR
SINGLE POINT
LOCK OR LATCH
JOB 28111832
VOLT 24VAC/DC
AMPS 3A
ARCHITECTURAL CONTROL SYSTEMS, INC. - ST. LOUIS, MO
800-753-5558
CSI


PDQ
LISTED FOR
SINGLE POINT
LOCK OR LATCH
JOB 28111832
VOLT 24VAC/DC
AMPS 3A
ARCHITECTURAL CONTROL SYSTEMS, INC. · ST. LOUIS, MO
800-753-5558
CSI


PDQ
US LISTED FORM
SINGLE POINT
LOCK OR LATCH
F
CSI
JOB 28111832
VOLT 24VAC/DC
AMPS 2A
ARCHITECTURAL CONTROL SYSTEMS, INC. . ST. LOUIS, MO
800-753-5558







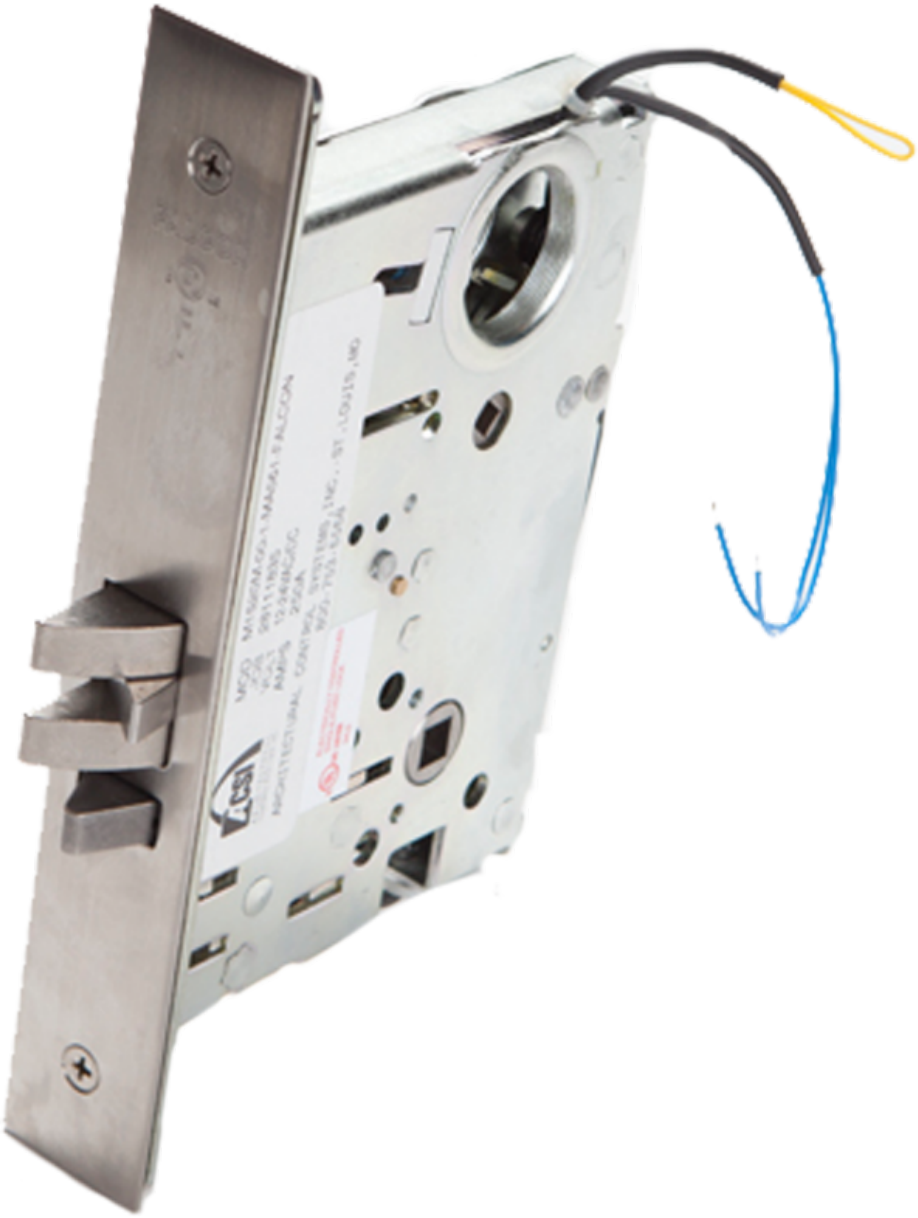

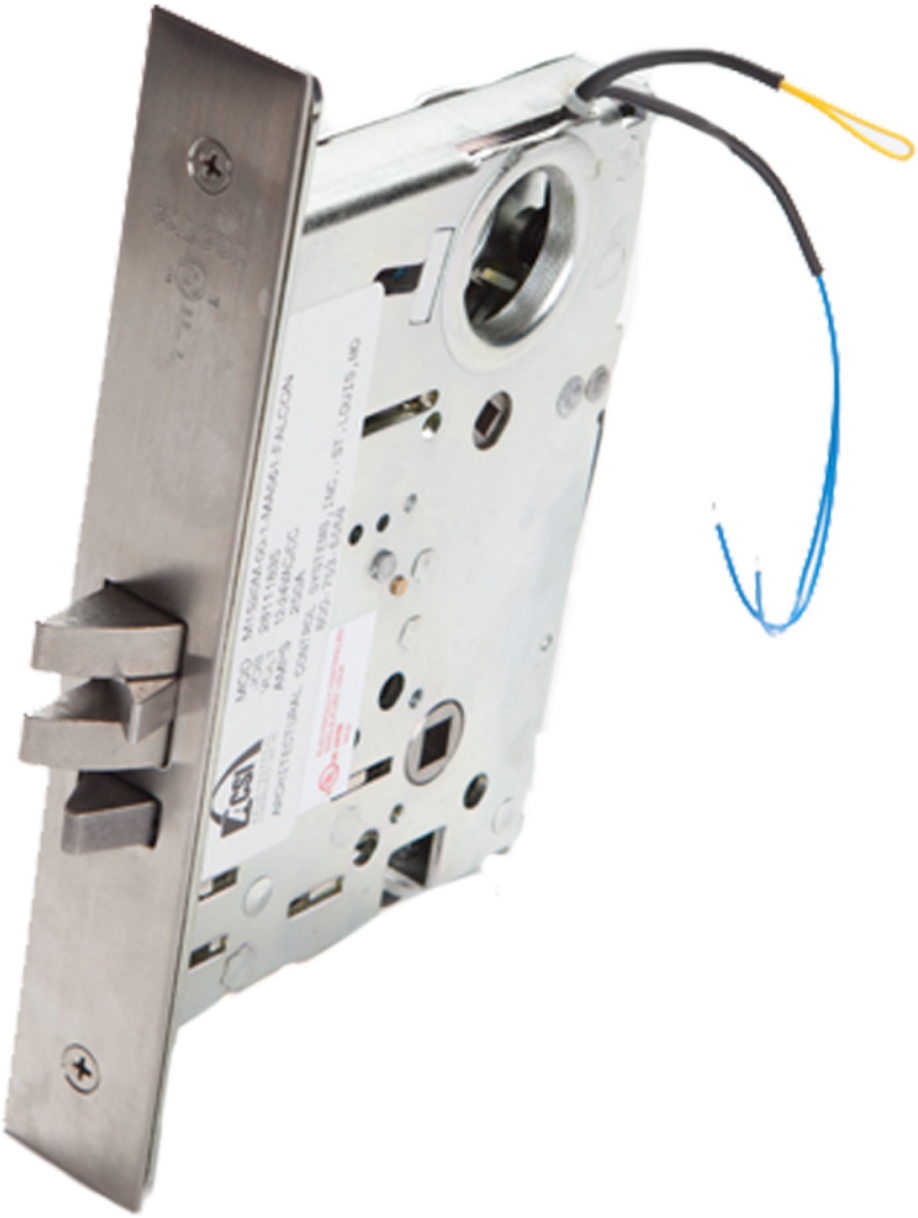

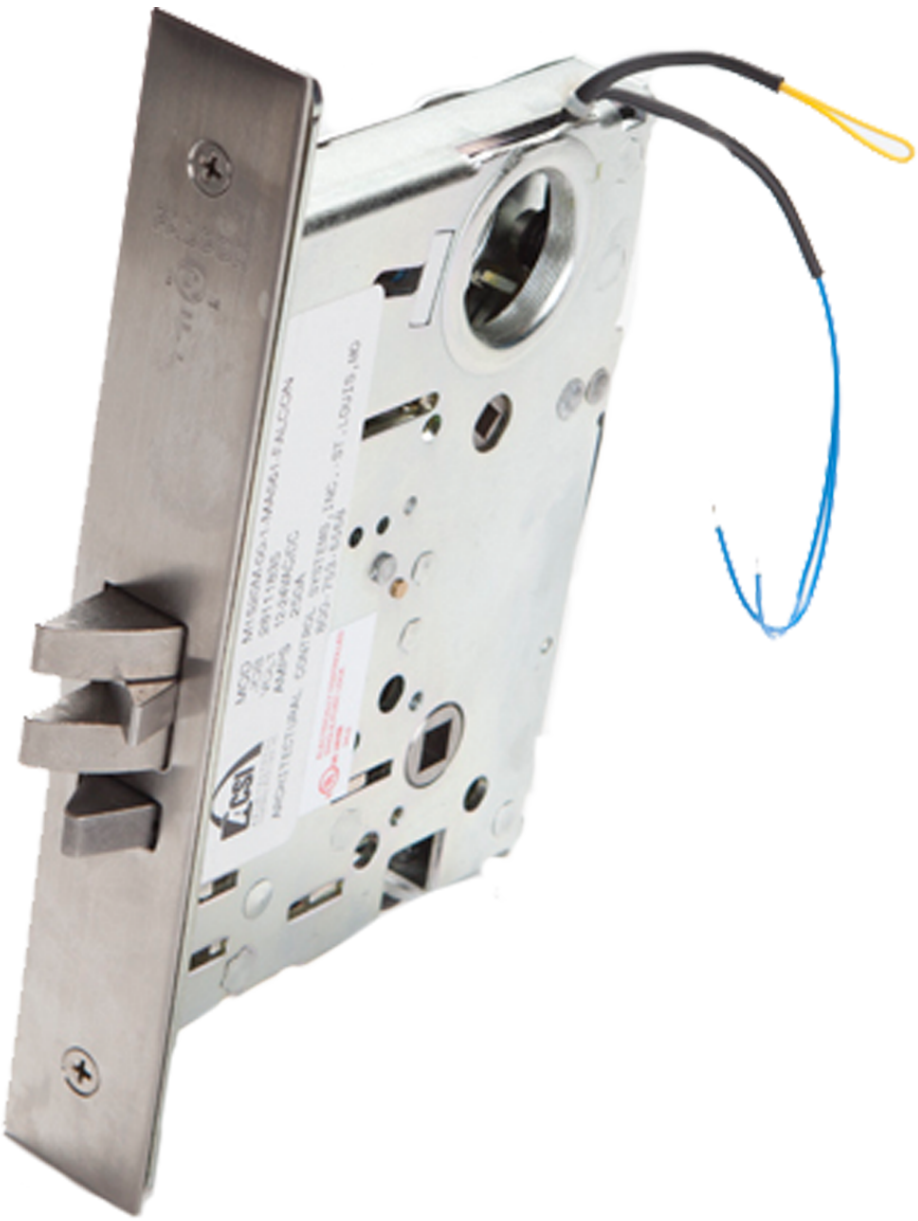











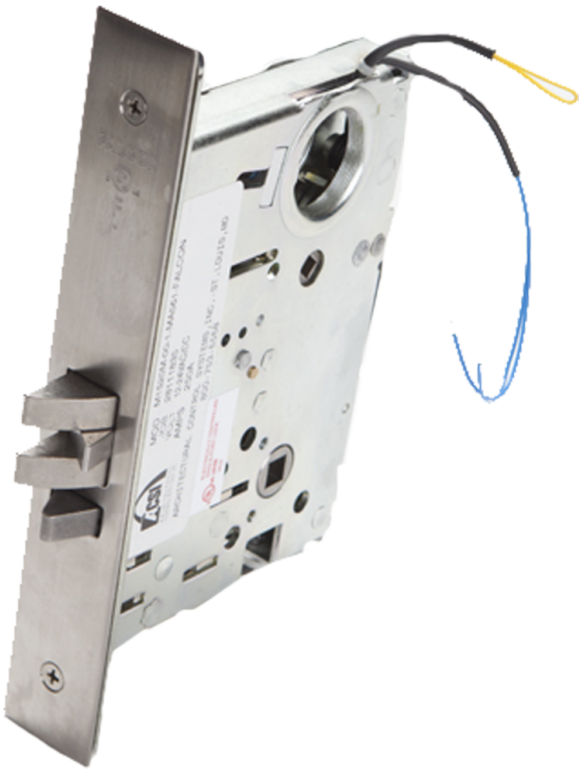



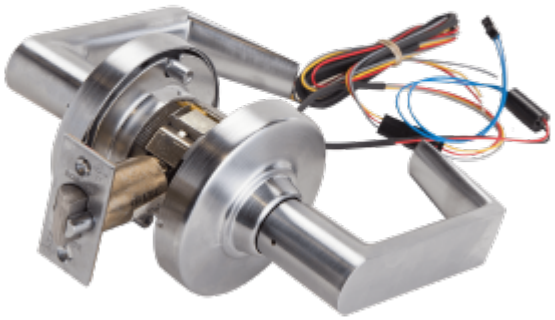

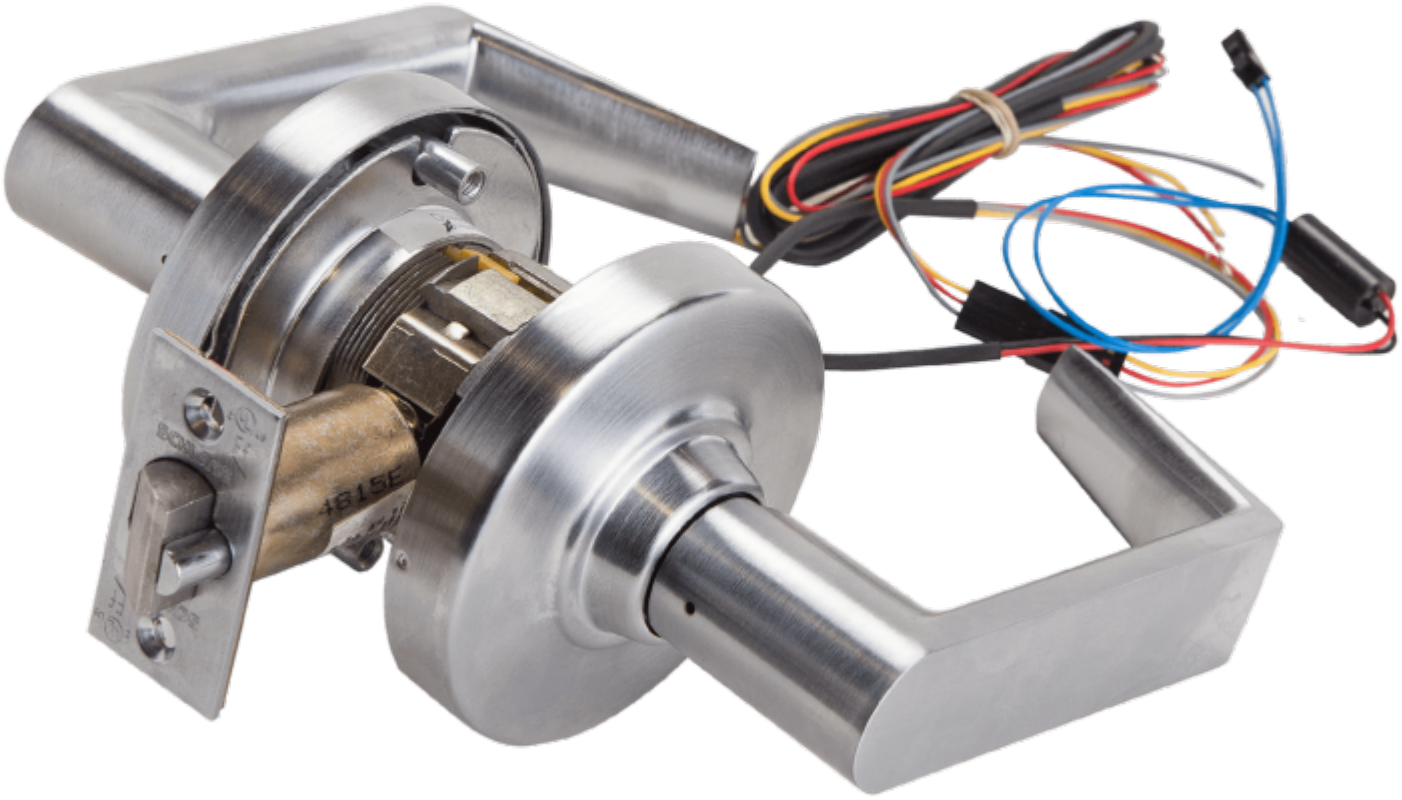
4815E

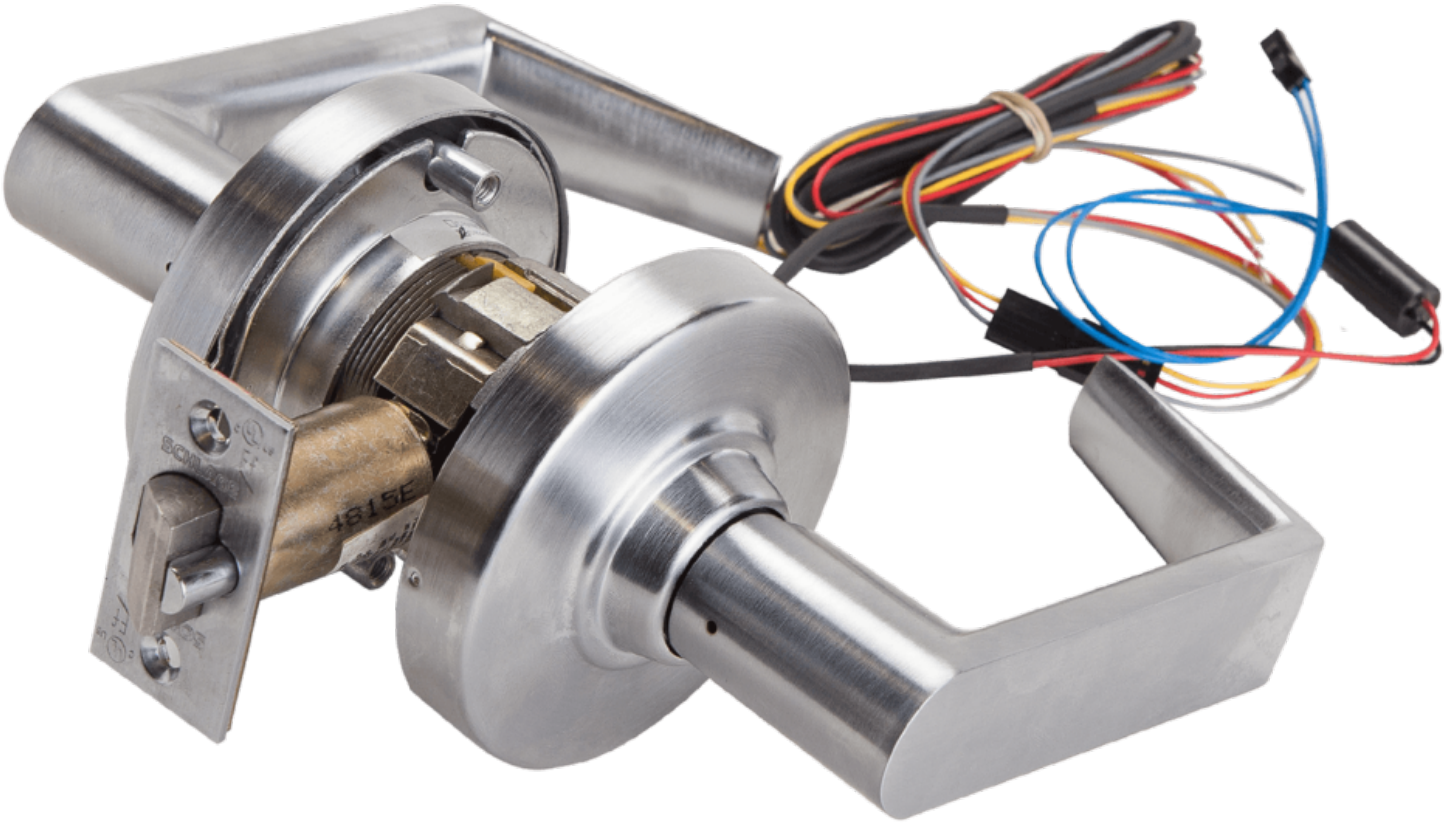
4815E

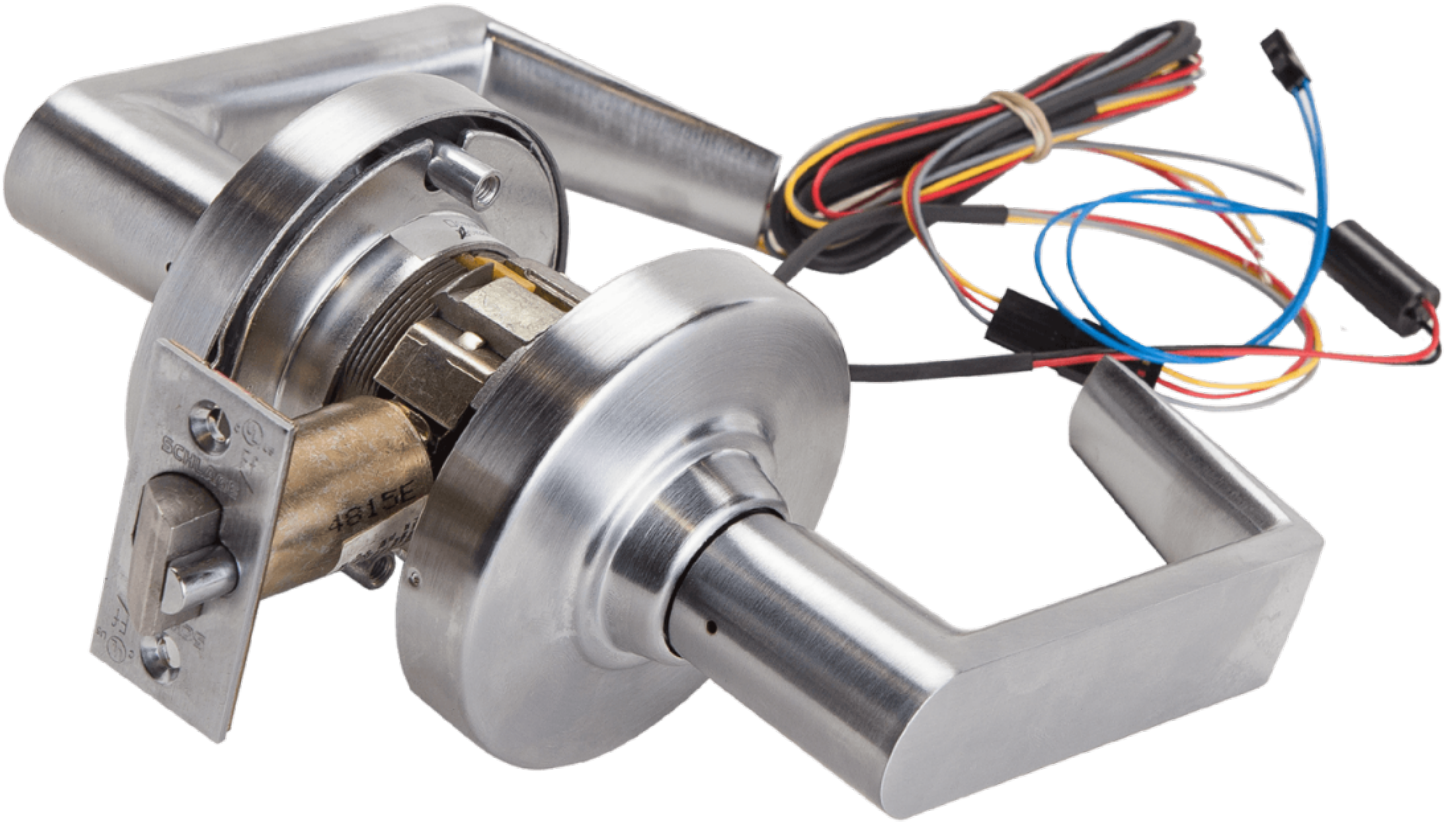
4815E

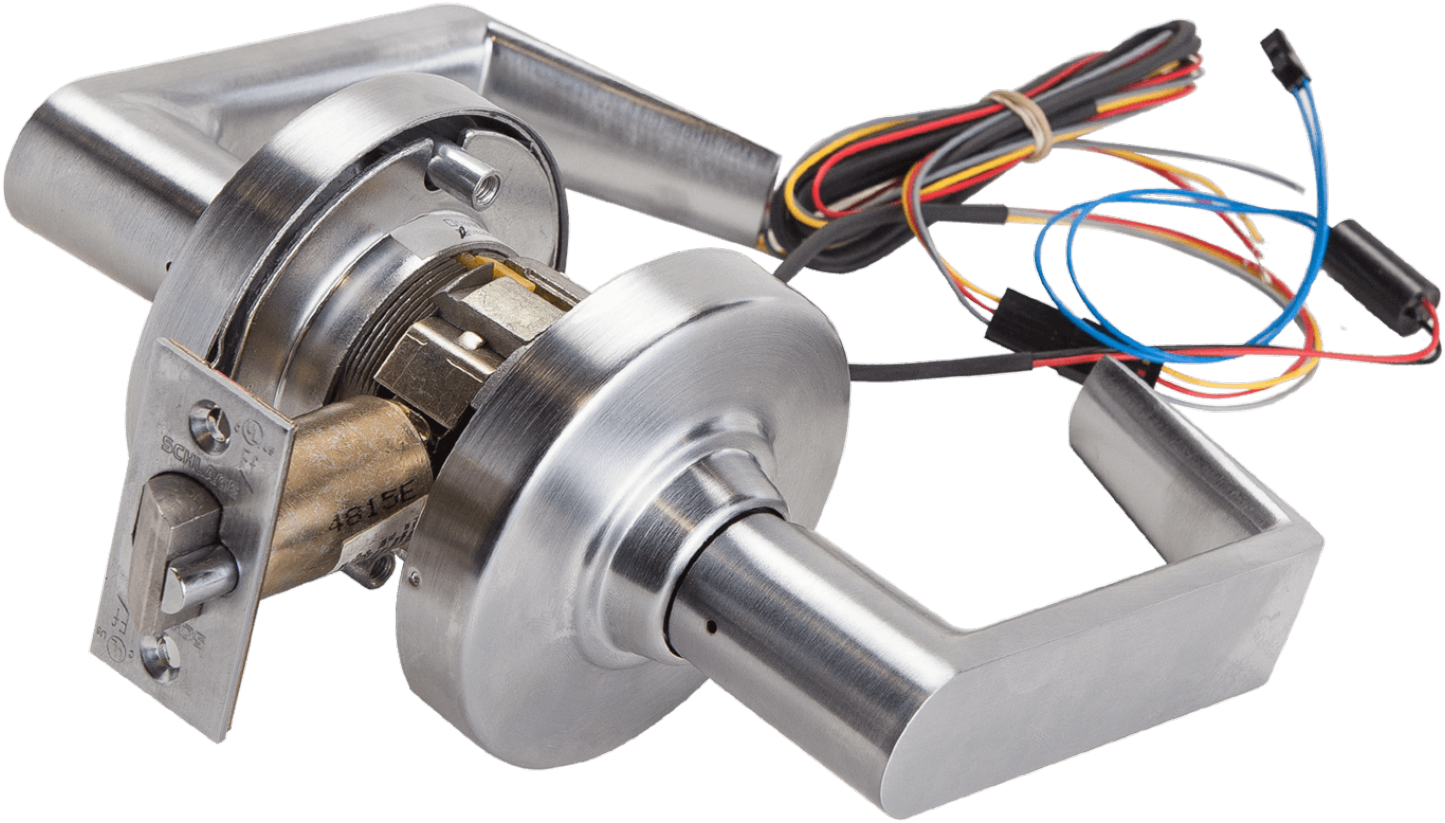
SCHLAGE
4815E

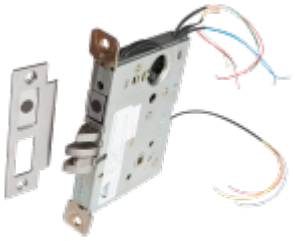

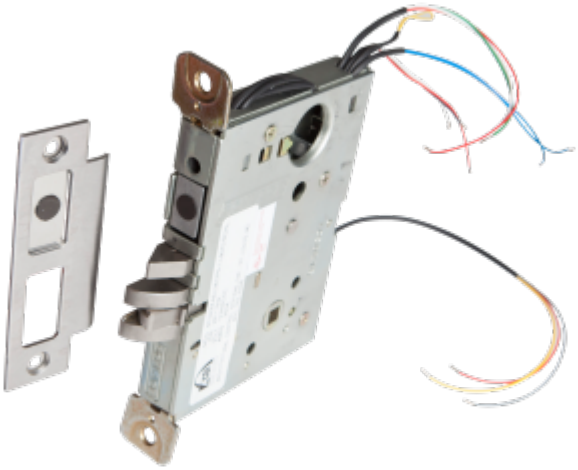

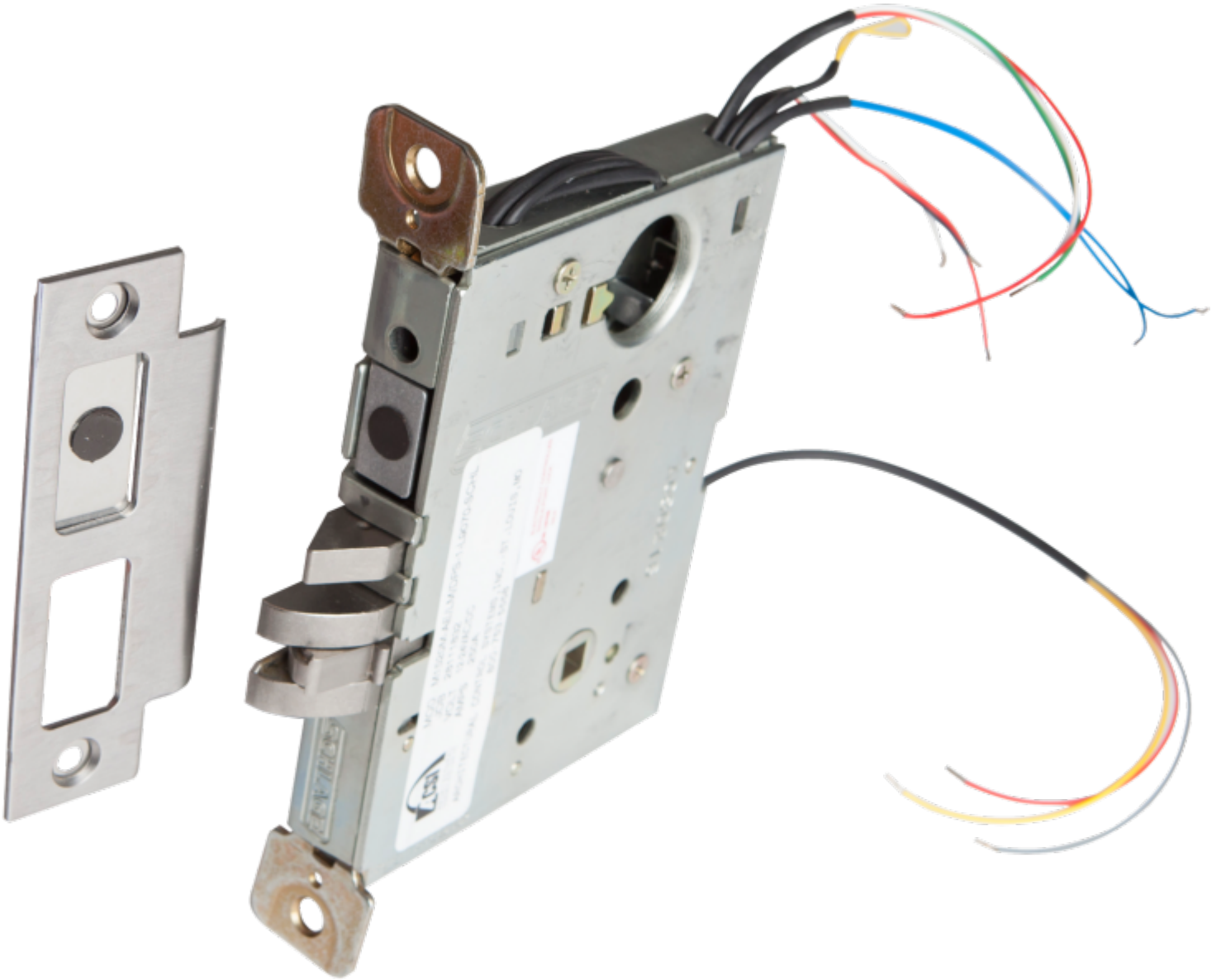

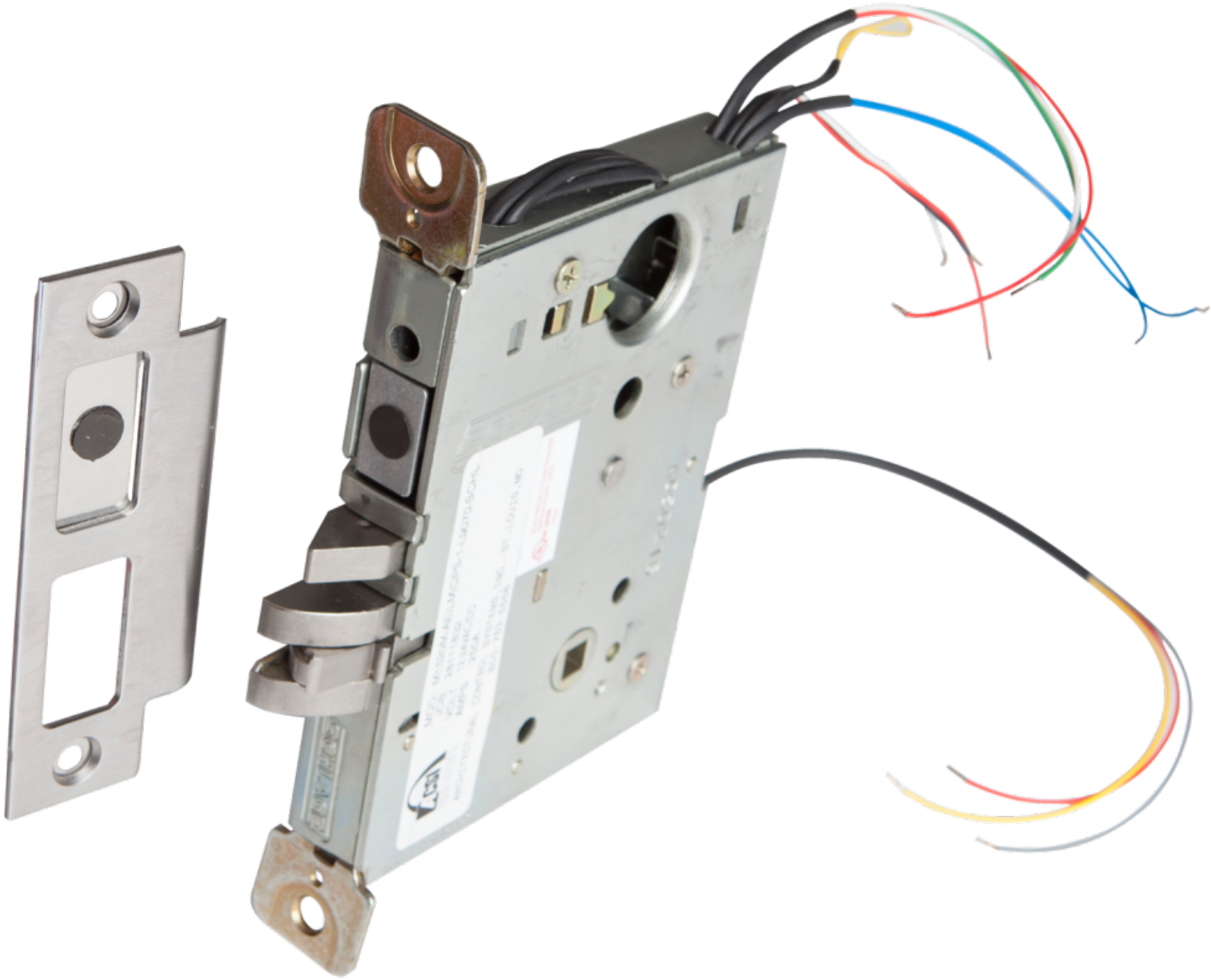

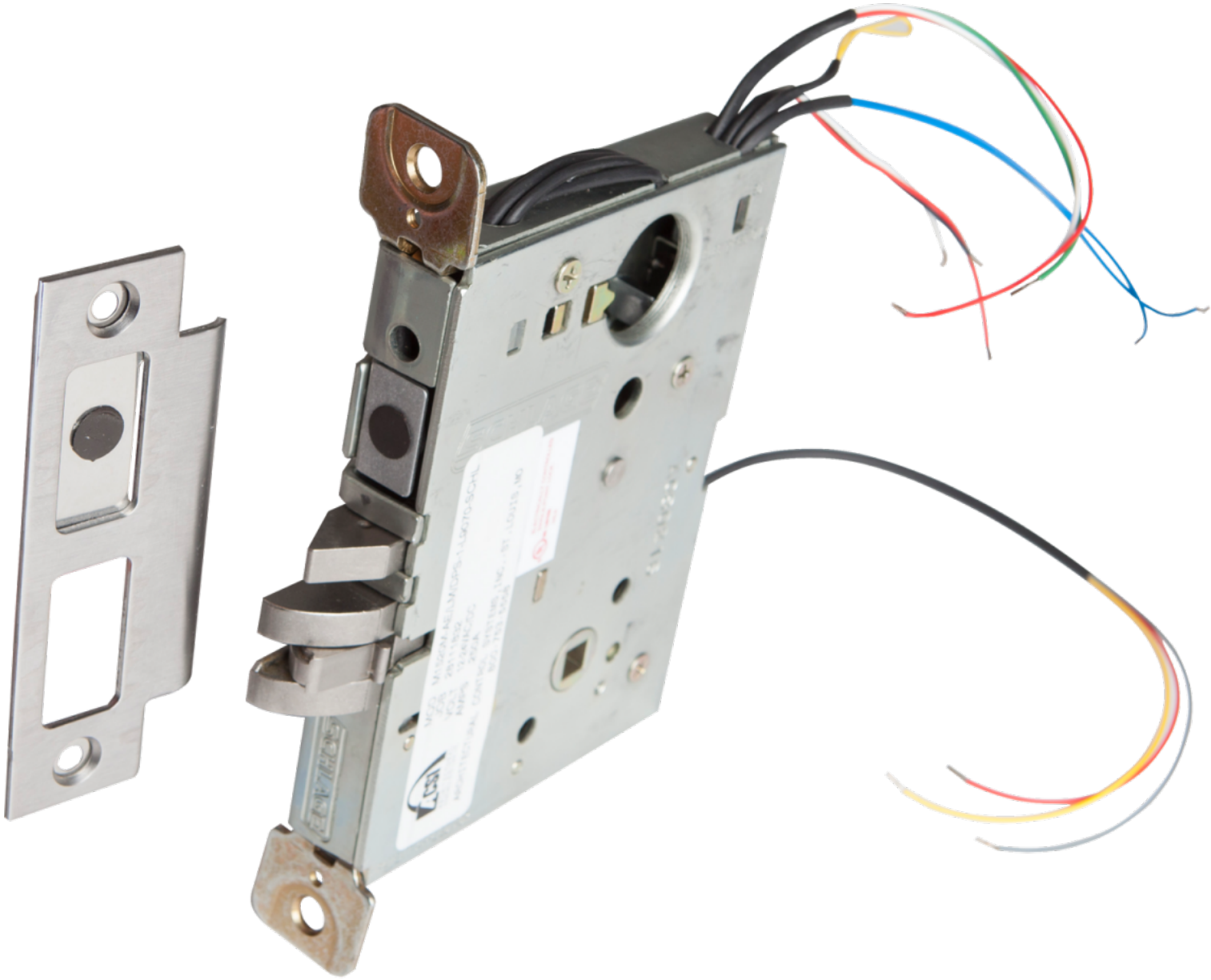

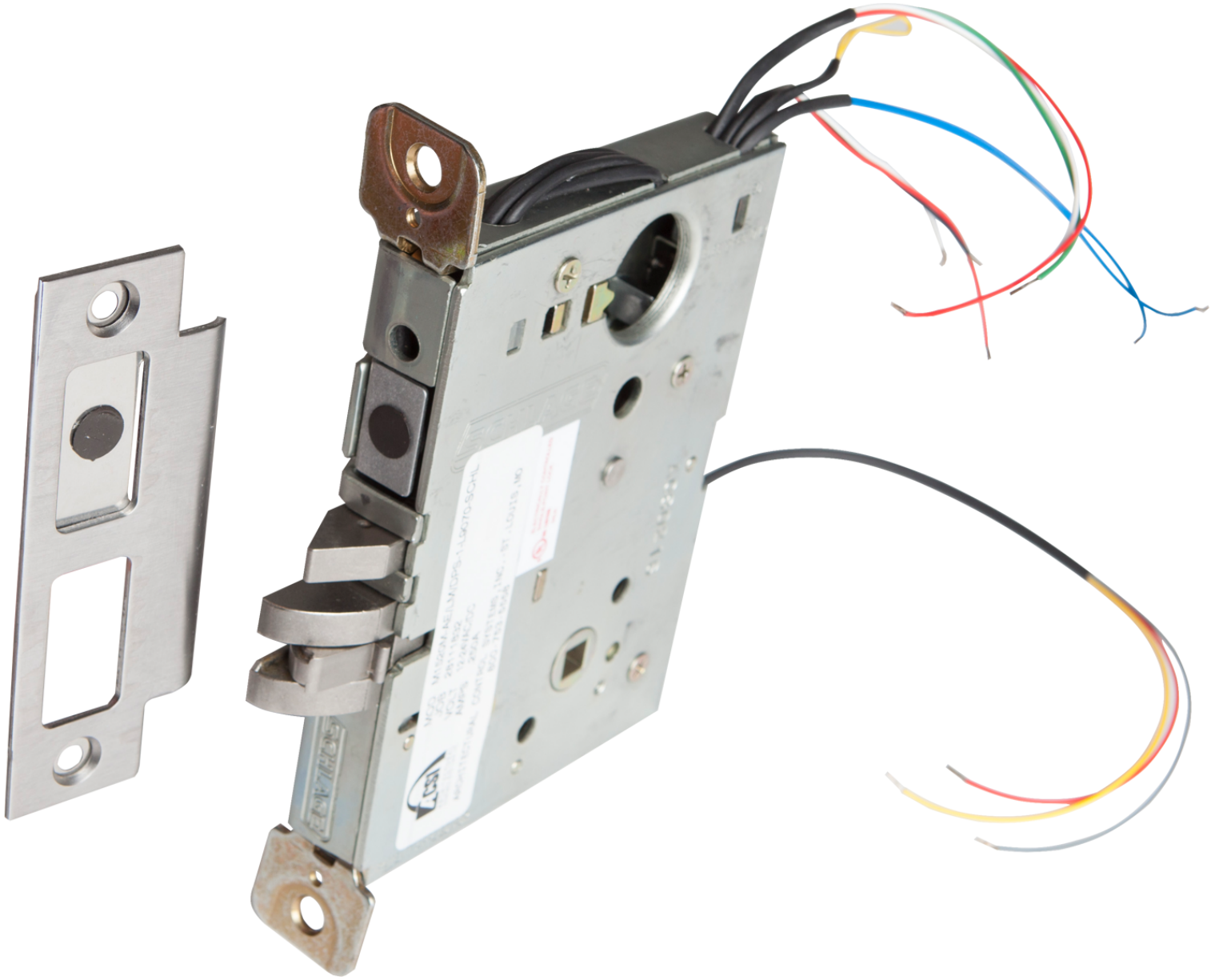





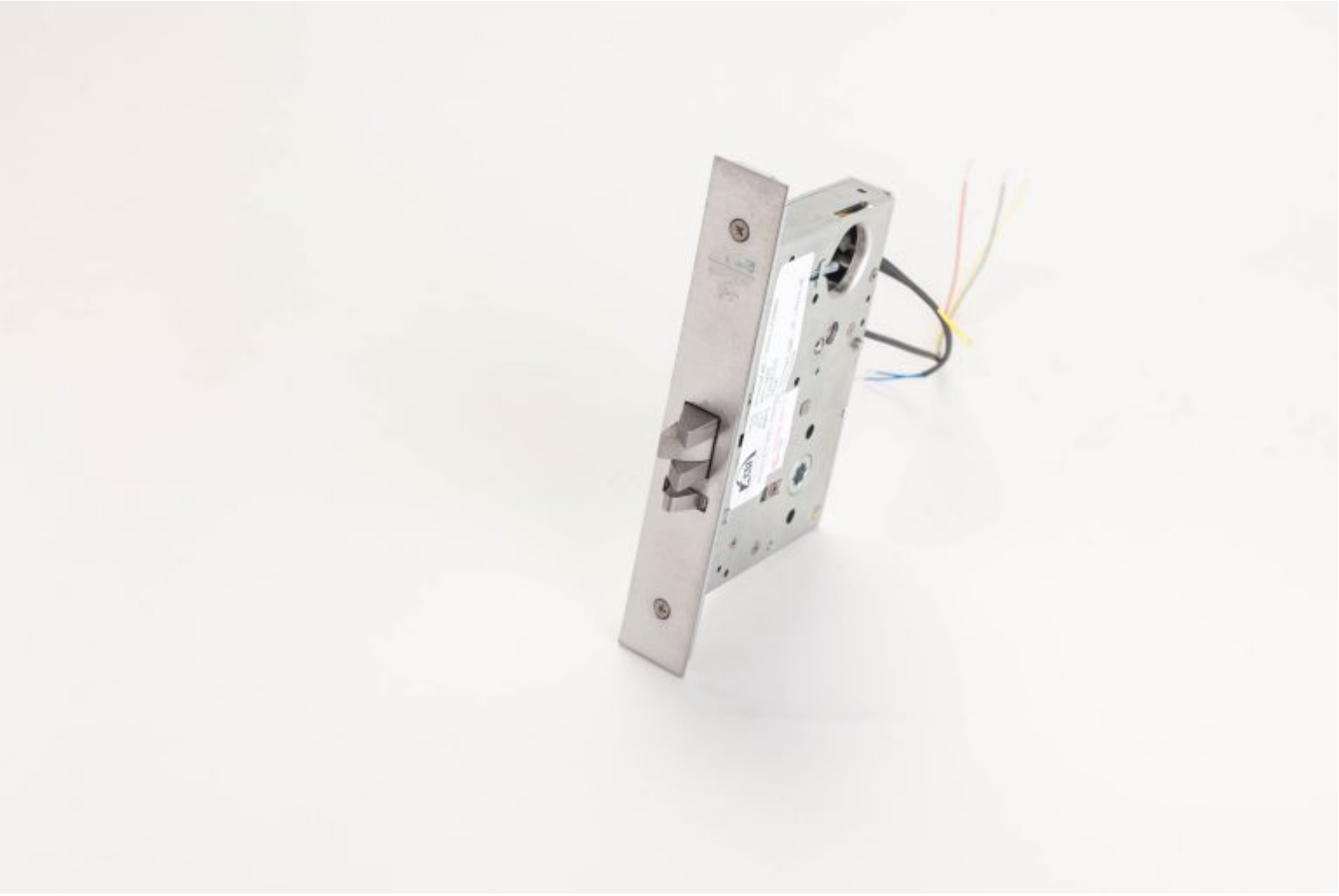

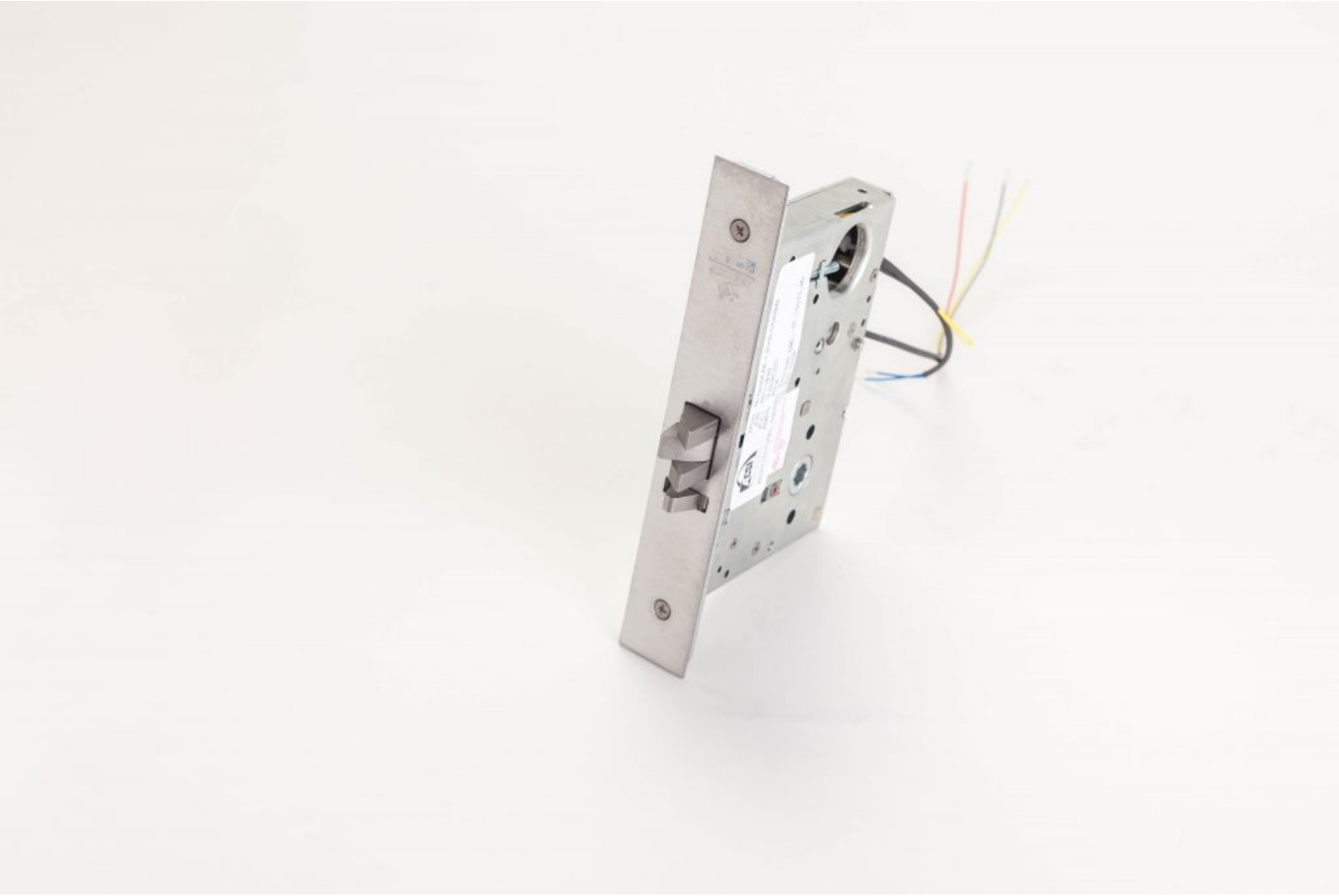

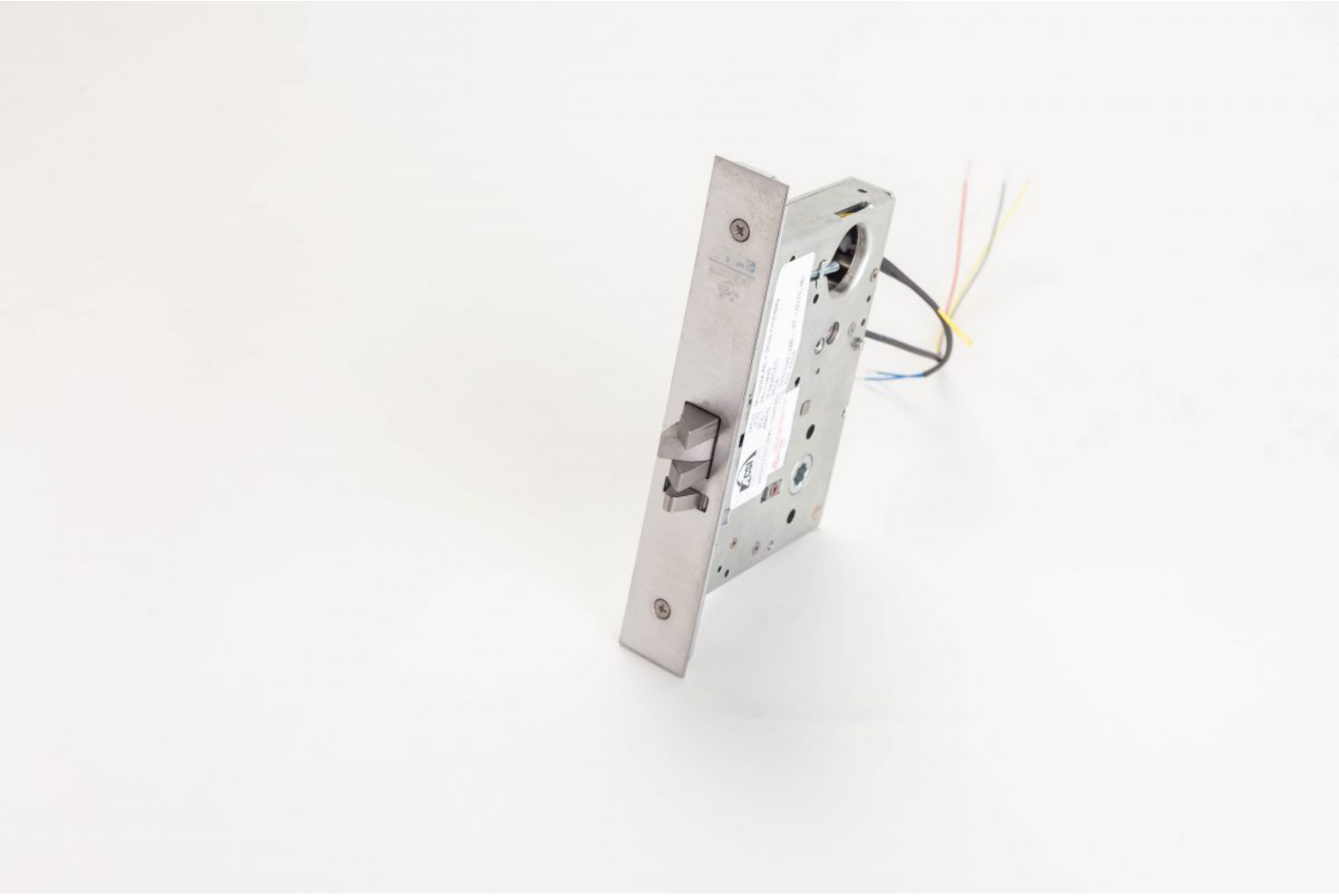

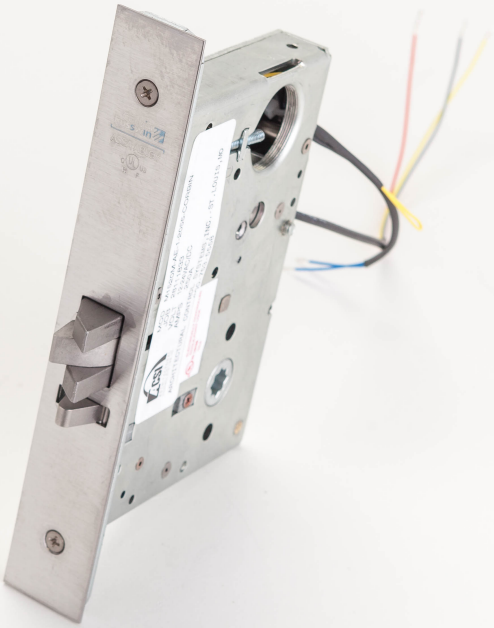





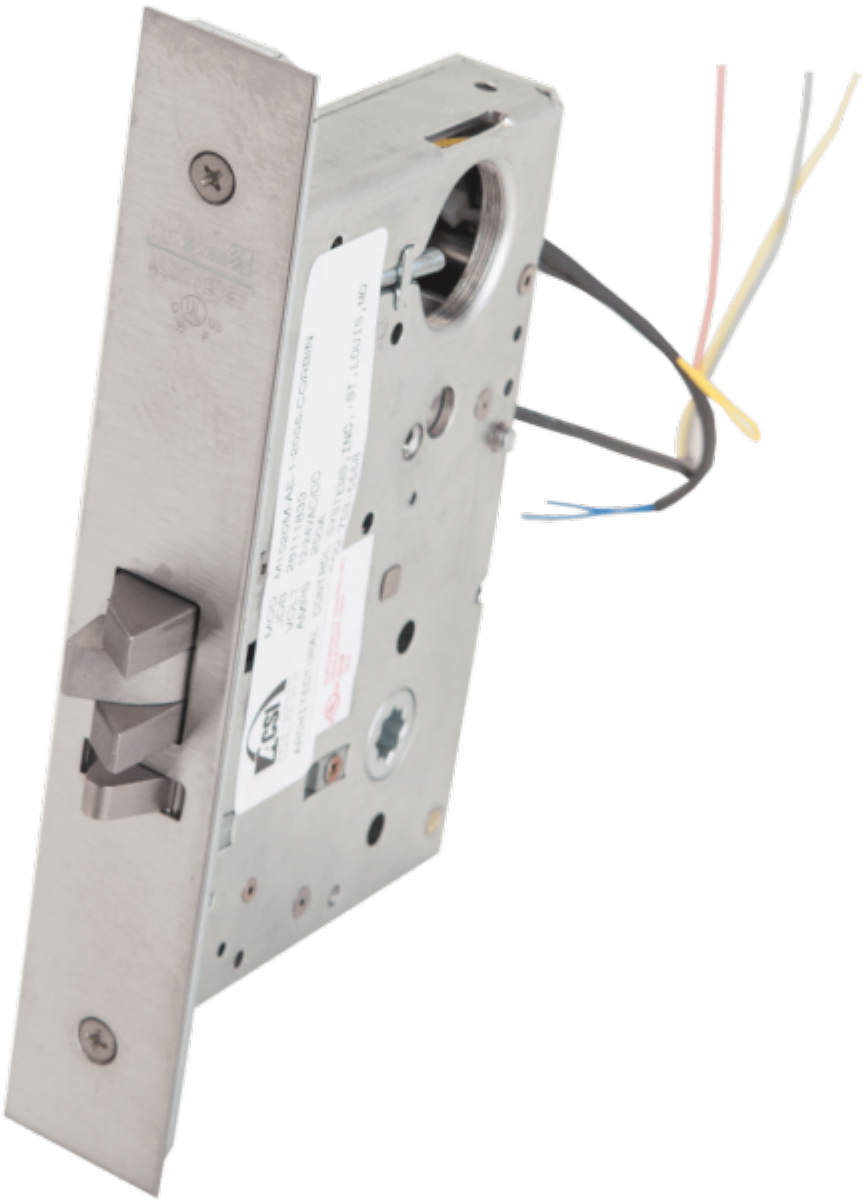

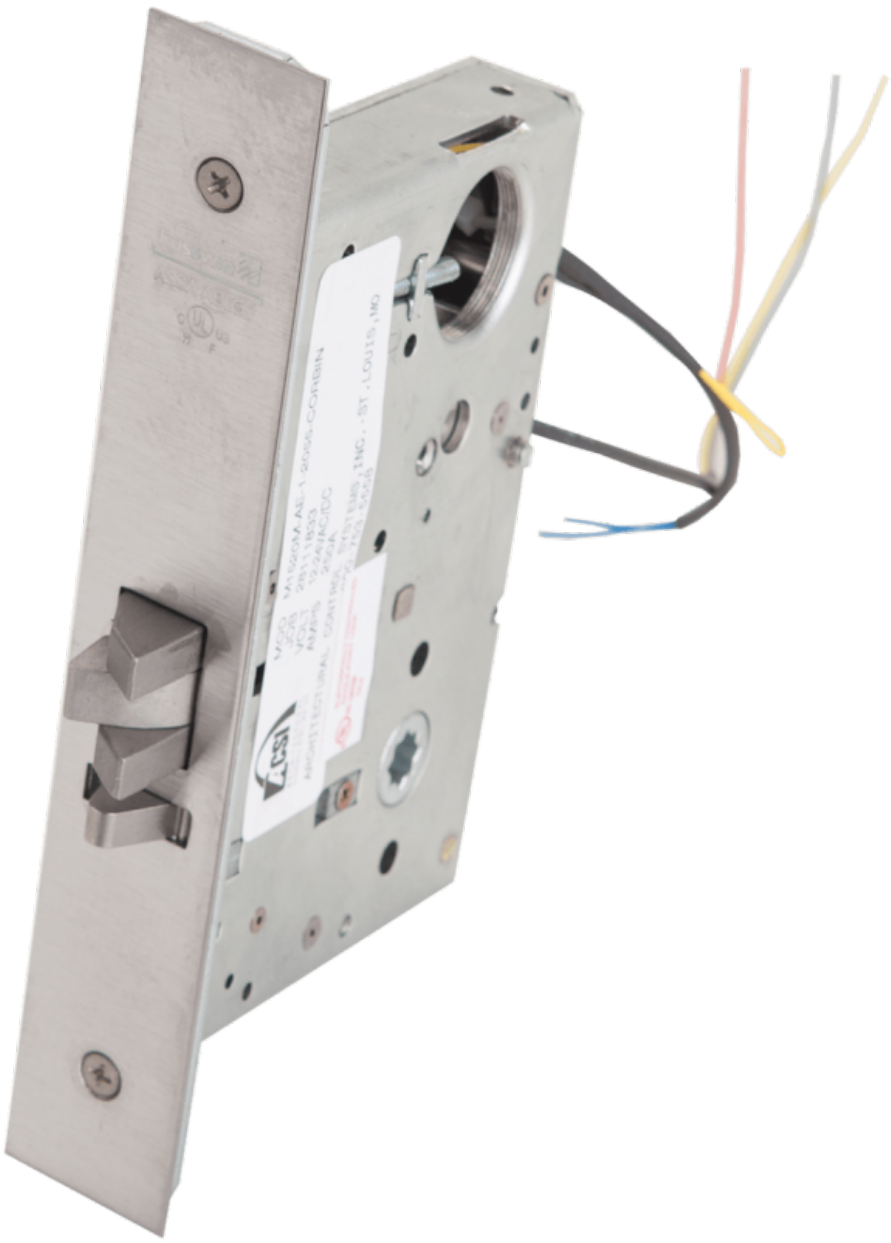

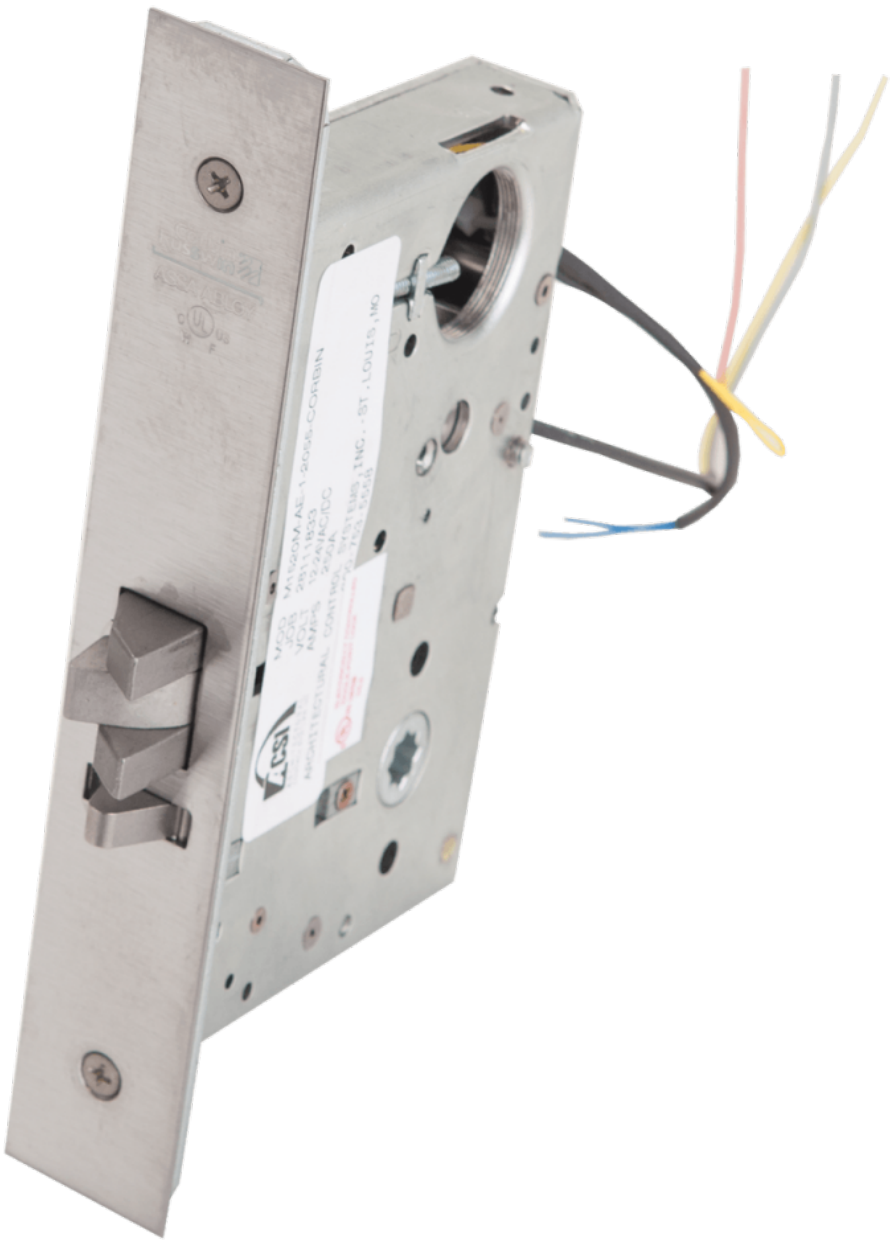

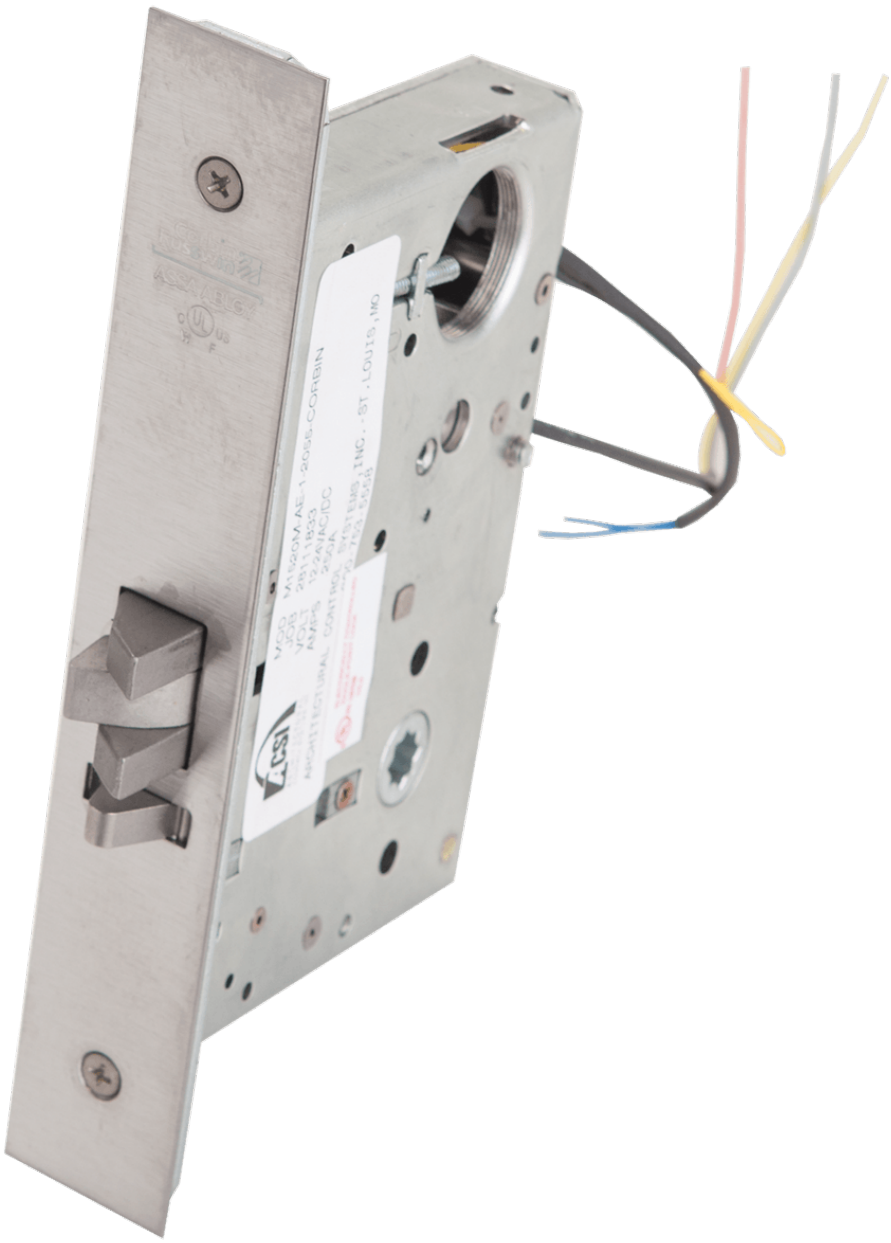
M1520M-AE-1-2055-CORBIN
ARCHITECTURAL CONTROL SYSTEMS, INC. - ST. LOUIS, MO







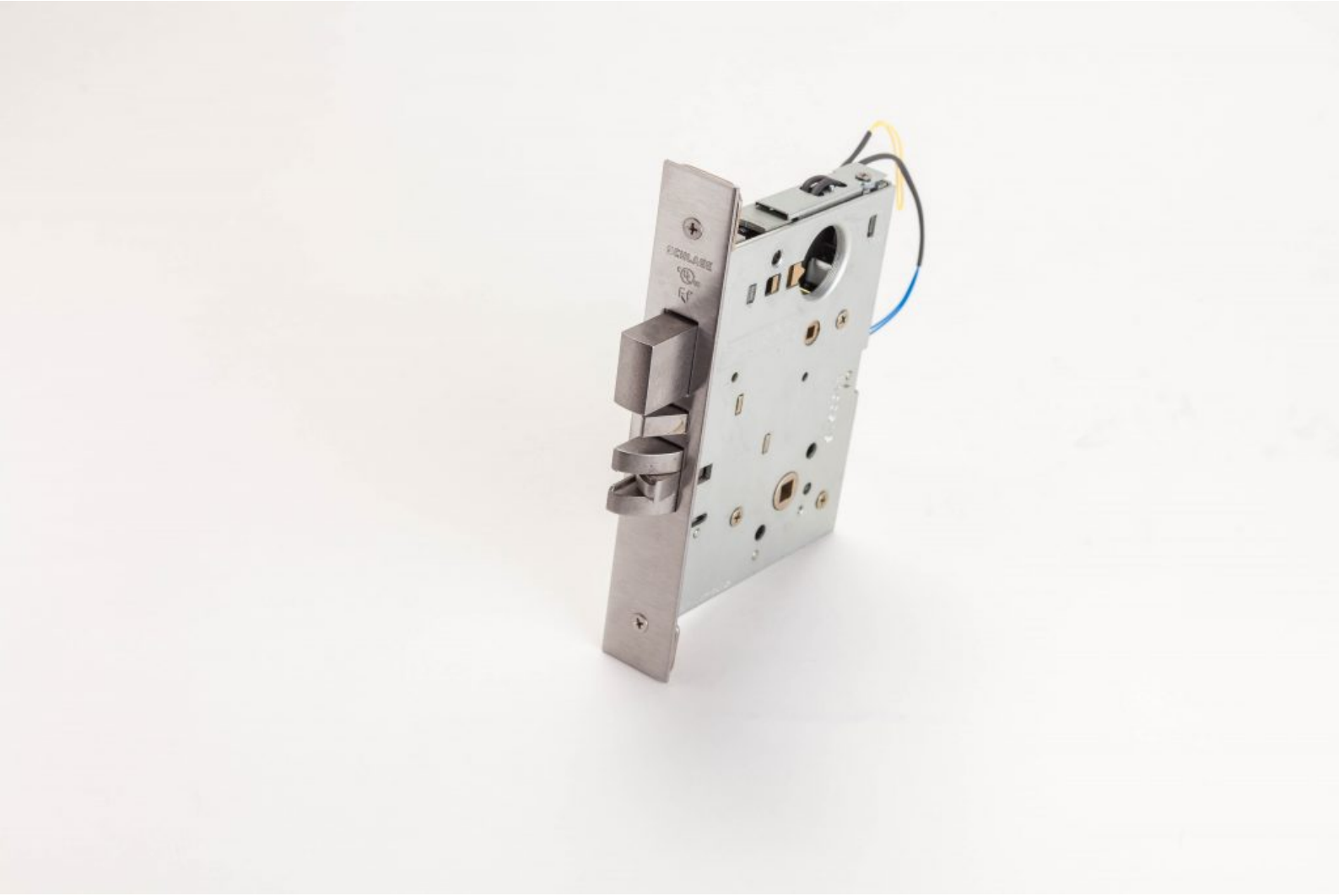

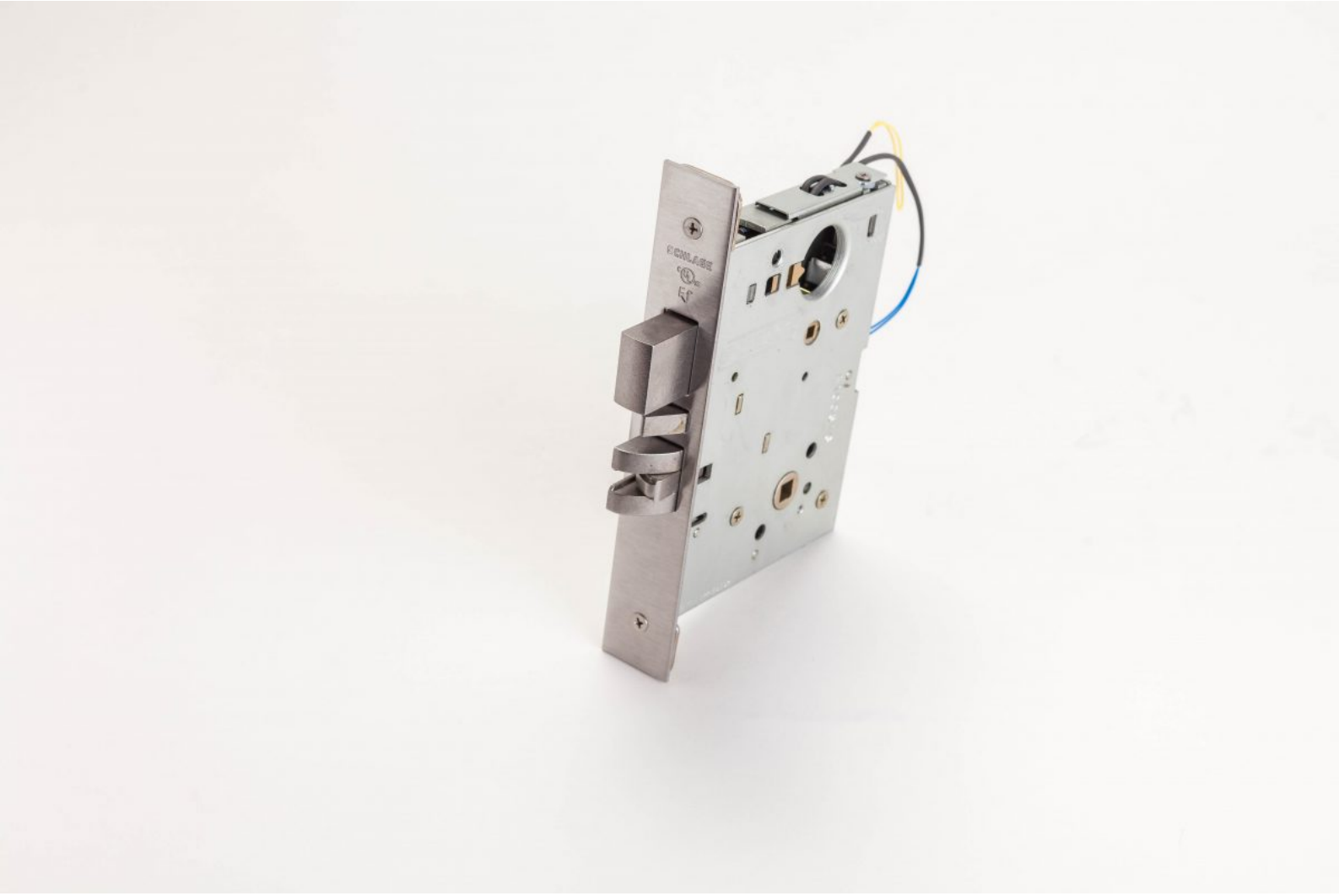
SCHLAGE

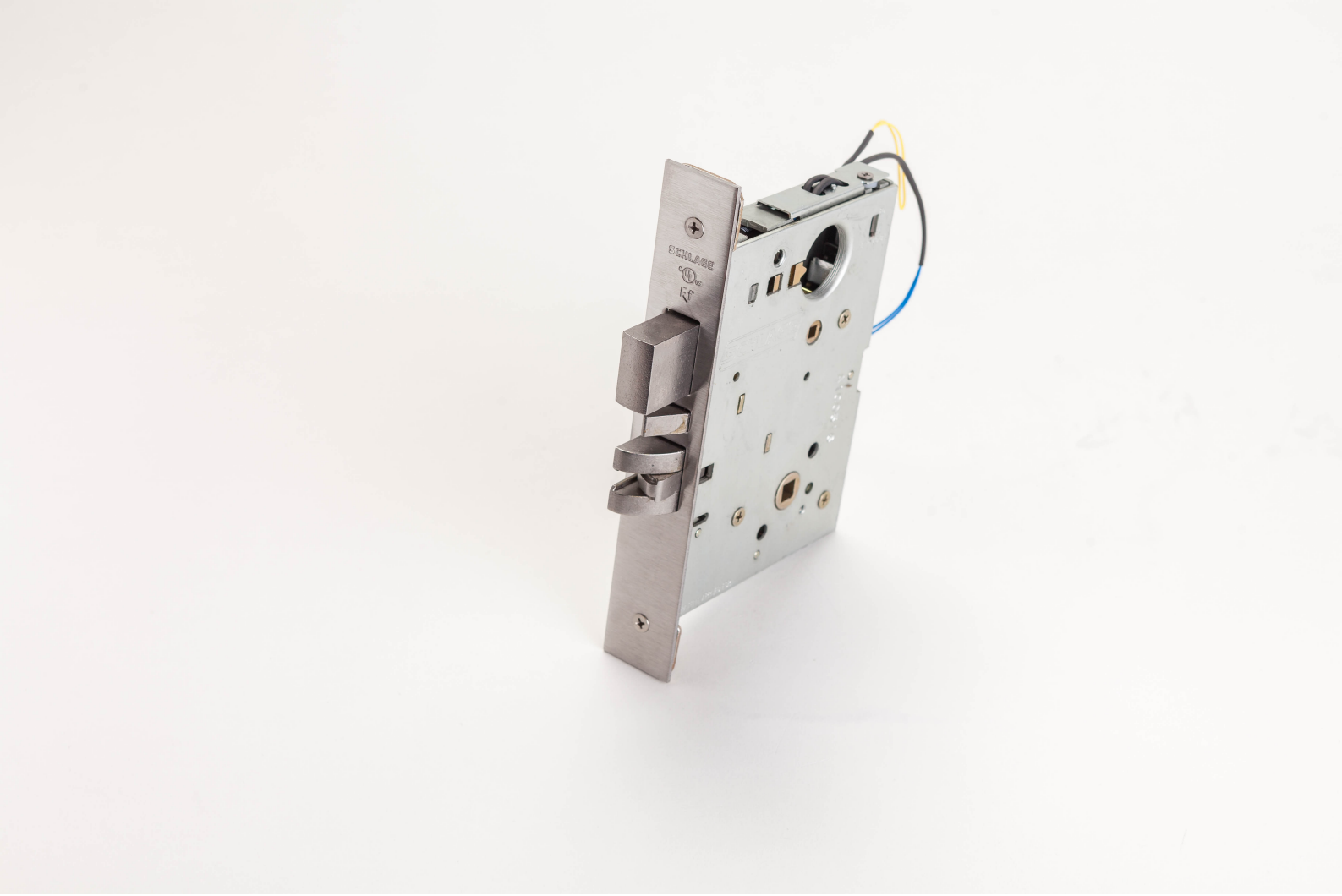
SCHLAGE





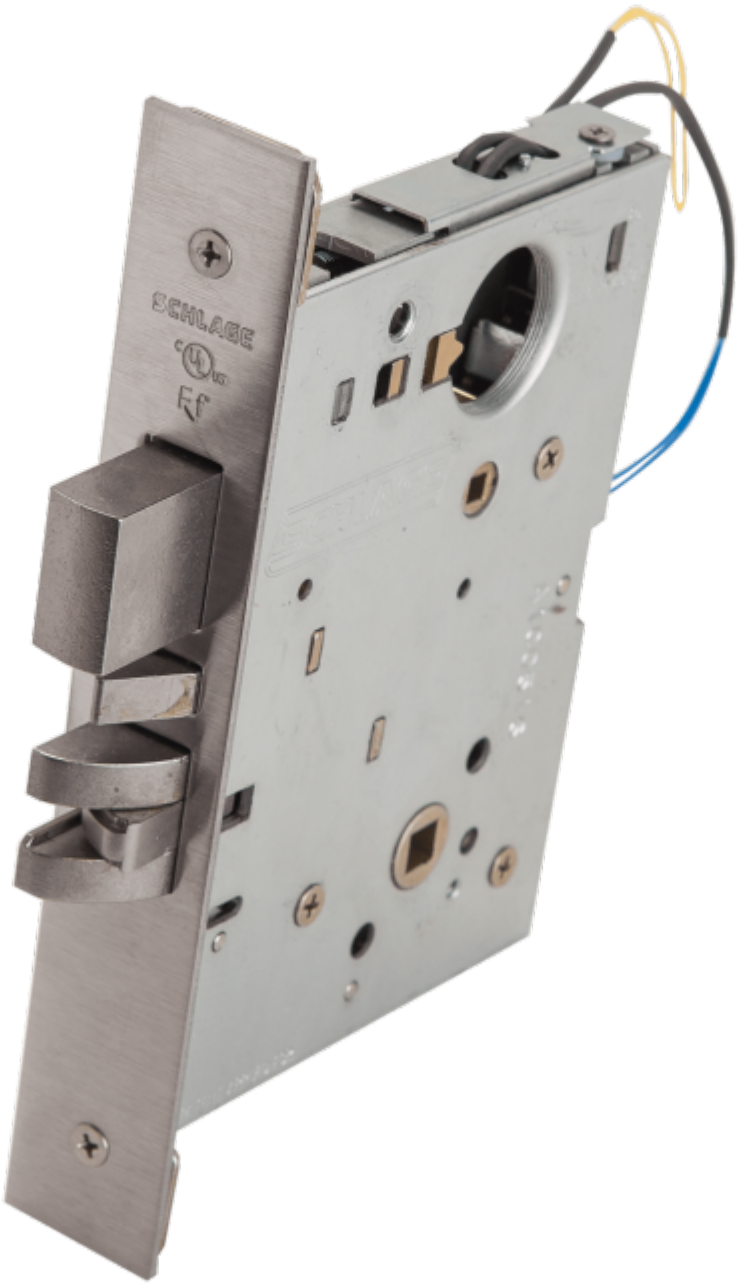
SCHLAGE

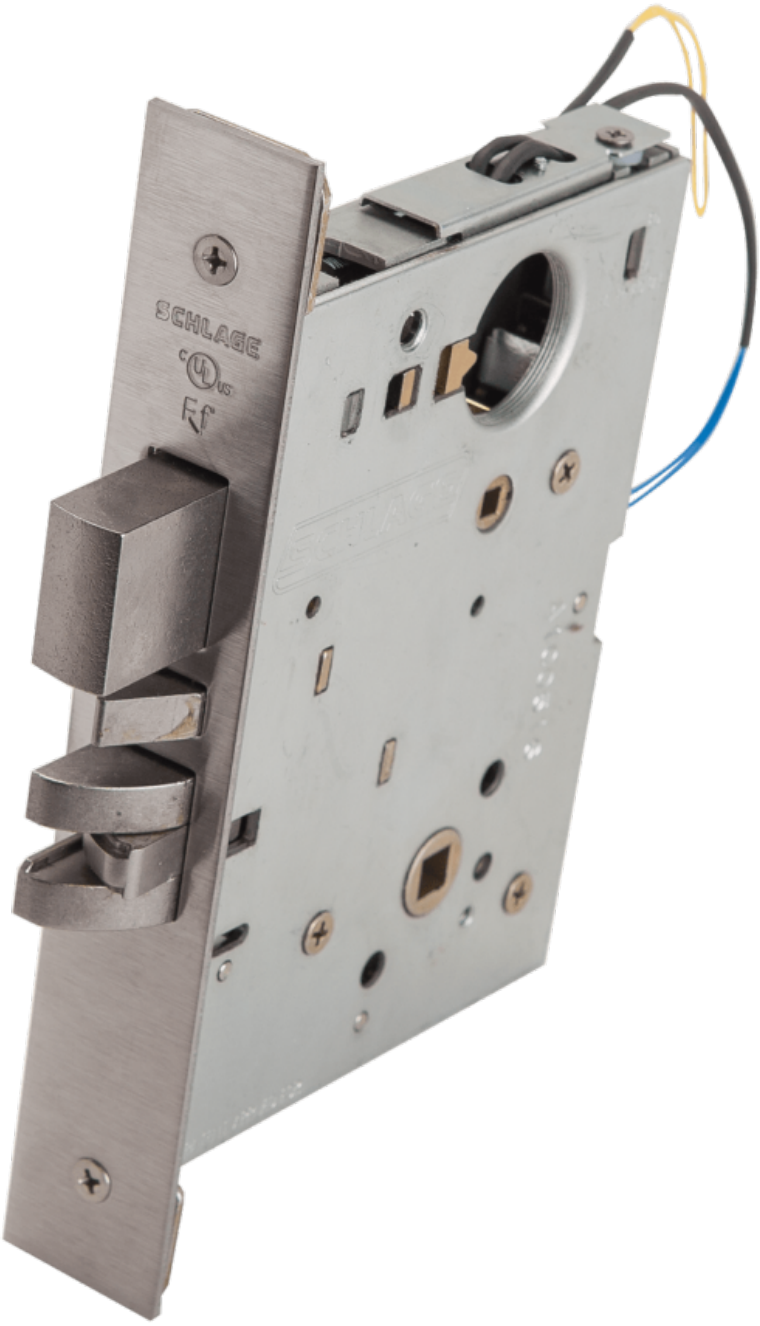
SCHLAGE

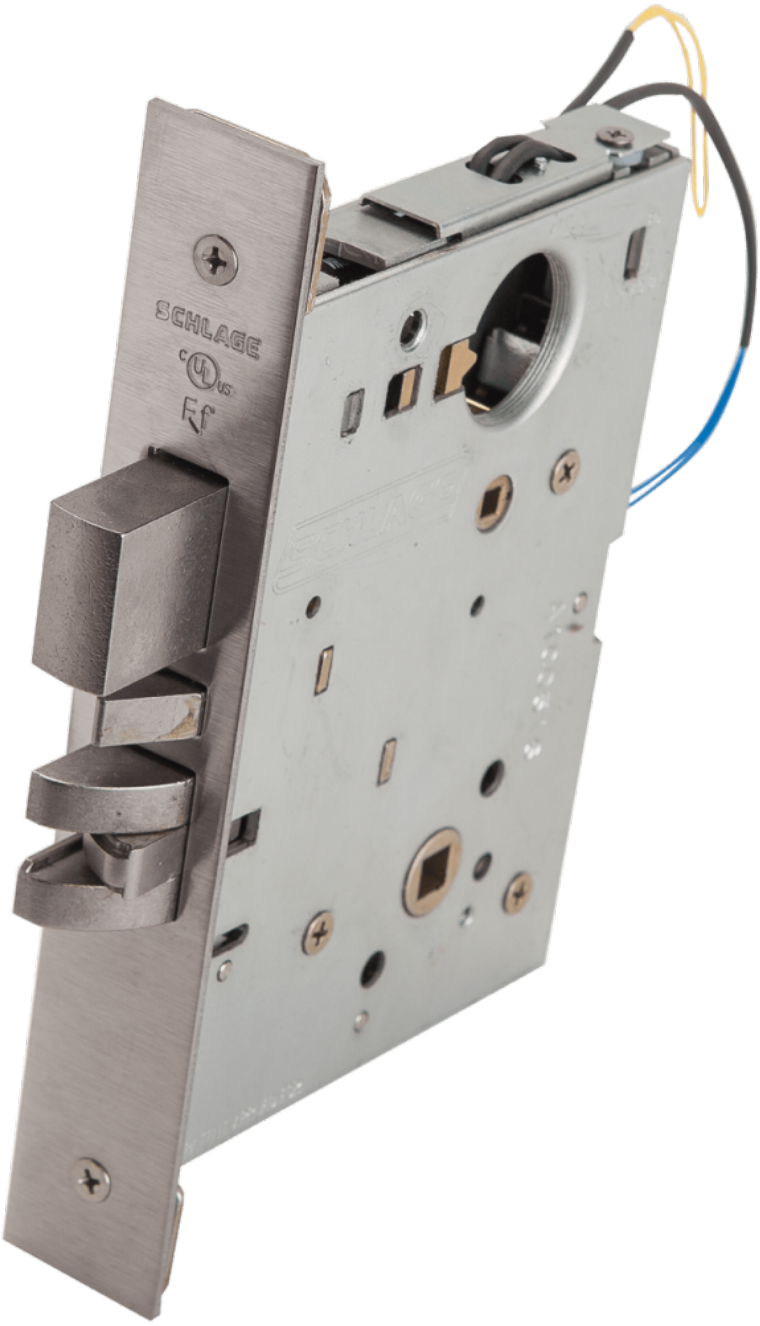
SCHLAGE





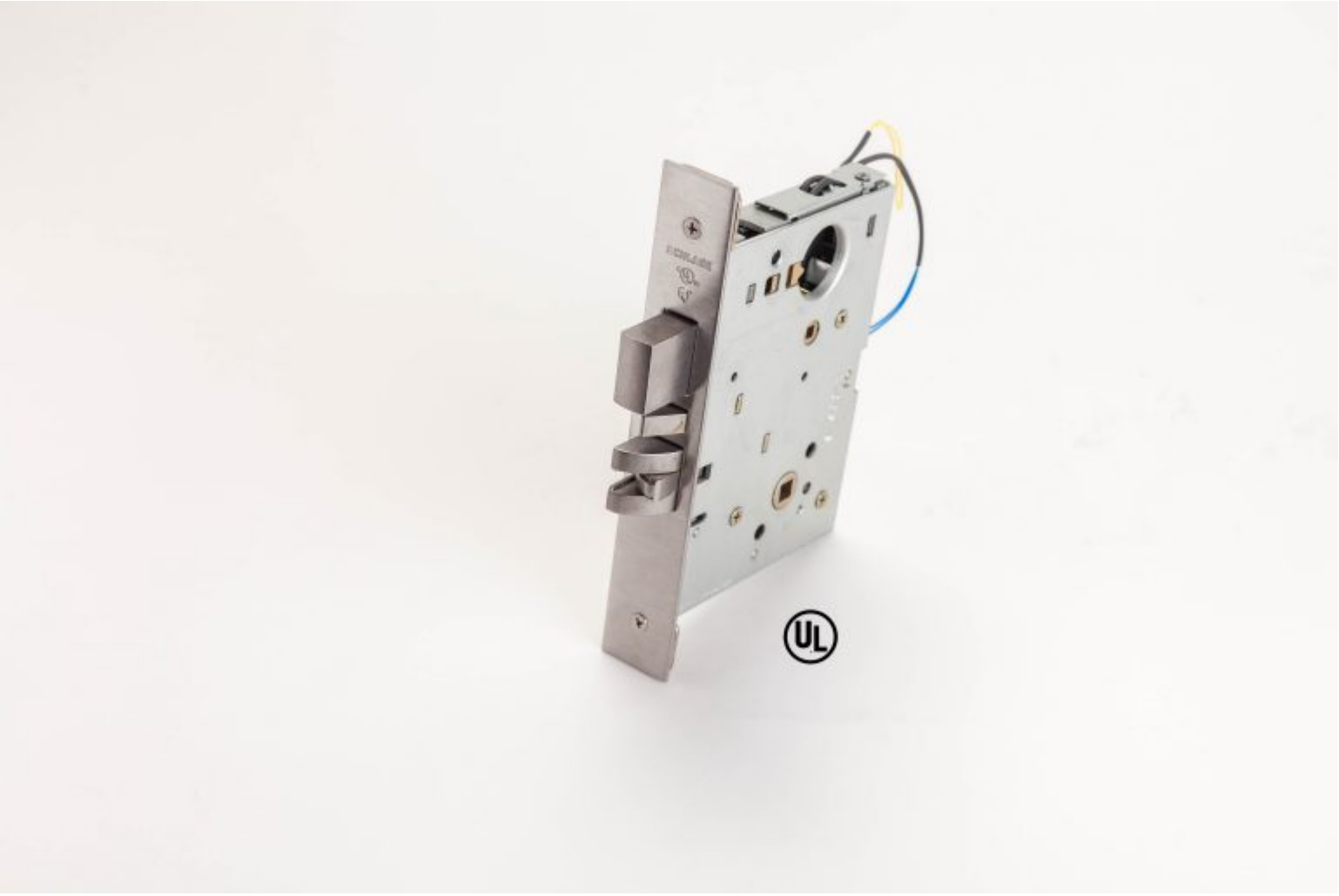

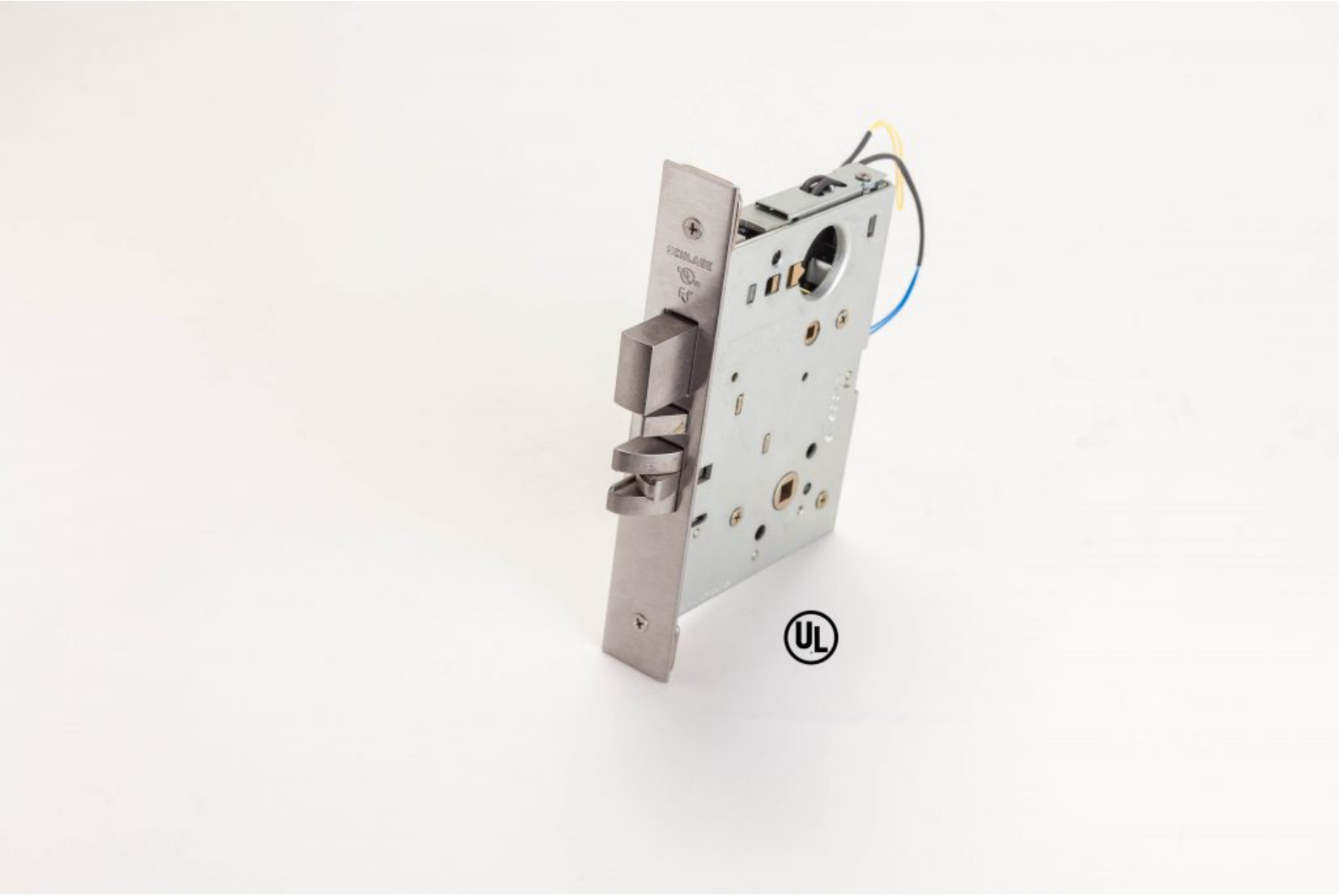

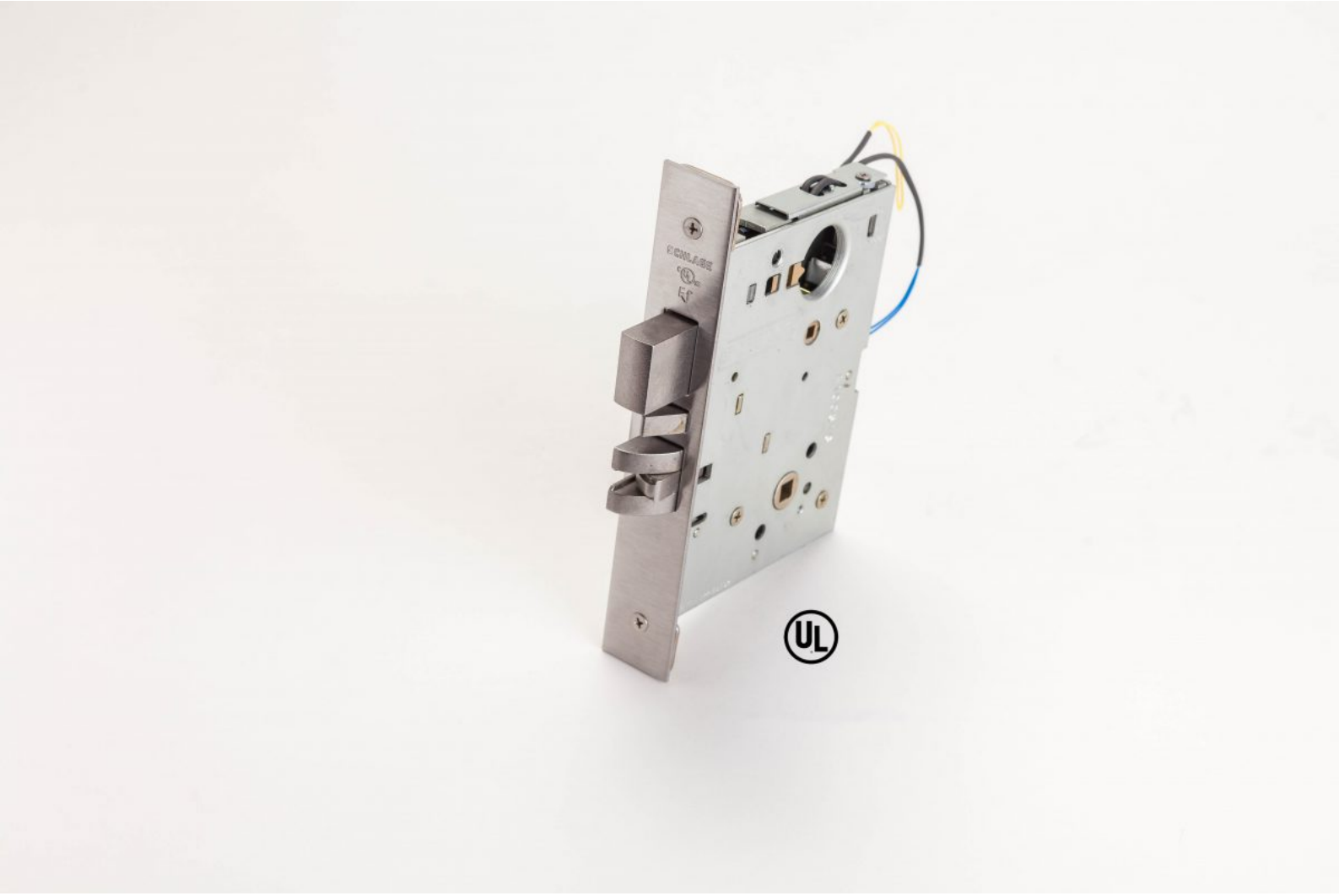
SCHLAGE

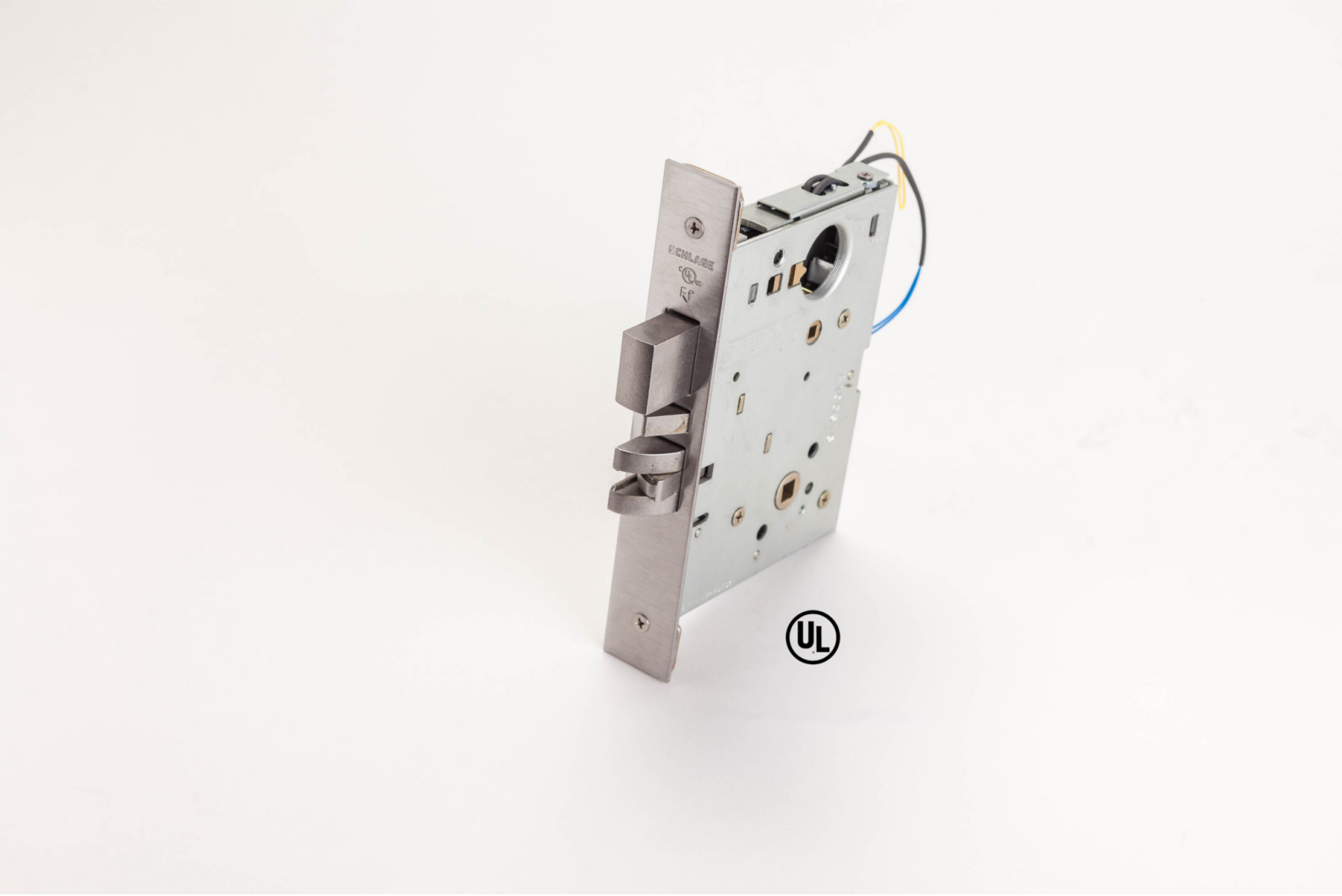
SCHLAGE


SCHLAGE





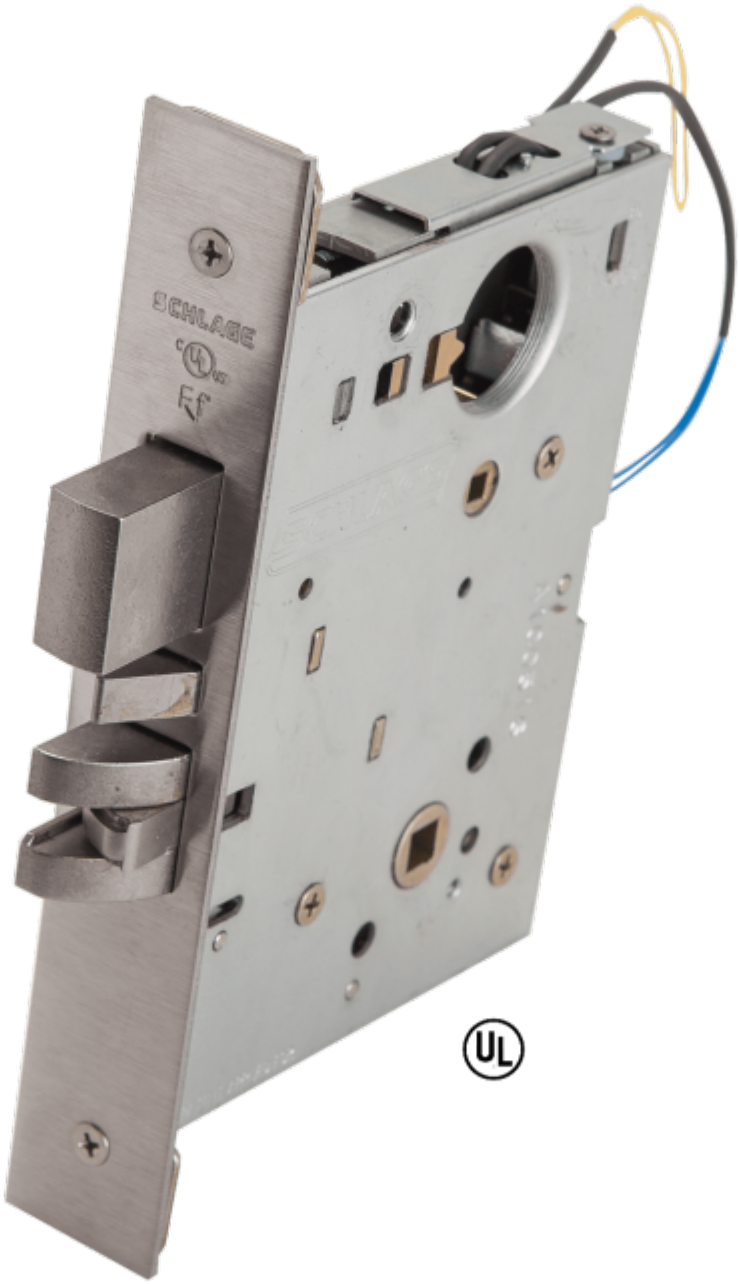
SCHLAGE

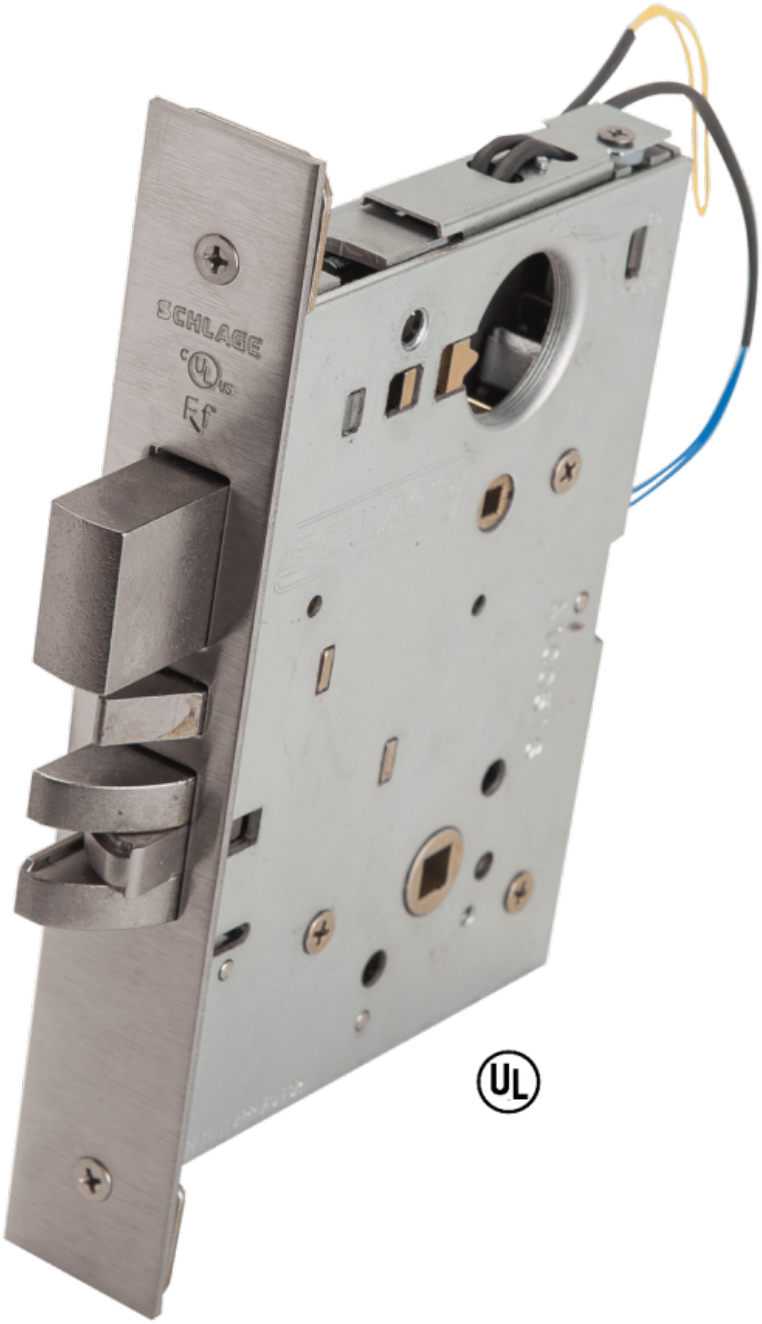
SCHLAGE

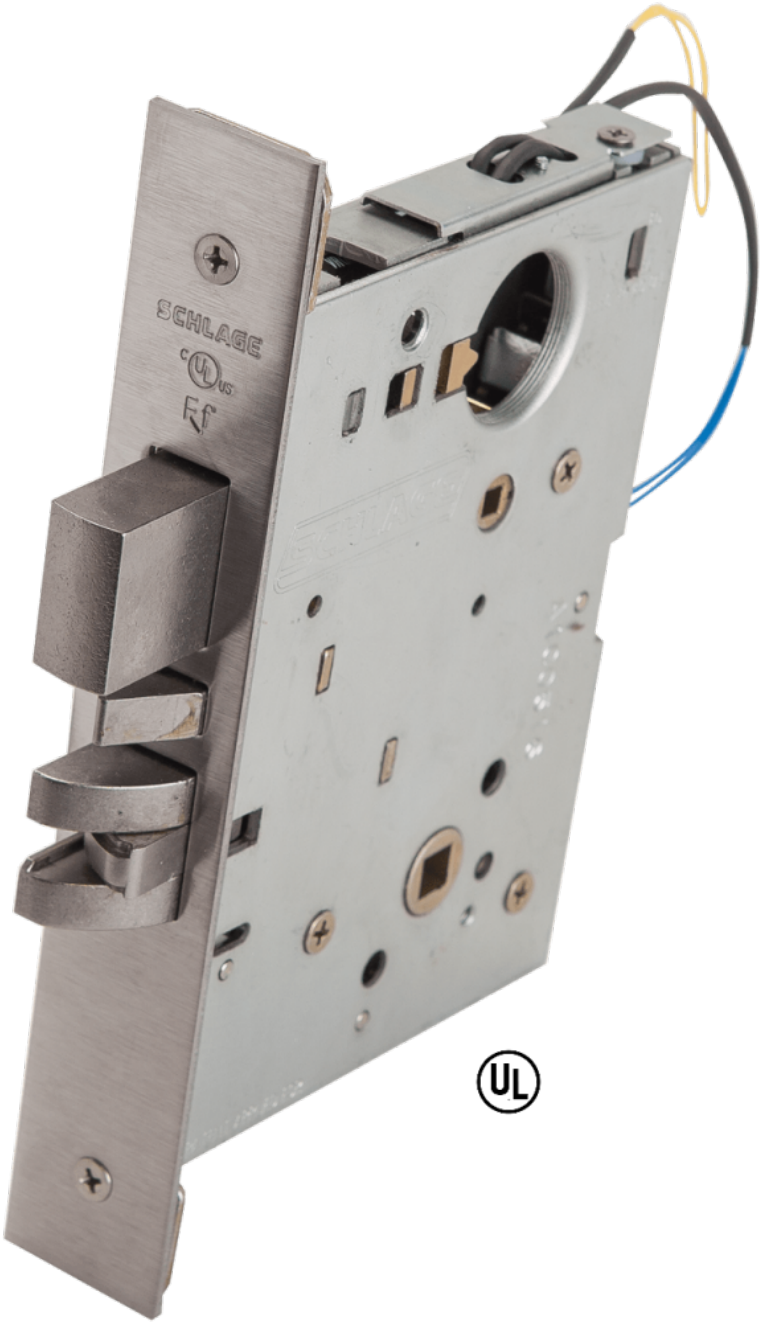
SCHLAGE

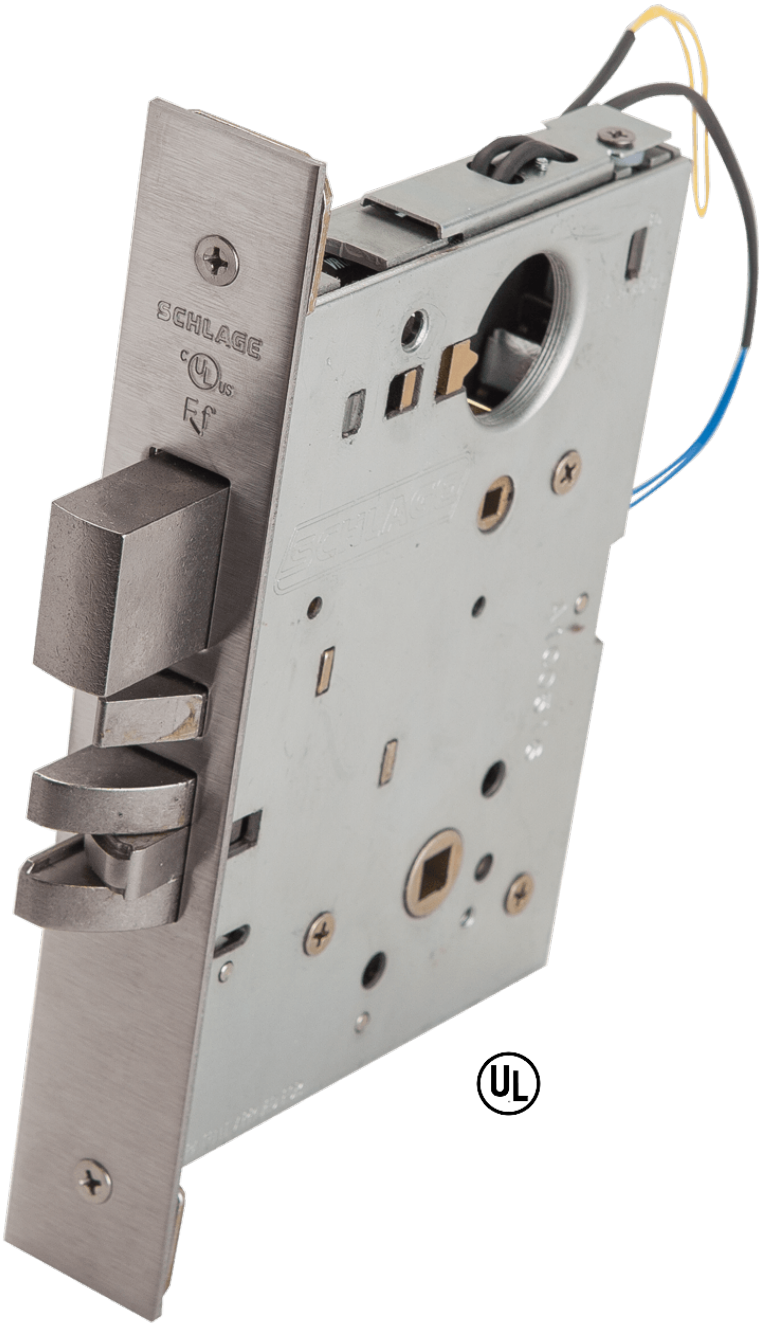
SCHLAGE






SARGENT
ASSA ABLOY


SARGENT
ASSA ABLOY
LISTED
W
F
604 H


SARGENT
ASSA ABLOY
LISTED
W
F
8G4 H


SARGENT
ASSA ABLOY
LISTED
W
F
8G4 H

























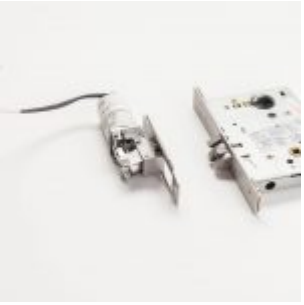





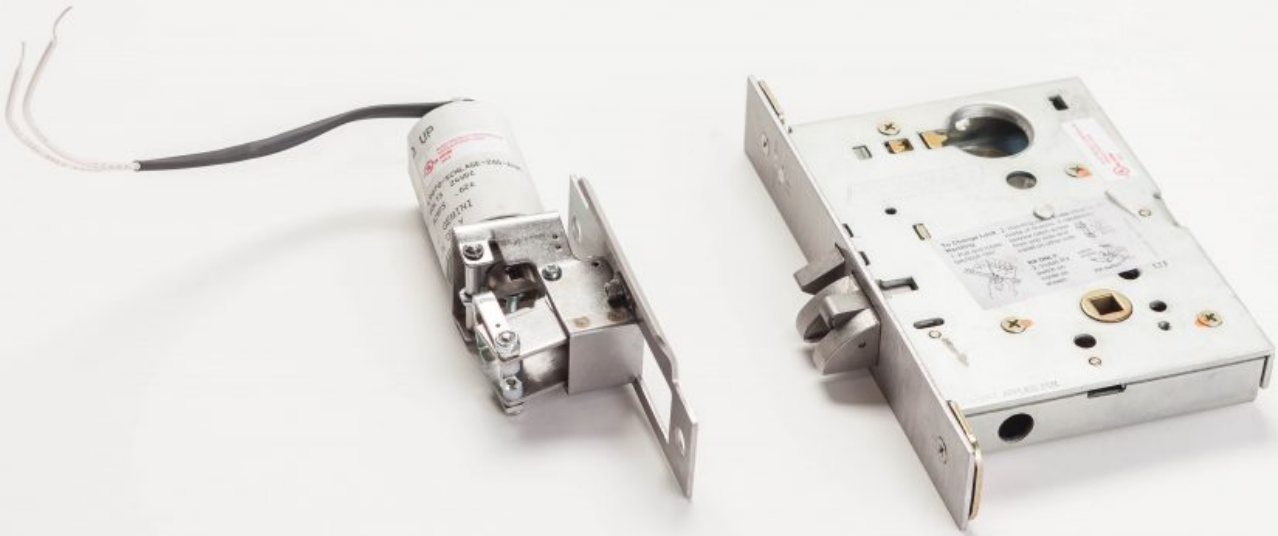

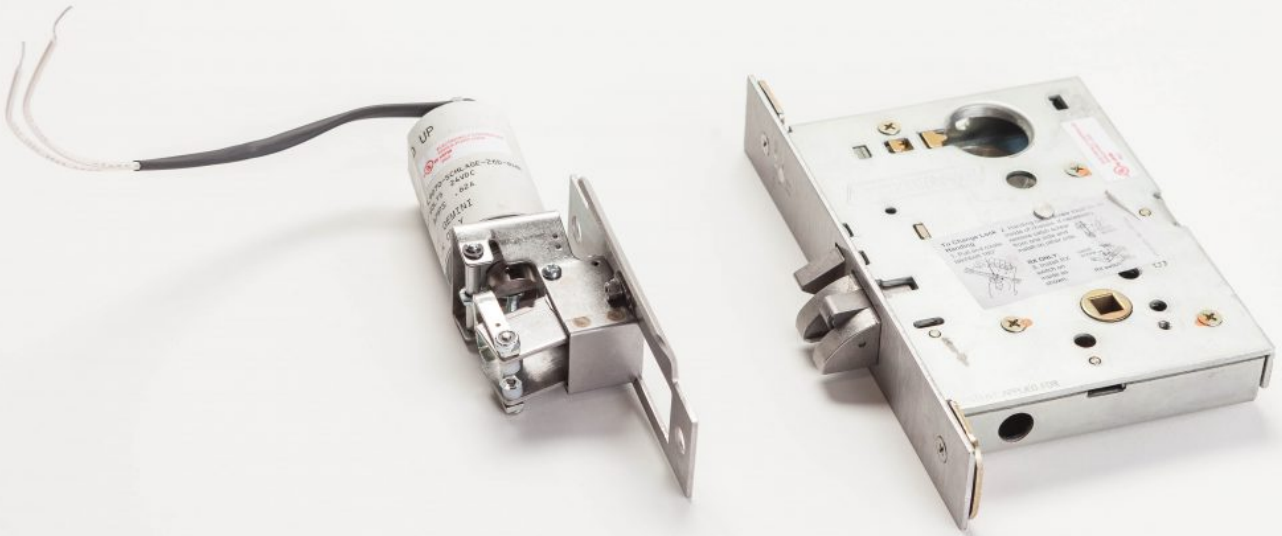

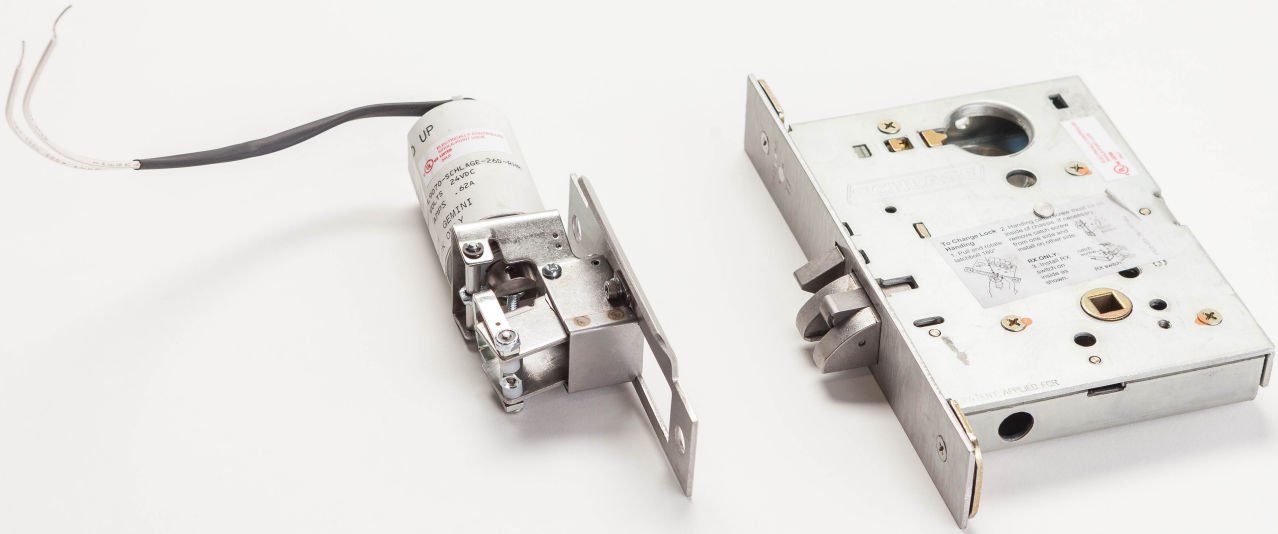
UP
GEMINI






SECURITY
LISTED


SECURITY
C UL US
LISTED
EQUIPMENT
MODEL
MFG.
DATE


SECURITY
C UL US
LISTED
EQUIPMENT
52X3
MODEL
MFG.
DATE


SECURITY
C UL US
LISTED
EQUIPMENT
52X3
MODEL
MFG.
DATE






SECURITY
C UL US
LISTED
EQUIPMENT
MODEL
MFG. DATE
COMMERCIAL FLEXIBLE
CONNECTOR


SECURITY
C UL US
LISTED
EQUIPMENT
52X3
MODEL 1100-10
MFG.
DATE 7/17/14
ARCHITECTURAL
CONTROL SYSTEMS
INCORPORATED
RESIDENTIAL AND
COMMERCIAL FLEXIBLE
CONNECTOR


SECURITY
C UL US
LISTED
EQUIPMENT
52X3
MODEL 1100-10
MFG. DATE 7/17 Kp
ANCHOR CULTURAL CONTROL SYSTEMS
INCORPORATED
RESIDENTIAL AND COMMERCIAL FLEXIBLE CONNECTOR


SECURITY
c UL us
LISTED
EQUIPMENT
52X3
MODEL 1100-10
MFG. DATE 7/17
ARCHITECTURAL CONTROL SYSTEMS INCORPORATED
RESIDENTIAL AND COMMERCIAL FLEXIBLE CONNECTOR






SECURITY
C UL US
LISTED
EQUIPMENT
MODEL
MFG. DATE
COMMERCIAL FLEXIBLE
CONNECTOR


SECURITY
C UL US
LISTED
EQUIPMENT
52X3
MODEL 1100-10
MFG.
DATE 7/17/14
ARCHITECTURAL
CONTROL SYSTEMS
INCORPORATED
RESIDENTIAL AND
COMMERCIAL FLEXIBLE
CONNECTOR


SECURITY
C UL US
LISTED
EQUIPMENT
52X3
MODEL 1100-10
MFG. DATE 7/17 Kp
ANCHOR CULTURAL CONTROL SYSTEMS
INCORPORATED
RESIDENTIAL AND COMMERCIAL FLEXIBLE CONNECTOR


SECURITY
c UL us
LISTED
EQUIPMENT
52X3
MODEL 1100-10
MFG. DATE 7/17
ARCHITECTURAL CONTROL SYSTEMS INCORPORATED
RESIDENTIAL AND COMMERCIAL FLEXIBLE CONNECTOR






SECURITY
C UL US
LISTED
EQUIPMENT
22X3
MODEL 180-12
MFG. DATE 12-16


SECURITY
LISTED
EQUIPMENT
5X3
MODEL 1100-12
MFG. DATE 12-16
RESIDENTIAL AND
COMMERCIAL FLEXIBLE
CONNECTOR


SECURITY
C UL US
LISTED
EQUIPMENT
52X3
MODEL 1100-12
MFG. DATE 12-16
RESIDENTIAL AND
COMMERCIAL FLEXIBLE
CONNECTOR


SECURITY
c UL us
LISTED
EQUIPMENT
52X3
MODEL 1100-12
MFG. DATE 12-16
ARCHITECTURAL CONTROL SYSTEMS INCORPORATED
RESIDENTIAL AND COMMERCIAL FLEXIBLE CONNECTOR

ACSI
ARCHITECTURAL
CONTROL SYSTEMS INC.

ACSI

ARCHITECTURAL
CONTROL SYSTEMS INC.


ACSI
ARCHITECTURAL
CONTROL SYSTEMS INC.



ARCHITECTURAL
CONTROL SYSTEMS INC.



ARCHITECTURAL
CONTROL SYSTEMS INC.

ACSI

ARCHITECTURAL
CONTROL SYSTEMS INC.

ELECTRIC CYLINDRICAL LOCK TEMPLATE
DOOR PREPARATION

1500 ELECTRIC MONITOR
1510/1520 ELECTRIC LOCKING/UNLOCKING

Notes:

1. This door preparation is in addition to the door preparation shown on the manufacturer's mechanical cylindrical lock template.
2. The door manufacturer to provide the door with adequate construction and reinforcement for proper support and installation of the door hardware.
3. The door manufacturer to provide a ∅3/8" raceway through the door between the cylindrical lock and the low voltage power transfer for wire routing.

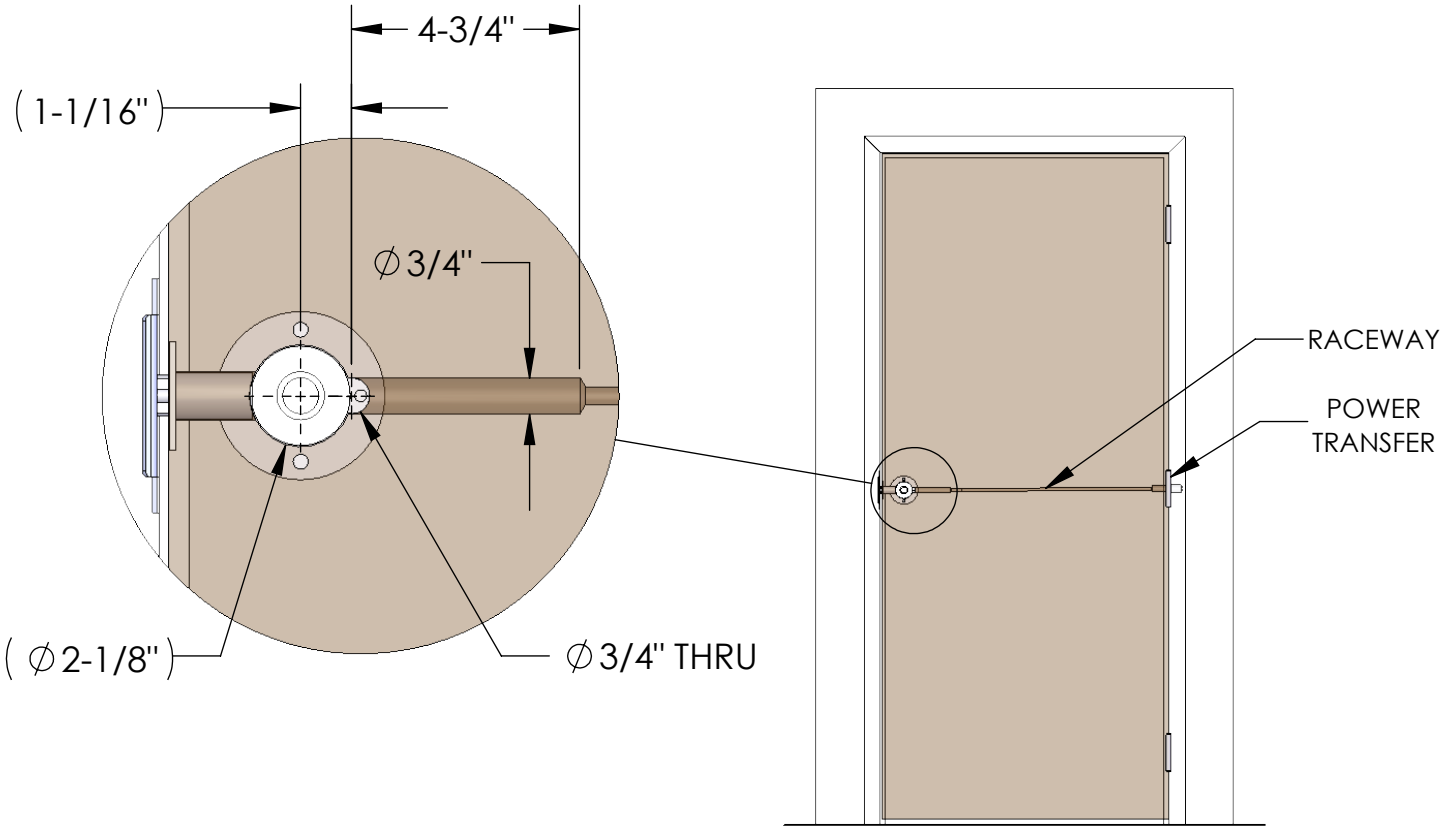



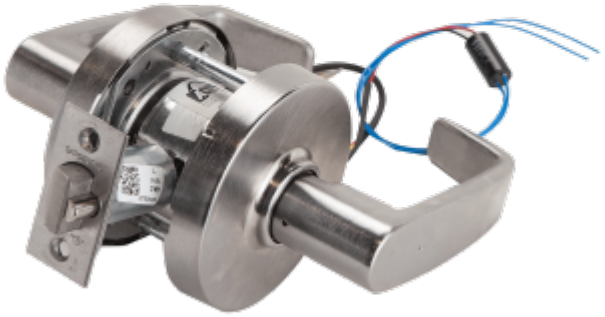

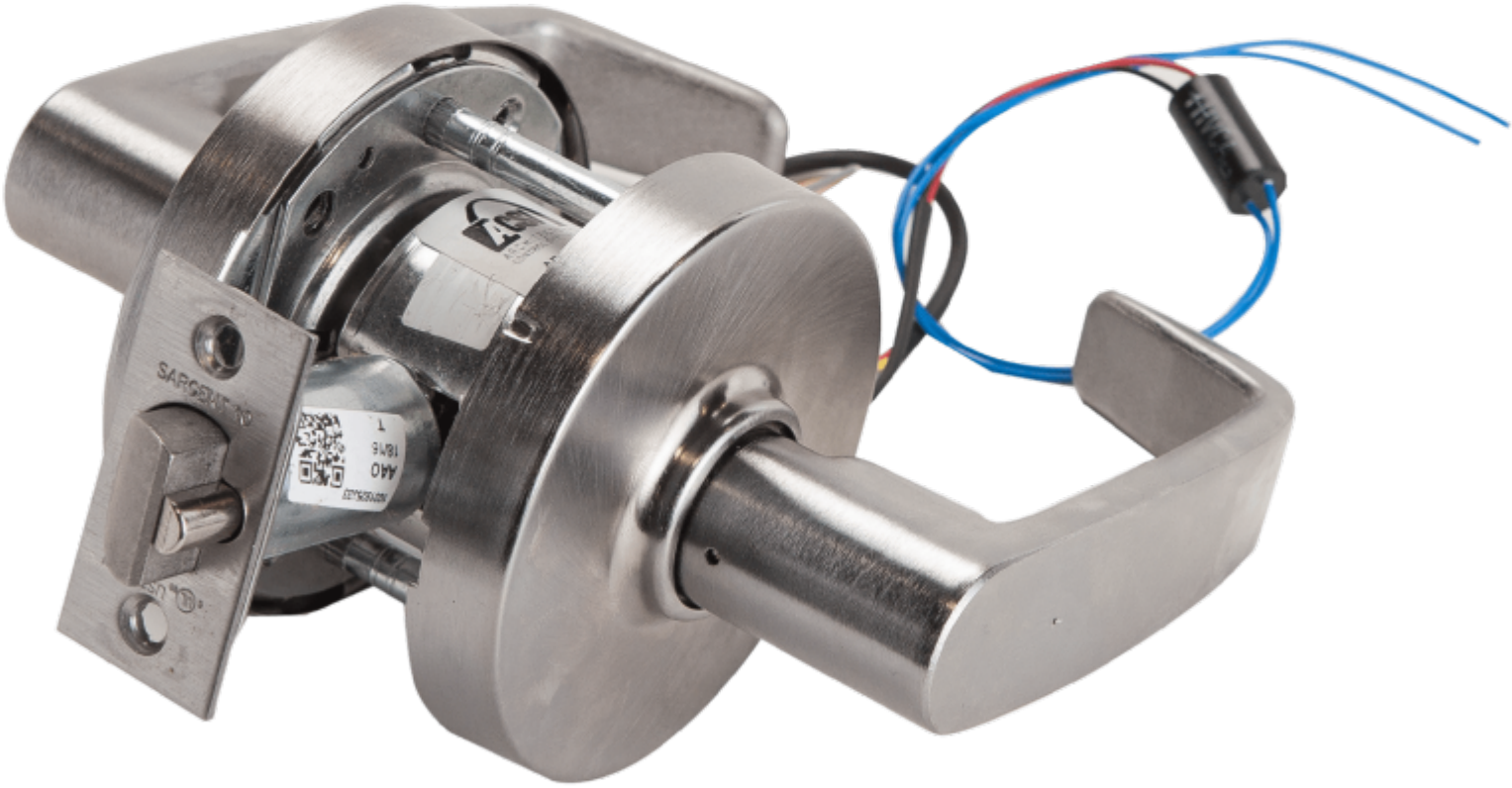
SARGENT
44D
18M5
T

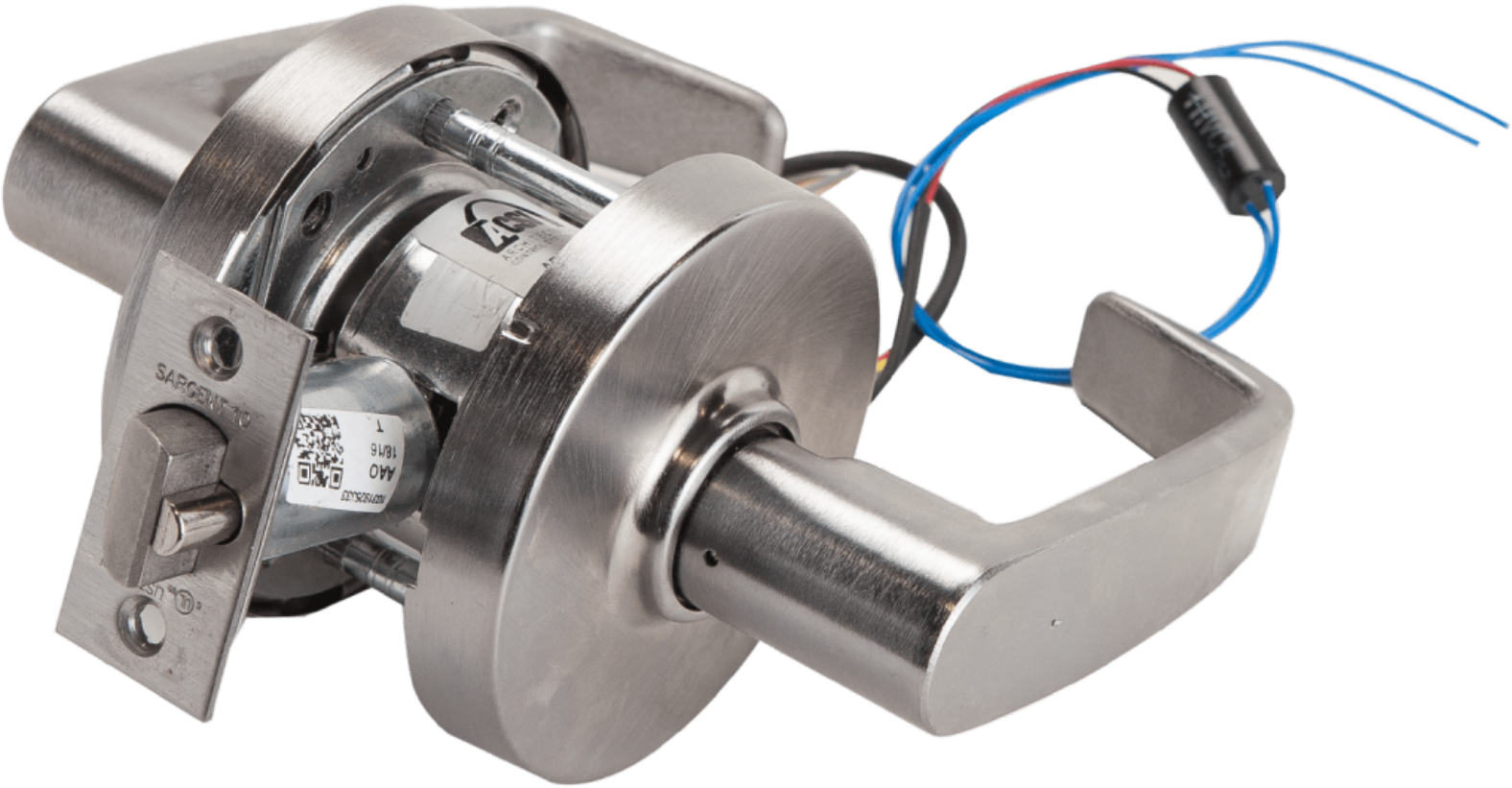
SARGENT 10
4A0
18/16
T

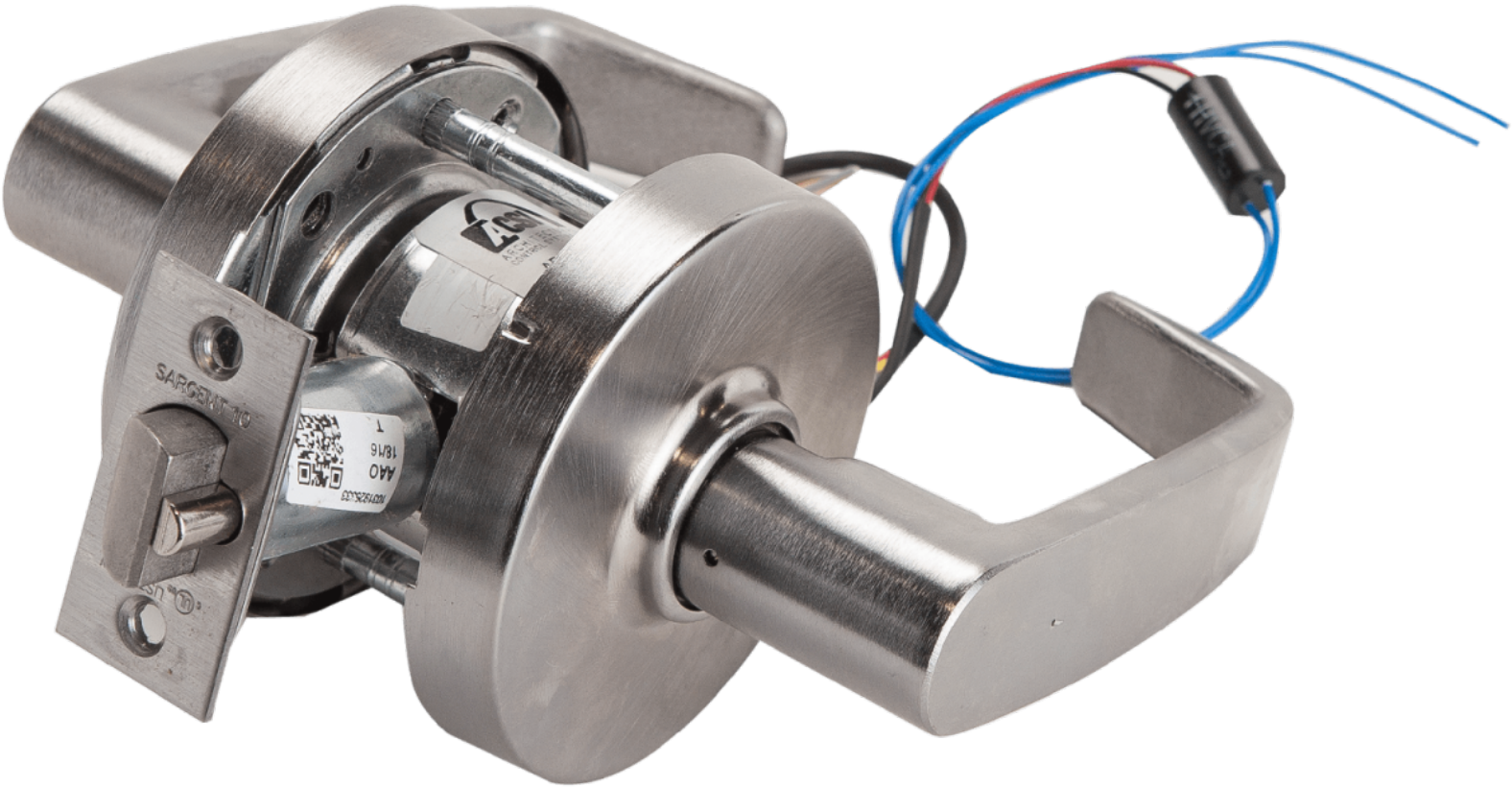
SARGENT

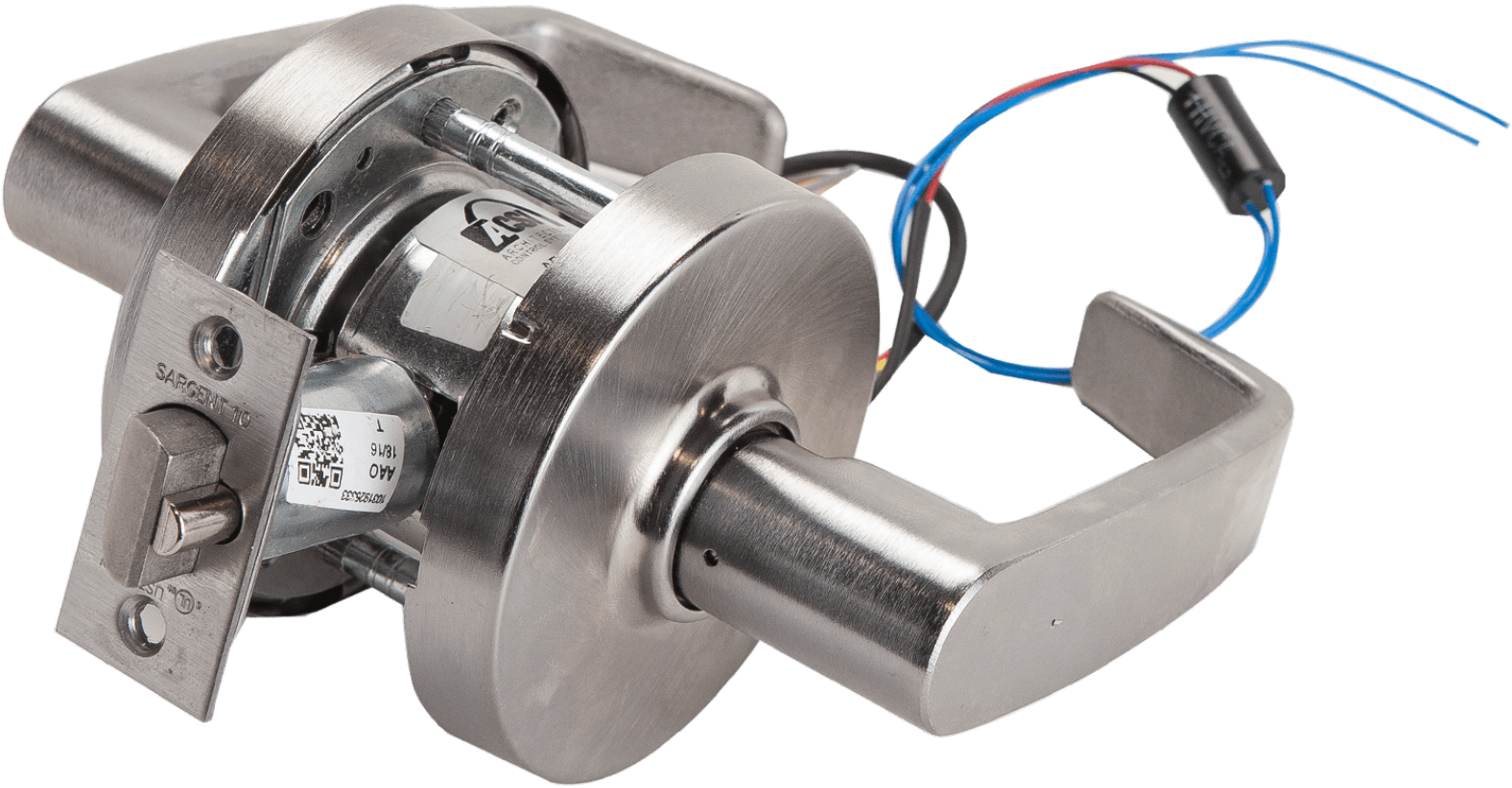
SARGENT

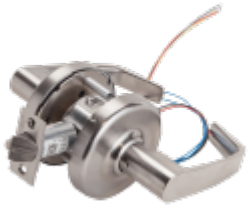

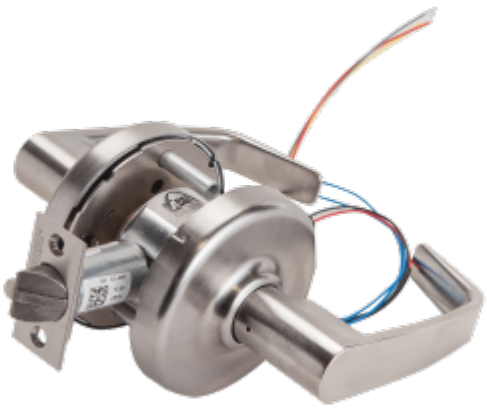

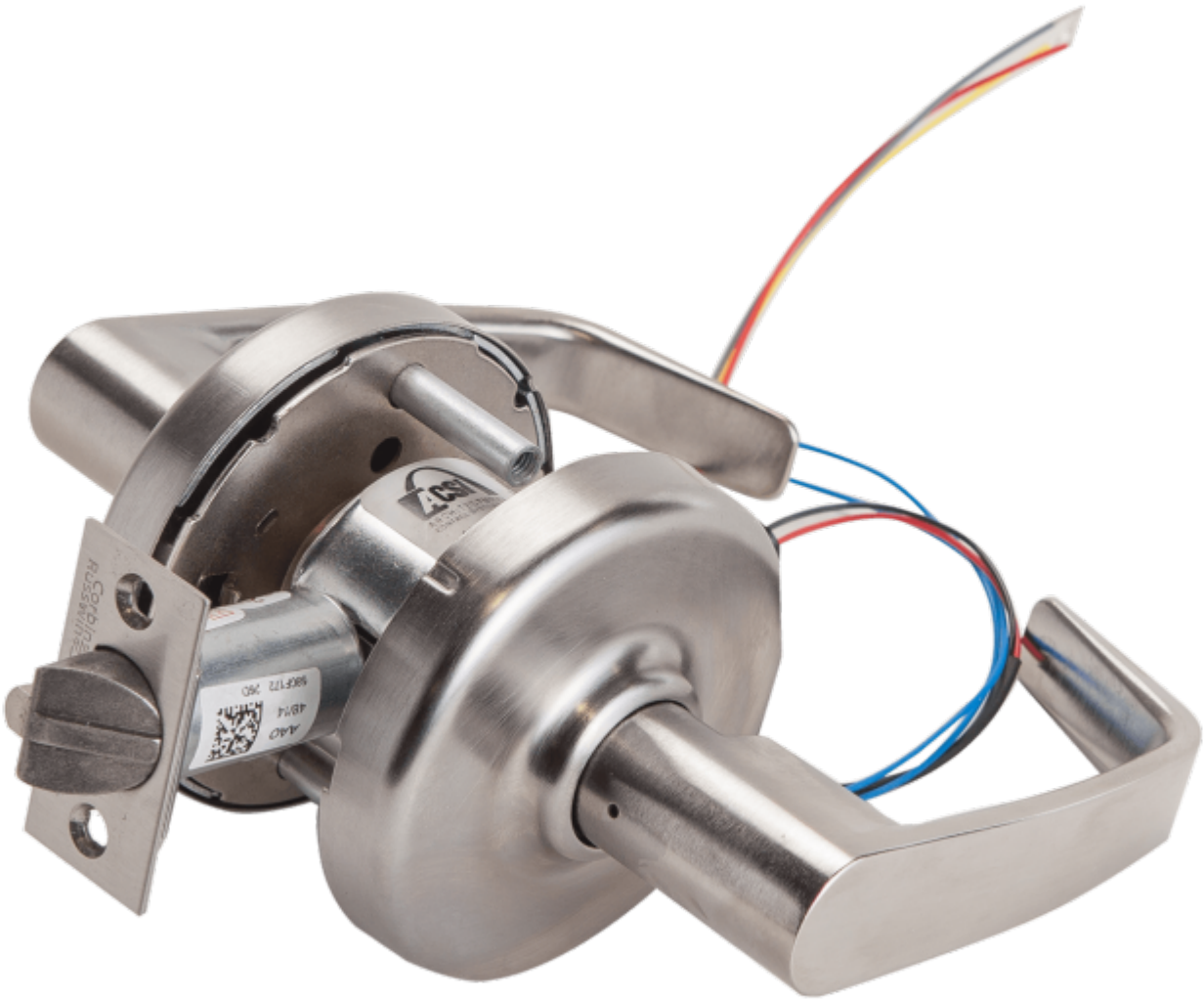

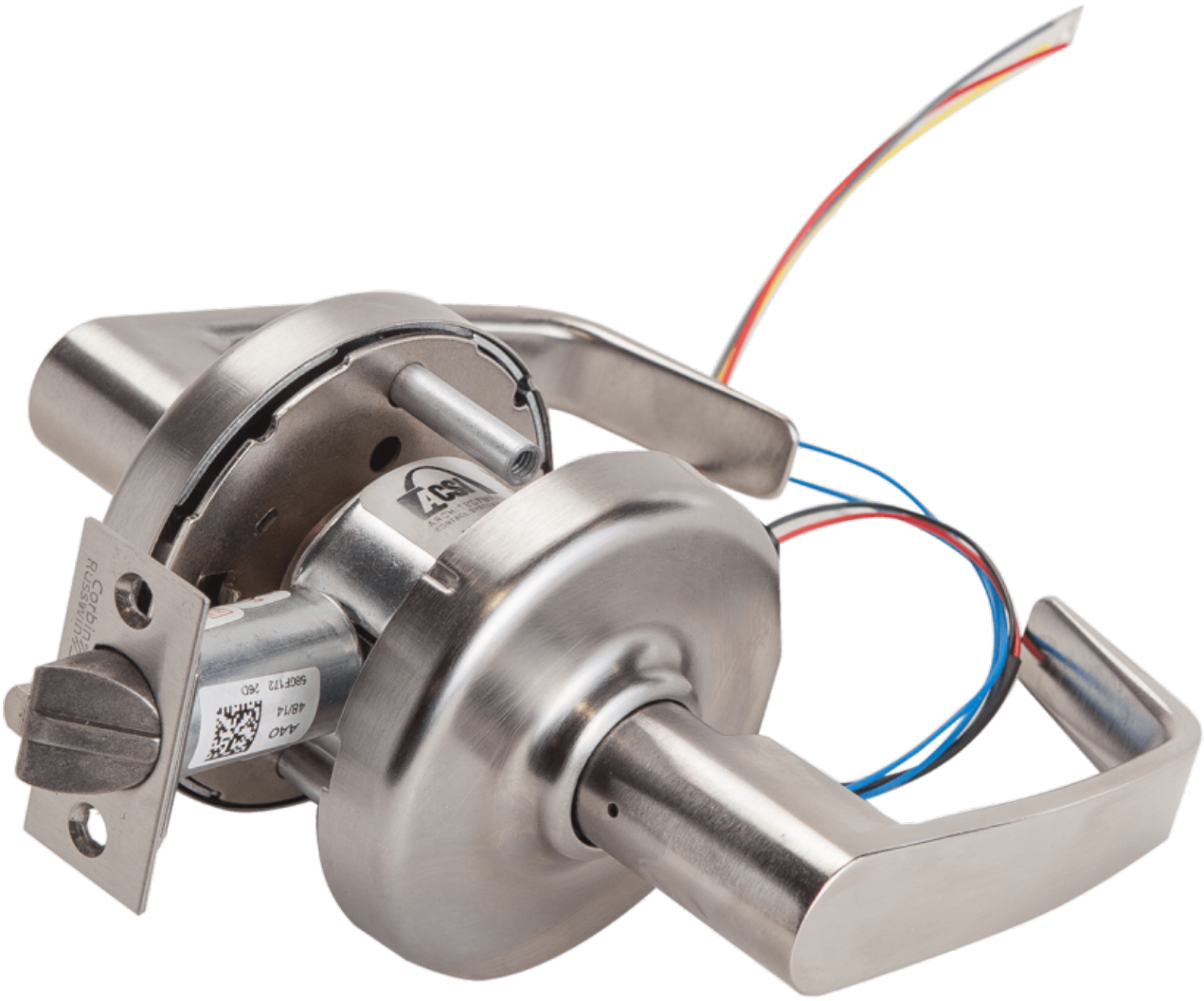
ACSI
Corbin Russwin
AAO
48/14
58GF172 26D

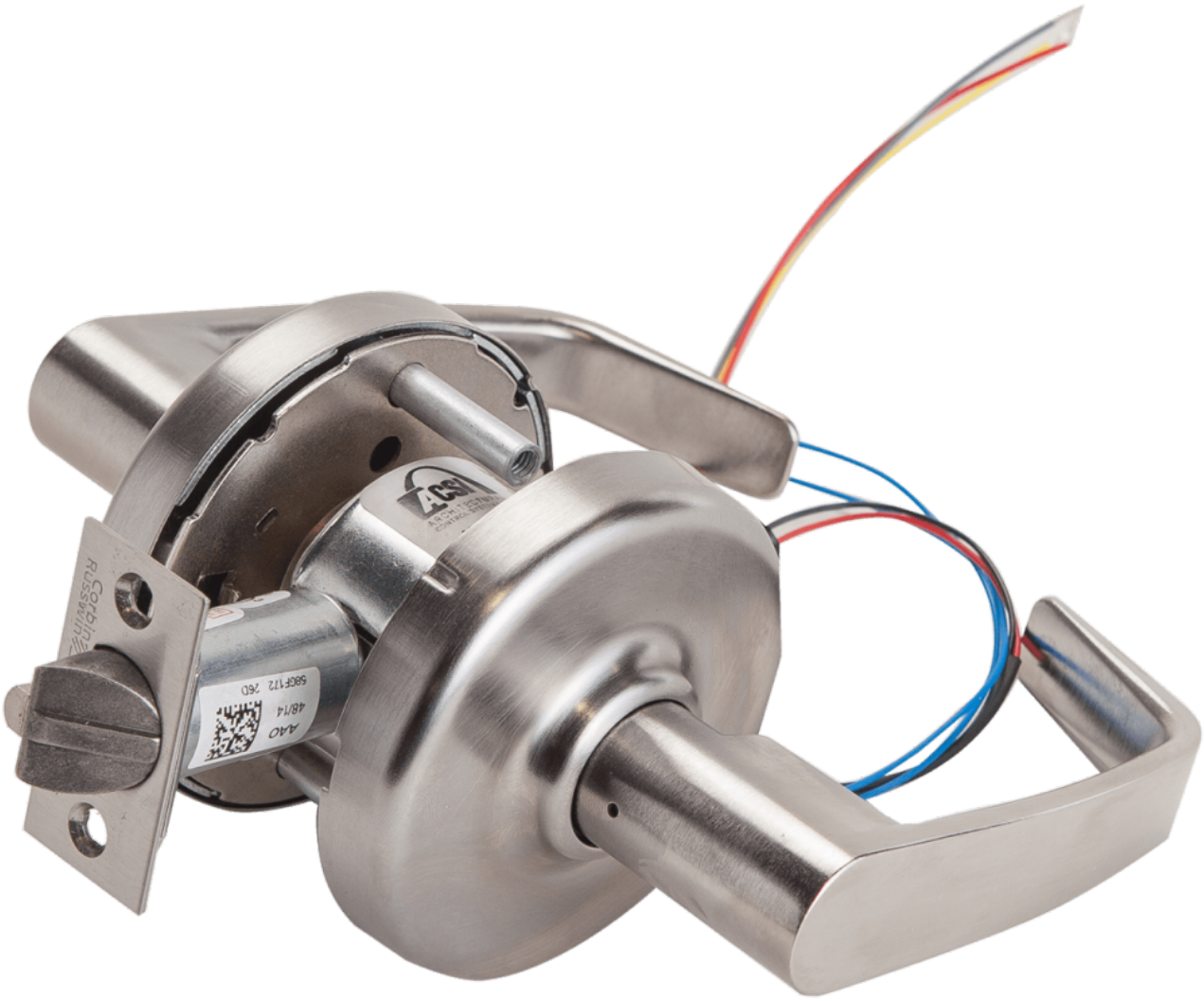
ACSI
Corbin
Russwin
AAO
48/14
58GF172 26D

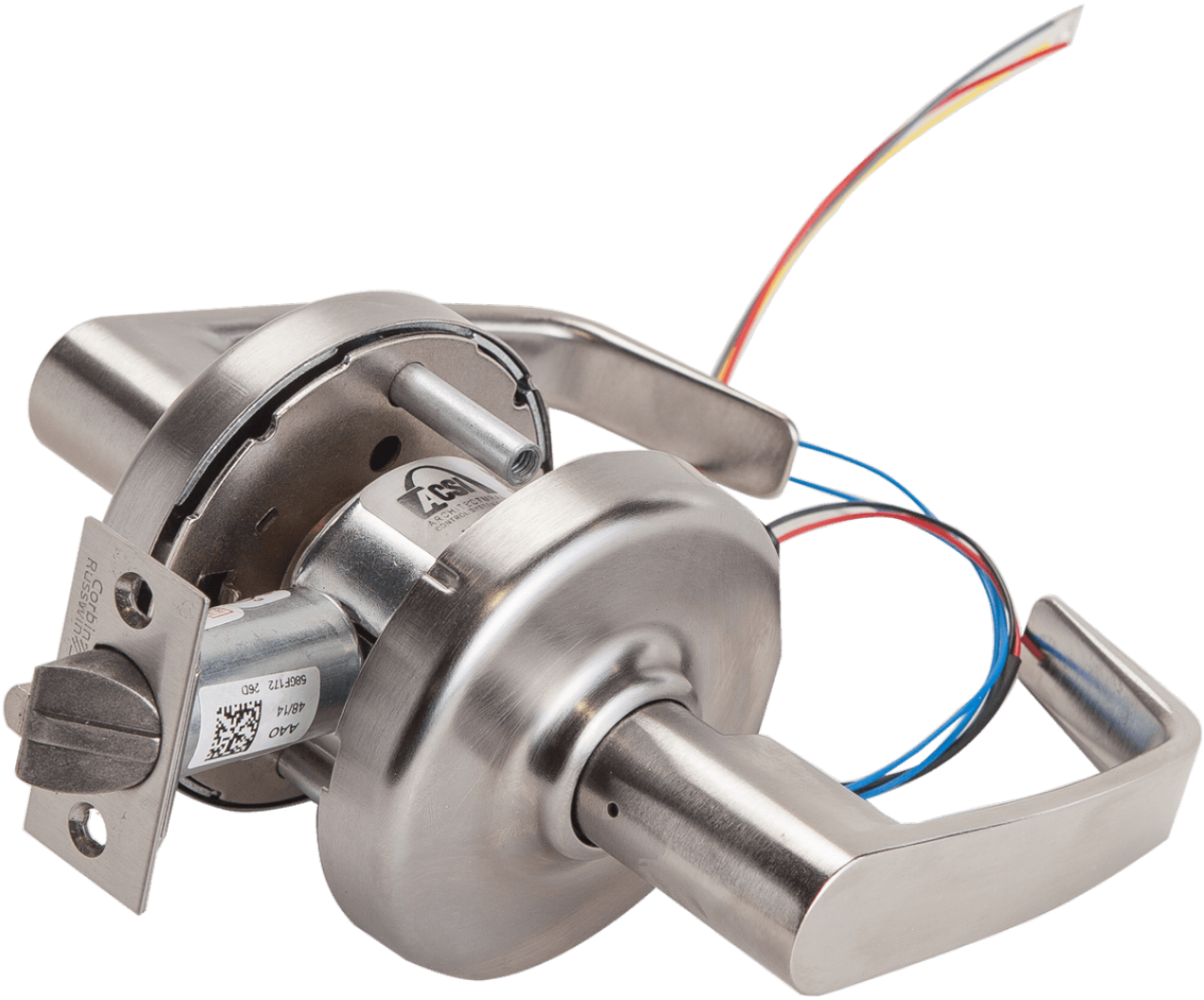
ACSI
Corbin
Russwin
AAO
48/14
58GF172 26D

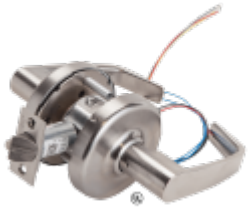

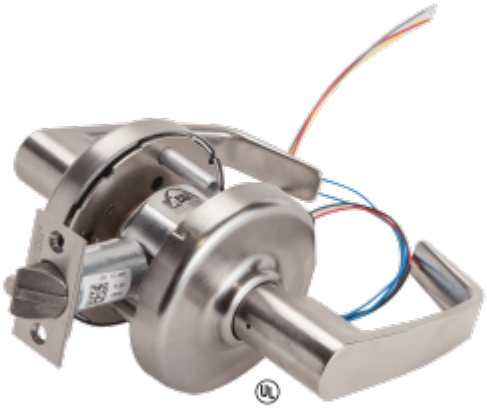

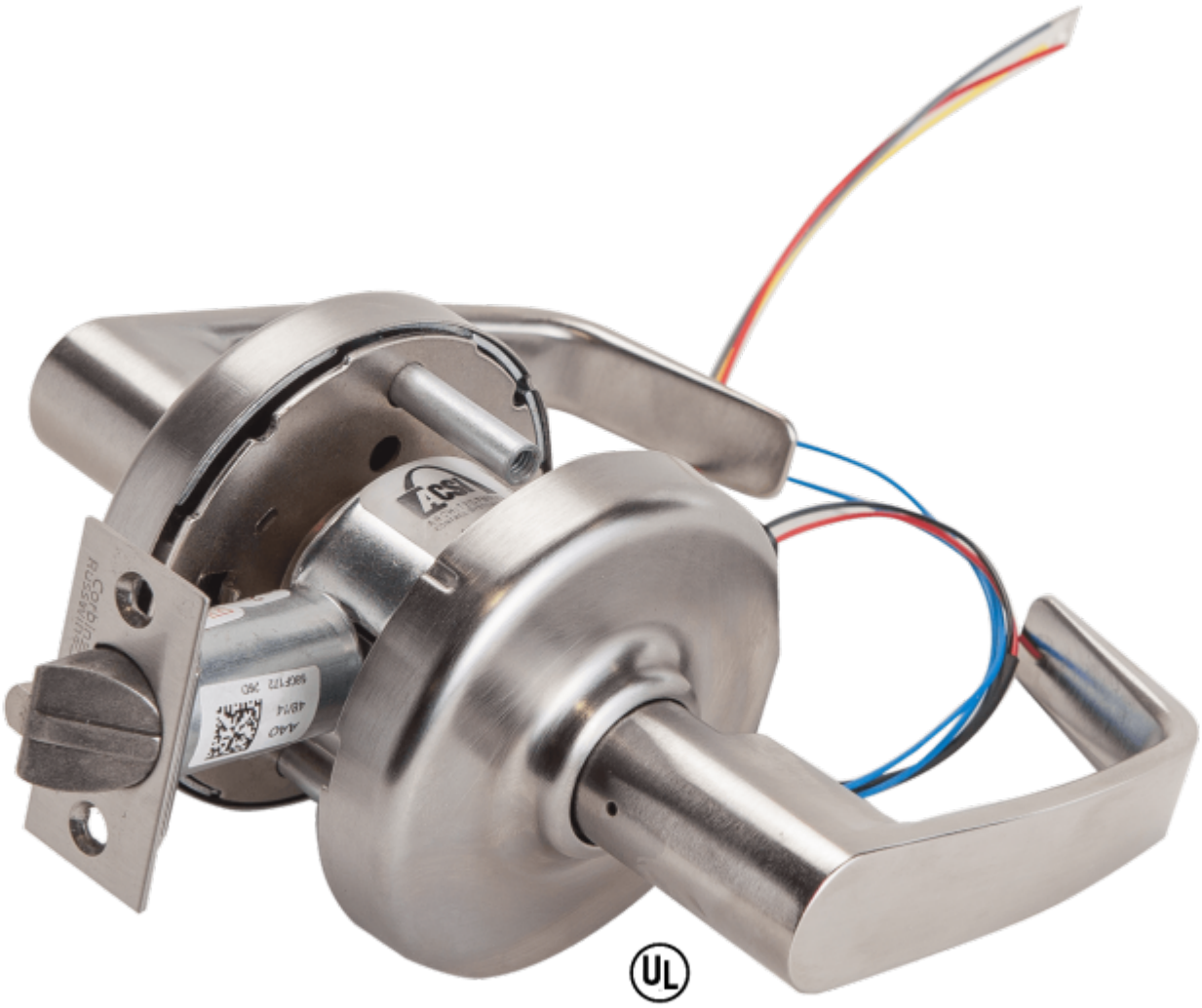

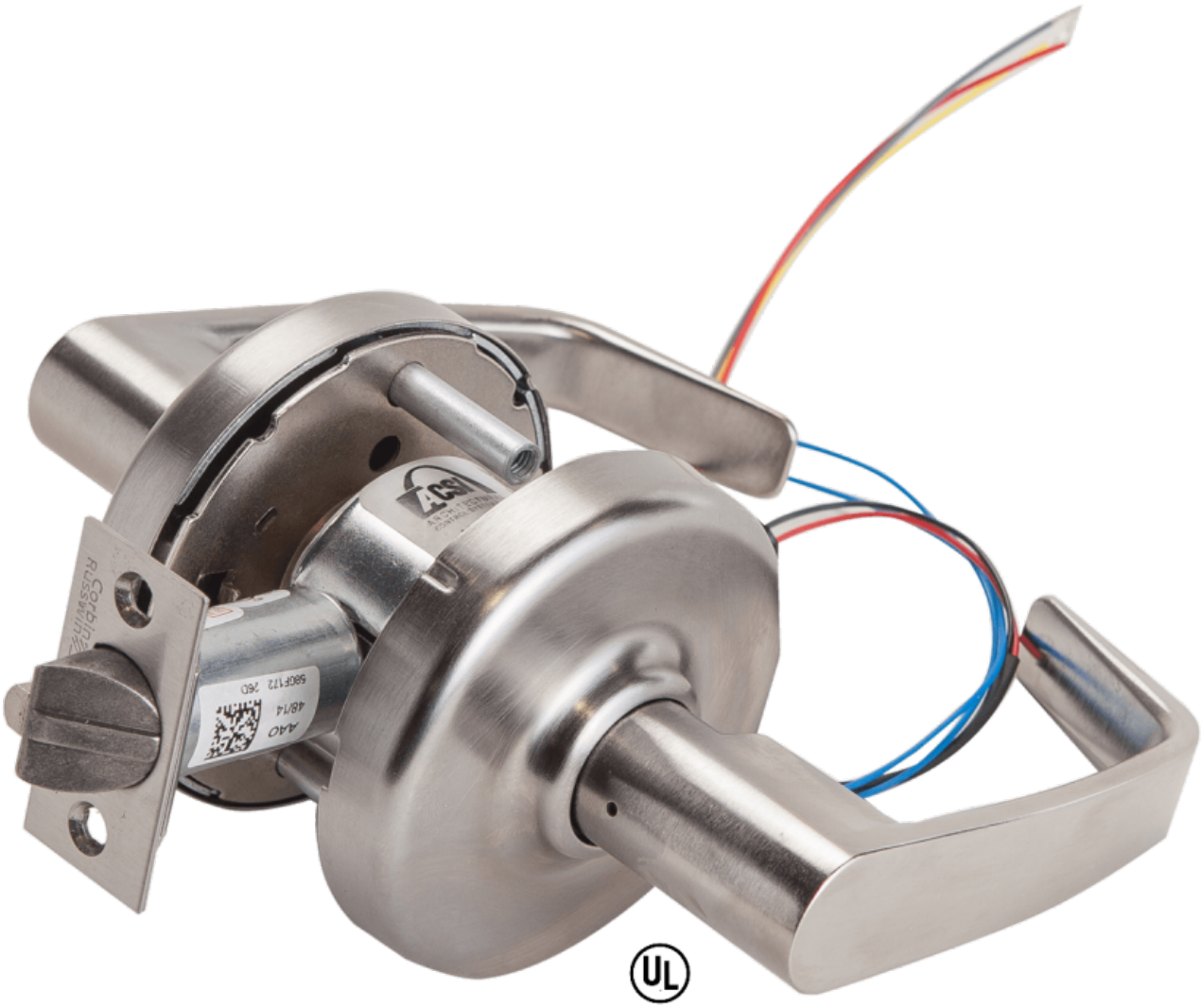
Corbin Russwin
AAO
48/14
58GF172 26D

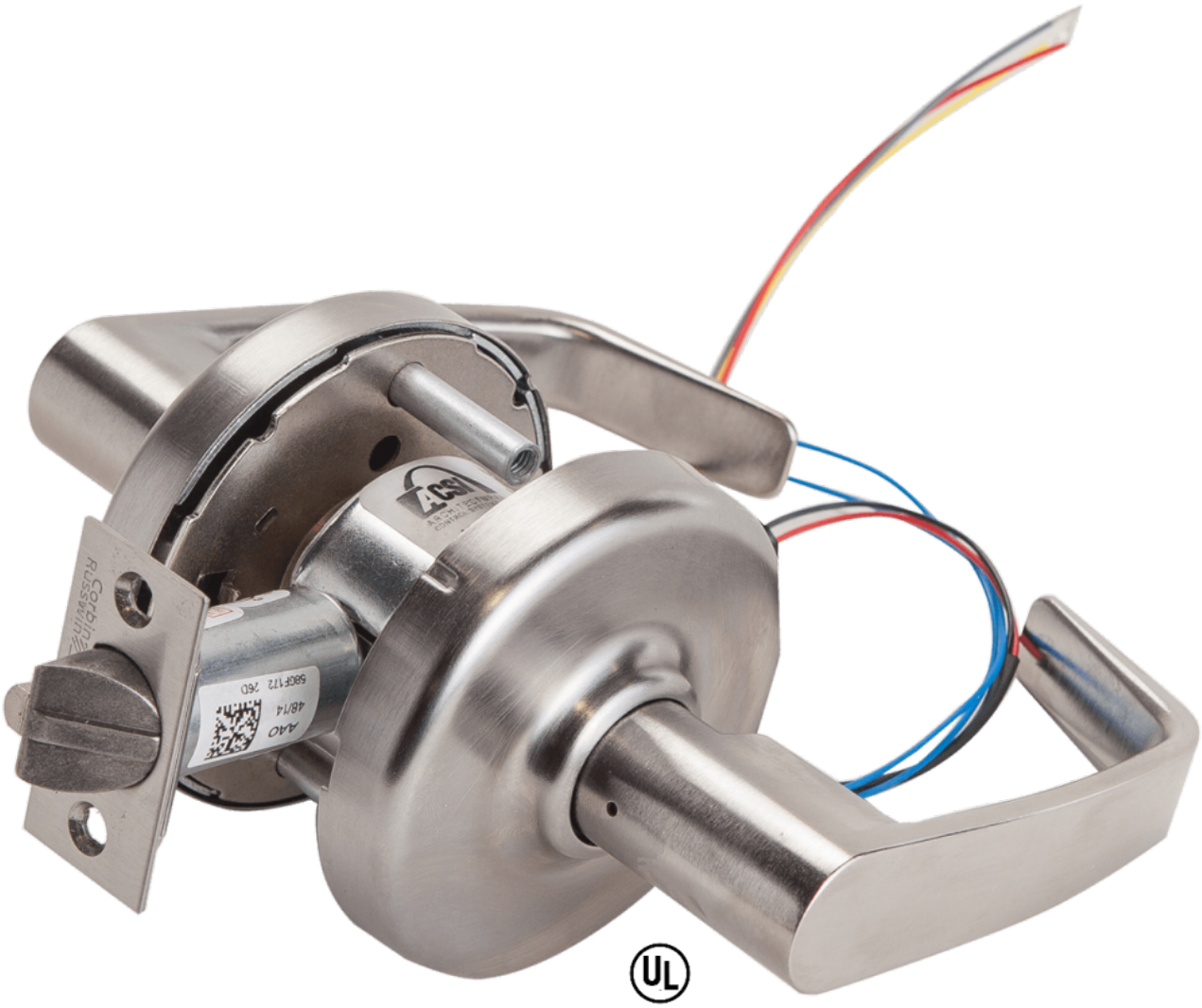
ACSI
Corbin Russwin
AAO
48/14
58GF172 26D

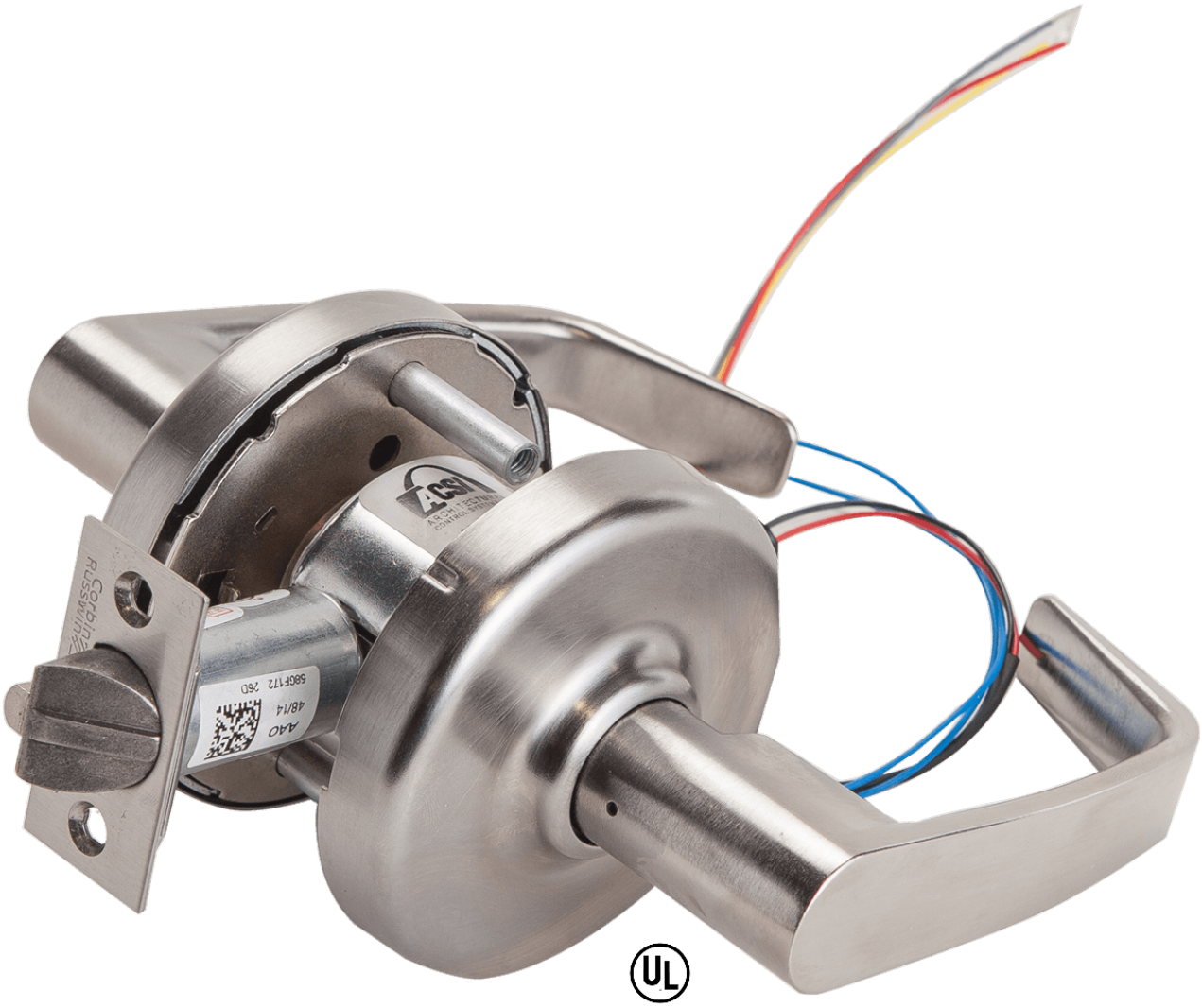
ACSI
Corbin Russwin
AAO
48/14
58GF172 26D

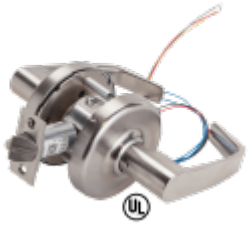

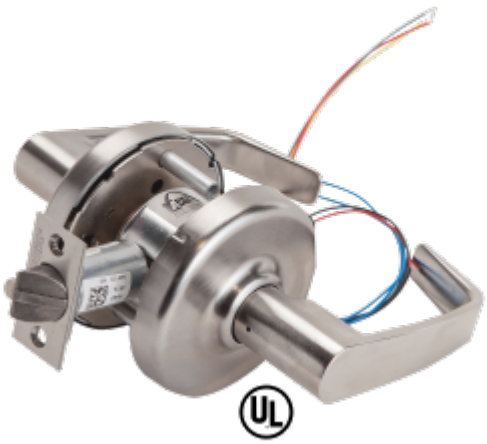

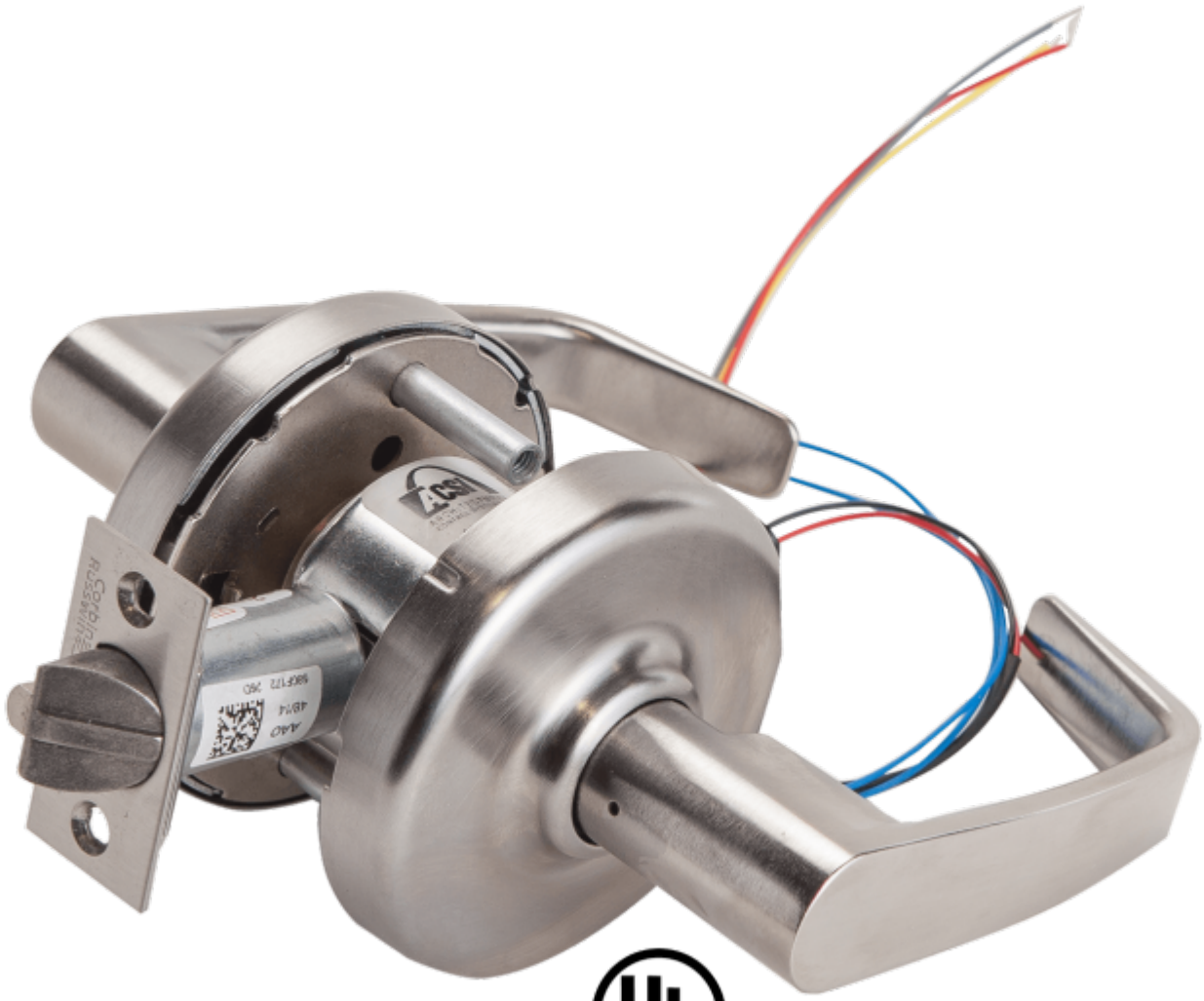

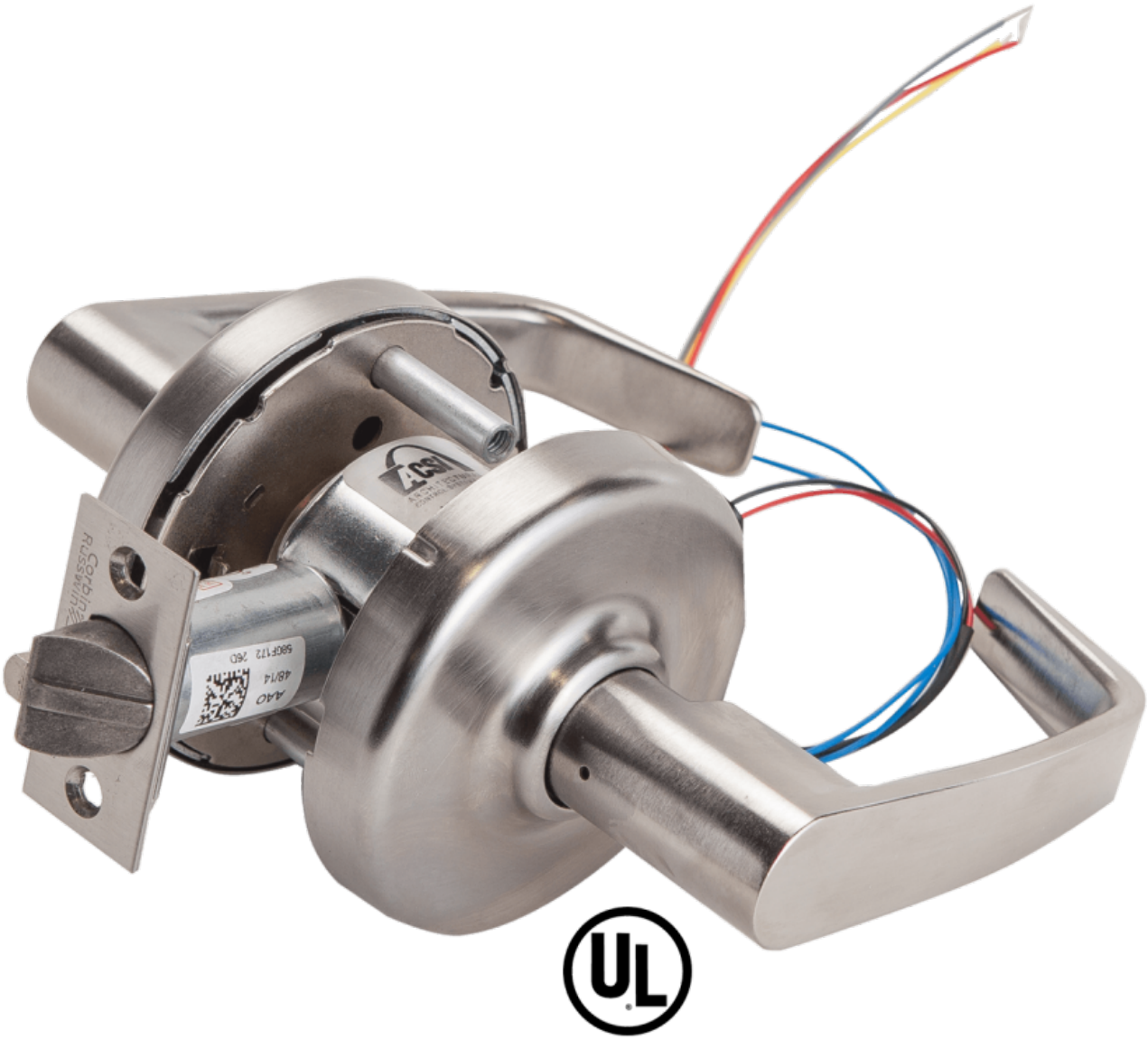

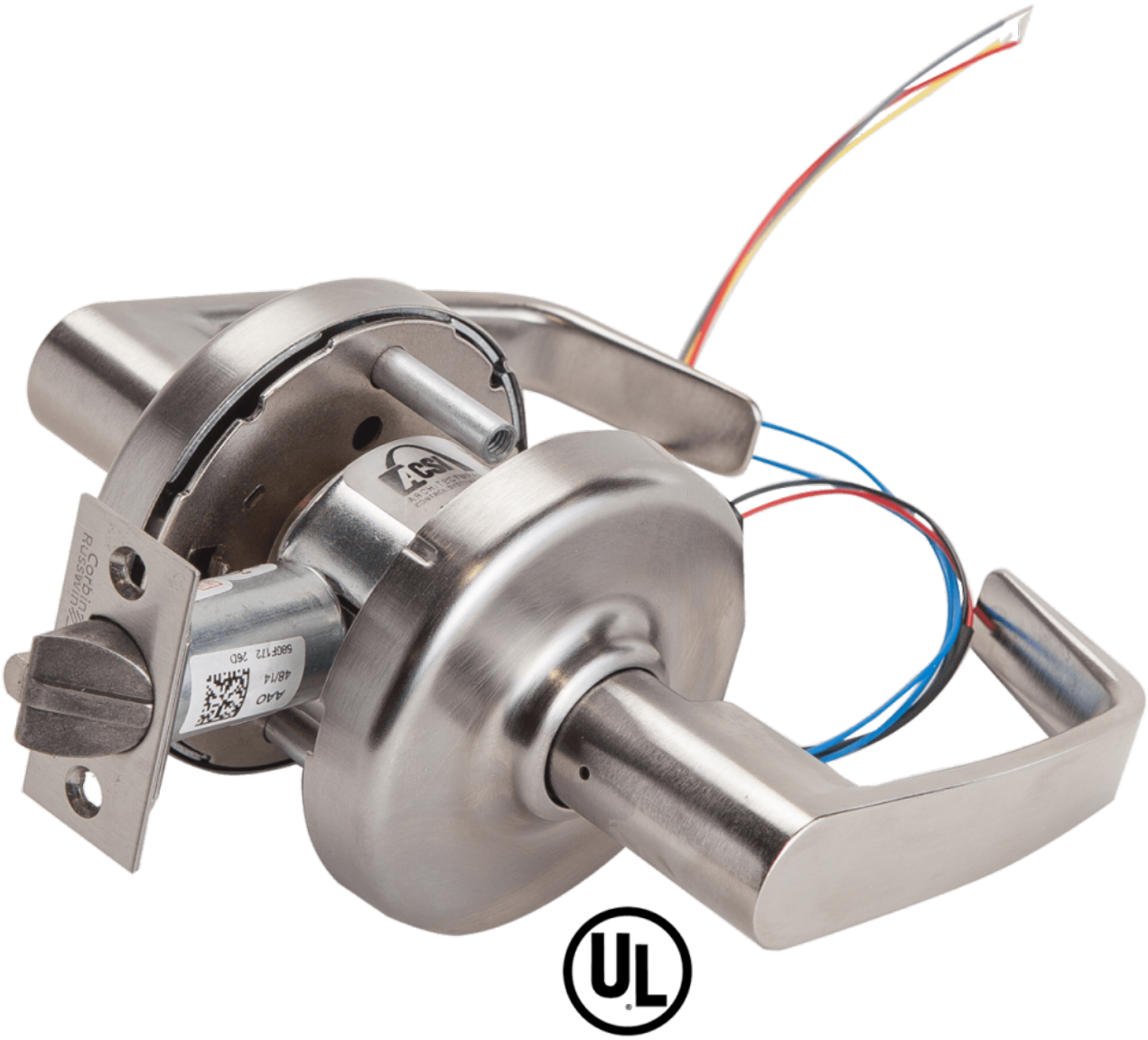
ACSI
Corbin Russwin
AAO
48/14
58GF172 26D

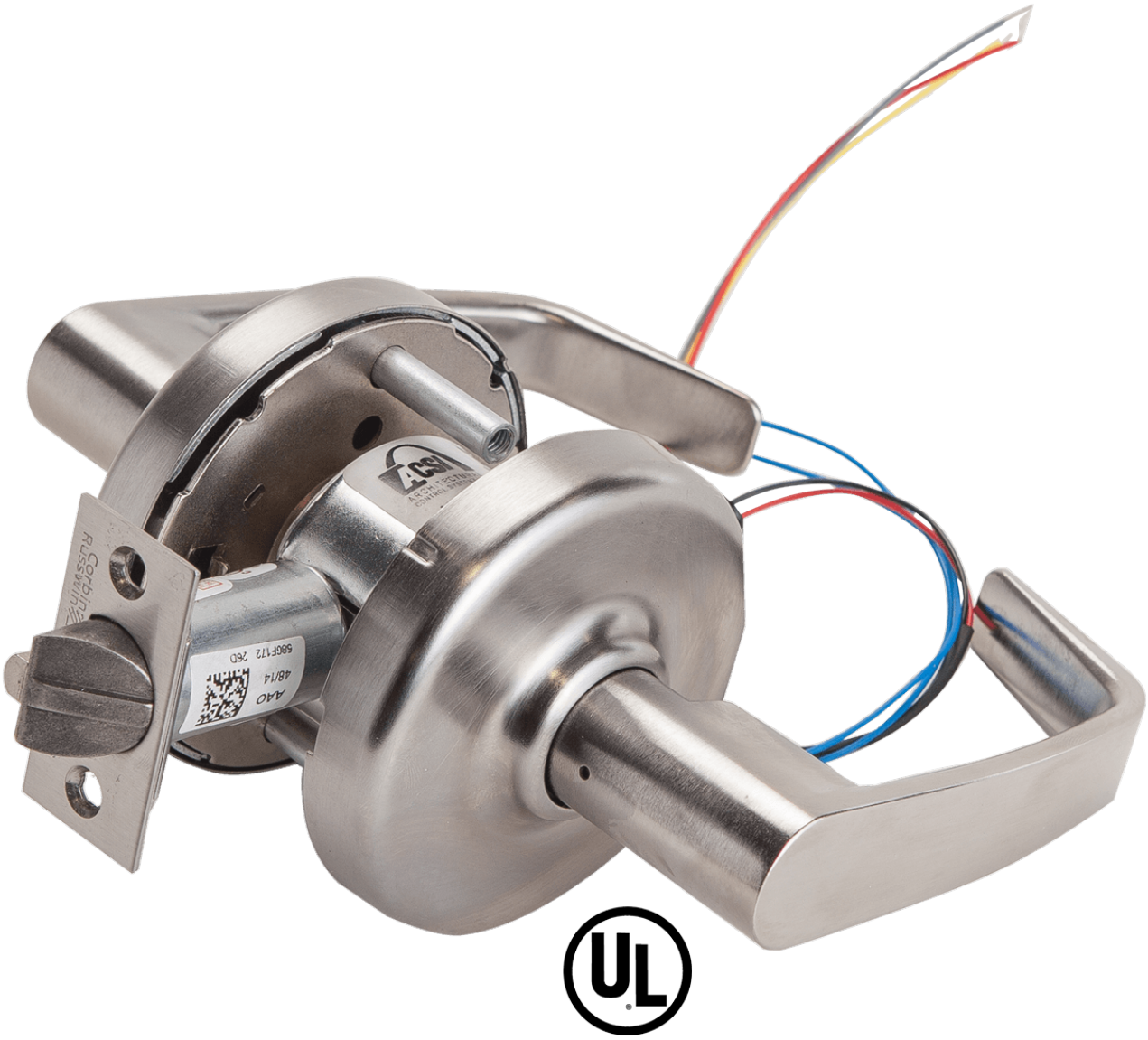
ACSI
Corbin Russwin
AAO
48/14
58GF172 26D

ELECTRIC HINGE INSTALLATION INSTRUCTIONS

CONCEALED ELECTRIC HINGES-RHS AND MONROE



Install Sequence

Electrical Specifications

- Supply voltage: 12VDC
- Current draw: 1.5A (Hinge) + 0.5A (Strike)
- Duty cycle: 30 seconds, 10% (Do not exceed duration)
- Electrical connection:
  - Hinge to door: 4 wires
  - Door to frame: 4 wires (Hinge)
  - Hinge to frame: 4 wires (Hinge)

Wiring

- Run wiring from power source to door.
- Wire each hinge to the hinge on the adjacent side.
- Run 4 wires from the hinge on the door to the hinge on the frame.
- Run 4 wires from the hinge on the frame to the strike.
- Be sure to connect the wires to the correct terminals on the hinges and strike.

Door and Frame Preparation

- Prepare the door and frame for the hinges and strike according to the manufacturer's instructions.
- Make sure the door and frame are square and plumb.

Installation

- Install the hinges on the door and frame according to the manufacturer's instructions.
- Connect the wires to the hinges and strike.
- Test the door to make sure it opens and closes properly.
- Adjust the hinges and strike as needed.

Troubleshooting

- If the door does not open, check the power supply and wiring.
- If the door does not close properly, check the hinges and strike for proper alignment.
- If the door is difficult to open or close, check the hinges for binding.

Maintenance and Repair

- Lubricate the hinges and strike annually.
- Replace any damaged or worn parts.
- Contact a qualified technician for any repairs that you are not comfortable making.

ELECTRIC HINGE INSTALLATION INSTRUCTIONS
CONCEALED ELECTRIC THROUGH-WIRE AND MONITOR

Model Descriptions:

1110	3-22ga wires	1110	3 24/28ga monitor wires
1110wk	3-22ga wires, 4-24/28ga wires	1114	4-24/28ga wires, 3-24/28ga monitor wires
1114	4-24/28ga wires	1116	6-24/28ga wires, 3-24/28ga monitor wires
1136	4-24/28ga wires	1118	8-24/28ga wires, 3-24/28ga monitor wires
1138	8-24/28ga wires	1110-TA	10-28ga wires, 3-24/28ga monitor wires
1130-10	10-24/28ga wires		
1130-12	12-24/28ga wires		
1162	2-18ga wires		
1160wk	2-18ga wires, 4-24/28ga wires		
1160ec	2-18ga wires, 4-28ga wires		



Electrical Specifications:

- 22ga, 24ga, and 28ga through-wire rated:
  - 3.5A continuous @ 30VAC/DC
  - 1ea pulse for 400msec, 10sec min off time between pulses
- 18ga through-wire rated:
  - 10A continuous @ 30VAC/DC
  - 20A inrush for 4sec, 10sec min off time between pulses
- Monitor Switch contacts rated: 0.5A @ 30VDC

Optional Connectors:

- ASSA Electrakey
- Allegion Connect
- Hager Quick Connect

Monitor Switch



Notes:

- Steel hinges are for interior use only.
- Brass and stainless steel hinges are for interior or exterior use.
- Do not disassemble the hinge as it will damage the hinge and void the warranty.
- Monitor and through-wire hinges are non-lead bearing and must be mounted in the center position.
- All concealed monitor hinges are pre-adjusted at the factory for 3/16" -3/8" gap between the hinge leaves. The switch contacts should change state before the door opens 2" from the frame on the latch side.

Door and Frame Preparation:

- Install a 7" mortise guard (part # 300-03-03, sold separately) in the electric hinge position on mortise lead frames as void the warranty.
- Door and frames must be prepared in accordance with the models hinge templates.
- Wire access holes must be free of burrs.
- Verify the hinge fits freely in the door and frame preparation before beginning installation.

Installation:

- Hang the door on the top and bottom hinges first (lead bearing, non-electrical hinges).
- Extract the routed wiring from the prepared holes in the door and frame.
- Terminate the wire connections with appropriate crimp splices or wire nuts.
  - **Do not hang the hinge by wires during installation or serious damage may occur.**
- Insulate all ends of unused wires.
- After all terminations are completed, carefully insert the wires into the prepared holes making sure they will not be cut or pinched as the hinge is installed.

Monitor Switch Hinge Gap Adjustment:

- Swing the hinge from the frame preparation to expose the terminal switch enclosure.
- Using a small standard blade screwdriver, turn the adjustment screw clockwise in 1/2 turn increments to increase the gap, checking the gap between the hinge leaves each time, until the desired gap is achieved. **Consult the factory if the desired gap is not achieved in 2 full turns.**
- Re-install the hinge into the frame preparation.



ELECTRIC HINGE INSTALLATION INSTRUCTIONS
CONCEALED ELECTRIC THROUGH-WIRE AND MONITOR

Model Descriptions:

1102:	2-22ga wires	1110:	3-26/28ga monitor wires
1102x4:	2-22ga wires, 4-26/28ga wires	1114:	4-26/28ga wires, 3-26/28ga monitor wires
1104:	4-26/28ga wires	1116:	6-26/28ga wires, 3-26/28ga monitor wires
1106:	6-26/28ga wires	1118:	8-26/28ga wires, 3-26/28ga monitor wires
1108	8-26/28ga wires	1110-10:	10-28ga wires, 3-26/28ga monitor wires
1100-10:	10-26/28ga wires		
1100-12:	12-26/28ga wires		
1182:	2-18ga wires		
1182x4:	2-18ga wires, 4-26/28ga wires		
1182x6:	2-18ga wires, 6-28ga wires		

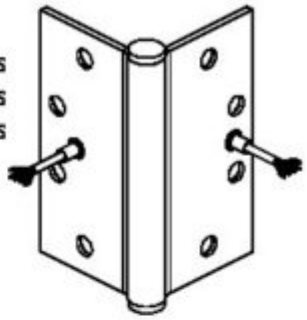

Electrical Specifications:

- 22ga, 26ga, and 28ga through-wire rated:
  - 3.5A continuous @ 50VAC/DC
  - 16A pulse for 400msec, 10sec min off-time between pulses
- 18ga through-wire rated:
  - 10A continuous @ 50VAC/DC
  - 20A inrush for 4sec, 10sec min off-time between pulses
- Monitor Switch contacts rated: 0.5A @ 30VDC

Optional Connectors:

- ASSA Electrolynx
- Allegion Connect
- Hager Quick Connect

Monitor Switch

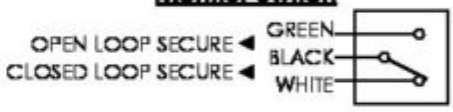

Notes:

- Steel hinges are for interior use only.
- Brass and stainless steel hinges are for interior or exterior use.
- Do not disassemble the hinge as it will damage the hinge and void the warranty.
- Monitor and through-wire hinges are non-load bearing and must be mounted in the center position.
- All concealed monitor hinges are pre-adjusted at the factory for 3/16"-3/8" gap between the hinge leaves. The switch contacts should change state before the door opens 2" from the frame on the latch side.

Door and Frame Preparation:

- Install a 7" mortar guard (part# 302-03-03, sold separately) in the electric hinge position on mortar filled frames or void the warranty.
- Door and frame must be prepared in accordance with the model's hinge template.
- Wire access holes must be free of burrs.
- Verify the hinge fits freely in the door and frame preparation before beginning installation.

Installation:

- Hang the door on the top and bottom hinges first (load bearing, non-electrical hinges).
- Extract the interior wiring from the prepared holes in the door and frame.
- Terminate the wire connections with appropriate crimp splices or wire nuts.
  - **Do not hang the hinge by wires during installation or serious damage may occur.**
- Insulate all ends of unused wires.
- After all terminations are completed, carefully insert the wires into the prepared holes making sure they will not be cut or pinched as the hinge is installed.

Monitor Switch Hinge Gap Adjustment:

- Swing the hinge from the frame preparation to expose the brass switch enclosure.
- Using a small standard blade screwdriver, turn the adjustment screw clockwise in 1/2 turn increments to increase the gap, checking the gap between the hinge leaves each time, until the desired gap is achieved. **Consult the factory if the desired gap is not achieved in 2 full turns.**
- Re-install the hinge into the frame preparation.

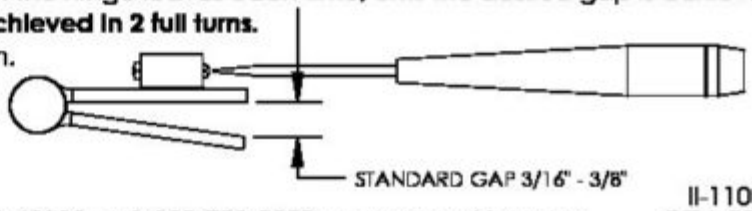

ELECTRIC HINGE INSTALLATION INSTRUCTIONS
CONCEALED ELECTRIC THROUGH-WIRE AND MONITOR

Model Descriptions:

1102:	2-22ga wires	1110:	3-26/28ga monitor wires
1102x4:	2-22ga wires, 4-26/28ga wires	1114:	4-26/28ga wires, 3-26/28ga monitor wires
1104:	4-26/28ga wires	1116:	6-26/28ga wires, 3-26/28ga monitor wires
1106:	6-26/28ga wires	1118:	8-26/28ga wires, 3-26/28ga monitor wires
1108	8-26/28ga wires	1110-10:	10-28ga wires, 3-26/28ga monitor wires
1100-10:	10-26/28ga wires		
1100-12:	12-26/28ga wires		
1182:	2-18ga wires		
1182x4:	2-18ga wires, 4-26/28ga wires		
1182x6:	2-18ga wires, 6-28ga wires		

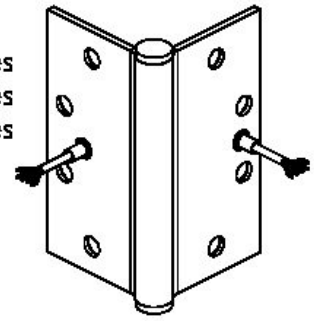

Electrical Specifications:

- 22ga, 26ga, and 28ga through-wire rated:
  - 3.5A continuous @ 50VAC/DC
  - 16A pulse for 400msec, 10sec min off-time between pulses
- 18ga through-wire rated:
  - 10A continuous @ 50VAC/DC
  - 20A inrush for 4sec, 10sec min off-time between pulses
- Monitor Switch contacts rated: 0.5A @ 30VDC

Optional Connectors:

- ASSA Electrolynx
- Allegion Connect
- Hager Quick Connect

Monitor Switch

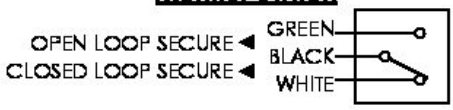

Notes:

- Steel hinges are for interior use only.
- Brass and stainless steel hinges are for interior or exterior use.
- Do not disassemble the hinge as it will damage the hinge and void the warranty.
- Monitor and through-wire hinges are non-load bearing and must be mounted in the center position.
- All concealed monitor hinges are pre-adjusted at the factory for 3/16"-3/8" gap between the hinge leaves. The switch contacts should change state before the door opens 2" from the frame on the latch side.

Door and Frame Preparation:

- Install a 7" mortar guard (part# 302-03-03, sold separately) in the electric hinge position on mortar filled frames or void the warranty.
- Door and frame must be prepared in accordance with the model's hinge template.
- Wire access holes must be free of burrs.
- Verify the hinge fits freely in the door and frame preparation before beginning installation.

Installation:

- Hang the door on the top and bottom hinges first (load bearing, non-electrical hinges).
- Extract the interior wiring from the prepared holes in the door and frame.
- Terminate the wire connections with appropriate crimp splices or wire nuts.
  - **Do not hang the hinge by wires during installation or serious damage may occur.**
- Insulate all ends of unused wires.
- After all terminations are completed, carefully insert the wires into the prepared holes making sure they will not be cut or pinched as the hinge is installed.

Monitor Switch Hinge Gap Adjustment:

- Swing the hinge from the frame preparation to expose the brass switch enclosure.
- Using a small standard blade screwdriver, turn the adjustment screw clockwise in 1/2 turn increments to increase the gap, checking the gap between the hinge leaves each time, until the desired gap is achieved. **Consult the factory if the desired gap is not achieved in 2 full turns.**
- Re-install the hinge into the frame preparation.

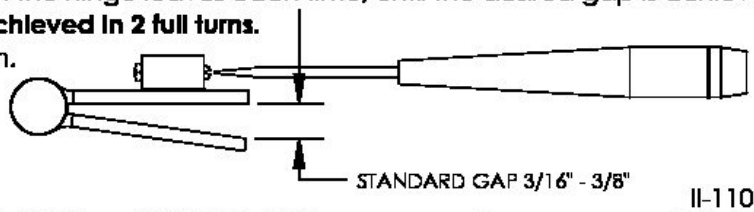

ELECTRIC HINGE INSTALLATION INSTRUCTIONS
CONCEALED ELECTRIC THROUGH-WIRE AND MONITOR

Model Descriptions:

1102:	2-22ga wires
1102x4:	2-22ga wires, 4-26/28ga wires
1104:	4-26/28ga wires
1106:	6-26/28ga wires
1108	8-26/28ga wires
1100-10:	10-26/28ga wires
1100-12:	12-26/28ga wires
1182:	2-18ga wires
1182x4:	2-18ga wires, 4-26/28ga wires
1182x6:	2-18ga wires, 6-28ga wires
1110:	3-26/28ga monitor wires
1114:	4-26/28ga wires, 3-26/28ga monitor wires
1116:	6-26/28ga wires, 3-26/28ga monitor wires
1118:	8-26/28ga wires, 3-26/28ga monitor wires
1110-10:	10-28ga wires, 3-26/28ga monitor wires

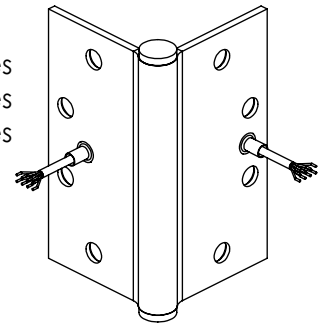

Electrical Specifications:

- 22ga, 26ga, and 28ga through-wire rated:
  - 3.5A continuous @ 50VAC/DC
  - 16A pulse for 400msec, 10sec min off-time between pulses
- 18ga through-wire rated:
  - 10A continuous @ 50VAC/DC
  - 20A inrush for 4sec, 10sec min off-time between pulses
- Monitor Switch contacts rated: 0.5A @ 30VDC

Optional Connectors:

- ASSA Electrolynx
- Allegion Connect
- Hager Quick Connect

Monitor Switch

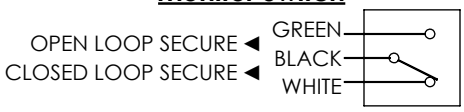

Notes:

- Steel hinges are for interior use only.
- Brass and stainless steel hinges are for interior or exterior use.
- Do not disassemble the hinge as it will damage the hinge and void the warranty.
- Monitor and through-wire hinges are non-load bearing and must be mounted in the center position.
- All concealed monitor hinges are pre-adjusted at the factory for 3/16"-3/8" gap between the hinge leaves. The switch contacts should change state before the door opens 2" from the frame on the latch side.

Door and Frame Preparation:

- Install a 7" mortar guard (part# 302-03-03, sold separately) in the electric hinge position on mortar filled frames or void the warranty.
- Door and frame must be prepared in accordance with the model's hinge template.
- Wire access holes must be free of burrs.
- Verify the hinge fits freely in the door and frame preparation before beginning installation.

Installation:

- Hang the door on the top and bottom hinges first (load bearing, non-electrical hinges).
- Extract the interior wiring from the prepared holes in the door and frame.
- Terminate the wire connections with appropriate crimp splices or wire nuts.
  - **Do not hang the hinge by wires during installation or serious damage may occur.**
- Insulate all ends of unused wires.
- After all terminations are completed, carefully insert the wires into the prepared holes making sure they will not be cut or pinched as the hinge is installed.

Monitor Switch Hinge Gap Adjustment:

- Swing the hinge from the frame preparation to expose the brass switch enclosure.
- Using a small standard blade screwdriver, turn the adjustment screw clockwise in 1/2 turn increments to increase the gap, checking the gap between the hinge leaves each time, until the desired gap is achieved. **Consult the factory if the desired gap is not achieved in 2 full turns.**
- Re-install the hinge into the frame preparation.

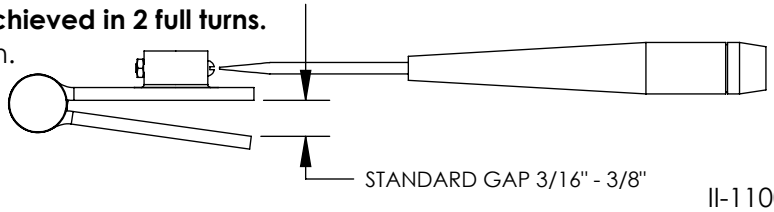

ELECTRIC HINGE INSTALLATION INSTRUCTIONS

CONCEALED ELECTRIC MONITOR AND THROUGH-WIRE

1114, 1116, 1118, 1110-10

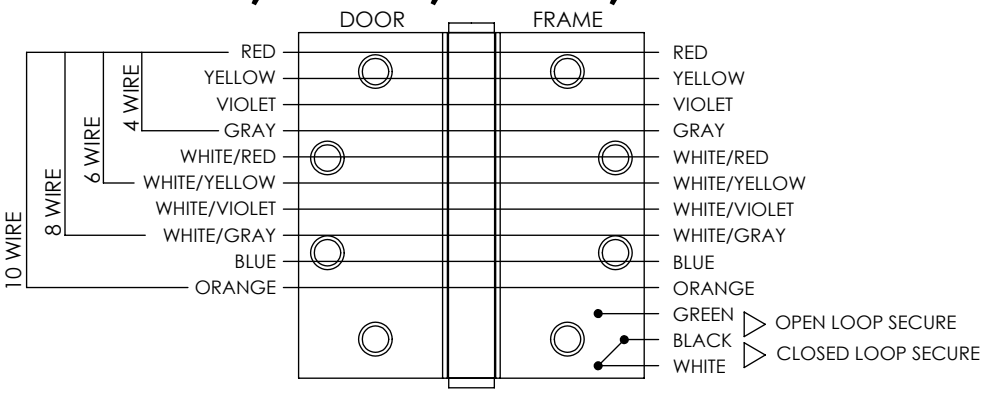

Model Descriptions:

1114: 3 wire, 28ga monitor x 4 wire, 28ga
1116: 3 wire, 28ga monitor x 6 wire, 28ga
1118: 3 wire, 28ga monitor x 8 wire, 28ga
1110-10: 3 wire, 28ga monitor x 10 wire, 28ga

Electrical Specifications:

Switch contacts rated: 0.5A @ 30VDC
Each 28ga through-wire rated:

- 3.5A continuous @ 50VAC/DC
- 16A pulse @ 50VAC/DC
  - 400msec maximum pulse-width
  - 10sec minimum off-time between pulses

Notes:

- All concealed monitor hinges are pre-adjusted at the factory for 3/16"-3/8" gap between the hinge leaves. The switch contacts should change state before the door opens 2" from the frame on the latch side.
- Steel hinges are for interior use only.
- Brass and stainless steel hinges are for interior or exterior use.
- Do not disassemble the hinge as it will damage the hinge and void the warranty.
- Monitor and through-wire hinges are non-load bearing and must be mounted in the center position.

Door and Frame Preparation:

- Install a 7" mortar guard (part# 302-03-03, sold separately) in the electric hinge position on mortar filled frames or void the warranty.
- Door and frame must be prepared in accordance with the model's hinge template.
- Wire access holes must be free of burrs.
- Verify the hinge fits freely in the door and frame preparation before beginning installation.

Installation:

- Hang the door on the top and bottom hinges first (load bearing, non-electrical hinges).
- Extract the interior wiring from the prepared holes in the door and frame.
- Terminate the wire connections with appropriate crimp splices or wire nuts.
  - **Do not hang the hinge by wires during installation or serious damage may occur.**
- Insulate all ends of unused wires.
- After all terminations are completed, carefully insert the wires into the prepared holes making sure they will not be cut or pinched as the hinge is installed.

Monitor Switch Hinge Gap Adjustment:

- Swing the hinge from the frame preparation to expose the brass switch enclosure.
- Using a small standard blade screwdriver, turn the adjustment screw clockwise in 1/2 turn increments to increase the gap, checking the gap between the hinge leaves each time, until the desired gap is achieved. **Consult the factory if the desired gap is not achieved in 2 full turns.**
- Re-install the hinge into the frame preparation.

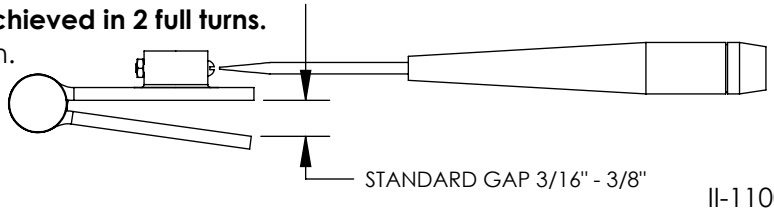

ELECTRIC HINGE INSTALLATION INSTRUCTIONS

CONCEALED ELECTRIC THROUGH-WIRE

1102, 1102x4

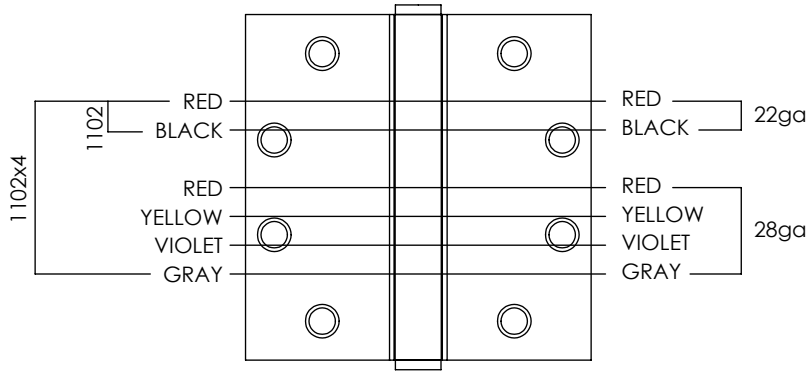

Model Descriptions:

1102: 2 wire, 22ga
1102x4: 2 wire, 22ga x 4 wire, 28ga

Electrical Specifications:

Each 22ga and 28ga through-wire rated:

- 3.5A continuous @ 50VAC/DC
- 16A pulse @ 50VAC/DC
  - 400msec maximum pulse-width
  - 10sec minimum off-time between pulses

Notes:

- Steel hinges are for interior use only.
- Brass and stainless steel hinges are for interior or exterior use.
- Do not disassemble the hinge as it will damage the hinge and void the warranty.
- Through-wire hinges are non-load bearing and must be mounted in the center position.

Door and Frame Preparation:

- Install a 7" mortar guard (part# 302-03-03, sold separately) in the electric hinge position on mortar filled frames or void the warranty.
- Door and frame must be prepared in accordance with the model's hinge template.
- Wire access holes must be free of burrs.
- Verify the hinge fits freely in the door and frame preparation before beginning installation.

Installation:

- Hang the door on the top and bottom hinges first (load bearing, non-electrical hinges).
- Extract the interior wiring from the prepared holes in the door and frame.
- Terminate the wire connections with appropriate crimp splices or wire nuts.
  - **Do not hang the hinge by wires during installation or serious damage may occur.**
- Insulate all ends of unused wires.
- After all terminations are completed, carefully insert the wires into the prepared holes making sure they will not be cut or pinched as the hinge is installed.

ELECTRIC PIVOT INSTALLATION INSTRUCTIONS

CONCEALED ELECTRIC THROUGH-WIRE

1104, 1106, 1108, 1100-10, 1100-12

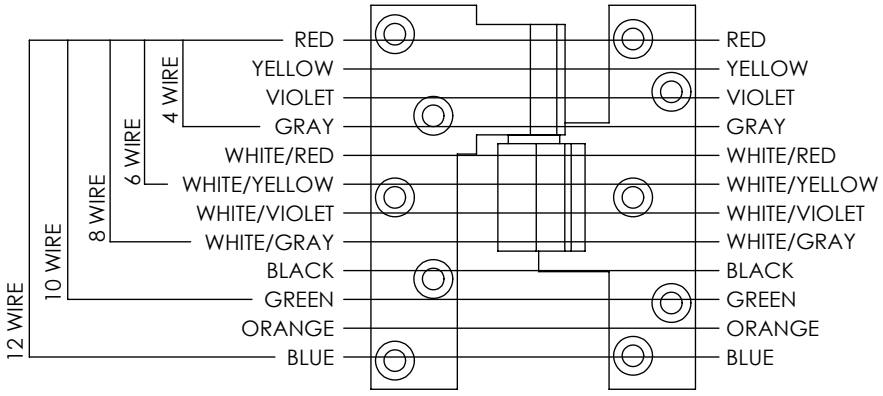

Model Descriptions:

1104: 4 wire, 28ga
1106: 6 wire, 28ga
1108: 8 wire, 28ga
1100-10: 10 wire, 28ga
1100-12: 12 wire, 28ga

Electrical Specifications:

Each 28ga through-wire rated:

- 3.5A continuous @ 50VAC/DC
- 16A pulse @ 50VAC/DC
  - 400msec maximum pulse-width
  - 10sec minimum off-time between pulses

Notes:

- Steel pivots are for interior use only.
- Brass, stainless steel, and aluminum pivots are for interior or exterior use.
- Do not disassemble the pivot as it will damage the pivot and void the warranty.
- Through-wire pivots are non-load bearing and must be mounted in the center position.

Door and Frame Preparation:

- Door and frame must be prepared in accordance with the model's pivot template.
- Wire access holes must be free of burrs.
- Verify the pivot fits freely in the door and frame preparation before beginning installation.

Installation:

- Hang the door on the top and bottom pivots first (load bearing, non-electrical pivots).
- Extract the interior wiring from the prepared holes in the door and frame.
- Terminate the wire connections with appropriate crimp splices or wire nuts.
  - **Do not hang the pivot by wires during installation or serious damage may occur.**
- Insulate all ends of unused wires.
- After all terminations are completed, carefully insert the wires into the prepared holes making sure they will not be cut or pinched as the pivot is installed.

ELECTRIC PIVOT INSTALLATION INSTRUCTIONS

CONCEALED ELECTRIC HINGES+ 80/8 AND SYSTEM MAGNETIC MONITOR



ELECTRIC PIVOT INSTALLATION INSTRUCTIONS

CONCEALED ELECTRIC THROUGH-WIRE AND EXPOSED MAGNETIC MONITOR

Model Descriptions:

1105 3-22ga wires
1105wb 3-22ga wires, 4-24/26ga wires
110a 4-24/26ga wires
110c 4-24/26ga wires
110ll 8-24/26ga wires
1105-10 10-24/26ga wires
1105-12 12-24/26ga wires
1180 2-18ga wires
1180wb 2-18ga wires, 4-24/26ga wires
1180elc 2-18ga wires, 4-26ga wires
1110 3-22ga monitor wires
111-c 4-24/26ga wires, 3-22ga monitor wires
111c 4-24/26ga wires, 3-22ga monitor wires
1118 8-24/26ga wires, 3-22ga monitor wires
1110-10 10-26ga wires, 5-22ga monitor wires

NON LOAD BEARING PIVOTS





LOAD BEARING PIVOTS





Electrical Specifications:

- 22ga, 24ga, and 26ga through-wire rated:
  - 3.0A continuous @ 30VAC/DC
  - 1mA pulse for 400msec, 10sec min off-time between pulses
- 18ga through-wire rated:
  - 10A continuous @ 30VAC/DC
  - 20A inrush for 4sec, 10sec min off-time between pulses
- Interior Switch contacts rated: 0.5A @ 28VDC

Optional Connectors:

- ASSA Receptacle
- Allegion Connect
- Hager Quick Connect

Monitor Switch

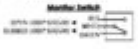

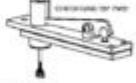

Notes:

- Steel pivots are for interior use only.
- Brass and stainless steel pivots are for interior or exterior use.
- Do not disassemble through-wire pivots as it will damage the pivot and void the warranty.
- Non-load bearing through-wire pivots must be mounted in the center position.

Door and Frame Preparation:

- Door and frame must be prepared in accordance with the models pivot template.
- Wire raceway holes must be free of burrs.
- Verify the pivot fits evenly in the door and frame preparation before beginning installation.

Installation:

- For non-load bearing through-wire pivot installations, hang the door on the top and bottom pivots first (load bearing, non-electrical pivots).
- Extract the interior wiring from the prepared holes in the door and frame.
- Terminate the wire connections with appropriate crimp splices or wire nuts.
  - **Do not hang the pivot by wires during installation or serious damage may occur.**
- Insulate all ends of unused wires.
- After all terminations are completed, carefully insert the wires into the prepared holes making sure they will not be cut or pinched as the pivot is installed.

ELECTRIC PIVOT INSTALLATION INSTRUCTIONS

CONCEALED ELECTRIC THROUGH-WIRE AND EXPOSED MAGNETIC MONITOR

Model Descriptions:

1102: 2-22ga wires
1102x4: 2-22ga wires, 4-26/28ga wires
1104: 4-26/28ga wires
1106: 6-26/28ga wires
1108 8-26/28ga wires
1100-10: 10-26/28ga wires
1100-12: 12-26/28ga wires
1182: 2-18ga wires
1182x4: 2-18ga wires, 4-26/28ga wires
1182x6: 2-18ga wires, 6-28ga wires
1110: 3-22ga monitor wires
1114: 4-26/28ga wires, 3-22ga monitor wires
1116: 6-26/28ga wires, 3-22ga monitor wires
1118: 8-26/28ga wires, 3-22ga monitor wires
1110-10: 10-28ga wires, 3-22ga monitor wires

NON-LOAD BEARING PIVOTS

3/4" OFFSET INTERMEDIATE PIVOT

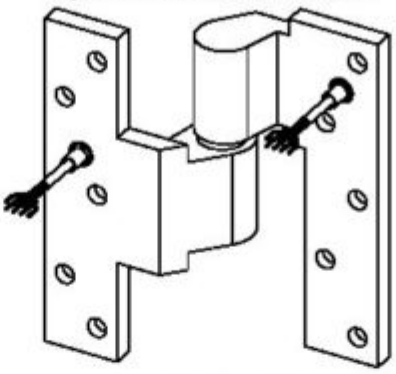

INTERMEDIATE PIVOT

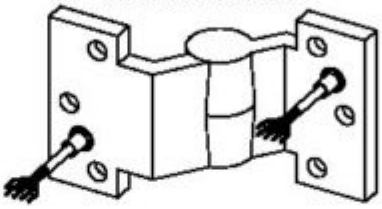

LOAD BEARING PIVOTS

POCKET PIVOT

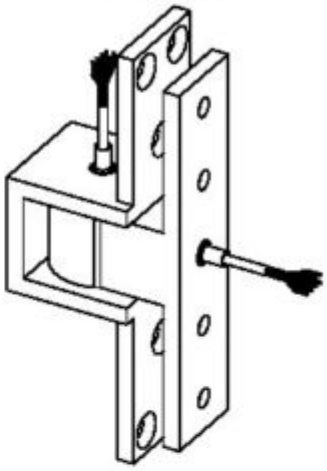

INTERMEDIATE PIVOT

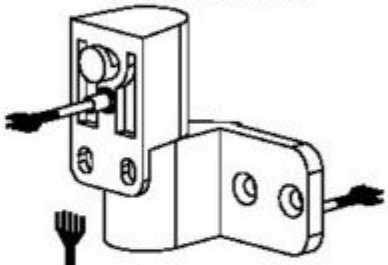

CENTER HUNG TOP PIVOT

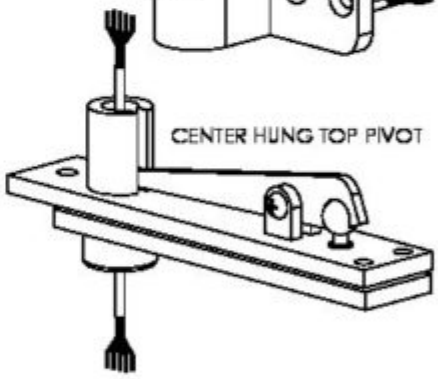

Electrical Specifications:

- 22ga, 26ga, and 28ga through-wire rated:
  - 3.5A continuous @ 50VAC/DC
  - 16A pulse for 400msec, 10sec min off-time between pulses
- 18ga through-wire rated:
  - 10A continuous @ 50VAC/DC
  - 20A inrush for 4sec, 10sec min off-time between pulses
- Monitor Switch contacts rated: 0.3A @ 28VDC

Optional Connectors:

- ASSA Electrolynx
- Allegion Connect
- Hager Quick Connect

Monitor Switch

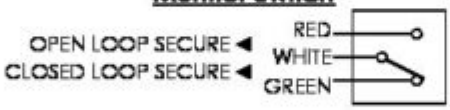

Notes:

- Steel pivots are for interior use only.
- Brass and stainless steel pivots are for interior or exterior use.
- Do not disassemble through-wire pivots as it will damage the pivot and void the warranty.
- Non-load bearing through-wire pivots must be mounted in the center position.

Door and Frame Preparation:

- Door and frame must be prepared in accordance with the model's pivot template.
- Wire access holes must be free of burrs.
- Verify the pivot fits freely in the door and frame preparation before beginning installation.

Installation:

- For non-load bearing through-wire pivot installations, hang the door on the top and bottom pivots first (load bearing, non-electrical pivots).
- Extract the interior wiring from the prepared holes in the door and frame.
- Terminate the wire connections with appropriate crimp splices or wire nuts.
  - **Do not hang the pivot by wires during installation or serious damage may occur.**
- Insulate all ends of unused wires.
- After all terminations are completed, carefully insert the wires into the prepared holes making sure they will not be cut or pinched as the pivot is installed.

ELECTRIC PIVOT INSTALLATION INSTRUCTIONS

CONCEALED ELECTRIC THROUGH-WIRE AND EXPOSED MAGNETIC MONITOR

Model Descriptions:

1102:	2-22ga wires
1102x4:	2-22ga wires, 4-26/28ga wires
1104:	4-26/28ga wires
1106:	6-26/28ga wires
1108	8-26/28ga wires
1100-10:	10-26/28ga wires
1100-12:	12-26/28ga wires
1182:	2-18ga wires
1182x4:	2-18ga wires, 4-26/28ga wires
1182x6:	2-18ga wires, 6-28ga wires
1110:	3-22ga monitor wires
1114:	4-26/28ga wires, 3-22ga monitor wires
1116:	6-26/28ga wires, 3-22ga monitor wires
1118:	8-26/28ga wires, 3-22ga monitor wires
1110-10:	10-28ga wires, 3-22ga monitor wires

NON-LOAD BEARING PIVOTS

3/4" OFFSET INTERMEDIATE PIVOT

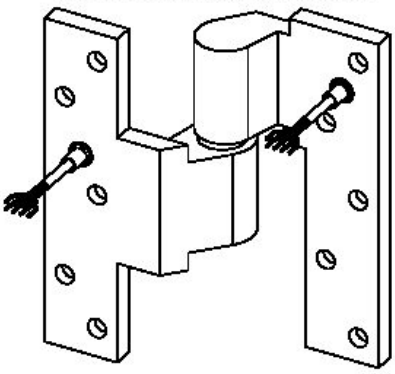

INTERMEDIATE PIVOT

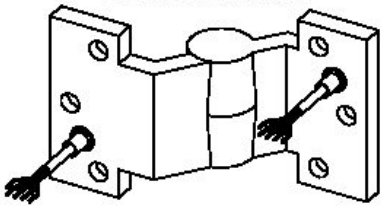

LOAD BEARING PIVOTS

POCKET PIVOT

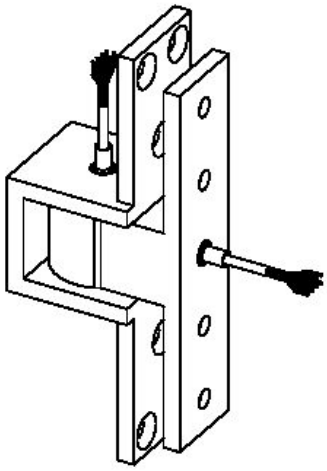

INTERMEDIATE PIVOT

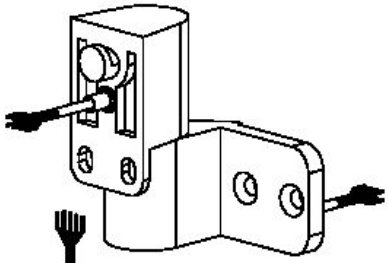

CENTER HUNG TOP PIVOT

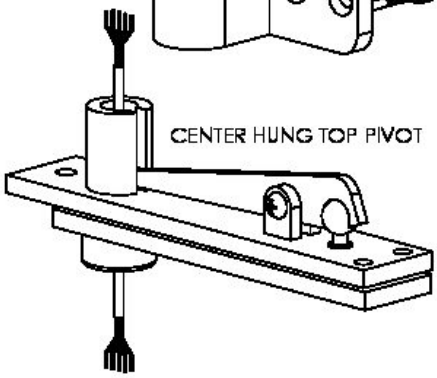

Electrical Specifications:

- 22ga, 26ga, and 28ga through-wire rated:
  - 3.5A continuous @ 50VAC/DC
  - 16A pulse for 400msec, 10sec min off-time between pulses
- 18ga through-wire rated:
  - 10A continuous @ 50VAC/DC
  - 20A inrush for 4sec, 10sec min off-time between pulses
- Monitor Switch contacts rated: 0.3A @ 28VDC

Optional Connectors:

- ASSA Electrolynx
- Allegion Connect
- Hager Quick Connect

Monitor Switch

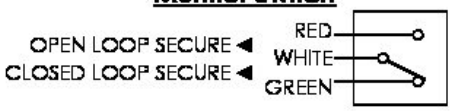

Notes:

- Steel pivots are for interior use only.
- Brass and stainless steel pivots are for interior or exterior use.
- Do not disassemble through-wire pivots as it will damage the pivot and void the warranty.
- Non-load bearing through-wire pivots must be mounted in the center position.

Door and Frame Preparation:

- Door and frame must be prepared in accordance with the model's pivot template.
- Wire access holes must be free of burrs.
- Verify the pivot fits freely in the door and frame preparation before beginning installation.

Installation:

- For non-load bearing through-wire pivot installations, hang the door on the top and bottom pivots first (load bearing, non-electrical pivots).
- Extract the interior wiring from the prepared holes in the door and frame.
- Terminate the wire connections with appropriate crimp splices or wire nuts.
  - **Do not hang the pivot by wires during installation or serious damage may occur.**
- Insulate all ends of unused wires.
- After all terminations are completed, carefully insert the wires into the prepared holes making sure they will not be cut or pinched as the pivot is installed.

ELECTRIC PIVOT INSTALLATION INSTRUCTIONS

CONCEALED ELECTRIC THROUGH-WIRE AND EXPOSED MAGNETIC MONITOR

Model Descriptions:

1102: 2-22ga wires
1102x4: 2-22ga wires, 4-26/28ga wires
1104: 4-26/28ga wires
1106: 6-26/28ga wires
1108 8-26/28ga wires
1100-10: 10-26/28ga wires
1100-12: 12-26/28ga wires
1182: 2-18ga wires
1182x4: 2-18ga wires, 4-26/28ga wires
1182x6: 2-18ga wires, 6-28ga wires
1110: 3-22ga monitor wires
1114: 4-26/28ga wires, 3-22ga monitor wires
1116: 6-26/28ga wires, 3-22ga monitor wires
1118: 8-26/28ga wires, 3-22ga monitor wires
1110-10: 10-28ga wires, 3-22ga monitor wires

NON-LOAD BEARING PIVOTS

3/4" OFFSET INTERMEDIATE PIVOT

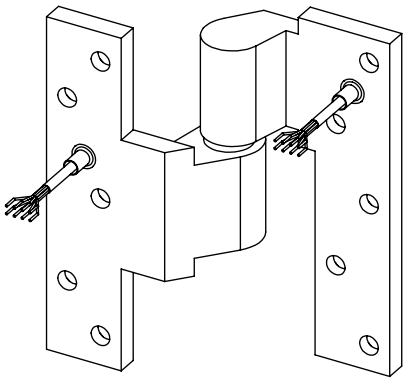

INTERMEDIATE PIVOT

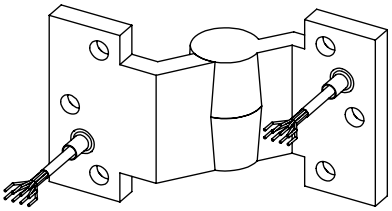

LOAD BEARING PIVOTS

POCKET PIVOT

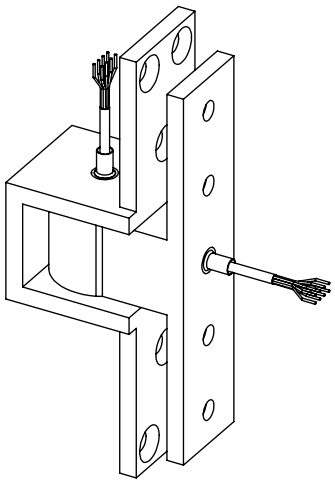

INTERMEDIATE PIVOT

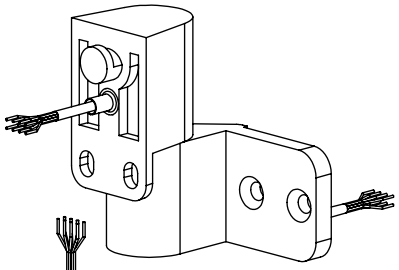

CENTER HUNG TOP PIVOT

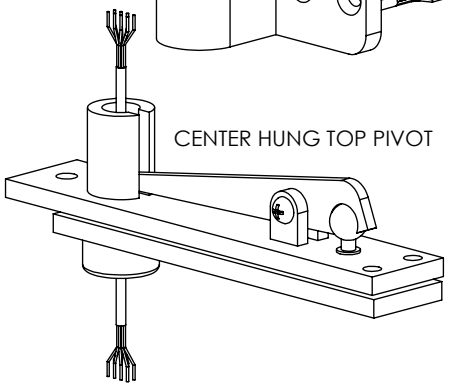

Electrical Specifications:

- 22ga, 26ga, and 28ga through-wire rated:
  - 3.5A continuous @ 50VAC/DC
  - 16A pulse for 400msec, 10sec min off-time between pulses
- 18ga through-wire rated:
  - 10A continuous @ 50VAC/DC
  - 20A inrush for 4sec, 10sec min off-time between pulses
- Monitor Switch contacts rated: 0.3A @ 28VDC

Optional Connectors:

- ASSA Electrolynx
- Allegion Connect
- Hager Quick Connect

Monitor Switch

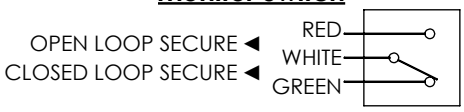

Notes:

- Steel pivots are for interior use only.
- Brass and stainless steel pivots are for interior or exterior use.
- Do not disassemble through-wire pivots as it will damage the pivot and void the warranty.
- Non-load bearing through-wire pivots must be mounted in the center position.

Door and Frame Preparation:

- Door and frame must be prepared in accordance with the model's pivot template.
- Wire access holes must be free of burrs.
- Verify the pivot fits freely in the door and frame preparation before beginning installation.

Installation:

- For non-load bearing through-wire pivot installations, hang the door on the top and bottom pivots first (load bearing, non-electrical pivots).
- Extract the interior wiring from the prepared holes in the door and frame.
- Terminate the wire connections with appropriate crimp splices or wire nuts.
  - **Do not hang the pivot by wires during installation or serious damage may occur.**
- Insulate all ends of unused wires.
- After all terminations are completed, carefully insert the wires into the prepared holes making sure they will not be cut or pinched as the pivot is installed.

ELECTRIC PIVOT INSTALLATION INSTRUCTIONS

CONCEALED ELECTRIC HINGES+ 80/8 AND SYSTEM MAGNETIC MONITOR



ELECTRIC PIVOT INSTALLATION INSTRUCTIONS

CONCEALED ELECTRIC THROUGH-WIRE AND EXPOSED MAGNETIC MONITOR

Model Descriptions:

1105 3-22ga wires
1105wb 3-22ga wires, 4-24/26ga wires
110a 4-24/26ga wires
110c 4-24/26ga wires
110ll 8-24/26ga wires
1105-10 10-24/26ga wires
1105-12 12-24/26ga wires
1180 2-18ga wires
1180wb 2-18ga wires, 4-24/26ga wires
1180elc 2-18ga wires, 4-26ga wires
1110 3-22ga monitor wires
111-c 4-24/26ga wires, 3-22ga monitor wires
111c 4-24/26ga wires, 3-22ga monitor wires
1118 8-24/26ga wires, 3-22ga monitor wires
1110-10 10-26ga wires, 5-22ga monitor wires

NON LOAD BEARING PIVOTS





LOAD BEARING PIVOTS





Electrical Specifications:

- 22ga, 24ga, and 26ga through-wire rated:
  - 3.0A continuous @ 30VAC/DC
  - 1mA pulse for 400msec, 10sec min off-time between pulses
- 18ga through-wire rated:
  - 10A continuous @ 30VAC/DC
  - 20A inrush for 4sec, 10sec min off-time between pulses
- Interior Switch contacts rated: 0.5A @ 28VDC

Optional Connectors:

- ASSA Receptacle
- Allegion Connect
- Hager Quick Connect

Monitor Switch

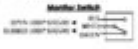

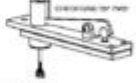

Notes:

- Steel pivots are for interior use only.
- Brass and stainless steel pivots are for interior or exterior use.
- Do not disassemble through-wire pivots as it will damage the pivot and void the warranty.
- Non-load bearing through-wire pivots must be mounted in the center position.

Door and Frame Preparation:

- Door and frame must be prepared in accordance with the models pivot template.
- Wire raceway holes must be free of burrs.
- Verify the pivot fits evenly in the door and frame preparation before beginning installation.

Installation:

- For non-load bearing through-wire pivot installations, hang the door on the top and bottom pivots first (load bearing, non-electrical pivots).
- Extract the interior wiring from the prepared holes in the door and frame.
- Terminate the wire connections with appropriate crimp splices or wire nuts.
  - **Do not hang the pivot by wires during installation or serious damage may occur.**
- Insulate all ends of unused wires.
- After all terminations are completed, carefully insert the wires into the prepared holes making sure they will not be cut or pinched as the pivot is installed.

ELECTRIC PIVOT INSTALLATION INSTRUCTIONS

CONCEALED ELECTRIC THROUGH-WIRE AND EXPOSED MAGNETIC MONITOR

Model Descriptions:

1102: 2-22ga wires
1102x4: 2-22ga wires, 4-26/28ga wires
1104: 4-26/28ga wires
1106: 6-26/28ga wires
1108 8-26/28ga wires
1100-10: 10-26/28ga wires
1100-12: 12-26/28ga wires
1182: 2-18ga wires
1182x4: 2-18ga wires, 4-26/28ga wires
1182x6: 2-18ga wires, 6-28ga wires
1110: 3-22ga monitor wires
1114: 4-26/28ga wires, 3-22ga monitor wires
1116: 6-26/28ga wires, 3-22ga monitor wires
1118: 8-26/28ga wires, 3-22ga monitor wires
1110-10: 10-28ga wires, 3-22ga monitor wires

NON-LOAD BEARING PIVOTS

3/4" OFFSET INTERMEDIATE PIVOT

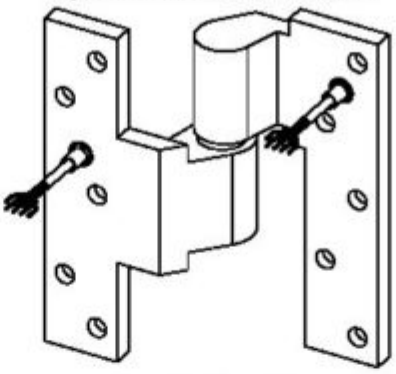

INTERMEDIATE PIVOT

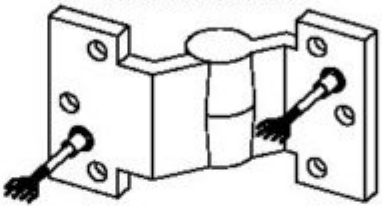

LOAD BEARING PIVOTS

POCKET PIVOT

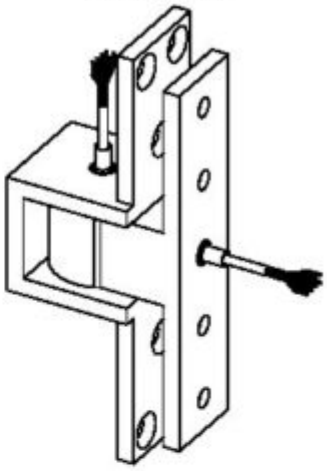

INTERMEDIATE PIVOT

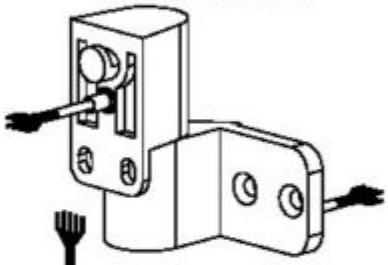

CENTER HUNG TOP PIVOT

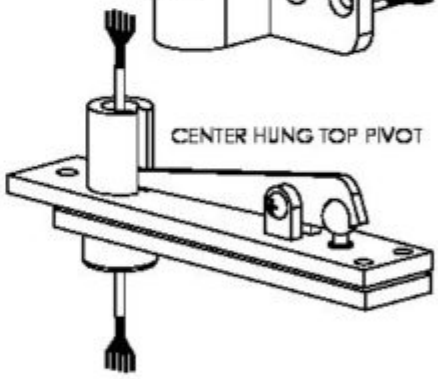

Electrical Specifications:

- 22ga, 26ga, and 28ga through-wire rated:
  - 3.5A continuous @ 50VAC/DC
  - 16A pulse for 400msec, 10sec min off-time between pulses
- 18ga through-wire rated:
  - 10A continuous @ 50VAC/DC
  - 20A inrush for 4sec, 10sec min off-time between pulses
- Monitor Switch contacts rated: 0.3A @ 28VDC

Optional Connectors:

- ASSA Electrolynx
- Allegion Connect
- Hager Quick Connect

Monitor Switch

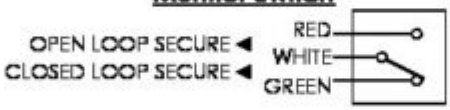

Notes:

- Steel pivots are for interior use only.
- Brass and stainless steel pivots are for interior or exterior use.
- Do not disassemble through-wire pivots as it will damage the pivot and void the warranty.
- Non-load bearing through-wire pivots must be mounted in the center position.

Door and Frame Preparation:

- Door and frame must be prepared in accordance with the model's pivot template.
- Wire access holes must be free of burrs.
- Verify the pivot fits freely in the door and frame preparation before beginning installation.

Installation:

- For non-load bearing through-wire pivot installations, hang the door on the top and bottom pivots first (load bearing, non-electrical pivots).
- Extract the interior wiring from the prepared holes in the door and frame.
- Terminate the wire connections with appropriate crimp splices or wire nuts.
  - **Do not hang the pivot by wires during installation or serious damage may occur.**
- Insulate all ends of unused wires.
- After all terminations are completed, carefully insert the wires into the prepared holes making sure they will not be cut or pinched as the pivot is installed.

ELECTRIC PIVOT INSTALLATION INSTRUCTIONS

CONCEALED ELECTRIC THROUGH-WIRE AND EXPOSED MAGNETIC MONITOR

Model Descriptions:

1102:	2-22ga wires
1102x4:	2-22ga wires, 4-26/28ga wires
1104:	4-26/28ga wires
1106:	6-26/28ga wires
1108	8-26/28ga wires
1100-10:	10-26/28ga wires
1100-12:	12-26/28ga wires
1182:	2-18ga wires
1182x4:	2-18ga wires, 4-26/28ga wires
1182x6:	2-18ga wires, 6-28ga wires
1110:	3-22ga monitor wires
1114:	4-26/28ga wires, 3-22ga monitor wires
1116:	6-26/28ga wires, 3-22ga monitor wires
1118:	8-26/28ga wires, 3-22ga monitor wires
1110-10:	10-28ga wires, 3-22ga monitor wires

NON-LOAD BEARING PIVOTS

3/4" OFFSET INTERMEDIATE PIVOT

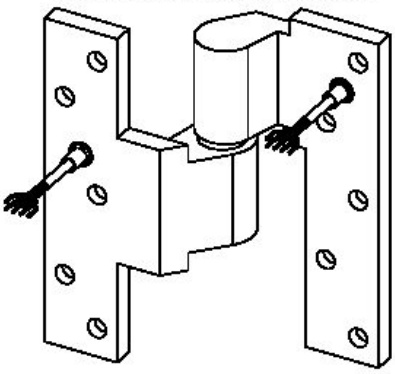

INTERMEDIATE PIVOT

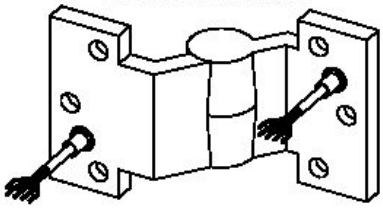

LOAD BEARING PIVOTS

POCKET PIVOT

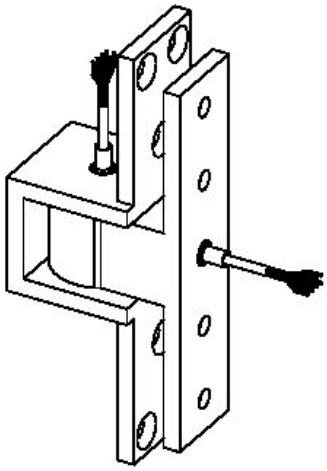

INTERMEDIATE PIVOT

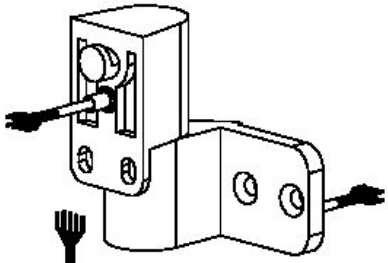

CENTER HUNG TOP PIVOT

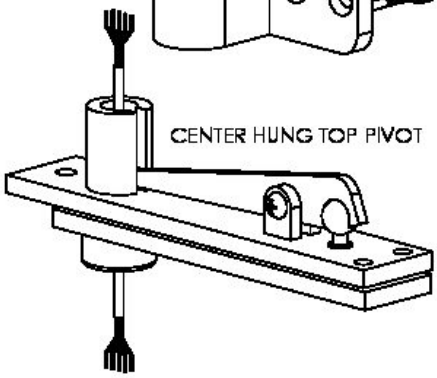

Electrical Specifications:

- 22ga, 26ga, and 28ga through-wire rated:
  - 3.5A continuous @ 50VAC/DC
  - 16A pulse for 400msec, 10sec min off-time between pulses
- 18ga through-wire rated:
  - 10A continuous @ 50VAC/DC
  - 20A inrush for 4sec, 10sec min off-time between pulses
- Monitor Switch contacts rated: 0.3A @ 28VDC

Optional Connectors:

- ASSA Electrolynx
- Allegion Connect
- Hager Quick Connect

Monitor Switch

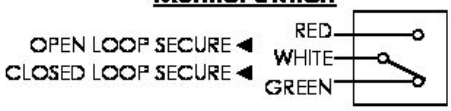

Notes:

- Steel pivots are for interior use only.
- Brass and stainless steel pivots are for interior or exterior use.
- Do not disassemble through-wire pivots as it will damage the pivot and void the warranty.
- Non-load bearing through-wire pivots must be mounted in the center position.

Door and Frame Preparation:

- Door and frame must be prepared in accordance with the model's pivot template.
- Wire access holes must be free of burrs.
- Verify the pivot fits freely in the door and frame preparation before beginning installation.

Installation:

- For non-load bearing through-wire pivot installations, hang the door on the top and bottom pivots first (load bearing, non-electrical pivots).
- Extract the interior wiring from the prepared holes in the door and frame.
- Terminate the wire connections with appropriate crimp splices or wire nuts.
  - **Do not hang the pivot by wires during installation or serious damage may occur.**
- Insulate all ends of unused wires.
- After all terminations are completed, carefully insert the wires into the prepared holes making sure they will not be cut or pinched as the pivot is installed.

ELECTRIC PIVOT INSTALLATION INSTRUCTIONS

EXPOSED MAGNETIC MONITOR

1110

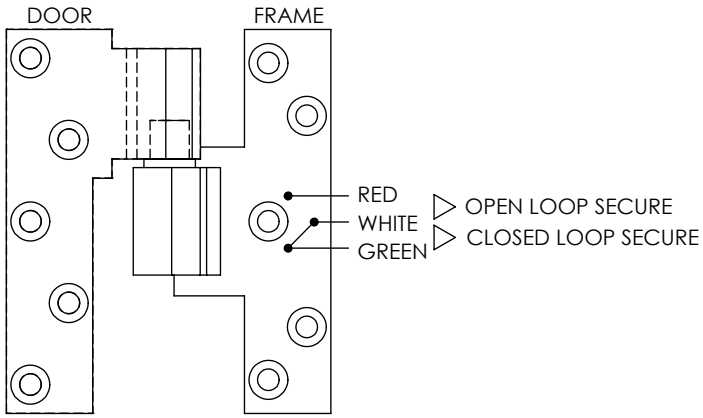

Model Descriptions:

1110: 3 wire, 22ga monitor

Electrical Specifications:

Switch contacts rated: 0.3A @ 28VDC

Notes:

- Steel pivots are for interior use only.
- Brass, stainless steel, and aluminum pivots are for interior or exterior use.

Door and Frame Preparation:

- Door and frame must be prepared in accordance with the model's pivot template.
- Wire access holes must be free of burrs.
- Verify the pivot fits freely in the door and frame preparation before beginning installation.

Installation:

- Extract the interior wiring from the prepared hole in the frame.
- Terminate the wire connections with appropriate crimp splices or wire nuts.
  - **Do not hang the pivot by wires during installation or serious damage may occur.**
- Insulate all ends of unused wires.
- After all terminations are completed, carefully insert the wires into the prepared hole making sure they will not be cut or pinched as the pivot is installed.

ELECTRIC PIVOT INSTALLATION INSTRUCTIONS

EXPOSED MAGNETIC MONITOR AND CONCEALED THROUGH-WIRE

1114, 1116, 1118, 1110-10

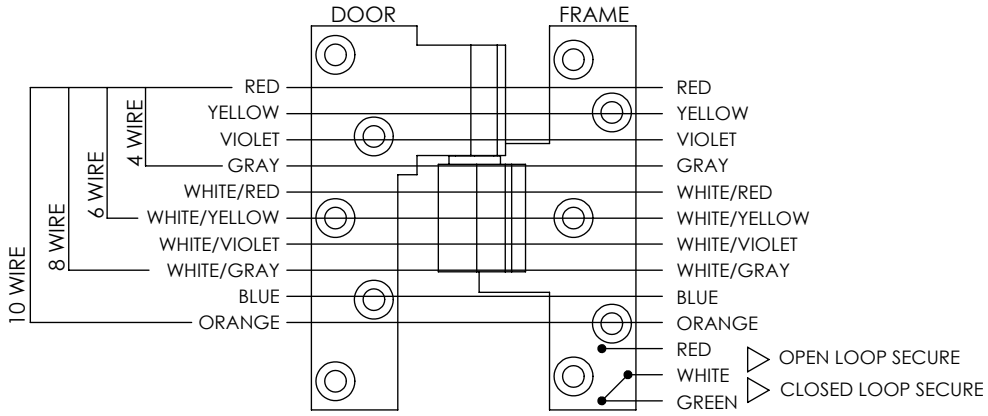

Model Descriptions:

1114: 3 wire, 22ga monitor x 4 wire, 28ga
1116: 3 wire, 22ga monitor x 6 wire, 28ga
1118: 3 wire, 22ga monitor x 8 wire, 28ga
1110-10: 3 wire, 22ga monitor x 10 wire, 28ga

Electrical Specifications:

Switch contacts rated: 0.3A @ 28VDC
Each 28ga through-wire rated:

- 3.5A continuous @ 50VAC/DC
- 16A pulse @ 50VAC/DC
  - 400msec maximum pulse-width
  - 10sec minimum off-time between pulses

Notes:

- Steel pivots are for interior use only.
- Brass, stainless steel, and aluminum pivots are for interior or exterior use.
- Do not disassemble the pivot as it will damage the pivot and void the warranty.
- Monitor and through-wire pivots are non-load bearing and must be mounted in the center position.

Door and Frame Preparation:

- Door and frame must be prepared in accordance with the model's pivot template.
- Wire access holes must be free of burrs.
- Verify the pivot fits freely in the door and frame preparation before beginning installation.

Installation:

- Hang the door on the top and bottom pivots first (load bearing, non-electrical pivots).
- Extract the interior wiring from the prepared holes in the door and frame.
- Terminate the wire connections with appropriate crimp splices or wire nuts.
  - **Do not hang the pivot by wires during installation or serious damage may occur.**
- Insulate all ends of unused wires.
- After all terminations are completed, carefully insert the wires into the prepared holes making sure they will not be cut or pinched as the pivot is installed.

ELECTRIC PIVOT INSTALLATION INSTRUCTIONS

CONCEALED ELECTRIC THROUGH-WIRE

1104, 1106, 1108, 1100-10, 1100-12

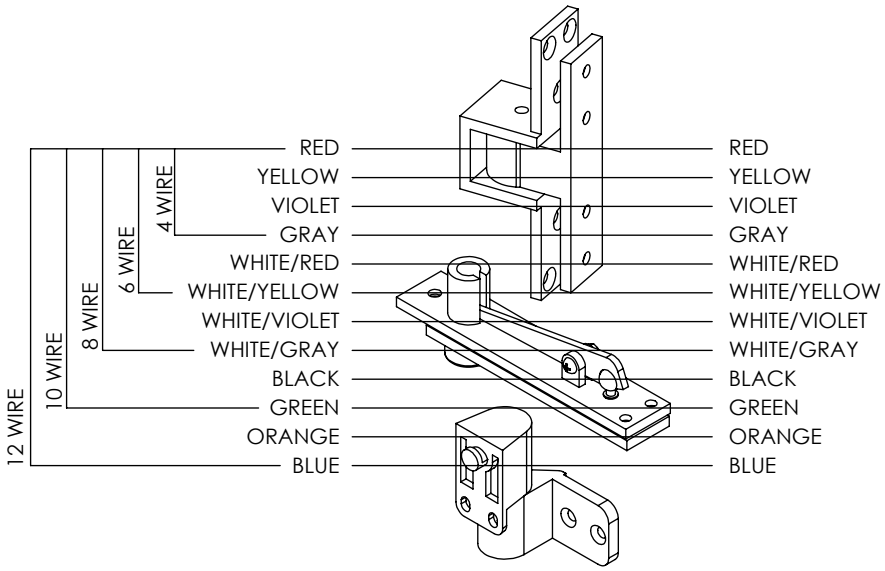

Model Descriptions:

1104: 4 wire, 28ga
1106: 6 wire, 28ga
1108: 8 wire, 28ga
1100-10: 10 wire, 28ga
1100-12: 12 wire, 28ga

Electrical Specifications:

Each 28ga through-wire rated:

- 3.5A continuous @ 50VAC/DC
- 16A pulse @ 50VAC/DC
  - 400msec maximum pulse-width
  - 10sec minimum off-time between pulses

Notes:

- Steel pivots are for interior use only.
- Brass, stainless steel, and aluminum pivots are for interior or exterior use.
- Do not disassemble the pivot as it will damage the pivot and void the warranty.

Door and Frame Preparation:

- Door and frame must be prepared in accordance with the model's pivot template.
- Wire access holes must be free of burrs.
- Verify the pivot fits freely in the door and frame preparation before beginning installation.

Installation:

- Extract the interior wiring from the prepared holes in the door and frame.
- Terminate the wire connections with appropriate crimp splices or wire nuts.
  - **Do not hang the pivot by wires during installation or serious damage may occur.**
- Insulate all ends of unused wires.
- After all terminations are completed, carefully insert the wires into the prepared holes making sure they will not be cut or pinched as the pivot is installed.

ELECTRIC PIVOT INSTALLATION INSTRUCTIONS

CONCEALED ELECTRIC THROUGH-WIRE

1102, 1102x4

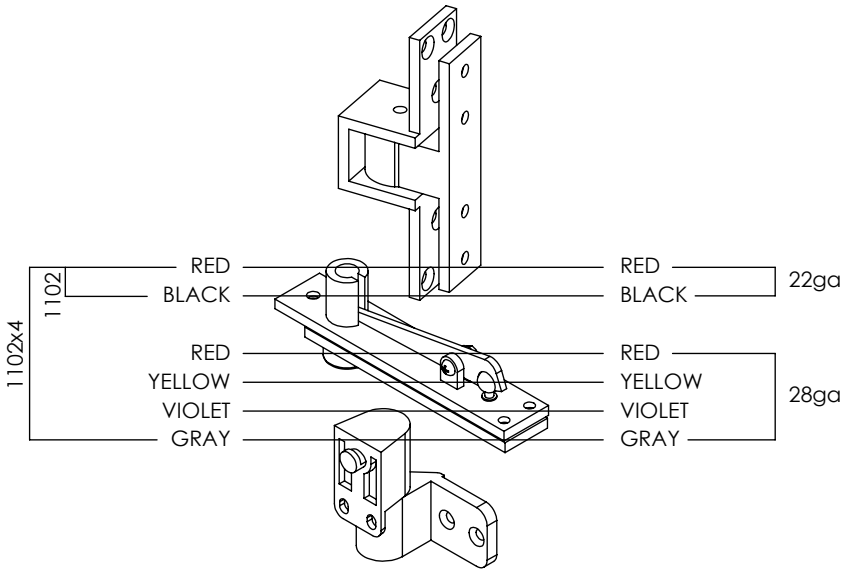

Model Descriptions:

1102: 2 wire, 22ga
1102x4: 2 wire, 22ga x 4 wire, 28ga

Electrical Specifications:

Each 22ga and 28ga through-wire rated:

- 3.5A continuous @ 50VAC/DC
- 16A pulse @ 50VAC/DC
  - 400msec maximum pulse-width
  - 10sec minimum off-time between pulses

Notes:

- Steel pivots are for interior use only.
- Brass, stainless steel, and aluminum pivots are for interior or exterior use.
- Do not disassemble the pivot as it will damage the pivot and void the warranty.

Door and Frame Preparation:

- Door and frame must be prepared in accordance with the model's pivot template.
- Wire access holes must be free of burrs.
- Verify the pivot fits freely in the door and frame preparation before beginning installation.

Installation:

- Extract the interior wiring from the prepared holes in the door and frame.
- Terminate the wire connections with appropriate crimp splices or wire nuts.
  - **Do not hang the pivot by wires during installation or serious damage may occur.**
- Insulate all ends of unused wires.
- After all terminations are completed, carefully insert the wires into the prepared holes making sure they will not be cut or pinched as the pivot is installed.

302-03-03 7" HINGE MORTAR GUARD INSTALLATION INSTRUCTIONS

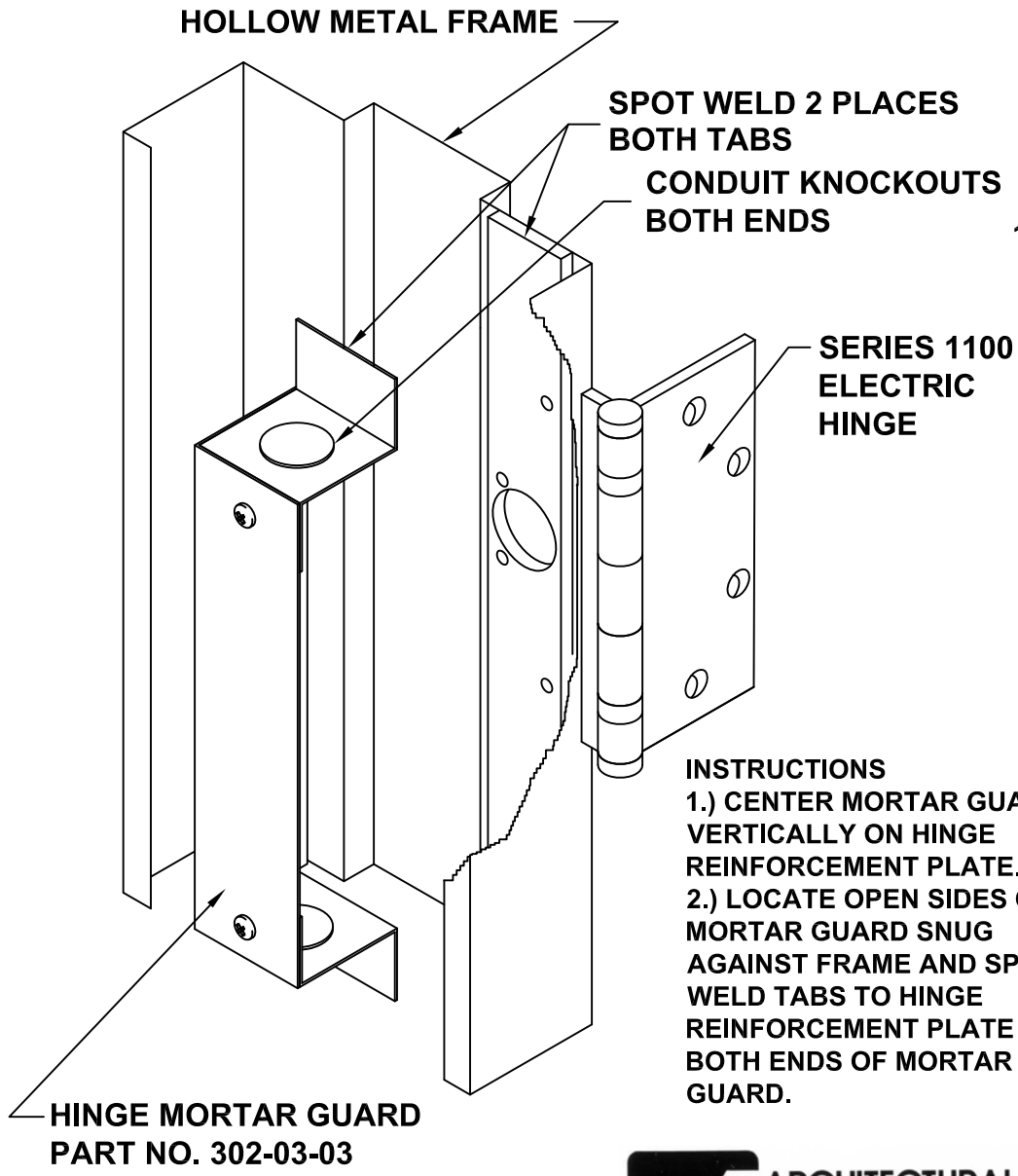

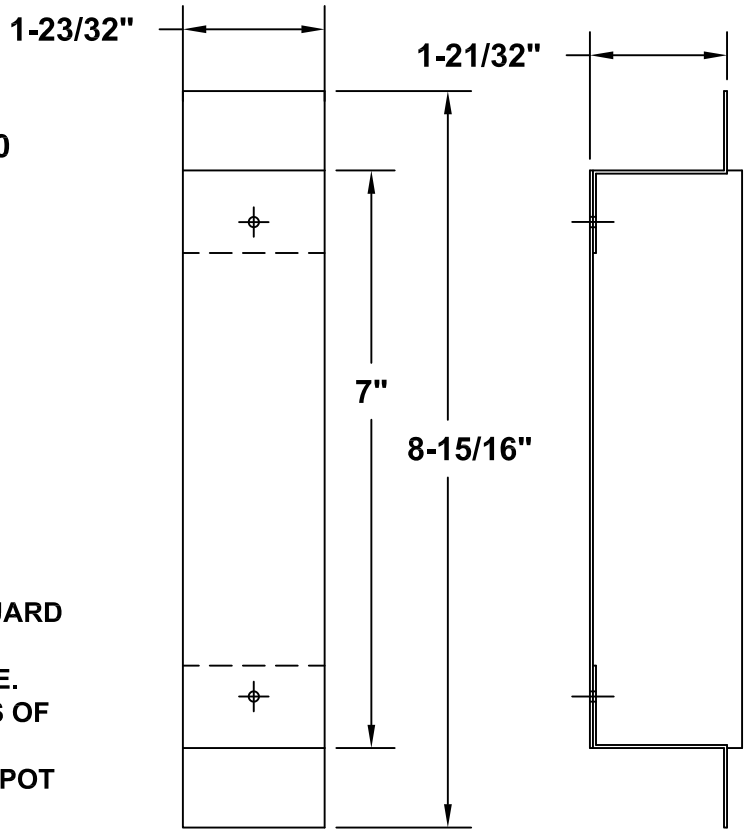

INSTRUCTIONS

1.) CENTER MORTAR GUARD VERTICALLY ON HINGE REINFORCEMENT PLATE.

2.) LOCATE OPEN SIDES OF MORTAR GUARD SNUG AGAINST FRAME AND SPOT WELD TABS TO HINGE REINFORCEMENT PLATE ON BOTH ENDS OF MORTAR GUARD.

ARCHITECTURAL CONTROL SYSTEMS, INCORPORATED

2720 CLARK AVE., ST. LOUIS, MO 63103 (800) 753-5558

II-1100-MG

REV. 07/2017

ACSI MODEL 1406-04-AO POWER SUPPY
INSTALLATION INSTRUCTIONS

Features:

- Up to 2.0 Amps Load Capacity
- Class 2 Rated Outputs
- Overload, Over Voltage, and Short Circuit Protection
- Two Output Devices Controlled by One Input or Programmed for Independent Control
- Two Independent Outputs for Automatic Door Operator Interface
- Input for Connection to Fire Alarm
- Auxiliary Outputs for Powering Stand Alone Devices, Such as Keypads, Motion Detectors, and Status Indicators
- UL Listed and Tested to 294 Standard for Access Control System Units with Security Levels Rated I for Physical Attack, IV for Endurance, I for Line Security, I for Standby Power



INSTALLATION

Transformer Model BE31763001 by Basler Electric, Transformer Model 2010028 by Galaxy Transformer and Magnetics, and Transformer Model A41-130-28A34 by EWC have been certified for UL applications.

The 1406 enclosure should be securely fastened to the wall using the four 1/4 inch diameter mounting holes located in the back of the box. Position the enclosure so that the transformer is located on the left-hand side. The 1406 must not be installed outdoors.

For the 120VAC power input, terminal block TB1 will accommodate up to 12 AWG wire (solid). Conduit must be used to provide an adequate earth ground to the enclosure.

NOTE: The maximum input current is 750mA.

The 1406 is designed to be used with all exit devices modified for 1550C electric latch retraction. Use the chart below to determine the correct wire gauge per given length of two-conductor cable that will be run from the 1406 to each exit device. Do not exceed the maximum length listed with each wire gauge.

WIRE GAUGE	MAXIMUM LENGTH OF TWO-CONDUCTOR CABLE
16 AWG	40 FEET
14 AWG	60 FEET
12 AWG	100 FEET

Up to two devices can be used with the 1406. If only one device is to be used, wire to the “DEVICE ONE” location at TB3, terminals 5 and 6.

NOTE: When using the 1550C exit device with red and black leads, be sure to observe polarity when connecting devices 1 and 2 to TB3. (Refer to the wiring diagram located on the lid of the controller.)

STANDARD OPERATION

The 1406 provides a choice of two methods of electric latch retraction: Single System or Dual System.

SINGLE SYSTEM LATCH RETRACTION

This method allows one input to control two devices sequentially. A momentary switch closure across terminals 1 and 2 of TB3 will retract DEVICE ONE first, followed by DEVICE TWO. Use this method for single door applications or on a pair of doors using a device on one or both leaves. The 1406 comes from the factory already set up for this method.

DUAL SYSTEM LATCH RETRACTION (OPTIONAL)

This method allows independent control of DEVICE ONE and DEVICE TWO outputs by their own separate input. A momentary switch closure across terminals 1 and 2 of TB3 will retract DEVICE ONE only. A momentary switch closure across terminals 7 and 8 of TB3 will retract DEVICE TWO. No more than one device can be used per output. Use this option for applications requiring two single door systems or two pair door systems using one device on the active leaf of each pair of doors. To change over to the optional dual system latch retraction, move the program jumper PJ1 from between the middle post and the end post marked “S” (Single System) to between the middle post and the end post marked “D” (Dual System).

NOTE: When using the optional method, DEVICE ONE and DEVICE TWO can never be activated at the same time in the event that both input switches are actuated simultaneously. If this should occur, DEVICE ONE will always activate first, followed by DEVICE TWO.

When using a momentary, normally open switch for activating latch retraction, adjust pot R2 (for DEVICE ONE) or pot R4 (for DEVICE TWO) on the p.c. board to the desired latch retract delay time from 1 to 20 seconds. Turn the pot clockwise to increase the delay time.

When using normally open contacts from a keypad or card reader (with built-in time delay) or a maintain switch, turn pot R2 (or R4) fully counterclockwise to the minimum delay time (approx. 0.5 sec.). A contact closure will activate latch

retraction. Upon opening of the timed or maintained contacts, the device will latch within 0.5 second.

1550C ELR SOLENOID ASSEMBLIES - THEORY OF OPERATION

ACSI provides two types of 1550C ELR (electric latch retraction) devices: One type is designed to fit inside exit devices of narrow height and depth (1-1/4"). The leads to these devices are polarized: Red lead = (+); Black Lead = (-). The other type ELR device will fit into exit devices having a minimum height and depth of 1-1/2". The leads to these devices are non-polarized and colored blue.

1550C ELR Device with Polarized Leads:
This device contains a pulse module which delivers a pulse at approx. 24VDC to a high current coil inside the exit device every 6 seconds until the latch is finally pulled back all the way. At this point, a control rod passes over a reflective sensor and signals the module to stop pulsing. There is always an initial pulse that occurs at the moment the system is activated. During the period the system remains activated, output voltage is applied to a low current secondary coil. This coil is responsible for holding the latch in the retracted position until instructed to return to the “fail secure” position. (See note 2 on page 7.) The device contains a fuse to protect the ELR circuit in the event of a reversed polarity wire connection.

1550C ELR Device with Non-polarized Leads:
This device contains a powerful solenoid that performs both pulling and holding functions. An initial high current pulse occurs each time output voltage is applied to the device. After the pulse, the solenoid switches over to a "holding" state by way of frequency modulation which reduces the current to allow the solenoid to run at a cooler temperature. Because of its non-polar design, the device contains no fuse.

OPERATION WITH AUTOMATIC DOOR OPERATOR

The 1406 is provided with two outputs (one output associated with DEVICE ONE and the other output associated with DEVICE TWO) for controlling separate automatic door operators. Each output consists of normally open relay contacts that are field wired directly to the “DOOR ACTIVATION” input of the automatic door operator. These outputs are activated within a moment after activation of their corresponding devices to allow time for the doors to be fully unlatched before automatic opening begins.

Time delay pots R2 and R4 are factory set at 5 seconds, which are appropriate when using this controller with automatic door operators. When the delay times out, power is removed from the exit device and the signal to the auto door

operator input is terminated, thus allowing the operator's "DOOR HOLD OPEN" delay to time out and close the door.

NOTE: When using the single system latch retraction method with automatic door operator interface and both devices are being used, the operator control input must be wired to the 1406 automatic door operator output for DEVICE TWO (TB3, terminals 9 and 10).

OPERATION WITH FIRE ALARM

The 1406 can be wired to the fire alarm relay normally closed contacts. When a fire alarm occurs, any door that is currently unlatched, whether by momentary time delay or by maintained switch, will immediately latch secure. During the time that the fire alarm is active, electronic control of the automatic door opening system by wall switch, card reader, keypad, etc., is disabled. The door can then only be opened manually.

The 1406 comes from the factory set up for use without fire alarm interface. If the fire alarm is to be used with this controller, move program jumper PJ2 from between the middle post and the end post marked "FA DIS" (Fire Alarm Disabled), to between the middle post and the end post marked "FA EN" (Fire Alarm Enabled).

NOTE: The current drawn through fire alarm relay contacts will be 120mA @ 24VDC

AUXILIARY POWER SOURCE OUTPUTS

Two constant, power limited auxiliary outputs are provided for powering keypads, motion sensors, annunciator panels, electromagnetic door holders, relays, LEDs, etc. Choose between auxiliary output #1 or auxiliary output #2.

- Auxiliary Output #1 Range: 26.7V - 28.0V, Nominal
- Auxiliary Output #2 Range: 12.6V - 16.5V, Nominal

NOTE: Both auxiliary outputs can be used at the same time for loads requiring different voltages (for a combined maximum load current of 500mA). However, <u>do not tie the aux. output #2 ground (TB3, terminal 18) common to the aux. output #1 ground (TB3, terminal 16).</u> Both of these power sources must be isolated from each other.

CAUTION: IT IS RECOMMENDED TO USE OUTPUT #2 WITH EQUIPMENT THAT HAVE INPUTS RATED FOR 12 - 24 VOLTS, AC OR DC. CHECK WITH THE MANUFACTURER BEFORE CONNECTING 24VDC RATED EQUIPMENT ACROSS OUTPUT #1 TO ENSURE THE HIGHER VOLTAGE WILL NOT CAUSE ANY DAMAGE.

TROUBLESHOOTING

Before proceeding through the troubleshooting section, ensure that all device latches are not binding against their corresponding strikes. A bound latch can cause sluggish electric retraction or prevent retraction entirely.

Power Limited Outputs

All outputs to the 1406 are power limited. Depending on the output, if a short circuit or an over load condition should occur, the output will either shut off entirely or go into a safe current limiting state.

IMPORTANT!: THE MAXIMUM RATED LOAD FOR ALL OUTPUTS COMBINED IS 2.0 AMPS, INCLUDING 250mA (MAX.) FOR EACH AUXILIARY OUTPUT.

The outputs to ELR Device One (TB3, terminals 5 & 6) and ELR Device Two (TB3, terminals 11 & 12) will completely shut down to 0 volts when a short circuit across the output occurs or when the load exceeds 5 amps. To reset the output, the short circuit or overload must first be located and removed. Next, momentarily switch off the outputs by opening the contacts across input terminals 1 & 2 or 7 &8, whichever is used. Before switching outputs back on, ensure the load does not exceed the maximum current ratings.

Both auxiliary outputs will go into a current limiting state when the load exceeds approximately 2.0 amps or in the event of a short circuit. The current is reduced to a safe level when either of these conditions occur. The output voltage will automatically return to its normal level when the short circuit or overload condition is removed and replaced by a load falling under the maximum current rating.

Symptom:

Neither DEVICE ONE nor DEVICE TWO retracts after the control switch is activated.

Possible Causes:

1. The power limited output to Device 1 or Device 2 (or both) may have shut down. When this happens, the field wires that are run to the exit device are probably shorted together against the conduit, door frame or electric hinge.

2. If using the 1550C ELR device with polarized leads, the slow blow 4 amp fuse (Littlefuse #239.004) inside the exit device may have blown. The most likely cause would be reversed polarity of the exit device red and black leads: RED = "+"; BLACK = "-". (Refer to the wiring diagram for proper connection.) Other possible causes may be shorted wires in the solenoid assembly or a defective pulse module.

3. An open connection in the field wiring between the power supply and control switch used for activating latch retraction.

4. A defective control switch.

5. An open connection in the field wiring between the power supply and exit device.

6. There may be no pulse. To check for pulses, prop the door open and connect a voltmeter across the red and black leads coming from the exit device (red lead is positive), or across the blue leads if using the alternate non-polarized 1550C ELR device . Next, connect a jumper wire across terminals 1 and 2 of TB3 to keep DEVICE ONE in a continuous retracted state. If the voltmeter measures between 30 and 40 VDC at the moment the jumper wire was installed, but the latch did not budge, then no initial pulse was generated. For the polarized 1550C ELR device, check for a series of timed pulses that will occur approximately every six seconds. (Make sure that the control rod is not positioned over the reflective sensor on the pulse module when making this next check.) Wait for about 20 seconds to see if the latch pulls in. If it still does not respond, then it indicates the pulse module is inoperative and the entire solenoid/module assembly must be replaced.

Symptom:

When 120 volts is applied to TB1, the exit devices immediately retract, even though the control switch had not been activated.

Possible Causes:

1. Field wiring between the power supply and control switch are shorted together against the conduit or switch mounting box.

2. A maintain switch is being used and is in the closed position.

3. A defective control switch.

Symptom (for polarized 1550C ELR devices only):

A noticeable buzzing sound at equal intervals is coming from inside the exit device when activated.

Possible Causes:

1. The latch is binding against its corresponding strike and preventing it from fully retracting, due to misalignment between the latch and strike opening.

2. A defective pulse module

For Service or Technical Support, call Architectural Control Systems, Inc. at (800) 753-5558.

NOTE 1: THIS UNIT IS LISTED AS AN EXIT DEVICE CONTROL UNIT TO UL294 REQUIREMENTS.

NOTE 2: THE POWER OUTPUT OF THE CONTROLLER IS OF A FAIL SECURE DESIGN. THE EXIT DEVICE REMAINS LATCHED DURING A COMPLETE POWER FAILURE, BUT ALWAYS ALLOWS FREE MECHANICAL EGRESS. LISTED PANIC HARDWARE MAY BE REQUIRED TO ALLOW EMERGENCY EXIT. CONSULT LOCAL AUTHORITY HAVING JURISDICTION.

GENERAL WIRING DIAGRAM FOR 1406-04-AO ELECTRIC LATCH RETRACTION CONTROLLER

USE INSTALLATION INSTRUCTIONS II - 1400-2

CLASS 2 OUTPUTS

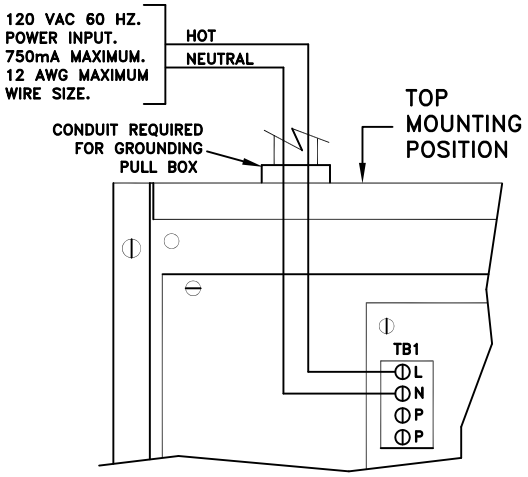

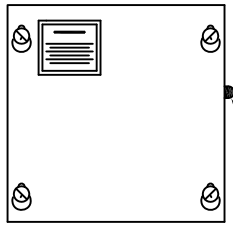

SECURITY
UL LISTED
EQUIPMENT
4M73

ACCESS CONTROL POWER SUPPLY, ACCESS CONTROL ELECTRIC LATCH RETRACTION (ELR) CONTROLLER

CONTROLLER INTENDED FOR INDOOR USE ONLY.



USED FOR ADJUSTING UNLOCK DELAY TIME WHEN USING MOMENTARY ACTION SWITCHES FOR SW. 1 AND SW. 2. R2 ADJUSTS DEV. 1 (SINGLE DOOR) OR DEV. 1 & DEV. 2 (PAIR DOORS) TIME DELAY. R4 ADJUSTS DEV. 2 (SINGLE DOOR) TIME DELAY. 20 SEC. MAX. DELAY TIME.

MFG. DATE:

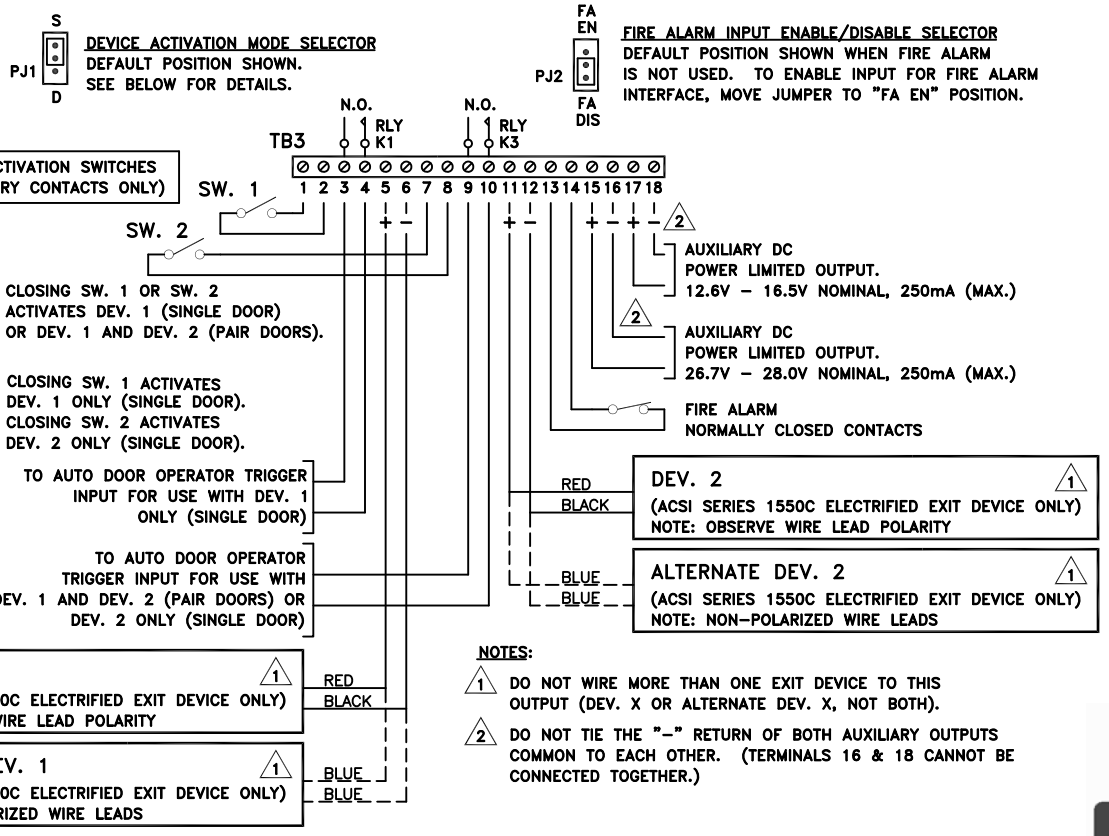

NOTES:

1. DO NOT WIRE MORE THAN ONE EXIT DEVICE TO THIS OUTPUT (DEV. X OR ALTERNATE DEV. X, NOT BOTH).
2. DO NOT TIE THE "-" RETURN OF BOTH AUXILIARY OUTPUTS COMMON TO EACH OTHER. (TERMINALS 16 & 18 CANNOT BE CONNECTED TOGETHER.)

FOR TROUBLE SHOOTING ASSISTANCE,
CONTACT ACSI TECHNICAL SUPPORT:
1-800-753-5558

REV. 06/15

ACSI
ARCHITECTURAL CONTROL SYSTEMS INC.

II – 1400-3

ACSI MODEL 1410 POWER SUPPLY
INSTALLATION INSTRUCTIONS

Features:

- For use with doors or groups of doors that must interlock with each other to regulate control of accessing one area from another, or to prevent the spread of contaminants to non-hazardous locations
- Applications include research laboratories, pharmaceuticals, detention centers, office buildings
- Separate plug-in “daughter” p.c. boards used to control interlocking doors – can be programmed for normally locked or normally unlocked operation
- Any one door can be programmed to be part of (common to) as many as three separate interlocking systems
- Inputs available for fire alarm and optional emergency release interface for overriding the interlocking systems
- Each power supply can control up to four doors, and can be expanded to control several more by linking power supplies together via a four-wire bus
- Filtered/Regulated 24 Volts DC
- Class 2 Rated Outputs
- Overload, over voltage, and short circuit protection
- Automatically accepts 120VAC or 240VAC input
- UL listed and Tested to 294 Standard for Access Control System Units with Security Levels Rated I for Physical Attack, IV for Endurance, I for Line Security, I for Standby Power

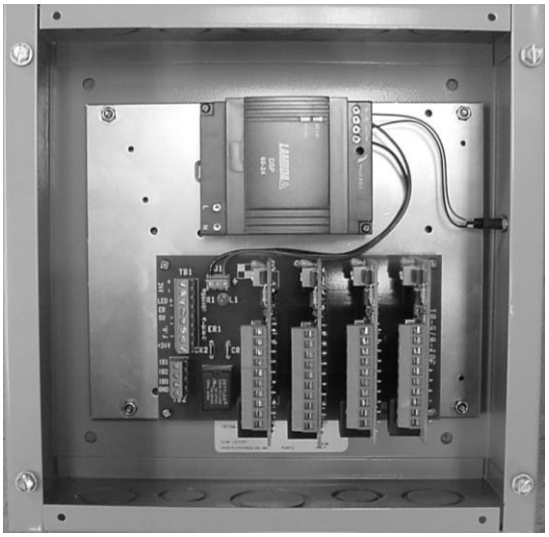

Installing the 1410

For UL installations, the product is to be used only with other UL Listed and compatible security products. The unit must be mounted indoors, avoiding moist or wet areas. Some common locations for mounting the 1410 enclosure would be in the plenum near the door containing the electric locking device, or in a nearby closet or electrical room.

When installing the unit in the plenum, wires must either be of plenum rating or contained inside conduit. The unit must be mounted in a vertical position with the power supply module located at the top, as shown in the photograph above. Four 1/4" holes are provided for mounting the box to the wall or other rigid surface. If the surface material is wood, it must be at least 1 inch thick. Use either a truss or pan head, 1 inch long sheet metal screw (#10 or larger) for fastening the box to the wood surface. When mounting the unit to 1/2 inch or 5/8 inch dry wall, it is recommended that 3/16 inch or 1/4 inch diameter toggle bolts be used for maximum support. Use the same size toggle bolts for mounting the unit to hollow concrete blocks. For mounting to concrete, solid block, or brick, it is recommended to use 1-3/4 inch long (minimum) x 1/4 inch diameter hex head bolt anchors (sometimes called power-bolts) in 18-8 stainless steel or Grade 5 zinc-plated steel. The sub plate can be removed from the box for easier access to the mounting holes. To remove the sub plate, locate the four #6 locknuts near each corner of the plate and remove. The 6-32 studs, from which the sub plate mounts to, are held in place to the box by threaded standoffs.

Wiring the AC Input

The 1410 power supply is rated for use with a 20 amp branch circuit and is capable of accepting either 120VAC or 240VAC input without the need for making any changes, or reconfiguring to convert from one input voltage to the other. Because the power supply module contains Class 2 double insulation, an earth ground wire is not required. For wiring 120VAC or 240VAC input, run 14 AWG 2-conductor to the power supply module's input terminals marked **L** (Line) and **N** (Neutral). Ensure that the conductors are fully inserted into the input terminals with no bare metal exposed. (Refer to the wire stripping instructions included on the wiring diagram attached to the cover plate of this power supply.)

CAUTION! It is important to maintain separation between the primary (high voltage AC) wiring and secondary (low voltage DC) wiring as they are routed inside the power supply enclosure. The primary wiring must be run inside conduit; and the conduit must be connected to one of the knockouts located towards the left end of the top wall of the enclosure (above and to the left of the power supply module's input terminals). All secondary wiring must be routed through any one of the knockouts located along the bottom wall of the enclosure.

Note: This unit is not equipped with a battery standby power feature.

Door Interlock Plug-In "Daughter" Board

There must be one daughter board used for each door that is to be interlocked. The 1410 power supply can accommodate up to four daughter p.c. boards to provide for a 2-door, 3-door, or 4-door interlock system. All interlocking door components (electric

locking device, door position switch, control switch, status LEDs) are connected directly to Terminal block TB1 located along the edge of the p.c. board.

Note: All daughter boards must be field wired while unplugged from the mother board connectors (J2 – J5). This is the only way to access the terminal screw heads. **Before inserting or removing daughter boards from the mother board, remove the fire alarm connection or bypass jumper (whichever one is used) to the fire alarm input on TB1 of the mother board. (Refer to Note 2 from the illustration found on the power supply's removable cover for more information.)**

There is no order in which the daughter boards must be installed. Use any combination of card connectors available: J2, J3, J4, J5.

Each daughter board is keyed to prevent it from being inserted in the wrong direction. A key notch, located between the connector pins of the daughter board, must slip over a key plug positioned inside the motherboard connector to ensure that the board is fully seated into the connector.

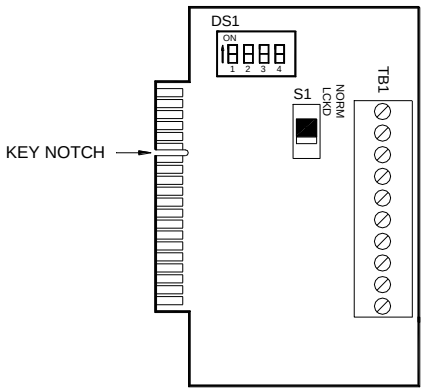

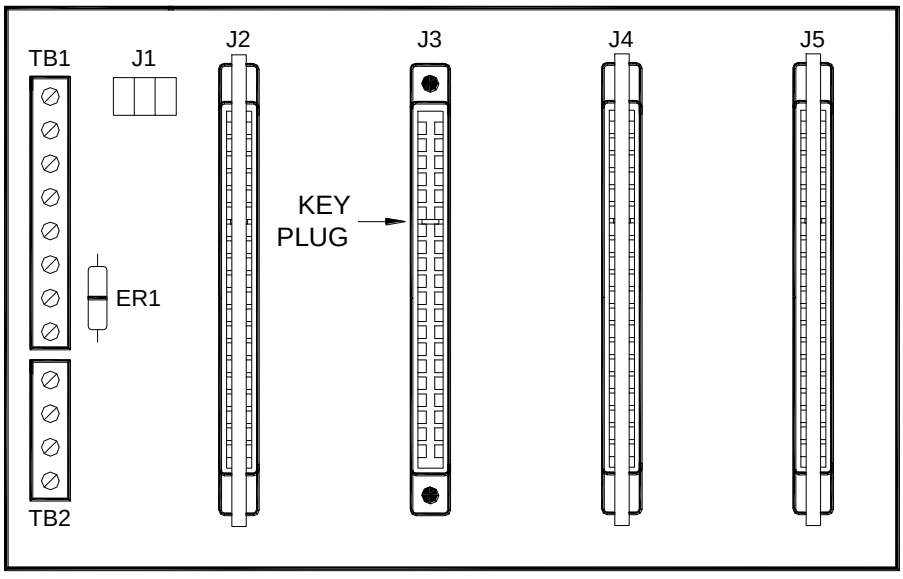

The above example shows three door interlock daughter boards inserted into connectors J2, J4, and J5 for a 3-door interlock system. The three boards can be located adjacent to each other, or separated as shown above. Order of p.c. board placement has no effect on interlocking system operation.

Interlocking Systems – General Description

The concept of interlocking doors normally means that when one door within a group of interlocking doors becomes unsecure (unlocked or open), all remaining doors are electronically prevented from opening. No two or more doors are allowed to open at the same time. The reason for having interlocking doors is to normally prevent a direct path for something harmful in one room to enter into another room. There is usually a small room called an Airlock that is linked between one room containing hazardous fumes or contaminants and another room or corridor that must be kept safe at all times. The airlock prevents a direct path for dangerous fumes or contaminants from flowing from a hazardous area into a safe area by allowing only one door to open at a time. When one door is opened, the other door is temporarily prevented from opening until the door that had opened is closed again. Another use for interlocking doors would be a dark room application where light from a corridor, or another room, must be prevented from entering into the dark room. This can be accomplished with an airlock situated between the dark room and the lighted area, and by using interlocking doors on the dark room and lighted area sides of the airlock.

There are two types of interlocking doors used with interlocking systems. Each type is described below:

Normally Unlocked Interlocking Doors

Doors within an interlocking system that are normally unlocked do not require any local controls. When there is a group of interlocking doors, and all of them are normally unlocked, opening one door within the group will electrically lock the rest of them. These doors will remain locked until the opened door closes. All doors then return back to normal “standby” operation, and any one door within the group can now be opened.

Normally Locked Interlocking Doors

Doors of this type are electrically locked until commanded to unlock by a local control device, such as a card reader or keypad. A request-to-exit push-button switch is often used on the egress side of the door. When a door from a group of normally locked interlocking doors becomes unsecure (unlocked or open), all remaining doors are electronically prevented from becoming unlocked by the decision making electronics inside the 1410 power supply. The “command to unlock” output signals that are initiated by the door’s local control devices are temporarily disabled, and all doors remain locked. At the moment when the door which had previously become unsecure is fully closed and electrically locked, the rest of the doors within that interlocking group will then return back to normal “standby” operation and be allowed to become unlocked via their local control devices.

Each door interlock daughter board can be programmed as either a normally unlocked or normally locked interlocking door by making a selection using slide switch S1 (see illustration on removable cover of power supply). To select the normally locked type,

move the slide switch to the position labeled “NORM LCKD”. Move the switch to the opposite position for selecting the normally unlocked type.

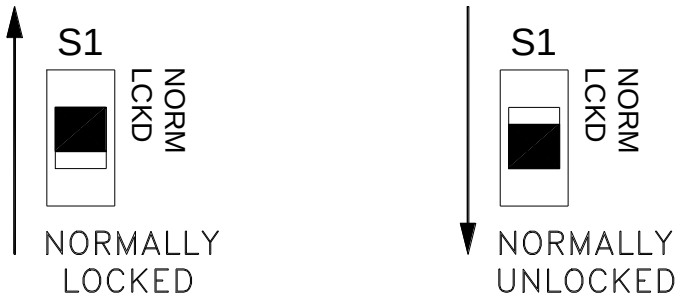

Note: It is not necessary to have all doors either normally unlocked or normally locked within a group of interlocking doors. Each group can contain a mix of either type of interlocking door.

Interlocking Doors Common to Multiple Interlocking Systems

It is possible for one interlocking door to be part of more than one interlocking system. When this situation occurs, all doors from each system respond when the common door is unlocked, or opened. Conversely, the common door will be affected by the unlocking or opening of any one door from each system.

The door interlock daughter board is provided with three dip switch settings for programming the door to be part of one interlocking system, two interlocking systems, or three interlocking systems. (Refer to the wiring diagram attached to the cover plate of this power supply.) By selecting any combination of dip switches (1 & 2, 1 & 3, 2 & 3, or 1, 2 & 3) to the “ON” position, the door can be programmed to be commonly used with two or three interlocking systems. Selecting just one of the three dip switches to the “ON” position will program that door to be part of only one interlocking system, and it will not be treated as a common interlocking door.

To get a better understanding of how this works, refer to the three example floor plans shown below. The floor plans used in Examples 1 through 3 show four doors labeled as Door A, Door B, Door C, and Door D. All doors are programmed for normally unlocked operation.

In Example 1, all four doors are part of a single interlocking system. When one door opens, the other three doors lock. Each of the four door interlock daughter boards would be programmed by placing dip switch #1 to the “ON” position. When programming boards for single interlock system use, any one of the three dip switches

can be used, i.e., all interlock boards can either use dip switch #1 selected to “ON”, or switch #2 or #3 selected to “ON”.

Note: When programming doors to be part of a single interlocking system, dip switches 1 through 3 cannot be mixed. All boards must use the same number dip switch selected to the “ON” position (all boards using dip switch #1 selected “on”, or all boards using dip switch #2 selected “on”, etc).

Example 2 shows four doors grouped into two interlocking systems. Doors A, B, and C are part of Interlock System #1, and Doors B, C, and D are part of Interlock System #2. In Interlock System #1, when Door A opens, Doors B and C lock; but Door D is not affected because it is part of Interlock System #2. When Door D from Interlock System #2 opens, Doors B and C lock; but Door A is not affected because it is part of Interlock System #1. Note that Doors B and C are both part of Interlock Systems #1 and #2. They both lock when either Door A from Interlock System #1 or Door D from Interlock System #2 opens. When Door B opens, Doors A, C, and D will lock because Door B is common to both interlock systems. Likewise, when Door C opens, Doors A, B, and D will lock because Door C is also common to both interlock systems. Follow these steps for programming the door interlock daughter boards for this scenario: The board representing Door A will have dip switch #1 set to the “ON” position (for Interlock System #1). The board for Door D will have dip switch #2 set to the “ON” position (for Interlock System #2). The boards used for Door B and Door C will each have both dip switches #1 and #2 set to the “ON” position since they are common to Interlock System #1 and Interlock System #2.

The third example illustrates an application involving three interlocking systems. Interlock System #1 includes Doors A, C, and D. Interlock System #2 includes Doors B and C. Interlock System #3 includes Doors C and D. Door A is not common to two or more systems; it is part of Interlock System #1 only. Set dip switch #1 to the “ON” position for this door. Door B is likewise not common to two or more systems, and is part of Interlock System #2 only. For this door, set dip switch #2 to the “ON” position. Door D is common to two interlocking systems: Interlock System #1 and Interlock System #3. Set dip switches #1 and #3 to the “ON” position for this door. Door C is common to Interlock Systems #1, #2, and #3. For this door, set dip switches #1, #2, and #3 to the “ON” position. When programmed this way, the interlocking sequence of operation for Doors A, B, C, and D are as follows:

Door A opens	Doors C & D lock
Door B opens	Door C locks
Door C opens	Doors A, B, & D lock
Door D opens	Doors A & C lock

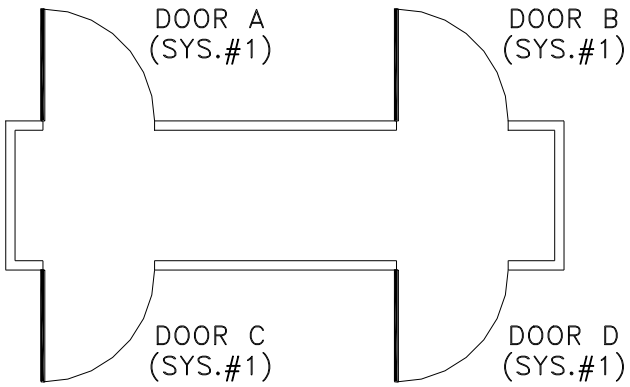

EXAMPLE 1

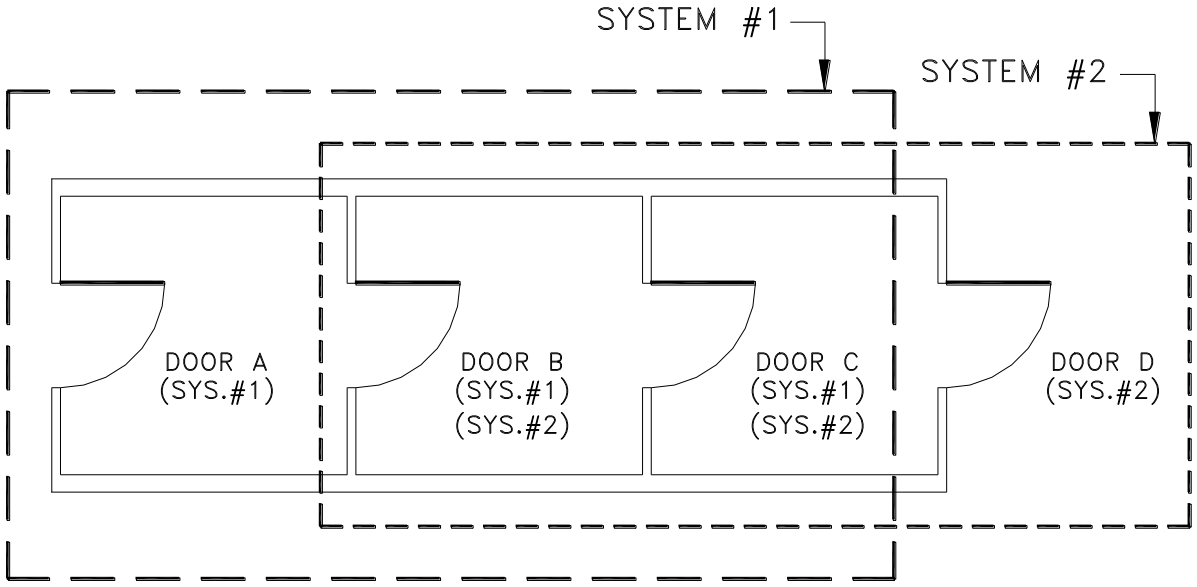

EXAMPLE 2

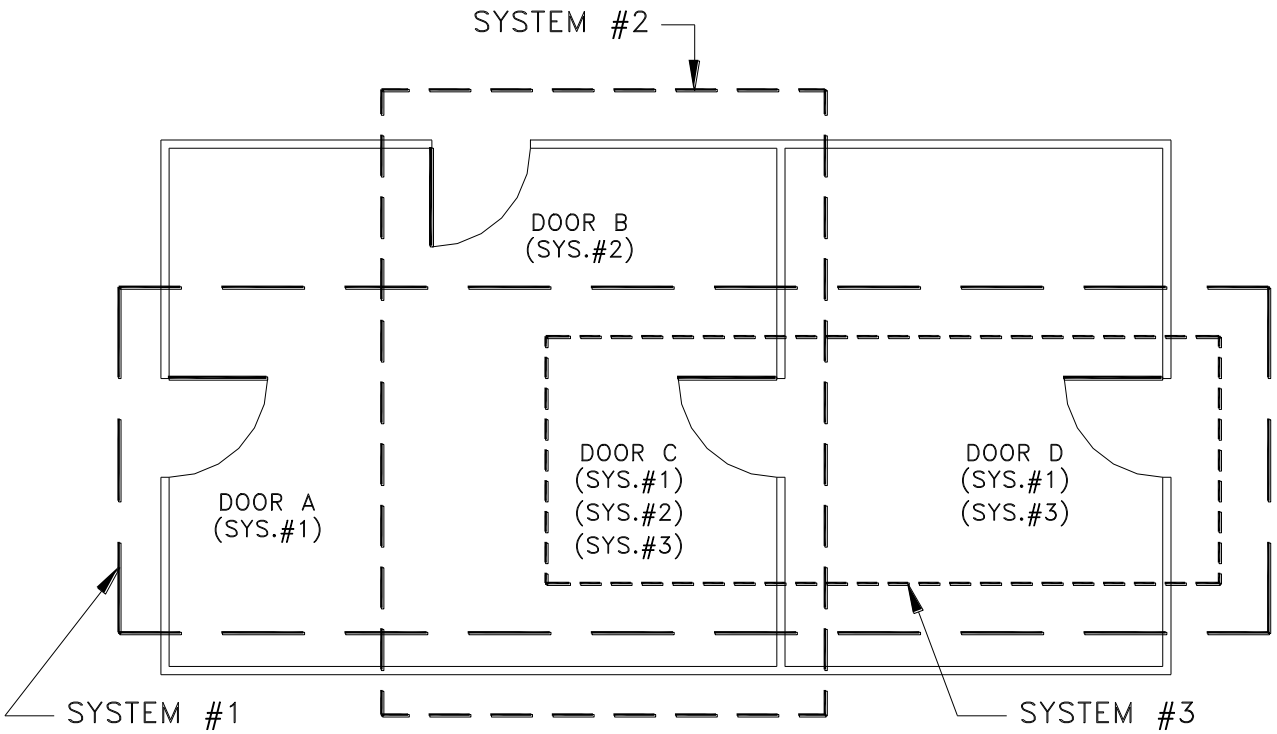

EXAMPLE 3

Inputs/Outputs – Door Interlock Daughter Board

Control Switch

For use on normally locked interlocking doors. The switch contacts must be normally closed for keeping the door locked. Opening the switch contacts will unlock the door. The most commonly used control devices for releasing interlocking doors are card readers and keypads. Occasionally, push-button switches are used. All doors become interlocked when the contacts of this switch remain in the open position.

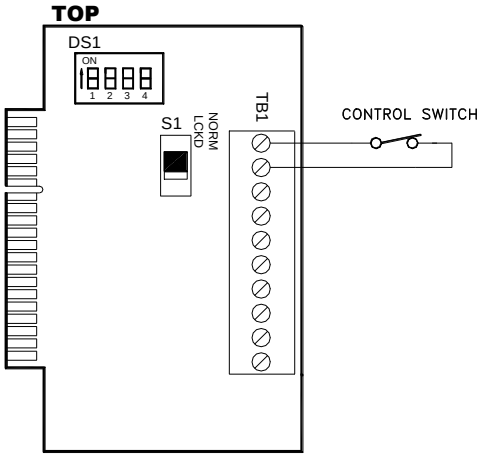

Door Position Switch

Used on both normally unlocked and normally locked interlocking doors. Open switch contacts signal an open door condition thereby locking out all other doors. The figures below show the proper connection to a board programmed for a normally locked door and for a normally unlocked door.

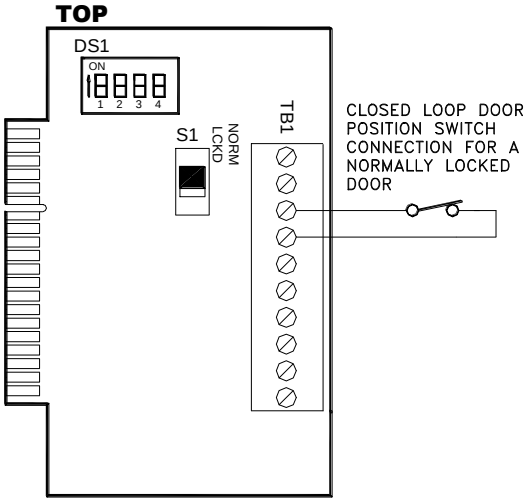

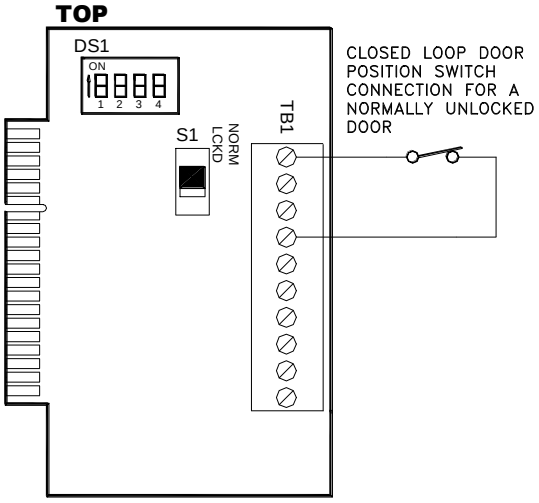

LED Status Indicators

Outputs are provided on each door interlock daughter board for connection to two LED indicators for the purpose of monitoring the status of the interlocking system. A typical application would have a red and green LED indicator located on at least one side of each interlocking door. (It is recommended that LED indicators be located on both sides of each door.)

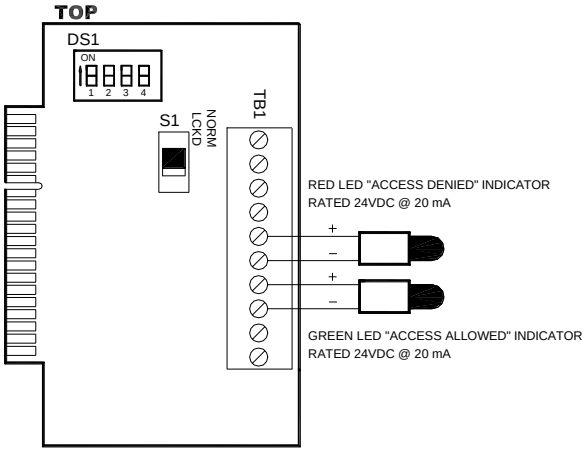

When all doors within an interlocking system are on standby (all doors closed and electrically locked for normally locked, or closed for normally unlocked), all green LED indicators will be turned on to signify that access is allowed through any one door within the interlocking system. When a door is opened, or is electrically unlocked, all LED indicators toggle from a lighted green to a lighted red indicator status. The change in status informs any person approaching a closed interlocking door that one of the doors associated with the interlock system is currently in use and access is denied. When the door-in-use eventually becomes secure, all status LEDs toggle back from a lighted red to a lighted green “standby” indication.

Electrified Locking Device

The most commonly used locking device applied to interlocking systems is the electromagnetic lock which bonds the door on both sides when energized. Other typical locking devices used are electrified mortise and cylindrical locks. In most cases, these locks are set up to lock the door on both sides. All locking devices must be rated 24 volts DC. The maximum current rating for a locking device is 0.5 amp (500mA) per output. Two electromagnetic locks, each with a maximum rating of 0.25 amp (250mA), can be connected to the output for pair door applications.

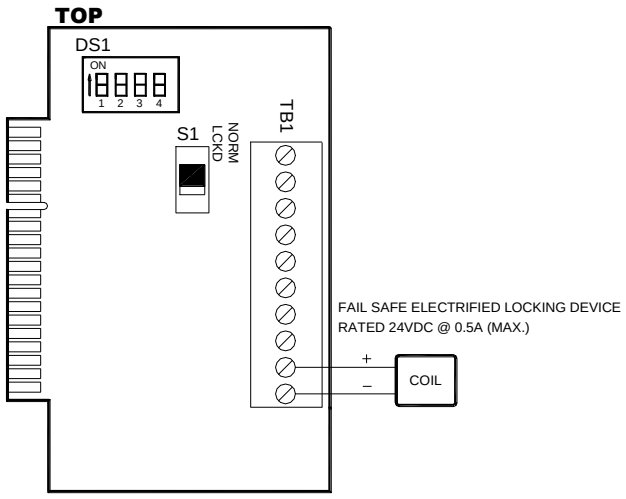

Note: All electrified locking devices used with the Model 1410 Power Supply must be set up for Fail Safe function. Fail secure electrified locking devices cannot be used with this power supply.

Time Delay Option for Normally Locked Doors

In most interlocking system applications using normally locked doors, the control devices used for unlocking the doors are provided with a built-in programmable time delay for keeping the door unlocked just long enough to open the door after becoming electrically unlocked. Typical of these type devices are card readers and keypads. However, in some applications the control devices used for unlocking doors lack a built-in time delay, such as key switches or push-button switches. In cases such as these, the door interlock daughter board can be programmed to provide an “unlock” time delay of 3 seconds by selecting dip switch #4 to the “ON” position. (Refer to the wiring diagram attached to the cover plate of this power supply.)

A “command to unlock” signal occurs every time the control switch contacts open. Unlock time delay begins when the control switch contacts return to the normally closed position. During this time delay period, all remaining doors within the same interlock system are interlocked and will not return to the “standby “ mode of operation until the unlock delay has timed out.

Note: Since the door position switch is internally connected in series with the control switch on the door interlock daughter board, all other doors will remain interlocked for 3 seconds after the opened door has closed and electrically locked.

Inputs/Outputs – Mother Board

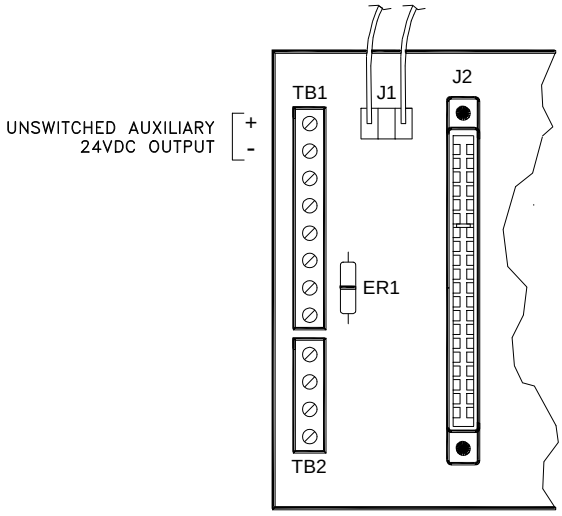

Auxiliary 24VDC Output

This constant voltage output can be used to power stand-alone control devices, such as keypads, motion detectors, key switches with time delay, etc., or various audio-visual status indicators rated 24 volts DC. The maximum current that can be drawn from this output is 100mA.

Emergency Release Switch With or Without LED Status Indicator

Three input terminals are provided on the motherboard for connecting to one or multiple emergency release switches. The switch contacts must be maintain action to allow alternate “Normal Operation/Emergency Override” function. A contact closure, such as what is shown in the figures below, puts the system into normal interlock operation. When the switch contacts open during an emergency situation, DC power is removed from the entire system. As a result, all normally locked doors will immediately unlock, and any normally unlocked door that is currently locked out (due to another door being open) will also unlock immediately. When the system is in the emergency release mode, all doors that are part of the interlock can be opened at the same time for quick and immediate access. A third terminal is provided for connection to an optional LED status indicator. If there are multiple emergency release switches used on an interlocking system, the LED will conveniently inform security as to which emergency release switch out of the group has been activated.

The figures on the next page illustrate four ways in which to wire emergency release switches, either with or without the LED status Indicators.

Not all interlock system applications require emergency release switches. When they are required on a system, the Emergency Release Switch input must be enabled. To accomplish this, the jumper marked “ER1” must be removed by cutting it out with wire cutters. This procedure is illustrated on each of the figures below and also on the wiring diagram attached to the cover plate of the power supply.

Note: The emergency release input affects all interlocking systems that are powered and controlled by a single Model 1410 Power Supply, regardless if there is a single interlocking system or multiple systems involved.

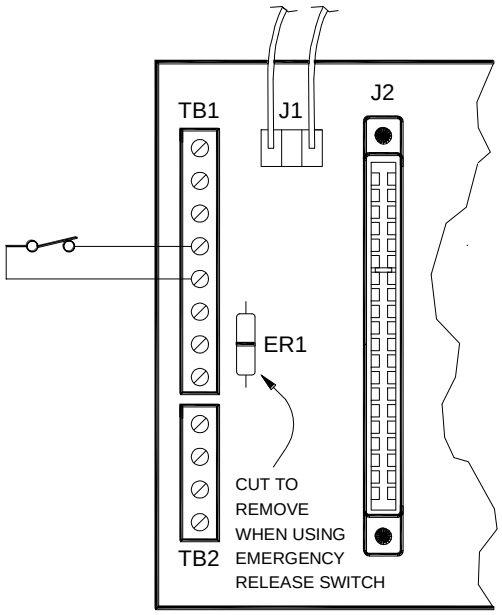

SINGLE EMERGENCY RELEASE SWITCH

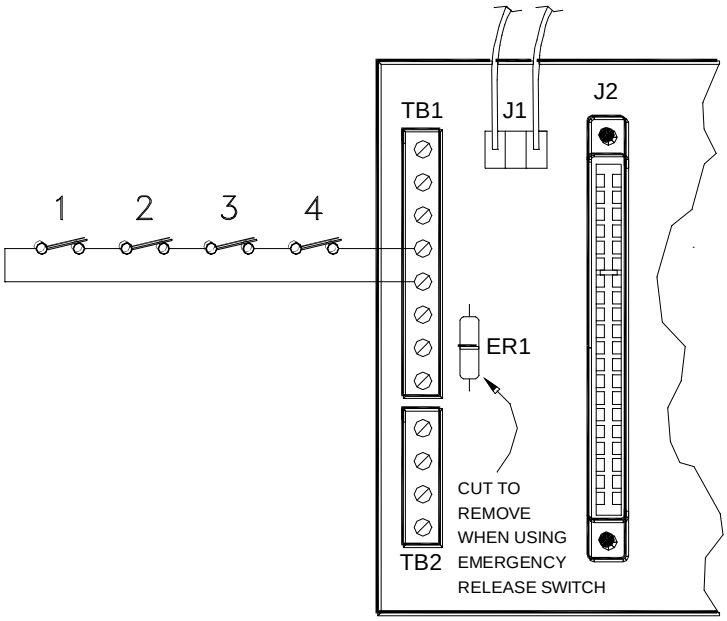

MULTIPLE EMERGENCY RELEASE SWITCHES

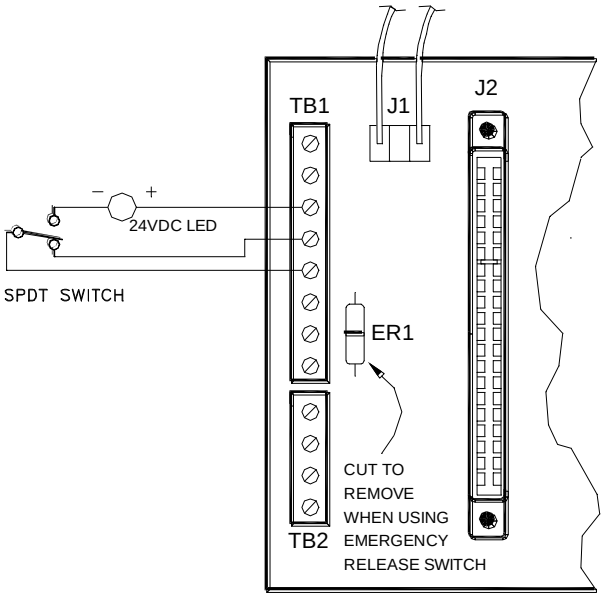

SINGLE EMERGENCY RELEASE SWITCH
WITH LED STATUS INDICATOR

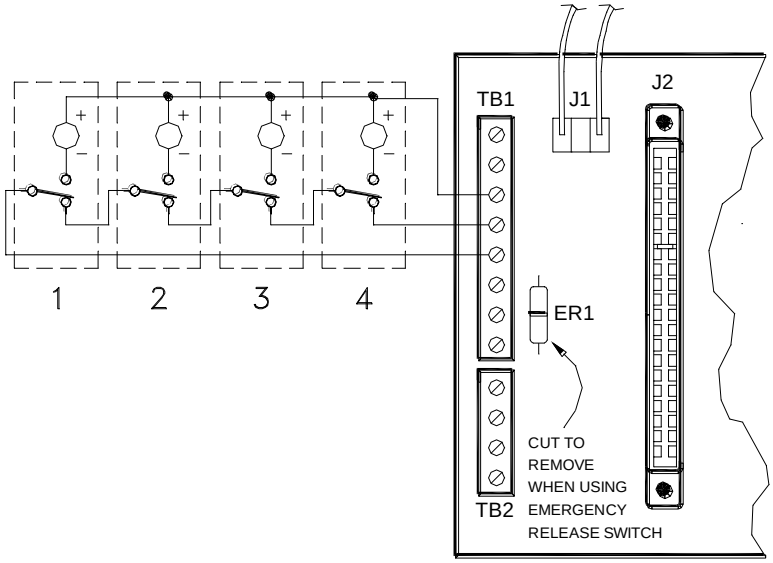

MULTIPLE EMERGENCY RELEASE SWITCHES
WITH LED STATUS INDICATORS

Fire Alarm Interface

Connect normally closed contacts of the fire alarm relay to the terminals shown on the right. In most cases, it is mandatory to have the fire alarm wired in to the interlock controller since all interlocking doors normally are locked on both sides. When the contacts of the fire alarm are opened during an alarm condition, DC power is removed from the entire system. All doors will unlock and remain unlocked until the fire alarm is reset.

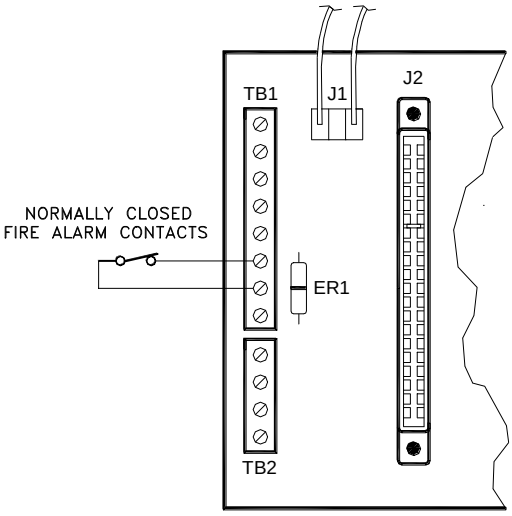

Note: If fire alarm interface is not required, it will be necessary to install a jumper in place of the normally closed fire alarm contacts. Without this jumper installed, the interlock power supply will be disabled.

Interlock Expansion

The Model 1410 Power Supply is provided with the capability of expansion when there comes a need for using more than four doors to an interlocking system, or group of interlocking systems. Expanding interlocking doors involves running a four conductor unshielded cable between two or more power supplies and making the appropriate connections at terminal block TB2 located on the mother board. The expansion cable will allow up to three separate interlocking systems to operate using more than four doors per system. Doors can continue to be common to as many as three systems as discussed earlier in this manual under “Interlocking Doors Common to Multiple Interlocking Systems”, but can be expanded to include a larger number of doors per system.

Using 18 gauge stranded wire per conductor for the four conductor cable, the figures below show maximum length runs for up to five expanded power supplies.

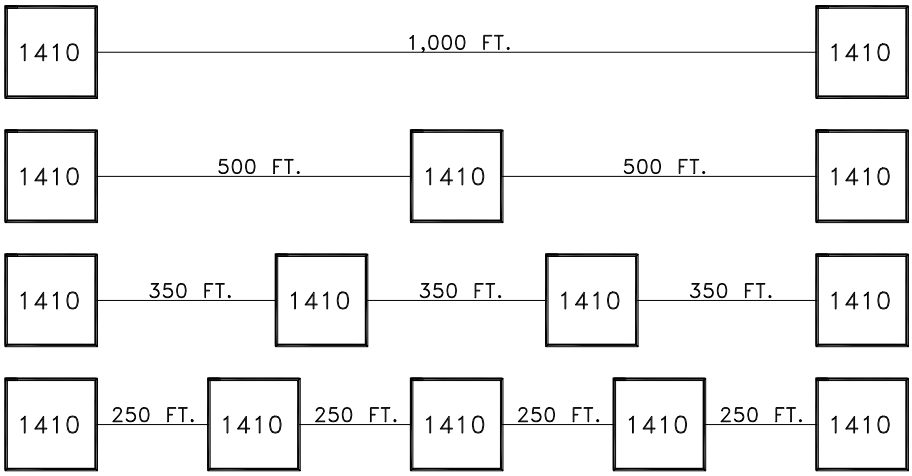

The expansion I/O terminals of each power supply are wired in daisy chain (parallel) fashion between power supplies, as shown below.

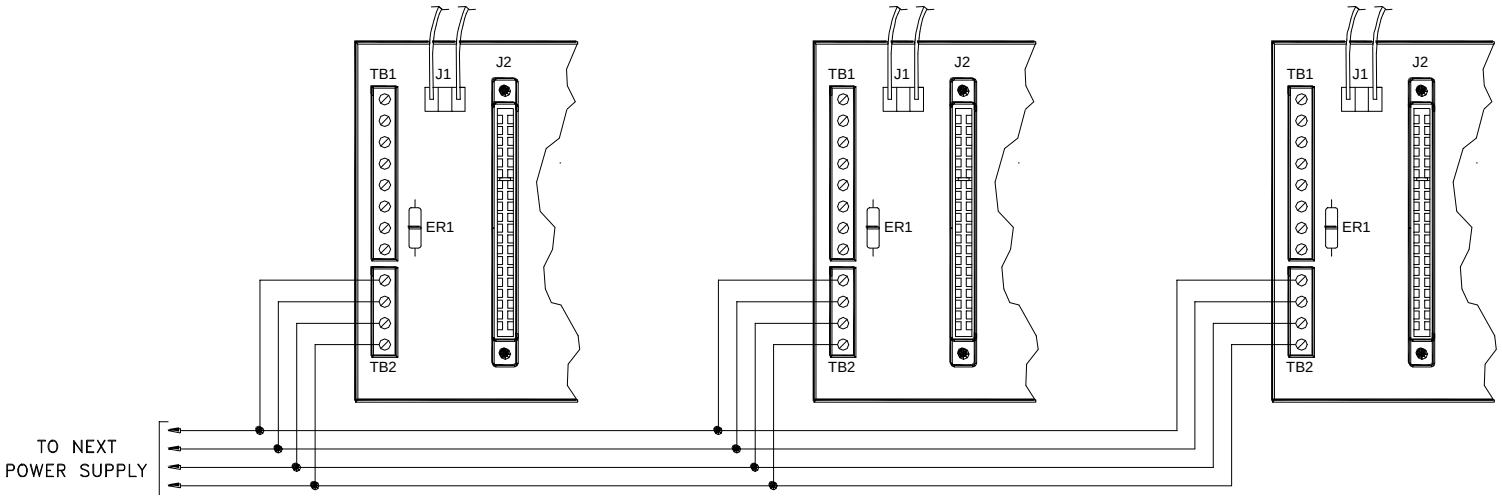

Application Drawings

At the end of this manual can be found an example of a complete set of drawings (riser diagram and point-to-point wire diagrams) showing field wire hookup to groups of interlocking systems involving a total of seven doors. Two Model 1410 power supplies will be required to power and control all of the doors. The scenario for this interlocking system complex is described as follows:

The application consists of three interlocking systems. System #1 includes Doors 101, 101A, 101B, 102A, and 103A. System #2 includes Doors 101B, 102, and 102A. System #3 includes Doors 101B, 103, and 103A. Doors 101A, 101B, 102, 102A, and 103A are normally unlocked. Accessing these doors only requires them to be opened when the interlocking system they belong to is currently on standby. Doors 101 and 103 are normally locked. Each door is controlled by a card reader on one side and a “request to exit” push-button switch on the other side.

All three systems are interlaced with each other as a result of certain doors being common to two or more systems. Doors 101 (System #1), 101A (System #1), 102 (System #2), and 103 (System #3) are unique to their system and are the only doors that are not common to two or more systems. They either affect or are affected by doors which are part of the same system they belong to. Door 102A is common to System #1 and System #2. This means that when Door 102A is opened, all doors that are a part of System #1 and System #2 will be interlocked. Conversely, when any one door from System #1 and/or System #2 is opened (or unlocked and opened), Door 102A will lock. Door 103A is common to System #1 and System #3. Therefore, when Door 103A is opened, all doors that are a part of System #1 and System #3 will be interlocked. Conversely, when any one door from System #1 and/or System #3 is opened (or unlocked and opened), Door 103A will lock.

Door 101B is common to Systems #1, #2, and #3. When Door 101B is opened, all doors that are a part of System #1, System #2, and System #3 will be interlocked. Conversely, when any one door from System #1, System #2, and/or System #3 is opened (or unlocked and opened), Door 101B will lock.

LED status indicators are located on both sides of each interlocking door. It is not always necessary to have status indicators on either side of a door if all interlocking doors can be seen from within the same area. For example, when standing inside the airlock of a two door interlock system, the "open/close" status of each door can normally be easily observed. Therefore, no status indicators are required on the airlock side of each door for monitoring door position. However, when standing in front of one door outside the airlock, status indicators will be required on this side because the position of the other door cannot be observed since it is not in view.

An emergency release switch with an LED status indicator is stationed at Doors 101B, 102A, and 103A. When any one of these switches is activated, all seven doors will unlock if currently locked, and will be prevented from locking when another door is opened. Any combination of two or more doors can be opened at the same time for quick and immediate access. Resetting the activated emergency release switch (identified by the lighted LED status indicator) will return all three systems to normal interlock operation.

The fire alarm will likewise accomplish the same results as the emergency release switch when activated. All three systems will return to normal interlock operation when the fire alarm is reset.

Since all electrified locking devices used with this power supply must function as fail safe, all interlocking doors will unlock in the event of a power failure.

Trouble Shooting Tips

Listed below are some problems that might be encountered during installation, or at any other time, and possible solutions for correcting them.

! CAUTION !

THIS UNIT CONTAINS AREAS OF EXPOSED HIGH VOLTAGE. ALL TROUBLE SHOOTING AND MAINTENANCE SHOULD BE PERFORMED BY A QUALIFIED ELECTRICIAN.

- **The interlocking doors do not lock or cannot be locked, nor do the red or green LED status indicators light up.**
    - Check to see if the LED power indicator L1 on the mother board inside the 1410 power supply is lit. If not, there may be a shorted output; or there may be no power being applied to the mother board from the power supply above.

- Check for 120VAC across terminals of input to power supply module.
- If 120VAC is present, disconnect field wires from all used outputs (locking device, LED status indicators) and measure for 24VDC across these terminals. Check to see if power indicator L1 has lighted.
- If 24VDC is now present and L1 is lit, check for shorts across field wires for each output. If the load is an electrified locking device mounted in the door, check the electric hinge for pinched wires behind each leaf. Also check for shorted wires between the locking device and raceway in the door.
- If 24VDC is not present across terminals marked “24V”on TB1 of the mother board (with field wires still disconnected from all outputs), and L1 is not lit, disconnect the red and black wire leads connected to the +,- terminals of the output to the power supply module and check for 24VDC at this output. If voltage is now present across the power supply module's output, it can be assumed that there is a short circuit somewhere on either the mother board or any one of the daughter boards and will need to be replaced. (Remove all of the daughter boards and see if L1 lights.) If voltage is still not present across the output to the power supply module, then it can be assumed the power supply module itself is damaged and must be replaced.
- If power indicator L1 is lit, but there is still no power to the electric locking device and LED status indicator outputs, check to make sure that there is normally closed contacts from the fire alarm wired to the 1410 fire alarm input terminals on the mother board (see subheading “Fire Alarm Interface” under main heading “Inputs/Outputs – Mother Board”). If fire alarm interface is not required for the application, then a jumper must be installed in place of the fire alarm normally closed contacts. If emergency release switches are not used, then confirm that the internal jumper, labeled as “ER1” is installed on the mother board. If emergency release switches are used (jumper ER1 would have to be removed), ensure that there is a sound contact closure across the emergency release input terminals (refer to the subheading “Emergency Release Switch With or Without LED Status Indicator” under the main heading “Inputs/Outputs – Mother Board).

- **An interlocking door containing a card reader, keypad, or other local control device remains unlocked after the 1410 power supply is powered up. However, the same door will lock when another door unlocks or opens.**
  - The “Normally Locked/Normally Unlocked” selection switch on the door interlock daughter board associated with this door is set to the normally unlocked position. Select the normally locked position.

- **An interlocking door with no local controls becomes locked when the 1410 power supply is powered up, and its associated green LED status indicator lights, signifying a "standby" condition.**
    - The "Normally Locked/Normally Unlocked" selection switch on the door interlock daughter board associated with this door is set to the normally locked position. Select the normally unlocked position.

- **Every time a door programmed for normally unlocked operation closes, there is a three second delay before the system returns to the standby mode (red LED status indicators remain lit for three seconds after the door closes).**
    - Dip switch **#**4 on the door interlock daughter board is set to the "ON" position for 3-second unlock time delay (for doors programmed for normally locked operation). To remove the delay, set this switch to the off position.

- **A door programmed for normally locked operation, and controlled by a simple push-button or key switch, unlocks when the switch is actuated, but immediately locks as soon as the switch is released. This does not allow enough time to open the door before it locks again.**
    - Dip switch #4 on the door interlock daughter board is set to the off position (3-second unlock time delay disabled). To add the delay, set this switch to the "ON" position.

- **The ACSI Model 1410 Power Supply can handle up to three systems, but what if there is a need for more than three systems?**
    - The three system design was intended to cover "common door" situations, allowing any door to be common to as many as three interlocking systems. However, more interlocking systems can be introduced by adding on more 1410 power supplies, but not linking them (via the four conductor expansion cable) with existing 1410 power supplies that are already controlling a three system interlock complex. For example, another <u>separate</u> grouping of 1410 power supplies can be linked together (if needed) to create System #4, or Systems #4 and #5, or Systems #4, #5, and #6.

- **When the 1410 power supply is powered up, all doors become interlocked instead of going on standby as expected. All red LED status indicators are lighted indicating an unsecure door condition even though all normally unlocked doors are closed, and/or all normally locked doors are closed and electrically locked.**
    - Verify that the door position switch contacts are closed when the door is in the closed position for all normally locked and normally unlocked doors. Also verify that the control switch used on all normally locked doors is normally closed when <u>not</u> actuated.

For trouble shooting assistance, contact ACSI Technical Support: 1-800-753-5558

SPECIFICATIONS:

Input Voltage:	120VAC/240VAC, 50/60Hz
AC Current:	900mA/120VAC, 600mA/240VAC
Output Voltage:	24VDC Filtered, Regulated
Output Current:	2.2A (MAX.)
Output Power:	53W
Protection:	Overload, Over Voltage, Short Circuit

ACSI
ARCHITECTURAL
CONTROL SYSTEMS INC.

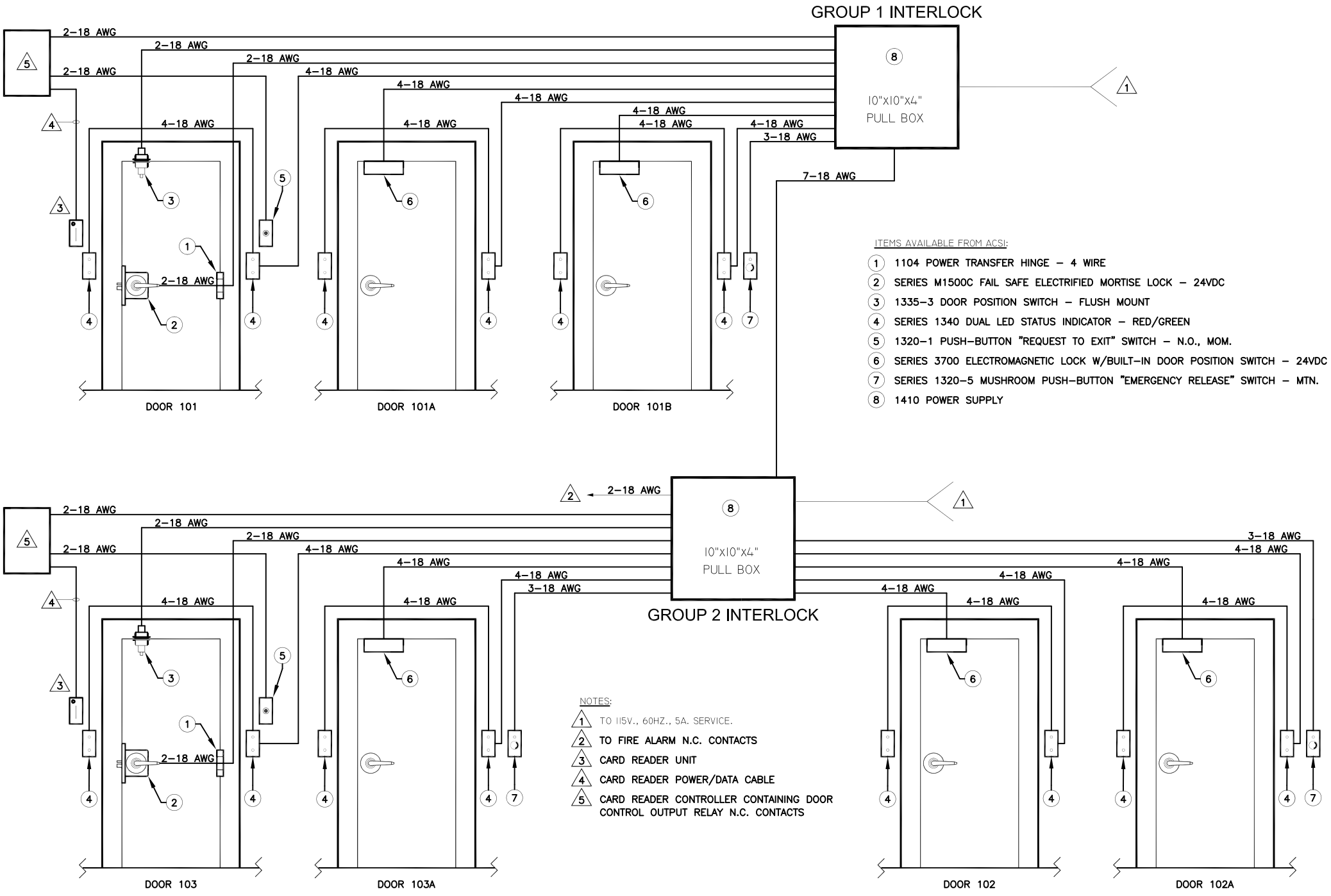

ITEMS AVAILABLE FROM ACSI:

1. 1104 POWER TRANSFER HINGE – 4 WIRE
2. SERIES M1500C FAIL SAFE ELECTRIFIED MORTISE LOCK – 24VDC
3. 1335-3 DOOR POSITION SWITCH – FLUSH MOUNT
4. SERIES 1340 DUAL LED STATUS INDICATOR – RED/GREEN
5. 1320-1 PUSH-BUTTON "REQUEST TO EXIT" SWITCH – N.O., MOM.
6. SERIES 3700 ELECTROMAGNETIC LOCK W/BUILT-IN DOOR POSITION SWITCH – 24VDC
7. SERIES 1320-5 MUSHROOM PUSH-BUTTON "EMERGENCY RELEASE" SWITCH – MTN.
8. 1410 POWER SUPPLY

NOTES:

1. TO 115V., 60HZ., 5A. SERVICE.
2. TO FIRE ALARM N.C. CONTACTS
3. CARD READER UNIT
4. CARD READER POWER/DATA CABLE
5. CARD READER CONTROLLER CONTAINING DOOR CONTROL OUTPUT RELAY N.C. CONTACTS

SYSTEM RISER

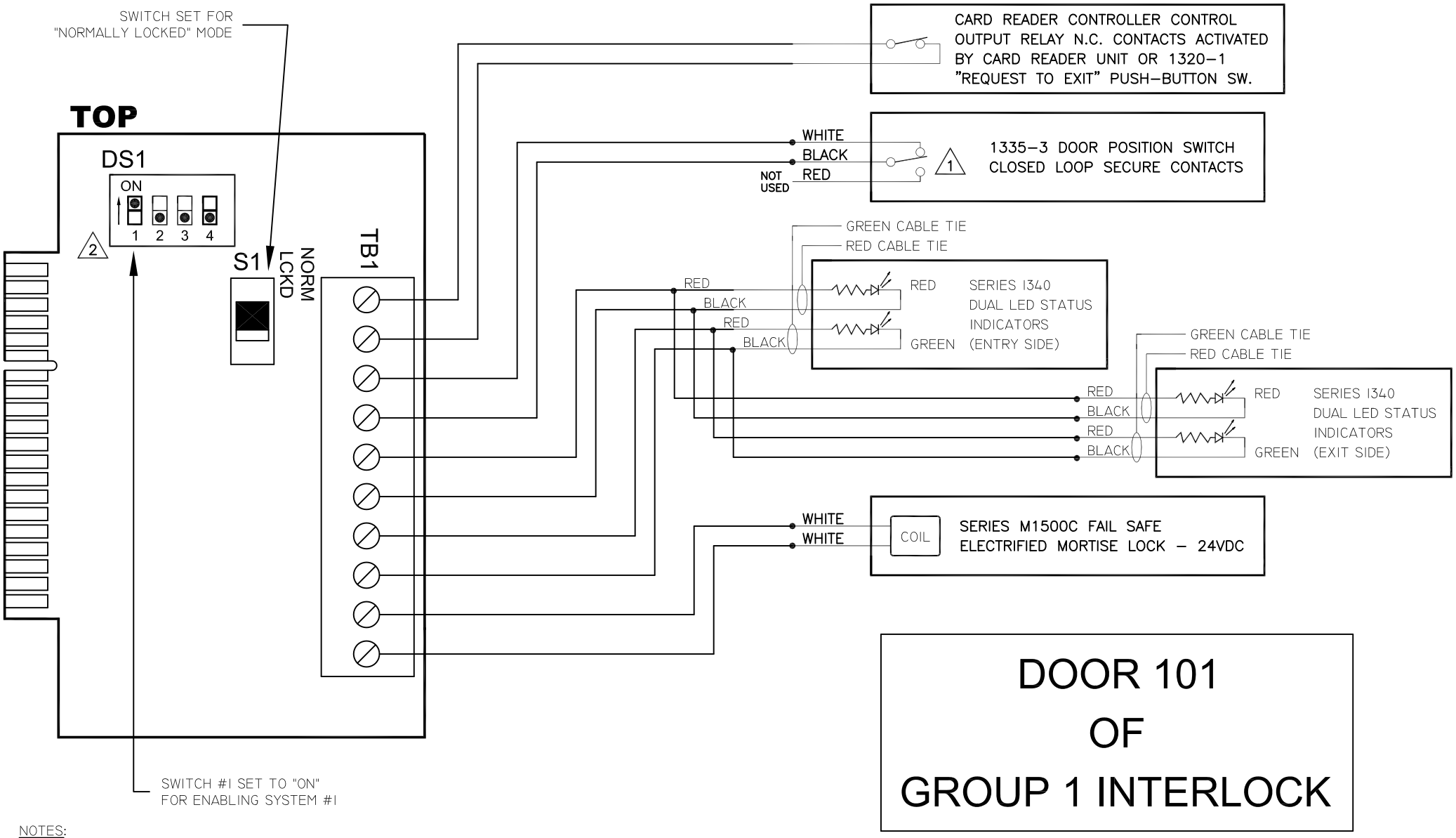

DOOR 101
OF
GROUP 1 INTERLOCK

NOTES:

1. DOOR POSITION SWITCH CONTACTS SHOWN WITH DOOR IN CLOSED POSITION.
2. DOTS SHOWN ON DIP SWITCH DS1 INDICATE POSITION OF SWITCHES.
3.) —•— DENOTES A FIELD WIRE CONNECTION.

SYSTEM POINT-TO-POINT - FIG. 1

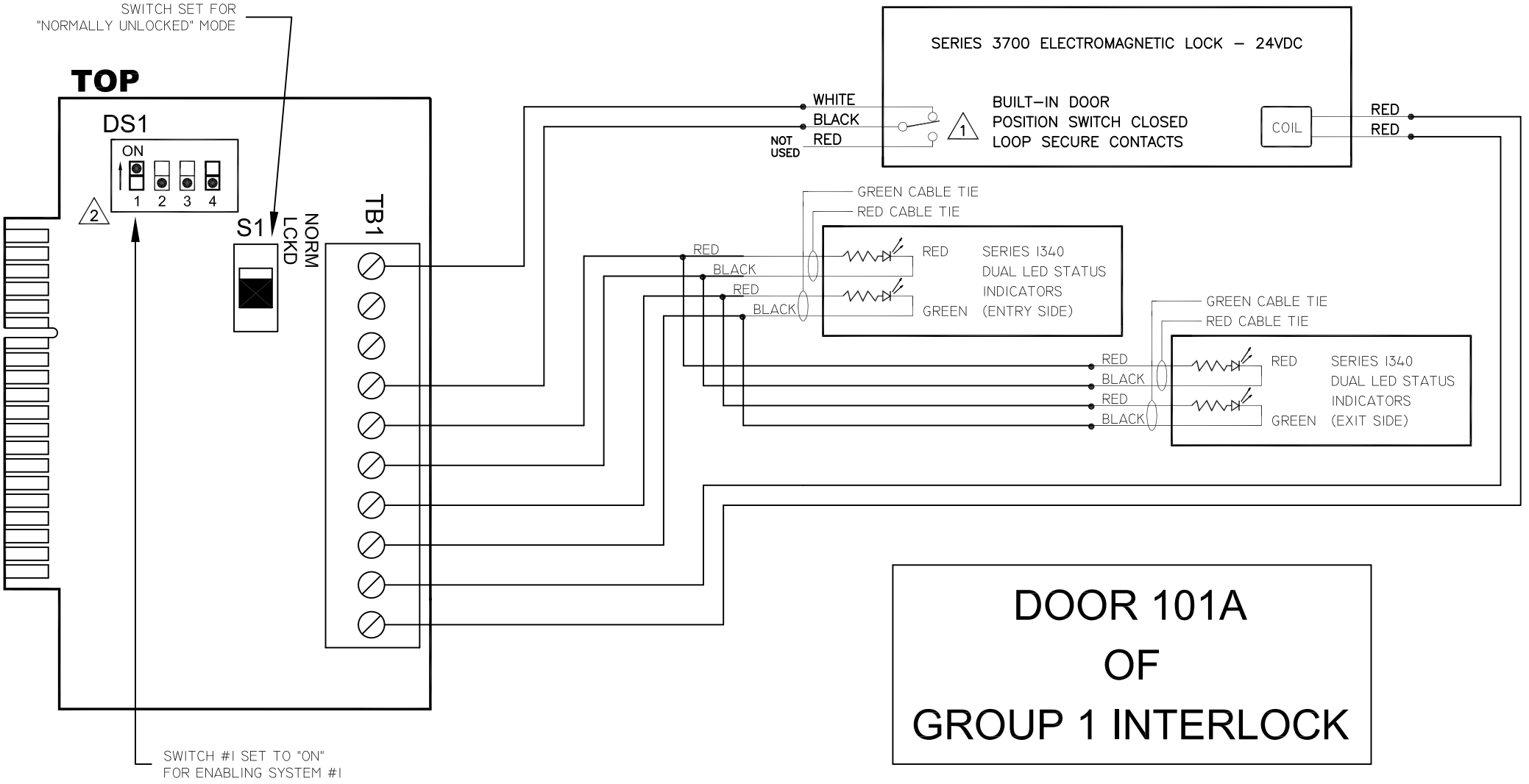

NOTES:

1. DOOR POSITION SWITCH CONTACTS SHOWN WITH DOOR IN CLOSED POSITION.
2. DOTS SHOWN ON DIP SWITCH DS1 INDICATE POSITION OF SWITCHES.
3. ——•—— DENOTES A FIELD WIRE CONNECTION.

SYSTEM POINT-TO-POINT - FIG. 2

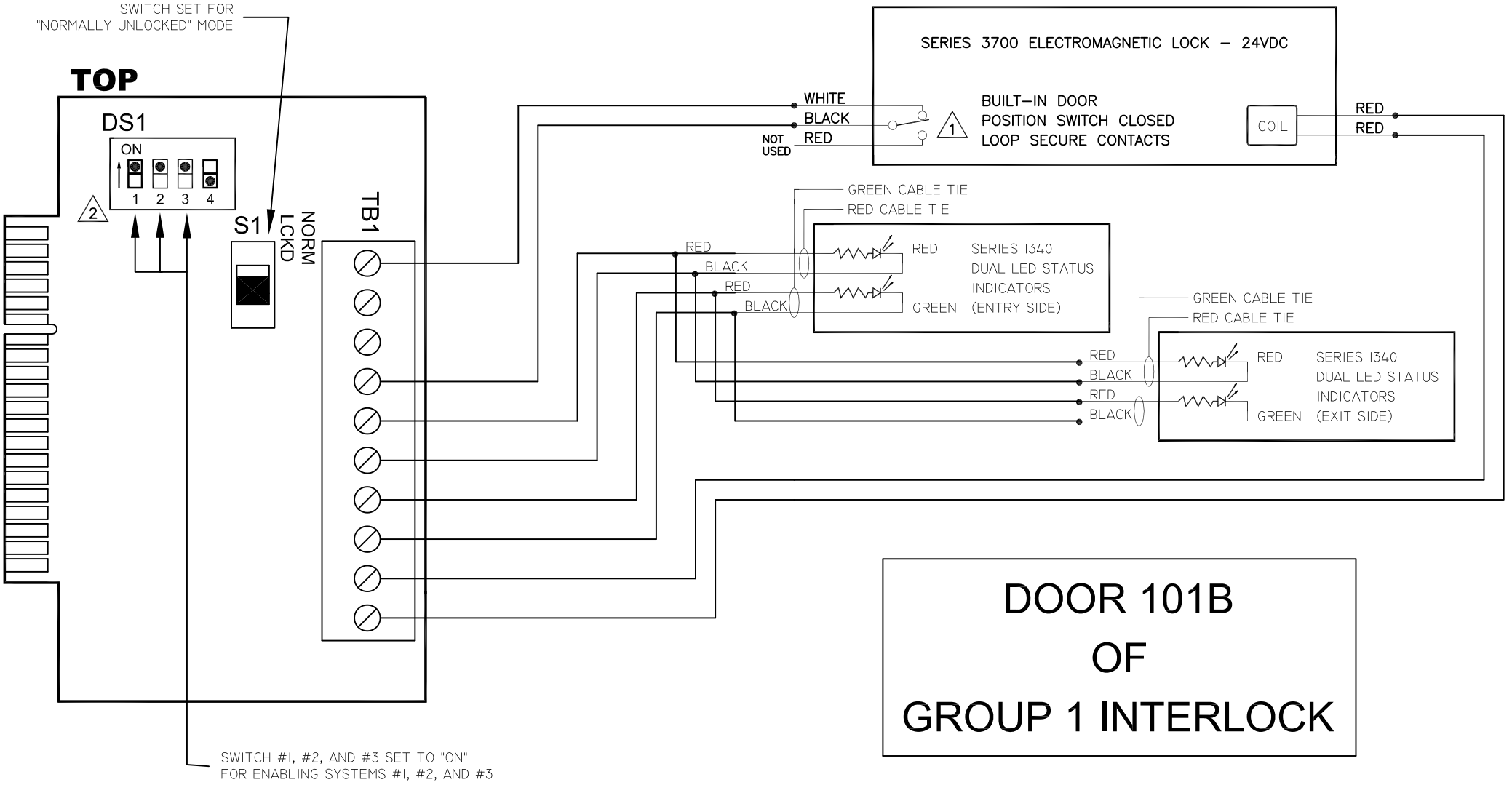

DOOR 101B
OF
GROUP 1 INTERLOCK

NOTES:

1. DOOR POSITION SWITCH CONTACTS SHOWN WITH DOOR IN CLOSED POSITION.
2. DOTS SHOWN ON DIP SWITCH DS1 INDICATE POSITION OF SWITCHES.
3.) —•— DENOTES A FIELD WIRE CONNECTION.

SYSTEM POINT-TO-POINT - FIG. 3

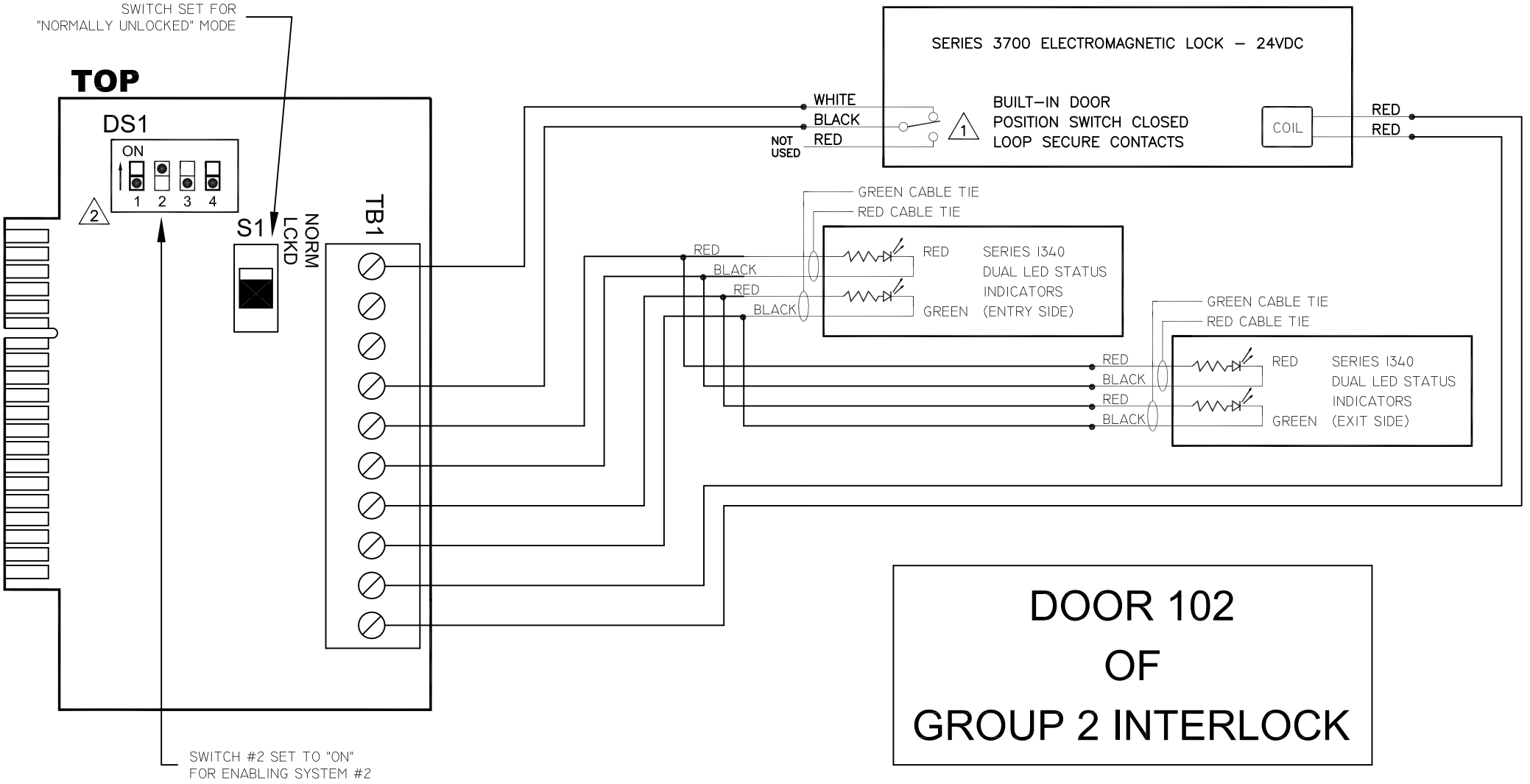

NOTES:

1. DOOR POSITION SWITCH CONTACTS SHOWN WITH DOOR IN CLOSED POSITION.
2. DOTS SHOWN ON DIP SWITCH DS1 INDICATE POSITION OF SWITCHES.
3. ——•—— DENOTES A FIELD WIRE CONNECTION.

SYSTEM POINT-TO-POINT - FIG. 4

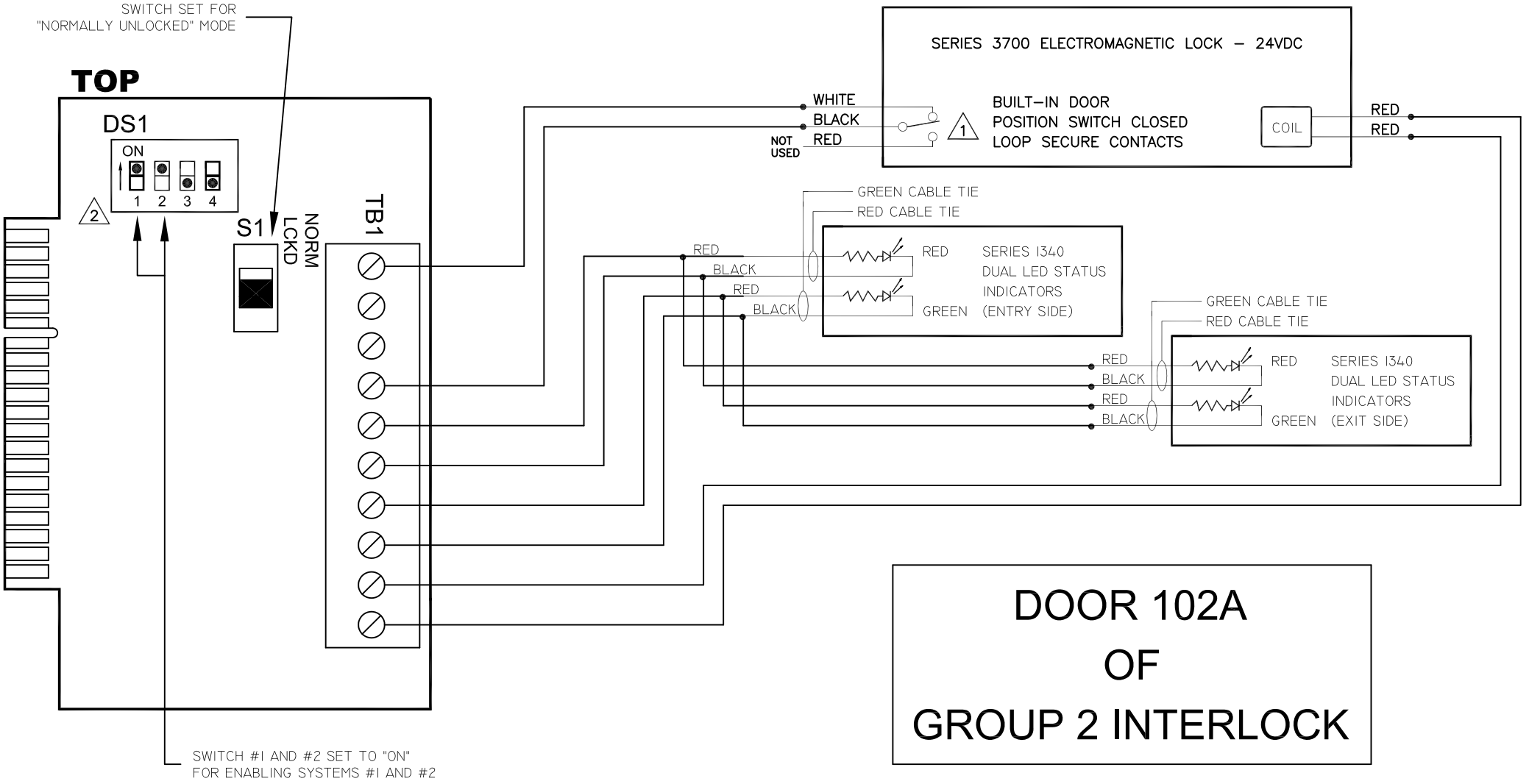

NOTES:

1. DOOR POSITION SWITCH CONTACTS SHOWN WITH DOOR IN CLOSED POSITION.
2. DOTS SHOWN ON DIP SWITCH DS1 INDICATE POSITION OF SWITCHES.
3. —•— DENOTES A FIELD WIRE CONNECTION.

SYSTEM POINT-TO-POINT - FIG. 5

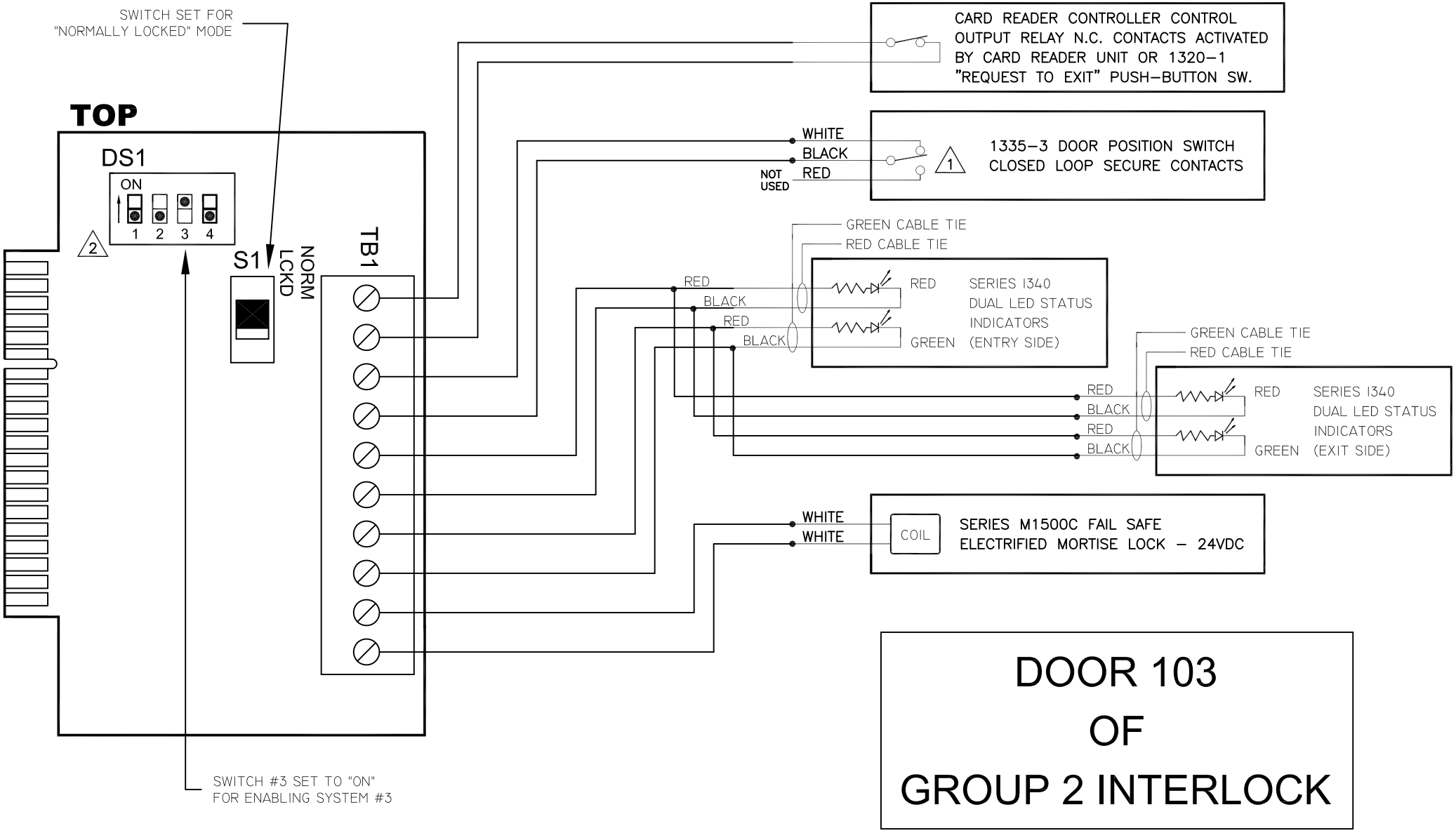

SYSTEM POINT-TO-POINT - FIG. 6

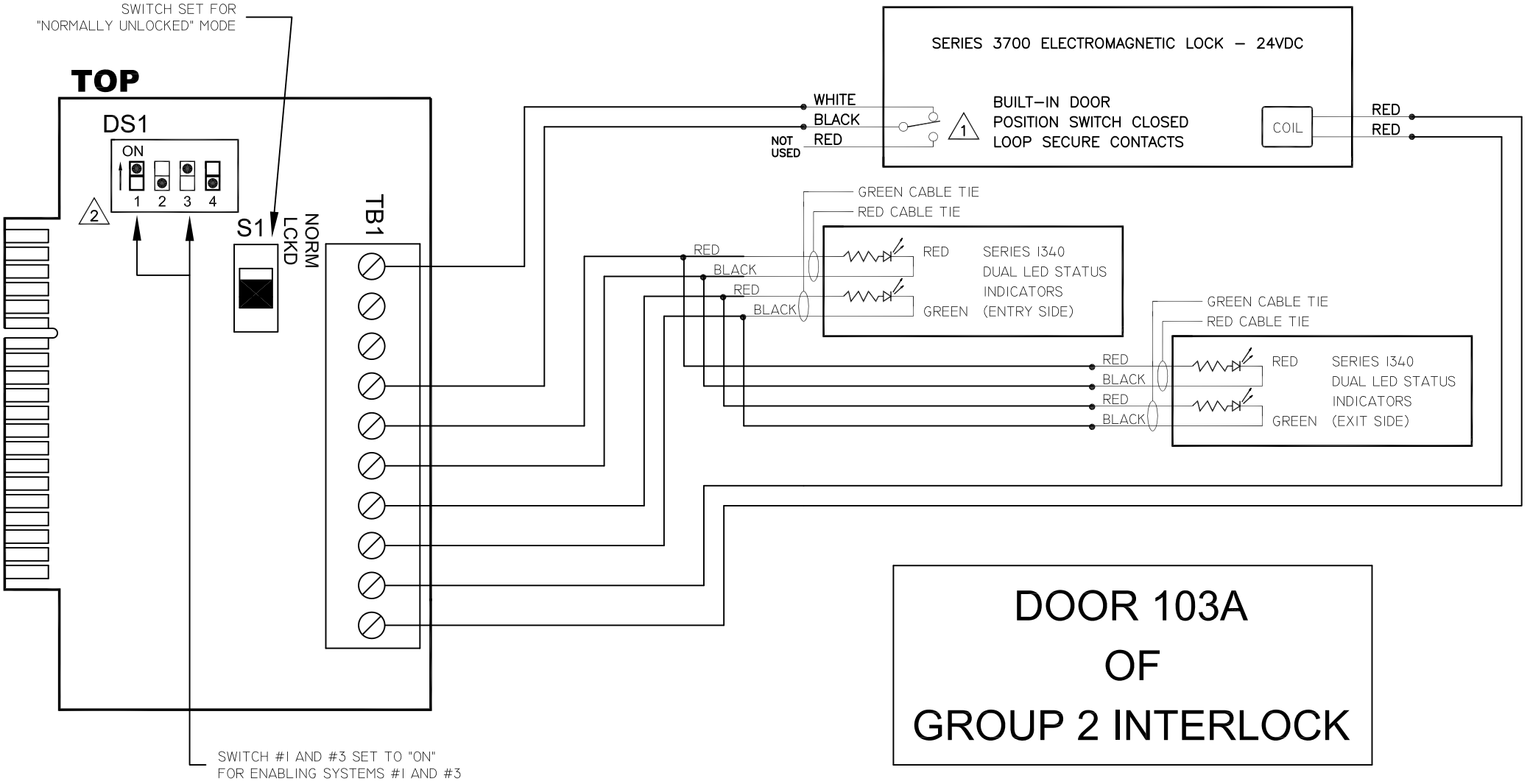

NOTES:

1. DOOR POSITION SWITCH CONTACTS SHOWN WITH DOOR IN CLOSED POSITION.
2. DOTS SHOWN ON DIP SWITCH DS1 INDICATE POSITION OF SWITCHES.
3. ——•—— DENOTES A FIELD WIRE CONNECTION.

SYSTEM POINT-TO-POINT - FIG. 7

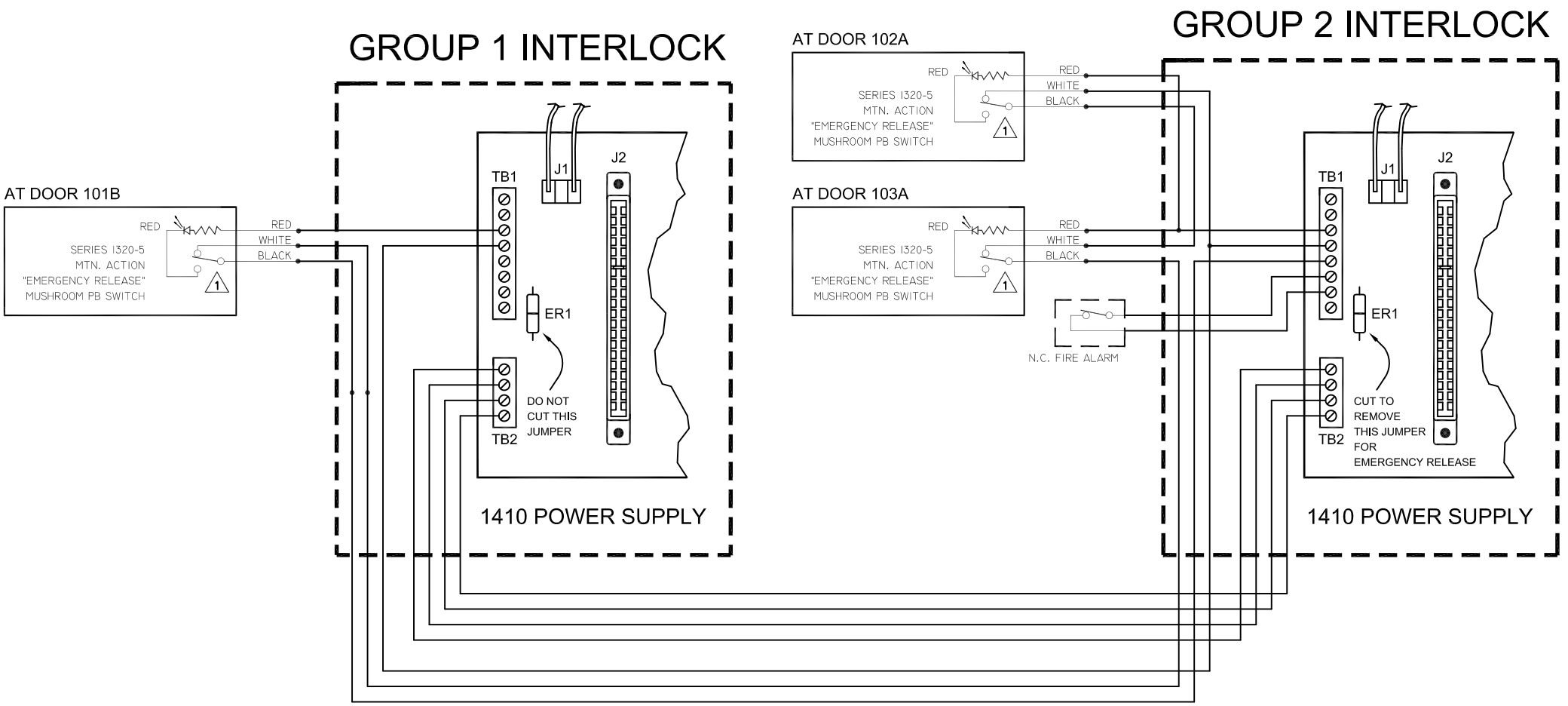

WIRE CONNECTION FOR
EMERGENCY RELEASE, FIRE ALARM,
AND INTERLOCK I/O EXPANSION

NOTES:

1. EMERGENCY RELEASE CONTACTS ARE POSITIONED AS SHOWN WHEN NOT ACTIVATED.
2. —•— DENOTES A FIELD WIRE CONNECTION.

SYSTEM POINT-TO-POINT - FIG. 8

MODEL 1410 POWER SUPPLY

ACCESS CONTROL POWER SUPPLY
CLASS 2 OUTPUTS

SECURITY UL LISTED
EQUIPMENT 4M73

MFG. DATE:

SPECIFICATIONS:

INPUT VOLTAGE:	120VAC/240VAC, 50/60Hz
AC CURRENT:	900mA/120VAC, 600mA/240VAC
OUTPUT VOLTAGE:	24VDC FILTERED, REGULATED
OUTPUT CURRENT:	2.2A
OUTPUT POWER:	53W
PROTECTION:	OVERLOAD, OVER VOLTAGE, SHORT CIRCUIT

USE INSTALLATION INSTRUCTIONS II - 1400-3

POWER SUPPLY INTENDED FOR INDOOR USE ONLY

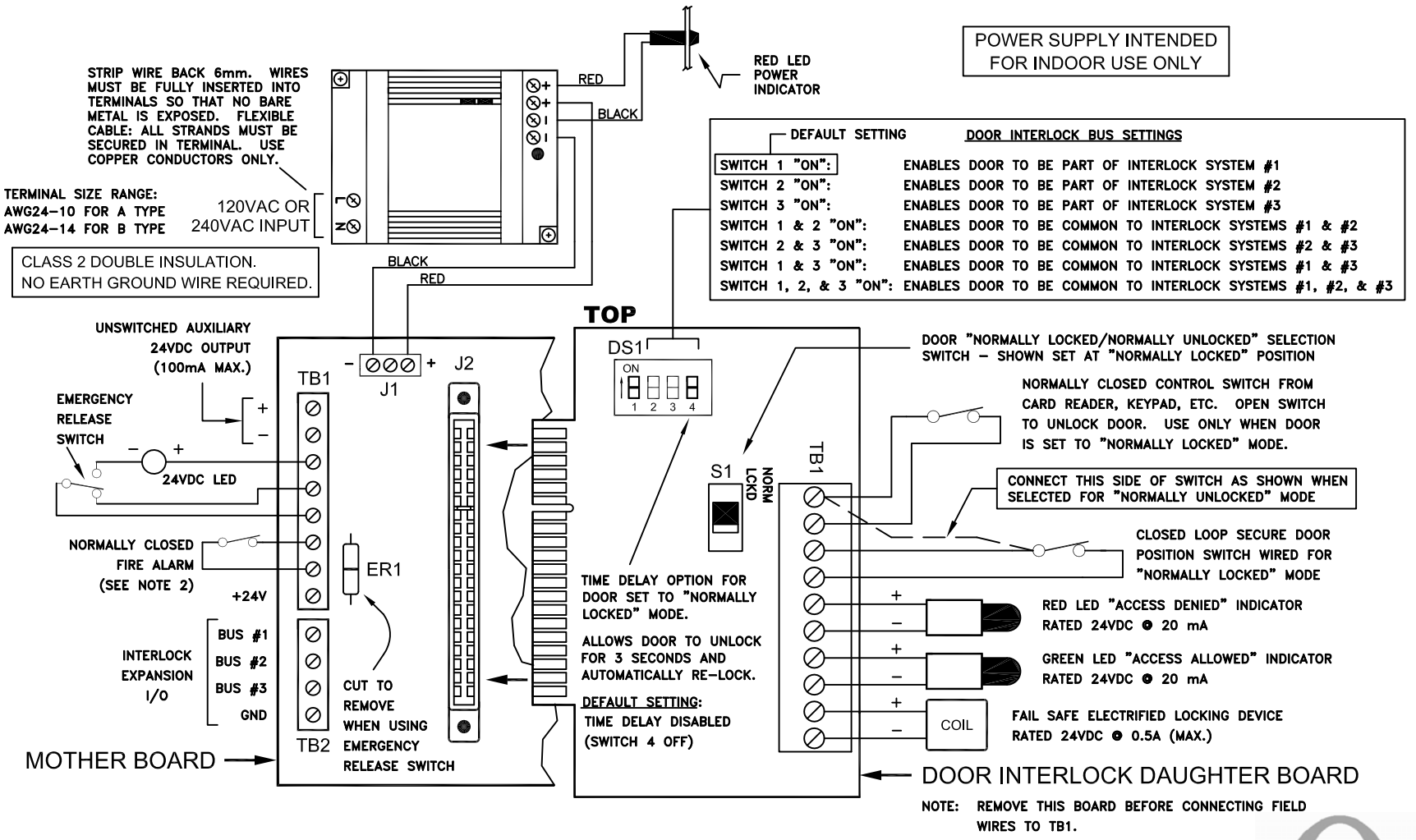

NOTE: REMOVE THIS BOARD BEFORE CONNECTING FIELD WIRES TO TB1.

NOTE 1: THE SUM OF ALL OUTPUTS CANNOT EXCEED 2.2 AMPS.
NOTE 2: DISCONNECT THE FIRE ALARM WHEN INSERTING OR REMOVING DAUGHTER BOARDS. DISCONNECTING THE FIRE ALARM INPUT REMOVES POWER FROM CARD EDGE CONNECTORS J2 - J5 FOR SAFE INSTALLATION OR REPLACEMENT OF DAUGHTER BOARDS.

FOR TROUBLE SHOOTING ASSISTANCE, CONTACT ACSI TECHNICAL SUPPORT:
1-800-753-5558

REV. 06/15

ACSI ARCHITECTURAL CONTROL SYSTEMS INC.

ACSI MODEL 1420 POWER SUPPLY
INSTALLATION INSTRUCTIONS

Features:

- Controls an opening with electrified door hardware and automatic door operator
- Separate inputs for activation switch on entry and exit sides of opening
- Separate 24VDC outputs for fail safe and fail secure electrified door hardware (2 amp max. for either output)
- Relay dry contact output to automatic door operator input
- Input for optional fire alarm or emergency release switch when urgent unlocking of door is required
- Auxiliary 24VDC constant voltage output (1 amp max.)
- Built-in time delay between activation of electrified door hardware and automatic door operator
- Filtered/Regulated 24 Volts DC
- Class 2 Rated Outputs
- Overload, over voltage, and short circuit protection
- Automatically accepts 120VAC or 240VAC input
- UL listed and Tested to 294 Standard for Access Control System Units with Security Levels Rated I for Physical Attack, IV for Endurance, I for Line Security, I for Standby Power



Installing the 1420

The unit must be mounted indoors and away from any moist or wet areas. Some common locations for mounting the 1420 would be in the plenum near the door containing the electrified door hardware, or in a nearby closet or electrical room. When installing the unit in the plenum, wires must either be of plenum rating or contained inside conduit. The unit must be mounted in a vertical position with the power supply module located at the top, as shown in the photograph above. Four 1/4” holes are provided for mounting the box to the wall or other rigid surface. If the surface material is wood, it must be at least 1 inch thick. Use either a truss or pan head, 1 inch long sheet metal screw (#10 or larger) for fastening the box to the wood surface. When mounting the unit to 1/2 inch or 5/8 inch dry wall, it is recommended that 3/16 inch or 1/4 inch diameter toggle bolts be used for maximum support. Use the same size toggle bolts for mounting the unit to hollow concrete blocks. For mounting to concrete, solid block, or brick, it is recommended to use 1-3/4 inch long (minimum) x 1/4 inch diameter hex head bolt

anchors (sometimes called power-bolts) in 18-8 stainless steel or Grade 5 zinc-plated steel. The sub plate can be removed from the box for easier access to the mounting holes. To remove the sub plate, locate the four #6 locknuts near each corner of the plate and remove. The 6-32 studs, from which the sub plate mounts to, are held in place to the box by threaded standoffs.

Wiring the AC Input

The 1420 power supply is rated for use with a 20 amp branch circuit and is capable of accepting either 120VAC or 240VAC input without the need for making any changes, or reconfiguring to convert from one input voltage to the other. Because the power supply module contains Class 2 double insulation, an earth ground wire is not required. For wiring 120VAC or 240VAC input, run 14 AWG 2-conductor to the power supply module's input terminals marked **L** (Line) and **N** (Neutral). Ensure that the conductors are fully inserted into the input terminals with no bare metal exposed. (Refer to the wire stripping instructions included on the wiring diagram attached to the cover plate of this power supply.)

CAUTION! It is important to maintain separation between the primary (high voltage AC) wiring and secondary (low voltage DC) wiring as they are routed inside the power supply enclosure. The primary wiring must be run inside conduit; and the conduit must be connected to one of the knockouts located towards the left end of the top wall of the enclosure (above and to the left of the power supply module's input terminals). All secondary wiring must be routed through any one of the knockouts located along the bottom wall of the enclosure.

Note: This unit is not equipped with a battery standby power feature.

General Description

This power supply provides the necessary electronics for controlling a complete automated door opening system by coordinating the control of electrified door hardware and an automatic door operator, resulting in a proper sequence of operation from beginning to end of cycle. The paragraph below describes how the system operates, and gives the installer an idea of what can be expected once the system has been installed and is ready for testing.

To start the automatic opening cycle, a control device, normally located next to the opening on the entry and exit sides, is activated. Immediately, the electrified door hardware releases to allow the door to swing freely. After a brief delay (about 1 second), the input to the automatic door operator unit receives a dry contact signal from the 1420 power supply, and the door is driven to the open position. The signal to the operator unit resets within approximately 3 - 5 seconds from the time it had been received. From this point, the “Door Hold-Open” time delay built into the automatic door operator unit continues to hold the door in the open position for as long as the delay had been initially set, or programmed for. Once this delay times out, the door will then freely close shut and become locked via the electrified door hardware. (The electrified door hardware switches back from the unlocked state to the locked state at the

same time the signal to the automatic door operator is aborted.) The cycle is completed, and the system is now ready for the next activation occurrence.

Activation Switches

Marked as OAS for “Outside Activation Switch”, and IAS for “Inside Activation Switch” at terminal block TB1, these inputs normally require a normally open, momentary switch for activating the automated door opening system. The most commonly used of these types are wall mounted push-button switches with large diameter actuators, such as used for handicap access. Card readers and keypads can be used for authorized access. They utilize the normally open, dry contact output of a relay for activating the system. For best results when using these devices is to have their built-in time delay set for one second, simulating the approximate length of time for a contact closure when depressing a push-button switch. By doing this, there are no extended delays to get confused with when coordinating the door hold open time adjustment on the automatic door operator unit with the 3 - 5 second delay generated by the output signal from the 1420 power supply to the operator input.

Maintain Switch Option

By wiring a maintain switch in parallel with a momentary switch across the OAS or IAS input terminals, the signal to the automatic door operator can be extended (while the switch contacts remain closed) for an indefinite period of time, and will hold the door in a maintained open position. This may prove useful in places where extra time is needed to move carts or other equipment through the door. When the maintain switch contacts are opened, the door will then close after the “Door Hold-Open” delay programmed into the automatic door operator unit times out.

One-Shot Activation Option

The 1420 can be programmed to allow the automated door opening sequence to go through its complete open/close cycle in spite of a constant maintained contact closure held across the OAS or IAS input terminals. This option may be desirable in overcoming any deliberate attempts at holding the activation switch in the closed position which would cause the door to remain in a maintained open position, contrary to its normal cycle. To program in this option, place the slide switch marked “1” on the onboard dip switch bank to the position <u>opposite</u> the “ON” position, as shown below:

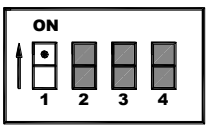

FACTORY SET POSITION

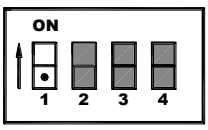

ONE-SHOT ACTIVATION POSITION

The dot shown above marks the position of the switch.

Note: When using the one-shot activation option, the following point must be observed: With the activation switch contacts in the maintained closed position, and after completion of a full open/close cycle, before the next activation can occur, the

activation switch contacts must be held open for 4 seconds (for resetting the delay circuit) before closing to reactivate the cycle.

Electrified Door Hardware

The 1420 is provided with an output for wiring to fail safe type door hardware (marked as FSF at terminal block TB1) and another output for fail secure type door hardware (marked as FSC). All electrified door hardware must be rated 24VDC. **The maximum allowable current draw for either output is 2 amps.** (If a pair of doors is used in the application, and each leaf contains electrified door hardware, the maximum current draw for each device is 1.0 amp.)

The most common type of fail safe door hardware used with this kind of system application is the electromagnetic lock. A complete riser diagram and point-to-point wiring diagram depicting an application utilizing this type of electrified door hardware can be found at the end of this manual, shown in Figures 1a and 1b respectively. Although not as common as an electromagnetic lock, a fail safe electric door strike can also be applied to an automated door opening system using the FSF output. **When using an electromagnetic lock for locking and releasing the door, there cannot be a mechanical latching device, such as a mortise or cylindrical lockset, installed in the door. This would prevent automatic opening of the door. The opening must be equipped with push-pull hardware trim only.**

The most common type of fail secure door hardware used is the electric door strike. A complete riser diagram and point-to-point wiring diagram depicting an application utilizing this type of electrified door hardware can be found at the end of this manual, shown in Figures 2a and 2b respectively.

A latching type of fail secure door hardware, such as the ACSI Series 1550K-MD kit with motor drive or the Series 1550-MD factory modified version, can be used providing that it is designed to have its latch retracted in less than 1.5 seconds upon application of power when the cycle has been activated, and providing the solenoid or motor used in the device does not draw more than 1 amp at 24VDC. For applications using the Series 1550K-MD or 1550-MD, a complete set of riser diagrams and point-to-point wiring diagrams can be found on the Architectural Control Systems website at www.acsi-inc.com.

For special applications, both fail safe and fail secure door hardware can be used on the same door, if required. As an example, a single door may contain a fail safe electromagnetic lock on the door frame header and a rim exit device with fail secure electric latch retraction on the door. When the system is activated, power is removed from the electromagnetic lock at the same time power is applied to the rim exit device (for retracting its latch) prior to signaling the automatic door operator to open. Each device can separately draw up to 1 amp of current (or up to 2 amps for pair door applications using electrified door hardware on each leaf) since both the fail safe and fail secure devices, at no time, are drawing current simultaneously.

CAUTION! Do not use the ACSI Series 1550C, Von Duprin Series EL, or any other manufacturer of high inrush electric latch retraction exit devices with the 1420 power supply. These devices can generate an initial high current pulse in excess of 6 amps. The 1420 is not designed to handle that amount of current draw. Special power supplies, specifically designed for use with these type of

exit devices, are required by the manufacturer to comply with UL safety requirements. Before using an exit device modified for electric latch retraction with the 1420, make sure to check out its electrical specifications, for ratings that comply with those of the 1420 power supply, and ensure that the manufacturer of the device does not require it to be used with a special power supply offered by that manufacturer.

Automatic Door Operator

The output terminals marked ADO at terminal block TB1 provide the electrical signal to the input of the automatic door operator for activating its “door open” cycle. This electrical signal is in the form of dry contacts from a relay located on the same p.c. board as TB1. The ADO output can be programmed for either a normally open or a normally closed contact signal. Most automatic door operator units accept a normally open contact signal, and the onboard dip switch bank is factory set for a “N.O.” output. But in the event that a normally closed (N.C.) signal should ever be required for activating an automatic door operator directly or indirectly, reconfigure the dip switch bank #2 and #3 switches per the illustration shown below:

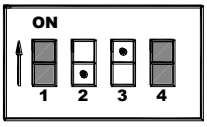

FACTORY SET POSITION
FOR N.O. OUTPUT

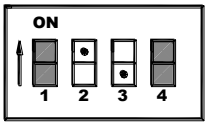

OPTIONAL FIELD SET POSITION
FOR N.C. OUTPUT

The dot shown above marks the position of the switch.

Emergency Release Switch

The emergency release switch input, marked as ERS at terminal block TB1, accepts a normally closed switch (or normally closed relay contacts) that is associated with some form of emergency, such as a panic alarm, or fire alarm. When the switch contacts open during an emergency situation, the electrified door hardware, regardless if it is fail safe or fail secure function, will unlock the door for immediate access. The 1420 comes from the factory with the emergency release switch input disabled. To enable the ERS input, switch #4 from the onboard dip switch bank must be placed <u>opposite</u> the “ON” position, as shown below:

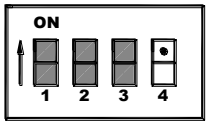

FACTORY SET POSITION
(ERS DISABLED)

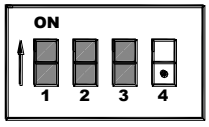

ERS "ENABLED" POSITION

The dot shown above marks the position of the switch.

Auxiliary 24VDC Output

This output, marked as 24V at terminal block TB1, provides a constant 24 volts that can be used to power keypads, motion detectors, LEDs, incandescent status indicators, etc. A maximum load of 1 amp is allowed across this output.

Note: The maximum output current for the 1420 power supply is 2 amps with all outputs combined. If the electrified door hardware draws a maximum of 1 amp, the auxiliary output can draw up to 1 amp. If the total current draw exceeds 1 amp for all electrified door hardware used, then the auxiliary output can only draw the amount of current that is equal to the difference between the total current drawn by the electrified door hardware and the 2 amp maximum.

Trouble Shooting Tips

Listed below are some problems that might be encountered during installation, or at any other time, and possible solutions for correcting them.

! CAUTION !

THIS UNIT CONTAINS AREAS OF EXPOSED HIGH VOLTAGE. ALL TROUBLE SHOOTING AND MAINTENANCE SHOULD BE PERFORMED BY A QUALIFIED ELECTRICIAN.

- **No output voltage measured across terminals 24V, FSF, or FSC.**
  - Check for 120VAC across terminals of input to power supply module.
  - If 120VAC is present, disconnect field wires from all used outputs (Auxiliary 24V, FSF, FSC) and measure for 24VDC across the “24V” terminals.
  - If 24VDC is now present, check for shorts across field wires for each output . If the load is electrified door hardware installed in the door, check the electric hinge for pinched wires behind each leaf. Also check for shorted wires between the electrified door hardware and raceway in the door if the raceway is metal conduit.
  - If 24VDC is not present across terminals marked “24V” (with field wires still disconnected from all outputs), disconnect the red and black wire leads connected to the +,- terminals of the output to the power supply module and check for 24VDC at this output. If voltage is now present across the power supply module's output, it can be assumed that there is a short circuit somewhere on the control board and it will need to be replaced. If voltage is still not present across the output to the power supply module, then it can be assumed the power supply module itself is damaged and must be replaced.

- **The electrified door hardware behaves the opposite of what was expected, i.e., it locks when intended to unlock, or unlocks when intended to lock.**
  - A fail safe type door hardware may be incorrectly wired to the fail secure output terminals (FSC). It must be wired to the terminals marked “FSF”.
  - A fail secure type door hardware may be incorrectly wired to the fail safe output terminals (FSF). It must be wired to the terminals marked “FSC”.

- Make sure that the electrified door hardware has been correctly modified for the function intended: Fail Safe (power to lock), Fail Secure (power to unlock).

- **A maintained activation switch is intended to be used to initiate the automated door opening system and hold the door in an open position; but when activated, the door goes through a complete open/close cycle instead of staying open.**
  - Dip switch #1 from the onboard dip switch bank is set for "One-Shot Activation". Correct this by placing dip switch #1 to the "ON" position. (See the above section entitled, "one-Shot Activation Option" under "Activation Switches" for more details.)

- **When the 1420 is powered up and the green "Power" indicator on the small p.c. board is lit, the electrified door hardware immediately releases, followed by activation of the automatic door operator, without manually activating the system.**
  - Field wires from the activation switch may be shorted together.
  - The 1420 activation inputs have been mistakenly wired to the normally closed contacts of the activation switch instead of the normally open contacts.

- **When the 1420 is powered up and the green "Power" indicator on the small p.c. board is lit, the electrified door hardware does not release, but the automatic door operator is activated and attempting to open the door, without manually activating the system.**
  - The dip switch settings for the ADO output are not correct, or are reversed from what they should be. Determine if the automatic door operator activation input accepts a contact closure or open contact signal for opening the door; then set the dip switches accordingly as per instructed in the section above entitled, "Automatic Door Operator".

- **The electrified door hardware all of a sudden releases, and the automatic door operator opens the door without being manually activated (characteristic of a symptom involving fail safe door hardware).**
  - The power supply has shut down due to a shorted output.
  - Loss of AC power to the 1420.

- **The automatic door operator all of a sudden becomes activated and is attempting to open the door; but the electrified door hardware remains locked, preventing the door from opening (characteristic of a symptom involving fail secure door hardware).**
  - The power supply has shut down due to a shorted output.
  - Loss of AC power to the 1420.

For trouble shooting assistance, contact ACSI Technical Support: 1-800-753-5558

SPECIFICATIONS:

Input Voltage:	120VAC/240VAC, 50/60Hz
AC Current:	900mA/120VAC, 600mA/240VAC
Output Voltage:	24VDC Filtered, Regulated
Output Current:	2.0A
Output Power:	48W
Protection:	Overload, Over Voltage, Short Circuit

ACSI
ARCHITECTURAL
CONTROL SYSTEMS INC.

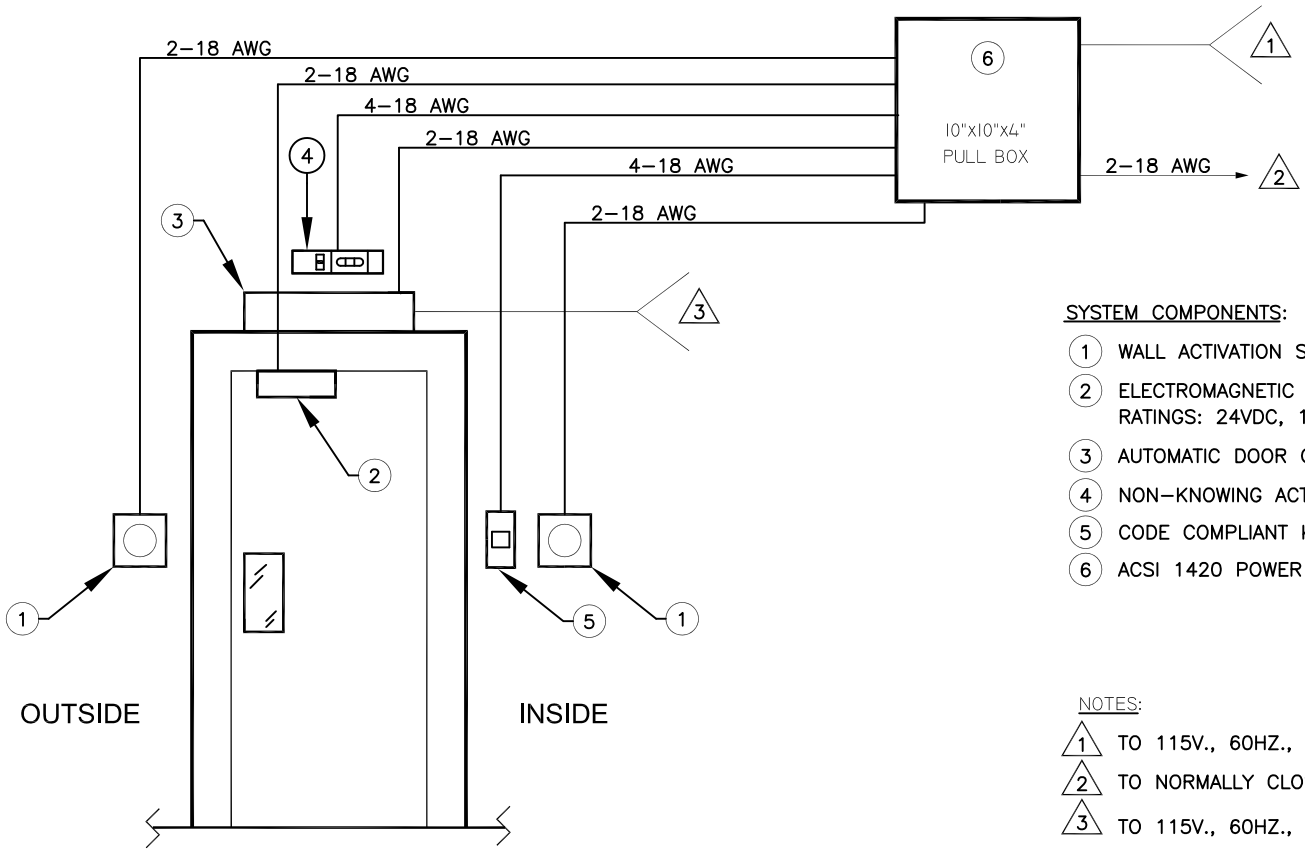

RISER DIAGRAM FOR AUTOMATED DOOR OPENING SYSTEM APPLICATION USING AN ELECTROMAGNETIC LOCK

SYSTEM COMPONENTS:

1. WALL ACTIVATION SWITCH – PUSH–BUTTON SWITCH TYPE
2. ELECTROMAGNETIC LOCK (ACSI SERIES 3700, OR OTHER TYPE) RATINGS: 24VDC, 1 AMP (MAX.)
3. AUTOMATIC DOOR OPERATOR UNIT
4. NON–KNOWING ACT RELEASE SWITCH
5. CODE COMPLIANT KNOWING ACT RELEASE SWITCH
6. ACSI 1420 POWER SUPPLY

NOTES:

1. TO 115V., 60HZ., 5A. SERVICE.
2. TO NORMALLY CLOSED DRY CONTACTS AT FIRE ALARM PANEL.
3. TO 115V., 60HZ., 20A. SERVICE.
4. ENSURE PROPER RELEASE SYSTEMS ARE IN PLACE TO RELEASE ELECTROMAGNETIC LOCK TO ALLOW FREE EGRESS THAT COMPLY WITH LOCAL CODES.

FIG. 1a

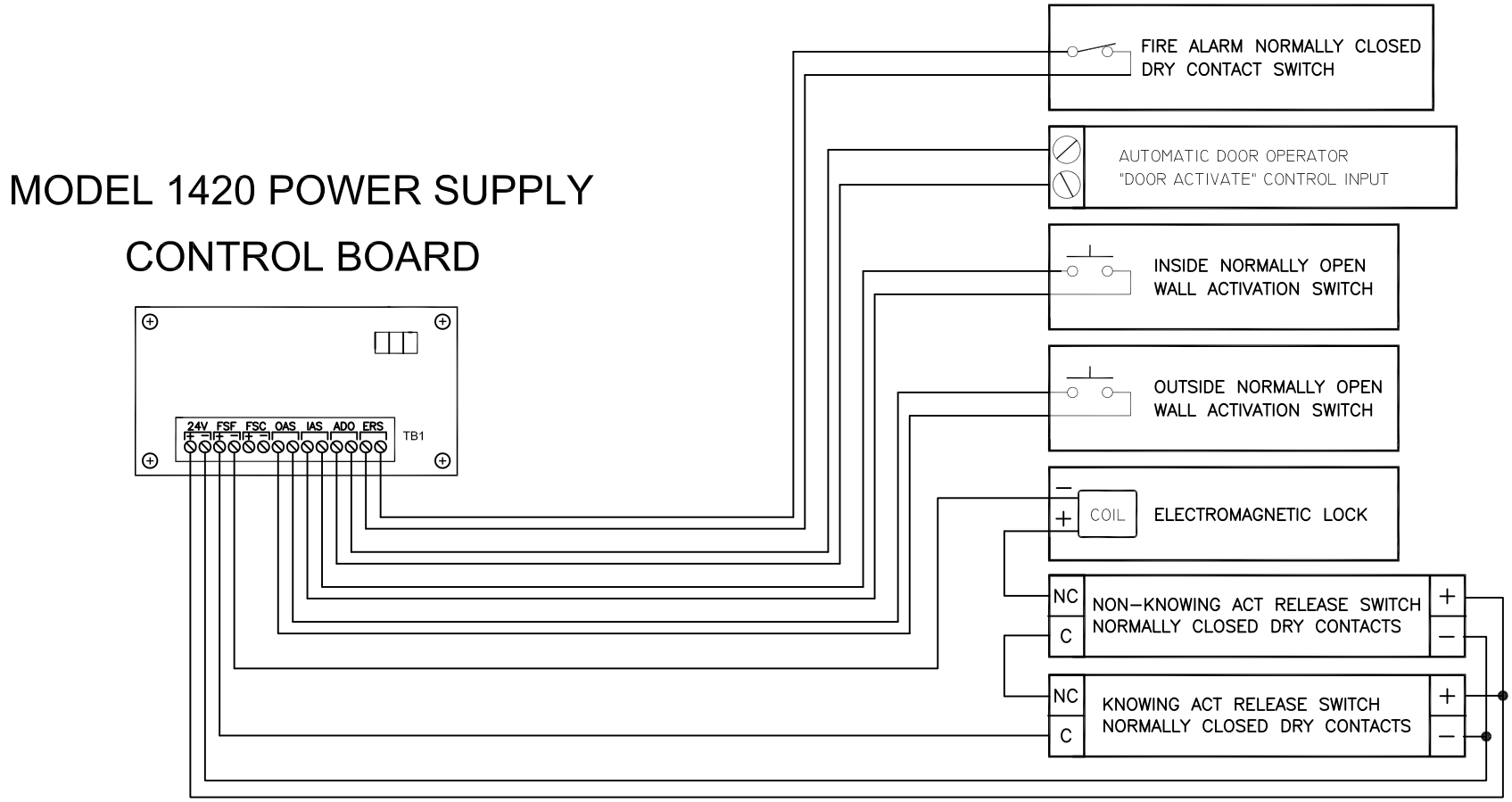

POINT-TO-POINT WIRE DIAGRAM FOR
AUTOMATED DOOR OPENING SYSTEM APPLICATION
USING AN ELECTROMAGNETIC LOCK

FIG. 1b

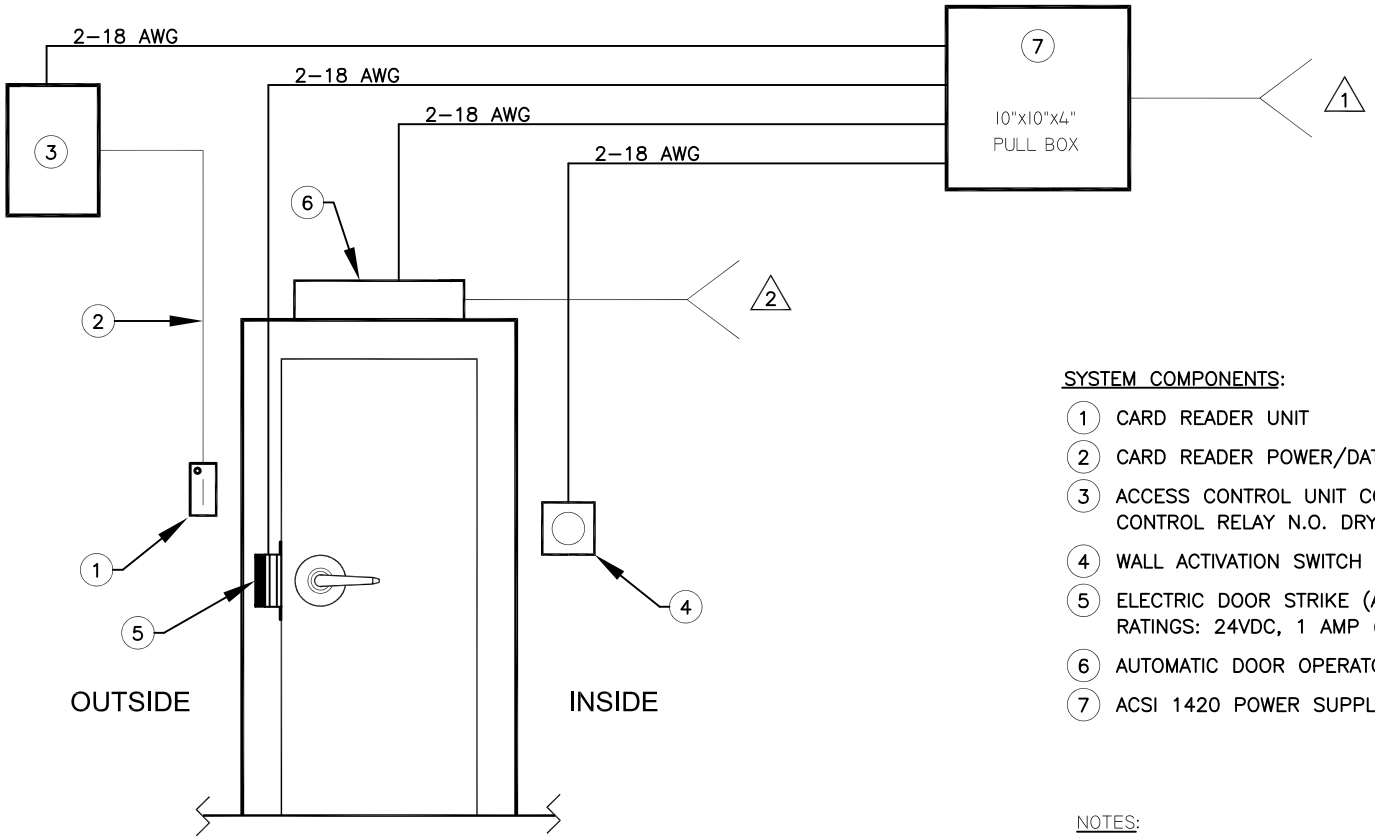

RISER DIAGRAM FOR AUTOMATED DOOR OPENING SYSTEM APPLICATION USING AN ELECTRIC DOOR STRIKE

SYSTEM COMPONENTS:

1. CARD READER UNIT
2. CARD READER POWER/DATA CABLE
3. ACCESS CONTROL UNIT CONTAINING DOOR CONTROL RELAY N.O. DRY CONTACT OUTPUT
4. WALL ACTIVATION SWITCH – PUSH–BUTTON SWITCH TYPE
5. ELECTRIC DOOR STRIKE (ACSI SERIES 1700, OR OTHER TYPE) RATINGS: 24VDC, 1 AMP (MAX.)
6. AUTOMATIC DOOR OPERATOR UNIT
7. ACSI 1420 POWER SUPPLY

NOTES:

1. TO 115V., 60HZ., 5A. SERVICE.
2. TO FIRE ALARM CONTROLLED 115V., 60HZ., 20A. SERVICE.

FIG. 2a

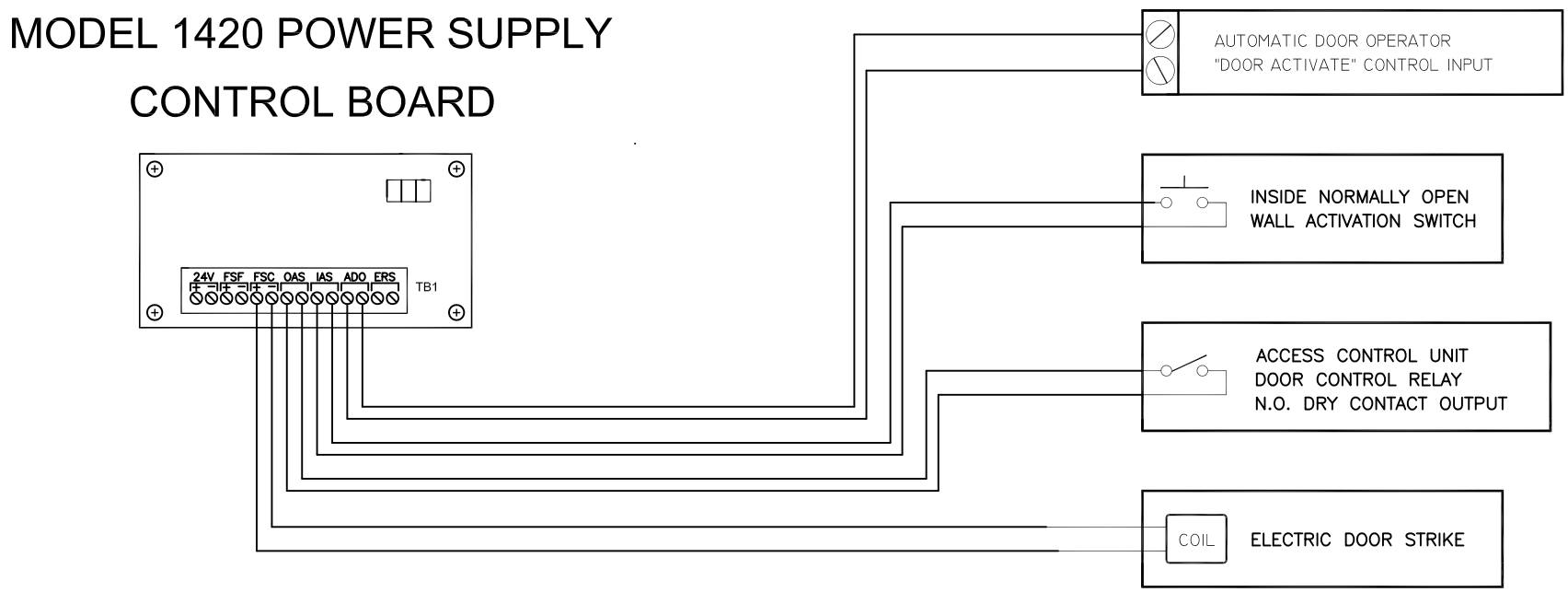

POINT-TO-POINT WIRE DIAGRAM FOR
AUTOMATED DOOR OPENING SYSTEM APPLICATION
USING AN ELECTRIC DOOR STRIKE

FIG. 2b

MODEL 1420 POWER SUPPLY

ACCESS CONTROL POWER SUPPLY
CLASS 2 OUTPUTS

SECURITY
UL LISTED
EQUIPMENT
4M73

MFG. DATE:

SPECIFICATIONS:

INPUT VOLTAGE:	120VAC/240VAC, 50/60Hz
AC CURRENT:	900mA/120VAC, 600mA/240VAC
OUTPUT VOLTAGE:	24VDC FILTERED, REGULATED
OUTPUT CURRENT:	2.0A
OUTPUT POWER:	48W
PROTECTION:	OVERLOAD, OVER VOLTAGE, SHORT CIRCUIT

USE INSTALLATION INSTRUCTIONS II - 1400-5

POWER SUPPLY INTENDED FOR INDOOR USE ONLY

STRIP WIRE BACK 6mm. WIRES MUST BE FULLY INSERTED INTO TERMINALS SO THAT NO BARE METAL IS EXPOSED. FLEXIBLE CABLE: ALL STRANDS MUST BE SECURED IN TERMINAL. USE COPPER CONDUCTORS ONLY.

TERMINAL SIZE RANGE:
AWG24–10 FOR A TYPE
AWG24–14 FOR B TYPE

120VAC OR 240VAC INPUT

CLASS 2 DOUBLE INSULATION.
NO EARTH GROUND WIRE REQUIRED.

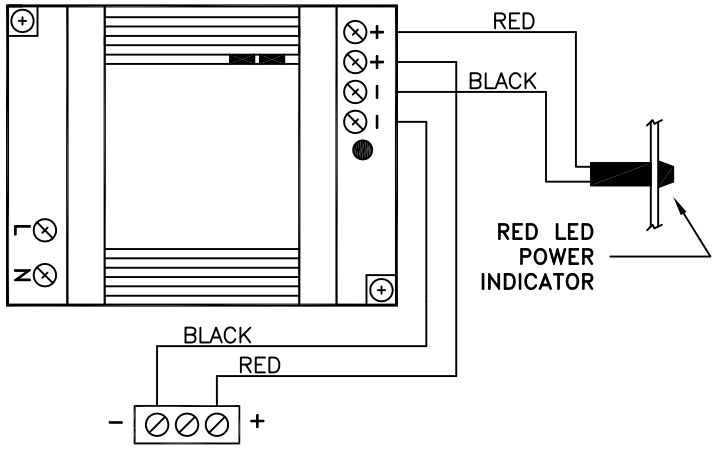

CONTROL BOARD I/O CONNECTOR

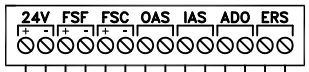

RELEASING DEVICE (FIRE ALARM, EMERGENCY RELEASE SWITCH, ETC.).
OPENING SWITCH CONTACTS WILL RELEASE ELECTRIFIED LOCKING DEVICE(S).
NOTE: THIS INPUT IS DISABLED BY DEFAULT – REFER TO INSTALLATION INSTRUCTIONS.

RELAY N.O. DRY CONTACT OUTPUT TO "DOOR OPEN" ACTIVATION INPUT OF AUTOMATIC DOOR OPERATOR.
MOMENTARY CLOSURE OF CONTACTS WILL ACTIVATE OPERATOR UNIT.

INSIDE ACTIVATION SWITCH FOR EXITING (HANDICAPPED WALL ACTUATOR, ETC.).
MOMENTARY CLOSURE OF CONTACTS WILL SEQUENTIALLY RELEASE ELECTRIFIED LOCKING DEVICE(S) AND ACTIVATE OPERATOR UNIT.

OUTSIDE ACTIVATION SWITCH FOR ENTRY (HANDICAPPED WALL ACTUATOR, ETC.).
MOMENTARY CLOSURE OF CONTACTS WILL SEQUENTIALLY RELEASE ELECTRIFIED LOCKING DEVICE(S) AND ACTIVATE OPERATOR UNIT.

TO FAIL SECURE ELECTRIFIED LOCKING DEVICE.

TO FAIL SAFE ELECTRIFIED LOCKING DEVICE.

BOTH TYPE DEVICES CAN BE CONNECTED AND OPERATED SIMULTANEOUSLY

UNSWITCHED AUXILIARY 24VDC OUTPUT.

NOTE: THE SUM OF ALL OUTPUTS CANNOT EXCEED 2 AMPS.

FOR TROUBLE SHOOTING ASSISTANCE,
CONTACT ACSI TECHNICAL SUPPORT:
1-800-753-5558

REV. 06/15

ACSI
ARCHITECTURAL CONTROL SYSTEMS INC.



ACSI Series 1550K-MD and 1550-MD Motor Drive Electric Latch Retraction

Riser and Point-to-Point Drawings for Standard Access Control and Day/Night Applications for Openings Using Automatic Door Operators

For Use with ACSI Part Numbers 1420 and 1420-DN

Rev. 02/15

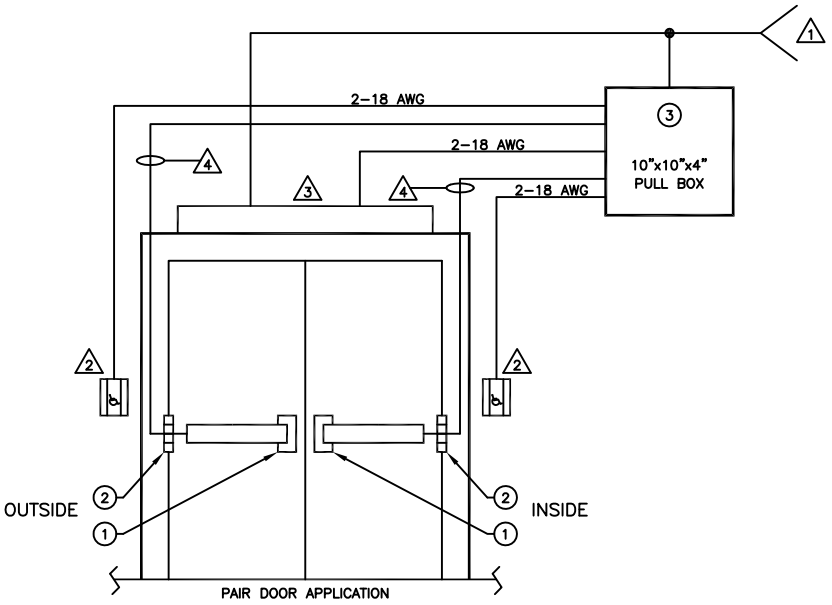

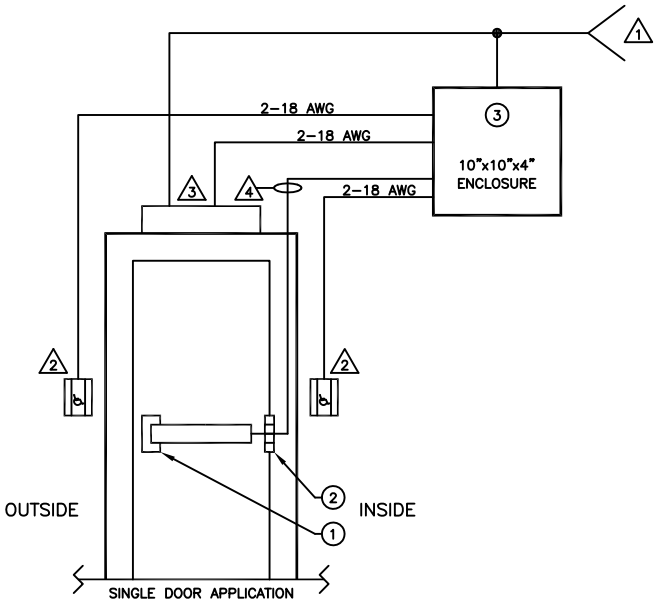

ACSI SUPPLIED EQUIPMENT:

1. SERIES 1550K-MD OR 1550-MD MOTOR DRIVE ELECTRIC LATCH RETRACTION
2. SERIES 1100 POWER TRANSFER HINGE
3. 1420 POWER SUPPLY

NOTES:

1. TO 115V., 60HZ., 15A. SERVICE.
   NOTE: IF FIRE ALARM INTERFACE IS REQUIRED, RUN 115V SERVICE THROUGH FIRE ALARM-CONTROLLED RELAY N.C. CONTACTS.
2. WALL ACTIVATION SWITCH
3. AUTOMATIC DOOR OPERATOR
4.

WIRE GAUGE	MAX. LENGTH 2-COND. CABLE
22 AWG	70 FEET
20 AWG	110 FEET
18 AWG	180 FEET
16 AWG	280 FEET
14 AWG	450 FEET
12 AWG	720 FEET

RISER DIAGRAM FOR STANDARD AUTOMATED DOOR OPENING SYSTEM APPLICATION USING SERIES 1550K-MD OR 1550-MD MOTOR DRIVE ELR DEVICES

ARCHITECTURAL CONTROL SYSTEMS, INCORPORATED
ST. LOUIS, MISSOURI
1-800-753-5558

TOLERANCES UNLESS NOTED
FRACTION ±1/64
DECIMAL ± .005
ANGULAR ±1°
DRILL +.007 -.001
REAM +.001 -.000
PUNCH +.004 -.001

DESCRIPTION	DRAWING NO.	MATERIAL
ACSI P/N 1420 ELR ACCESS CONTROL	REF 6037-R1	

DATE	REV.	APPRV.
10/7/14	RELEASED	CRH

SCALE NONE | DRAWN BY CRH | DATE 10/7/14
SHEET 1 OF 1 | APPRV. BY CRH | DATE 10/7/14

DO NOT SCALE THIS DRAWING

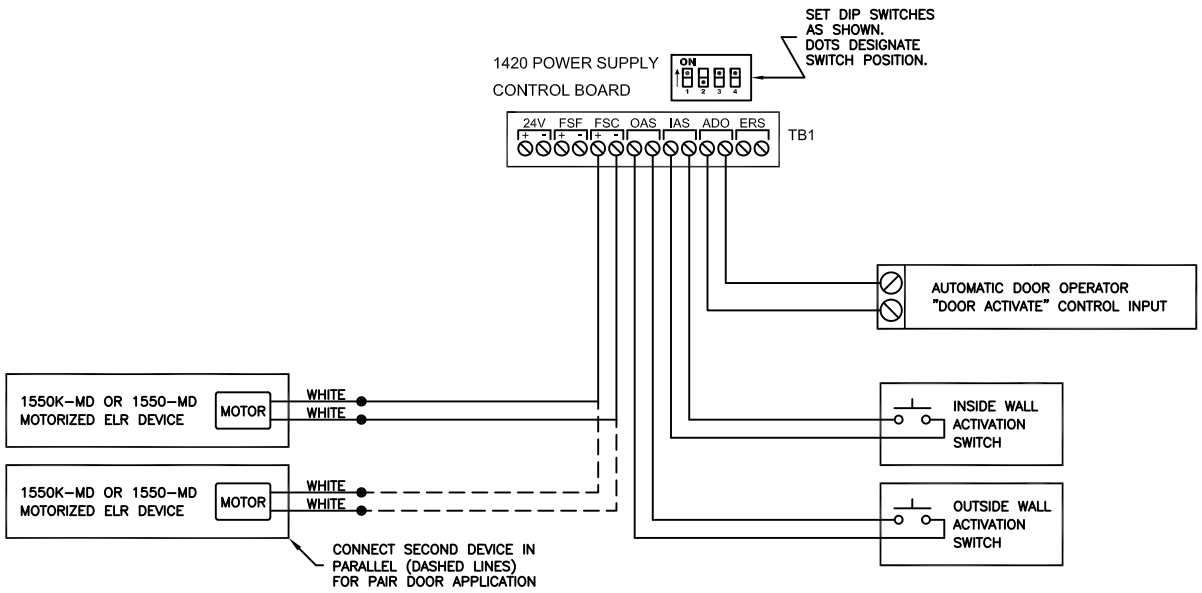

POINT-TO-POINT WIRING DIAGRAM
STANDARD ACCESS CONTROL WITH AUTOMATIC DOOR OPERATOR
USING SERIES 1550K-MD OR 1550-MD MOTOR DRIVE ELR DEVICES

SYSTEM OPERATION:

OUTSIDE OR INSIDE WALL ACTIVATION SWITCH SEQUENTIALLY RETRACTS LATCHBOLT AND ACTIVATES AUTOMATIC DOOR OPERATOR.

IF THE 1420 POWER SUPPLY IS WIRED TO A FIRE ALARM CONTROL PANEL, AN ALARM CONDITION WILL IMMEDIATELY PROJECT LATCHBOLT AND DISABLE USE OF OUTSIDE AND INSIDE WALL ACTIVATION SWITCHES.

NOTE: IF THE FIRE ALARM ACTIVATES DURING A "DOOR OPEN" CYCLE, THE LATCHBOLT WILL IMMEDIATELY PROJECT AND THE OUTSIDE/INSIDE WALL ACTIVATION SWITCHES WILL IMMEDIATELY BECOME DISABLED, BUT THE THE SIGNAL TO THE AUTOMATIC DOOR OPERATOR TRIGGER INPUT WILL TERMINATE APPROXIMATELY ½ SEC. AFTER THE ALARM HAS ACTIVATED.

ARCHITECTURAL CONTROL SYSTEMS, INCORPORATED
ST. LOUIS, MISSOURI
1–800–753–5558

TOLERANCES UNLESS NOTED
FRACTION ±1/64 — DRILL +.007 –.001
DECIMAL ± .005 — REAM +.001 –.000
ANGULAR ±1° — PUNCH +.004 –.001

DESCRIPTION	DRAWING NO.	MATERIAL
ACSI P/N 1420 ELR ACCESS CONTROL	REF 6037–P1	

10/7/14	RELEASED	CRH
DATE	REV.	APPRV.
SCALE NONE	DRAWN BY CRH	DATE 10/7/14
SHEET 1 OF 1	APPRV. BY CRH	DATE 10/7/14

DO NOT SCALE THIS DRAWING

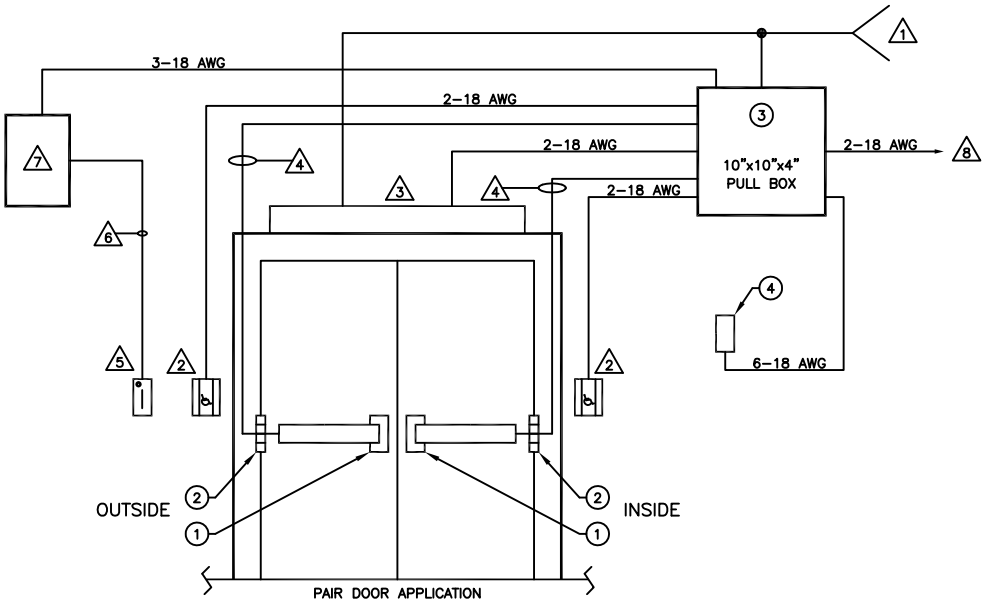

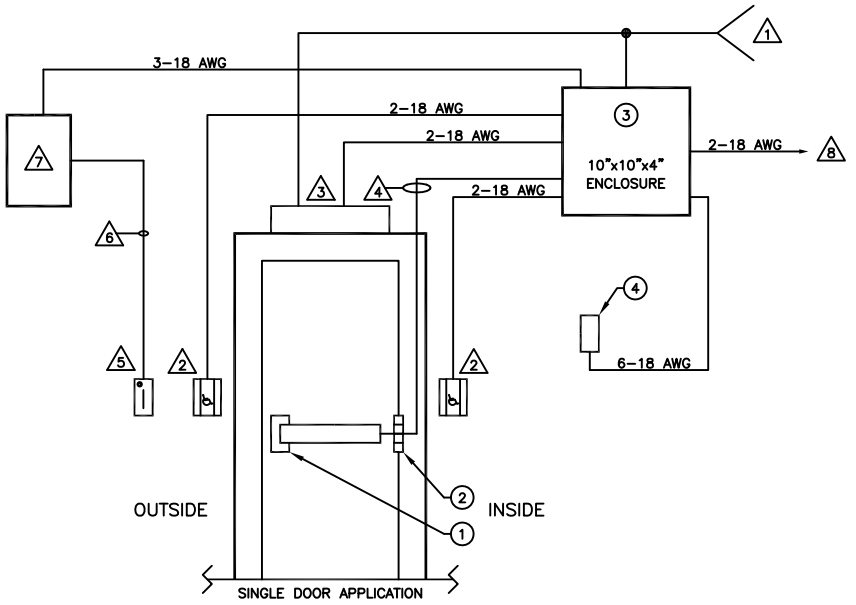

ACSI SUPPLIED EQUIPMENT:

1. SERIES 1550K-MD OR 1550-MD MOTOR DRIVE ELECTRIC LATCH RETRACTION
2. SERIES 1100 POWER TRANSFER HINGE
3. 1420 POWER SUPPLY
4. RM RELAY MODULE
   NOTE: DO NOT LOCATE MORE THAN 10 FT. FROM POWER SUPPLY

NOTES:

1. TO 115V., 60HZ., 15A. SERVICE.
   NOTE: IF FIRE ALARM INTERFACE IS REQUIRED, RUN 115V SERVICE THROUGH FIRE ALARM-CONTROLLED RELAY N.C. CONTACTS.
2. WALL ACTIVATION SWITCH
3. AUTOMATIC DOOR OPERATOR

4.

WIRE GAUGE	MAX. LENGTH 2-COND. CABLE
22 AWG	70 FEET
20 AWG	110 FEET
18 AWG	180 FEET
16 AWG	280 FEET
14 AWG	450 FEET
12 AWG	720 FEET

5. CARD READER UNIT
6. CARD READER POWER/DATA CABLE
7. CARD ACCESS CONTROL UNIT CONTAINING DOOR CONTROL RELAY RESPONDING TO CARD READER SWIPE FOR MOMENTARY AUTHORIZED ENTRY (NIGHT MODE)
8. ACCESS CONTROL SYSTEM DAY/NIGHT SWITCHING OUTPUT (TIME CLOCK, COMPUTER-CONTROLLED TIME SCHEDULE, ETC.)

RISER DIAGRAM FOR DAY/NIGHT AUTOMATED DOOR OPENING SYSTEM APPLICATION USING SERIES 1550K-MD OR 1550-MD MOTOR DRIVE ELR DEVICES

ARCHITECTURAL CONTROL SYSTEMS, INCORPORATED
ST. LOUIS, MISSOURI
1-800-753-5558

TOLERANCES UNLESS NOTED
FRACTION ±1/64 — DRILL +.007 -.001
DECIMAL ± .005 — REAM +.001 -.000
ANGULAR ±1° — PUNCH +.004 -.001

DESCRIPTION	DRAWING NO.	MATERIAL
ACSI P/N 1420-DN ELR ACCESS CONTROL	REF 6037-R2	

DATE	REV.	APPRV.
2/10/15	A	CRH
10/7/14	RELEASED	CRH

SCALE NTS — DRAWN BY CRH — DATE 10/7/14
SHEET 1 OF 1 — APPRV. BY CRH — DATE 10/7/14
DO NOT SCALE THIS DRAWING

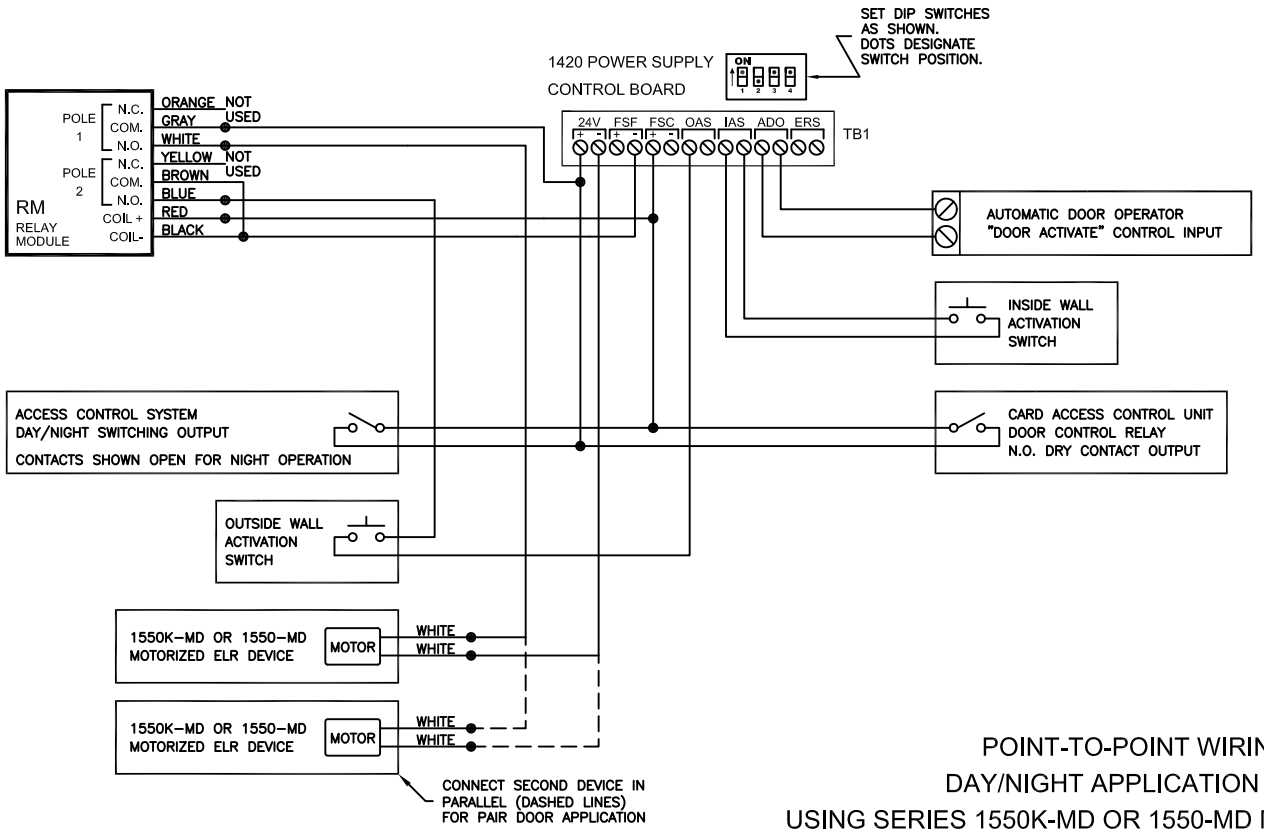

POINT-TO-POINT WIRING DIAGRAM
DAY/NIGHT APPLICATION - VARIATION #1
USING SERIES 1550K-MD OR 1550-MD MOTOR DRIVE ELR DEVICES

SYSTEM OPERATION:

WHEN THE ACCESS CONTROL SYSTEM DAY/NIGHT SWITCHING OUTPUT IS SET FOR DAY OPERATION (DRY CONTACTS CLOSED), THE LATCHBOLT WILL RETRACT. PUSHING THE OUTSIDE OR INSIDE WALL ACTIVATION SWITCH WILL ACTIVATE THE AUTOMATIC DOOR OPERATOR.

WHEN THE ACCESS CONTROL SYSTEM DAY/NIGHT SWITCHING OUTPUT IS SET FOR NIGHT OPERATION (DRY CONTACTS OPEN), THE LATCHBOLT WILL PROJECT AND THE OUTSIDE WALL ACTIVATION SWITCH BECOMES DISABLED. A VALID SWIPE FROM THE CARD READER WILL TEMPORARILY RETRACT THE LATCHBOLT. WHILE THE CARD READER IS IN ITS ACTIVATED STATE, THE OUTSIDE WALL ACTIVATION SWITCH IS ENABLED FOR ACTIVATING THE AUTOMATIC DOOR OPERATOR. THE INSIDE WALL ACTIVATION SWITCH IS ALWAYS ENABLED IN NIGHT MODE AND WILL SEQUENTIALLY RETRACT THE LATCHBOLT AND ACTIVATE THE AUTOMATIC DOOR OPERATOR.

IF THE 1420 POWER SUPPLY IS WIRED TO A FIRE ALARM CONTROL PANEL, AN ALARM CONDITION OCCURRING WHILE IN DAY MODE WILL IMMEDIATELY PROJECT THE LATCHBOLT AND DISABLE USE OF THE OUTSIDE AND INSIDE WALL ACTIVATION SWITCHES. IN NIGHT MODE WHEN A FIRE ALARM CONDITION OCCURS, THE LATCHBOLT WILL REMAIN PROJECTED AND BOTH OUTSDIE AND INSIDE WALL ACTIVATION SWITCHES BECOME DISABLED.

NOTE: IF THE FIRE ALARM ACTIVATES DURING A "DOOR OPEN" CYCLE (DAY OR NIGHT MODE), THE LATCHBOLT WILL IMMEDIATELY PROJECT AND THE OUTSIDE/INSIDE WALL ACTIVATION SWITCHES WILL IMMEDIATELY BECOME DISABLED, BUT THE THE SIGNAL TO THE AUTOMATIC DOOR OPERATOR TRIGGER INPUT WILL TERMINATE APPROXIMATELY ½ SEC. AFTER THE ALARM HAS ACTIVATED.

ARCHITECTURAL CONTROL SYSTEMS, INCORPORATED
ST. LOUIS, MISSOURI
1-800-753-5558

TOLERANCES UNLESS NOTED
FRACTION ±1/64 DRILL +.007 -.001
DECIMAL ± .005 REAM +.001 -.000
ANGULAR ±1° PUNCH +.004 -.001

DESCRIPTION	DRAWING NO.	MATERIAL
ACSI P/N 1420-DN ELR ACCESS CONTROL	REF 6037-P2-1	

DATE	REV.	APPRV.
12/18/14	A	CRH
10/7/14	RELEASED	CRH

SCALE NONE | DRAWN BY CRH | DATE 10/7/14
SHEET 1 OF 1 | APPRV. BY CRH | DATE 10/7/14

DO NOT SCALE THIS DRAWING

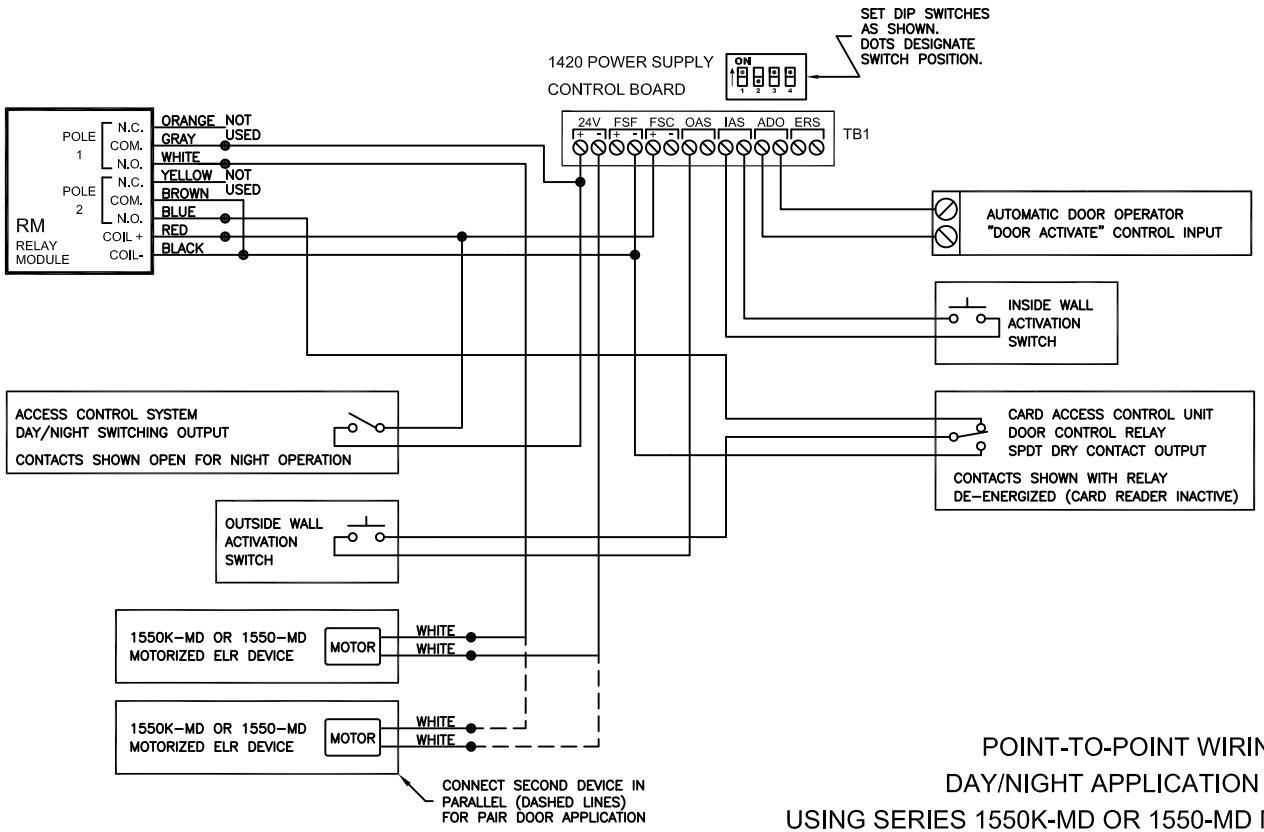

POINT-TO-POINT WIRING DIAGRAM
DAY/NIGHT APPLICATION - VARIATION #2
USING SERIES 1550K-MD OR 1550-MD MOTOR DRIVE ELR DEVICES

SYSTEM OPERATION:

WHEN THE ACCESS CONTROL SYSTEM DAY/NIGHT SWITCHING OUTPUT IS SET FOR DAY OPERATION (DRY CONTACTS CLOSED), THE LATCHBOLT WILL RETRACT. PUSHING THE OUTSIDE OR INSIDE WALL ACTIVATION SWITCH WILL ACTIVATE THE AUTOMATIC DOOR OPERATOR.

WHEN THE ACCESS CONTROL SYSTEM DAY/NIGHT SWITCHING OUTPUT IS SET FOR NIGHT OPERATION (DRY CONTACTS OPEN), THE LATCHBOLT WILL PROJECT AND THE OUTSIDE WALL ACTIVATION SWITCH BECOMES DISABLED. A VALID SWIPE FROM THE CARD READER WILL ENABLE THE OUTSIDE WALL ACTIVATION SWITCH TO SEQUENTIALLY RETRACT THE LATCHBOLT AND ACTIVATE THE AUTOMATIC DOOR OPERATOR. THE INSIDE WALL ACTIVATION SWITCH IS ALWAYS ENABLED IN NIGHT MODE AND WILL SEQUENTIALLY RETRACT THE LATCHBOLT AND ACTIVATE THE AUTOMATIC DOOR OPERATOR.

IF THE 1420 POWER SUPPLY IS WIRED TO A FIRE ALARM CONTROL PANEL, AN ALARM CONDITION OCCURRING WHILE IN DAY MODE WILL IMMEDIATELY PROJECT THE LATCHBOLT AND DISABLE USE OF THE OUTSIDE AND INSIDE WALL ACTIVATION SWITCHES. IN NIGHT MODE WHEN A FIRE ALARM CONDITION OCCURS, THE LATCHBOLT WILL REMAIN PROJECTED AND BOTH OUTSIDE AND INSIDE WALL ACTIVATION SWITCHES BECOME DISABLED.

NOTE: IF THE FIRE ALARM ACTIVATES DURING A "DOOR OPEN" CYCLE (DAY OR NIGHT MODE), THE LATCHBOLT WILL IMMEDIATELY PROJECT AND THE OUTSIDE/INSIDE WALL ACTIVATION SWITCHES WILL IMMEDIATELY BECOME DISABLED, BUT THE THE SIGNAL TO THE AUTOMATIC DOOR OPERATOR TRIGGER INPUT WILL TERMINATE APPROXIMATELY ½ SEC. AFTER THE ALARM HAS ACTIVATED.

ARCHITECTURAL CONTROL SYSTEMS, INCORPORATED
ST. LOUIS, MISSOURI
1-800-753-5558

TOLERANCES UNLESS NOTED
FRACTION ±1/64 DRILL +.007 -.001
DECIMAL ± .005 REAM +.001 -.000
ANGULAR ±1° PUNCH +.004 -.001

DESCRIPTION	DRAWING NO.	MATERIAL
ACSI P/N 1420-DN ELR ACCESS CONTROL	REF 6037-P2-2	

DATE	REV.	APPRV.
12/18/14	A	CRH
10/8/14	RELEASED	CRH

SCALE NONE | DRAWN BY CRH | DATE 10/8/14
SHEET 1 OF 1 | APPRV. BY CRH | DATE 10/8/14

DO NOT SCALE THIS DRAWING

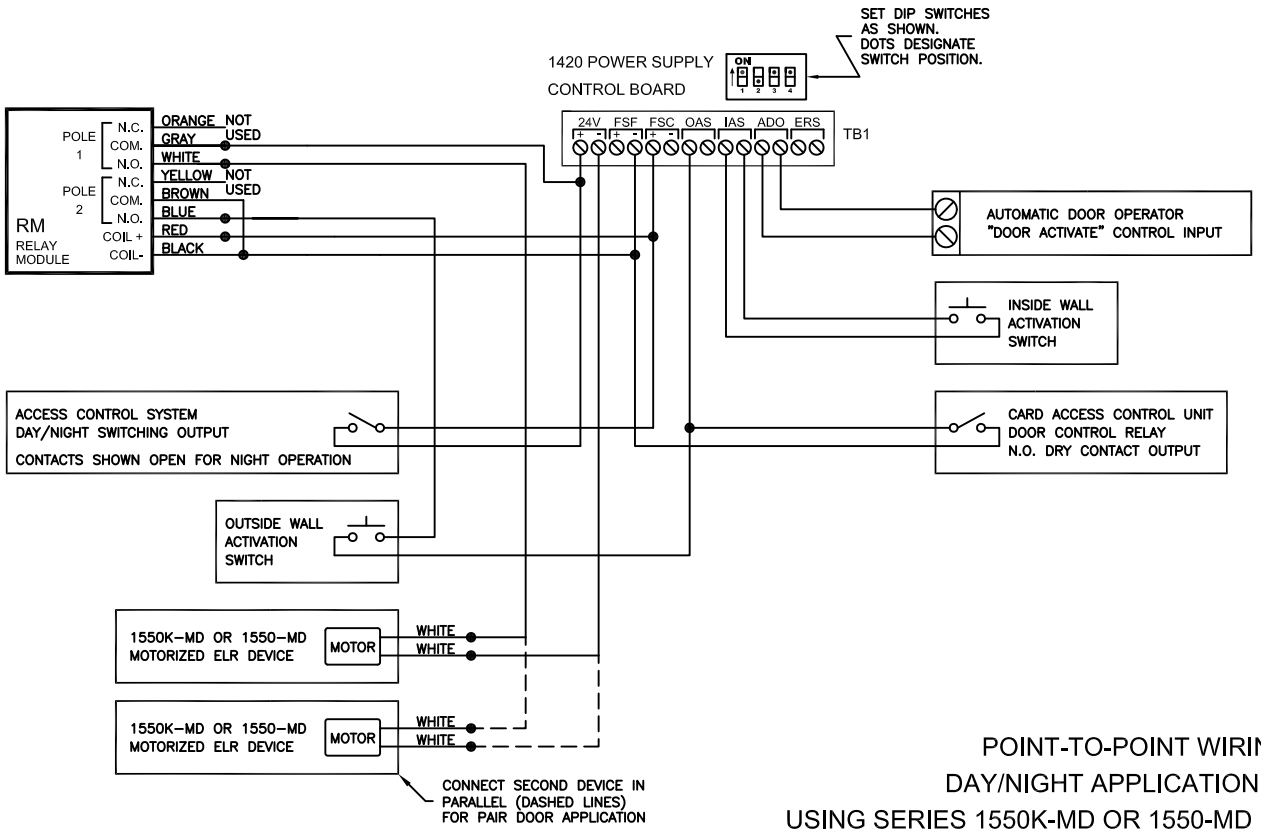

POINT-TO-POINT WIRING DIAGRAM
DAY/NIGHT APPLICATION - VARIATION #3
USING SERIES 1550K-MD OR 1550-MD MOTOR DRIVE ELR DEVICES

SYSTEM OPERATION:

WHEN THE ACCESS CONTROL SYSTEM DAY/NIGHT SWITCHING OUTPUT IS SET FOR DAY OPERATION (DRY CONTACTS CLOSED), THE LATCHBOLT WILL RETRACT. PUSHING THE OUTSIDE OR INSIDE WALL ACTIVATION SWITCH WILL ACTIVATE THE AUTOMATIC DOOR OPERATOR.

WHEN THE ACCESS CONTROL SYSTEM DAY/NIGHT SWITCHING OUTPUT IS SET FOR NIGHT OPERATION (DRY CONTACTS OPEN), THE LATCHBOLT WILL PROJECT AND THE OUTSIDE WALL ACTIVATION SWITCH BECOMES DISABLED. A VALID SWIPE FROM THE CARD READER WILL SEQUENTIALLY RETRACT THE LATCHBOLT AND ACTIVATE THE AUTOMATIC DOOR OPERATOR. THE INSIDE WALL ACTIVATION SWITCH IS ALWAYS ENABLED IN NIGHT MODE AND WILL SEQUENTIALLY RETRACT THE LATCHBOLT AND ACTIVATE THE AUTOMATIC DOOR OPERATOR.

IF THE 1420 POWER SUPPLY IS WIRED TO A FIRE ALARM CONTROL PANEL, AN ALARM CONDITION OCCURRING WHILE IN DAY MODE WILL IMMEDIATELY PROJECT THE LATCHBOLT AND DISABLE USE OF THE OUTSIDE AND INSIDE WALL ACTIVATION SWITCHES. IN NIGHT MODE WHEN A FIRE ALARM CONDITION OCCURS, THE LATCHBOLT WILL REMAIN PROJECTED AND BOTH OUTSDIE AND INSIDE WALL ACTIVATION SWITCHES BECOME DISABLED.

NOTE: IF THE FIRE ALARM ACTIVATES DURING A "DOOR OPEN" CYCLE (DAY OR NIGHT MODE), THE LATCHBOLT WILL IMMEDIATELY PROJECT AND THE OUTSIDE/INSIDE WALL ACTIVATION SWITCHES WILL IMMEDIATELY BECOME DISABLED, BUT THE THE SIGNAL TO THE AUTOMATIC DOOR OPERATOR TRIGGER INPUT WILL TERMINATE APPROXIMATELY ½ SEC. AFTER THE ALARM HAS ACTIVATED.

ARCHITECTURAL CONTROL SYSTEMS, INCORPORATED
ST. LOUIS, MISSOURI
1-800-753-5558

TOLERANCES UNLESS NOTED
FRACTION ±1/64 DRILL +.007 -.001
DECIMAL ± .005 REAM +.001 -.000
ANGULAR ±1° PUNCH +.004 -.001

DESCRIPTION	DRAWING NO.	MATERIAL
ACSI P/N 1420-DN ELR ACCESS CONTROL	REF 6037-P2-3	

DATE	REV.	APPRV.
12/18/14	A	CRH
10/8/14	RELEASED	CRH

SCALE NTS | DRAWN BY CRH | DATE 10/8/14
SHEET 1 OF 1 | APPRV. BY CRH | DATE 10/8/14

DO NOT SCALE THIS DRAWING

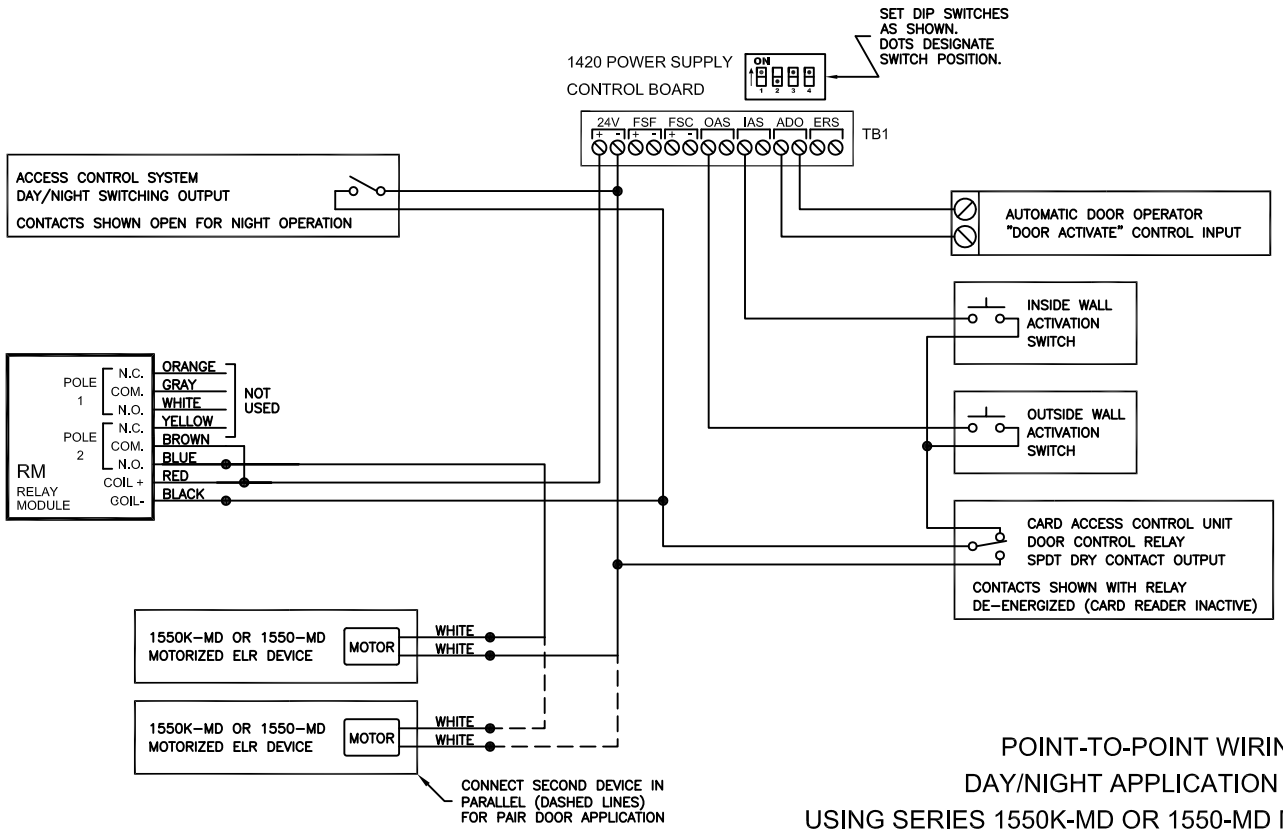

POINT-TO-POINT WIRING DIAGRAM
DAY/NIGHT APPLICATION - VARIATION #4
USING SERIES 1550K-MD OR 1550-MD MOTOR DRIVE ELR DEVICES

SYSTEM OPERATION:

WHEN THE ACCESS CONTROL SYSTEM DAY/NIGHT SWITCHING OUTPUT IS SET FOR DAY OPERATION (DRY CONTACTS CLOSED), THE LATCHBOLT WILL RETRACT. PUSHING THE OUTSIDE OR INSIDE WALL ACTIVATION SWITCH WILL ACTIVATE THE AUTOMATIC DOOR OPERATOR.

WHEN THE ACCESS CONTROL SYSTEM DAY/NIGHT SWITCHING OUTPUT IS SET FOR NIGHT OPERATION (DRY CONTACTS OPEN), THE LATCHBOLT WILL PROJECT AND BOTH THE OUTSIDE AND INSIDE WALL ACTIVATION SWITCHES BECOME DISABLED. A VALID SWIPE FROM THE CARD READER WILL ONLY RETRACT THE LATCHBOLT. THE DOOR MUST BE PULLED OPEN MANUALLY FOR ENTRY OR PUSHED OPEN MANUALLY FOR EXITING.

IF THE 1420 POWER SUPPLY IS WIRED TO A FIRE ALARM CONTROL PANEL, AN ALARM CONDITION OCCURRING WHILE IN DAY MODE WILL IMMEDIATELY PROJECT THE LATCHBOLT AND DISABLE USE OF THE OUTSIDE AND INSIDE WALL ACTIVATION SWITCHES. IN NIGHT MODE WHEN A FIRE ALARM CONDITION OCCURS, THE LATCHBOLT WILL REMAIN PROJECTED. BY DEFAULT, BOTH OUTSIDE AND INSIDE WALL ACTIVATION SWITCHES ARE DISABLED IN NIGHT MODE.

NOTE: IF THE FIRE ALARM ACTIVATES DURING A "DOOR OPEN" CYCLE (DAY MODE ONLY), THE LATCHBOLT WILL IMMEDIATELY PROJECT AND THE OUTSIDE/INSIDE WALL ACTIVATION SWITCHES WILL IMMEDIATELY BECOME DISABLED, BUT THE THE SIGNAL TO THE AUTOMATIC DOOR OPERATOR TRIGGER INPUT WILL TERMINATE APPROXIMATELY ½ SEC. AFTER THE ALARM HAS ACTIVATED.

ARCHITECTURAL CONTROL SYSTEMS, INCORPORATED
ST. LOUIS, MISSOURI
1-800-753-5558

TOLERANCES UNLESS NOTED
FRACTION ±1/64 DRILL +.007 -.001
DECIMAL ± .005 REAM +.001 -.000
ANGULAR ±1° PUNCH +.004 -.001

DESCRIPTION	DRAWING NO.	MATERIAL
ACSI P/N 1420-DN ELR ACCESS CONTROL	REF 6037-P2-4	

DATE	REV.	APPRV.
12/18/14	A	CRH
10/8/14	RELEASED	CRH

SCALE NONE | DRAWN BY CRH | DATE 10/8/14
SHEET 1 OF 1 | APPRV. BY CRH | DATE 10/8/14
DO NOT SCALE THIS DRAWING

ACSI MODEL 1426-04-AO POWER SUPPY
INSTALLATION INSTRUCTIONS

Features:

- Up to 2.0 Amps Load Capacity
- Class 2 Rated Outputs
- Overload, Over Voltage, and Short Circuit Protection
- Up to Two Output Devices Controlled by One Input
- Day/Night Control with Output for Automatic Door Operator Interface
- Input for Connection to Fire Alarm
- Auxiliary Outputs for Powering Stand Alone Devices, Such as Keypads, Motion Detectors, and Status Indicators
- UL Listed and Tested to 294 Standard for Access Control System Units with Security Levels Rated I for Physical Attack, IV for Endurance, I for Line Security, I for Standby Power



INSTALLATION

Transformer Model BE31763001 by Basler Electric, Transformer Model 2010028 by Galaxy Transformer and Magnetics, and Transformer Model A41-130-28A34 by EWC have been certified for UL applications.

The 1426 enclosure should be securely fastened to the wall using the four 1/4 inch diameter mounting holes located in the back of the box. Position the enclosure so that the transformer is located on the left-hand side. The 1426 must not be installed outdoors.

For the 120VAC power input, terminal block TB1 will accommodate up to 12 AWG wire (solid). Conduit must be used to provide an adequate earth ground to the enclosure.

NOTE: The maximum input current is 750mA.

The 1426 is designed to be used with all exit devices modified for 1550C electric latch retraction. Use the chart below to determine the correct wire gauge per given length of two-conductor cable that will be run from the 1426 to each exit device. Do not exceed the maximum length listed with each wire gauge.

WIRE GAUGE	MAXIMUM LENGTH OF TWO-CONDUCTOR CABLE
16 AWG	40 FEET
14 AWG	60 FEET
12 AWG	100 FEET

Up to two devices can be used with the 1426. If only one device is to be used, wire to the “DEVICE ONE” location at TB3, terminals 5 and 6.

NOTE: When using the 1550C exit device with red and black leads, be sure to observe polarity when connecting devices 1 and 2 to TB3. (Refer to the wiring diagram located on the lid of the controller.)

STANDARD OPERATION

The 1426 is provided with two inputs: one used for momentarily retracting latches sequentially, followed by a signal to activate the automatic door operator; the other used with a maintain switch for sequentially retracting latches only. This system will work for single door applications or on a pair of doors using a device on one or both leaves.

Connect a momentary, normally open switch across terminals 1 and 2 of terminal block TB3. Closing this switch momentarily will retract the latch of DEVICE ONE and DEVICE TWO sequentially and follow with a dry contact closure signal to the automatic door operator. Pot R2 is used to control the length of time that the latch(es) remain retracted and the signal to the automatic door operator remains active. Factory set to five seconds, pot R2 (located at the top of the p.c. board) can be field adjusted to the desired delay time from 1 to 20 seconds. Turn the pot clockwise to increase the delay time.

When using normally open contacts from a keypad or card reader with built-in time delay, turn pot R2 fully counterclockwise to the minimum delay time (approx. 0.5 sec.). A contact closure will activate latch retraction and activate the automatic door operator. The device(s) will latch and the signal to the automatic door operator will cancel within 0.5 second after the keypad or card reader delay times out.

NOTE: Pot R4 is not used; do not adjust.

Connect a maintain switch across terminals 7 and 8 of terminal block TB3. Closing this switch will sequentially retract the latch of DEVICE ONE and DEVICE TWO, <u>but will not activate the automatic door operator</u>. Upon opening the switch contacts, both devices will immediately latch (no delay before latching).

Connect DEVICE ONE to TB3, terminals 5 and 6; positive red lead connects to terminal 5. POLARITY MUST BE OBSERVED WHEN USING THE ELR DEVICE WITH RED & BLACK LEADS. Connect DEVICE TWO, if used, to TB3, terminals 11 and 12; positive red lead connects to terminal 11. (When connecting the alternate1550C exit device with blue leads to terminals 5 and 6 or 11 and 12, polarity is not observed.) The automatic door operator output, TB3,

terminals 9 and 10, consists of normally open relay contacts that are field wired directly to the “DOOR ACTIVATION” input of the automatic door operator.

NOTE: P.C. board program jumper PJ1 must always be left in place between the middle post and the end post marked “S”.

1550C ELR SOLENOID ASSEMBLIES - THEORY OF OPERATION

ACSI provides two types of 1550C ELR (electric latch retraction) devices: One type is designed to fit inside exit devices of narrow height and depth (1-1/4"). The leads to these devices are polarized: Red lead = (+); Black Lead = (-). The other type ELR device will fit into exit devices having a minimum height and depth of 1-1/2". The leads to these devices are non-polarized and colored blue.

1550C ELR Device with Polarized Leads:
This device contains a pulse module which delivers a pulse at 24VDC to a high current coil inside the exit device every 6 seconds until the latch is finally pulled back all the way. At this point, a control rod passes over a reflective sensor and signals the module to stop pulsing. There is always an initial pulse that occurs at the moment the system is activated. During the period the system remains activated, output voltage is applied to a low current secondary coil. This coil is responsible for holding the latch in the retracted position until instructed to return to the “fail secure” position. (See note 2 on page 7.) The device contains a fuse to protect the ELR circuit in the event of a reversed polarity wire connection.

1550C ELR Device with Non-polarized Leads:
This device contains a powerful solenoid that performs both pulling and holding functions. An initial high current pulse occurs each time output voltage is applied to the device. After the pulse, the solenoid switches over to a "holding" state by way of frequency modulation which reduces the current to allow the solenoid to run at a cooler temperature. Because of its non-polar design, the device contains no fuse.

OPERATION WITH FIRE ALARM

The 1426 can be wired to the fire alarm relay normally closed contacts. When a fire alarm occurs, any door that is currently unlatched, whether by momentary time delay or by maintained switch, will immediately latch secure. During the time that the fire alarm is active, electronic control of the automatic door opening system by wall switch, card reader, keypad, etc., is disabled. The door then can only be opened manually.

The 1426 comes from the factory set up for use without fire alarm interface. If the fire alarm is to be used with this controller, move the program jumper PJ2 from between the middle post and the end post marked “FA DIS” (Fire Alarm

Disabled), to between the middle post and the end post marked “FA EN” (Fire Alarm Enabled).

NOTE: The current drawn through fire alarm relay contacts will be 120mA @ 24VDC

AUXILIARY POWER SOURCE OUTPUTS

Two constant, power limited auxiliary outputs are provided for powering keypads, motion sensors, annunciator panels, electromagnetic door holders, relays, LEDs, etc. Choose between auxiliary output #1 or auxiliary output #2.

- Auxiliary Output #1 Range: 26.7V - 28.0V, Nominal
- Auxiliary Output #2 Range: 12.6V - 16.5V, Nominal

NOTE: Both auxiliary outputs can be used at the same time for loads requiring different voltages (for a combined maximum load current of 500mA). However, do not tie the aux. output #2 ground (TB3, terminal 18) common to the aux. output #1 ground (TB3, terminal 16). Both of these power sources must be isolated from each other.

CAUTION: IT IS RECOMMENDED TO USE OUTPUT #2 WITH EQUIPMENT THAT HAVE INPUTS RATED FOR 12 - 24 VOLTS, AC OR DC. CHECK WITH THE MANUFACTURER BEFORE CONNECTING 24VDC RATED EQUIPMENT ACROSS OUTPUT #1 TO ENSURE THE HIGHER VOLTAGE WILL NOT CAUSE ANY DAMAGE.

TYPICAL 1426 APPLICATION

A pair of doors is to be controlled by a computerized time system where it is to be unlatched during business hours from 8:00 AM to 5:00 PM. During this time, a handicapped wall switch located on the exterior and interior sides of the door can be used to activate the automatic door operator.

After business hours, the computer locks the pair of doors and disables use of the exterior handicapped wall switch. The inside wall switch remains enabled after business hours and, when actuated, will momentarily retract the latches and activate the automatic door operator. To gain entry, a card reader located on the exterior side of the door momentarily retracts the latches and simultaneously enables the outside wall switch to be activated by the handicapped.

Refer to the wiring diagrams section for selecting an application that suits the project requirements.

TROUBLESHOOTING

Before proceeding through the troubleshooting section, ensure that all device latches are not binding against their corresponding strikes. A bound latch can cause sluggish electric retraction or prevent retraction entirely.

Power Limited Outputs

All outputs to the 1426 are power limited. Depending on the output, if a short circuit or an over load condition should occur, the output will either shut off entirely or go into a safe current limiting state.

IMPORTANT!: THE MAXIMUM RATED LOAD FOR ALL OUTPUTS COMBINED IS 2.0 AMPS, INCLUDING 250mA (MAX.) FOR EACH AUXILIARY OUTPUT.

The outputs to ELR Device One (TB3, terminals 5 & 6) and ELR Device Two (TB3, terminals 11 & 12) will completely shut down to 0 volts when a short circuit across the output occurs or when the load exceeds 5 amps. To reset the output, the short circuit or overload must first be located and removed. Next, momentarily switch off the outputs by opening the contacts across input terminals 1 & 2 or 7 &8, whichever is used. Before switching outputs back on, ensure the load does not exceed the maximum current ratings.

Both auxiliary outputs will go into a current limiting state when the load exceeds approximately 2.0 amps or in the event of a short circuit. The current is reduced to a safe level when either of these conditions occur. The output voltage will automatically return to its normal level when the short circuit or overload condition is removed and replaced by a load falling under the maximum current rating.

Symptom:

Neither DEVICE ONE nor DEVICE TWO retracts after the control switch is activated

Possible Causes:

1. The power limited output to Device 1 or Device 2 (or both) may have shut down. When this happens, the field wires that are run to the exit device are probably shorted together against the conduit, door frame or electric hinge.

2. If using the 1550C ELR device with polarized leads, the slow blow 4 amp fuse (Littelfuse #239.004) inside the exit device has blown. The most likely cause would be reversed polarity of the exit device red and black leads: RED = “+”;

BLACK = “-”. (Refer to the wiring diagram for proper connection.) Other possible causes may be shorted wires in the solenoid assembly or a defective pulse module.

3. An open connection in the field wiring between the power supply and control switch used for activating latch retraction.

4. A defective control switch.

5. An open connection in the field wiring between the power supply and exit device.

6. There may be no pulse. To check for pulses, prop the door open and connect a voltmeter across the red and black leads coming from the exit device (red lead is positive), or across the blue leads if using the alternate non-polarized 1550C ELR device. Next, connect a jumper wire across terminals 1 and 2 of TB3 to keep DEVICE ONE in a continuous retracted state. If the voltmeter measures between 30 and 40 VDC at the moment the jumper wire was installed, but the latch did not budge, then no initial pulse was generated. For the polarized 1550C ELR device, check for a series of timed pulses that will occur approximately every six seconds. (Make sure that the control rod is not positioned over the reflective sensor on the pulse module when making this next check.) Wait for about 20 seconds to see if the latch pulls in. If it still does not respond, then it indicates the pulse module is inoperative and the entire solenoid/module assembly must be replaced.

Symptom:

When 120 volts is applied to TB1, the exit devices will momentarily retract; but if they remain retracted for longer than 20 seconds, then it signals a problem.

Possible Causes:

1. Field wiring between the power supply and control switch are shorted together against the conduit or switch mounting box.

2. A maintain switch is being used and is in the closed position.

3. A defective control switch.

Symptom (for polarized 1550C ELR devices only):

A noticeable buzzing sound at equal intervals is coming from inside the exit device while in its fully retracted state.

Possible Causes:

1. The latch is binding against its corresponding strike and preventing it from fully retracting, due to misalignment between the latch and strike opening.

2. A defective pulse module

For Service or Technical Support, call Architectural Control Systems, Inc. at (800) 753-5558.

NOTE 1: THIS UNIT IS LISTED AS AN EXIT DEVICE CONTROL UNIT TO UL294 REQUIREMENTS.

NOTE 2: THE POWER OUTPUT OF THE CONTROLLER IS OF A FAIL SECURE DESIGN. THE EXIT DEVICE REMAINS LATCHED DURING A COMPLETE POWER FAILURE, BUT ALWAYS ALLOWS FREE MECHANICAL EGRESS. LISTED PANIC HARDWARE MAY BE REQUIRED TO ALLOW EMERGENCY EXIT. CONSULT LOCAL AUTHORITY HAVING JURISDICTION.

ACSI
ARCHITECTURAL
CONTROL SYSTEMS INC.

1426-04-AO WIRING DIAGRAMS FOR VARIOUS SINGLE DOOR AND PAIR DOOR APPLICATIONS (REV. A)

Riser diagrams for typical single door and pair door system configurations have been included.

All wiring diagrams are divided into two main categories for selection of day/night mode control: applications using ACSI maintain action key switch w/status indicators, p/n 1310-2; and applications involving interface with a remote output, such as a time clock or computer.

For each door type and method of selection category there are four variations of point-to-point wiring diagrams. All variations involve different ways in which the exterior card reader, exterior wall switch and interior wall switch can be used in conjunction with the electrified exit device(s) and automatic door operator when selected for night mode of operation. Below is a brief description describing each variation.

Variation 1: Pressing inside wall switch will cause latch(es) to retract and activate automatic opening of door. Outside wall switch is disabled. Activating card reader will enable outside wall switch to retract latch(es) and activate automatic opening of door.

Variation 2: Pressing inside wall switch will cause latch(es) to retract and activate automatic opening of door. Outside wall switch is disabled. Activating card reader will retract latch(es) and enable outside wall switch to activate auto operator when pressed.

Variation 3: Pressing inside wall switch will cause latch(es) to retract and activate automatic opening of door. Outside wall switch is disabled. Activating card reader will retract latch(es) and activate auto operator.

Variation 4: Both inside and outside wall switches are disabled. Activating card reader will retract latch(es) only. Door must be pulled open manually for entry; pushed open manually to exit.

A more detailed description of system operation for each variation can be found on the point-to-point wiring diagrams to follow.

Note: All point-to-point wiring diagrams on the following pages show the 1550C ELR Device with polarized red and black leads connected to TB3, terminals 5 and 6 and/or 11 and 12. When using the alternate 1550C ELR Device with nonpolarized leads, connect the blue wires to TB3, terminals 5 and 6 and/or 11 and 12.

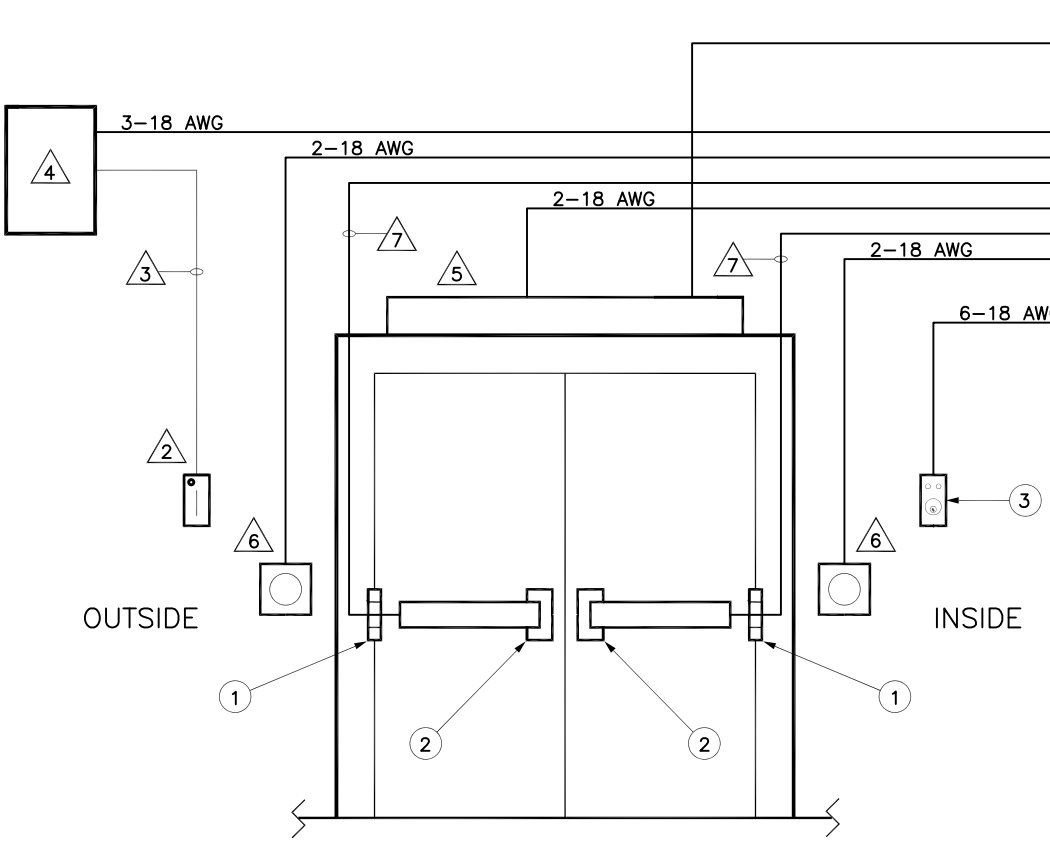

ACSI SUPPLIED EQUIPMENT:

1. POWER TRANSFER HINGE – 8 WIRE
2. SERIES 1550C ELECTRIC LATCH RETRACTION MODIFICATION – 24VDC
3. 1310–2 MAINTAINED ACTION KEY SWITCH W/INDICATORS

   NOTE: MOUNT ASSEMBLY IN STANDARD 2-1/8" DEEP SINGLE GANG HANDY BOX (NOT SUPPLIED BY ACSI).
4. 1426–04–AO ELECTRIC LATCH RETRACTION CONTROLLER

NOTES:

1. TO 115V., 60HZ., 5A. SERVICE.
2. CARD READER
3. CARD READER POWER/DATA CABLE
4. CARD READER CONTROLLER CONTAINING RELAY N.O. CONTROL OUTPUT
5. AUTOMATIC DOOR OPERATOR
6. WALL SWITCH
7.

WIRE GAUGE	MAX. LENGTH 2-COND. CABLE
16 AWG	40 FEET
14 AWG	60 FEET
12 AWG	100 FEET

8. TO 115V., 60HZ., 20A. SERVICE.

FIG. 1: TYPICAL RISER FOR PAIR DOOR APPLICATION USING ACSI KEY SWITCH FOR SELECTING DAY/NIGHT MODE CONTROL

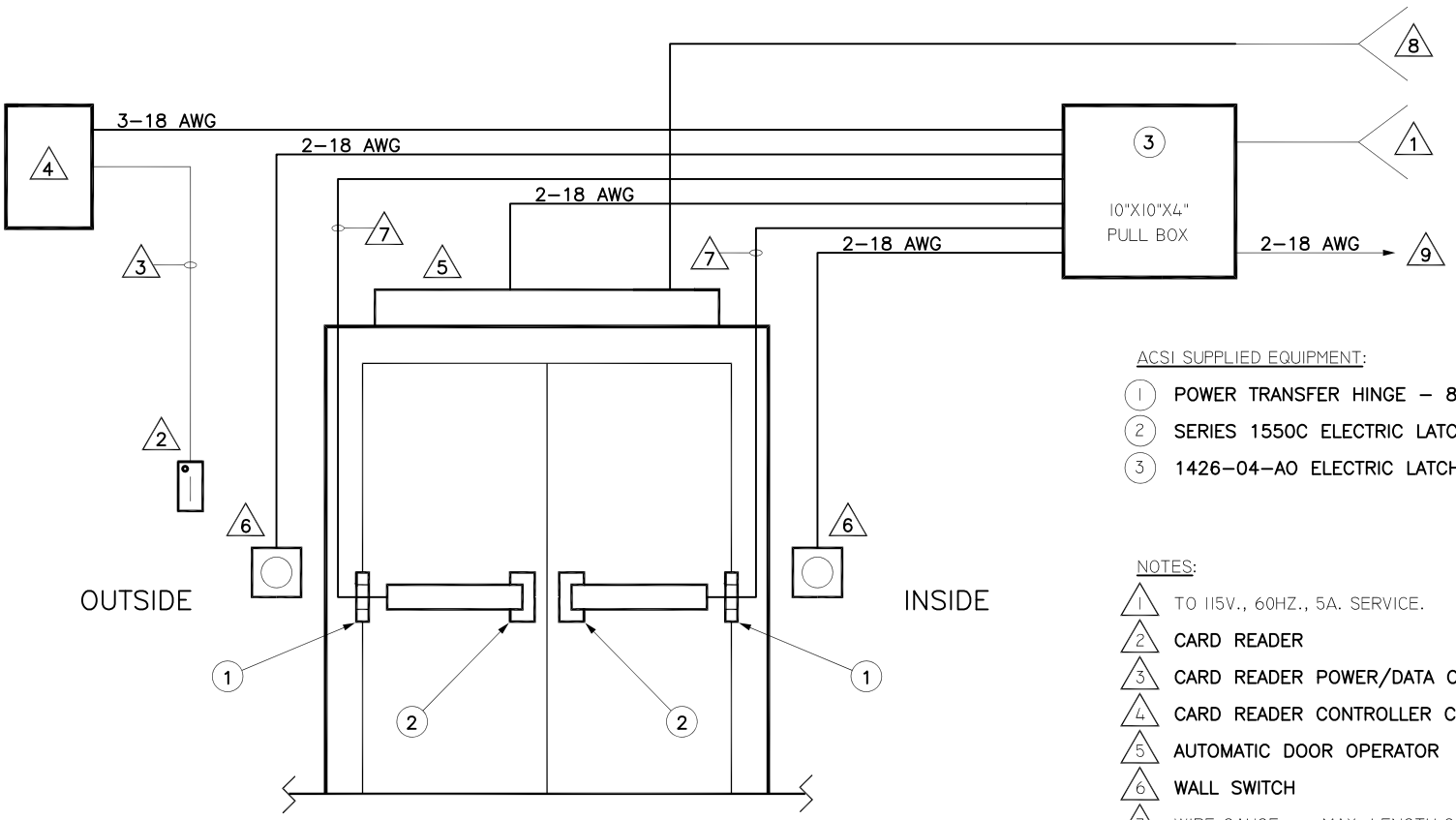

ACSI SUPPLIED EQUIPMENT:

1. POWER TRANSFER HINGE – 8 WIRE
2. SERIES 1550C ELECTRIC LATCH RETRACTION MODIFICATION – 24VDC
3. 1426-04-AO ELECTRIC LATCH RETRACTION CONTROLLER

NOTES:

1. TO 115V., 60HZ., 5A. SERVICE.
2. CARD READER
3. CARD READER POWER/DATA CABLE
4. CARD READER CONTROLLER CONTAINING RELAY N.O. CONTROL OUTPUT
5. AUTOMATIC DOOR OPERATOR
6. WALL SWITCH
7. WIRE GAUGE / MAX. LENGTH 2-COND. CABLE

WIRE GAUGE	MAX. LENGTH 2-COND. CABLE
16 AWG	40 FEET
14 AWG	60 FEET
12 AWG	100 FEET

8. TO 115V., 60HZ., 20A. SERVICE.
9. TO DRY CONTACT, SWITCHED OUTPUT OF TIME CLOCK, COMPUTER, ETC.

FIG. 2: TYPICAL RISER FOR PAIR DOOR APPLICATION USING REMOTE OUTPUT (TIME CLOCK, COMPUTER, ETC.) FOR SELECTING DAY/NIGHT MODE CONTROL

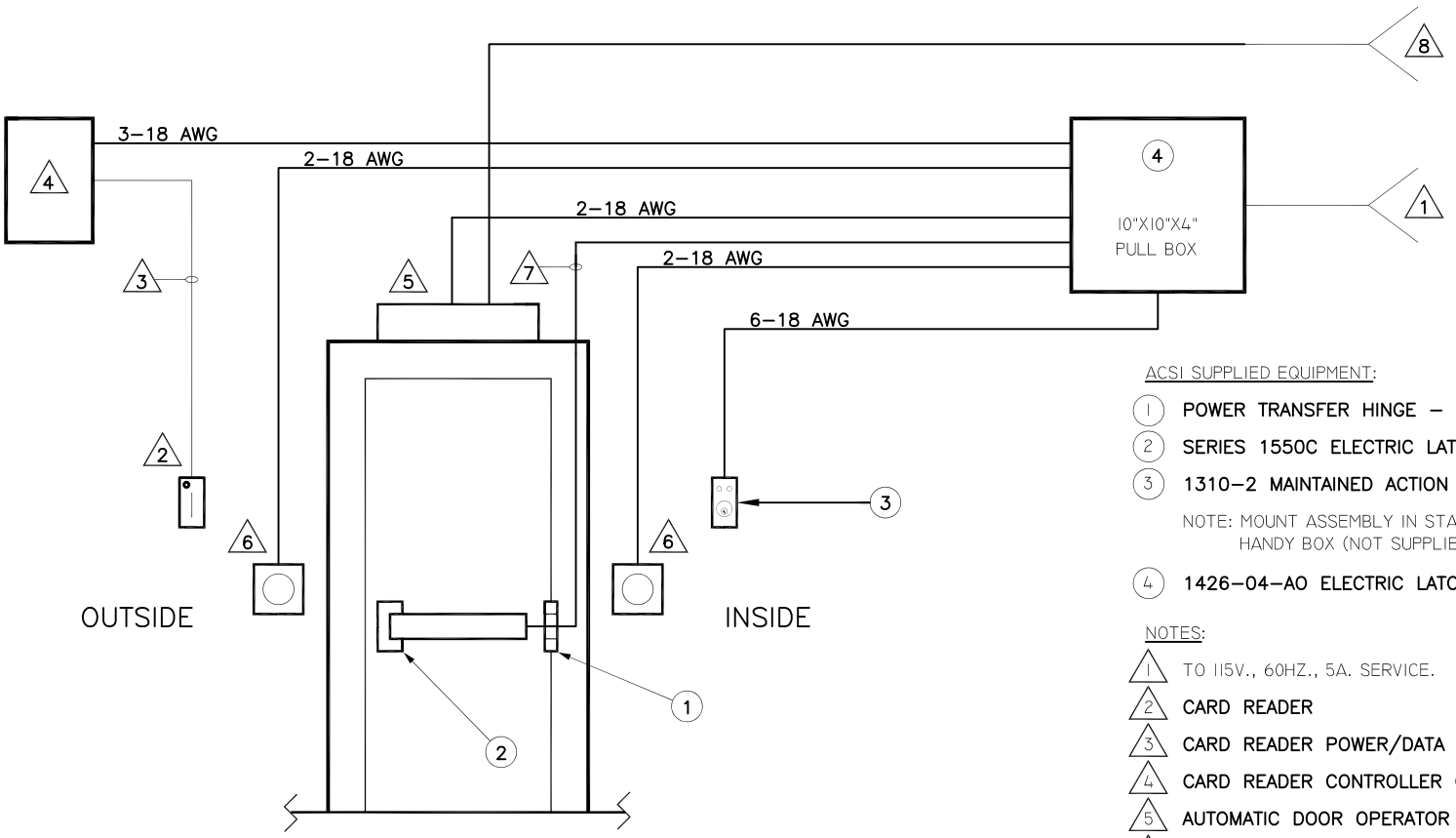

ACSI SUPPLIED EQUIPMENT:

1. POWER TRANSFER HINGE – 8 WIRE
2. SERIES 1550C ELECTRIC LATCH RETRACTION MODIFICATION – 24VDC
3. 1310–2 MAINTAINED ACTION KEY SWITCH W/INDICATORS

   NOTE: MOUNT ASSEMBLY IN STANDARD 2-1/8" DEEP SINGLE GANG HANDY BOX (NOT SUPPLIED BY ACSI).
4. 1426–04–AO ELECTRIC LATCH RETRACTION CONTROLLER

NOTES:

1. TO 115V., 60HZ., 5A. SERVICE.
2. CARD READER
3. CARD READER POWER/DATA CABLE
4. CARD READER CONTROLLER CONTAINING RELAY N.O. CONTROL OUTPUT
5. AUTOMATIC DOOR OPERATOR
6. WALL SWITCH
7.

WIRE GAUGE	MAX. LENGTH 2-COND. CABLE
16 AWG	40 FEET
14 AWG	60 FEET
12 AWG	100 FEET

8. TO 115V., 60HZ., 20A. SERVICE.

FIG. 3: TYPICAL RISER FOR SINGLE DOOR APPLICATION USING ACSI KEY SWITCH FOR SELECTING DAY/NIGHT MODE CONTROL

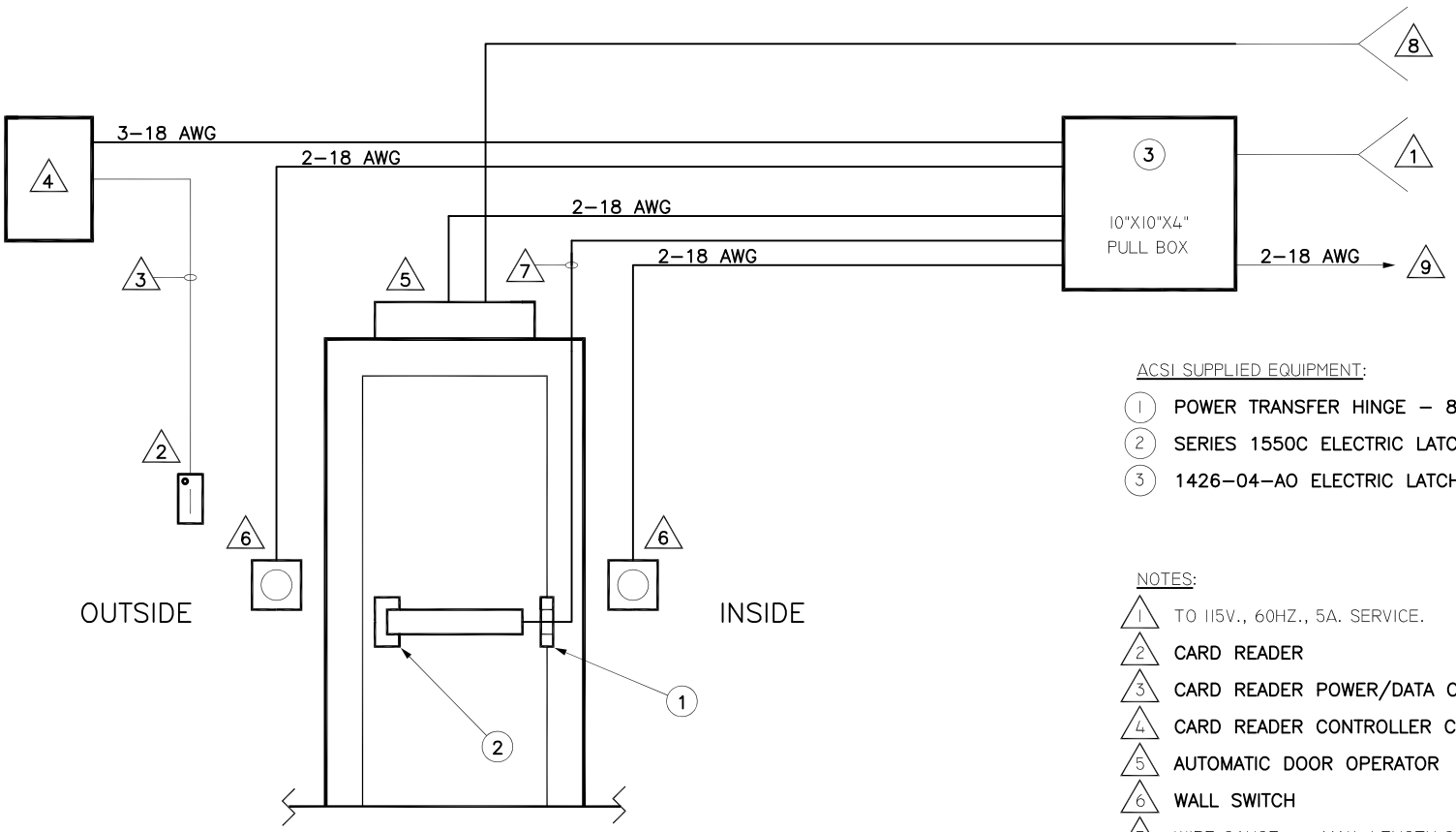

ACSI SUPPLIED EQUIPMENT:

1. POWER TRANSFER HINGE – 8 WIRE
2. SERIES 1550C ELECTRIC LATCH RETRACTION MODIFICATION – 24VDC
3. 1426–04–AO ELECTRIC LATCH RETRACTION CONTROLLER

NOTES:

1. TO 115V., 60HZ., 5A. SERVICE.
2. CARD READER
3. CARD READER POWER/DATA CABLE
4. CARD READER CONTROLLER CONTAINING RELAY N.O. CONTROL OUTPUT
5. AUTOMATIC DOOR OPERATOR
6. WALL SWITCH
7. WIRE GAUGE — MAX. LENGTH 2-COND. CABLE

WIRE GAUGE	MAX. LENGTH 2-COND. CABLE
16 AWG	40 FEET
14 AWG	60 FEET
12 AWG	100 FEET

8. TO 115V., 60HZ., 20A. SERVICE.
9. TO DRY CONTACT, SWITCHED OUTPUT OF TIME CLOCK, COMPUTER, ETC.

FIG. 4: TYPICAL RISER FOR SINGLE DOOR APPLICATION USING REMOTE OUTPUT (TIME CLOCK, COMPUTER, ETC.) FOR SELECTING DAY/NIGHT MODE CONTROL

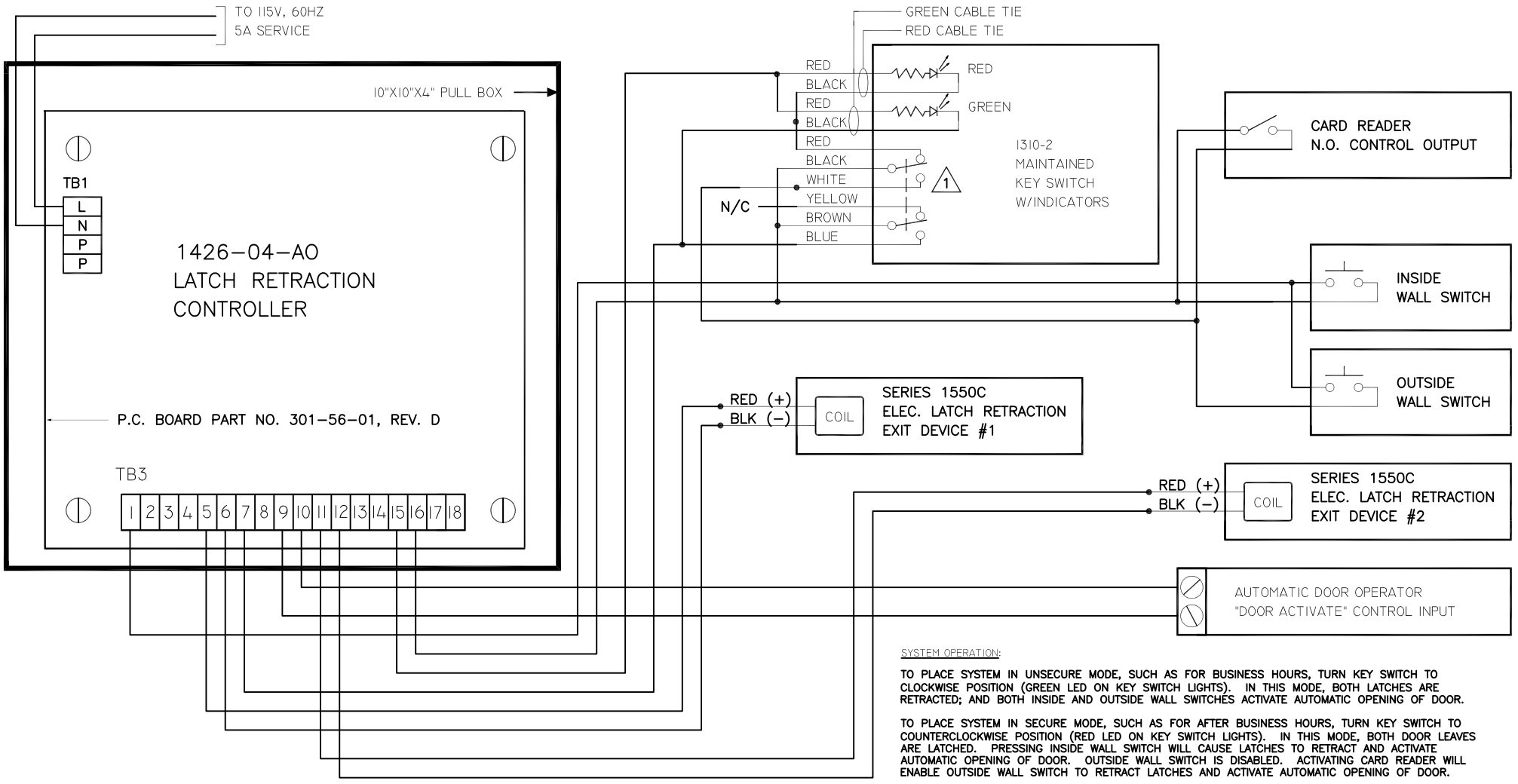

SYSTEM OPERATION:

TO PLACE SYSTEM IN UNSECURE MODE, SUCH AS FOR BUSINESS HOURS, TURN KEY SWITCH TO CLOCKWISE POSITION (GREEN LED ON KEY SWITCH LIGHTS). IN THIS MODE, BOTH LATCHES ARE RETRACTED; AND BOTH INSIDE AND OUTSIDE WALL SWITCHES ACTIVATE AUTOMATIC OPENING OF DOOR.

TO PLACE SYSTEM IN SECURE MODE, SUCH AS FOR AFTER BUSINESS HOURS, TURN KEY SWITCH TO COUNTERCLOCKWISE POSITION (RED LED ON KEY SWITCH LIGHTS). IN THIS MODE, BOTH DOOR LEAVES ARE LATCHED. PRESSING INSIDE WALL SWITCH WILL CAUSE LATCHES TO RETRACT AND ACTIVATE AUTOMATIC OPENING OF DOOR. OUTSIDE WALL SWITCH IS DISABLED. ACTIVATING CARD READER WILL ENABLE OUTSIDE WALL SWITCH TO RETRACT LATCHES AND ACTIVATE AUTOMATIC OPENING OF DOOR.

FIG. 5: POINT-TO-POINT FOR VARIATION 1 OF PAIR DOOR APPLICATION USING ACSI KEY SWITCH FOR SELECTING DAY/NIGHT MODE CONTROL

NOTES:

1. KEY SWITCH CONTACTS SHOWN IN "SYSTEM SECURE" POSITION.
2. —•— DENOTES A FIELD WIRE CONNECTION.

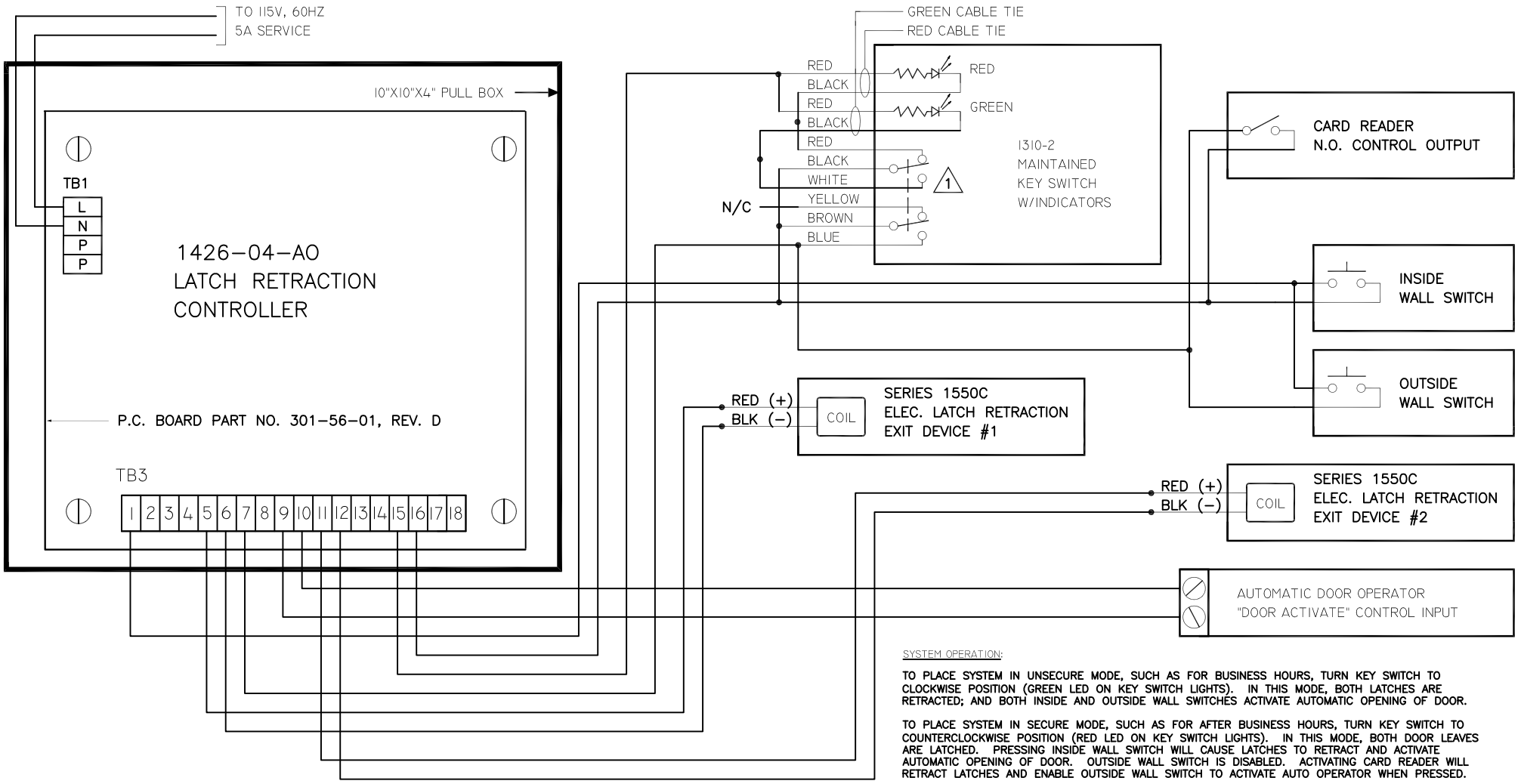

SYSTEM OPERATION:

TO PLACE SYSTEM IN UNSECURE MODE, SUCH AS FOR BUSINESS HOURS, TURN KEY SWITCH TO CLOCKWISE POSITION (GREEN LED ON KEY SWITCH LIGHTS). IN THIS MODE, BOTH LATCHES ARE RETRACTED; AND BOTH INSIDE AND OUTSIDE WALL SWITCHES ACTIVATE AUTOMATIC OPENING OF DOOR.

TO PLACE SYSTEM IN SECURE MODE, SUCH AS FOR AFTER BUSINESS HOURS, TURN KEY SWITCH TO COUNTERCLOCKWISE POSITION (RED LED ON KEY SWITCH LIGHTS). IN THIS MODE, BOTH DOOR LEAVES ARE LATCHED. PRESSING INSIDE WALL SWITCH WILL CAUSE LATCHES TO RETRACT AND ACTIVATE AUTOMATIC OPENING OF DOOR. OUTSIDE WALL SWITCH IS DISABLED. ACTIVATING CARD READER WILL RETRACT LATCHES AND ENABLE OUTSIDE WALL SWITCH TO ACTIVATE AUTO OPERATOR WHEN PRESSED.

FIG. 6: POINT-TO-POINT FOR VARIATION 2 OF PAIR DOOR APPLICATION USING ACSI KEY SWITCH FOR SELECTING DAY/NIGHT MODE CONTROL

NOTES:

1. KEY SWITCH CONTACTS SHOWN IN "SYSTEM SECURE" POSITION.
2. —•— DENOTES A FIELD WIRE CONNECTION.

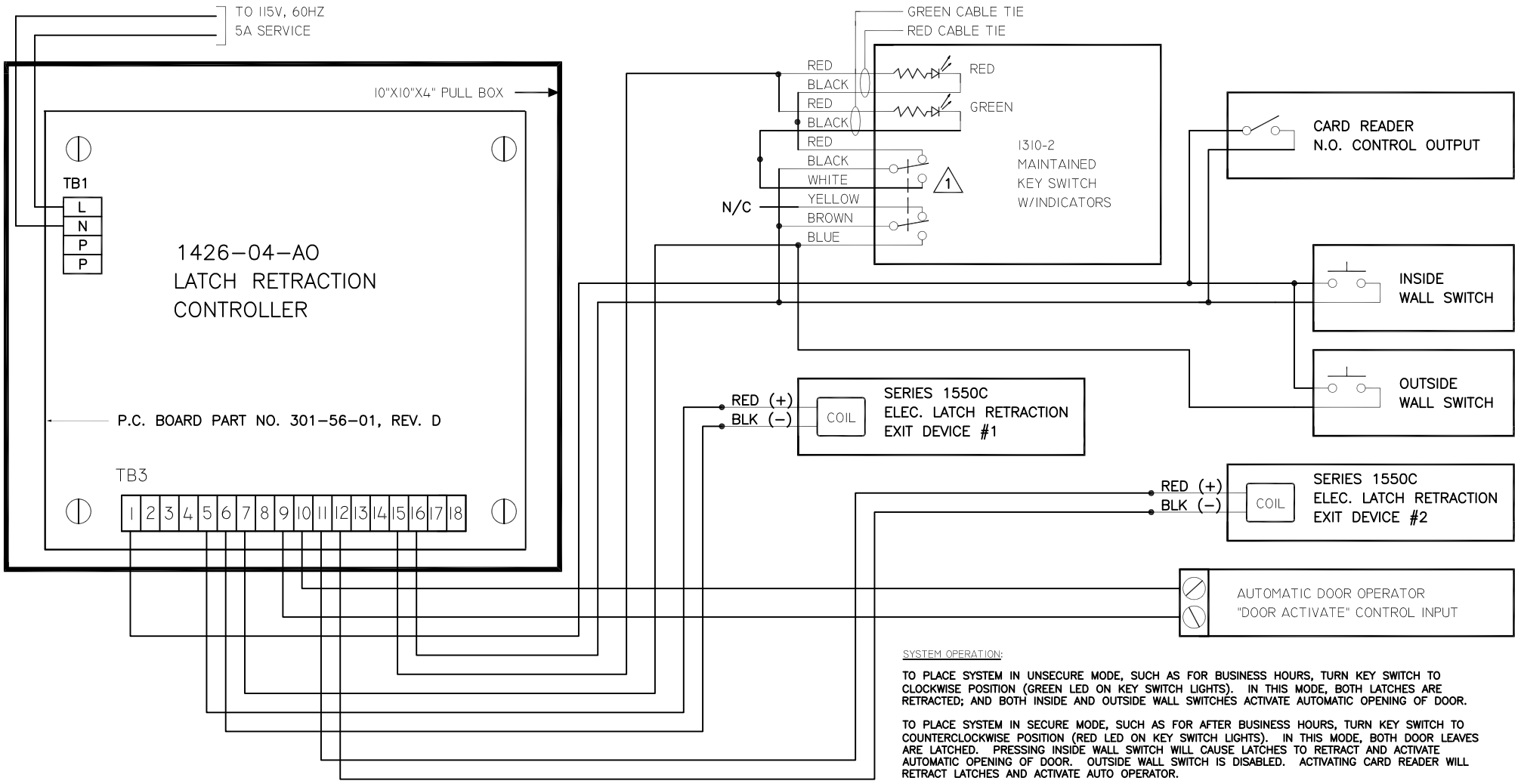

SYSTEM OPERATION:

TO PLACE SYSTEM IN UNSECURE MODE, SUCH AS FOR BUSINESS HOURS, TURN KEY SWITCH TO CLOCKWISE POSITION (GREEN LED ON KEY SWITCH LIGHTS). IN THIS MODE, BOTH LATCHES ARE RETRACTED; AND BOTH INSIDE AND OUTSIDE WALL SWITCHES ACTIVATE AUTOMATIC OPENING OF DOOR.

TO PLACE SYSTEM IN SECURE MODE, SUCH AS FOR AFTER BUSINESS HOURS, TURN KEY SWITCH TO COUNTERCLOCKWISE POSITION (RED LED ON KEY SWITCH LIGHTS). IN THIS MODE, BOTH DOOR LEAVES ARE LATCHED. PRESSING INSIDE WALL SWITCH WILL CAUSE LATCHES TO RETRACT AND ACTIVATE AUTOMATIC OPENING OF DOOR. OUTSIDE WALL SWITCH IS DISABLED. ACTIVATING CARD READER WILL RETRACT LATCHES AND ACTIVATE AUTO OPERATOR.

FIG. 7: POINT-TO-POINT FOR VARIATION 3 OF PAIR DOOR APPLICATION USING ACSI KEY SWITCH FOR SELECTING DAY/NIGHT MODE CONTROL

NOTES:

1. KEY SWITCH CONTACTS SHOWN IN "SYSTEM SECURE" POSITION.
2. —•— DENOTES A FIELD WIRE CONNECTION.

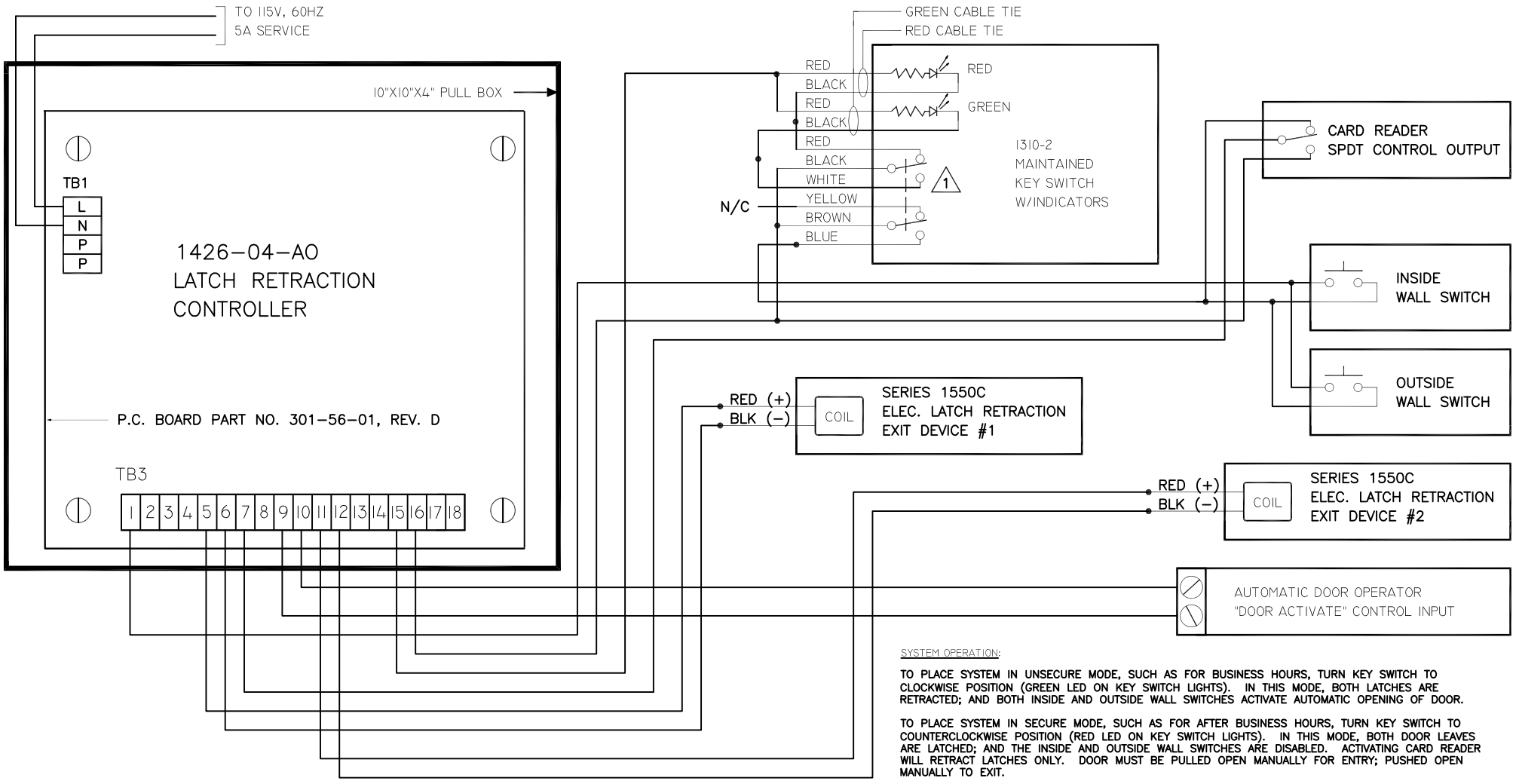

SYSTEM OPERATION:

TO PLACE SYSTEM IN UNSECURE MODE, SUCH AS FOR BUSINESS HOURS, TURN KEY SWITCH TO CLOCKWISE POSITION (GREEN LED ON KEY SWITCH LIGHTS). IN THIS MODE, BOTH LATCHES ARE RETRACTED; AND BOTH INSIDE AND OUTSIDE WALL SWITCHES ACTIVATE AUTOMATIC OPENING OF DOOR.

TO PLACE SYSTEM IN SECURE MODE, SUCH AS FOR AFTER BUSINESS HOURS, TURN KEY SWITCH TO COUNTERCLOCKWISE POSITION (RED LED ON KEY SWITCH LIGHTS). IN THIS MODE, BOTH DOOR LEAVES ARE LATCHED; AND THE INSIDE AND OUTSIDE WALL SWITCHES ARE DISABLED. ACTIVATING CARD READER WILL RETRACT LATCHES ONLY. DOOR MUST BE PULLED OPEN MANUALLY FOR ENTRY; PUSHED OPEN MANUALLY TO EXIT.

FIG. 8: POINT-TO-POINT FOR VARIATION 4 OF PAIR DOOR APPLICATION USING ACSI KEY SWITCH FOR SELECTING DAY/NIGHT MODE CONTROL

NOTES:

1. KEY SWITCH CONTACTS SHOWN IN "SYSTEM SECURE" POSITION.
2. —•— DENOTES A FIELD WIRE CONNECTION.

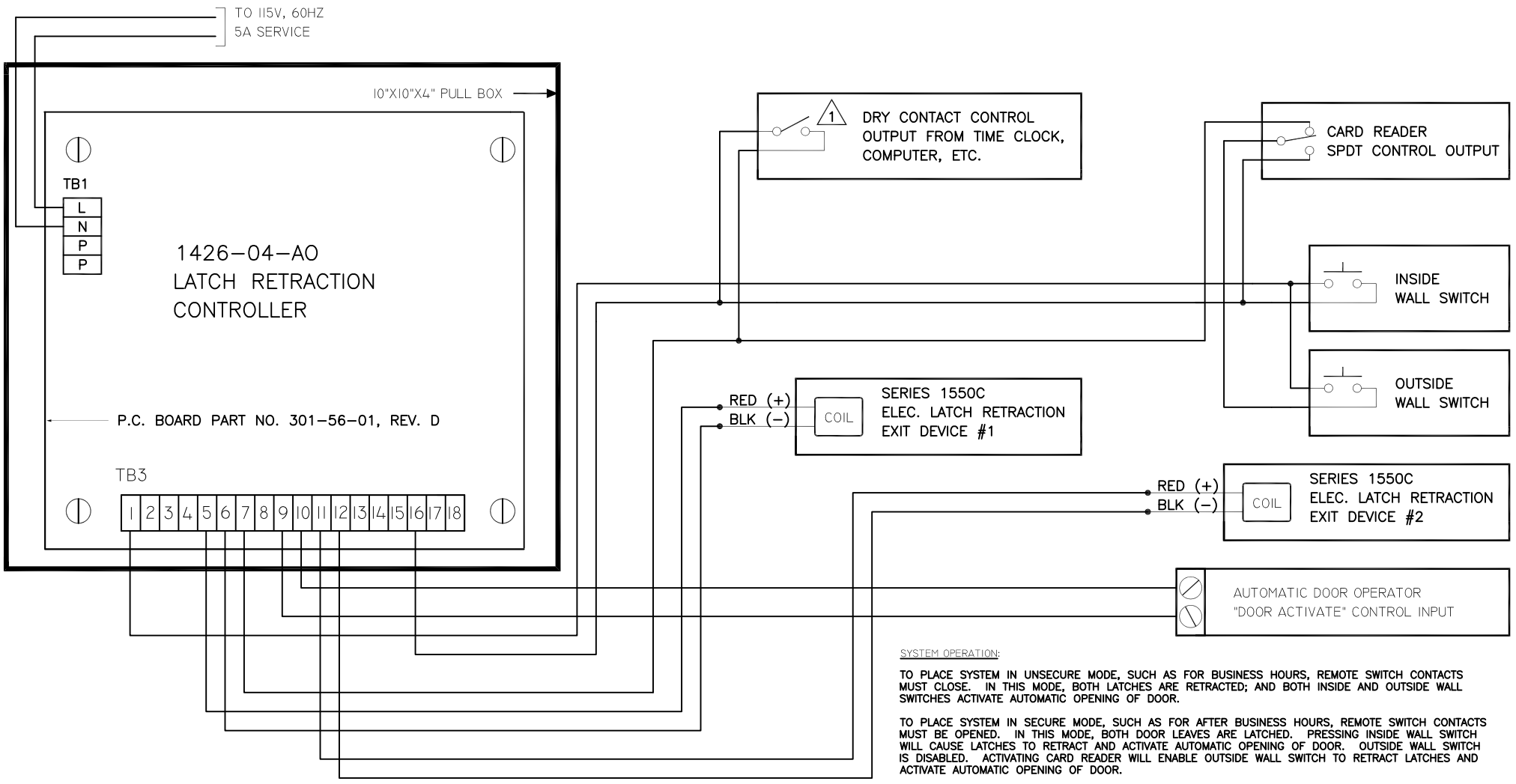

SYSTEM OPERATION:

TO PLACE SYSTEM IN UNSECURE MODE, SUCH AS FOR BUSINESS HOURS, REMOTE SWITCH CONTACTS MUST CLOSE. IN THIS MODE, BOTH LATCHES ARE RETRACTED; AND BOTH INSIDE AND OUTSIDE WALL SWITCHES ACTIVATE AUTOMATIC OPENING OF DOOR.

TO PLACE SYSTEM IN SECURE MODE, SUCH AS FOR AFTER BUSINESS HOURS, REMOTE SWITCH CONTACTS MUST BE OPENED. IN THIS MODE, BOTH DOOR LEAVES ARE LATCHED. PRESSING INSIDE WALL SWITCH WILL CAUSE LATCHES TO RETRACT AND ACTIVATE AUTOMATIC OPENING OF DOOR. OUTSIDE WALL SWITCH IS DISABLED. ACTIVATING CARD READER WILL ENABLE OUTSIDE WALL SWITCH TO RETRACT LATCHES AND ACTIVATE AUTOMATIC OPENING OF DOOR.

FIG. 9: POINT-TO-POINT FOR VARIATION 1 OF PAIR DOOR APPLICATION USING REMOTE OUTPUT (TIME CLOCK, COMPUTER, ETC.) FOR SELECTING DAY/NIGHT MODE CONTROL

NOTES:

1. REMOTE SWITCH CONTACTS SHOWN IN "SYSTEM SECURE" POSITION.
2. —•— DENOTES A FIELD WIRE CONNECTION.

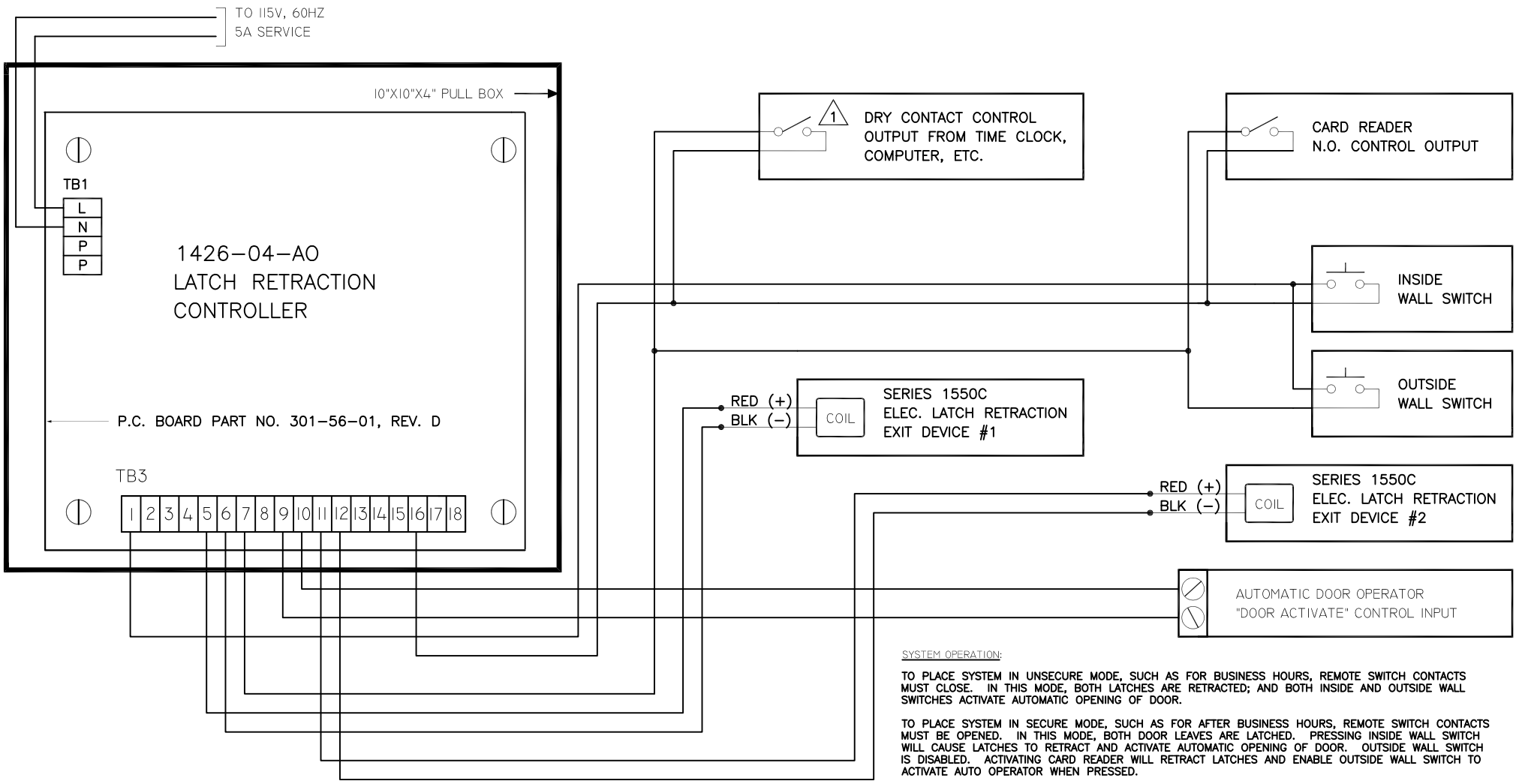

SYSTEM OPERATION:

TO PLACE SYSTEM IN UNSECURE MODE, SUCH AS FOR BUSINESS HOURS, REMOTE SWITCH CONTACTS MUST CLOSE. IN THIS MODE, BOTH LATCHES ARE RETRACTED; AND BOTH INSIDE AND OUTSIDE WALL SWITCHES ACTIVATE AUTOMATIC OPENING OF DOOR.

TO PLACE SYSTEM IN SECURE MODE, SUCH AS FOR AFTER BUSINESS HOURS, REMOTE SWITCH CONTACTS MUST BE OPENED. IN THIS MODE, BOTH DOOR LEAVES ARE LATCHED. PRESSING INSIDE WALL SWITCH WILL CAUSE LATCHES TO RETRACT AND ACTIVATE AUTOMATIC OPENING OF DOOR. OUTSIDE WALL SWITCH IS DISABLED. ACTIVATING CARD READER WILL RETRACT LATCHES AND ENABLE OUTSIDE WALL SWITCH TO ACTIVATE AUTO OPERATOR WHEN PRESSED.

FIG. 10: POINT-TO-POINT FOR VARIATION 2 OF PAIR DOOR APPLICATION USING REMOTE OUTPUT (TIME CLOCK, COMPUTER, ETC.) FOR SELECTING DAY/NIGHT MODE CONTROL

NOTES:

1. REMOTE SWITCH CONTACTS SHOWN IN "SYSTEM SECURE" POSITION.
2. —•— DENOTES A FIELD WIRE CONNECTION.

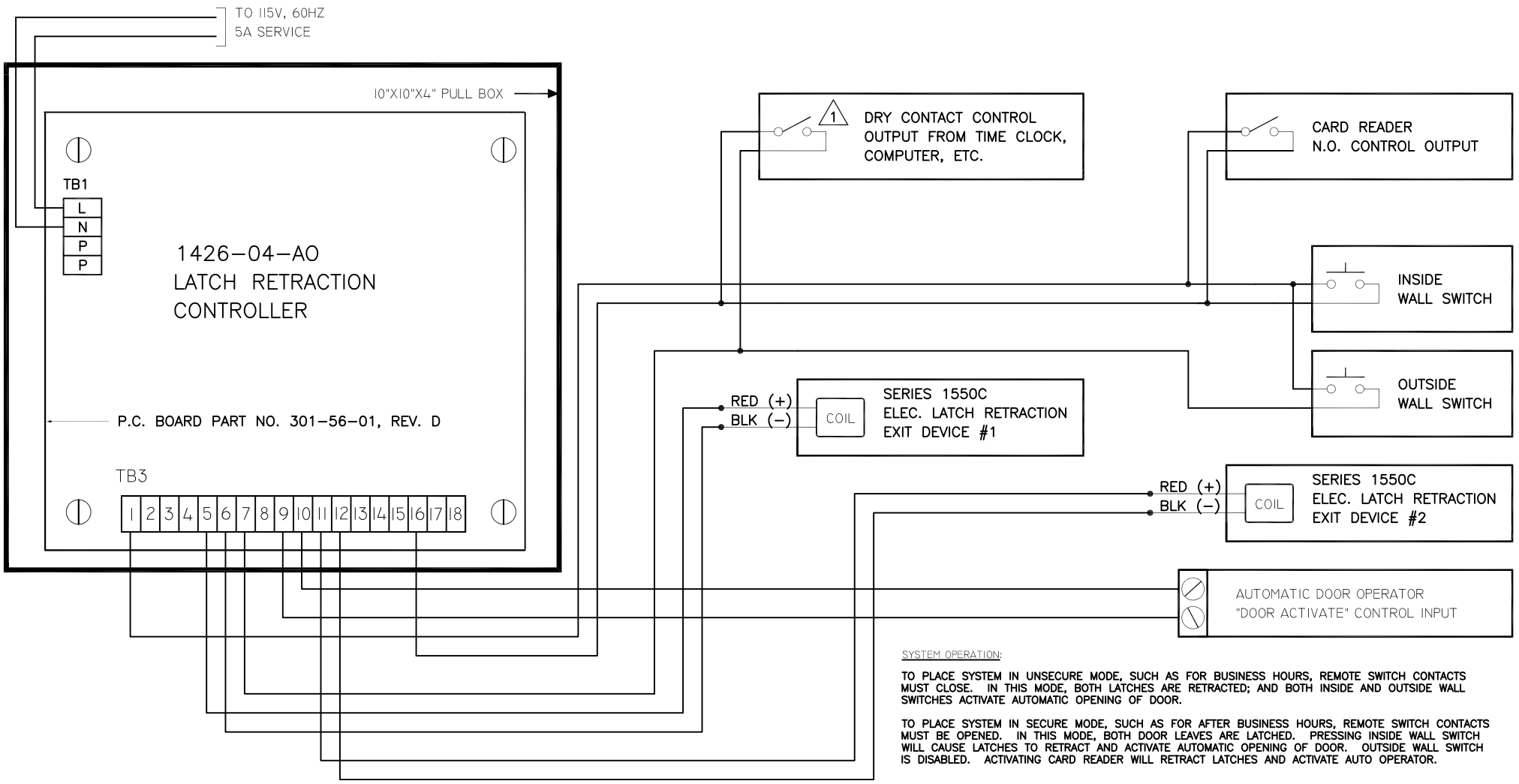

FIG. 11: POINT-TO-POINT FOR VARIATION 3 OF PAIR DOOR APPLICATION USING REMOTE OUTPUT (TIME CLOCK, COMPUTER, ETC.) FOR SELECTING DAY/NIGHT MODE CONTROL

NOTES:

1. REMOTE SWITCH CONTACTS SHOWN IN "SYSTEM SECURE" POSITION.
2. —•— DENOTES A FIELD WIRE CONNECTION.

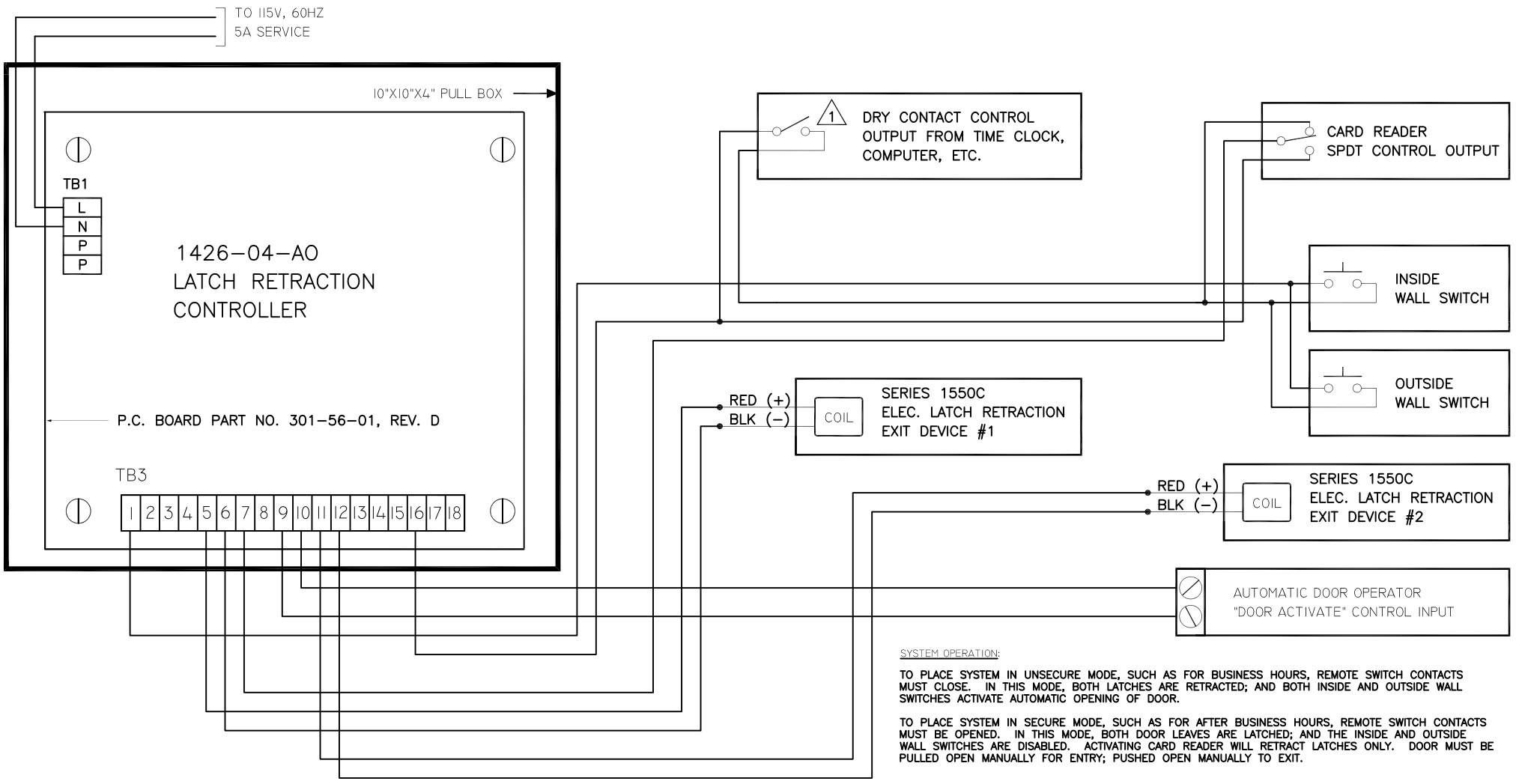

SYSTEM OPERATION:

TO PLACE SYSTEM IN UNSECURE MODE, SUCH AS FOR BUSINESS HOURS, REMOTE SWITCH CONTACTS MUST CLOSE. IN THIS MODE, BOTH LATCHES ARE RETRACTED; AND BOTH INSIDE AND OUTSIDE WALL SWITCHES ACTIVATE AUTOMATIC OPENING OF DOOR.

TO PLACE SYSTEM IN SECURE MODE, SUCH AS FOR AFTER BUSINESS HOURS, REMOTE SWITCH CONTACTS MUST BE OPENED. IN THIS MODE, BOTH DOOR LEAVES ARE LATCHED; AND THE INSIDE AND OUTSIDE WALL SWITCHES ARE DISABLED. ACTIVATING CARD READER WILL RETRACT LATCHES ONLY. DOOR MUST BE PULLED OPEN MANUALLY FOR ENTRY; PUSHED OPEN MANUALLY TO EXIT.

FIG. 12: POINT-TO-POINT FOR VARIATION 4 OF PAIR DOOR APPLICATION USING REMOTE OUTPUT (TIME CLOCK, COMPUTER, ETC.) FOR SELECTING DAY/NIGHT MODE CONTROL

NOTES:

1. REMOTE SWITCH CONTACTS SHOWN IN "SYSTEM SECURE" POSITION.
2. —•— DENOTES A FIELD WIRE CONNECTION.

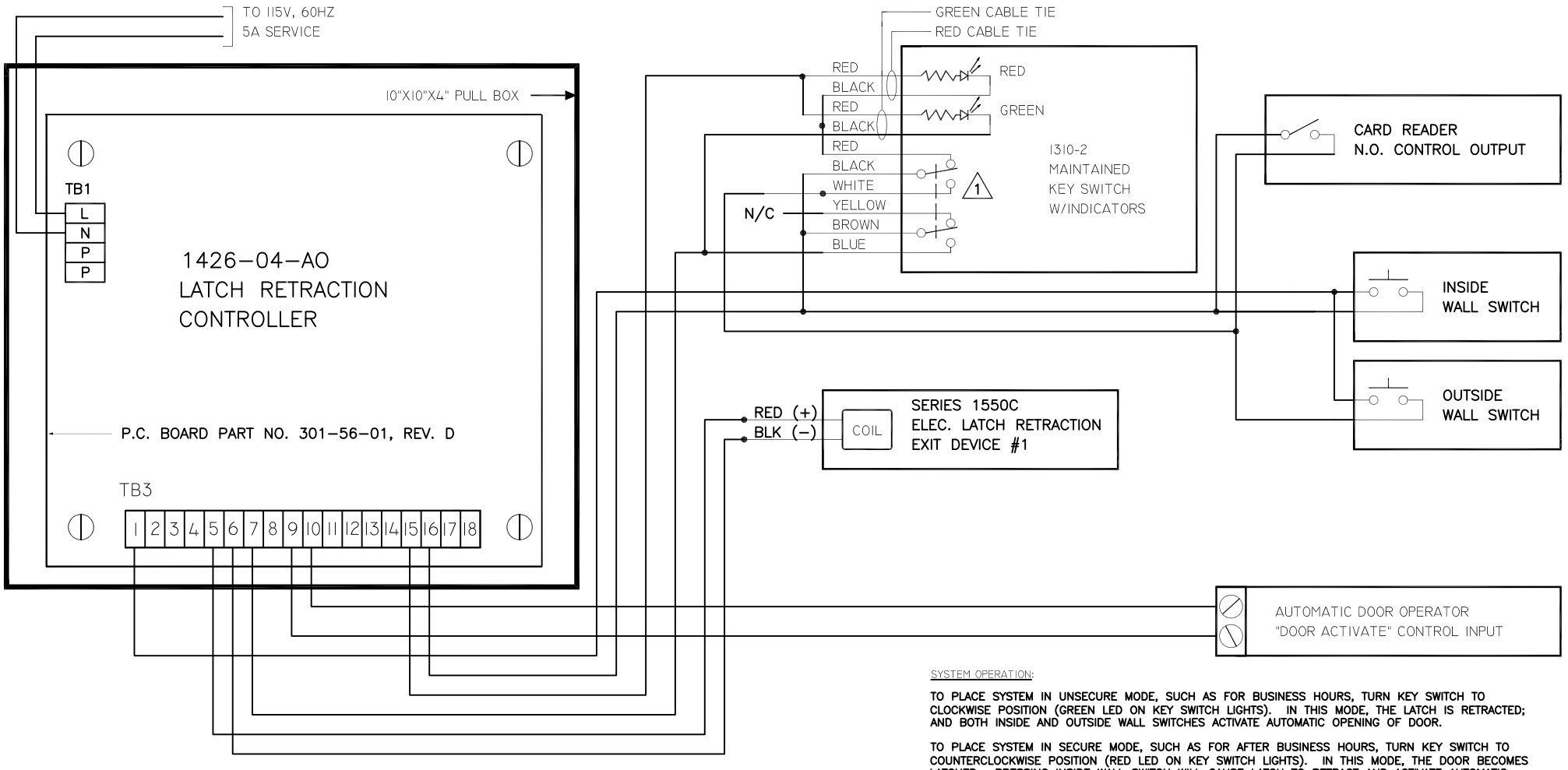

SYSTEM OPERATION:

TO PLACE SYSTEM IN UNSECURE MODE, SUCH AS FOR BUSINESS HOURS, TURN KEY SWITCH TO CLOCKWISE POSITION (GREEN LED ON KEY SWITCH LIGHTS). IN THIS MODE, THE LATCH IS RETRACTED; AND BOTH INSIDE AND OUTSIDE WALL SWITCHES ACTIVATE AUTOMATIC OPENING OF DOOR.

TO PLACE SYSTEM IN SECURE MODE, SUCH AS FOR AFTER BUSINESS HOURS, TURN KEY SWITCH TO COUNTERCLOCKWISE POSITION (RED LED ON KEY SWITCH LIGHTS). IN THIS MODE, THE DOOR BECOMES LATCHED. PRESSING INSIDE WALL SWITCH WILL CAUSE LATCH TO RETRACT AND ACTIVATE AUTOMATIC OPENING OF DOOR. OUTSIDE WALL SWITCH IS DISABLED. ACTIVATING CARD READER WILL ENABLE OUTSIDE WALL SWITCH TO RETRACT LATCH AND ACTIVATE AUTOMATIC OPENING OF DOOR.

FIG. 13: POINT-TO-POINT FOR VARIATION 1 OF SINGLE DOOR APPLICATION USING ACSI KEY SWITCH FOR SELECTING DAY/NIGHT MODE CONTROL

NOTES:

1. KEY SWITCH CONTACTS SHOWN IN "SYSTEM SECURE" POSITION.
2. —•— DENOTES A FIELD WIRE CONNECTION.

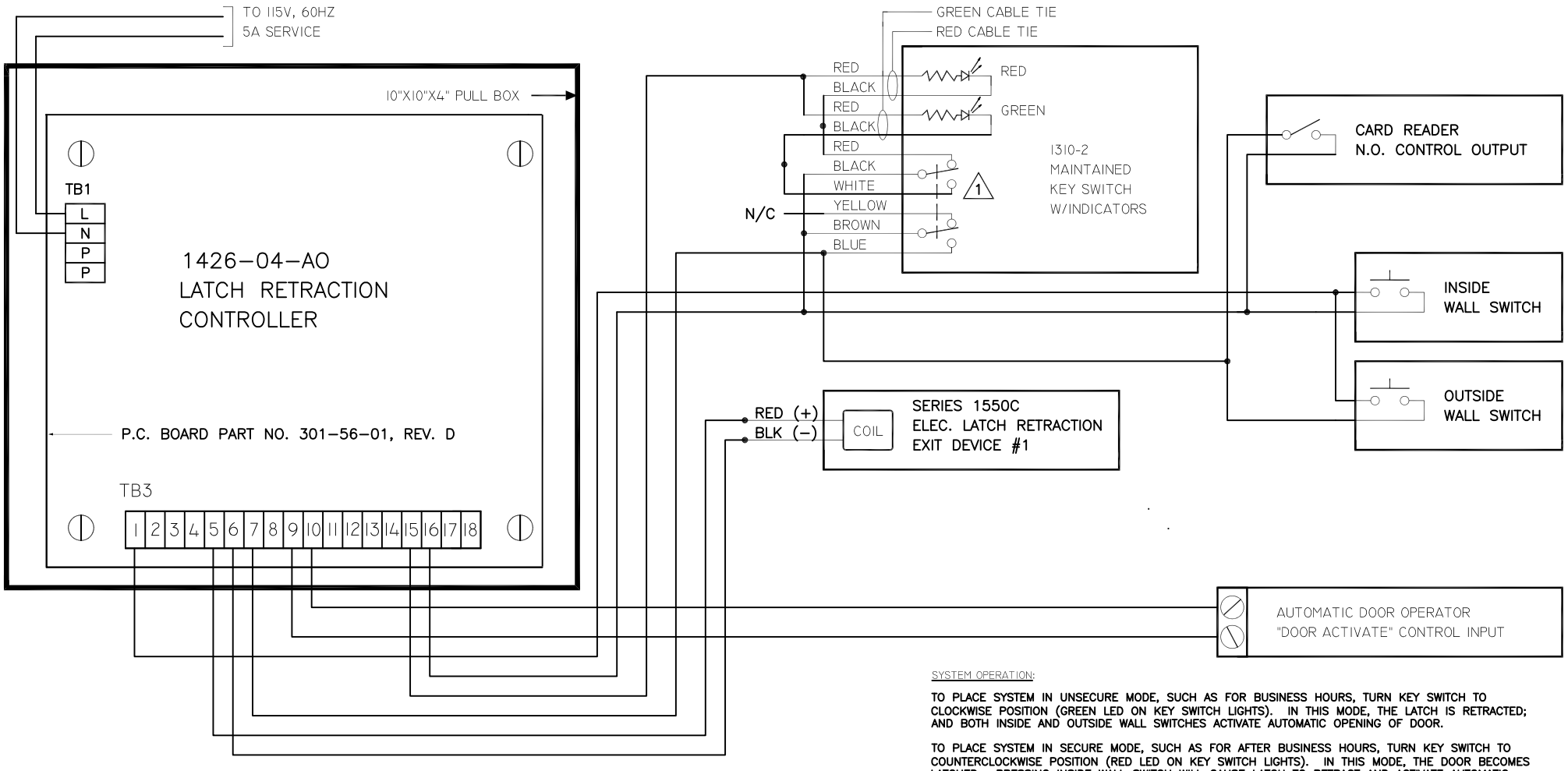

SYSTEM OPERATION:

TO PLACE SYSTEM IN UNSECURE MODE, SUCH AS FOR BUSINESS HOURS, TURN KEY SWITCH TO CLOCKWISE POSITION (GREEN LED ON KEY SWITCH LIGHTS). IN THIS MODE, THE LATCH IS RETRACTED; AND BOTH INSIDE AND OUTSIDE WALL SWITCHES ACTIVATE AUTOMATIC OPENING OF DOOR.

TO PLACE SYSTEM IN SECURE MODE, SUCH AS FOR AFTER BUSINESS HOURS, TURN KEY SWITCH TO COUNTERCLOCKWISE POSITION (RED LED ON KEY SWITCH LIGHTS). IN THIS MODE, THE DOOR BECOMES LATCHED. PRESSING INSIDE WALL SWITCH WILL CAUSE LATCH TO RETRACT AND ACTIVATE AUTOMATIC OPENING OF DOOR. OUTSIDE WALL SWITCH IS DISABLED. ACTIVATING CARD READER WILL RETRACT LATCH AND ENABLE OUTSIDE WALL SWITCH TO ACTIVATE AUTO OPERATOR WHEN PRESSED.

FIG. 14: POINT-TO-POINT FOR VARIATION 2 OF SINGLE DOOR APPLICATION USING ACSI KEY SWITCH FOR SELECTING DAY/NIGHT MODE CONTROL

NOTES:

1. KEY SWITCH CONTACTS SHOWN IN "SYSTEM SECURE" POSITION.
2. —•— DENOTES A FIELD WIRE CONNECTION.

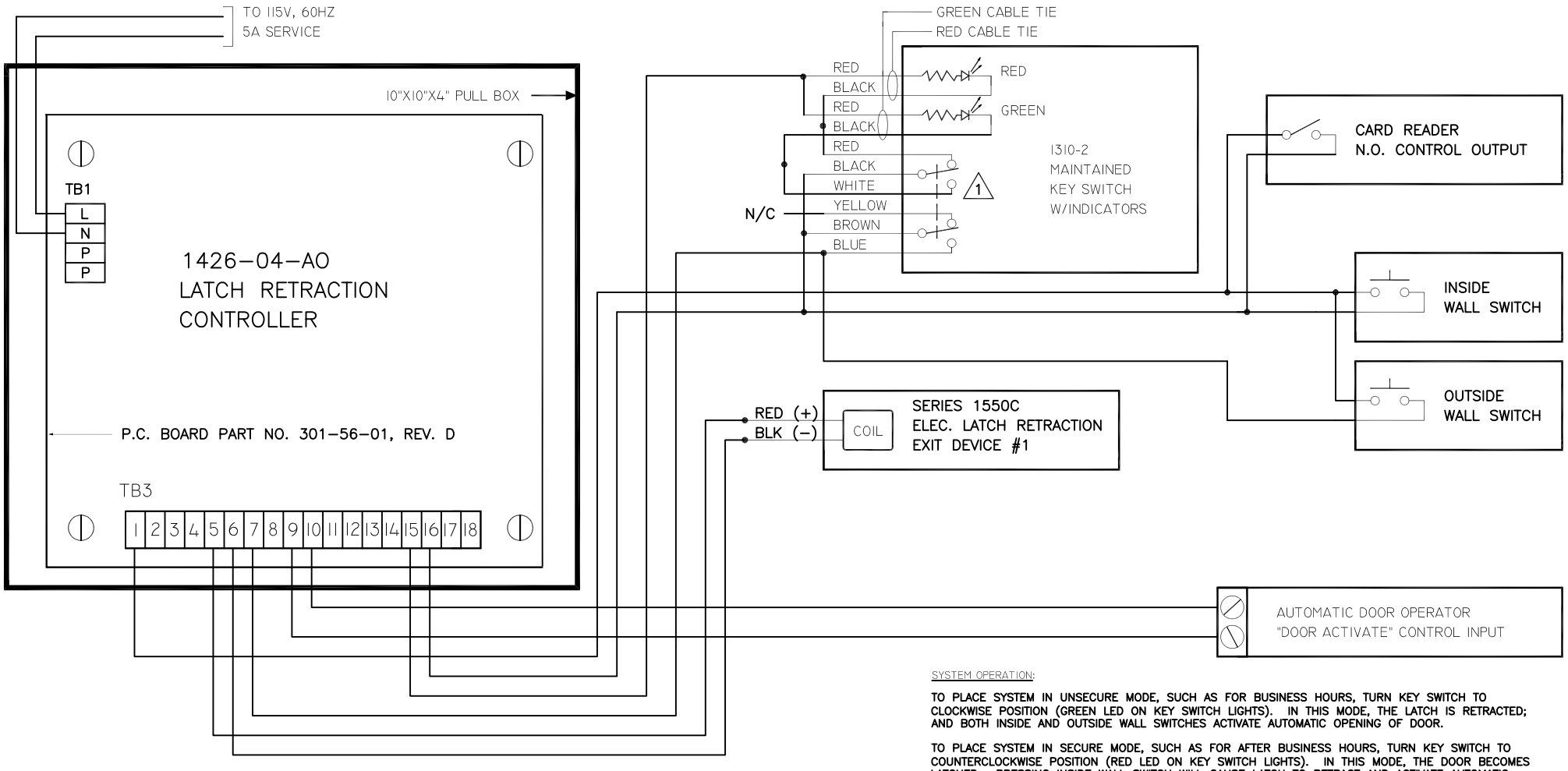

SYSTEM OPERATION:

TO PLACE SYSTEM IN UNSECURE MODE, SUCH AS FOR BUSINESS HOURS, TURN KEY SWITCH TO CLOCKWISE POSITION (GREEN LED ON KEY SWITCH LIGHTS). IN THIS MODE, THE LATCH IS RETRACTED; AND BOTH INSIDE AND OUTSIDE WALL SWITCHES ACTIVATE AUTOMATIC OPENING OF DOOR.

TO PLACE SYSTEM IN SECURE MODE, SUCH AS FOR AFTER BUSINESS HOURS, TURN KEY SWITCH TO COUNTERCLOCKWISE POSITION (RED LED ON KEY SWITCH LIGHTS). IN THIS MODE, THE DOOR BECOMES LATCHED. PRESSING INSIDE WALL SWITCH WILL CAUSE LATCH TO RETRACT AND ACTIVATE AUTOMATIC OPENING OF DOOR. OUTSIDE WALL SWITCH IS DISABLED. ACTIVATING CARD READER WILL RETRACT LATCH AND ACTIVATE AUTO OPERATOR.

FIG. 15: POINT-TO-POINT FOR VARIATION 3 OF SINGLE DOOR APPLICATION USING ACSI KEY SWITCH FOR SELECTING DAY/NIGHT MODE CONTROL

NOTES:

1. KEY SWITCH CONTACTS SHOWN IN "SYSTEM SECURE" POSITION.
2. —•— DENOTES A FIELD WIRE CONNECTION.

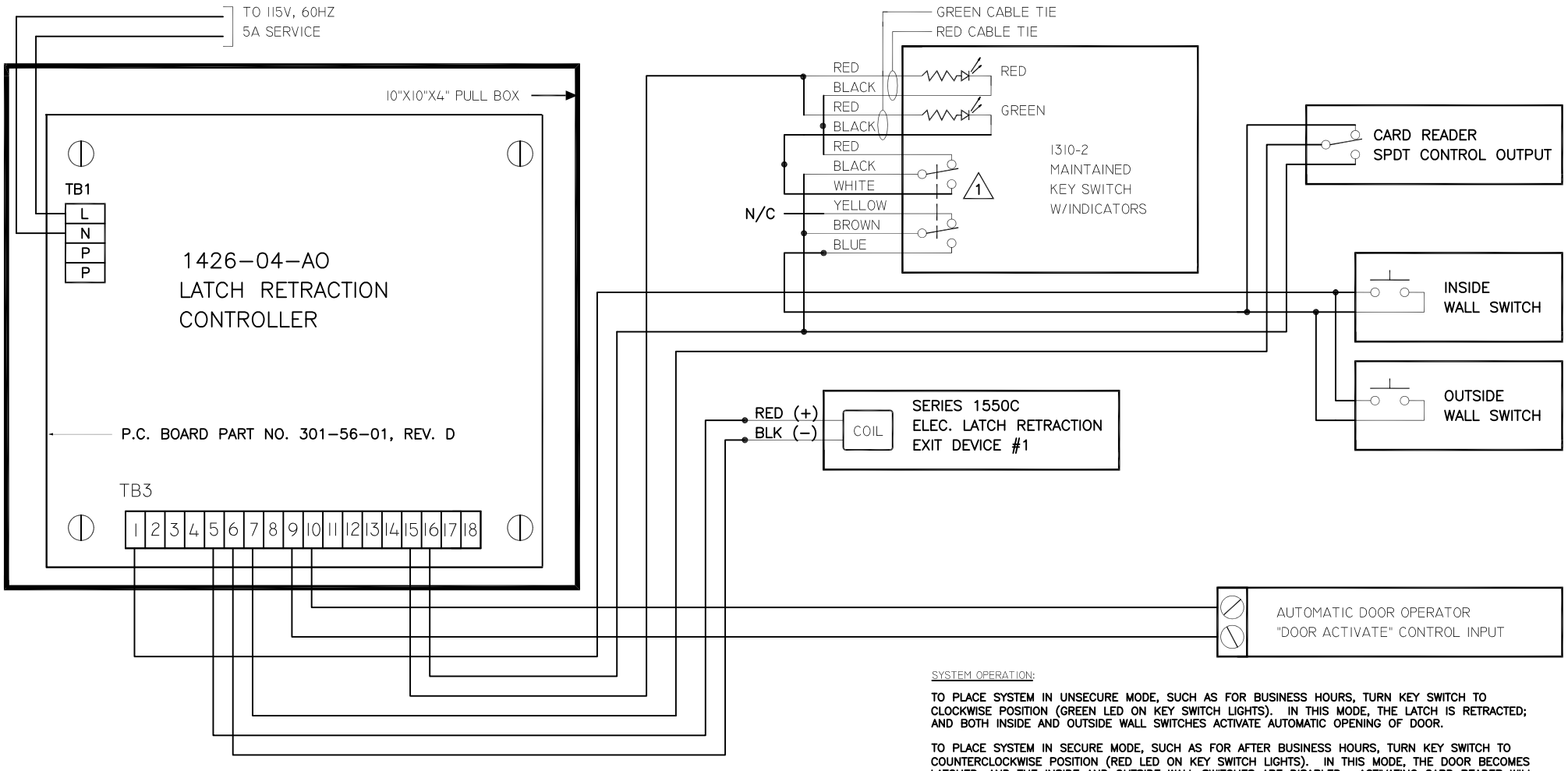

SYSTEM OPERATION:

TO PLACE SYSTEM IN UNSECURE MODE, SUCH AS FOR BUSINESS HOURS, TURN KEY SWITCH TO CLOCKWISE POSITION (GREEN LED ON KEY SWITCH LIGHTS). IN THIS MODE, THE LATCH IS RETRACTED; AND BOTH INSIDE AND OUTSIDE WALL SWITCHES ACTIVATE AUTOMATIC OPENING OF DOOR.

TO PLACE SYSTEM IN SECURE MODE, SUCH AS FOR AFTER BUSINESS HOURS, TURN KEY SWITCH TO COUNTERCLOCKWISE POSITION (RED LED ON KEY SWITCH LIGHTS). IN THIS MODE, THE DOOR BECOMES LATCHED; AND THE INSIDE AND OUTSIDE WALL SWITCHES ARE DISABLED. ACTIVATING CARD READER WILL RETRACT LATCH ONLY. DOOR MUST BE PULLED OPEN MANUALLY FOR ENTRY; PUSHED OPEN MANUALLY TO EXIT.

FIG. 16: POINT-TO-POINT FOR VARIATION 4 OF SINGLE DOOR APPLICATION USING ACSI KEY SWITCH FOR SELECTING DAY/NIGHT MODE CONTROL

NOTES:

1. KEY SWITCH CONTACTS SHOWN IN "SYSTEM SECURE" POSITION.
2. —•— DENOTES A FIELD WIRE CONNECTION.

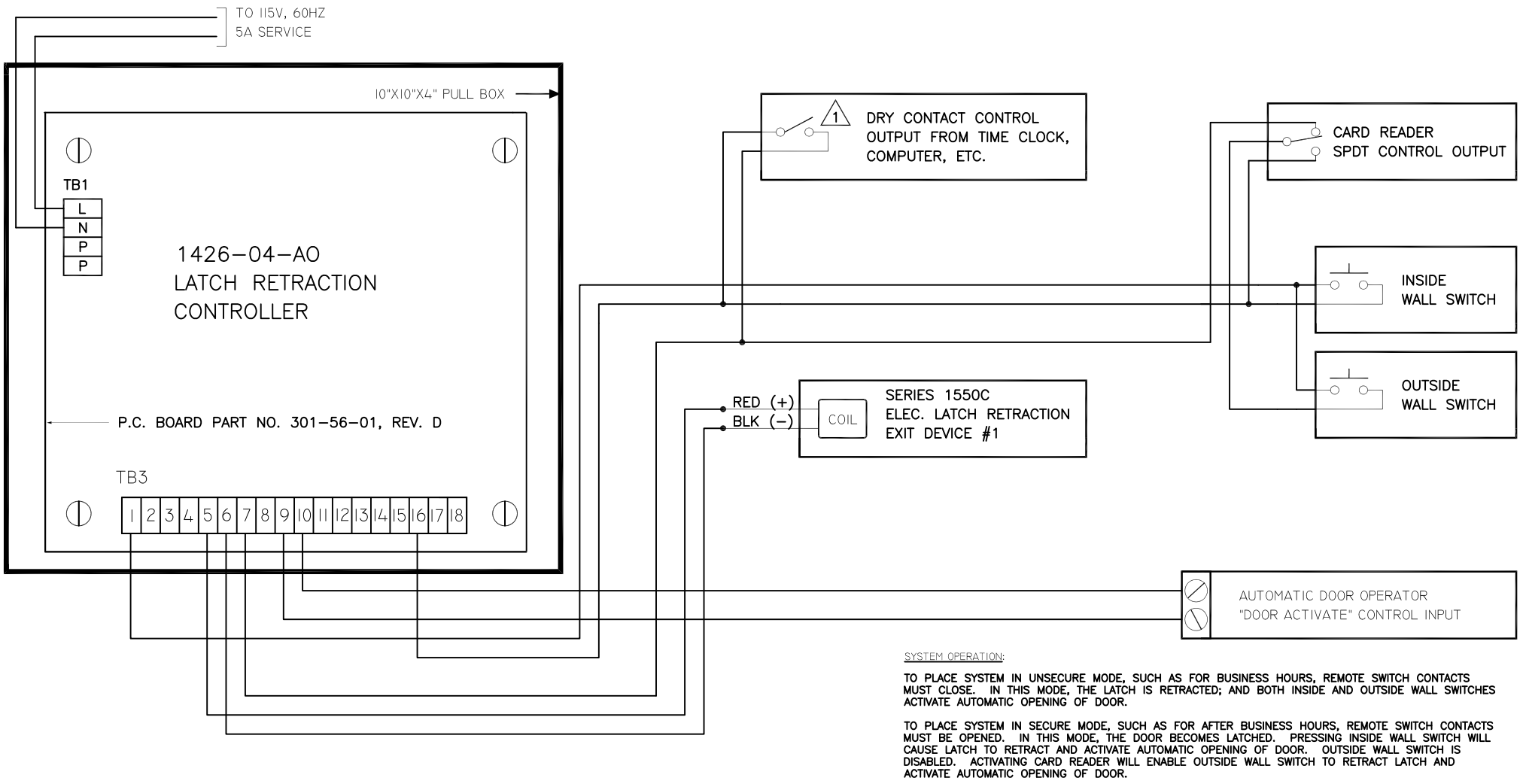

SYSTEM OPERATION:

TO PLACE SYSTEM IN UNSECURE MODE, SUCH AS FOR BUSINESS HOURS, REMOTE SWITCH CONTACTS MUST CLOSE. IN THIS MODE, THE LATCH IS RETRACTED; AND BOTH INSIDE AND OUTSIDE WALL SWITCHES ACTIVATE AUTOMATIC OPENING OF DOOR.

TO PLACE SYSTEM IN SECURE MODE, SUCH AS FOR AFTER BUSINESS HOURS, REMOTE SWITCH CONTACTS MUST BE OPENED. IN THIS MODE, THE DOOR BECOMES LATCHED. PRESSING INSIDE WALL SWITCH WILL CAUSE LATCH TO RETRACT AND ACTIVATE AUTOMATIC OPENING OF DOOR. OUTSIDE WALL SWITCH IS DISABLED. ACTIVATING CARD READER WILL ENABLE OUTSIDE WALL SWITCH TO RETRACT LATCH AND ACTIVATE AUTOMATIC OPENING OF DOOR.

FIG. 17: POINT-TO-POINT FOR VARIATION 1 OF SINGLE DOOR APPLICATION USING REMOTE OUTPUT (TIME CLOCK, COMPUTER, ETC.) FOR SELECTING DAY/NIGHT MODE CONTROL

NOTES:

1. REMOTE SWITCH CONTACTS SHOWN IN "SYSTEM SECURE" POSITION.
2. —•— DENOTES A FIELD WIRE CONNECTION.

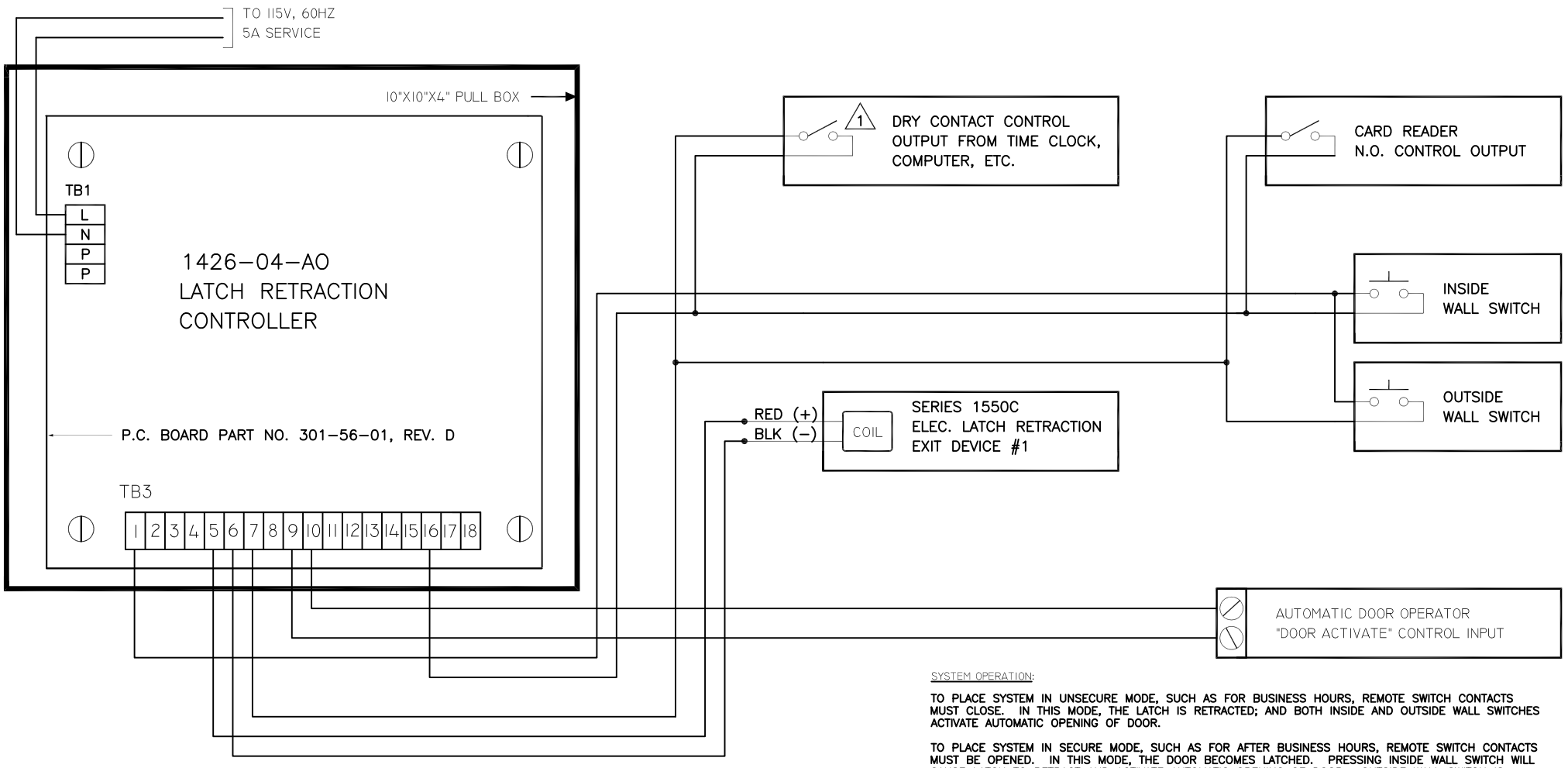

SYSTEM OPERATION:

TO PLACE SYSTEM IN UNSECURE MODE, SUCH AS FOR BUSINESS HOURS, REMOTE SWITCH CONTACTS MUST CLOSE. IN THIS MODE, THE LATCH IS RETRACTED; AND BOTH INSIDE AND OUTSIDE WALL SWITCHES ACTIVATE AUTOMATIC OPENING OF DOOR.

TO PLACE SYSTEM IN SECURE MODE, SUCH AS FOR AFTER BUSINESS HOURS, REMOTE SWITCH CONTACTS MUST BE OPENED. IN THIS MODE, THE DOOR BECOMES LATCHED. PRESSING INSIDE WALL SWITCH WILL CAUSE LATCH TO RETRACT AND ACTIVATE AUTOMATIC OPENING OF DOOR. OUTSIDE WALL SWITCH IS DISABLED. ACTIVATING CARD READER WILL RETRACT LATCH AND ENABLE OUTSIDE WALL SWITCH TO ACTIVATE AUTO OPERATOR WHEN PRESSED.

FIG. 18: POINT-TO-POINT FOR VARIATION 2 OF SINGLE DOOR APPLICATION USING REMOTE OUTPUT (TIME CLOCK, COMPUTER, ETC.) FOR SELECTING DAY/NIGHT MODE CONTROL

NOTES:

1. REMOTE SWITCH CONTACTS SHOWN IN "SYSTEM SECURE" POSITION.
2. —•— DENOTES A FIELD WIRE CONNECTION.

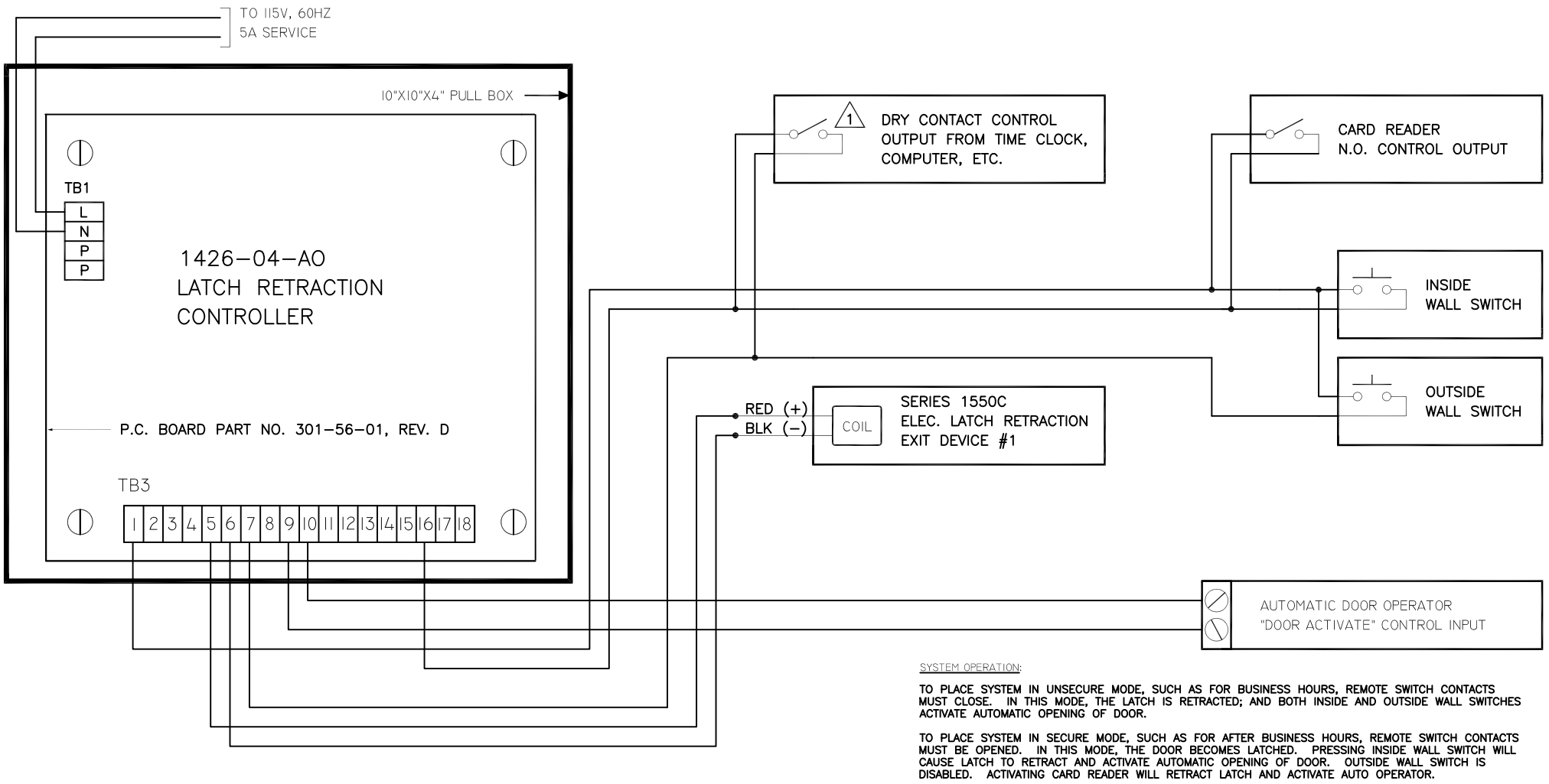

SYSTEM OPERATION:

TO PLACE SYSTEM IN UNSECURE MODE, SUCH AS FOR BUSINESS HOURS, REMOTE SWITCH CONTACTS MUST CLOSE. IN THIS MODE, THE LATCH IS RETRACTED; AND BOTH INSIDE AND OUTSIDE WALL SWITCHES ACTIVATE AUTOMATIC OPENING OF DOOR.

TO PLACE SYSTEM IN SECURE MODE, SUCH AS FOR AFTER BUSINESS HOURS, REMOTE SWITCH CONTACTS MUST BE OPENED. IN THIS MODE, THE DOOR BECOMES LATCHED. PRESSING INSIDE WALL SWITCH WILL CAUSE LATCH TO RETRACT AND ACTIVATE AUTOMATIC OPENING OF DOOR. OUTSIDE WALL SWITCH IS DISABLED. ACTIVATING CARD READER WILL RETRACT LATCH AND ACTIVATE AUTO OPERATOR.

FIG. 19: POINT-TO-POINT FOR VARIATION 3 OF SINGLE DOOR APPLICATION USING REMOTE OUTPUT (TIME CLOCK, COMPUTER, ETC.) FOR SELECTING DAY/NIGHT MODE CONTROL

NOTES:

1. REMOTE SWITCH CONTACTS SHOWN IN "SYSTEM SECURE" POSITION.
2. —•— DENOTES A FIELD WIRE CONNECTION.

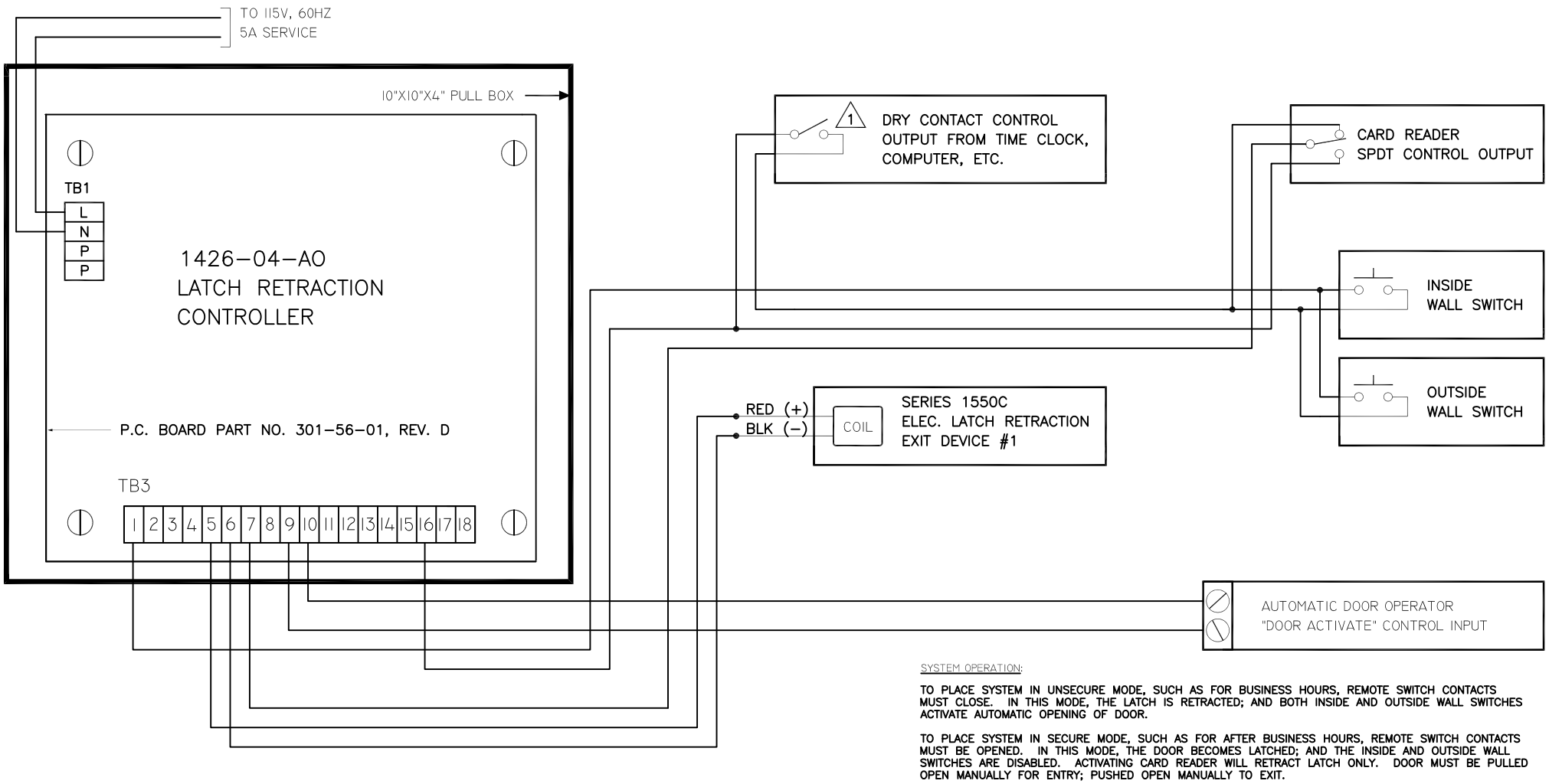

SYSTEM OPERATION:

TO PLACE SYSTEM IN UNSECURE MODE, SUCH AS FOR BUSINESS HOURS, REMOTE SWITCH CONTACTS MUST CLOSE. IN THIS MODE, THE LATCH IS RETRACTED; AND BOTH INSIDE AND OUTSIDE WALL SWITCHES ACTIVATE AUTOMATIC OPENING OF DOOR.

TO PLACE SYSTEM IN SECURE MODE, SUCH AS FOR AFTER BUSINESS HOURS, REMOTE SWITCH CONTACTS MUST BE OPENED. IN THIS MODE, THE DOOR BECOMES LATCHED; AND THE INSIDE AND OUTSIDE WALL SWITCHES ARE DISABLED. ACTIVATING CARD READER WILL RETRACT LATCH ONLY. DOOR MUST BE PULLED OPEN MANUALLY FOR ENTRY; PUSHED OPEN MANUALLY TO EXIT.

FIG. 20: POINT-TO-POINT FOR VARIATION 4 OF SINGLE DOOR APPLICATION USING REMOTE OUTPUT (TIME CLOCK, COMPUTER, ETC.) FOR SELECTING DAY/NIGHT MODE CONTROL

NOTES:

1. REMOTE SWITCH CONTACTS SHOWN IN "SYSTEM SECURE" POSITION.
2. —•— DENOTES A FIELD WIRE CONNECTION.

GENERAL WIRING DIAGRAM FOR 1426-04-AO ELECTRIC LATCH RETRACTION CONTROLLER

USE INSTALLATION INSTRUCTIONS II - 1400-6

CLASS 2 OUTPUTS

SECURITY UL LISTED

EQUIPMENT
4M73

ACCESS CONTROL POWER SUPPLY, ACCESS CONTROL ELECTRIC LATCH RETRACTION (ELR) CONTROLLER

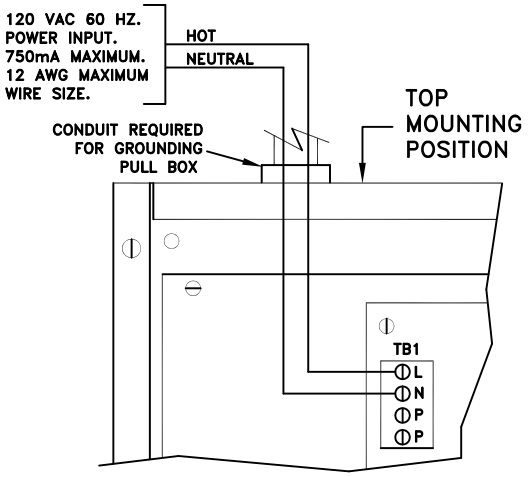

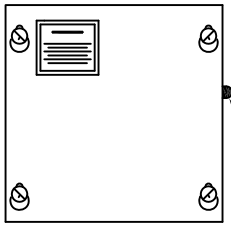

CONTROLLER INTENDED FOR INDOOR USE ONLY.

R2 R4
INC. INC.

USED FOR ADJUSTING UNLOCK DELAY TIME WHEN USING A MOMENTARY ACTION SWITCH FOR SW. 1. R2 ADJUSTS DEV. 1 (SINGLE DOOR) OR DEV. 1 & DEV. 2 (PAIR DOORS) TIME DELAY. 20 SEC. MAX. DELAY TIME. R4 IS NOT USED WITH THE MODEL 1426-04-AO LATCH RETRACTION CONTROLLER.

MFG. DATE:

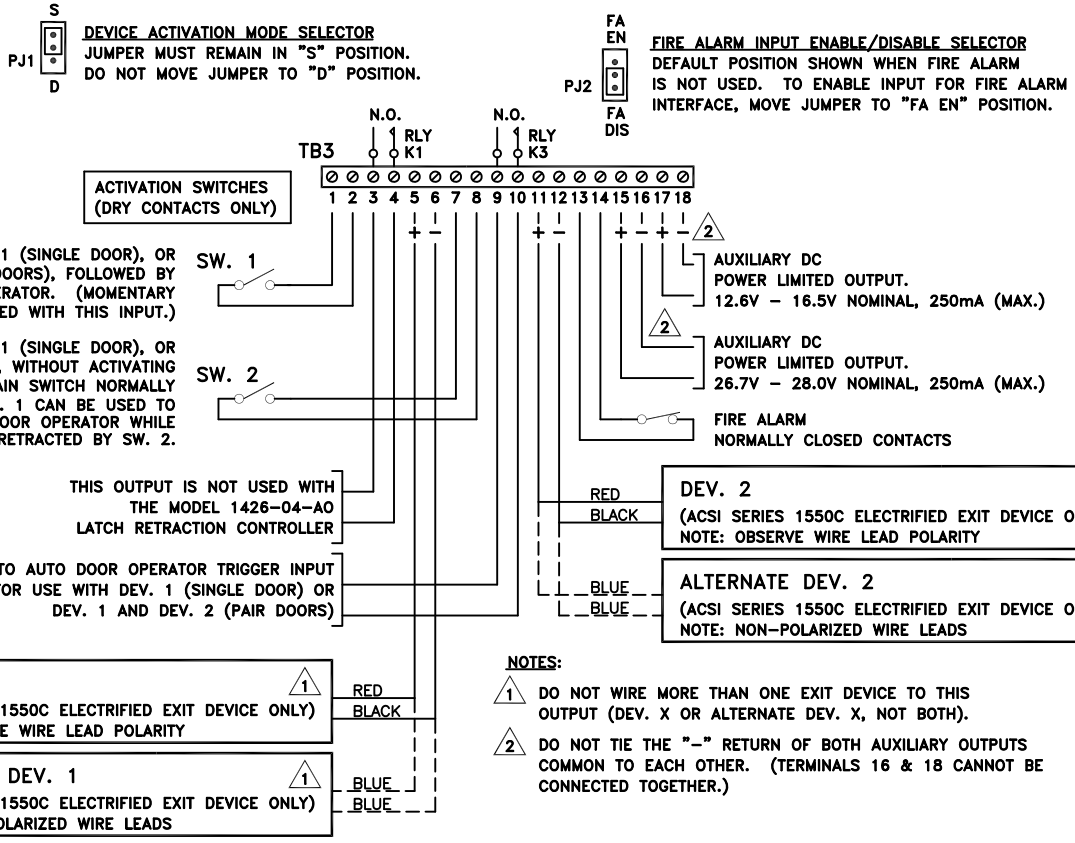

NOTES:

1. DO NOT WIRE MORE THAN ONE EXIT DEVICE TO THIS OUTPUT (DEV. X OR ALTERNATE DEV. X, NOT BOTH).
2. DO NOT TIE THE "-" RETURN OF BOTH AUXILIARY OUTPUTS COMMON TO EACH OTHER. (TERMINALS 16 & 18 CANNOT BE CONNECTED TOGETHER.)

FOR TROUBLE SHOOTING ASSISTANCE, CONTACT ACSI TECHNICAL SUPPORT:
1-800-753-5558

REV. 06/15

ACSI
ARCHITECTURAL CONTROL SYSTEMS INC.

ACSI MODEL 1440 POWER SUPPLY
INSTALLATION INSTRUCTIONS

Features:

- Filtered/Regulated 24 Volts DC
- Up to Full 2 Amps Load Capacity
- Class 2 Rated Outputs
- Overload, Over Voltage, and Short Circuit Protection
- Automatically Accepts 120VAC or 240VAC Input Without Requiring to Move Jumpers or Set Dip Switches
- Controls Fail Safe or Fail Secure Locking Devices
- Interface Relay Isolates Locking device current from control switch
- Auxiliary 24VDC Constant Voltage Output for Powering Stand Alone Devices, Such as Keypads, Motion Detectors, and Status Indicators
- Surge Suppression on Fail Safe & Fail Secure Outputs
- UL Listed and Tested to 294 Standard for Access Control System Units with Security Levels Rated I for Physical Attack, IV for Endurance, I for Line Security, I for Standby Power

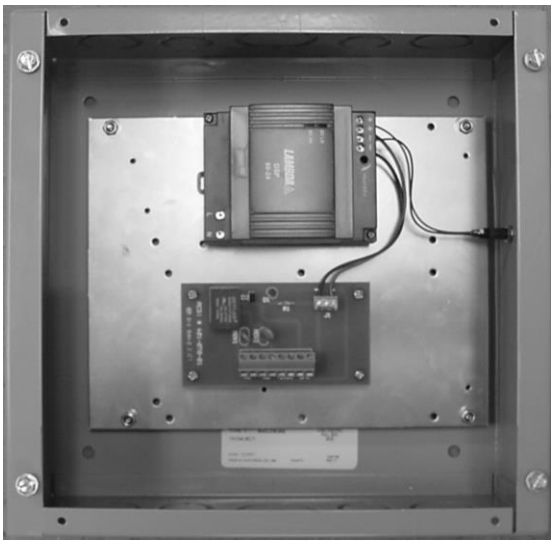

Installing the 1440

The unit must be mounted indoors and away from any moist or wet areas. Some common locations for mounting the 1440 would be in the plenum near the door containing the electric locking device, or in a nearby closet or electrical room. When installing the unit in the plenum, wires must either be of plenum rating or contained inside conduit. The unit must be mounted in a vertical position with the power supply module located at the top, as shown in the photograph above. Four 1/4" holes are provided for mounting the box to the wall or other rigid surface. If the surface material is wood, it must be at least 1 inch thick. Use either a truss or pan head, 1 inch long sheet metal screw (#10 or larger) for fastening the box to the wood surface. When mounting the unit to 1/2 inch or 5/8 inch dry wall, it is recommended that 3/16 inch or 1/4 inch diameter toggle bolts be used for maximum support. Use the same size toggle bolts for mounting the unit to hollow concrete blocks. For mounting to concrete, solid block, or brick, it is recommended to use 1-3/4 inch long (minimum) x 1/4 inch diameter hex head bolt anchors (sometimes called power-bolts) in 18-8 stainless steel or Grade 5 zinc-plated steel. The sub plate can be removed from the box for easier access to the mounting holes. To remove the sub plate, locate the four #6 locknuts near each corner of the plate and remove.

The 6-32 studs, from which the sub plate mounts to, are held in place to the box by threaded standoffs.

Wiring the AC Input

The 1440 power supply is rated for use with a 20 amp branch circuit and is capable of accepting either 120VAC or 240VAC input without the need for making any changes, or reconfiguring to convert from one input voltage to the other. Because the power supply module contains Class 2 double insulation, an earth ground wire is not required. For wiring 120VAC or 240VAC input, run 14 AWG 2-conductor to the power supply module's input terminals marked **L** (Line) and **N** (Neutral). Ensure that the conductors are fully inserted into the input terminals with no bare metal exposed. (Refer to the wire stripping instructions included on the wiring diagram attached to the cover plate of this power supply.)

CAUTION! It is important to maintain separation between the primary (high voltage AC) wiring and secondary (low voltage DC) wiring as they are routed inside the power supply enclosure. The primary wiring must be run inside conduit; and the conduit must be connected to one of the knockouts located towards the left end of the top wall of the enclosure (above and to the left of the power supply module's input terminals). All secondary wiring must be routed through any one of the knockouts located along the bottom wall of the enclosure.

Note: This unit is not equipped with a battery standby power feature.

Control Switch

Used for indirectly switching power to fail safe and fail secure locking devices, a control switch can be momentary or maintained action, depending on the application. A control switch can be in the form of relay contacts, such as used in card reader systems, motion detectors, or stand alone keypads. Key switches, push-button switches, and emergency release type switches (including fire alarm contacts) can also be used as a control switch for local or remote switching of electric locking devices. It is important to ensure that the switching device be in the form of “dry” contacts only (no voltage riding on the switch contacts, usually referred to as “wet” contacts).

The control switch actually energizes and de-energizes an on board interface relay. The purpose for the relay is to isolate locking device current from the control switch contacts. Using this method of control, switches with low current ratings can be used without the risk of becoming damaged from the higher current of the locking device, which can be 0.5 amp or greater. The control switch will only see low relay current (15mA) passing through its contacts. The higher current drawn from the locking device will be switched through the heavy duty 7 amp rated contacts of the interface relay.

Note: To keep line drop (voltage lost due to resistance in the field wire) to a minimum, it is recommended that an 18 gauge stranded two conductor cable be run from the 1440 to each electrified locking device (or two locking devices if required on pair

door applications). Each separate run must not exceed 500 feet. The control switch, however, can be located several hundred feet further from the power supply with hardly any voltage lost on account of the high impedance of the relay coil (1,600Ω).

The illustrations below are wire diagram examples for wiring a typical fail safe and fail secure system using combinations of available inputs and outputs:

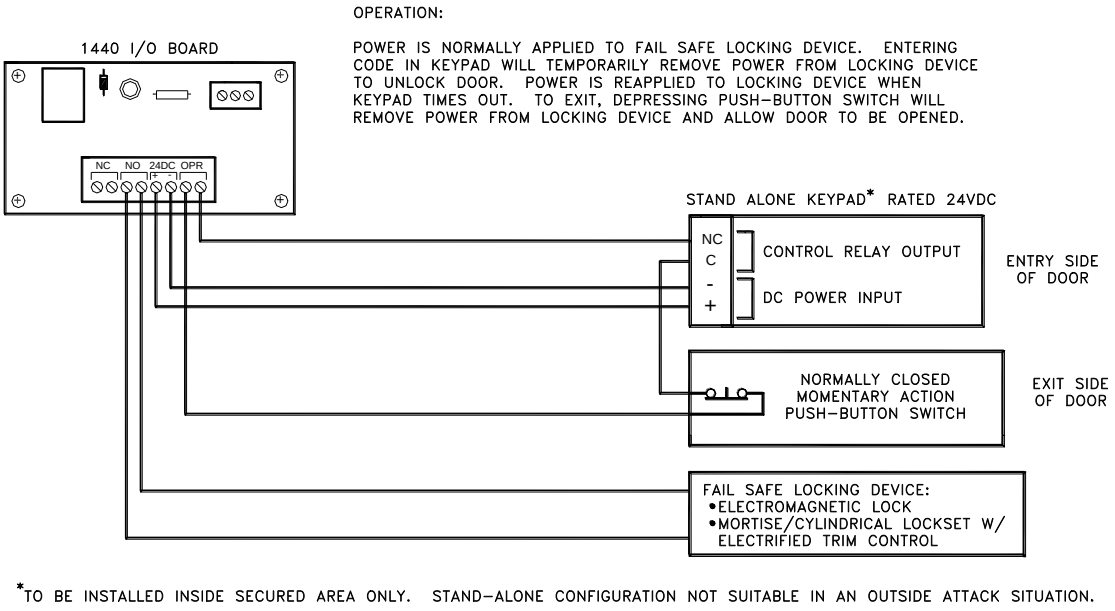

FIG. 1: WIRE SCHEME FOR A TYPICAL FAIL SAFE SYSTEM

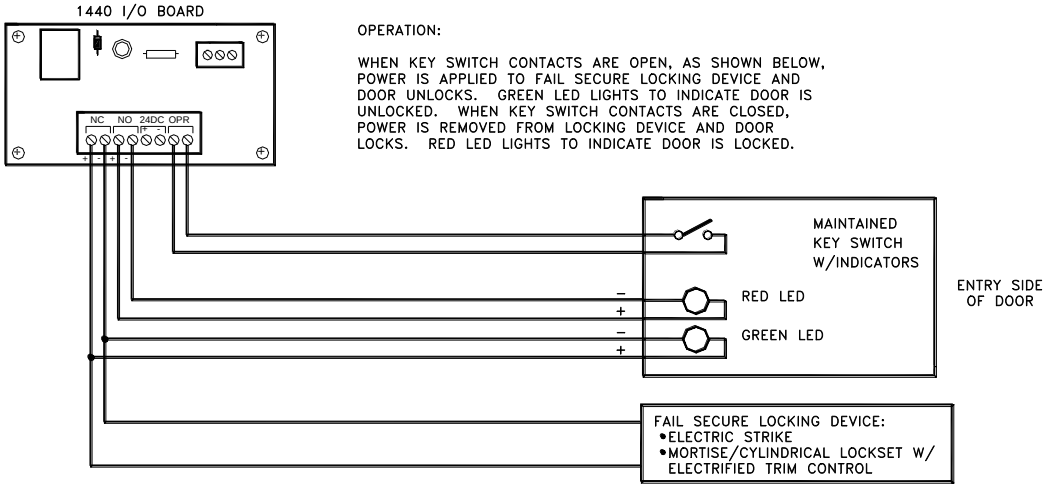

FIG. 2: WIRE SCHEME FOR A TYPICAL FAIL SECURE SYSTEM

Figure 3 below shows use of more than one locking device simultaneously locked and unlocked by one control switch. Figure 4 illustrates multiple locking devices controlled independently by a card reader system:

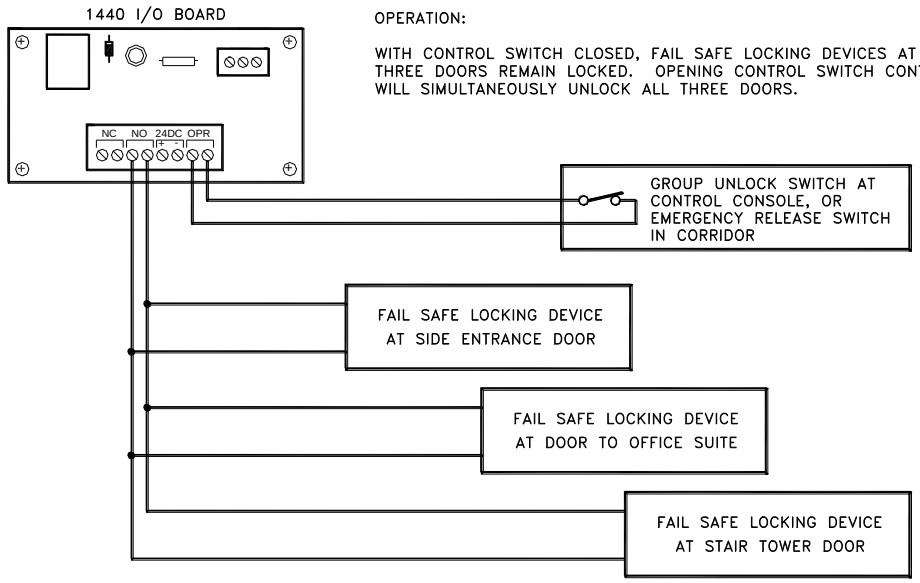

FIG. 3: WIRE SCHEME FOR SIMULTANEOUS CONTROL OF MULTIPLE DOORS

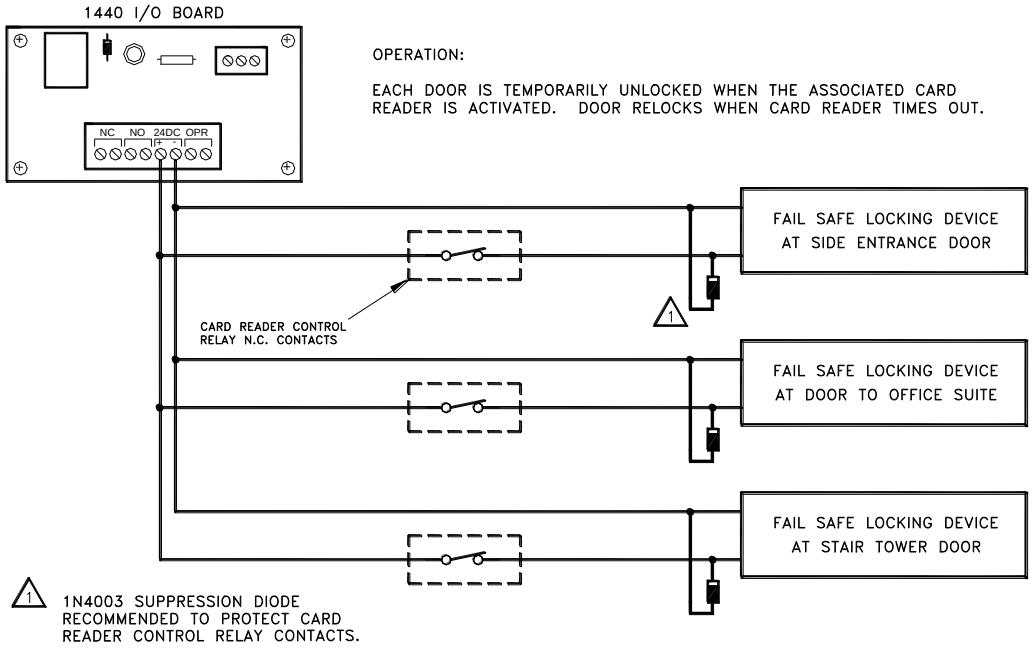

FIG. 4: WIRE SCHEME FOR INDEPENDENT CONTROL OF MULTIPLE DOORS

Applications illustrated in Figures 3 and 4 can be combined to provide both independent and simultaneous control of doors as follows: In Figure 4, move the two-wire circuit of the three fail

safe locking devices from the terminals marked “24DC” (constant 24 volt output) to the terminals marked “NO” (fail safe output). Connect terminals marked “OPR” (control switch input) to either the fire alarm, an emergency release switch or a group unlock switch. The control switch is normally closed to lock all doors and allow them to be independently unlocked by card readers. When the control switch is opened, all doors unlock together.

Trouble Shooting Tips

Listed below are some problems that might be encountered during installation, or at any other time, and possible solutions for correcting them.

! CAUTION !

THIS UNIT CONTAINS AREAS OF EXPOSED HIGH VOLTAGE. ALL TROUBLE SHOOTING AND MAINTENANCE SHOULD BE PERFORMED BY A QUALIFIED ELECTRICIAN.

- **No output voltage measured across terminals NC, NO, and 24DC.**
  - Check for 120VAC across terminals of input to power supply module.
  - If 120VAC is present, disconnect field wires from all used outputs (NC, NO, 24DC) and measure for 24VDC across the “24DC” terminals.
  - If 24VDC is now present, check for shorts across field wires for each output. If the load is an electrified locking device mounted in the door, check the electric hinge for pinched wires behind each leaf. Also check for shorted wires between the locking device and raceway in the door.
  - If 24VDC is not present across terminals marked “24DC” (with field wires still disconnected from all outputs), disconnect the red and black wire leads connected to the +,- terminals of the output to the power supply module and check for 24VDC at this output. If voltage is now present across the power supply module's output, it can be assumed that there is a short circuit somewhere on the control board and it will need to be replaced. If voltage is still not present across the output to the power supply module, then it can be assumed the power supply module itself is damaged and must be replaced.

- **The electrified locking device behaves the opposite of what was expected, i.e., it locks when intended to unlock, or unlocks when intended to lock.**
  - A fail safe type locking device may be incorrectly wired to the fail secure output terminals (NC). It must be wired to the terminals marked “NO”.
  - A fail secure type locking device may be incorrectly wired to the fail safe output terminals (NO). It must be wired to the terminals marked “NC”.
  - Make sure that the electric locking device has been correctly modified for the function intended: Fail Safe (power to lock), Fail Secure (power to unlock).
  - The control switch may be incorrectly wired. To lock a fail safe or fail secure electric locking device, the control switch must be closed. To unlock a fail safe or fail secure electric locking device, the control switch must be open.

- **The electric locking device does not unlock when a control device, such as a card reader or keypad, is activated.**
    - The control output from the card reader or keypad must be in the from of dry contacts and wired across the terminals marked “OPR”. In some cases, card readers and keypads put out a switched voltage output when activated. Check these outputs with a voltmeter to ensure that there is no AC/DC voltage present across these outputs when activated or deactivated.

For trouble shooting assistance, contact ACSI Technical Support: 1-800-753-5558

SPECIFICATIONS:

Input Voltage:	120VAC/240VAC, 50/60Hz
AC Current:	900mA/120VAC, 600mA/240VAC
Output Voltage:	24VDC Filtered, Regulated
Output Current:	2.0A
Output Power:	48W
Protection:	Overload, Over Voltage, Short Circuit

ACSI
ARCHITECTURAL
CONTROL SYSTEMS INC.

MODEL 1440 POWER SUPPLY

ACCESS CONTROL POWER SUPPLY
CLASS 2 OUTPUTS

SECURITY
UL LISTED
EQUIPMENT
4M73

MFG. DATE:

SPECIFICATIONS:

INPUT VOLTAGE:	120VAC/240VAC, 50/60Hz
AC CURRENT:	900mA/120VAC, 600mA/240VAC
OUTPUT VOLTAGE:	24VDC FILTERED, REGULATED
OUTPUT CURRENT:	2.0A
OUTPUT POWER:	48W
PROTECTION:	OVERLOAD, OVER VOLTAGE, SHORT CIRCUIT

USE INSTALLATION INSTRUCTIONS II - 1400-8

POWER SUPPLY INTENDED FOR INDOOR USE ONLY

STRIP WIRE BACK 6mm. WIRES MUST BE FULLY INSERTED INTO TERMINALS SO THAT NO BARE METAL IS EXPOSED. FLEXIBLE CABLE: ALL STRANDS MUST BE SECURED IN TERMINAL. USE COPPER CONDUCTORS ONLY.

TERMINAL SIZE RANGE:
AWG24–10 FOR A TYPE
AWG24–14 FOR B TYPE

120VAC OR 240VAC INPUT

CLASS 2 DOUBLE INSULATION.
NO EARTH GROUND WIRE REQUIRED.

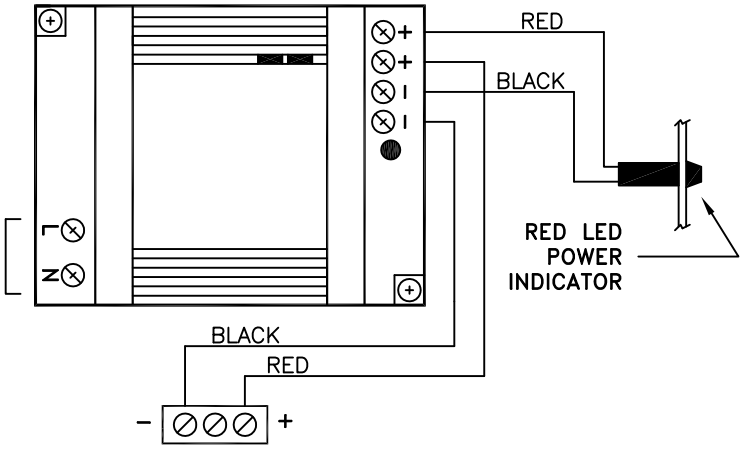

CONTROL BOARD 24V POWER CONNECTOR J1

CONTROL BOARD I/O CONNECTOR

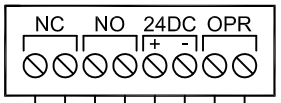

CONTROL SWITCH (CARD READER, KEYPAD, FIRE ALARM, ETC.).
CLOSING SWITCH POWERS UP "NO" (FAIL SAFE) OUTPUT, POWERS DOWN "NC" (FAIL SECURE) OUTPUT. OPENING SWITCH REVERSES POWER TO OUTPUTS.

AUXILIARY 24VDC OUTPUT (UNSWITCHED).
FOR POWERING KEYPADS, MOTION SENSORS, STATUS INDICATORS, ETC.

– +
FAIL SAFE ELECTRIFIED LOCKING DEVICES.
ELECTRIC LOCKING OCCURS WHEN CONTROL SWITCH IS CLOSED.

– +
FAIL SECURE ELECTRIFIED LOCKING DEVICES.
ELECTRIC UNLOCKING OCCURS WHEN CONTROL SWITCH IS OPEN.

NOTE: THE SUM OF ALL OUTPUTS CANNOT EXCEED 2 AMPS.

FOR TROUBLE SHOOTING ASSISTANCE,
CONTACT ACSI TECHNICAL SUPPORT:
1-800-753-5558

REV. 06/15

ACSI
ARCHITECTURAL CONTROL SYSTEMS INC.



ACSI Series 1550K-MD and 1550-MD Motor Drive Electric Latch Retraction

Riser and Point-to-Point Drawings for Standard Access Control Applications Using Maintained Latch Retraction Control or Momentary Latch Retraction Control with Field-Adjustable Time Delay

For Use with ACSI Part Numbers 1440 and 1440-TD

Rev. 02/15

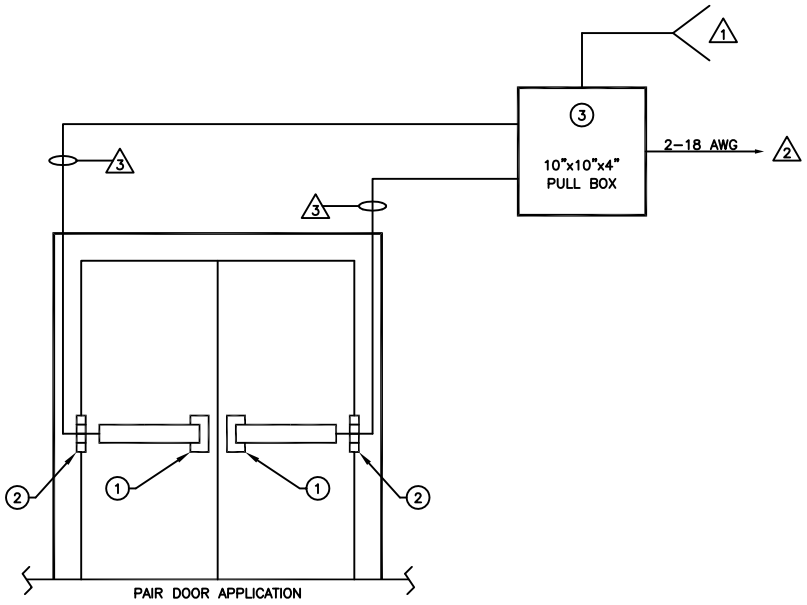

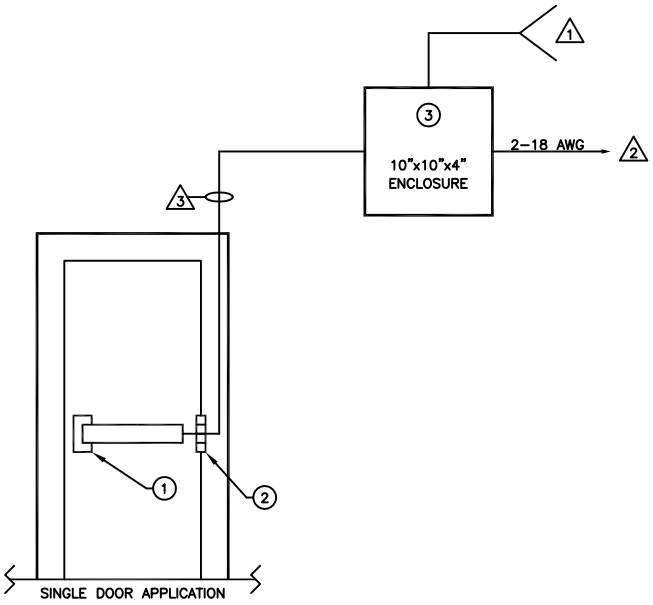

ACSI SUPPLIED EQUIPMENT:

(1) SERIES 1550K–MD OR 1550–MD MOTOR DRIVE ELECTRIC LATCH RETRACTION

(2) SERIES 1100 POWER TRANSFER HINGE

(3) 1440 POWER SUPPLY

NOTES:

△1 TO 115V., 60HZ., 15A. SERVICE.

NOTE: IF FIRE ALARM INTERFACE IS REQUIRED, RUN 115V SERVICE THROUGH FIRE ALARM–CONTROLLED RELAY N.C. CONTACTS.

△2 TO A CONTROL DEVICE USING MAINTAINED SWITCH CONTACTS (PUSHBUTTON SWITCH, KEY SWITCH) OR A CONTROL DEVICE RELAY OUTPUT EQUIPPED WITH BUILT–IN TIME DELAY (CARD READER, KEYPAD, MOTION SENSOR).

△3

WIRE GAUGE	MAX. LENGTH 2–COND. CABLE
22 AWG	70 FEET
20 AWG	110 FEET
18 AWG	180 FEET
16 AWG	280 FEET
14 AWG	450 FEET
12 AWG	720 FEET

RISER DIAGRAM FOR STANDARD ACCESS CONTROL WITH MAINTAINED ELECTRIC LATCH RETRACTION, OR MOMENTARY RETRACTION BY CONTROL DEVICES WITH BUILT-IN TIME DELAY, USING SERIES 1550K-MD OR 1550-MD MOTOR DRIVE ELR DEVICES

ARCHITECTURAL CONTROL SYSTEMS, INCORPORATED
ST. LOUIS, MISSOURI
1–800–753–5558

TOLERANCES UNLESS NOTED
FRACTION ±1/64 DRILL +.007 –.001
DECIMAL ± .005 REAM +.001 –.000
ANGULAR ±1° PUNCH +.004 –.001

DESCRIPTION	DRAWING NO.	MATERIAL
ACSI P/N 1440 ELR ACCESS CONTROL	REF 6038–R1	

2/10/15	A	CRH
10/8/14	RELEASED	CRH
DATE	REV.	APPRV.
SCALE NONE	DRAWN BY CRH	DATE 10/8/14
SHEET 1 OF 1	APPRV. BY CRH	DATE 10/8/14

DO NOT SCALE THIS DRAWING

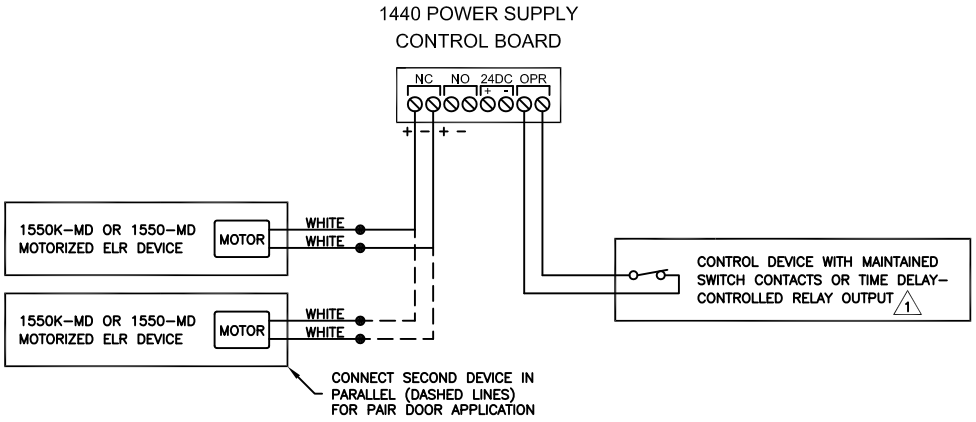

POINT-TO-POINT WIRING DIAGRAM
STANDARD ACCESS CONTROL WITH MAINTAINED ELECTRIC LATCH RETRACTION, OR MOMENTARY RETRACTION BY CONTROL DEVICES WITH BUILT-IN TIME DELAY, USING SERIES 1550K-MD OR 1550-MD MOTOR DRIVE ELR DEVICES

NOTES:

1. LATCHBOLT IS PROJECTED WITH SWITCH IN CLOSED POSITION, AS SHOWN. OPENING SWITCH CONTACTS WILL RETRACT LATCHBOLT.
2. IF THE 1440 POWER SUPPLY IS WIRED TO A FIRE ALARM CONTROL PANEL, AN ALARM CONDITION WILL IMMEDIATELY PROJECT THE LATCHBOLT WHEN CURRENTLY RETRACTED.

ARCHITECTURAL CONTROL SYSTEMS, INCORPORATED
ST. LOUIS, MISSOURI
1-800-753-5558

TOLERANCES UNLESS NOTED
FRACTION ±1/64 DRILL +.007 -.001
DECIMAL ± .005 REAM +.001 -.000
ANGULAR ±1° PUNCH +.004 -.001

DESCRIPTION	DRAWING NO.	MATERIAL
ACSI P/N 1440 ELR ACCESS CONTROL	REF 6038-P1	

10/8/14	RELEASED	CRH
DATE	REV.	APPRV.
SCALE NONE	DRAWN BY CRH	DATE 10/8/14
SHEET 1 OF 1	APPRV. BY CRH	DATE 10/8/14

DO NOT SCALE THIS DRAWING

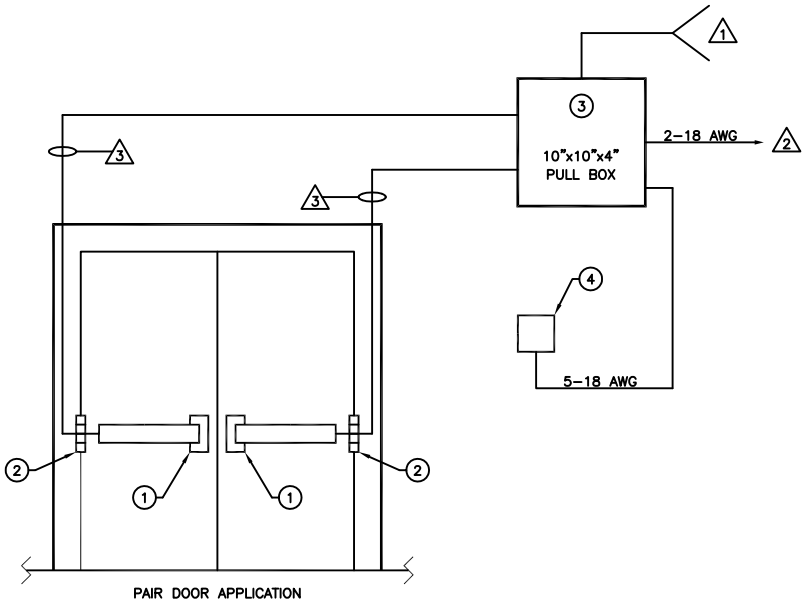

PAIR DOOR APPLICATION

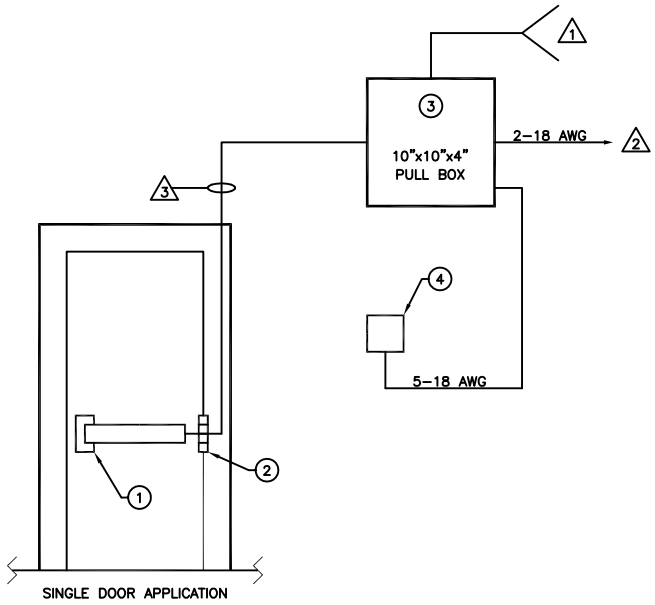

SINGLE DOOR APPLICATION

ACSI SUPPLIED EQUIPMENT:

(1) SERIES 1550K-MD OR 1550-MD MOTOR DRIVE ELECTRIC LATCH RETRACTION

(2) SERIES 1100 POWER TRANSFER HINGE

(3) 1440 POWER SUPPLY

(4) TM TIMER MODULE
NOTE: DO NOT LOCATE MORE THAN 10 FT. FROM POWER SUPPLY

NOTES:

(1) TO 115V., 60HZ., 15A. SERVICE.

NOTE: IF FIRE ALARM INTERFACE IS REQUIRED, RUN 115V SERVICE THROUGH FIRE ALARM-CONTROLLED RELAY N.C. CONTACTS.

(2) TO A MOMENTARY PUSHBUTTON OR KEY SWITCH FOR TIMED MOMENTARY DOOR CONTROL USING THE TM TIMER MODULE'S FIELD-ADJUSTABLE TIME DELAY.

(3)

WIRE GAUGE	MAX. LENGTH 2-COND. CABLE
22 AWG	70 FEET
20 AWG	110 FEET
18 AWG	180 FEET
16 AWG	280 FEET
14 AWG	450 FEET
12 AWG	720 FEET

RISER DIAGRAM FOR STANDARD ACCESS CONTROL WITH FIELD-ADJUSTABLE TIME DELAY USING SERIES 1550K-MD OR 1550-MD MOTOR DRIVE ELR DEVICES

ARCHITECTURAL CONTROL SYSTEMS, INCORPORATED
ST. LOUIS, MISSOURI
1-800-753-5558

TOLERANCES UNLESS NOTED
FRACTION ±1/64 — DRILL +.007 -.001
DECIMAL ± .005 — REAM +.001 -.000
ANGULAR ±1° — PUNCH +.004 -.001

DESCRIPTION	DRAWING NO.	MATERIAL
ACSI P/N 1440-TD ELR ACCESS CONTROL	REF 6038-R2	

DATE	REV.	APPRV.
2/10/15	B	CRH
12/17/14	A	CRH
10/22/14	RELEASED	CRH

SCALE NONE — DRAWN BY CRH — DATE 10/22/14
SHEET 1 OF 1 — APPRV. BY CRH — DATE 10/22/14

DO NOT SCALE THIS DRAWING

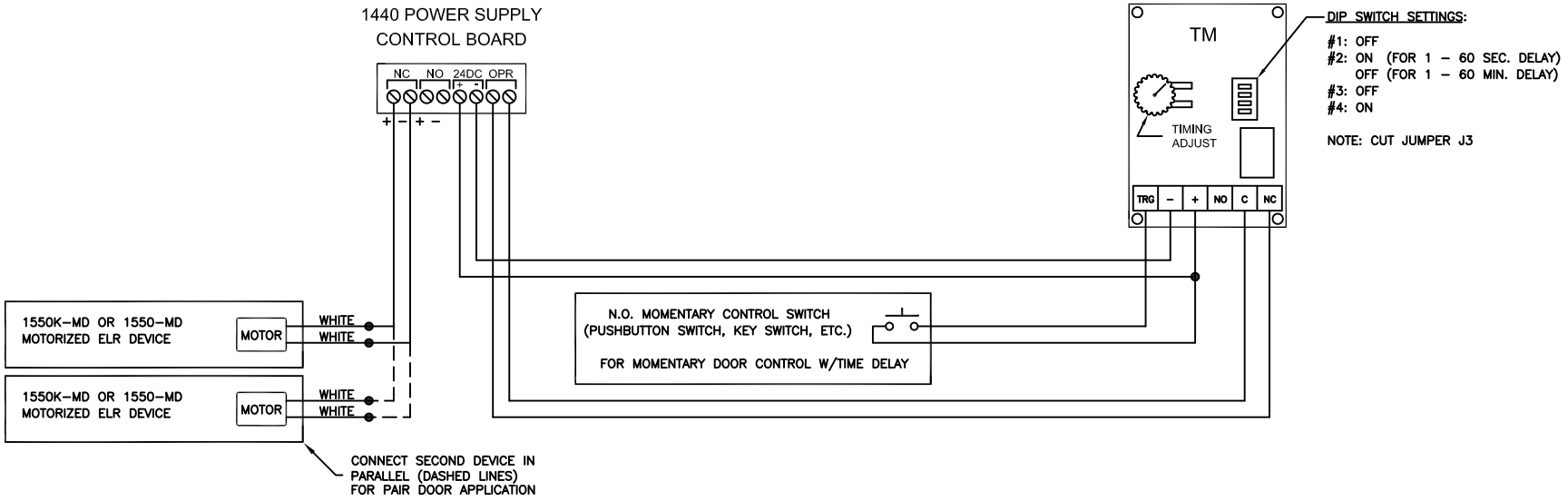

POINT-TO-POINT WIRE DIAGRAM
STANDARD ACCESS CONTROL WITH
FIELD-ADJUSTABLE TIME DELAY USING SERIES
1550K-MD OR 1550-MD MOTOR DRIVE ELR DEVICES

NOTES:

1.) LATCHBOLT IS NORMALLY PROJECTED. A MOMENTARY CLOSURE OF SWITCH CONTACTS WILL RETRACT LATCHBOLT. THE DEVICE'S LATCHBOLT WILL REMAIN RETRACTED FOR THE PERIOD OF TIME AS DETERMINED BY THE SETTING OF THE ADJUSTMENT WHEEL ON THE TM TIMER MODULE AND THE TIME RANGE DIP SWITCH SETTING (SECONDS OR MINUTES). LATCHBOLT PROJECTS AFTER DELAY PERIOD TIMES OUT.

2.) IF THE 1440 POWER SUPPLY IS WIRED TO A FIRE ALARM CONTROL PANEL, AN ALARM CONDITION WILL IMMEDIATELY PROJECT THE LATCHBOLT WHEN CURRENTLY RETRACTED.

ARCHITECTURAL CONTROL SYSTEMS, INCORPORATED ST. LOUIS, MISSOURI 1–800–753–5558	TOLERANCES UNLESS NOTED FRACTION ±1/64 DRILL +.007 −.001 DECIMAL ± .005 REAM +.001 −.000 ANGULAR ±1° PUNCH +.004 −.001	2/10/15	B	CRH
		12/17/14	A	CRH
		10/21/14	RELEASED	CRH
		DATE	REV.	APPRV.
DESCRIPTION ACSI P/N 1440–TD ELR ACCESS CONTROL	DRAWING NO. REF 6038–P2	MATERIAL	SCALE NONE / DRAWN BY CRH / DATE 10/21/14	
			SHEET 1 OF 1 / APPRV. BY CRH / DATE 10/21/14	
			DO NOT SCALE THIS DRAWING	

ACSI MODEL 1406BB-04-AO POWER SUPPLY
INSTALLATION INSTRUCTIONS

Features:

- Up to 1.95 Amps Load Capacity
- Class 2 Rated Outputs
- Overload, Over Voltage, and Short Circuit Protection
- Standby Battery Power with Supervised AC Fail and Low Battery Outputs
- Batteries Supplied with Unit
- Two Output Devices Controlled by One Input or Programmed for Independent Control
- Two Independent Outputs for Automatic Door Operator Interface
- Input for Connection to Fire Alarm
- Auxiliary Output for Powering Stand Alone Devices, Such as Keypads, Motion Detectors, and Status Indicators
- UL Listed and Tested to 294 Standard for Access Control System Units with Security Levels Rated I for Physical Attack, IV for Endurance, I for Line Security, IV for Standby Power



INSTALLATION

Install in accordance with NFPA 70.

The 1406BB enclosure should be securely fastened to the wall using the four 1/4 inch diameter mounting holes located in the back of the box. Position the enclosure so that the battery compartment is located on the left-hand side. The 1406BB must not be installed outdoors.

For the 120VAC power input, terminal block TB1 will accommodate up to 12 AWG wire (solid). Conduit must be used to provide an adequate earth ground to the enclosure.

NOTE: The maximum input current is 1.08A with a 12.6A inrush current.

The 1406BB is designed to be used with all exit devices modified for 1550C electric latch retraction. Use the chart below to determine the correct wire gauge per given length of two-conductor cable that will be run from the 1406BB to each exit device. Do not exceed the maximum length listed with each wire gauge.

WIRE GAUGE	MAXIMUM LENGTH OF TWO-CONDUCTOR CABLE
16 AWG	40 FEET
14 AWG	60 FEET
12 AWG	100 FEET

Up to two devices can be used with the 1406BB. If only one device is to be used, wire to the "DEVICE ONE" location at TB3, terminals 5 and 6.

NOTE: When using the 1550C exit device with red and black leads, be sure to observe polarity when connecting devices 1 and 2 to TB3. (Refer to the wiring diagram located on the lid of the controller.)

STANDARD OPERATION

The 1406BB provides a choice of two methods of electric latch retraction: Single System or Dual System.

SINGLE SYSTEM LATCH RETRACTION

This method allows one input to control two devices sequentially. A momentary switch closure across terminals 1 and 2 of TB3 will retract DEVICE ONE first, followed by DEVICE TWO. Use this method for single door applications or on a pair of doors using a device on one or both leaves. The 1406BB comes from the factory already set up for this method.

DUAL SYSTEM LATCH RETRACTION (OPTIONAL)

This method allows independent control of DEVICE ONE and DEVICE TWO outputs by their own separate input. A momentary switch closure across terminals 1 and 2 of TB3 will retract DEVICE ONE only. A momentary switch closure across terminals 7 and 8 of TB3 will retract DEVICE TWO. No more than one device can be used per output. Use this option for applications requiring two single door systems or two pair door systems using one device on the active leaf of each pair of doors. To change over to the optional dual system latch retraction, move the program jumper PJ1 from between the middle post and the end post marked "S" (Single System) to between the middle post and the end post marked "D" (Dual System).

NOTE: When using the optional method, DEVICE ONE and DEVICE TWO can never be activated at the same time in the event that both input switches are actuated simultaneously. If this should occur, DEVICE ONE will always activate first, followed by DEVICE TWO.

When using a momentary, normally open switch for activating latch retraction, adjust pot R2 (for DEVICE ONE) or pot R4 (for DEVICE TWO) on the p.c. board to the desired latch retract delay time from 2 to 8 seconds. Turn the pot clockwise to increase the delay time.

When using normally open contacts from a keypad or card reader (with built-in time delay) or a maintain switch, turn pot R2 (or R4) fully counterclockwise to the minimum delay time (approx. 2 sec.). A contact closure will activate latch retraction. Upon opening of the timed or maintained contacts, the device will latch within 2 seconds.

1550C ELR SOLENOID ASSEMBLIES - THEORY OF OPERATION

ACSI provides two types of 1550C ELR (electric latch retraction) devices: One type is designed to fit inside exit devices of narrow height and depth (1-1/4"). The leads to these devices are polarized: Red lead = (+); Black Lead = (-). The other type ELR device will fit into exit devices having a minimum height and depth of 1-1/2". The leads to these devices are non-polarized and colored blue.

1550C ELR Device with Polarized Leads:
This device contains a pulse module which delivers a pulse at approx. 24VDC to a high current coil inside the exit device every 6 seconds until the latch is finally pulled back all the way. At this point, a control rod passes over a reflective sensor and signals the module to stop pulsing. There is always an initial pulse that occurs at the moment the system is activated. During the period the system remains activated, output voltage is applied to a low current secondary coil. This coil is responsible for holding the latch in the retracted position until instructed to return to the "fail secure" position. (See note 2 on page 8.) The device contains a fuse to protect the ELR circuit in the event of a reversed polarity wire connection.

1550C ELR Device with Non-polarized Leads:
This device contains a powerful solenoid that performs both pulling and holding functions. An initial high current pulse occurs each time output voltage is applied to the device. After the pulse, the solenoid switches over to a "holding" state by way of frequency modulation which reduces the current to allow the solenoid to run at a cooler temperature. Because of its non-polar design, the device contains no fuse.

OPERATION WITH AUTOMATIC DOOR OPERATOR

The 1406BB is provided with two outputs (one output associated with DEVICE ONE and the other output associated with DEVICE TWO) for controlling separate automatic door operators. Each output consists of normally open relay contacts that are field wired directly to the "DOOR ACTIVATION" input of the automatic door operator. These outputs are activated within a moment after activation of their corresponding devices to allow time for the doors to be fully unlatched before automatic opening begins.

Time delay pots R2 and R4 are factory set at 5 seconds, which are appropriate when using this controller with automatic door operators. When the delay times out, power is removed from the exit device and the signal to the auto door operator input is terminated, thus allowing the operator's "DOOR HOLD OPEN" delay to time out and close the door.

NOTE: When using the single system latch retraction method with automatic door operator interface and both devices are being used, the operator control input must be wired to the 1406BB automatic door operator output for DEVICE TWO (TB3, terminals 9 and 10).

OPERATION WITH FIRE ALARM

The 1406BB can be wired to the fire alarm relay normally closed contacts. When a fire alarm occurs, any door that is currently unlatched, whether by momentary time delay or by maintained switch, will immediately latch secure. During the time that the fire alarm is active, electronic control of the automatic door opening system by wall switch, card reader, keypad, etc., is disabled. The door can only be opened manually.

The 1406BB comes from the factory set up for use without fire alarm interface. If the fire alarm is to be used with this unit, move program jumper PJ2 from between the middle post and the end post marked “FA DIS” (Fire Alarm Disabled), to between the middle post and the end post marked “FA EN” (Fire Alarm Enabled).

NOTE: The current drawn through fire alarm relay contacts will be 120mA @ 24VDC

AUXILIARY POWER SOURCE OUTPUT

A constant, power limited auxiliary output is provided for powering a variety of load devices, such as keypads, motion sensors, annunciator panels, electromagnetic door holders, relays, LEDs, etc.

- Auxiliary Output Range:
    - 26.1V – 27.2V, Nominal (commercial power applied)
    - 15.4V – 22.5V, Standby Battery Power (85% nominal to full charge range)

Due to the significantly lower voltage range resulting from the unit running on standby battery power, it is recommended to use load devices with a rated input of 12 – 24 volts DC (or AC/DC).

CAUTION: CHECK WITH THE MANUFACTURER TO MAKE SURE THE LOAD DEVICE WILL OPERATE PROPERLY AND SAFELY WITHIN THE HIGHER VOLTAGE RANGE WHEN THE 1406BB IS RUNNING ON COMMERCIAL POWER.

STANDBY BATTERY INSTALLATION

Refer to the figure below for connecting the leads from the battery charger p.c. board to the battery terminals. It does not matter which 2-conductor cable with positive/negative leads is connected to either battery.

CAUTION: OBSERVE POLARITY WHEN MAKING CONNECTIONS: RED BATTERY LEADS CONNECT TO BATTERY “+” TERMINALS. BLACK BATTERY LEADS CONNECT TO BATTERY “-“ TERMINALS.

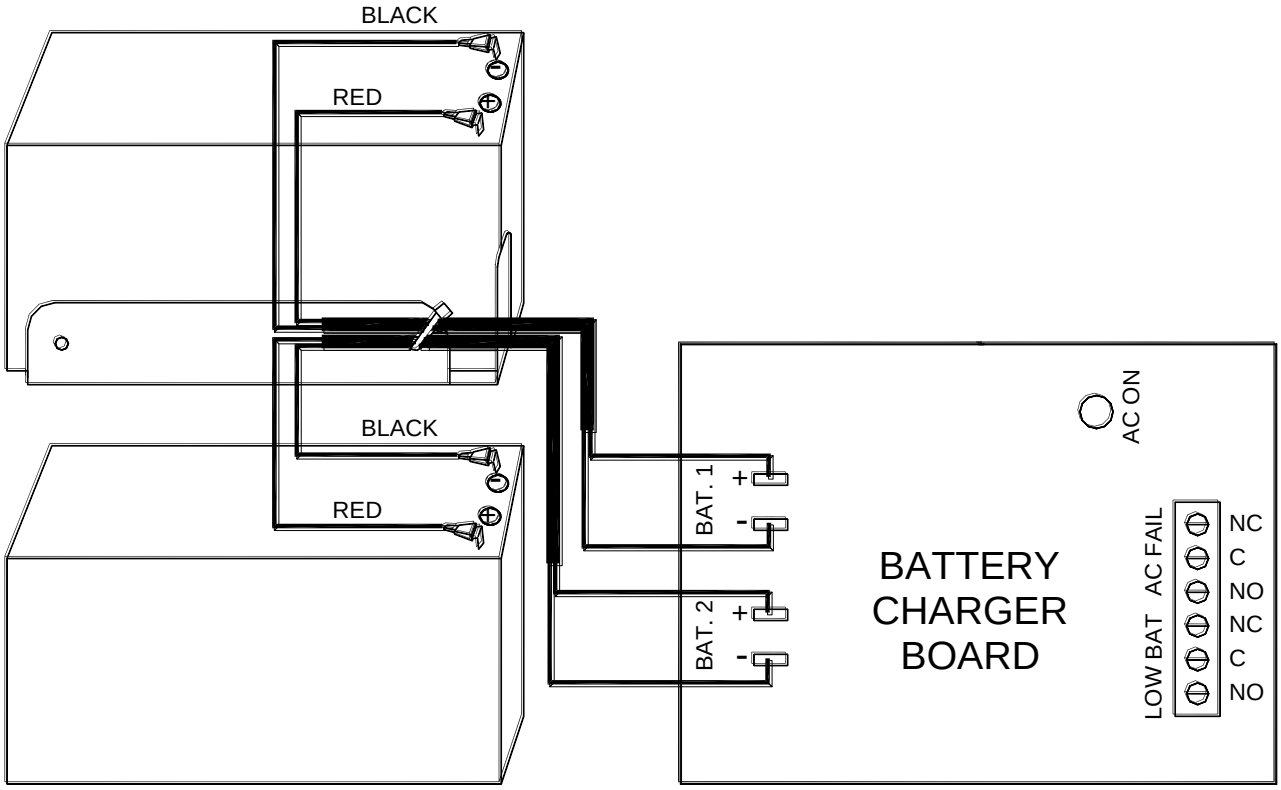

Place one of the two supplied batteries in the lower-left corner of the enclosure. Place the second battery on the shelf above the other battery. Tilt the top of each battery forward to gain access to the terminals. Connect the two pre-assembled 2-conductor cable leads to the battery terminals as shown above.

WARNING! USE ONLY ACSI PART NO. 07-05-21 REPLACEMENT BATTERIES (UL RECOGNIZED). THESE BATTERIES UNDERGO A SAFE FLOAT CHARGING CYCLE WHILE THE 1406BB IS OPERATING ON COMMERCIAL POWER, AND CAN BE EXPECTED TO HAVE AN AVERAGE LIFE SPAN OF 5 YEARS.

The batteries are internally connected in series at the battery charger board for 24 volt operation. An onboard, self-resetting PTC protects the batteries during discharge and acts as a secondary backup to the power limited outputs from Terminal Block TB3 of power supply p.c. board 301-56-01.

NOTE: This power supply is UL verified for 4 hours of standby operation under 100% load. Longer standby times can be expected when applying smaller loads, but were not tested by UL.

SUPERVISED OUTPUTS

Two supervised Form "C" outputs are provided for monitoring commercial/battery power status. Contacts are rated 1 Amp @ 28VDC. The contacts shown as "NC" and "NO" in the figure above are what state they will be in when the relays are de-energized.

AC Fail Supervision

With commercial power applied to the 1406BB, the relay will be energized. A loss of commercial power will de-energize the relay and change state of the contacts to the supervised "AC Fail" position.

Low Battery Supervision

Battery voltage is constantly monitored while batteries are charging and discharging. The supervisory relay remains energized while the battery voltage remains above the cut-off voltage of a full discharge (approx. 21 volts). When the voltage drops to near this value, the relay de-energizes and changes state of the contacts to the supervised "Low Battery" position. It is recommended to consider replacing batteries when a low battery notification occurs.

STATUS INDICATORS

A red indicator, visible from the outside of the 1406BB enclosure, identifies DC power "ON". This means that the unit is operating on either commercial or standby battery power. Commercial power can be verified by observing the green "AC ON" indicator located on the battery charger board inside the 1406BB enclosure. This indicator is turned on when commercial power is applied to the unit.

If the red indicator is turned off, there is no commercial power to the unit, and the batteries are either disconnected from the battery charger board or missing. A lack of battery power will signal a supervised "Low Battery" condition.

TROUBLESHOOTING

Before proceeding through the troubleshooting section, ensure that all device latches are not binding against their corresponding strikes. A bound latch can cause sluggish electric retraction or prevent retraction entirely.

Power Limited Outputs

All outputs to the 1406BB are power limited. Depending on the output, if a short circuit or an over load condition should occur, the output will either shut off entirely or go into a safe current limiting state.

IMPORTANT!: THE MAXIMUM RATED LOAD FOR ALL OUTPUTS COMBINED IS 1.95 AMPS, INCLUDING 200mA (MAX.) FOR THE AUXILIARY OUTPUT.

The outputs to ELR Device One (TB3, terminals 5 & 6) and ELR Device Two (TB3, terminals 11 & 12) will completely shut down to 0 volts when a short circuit across the output occurs or when the load exceeds 5 amps. To reset the output, the short circuit or overload must first be located and removed. Next, momentarily switch off the outputs by opening the contacts across input terminals 1 & 2 or 7 &8, whichever is used. Before switching outputs back on, ensure the load does not exceed the maximum current ratings.

The auxiliary output will go into a current limiting state if the load applied across it exceeds approximately 2.0 amps or in the event of a short circuit. The current is reduced to a safe level when either of these conditions occur. The output voltage will automatically return to its normal level when the short circuit or overload condition is removed and replaced by a load falling under the maximum current rating.

Symptom:

Neither DEVICE ONE nor DEVICE TWO retracts after the control switch is activated.

Possible Causes:

1. The power limited output to Device 1 or Device 2 (or both) may have shut down. When this happens, the field wires that are run to the exit device are probably shorted together against the conduit, door frame or electric hinge.

2. If using the 1550C ELR device with polarized leads, the slow blow 4 amp fuse (Littlefuse #239.004) inside the exit device may have blown. The most likely cause would be reversed polarity of the exit device red and black leads: RED = “+”; BLACK = “-”. (Refer to the wiring diagram for proper connection.) Other possible causes may be shorted wires in the solenoid assembly or a defective pulse module.

3. An open connection in the field wiring between the power supply and control switch used for activating latch retraction.

4. A defective control switch.

5. An open connection in the field wiring between the power supply and exit device.

6. There may be no pulse. To check for pulses, prop the door open and connect a voltmeter across the red and black leads coming from the exit device (red lead is positive), or across the blue leads if using the alternate non-polarized 1550C ELR device . Next, connect a jumper wire across terminals 1 and 2 of TB3 to keep DEVICE ONE in a continuous retracted state. If the voltmeter measures between 30 and 40 VDC at the moment the jumper wire was installed, but the latch did not budge, then no initial pulse was generated. For the polarized 1550C ELR device, check for a series of timed pulses that will occur approximately every six seconds. (Make sure that the control rod is not positioned over the reflective sensor on the pulse module when making this next check.) Wait for about 20 seconds to see if the latch pulls in. If it still does not respond, then it indicates the pulse module is inoperative and the entire solenoid/module assembly must be replaced.

Symptom:

When 120 volts is applied to TB1, the exit devices immediately retract, even though the control switch had not been activated.

Possible Causes:

1. Field wiring between the power supply and control switch are shorted together against the conduit or switch mounting box.

2. A maintain switch is being used and is in the closed position.

3. A defective control switch.

Symptom (for polarized 1550C ELR devices only):

A noticeable buzzing sound at equal intervals is coming from inside the exit device when activated.

Possible Causes:

1. The latch is binding against its corresponding strike and preventing it from fully retracting, due to misalignment between the latch and strike opening.

2. A defective pulse module

For Service or Technical Support, call Architectural Control Systems, Inc.
(800) 753-5558.

NOTE 1: THIS UNIT IS LISTED AS AN EXIT DEVICE CONTROL UNIT TO UL294 REQUIREMENTS.

NOTE 2: THE POWER OUTPUT OF THE CONTROLLER IS OF A FAIL SECURE DESIGN. THE EXIT DEVICE REMAINS LATCHED DURING A COMPLETE POWER FAILURE, BUT ALWAYS ALLOWS FREE MECHANICAL EGRESS. LISTED PANIC HARDWARE MAY BE REQUIRED TO ALLOW EMERGENCY EXIT. CONSULT LOCAL AUTHORITY HAVING JURISDICTION.

ACSI
ARCHITECTURAL
CONTROL SYSTEMS INC.

GENERAL WIRING DIAGRAM FOR 1406BB-04-AO ELECTRIC LATCH RETRACTION CONTROLLER

USE INSTALLATION INSTRUCTIONS II - 1400-10

CLASS 2 OUTPUTS

SECURITY UL LISTED

EQUIPMENT 4M73

ACCESS CONTROL POWER SUPPLY, ACCESS CONTROL ELECTRIC LATCH RETRACTION (ELR) CONTROLLER

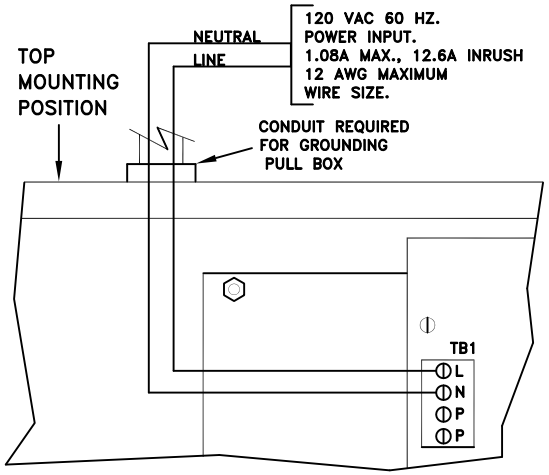

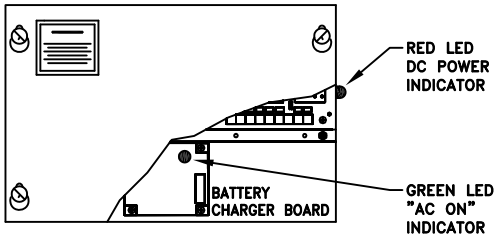

CONTROLLER INTENDED FOR INDOOR USE ONLY.



USED FOR ADJUSTING UNLOCK DELAY TIME WHEN USING MOMENTARY ACTION SWITCHES FOR SW. 1 AND SW. 2. R2 ADJUSTS DEV. 1 (SINGLE DOOR) OR DEV. 1 & DEV. 2 (PAIR DOORS) TIME DELAY. R4 ADJUSTS DEV. 2 (SINGLE DOOR) TIME DELAY. 8 SEC. MAX. DELAY TIME.

MFG. DATE:

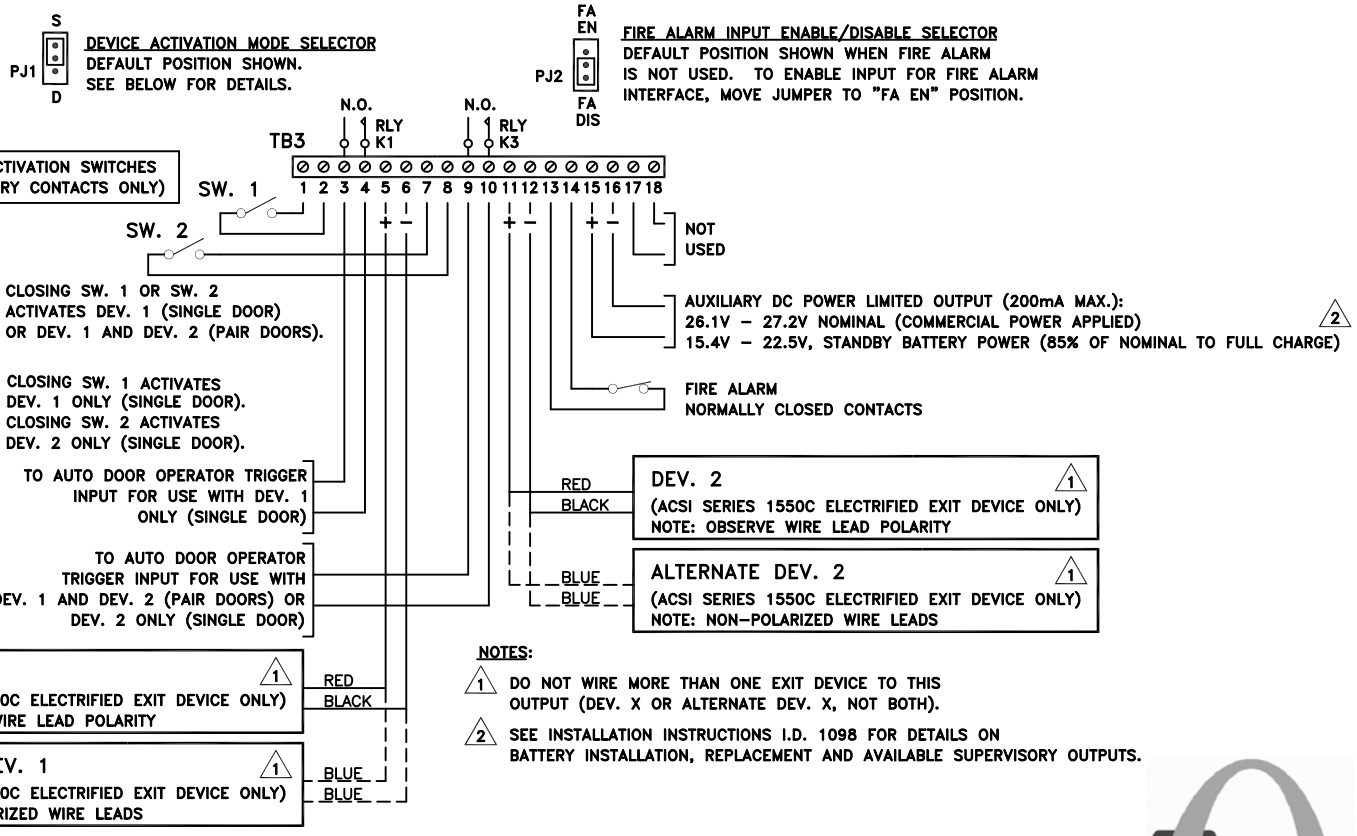

NOTES:

1. DO NOT WIRE MORE THAN ONE EXIT DEVICE TO THIS OUTPUT (DEV. X OR ALTERNATE DEV. X, NOT BOTH).
2. SEE INSTALLATION INSTRUCTIONS I.D. 1098 FOR DETAILS ON BATTERY INSTALLATION, REPLACEMENT AND AVAILABLE SUPERVISORY OUTPUTS.

FOR TROUBLE SHOOTING ASSISTANCE, CONTACT ACSI TECHNICAL SUPPORT:
1-800-753-5558

REV. 06/15

ACSI ARCHITECTURAL CONTROL SYSTEMS INC.

ACSI MODEL 1426BB-04-AO POWER SUPPLY
INSTALLATION INSTRUCTIONS

Features:

- Up to 1.95 Amps Load Capacity
- Class 2 Rated Outputs
- Overload, Over Voltage, and Short Circuit Protection
- Standby Battery Power with Supervised AC Fail and Low Battery Outputs
- Batteries Supplied with Unit
- Up to Two Output Devices Controlled by One Input
- Day/Night Control with Output for Automatic Door Operator Interface
- Input for Connection to Fire Alarm
- Auxiliary Output for Powering Stand Alone Devices, Such as Keypads, Motion Detectors, and Status Indicators
- UL Listed and Tested to 294 Standard for Access Control System Units with Security Levels Rated I for Physical Attack, IV for Endurance, I for Line Security, IV for Standby Power

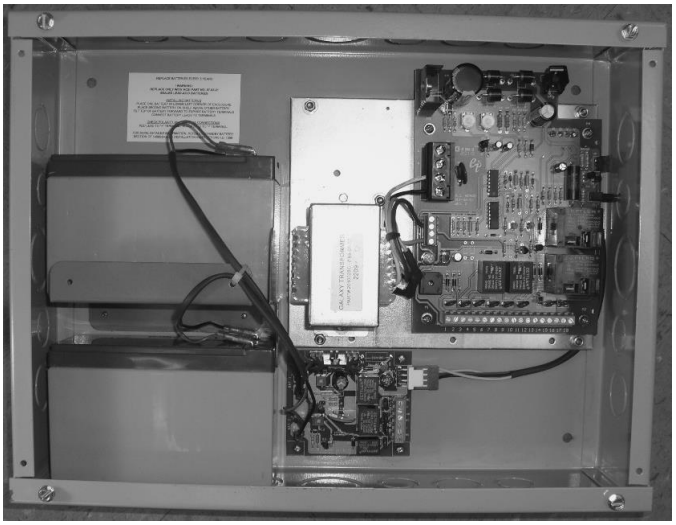

INSTALLATION

Install in accordance with NFPA 70.

The 1426BB enclosure should be securely fastened to the wall using the four 1/4 inch diameter mounting holes located in the back of the box. Position the enclosure so that the battery compartment is located on the left-hand side. The 1426BB must not be installed outdoors.

For the 120VAC power input, terminal block TB1 will accommodate up to 12 AWG wire (solid). Conduit must be used to provide an adequate earth ground to the enclosure.

NOTE: The maximum input current is 1.08A with a 12.6A inrush current.

The 1426BB is designed to be used with all exit devices modified for 1550C electric latch retraction. Use the chart below to determine the correct wire gauge per given length of two-conductor cable that will be run from the 1426BB to each exit device. Do not exceed the maximum length listed with each wire gauge.

WIRE GAUGE	MAXIMUM LENGTH OF TWO-CONDUCTOR CABLE
16 AWG	40 FEET
14 AWG	60 FEET
12 AWG	100 FEET

Up to two devices can be used with the 1426BB. If only one device is to be used, wire to the "DEVICE ONE" location at TB3, terminals 5 and 6.

NOTE: When using the 1550C exit device with red and black leads, be sure to observe polarity when connecting devices 1 and 2 to TB3. (Refer to the wiring diagram located on the lid of the controller.)

STANDARD OPERATION

The 1426BB is provided with two inputs: one used for momentarily retracting latches sequentially, followed by a signal to activate the automatic door operator; the other used with a maintain switch for sequentially retracting latches only. This system will work for single door applications or on a pair of doors using a device on one or both leaves.

Connect a momentary, normally open switch across terminals 1 and 2 of terminal block TB3. Closing this switch momentarily will retract the latch of DEVICE ONE and DEVICE TWO sequentially and follow with a dry contact closure signal to the automatic door operator. Pot R2 is used to control the length of time that the latch(es) remain retracted and the signal to the automatic door operator remains active. Factory set to five seconds, pot R2 (located at the top of the p.c. board) can be field adjusted to the desired delay time from 2 to 8 seconds. Turn the pot clockwise to increase the delay time.

When using normally open contacts from a keypad or card reader with built-in time delay, turn pot R2 fully counterclockwise to the minimum delay time (approx. 2 sec.). A contact closure will activate latch retraction and activate the automatic door operator. The device(s) will latch and the signal to the automatic door operator will cancel within 2 seconds after the keypad or card reader delay times out.

NOTE: Pot R4 is not used; do not adjust.

Connect a maintain switch across terminals 7 and 8 of terminal block TB3. Closing this switch will sequentially retract the latch of DEVICE ONE and DEVICE TWO, but will not activate the automatic door operator. Upon opening the switch contacts, both devices will immediately latch (no delay before latching).

Connect DEVICE ONE to TB3, terminals 5 and 6; positive red lead connects to terminal 5. POLARITY MUST BE OBSERVED WHEN USING THE ELR DEVICE WITH RED & BLACK LEADS. Connect DEVICE TWO, if used, to TB3, terminals 11 and 12; positive red lead connects to terminal 11. (When connecting the alternate1550C exit device with blue leads to terminals 5 and 6 or 11 and 12, polarity is not observed.) The automatic door operator output, TB3, terminals 9 and 10, consists of normally open relay contacts that are field wired directly to the "DOOR ACTIVATION" input of the automatic door operator.

NOTE: P.C. board program jumper PJ1 must always be left in place between the middle post and the end post marked "S".

1550C ELR SOLENOID ASSEMBLIES - THEORY OF OPERATION

ACSI provides two types of 1550C ELR (electric latch retraction) devices: One type is designed to fit inside exit devices of narrow height and depth (1-1/4"). The leads to these devices are polarized: Red lead = (+); Black Lead = (-). The other type ELR device will fit into exit devices having a minimum height and depth of 1-1/2". The leads to these devices are non-polarized and colored blue.

1550C ELR Device with Polarized Leads:
This device contains a pulse module which delivers a pulse at 24VDC to a high current coil inside the exit device every 6 seconds until the latch is finally pulled back all the way. At this point, a control rod passes over a reflective sensor and signals the module to stop pulsing. There is always an initial pulse that occurs at the moment the system is activated. During the period the system remains activated, output voltage is applied to a low current secondary coil. This coil is responsible for holding the latch in the retracted position until instructed to return to the “fail secure” position. (See note 2 on page 8.) The device contains a fuse to protect the ELR circuit in the event of a reversed polarity wire connection.

1550C ELR Device with Non-polarized Leads:
This device contains a powerful solenoid that performs both pulling and holding functions. An initial high current pulse occurs each time output voltage is applied to the device. After the pulse, the solenoid switches over to a "holding" state by way of frequency modulation which reduces the current to allow the solenoid to run at a cooler temperature. Because of its non-polar design, the device contains no fuse.

OPERATION WITH FIRE ALARM

The 1426BB can be wired to the fire alarm relay normally closed contacts. When a fire alarm occurs, any door that is currently unlatched, whether by momentary time delay or by maintained switch, will immediately latch secure. During the time that the fire alarm is active, electronic control of the automatic door opening system by wall switch, card reader, keypad, etc., is disabled. The door can only be opened manually.

The 1426BB comes from the factory set up for use without fire alarm interface. If the fire alarm is to be used with this unit, move the program jumper PJ2 from between the middle post and the end post marked “FA DIS” (Fire Alarm Disabled), to between the middle post and the end post marked “FA EN” (Fire Alarm Enabled).

NOTE: The current drawn through fire alarm relay contacts will be 120mA @ 24VDC.

AUXILIARY POWER SOURCE OUTPUT

A constant, power limited auxiliary output is provided for powering a variety of load devices, such as keypads, motion sensors, annunciator panels, electromagnetic door holders, relays, LEDs, etc.

- Auxiliary Output Range:
  - 26.1V – 27.2V, Nominal (commercial power applied)
  - 15.4V – 22.5V, Standby Battery Power (85% nominal to full charge range)

Due to the significantly lower voltage range resulting from the unit running on standby battery power, it is recommended to use load devices with a rated input of 12 – 24 volts DC (or AC/DC).

CAUTION: CHECK WITH THE MANUFACTURER TO MAKE SURE THE LOAD DEVICE WILL OPERATE PROPERLY AND SAFELY WITHIN THE HIGHER VOLTAGE RANGE WHEN THE 1426BB IS RUNNING ON COMMERCIAL POWER.

STANDBY BATTERY INSTALLATION

Refer to the figure below for connecting the leads from the battery charger p.c. board to the battery terminals. It does not matter which 2-conductor cable with positive/negative leads is connected to either battery.

CAUTION: OBSERVE POLARITY WHEN MAKING CONNECTIONS: RED BATTERY LEADS CONNECT TO BATTERY "+" TERMINALS. BLACK BATTERY LEADS CONNECT TO BATTERY "-" TERMINALS.

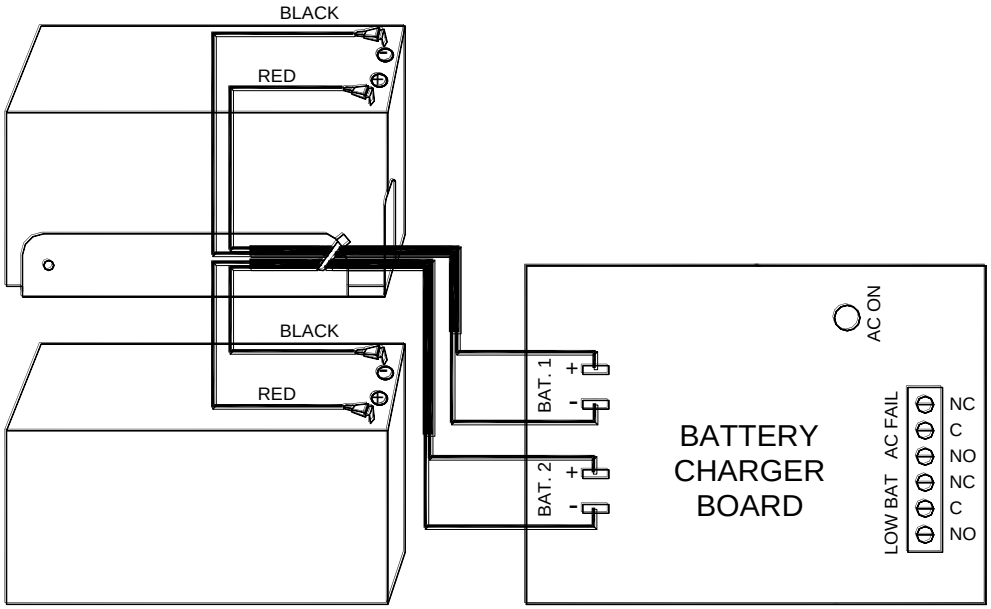

Place one of the two supplied batteries in the lower-left corner of the enclosure. Place the second battery on the shelf above the other battery. Tilt the top of each battery forward to gain access to the terminals. Connect the two pre-assembled 2-conductor cable leads to the battery terminals as shown above.

WARNING! USE ONLY ACSI PART NO. 07-05-21 REPLACEMENT BATTERIES (UL RECOGNIZED). THESE BATTERIES UNDERGO A SAFE FLOAT CHARGING CYCLE WHILE THE 1426BB IS OPERATING ON COMMERCIAL POWER, AND CAN BE EXPECTED TO HAVE AN AVERAGE LIFE SPAN OF 5 YEARS.

The batteries are internally connected in series at the battery charger board for 24 volt operation. An onboard, self-resetting PTC protects the batteries during discharge and acts as a secondary backup to the power limited outputs from Terminal Block TB3 of power supply p.c. board 301-56-01.

NOTE: This power supply is UL verified for 4 hours of standby operation under 100% load. Longer standby times can be expected when applying smaller loads, but were not tested by UL.

SUPERVISED OUTPUTS

Two supervised Form "C" outputs are provided for monitoring commercial/battery power status. Contacts are rated 1 Amp @ 28VDC. The contacts shown as "NC" and "NO" in the figure above are what state they will be in when the relays are de-energized.

AC Fail Supervision

With commercial power applied to the 1426BB, the relay will be energized. A loss of commercial power will de-energize the relay and change state of the contacts to the supervised "AC Fail" position.

Low Battery Supervision

Battery voltage is constantly monitored while batteries are charging and discharging. The supervisory relay remains energized while the battery voltage remains above the cut-off voltage of a full discharge (approx. 21 volts). When the voltage drops to near this value, the relay de-energizes and changes state of the contacts to the supervised "Low Battery" position. It is recommended to consider replacing batteries when a low battery notification occurs.

STATUS INDICATORS

A red indicator, visible from the outside of the 1426BB enclosure, identifies DC power "ON". This means that the unit is operating on either commercial or standby battery power. Commercial power can be verified by observing the green "AC ON" indicator located on the battery charger board inside the 1426BB enclosure. This indicator is turned on when commercial power is applied to the unit.

If the red indicator is turned off, there is no commercial power to the unit, and the batteries are either disconnected from the battery charger board or missing. A lack of battery power will signal a supervised “Low Battery” condition.

TYPICAL 1426 APPLICATION

A pair of doors is to be controlled by a computerized time system where it is to be unlatched during business hours from 8:00 AM to 5:00 PM. During this time, a handicapped wall switch located on the exterior and interior sides of the door can be used to activate the automatic door operator.

After business hours, the computer locks the pair of doors and disables use of the exterior handicapped wall switch. The inside wall switch remains enabled after business hours and, when actuated, will momentarily retract the latches and activate the automatic door operator. To gain entry, a card reader located on the exterior side of the door momentarily retracts the latches and simultaneously enables the outside wall switch to be activated by the handicapped.

Refer to the wiring diagrams section for selecting an application that suits the project requirements.

TROUBLESHOOTING

Before proceeding through the troubleshooting section, ensure that all device latches are not binding against their corresponding strikes. A bound latch can cause sluggish electric retraction or prevent retraction entirely.

Power Limited Outputs

All outputs to the 1426BB are power limited. Depending on the output, if a short circuit or an over load condition should occur, the output will either shut off entirely or go into a safe current limiting state.

IMPORTANT!: THE MAXIMUM RATED LOAD FOR ALL OUTPUTS COMBINED IS 1.95 AMPS, INCLUDING 200mA (MAX.) FOR THE AUXILIARY OUTPUT.

The outputs to ELR Device One (TB3, terminals 5 & 6) and ELR Device Two (TB3, terminals 11 & 12) will completely shut down to 0 volts when a short circuit across the output occurs or when the load exceeds 5 amps. To reset the output, the short circuit or overload must first be located and removed. Next, momentarily switch off the outputs by opening the contacts across input terminals 1 & 2 or 7 &8, whichever is used. Before switching outputs back on, ensure the load does not exceed the maximum current ratings.

The auxiliary output will go into a current limiting state if the load applied across it exceeds approximately 2.0 amps or in the event of a short circuit. The current is reduced to a safe level

when either of these conditions occur. The output voltage will automatically return to its normal level when the short circuit or overload condition is removed and replaced by a load falling under the maximum current rating.

Symptom:

Neither DEVICE ONE nor DEVICE TWO retracts after the control switch is activated

Possible Causes:

1. The power limited output to Device 1 or Device 2 (or both) may have shut down. When this happens, the field wires that are run to the exit device are probably shorted together against the conduit, door frame or electric hinge.

2. If using the 1550C ELR device with polarized leads, the slow blow 4 amp fuse (Littelfuse #239.004) inside the exit device has blown. The most likely cause would be reversed polarity of the exit device red and black leads: RED = “+”; BLACK = “-”. (Refer to the wiring diagram for proper connection.) Other possible causes may be shorted wires in the solenoid assembly or a defective pulse module.

3. An open connection in the field wiring between the power supply and control switch used for activating latch retraction.

4. A defective control switch.

5. An open connection in the field wiring between the power supply and exit device.

6. There may be no pulse. To check for pulses, prop the door open and connect a voltmeter across the red and black leads coming from the exit device (red lead is positive), or across the blue leads if using the alternate non-polarized 1550C ELR device. Next, connect a jumper wire across terminals 1 and 2 of TB3 to keep DEVICE ONE in a continuous retracted state. If the voltmeter measures between 30 and 40 VDC at the moment the jumper wire was installed, but the latch did not budge, then no initial pulse was generated. For the polarized 1550C ELR device, check for a series of timed pulses that will occur approximately every six seconds. (Make sure that the control rod is not positioned over the reflective sensor on the pulse module when making this next check.) Wait for about 20 seconds to see if the latch pulls in. If it still does not respond, then it indicates the pulse module is inoperative and the entire solenoid/module assembly must be replaced.

Symptom:

When 120 volts is applied to TB1, the exit devices will momentarily retract; but if they remain retracted for longer than 20 seconds, then it signals a problem.

Possible Causes:

1. Field wiring between the power supply and control switch are shorted together against the conduit or switch mounting box.

2. A maintain switch is being used and is in the closed position.

3. A defective control switch.

Symptom (for polarized 1550C ELR devices only):

A noticeable buzzing sound at equal intervals is coming from inside the exit device while in its fully retracted state.

Possible Causes:

1. The latch is binding against its corresponding strike and preventing it from fully retracting, due to misalignment between the latch and strike opening.

2. A defective pulse module

For Service or Technical Support, call Architectural Control Systems, Inc.
(800) 753-5558.

NOTE 1: THIS UNIT IS LISTED AS AN EXIT DEVICE CONTROL UNIT TO UL294 REQUIREMENTS.

NOTE 2: THE POWER OUTPUT OF THE CONTROLLER IS OF A FAIL SECURE DESIGN. THE EXIT DEVICE REMAINS LATCHED DURING A COMPLETE POWER FAILURE, BUT ALWAYS ALLOWS FREE MECHANICAL EGRESS. LISTED PANIC HARDWARE MAY BE REQUIRED TO ALLOW EMERGENCY EXIT. CONSULT LOCAL AUTHORITY HAVING JURISDICTION.

ACSI
ARCHITECTURAL
CONTROL SYSTEMS INC.

1426BB-04-AO WIRING DIAGRAMS FOR VARIOUS SINGLE DOOR AND PAIR DOOR APPLICATIONS

Note: The application wiring diagrams apply to both the 1426-04-AO and 1426BB-04-AO power supplies

Riser diagrams for typical single door and pair door system configurations have been included.

All wiring diagrams are divided into two main categories for selection of day/night mode control: applications using ACSI maintain action key switch w/status indicators, p/n 1310-2; and applications involving interface with a remote output, such as a time clock or computer.

For each door type and method of selection category there are four variations of point-to-point wiring diagrams. All variations involve different ways in which the exterior card reader, exterior wall switch and interior wall switch can be used in conjunction with the electrified exit device(s) and automatic door operator when selected for night mode of operation. Below is a brief description describing each variation.

Variation 1: Pressing inside wall switch will cause latch(es) to retract and activate automatic opening of door. Outside wall switch is disabled. Activating card reader will enable outside wall switch to retract latch(es) and activate automatic opening of door.

Variation 2: Pressing inside wall switch will cause latch(es) to retract and activate automatic opening of door. Outside wall switch is disabled. Activating card reader will retract latch(es) and enable outside wall switch to activate auto operator when pressed.

Variation 3: Pressing inside wall switch will cause latch(es) to retract and activate automatic opening of door. Outside wall switch is disabled. Activating card reader will retract latch(es) and activate auto operator.

Variation 4: Both inside and outside wall switches are disabled. Activating card reader will retract latch(es) only. Door must be pulled open manually for entry; pushed open manually to exit.

A more detailed description of system operation for each variation can be found on the point-to-point wiring diagrams to follow.

Note: All point-to-point wiring diagrams on the following pages show the 1550C ELR Device with polarized red and black leads connected to TB3, terminals 5 and 6 and/or 11 and 12. When using the alternate 1550C ELR Device with non-polarized leads, connect the blue wires to TB3, terminals 5 and 6 and/or 11 and 12.

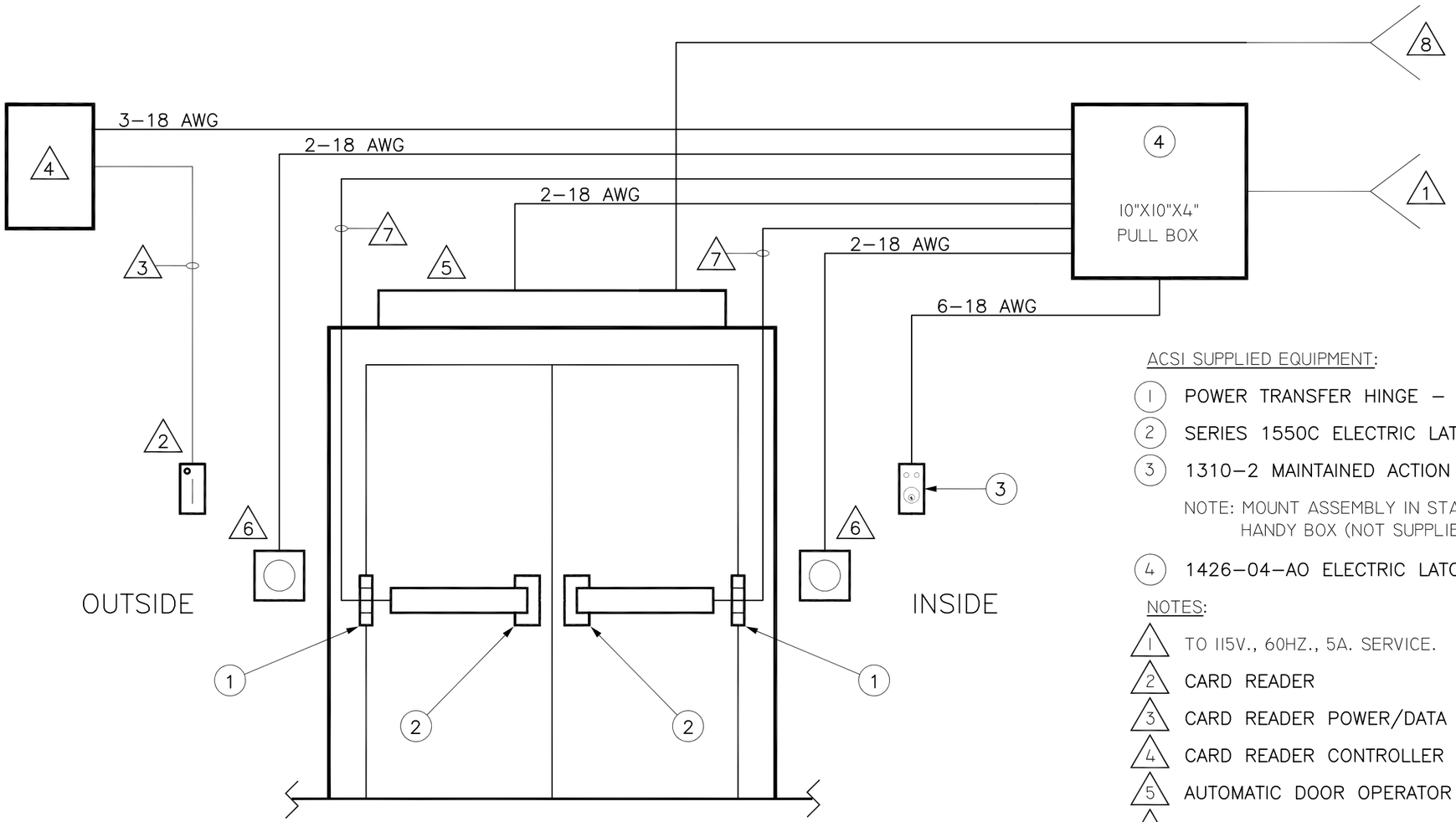

ACSI SUPPLIED EQUIPMENT:

(1) POWER TRANSFER HINGE – 8 WIRE

(2) SERIES 1550C ELECTRIC LATCH RETRACTION MODIFICATION – 24VDC

(3) 1310–2 MAINTAINED ACTION KEY SWITCH W/INDICATORS

NOTE: MOUNT ASSEMBLY IN STANDARD 2-1/8" DEEP SINGLE GANG HANDY BOX (NOT SUPPLIED BY ACSI).

(4) 1426–04–AO ELECTRIC LATCH RETRACTION CONTROLLER

NOTES:

1. TO 115V., 60HZ., 5A. SERVICE.
2. CARD READER
3. CARD READER POWER/DATA CABLE
4. CARD READER CONTROLLER CONTAINING RELAY N.O. CONTROL OUTPUT
5. AUTOMATIC DOOR OPERATOR
6. WALL SWITCH
7.

WIRE GAUGE	MAX. LENGTH 2-COND. CABLE
16 AWG	40 FEET
14 AWG	60 FEET
12 AWG	100 FEET

8. TO 115V., 60HZ., 20A. SERVICE.

FIG. 1: TYPICAL RISER FOR PAIR DOOR APPLICATION USING ACSI KEY SWITCH FOR SELECTING DAY/NIGHT MODE CONTROL

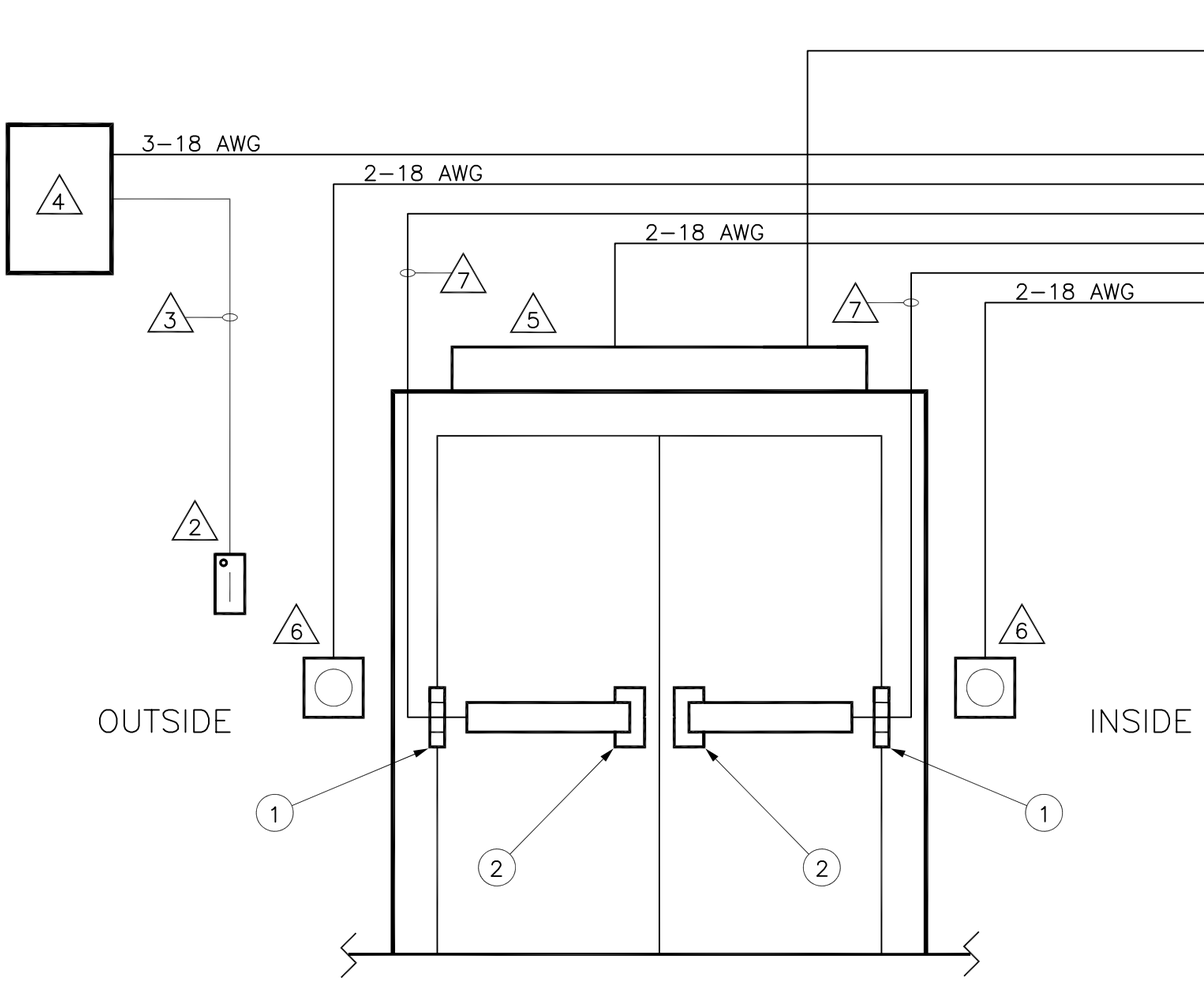

ACSI SUPPLIED EQUIPMENT:

1. POWER TRANSFER HINGE – 8 WIRE
2. SERIES 1550C ELECTRIC LATCH RETRACTION MODIFICATION – 24VDC
3. 1426–04–AO ELECTRIC LATCH RETRACTION CONTROLLER

NOTES:

1. TO 115V., 60HZ., 5A. SERVICE.
2. CARD READER
3. CARD READER POWER/DATA CABLE
4. CARD READER CONTROLLER CONTAINING RELAY N.O. CONTROL OUTPUT
5. AUTOMATIC DOOR OPERATOR
6. WALL SWITCH
7. WIRE GAUGE — MAX. LENGTH 2-COND. CABLE

16 AWG	40 FEET
14 AWG	60 FEET
12 AWG	100 FEET

8. TO 115V., 60HZ., 20A. SERVICE.
9. TO DRY CONTACT, SWITCHED OUTPUT OF TIME CLOCK, COMPUTER, ETC.

FIG. 2: TYPICAL RISER FOR PAIR DOOR APPLICATION USING REMOTE OUTPUT (TIME CLOCK, COMPUTER, ETC.) FOR SELECTING DAY/NIGHT MODE CONTROL

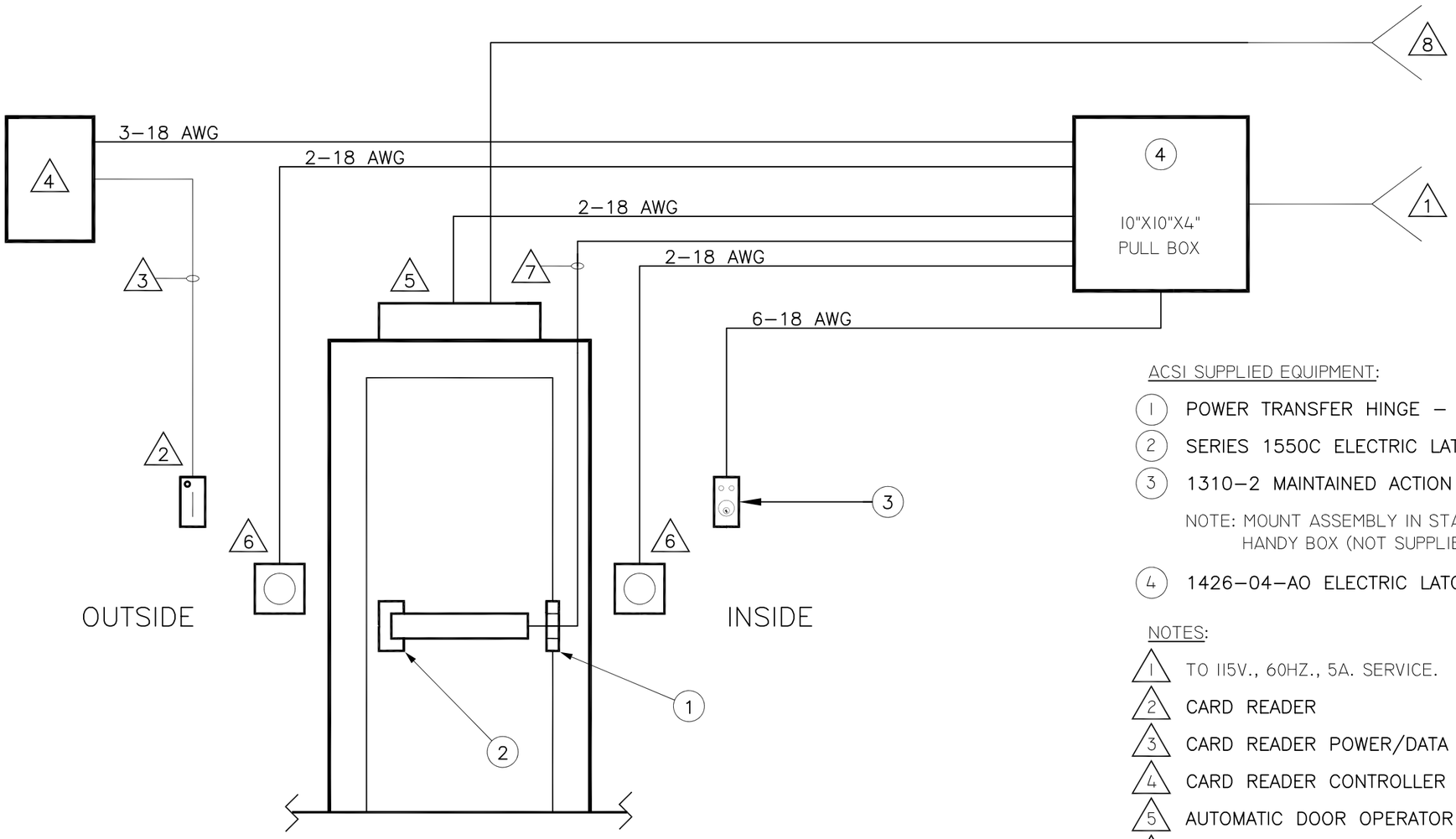

ACSI SUPPLIED EQUIPMENT:

1. POWER TRANSFER HINGE – 8 WIRE
2. SERIES 1550C ELECTRIC LATCH RETRACTION MODIFICATION – 24VDC
3. 1310–2 MAINTAINED ACTION KEY SWITCH W/INDICATORS

   NOTE: MOUNT ASSEMBLY IN STANDARD 2-1/8" DEEP SINGLE GANG HANDY BOX (NOT SUPPLIED BY ACSI).
4. 1426–04–AO ELECTRIC LATCH RETRACTION CONTROLLER

NOTES:

1. TO 115V., 60HZ., 5A. SERVICE.
2. CARD READER
3. CARD READER POWER/DATA CABLE
4. CARD READER CONTROLLER CONTAINING RELAY N.O. CONTROL OUTPUT
5. AUTOMATIC DOOR OPERATOR
6. WALL SWITCH
7.

WIRE GAUGE	MAX. LENGTH 2-COND. CABLE
16 AWG	40 FEET
14 AWG	60 FEET
12 AWG	100 FEET

8. TO 115V., 60HZ., 20A. SERVICE.

FIG. 3: TYPICAL RISER FOR SINGLE DOOR APPLICATION USING ACSI KEY SWITCH FOR SELECTING DAY/NIGHT MODE CONTROL

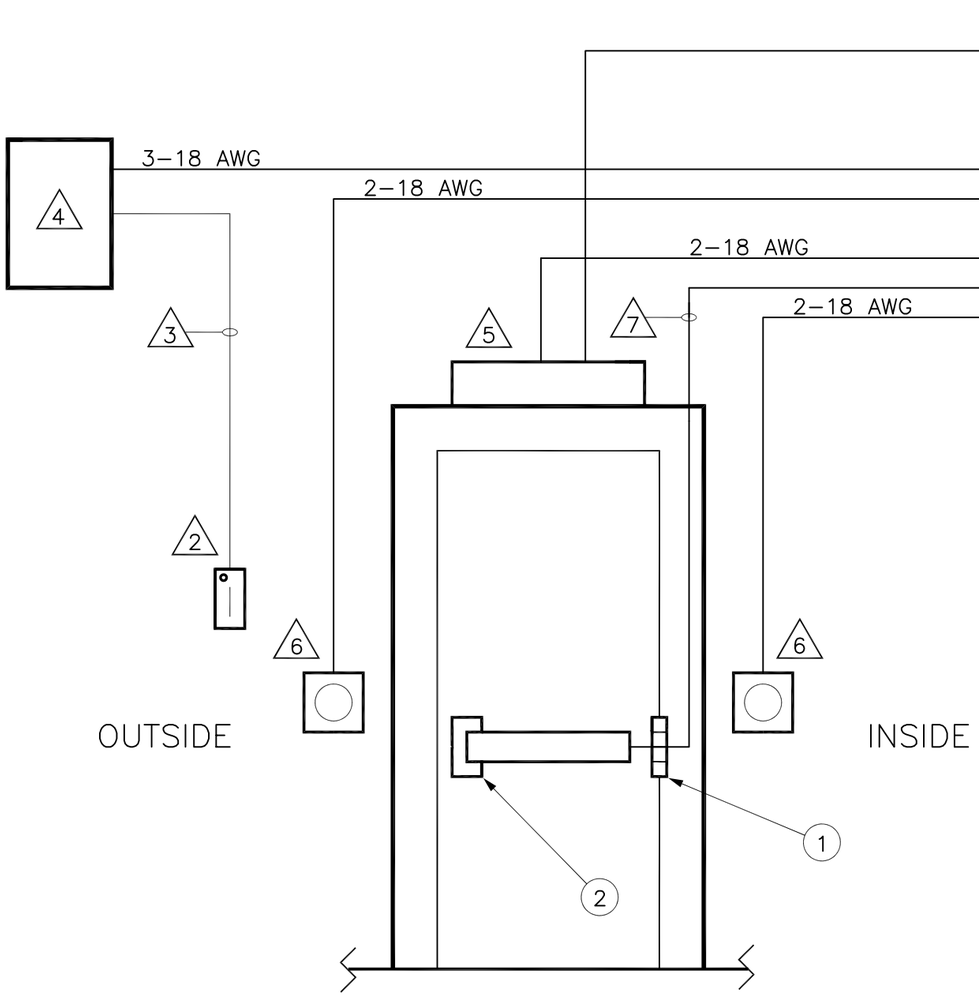

ACSI SUPPLIED EQUIPMENT:

1. POWER TRANSFER HINGE – 8 WIRE
2. SERIES 1550C ELECTRIC LATCH RETRACTION MODIFICATION – 24VDC
3. 1426–04–AO ELECTRIC LATCH RETRACTION CONTROLLER

NOTES:

1. TO 115V., 60HZ., 5A. SERVICE.
2. CARD READER
3. CARD READER POWER/DATA CABLE
4. CARD READER CONTROLLER CONTAINING RELAY N.O. CONTROL OUTPUT
5. AUTOMATIC DOOR OPERATOR
6. WALL SWITCH
7. WIRE GAUGE — MAX. LENGTH 2-COND. CABLE

16 AWG	40 FEET
14 AWG	60 FEET
12 AWG	100 FEET

8. TO 115V., 60HZ., 20A. SERVICE.
9. TO DRY CONTACT, SWITCHED OUTPUT OF TIME CLOCK, COMPUTER, ETC.

FIG. 4: TYPICAL RISER FOR SINGLE DOOR APPLICATION USING REMOTE OUTPUT (TIME CLOCK, COMPUTER, ETC.) FOR SELECTING DAY/NIGHT MODE CONTROL

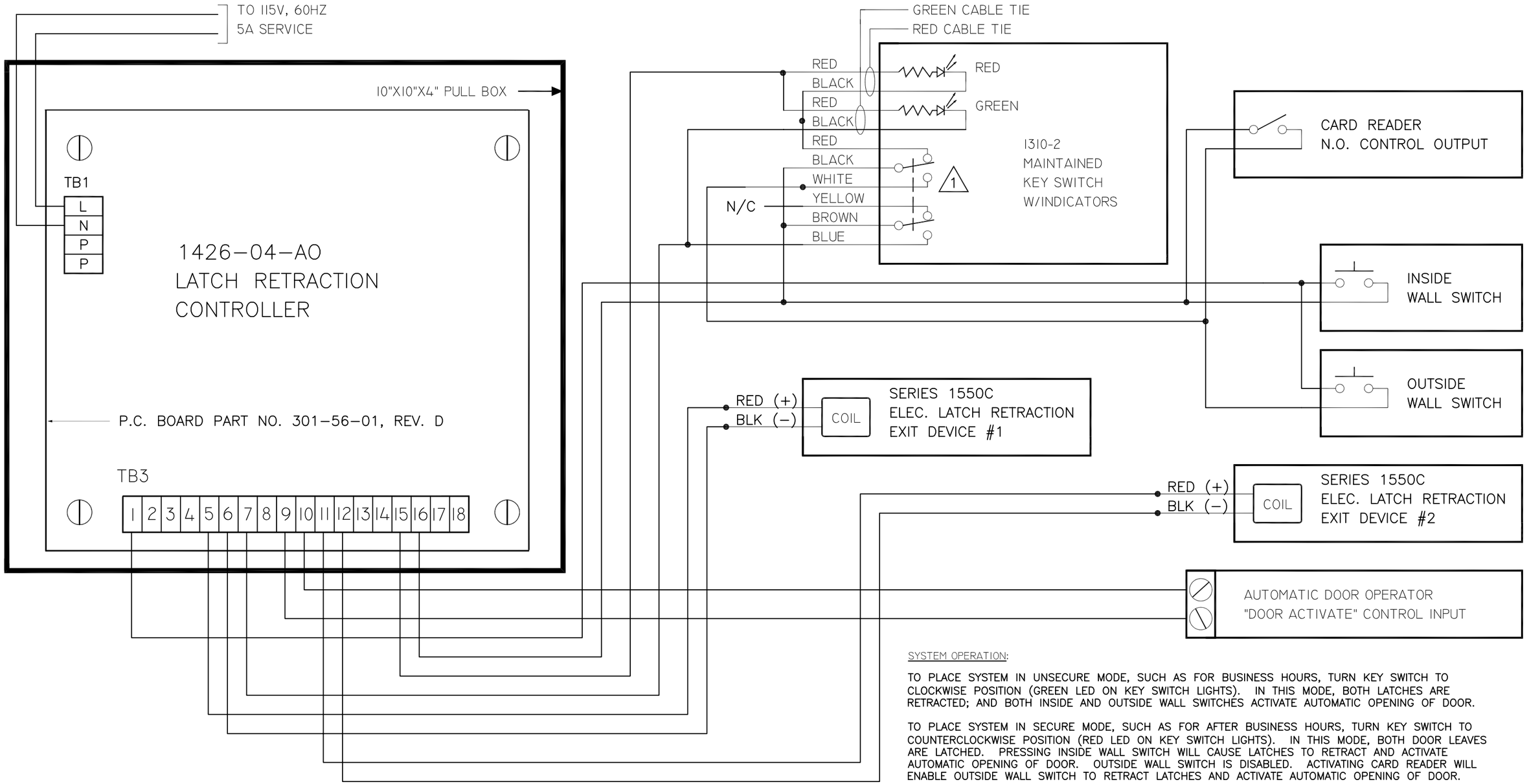

SYSTEM OPERATION:

TO PLACE SYSTEM IN UNSECURE MODE, SUCH AS FOR BUSINESS HOURS, TURN KEY SWITCH TO CLOCKWISE POSITION (GREEN LED ON KEY SWITCH LIGHTS). IN THIS MODE, BOTH LATCHES ARE RETRACTED; AND BOTH INSIDE AND OUTSIDE WALL SWITCHES ACTIVATE AUTOMATIC OPENING OF DOOR.

TO PLACE SYSTEM IN SECURE MODE, SUCH AS FOR AFTER BUSINESS HOURS, TURN KEY SWITCH TO COUNTERCLOCKWISE POSITION (RED LED ON KEY SWITCH LIGHTS). IN THIS MODE, BOTH DOOR LEAVES ARE LATCHED. PRESSING INSIDE WALL SWITCH WILL CAUSE LATCHES TO RETRACT AND ACTIVATE AUTOMATIC OPENING OF DOOR. OUTSIDE WALL SWITCH IS DISABLED. ACTIVATING CARD READER WILL ENABLE OUTSIDE WALL SWITCH TO RETRACT LATCHES AND ACTIVATE AUTOMATIC OPENING OF DOOR.

FIG. 5: POINT-TO-POINT FOR VARIATION 1 OF PAIR DOOR APPLICATION USING ACSI KEY SWITCH FOR SELECTING DAY/NIGHT MODE CONTROL

NOTES:

1. KEY SWITCH CONTACTS SHOWN IN "SYSTEM SECURE" POSITION.
2. —•— DENOTES A FIELD WIRE CONNECTION.

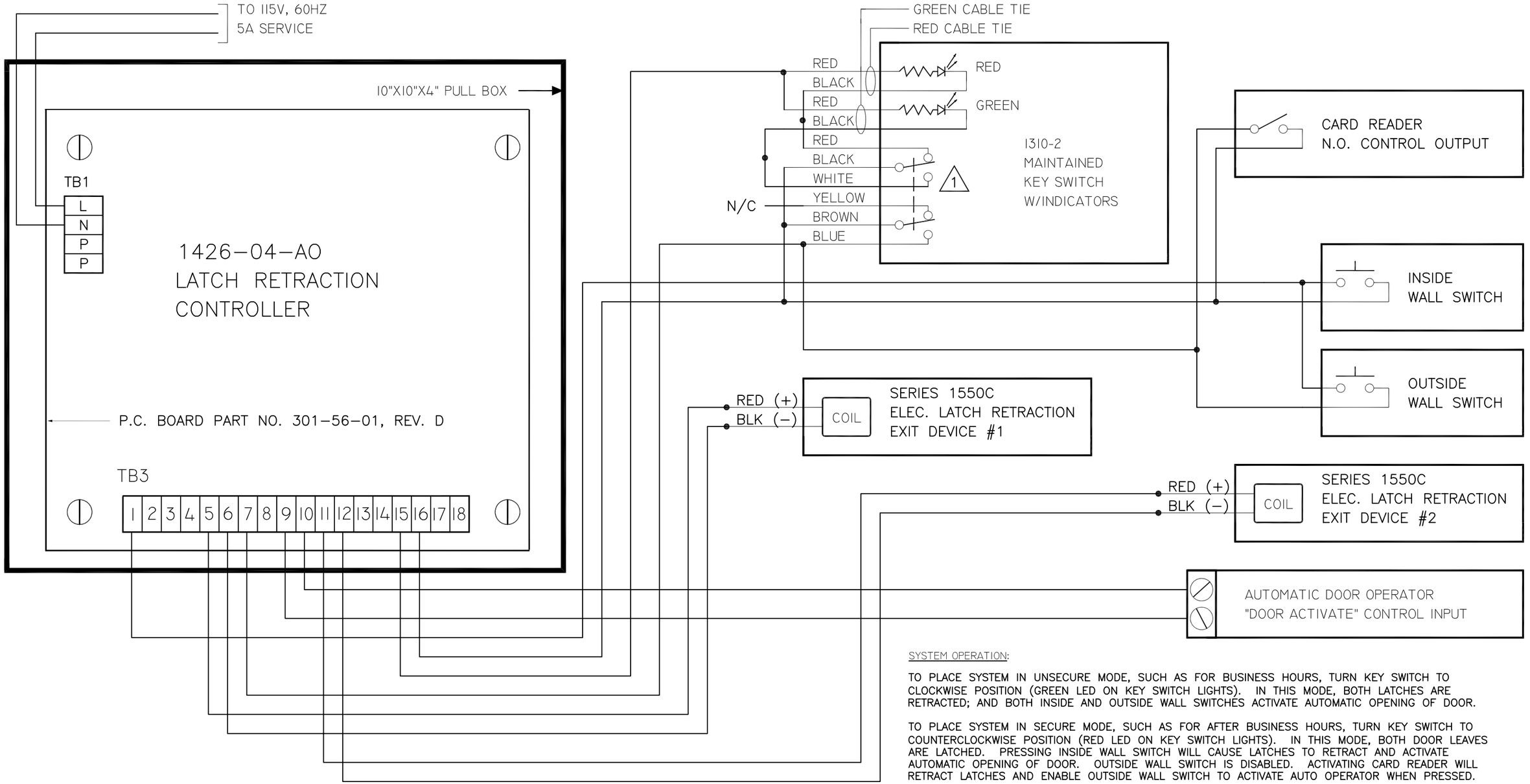

SYSTEM OPERATION:

TO PLACE SYSTEM IN UNSECURE MODE, SUCH AS FOR BUSINESS HOURS, TURN KEY SWITCH TO CLOCKWISE POSITION (GREEN LED ON KEY SWITCH LIGHTS). IN THIS MODE, BOTH LATCHES ARE RETRACTED; AND BOTH INSIDE AND OUTSIDE WALL SWITCHES ACTIVATE AUTOMATIC OPENING OF DOOR.

TO PLACE SYSTEM IN SECURE MODE, SUCH AS FOR AFTER BUSINESS HOURS, TURN KEY SWITCH TO COUNTERCLOCKWISE POSITION (RED LED ON KEY SWITCH LIGHTS). IN THIS MODE, BOTH DOOR LEAVES ARE LATCHED. PRESSING INSIDE WALL SWITCH WILL CAUSE LATCHES TO RETRACT AND ACTIVATE AUTOMATIC OPENING OF DOOR. OUTSIDE WALL SWITCH IS DISABLED. ACTIVATING CARD READER WILL RETRACT LATCHES AND ENABLE OUTSIDE WALL SWITCH TO ACTIVATE AUTO OPERATOR WHEN PRESSED.

FIG. 6: POINT-TO-POINT FOR VARIATION 2 OF PAIR DOOR APPLICATION USING ACSI KEY SWITCH FOR SELECTING DAY/NIGHT MODE CONTROL

NOTES:

1. KEY SWITCH CONTACTS SHOWN IN "SYSTEM SECURE" POSITION.
2. —•— DENOTES A FIELD WIRE CONNECTION.

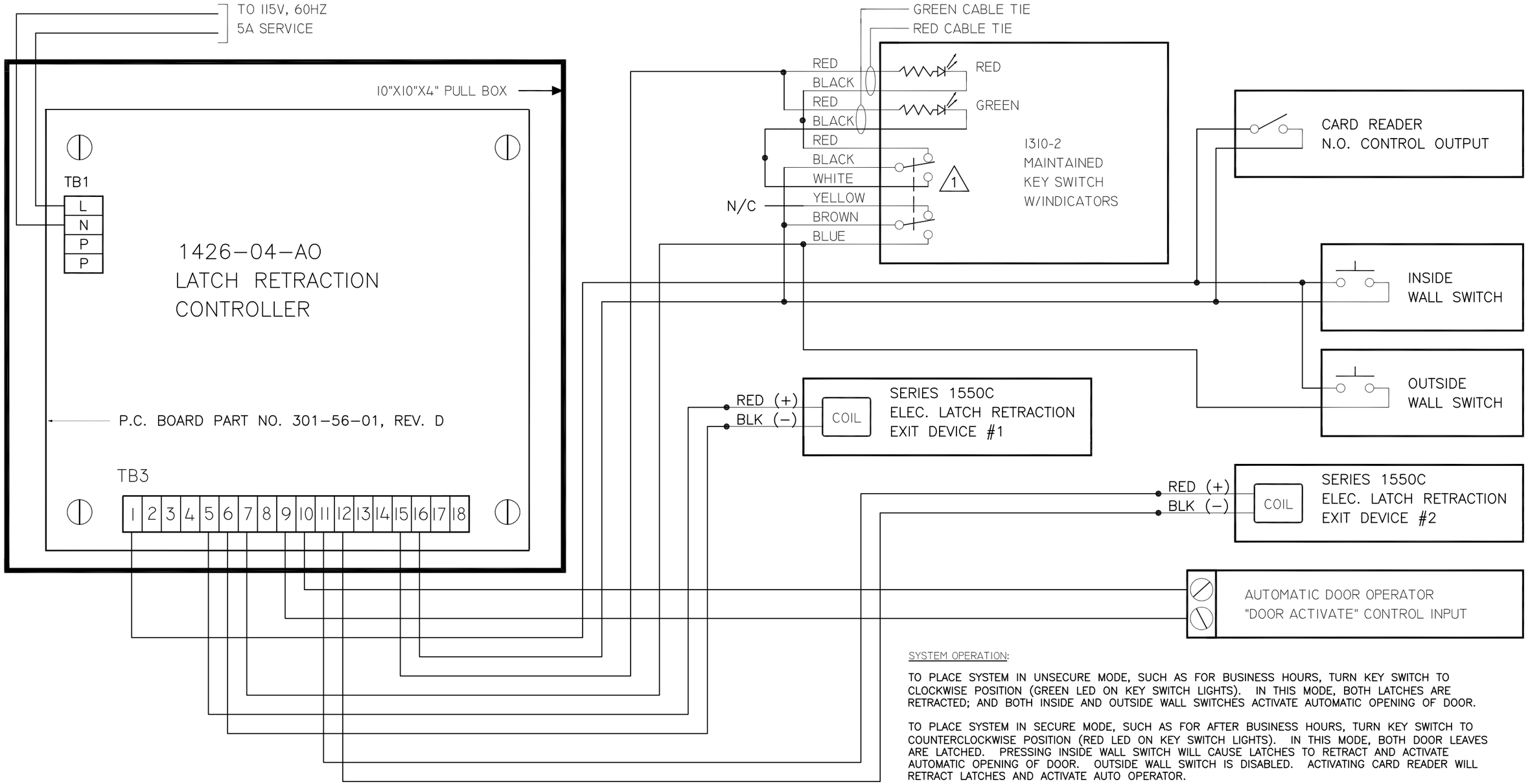

SYSTEM OPERATION:

TO PLACE SYSTEM IN UNSECURE MODE, SUCH AS FOR BUSINESS HOURS, TURN KEY SWITCH TO CLOCKWISE POSITION (GREEN LED ON KEY SWITCH LIGHTS). IN THIS MODE, BOTH LATCHES ARE RETRACTED; AND BOTH INSIDE AND OUTSIDE WALL SWITCHES ACTIVATE AUTOMATIC OPENING OF DOOR.

TO PLACE SYSTEM IN SECURE MODE, SUCH AS FOR AFTER BUSINESS HOURS, TURN KEY SWITCH TO COUNTERCLOCKWISE POSITION (RED LED ON KEY SWITCH LIGHTS). IN THIS MODE, BOTH DOOR LEAVES ARE LATCHED. PRESSING INSIDE WALL SWITCH WILL CAUSE LATCHES TO RETRACT AND ACTIVATE AUTOMATIC OPENING OF DOOR. OUTSIDE WALL SWITCH IS DISABLED. ACTIVATING CARD READER WILL RETRACT LATCHES AND ACTIVATE AUTO OPERATOR.

FIG. 7: POINT-TO-POINT FOR VARIATION 3 OF PAIR DOOR APPLICATION USING ACSI KEY SWITCH FOR SELECTING DAY/NIGHT MODE CONTROL

NOTES:

1. KEY SWITCH CONTACTS SHOWN IN "SYSTEM SECURE" POSITION.
2. —•— DENOTES A FIELD WIRE CONNECTION.

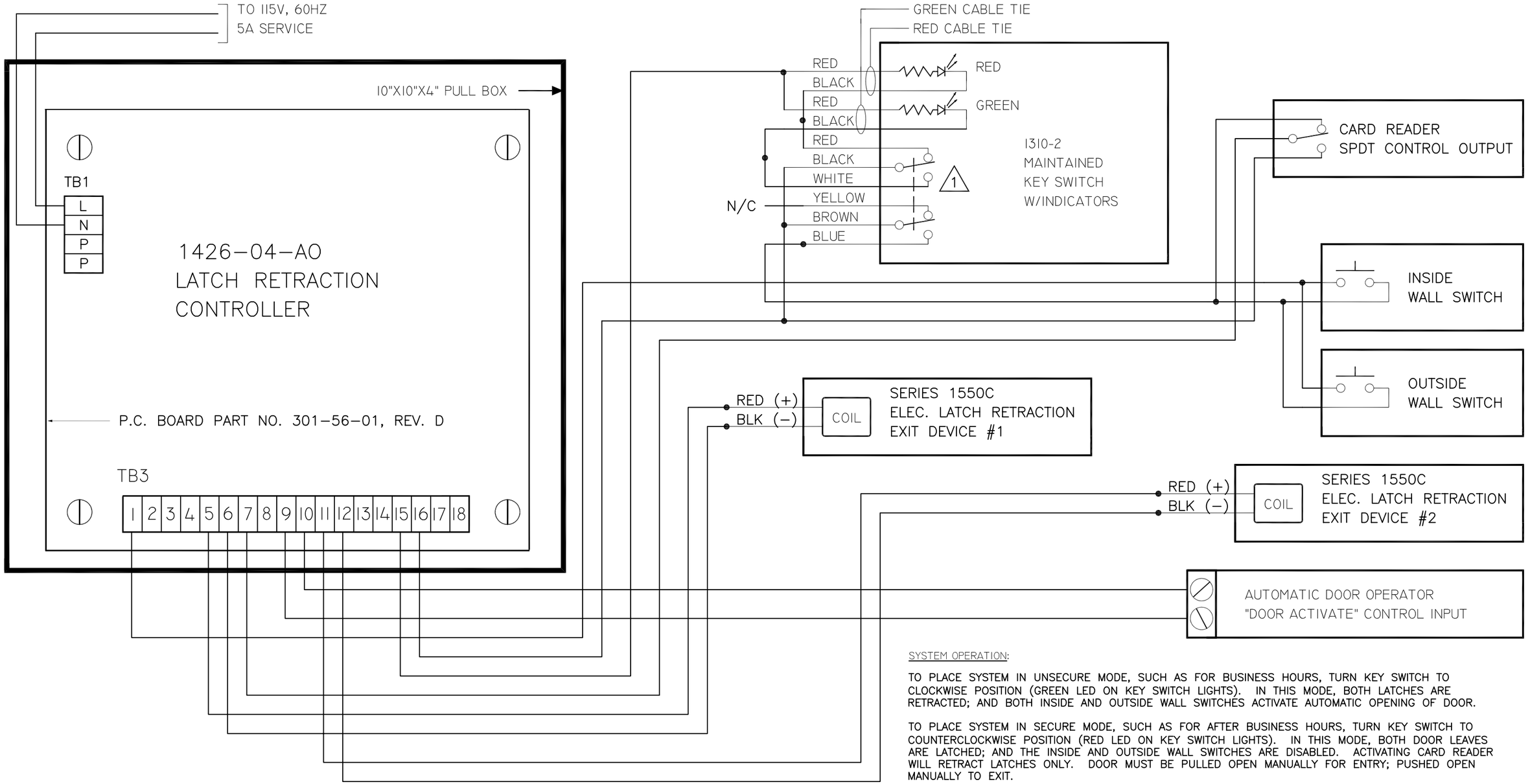

SYSTEM OPERATION:

TO PLACE SYSTEM IN UNSECURE MODE, SUCH AS FOR BUSINESS HOURS, TURN KEY SWITCH TO CLOCKWISE POSITION (GREEN LED ON KEY SWITCH LIGHTS). IN THIS MODE, BOTH LATCHES ARE RETRACTED; AND BOTH INSIDE AND OUTSIDE WALL SWITCHES ACTIVATE AUTOMATIC OPENING OF DOOR.

TO PLACE SYSTEM IN SECURE MODE, SUCH AS FOR AFTER BUSINESS HOURS, TURN KEY SWITCH TO COUNTERCLOCKWISE POSITION (RED LED ON KEY SWITCH LIGHTS). IN THIS MODE, BOTH DOOR LEAVES ARE LATCHED; AND THE INSIDE AND OUTSIDE WALL SWITCHES ARE DISABLED. ACTIVATING CARD READER WILL RETRACT LATCHES ONLY. DOOR MUST BE PULLED OPEN MANUALLY FOR ENTRY; PUSHED OPEN MANUALLY TO EXIT.

FIG. 8: POINT-TO-POINT FOR VARIATION 4 OF PAIR DOOR APPLICATION USING ACSI KEY SWITCH FOR SELECTING DAY/NIGHT MODE CONTROL

NOTES:

1. KEY SWITCH CONTACTS SHOWN IN "SYSTEM SECURE" POSITION.
2. —•— DENOTES A FIELD WIRE CONNECTION.

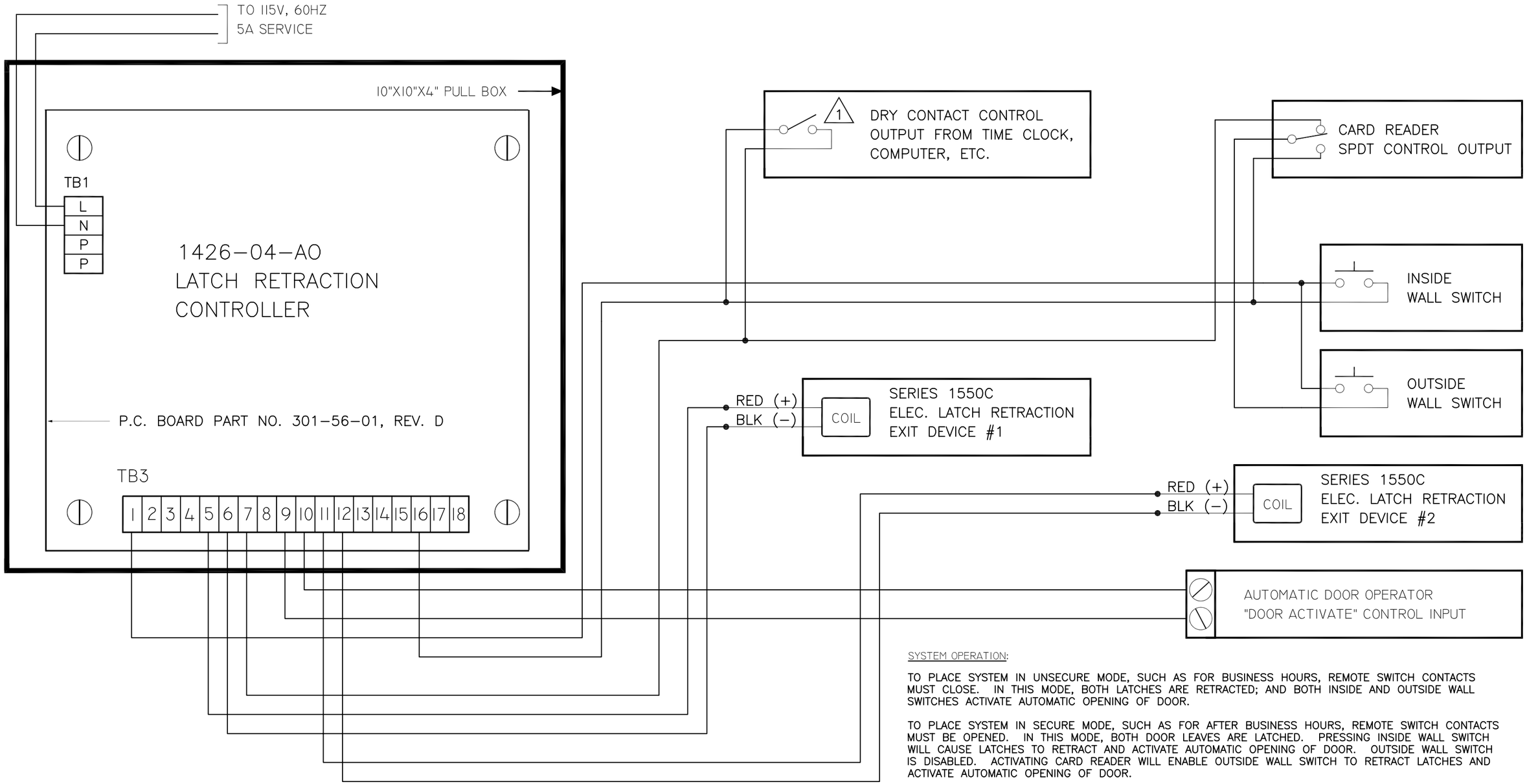

SYSTEM OPERATION:

TO PLACE SYSTEM IN UNSECURE MODE, SUCH AS FOR BUSINESS HOURS, REMOTE SWITCH CONTACTS MUST CLOSE. IN THIS MODE, BOTH LATCHES ARE RETRACTED; AND BOTH INSIDE AND OUTSIDE WALL SWITCHES ACTIVATE AUTOMATIC OPENING OF DOOR.

TO PLACE SYSTEM IN SECURE MODE, SUCH AS FOR AFTER BUSINESS HOURS, REMOTE SWITCH CONTACTS MUST BE OPENED. IN THIS MODE, BOTH DOOR LEAVES ARE LATCHED. PRESSING INSIDE WALL SWITCH WILL CAUSE LATCHES TO RETRACT AND ACTIVATE AUTOMATIC OPENING OF DOOR. OUTSIDE WALL SWITCH IS DISABLED. ACTIVATING CARD READER WILL ENABLE OUTSIDE WALL SWITCH TO RETRACT LATCHES AND ACTIVATE AUTOMATIC OPENING OF DOOR.

FIG. 9: POINT-TO-POINT FOR VARIATION 1 OF PAIR DOOR APPLICATION USING REMOTE OUTPUT (TIME CLOCK, COMPUTER, ETC.) FOR SELECTING DAY/NIGHT MODE CONTROL

NOTES:

1. REMOTE SWITCH CONTACTS SHOWN IN "SYSTEM SECURE" POSITION.
2. —•— DENOTES A FIELD WIRE CONNECTION.

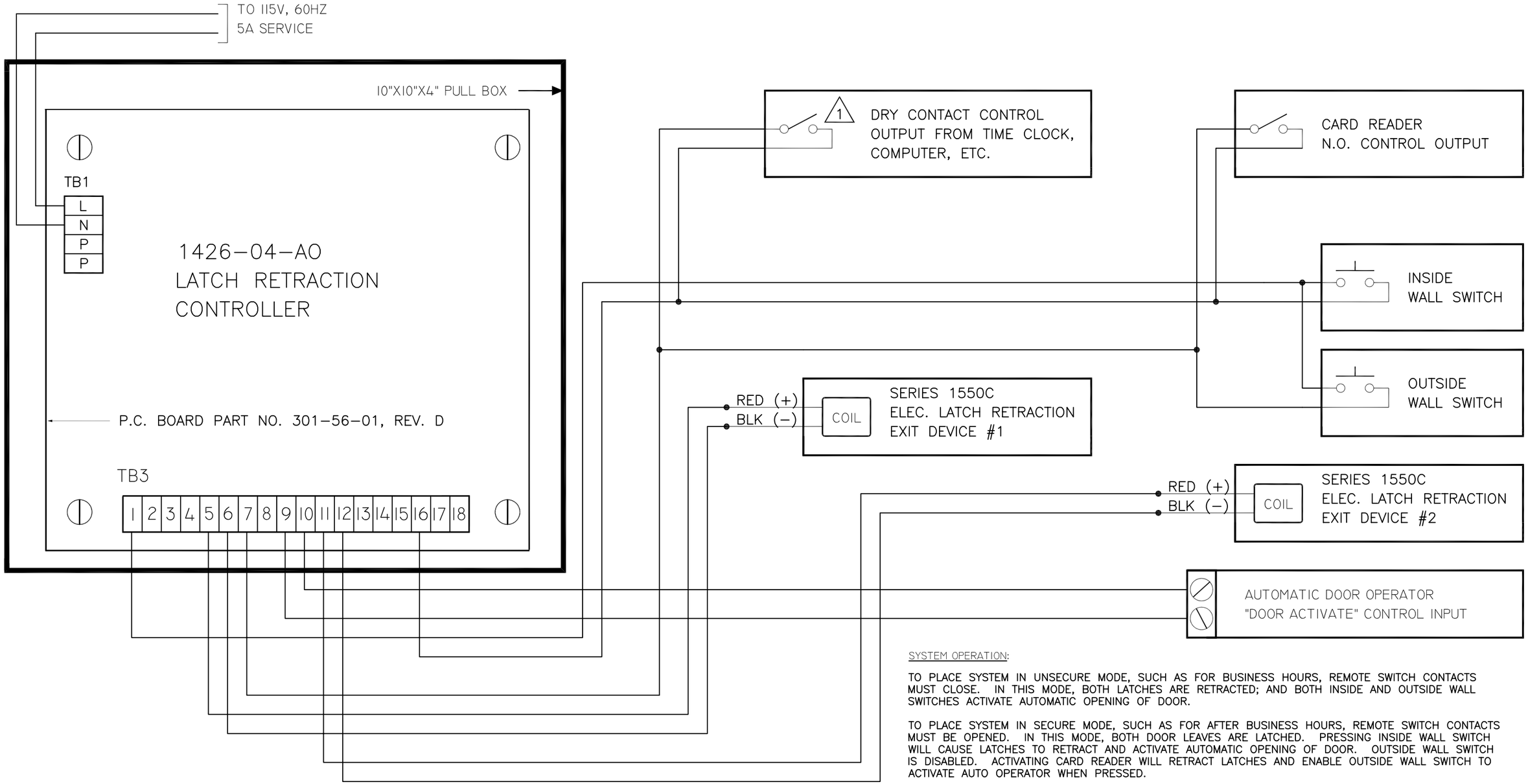

SYSTEM OPERATION:

TO PLACE SYSTEM IN UNSECURE MODE, SUCH AS FOR BUSINESS HOURS, REMOTE SWITCH CONTACTS MUST CLOSE. IN THIS MODE, BOTH LATCHES ARE RETRACTED; AND BOTH INSIDE AND OUTSIDE WALL SWITCHES ACTIVATE AUTOMATIC OPENING OF DOOR.

TO PLACE SYSTEM IN SECURE MODE, SUCH AS FOR AFTER BUSINESS HOURS, REMOTE SWITCH CONTACTS MUST BE OPENED. IN THIS MODE, BOTH DOOR LEAVES ARE LATCHED. PRESSING INSIDE WALL SWITCH WILL CAUSE LATCHES TO RETRACT AND ACTIVATE AUTOMATIC OPENING OF DOOR. OUTSIDE WALL SWITCH IS DISABLED. ACTIVATING CARD READER WILL RETRACT LATCHES AND ENABLE OUTSIDE WALL SWITCH TO ACTIVATE AUTO OPERATOR WHEN PRESSED.

FIG. 10: POINT-TO-POINT FOR VARIATION 2 OF PAIR DOOR APPLICATION USING REMOTE OUTPUT (TIME CLOCK, COMPUTER, ETC.) FOR SELECTING DAY/NIGHT MODE CONTROL

NOTES:

1. REMOTE SWITCH CONTACTS SHOWN IN "SYSTEM SECURE" POSITION.
2. —•— DENOTES A FIELD WIRE CONNECTION.

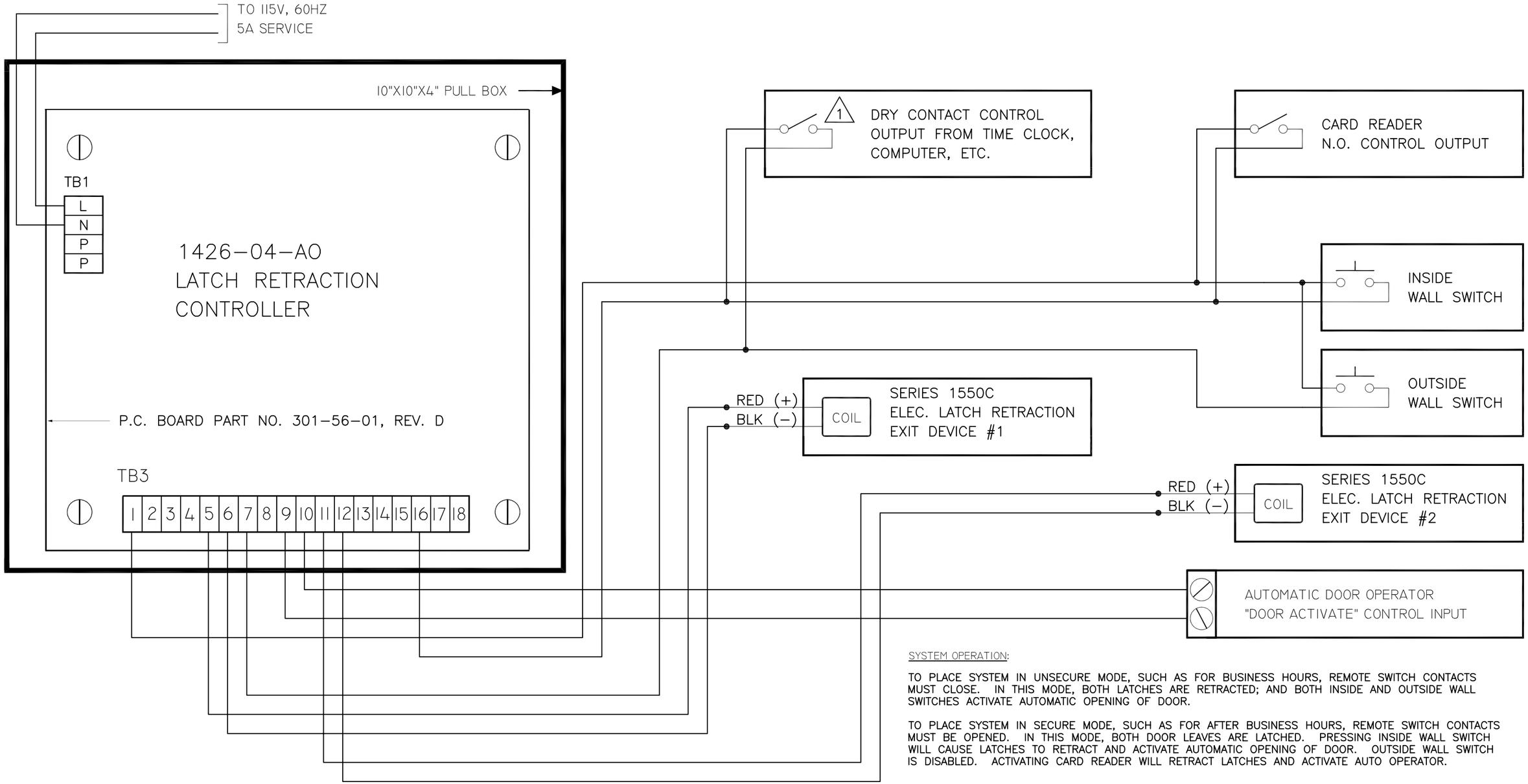

SYSTEM OPERATION:

TO PLACE SYSTEM IN UNSECURE MODE, SUCH AS FOR BUSINESS HOURS, REMOTE SWITCH CONTACTS MUST CLOSE. IN THIS MODE, BOTH LATCHES ARE RETRACTED; AND BOTH INSIDE AND OUTSIDE WALL SWITCHES ACTIVATE AUTOMATIC OPENING OF DOOR.

TO PLACE SYSTEM IN SECURE MODE, SUCH AS FOR AFTER BUSINESS HOURS, REMOTE SWITCH CONTACTS MUST BE OPENED. IN THIS MODE, BOTH DOOR LEAVES ARE LATCHED. PRESSING INSIDE WALL SWITCH WILL CAUSE LATCHES TO RETRACT AND ACTIVATE AUTOMATIC OPENING OF DOOR. OUTSIDE WALL SWITCH IS DISABLED. ACTIVATING CARD READER WILL RETRACT LATCHES AND ACTIVATE AUTO OPERATOR.

FIG. 11: POINT-TO-POINT FOR VARIATION 3 OF PAIR DOOR APPLICATION USING REMOTE OUTPUT (TIME CLOCK, COMPUTER, ETC.) FOR SELECTING DAY/NIGHT MODE CONTROL

NOTES:

1. REMOTE SWITCH CONTACTS SHOWN IN "SYSTEM SECURE" POSITION.
2. —•— DENOTES A FIELD WIRE CONNECTION.

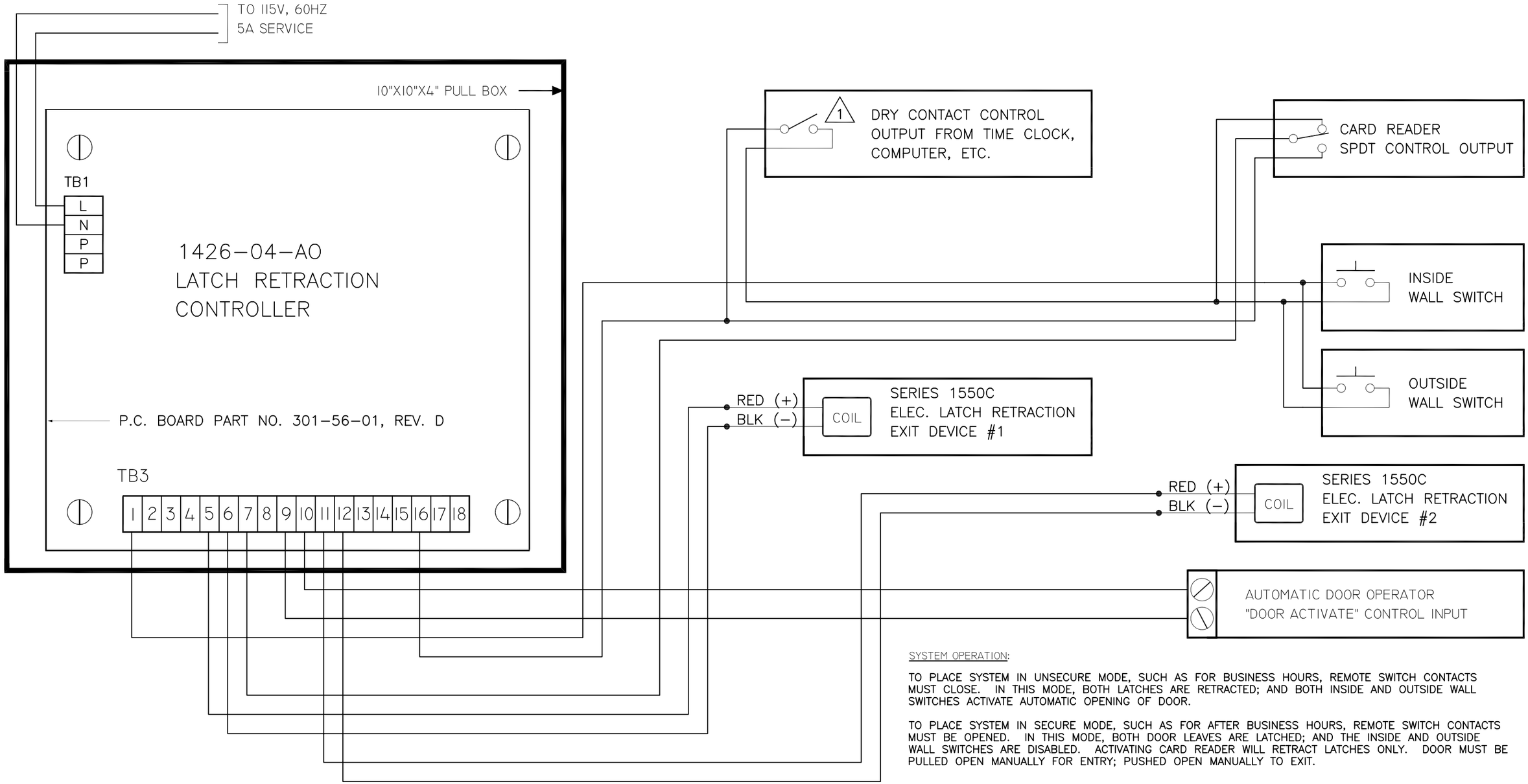

SYSTEM OPERATION:

TO PLACE SYSTEM IN UNSECURE MODE, SUCH AS FOR BUSINESS HOURS, REMOTE SWITCH CONTACTS MUST CLOSE. IN THIS MODE, BOTH LATCHES ARE RETRACTED; AND BOTH INSIDE AND OUTSIDE WALL SWITCHES ACTIVATE AUTOMATIC OPENING OF DOOR.

TO PLACE SYSTEM IN SECURE MODE, SUCH AS FOR AFTER BUSINESS HOURS, REMOTE SWITCH CONTACTS MUST BE OPENED. IN THIS MODE, BOTH DOOR LEAVES ARE LATCHED; AND THE INSIDE AND OUTSIDE WALL SWITCHES ARE DISABLED. ACTIVATING CARD READER WILL RETRACT LATCHES ONLY. DOOR MUST BE PULLED OPEN MANUALLY FOR ENTRY; PUSHED OPEN MANUALLY TO EXIT.

FIG. 12: POINT-TO-POINT FOR VARIATION 4 OF PAIR DOOR APPLICATION USING REMOTE OUTPUT (TIME CLOCK, COMPUTER, ETC.) FOR SELECTING DAY/NIGHT MODE CONTROL

NOTES:

1. REMOTE SWITCH CONTACTS SHOWN IN "SYSTEM SECURE" POSITION.
2. —•— DENOTES A FIELD WIRE CONNECTION.

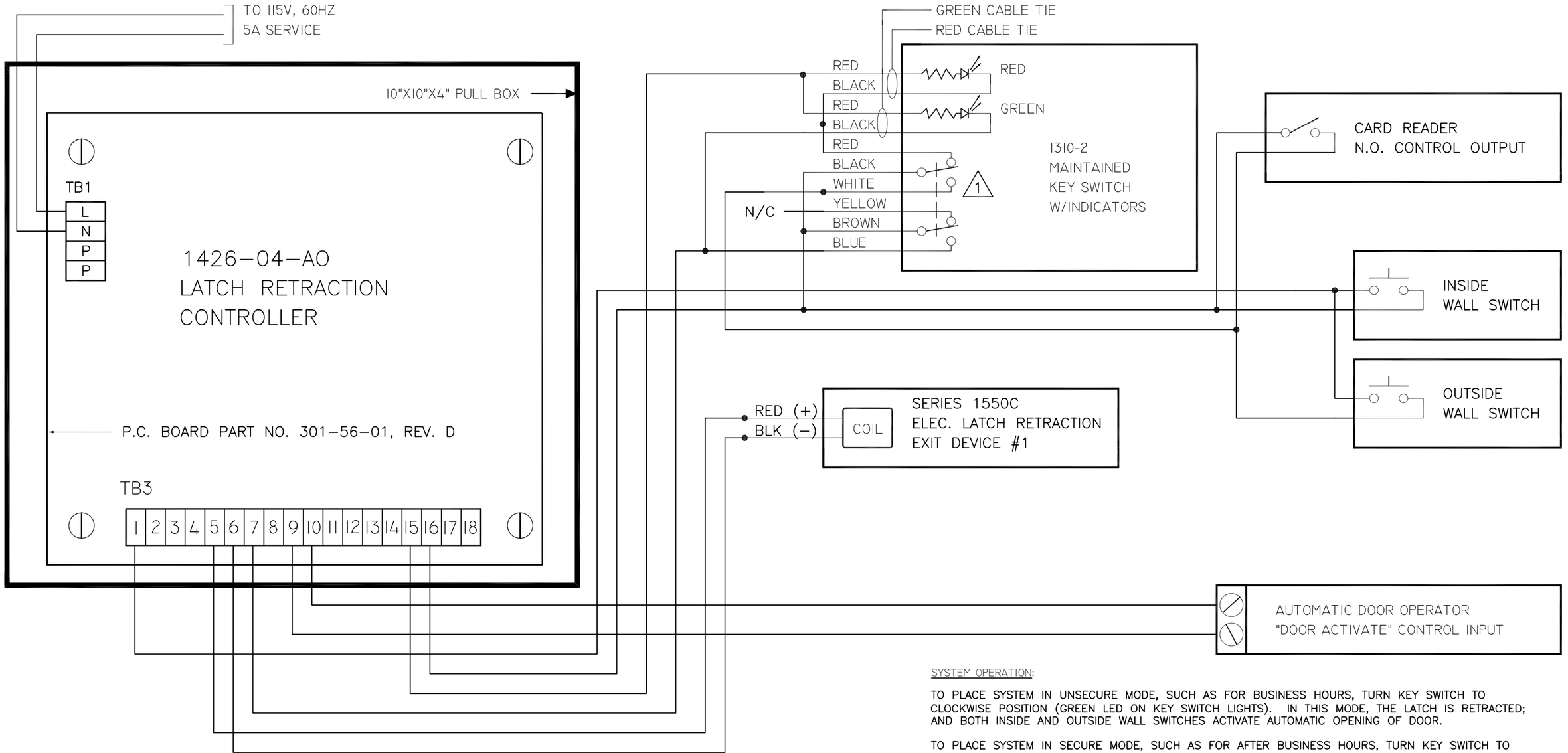

SYSTEM OPERATION:

TO PLACE SYSTEM IN UNSECURE MODE, SUCH AS FOR BUSINESS HOURS, TURN KEY SWITCH TO CLOCKWISE POSITION (GREEN LED ON KEY SWITCH LIGHTS). IN THIS MODE, THE LATCH IS RETRACTED; AND BOTH INSIDE AND OUTSIDE WALL SWITCHES ACTIVATE AUTOMATIC OPENING OF DOOR.

TO PLACE SYSTEM IN SECURE MODE, SUCH AS FOR AFTER BUSINESS HOURS, TURN KEY SWITCH TO COUNTERCLOCKWISE POSITION (RED LED ON KEY SWITCH LIGHTS). IN THIS MODE, THE DOOR BECOMES LATCHED. PRESSING INSIDE WALL SWITCH WILL CAUSE LATCH TO RETRACT AND ACTIVATE AUTOMATIC OPENING OF DOOR. OUTSIDE WALL SWITCH IS DISABLED. ACTIVATING CARD READER WILL ENABLE OUTSIDE WALL SWITCH TO RETRACT LATCH AND ACTIVATE AUTOMATIC OPENING OF DOOR.

FIG. 13: POINT-TO-POINT FOR VARIATION 1 OF SINGLE DOOR APPLICATION USING ACSI KEY SWITCH FOR SELECTING DAY/NIGHT MODE CONTROL

NOTES:

1. KEY SWITCH CONTACTS SHOWN IN "SYSTEM SECURE" POSITION.
2. —•— DENOTES A FIELD WIRE CONNECTION.

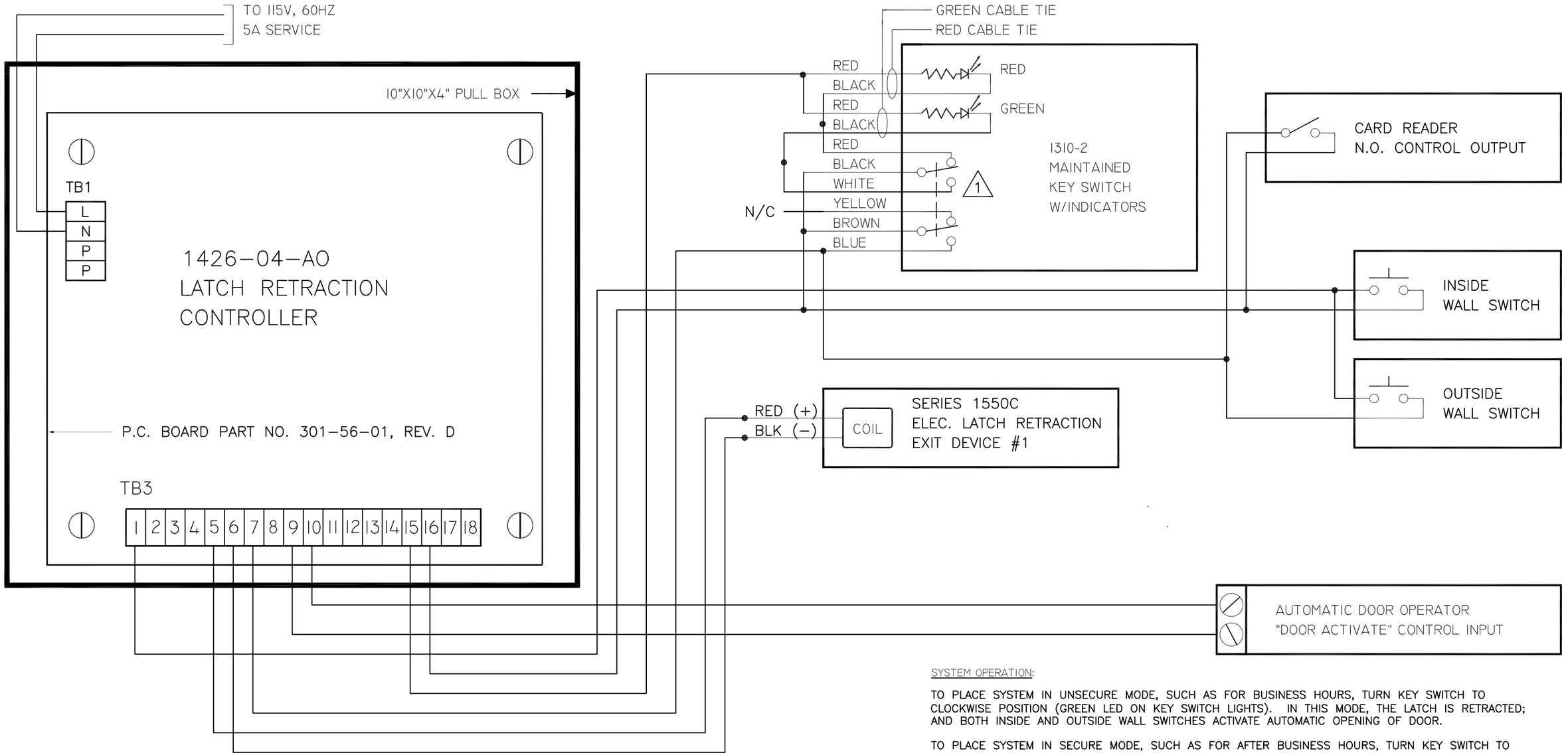

SYSTEM OPERATION:

TO PLACE SYSTEM IN UNSECURE MODE, SUCH AS FOR BUSINESS HOURS, TURN KEY SWITCH TO CLOCKWISE POSITION (GREEN LED ON KEY SWITCH LIGHTS). IN THIS MODE, THE LATCH IS RETRACTED; AND BOTH INSIDE AND OUTSIDE WALL SWITCHES ACTIVATE AUTOMATIC OPENING OF DOOR.

TO PLACE SYSTEM IN SECURE MODE, SUCH AS FOR AFTER BUSINESS HOURS, TURN KEY SWITCH TO COUNTERCLOCKWISE POSITION (RED LED ON KEY SWITCH LIGHTS). IN THIS MODE, THE DOOR BECOMES LATCHED. PRESSING INSIDE WALL SWITCH WILL CAUSE LATCH TO RETRACT AND ACTIVATE AUTOMATIC OPENING OF DOOR. OUTSIDE WALL SWITCH IS DISABLED. ACTIVATING CARD READER WILL RETRACT LATCH AND ENABLE OUTSIDE WALL SWITCH TO ACTIVATE AUTO OPERATOR WHEN PRESSED.

FIG. 14: POINT-TO-POINT FOR VARIATION 2 OF SINGLE DOOR APPLICATION USING ACSI KEY SWITCH FOR SELECTING DAY/NIGHT MODE CONTROL

NOTES:

1. KEY SWITCH CONTACTS SHOWN IN "SYSTEM SECURE" POSITION.
2. —•— DENOTES A FIELD WIRE CONNECTION.

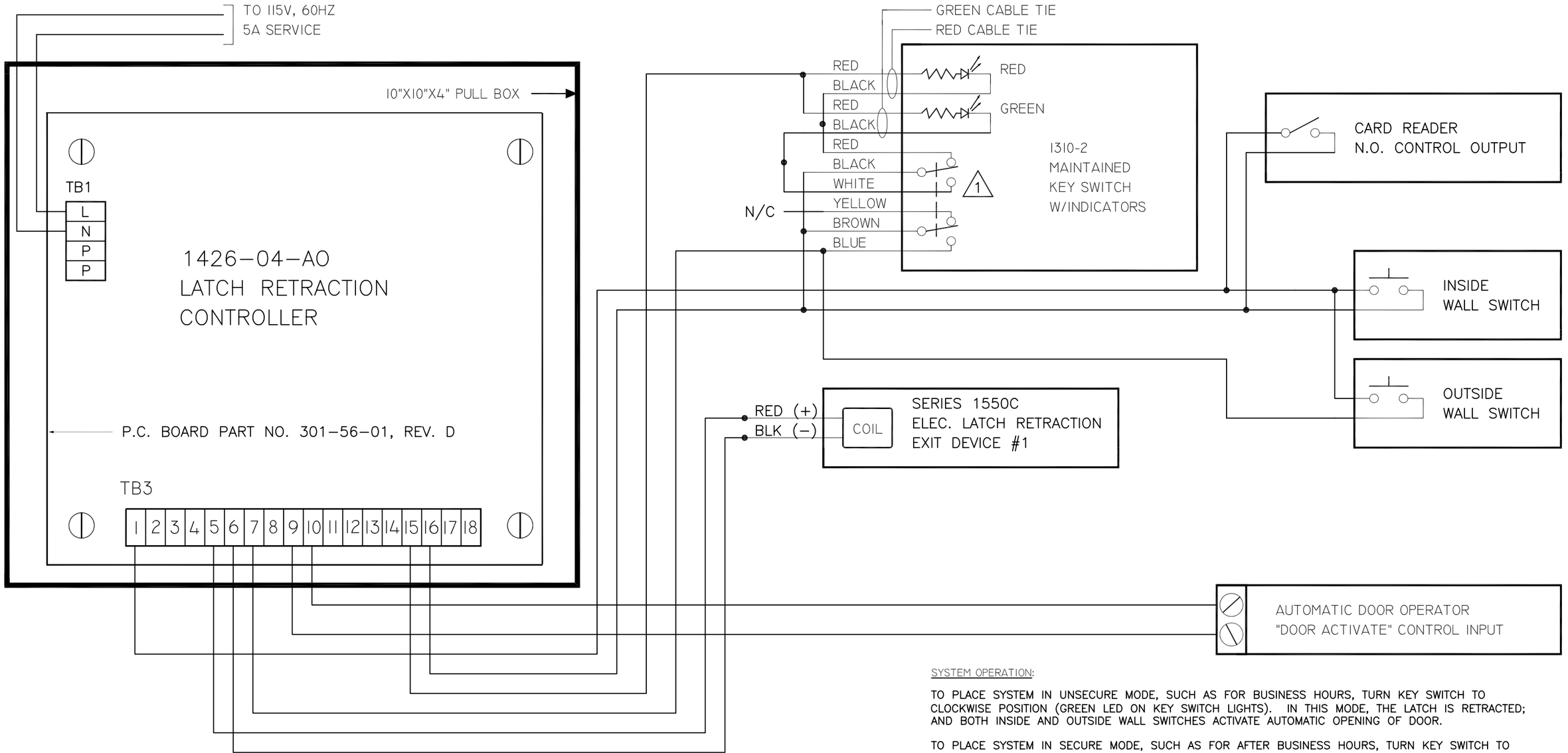

SYSTEM OPERATION:

TO PLACE SYSTEM IN UNSECURE MODE, SUCH AS FOR BUSINESS HOURS, TURN KEY SWITCH TO CLOCKWISE POSITION (GREEN LED ON KEY SWITCH LIGHTS). IN THIS MODE, THE LATCH IS RETRACTED; AND BOTH INSIDE AND OUTSIDE WALL SWITCHES ACTIVATE AUTOMATIC OPENING OF DOOR.

TO PLACE SYSTEM IN SECURE MODE, SUCH AS FOR AFTER BUSINESS HOURS, TURN KEY SWITCH TO COUNTERCLOCKWISE POSITION (RED LED ON KEY SWITCH LIGHTS). IN THIS MODE, THE DOOR BECOMES LATCHED. PRESSING INSIDE WALL SWITCH WILL CAUSE LATCH TO RETRACT AND ACTIVATE AUTOMATIC OPENING OF DOOR. OUTSIDE WALL SWITCH IS DISABLED. ACTIVATING CARD READER WILL RETRACT LATCH AND ACTIVATE AUTO OPERATOR.

FIG. 15: POINT-TO-POINT FOR VARIATION 3 OF SINGLE DOOR APPLICATION USING ACSI KEY SWITCH FOR SELECTING DAY/NIGHT MODE CONTROL

NOTES:

1. KEY SWITCH CONTACTS SHOWN IN "SYSTEM SECURE" POSITION.
2. —•— DENOTES A FIELD WIRE CONNECTION.

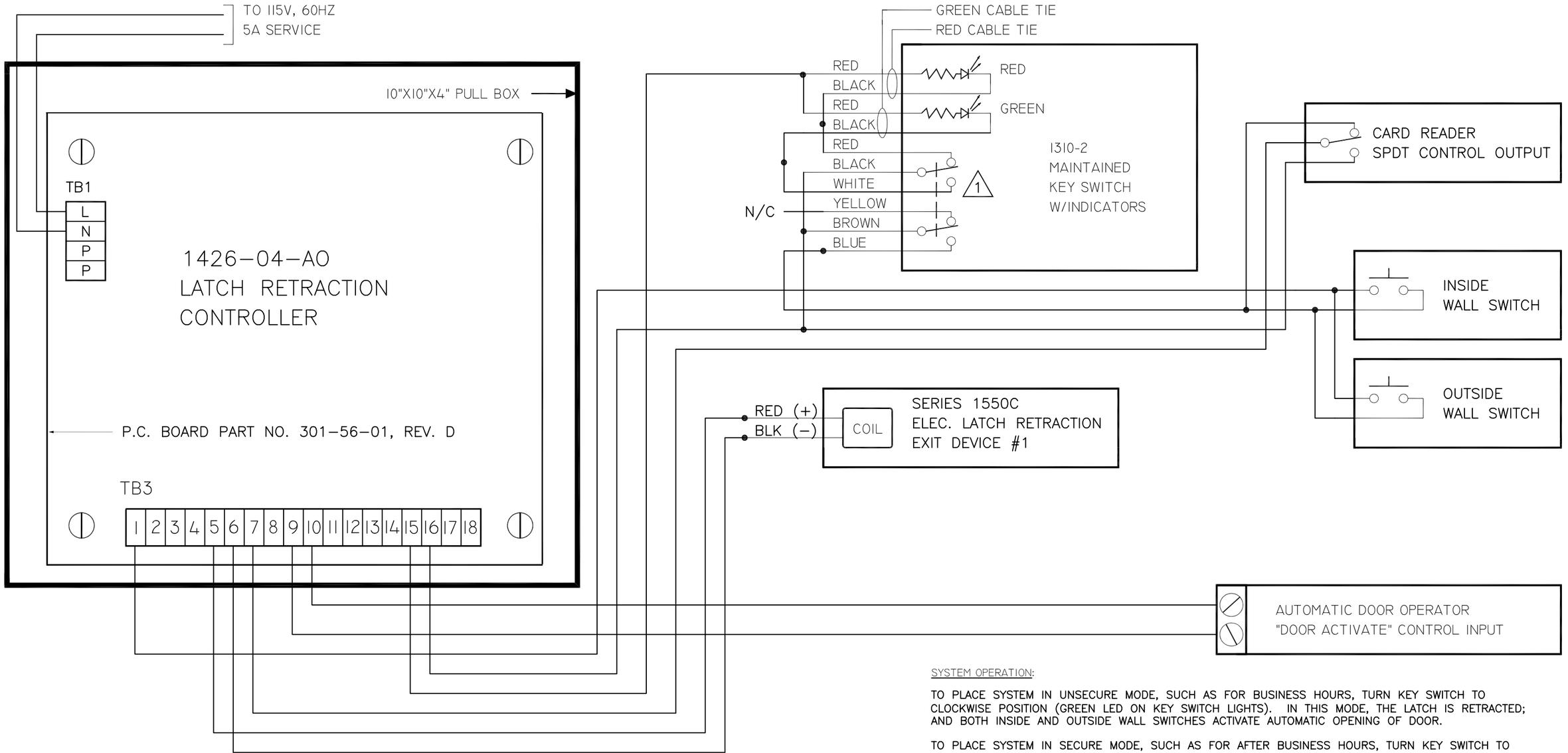

SYSTEM OPERATION:

TO PLACE SYSTEM IN UNSECURE MODE, SUCH AS FOR BUSINESS HOURS, TURN KEY SWITCH TO CLOCKWISE POSITION (GREEN LED ON KEY SWITCH LIGHTS). IN THIS MODE, THE LATCH IS RETRACTED; AND BOTH INSIDE AND OUTSIDE WALL SWITCHES ACTIVATE AUTOMATIC OPENING OF DOOR.

TO PLACE SYSTEM IN SECURE MODE, SUCH AS FOR AFTER BUSINESS HOURS, TURN KEY SWITCH TO COUNTERCLOCKWISE POSITION (RED LED ON KEY SWITCH LIGHTS). IN THIS MODE, THE DOOR BECOMES LATCHED; AND THE INSIDE AND OUTSIDE WALL SWITCHES ARE DISABLED. ACTIVATING CARD READER WILL RETRACT LATCH ONLY. DOOR MUST BE PULLED OPEN MANUALLY FOR ENTRY; PUSHED OPEN MANUALLY TO EXIT.

FIG. 16: POINT-TO-POINT FOR VARIATION 4 OF SINGLE DOOR APPLICATION USING ACSI KEY SWITCH FOR SELECTING DAY/NIGHT MODE CONTROL

NOTES:

1. KEY SWITCH CONTACTS SHOWN IN "SYSTEM SECURE" POSITION.
2. —•— DENOTES A FIELD WIRE CONNECTION.

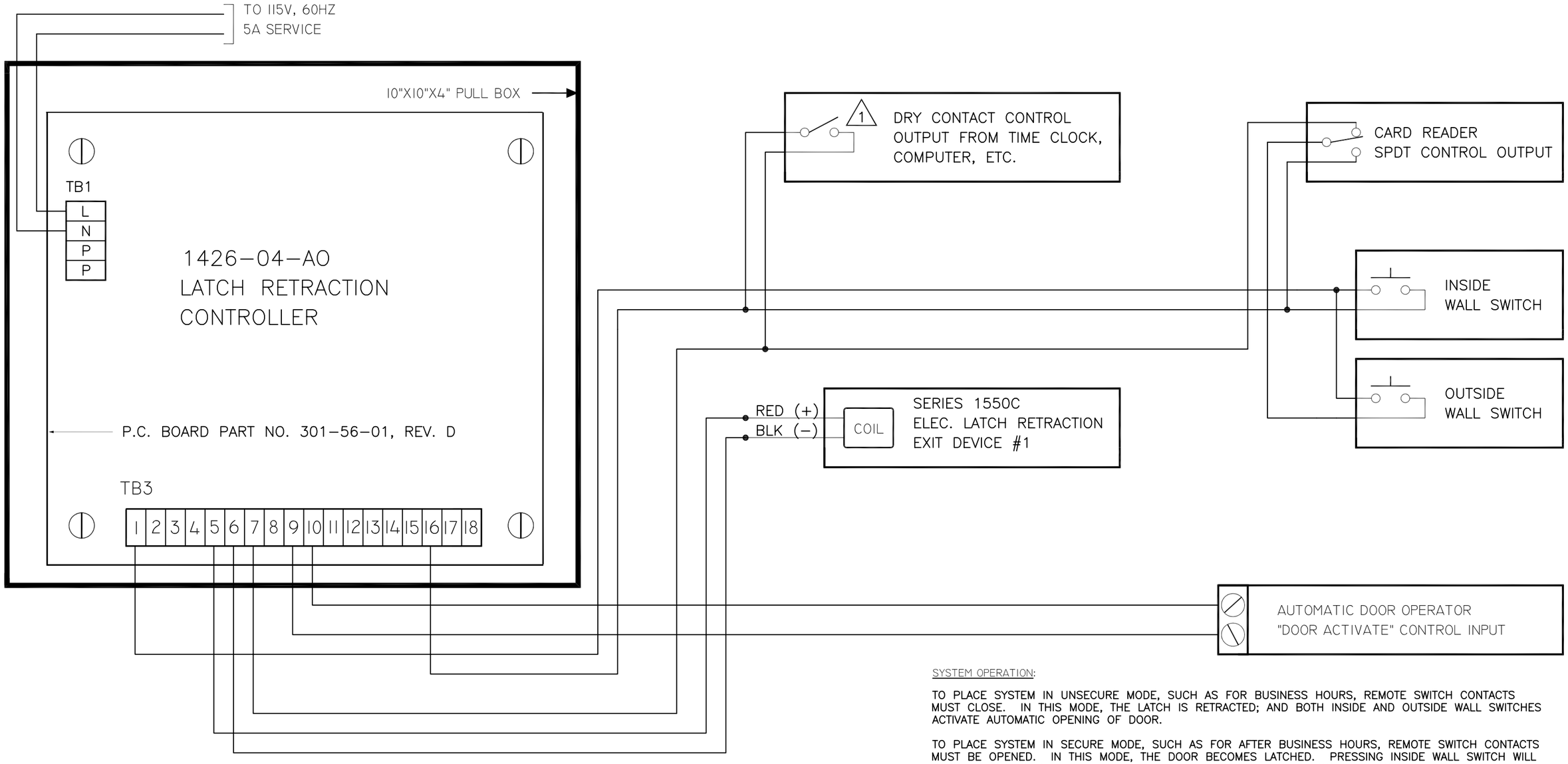

SYSTEM OPERATION:

TO PLACE SYSTEM IN UNSECURE MODE, SUCH AS FOR BUSINESS HOURS, REMOTE SWITCH CONTACTS MUST CLOSE. IN THIS MODE, THE LATCH IS RETRACTED; AND BOTH INSIDE AND OUTSIDE WALL SWITCHES ACTIVATE AUTOMATIC OPENING OF DOOR.

TO PLACE SYSTEM IN SECURE MODE, SUCH AS FOR AFTER BUSINESS HOURS, REMOTE SWITCH CONTACTS MUST BE OPENED. IN THIS MODE, THE DOOR BECOMES LATCHED. PRESSING INSIDE WALL SWITCH WILL CAUSE LATCH TO RETRACT AND ACTIVATE AUTOMATIC OPENING OF DOOR. OUTSIDE WALL SWITCH IS DISABLED. ACTIVATING CARD READER WILL ENABLE OUTSIDE WALL SWITCH TO RETRACT LATCH AND ACTIVATE AUTOMATIC OPENING OF DOOR.

FIG. 17: POINT-TO-POINT FOR VARIATION 1 OF SINGLE DOOR APPLICATION USING REMOTE OUTPUT (TIME CLOCK, COMPUTER, ETC.) FOR SELECTING DAY/NIGHT MODE CONTROL

NOTES:

1. REMOTE SWITCH CONTACTS SHOWN IN "SYSTEM SECURE" POSITION.
2. —•— DENOTES A FIELD WIRE CONNECTION.

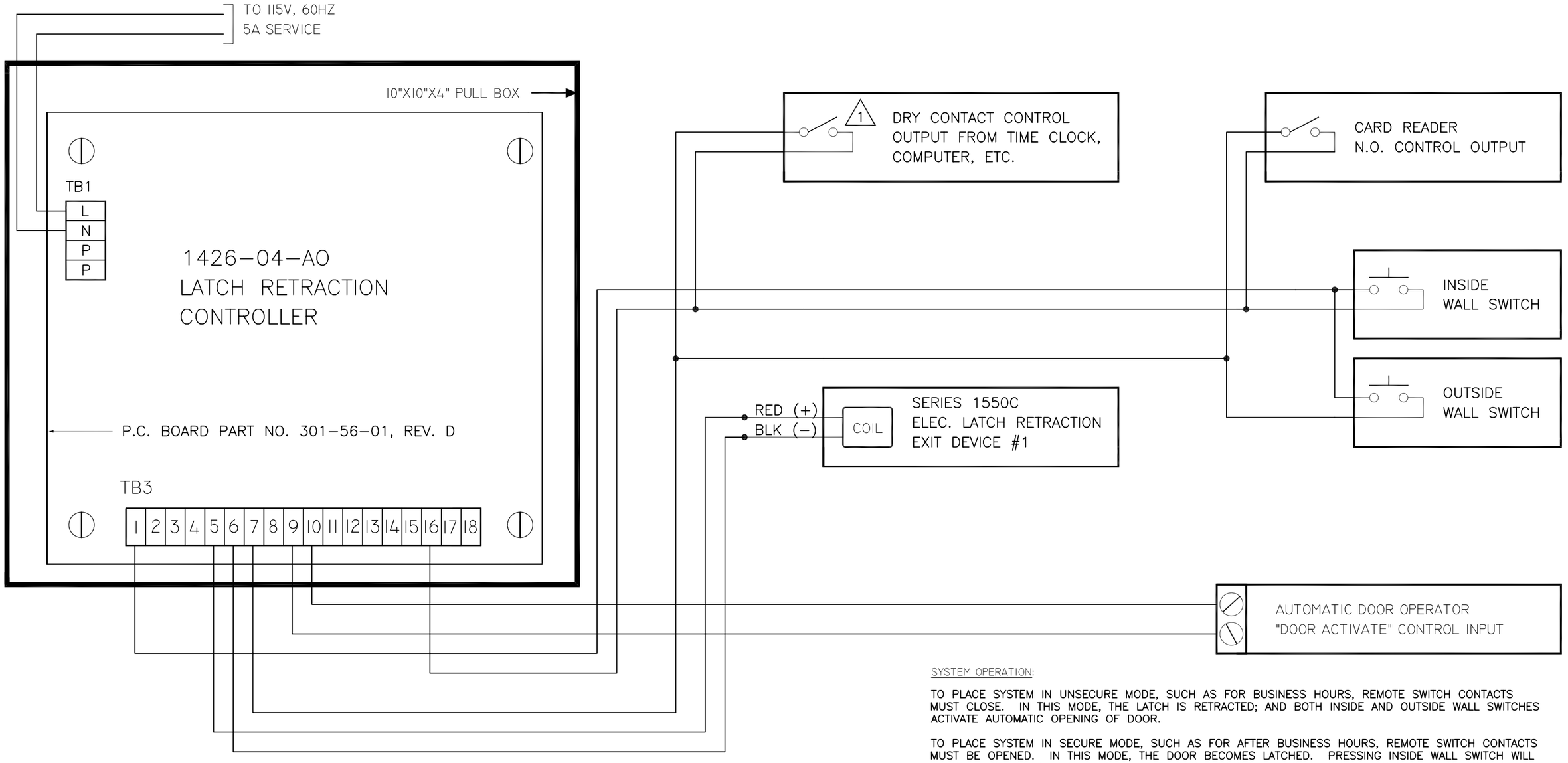

SYSTEM OPERATION:

TO PLACE SYSTEM IN UNSECURE MODE, SUCH AS FOR BUSINESS HOURS, REMOTE SWITCH CONTACTS MUST CLOSE. IN THIS MODE, THE LATCH IS RETRACTED; AND BOTH INSIDE AND OUTSIDE WALL SWITCHES ACTIVATE AUTOMATIC OPENING OF DOOR.

TO PLACE SYSTEM IN SECURE MODE, SUCH AS FOR AFTER BUSINESS HOURS, REMOTE SWITCH CONTACTS MUST BE OPENED. IN THIS MODE, THE DOOR BECOMES LATCHED. PRESSING INSIDE WALL SWITCH WILL CAUSE LATCH TO RETRACT AND ACTIVATE AUTOMATIC OPENING OF DOOR. OUTSIDE WALL SWITCH IS DISABLED. ACTIVATING CARD READER WILL RETRACT LATCH AND ENABLE OUTSIDE WALL SWITCH TO ACTIVATE AUTO OPERATOR WHEN PRESSED.

FIG. 18: POINT-TO-POINT FOR VARIATION 2 OF SINGLE DOOR APPLICATION USING REMOTE OUTPUT (TIME CLOCK, COMPUTER, ETC.) FOR SELECTING DAY/NIGHT MODE CONTROL

NOTES:

1. REMOTE SWITCH CONTACTS SHOWN IN "SYSTEM SECURE" POSITION.
2. —•— DENOTES A FIELD WIRE CONNECTION.

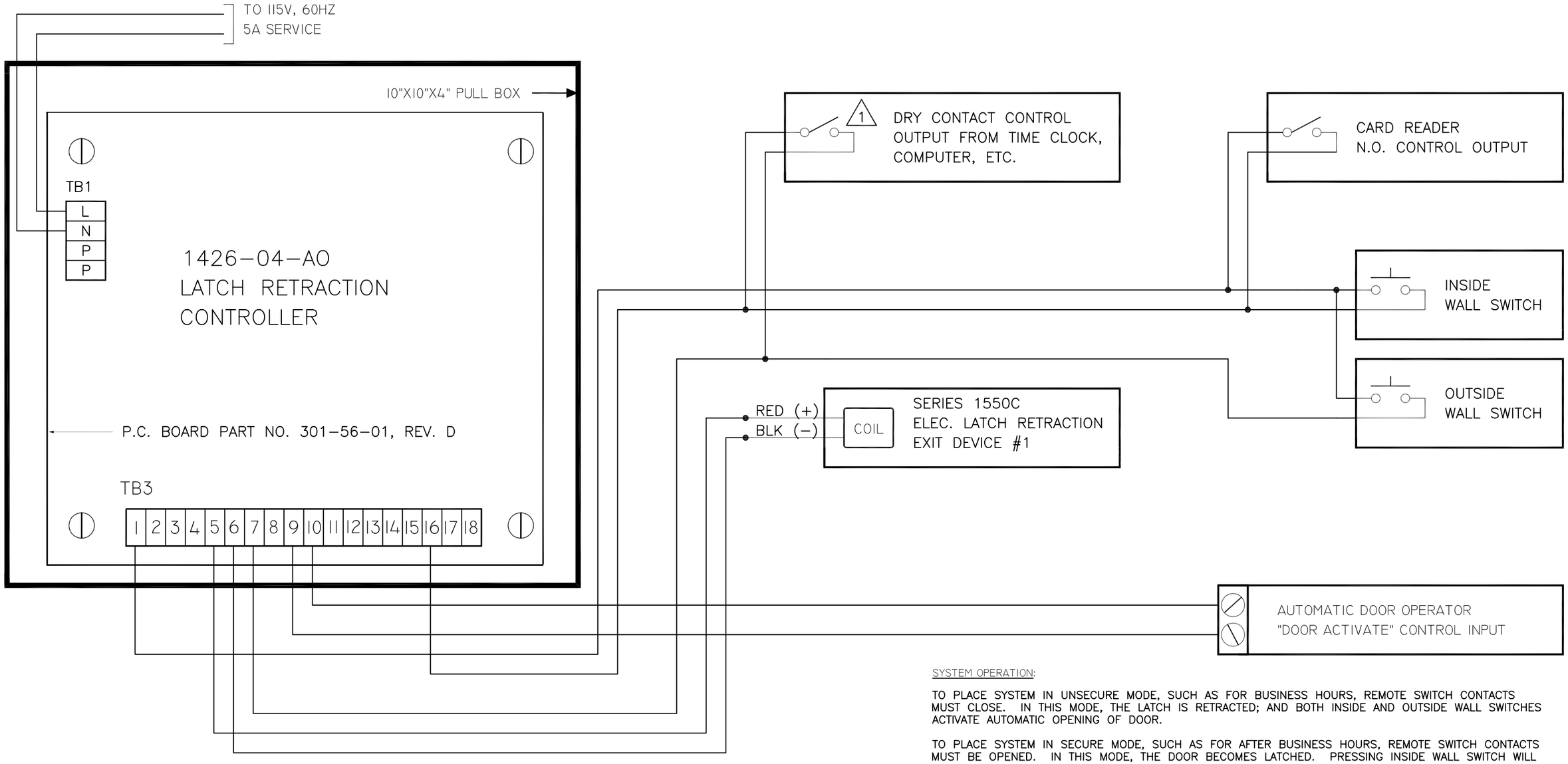

SYSTEM OPERATION:

TO PLACE SYSTEM IN UNSECURE MODE, SUCH AS FOR BUSINESS HOURS, REMOTE SWITCH CONTACTS MUST CLOSE. IN THIS MODE, THE LATCH IS RETRACTED; AND BOTH INSIDE AND OUTSIDE WALL SWITCHES ACTIVATE AUTOMATIC OPENING OF DOOR.

TO PLACE SYSTEM IN SECURE MODE, SUCH AS FOR AFTER BUSINESS HOURS, REMOTE SWITCH CONTACTS MUST BE OPENED. IN THIS MODE, THE DOOR BECOMES LATCHED. PRESSING INSIDE WALL SWITCH WILL CAUSE LATCH TO RETRACT AND ACTIVATE AUTOMATIC OPENING OF DOOR. OUTSIDE WALL SWITCH IS DISABLED. ACTIVATING CARD READER WILL RETRACT LATCH AND ACTIVATE AUTO OPERATOR.

FIG. 19: POINT-TO-POINT FOR VARIATION 3 OF SINGLE DOOR APPLICATION USING REMOTE OUTPUT (TIME CLOCK, COMPUTER, ETC.) FOR SELECTING DAY/NIGHT MODE CONTROL

NOTES:

1 REMOTE SWITCH CONTACTS SHOWN IN "SYSTEM SECURE" POSITION.

2.) —•— DENOTES A FIELD WIRE CONNECTION.

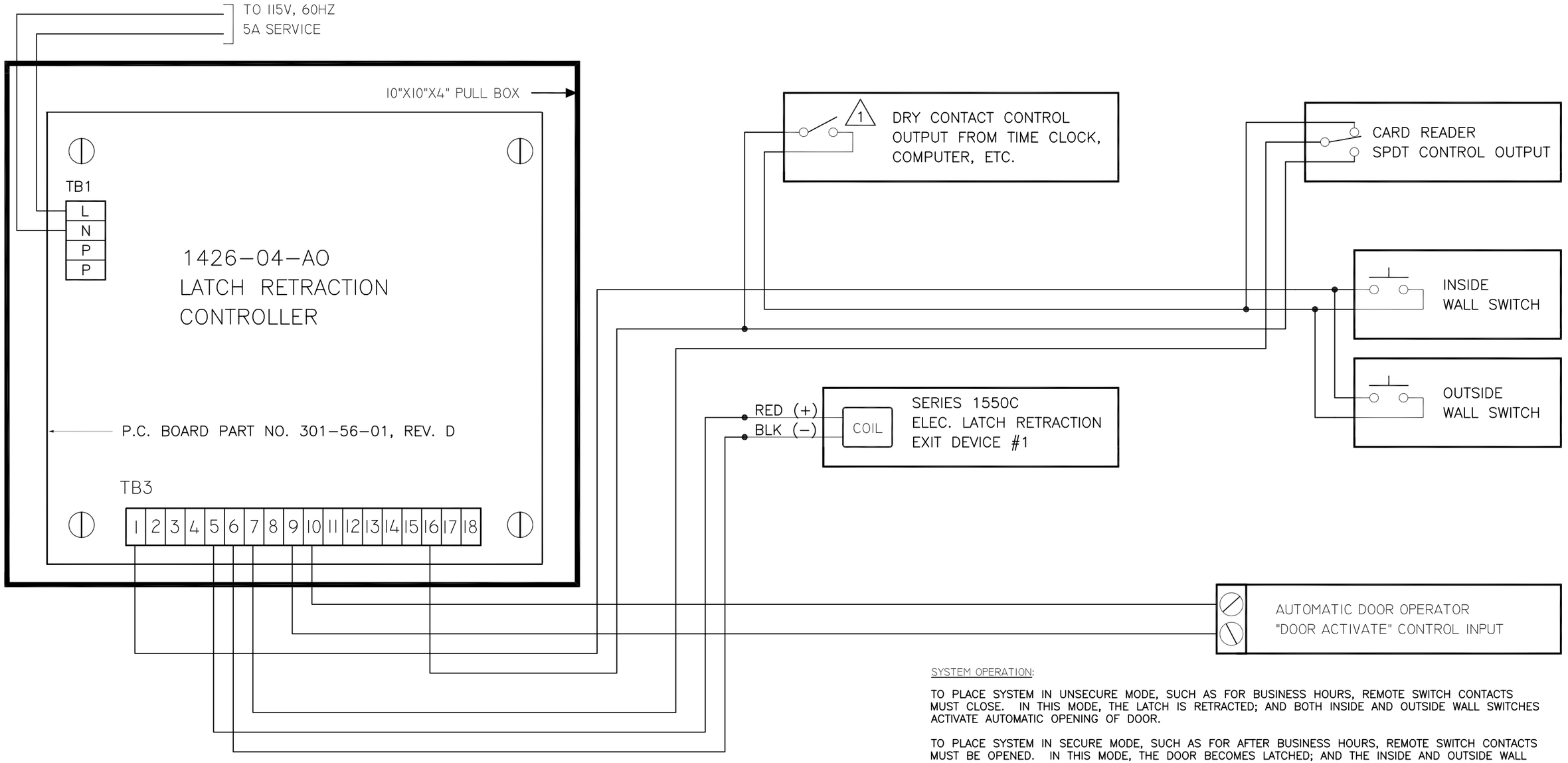

SYSTEM OPERATION:

TO PLACE SYSTEM IN UNSECURE MODE, SUCH AS FOR BUSINESS HOURS, REMOTE SWITCH CONTACTS MUST CLOSE. IN THIS MODE, THE LATCH IS RETRACTED; AND BOTH INSIDE AND OUTSIDE WALL SWITCHES ACTIVATE AUTOMATIC OPENING OF DOOR.

TO PLACE SYSTEM IN SECURE MODE, SUCH AS FOR AFTER BUSINESS HOURS, REMOTE SWITCH CONTACTS MUST BE OPENED. IN THIS MODE, THE DOOR BECOMES LATCHED; AND THE INSIDE AND OUTSIDE WALL SWITCHES ARE DISABLED. ACTIVATING CARD READER WILL RETRACT LATCH ONLY. DOOR MUST BE PULLED OPEN MANUALLY FOR ENTRY; PUSHED OPEN MANUALLY TO EXIT.

FIG. 20: POINT-TO-POINT FOR VARIATION 4 OF SINGLE DOOR APPLICATION USING REMOTE OUTPUT (TIME CLOCK, COMPUTER, ETC.) FOR SELECTING DAY/NIGHT MODE CONTROL

NOTES:

1. REMOTE SWITCH CONTACTS SHOWN IN "SYSTEM SECURE" POSITION.
2. —•— DENOTES A FIELD WIRE CONNECTION.

GENERAL WIRING DIAGRAM FOR 1426BB-04-AO ELECTRIC LATCH RETRACTION CONTROLLER

USE INSTALLATION INSTRUCTIONS II - 1400-11

CLASS 2 OUTPUTS

SECURITY UL LISTED

EQUIPMENT 4M73

ACCESS CONTROL POWER SUPPLY, ACCESS CONTROL ELECTRIC LATCH RETRACTION (ELR) CONTROLLER

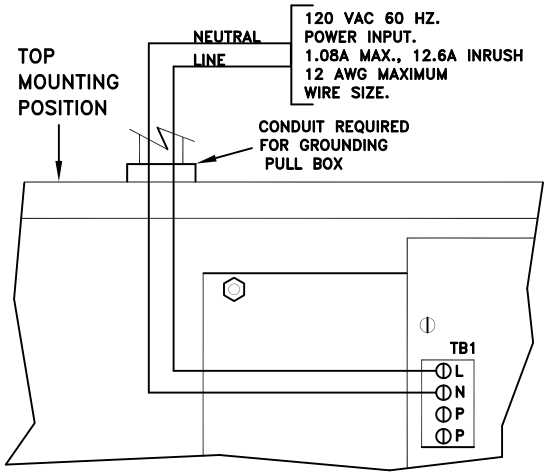

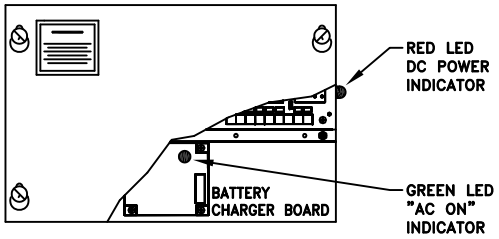

CONTROLLER INTENDED FOR INDOOR USE ONLY.

R2 R4
INC. INC.

USED FOR ADJUSTING UNLOCK DELAY TIME WHEN USING A MOMENTARY ACTION SWITCH FOR SW. 1. R2 ADJUSTS DEV. 1 (SINGLE DOOR) OR DEV. 1 & DEV. 2 (PAIR DOORS) TIME DELAY. 8 SEC. MAX. DELAY TIME. R4 IS NOT USED WITH THE MODEL 1426BB-04-AO LATCH RETRACTION CONTROLLER.

MFG. DATE:

PJ1 S D

DEVICE ACTIVATION MODE SELECTOR
JUMPER MUST REMAIN IN "S" POSITION.
DO NOT MOVE JUMPER TO "D" POSITION.

PJ2 FA EN FA DIS

FIRE ALARM INPUT ENABLE/DISABLE SELECTOR
DEFAULT POSITION SHOWN WHEN FIRE ALARM IS NOT USED. TO ENABLE INPUT FOR FIRE ALARM INTERFACE, MOVE JUMPER TO "FA EN" POSITION.

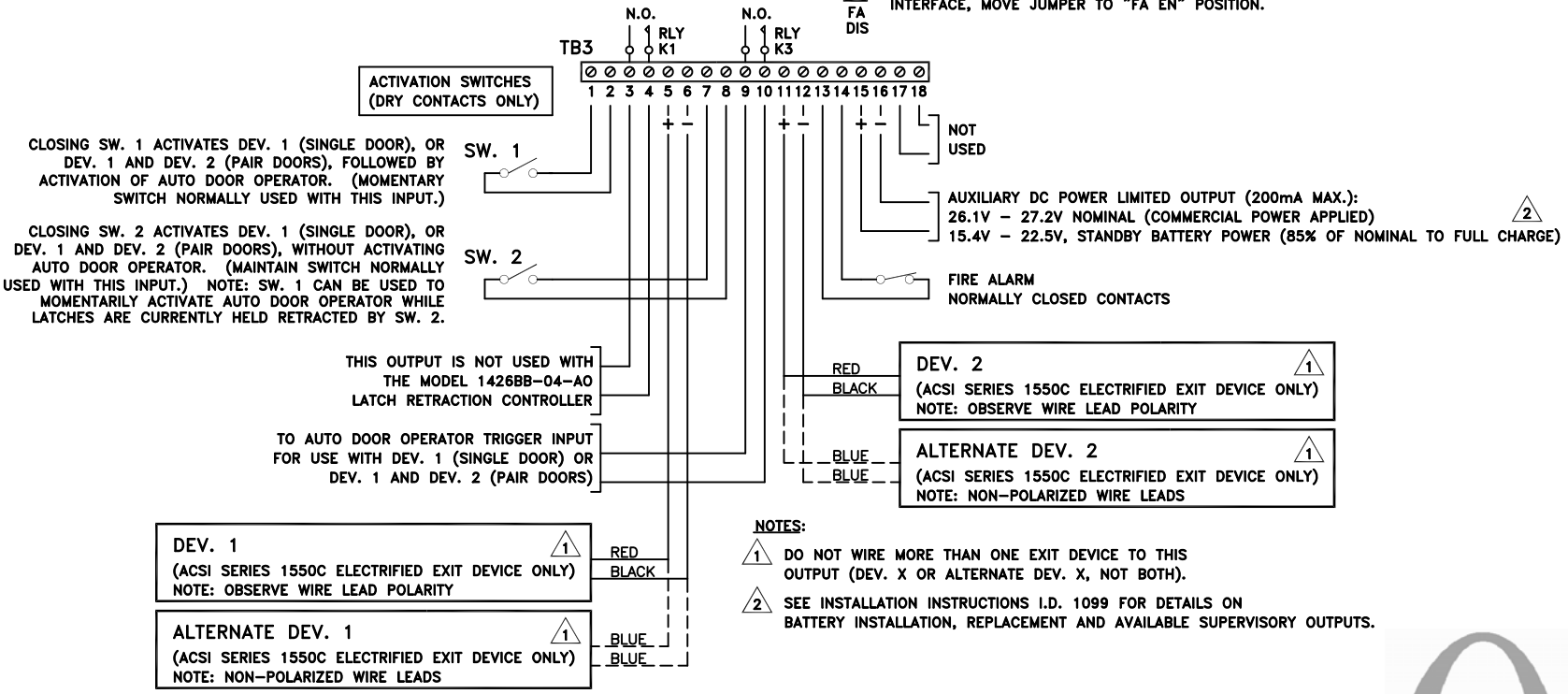

NOTES:

1. DO NOT WIRE MORE THAN ONE EXIT DEVICE TO THIS OUTPUT (DEV. X OR ALTERNATE DEV. X, NOT BOTH).
2. SEE INSTALLATION INSTRUCTIONS I.D. 1099 FOR DETAILS ON BATTERY INSTALLATION, REPLACEMENT AND AVAILABLE SUPERVISORY OUTPUTS.

FOR TROUBLE SHOOTING ASSISTANCE, CONTACT ACSI TECHNICAL SUPPORT:
1-800-753-5558

REV. 06/15

ACSI ARCHITECTURAL CONTROL SYSTEMS INC.

II-1400-13

INSTALLATION INSTRUCTIONS

RM RELAY MODULE

The RM Relay Module can be used with all ACSI Series1400 power supplies to provide dry output contacts for special applications that require interfacing with other electronic equipment requiring a dry contact input signal. The module can be wired across the locking device output terminals of the Model 1400-6100, 1420, and 1440 power supply control board, and the 1410 Series daughter board, with or without the locking device connected. When using the RM Relay Module with the 1406/1426 Series ELR power supplies, it must be wired as shown in Figure 2 for adding electromagnetic locks with fire alarm interface.

Installing the Module

The RM Relay Module can be installed horizontally or vertically inside the 1400 Series power supply or inside a smaller junction box in another location. If the relay is switching power to a locking device, it is recommended to locate the module no further than 10 ft. from the power supply to keep line resistance of the conductors running between the power supply and locking device to a minimum.

There are two methods of mounting the RM Relay Module. **Method 1:** It can mounted to a clean, hard surface using the supplied double adhesive foam tape. Peel off the backing of one side and adhere it to the top flanged side of the relay's clear plastic case (Figure 1). Peel off the backing from the other side and press the relay against the surface, holding it in place under pressure for 30 seconds. **Method 2:** The flanged side of the relay case contains two mounting holes for fastening the relay to the surface using #6 screws (not supplied). This method requires drilling and tapping if mounting to a metal surface.

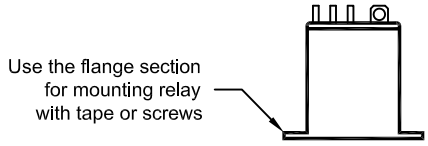

Fig. 1

RM Wire Designation

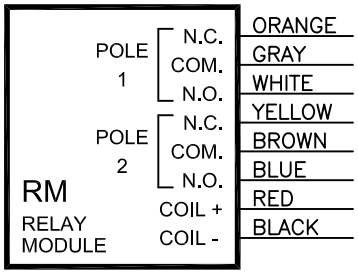

Specifications:

Contact Configuration:	DPDT
Rated Coil Voltage:	24VDC
Pick-up Voltage:	19.2VDC
Dropout Voltage:	2.4VDC
Maximum Voltage:	26.4VDC
Coil Current @ Rated Voltage:	37mA
UL Approved Contact Rating:	15A @ 28VDC (Resistive), 40°C

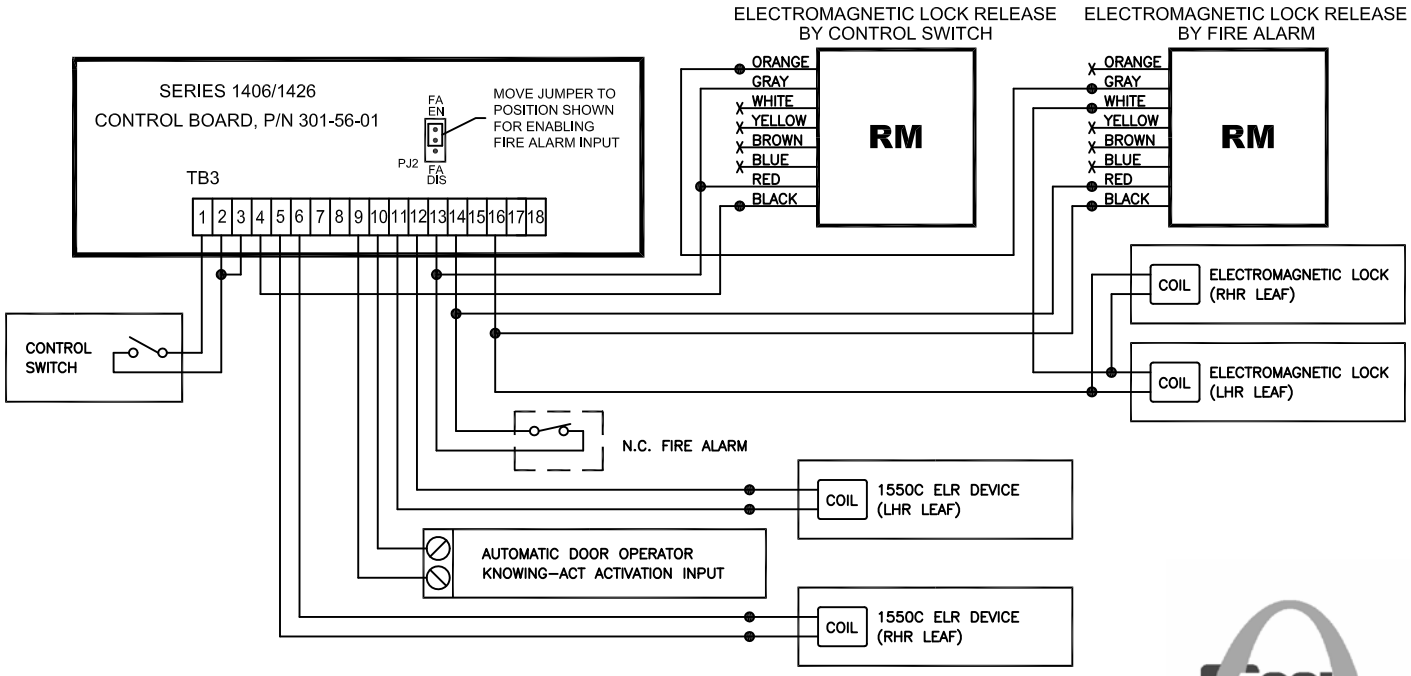

Fig. 2

ACSI Series 1550K-MD and 1550-MD Motor Drive Electric Latch Retraction

Riser and Point-to-Point Drawings for Standard Access Control Applications Using Maintained Latch Retraction Control or Momentary Latch Retraction Control with Field-Adjustable Time Delay For Use with ACSI Part Numbers 1451 and 1451-TD

Riser and Point-to-Point Drawings for Standard Access Control and Day/Night Applications for Openings Using Automatic Door Operators For Use with ACSI Part Numbers 1451-AO and 1451-DN

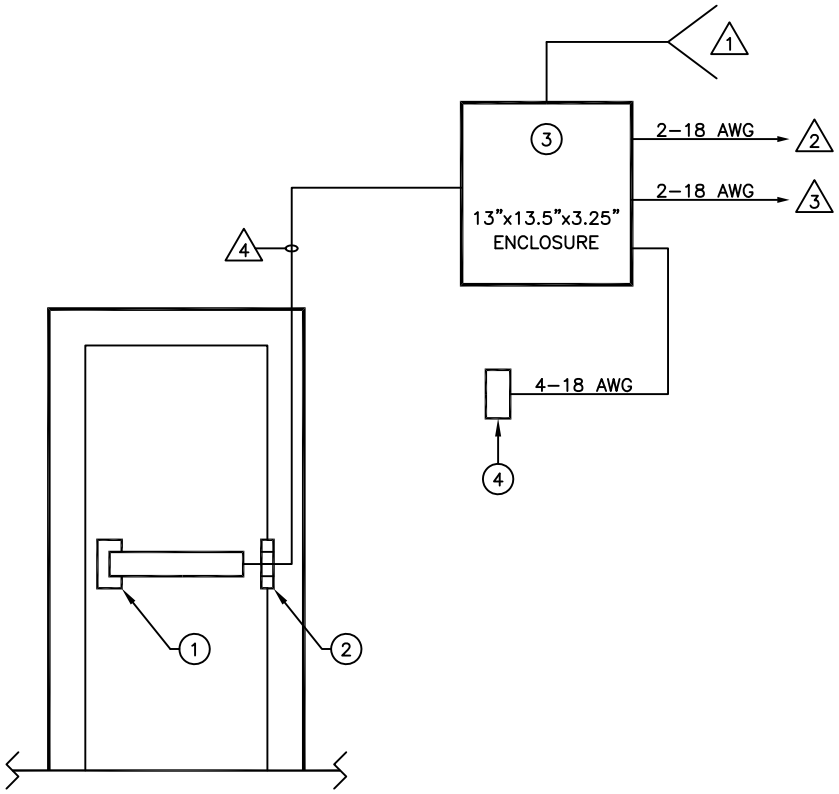

NOTES:

1. TO 115V., 60HZ., 15A SERVICE.
2. TO N.C. FIRE ALARM, IF REQUIRED.
3. TO A CONTROL DEVICE USING MAINTAINED SWITCH CONTACTS (PUSHBUTTON SWITCH, KEY SWITCH) OR A CONTROL DEVICE RELAY OUTPUT EQUIPPED WITH BUILT–IN TIME DELAY (CARD READER, KEYPAD, MOTION SENSOR).
4.

WIRE GAUGE	MAX. LENGTH 2–COND. CABLE
22 AWG	70 FEET
20 AWG	110 FEET
18 AWG	180 FEET
16 AWG	280 FEET
14 AWG	450 FEET
12 AWG	720 FEET

RISER DIAGRAM FOR STANDARD ACCESS CONTROL WITH MAINTAINED ELECTRIC LATCH RETRACTION, OR MOMENTARY RETRACTION BY CONTROL DEVICES WITH BUILT-IN TIME DELAY, USING SERIES 1550K-MD OR 1550-MD MOTOR DRIVE ELR DEVICES

ACSI SUPPLIED EQUIPMENT:

1. SERIES 1550K–MD OR 1550–MD MOTOR DRIVE ELECTRIC LATCH RETRACTION
2. SERIES 1100 POWER TRANSFER HINGE
3. 1451PS POWER SUPPLY
4. RM RELAY MODULE
   NOTE: DO NOT LOCATE MORE THAN 10 FT. FROM POWER SUPPLY

ARCHITECTURAL CONTROL SYSTEMS, INCORPORATED
ST. LOUIS, MISSOURI
1–800–753–5558

TOLERANCES UNLESS NOTED
FRACTION ±1/64
DECIMAL ± .005
ANGULAR ±1°
DRILL +.007 −.001
REAM +.001 −.000
PUNCH +.004 −.001

DESCRIPTION	DRAWING NO.	MATERIAL
ACSI P/N 1451 ELR ACCESS CONTROL	REF 6039–R1	

2/6/15	RELEASED	CRH
DATE	REV.	APPRV.
SCALE ~N~	DRAWN BY CRH	DATE 2/6/15
SHEET 1 OF 1	APPRV. BY CRH	DATE 2/6/15
DO NOT SCALE THIS DRAWING		

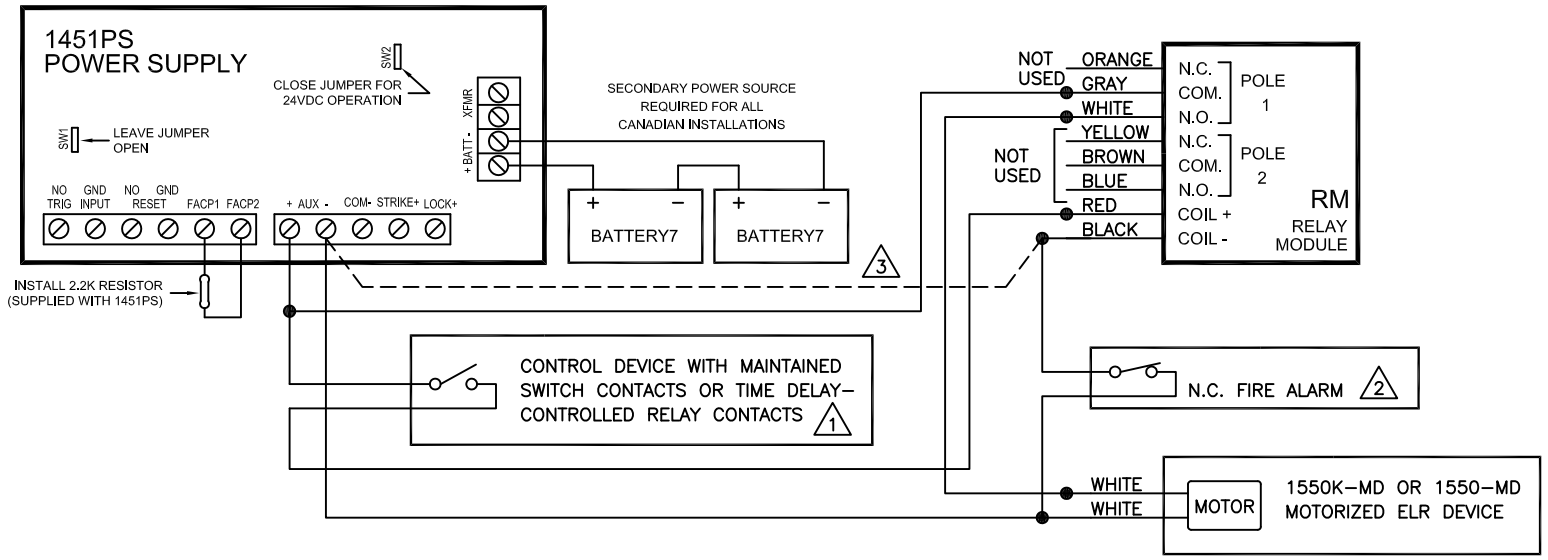

POINT-TO-POINT WIRING DIAGRAM
STANDARD ACCESS CONTROL WITH MAINTAINED ELECTRIC LATCH RETRACTION, OR MOMENTARY RETRACTION BY CONTROL DEVICES WITH BUILT-IN TIME DELAY, USING SERIES 1550K-MD OR 1550-MD MOTOR DRIVE ELR DEVICES

NOTES:

1. LATCHBOLT IS PROJECTED WITH SWITCH IN OPEN POSITION, AS SHOWN. CLOSING SWITCH CONTACTS WILL RETRACT LATCHBOLT.
2. A FIRE ALARM CONDITION WILL IMMEDIATELY PROJECT THE LATCHBOLT WHEN CURRENTLY RETRACTED.
3. IF FIRE ALARM IS NOT REQUIRED, CONNECT A WIRE BETWEEN THE COIL NEGATIVE (–) OF RELAY RM AND THE AUXILIARY OUTPUT NEGATIVE (–) TERMINAL (SHOWN AS DOTTED LINE).

ARCHITECTURAL CONTROL SYSTEMS, INCORPORATED
ST. LOUIS, MISSOURI
1-800-753-5558

TOLERANCES UNLESS NOTED
FRACTION ±1/64 DRILL +.007 −.001
DECIMAL ± .005 REAM +.001 −.000
ANGULAR ±1° PUNCH +.004 −.001

DESCRIPTION	DRAWING NO.	MATERIAL
ACSI P/N 1451 ELR ACCESS CONTROL	REF 6039-P1	

2/3/15	RELEASED	CRH
DATE	REV.	APPRV.
SCALE NONE	DRAWN BY CRH	DATE 2/3/15
SHEET 1 OF 1	APPRV. BY CRH	DATE 2/3/15

DO NOT SCALE THIS DRAWING

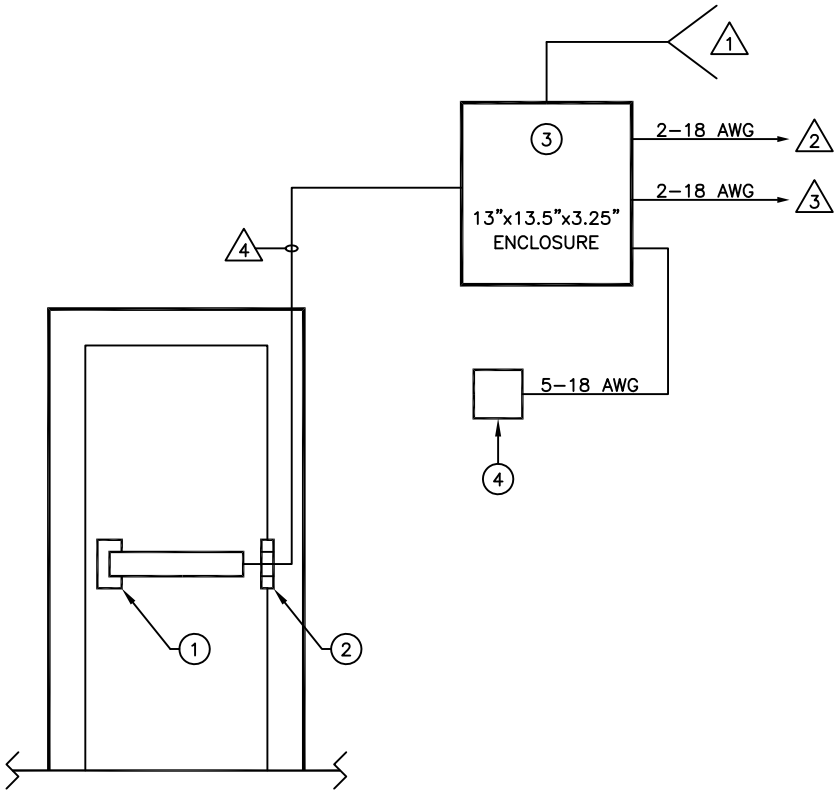

NOTES:

1. TO 115V., 60HZ., 15A SERVICE.
2. TO N.C. FIRE ALARM, IF REQUIRED.
3. TO A MOMENTARY PUSHBUTTON OR KEY SWITCH FOR TIMED MOMENTARY DOOR CONTROL USING THE TM TIMER MODULE'S FIELD–ADJUSTABLE TIME DELAY.
4.

WIRE GAUGE	MAX. LENGTH 2–COND. CABLE
22 AWG	70 FEET
20 AWG	110 FEET
18 AWG	180 FEET
16 AWG	280 FEET
14 AWG	450 FEET
12 AWG	720 FEET

RISER DIAGRAM FOR STANDARD ACCESS CONTROL WITH FIELD-ADJUSTBLE TIME DELAY USING SERIES 1550K-MD OR 1550-MD MOTOR DRIVE ELR DEVICES

ACSI SUPPLIED EQUIPMENT:

1. SERIES 1550K–MD OR 1550–MD MOTOR DRIVE ELECTRIC LATCH RETRACTION
2. SERIES 1100 POWER TRANSFER HINGE
3. 1451PS POWER SUPPLY
4. TM TIMER MODULE
   NOTE: DO NOT LOCATE MORE THAN 10 FT. FROM POWER SUPPLY

ARCHITECTURAL CONTROL SYSTEMS, INCORPORATED
ST. LOUIS, MISSOURI
1–800–753–5558

TOLERANCES UNLESS NOTED
FRACTION ±1/64
DECIMAL ± .005
ANGULAR ±1°
DRILL +.007 −.001
REAM +.001 −.000
PUNCH +.004 −.001

DESCRIPTION	DRAWING NO.	MATERIAL
ACSI P/N 1451–TD ELR ACCESS CONTROL	REF 6039–R2	

2/6/15	RELEASED	CRH
DATE	REV.	APPRV.
SCALE NTS	DRAWN BY CRH	DATE 2/6/15
SHEET 1 OF 1	APPRV. BY CRH	DATE 2/6/15
DO NOT SCALE THIS DRAWING		

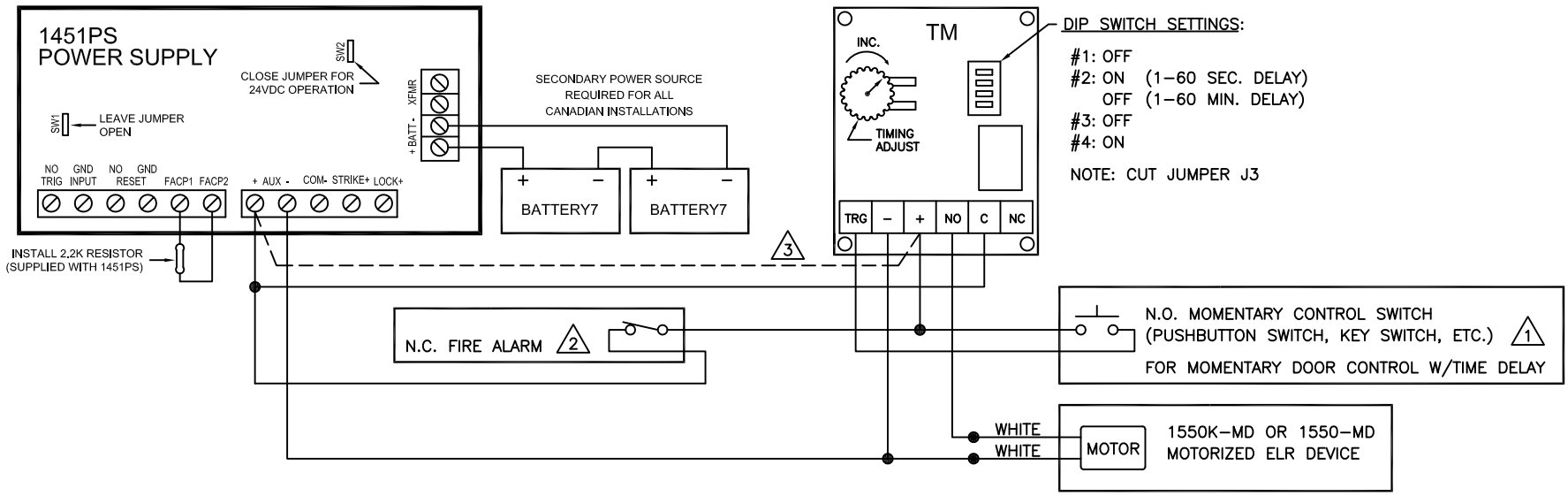

POINT-TO-POINT WIRING DIAGRAM
STANDARD ACCESS CONTROL WITH
FIELD-ADJUSTABLE TIME DELAY USING SERIES
1550K-MD OR 1550-MD MOTOR DRIVE ELR DEVICES

NOTES:

1. LATCHBOLT IS NORMALLY PROJECTED. A MOMENTARY CLOSURE OF SWITCH CONTACTS WILL RETRACT LATCHBOLT. DEVICE'S LATCHBOLT WILL REMAIN RETRACTED FOR PERIOD OF TIME AS DETERMINED BY SETTING OF ADJUSTMENT WHEEL ON TM TIMER MODULE AND TIME RANGE DIP SWITCH SETTING (SECONDS OR MINUTES). LATCHBOLT PROJECTS AFTER DELAY PERIOD TIMES OUT.
2. A FIRE ALARM CONDITION WILL IMMEDIATELY PROJECT LATCHBOLT (WHEN CURRENTLY RETRACTED) AND RESET TIMER MODULE.
3. IF FIRE ALARM IS NOT REQUIRED, CONNECT A WIRE BETWEEN THE POSITIVE (+) TERMINAL OF TIMER TM AND THE AUXILIARY OUTPUT POSITIVE (+) TERMINAL (SHOWN AS DOTTED LINE).

ARCHITECTURAL CONTROL SYSTEMS, INCORPORATED
ST. LOUIS, MISSOURI
1-800-753-5558

TOLERANCES UNLESS NOTED
FRACTION ±1/64
DECIMAL ± .005
ANGULAR ±1°
DRILL +.007 −.001
REAM +.001 −.000
PUNCH +.004 −.001

DESCRIPTION	DRAWING NO.	MATERIAL
ACSI P/N 1451–TD ELR ACCESS CONTROL	REF 6039–P2	

2/4/15	RELEASED	CRH
DATE	REV.	APPRV.
SCALE NONE	DRAWN BY CRH	DATE 2/4/15
SHEET 1 OF 1	APPRV. BY CRH	DATE 2/4/15
DO NOT SCALE THIS DRAWING		

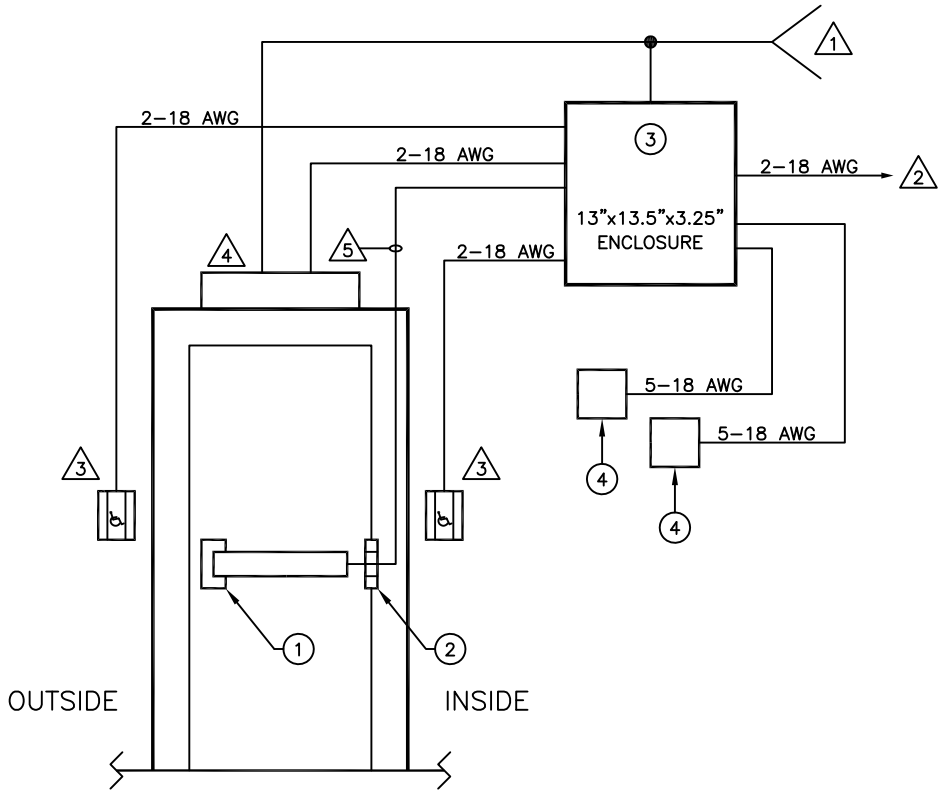

NOTES:

1. TO 115V., 60HZ., 15A SERVICE.
2. TO N.C. FIRE ALARM, IF REQUIRED.
3. WALL SWITCH
4. AUTOMATIC DOOR OPERATOR
5.

WIRE GAUGE	MAX. LENGTH 2–COND. CABLE
22 AWG	70 FEET
20 AWG	110 FEET
18 AWG	180 FEET
16 AWG	280 FEET
14 AWG	450 FEET
12 AWG	720 FEET

RISER DIAGRAM FOR STANDARD AUTOMATED DOOR OPENING SYSTEM APPLICATION USING SERIES 1550K-MD OR 1550-MD MOTOR DRIVE ELR DEVICES

ACSI SUPPLIED EQUIPMENT:

1. SERIES 1550K–MD OR 1550–MD MOTOR DRIVE ELECTRIC LATCH RETRACTION
2. SERIES 1100 POWER TRANSFER HINGE
3. 1451PS POWER SUPPLY
4. TM TIMER MODULE
   NOTE: DO NOT LOCATE MORE THAN 10 FT. FROM POWER SUPPLY

ARCHITECTURAL CONTROL SYSTEMS, INCORPORATED
ST. LOUIS, MISSOURI
1–800–753–5558

TOLERANCES UNLESS NOTED
FRACTION ±1/64
DECIMAL ± .005
ANGULAR ±1°
DRILL +.007 −.001
REAM +.001 −.000
PUNCH +.004 −.001

DESCRIPTION	DRAWING NO.	MATERIAL
ACSI P/N 1451–AO ELR ACCESS CONTROL	REF 6039–R3	

2/6/15	RELEASED	CRH
DATE	REV.	APPRV.
SCALE NTS	DRAWN BY CRH	DATE 2/6/15
SHEET 1 OF 1	APPRV. BY CRH	DATE 2/6/15
DO NOT SCALE THIS DRAWING		

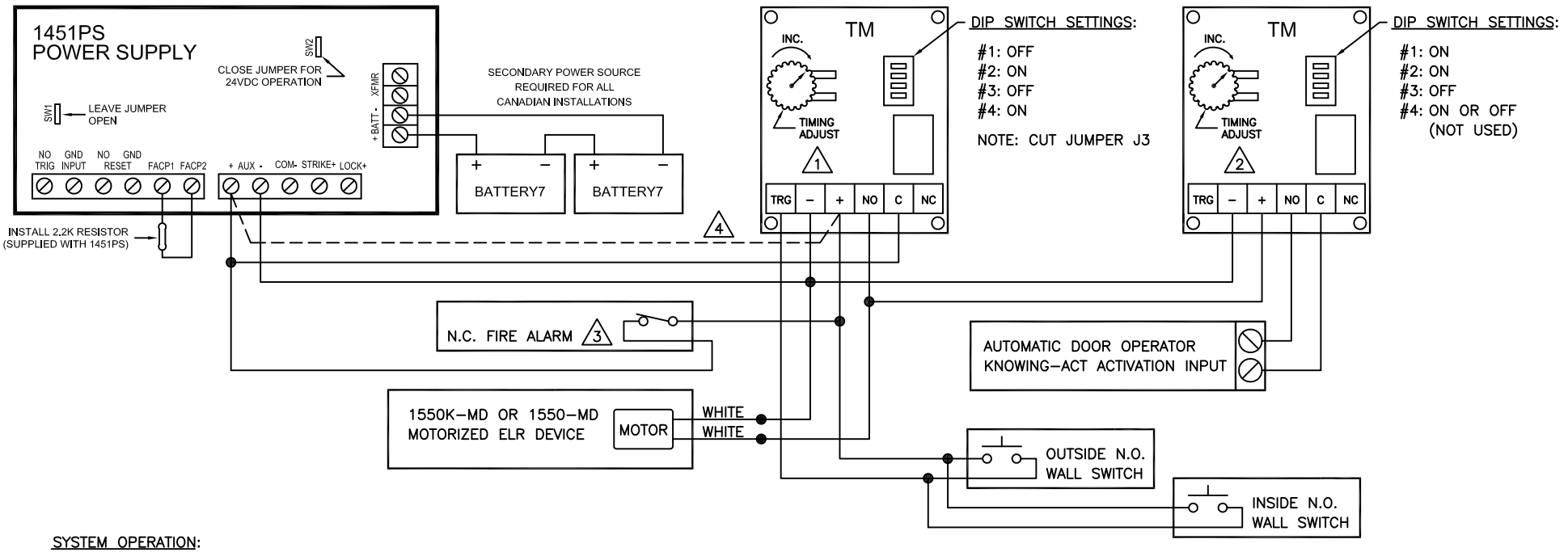

SYSTEM OPERATION:

OUTSIDE OR INSIDE WALL SWITCH SEQUENTIALLY RETRACTS LATCHBOLT AND ACTIVATES AUTOMATIC DOOR OPERATOR.

NOTES:

1. ADJUST LATCH RETRACTION DELAY TIMER FOR 3–5 SEC. TO ENSURE LATCHBOLT IS FULLY RETRACTED BEFORE AUTO OPERATOR OPENS DOOR, AND TO ENSURE DOOR WILL LATCH WHEN IT CLOSES.
2. ADJUST AUTO OPERATOR DELAY–BEFORE–ACTIVATE TIMER FOR 1–2 SEC. TO ALLOW ENOUGH TIME FOR LATCHBOLT TO FULLY RETRACT BEFORE OPERATOR IS ACTIVATED. NOTE: THE "TRG" TERMINAL IS NOT USED WITH THIS TIMER.
3. A FIRE ALARM CONDITION WILL IMMEDIATELY PROJECT LATCHBOLT (WHEN CURRENTLY RETRACTED), DISABLE USE OF WALL SWITCHES AND RESET TIMER MODULES.
4. IF FIRE ALARM IS NOT REQUIRED, CONNECT A WIRE BETWEEN THE POSITIVE (+) TERMINAL OF LATCH RETRACTION DELAY TIMER TM AND THE AUXILIARY OUTPUT POSITIVE (+) TERMINAL (SHOWN AS DOTTED LINE).

POINT-TO-POINT WIRING DIAGRAM
STANDARD ACCESS CONTROL WITH AUTOMATIC DOOR OPERATOR
USING SERIES 1550K-MD OR 1550-MD MOTOR DRIVE ELR DEVICES

ARCHITECTURAL CONTROL SYSTEMS, INCORPORATED
ST. LOUIS, MISSOURI
1–800–753–5558

TOLERANCES UNLESS NOTED
FRACTION ±1/64
DECIMAL ± .005
ANGULAR ±1°
DRILL +.007 −.001
REAM +.001 −.000
PUNCH +.004 −.001

DESCRIPTION	DRAWING NO.	MATERIAL
ACSI P/N 1451–AO ELR ACCESS CONTROL	REF 6039–P3	

2/4/15	RELEASED	CRH
DATE	REV.	APPRV.
SCALE N/A	DRAWN BY CRH	DATE 2/4/15
SHEET 1 OF 1	APPRV. BY CRH	DATE 2/4/15

DO NOT SCALE THIS DRAWING

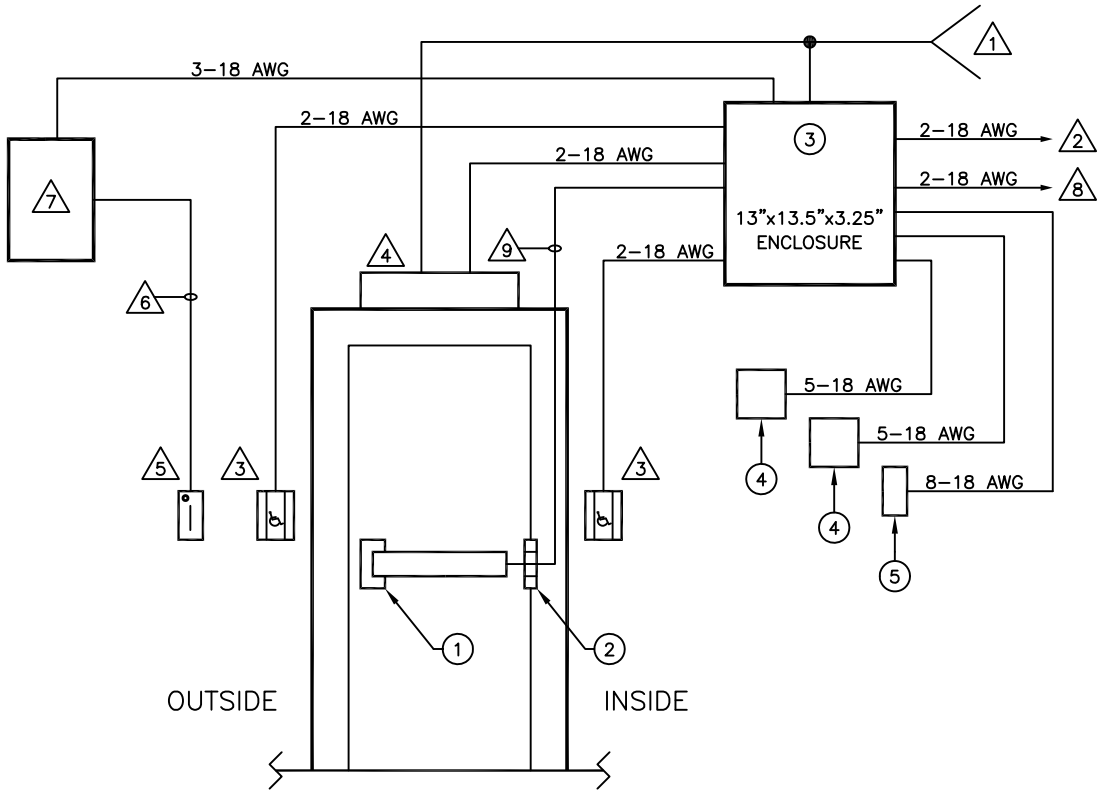

NOTES:

1. TO 115V., 60HZ., 15A SERVICE.
2. TO N.C. FIRE ALARM, IF REQUIRED.
3. WALL SWITCH
4. AUTOMATIC DOOR OPERATOR
5. CARD READER UNIT
6. CARD READER POWER/DATA CABLE
7. CARD ACCESS CONTROL UNIT CONTAINING DOOR CONTROL RELAY RESPONDING TO CARD READER SWIPE FOR MOMENTARY AUTHORIZED ENTRY (NIGHT MODE)
8. ACCESS CONTROL SYSTEM DAY/NIGHT SWITCHING OUTPUT (TIME CLOCK, COMPUTER–CONTROLLED TIME SCHEDULE, ETC.)
9.

WIRE GAUGE	MAX. LENGTH 2–COND. CABLE
22 AWG	70 FEET
20 AWG	110 FEET
18 AWG	180 FEET
16 AWG	280 FEET
14 AWG	450 FEET
12 AWG	720 FEET

RISER DIAGRAM FOR DAY/NIGHT AUTOMATED DOOR OPENING SYSTEM APPLICATION USING SERIES 1550K-MD OR 1550-MD MOTOR DRIVE ELR DEVICES

ACSI SUPPLIED EQUIPMENT:

1. SERIES 1550K–MD OR 1550–MD MOTOR DRIVE ELECTRIC LATCH RETRACTION
2. SERIES 1100 POWER TRANSFER HINGE
3. 1451PS POWER SUPPLY
4. TM TIMER MODULE*
5. RM RELAY MODULE*

*DO NOT LOCATE MORE THAN 10 FT. FROM POWER SUPPLY

ARCHITECTURAL CONTROL SYSTEMS, INCORPORATED
ST. LOUIS, MISSOURI
1–800–753–5558

TOLERANCES UNLESS NOTED
FRACTION ±1/64
DECIMAL ± .005
ANGULAR ±1°
DRILL +.007 −.001
REAM +.001 −.000
PUNCH +.004 −.001

DESCRIPTION	DRAWING NO.	MATERIAL
ACSI P/N 1451–DN ELR ACCESS CONTROL	REF 6039–R4	

2/6/15	RELEASED	CRH
DATE	REV.	APPRV.
SCALE NTS	DRAWN BY CRH	DATE 2/6/15
SHEET 1 OF 1	APPRV. BY CRH	DATE 2/6/15
DO NOT SCALE THIS DRAWING		

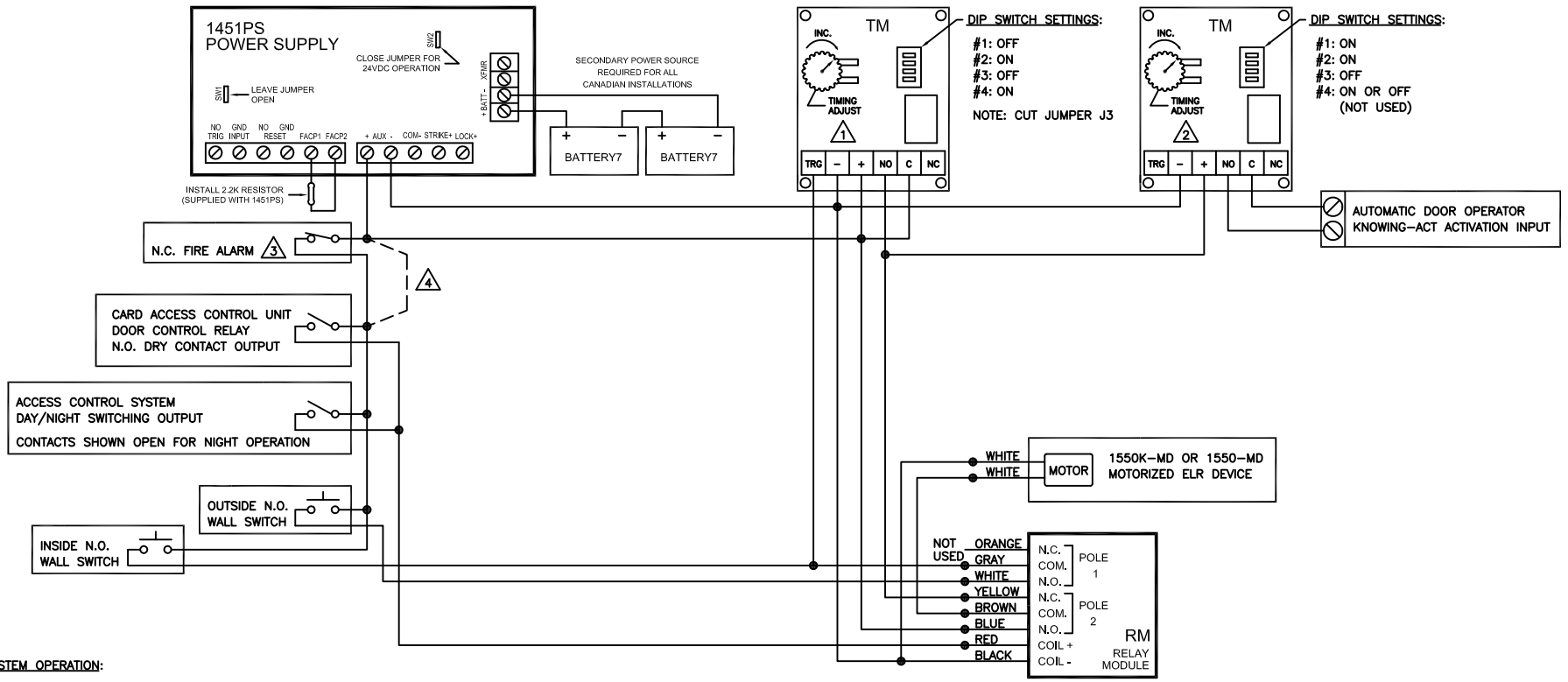

SYSTEM OPERATION:

WHEN THE ACCESS CONTROL SYSTEM DAY/NIGHT SWITCHING OUTPUT IS SET FOR DAY OPERATION (DRY CONTACTS CLOSED), THE LATCHBOLT WILL RETRACT. PUSHING THE OUTSIDE OR INSIDE WALL SWITCH WILL ACTIVATE THE AUTOMATIC DOOR OPERATOR.

WHEN THE ACCESS CONTROL SYSTEM DAY/NIGHT SWITCHING OUTPUT IS SET FOR NIGHT OPERATION (DRY CONTACTS OPEN), THE LATCHBOLT WILL PROJECT AND THE OUTSIDE WALL SWITCH BECOMES DISABLED. A VALID SWIPE FROM THE CARD READER WILL TEMPORARILY RETRACT THE LATCHBOLT. WHILE THE CARD READER IS IN ITS ACTIVATED STATE, THE OUTSIDE WALL SWITCH IS ENABLED FOR ACTIVATING THE AUTOMATIC DOOR OPERATOR. THE INSIDE WALL SWITCH IS ALWAYS ENABLED IN NIGHT MODE AND WILL SEQUENTIALLY RETRACT THE LATCHBOLT AND ACTIVATE THE AUTOMATIC DOOR OPERATOR.

NOTES:

1. ADJUST LATCH RETRACTION DELAY TIMER FOR 3-5 SEC. TO ENSURE LATCHBOLT IS FULLY RETRACTED BEFORE AUTO OPERATOR OPENS DOOR, AND TO ENSURE DOOR WILL LATCH WHEN IT CLOSES.
2. ADJUST AUTO OPERATOR DELAY-BEFORE-ACTIVATE TIMER FOR 1-2 SEC. TO ALLOW ENOUGH TIME FOR LATCHBOLT TO FULLY RETRACT BEFORE OPERATOR IS ACTIVATED. NOTE: THE "TRG" TERMINAL IS NOT USED WITH THIS TIMER.
3. A FIRE ALARM CONDITION OCCURRING WHILE IN DAY MODE WILL IMMEDIATELY PROJECT LATCHBOLT AND DISABLE USE OF OUTSIDE AND INSIDE WALL SWITCHES. WHEN A FIRE ALARM CONDITION OCCURS IN NIGHT MODE, LATCHBOLT WILL REMAIN PROJECTED, AND BOTH OUTSIDE AND INSIDE WALL SWITCHES WILL BECOME DISABLED. NOTE: IF A FIRE ALARM OCCURS AT THE BEGINNING OF A DOOR OPEN CYCLE, THE SYSTEM APPLICATION WILL ALLOW THE OPENING CYCLE TO BE COMPLETED BEFORE DISABLING LATCH RETRACTION AND USE OF BOTH WALL SWITCHES.
4. IF FIRE ALARM IS NOT REQUIRED, CONNECT ONE SIDE OF THE CARD ACCESS RELAY OUTPUT, ACCESS CONTROL SYSTEM DAY/NIGHT SWITCHING OUTPUT, OUTSIDE WALL SWITCH AND INSIDE WALL SWITCH (ALL SHOWN BUSSED TOGETHER) TO THE AUXILIARY OUTPUT POSITIVE (+) TERMINAL (SHOWN AS DOTTED LINE).

POINT-TO-POINT WIRING DIAGRAM
DAY/NIGHT APPLICATION - VARIATION #1
USING SERIES 1550K-MD OR 1550-MD MOTOR DRIVE ELR DEVICES

ARCHITECTURAL CONTROL SYSTEMS, INCORPORATED
ST. LOUIS, MISSOURI
1-800-753-5558

TOLERANCES UNLESS NOTED
FRACTION ±1/64
DECIMAL ± .005
ANGULAR ±1°
DRILL +.007 -.001
REAM +.001 -.000
PUNCH +.004 -.001

DESCRIPTION	DRAWING NO.	MATERIAL
ACSI P/N 1451-DN ELR ACCESS CONTROL	REF 6039-P4-1	

2/5/15	RELEASED	CRH
DATE	REV.	APPRV.
SCALE NONE	DRAWN BY CRH	DATE 2/5/15
SHEET 1 OF 1	APPRV. BY CRH	DATE 2/5/15

DO NOT SCALE THIS DRAWING

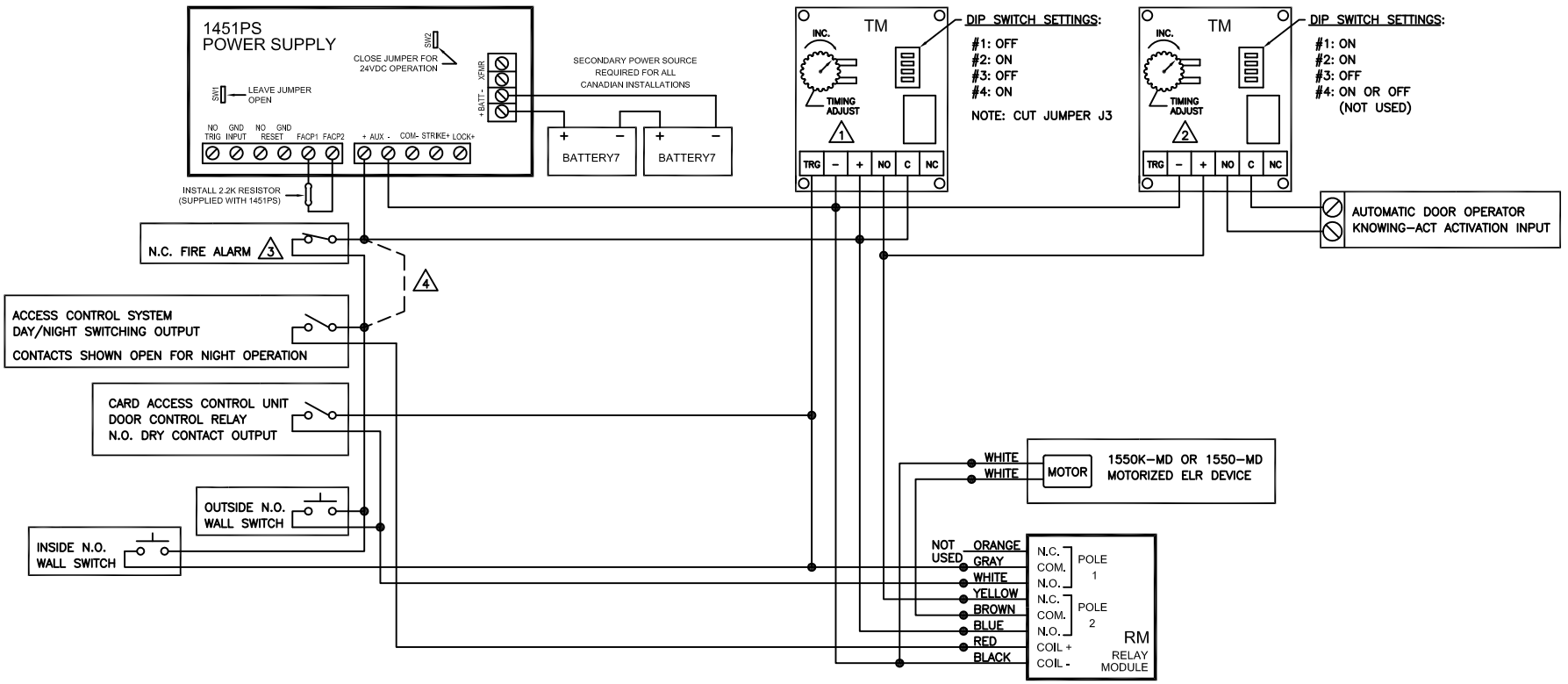

SYSTEM OPERATION:

WHEN THE ACCESS CONTROL SYSTEM DAY/NIGHT SWITCHING OUTPUT IS SET FOR DAY OPERATION (DRY CONTACTS CLOSED), THE LATCHBOLT WILL RETRACT. PUSHING THE OUTSIDE OR INSIDE WALL SWITCH WILL ACTIVATE THE AUTOMATIC DOOR OPERATOR.

WHEN THE ACCESS CONTROL SYSTEM DAY/NIGHT SWITCHING OUTPUT IS SET FOR NIGHT OPERATION (DRY CONTACTS OPEN), THE LATCHBOLT WILL PROJECT AND THE OUTSIDE WALL SWITCH BECOMES DISABLED. A VALID SWIPE FROM THE CARD READER WILL TEMPORARILY ENABLE THE OUTSIDE WALL SWITCH TO SEQUENTIALLY RETRACT THE LATCHBOLT AND ACTIVATE THE AUTOMATIC DOOR OPERATOR. THE INSIDE WALL SWITCH IS ALWAYS ENABLED IN NIGHT MODE AND WILL SEQUENTIALLY RETRACT THE LATCHBOLT AND ACTIVATE THE AUTOMATIC DOOR OPERATOR.

NOTES:

1. ADJUST LATCH RETRACTION DELAY TIMER FOR 3–5 SEC. TO ENSURE LATCHBOLT IS FULLY RETRACTED BEFORE AUTO OPERATOR OPENS DOOR, AND TO ENSURE DOOR WILL LATCH WHEN IT CLOSES.
2. ADJUST AUTO OPERATOR DELAY–BEFORE–ACTIVATE TIMER FOR 1–2 SEC. TO ALLOW ENOUGH TIME FOR LATCHBOLT TO FULLY RETRACT BEFORE OPERATOR IS ACTIVATED. NOTE: THE "TRG" TERMINAL IS NOT USED WITH THIS TIMER.
3. A FIRE ALARM CONDITION OCCURRING WHILE IN DAY MODE WILL IMMEDIATELY PROJECT LATCHBOLT AND DISABLE USE OF OUTSIDE AND INSIDE WALL SWITCHES. WHEN A FIRE ALARM CONDITION OCCURS IN NIGHT MODE, LATCHBOLT WILL REMAIN PROJECTED, AND BOTH OUTSIDE AND INSIDE WALL SWITCHES WILL BECOME DISABLED. NOTE: IF A FIRE ALARM OCCURS AT THE BEGINNING OF A DOOR OPEN CYCLE, THE SYSTEM APPLICATION WILL ALLOW THE OPENING CYCLE TO BE COMPLETED BEFORE DISABLING LATCH RETRACTION AND USE OF BOTH WALL SWITCHES.
4. IF FIRE ALARM IS NOT REQUIRED, CONNECT ONE SIDE OF THE ACCESS CONTROL SYSTEM DAY/NIGHT SWITCHING OUTPUT, OUTSIDE WALL SWITCH AND INSIDE WALL SWITCH (ALL SHOWN BUSSED TOGETHER) TO THE AUXILIARY OUTPUT POSITIVE (+) TERMINAL (SHOWN AS DOTTED LINE).

POINT-TO-POINT WIRING DIAGRAM
DAY/NIGHT APPLICATION - VARIATION #2
USING SERIES 1550K-MD OR 1550-MD MOTOR DRIVE ELR DEVICES

ARCHITECTURAL CONTROL SYSTEMS, INCORPORATED
ST. LOUIS, MISSOURI
1–800–753–5558

TOLERANCES UNLESS NOTED
FRACTION ±1/64
DECIMAL ± .005
ANGULAR ±1°
DRILL +.007 –.001
REAM +.001 –.000
PUNCH +.004 –.001

DESCRIPTION	DRAWING NO.	MATERIAL
ACSI P/N 1451–DN ELR ACCESS CONTROL	REF 6039–P4–2	

2/5/15	RELEASED	CRH
DATE	REV.	APPRV.
SCALE NONE	DRAWN BY CRH	DATE 2/5/15
SHEET 1 OF 1	APPRV. BY CRH	DATE 2/5/15

DO NOT SCALE THIS DRAWING

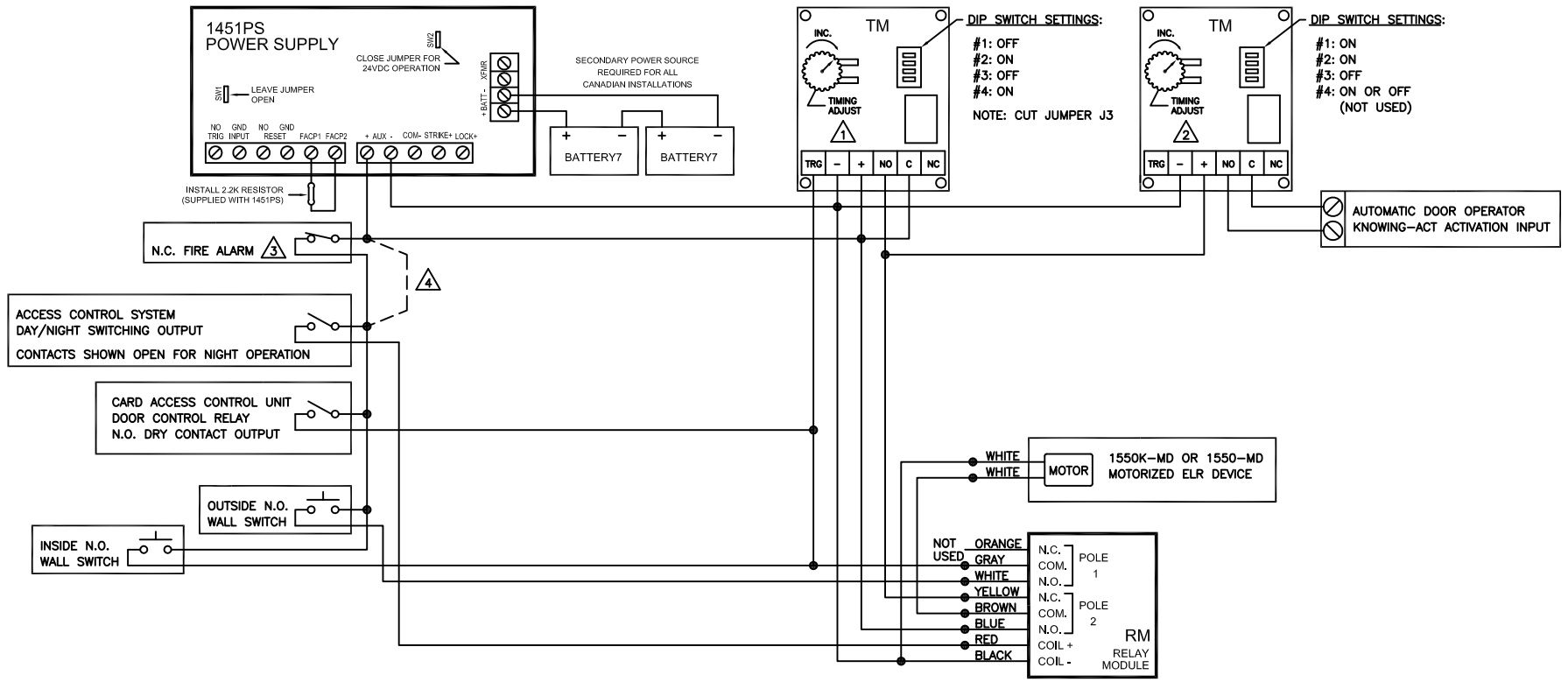

SYSTEM OPERATION:

WHEN THE ACCESS CONTROL SYSTEM DAY/NIGHT SWITCHING OUTPUT IS SET FOR DAY OPERATION (DRY CONTACTS CLOSED), THE LATCHBOLT WILL RETRACT. PUSHING THE OUTSIDE OR INSIDE WALL SWITCH WILL ACTIVATE THE AUTOMATIC DOOR OPERATOR.

WHEN THE ACCESS CONTROL SYSTEM DAY/NIGHT SWITCHING OUTPUT IS SET FOR NIGHT OPERATION (DRY CONTACTS OPEN), THE LATCHBOLT WILL PROJECT AND THE OUTSIDE WALL SWITCH BECOMES DISABLED. A VALID SWIPE FROM THE CARD READER WILL SEQUENTIALLY RETRACT THE LATCHBOLT AND ACTIVATE THE AUTOMATIC DOOR OPERATOR. THE INSIDE WALL SWITCH IS ALWAYS ENABLED IN NIGHT MODE AND WILL SEQUENTIALLY RETRACT THE LATCHBOLT AND ACTIVATE THE AUTOMATIC DOOR OPERATOR.

NOTES:

1. ADJUST LATCH RETRACTION DELAY TIMER FOR 3–5 SEC. TO ENSURE LATCHBOLT IS FULLY RETRACTED BEFORE AUTO OPERATOR OPENS DOOR, AND TO ENSURE DOOR WILL LATCH WHEN IT CLOSES.
2. ADJUST AUTO OPERATOR DELAY–BEFORE–ACTIVATE TIMER FOR 1–2 SEC. TO ALLOW ENOUGH TIME FOR LATCHBOLT TO FULLY RETRACT BEFORE OPERATOR IS ACTIVATED. NOTE: THE "TRG" TERMINAL IS NOT USED WITH THIS TIMER.
3. A FIRE ALARM CONDITION OCCURRING WHILE IN DAY MODE WILL IMMEDIATELY PROJECT LATCHBOLT AND DISABLE USE OF OUTSIDE AND INSIDE WALL SWITCHES. WHEN A FIRE ALARM CONDITION OCCURS IN NIGHT MODE, LATCHBOLT WILL REMAIN PROJECTED, AND BOTH OUTSIDE AND INSIDE WALL SWITCHES WILL BECOME DISABLED. NOTE: IF A FIRE ALARM OCCURS AT THE BEGINNING OF A DOOR OPEN CYCLE, THE SYSTEM APPLICATION WILL ALLOW THE OPENING CYCLE TO BE COMPLETED BEFORE DISABLING LATCH RETRACTION AND USE OF BOTH WALL SWITCHES.
4. IF FIRE ALARM IS NOT REQUIRED, CONNECT ONE SIDE OF THE ACCESS CONTROL SYSTEM DAY/NIGHT SWITCHING OUTPUT, CARD ACCESS RELAY OUTPUT, OUTSIDE WALL SWITCH AND INSIDE WALL SWITCH (ALL SHOWN BUSSED TOGETHER) TO THE AUXILIARY OUTPUT POSITIVE (+) TERMINAL (SHOWN AS DOTTED LINE).

POINT-TO-POINT WIRING DIAGRAM
DAY/NIGHT APPLICATION - VARIATION #3
USING SERIES 1550K-MD OR 1550-MD MOTOR DRIVE ELR DEVICES

ARCHITECTURAL CONTROL SYSTEMS, INCORPORATED
ST. LOUIS, MISSOURI
1–800–753–5558

TOLERANCES UNLESS NOTED
FRACTION ±1/64
DECIMAL ± .005
ANGULAR ±1°
DRILL +.007 –.001
REAM +.001 –.000
PUNCH +.004 –.001

DESCRIPTION	DRAWING NO.	MATERIAL
ACSI P/N 1451–DN ELR ACCESS CONTROL	REF 6039–P4–3	

2/6/15	RELEASED	CRH
DATE	REV.	APPRV.
SCALE NONE	DRAWN BY CRH	DATE 2/6/15
SHEET 1 OF 1	APPRV. BY CRH	DATE 2/6/15

DO NOT SCALE THIS DRAWING

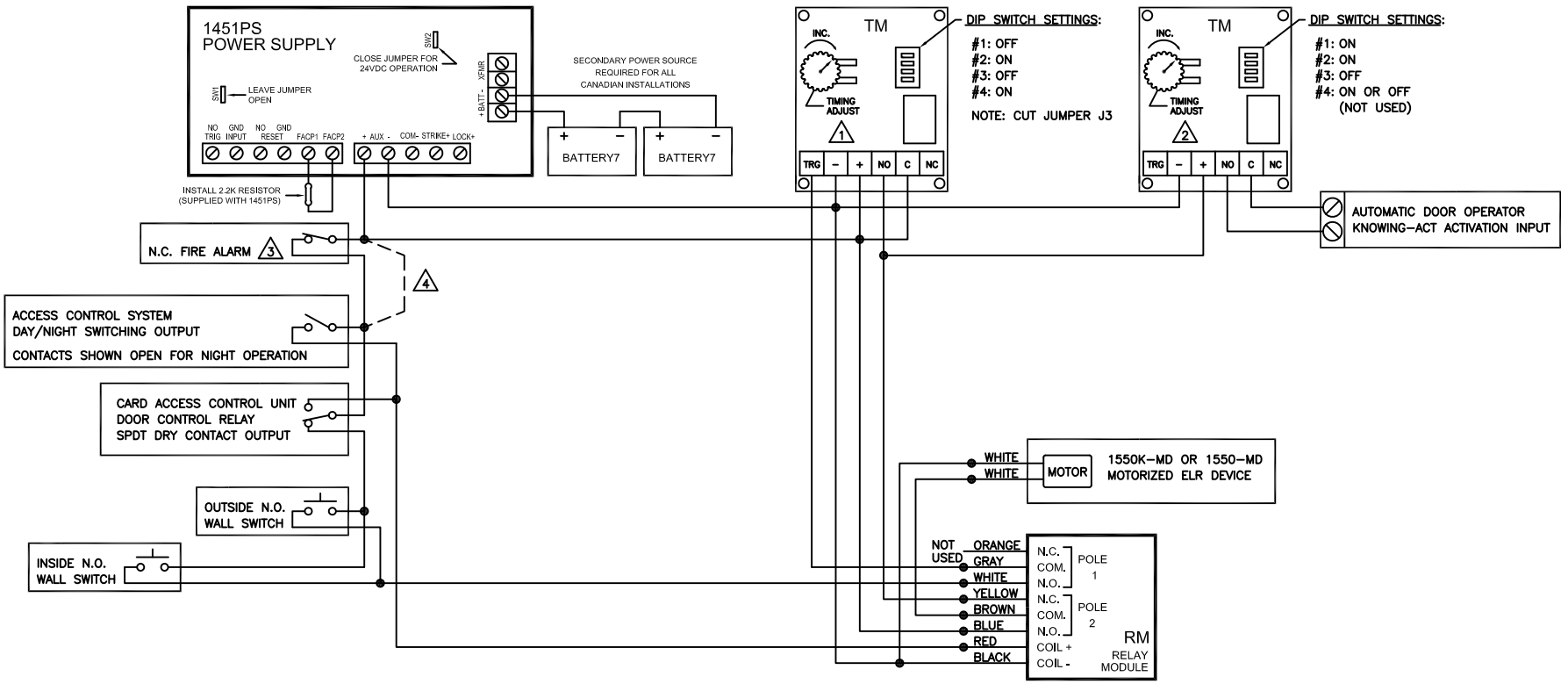

SYSTEM OPERATION:

WHEN THE ACCESS CONTROL SYSTEM DAY/NIGHT SWITCHING OUTPUT IS SET FOR DAY OPERATION (DRY CONTACTS CLOSED), THE LATCHBOLT WILL RETRACT. PUSHING THE OUTSIDE OR INSIDE WALL SWITCH WILL ACTIVATE THE AUTOMATIC DOOR OPERATOR.

WHEN THE ACCESS CONTROL SYSTEM DAY/NIGHT SWITCHING OUTPUT IS SET FOR NIGHT OPERATION (DRY CONTACTS OPEN), THE LATCHBOLT WILL PROJECT AND BOTH THE OUTSIDE AND INSIDE WALL SWITCHES BECOME DISABLED. A VALID SWIPE FROM THE CARD READER WILL ONLY RETRACT THE LATCHBOLT. THE DOOR MUST BE PULLED OPEN MANUALLY FOR ENTRY OR PUSHED OPEN MANUALLY FOR EXITING.

NOTES:

1. ADJUST LATCH RETRACTION DELAY TIMER FOR 3-5 SEC. TO ENSURE LATCHBOLT IS FULLY RETRACTED BEFORE AUTO OPERATOR OPENS DOOR, AND TO ENSURE DOOR WILL LATCH WHEN IT CLOSES.
2. ADJUST AUTO OPERATOR DELAY-BEFORE-ACTIVATE TIMER FOR 1-2 SEC. TO ALLOW ENOUGH TIME FOR LATCHBOLT TO FULLY RETRACT BEFORE OPERATOR IS ACTIVATED. NOTE: THE "TRG" TERMINAL IS NOT USED WITH THIS TIMER.
3. A FIRE ALARM CONDITION OCCURRING WHILE IN DAY MODE WILL IMMEDIATELY PROJECT LATCHBOLT AND DISABLE USE OF OUTSIDE AND INSIDE WALL SWITCHES. WHEN A FIRE ALARM CONDITION OCCURS IN NIGHT MODE, LATCHBOLT WILL REMAIN PROJECTED, AND BOTH OUTSIDE AND INSIDE WALL SWITCHES WILL BECOME DISABLED. NOTE: IF A FIRE ALARM OCCURS AT THE BEGINNING OF A DOOR OPEN CYCLE, THE SYSTEM APPLICATION WILL ALLOW THE OPENING CYCLE TO BE COMPLETED BEFORE DISABLING LATCH RETRACTION AND USE OF BOTH WALL SWITCHES.
4. IF FIRE ALARM IS NOT REQUIRED, CONNECT ONE SIDE OF THE ACCESS CONTROL SYSTEM DAY/NIGHT SWITCHING OUTPUT AND CARD ACCESS RELAY OUTPUT (BOTH SHOWN BUSSED TOGETHER) TO THE AUXILIARY OUTPUT POSITIVE (+) TERMINAL (SHOWN AS DOTTED LINE).

POINT-TO-POINT WIRING DIAGRAM
DAY/NIGHT APPLICATION - VARIATION #4
USING SERIES 1550K-MD OR 1550-MD MOTOR DRIVE ELR DEVICES

ARCHITECTURAL CONTROL SYSTEMS, INCORPORATED
ST. LOUIS, MISSOURI
1-800-753-5558

TOLERANCES UNLESS NOTED
FRACTION ±1/64
DECIMAL ± .005
ANGULAR ±1°
DRILL +.007 -.001
REAM +.001 -.000
PUNCH +.004 -.001

DESCRIPTION	DRAWING NO.	MATERIAL
ACSI P/N 1451-DN ELR ACCESS CONTROL	REF 6039-P4-4	

2/6/15	RELEASED	CRH
DATE	REV.	APPRV.
SCALE NONE	DRAWN BY CRH	DATE 2/6/15
SHEET 1 OF 1	APPRV. BY CRH	DATE 2/6/15

DO NOT SCALE THIS DRAWING

AL125UL • AL125ULX • AL125ULP • AL125ULE
Access Control Power Supply/Chargers

Overview:

AL125UL Series power-limited Power Supply/Chargers convert 115VAC 50/60Hz input into two individually PTC protected 12VDC or 24VDC outputs (see specifications). They are intended for use in applications requiring UL Listing for Access Control (UL294) and applications requiring an interface with Fire Alarm Control Panels.

Specifications:

Agency Listings:

- UL Listed for Access Control Systems (UL294). CUL Listed - CSA Standard C22.2 No.205-M1983, Signal Equipment.
- MEA - NYC Department of Buildings Approved.
- NFPA 101 (Life Safety).

Input:

- AL125UL, AL125ULX - 115VAC 50/60 Hz, 0.6A.
- AL125ULP, AL125ULE - 24VAC @ 40VA.

Output:

- Two (2) 12VDC or 24VDC, Class 2 Rated Power-Limited Outputs.
- 1A total supply current @ 12VDC or 24VDC (AL125UL & AL125ULX).
- 1A total supply current @ 12VDC, 0.5A total supply current @ 24VDC (AL125ULP & AL125ULE).
- Filtered and electronically regulated output.*

Battery Backup:

- Built-in charger for sealed lead acid or gel type batteries.
- Maximum charge current: 400mA.
- Automatic switch over to stand-by battery when AC fails.

Special Features:

- AC power and unit status indicator on the front panel.
- Normally Open [NO] trigger input.
- Supervised Fire Alarm Disconnect (Latching w/reset or Non-Latching).

Configurations:

- **AL125UL** - includes power supply, transformer, cam lock, and enclosure. 8.5” x 7.5” x 3.5” (215.9mm x 190.5mm x 88.9mm). Accommodates one (1) 12VDC/4AH battery.
- **AL125ULP** - includes power supply, 24VAC/40VA plug-in transformer, cam lock, and enclosure. 8.5” x 7.5” x 3.5” (215.9mm x 190.5mm x 88.9mm). Accommodates one (1) 12VDC/7AH battery or two (2) 12VDC/4AH batteries.
- **AL125ULE** - includes power supply, cam lock, and enclosure. 8.5” x 7.5” x 3.5” (215.9mm x 190.5mm x 88.9mm). Accommodates up to two (2) 12VDC/4AH batteries.
- **AL125ULX** - includes power supply, transformer, cam lock, and enclosure 13.5” x 13” x 3.25” (342.9mm x 330.2mm x 82.55mm). Accommodates up to two (2) 12VDC/7AH batteries.

***Note:** When unit is powered by battery back up (AC Fail condition), the voltage range is 9.3V-13.2V and 19.55V-26.4V for 12 and 24 volt operation respectively.

Power Supply Output Specifications: *(AL125UL, AL125ULX)*

Output VDC	Switch Position	Max. Stand-by Load DC	Max. Alarm Load DC	Battery (optional)
12VDC	SW2 OFF	1A	1A	12VDC
24VDC	SW2 ON	1A	1A	24VDC

Power Supply Output Specifications: *(AL125ULP, AL125ULE)*

Output VDC	Switch Position	Max. Stand-by Load DC	Max. Alarm Load DC	Battery (optional)
12VDC	SW2 OFF	1A	1A	12VDC
24VDC	SW2 ON	0.5A	0.5A	24VDC

Stand-by Specifications:

Output	4hr. of Stand-by & 5 min. of Alarm
12VDC / 4AH Battery	0.5A / 1A
24VDC / 4AH Battery	0.5A / 1A

Output	4hr. of Stand-by & 5 min. of Alarm
12VDC / 7AH Battery	1A / 1A
24VDC / 7AH Battery	1A / 1A

Installation Instructions:

The units should be installed in accordance with article 760 of The National Electrical Code and NFPA 72 as well as all applicable Local Codes.

See Terminal Identification Chart on page 2 for a description of each terminal function.

1. Mount unit in the desired location. Mark and predrill holes in the wall to line up with the top two keyholes in the enclosure. Install two upper fasteners and screws in the wall with the screw heads protruding. Place the enclosure's upper keyholes over the two upper screws, level and secure. Mark the position of the lower two holes. Remove the enclosure. Drill the lower holes and install two fasteners. Place the enclosure's upper keyholes over the two upper screws. Install two lower screws and make sure to tighten all screws *(Enclosure Dimensions, pg. 4)*. Secure green wire lead to the earth ground.
2. Power connections:
   a. **AL125UL, AL125ULX** - Connect 115VAC 50/60Hz to the black and white flying leads of the transformer. Use 18 AWG or larger for all power connections (Battery, AC input, DC outputs). Use 22 AWG to 18 AWG for power-limited circuits (Trigger inputs, Dry outputs, DC outputs).
   b. **AL125ULP, AL125ULE** - Connect 24VAC from UL Listed 40VA plug-in transformer (included with AL125ULP) to terminals marked [XFMR].

   Keep power-limited wiring separate from non power-limited wiring (115VAC / 60Hz Input, Battery Wires). Minimum 0.25" spacing must be provided.

   CAUTION: Do not touch exposed metal parts. Shut branch circuit power before installing or servicing equipment. There are no user serviceable parts inside. Refer installation and servicing to qualified service personnel.
3. **Measure output voltage before connecting any devices to ensure proper operation. Improper or high voltage will damage these devices.**
4. Set the desired DC output voltage by setting switch SW2 *(Fig. 1a - Application Diagram, pg. 3)* to the appropriate position *(Power Supply Output Specifications Table, pg. 1)*.
5. Connect Fail-Safe locking devices to the terminals marked [COM– and LOCK+]. Connect Fail-Secure locking devices to the terminals marked [COM– and STRIKE+] *(Fig. 1 - Application Diagram, pg. 3)*.
6. Connect normally open access control device (i.e. card reader, request to exit device, access control system) to the terminals marked TRG INPUT [NO, GND] *(Fig. 1 - Application Diagram, pg. 3)*.
7. Connect FACP interface to the terminals marked [FACP1 and FACP2]. Wire the 2.2K resistor (supplied) in series for a normally closed input or in parallel for a normally open input *(Fig. 1 - Application Diagram, pg. 3)*. If required, set the latching FACP interface mode by turning SW1 ON *(Fig. 1a - Application Diagram, pg. 3)* and connect a normally open reset device to the terminals marked RESET [NO, GND].
   Note: If 2.2K resistor is not installed unit will be in alarm condition.
8. Connect battery to terminals marked [+ BAT –] (battery leads included). Use two (2) 12VDC batteries connected in series for 24VDC operation.
   Note: For Access Control applications batteries are optional. When batteries are not used, a loss of AC will result in the loss of output voltage. When the use of stand-by batteries is desired, they must be lead acid or gel type.
9. Please ensure that the cover is secured with the provided cam lock.

Terminal Identification:

Terminal Legend	Function/Description
XFMR	Low voltage transformer connections.
+ AUX –	Aux. power output terminals. These terminals supply 12VDC or 24VDC not affected by trigger, reset or fire alarm interface.
LOCK + STRIKE + COM –	Switched power output. Fail-Safe [LOCK+] supplies positive power when unit is not triggered and FACP interface is inactive. Fail-Secure [STRIKE+] supplies positive power when unit is triggered and/or fire alarm interface is activated. [COM–] supplies negative power.
FACP1 FACP2	Supervised by 2.2K end of line resistor FACP interface. Short or open will cause power to be dropped to terminal marked [LOCK+] and supply power to terminal marked [STRIKE+]. Condition can be maintained even after restoration of the circuit (latching mode).
TRG INPUT NO, GND	Short between these two terminals will cause power to be dropped to the terminal marked [LOCK+] and supplied to the terminal marked [STRIKE+].
RESET NO, GND	Momentary short between these terminals would end latching FACP interface condition. Feature active only if latching FACP is selected (SW1 ON).
+ BAT –	Stand-by battery connections.

The lightning flash with arrow head symbol within an equilateral triangle is intended to alert the user to the presence of an insulated DANGEROUS VOLTAGE within the product's enclosure that may be of sufficient magnitude to constitute an electric shock.

The exclamation point within an equilateral triangle is intended to alert the user to the presence of important operating and maintenance (servicing) instructions in the literature accompanying the appliance.

CAUTION
RISK OF ELECTRIC SHOCK
DO NOT OPEN

CAUTION: To reduce the risk of electric shock do not open enclosure. There are no user serviceable parts inside. Refer servicing to qualified service personnel.

Maintenance:

Unit should be tested at least once a year for the proper operation as follows:
Output Voltage Test: Under normal load conditions, the DC output voltage should be checked for proper voltage level *(Power Supply Output Specifications Table, pg. 1).*
Battery Test: Under normal load conditions check that the battery is fully charged, check specified voltage both at battery terminal and at the board terminals marked [+ BAT –] to ensure that there is no break in the battery connection wires.
Note: Maximum charging current under discharge is 400mA.
Note: Expected battery life is 5 years; however, it is recommended changing batteries in 4 years or less if needed.

LED Diagnostics:

Red	**Power Supply Status**
ON	Normal function.
OFF	No DC output.
Slow Blink	Loss of AC.
Rapid Blink	Unit is triggered, awaiting reset. Fire alarm interface activated.

Fig. 1 - Application Diagram:

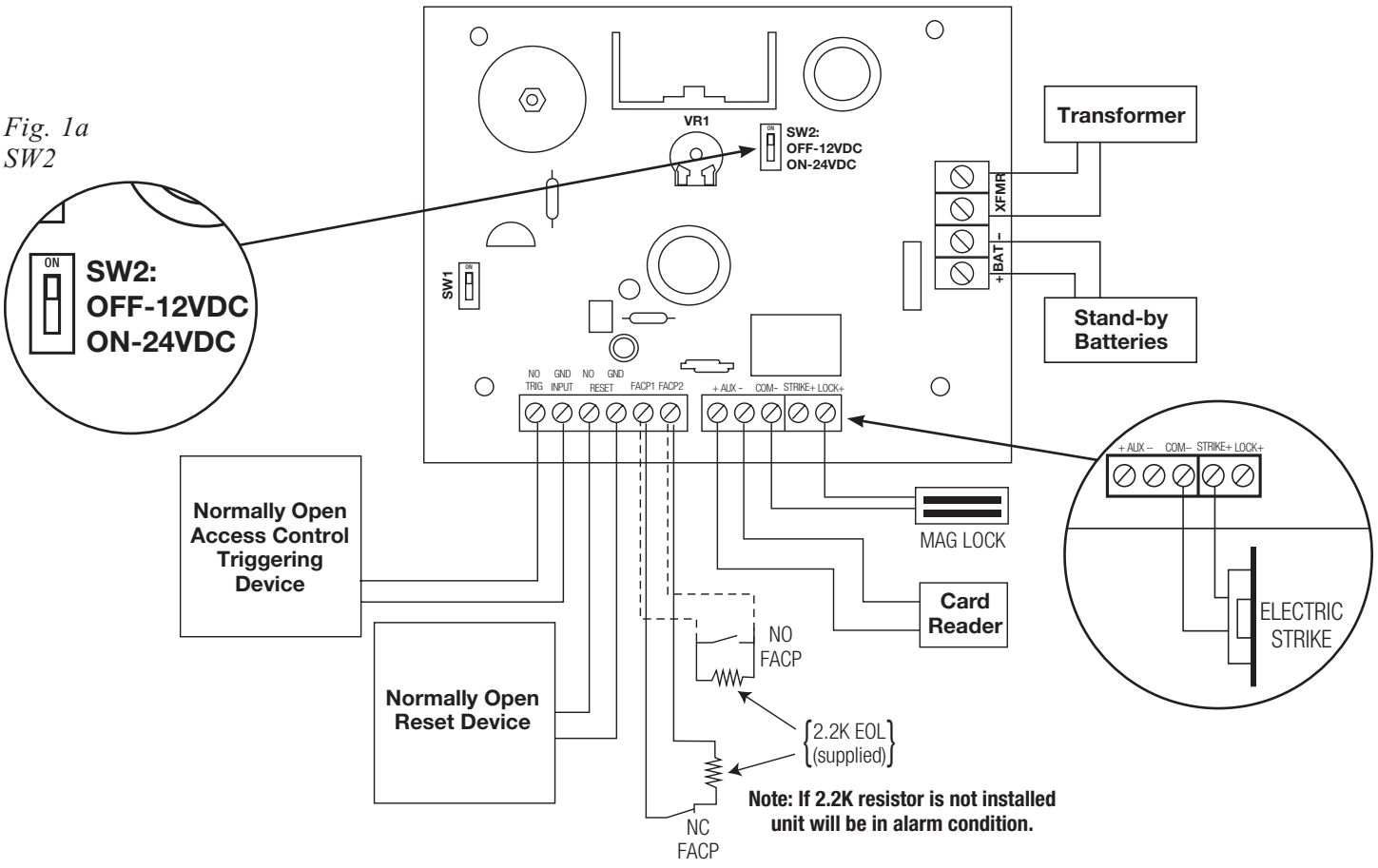

Enclosure Dimensions *(H x W x D):*

AL125UL, AL125ULE, AL125ULP

8.5” x 7.5” x 3.5” (215.9mm x 190.5mm x 88.9mm)

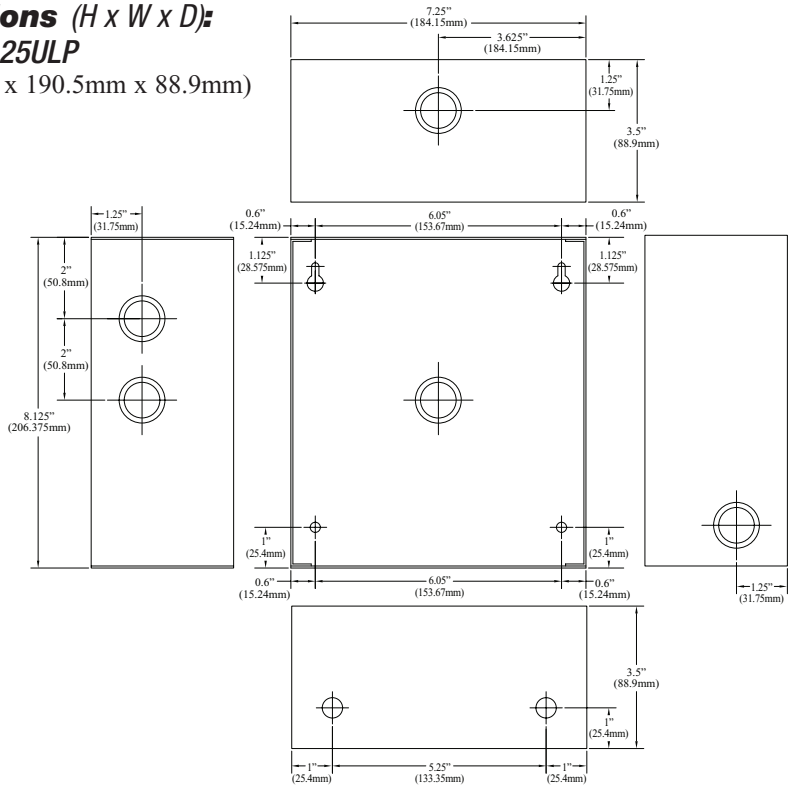

Enclosure Dimensions *(H x W x D):*

AL125ULX

13.5” x 13” x 3.25” (342.9mm x 330.2mm x 82.55mm)

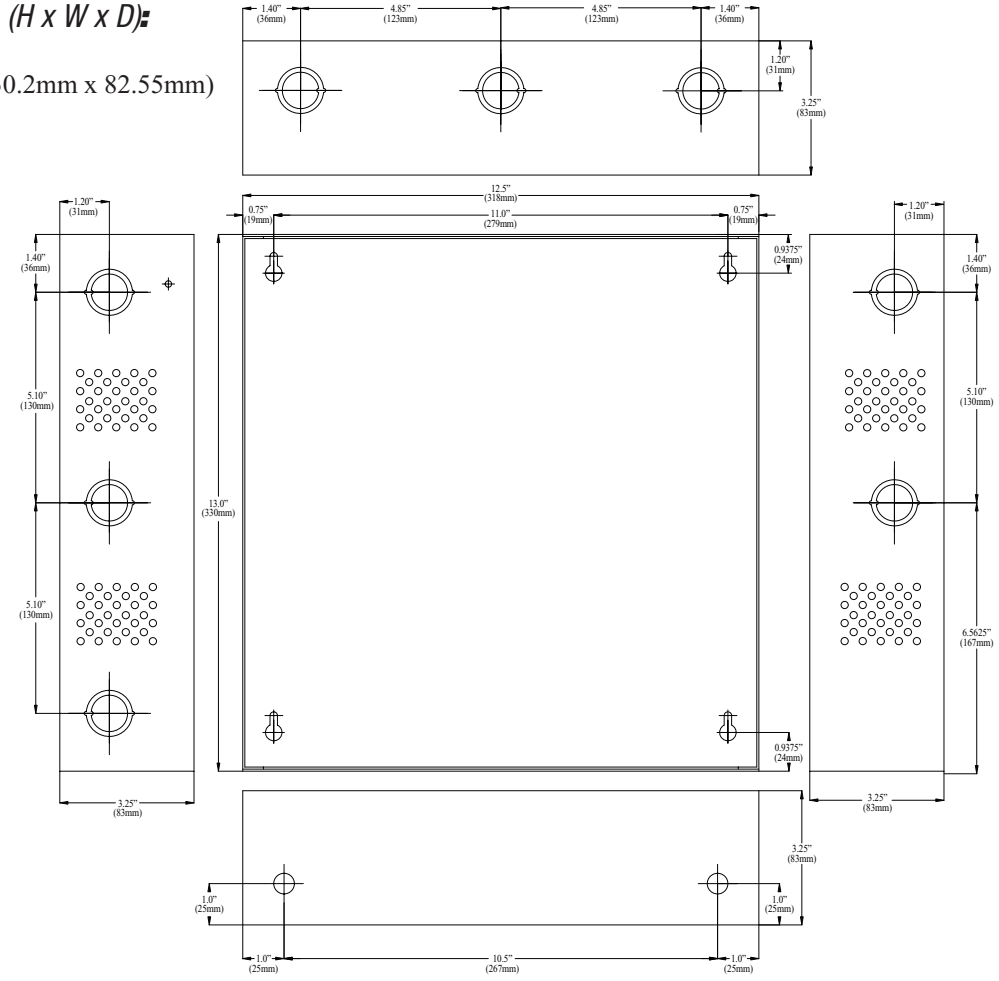

Altronix is not responsible for any typographical errors.

ACSI Series 1550K-MD and 1550-MD Motor Drive Electric Latch Retraction

Riser and Point-to-Point Drawings for Standard Access Control Applications Using Maintained Latch Retraction Control or Momentary Latch Retraction Control with Field-Adjustable Time Delay For Use with ACSI Part Numbers 1452 and 1452-TD

Riser and Point-to-Point Drawings for Standard Access Control and Day/Night Applications for Openings Using Automatic Door Operators For Use with ACSI Part Numbers 1452-AO and 1452-DN

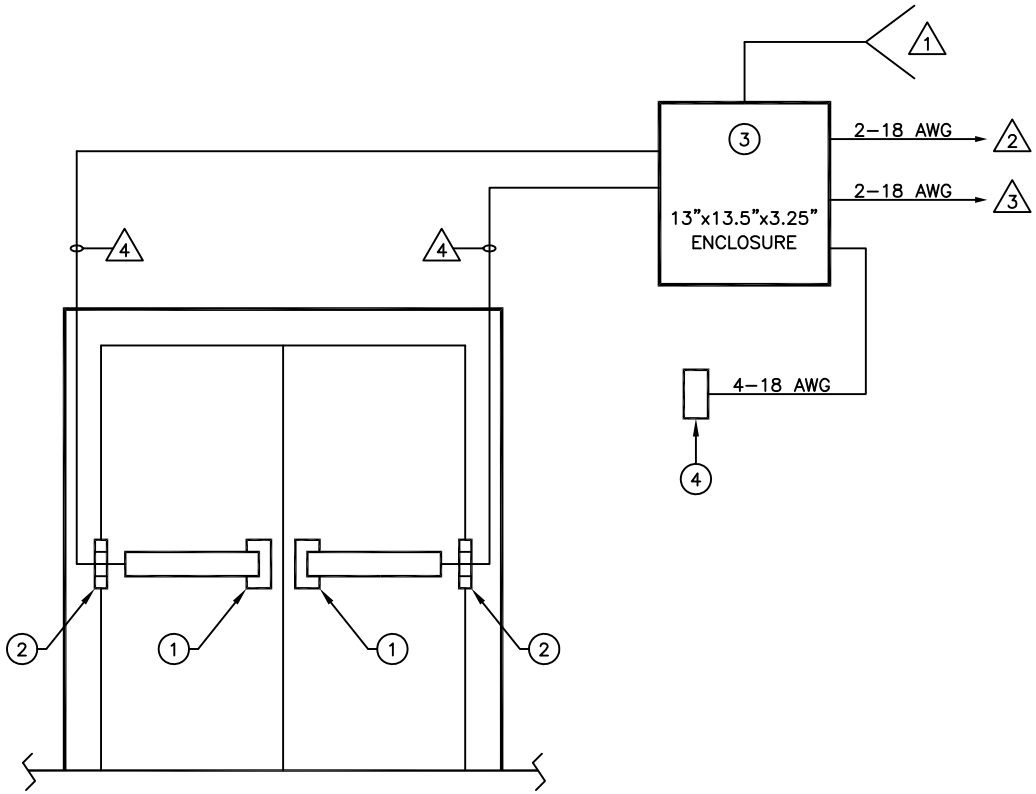

NOTES:

1. TO 115V., 60HZ., 15A SERVICE.
2. TO N.C. FIRE ALARM, IF REQUIRED.
3. TO A CONTROL DEVICE USING MAINTAINED SWITCH CONTACTS (PUSHBUTTON SWITCH, KEY SWITCH) OR A CONTROL DEVICE RELAY OUTPUT EQUIPPED WITH BUILT–IN TIME DELAY (CARD READER, KEYPAD, MOTION SENSOR).
4.

WIRE GAUGE	MAX. LENGTH 2–COND. CABLE
22 AWG	70 FEET
20 AWG	110 FEET
18 AWG	180 FEET
16 AWG	280 FEET
14 AWG	450 FEET
12 AWG	720 FEET

RISER DIAGRAM FOR STANDARD ACCESS CONTROL WITH MAINTAINED ELECTRIC LATCH RETRACTION, OR MOMENTARY RETRACTION BY CONTROL DEVICES WITH BUILT-IN TIME DELAY, USING SERIES 1550K-MD OR 1550-MD MOTOR DRIVE ELR DEVICES

ACSI SUPPLIED EQUIPMENT:

1. SERIES 1550K–MD OR 1550–MD MOTOR DRIVE ELECTRIC LATCH RETRACTION
2. SERIES 1100 POWER TRANSFER HINGE
3. 1452PS POWER SUPPLY
4. RM RELAY MODULE
   NOTE: DO NOT LOCATE MORE THAN 10 FT. FROM POWER SUPPLY

ARCHITECTURAL CONTROL SYSTEMS, INCORPORATED
ST. LOUIS, MISSOURI
1–800–753–5558

TOLERANCES UNLESS NOTED
FRACTION ±1/64
DECIMAL ± .005
ANGULAR ±1°
DRILL +.007 −.001
REAM +.001 −.000
PUNCH +.004 −.001

DESCRIPTION	DRAWING NO.	MATERIAL
ACSI P/N 1452 ELR ACCESS CONTROL	REF 6040–R1	

8/23/16	A	CRH
2/12/15	RELEASED	CRH
DATE	REV.	APPRV.
SCALE NTS	DRAWN BY CRH	DATE 2/12/15
SHEET 1 OF 1	APPRV. BY CRH	DATE 2/12/15
DO NOT SCALE THIS DRAWING		

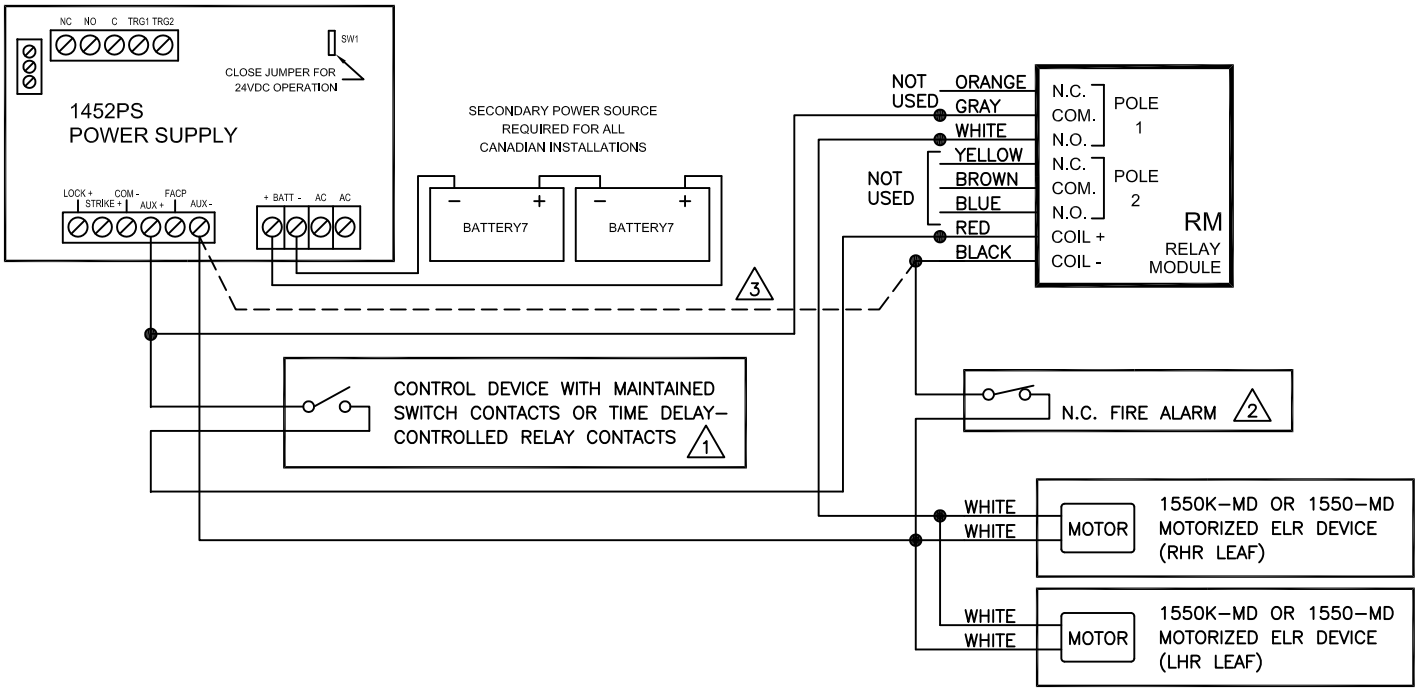

POINT-TO-POINT WIRING DIAGRAM
STANDARD ACCESS CONTROL WITH MAINTAINED ELECTRIC LATCH RETRACTION, OR MOMENTARY RETRACTION BY CONTROL DEVICES WITH BUILT-IN TIME DELAY, USING SERIES 1550K-MD OR 1550-MD MOTOR DRIVE ELR DEVICES

NOTES:

1. LATCHBOLTS ARE PROJECTED WITH SWITCH IN OPEN POSITION, AS SHOWN. CLOSING SWITCH CONTACTS WILL RETRACT LATCHBOLTS.
2. A FIRE ALARM CONDITION WILL IMMEDIATELY PROJECT THE LATCHBOLTS WHEN CURRENTLY RETRACTED.
3. IF FIRE ALARM IS NOT REQUIRED, CONNECT A WIRE BETWEEN THE COIL NEGATIVE (–) OF RELAY RM AND THE AUXILIARY OUTPUT NEGATIVE (–) TERMINAL (SHOWN AS DOTTED LINE).

ARCHITECTURAL CONTROL SYSTEMS, INCORPORATED
ST. LOUIS, MISSOURI
1–800–753–5558

TOLERANCES UNLESS NOTED
FRACTION ±1/64
DECIMAL ± .005
ANGULAR ±1°
DRILL +.007 −.001
REAM +.001 −.000
PUNCH +.004 −.001

DESCRIPTION	DRAWING NO.	MATERIAL
ACSI P/N 1452 ELR ACCESS CONTROL	REF 6040–P1	

2/12/15	RELEASED	CRH
DATE	REV.	APPRV.
SCALE NONE	DRAWN BY CRH	DATE 2/12/15
SHEET 1 OF 1	APPRV. BY CRH	DATE 2/12/15
DO NOT SCALE THIS DRAWING		

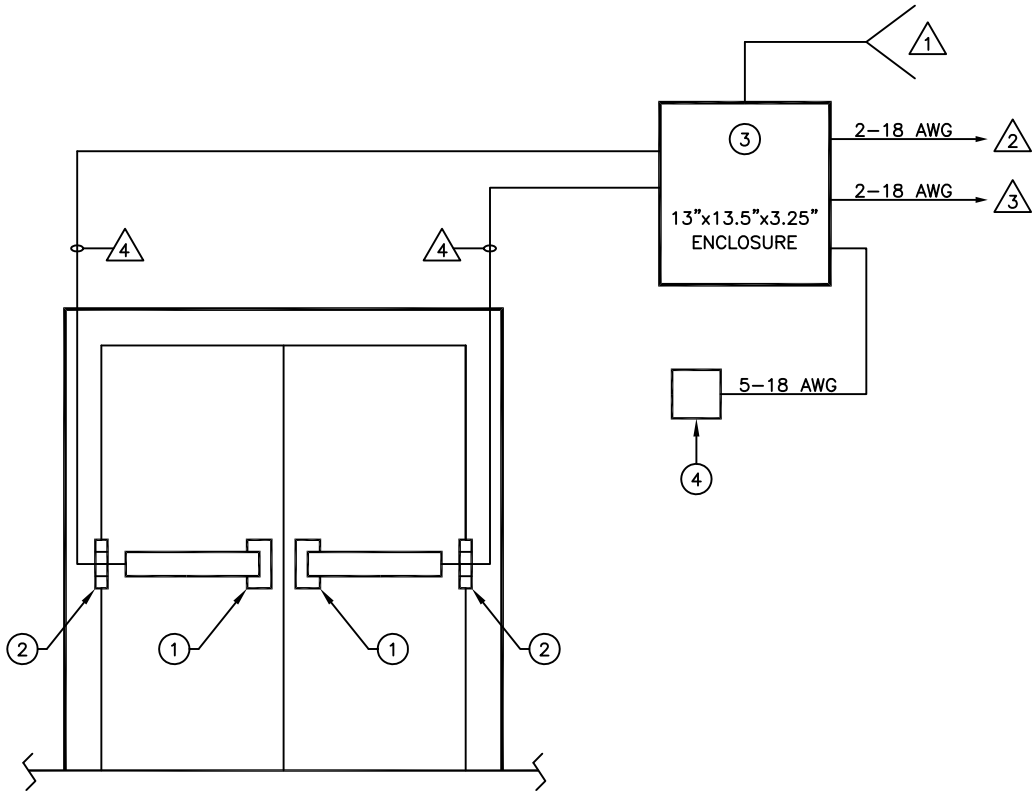

NOTES:

1. TO 115V., 60HZ., 15A SERVICE.
2. TO N.C. FIRE ALARM, IF REQUIRED.
3. TO A MOMENTARY PUSHBUTTON OR KEY SWITCH FOR TIMED MOMENTARY DOOR CONTROL USING THE TM TIMER MODULE'S FIELD–ADJUSTABLE TIME DELAY.
4.

WIRE GAUGE	MAX. LENGTH 2–COND. CABLE
22 AWG	70 FEET
20 AWG	110 FEET
18 AWG	180 FEET
16 AWG	280 FEET
14 AWG	450 FEET
12 AWG	720 FEET

RISER DIAGRAM FOR STANDARD ACCESS CONTROL WITH FIELD-ADJUSTBLE TIME DELAY USING SERIES 1550K-MD OR 1550-MD MOTOR DRIVE ELR DEVICES

ACSI SUPPLIED EQUIPMENT:

1. SERIES 1550K–MD OR 1550–MD MOTOR DRIVE ELECTRIC LATCH RETRACTION
2. SERIES 1100 POWER TRANSFER HINGE
3. 1452PS POWER SUPPLY
4. TM TIMER MODULE
   NOTE: DO NOT LOCATE MORE THAN 10 FT. FROM POWER SUPPLY

ARCHITECTURAL CONTROL SYSTEMS, INCORPORATED
ST. LOUIS, MISSOURI
1–800–753–5558

TOLERANCES UNLESS NOTED
FRACTION ±1/64
DECIMAL ± .005
ANGULAR ±1°
DRILL +.007 −.001
REAM +.001 −.000
PUNCH +.004 −.001

DESCRIPTION	DRAWING NO.	MATERIAL
ACSI P/N 1452–TD ELR ACCESS CONTROL	REF 6040–R2	

DATE	REV.	APPRV.
8/23/16	A	CRH
2/12/15	RELEASED	CRH

SCALE NTS | DRAWN BY CRH | DATE 2/12/15
SHEET 1 OF 1 | APPRV. BY CRH | DATE 2/12/15

DO NOT SCALE THIS DRAWING

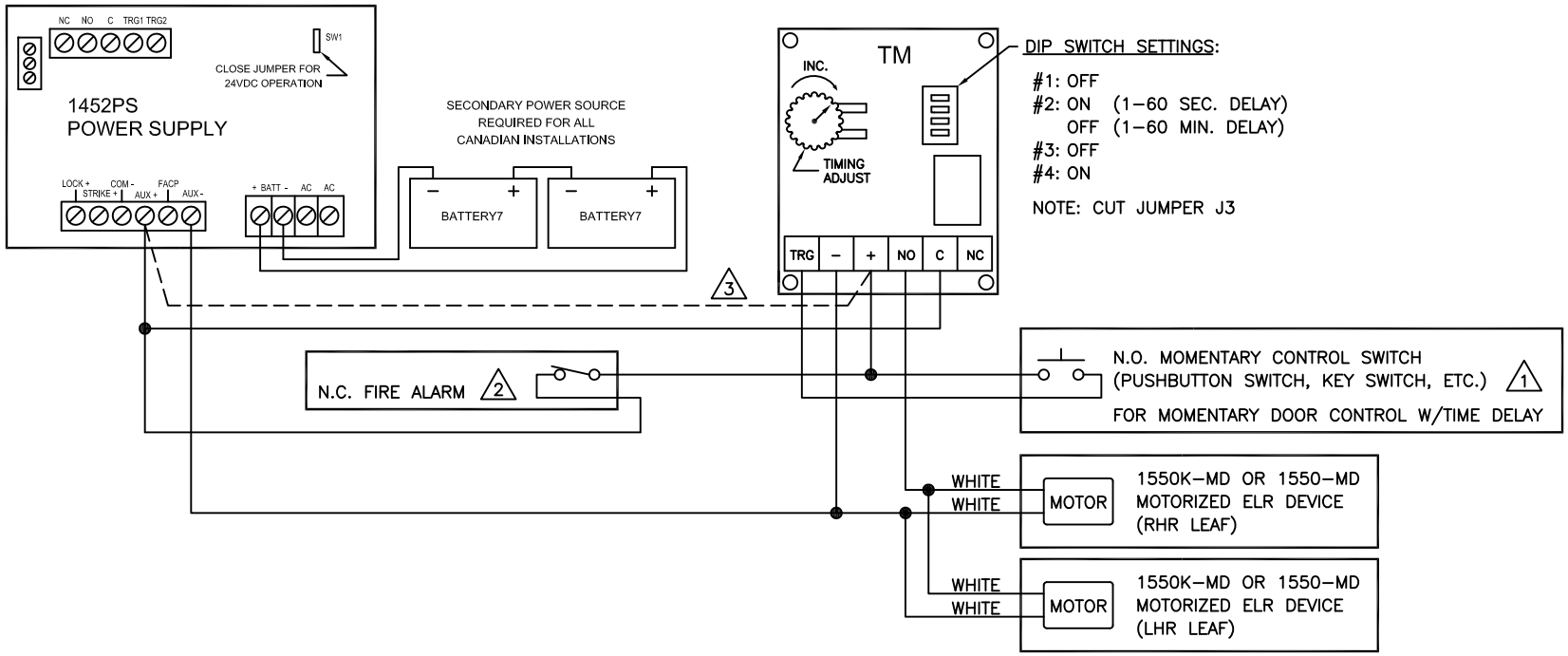

POINT-TO-POINT WIRING DIAGRAM
STANDARD ACCESS CONTROL WITH FIELD-ADJUSTABLE TIME DELAY USING SERIES 1550K-MD OR 1550-MD MOTOR DRIVE ELR DEVICES

NOTES:

1. LATCHBOLTS ARE NORMALLY PROJECTED. A MOMENTARY CLOSURE OF SWITCH CONTACTS WILL RETRACT LATCHBOLTS. DEVICES' LATCHBOLT WILL REMAIN RETRACTED FOR PERIOD OF TIME AS DETERMINED BY SETTING OF ADJUSTMENT WHEEL ON TM TIMER MODULE AND TIME RANGE DIP SWITCH SETTING (SECONDS OR MINUTES). LATCHBOLTS PROJECT AFTER DELAY PERIOD TIMES OUT.
2. A FIRE ALARM CONDITION WILL IMMEDIATELY PROJECT LATCHBOLTS (WHEN CURRENTLY RETRACTED) AND RESET TIMER MODULE.
3. IF FIRE ALARM IS NOT REQUIRED, CONNECT A WIRE BETWEEN THE POSITIVE (+) TERMINAL OF TIMER TM AND THE AUXILIARY OUTPUT POSITIVE (+) TERMINAL (SHOWN AS DOTTED LINE).

ARCHITECTURAL CONTROL SYSTEMS, INCORPORATED
ST. LOUIS, MISSOURI
1–800–753–5558

TOLERANCES UNLESS NOTED
FRACTION ±1/64
DECIMAL ± .005
ANGULAR ±1°
DRILL +.007 −.001
REAM +.001 −.000
PUNCH +.004 −.001

DESCRIPTION	DRAWING NO.	MATERIAL
ACSI P/N 1452–TD ELR ACCESS CONTROL	REF 6040–P2	

2/12/15	RELEASED	CRH
DATE	REV.	APPRV.
SCALE NONE	DRAWN BY CRH	DATE 2/12/15
SHEET 1 OF 1	APPRV. BY CRH	DATE 2/12/15
DO NOT SCALE THIS DRAWING		

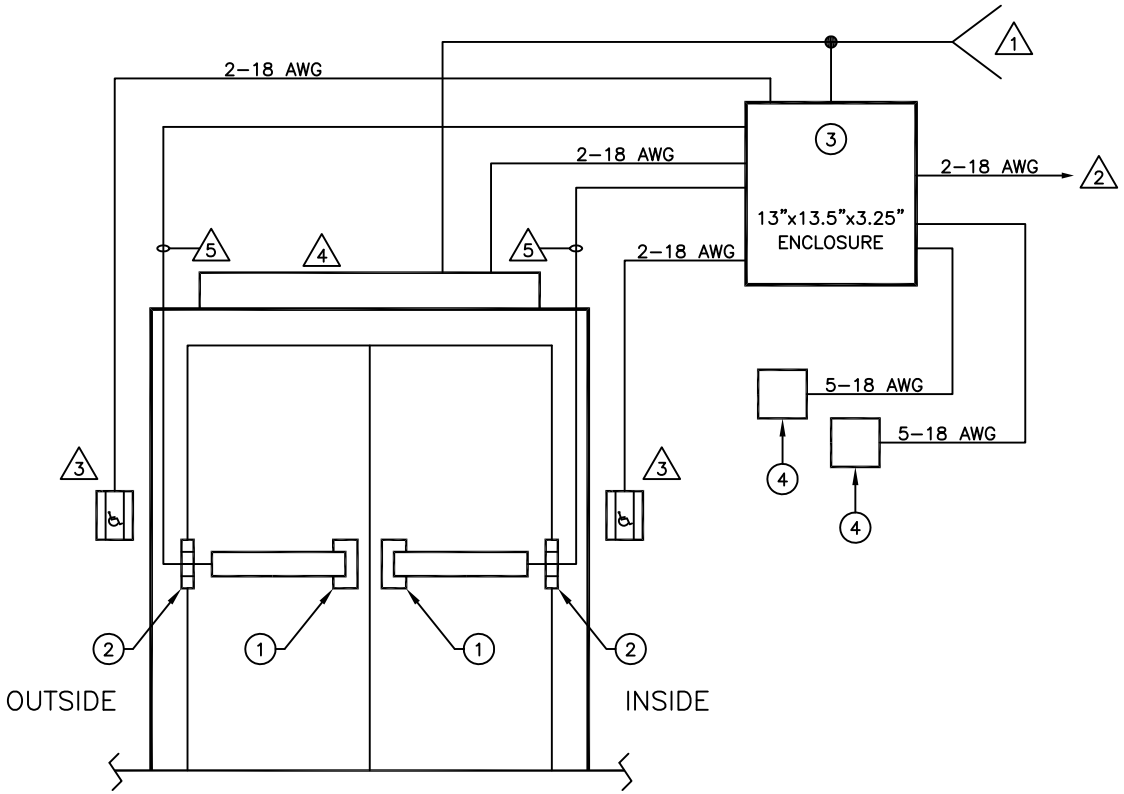

NOTES:

1. TO 115V., 60HZ., 15A SERVICE.
2. TO N.C. FIRE ALARM, IF REQUIRED.
3. WALL SWITCH
4. AUTOMATIC DOOR OPERATOR
5. WIRE GAUGE — MAX. LENGTH 2–COND. CABLE

WIRE GAUGE	MAX. LENGTH 2–COND. CABLE
22 AWG	70 FEET
20 AWG	110 FEET
18 AWG	180 FEET
16 AWG	280 FEET
14 AWG	450 FEET
12 AWG	720 FEET

RISER DIAGRAM FOR STANDARD AUTOMATED DOOR OPENING SYSTEM APPLICATION USING SERIES 1550K-MD OR 1550-MD MOTOR DRIVE ELR DEVICES

ACSI SUPPLIED EQUIPMENT:

1. SERIES 1550K–MD OR 1550–MD MOTOR DRIVE ELECTRIC LATCH RETRACTION
2. SERIES 1100 POWER TRANSFER HINGE
3. 1452PS POWER SUPPLY
4. TM TIMER MODULE
   NOTE: DO NOT LOCATE MORE THAN 10 FT. FROM POWER SUPPLY

ARCHITECTURAL CONTROL SYSTEMS, INCORPORATED
ST. LOUIS, MISSOURI
1–800–753–5558

TOLERANCES UNLESS NOTED
FRACTION ±1/64
DECIMAL ± .005
ANGULAR ±1°
DRILL +.007 −.001
REAM +.001 −.000
PUNCH +.004 −.001

DESCRIPTION	DRAWING NO.	MATERIAL
ACSI P/N 1452–AO ELR ACCESS CONTROL	REF 6040–R3	

8/23/16	A	CRH
2/12/15	RELEASED	CRH
DATE	REV.	APPRV.

SCALE NONE | DRAWN BY CRH | DATE 2/12/15
SHEET 1 OF 1 | APPRV. BY CRH | DATE 2/12/15

DO NOT SCALE THIS DRAWING

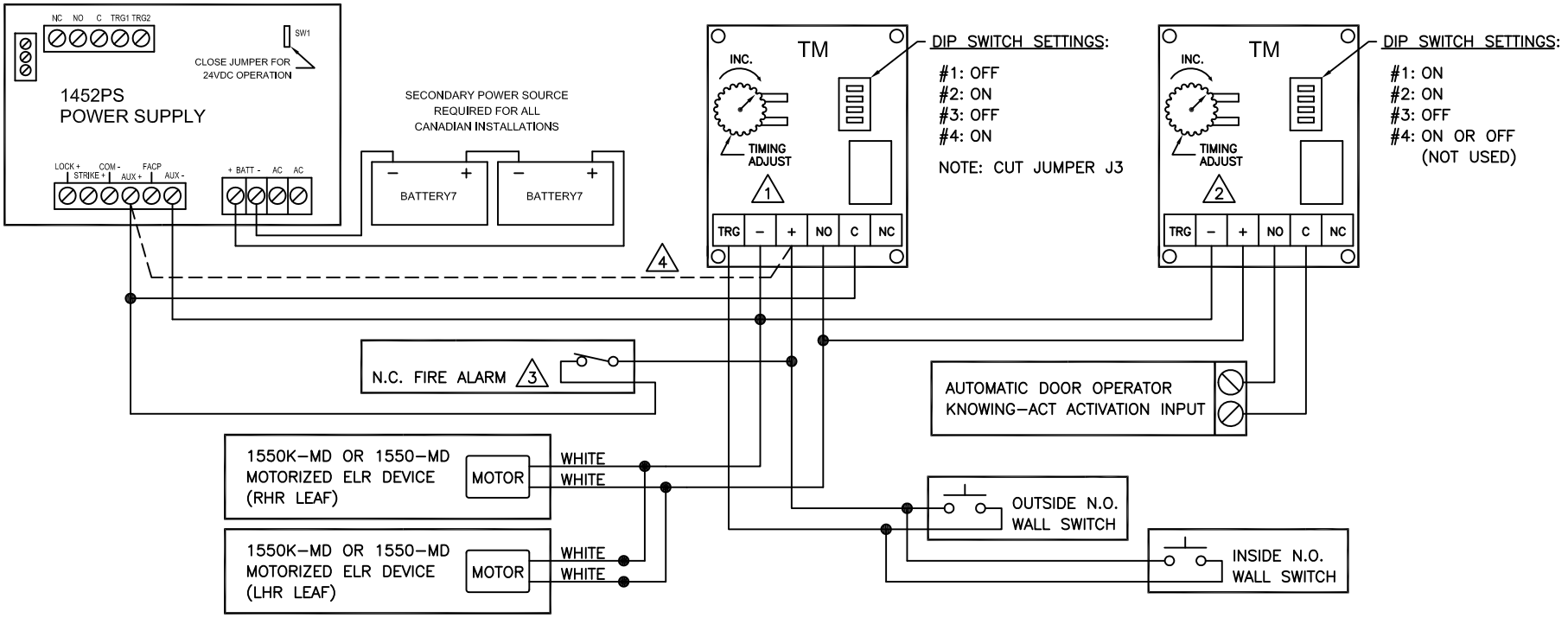

SYSTEM OPERATION:

OUTSIDE OR INSIDE WALL SWITCH SEQUENTIALLY RETRACTS LATCHBOLTS AND ACTIVATES AUTOMATIC DOOR OPERATOR.

NOTES:

1. ADJUST LATCH RETRACTION DELAY TIMER FOR 3–5 SEC. TO ENSURE LATCHBOLTS ARE FULLY RETRACTED BEFORE AUTO OPERATOR OPENS DOOR LEAVES, AND TO ENSURE THEY WILL LATCH WHEN THEY CLOSE.
2. ADJUST AUTO OPERATOR DELAY–BEFORE–ACTIVATE TIMER FOR 1–2 SEC. TO ALLOW ENOUGH TIME FOR LATCHBOLTS TO FULLY RETRACT BEFORE OPERATOR IS ACTIVATED. NOTE: THE "TRG" TERMINAL IS NOT USED WITH THIS TIMER.
3. A FIRE ALARM CONDITION WILL IMMEDIATELY PROJECT LATCHBOLTS (WHEN CURRENTLY RETRACTED), DISABLE USE OF WALL SWITCHES AND RESET TIMER MODULES.
4. IF FIRE ALARM IS NOT REQUIRED, CONNECT A WIRE BETWEEN THE POSITIVE (+) TERMINAL OF LATCH RETRACTION DELAY TIMER TM AND THE AUXILIARY OUTPUT POSITIVE (+) TERMINAL (SHOWN AS DOTTED LINE).

POINT-TO-POINT WIRING DIAGRAM
STANDARD ACCESS CONTROL WITH AUTOMATIC DOOR OPERATOR
USING SERIES 1550K-MD OR 1550-MD MOTOR DRIVE ELR DEVICES

ARCHITECTURAL CONTROL SYSTEMS, INCORPORATED
ST. LOUIS, MISSOURI
1–800–753–5558

TOLERANCES UNLESS NOTED
FRACTION ±1/64
DECIMAL ± .005
ANGULAR ±1°
DRILL +.007 −.001
REAM +.001 −.000
PUNCH +.004 −.001

DESCRIPTION	DRAWING NO.	MATERIAL
ACSI P/N 1452–AO ELR ACCESS CONTROL	REF 6040–P3	

2/12/15	RELEASED	CRH
DATE	REV.	APPRV.
SCALE NU	DRAWN BY CRH	DATE 2/12/15
SHEET 1 OF 1	APPRV. BY CRH	DATE 2/12/15
DO NOT SCALE THIS DRAWING		

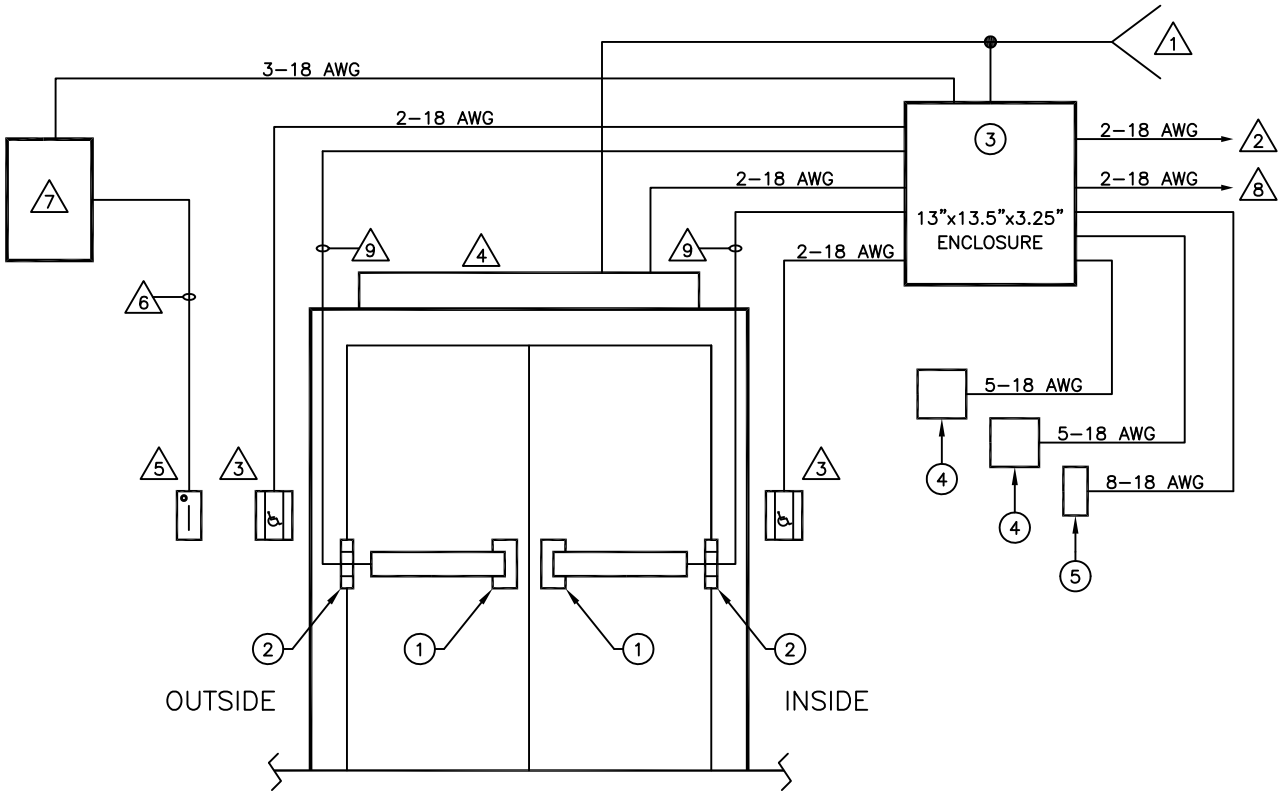

NOTES:

1. TO 115V., 60HZ., 15A SERVICE.
2. TO N.C. FIRE ALARM, IF REQUIRED.
3. WALL SWITCH
4. AUTOMATIC DOOR OPERATOR
5. CARD READER UNIT
6. CARD READER POWER/DATA CABLE
7. CARD ACCESS CONTROL UNIT CONTAINING DOOR CONTROL RELAY RESPONDING TO CARD READER SWIPE FOR MOMENTARY AUTHORIZED ENTRY (NIGHT MODE)
8. ACCESS CONTROL SYSTEM DAY/NIGHT SWITCHING OUTPUT (TIME CLOCK, COMPUTER–CONTROLLED TIME SCHEDULE, ETC.)
9.

WIRE GAUGE	MAX. LENGTH 2–COND. CABLE
22 AWG	70 FEET
20 AWG	110 FEET
18 AWG	180 FEET
16 AWG	280 FEET
14 AWG	450 FEET
12 AWG	720 FEET

RISER DIAGRAM FOR DAY/NIGHT AUTOMATED DOOR OPENING SYSTEM APPLICATION USING SERIES 1550K-MD OR 1550-MD MOTOR DRIVE ELR DEVICES

ACSI SUPPLIED EQUIPMENT:

1. SERIES 1550K–MD OR 1550–MD MOTOR DRIVE ELECTRIC LATCH RETRACTION
2. SERIES 1100 POWER TRANSFER HINGE
3. 1452PS POWER SUPPLY
4. TM TIMER MODULE*
5. RM RELAY MODULE*

*DO NOT LOCATE MORE THAN 10 FT. FROM POWER SUPPLY

ARCHITECTURAL CONTROL SYSTEMS, INCORPORATED
ST. LOUIS, MISSOURI
1–800–753–5558

TOLERANCES UNLESS NOTED
FRACTION ±1/64
DECIMAL ± .005
ANGULAR ±1°
DRILL +.007 −.001
REAM +.001 −.000
PUNCH +.004 −.001

DESCRIPTION	DRAWING NO.	MATERIAL
ACSI P/N 1452–DN ELR ACCESS CONTROL	REF 6040–R4	

8/23/16	A	CRH
2/12/15	RELEASED	CRH
DATE	REV.	APPRV.
SCALE NTS	DRAWN BY CRH	DATE 2/12/15
SHEET 1 OF 1	APPRV. BY CRH	DATE 2/12/15

DO NOT SCALE THIS DRAWING

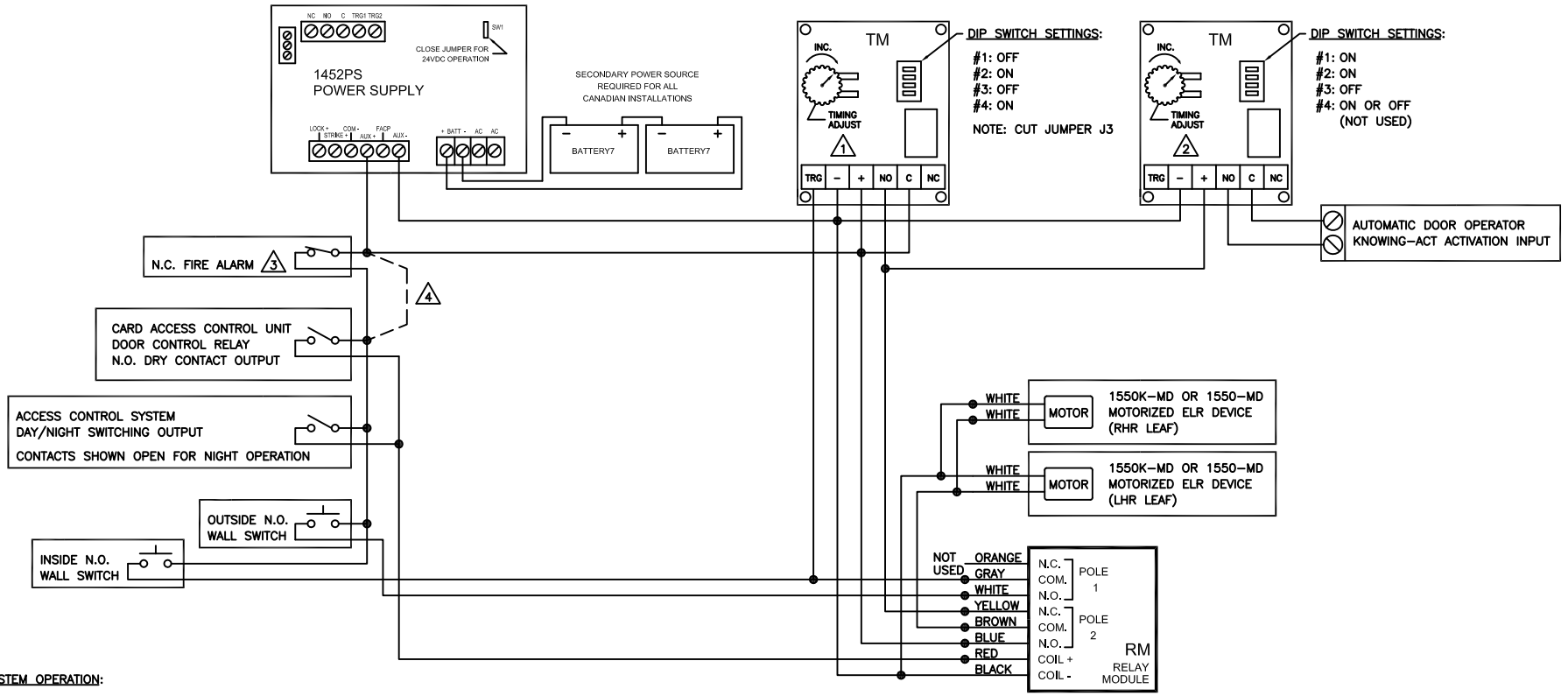

SYSTEM OPERATION:

WHEN THE ACCESS CONTROL SYSTEM DAY/NIGHT SWITCHING OUTPUT IS SET FOR DAY OPERATION (DRY CONTACTS CLOSED), THE LATCHBOLTS WILL RETRACT. PUSHING THE OUTSIDE OR INSIDE WALL SWITCH WILL ACTIVATE THE AUTOMATIC DOOR OPERATOR.

WHEN THE ACCESS CONTROL SYSTEM DAY/NIGHT SWITCHING OUTPUT IS SET FOR NIGHT OPERATION (DRY CONTACTS OPEN), THE LATCHBOLTS WILL PROJECT AND THE OUTSIDE WALL SWITCH BECOMES DISABLED. A VALID SWIPE FROM THE CARD READER WILL TEMPORARILY RETRACT THE LATCHBOLTS. WHILE THE CARD READER IS IN ITS ACTIVATED STATE, THE OUTSIDE WALL SWITCH IS ENABLED FOR ACTIVATING THE AUTOMATIC DOOR OPERATOR. THE INSIDE WALL SWITCH IS ALWAYS ENABLED IN NIGHT MODE AND WILL SEQUENTIALLY RETRACT THE LATCHBOLTS AND ACTIVATE THE AUTOMATIC DOOR OPERATOR.

NOTES:

1. ADJUST LATCH RETRACTION DELAY TIMER FOR 3–5 SEC. TO ENSURE LATCHBOLTS ARE FULLY RETRACTED BEFORE AUTO OPERATOR OPENS DOOR LEAVES, AND TO ENSURE THEY WILL LATCH WHEN THEY CLOSE.
2. ADJUST AUTO OPERATOR DELAY–BEFORE–ACTIVATE TIMER FOR 1–2 SEC. TO ALLOW ENOUGH TIME FOR LATCHBOLTS TO FULLY RETRACT BEFORE OPERATOR IS ACTIVATED. NOTE: THE "TRG" TERMINAL IS NOT USED WITH THIS TIMER.
3. A FIRE ALARM CONDITION OCCURRING WHILE IN DAY MODE WILL IMMEDIATELY PROJECT LATCHBOLTS AND DISABLE USE OF OUTSIDE AND INSIDE WALL SWITCHES. WHEN A FIRE ALARM CONDITION OCCURS IN NIGHT MODE, LATCHBOLTS WILL REMAIN PROJECTED, AND BOTH OUTSIDE AND INSIDE WALL SWITCHES WILL BECOME DISABLED. NOTE: IF A FIRE ALARM OCCURS AT THE BEGINNING OF A DOOR OPEN CYCLE, THE SYSTEM APPLICATION WILL ALLOW THE OPENING CYCLE TO BE COMPLETED BEFORE DISABLING LATCH RETRACTION AND USE OF BOTH WALL SWITCHES.
4. IF FIRE ALARM IS NOT REQUIRED, CONNECT ONE SIDE OF THE CARD ACCESS RELAY OUTPUT, ACCESS CONTROL SYSTEM DAY/NIGHT SWITCHING OUTPUT, OUTSIDE WALL SWITCH AND INSIDE WALL SWITCH (ALL SHOWN BUSSED TOGETHER) TO THE AUXILIARY OUTPUT POSITIVE (+) TERMINAL (SHOWN AS DOTTED LINE).

POINT-TO-POINT WIRING DIAGRAM
DAY/NIGHT APPLICATION - VARIATION #1
USING SERIES 1550K-MD OR 1550-MD MOTOR DRIVE ELR DEVICES

ARCHITECTURAL CONTROL SYSTEMS, INCORPORATED
ST. LOUIS, MISSOURI
1–800–753–5558

TOLERANCES UNLESS NOTED
FRACTION ±1/64
DECIMAL ± .005
ANGULAR ±1°
DRILL +.007 –.001
REAM +.001 –.000
PUNCH +.004 –.001

DESCRIPTION	DRAWING NO.	MATERIAL
ACSI P/N 1452–DN ELR ACCESS CONTROL	REF 6040–P4–1	

2/12/15	RELEASED	CRH
DATE	REV.	APPRV.
SCALE NONE	DRAWN BY CRH	DATE 2/12/15
SHEET 1 OF 1	APPRV. BY CRH	DATE 2/12/15

DO NOT SCALE THIS DRAWING

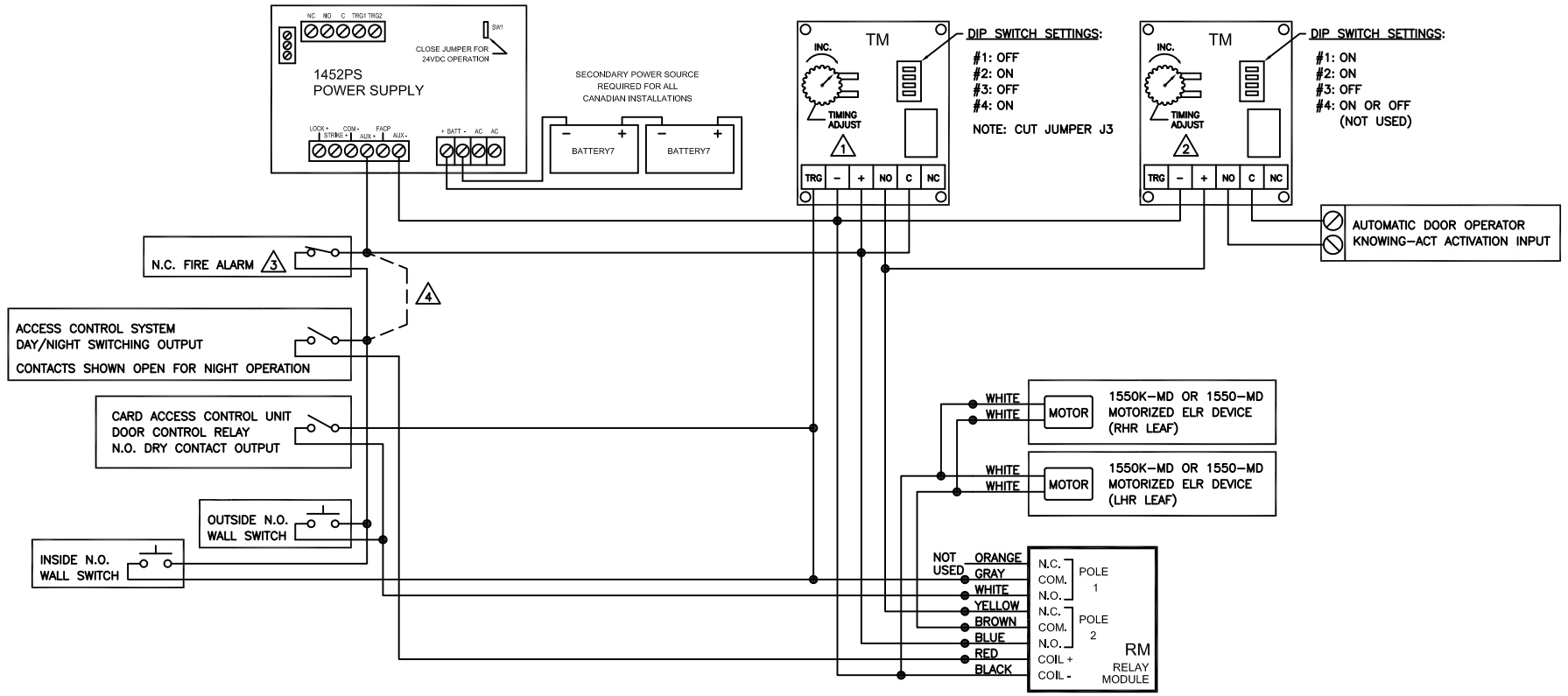

SYSTEM OPERATION:

WHEN THE ACCESS CONTROL SYSTEM DAY/NIGHT SWITCHING OUTPUT IS SET FOR DAY OPERATION (DRY CONTACTS CLOSED), THE LATCHBOLTS WILL RETRACT. PUSHING THE OUTSIDE OR INSIDE WALL SWITCH WILL ACTIVATE THE AUTOMATIC DOOR OPERATOR.

WHEN THE ACCESS CONTROL SYSTEM DAY/NIGHT SWITCHING OUTPUT IS SET FOR NIGHT OPERATION (DRY CONTACTS OPEN), THE LATCHBOLTS WILL PROJECT AND THE OUTSIDE WALL SWITCH BECOMES DISABLED. A VALID SWIPE FROM THE CARD READER WILL TEMPORARILY ENABLE THE OUTSIDE WALL SWITCH TO SEQUENTIALLY RETRACT THE LATCHBOLTS AND ACTIVATE THE AUTOMATIC DOOR OPERATOR. THE INSIDE WALL SWITCH IS ALWAYS ENABLED IN NIGHT MODE AND WILL SEQUENTIALLY RETRACT THE LATCHBOLTS AND ACTIVATE THE AUTOMATIC DOOR OPERATOR.

NOTES:

1. ADJUST LATCH RETRACTION DELAY TIMER FOR 3–5 SEC. TO ENSURE LATCHBOLTS ARE FULLY RETRACTED BEFORE AUTO OPERATOR OPENS DOOR LEAVES, AND TO ENSURE THEY WILL LATCH WHEN THEY CLOSE.
2. ADJUST AUTO OPERATOR DELAY–BEFORE–ACTIVATE TIMER FOR 1–2 SEC. TO ALLOW ENOUGH TIME FOR LATCHBOLTS TO FULLY RETRACT BEFORE OPERATOR IS ACTIVATED. NOTE: THE "TRG" TERMINAL IS NOT USED WITH THIS TIMER.
3. A FIRE ALARM CONDITION OCCURRING WHILE IN DAY MODE WILL IMMEDIATELY PROJECT LATCHBOLTS AND DISABLE USE OF OUTSIDE AND INSIDE WALL SWITCHES. WHEN A FIRE ALARM CONDITION OCCURS IN NIGHT MODE, LATCHBOLTS WILL REMAIN PROJECTED, AND BOTH OUTSIDE AND INSIDE WALL SWITCHES WILL BECOME DISABLED. NOTE: IF A FIRE ALARM OCCURS AT THE BEGINNING OF A DOOR OPEN CYCLE, THE SYSTEM APPLICATION WILL ALLOW THE OPENING CYCLE TO BE COMPLETED BEFORE DISABLING LATCH RETRACTION AND USE OF BOTH WALL SWITCHES.
4. IF FIRE ALARM IS NOT REQUIRED, CONNECT ONE SIDE OF THE ACCESS CONTROL SYSTEM DAY/NIGHT SWITCHING OUTPUT, OUTSIDE WALL SWITCH AND INSIDE WALL SWITCH (ALL SHOWN BUSSED TOGETHER) TO THE AUXILIARY OUTPUT POSITIVE (+) TERMINAL (SHOWN AS DOTTED LINE).

POINT-TO-POINT WIRING DIAGRAM
DAY/NIGHT APPLICATION - VARIATION #2
USING SERIES 1550K-MD OR 1550-MD MOTOR DRIVE ELR DEVICES

ARCHITECTURAL CONTROL SYSTEMS, INCORPORATED
ST. LOUIS, MISSOURI
1–800–753–5558

TOLERANCES UNLESS NOTED
FRACTION ±1/64
DECIMAL ± .005
ANGULAR ±1°
DRILL +.007 –.001
REAM +.001 –.000
PUNCH +.004 –.001

DESCRIPTION	DRAWING NO.	MATERIAL
ACSI P/N 1452–DN ELR ACCESS CONTROL	REF 6040–P4–2	

2/13/15	RELEASED	CRH
DATE	REV.	APPRV.
SCALE NONE	DRAWN BY CRH	DATE 2/13/15
SHEET 1 OF 1	APPRV. BY CRH	DATE 2/13/15

DO NOT SCALE THIS DRAWING

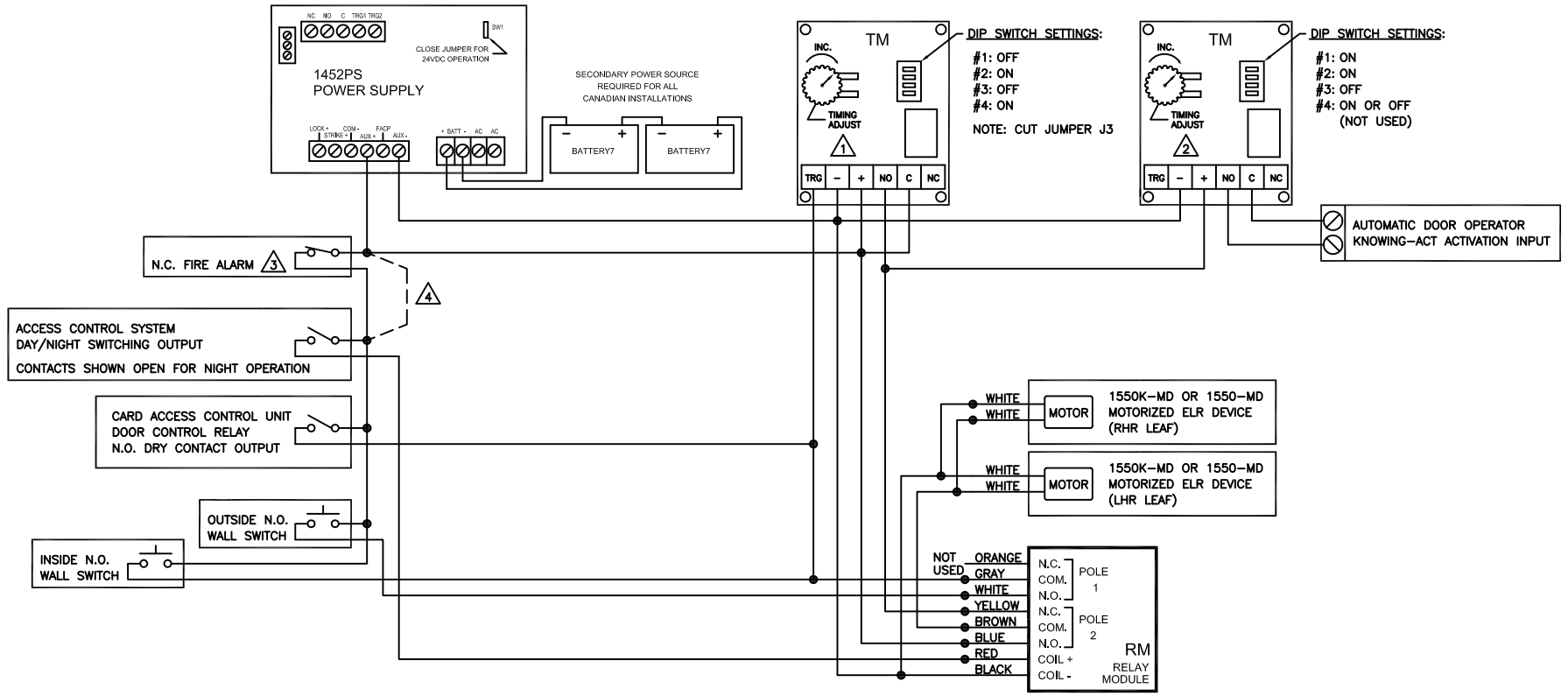

SYSTEM OPERATION:

WHEN THE ACCESS CONTROL SYSTEM DAY/NIGHT SWITCHING OUTPUT IS SET FOR DAY OPERATION (DRY CONTACTS CLOSED), THE LATCHBOLTS WILL RETRACT. PUSHING THE OUTSIDE OR INSIDE WALL SWITCH WILL ACTIVATE THE AUTOMATIC DOOR OPERATOR.

WHEN THE ACCESS CONTROL SYSTEM DAY/NIGHT SWITCHING OUTPUT IS SET FOR NIGHT OPERATION (DRY CONTACTS OPEN), THE LATCHBOLTS WILL PROJECT AND THE OUTSIDE WALL SWITCH BECOMES DISABLED. A VALID SWIPE FROM THE CARD READER WILL SEQUENTIALLY RETRACT THE LATCHBOLTS AND ACTIVATE THE AUTOMATIC DOOR OPERATOR. THE INSIDE WALL SWITCH IS ALWAYS ENABLED IN NIGHT MODE AND WILL SEQUENTIALLY RETRACT THE LATCHBOLTS AND ACTIVATE THE AUTOMATIC DOOR OPERATOR.

NOTES:

1. ADJUST LATCH RETRACTION DELAY TIMER FOR 3–5 SEC. TO ENSURE LATCHBOLTS ARE FULLY RETRACTED BEFORE AUTO OPERATOR OPENS DOOR LEAVES, AND TO ENSURE THEY WILL LATCH WHEN THEY CLOSE.
2. ADJUST AUTO OPERATOR DELAY–BEFORE–ACTIVATE TIMER FOR 1–2 SEC. TO ALLOW ENOUGH TIME FOR LATCHBOLTS TO FULLY RETRACT BEFORE OPERATOR IS ACTIVATED. NOTE: THE "TRG" TERMINAL IS NOT USED WITH THIS TIMER.
3. A FIRE ALARM CONDITION OCCURRING WHILE IN DAY MODE WILL IMMEDIATELY PROJECT LATCHBOLTS AND DISABLE USE OF OUTSIDE AND INSIDE WALL SWITCHES. WHEN A FIRE ALARM CONDITION OCCURS IN NIGHT MODE, LATCHBOLTS WILL REMAIN PROJECTED, AND BOTH OUTSIDE AND INSIDE WALL SWITCHES WILL BECOME DISABLED. NOTE: IF A FIRE ALARM OCCURS AT THE BEGINNING OF A DOOR OPEN CYCLE, THE SYSTEM APPLICATION WILL ALLOW THE OPENING CYCLE TO BE COMPLETED BEFORE DISABLING LATCH RETRACTION AND USE OF BOTH WALL SWITCHES.
4. IF FIRE ALARM IS NOT REQUIRED, CONNECT ONE SIDE OF THE ACCESS CONTROL SYSTEM DAY/NIGHT SWITCHING OUTPUT, CARD ACCESS RELAY OUTPUT, OUTSIDE WALL SWITCH AND INSIDE WALL SWITCH (ALL SHOWN BUSSED TOGETHER) TO THE AUXILIARY OUTPUT POSITIVE (+) TERMINAL (SHOWN AS DOTTED LINE).

POINT-TO-POINT WIRING DIAGRAM
DAY/NIGHT APPLICATION - VARIATION #3
USING SERIES 1550K-MD OR 1550-MD MOTOR DRIVE ELR DEVICES

ARCHITECTURAL CONTROL SYSTEMS, INCORPORATED
ST. LOUIS, MISSOURI
1–800–753–5558

TOLERANCES UNLESS NOTED
FRACTION ±1/64
DECIMAL ± .005
ANGULAR ±1°
DRILL +.007 –.001
REAM +.001 –.000
PUNCH +.004 –.001

DESCRIPTION	DRAWING NO.	MATERIAL
ACSI P/N 1452–DN ELR ACCESS CONTROL	REF 6040–P4–3	

2/13/15	RELEASED	CRH
DATE	REV.	APPRV.
SCALE NONE	DRAWN BY CRH	DATE 2/13/15
SHEET 1 OF 1	APPRV. BY CRH	DATE 2/13/15

DO NOT SCALE THIS DRAWING

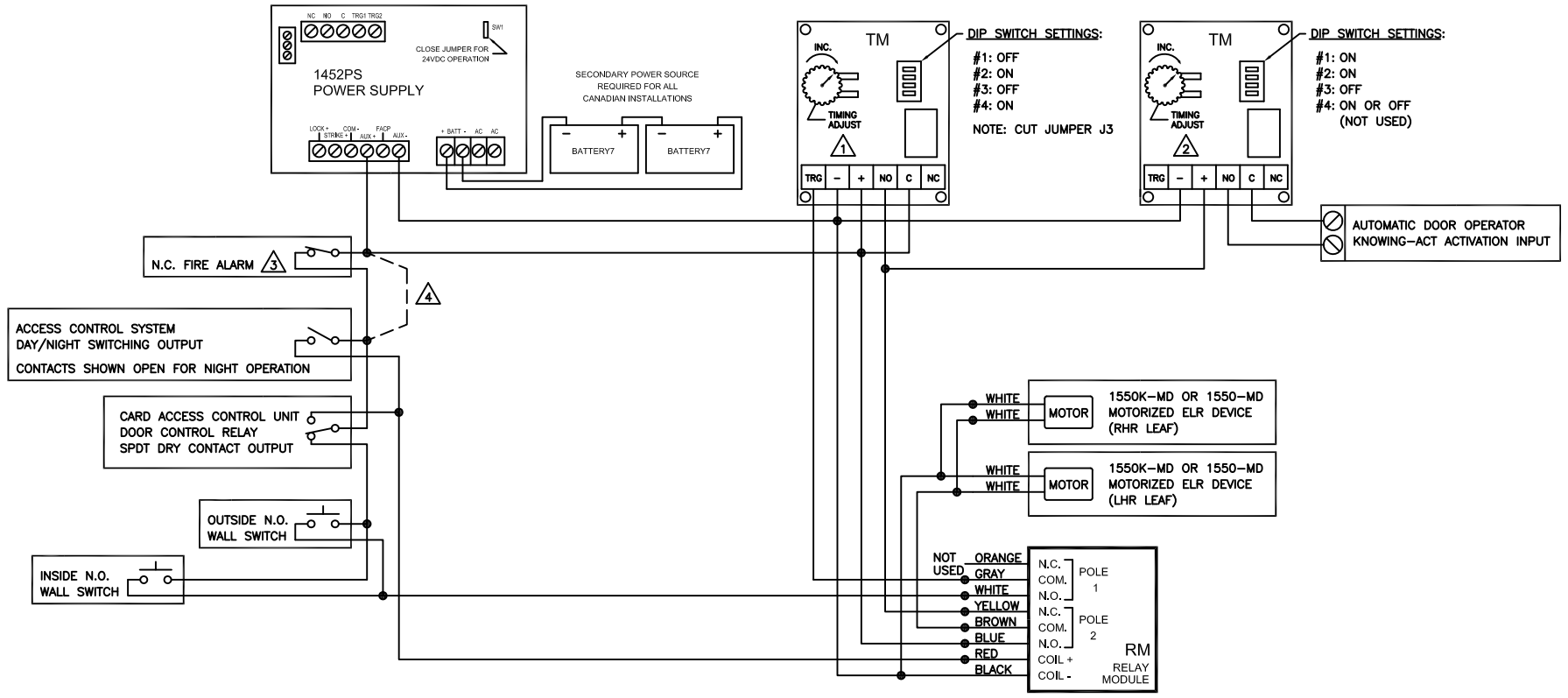

SYSTEM OPERATION:

WHEN THE ACCESS CONTROL SYSTEM DAY/NIGHT SWITCHING OUTPUT IS SET FOR DAY OPERATION (DRY CONTACTS CLOSED), THE LATCHBOLTS WILL RETRACT. PUSHING THE OUTSIDE OR INSIDE WALL SWITCH WILL ACTIVATE THE AUTOMATIC DOOR OPERATOR.

WHEN THE ACCESS CONTROL SYSTEM DAY/NIGHT SWITCHING OUTPUT IS SET FOR NIGHT OPERATION (DRY CONTACTS OPEN), THE LATCHBOLTS WILL PROJECT AND BOTH THE OUTSIDE AND INSIDE WALL SWITCHES BECOME DISABLED. A VALID SWIPE FROM THE CARD READER WILL ONLY RETRACT THE LATCHBOLTS. THE DOOR MUST BE PULLED OPEN MANUALLY FOR ENTRY OR PUSHED OPEN MANUALLY FOR EXITING.

NOTES:

1. ADJUST LATCH RETRACTION DELAY TIMER FOR 3–5 SEC. TO ENSURE LATCHBOLTS ARE FULLY RETRACTED BEFORE AUTO OPERATOR OPENS DOOR LEAVES, AND TO ENSURE THEY WILL LATCH WHEN THEY CLOSE.
2. ADJUST AUTO OPERATOR DELAY–BEFORE–ACTIVATE TIMER FOR 1–2 SEC. TO ALLOW ENOUGH TIME FOR LATCHBOLTS TO FULLY RETRACT BEFORE OPERATOR IS ACTIVATED. NOTE: THE "TRG" TERMINAL IS NOT USED WITH THIS TIMER.
3. A FIRE ALARM CONDITION OCCURRING WHILE IN DAY MODE WILL IMMEDIATELY PROJECT LATCHBOLTS AND DISABLE USE OF OUTSIDE AND INSIDE WALL SWITCHES. WHEN A FIRE ALARM CONDITION OCCURS IN NIGHT MODE, LATCHBOLTS WILL REMAIN PROJECTED, AND BOTH OUTSIDE AND INSIDE WALL SWITCHES WILL BECOME DISABLED. NOTE: IF A FIRE ALARM OCCURS AT THE BEGINNING OF A DOOR OPEN CYCLE, THE SYSTEM APPLICATION WILL ALLOW THE OPENING CYCLE TO BE COMPLETED BEFORE DISABLING LATCH RETRACTION AND USE OF BOTH WALL SWITCHES.
4. IF FIRE ALARM IS NOT REQUIRED, CONNECT ONE SIDE OF THE ACCESS CONTROL SYSTEM DAY/NIGHT SWITCHING OUTPUT AND CARD ACCESS RELAY OUTPUT (BOTH SHOWN BUSSED TOGETHER) TO THE AUXILIARY OUTPUT POSITIVE (+) TERMINAL (SHOWN AS DOTTED LINE).

POINT-TO-POINT WIRING DIAGRAM
DAY/NIGHT APPLICATION - VARIATION #4
USING SERIES 1550K-MD OR 1550-MD MOTOR DRIVE ELR DEVICES

ARCHITECTURAL CONTROL SYSTEMS, INCORPORATED
ST. LOUIS, MISSOURI
1–800–753–5558

TOLERANCES UNLESS NOTED
FRACTION ±1/64
DECIMAL ± .005
ANGULAR ±1°
DRILL +.007 –.001
REAM +.001 –.000
PUNCH +.004 –.001

DESCRIPTION	DRAWING NO.	MATERIAL
ACSI P/N 1452–DN ELR ACCESS CONTROL	REF 6040–P4–4	

2/13/15	RELEASED	CRH
DATE	REV.	APPRV.
SCALE NONE	DRAWN BY CRH	DATE 2/13/15
SHEET 1 OF 1	APPRV. BY CRH	DATE 2/13/15
DO NOT SCALE THIS DRAWING		

AL175ULX
Access Control Power Supply/Charger

Overview:

The AL175ULX is a power-limited power supply/charger that will convert 115VAC / 60Hz input into two individually PTC protected auto-resettable 12VDC or 24VDC outputs (see specifications). It is intended for use in applications requiring UL Listing for Access Control System Units (UL 294) and applications requiring an interface with the Fire Alarm Control Panels.

Specifications:

Agency Listings:

- UL Listed for Access Control Systems (UL294). CUL Listed - CSA Standard C22.2 No.205-M1983, Signal Equipment.
- MEA - NYC Dept. of Buildings Approved.
- CSFM - California State Fire Marshal Approved.
- Conforms to NFPA 101 life safety codes.

Input:

- Input 115VAC / 60 Hz, 0.6A.

Output:

- Selectable 12VDC or 24VDC power-limited outputs.
- Class 2 Rated power-limited outputs.
- 1.75A continuous supply current @ 12VDC or 24VDC.
- Filtered and electronically regulated output.
- Short circuit and thermal overload protection.

Battery Backup:

- Maximum charge current: 400mA.
- Automatic switch over to stand-by battery when AC fails.

Supervision:

- AC fail supervision (form “C” contacts).
- Dry trigger output (form “C” contacts).

Fire Alarm Interface:

- Dry trigger input.

Visual Indicators:

- AC input and DC output LED indicators.

Added Features:

- Includes power supply, transformer, and enclosure.

Enclosure Dimensions:

13.5” x 13” x 3.25” (342.9mm x 330.2mm x 82.55mm).

Power Supply Output Specifications:

Output VDC	Switch Position	Max. Stand-by Load DC	Max. Alarm Load DC	Battery (optional)
12VDC	SW1 OFF	1.75A	1.75A	12VDC
24VDC	SW1 ON	1.75A	1.75A	24VDC

Stand-by Specifications:

Output	4 hr. of Stand-by and 5 Minutes of Alarm
12VDC / 7 AH Battery	Stand-by = 1.25A
24VDC / 7 AH Battery	Alarm = 1.25A

Installation Instructions:

Wiring methods shall be in accordance with the National Electrical Code/NFPA 70/NFPA 72/ANSI, and with all local codes and authorities having jurisdiction. Product is intended for indoor use only.

See ***Terminal Identification Chart*** on *Pg. 3* for a description of each terminal function.

1. Mount unit in the desired location. Mark and predrill holes in the wall to line up with the top two keyholes in the enclosure. Install two upper fasteners and screws in the wall with the screw heads protruding. Place the enclosure’s upper keyholes over the two upper screws; level and secure. Mark the position of the lower two holes. Remove the enclosure. Drill the lower holes and install two fasteners. Place the enclosure’s upper keyholes over the two upper screws. Install the two lower screws and make sure to tighten all screws *(Enclosure Dimensions, pg. 3)*. Secure enclosure to earth ground.
2. Connect AC power to the black and white flying leads of the transformer. Secure green wire lead to earth ground. Use 18 AWG or larger for all power connections (Battery, DC output). Use 22 AWG to 18 AWG for power-limited circuits (trigger inputs, dry outputs).
   Keep power-limited wiring separate from non power-limited wiring (115VAC / 60Hz Input, Battery Wires). Minimum 0.25” spacing must be provided.
   CAUTION: Do not touch exposed metal parts. Shut branch circuit power before installing or servicing equipment. There are no user serviceable parts inside. Refer installation and servicing to qualified service personnel.
3. Set the AL175ULX to the desired DC output voltage by setting switch SW1 to the appropriate position (refer to ***Power Supply Output Specification Table***).
4. Measure output voltage before connecting devices. This helps avoiding potential damage.

5. Connect one (1) 12VDC battery to the terminals marked [+ BAT –] *(Fig. 1, pg. 2)* for 12VDC operation. Use two (2) 12VDC batteries connected in series for 24VDC operation (Battery leads included).
   Note: For Access Control applications batteries are optional. When batteries are not used, a loss of AC will result in the loss of output voltage. When the use of stand-by batteries is desired, they must be lead acid or gel type. Use two (2) 12VDC batteries connected in series for 24VDC operation.
6. Connect appropriate signaling notification devices to AC Fail supervisory relay outputs.
   Note: To meet UL requirements, AC Supervisory outputs must be connected to the zone of Alarm Control Panel or to visual AC trouble indicator.
7. For Access Control Device & Fire Alarm Interface connections refer to desired *Application Diagrams (pg. 4)* and *Terminal Identification Chart (pg. 3)*.

Maintenance:

Unit should be tested at least once a year for the proper operation as follows:
Output Voltage Test: Under normal load conditions, the DC output voltage should be checked for proper voltage level (refer to ***Power Supply Output Specifications Chart***).
Battery Test: Under normal load conditions check that the battery is fully charged, check specified voltage both at battery terminal and at the board terminals marked [- BAT +] to ensure that there is no break in the battery connection wires.
Note: Maximum charging current under discharges is 0.40A.
Note: Expected battery life is 5 years; however, it is recommended changing batteries in 4 years or less if needed.

LED Diagnostics:

Red (DC)	Green (AC)	Power Supply Status
ON	ON	Normal function.
ON	OFF	Loss of AC. Battery backup is powering output.
OFF	ON	No DC output.
OFF	OFF	Loss of AC. Discharged or missing stand-by battery. No DC output.

Fig. 1

CAUTION: De-energize unit prior to servicing. For continued protection against fire hazard replace fuses with the same type and rating.
Do not expose to rain or moisture.

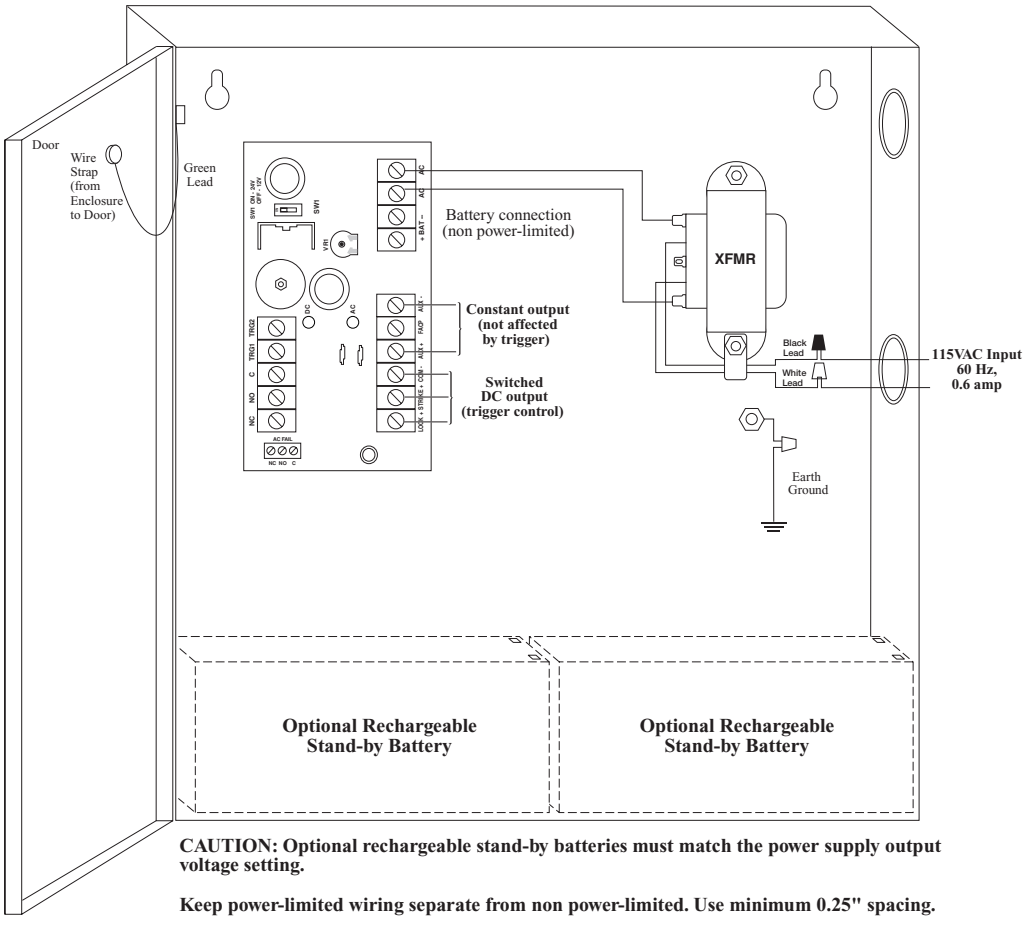

CAUTION: Optional rechargeable stand-by batteries must match the power supply output voltage setting.

Keep power-limited wiring separate from non power-limited. Use minimum 0.25" spacing.

Terminal Identification:

Terminal Legend	Function/Description
TRG1 and TRG2	These input terminals are designed to connect to the normally closed outputs of an access control or fire alarm relay. These terminals control [LOCK+], and [STRIKE+], as well as AL175ULX output relay contacts [NC, NO, C]
LOCK+	This terminal provides DC output voltage when [TRG1] and [TRG2] are shorted together and are typically used to power Mag Locks.
STRIKE+	This terminal provides DC output voltage when [TRG1] and [TRG2] are unshorted and are typically used to power Electric Strikes.
NC, NO, C	Isolated dry Form "C" contacts. Shorting [TRG1] and [TRG2] together causes these contacts to switch. They are typically used for controlling multiple AL175ULXs with fire alarm tie-in *(Fig. 5 and Fig. 6, pg. 4)*
AUX +	Continuous positive (+) DC power output voltage. It is not affected by TRG1, TRG2 operation.
COM -	Common negative (-) output (ground).
FACP	Spare wiring terminal used for fire alarm tie-in application *(Fig. 4, pg. 4)*.
+ BAT –	Stand-by battery connections.
AC FAIL NC, C, NO	Indicates loss of AC e.g connect audible device or alarm panel relay normally energized When AC power is present. Contact rating 1A @ 28VDC.

Enclosure Dimensions:

13.5" x 13" x 3.25" (342.9mm x 330.2mm x 82.55mm)

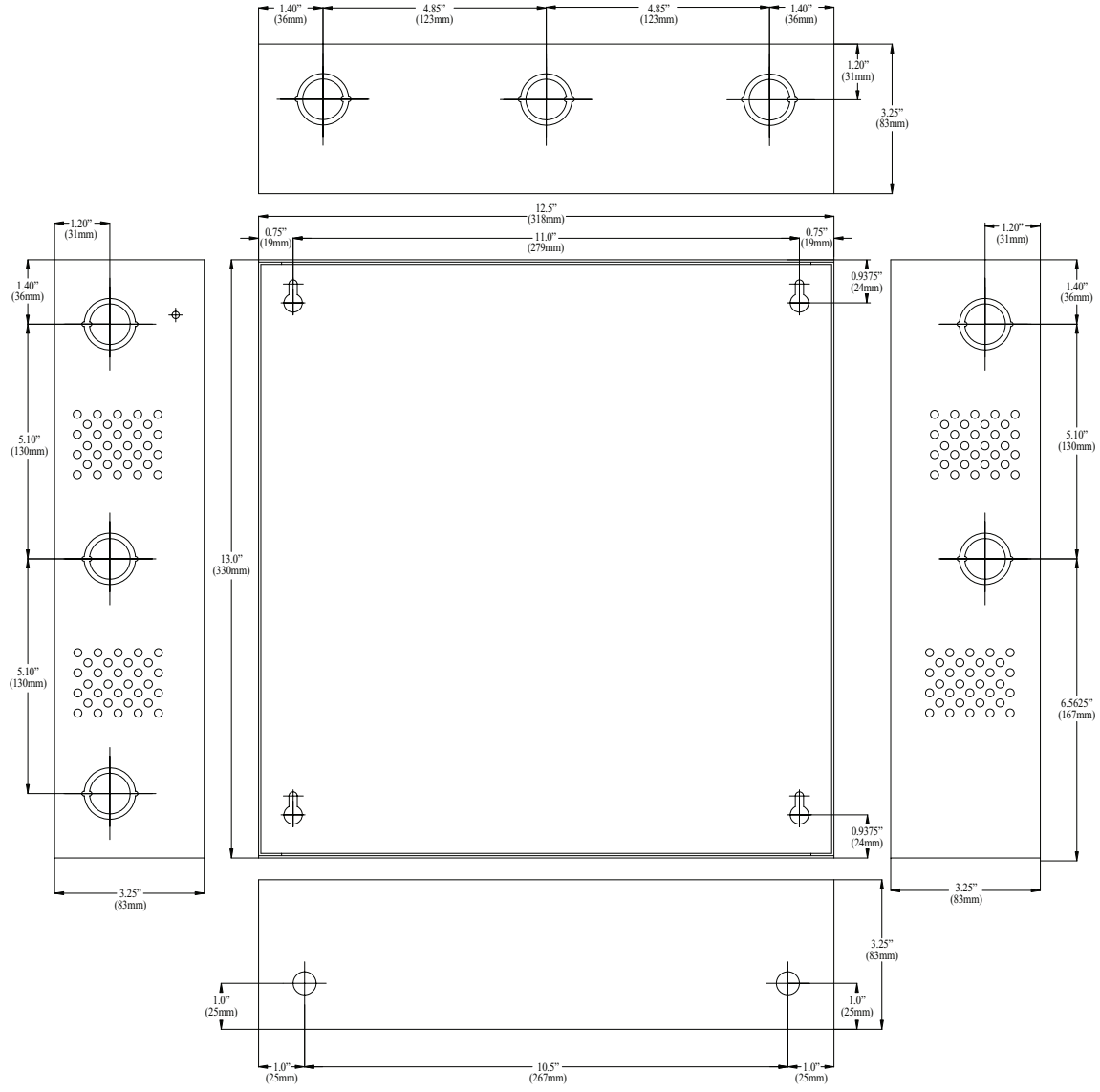

Typical Application Diagrams:

Fig. 2 Typical single mag lock or door strike installation with fire alarm tie-in using trigger controlled output:

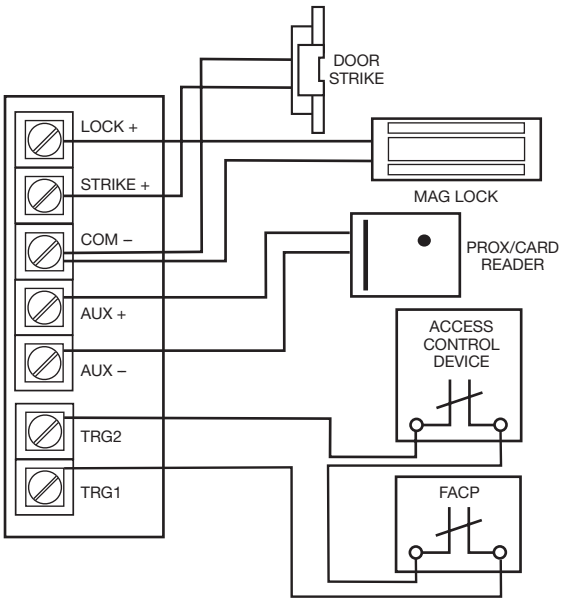

Fig. 3 Typical dual mag lock installation with fire alarm tie-in using trigger controlled outputs:

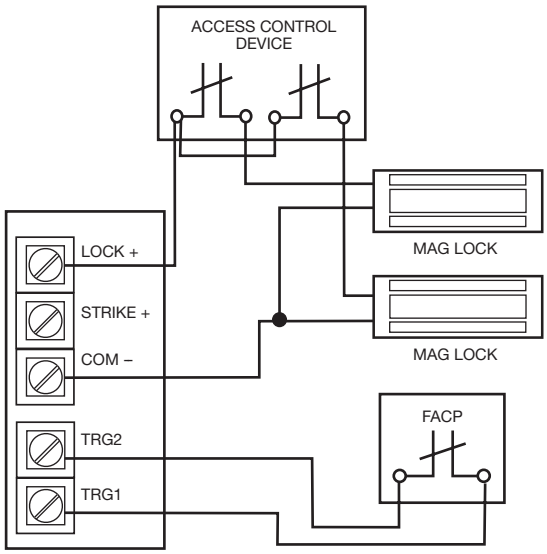

Fig. 4 Typical mag lock with fire alarm tie-in using aux output installation:

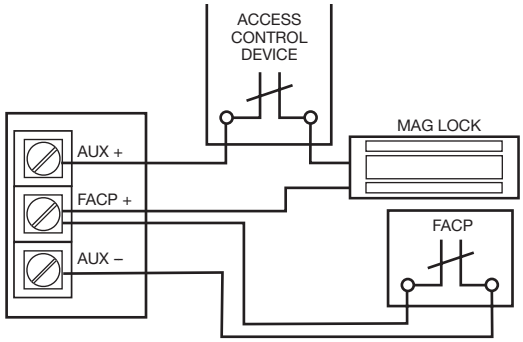

Fig. 5 Latching fire alarm tie-in with manual reset:

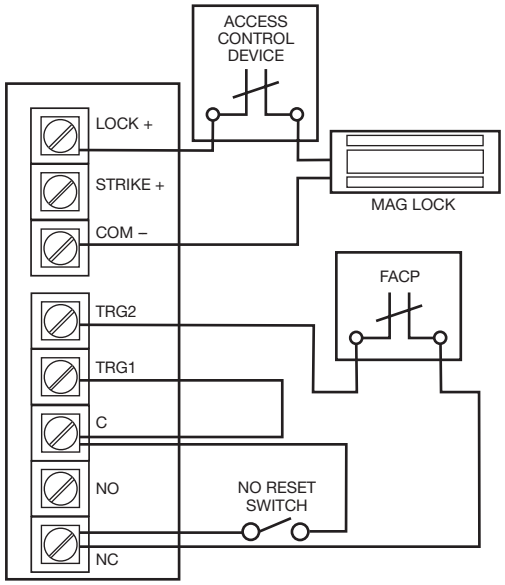

Fig. 6 Multiple AL175ULX power supply connections:

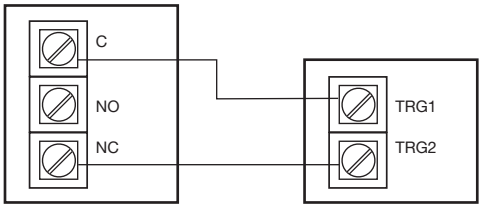

Altronix is not responsible for any typographical errors. Product specifications are subject to change without notice.

140 58th Street, Brooklyn, New York 11220 USA | phone: 718-567-8181 | fax: 718-567-9056
web site: www.altronix.com | e-mail: info@altronix.com | Lifetime Warranty | Made in U.S.A.

ASTERISK SECURITY HARDWARE INTERNATIONAL INC
PS SERIES POWER SUPPLY
PDCU 2020 1-4 ZONES POWER DISTRIBUTION
CONTROL UNIT

The **Asterisk** PS series and PDCU 2020 series is a UL and ULC listed power supply , time delay control unit design to power up to six magnetic locking devices. Its built-in ground fault release, fire alarm release and manual/automatic selective reset capability meets the intention of national and provincial building codes. Combine with the Asterisk series of magnetic locking devices, electric strikes, switched exit devices and a host of switching and annunciations options, the PDCU features unsurpassed flexibility to accommodate any access control specifications. The PS/PDCU provides 12 or 24vdc power to any electromagnetic locking devices. .

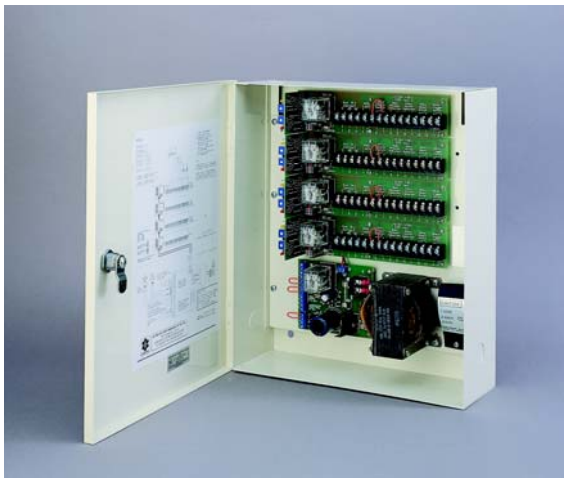

Features:-

- Design to power up to 6 (24vdc) magnets or 3 (12vdc) magnets.
- The power supply can be expanded up to 4 zones. Each zone can perform independently. All doors in the same zome perform identicaly.
- Built-in fire alarm contact terminals. All locks release immediately upon fire alarm signal and loss of power.
- Manual/automatic reset system. Selective mode to reset the system after fire alarm system reset and restoration of power.
- Battery backup capability
- Auxiliary 12 and 24 vac output.
- Auxiiiary Form “C” contact (follow) status of fire alarm contact
- AC and DC fused.
- Field expandable, 1 to 4 zones.
- Multiple PS/PDCU can be daisy-chained for a single fire alarm release and rest feature.

SPECIFICATIONS:

Power supply shall be Asterisk seriesPS or PDCU , UL and ULC listed to meet the intend of the building code. The power supply shall. Be 120vac in/ut / 1`2 or 24vdc output. With built-in fire alarm release contact and , manual or automatic reset contact.

ULC listed—Door releasing and automatic releasing devices (electrically activated)
CAN/ulc-S533-M87 STANDARD
UL listed—Releasing devices (SZNT)general purpose power supply

PLUG-IN DELAY MODULES:
DCM1—Instand release , delay relock (adjustable)
DCM-2—Delay release (adjustable) delay relock (adjustable)
DCM-3—NFPA Delay release (adjustable set to 15 sec) manual reset.
DCM-3N NFPA 3 seconds nuisance Delay release, amunal relock

Zone card features

- Independent zone lock/unlock switch terminal
- Auxiliary Form “C” contact
- Door release output
- Delay release output
- Zone trigger switch terminal
- Zone reset switch..

Specifications:
Height—14”
Width—12 “
Depth—4”

Input—120vac
Output :
12vdc/2amp
Or
24vdc/2amp
Contact rating
3amp@ 120vac/30v

ASTERISK SECURITY HARDWARE INTERNATIONAL INC.
7045 TRANMERE DR. UNIT 10
MISSISSAUGA, ONTARIO, CANADA L5S 1M2
TEL:(905)672 1245 FAX: (905) 672 1247

MODEL

- ☐ PS12-2
- ☐ PS24-2
- ☐ PDCU 2021
- ☐ PDCU 2022
- ☐ PDCU2023
- ☐ PDCU 2024

☐ INPUT:120VAC/60Hz/0.75A
OUTPUT: 24VDC 2.0 AMP

☐ INPUT:120VAC/60Hz/0.75A
OUTPUT: 12VDC 2.0 AMP

(1) - LOAD 2 AMP. MAXIMUM
(2) - LOCK/UNLOCK SWITCH
(3) - DOOR RELEASE INDICATION OUTPUT 0.2A MAX
(4) - DELAY ACTIVE INDICATION OUTPUT 0.2A MAX
(5) - DELAY CYCLE RESET SWITCH (N.O MOMENTARY.)
(6) DELAY CYCLE START SWITCH (N.O MOMENTARY)

NOTE;

CURRENT CAPABILITIES SPECIFIED ABOVE ARE MAXIMUM ALLOWABLE ,REGARDLESS THE NUMBER OF ZONE(S) IN THE SYSTEM.

CURRENT DRAW CAN BE DISTRIBUTED UNEVENLY BETWEEN ZONES AS LONG AS THE COMBINED LOADING DOES NOT EXCEED THE MAXIMUM ALLOWABLE FIGURE.

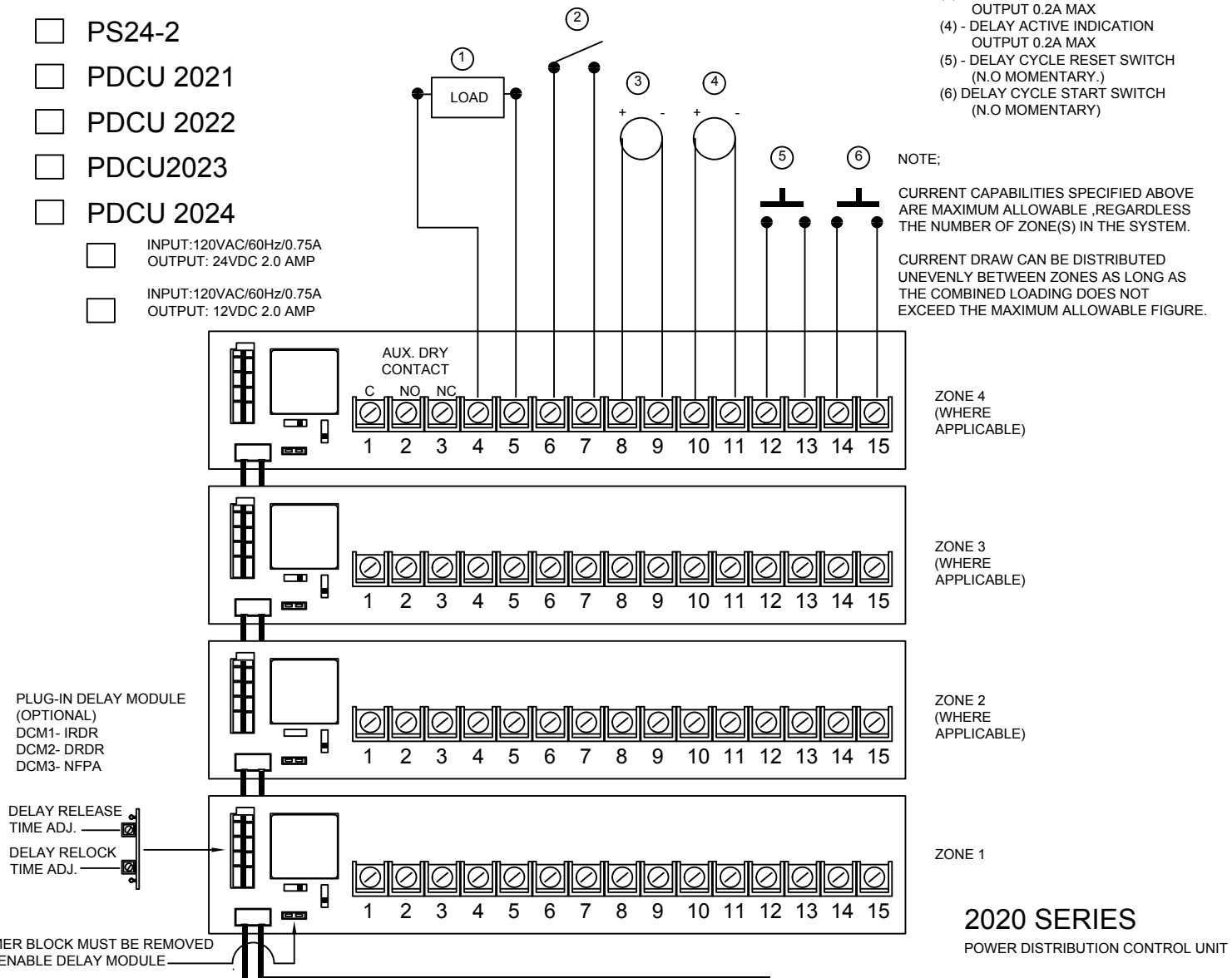

2020 SERIES

POWER DISTRIBUTION CONTROL UNIT

PS SERIES -

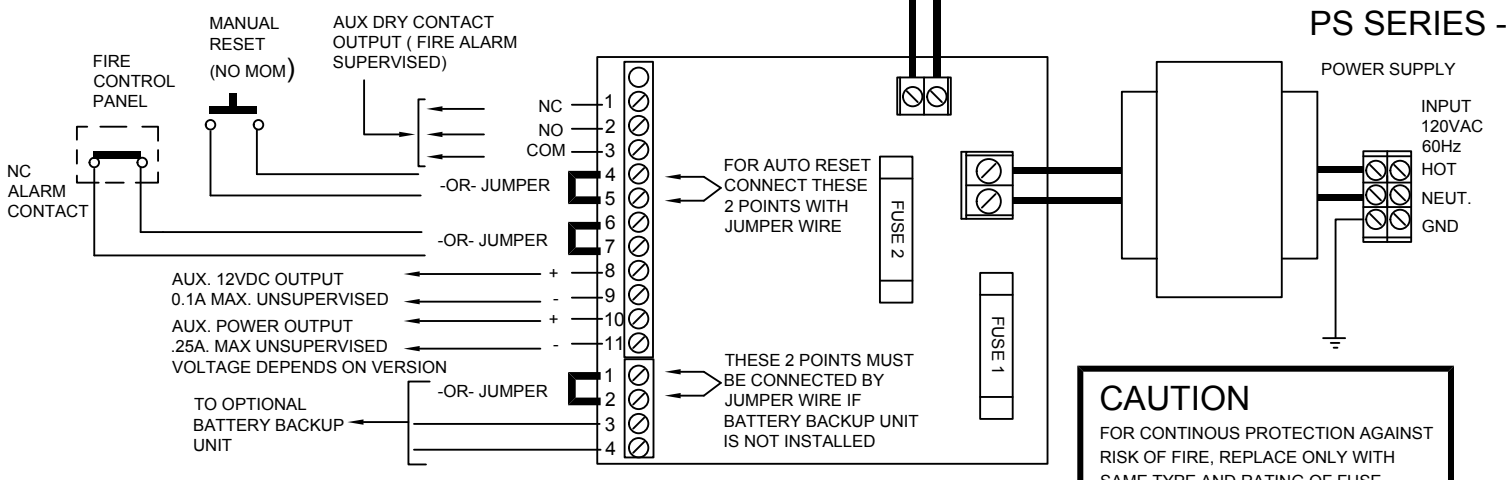

CAUTION

FOR CONTINOUS PROTECTION AGAINST RISK OF FIRE, REPLACE ONLY WITH SAME TYPE AND RATING OF FUSE.
F1 : 4A 250V SLOW
F2 : 2.5A 250 FAST ACTING

ASTERISK

ASTERISK SECURITY HARDWARE INT'NL INC.
7045 TRANMERE DR. UNIT 10
MISSISSAUGA, ONTARIO, CANADA, L5S 1M2
TEL: (905)672 1245 FAX: (905) 672 1247

DATE OF MANUFACTURE ☐☐☐☐☐☐

ELECTRIC CYLINDRICAL LOCK INSTRUCTIONS
SOLENOID-CONTROLLED ELECTRIC LOCKING/UNLOCKING

1510 - Fail Safe (Power Lock):
Outside trim is locked when power is applied and unlocked when power is removed. Lockset will unlock in the event of a power failure.

1520 - Fail Secure (Power Unlock):
Outside trim is unlocked when power is applied and locked when power is removed. Lockset will lock in the event of a power failure.

Key Function:
The latch bolt may be momentarily retracted with a key even though the lockset is electrically locked.

Electrical Specifications:
Continuous Duty Solenoids
- 12VAC/DC ± 10%, 250mA
- 24VAC/DC ± 10%, 150mA

Non-polarized Blue Leads

2-Conductor Wire Run	
Distance 12V/24V	**Wire Gauge**
120'/400'	22
175'/600'	20
300'/1000'	18
475'/1600'	16
750'/2500'	14
1200'/4000'	12

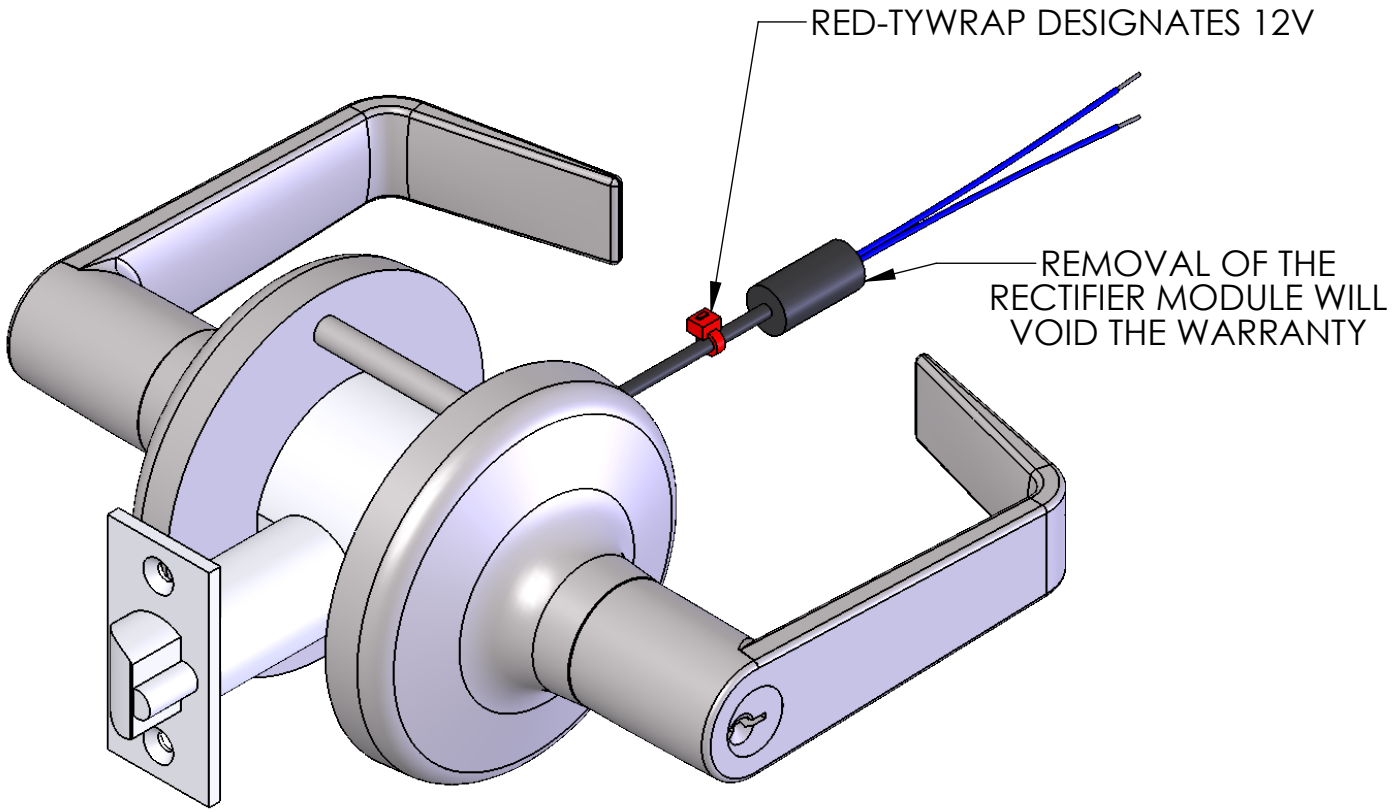

ELECTRIC CYLINDRICAL LOCK INSTRUCTIONS
MOTOR-CONTROLLED ELECTRIC LOCKING/UNLOCKING

1510 - Fail Safe (Power Lock):
Outside trim is locked when power is applied and unlocked when power is removed. Lockset will unlock in the event of a power failure.

1520 - Fail Secure (Power Unlock):
Outside trim is unlocked when power is applied and locked when power is removed. Lockset will lock in the event of a power failure.

Key Function:
The latch bolt may be momentarily retracted with a key even though the lockset is electrically locked.

Electrical Specifications:
Voltage: 12-24V AC/DC (11V - 30V)
Current: 250mA MAX Inrush, 10mA MAX Holding
Non-polarized Blue Leads

Switch Slider Settings:
Yellow: Fail Secure
Green: Fail Safe

2-Conductor Wire Run	
Distance 12V/24V	**Wire Gauge**
125'/250'	22
200'/400'	20
300'/600'	18
500'/1000'	16
750'/1500'	14
1250'/2500'	12

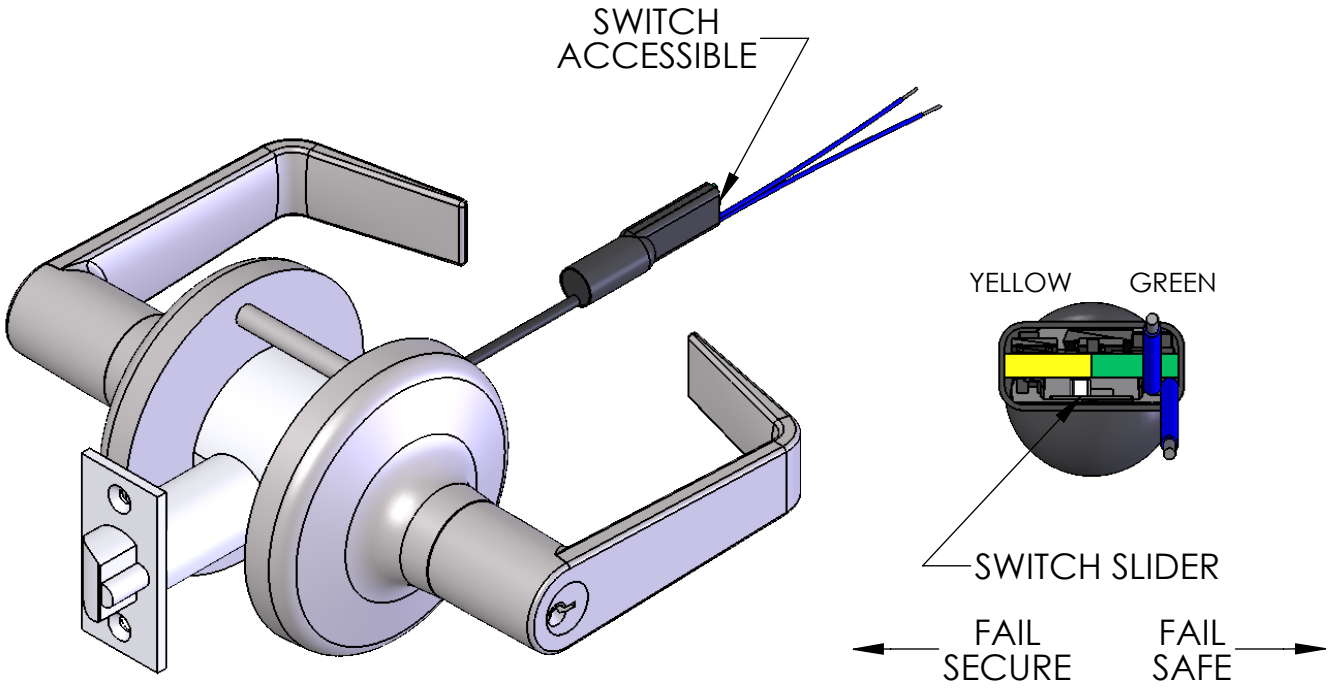

ELECTRIC CYLINDRICAL LOCK INSTRUCTIONS
AE - AUTHORIZED EGRESS (REQUEST-TO-EXIT)

Description:
Monitors the use of the INSIDE trim.

Electrical Specifications:
SPDT Monitor Switch
Switch "A" Contacts Rated: 1A @ 250VAC
Switch "B" Contacts Rated: 3A @ 125VAC, 2A @ 30VDC
Switch "C" Contacts Rated: 0.5A @ 30VDC

Wire Color Codes:
YELLOW - Common
RED - Normally Open
GRAY - Normally Closed

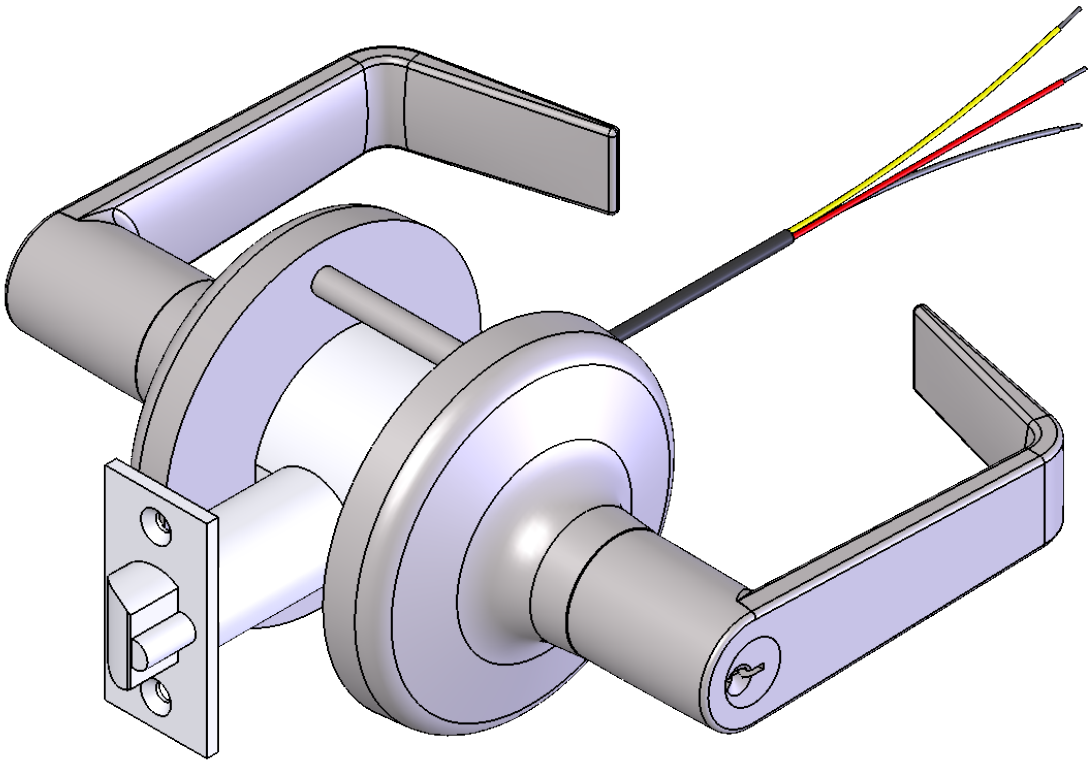

Manufacturer's Series	Switch		Manufacturer's Series	Switch
Arrow QL	B		PDQ GT	C
Corbin 3300	B		Sargent 10 Line	A
Design Hardware Z	B		Schlage ND	A
Falcon T	C		Tell LC2400	B
General Lock L100	B		Yale 5400LN	B
Hager 3400	B			

CORBIN RUSSWIN ML2055 AND ARROW BM17 ELECTRIC LOCK M1510/1520C

FUNCTION CHANGE INSTRUCTIONS

TO CHANGE THE LOCKING FUNCTION FOLLOW THE THE BELOW INSTRUCTIONS CAREFULLY.

STEP 1: REMOVE THE 3 COVER SCREWS AND COVER

STEP 2: USING THE ILLUSTRATION BELOW, REMOVE PIN AND REPLACE PIN IN PROPER HOLE AS FOLLOWS

A **FOR FAIL SECURE M1520C (POWER UNLOCK) FUNCTION**

B **FOR FAIL SAFE M1510C (POWER LOCK) FUNCTION**

STEP 3: REPLACE COVER AND SCREWS. MAKE SURE SOLENOID IS PROPERLY POSITIONED IN COVER SLOT.

A **INSERT PIN HERE FOR FAIL SECURE (POWER UNLOCK) OPERATION**

B **INSERT PIN HERE FOR FAIL SAFE (POWER LOCK) OPERATION**

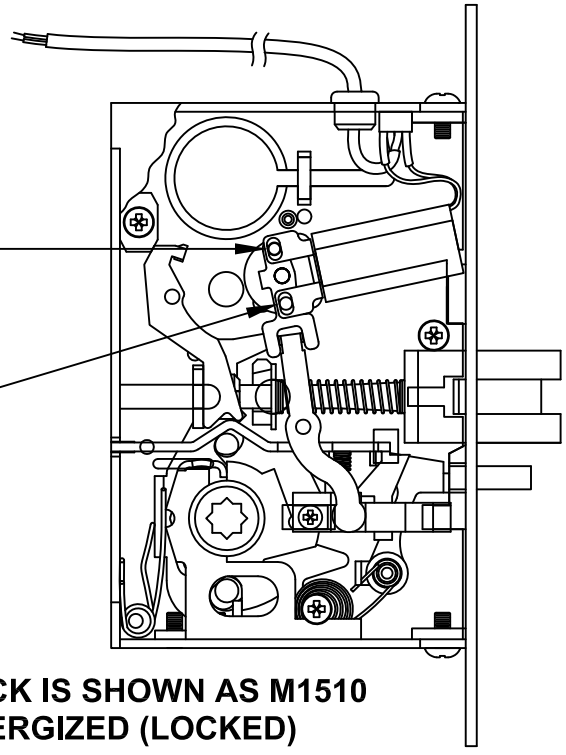

LOCK IS SHOWN AS M1510 ENERGIZED (LOCKED)

ACSI ARCHITECTURAL CONTROL SYSTEMS INC.

SCHLAGE L9070 & L9453 ELECTRIC LOCK M1510/1520C

FUNCTION CHANGE INSTRUCTIONS

TO CHANGE THE LOCKING FUNCTION FOLLOW THE BELOW INSTRUCTIONS CAREFULLY.

STEP 1: REMOVE THE 4 COVER SCREWS AND COVER

STEP 2: USING THE ILLUSTRATION BELOW, REMOVE PIN AND REPLACE PIN IN PROPER HOLE AS FOLLOWS

A **FOR FAIL SECURE M1520C (POWER UNLOCK) FUNCTION**

B **FOR FAIL SAFE M1510C (POWER LOCK) FUNCTION**

STEP 3: REPLACE COVER AND SCREWS. MAKE SURE SOLENOID IS PROPERLY POSITIONED IN COVER SLOT.

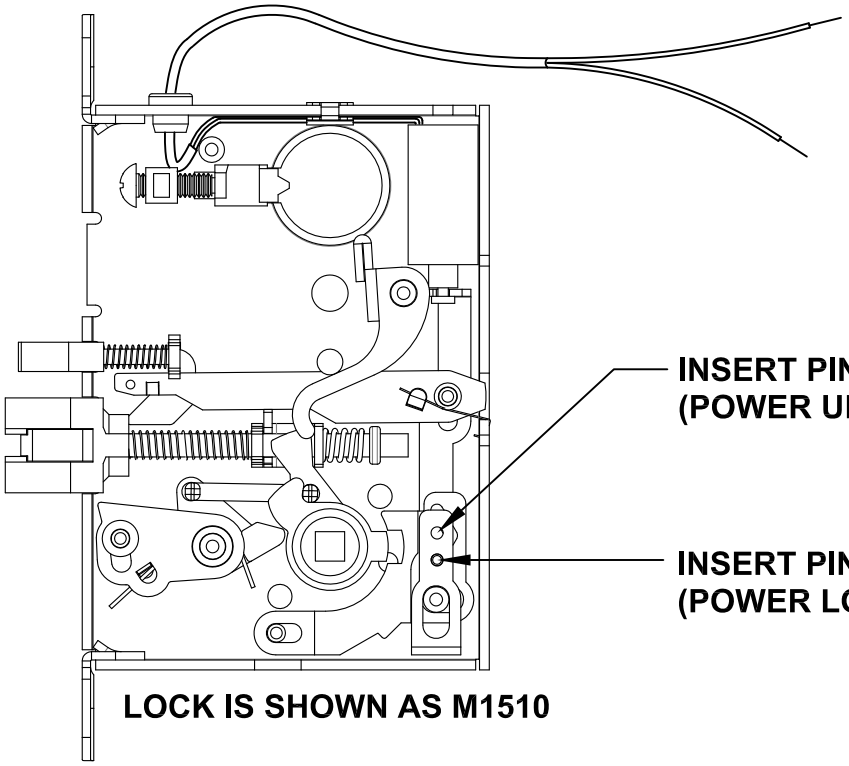

LOCK IS SHOWN AS M1510

ACSI ARCHITECTURAL CONTROL SYSTEMS INC.

ELECTRIC MORTISE LOCK INSTRUCTIONS
SOLENOID-CONTROLLED ELECTRIC LOCKING/UNLOCKING

1510 - Fail Safe (Power Lock):
Outside trim (or both outside and inside trim depending on the lock function) is locked when power is applied and unlocked when power is removed. Lockset will unlock in the event of a power failure.

1520 - Fail Secure (Power Unlock):
Outside trim (or both outside and inside trim depending on the lock function) is unlocked when power is applied and locked when power is removed. Lockset will lock in the event of a power failure.

Key Function:
The latch bolt may be momentarily retracted with a key even though the lockset is electrically locked.

2-Conductor Wire Run	
Distance 12V/24V	**Wire Gauge**
50'/175'	22
75'/275'	20
120'/450'	18
200'/700'	16
300'/1100'	14
500'/1800'	12

Electrical Specifications:
Continuous Duty Solenoids
- 12VAC/DC ± 10%, 612mA
- 12VDC ± 10%, 612mA
- 24VAC/DC ± 10%, 330mA
- 24VDC ± 10%, 330mA

Non-polarized Leads
- Blue (AC/DC)
- White (DC)

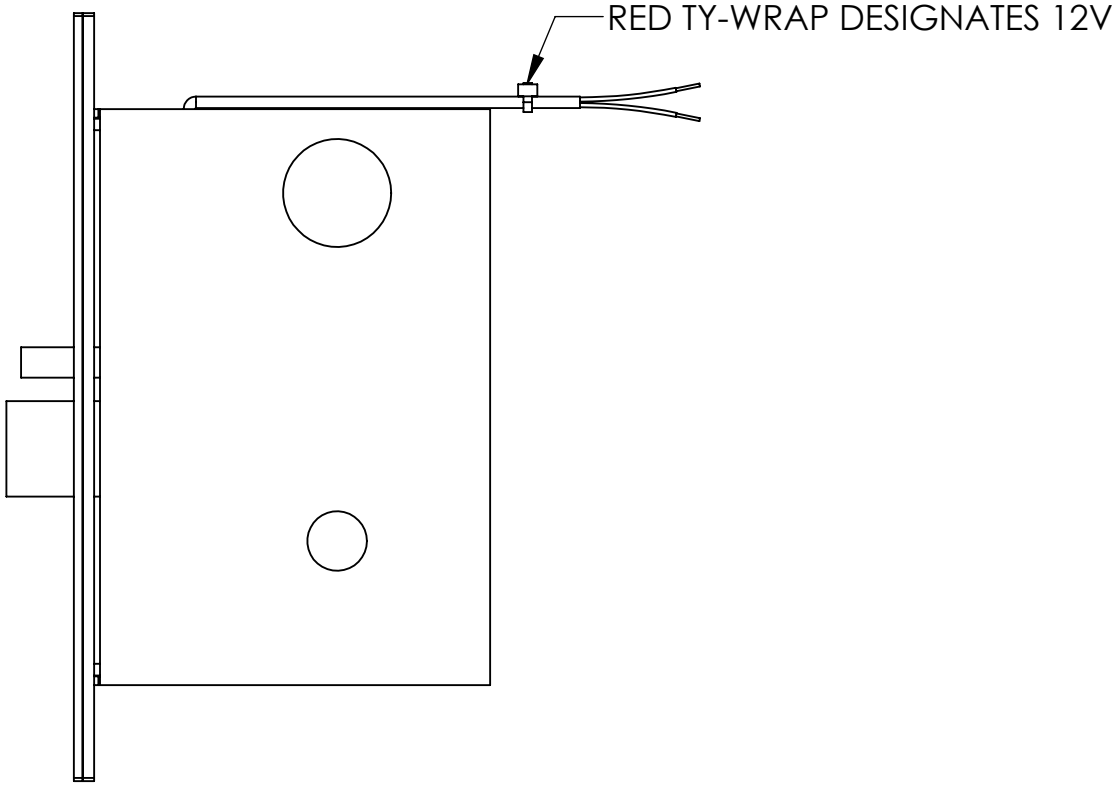

ELECTRIC MORTISE LOCK INSTRUCTIONS
AE - AUTHORIZED EGRESS (REQUEST-TO-EXIT)

Description:
Monitors the use of the INSIDE trim when the OUTSIDE trim is locked.

Electrical Specifications:
SPDT Monitor Switch
Contacts Rated: 3A @ 125VAC
2A @ 30VDC

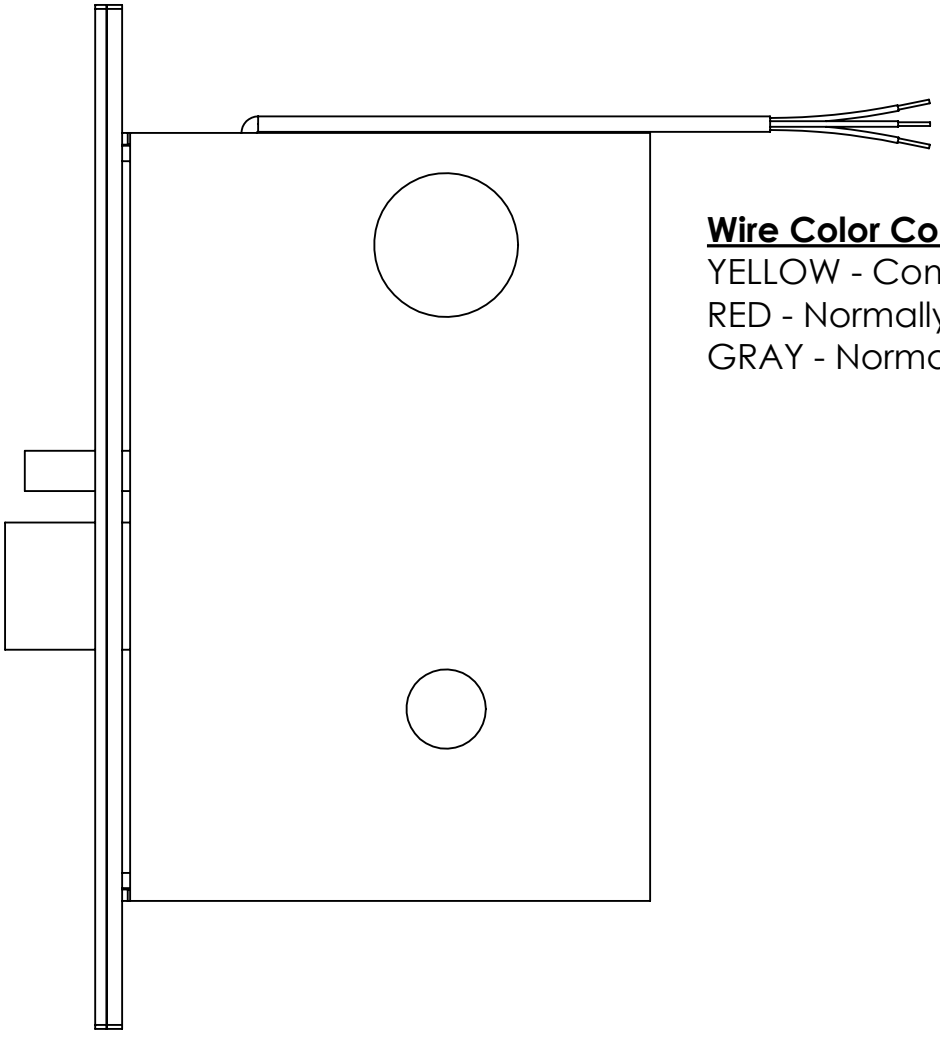

Wire Color Codes:
YELLOW - Common
RED - Normally Open
GRAY - Normally Closed

ELECTRIC MORTISE LOCK INSTRUCTIONS
LM - LATCH BOLT MONITOR

Description:
Monitors the full extension of the main latch.

Electrical Specifications:
SPDT Monitor Switch
Contacts Rated: 3A @ 125VAC
2A @ 30VDC

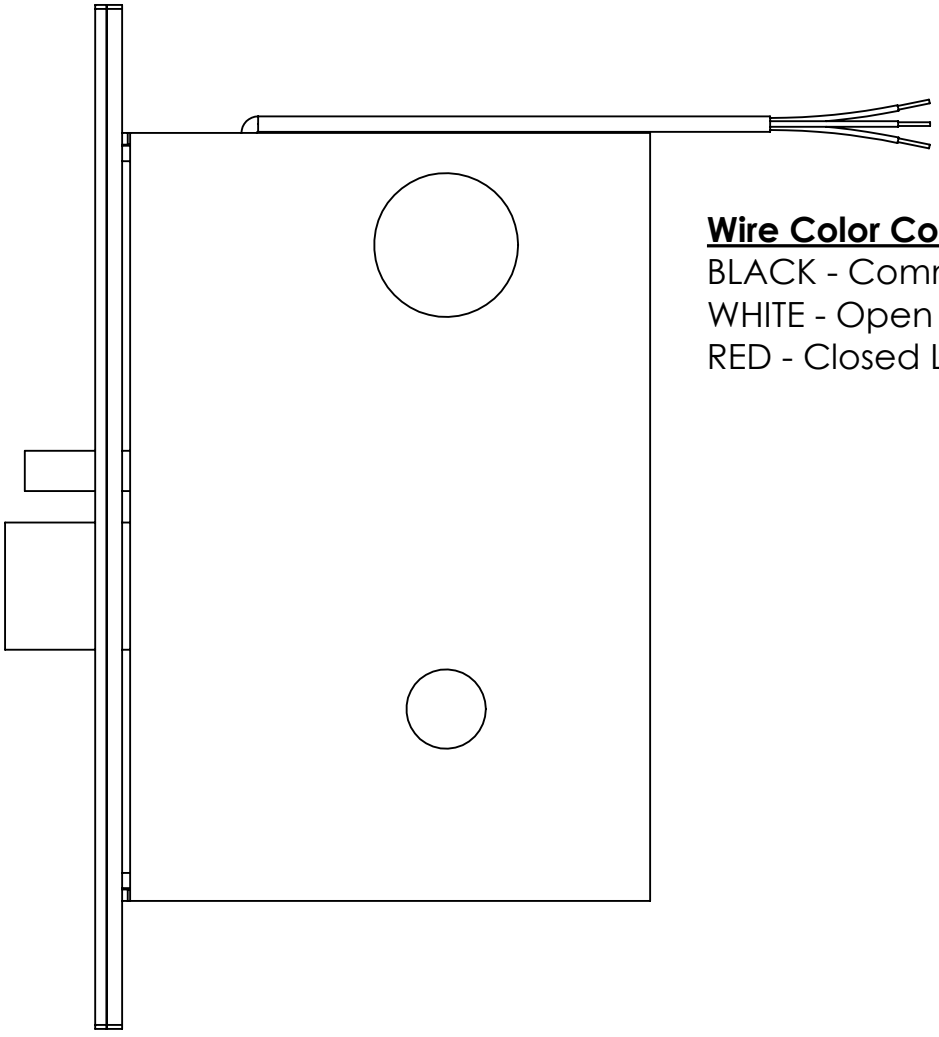

Wire Color Codes:
BLACK - Common
WHITE - Open Loop Secure
RED - Closed Loop Secure

ELECTRIC MORTISE LOCK INSTRUCTIONS
AI - AUTHORIZED INGRESS

Description:
Monitors the use of the OUTSIDE trim.

Electrical Specifications:
SPDT Monitor Switch
Contacts Rated: 3A @ 125VAC
2A @ 30VDC

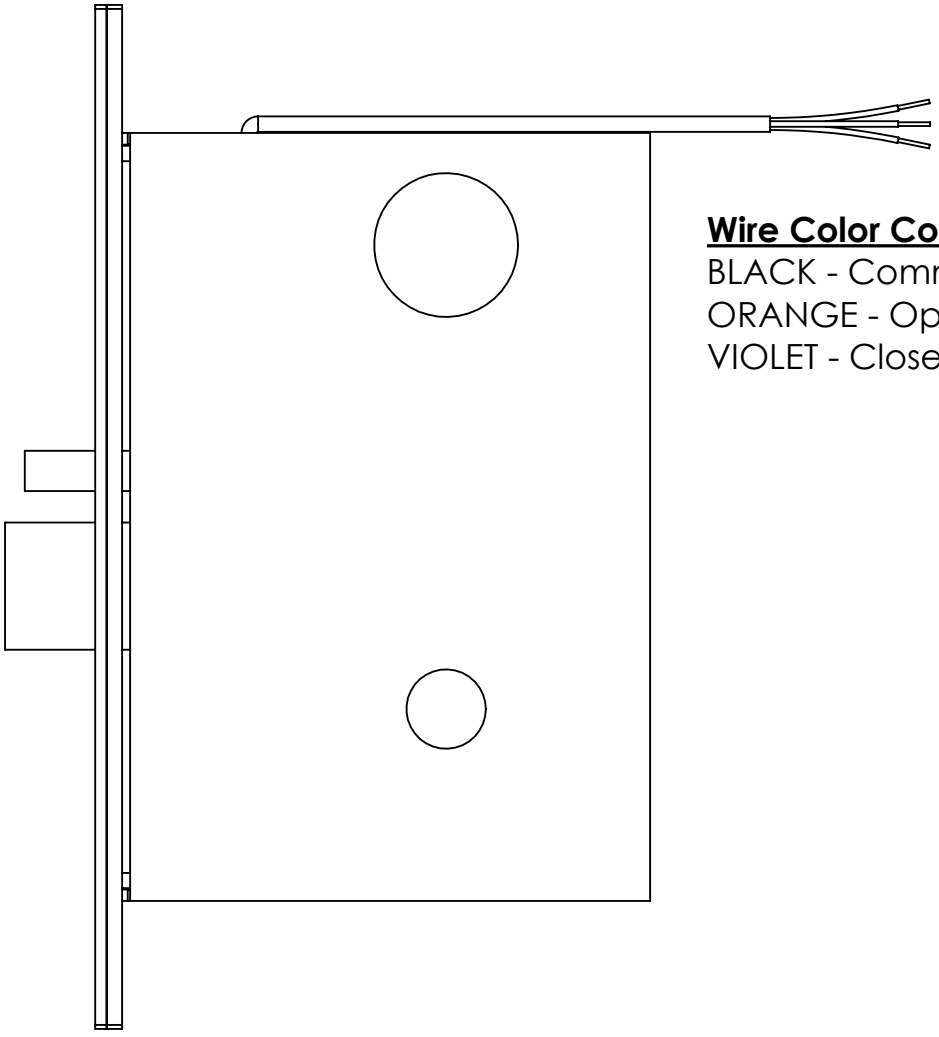

Wire Color Codes:
BLACK - Common
ORANGE - Open Loop Secure
VIOLET - Closed Loop Secure

ELECTRIC MORTISE LOCK INSTRUCTIONS
AM - AUXILIARY LATCH MONITOR

Description:
Monitors the position of the dead latch.

Electrical Specifications:
SPDT Monitor Switch
Contacts Rated: 3A @ 125VAC
2A @ 30VDC

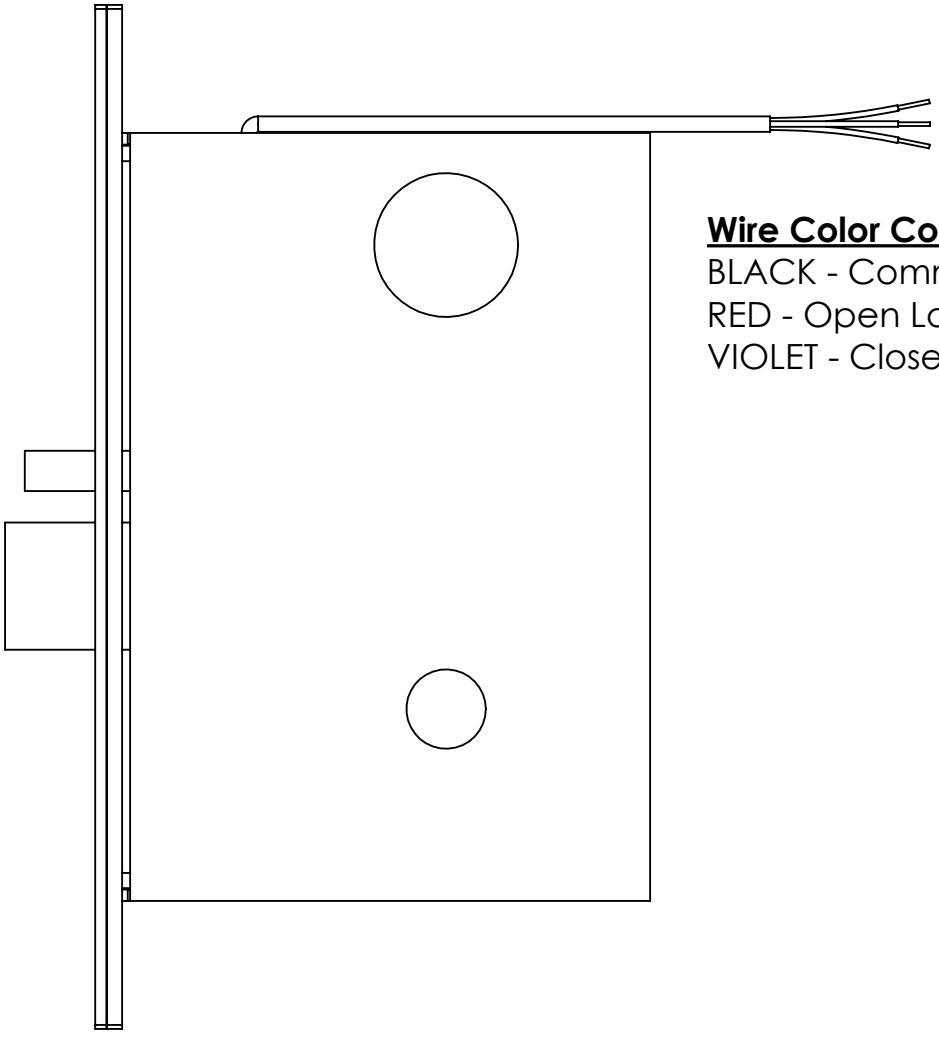

Wire Color Codes:
BLACK - Common
RED - Open Loop Secure
VIOLET - Closed Loop Secure

ELECTRIC MORTISE LOCK INSTRUCTIONS
DM - DEADBOLT MONITOR

Description:
Monitors the full extension of the deadbolt.

Electrical Specifications:
SPDT Monitor Switch
Contacts Rated: 3A @ 125VAC
2A @ 30VDC

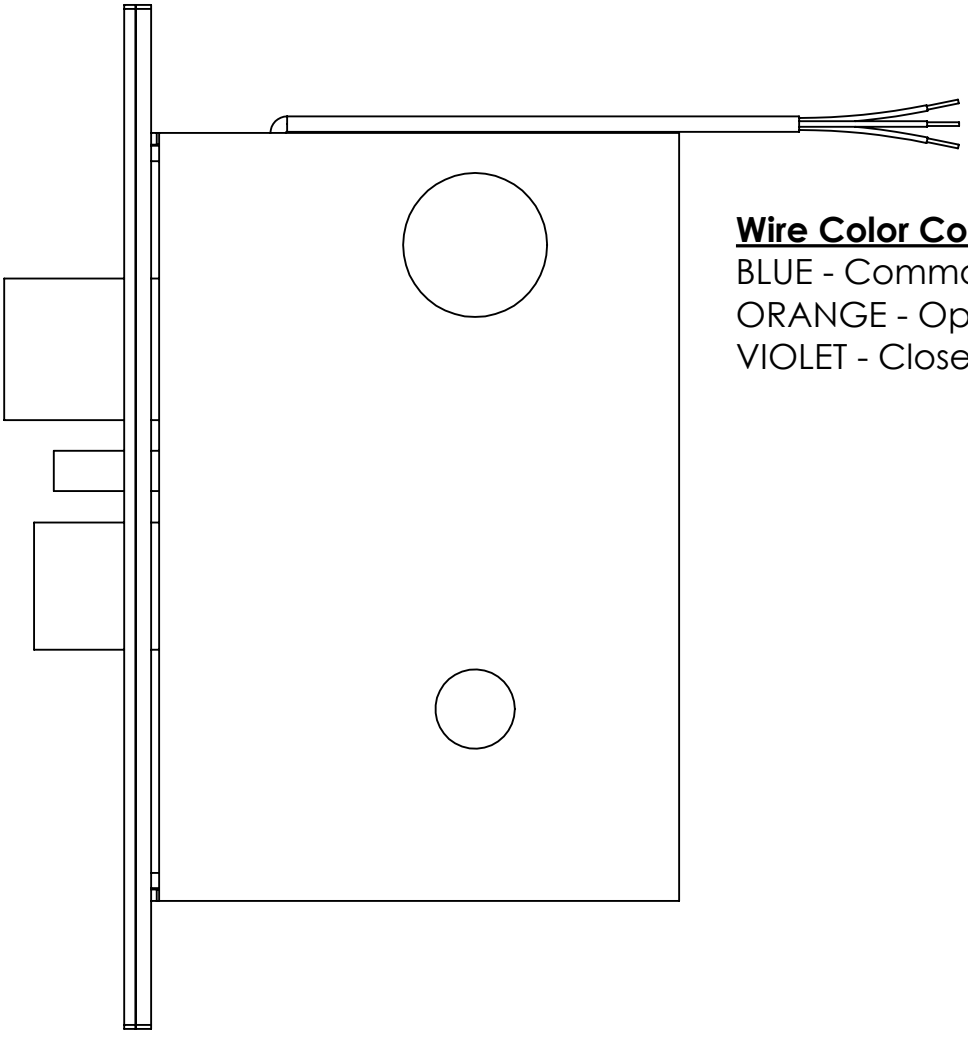

Wire Color Codes:
BLUE - Common
ORANGE - Open Loop Secure
VIOLET - Closed Loop Secure

ELECTRIC MORTISE LOCK INSTRUCTIONS
SM - SECURITY MONITORING

Description:
Monitors the locked or unlocked status (LB - Locking Bar Monitor) and the dead latch status (AM - Auxiliary Latch Monitor) in series.

The OUTSIDE trim must be locked and the auxiliary latch must be depressed (as when the door is closed) to get a secure signal.

Electrical Specifications:
SPDT Monitor Switch
Contacts Rated: 3A @ 125VAC
2A @ 30VDC

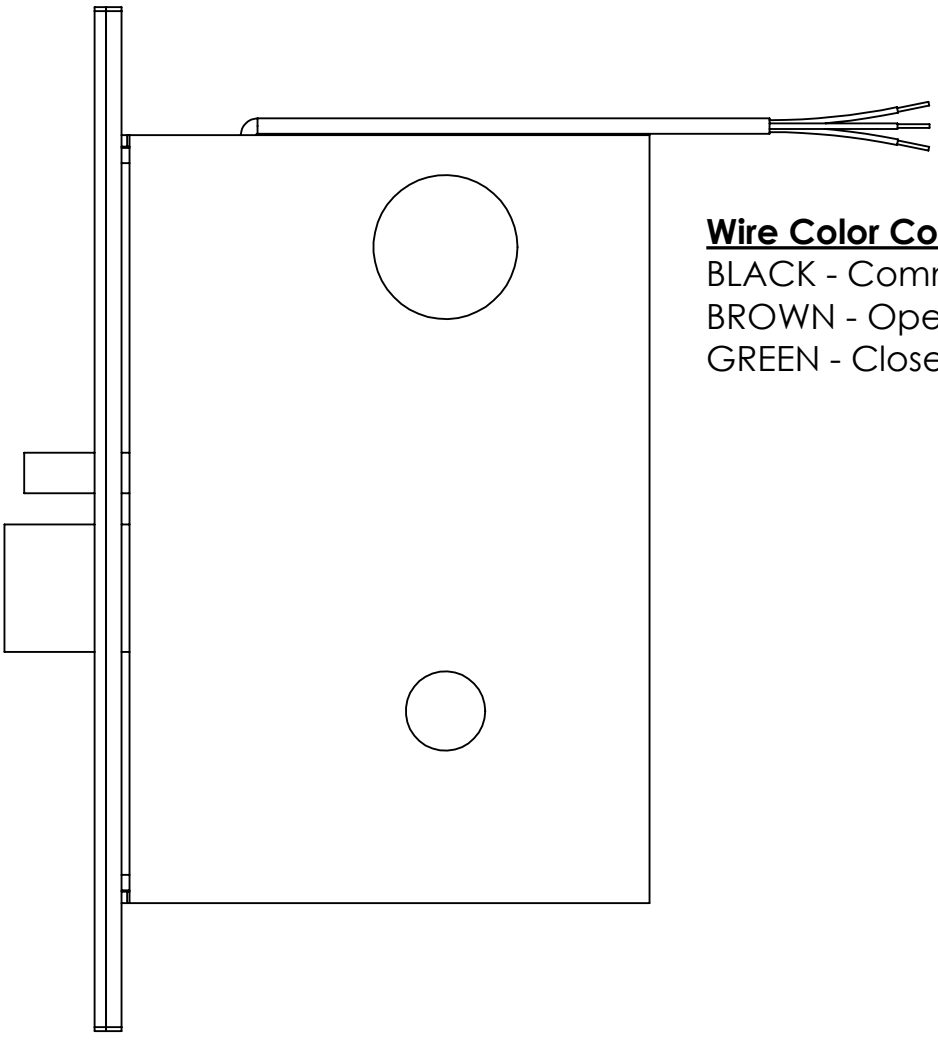

Wire Color Codes:
BLACK - Common
BROWN - Open Loop Secure
GREEN - Closed Loop Secure

ELECTRIC MORTISE LOCK INSTRUCTIONS
AE2 - AUTHORIZED EGRESS (REQUEST-TO-EXIT)

Description:
Monitors the use of the INSIDE trim when the OUTSIDE trim is locked or held stationary.

Electrical Specifications:
SPDT Monitor Switch
Contacts Rated: 3A @ 125VAC
2A @ 30VDC

SELECT THE WIRE SET TO TERMINATE BASED ON THE DOOR HANDING

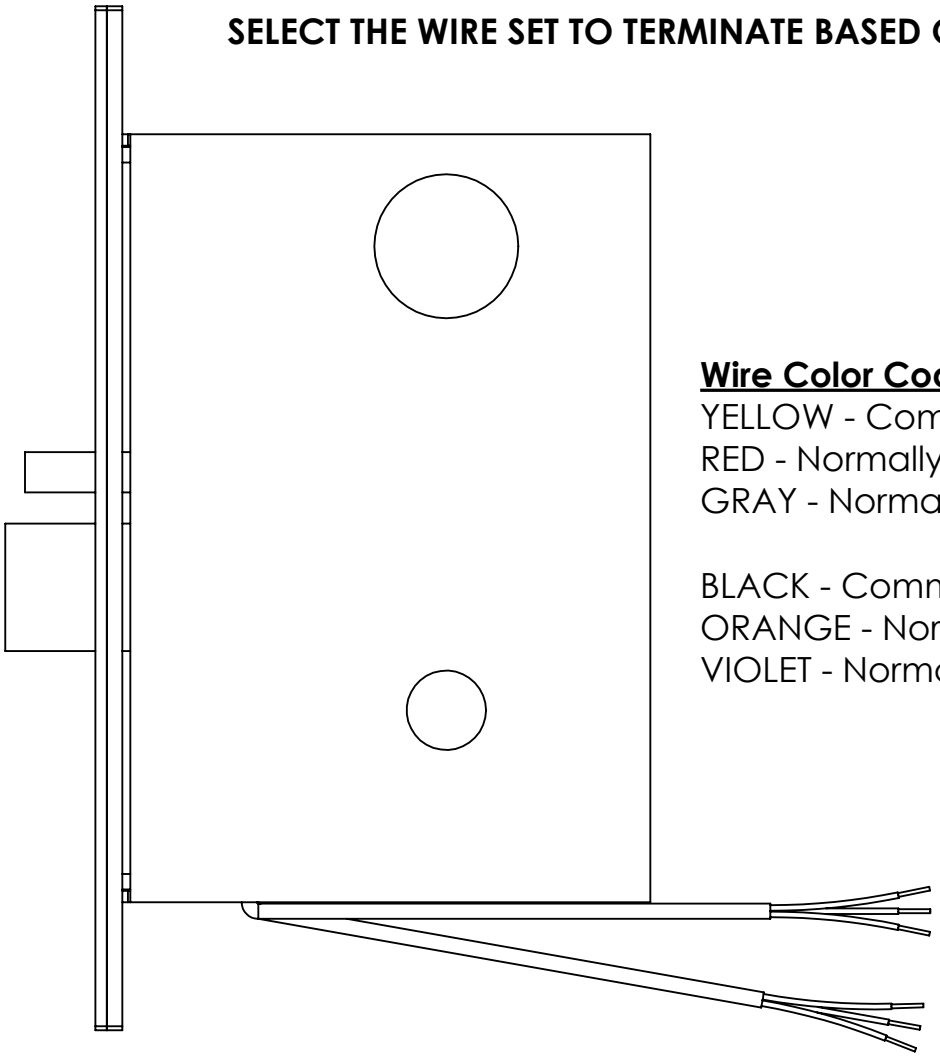

Wire Color Codes:

YELLOW - Common
RED - Normally Open
GRAY - Normally Closed
RH & RHR HANDING

BLACK - Common
ORANGE - Normally Open
VIOLET - Normally Closed
LH & LHR HANDING

MK-10

AE – AUTHORIZED EGRESS KIT INSTALLATION INSTRUCTIONS

FOR USE WITH ALL SCHLAGE “L” SERIES MORTISE LOCKS

STEP 1: REMOVE 4 SCREWS AND COVER FROM LOCKSET.

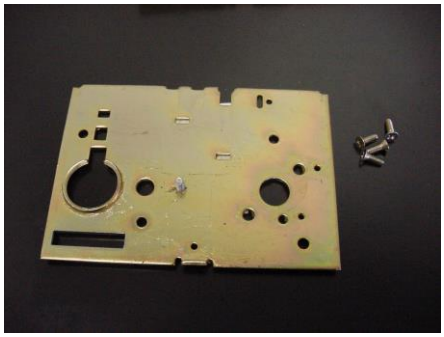

STEP 2: LOCATE FIRE DOOR CATCH AND FIRE DOOR FUSE.

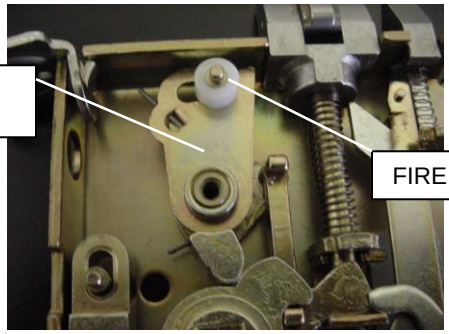

STEP 3: REMOVE FIRE DOOR FUSE FROM FIRE DOOR CATCH. LIFT FIRE DOOR CATCH OVER POST WHILE KEEPING THE HUB SPRING ATTACHED.

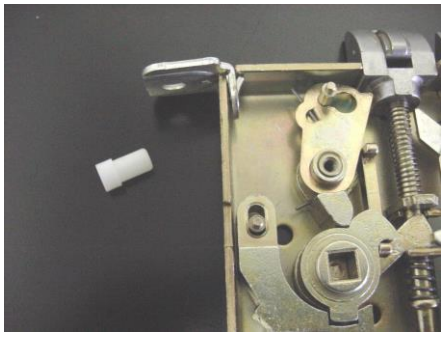

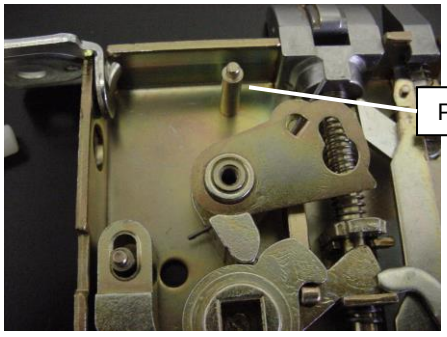

ARCHITECTURAL CONTROL SYSTEMS, INCORPORATED

2720 CLARK AVE., ST. LOUIS, MO 63103 (800) 753-5558

II-M1500-15
REV. 12/2017

STEP 4: PLACE AE KIT INTO LOCKCASE. INSERT THE WIRES AND THE TAB ON THE AE BRACKET THROUGH THE HOLE IN THE SIDE OF THE LOCK CASE AND POSITION AE BRACKET SO THAT THE LOCK CASE POST GOES THROUGH THE HOLE IN THE AE BRACKET.

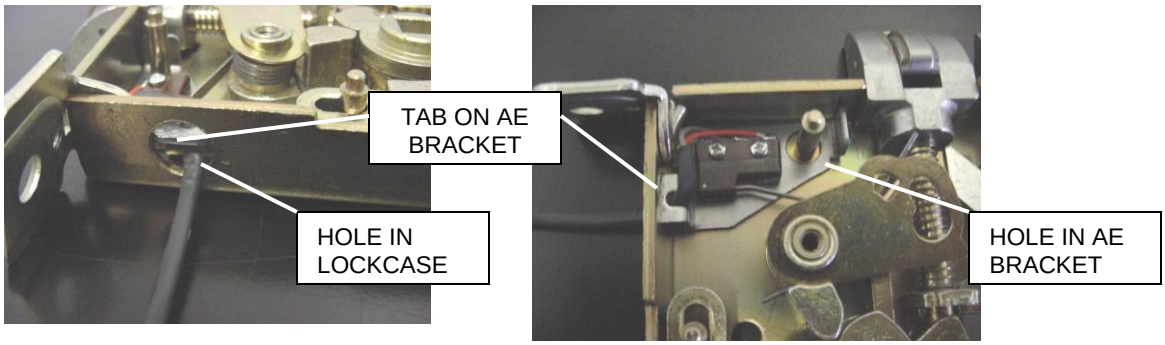

NOTE: MAKE SURE THAT SWITCH ARM IS POSITIONED ON THE SIDE OF THE RETRACTOR CRANK AS SHOWN BELOW.

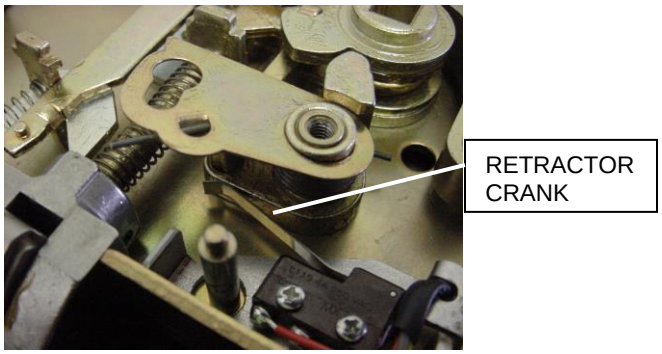

STEP 5: RE-INSTALL THE FIRE DOOR CATCH OVER POST AND PLACE THE FIRE DOOR FUSE BACK THROUGH THE HOLE IN THE FIRE DOOR CATCH AND AE BRACKET.



NOTE: MAKE SURE THAT THE FIRE DOOR FUSE GOES THROUGH THE HOLE IN THE AE BRACKET. THIS PROPERLY TRAPS THE BRACKET IN POSITION.

STEP 6: REPLACE LOCK COVER AND TIGHTEN FOUR SCREWS.

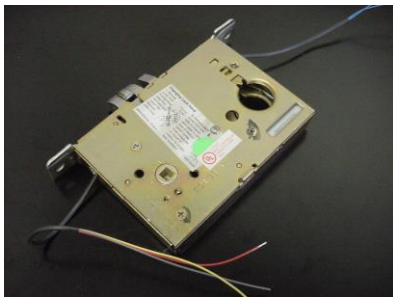

ELECTRICAL SPECIFICATIONS

SWITCH RATING: 4 AMPS @ 250VAC MAX.

WIRING DIAGRAM

YELLOW WIRE (COMMON)
RED WIRE (NORMALLY OPEN)
GRAY WIRE (NORMALLY CLOSED)

ELECTRIC MORTISE LOCK INSTRUCTIONS
LB - LOCKING BAR MONITOR

Description:
Monitors the position of the locking bar.

Electrical Specifications:
SPDT Monitor Switch
Contacts Rated: 3A @ 125VAC
2A @ 30VDC

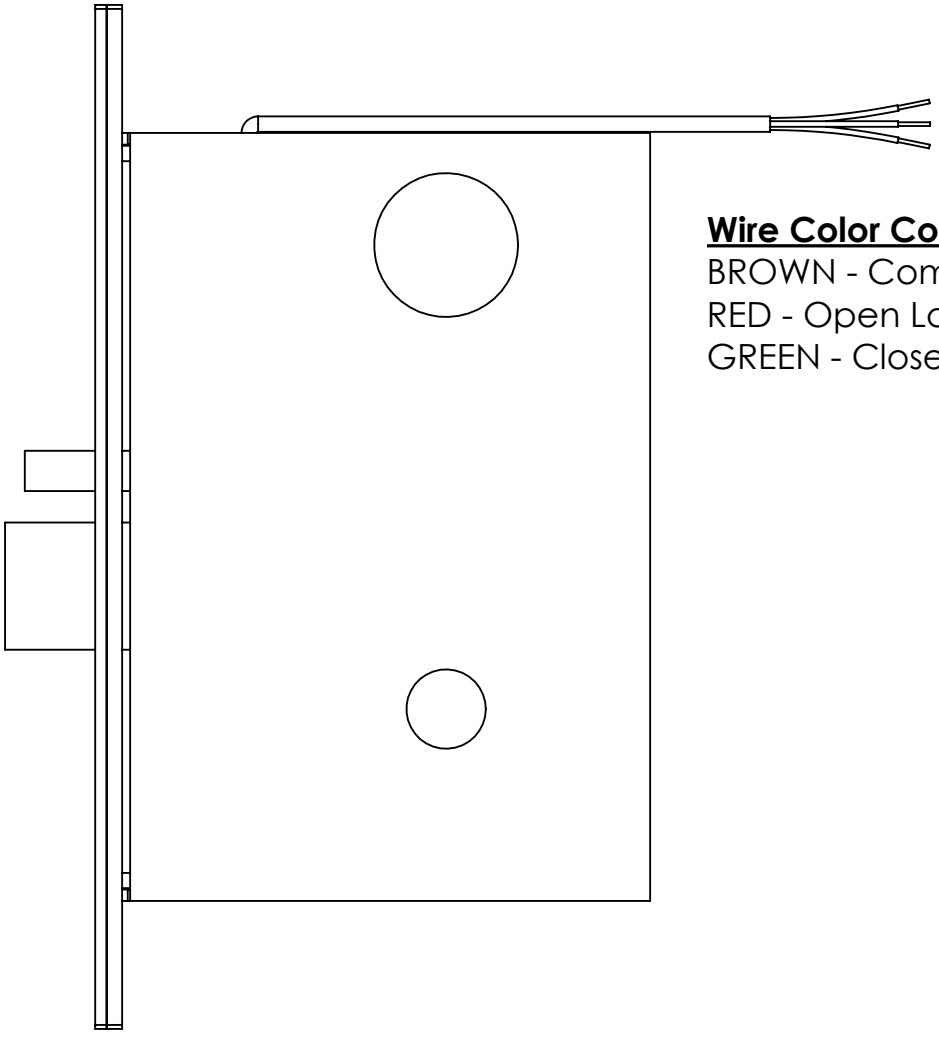

Wire Color Codes:
BROWN - Common
RED - Open Loop Secure
GREEN - Closed Loop Secure

BEST 45H SERIES ELECTRIC LOCK M1510/1520C

FUNCTION CHANGE INSTRUCTIONS

TO CHANGE THE LOCKING FUNCTION FOLLOW THE BELOW INSTRUCTIONS CAREFULLY.

STEP 1: REMOVE THE 4 COVER SCREWS AND COVER

STEP 2: USING THE ILLUSTRATION BELOW, REMOVE SCREW AND REPLACE SCREW IN PROPER HOLE AS FOLLOWS

A **FOR FAIL SAFE M1510C (POWER LOCK) FUNCTION**

B **FOR FAIL SECURE M1520C (POWER UNLOCK) FUNCTION**

STEP 3: REPLACE COVER AND SCREWS. MAKE SURE SOLENOID IS PROPERLY POSITIONED IN COVER SLOT.

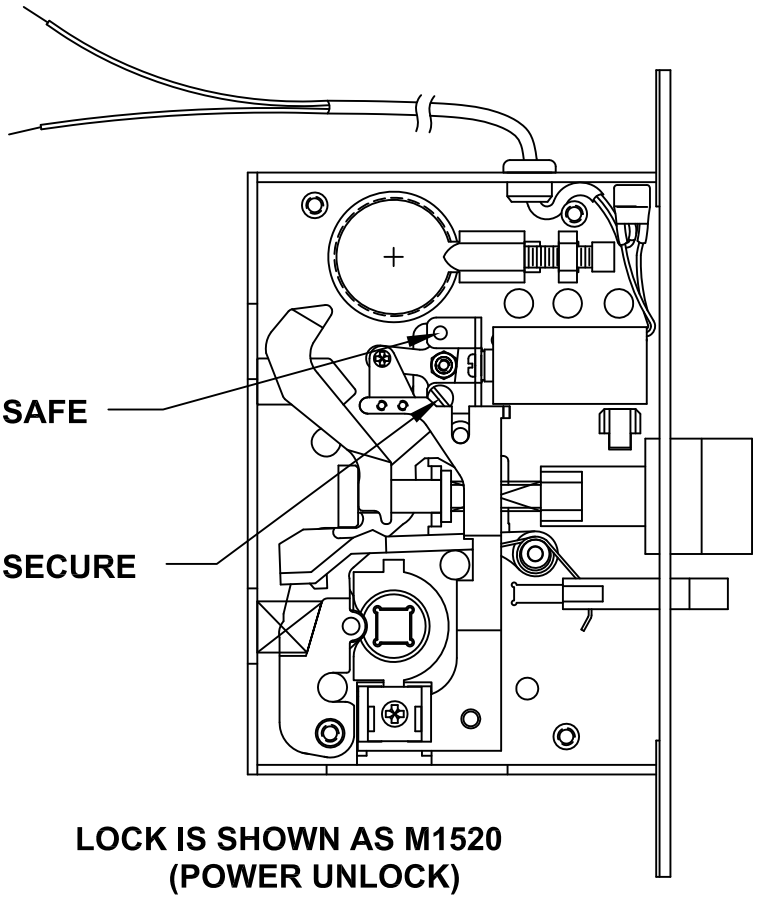

A **INSERT SCREW HERE FOR FAIL SAFE (POWER LOCK) OPERATION**

B **INSERT SCREW HERE FOR FAIL SECURE (POWER UNLOCK) OPERATION**

LOCK IS SHOWN AS M1520 (POWER UNLOCK)

ACSI ARCHITECTURAL CONTROL SYSTEMS INC.

2720 CLARK AVE., ST. LOUIS, MO 63103 (800) 753-5558 REV. 12/2017

SARGENT 8200 SERIES/YALE 8800 SERIES ELECTRIC LOCK M1510 & M1520 FUNCTION CHANGE INSTRUCTIONS

TO CHANGE THE LOCKING FUNCTION FOLLOW THE INSTRUCTIONS BELOW CAREFULLY.



STEP 1: REMOVE 5 EACH COVER SCREWS AND REMOVE COVER.

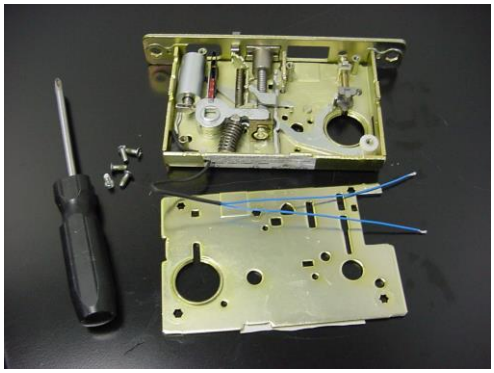

STEP 2: REMOVE TOP LEVER/KNOB HUB AND LOCKING BAR ASSEMBLY.

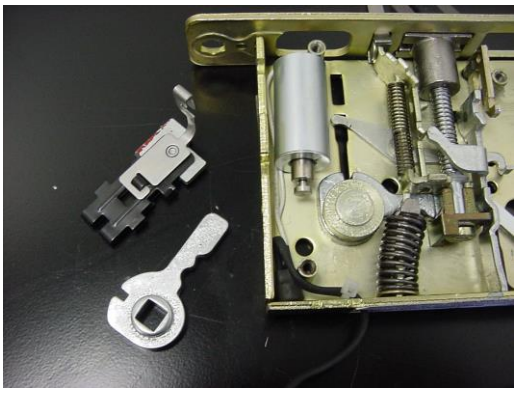

ARCHITECTURAL CONTROL SYSTEMS, INCORPORATED

2720 CLARK AVE., ST. LOUIS, MO 63103 (800) 753-5558

STEP 3: CHANGING THE FUNCTION, FOLLOW THE INSTRUCTIONS BELOW FOR FAIL SAFE OR FAIL SECURE LOCKING.

M1510C (FAIL SAFE) POWER LOCK FUNCTION

FOR FAIL SAFE FUNCTION THE LOCKING BAR ASSEMBLY IS INSTALLED ON THE WIRE ENTRY SIDE OF SOLENOID COIL. SLIDE LOCKING BAR ASSEMBLY UNTO THE SOLENOID WITH THE MAIN PORTION OF THE LOCKING LINK ALONG THE SIDE OF THE SOLENOID BODY.

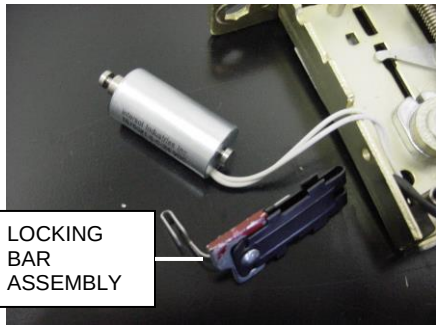





AFTER LOCKING BAR ASSEMBLY HAS BEEN INSTALLED ONTO SOLENOID PLACE THE SOLENOID BACK INTO THE LOCK CASE. THE LOCK CASE TOGGLE NEEDS TO BE POSITIONED IN THE CORRECT SLOT IN LOCKING BAR. MAKE SURE THAT THE WIRES ARE LOCATED ON THE BOTTOM OF THE LOCK CASE SO THAT THEY DO NOT INTERFERE WITH THE SOLENOID AND LINKAGE. FOLD THE EXCESSS WIRE ONTO THE TOP OF THE RECTIFIER IN THE CORNER OF THE LOCK CASE.

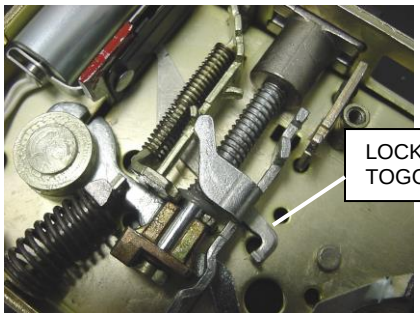

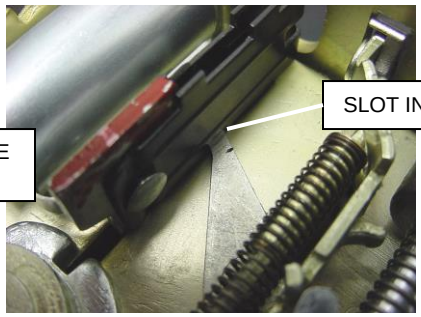

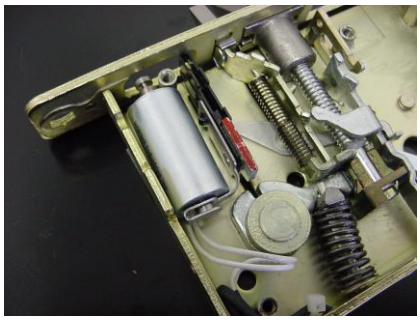

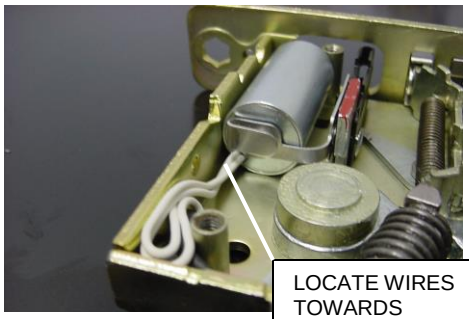

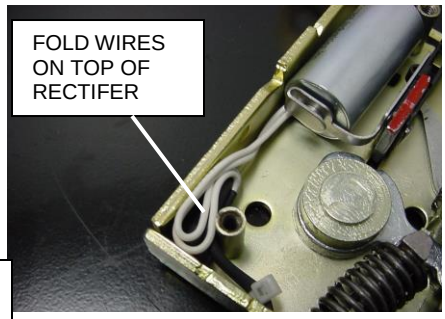

ARCHITECTURAL CONTROL SYSTEMS, INCORPORATED

2720 CLARK AVE., ST. LOUIS, MO 63103 (800) 753-5558

M1520C (FAIL SECURE) POWER UNLOCK FUNCTION

FOR FAIL SECURE FUNCTION THE LOCKING BAR ASSEMBLY IS INSTALLED ONTO THE END OF THE SOLENOID PLUNGER. POSITION THE SOLENOID IN LOCK CASE WITH THE WIRES LOCATED ON THE BOTTOM EDGE BETWEEN THE LOCK CASE AND THE SOLENOID BODY.



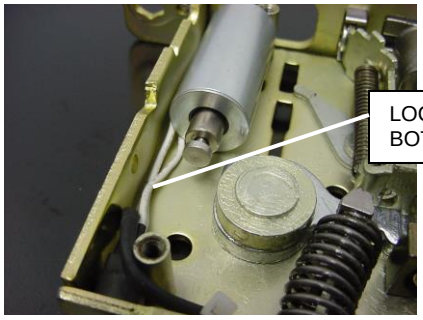

INSTALL THE LOCKING BAR ASSEMBLY ONTO THE SOLENOID PLUNGER. THE LOCK CASE TOGGLE NEEDS TO BE POSITIONED IN THE CORRECT SLOT IN LOCKING BAR

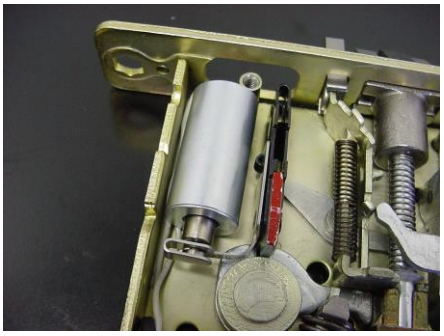



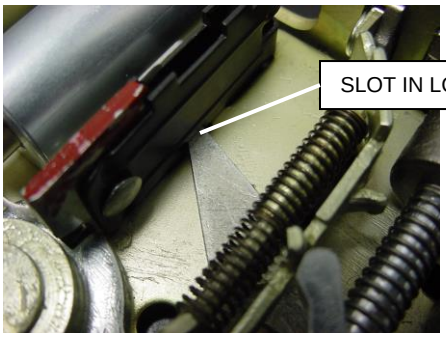

ARCHITECTURAL CONTROL SYSTEMS, INCORPORATED

2720 CLARK AVE., ST. LOUIS, MO 63103 (800) 753-5558

STEP 4: PLACE THE TOP LEVER/KNOB HUB ONTO HUB SPACER.
THEN INSTALL THE COVER AND SCREWS. CHECK LOCK BY APPLYING THE CORRECT VOLTAGE TO THE SOLENOID MAKING SURE THAT THE LOCKING BAR ENGAGES AND DISENGAGES PROPERLY.







ELECTRIC LOCK M1510/1520C

HAGER 3800 SERIES, I-TEK M9000 SERIES AND OAK SECURITY GROUP M9000 SERIES LOCKS

FUNCTION CHANGE INSTRUCTIONS

TO CHANGE THE LOCKING FUNCTION FOLLOW THE BELOW INSTRUCTIONS CAREFULLY.

STEP 1: REMOVE THE 4 COVER SCREWS AND COVER

STEP 2: USING THE ILLUSTRATION BELOW, REMOVE PIN AND REPLACE PIN IN PROPER HOLE AS FOLLOWS

A **FOR FAIL SECURE M1520C (POWER UNLOCK) FUNCTION**

B **FOR FAIL SAFE M1510C (POWER LOCK) FUNCTION**

STEP 3: REPLACE COVER AND SCREWS. MAKE SURE SOLENOID IS PROPERLY POSITIONED IN COVER SLOT.

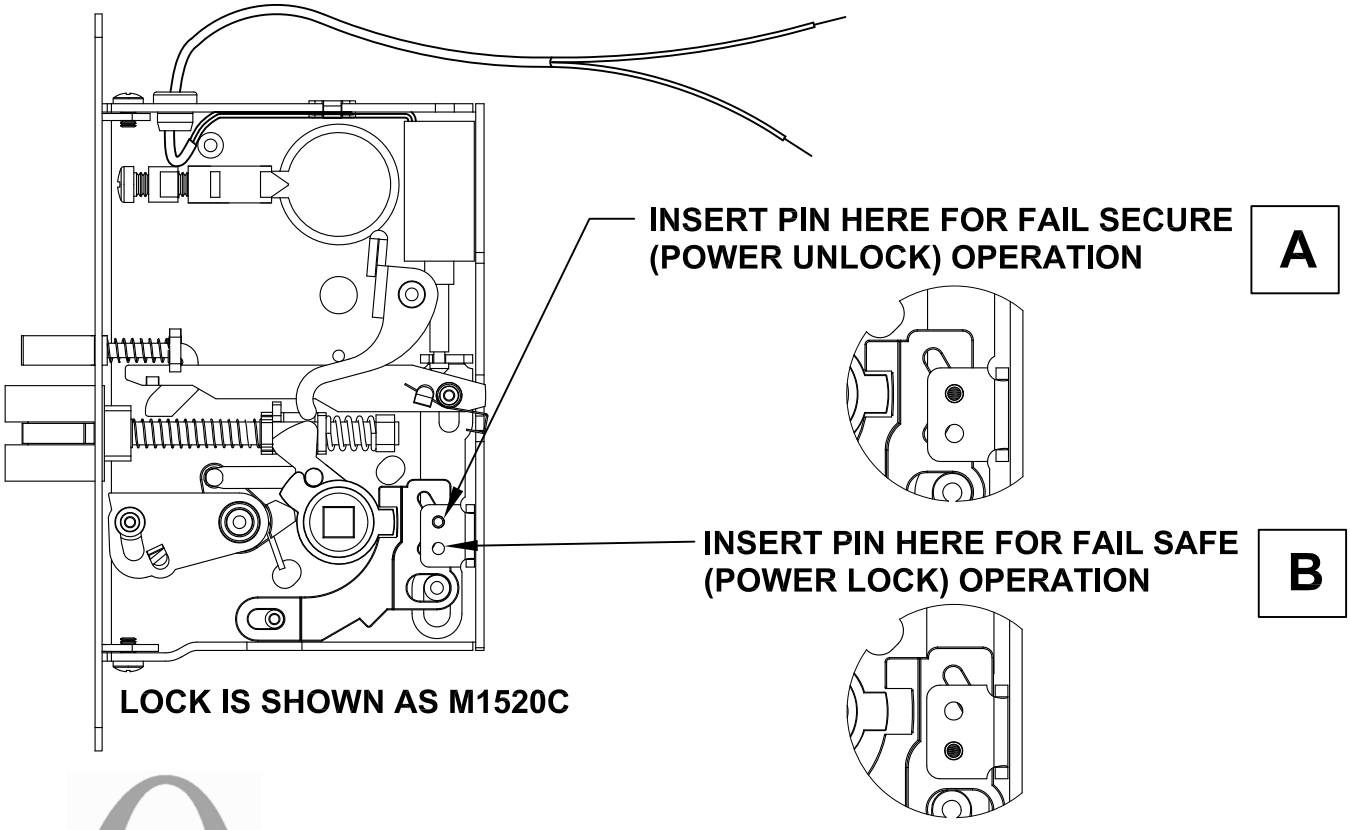

ACSI
ARCHITECTURAL CONTROL SYSTEMS INC.

FALCON MA500 SERIES ELECTRIC LOCK
M1510/M1520C FUNCTION CHANGE INSTRUCTIONS

TO CHANGE THE LOCKING FUNCTION FOLLOW THE INSTRUCTIONS BELOW CAREFULLY.

STEP 1: REMOVE THE 4 COVER SCREWS AND COVER.

STEP 2: USE THE ILLUSTRATION BELOW FOR SWITCHING LOCK FUNCTION.

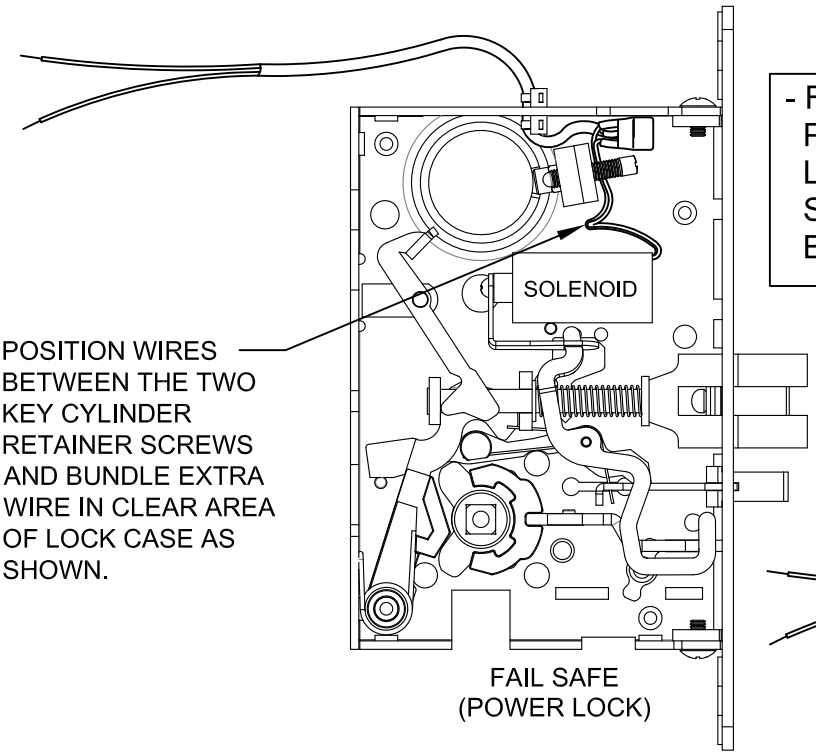

POSITION WIRES BETWEEN THE TWO KEY CYLINDER RETAINER SCREWS AND BUNDLE EXTRA WIRE IN CLEAR AREA OF LOCK CASE AS SHOWN.

- FOR FAIL SAFE (M1510C) FUNCTION POSITION THE SOLENOID ONTO THE LOCKING BAR PIVOT SO THAT THE SOLENOID PLUNGER FACES THE BACK OF LOCK.

FAIL SAFE
(POWER LOCK)

POSITION WIRES CLOSE TO THE CASE AND BETWEEN THE TWO KEY CYLINDER RETAINER SCREWS AS SHOWN.

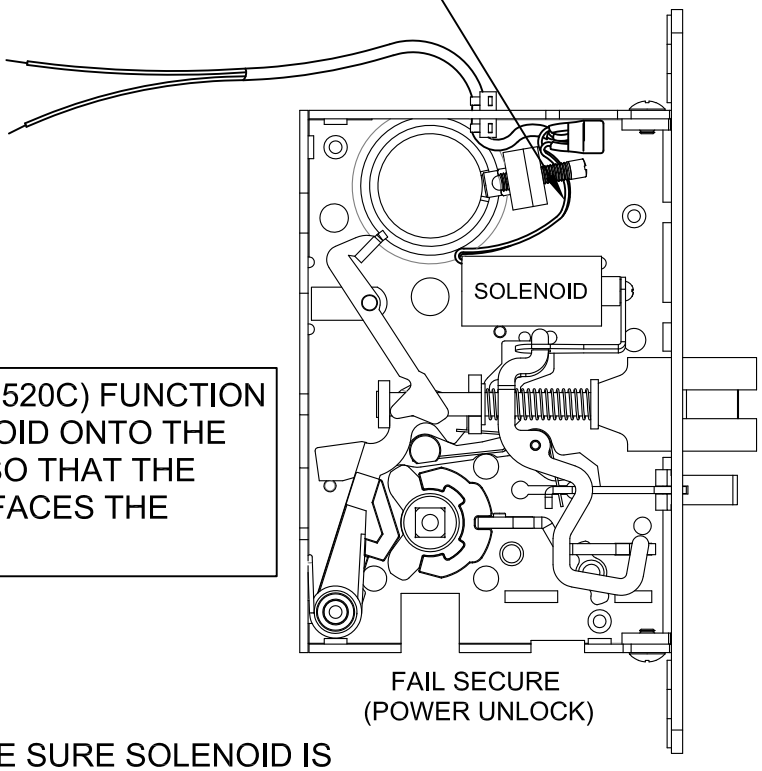

- FOR FAIL SECURE (M1520C) FUNCTION POSITION THE SOLENOID ONTO THE LOCKING BAR PIVOT SO THAT THE SOLENOID PLUNGER FACES THE LATCH SIDE OF LOCK.

FAIL SECURE
(POWER UNLOCK)

STEP 3: REPLACE COVER AND SCREWS. MAKE SURE SOLENOID IS PROPERLY POSITIONED IN COVER SLOT.

ACSI
ARCHITECTURAL CONTROL SYSTEMS INC.

2720 CLARK AVE., ST. LOUIS, MO 63103 (800) 753-5558

ELECTRIC MORTISE LOCK INSTRUCTIONS
KM - KEY RETRACTION MONITOR

Description:
Monitors the use of a key for latch retraction.

Electrical Specifications:
SPDT Monitor Switch
Contacts Rated: 3A @ 125VAC
2A @ 30VDC

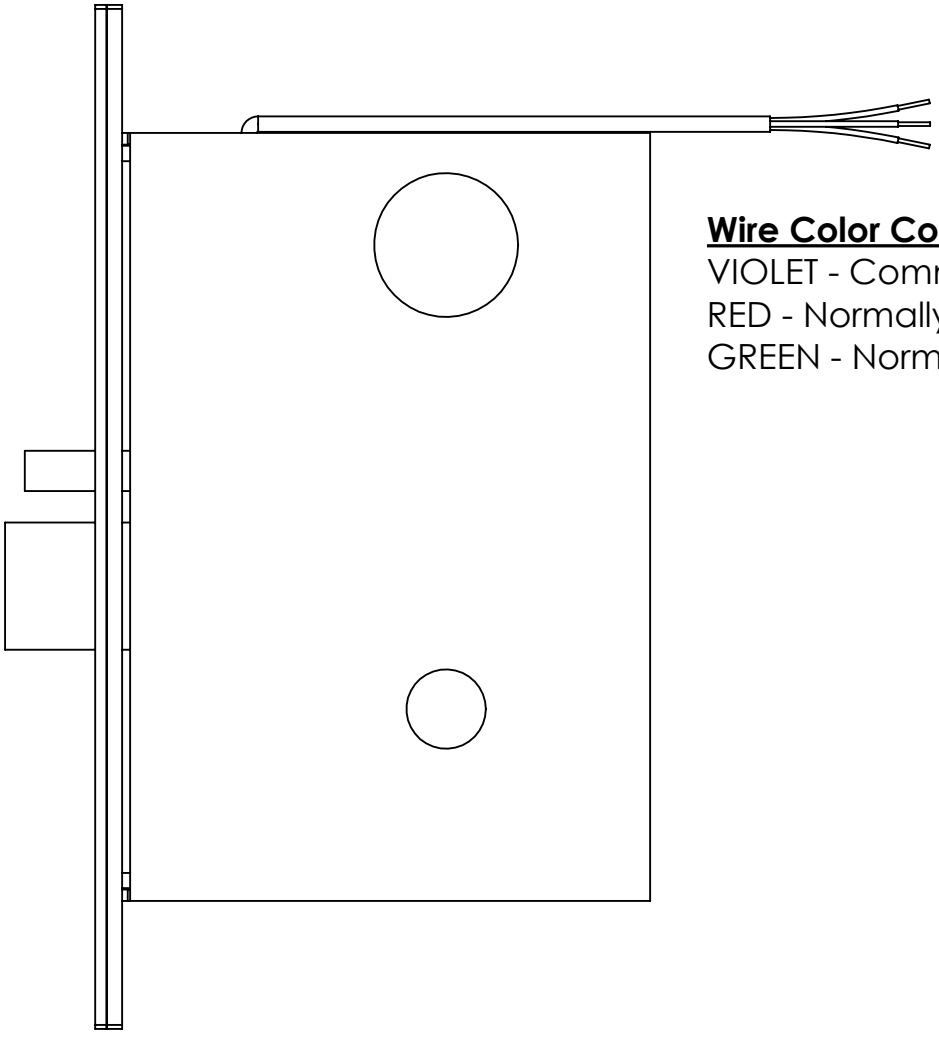

Wire Color Codes:
VIOLET - Common
RED - Normally Open
GREEN - Normally Closed

STANLEY COMMERCIAL QM SERIES ELECTRIC LOCK
M1510/M1520C FUNCTION CHANGE INSTRUCTIONS

TO CHANGE THE LOCKING FUNCTION FOLLOW THE INSTRUCTIONS BELOW CAREFULLY.

STEP 1: REMOVE THE 4 COVER SCREWS AND COVER.
STEP 2: USE THE ILLUSTRATION BELOW FOR SWITCHING LOCK FUNCTION.
STEP 3: MAKE SURE SOLENOID IS PROPERLY POSITIONED IN CASE SLOT.
STEP 4: REPLACE COVER AND SCREWS.

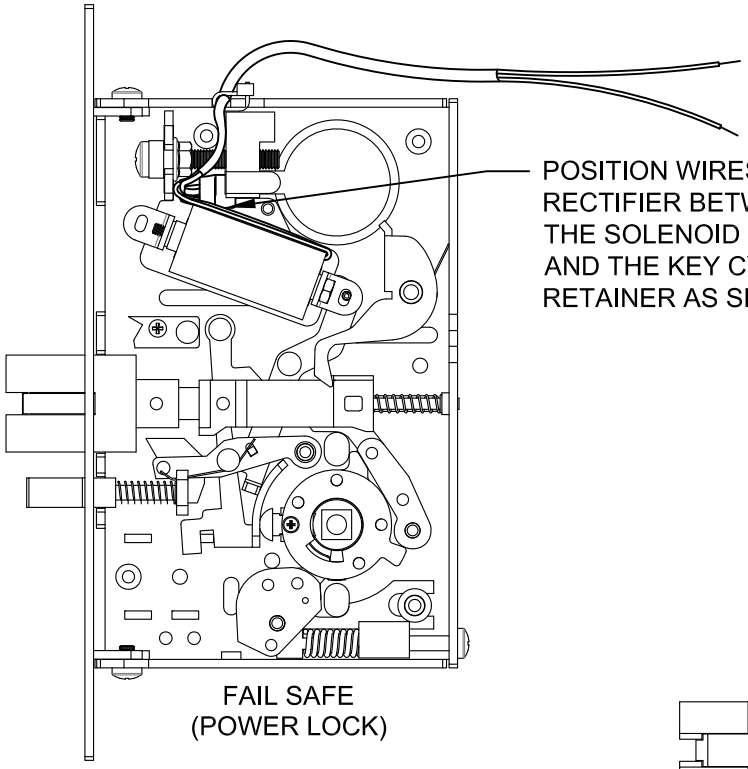

FAIL SAFE
(POWER LOCK)

- FOR FAIL SAFE (M1510C) FUNCTION POSITION THE SOLENOID ONTO THE LOCKING BAR PIVOT SO THAT THE SOLENOID PLUNGER FACES THE LATCH SIDE OF LOCK.

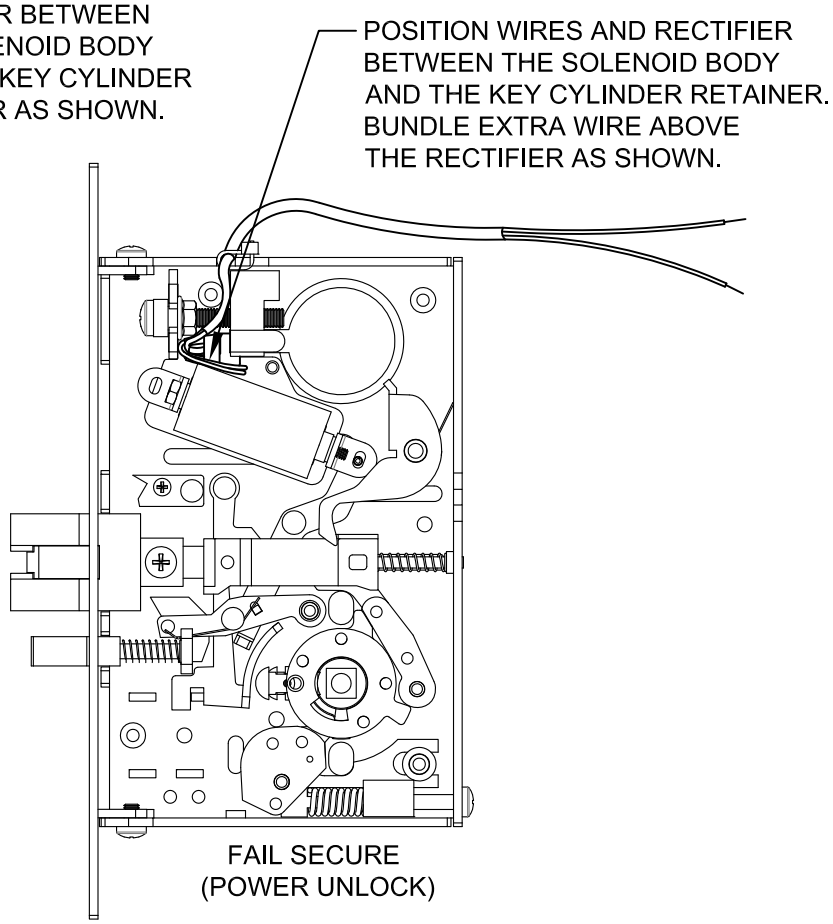

FAIL SECURE
(POWER UNLOCK)

- FOR FAIL SECURE (M1520C) FUNCTION POSITION THE SOLENOID ONTO THE LOCKING BAR PIVOT SO THAT THE SOLENOID PLUNGER FACES THE BACK OF LOCK.

ACSI
ARCHITECTURAL CONTROL SYSTEMS INC.

2720 CLARK AVE., ST. LOUIS, MO 63103 (800) 753-5558

REV. 12/2017

ELECTRIC MORTISE LOCK INSTRUCTIONS
DPS - DOOR POSITION SENSOR

Description:
Monitors the door position.

A magnetic sensor mounted in the mortise lock reacts to the proximity of a magnet mounted behind the ASA strike.

Electrical Specifications:
SPDT Monitor Switch
Contacts Rated: 0.3A @ 28VDC

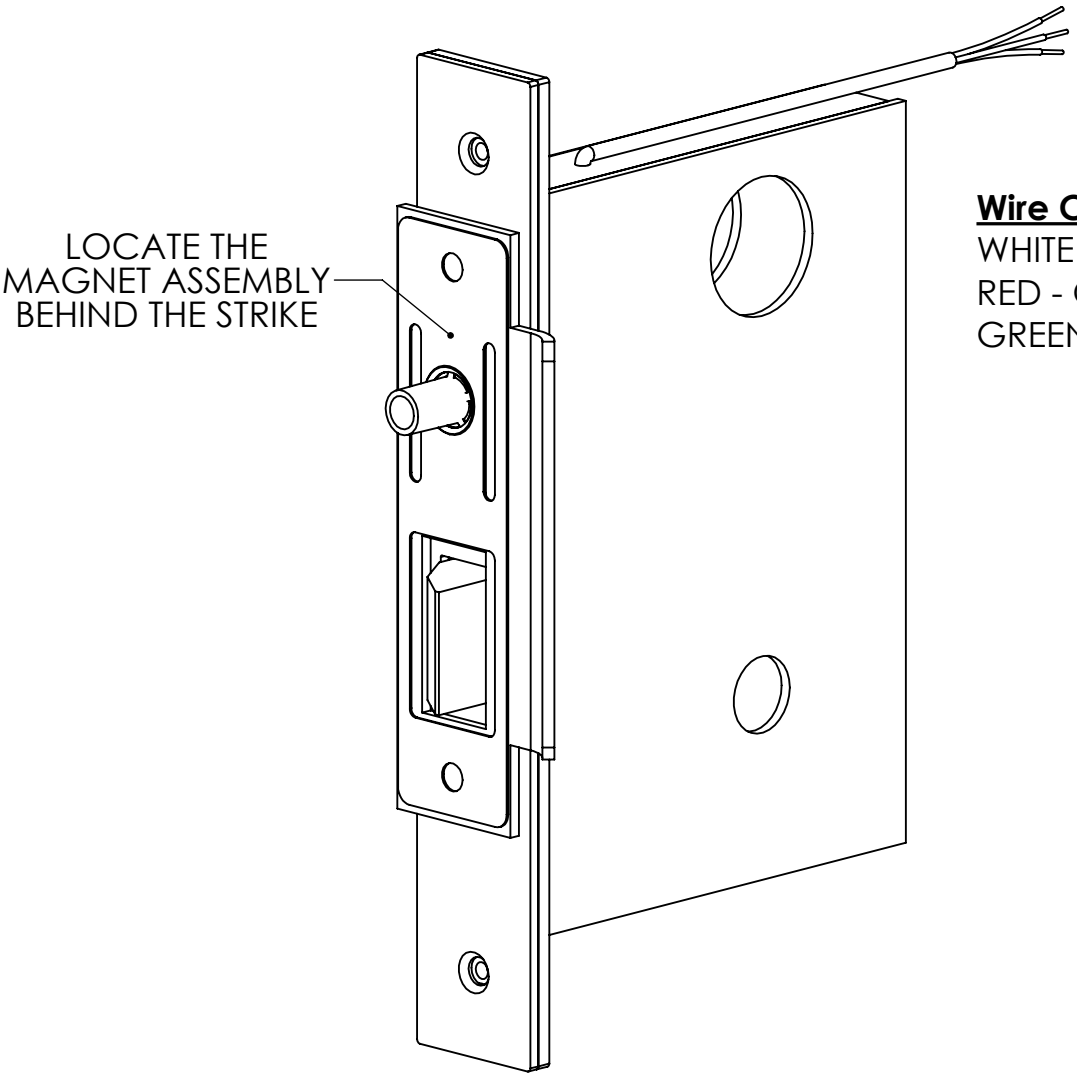

Wire Color Codes:
WHITE - Common
RED - Open Loop Secure
GREEN - Closed Loop Secure

ELECTRIC MORTISE LOCK INSTRUCTIONS
DMS - DEADBOLT MONITOR SECURED
(SOLENOID-CONTROLLED)

Description:

Monitors the full extension of the deadbolt (DM - Deadbolt Monitor) disabling the electrical control of a fail secure lockset locking the OUTSIDE trim. Retracting the deadbolt will enable the electrical control. Free egress at all times.

Electrical Specifications:

Continuous Duty Solenoids

- 12VAC/DC ± 10%, 612mA
- 12VDC ± 10%, 612mA
- 24VAC/DC ± 10%, 330mA
- 24VDC ± 10%, 330mA

Non-polarized Leads

- Blue (AC/DC)
- White (DC)

2-Conductor Wire Run	
Distance 12V/24V	**Wire Gauge**
50'/175'	22
75'/275'	20
120'/450'	18
200'/700'	16
300'/1100'	14
500'/1800'	12

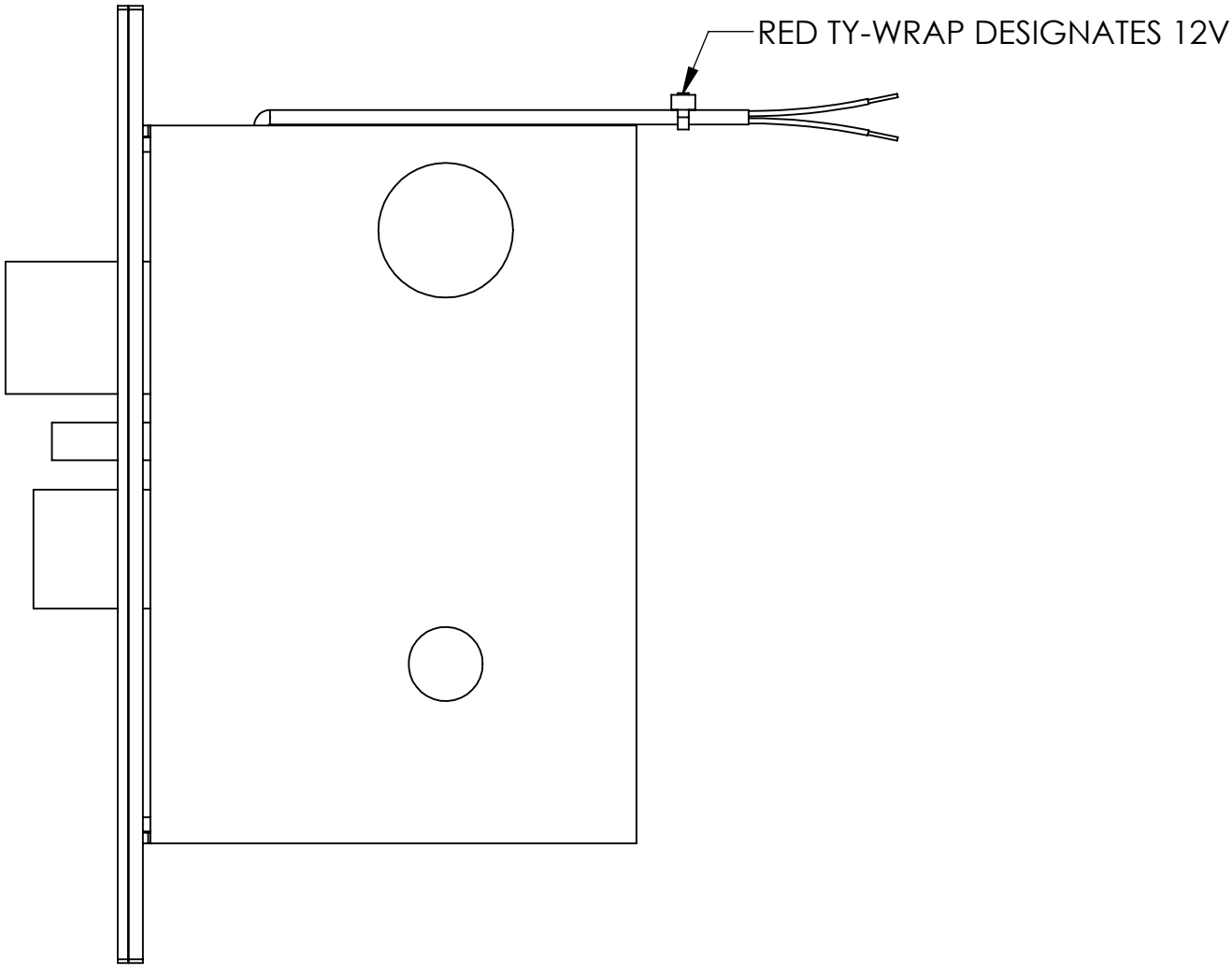

ELECTRIC MORTISE LOCK INSTRUCTIONS
MOTOR-CONTROLLED ELECTRIC LOCKING/UNLOCKING

1510 - Fail Safe (Power Lock):
Outside trim (or both outside and inside trim depending on the lock function) is locked when power is applied and unlocked when power is removed. Lockset will unlock in the event of a power failure.

1520 - Fail Secure (Power Unlock):
Outside trim (or both outside and inside trim depending on the lock function) is unlocked when power is applied and locked when power is removed. Lockset will lock in the event of a power failure.

Key Function:
The latch bolt may be momentarily retracted with a key even though the lockset is electrically locked.

2-Conductor Wire Run	
Distance 12V/24V	**Wire Gauge**
125'/250'	22
200'/400'	20
300'/600'	18
500'/1000'	16
750'/1500'	14
1250'/2500'	12

Electrical Specifications:
Voltage: 12-24V AC/DC (11V - 30V)
Current: 250mA MAX Inrush, 10mA MAX Holding
Non-polarized Blue Leads

Switch Slider Settings:
Yellow: Fail Secure
Green: Fail Safe

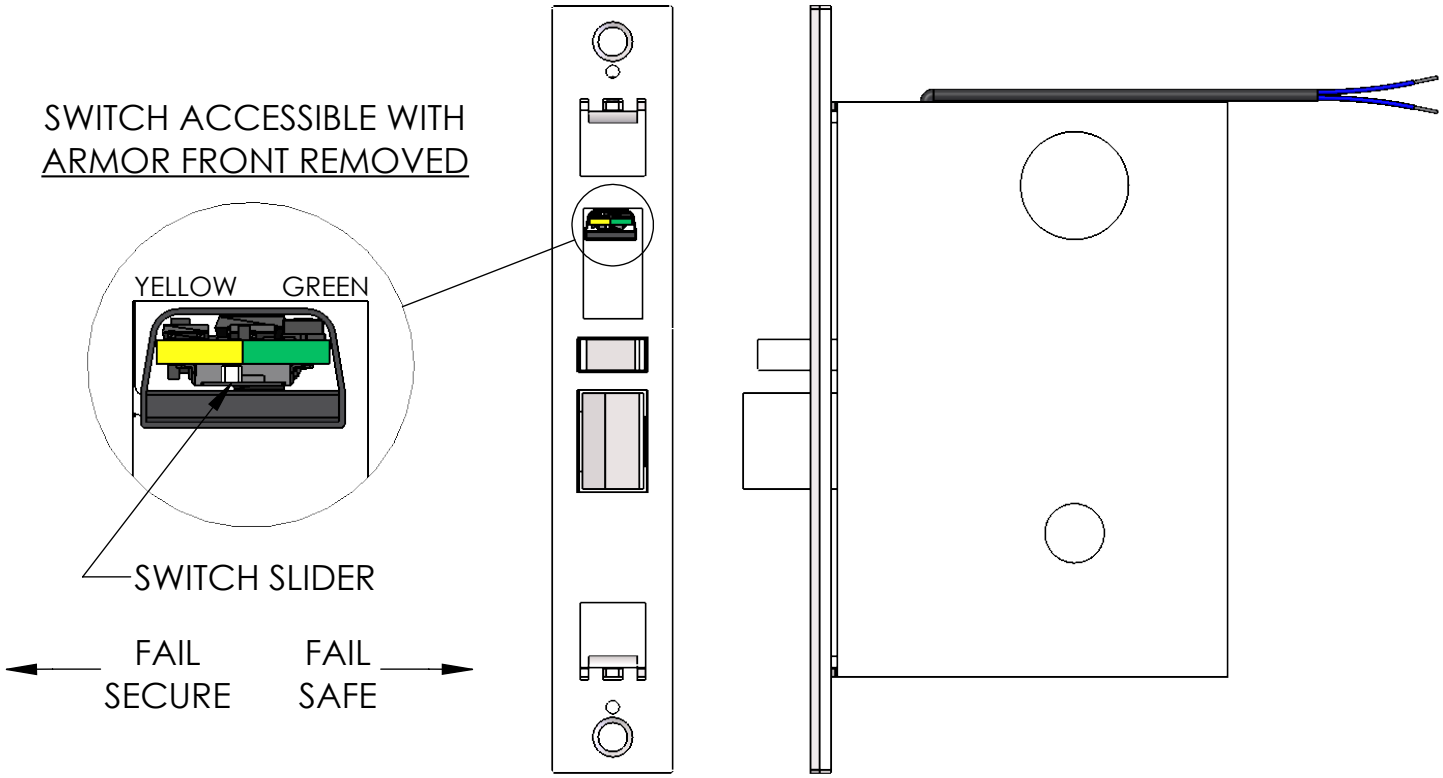

ELECTRIC MORTISE LOCK INSTRUCTIONS
DMS - DEADBOLT MONITOR SECURED
(MOTOR-CONTROLLED)

Description:

Monitors the full extension of the deadbolt (DM - Deadbolt Monitor) disabling the electrical control of a fail secure lockset locking the OUTSIDE trim. Retracting the deadbolt will enable the electrical control. Free egress at all times.

Electrical Specifications:

Voltage: 12-24V AC/DC (11V - 30V)
Current: 250mA MAX Inrush, 10mA MAX Holding
Non-polarized Blue Leads

2-Conductor Wire Run	
Distance 12V/24V	**Wire Gauge**
125'/250'	22
200'/400'	20
300'/600'	18
500'/1000'	16
750'/1500'	14
1250'/2500'	12

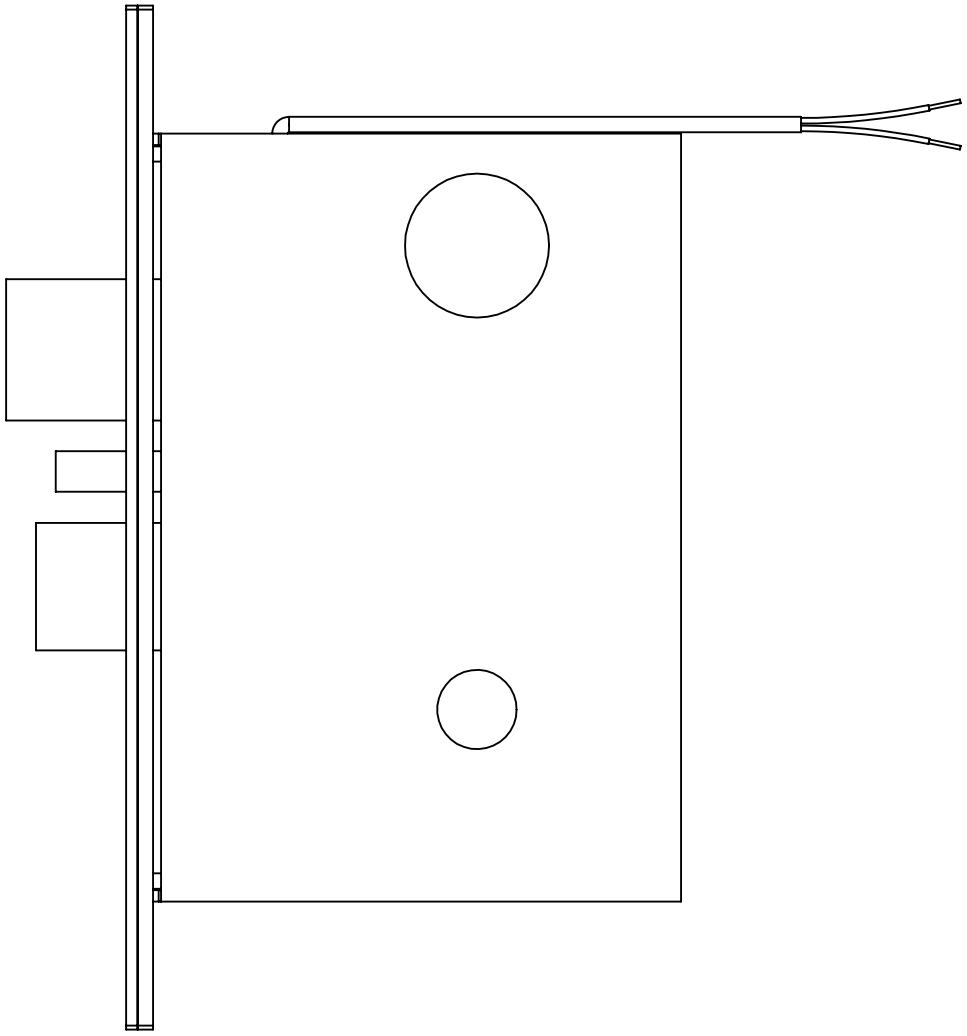

ELECTRIC MORTISE LOCK INSTRUCTIONS
CE - 3000 SERIES (NO LEVER)
(MOTOR HOOKED-UP)

Description:
The CE mortise lock is the specialist's solution for electrical control of a full mortise lock. Although the CE is designed for new doors, it can be retrofitted to existing doors. Please register all queries.

Electrical specifications:
Voltage: 12VDC ±10% or 24VDC ±10%
Current: 300mA (12V) or 150mA (24V) locking
Non-permanent current

Characteristics	
Voltage	Current
12 VDC	300 mA
24 VDC	150 mA
12 VDC	300 mA
24 VDC	150 mA

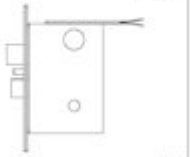

ELECTRIC MORTISE LOCK INSTRUCTIONS
DS - DEADBOLT SECURED
(MOTOR-CONTROLLED)

Description:
The full extension of the deadbolt disables the electrical control of a fail secure lockset locking the OUTSIDE trim. Retracting the deadbolt will enable the electrical control. Free egress at all times.

Electrical Specifications:
Voltage: 12-24V AC/DC (11V - 30V)
Current: 250mA MAX Inrush, 10mA MAX Holding
Non-polarized Leads

2-Conductor Wire Run	
Distance 12s/24V	Wire Gauge
125/1000	20
200/1400	20
300/1600	18
500/1000	16
750/1000	14
1250/2000	12

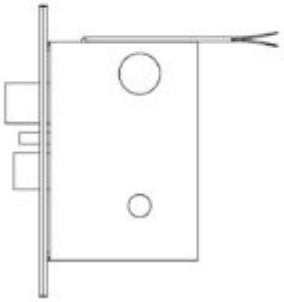

ELECTRIC MORTISE LOCK INSTRUCTIONS
DS - DEADBOLT SECURED
(MOTOR-CONTROLLED)

Description:
The full extension of the deadbolt disables the electrical control of a fail secure lockset locking the OUTSIDE trim. Retracting the deadbolt will enable the electrical control. Free egress at all times.

Electrical Specifications:
Voltage: 12-24V AC/DC (11V - 30V)
Current: 250mA MAX Inrush, 10mA MAX Holding
Non-polarized Leads

2-Conductor Wire Run	
Distance 12V/24V	**Wire Gauge**
125'/250'	22
200'/400'	20
300'/600'	18
500'/1000'	16
750'/1500'	14
1250'/2500'	12

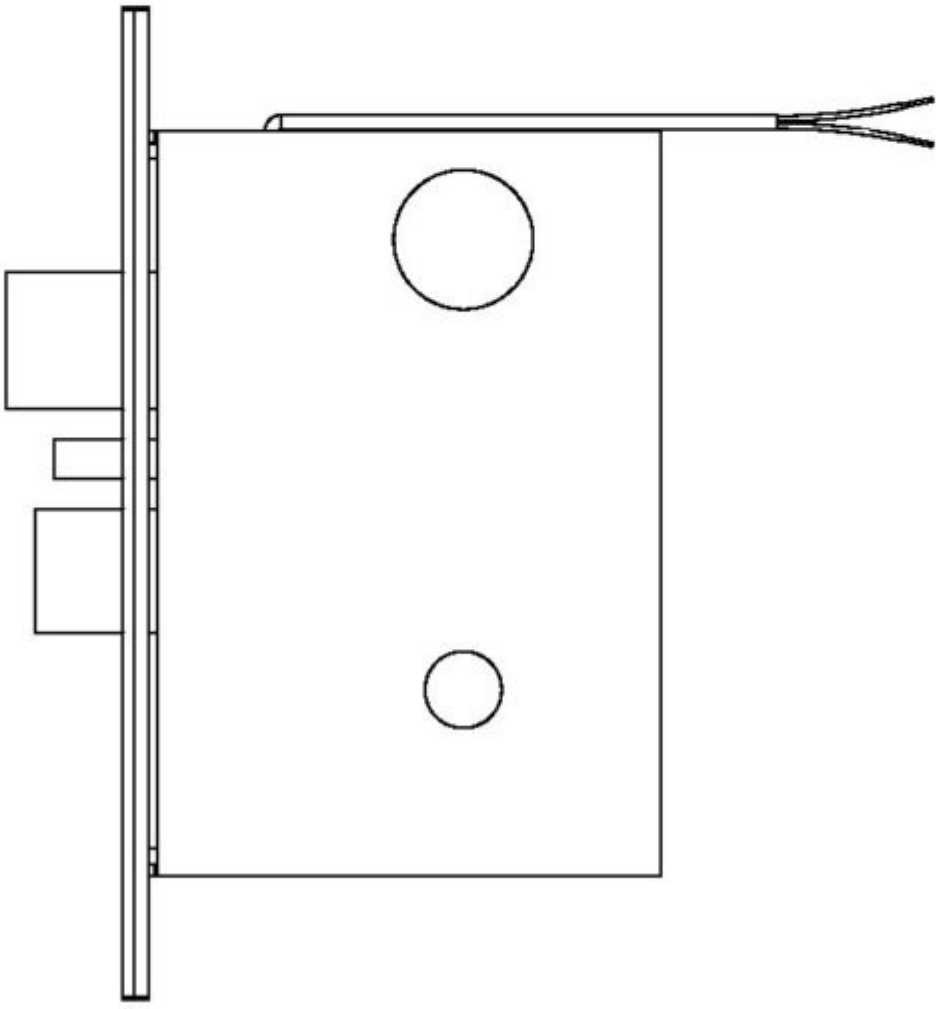

ELECTRIC MORTISE LOCK INSTRUCTIONS
DS - DEADBOLT SECURED
(MOTOR-CONTROLLED)

Description:
The full extension of the deadbolt disables the electrical control of a fail secure lockset locking the OUTSIDE trim. Retracting the deadbolt will enable the electrical control. Free egress at all times.

Electrical Specifications:
Voltage: 12-24V AC/DC (11V - 30V)
Current: 250mA MAX Inrush, 10mA MAX Holding
Non-polarized Leads

2-Conductor Wire Run	
Distance 12V/24V	**Wire Gauge**
125'/250'	22
200'/400'	20
300'/600'	18
500'/1000'	16
750'/1500'	14
1250'/2500'	12

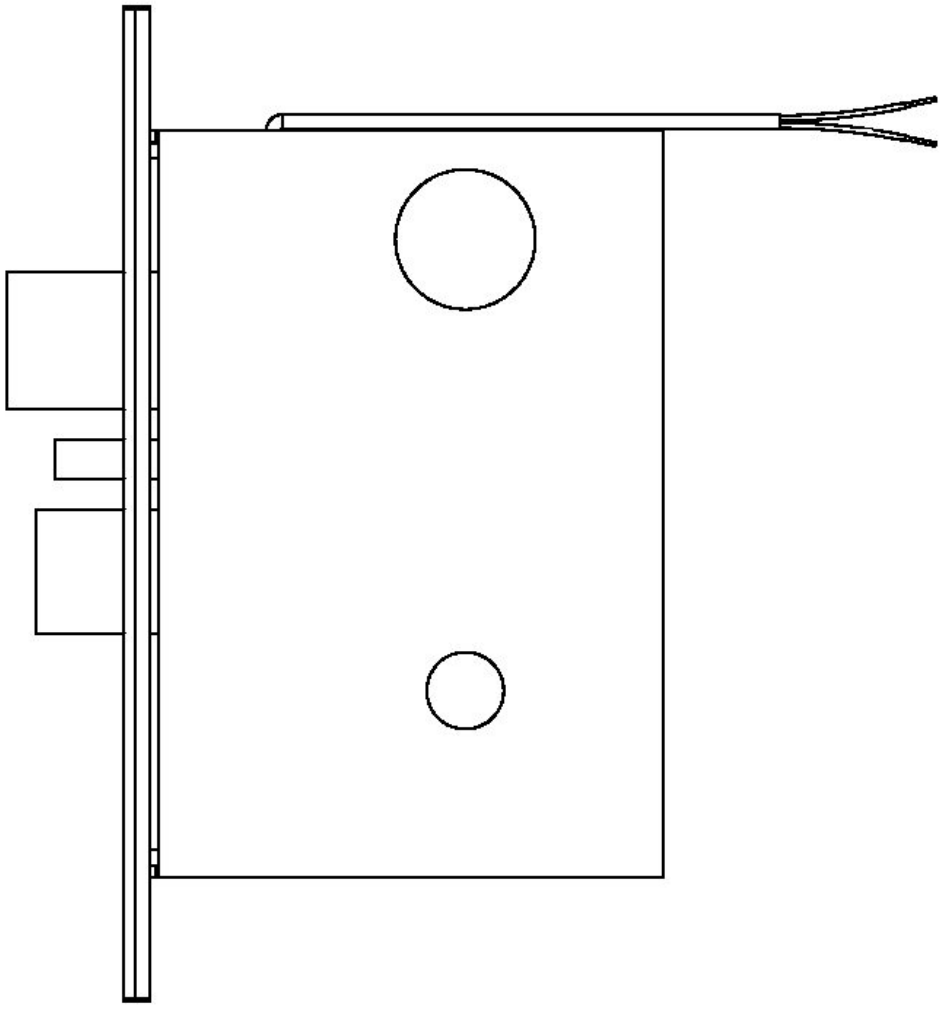

ELECTRIC MORTISE LOCK INSTRUCTIONS
DS - DEADBOLT SECURED
(MOTOR-CONTROLLED)

Description:

The full extension of the deadbolt disables the electrical control of a fail secure lockset locking the OUTSIDE trim. Retracting the deadbolt will enable the electrical control. Free egress at all times.

Electrical Specifications:

Voltage: 12-24V AC/DC (11V - 30V)
Current: 250mA MAX Inrush, 10mA MAX Holding
Non-polarized Leads

2-Conductor Wire Run	
Distance 12V/24V	**Wire Gauge**
125'/250'	22
200'/400'	20
300'/600'	18
500'/1000'	16
750'/1500'	14
1250'/2500'	12

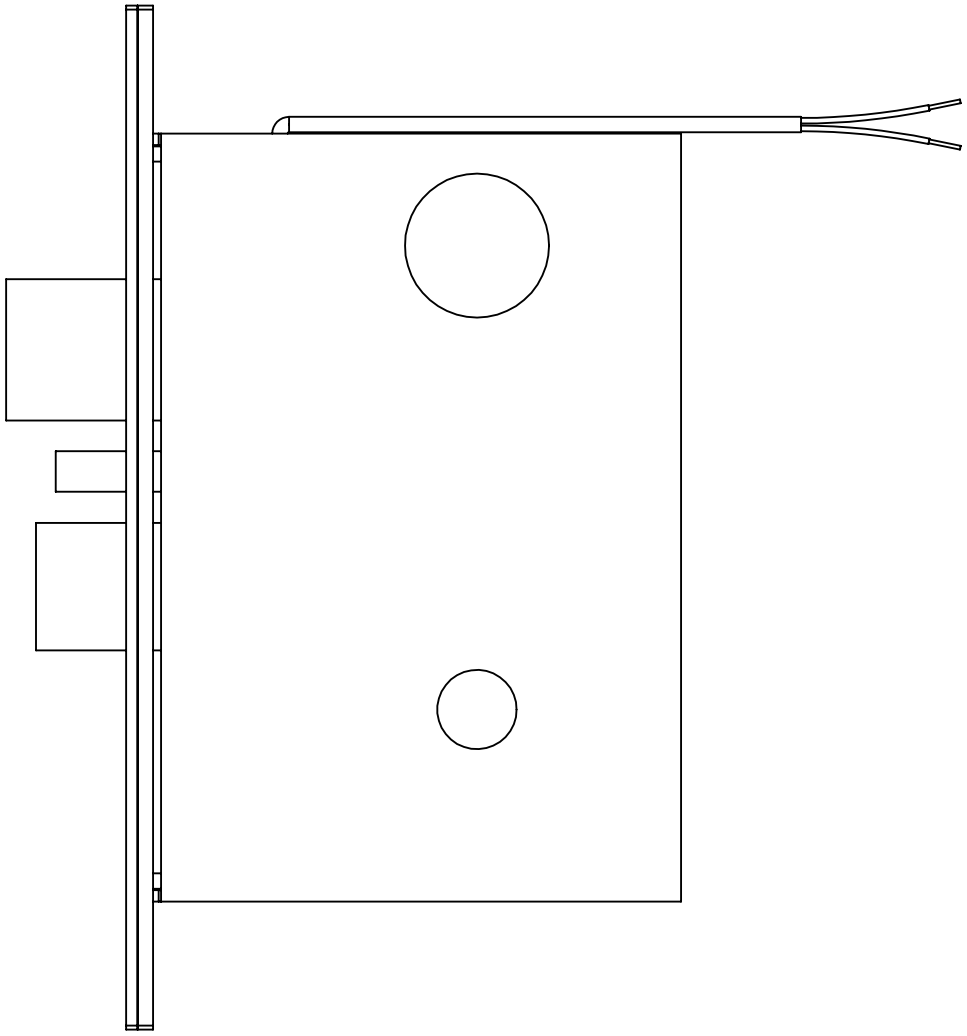









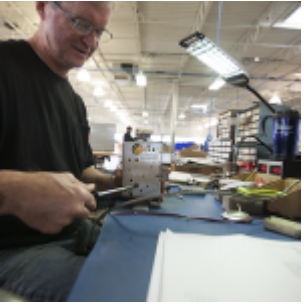





ELECTRIC MORTISE LOCK TEMPLATE
"C" CONFIGURATION DOOR PREPARATION

1500 ELECTRIC MONITOR
1510/1520 ELECTRIC LOCKING/UNLOCKING

Notes:

1. This door preparation is in addition to the door preparation shown on the manufacturer's mechanical mortise lock template.
2. The door manufacturer to provide the door with adequate construction and reinforcement for proper support and installation of the door hardware.
3. The door manufacturer to provide a ∅3/8" raceway through the door between the mortise lock and the low voltage power transfer for wire routing.

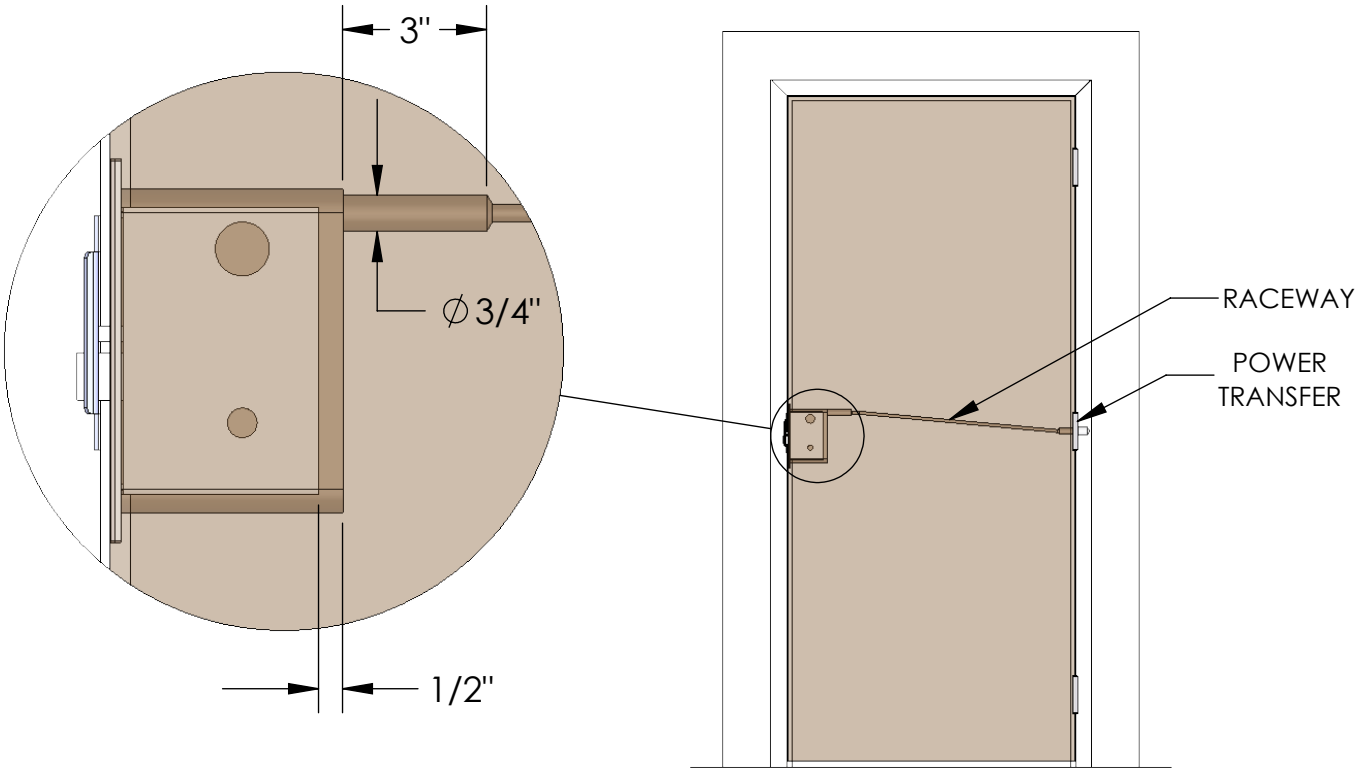

VIEW FROM OUTSIDE OF DOORWAY





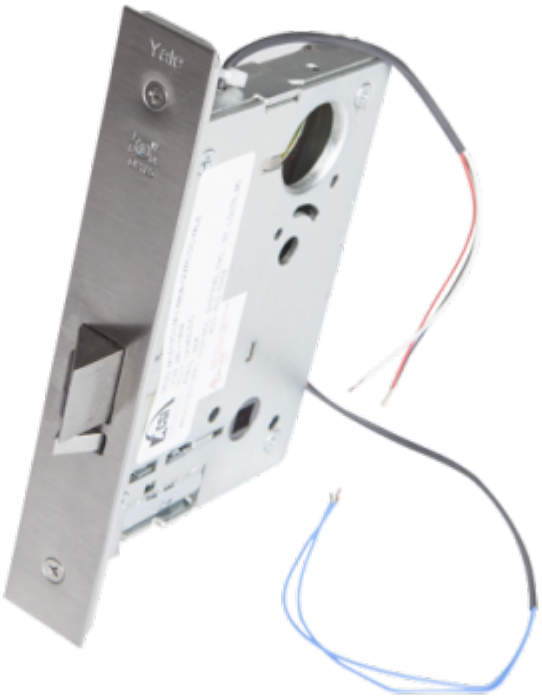
Yale

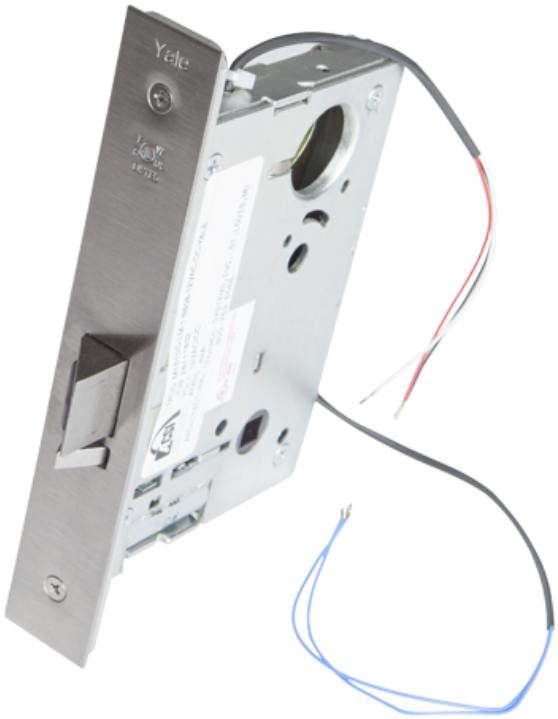
Yale



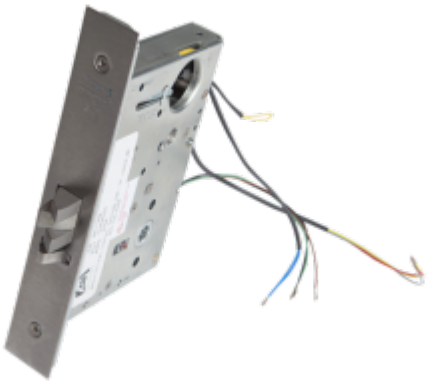

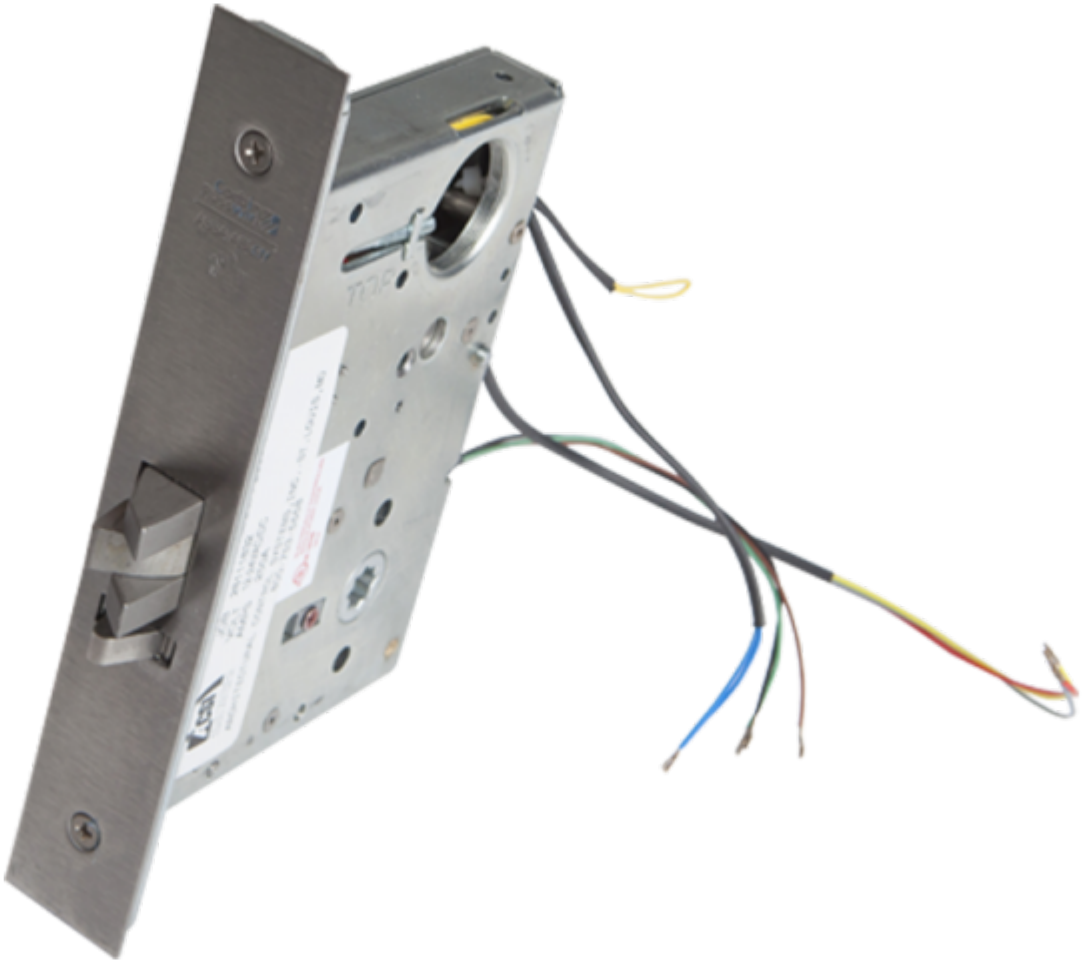

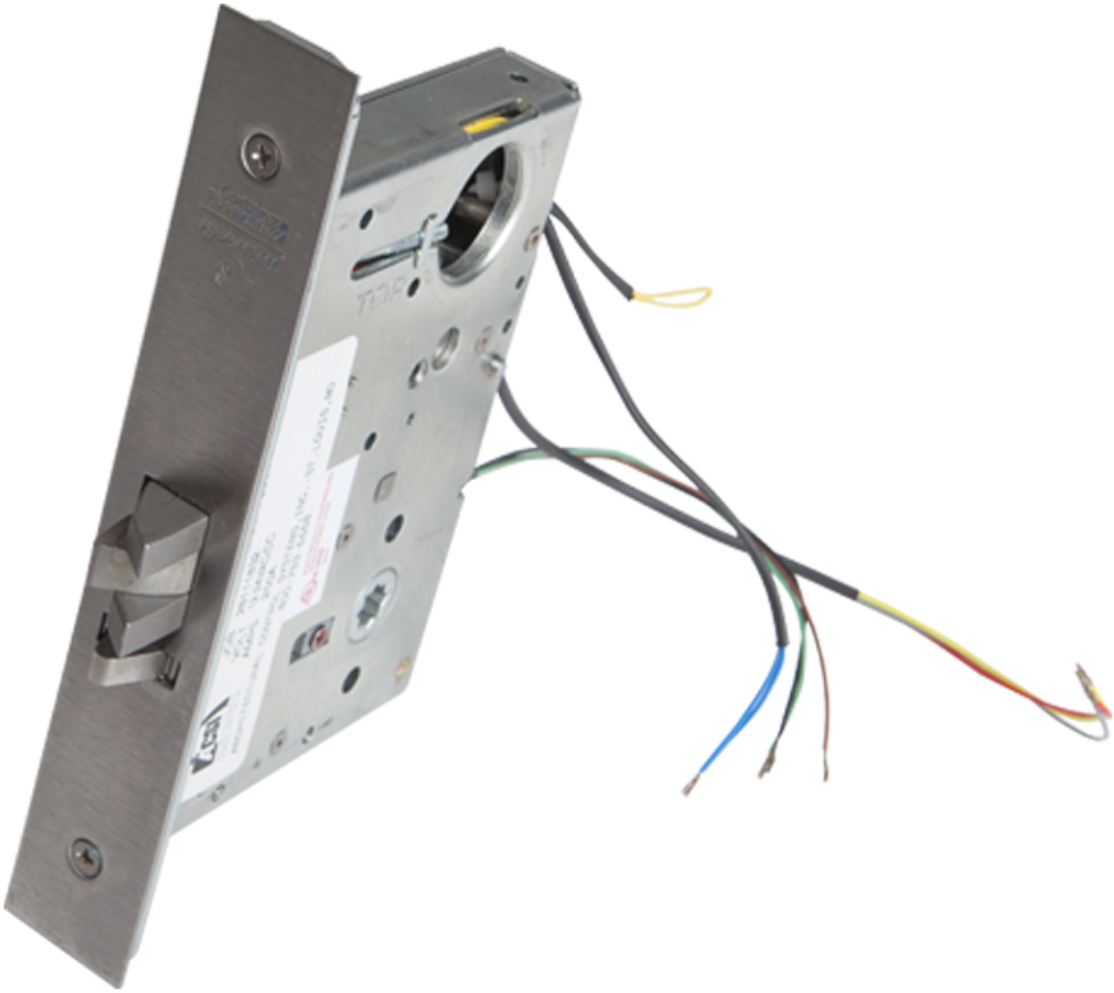








BEST
40H



















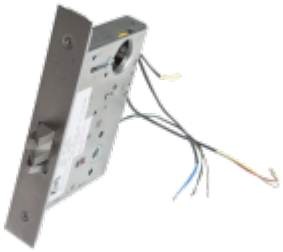

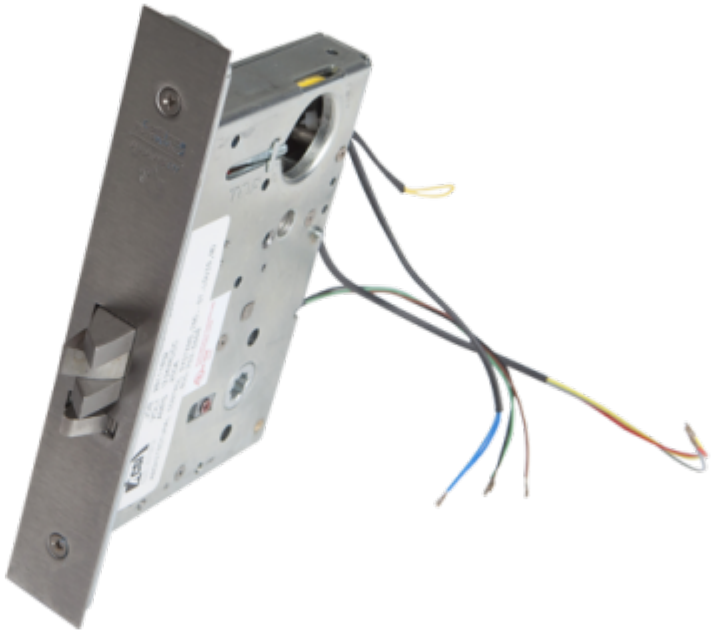

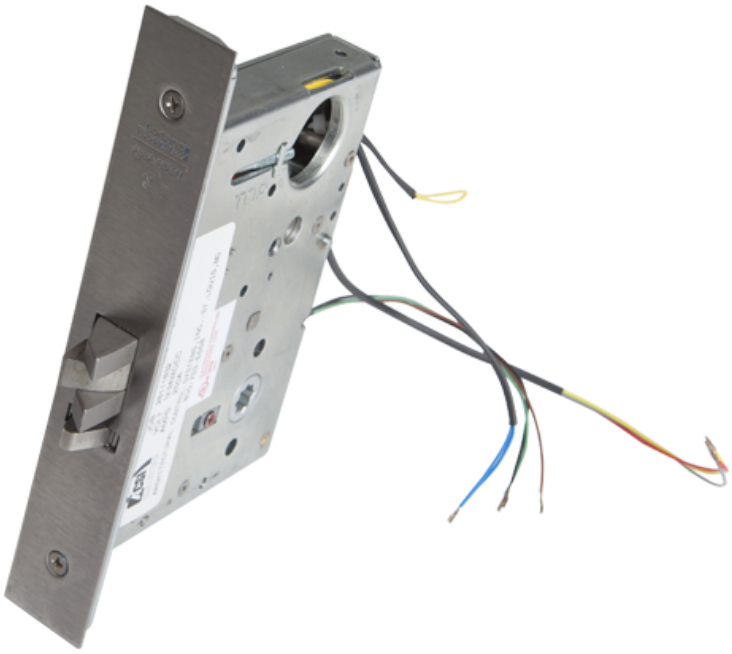






SONY


ACS
CHITECTUR
NTROL SYSTEMS

ACSL
ARCHITECTURAL
CONTROL SYSTEMS INC






SECURITY
C UL US
LISTED
EQUIPMENT
52X3
MODEL 1106
MFG. DATE 7/13
ARCHITECTURAL CONTROL SYSTEMS INCORPORATED
RESIDENTIAL AND COMMERCIAL FLEXIBLE CONNECTOR


SECURITY
C UL US
LISTED
EQUIPMENT
52X3
MODEL 1106
MFG. DATE 7/12kp
ARCHITECTURAL CONTROL SYSTEMS INCORPORATED
RESIDENTIAL AND COMMERCIAL FLEXIBLE CONNECTOR


SECURITY
C UL US
LISTED
EQUIPMENT
52X3
MODEL 1106
MFG. DATE 7/12kp
ARCHITECTURAL CONTROL SYSTEMS INCORPORATED
RESIDENTIAL AND COMMERCIAL FLEXIBLE CONNECTOR


SECURITY
C UL US
LISTED
EQUIPMENT
52X3
MODEL 1106
MFG. DATE 7/12kp
ARCHITECTURAL CONTROL SYSTEMS INCORPORATED
RESIDENTIAL AND COMMERCIAL FLEXIBLE CONNECTOR



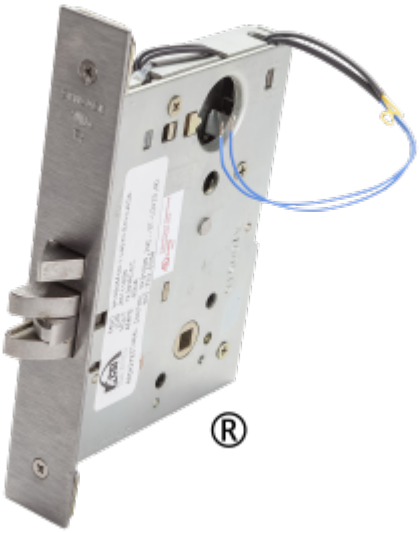

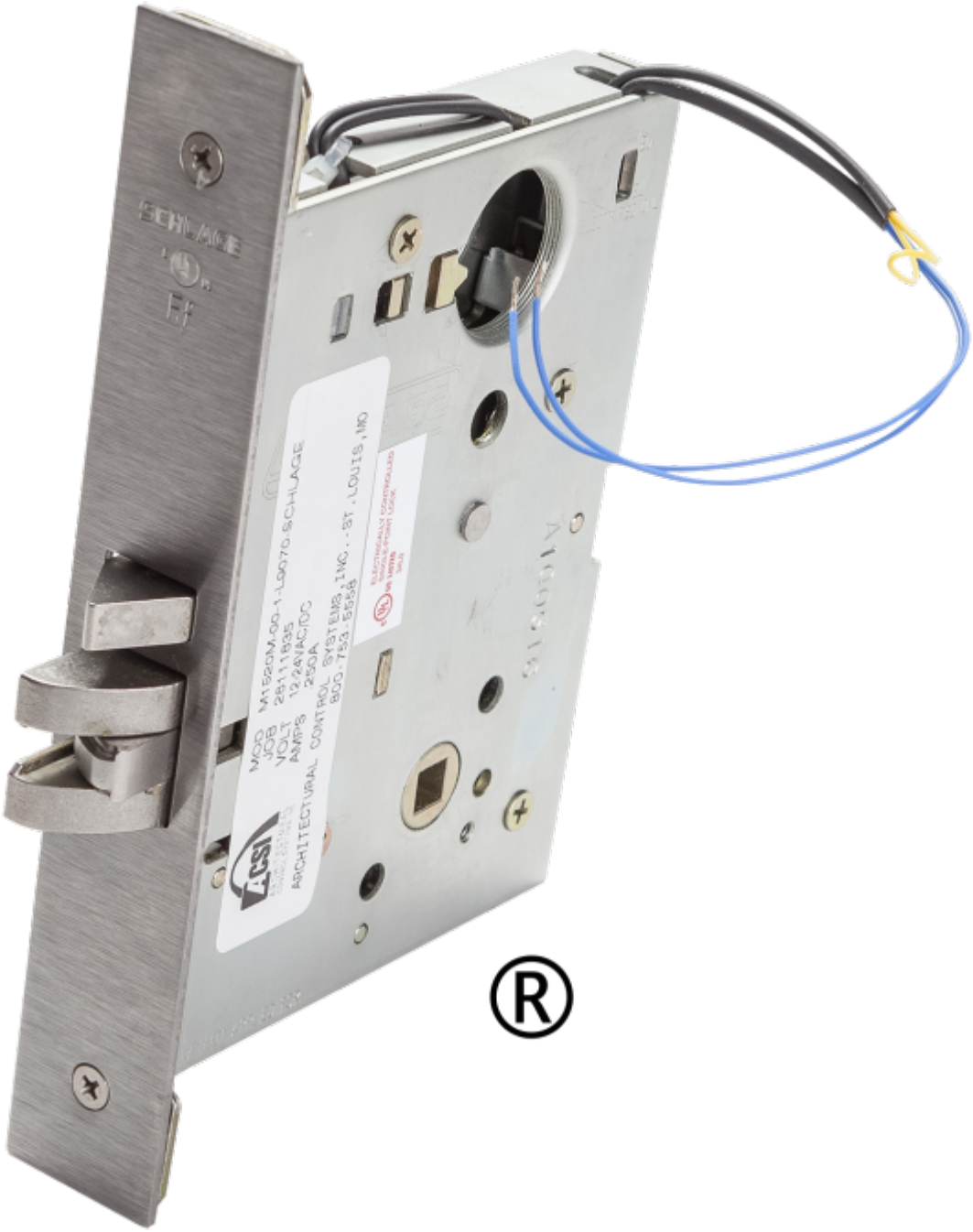
SCHLAGE
MOD M1520M-00-1-L9070-SCHLAGE
JOB 28111835
VOLT 12-24VAC/DC
AMPS 250A
ARCHITECTURAL CONTROL SYSTEMS, INC. - ST. LOUIS, MO
800-753-5558
ACSI

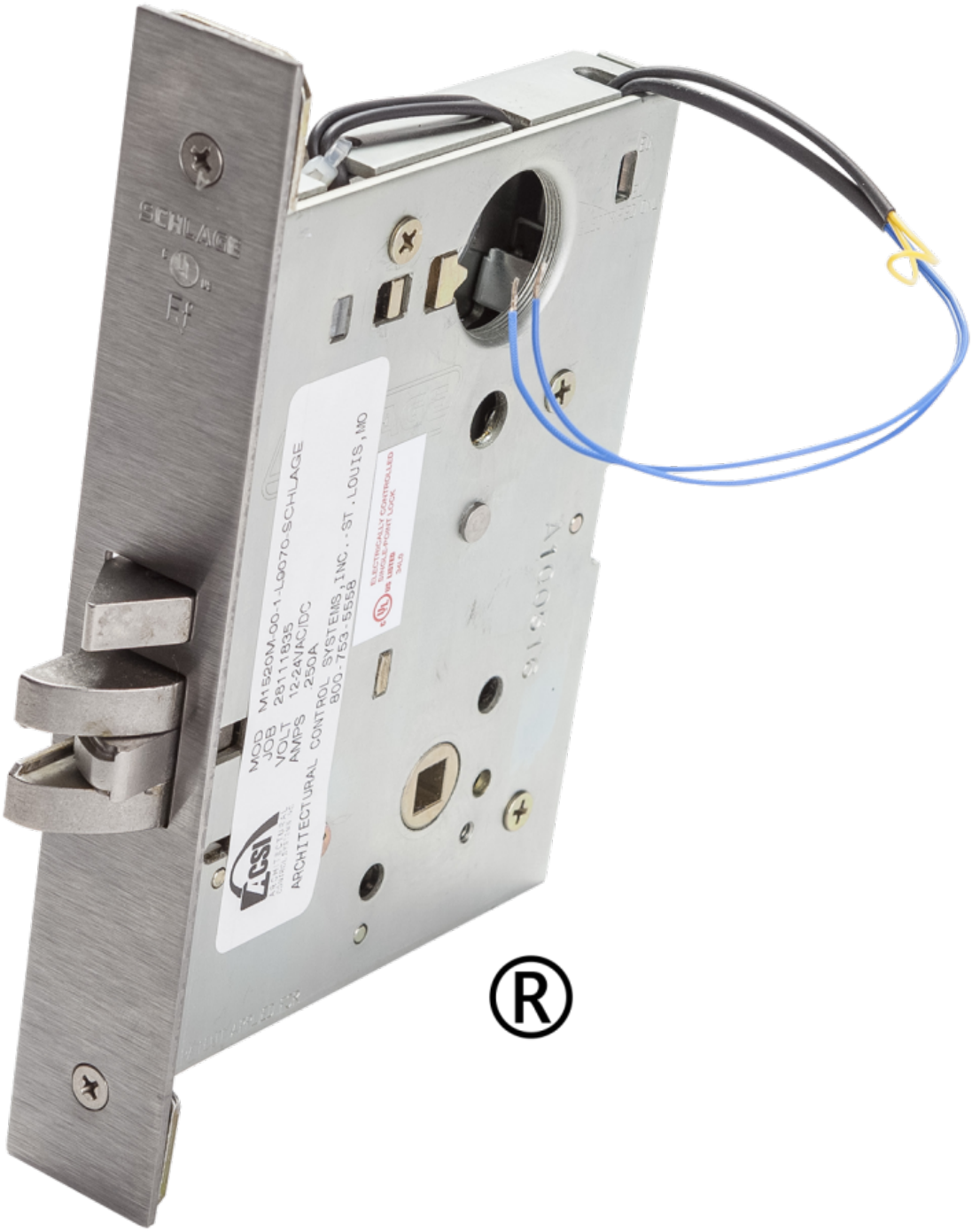
SCHLAGE
MOD M1520M-00-1-LG070-SCHLAGE
JOB 2811835
VOLT 12-24VAC/DC
AMPS 250A
ARCHITECTURAL CONTROL SYSTEMS, INC., ST. LOUIS, MO
800-753-5558
ELECTRICALLY CONTROLLED
SINGLE POINT LOCK
ACSI

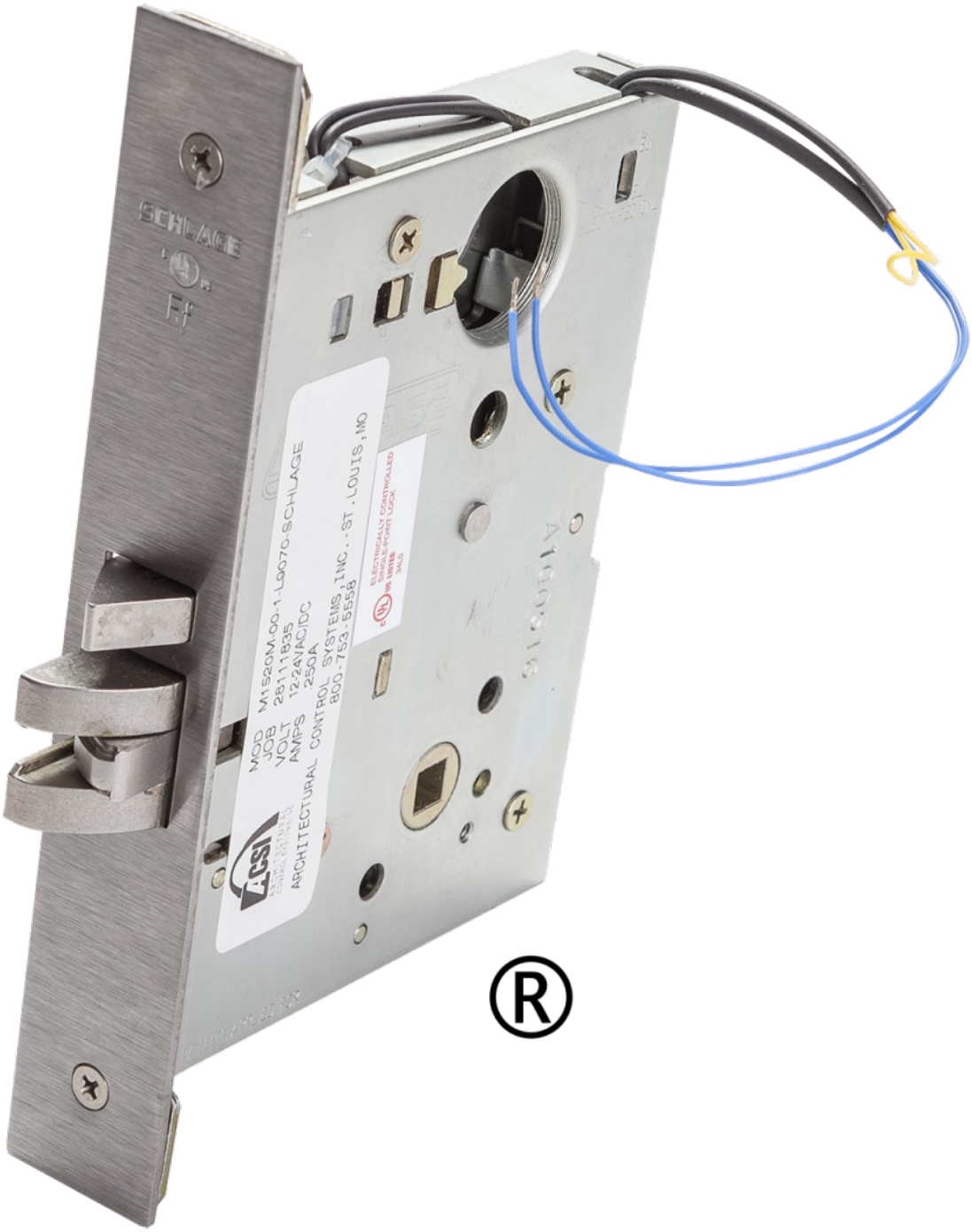
SCHLAGE
MOD M1520M-00-1-L9070-SCHLAGE
JOB 2811835
VOLT 12-24VAC/DC
AMPS 250A
ARCHITECTURAL CONTROL SYSTEMS,INC.,ST.LOUIS,MO
800-753-5558
ELECTRICALLY CONTROLLED
SINGLE POINT LOCK
ACSI

®

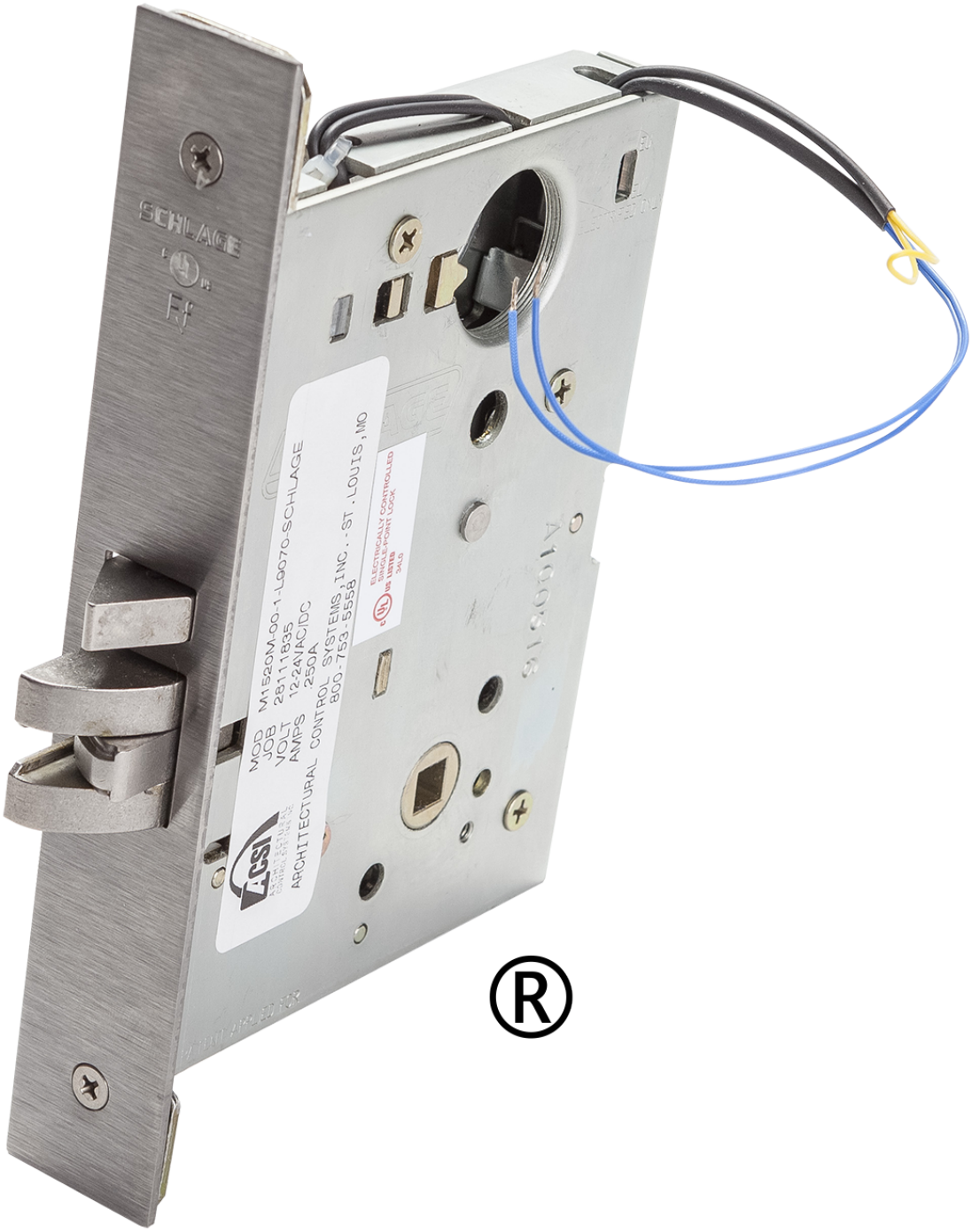
SCHLAGE
MOD M1520M-00-1-L9070-SCHLAGE
JOB 28111835
VOLT 12-24VAC/DC
AMPS .250A
ARCHITECTURAL CONTROL SYSTEMS,INC.-ST.LOUIS,MO
800-753-5558
ELECTRICALLY CONTROLLED
SINGLE-POINT LOCK
US LISTED
24L0
ACSI
ARCHITECTURAL CONTROL SYSTEMS INC
A100816






SCHLAGE
MOD M1520M-00-1-L9070-SCHLAGE
JOB 28111835
VOLT 12-24VAC/DC
AMPS 250A
ARCHITECTURAL CONTROL SYSTEMS, INC. - ST. LOUIS, MO
800-753-5558
ACSI


SCHLAGE
MOD M1520M-00-1-LG070-SCHLAGE
JOB 2811835
VOLT 12-24VAC/DC
AMPS 250A
ARCHITECTURAL CONTROL SYSTEMS,INC.,ST.LOUIS,MO
800-753-5558
ELECTRICALLY CONTROLLED
SINGLE POINT LOCK
341


SCHLAGE
MOD M1520M-00-1-L9070-SCHLAGE
JOB 2811835
VOLT 12-24VAC/DC
AMPS 250A
ARCHITECTURAL CONTROL SYSTEMS,INC.,ST.LOUIS,MO
800-753-5558
ELECTRICALLY CONTROLLED
SINGLE POINT LOCK
ACSI


SCHLAGE
MOD M1520M-00-1-LG070-SCHLAGE
JOB 28111835
VOLT 12-24VAC/DC
AMPS 250A
ARCHITECTURAL CONTROL SYSTEMS, INC. . ST. LOUIS, MO
800-753-5558
ELECTRICALLY CONTROLLED
SINGLE POINT LOCK
24.0
ACSI












SARGENT 10














ACSI


ACSI


ACSI


ACSI


ACSI


Series 1100
Electric
Hinges/
Pivots
ACSI


Series 1100
Electric Hinges/ Pivots
ACSI


Series 1100
Electric
Hinges/
Pivots
ACSI
2720 Clark Avenue
St. Louis, MO 63103
(314) 652-5588
(314) 652-2090 FAX
www.asci-inc.com
1-800-753-5558


Series 1100
Electric Hinges/ Pivots
ACSI
2720 Clark Avenue
St. Louis, MO 63103
(314) 652-5588
(314) 652-2090 FAX
www.asci-inc.com
1-800-753-5558
Series
Electric Locks
Modifications to:
Adams Rite, Arrow,
Corbin Russwin,
Doromatic, Monarch,
Precision, Sargent,
Von Duprin, and Yale
Series
Electric Exit De
Modifications to:
Adams Rite, Arrow,
Corbin Russwin, De
Doromatic, Monarc
Precision, Sargent
Von Duprin, Yale,
and more
Series
Door Control
Mortise Key Switch
Pushbutton Switch
Emergency Release
Door Position Switc
Indicators
Audible Alarm
Keypads


Series 1100
Electric
Hinges/
Pivots
ACSI
2720 Clark Avenue
St. Louis, MO 63103
(314) 652-5588
(314) 652-2090 FAX
www.asci-inc.com
1-800-753-5558
Series
Electric
Locks
Modifications to:
Adams Rite, Arrow,
Corbin Russwin, D
Doromatic, Monar
Precision, Sargen
Von Duprin, and Y
Series
Electric
Exit De
Modifications to:
Adams Rite, Arrow,
Corbin Russwin, D
Doromatic, Monarc
Precision, Sargent
Von Duprin, Yale,
and more
Series
Door
Control
Mortise Key Switch
Pushbutton Switch
Emergency Release
Door Position Switc
Indicators
Audible Alarm
Keypads


Series 1100
Electric
Hinges/
Pivots
ACSI
2720 Clark Avenue
St. Louis, MO 63103
(314) 652-5588
(314) 652-2090 FAX
www.asci-inc.com
1-800-753-5558
Series
Electric
Locks
Modifications to:
Adams Rite, Arrow,
Corbin Russwin,
Doromatic, Monarch,
Precision, Sargent,
Von Duprin, and Yale
Series
Electric
Exit De
Modifications to:
Adams Rite, Arrow,
Corbin Russwin, De
Doromatic, Monarc
Precision, Sargent,
Von Duprin, Yale,
and more
Series
Door
Control
Mortise Key Switch
Pushbutton Switch
Emergency Release
Door Position Switc
Indicators
Audible Alarm
Keypads


















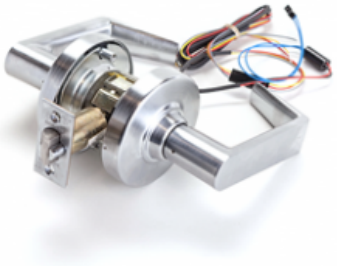













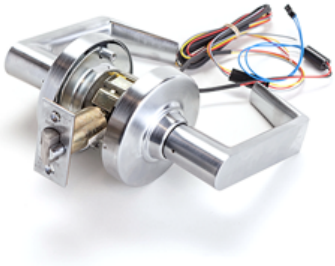














ACSI
ARCHITECTURAL
CONTROL SYSTEMS INC.

ACSI
ARCHITECTURAL
CONTROL SYSTEMS INC.

ACSI
ARCHITECTURAL
CONTROL SYSTEMS INC.

ACSI
ARCHITECTURAL
CONTROL SYSTEMS INC.

ACS
CHITECTUR
NTROL SYSTEMS

ACSI
ARCHITECTURAL
CONTROL SYSTEMS INC.

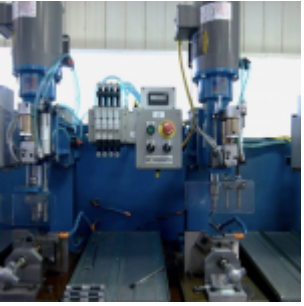

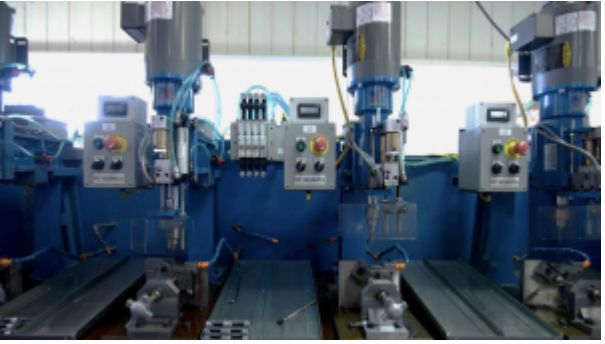

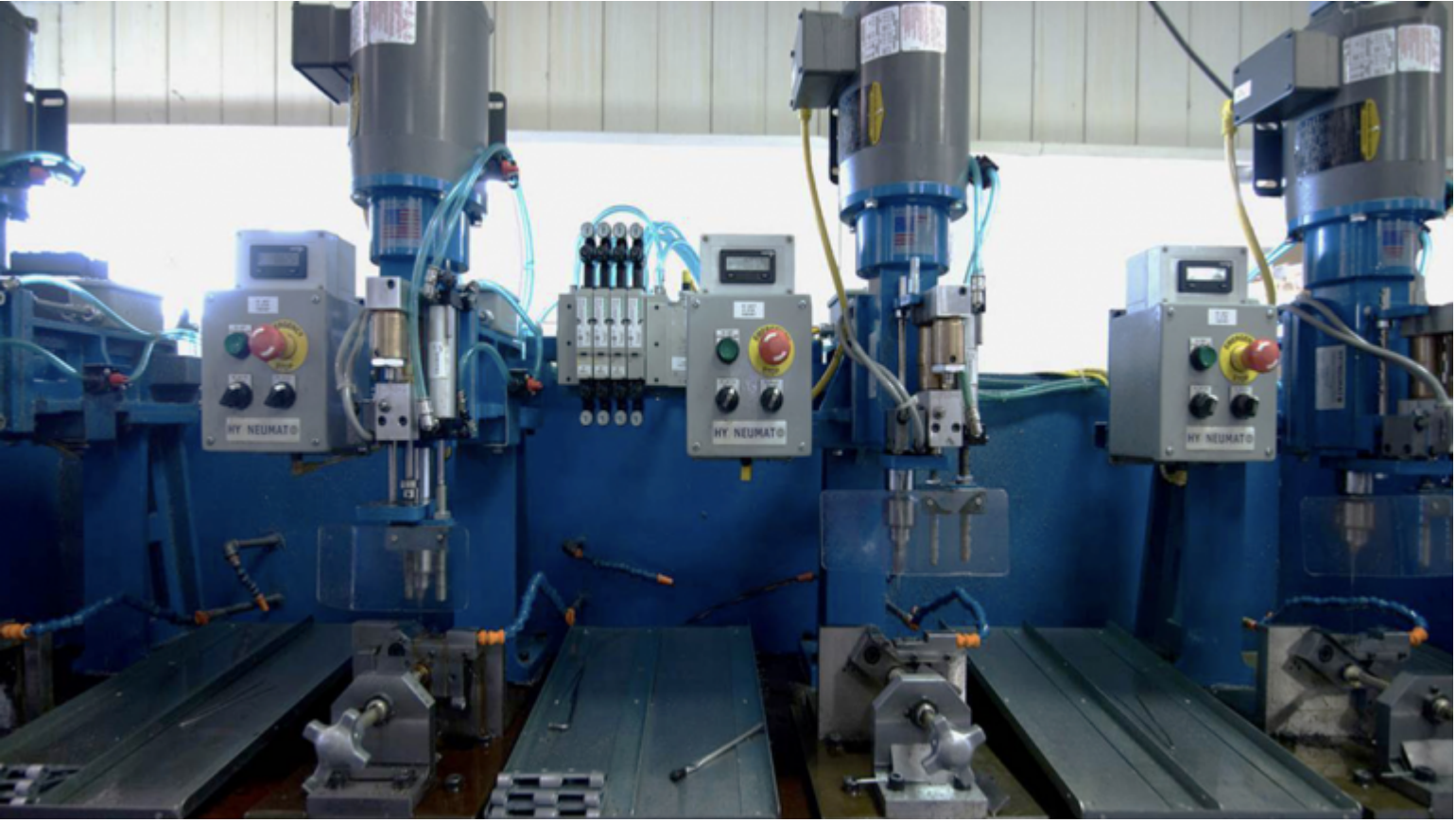
HY NEUMAT
HY NEUMAT
HY NEUMAT

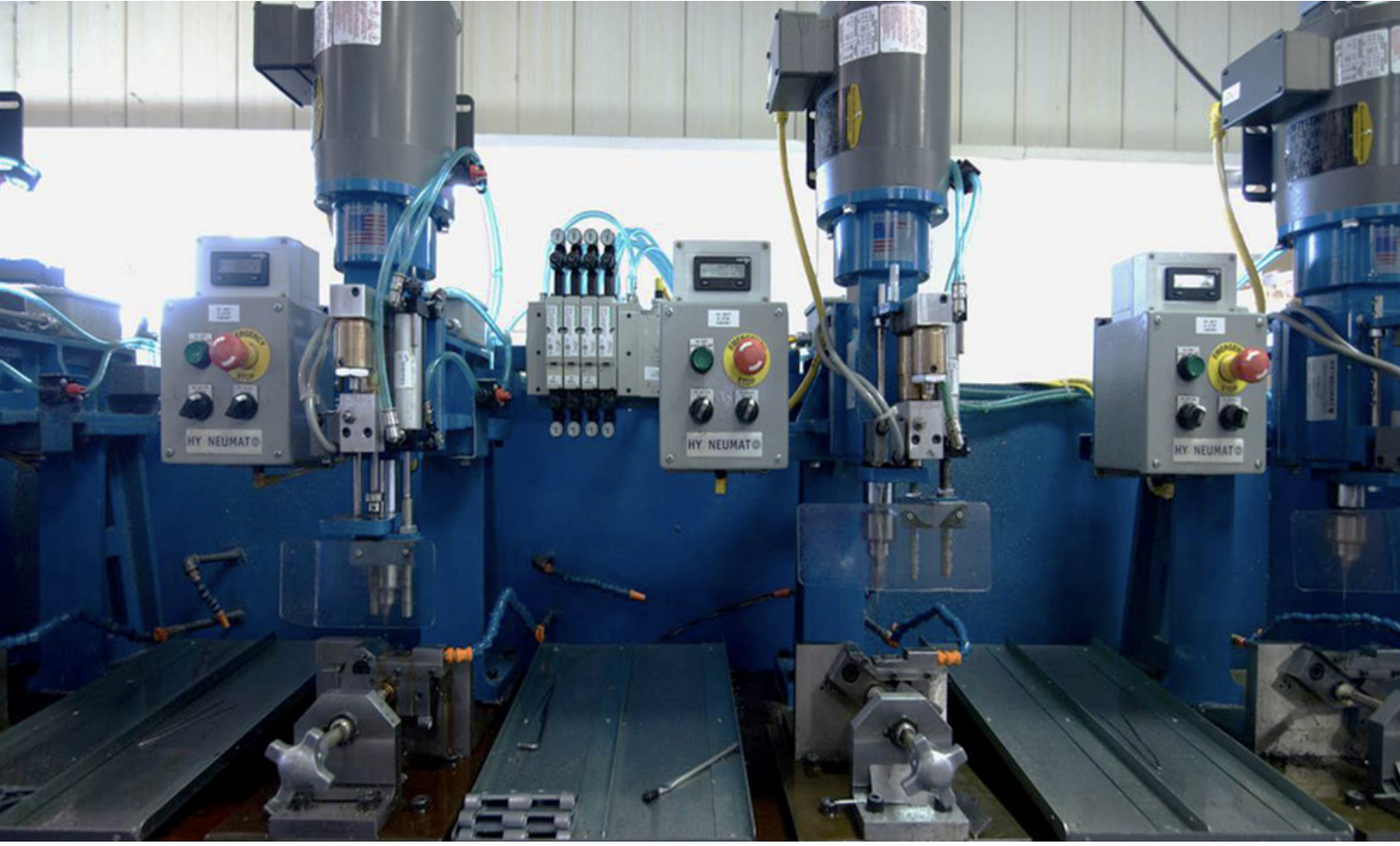
HY NEUMAT
HY NEUMAT
HY NEUMAT

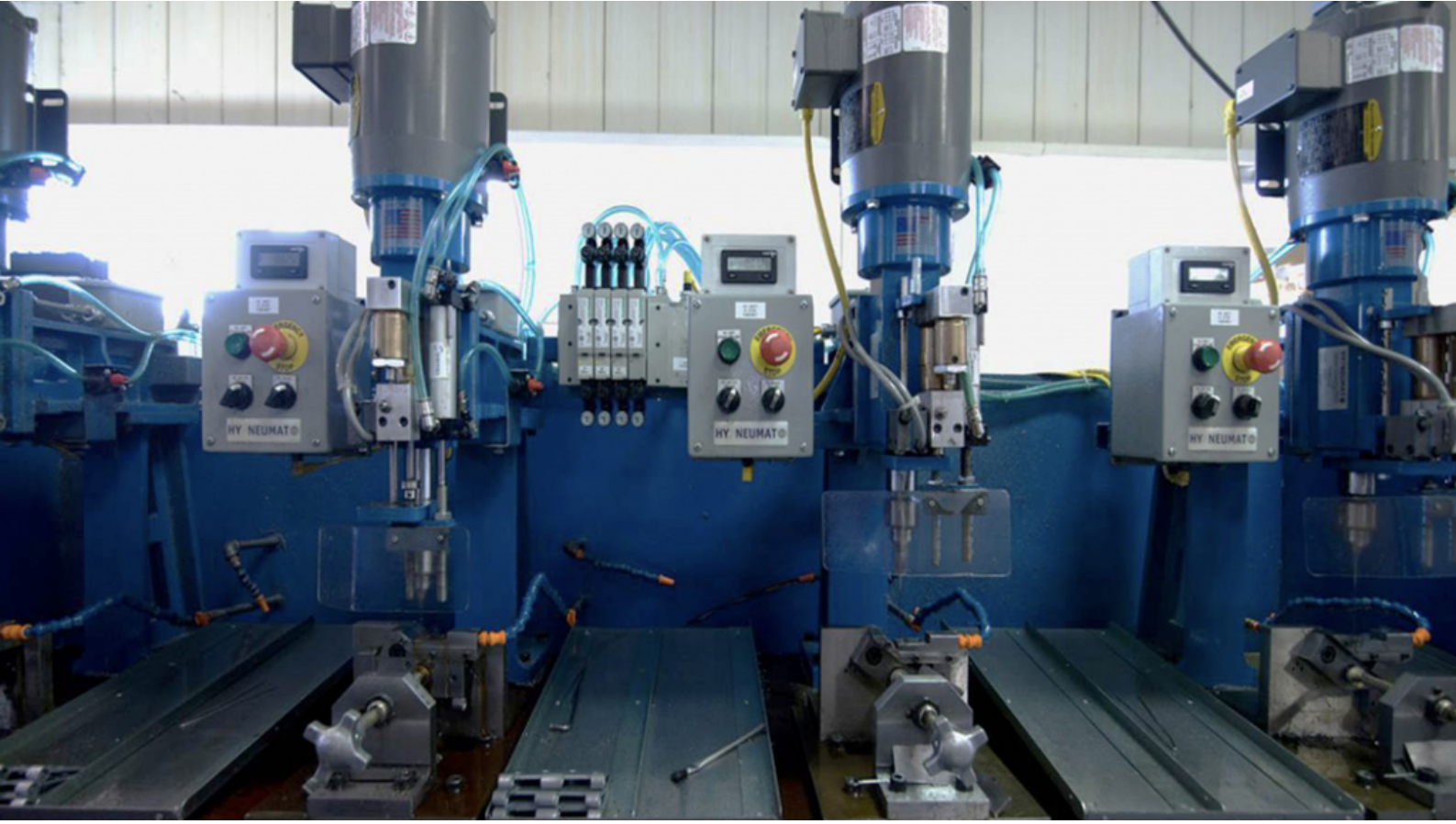
HY NEUMAT
HY NEUMAT
HY NEUMAT

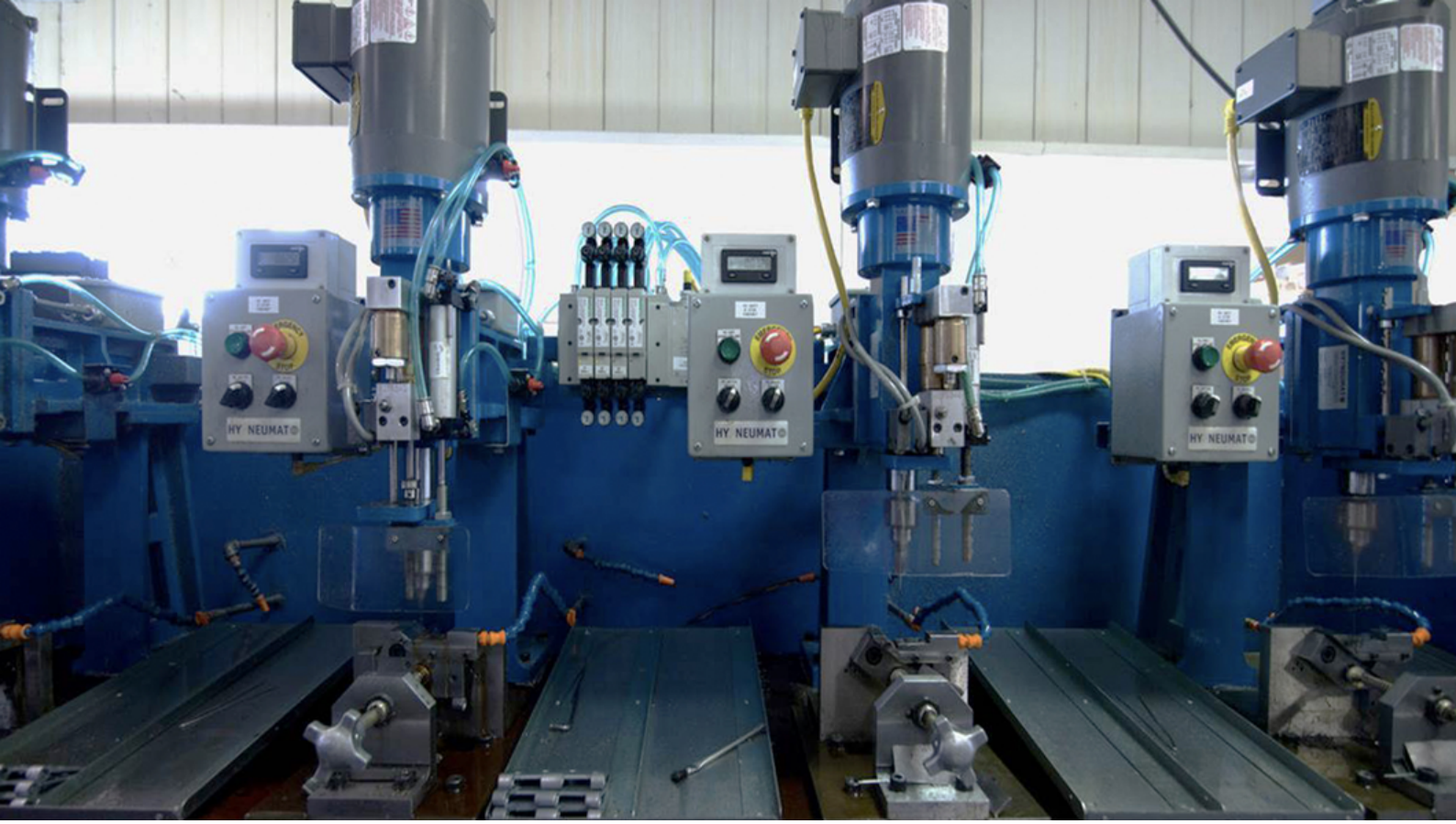
HY NEUMAT
HY NEUMAT
HY NEUMAT



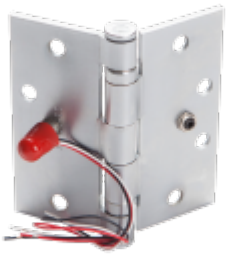

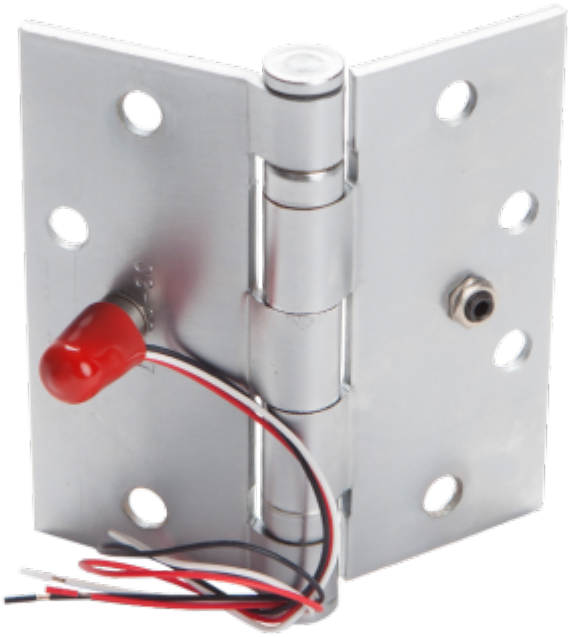

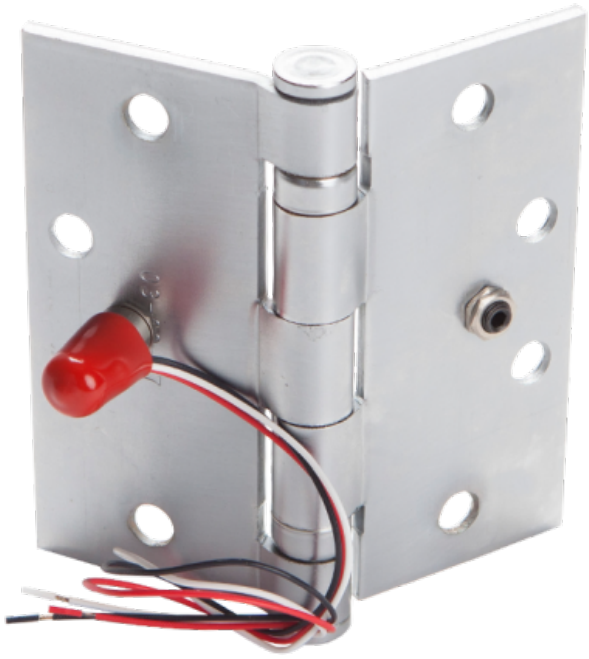

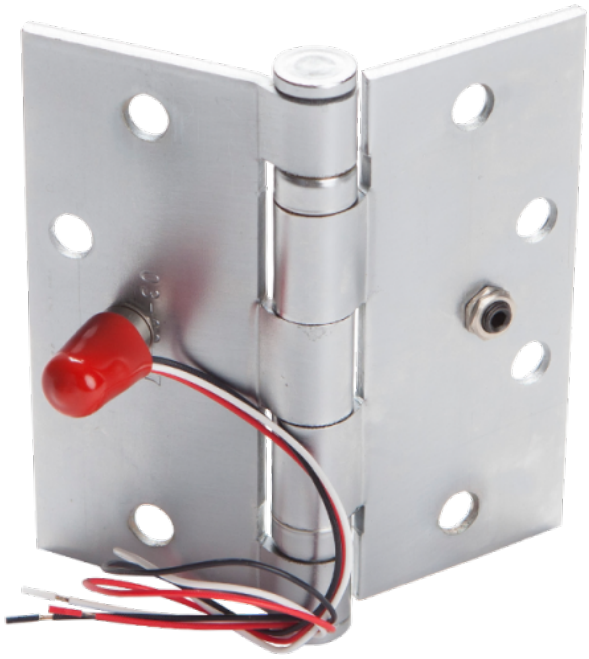

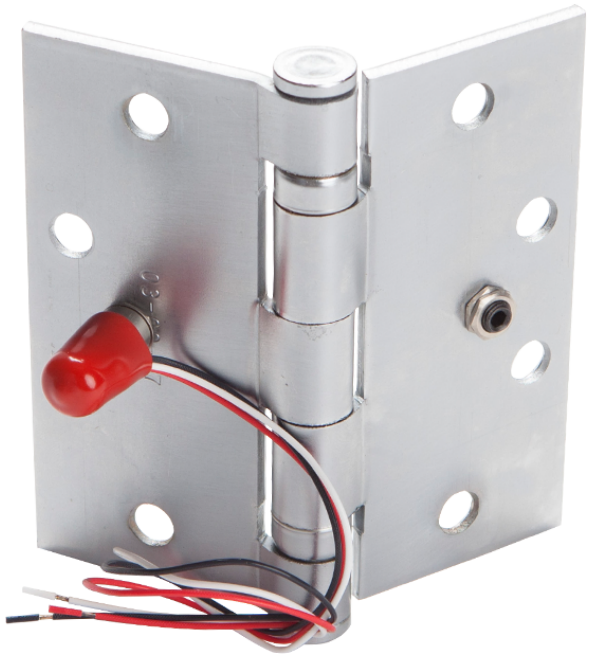


ACSI


ACSI





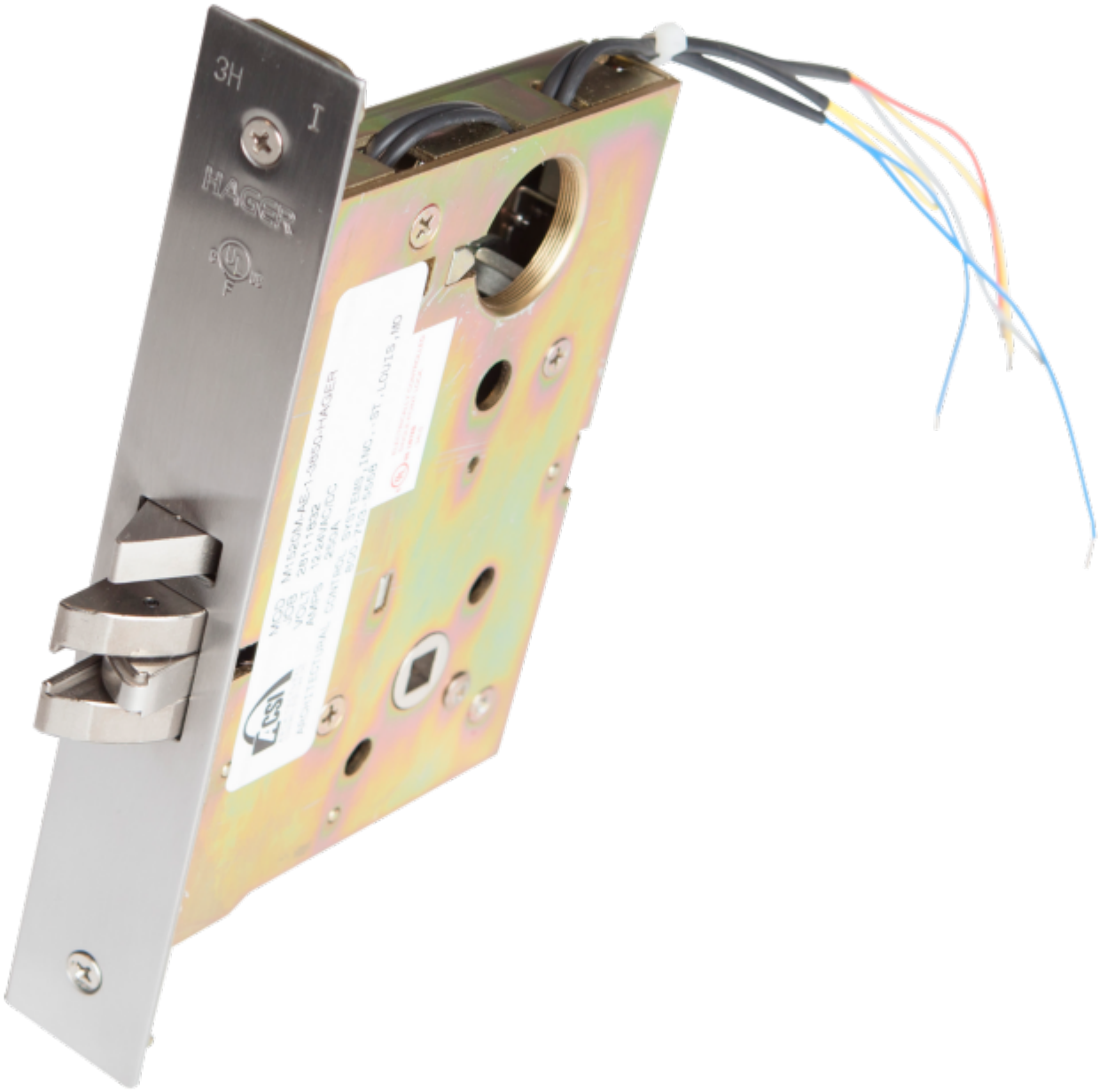
3H
I
HAGER

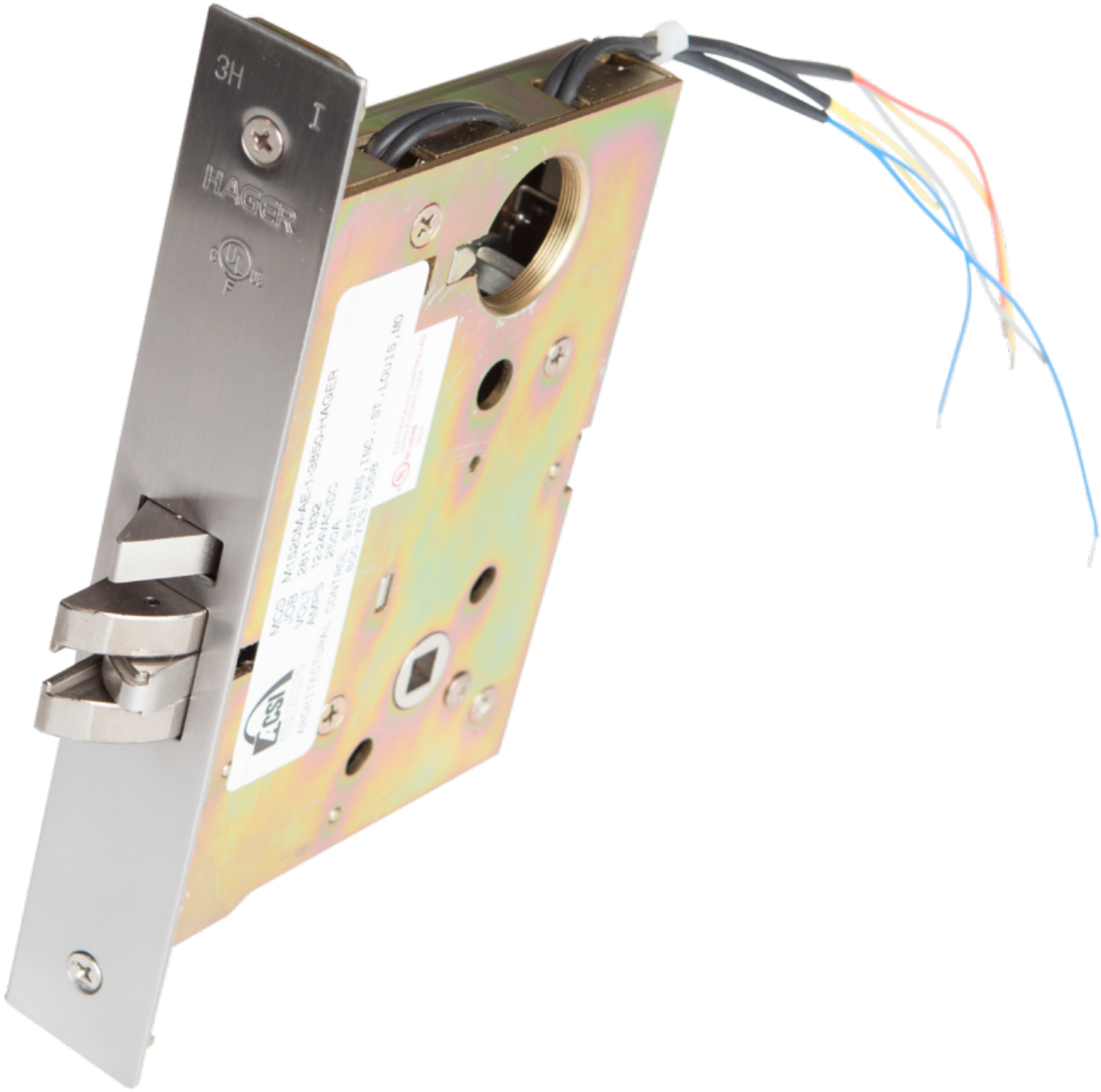
3H
HAGER

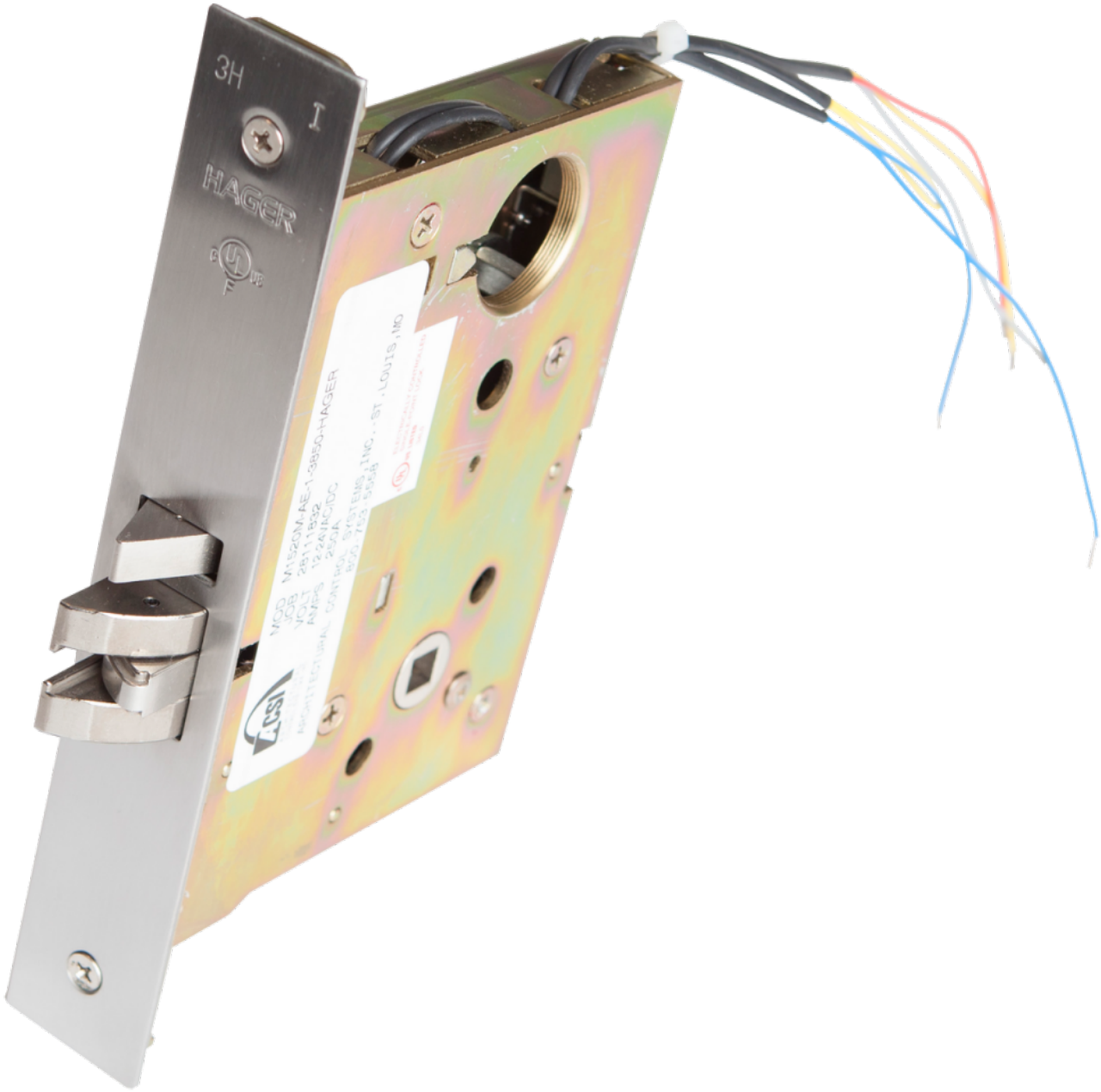
3H
HAGER

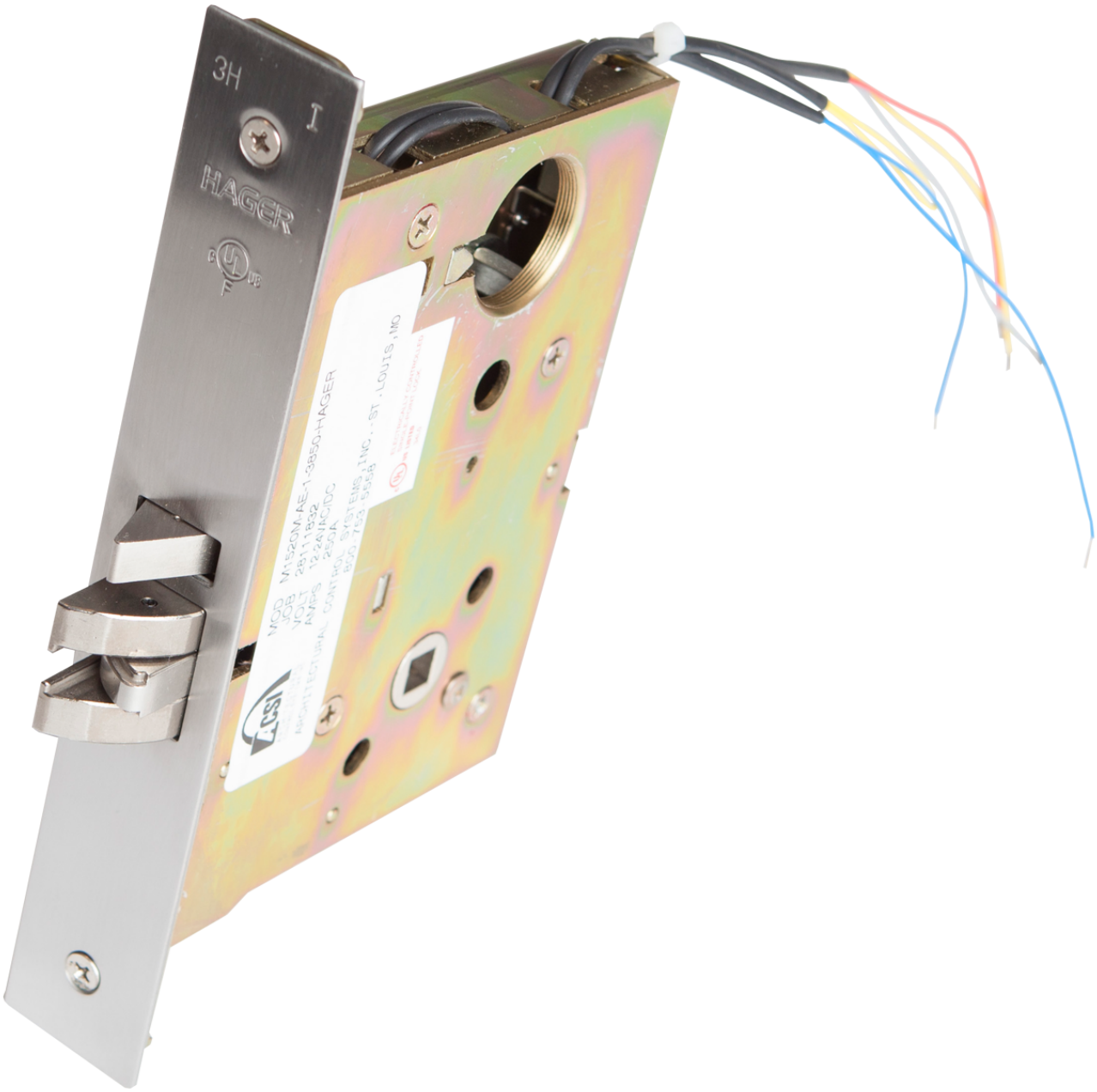
3H
HAGER

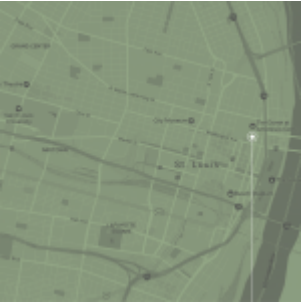


GRAND CENTER
Fox Theatre
Saint Louis University
City Museum
MIDTOWN
St. Louis
LAFAYETTE SQUARE


Page Blvd
GRAND CENTER
Cass Ave
N 14th St
Fox Theatre
Dr Martin Luther King Dr
Saint Louis University
Olive St
City Museum
The Dome at America's Center
Washington Ave
Market St
MIDTOWN
St. Louis
The Gateway Arch
Busch Stadium
S Grand Blvd
Park Ave
LAFAYETTE SQUARE
Russell Blvd
Mississippi River
70
44
64
55
100
30


Page Blvd
GRAND CENTER
Cass Ave
N 14th St
Fox Theatre
Dr Martin Luther King Dr
Saint Louis University
Olive St
City Museum
The Dome at America's Center
Washington Ave
Market St
MIDTOWN
St. Louis
The Gateway Arch
Busch Stadium
S Grand Blvd
Park Ave
LAFAYETTE SQUARE
Russell Blvd
Mississippi River
70
44
64
55
100
30























































































































































































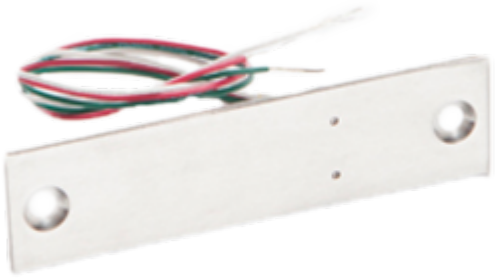

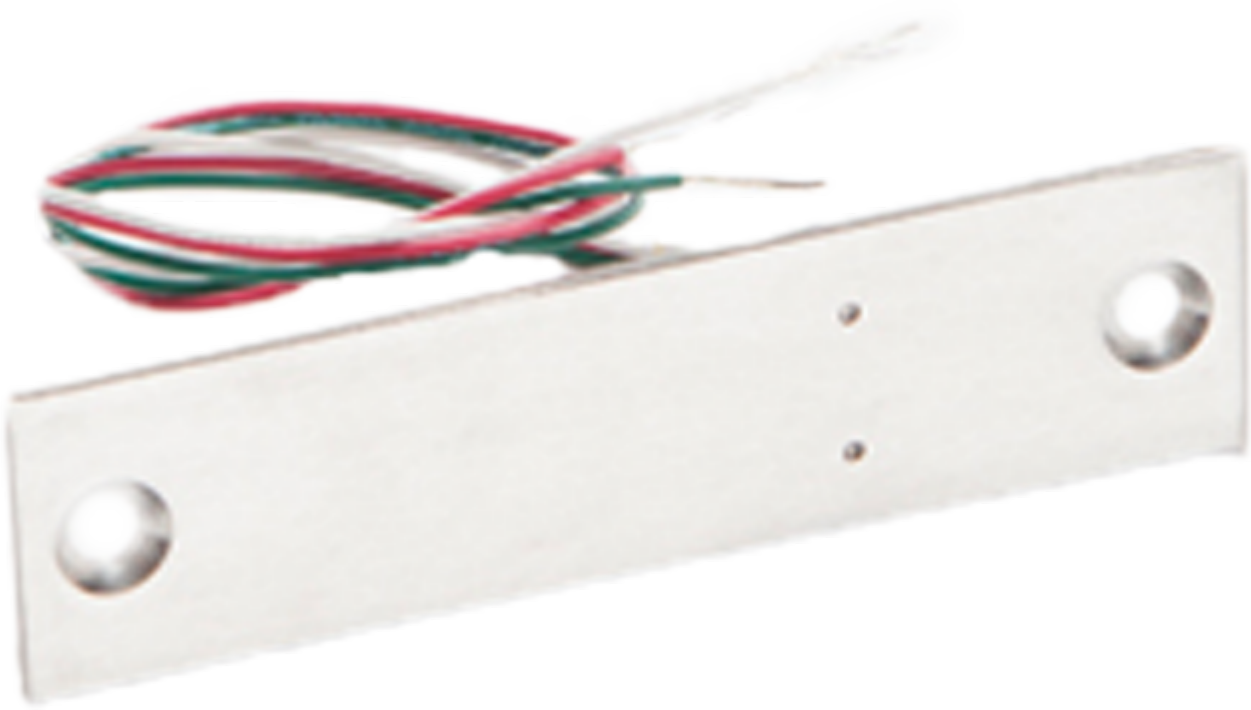

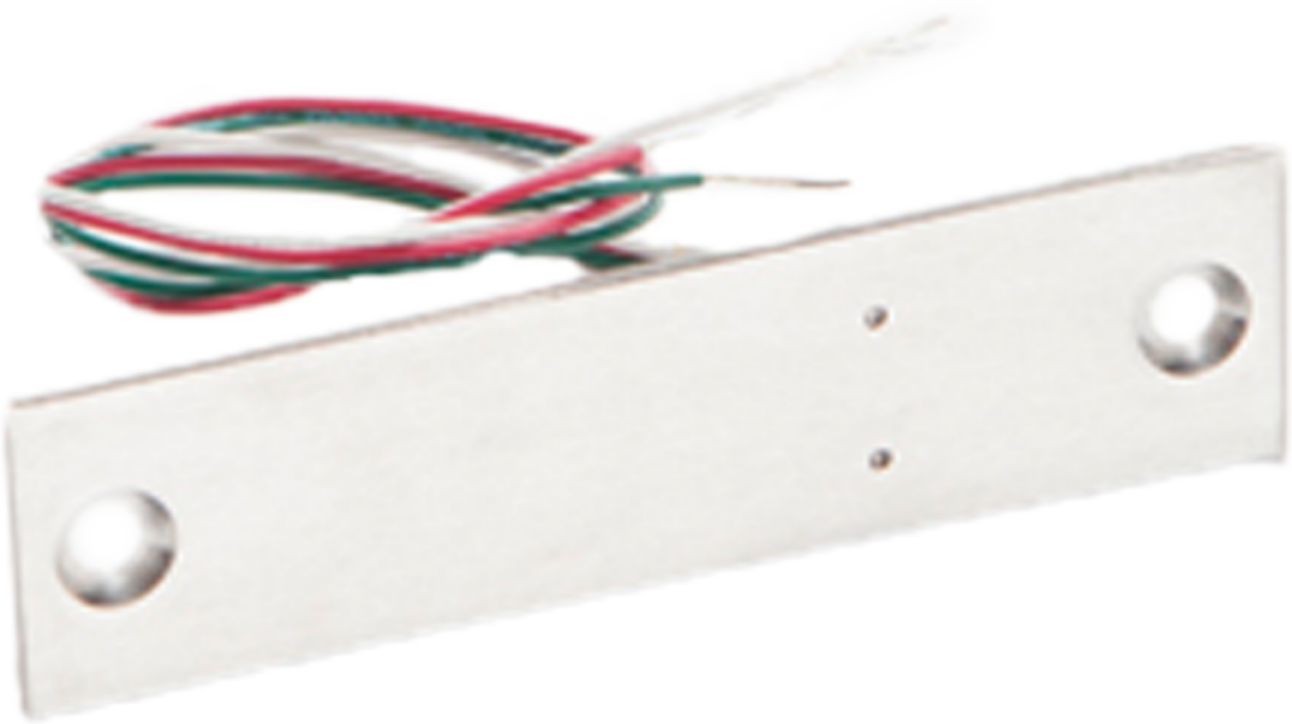

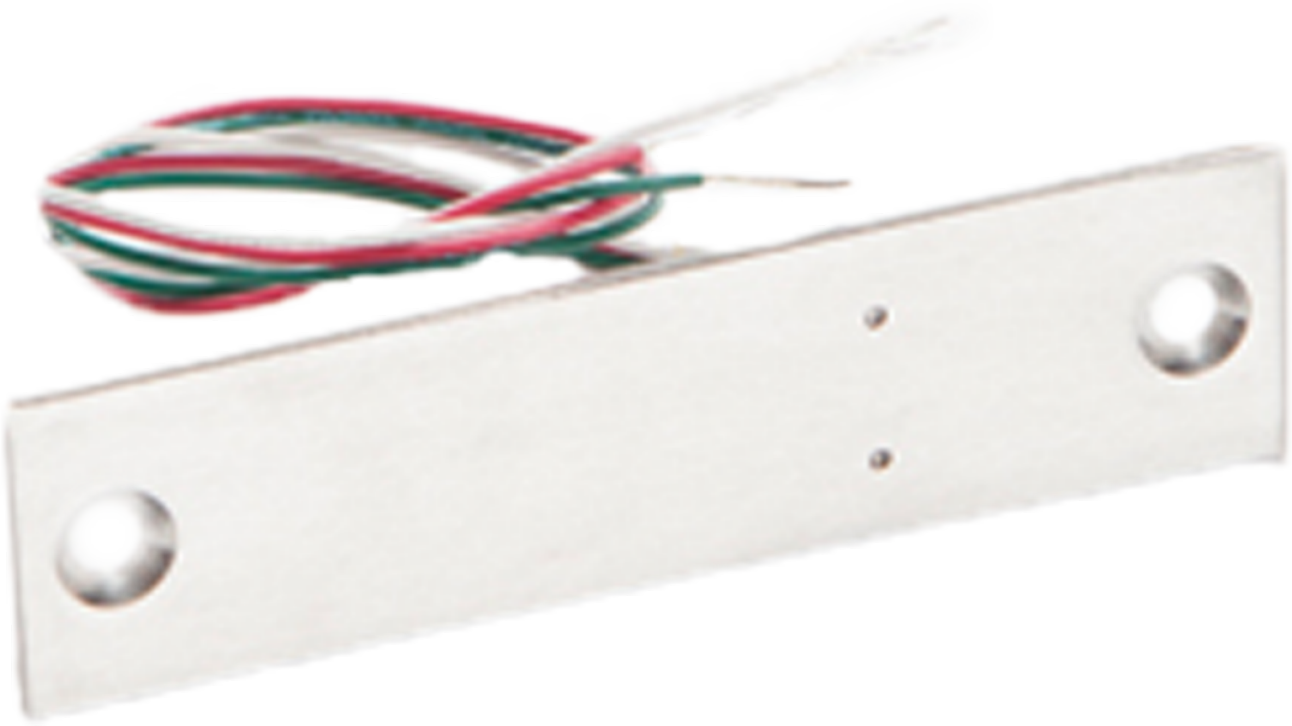

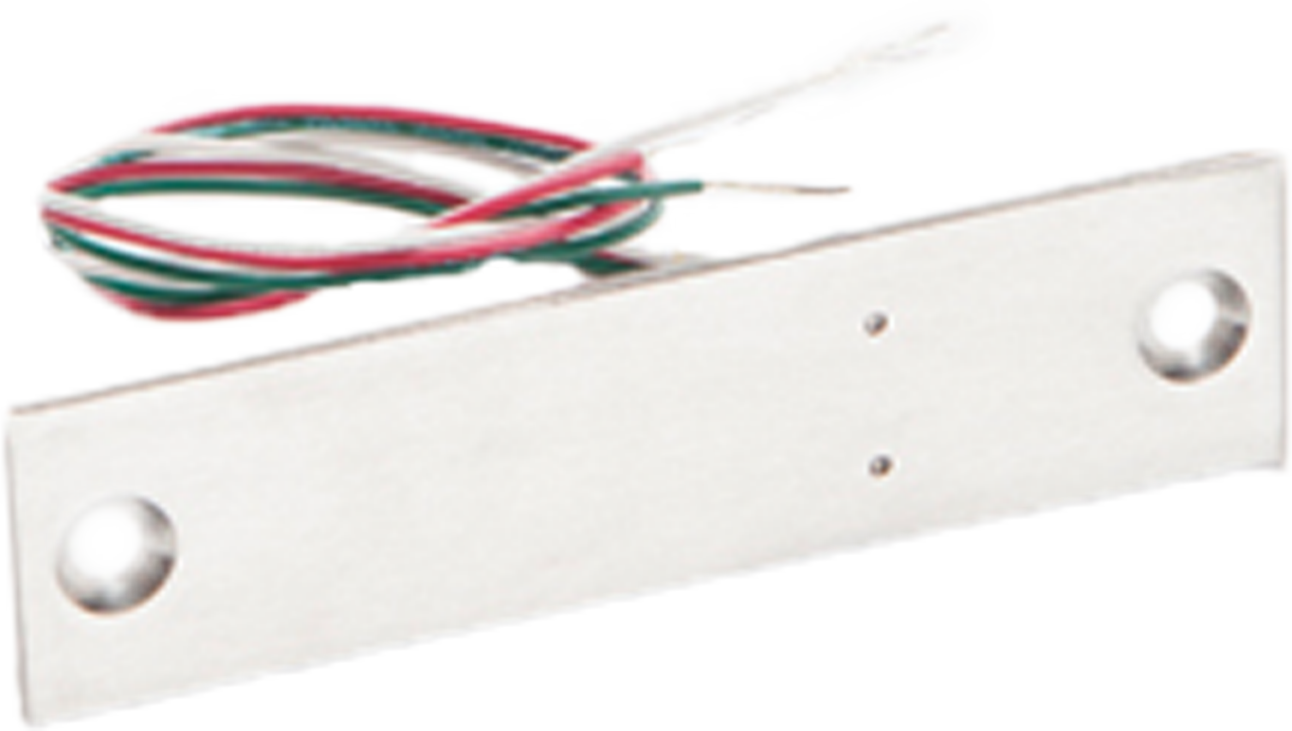







































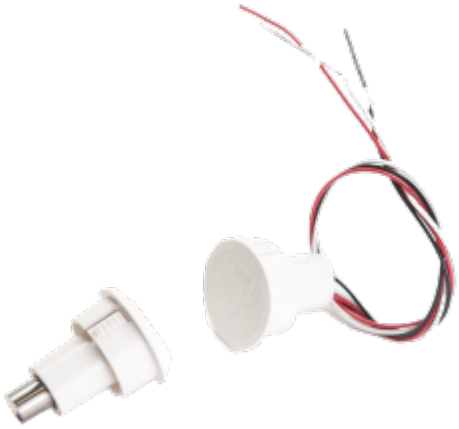

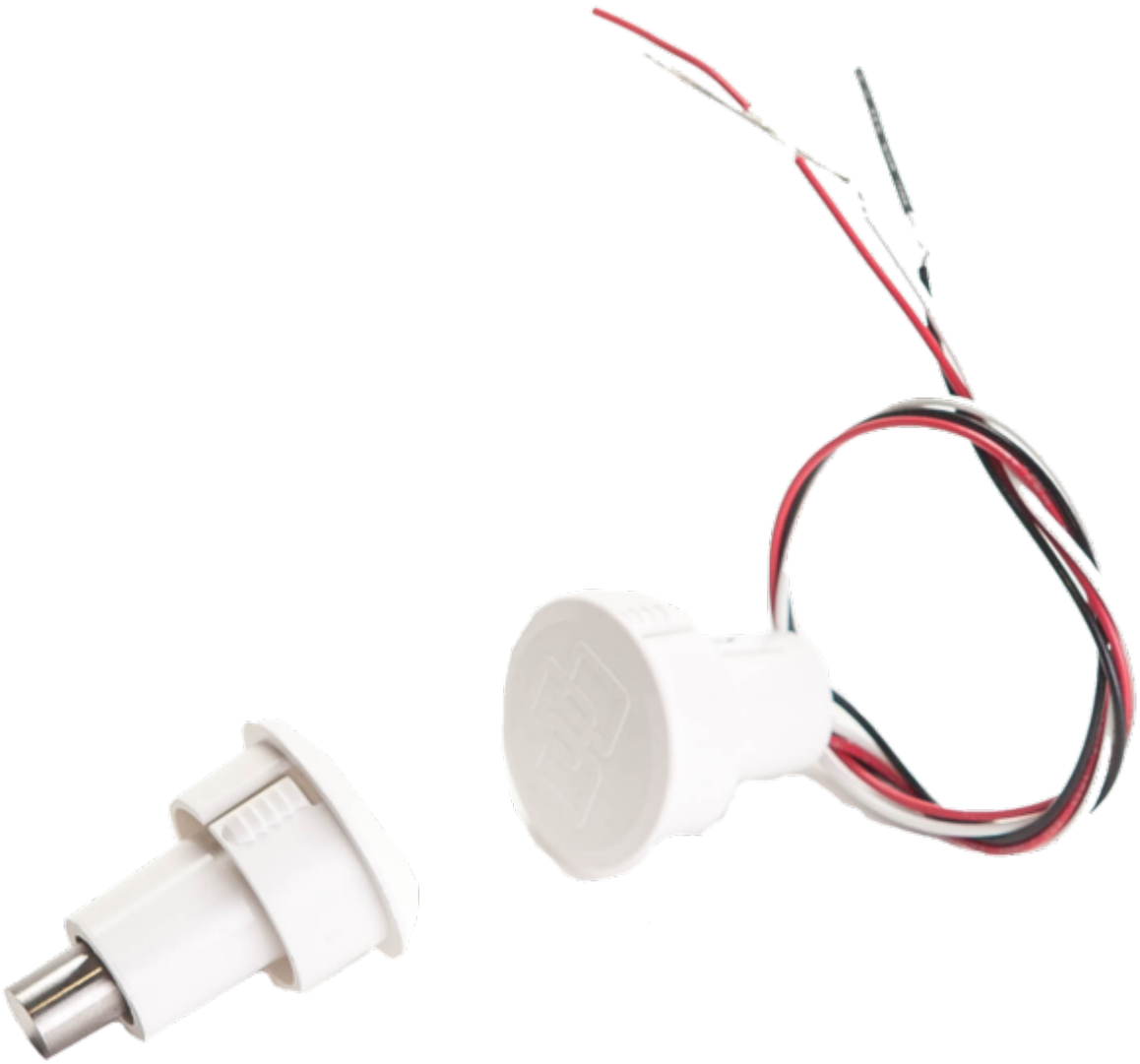

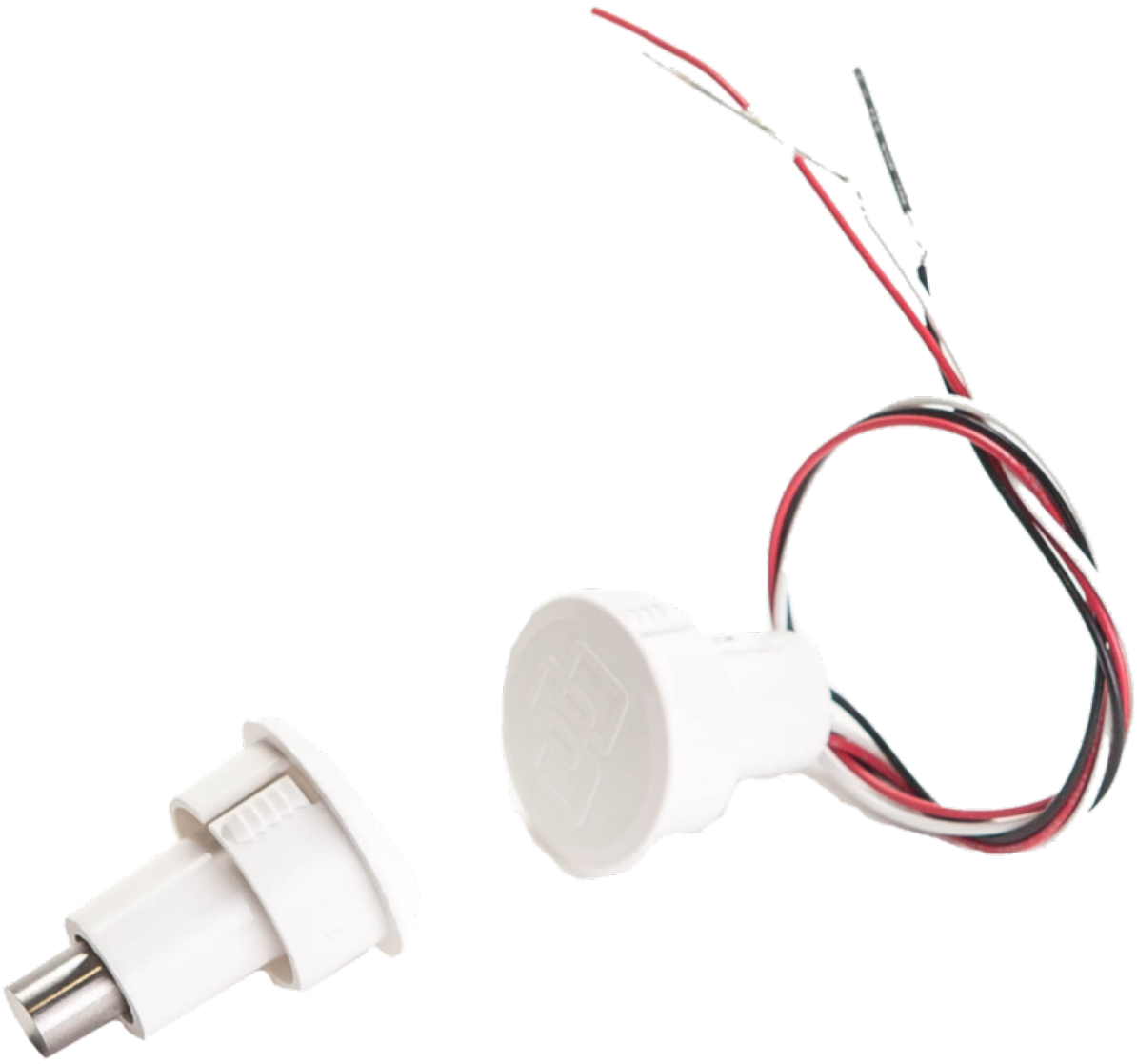

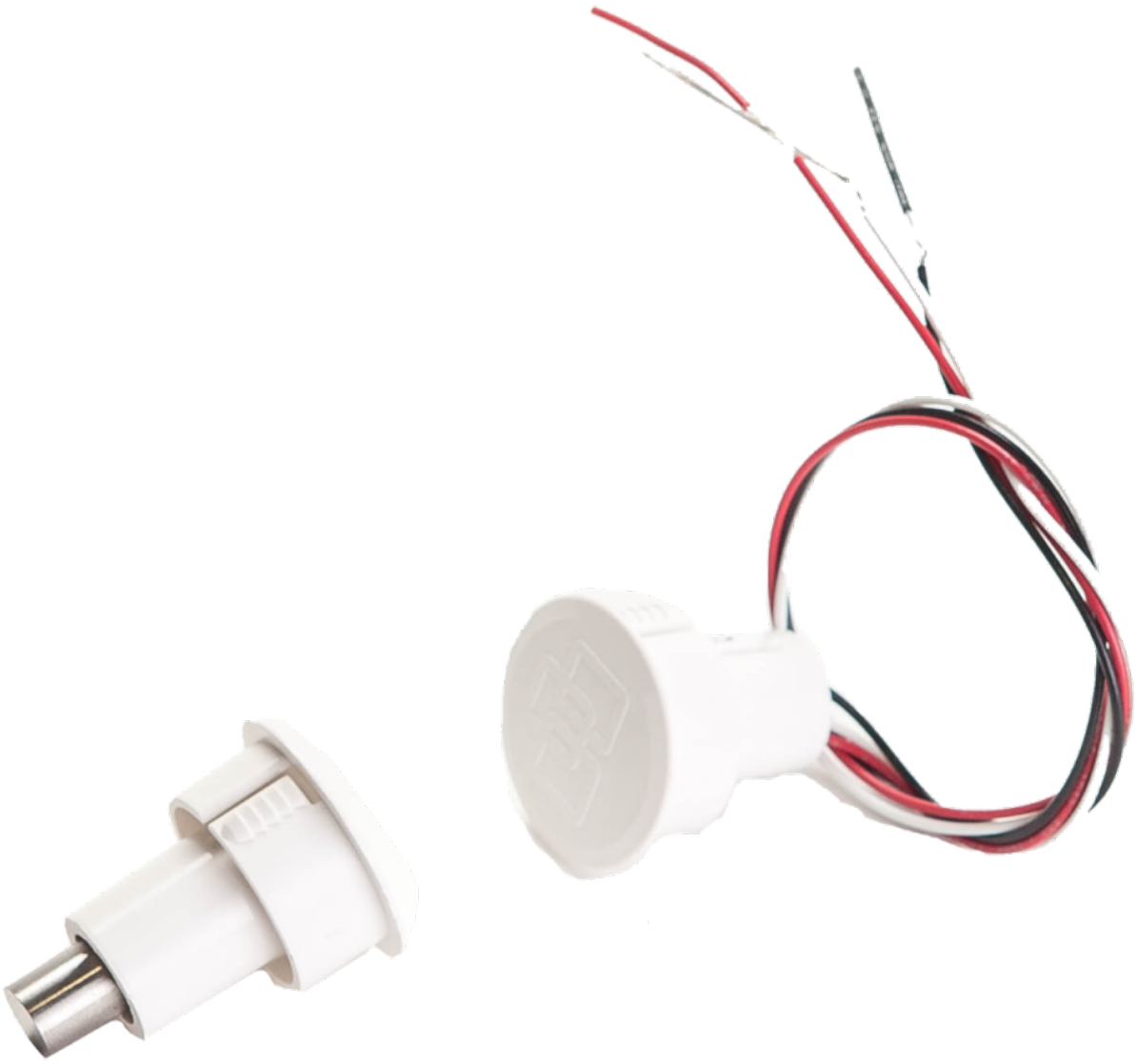

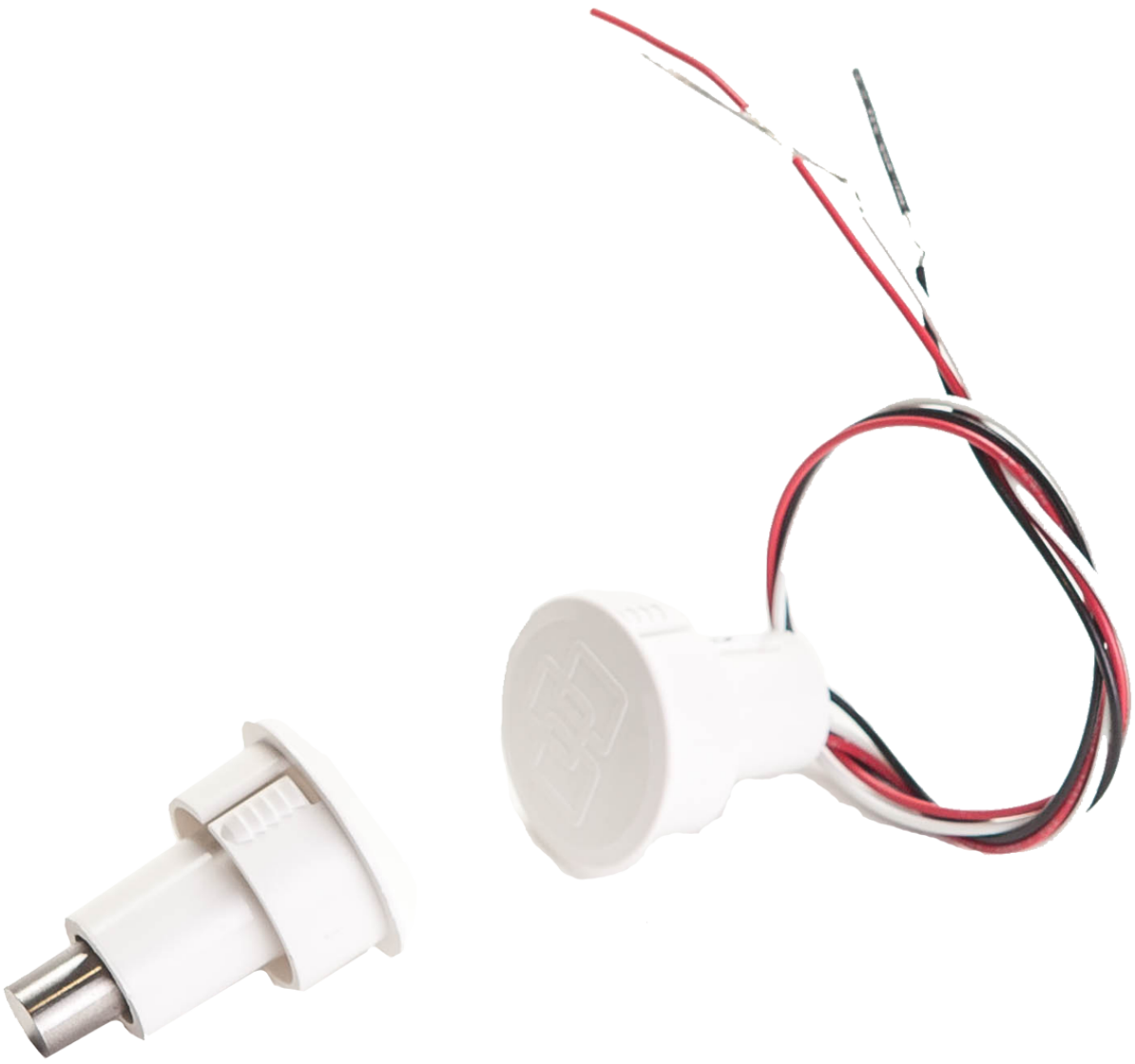















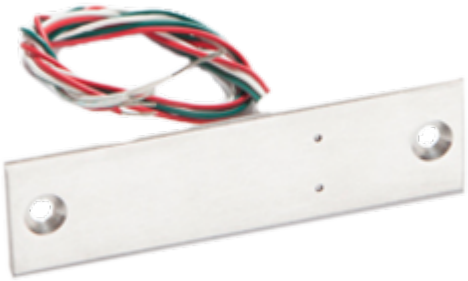

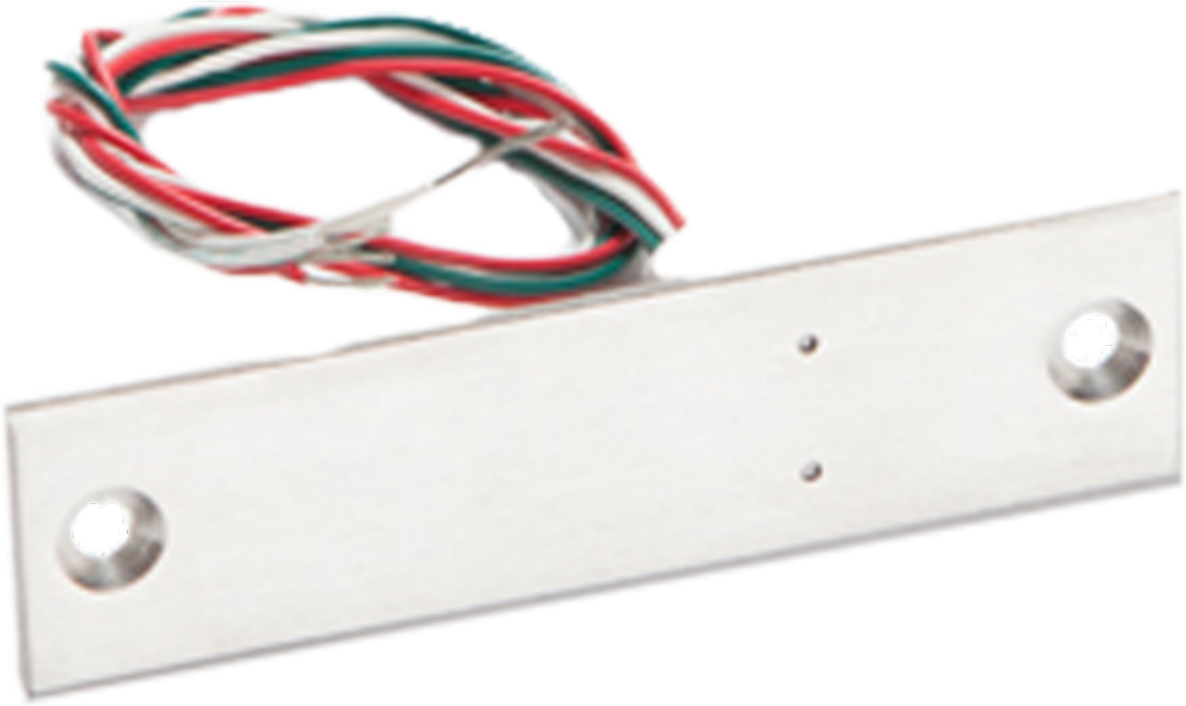

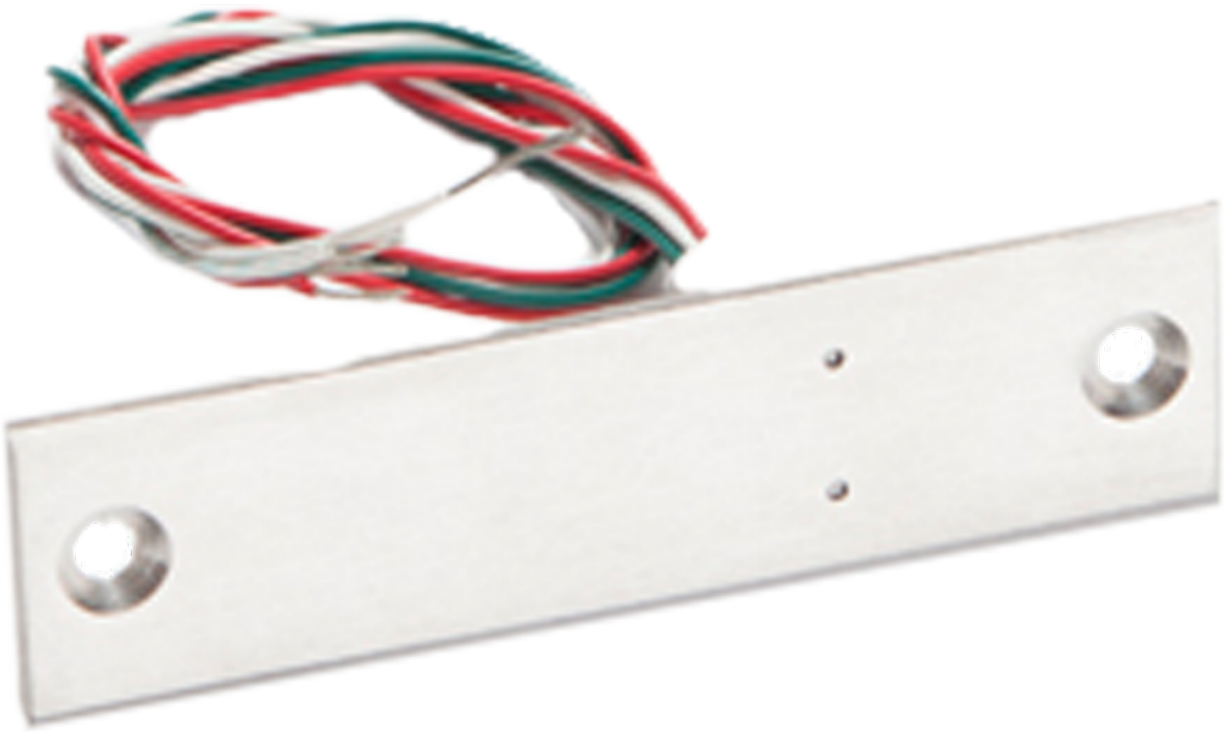

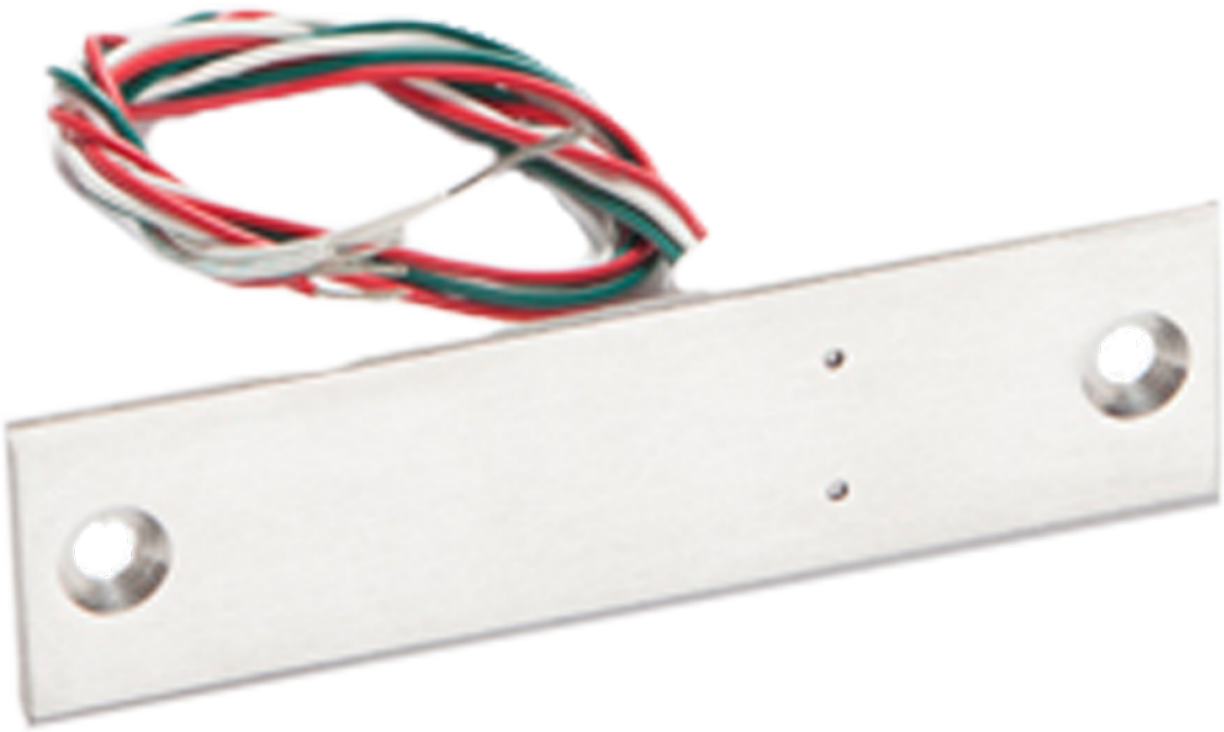

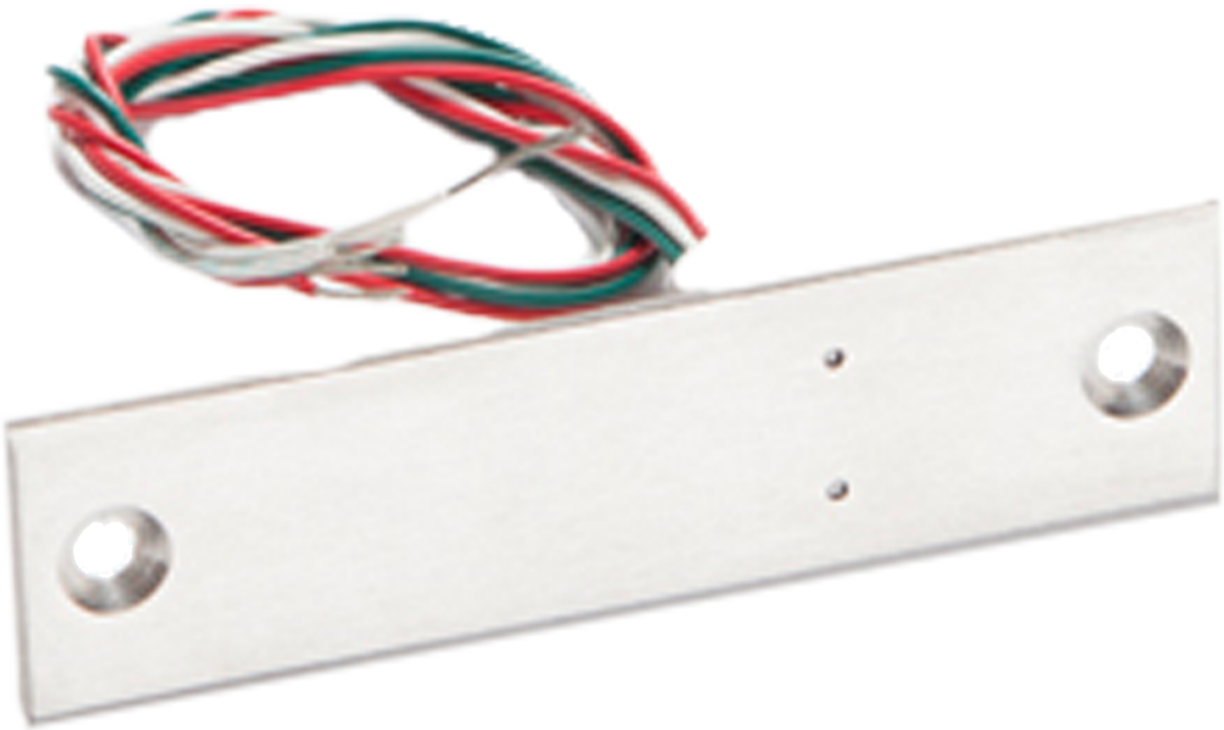



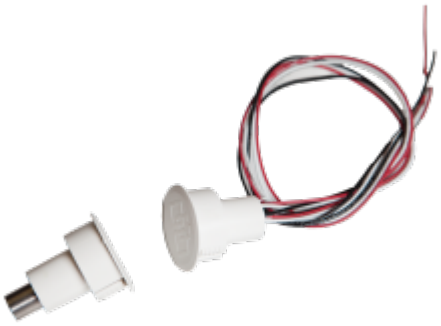

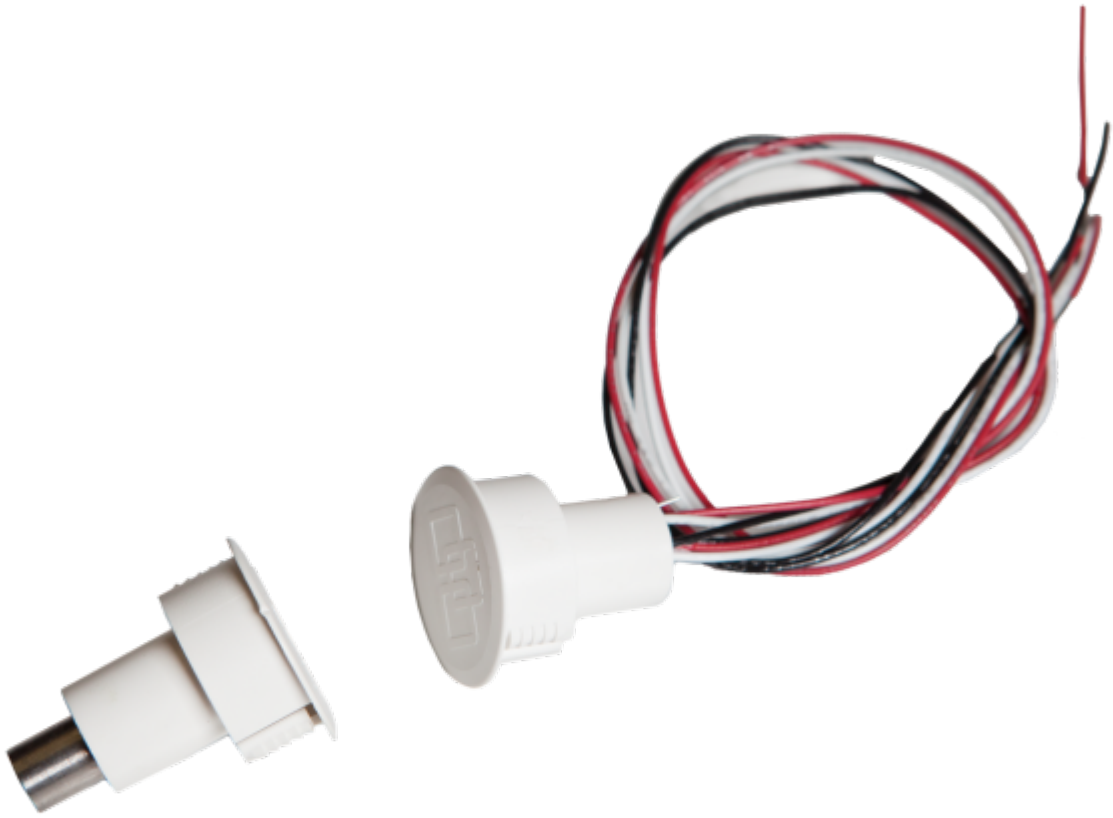

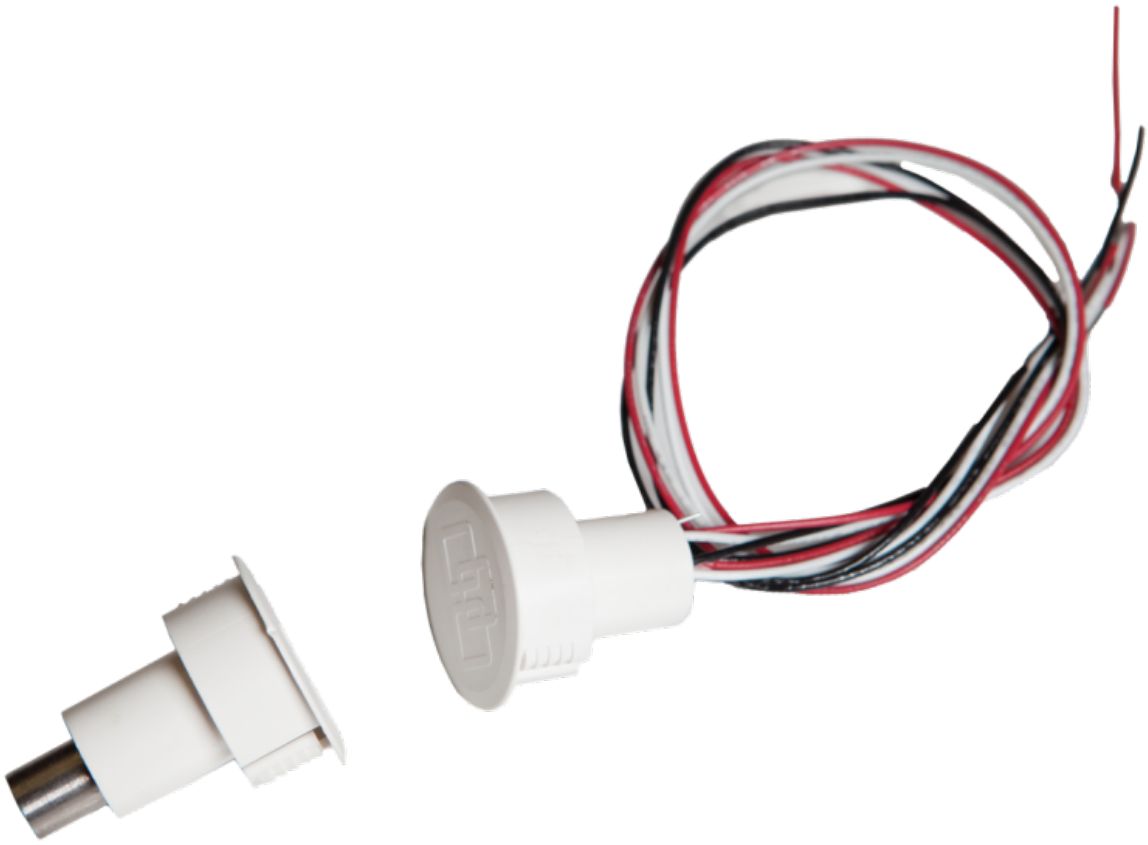

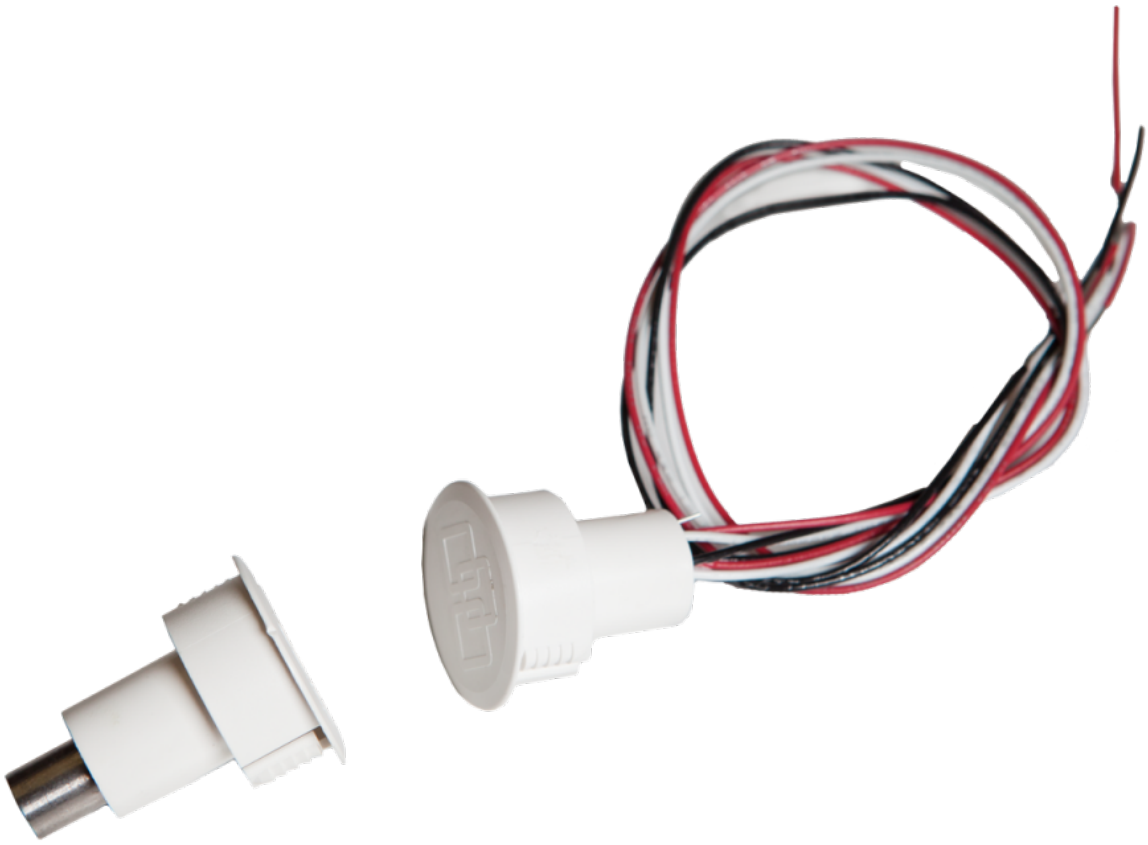

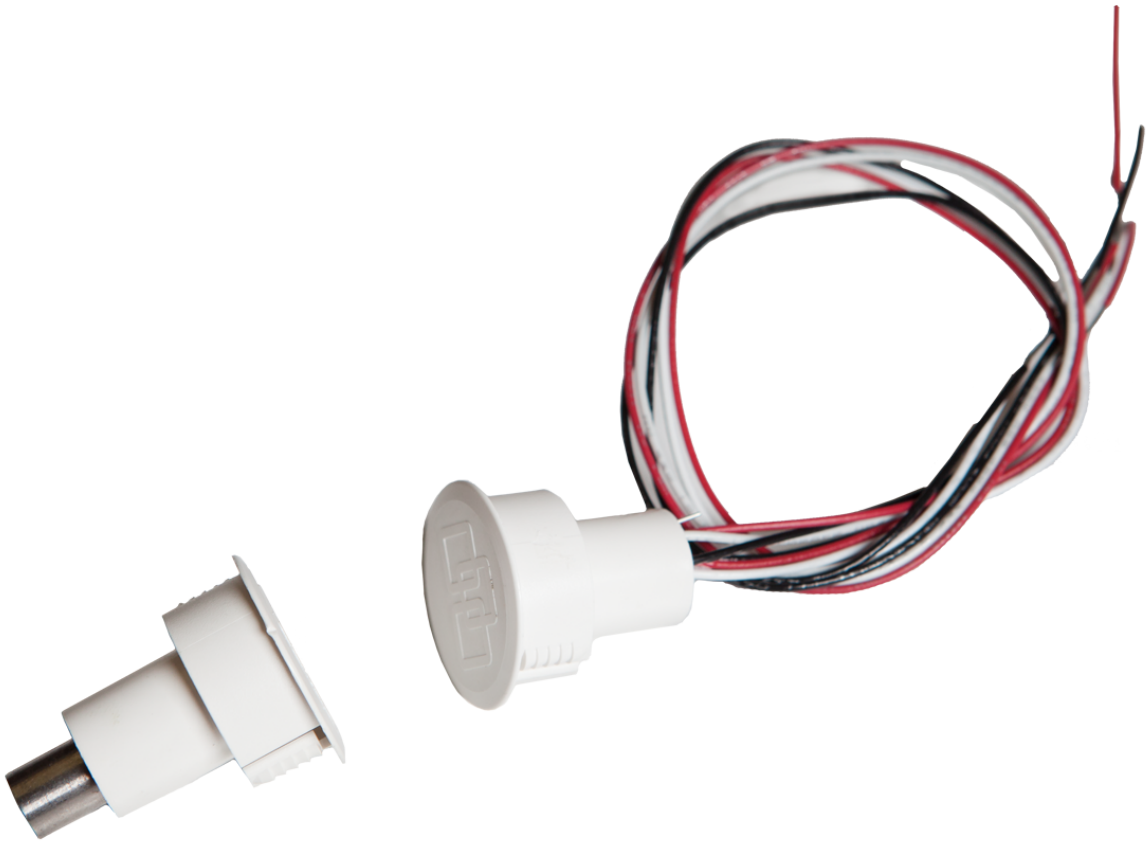

















































DOOR•GARD®

212i Keypad
Wiring Diagrams & Specifications

Note: *This product is designed to be installed and serviced by security and lock industry professionals.*

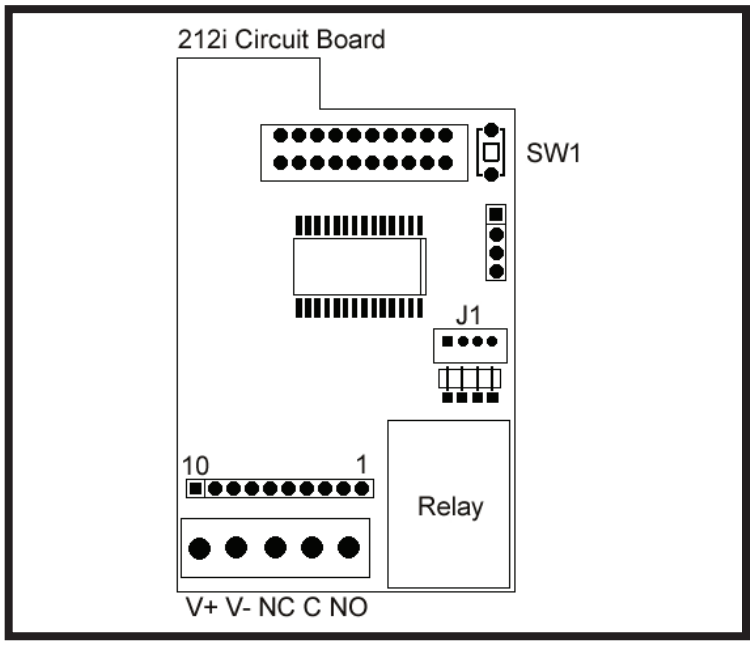

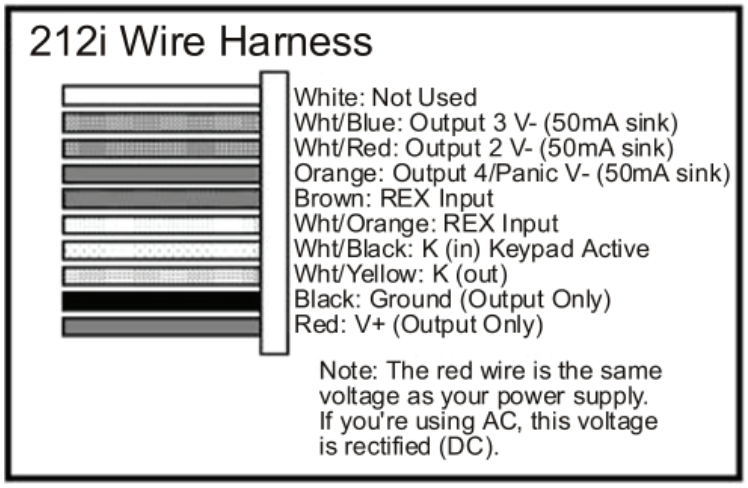

TECHNICAL NOTES

This product was re-designed using a new manufacturing technology, which changed the physical appearance of the keypad electronics. The LED's changed to surface mount chip LED's mounted on bottom of the circuit board which eliminates the need for the wire harnesses. It is also possible to control the red and green chip LED's externally, with an alarm panel for example, by using connector J1. See the diagram for details. Also, the voltage selection jumper on the main circuit board is no longer required.

To prevent electrical kick back voltage from damaging the keypad, when using an electrical locking device, you MUST install the transorb as close as possible to the lock. Wire the transorb in parallel with the lock power terminals.

Also, to avoid ESD (electro-static discharge) from interfering with the operation of the keypad, ground the negative terminal of the keypad to earth ground. If you cannot ground the power supply, then you must ground the keypad housing.

The manufacturer recommends using a filtered and regulated power supply.

• Packing Checklist

212i Keypad
10 Conductor Wire Harness (1)
4 Conductor Wire Harness (1)
Slotted screws (2)
Security Screws (2)
Transorb (1)
Features & Programming Guide
Warranty Guide

SPECIFICATIONS:

MECHANICAL:
BOARD DIMENSIONS: 1.80"W x 2.845"H x 1.125"D

ELECTRICAL:

VOLTAGE:	12-24 Volts AC/DC **(No Jumper Required)**
CURRENT:	8mA@12VDC typical; 35ma with relay energized. 16mA@24VDC typical; 45ma with relay energized. 21mA@12VAC typical; 74mA with relay energized. 43mA@24VAC typical; 91mA with relay energized.
Note:	Keypads using the 293 Relay Board, need an additional 30mA for each relay energized.
OUTPUTS:	Main Relay: 5 Amp, Form C @ 24VDC with 10 Amp surge. Outputs 2, 3, and 4 are 50mA negative voltage outputs

ENVIRONMENTAL:
TEMPERATURE: -20°F TO 130°F (-28°C TO 54°C)
Indoor Only

TECHNICAL SUPPORT

DEALERS/INSTALLERS ONLY! End users must contact the dealer/installer for support. If the keypad still does not work after troubleshooting, please call the Technical Services department at 1-800-421-1587.

293 Auxiliary Relay Board

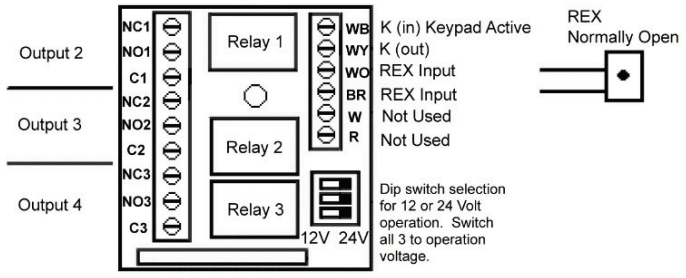

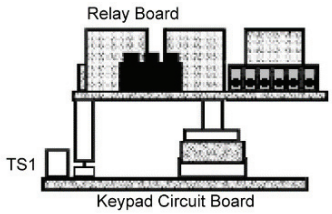

The 293 plug-on relay board converts voltage outputs to 1 Amp, Form C relays and provides screw terminals for all inputs and outputs.
The 293 fits into a standard 2" electrical box with the keypad.

Basic Access Control with an Electromagnetic Door Lock

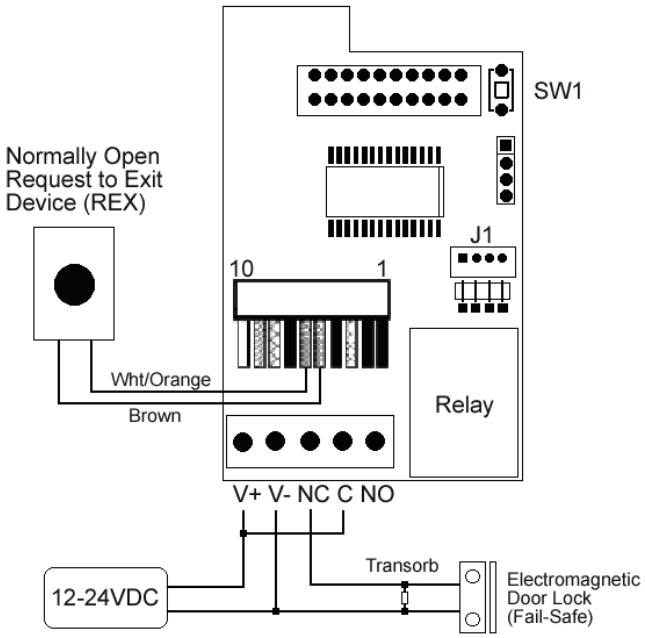

Basic Access Control with an Electric Door Strike

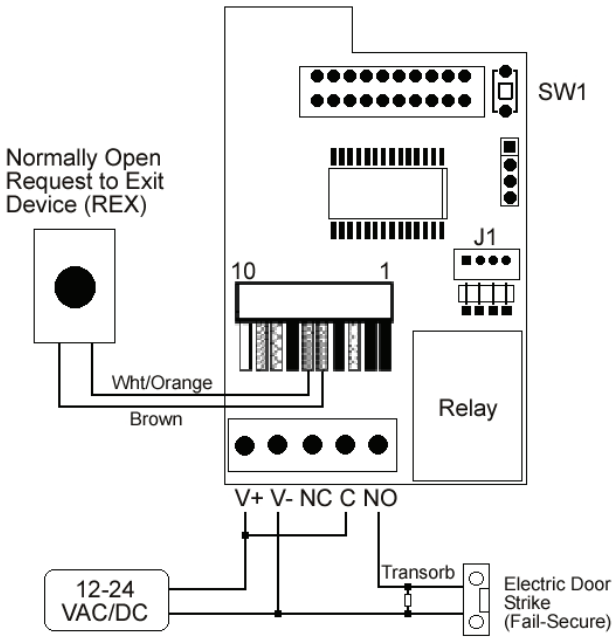

Shunting a Normally Closed Zone and Wiring a Request to Exit Device (REX)

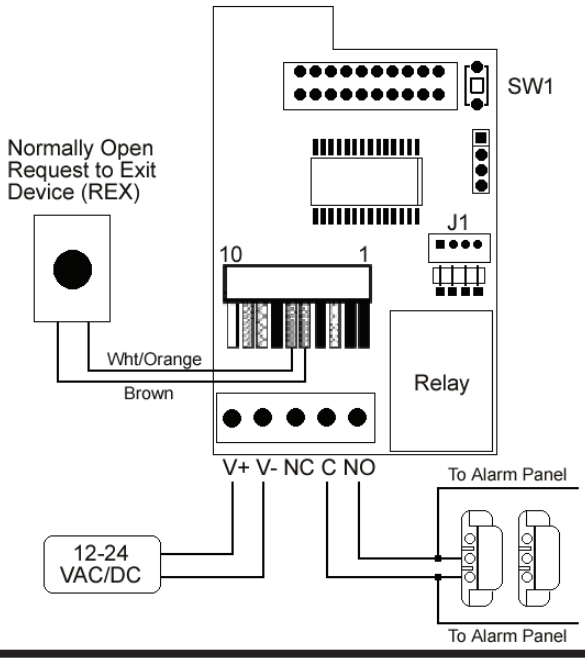

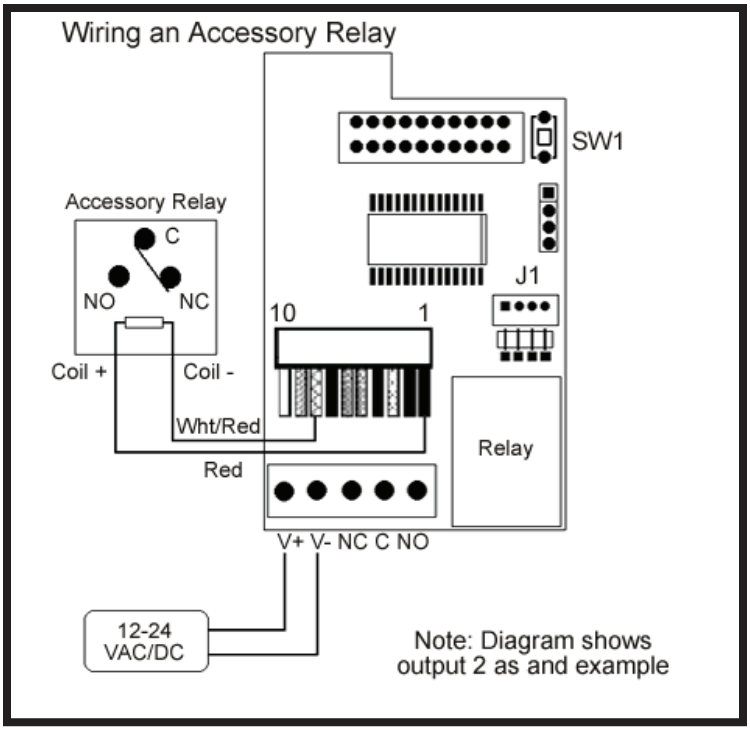

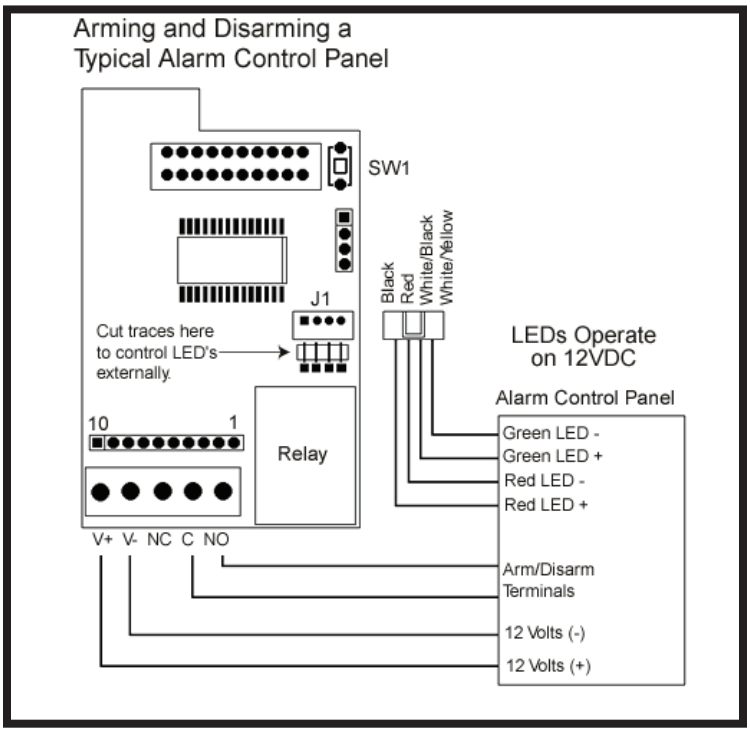

To control the LED's externally cut the four traces in the box underneath connector J1. Before connecting the alarm panel's LED control lines to J1 verify the traces are cut. To verify, measure continuity between the end of the wire on the wire harness and the square pad on the circuit board below the box corresponding to the wire you're measuring. **Permanent damage to the keypad may result if voltage is connected to J1 when the traces are not cut.**

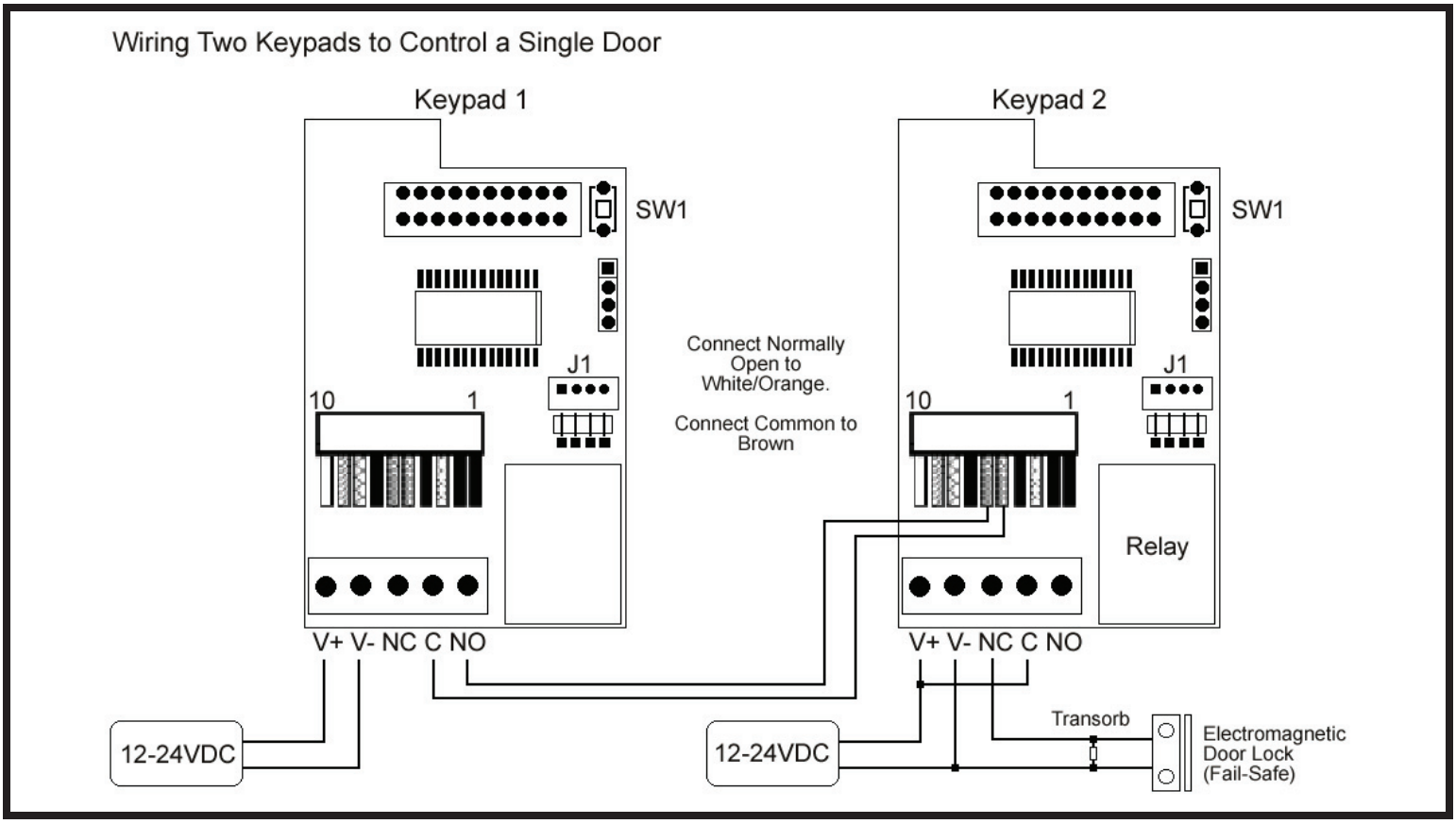

The diagram above shows how to connect two keypads to control a single door. Entering your code on keypad 2 unlocks the maglock directly. When you enter your code on keypad 1, it triggers the REX input of keypad two, which unlocks the door

Please note that user codes must be programmed into both keypads

LIMITED WARRANTY

This Nortek Security & Control product is warranted against defects in material and workmanship for twenty four (24) months. **This warranty extends only to wholesale customers** who buy direct from Nortek Security & Control or through Nortek Security & Control's normal distribution channels. Nortek Security & Control does not warrant this product to consumers. Consumers should inquire from their selling dealer as to the nature of the dealer's warranty, if any. **There are no obligations or liabilities on the part of Nortek Security & Control LLC for consequential damages arising out of or in connection with use or performance of this product or other indirect damages with respect to loss of property, revenue, or profit, or cost of removal, installation, or reinstallation.** All implied warranties, including implied warranties for merchantability and implied warranties for fitness, are valid only until the warranty expires. **This Nortek Security & Control LLC Warranty is in lieu of all other warranties express or implied.**

All products returned for warranty service require a Return Authorization Number (RA#). Contact Returns at 1-855-546-3351 for an RA# and other important details.

NORTEK
SECURITY & CONTROL
USA & Canada (800) 421-1587 & (800) 392-0123
(760) 438-7000 - Toll Free FAX (800) 468-1340
www.nortekcontrol.com

Copyright © 2015 Nortek Security & Control LLC

DOOR•GARD®

212w Keypad
Wiring Diagrams & Specifications

Note: *This product is designed to be installed and serviced by security and lock industry professionals.*

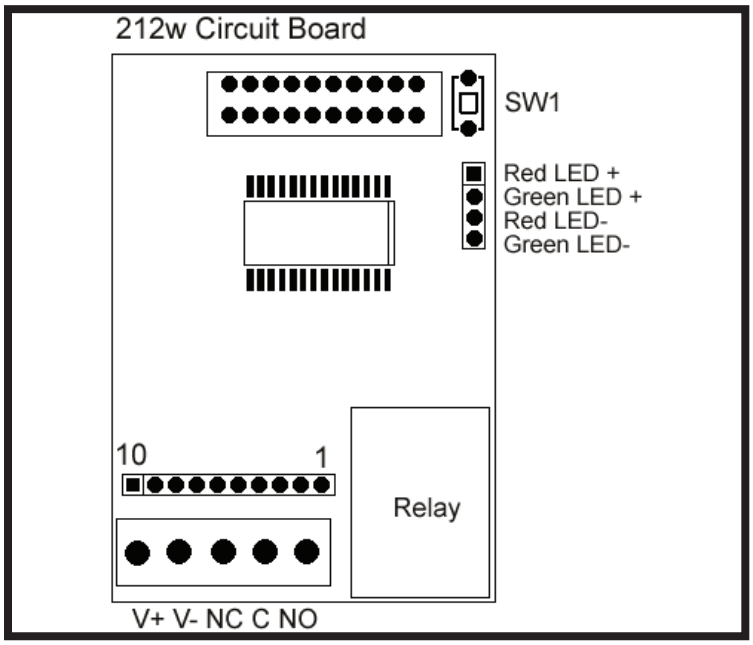

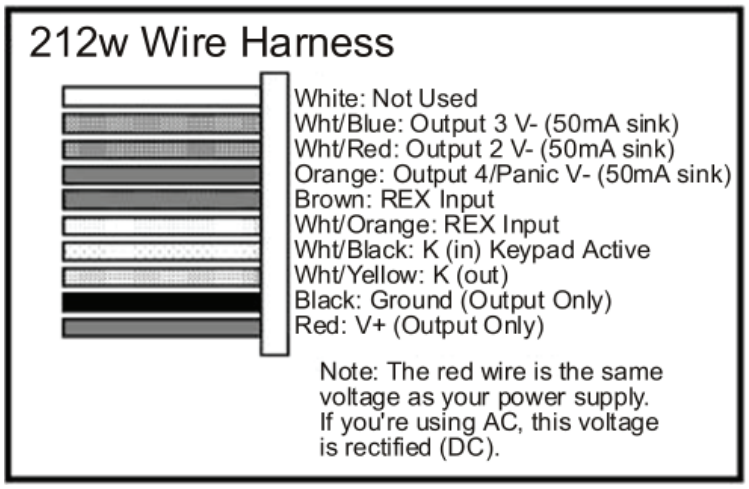

TECHNICAL NOTES

This product was re-designed using a new manufacturing technology, which changed the physical appearance of the keypad electronics. Also, the voltage selection jumper on the main circuit board is no longer required.

To prevent electrical kick back voltage from damaging the keypad, when using an electrical locking device, you MUST install the transorb as close as possible to the lock. Wire the transorb in parallel with the lock power terminals.

Also, to avoid ESD (electro-static discharge) from interfering with the operation of the keypad, ground the negative terminal of the keypad to earth ground. If you cannot ground the power supply, then you must ground the keypad housing.

The manufacturer recommends using a filtered and regulated power supply.

When mounting the 212w outside, use a weatherproof back box and apply silicone to the area where the wires enter the case. Also, provide a weep hole at the bottom of the back box to prevent condensation from collecting on the circuit board. This keypad is not for use in extreme weather conditions; please consult the factory for additional keypad models.

• Packing Checklist

212w Keypad
10 Conductor Wire Harness (1)
4 Conductor Wire Harness (1)
Slotted screws (2)
Security Screws (2)
Transorb (1)
Mounting Gasket (1)
Features & Programming Guide
Warranty Guide

SPECIFICATIONS:

MECHANICAL:
BOARD DIMENSIONS: 1.80”W x 2.555”H x 1.125”D

ELECTRICAL:

VOLTAGE: 12-24 Volts AC/DC **(No Jumper Required)**

CURRENT: 8mA@12VDC typical;
35ma with relay energized.
16mA@24VDC typical;
45ma with relay energized.
21mA@12VAC typical;
74mA with relay energized.
43mA@24VAC typical;
91mA with relay energized.

Note: Keypads using the 293 Relay Board, need an additional 30mA for each relay energized.

OUTPUTS: Main Relay: 5 Amp, Form C @ 24VDC with 10 Amp surge.
Outputs 2, 3, and 4 are 50mA negative voltage outputs

ENVIRONMENTAL:
TEMPERATURE: -20°F TO 130°F (-28°C TO 54°C)
Weather Resistant

TECHNICAL SUPPORT

DEALERS/INSTALLERS ONLY! End users must contact the dealer/installer for support. If the keypad still does not work after troubleshooting, please call the Technical Services department at 1-800-421-1587.

293 Auxiliary Relay Board

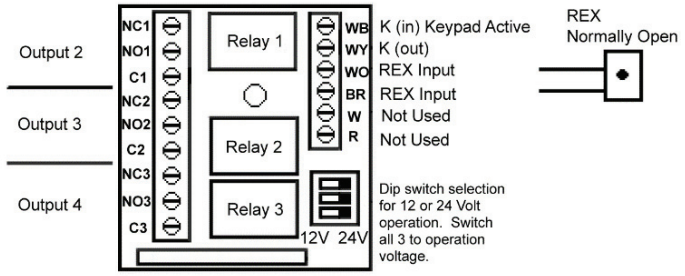

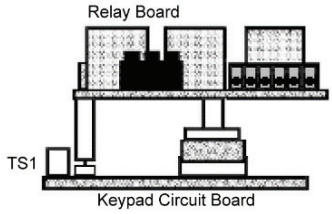

The 293 plug-on relay board converts voltage outputs to 1 Amp, Form C relays and provides screw terminals for all inputs and outputs.
The 293 fits into a standard 2" electrical box with the keypad.

Basic Access Control with an Electromagnetic Door Lock

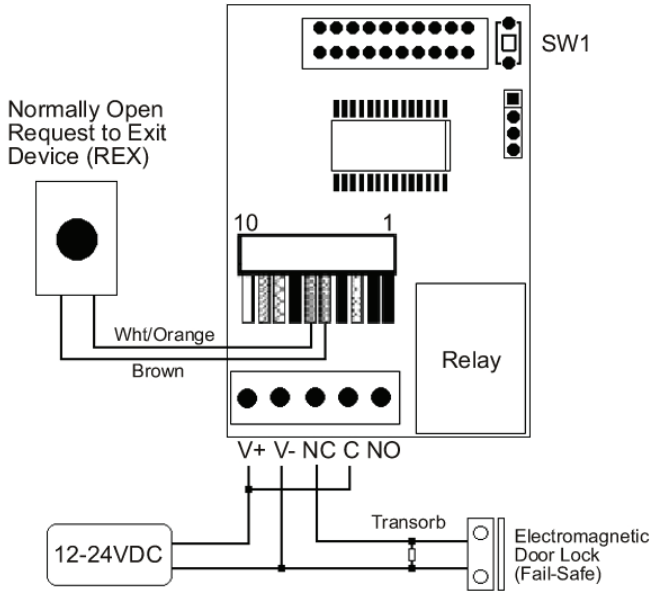

Basic Access Control with an Electric Door Strike

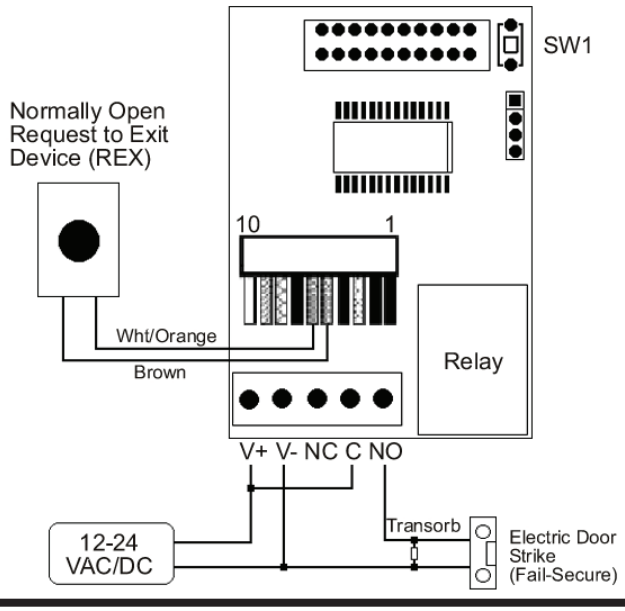

Shunting a Normally Closed Zone and Wiring a Request to Exit Device (REX)

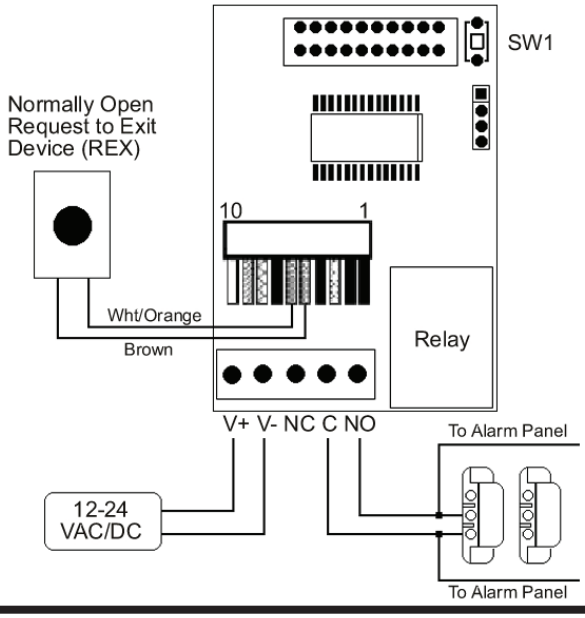

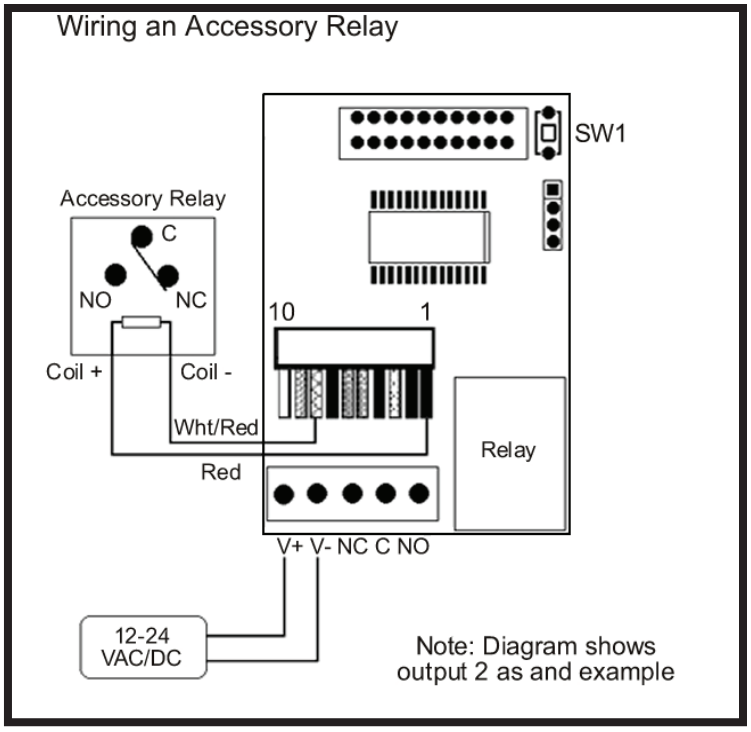

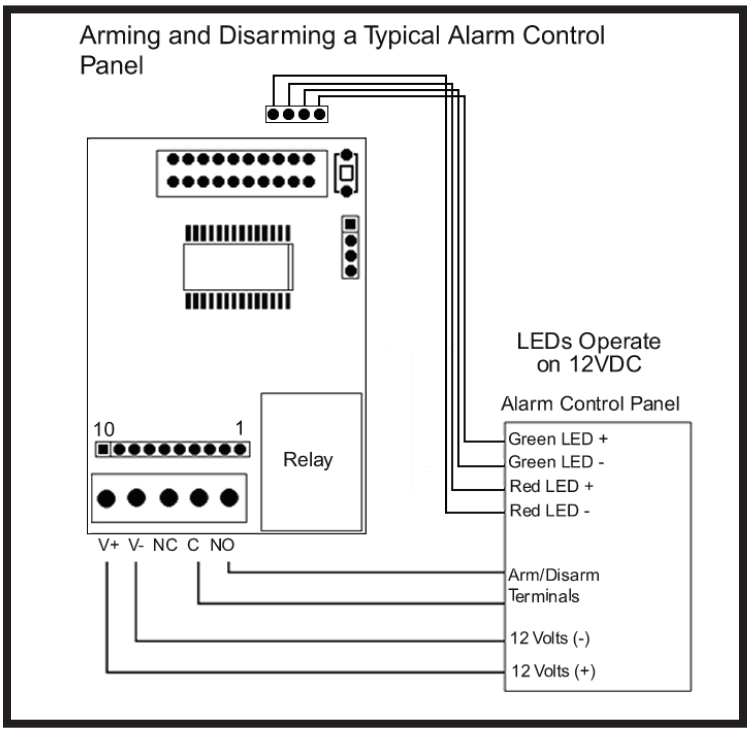

To control the LED's externally cut the four wires going to the green and red LEDs. Each LED has a black and red wire. Black is the negative and red is the positive. These LED's require 12VDC to operate.

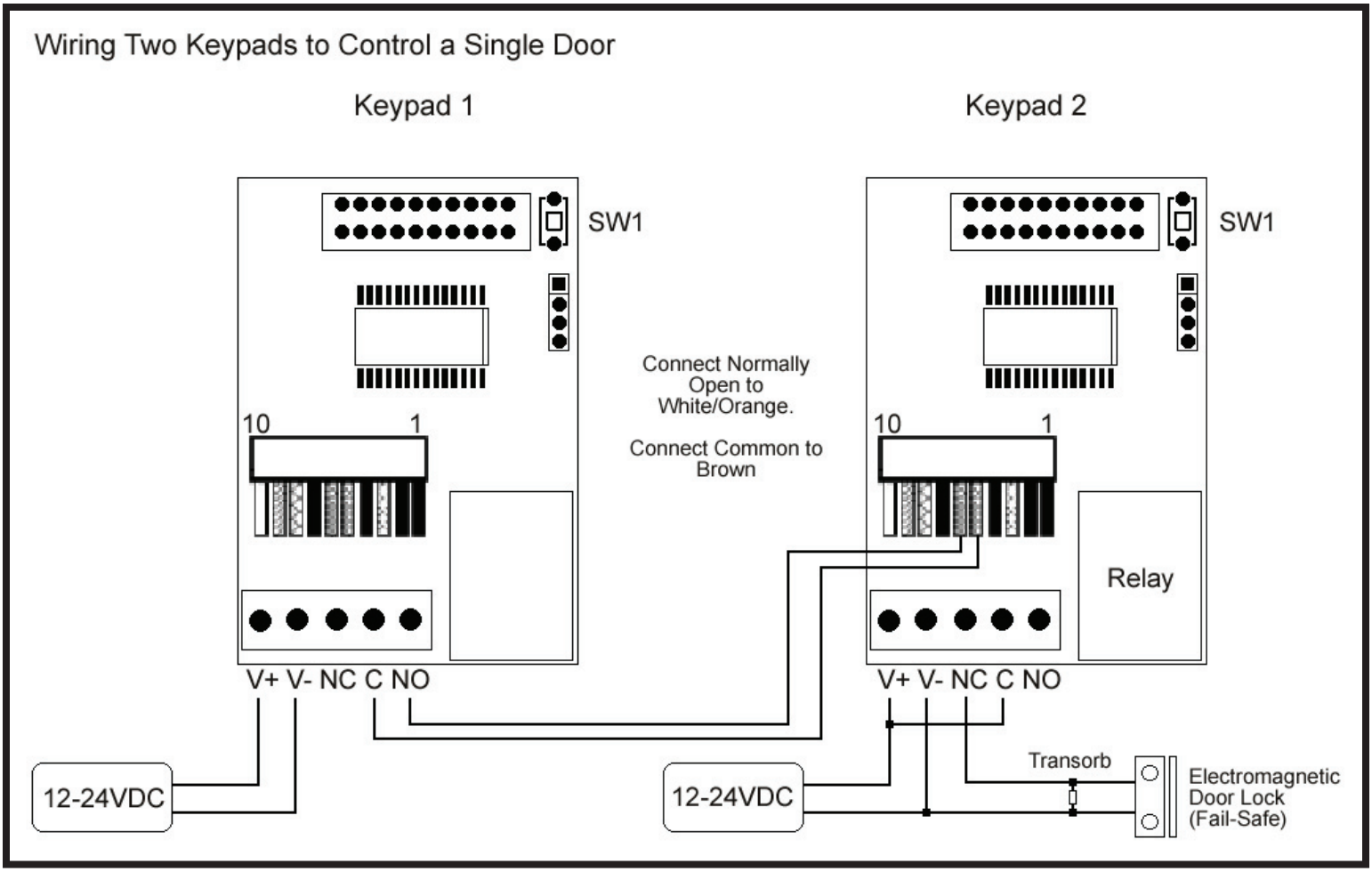

The diagram above shows how to connect two keypads to control a single door. Entering your code on keypad 2 unlocks the maglock directly. When you enter your code on keypad 1, it triggers the REX input of keypad two, which unlocks the door.

Please note that user codes must be programmed into both keypads.

LIMITED WARRANTY

This Nortek Security & Control product is warranted against defects in material and workmanship for twenty four (24) months. **This warranty extends only to wholesale customers** who buy direct from Nortek Security & Control or through Nortek Security & Control's normal distribution channels. Nortek Security & Control does not warrant this product to consumers. Consumers should inquire from their selling dealer as to the nature of the dealer's warranty, if any. **There are no obligations or liabilities on the part of Nortek Security & Control LLC for consequential damages arising out of or in connection with use or performance of this product or other indirect damages with respect to loss of property, revenue, or profit, or cost of removal, installation, or reinstallation.** All implied warranties, including implied warranties for merchantability and implied warranties for fitness, are valid only until the warranty expires. **This Nortek Security & Control LLC Warranty is in lieu of all other warranties express or implied.**

All products returned for warranty service require a Return Authorization Number (RA#). Contact Returns at 1-855-546-3351 for an RA# and other important details.

NORTEK
SECURITY & CONTROL
USA & Canada (800) 421-1587 & (800) 392-0123
(760) 438-7000 - Toll Free FAX (800) 468-1340
www.nortekcontrol.com

Copyright © 2015 Nortek Security & Control LLC

DOOR•GARD®

212R & 212SE Keypad Wiring Diagrams & Specifications

Note: *This product is designed to be installed and serviced by security and lock industry professionals.*

CIRCUIT BOARD DIAGRAM

RELAYS:
P2 = K2 OUTPUT 2
P3 = K3 OUTPUT 3
P4 = K4 OUTPUT 4

RELAY CONNECTOR PINS
PIN 1 = NO (GREEN)
PIN 2 = C (BLUE)
PIN 3 = NC (GRAY)

REX/DOOR CONNECTION:
P5
PIN 1 = REX (BROWN)
PIN 2 = (WHITE - NOT USED)
PIN 3 = Loop Common (WHITE/ORANGE)

TAMPER CONNECTION:
P6
PIN 1 = TAMPER (GREEN)
PIN 2 = TAMPER (BLUE)
PIN 3 (NOT USED)

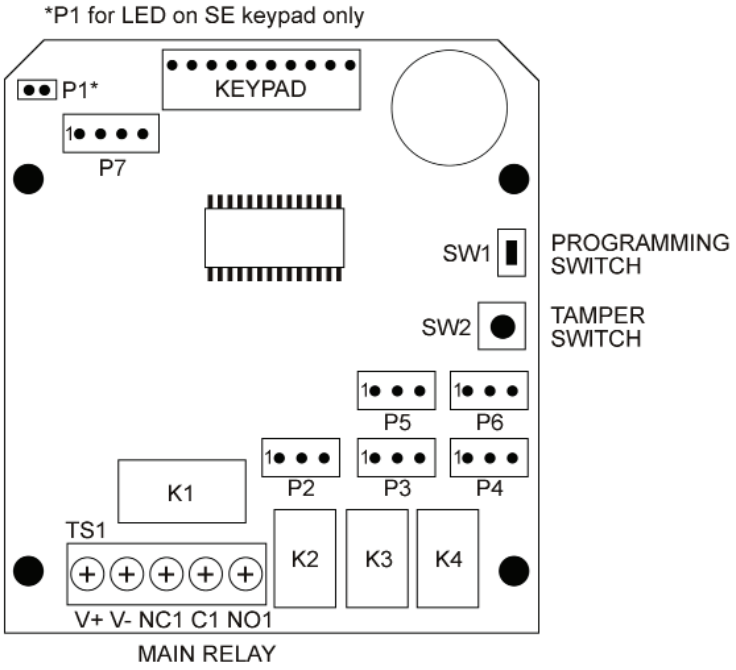

TECHNICAL NOTES

- To avoid ESD (Electro-Static Discharge) interfering with the operation of the keypad, ground the housing to earth ground.
- The bi-color LED provided with the SE keypad illuminates red when the Lock-Release relay is de-energized and green when the relay is de-energized.
- When mounting this unit outside, apply silicone to the area where the wires enter the case. This helps prevent water from entering the case and condensing on the circuit board. Do not silicone the cover plate because the unit will not seal properly.
- Do not seal the drain holes at the bottom of the keypad housing. This allows air to circulate and a place for condensation to drain.
- For use in extreme weather conditions, consult the factory for additional methods of protecting your keypad.
- To speed installation of the SE keypad, holes have been spotted on the inside the back housing for mounting to a wall or a single-gang electrical box.
- On SE keypad, holes have also been spotted inside the front housing for additional LEDs (LEDs not included).

SPECIFICATIONS

Case Dimensions:

212R Keypad: 3.75" W x 5.25" H x 2.50" D

212SE Keypad: 3.00" W x 4.50" H x 1.55" D

Operating Voltage: 12-24V AC/DC (Auto-Adjusting)

Maximum Current Draw	
Operating Voltage	**Current**
12 VDC	50 mA
24 VDC	63 mA
12 VAC	86 mA
24 VAC	108 mA

Main Relay Contacts (K1): 2A @ 12-24V AC/DC

Auxiliary Relay Contacts (K2, K3 & K4): 1A @ 12-24V AC/DC

Environment: Indoor or Outdoor

Temperature: -31°F to 151°F (-35°C to 66°C)

LIMITED WARRANTY

This Nortek Security & Control product is warranted against defects in material and workmanship for twenty four (24) months. **This warranty extends only to wholesale customers** who buy direct from Nortek Security & Control or through Nortek Security & Control's normal distribution channels. Nortek Security & Control does not warrant this product to consumers. Consumers should inquire from their selling dealer as to the nature of the dealer's warranty, if any. **There are no obligations or liabilities on the part of Nortek Security & Control LLC for consequential damages arising out of or in connection with use or performance of this product or other indirect damages with respect to loss of property, revenue, or profit, or cost of removal, installation, or reinstallation.** All implied warranties, including implied warranties for merchantability and implied warranties for fitness, are valid only until the warranty expires. **This Nortek Security & Control LLC Warranty is in lieu of all other warranties express or implied.**

All products returned for warranty service require a Return Authorization Number (RA#). Contact Returns at 1-855-546-3351 for an RA# and other important details.

BASIC ACCESS CONTROL WITH AN ELECTROMAGNETIC DOOR LOCK

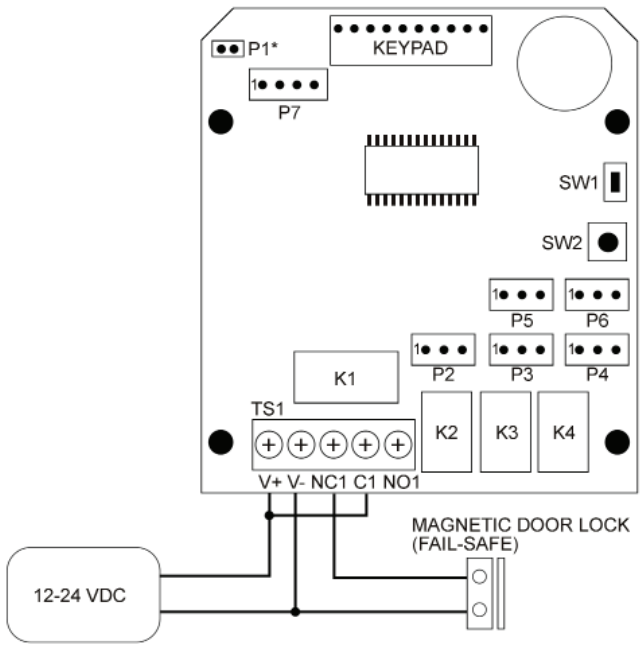

BASIC ACCESS CONTROL WITH AN ELECTRIC DOOR STRIKE

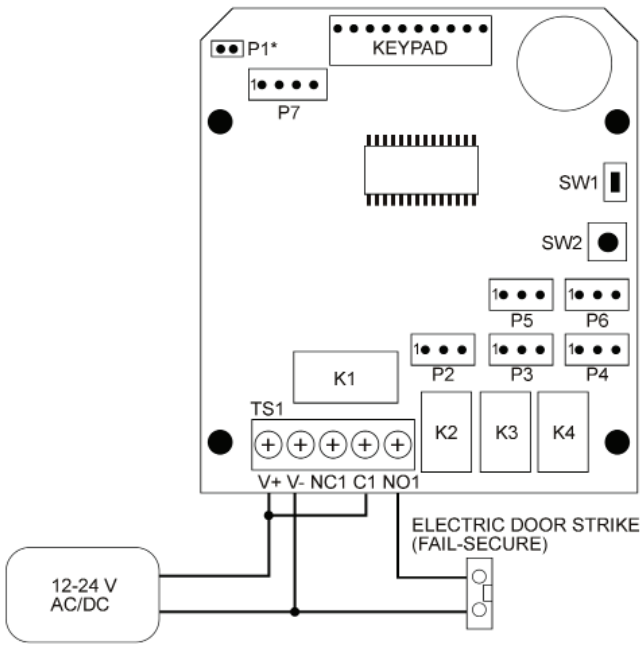

SHUNTING A NORMALLY CLOSED ZONE AND WIRING THE REX

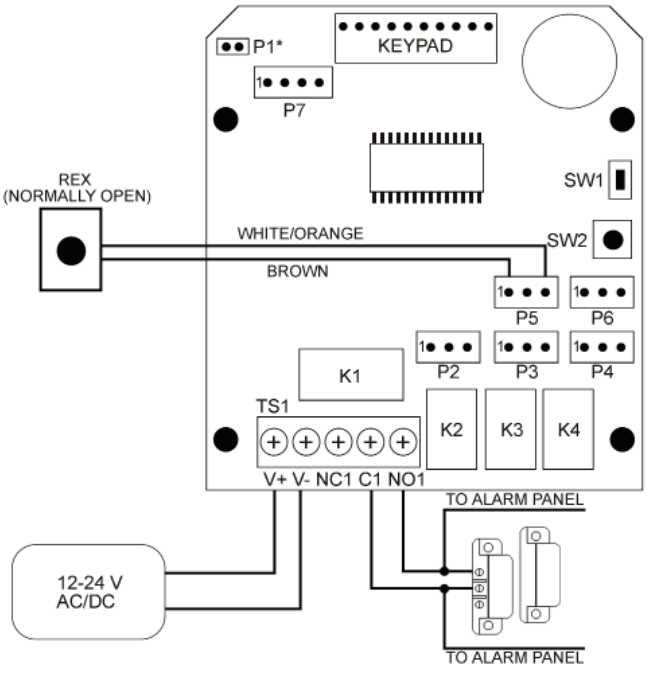

Important

A filtered and regulated DC power supply is recommended.

Technical Support

DEALERS/INSTALLERS ONLY! End users must contact the dealer/installer for support. If the keypad still does not work after troubleshooting, please call the Technical Services department at 1-800-421-1587.

NORTEK
SECURITY & CONTROL
USA & Canada (800) 421-1587 & (800) 392-0123
(760) 438-7000 - Toll Free FAX (800) 468-1340
www.nortekcontrol.com

Copyright © 2015 Nortek Security & Control LLC

DOOR♦GARD®

212iLM Keypad Installation & Programming Instructions

Note: *This product is designed to be installed and serviced by security and lock industry professionals.*

Specifications

Case Dimensions:
6-1/2" L x 1-3/4" W x 1-1/8" D

Electrical:
Voltage: 12-24 VAC/DC

Current:
53mA@12VDC
72 mA @ 24 VDC
95 mA@12 VAC
108 mA @ 24 VAC

Relay Contacts:
Main Relay (controller): 2 Amps

Bell Relay:
Form A; 1 Amp @ 30 VAC/DC

Environmental:
-20º F to 130° F
For Indoor and Outdoor Use



Features

- 120 User Capacity
- Programmable Relay Time (0 to 99 seconds)
- Request to Exit (REX) Input
- Vandal Resistant Case
- Sealed for Indoor or Outdoor Applications
- LED's for Relay Status Indication
- Bell Output
- Surface Mount
- Illuminated Hardened Keys
- Rated for Greater than One Million Key Cycles

Applications

- Low to Medium/Heavy Traffic Areas
- Rough Service Environments
- Mullion Frame Mounting
- Dimly Lit Areas

Description:

The Door♦Gard Series 212iLM keypad combines elegant looks with a mullion mount design in a rugged, vandal resistant case, which you can use for almost any application. The 212iLM has hardened backlit keys designed to perform in medium to high traffic areas and in rough duty environments. The electronics are also conformal coated, which makes the keypad suitable for indoor or outdoor applications.

Basic Operation:

To gain access through the door enter your code (1-6 digits) followed by the ✱ key on the keypad.

Packing List:

(1) 212iLM Keypad
(1) Eight-Conductor Wire Harness
(1) Mullion Hardware Pack
(1) 5/64" Allen Wrench
(1) Anti-Oxidant Grease Pack
(1) Installation/Programming Manual

Wire Harness Configuration:

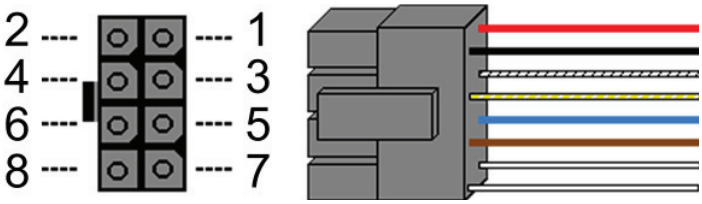

Pin	Wire Color	Signal Name
1	Red	Power (+)
2	Black	Power (-)
3	White/Black	REX
4	White/Yellow	Main Relay NC
5	Blue	Main Relay Common
6	Brown	Main Relay NO
7	White	Bell Relay Contact (A)
8	White	Bell Relay Contact (B)

Keypad Installation Procedure:

Step 1: Drill through the back plate using a 11/64” bit. Use the template on the back page to accurately mark the mounting holes before drilling. Then drill the mounting holes with a 9/64” drill bit. Also drill the hole for the wires. This may vary depending on the number of conductors required. Refer to mounting height below.

Step 2: Wire the keypad using the diagrams in the following sections.

Step 3: Mount the 2121iLM keypad onto the mounting surface using the provided screws. Do no over-tighten the screws, which may result in damage.

Keypad Mounting Height

Mounting height can vary depending on requirements. An appropriate range is typically between 48 and 52 inches on center off the floor.

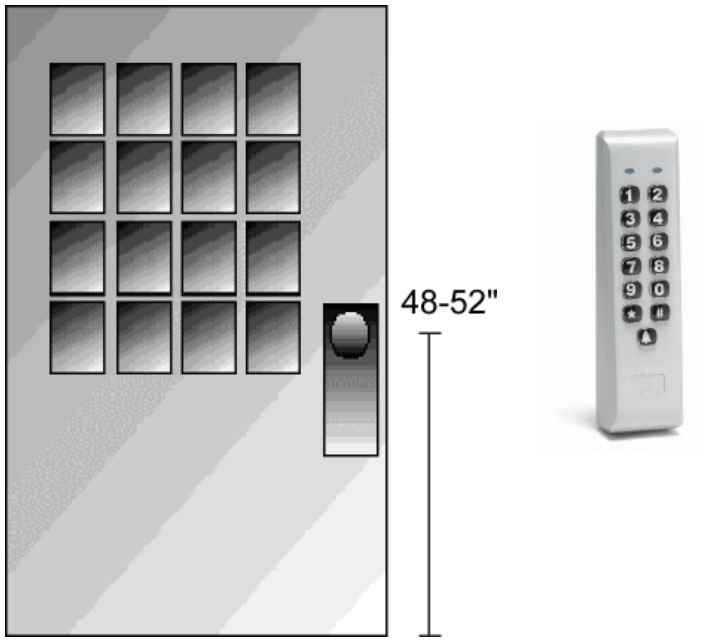

Wiring an Electromagnetic Lock (Maglock)

1. Connect the red (V+) and black (V-) wires to your power supply.
2. Connect the blue wire (relay common) to positive on your power supply.
3. Connect the white/yellow wire (relay normally closed) to the positive connection on your maglock.
4. Connect negative connection on your maglock to the negative on the power supply.

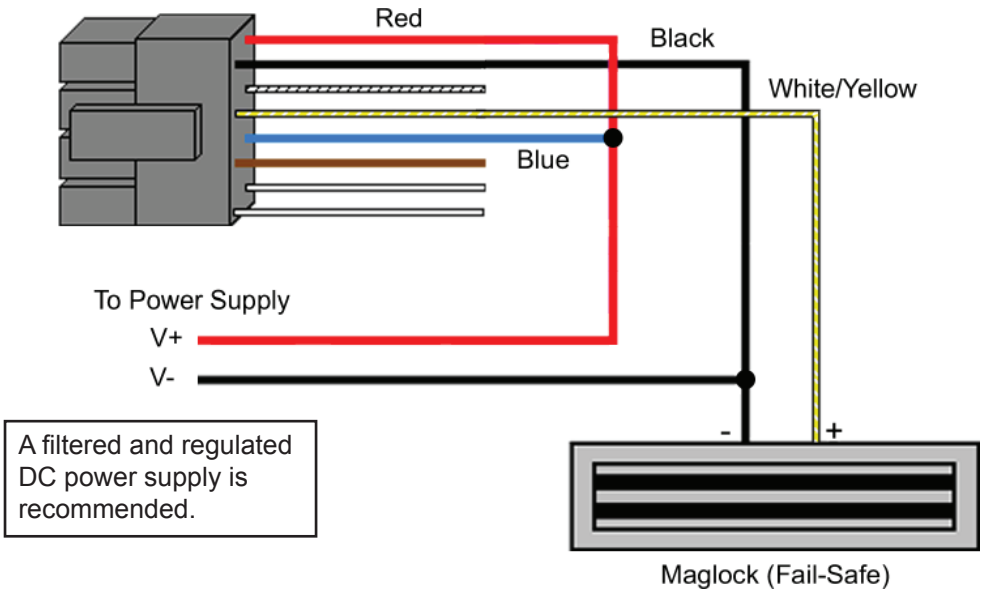

Basic Access Control Using an Electric Door Strike

1. Connect the red (V+) and black (V-) wires to your power supply.
2. Connect the blue wire (relay common) to positive on your power supply.
3. Connect the brown wire (relay normally open) to the positive connection on your door strike.
4. Connect negative connection on your door strike to the negative on the power supply.

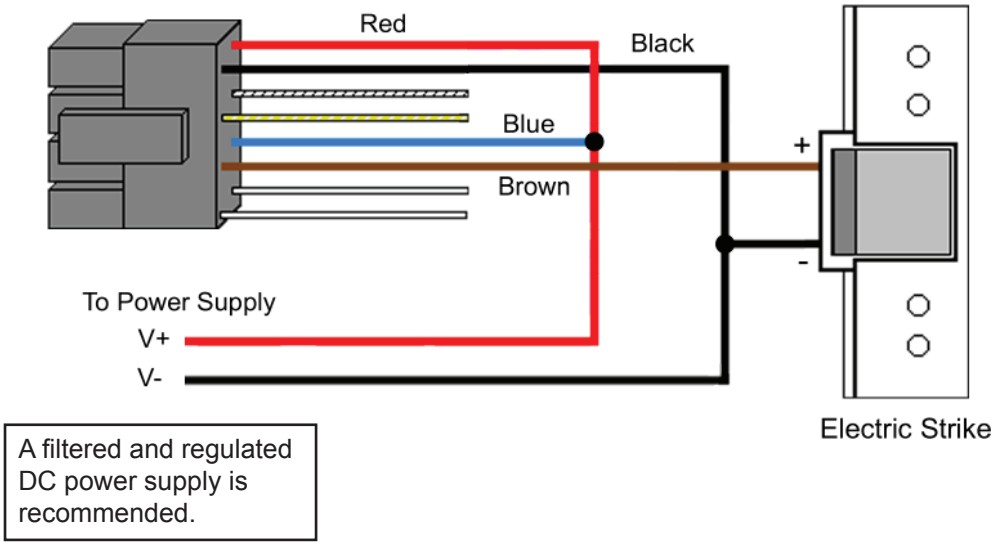

Shunting a Normally Closed Zone

1. Connect the red (V+) and black (V-) wires to your power supply.
2. Connect the blue wire (relay common) to the common connection on the alarm contacts.
3. Connect the brown wire (relay normally open) to the normally open connection on the alarm contacts.

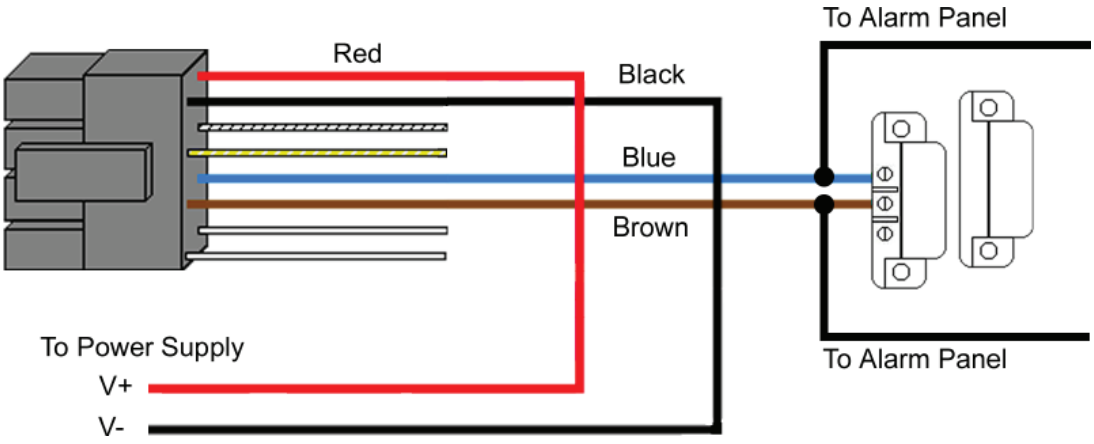

A filtered and regulated DC power supply is recommended.

Wiring a Request to Exit Device (REX)

The 212iLM is equipped with a REX input. The normally open REX input triggers the main relay for the amount of time you programmed for the master code. If the master code is set to toggle, the REX only triggers the relay for 5 seconds. There is no programming required for the REX to operate.

1. Connect the red (V+) and black (V-) wires to your power supply.
2. Connect the common connection on the REX device to the negative on your power supply.
3. Connect the white/black wire to the normally open connection on the REX device.

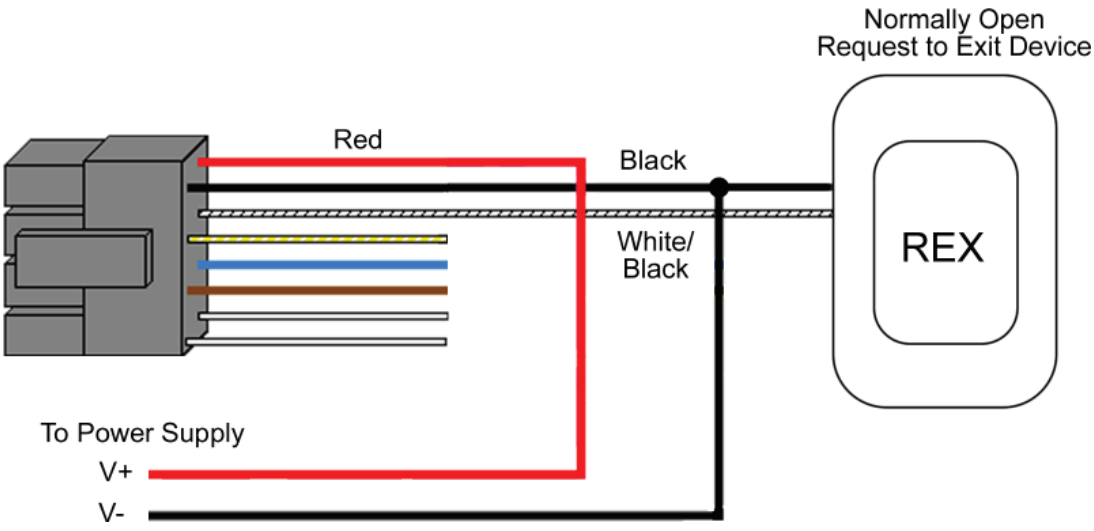

A filtered and regulated DC power supply is recommended.

Wiring the Bell Output to a Speaker:

The 212iLM keypad has a built in bell button, which triggers a relay output when pressed. This relay is normally open and the contact closes when triggered. You can use this relay output to trigger devices that require a momentary closure, such as a doorbell. The relay output provides a dry contact, but you can run up to 30 volts AC/DC through it for devices that require power to operate. The diagram below shows these connections.

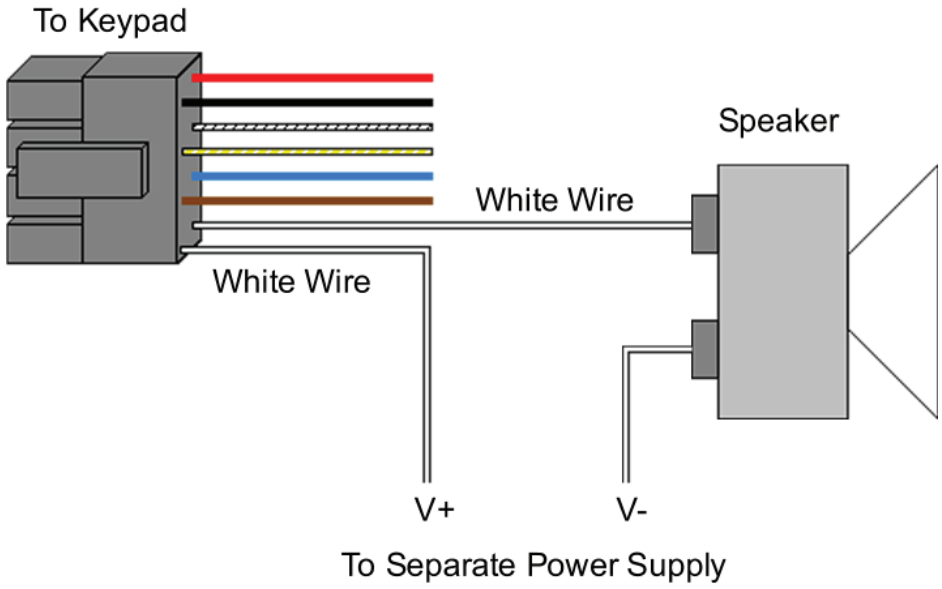

Programming the 212iLM Keypad

To program the 212iLM you first must enter program mode.

To enter program mode enter the following on the keypad: **99 # master code ✱** (default master code is 1234).

Keypad Default Settings

Option	Default Setting	Option	Default Setting
Master Code	1234	Main Relay Time	5 Seconds
Audio Keypress Feedback	Enabled	Visual Keypress Feedback	Enabled
Auto-Entry	Disabled	Door Bell Select	Continuous
Keypad Illumination	Enabled	Keypad Dimming	Enabled

Programming Options Chart

Command/Action	Keys to Enter/Details	
Change Master Code	**1 # new code ✱ new code ✱**	
Change Main Relay Time	**relay time # 1 # master code ✱ master code ✱**	
Add/Change User	**user location # new code ✱ new code ✱** Note: Users programmed with this command use master code relay time.	
Add Toggle User	**00 # user location # new code ✱ new code ✱**	
Add User with Specific Relay Time	**relay time # user location # new code ✱ new code ✱**	
Command 30 Set/Clear Keypad Options (options below, **defaults in bold**)	**30 # option # set/clear # ✱ ✱**	
Option	**Clear**	**Set**
0 – Audio Keypress Feedback	0 = Disabled	**1 = Enabled**
1 – Visual Keypress Feedback	0 = Disabled	**1 = Enabled**
2 – Auto-Entry	**0 = Disabled**	1 = Enabled
3 – Keypad Illumination	0 = Disabled	**1 = Enabled**
4 – Keypad Dimming	0 = Disabled (always bright)	**1 = Enabled**
5 – Door Bell Select	0 = Disabled	**1 = Enabled**
Command 32 Set Bell Output Time	**32 # 0 # time # ✱ ✱**	Set timed output (1 – 99 seconds)
	32 # 0 # 0 # ✱ ✱	Set to continuous
Command 46 Reset Keypad to Default Settings	**46 # 00000 # 00000 # ✱ ✱**	
Exit Program Mode	Press the ✱ Key	

Notes:

1. The 212iLM can store 120 user codes, including the master code. Codes can be from 1 to 6 digits long.
2. When auto-entry is enabled, users with codes the same length as the master code do not have to press the ✱ key after entering their code to enter the door.
3. When keypad dimming is disabled the backlighting remains at full intensity (does not dim).
4. When the door bell output is set to continuous the relay is energized as long the door button is pressed. When you release the button the relay de-energizes.

Programming Examples

Changing the Master Code

The following example show how to change the master code to 4875 from the default of 1234.

1. Enter Program Mode	99 # 1234 ✱
2. Program New Master Code	1 # 4875 ✱ 4875 ✱
3. Exit Program Mode	✱

Changing the Main Relay Time

The following example shows how to change the main relay time. The master code is 4875.

1. Enter Program Mode	99 # 4875 ✱
2. Change the Main Relay Time	10 # 1 # 4875 ✱ 4875 ✱
3. Exit Program Mode	✱

Adding User Codes

The following example shows how to program user 2 with a code of 1749 and user 3 with 9328. The master code is 4875.

1. Enter Program Mode	99 # 4875 ✱
2. Program User # 2	2 # 1749 ✱ code ✱
3. Program User # 3	3 # 9328 ✱ code ✱
4. Exit Program Mode	✱

Programming a Toggle User

The following example shows how to program user 4 as a toggle user with a code of 98773. The master code is 4875.

1. Enter Program Mode	99 # 4875 ✱
2. Change the Main Relay Time	00 # 4 # 98773 ✱ 98773 ✱
3. Exit Program Mode	✱

LED Indications

LED State	Description
Red Solid	Door Locked
Green Solid	Door Unlocked
Yellow Solid	Programming Error
Yellow Flashing Slowly	Program Mode
Yellow Momentary Flash	Visual Keypress Feedback

Troubleshooting

Issue	Explanation	Solution
LED's cycling slowly from right to left.	The 212iLM Mullion is designed to monitor for low voltage. Once low voltage is detected, the keypad turns off the backlighting to ensure operation of the keypad until the problem can be attended to.	Verify the power supply output voltage. If it is below the voltage threshold of 7.5 Volts AC or 9 Volts DC, you must increase the voltage to between 12-24 Volts.
LED's cycling rapidly from left to right and the keypad has lost all operation.	The 212iLM Mullion is designed to monitor for over voltage. This is a very "severe" condition and significantly affects the keypad's operation. Once the over voltage is detected, the keypad shuts down all operation and does not operate until the voltage is lowered.	Verify the power supply output voltage. If it is over the voltage threshold of 35 Volts, you must lower the voltage below 29 Volts.
Can't access programming mode using the master code.	The code you are entering is likely not the master code.	Perform the program mode loopback in the following section to enter program mode and reprogram the master code.
No LED's are lit on the keypad.	Power is not reaching the keypad.	First verify there is voltage at the keypad. If not, verify there is voltage at the power supply. If there is voltage, verify continuity on the wires out to the keypad. Otherwise contact the power supply manufacturer or Nortek Security & Control if there is a problem with the keypad. You also may try power the keypad with a 12V battery to verify operation.

DEALERS/INSTALLERS ONLY! End users must contact the dealer/installer for support. If the keypad still does not work after troubleshooting, please call the Technical Services department at 1-800-421-1587.

Testing the Keypad

After installing the keypad, it is recommended that you perform the keypad self-test once a year, to ensure that the keypad is working properly.

- To perform the self-test, with the unit powered up, press the following keys on the keypad: **7890 # 123456 ∗**
- If all 12 key presses are accepted, the keypad enters self-test mode.
- The LEDs alternate three times followed by the sounder beeping three times.

Program Mode Loopback

If you've forgotten the local program code use the following loopback connection to enter program mode. Power down the unit, short the wires in the configuration illustrated, then power the unit back up. The yellow LED should be flashing. Now change your local program code or reset the unit. Power the keypad down and reconnected the wire harness in the original configuration.

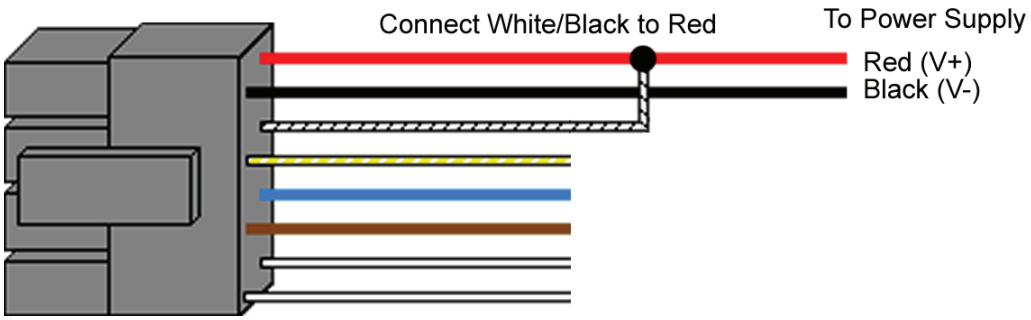

Limited Warranty

This Nortek Security & Control product is warranted against defects in material and workmanship for twenty four (24) months. **This warranty extends only to wholesale customers** who buy direct from Nortek Security & Control or through Nortek Security & Control's normal distribution channels. Nortek Security & Control does not warrant this product to consumers. Consumers should inquire from their selling dealer as to the nature of the dealer's warranty, if any. **There are no obligations or liabilities on the part of Nortek Security & Control LLC for consequential damages arising out of or in connection with use or performance of this product or other indirect damages with respect to loss of property, revenue, or profit, or cost of removal, installation, or reinstallation.** All implied warranties, including implied warranties for merchantability and implied warranties for fitness, are valid only until the warranty expires. **This Nortek Security & Control LLC Warranty is in lieu of all other warranties express or implied.**

All products returned for warranty service require a Return Authorization Number (RA#). Contact Returns at 1-855-546-3351 for an RA# and other important details.

PAGE LEFT BLANK INTENTIONALLY

212iIM Mounting Template

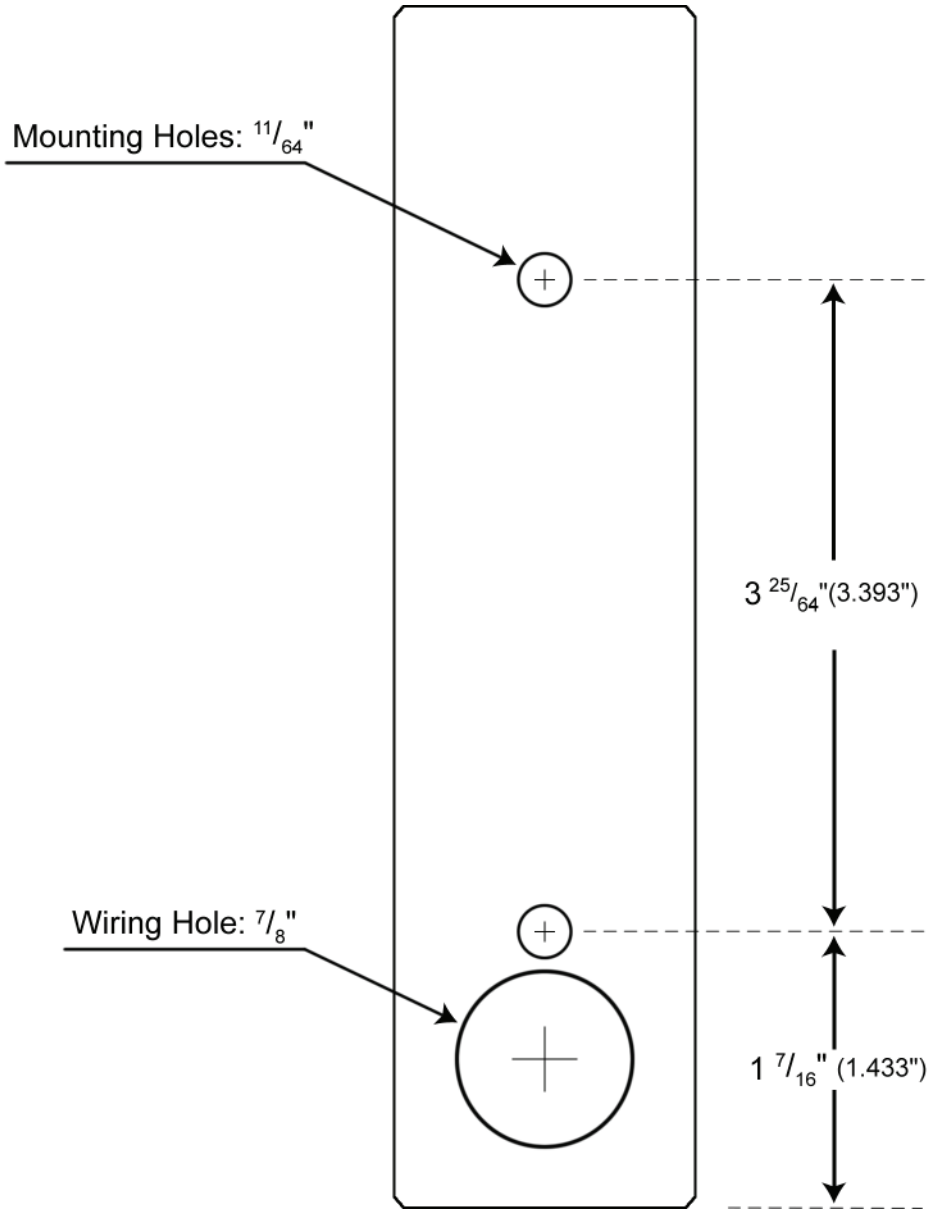

The iLM keypad is designed for surface mount applications. You must drill a 7/8" hole for the wire harness connector as shown so the unit is flat against the mounting surface.

NORTEK
SECURITY & CONTROL
USA & Canada (800) 421-1587 & (800) 392-0123
(760) 438-7000 - Toll Free FAX (800) 468-1340
www.nortekcontrol.com

Copyright © 2015 Nortek Security & Control LLC

212iLW & 242iLW Standalone Keypad Installation & Programming Manual

Note: *This equipment is designed to be installed and serviced by security and lock industry professionals.*

Put Service Company Contact Information Here:

Company Name: _____

Service Number: _____

Contents

1. **Features and Product Description** 2
2. **Specifications** 4
3. **Keypad Tampering** 5
4. **Mounting** 7
5. **Wiring** 8
6. **Testing the Keypad** 15
7. **Programming** 16
8. **Troubleshooting** 25
9. **Wire Harness Loopback Connections** 26
10. **Limited Warranty** 27
11. **212iLW / 242iLW Keypad Surface-mount Template** 28

NORTEK
SECURITY & CONTROL
USA & Canada (800) 421-1587 & (800) 392-0123
(760) 438-7000 - Toll Free FAX (800) 468-1340
www.nortekcontrol.com

1. Features and Product Description

1.1 Keypad Features

- Flush Mount, Single Gang
- Illuminated Backlit Keys
- Keypad Programmable
- Access Control Functionality (242 model)
- Individually Control up to 4 Devices (242 model)
- Keypress Feedback via Built-In Sounder
- Bi-Color Red/Green LED Indicates Relay Status
- Yellow LED Indicates Program Mode
- 120 Users
- Panic and Duress Options
- Single Use Codes
- Lockout Users
- Passage/Toggle Codes
- 10 to 30 Volt DC Operation
- 12 to 24 Volt AC Operation
- 2 Amp Main Relay
- Remote Trigger Input (REX)
- Door Monitor Input
- 2 Year Warranty

1.1.1 Output Functionality Options (242 only)

- Four Independent Relay Outputs
- Four Independent Relay Timers
- All Relay Outputs Assignable By Code

1.1.2 Access Control Features (242 only)

- Lock Release Output With Timer
- Alarm Zone Shunt Relay
- Propped Door Alarm Relay
- Forced Door Alarm Relay

1.2 Product Description

The 242iLW keypad features the most flexibility and options available in a self-contained unit. It has an accessory relay board that provides an additional three relays. It can perform access control functions and also its four relay outputs can be assigned independently for timed operation or to latch. The 242iLW keypad can control up to four devices, and is perfect for controlling electronic locking devices, security systems, CCTV systems, automatic operators, or machinery.

The 212iLW keypad features a single-relay output to control any device requiring an on/off switch. The output is timed or latched and operated by a user's PIN code. Additionally, the 212iLW keypad provides basic keyless entry by controlling a door locking device where security is not an issue.

The 212iLW and 242iLW style keypads are designed for both indoor and outdoor flush mount applications. The electronics for each keypad are conformal coated in the manufacturing process in order to provide this level of application flexibility. In addition, each keypad uses hardened keys to assure long-term, high-quality performance. Each keypad contains illuminated clear keys that make operation in low light situations easy and accurate. Both iLW style keypads mount to any standard single-gang electrical box or directly to any wall.

NOTE: This manual covers both the 212 and 242 model. All features referring to the additional relays and outputs are available only on the 242 model.

2. Specifications

Parameter	Range/Description
Voltage	10–30 VDC, 12-24 VAC (Auto-Adjusting)
Current	93 mA @ 10 VDC; 158 mA @ 30 VDC, 148 mA @ 12 VAC; 198 mA @ 24 VAC 242 Model - Add 25 mA for each energized aux relay (max = 75 mA)
Environment	For Indoor and Outdoor Use
Temperature Tolerance	-20° F to 130° F (-28° C to 54° C)
Dimensions	5-1/8" H x 3-3/8" W x 5/8" D
Main Relay (Form C)	Contact Rating: 2 A @ 30 VAC/DC
Aux Relay (Form C)	Contact Rating: 1 A @ 24 VAC/DC
REX Input	Normally Open Dry Contact
Door Position Input	Normally Closed Dry Contact
LEDs	Bi-Color Red/Green; Yellow

Default Keypad Settings	
Parameter	**Default Setting**
Master Code	1234
Lock Output	Relay 1 (Main relay – 212 and 242)
Alarm Shunt Output	Relay 2 (242)
Propped Door Output	Relay 3 (242)
Forced Door Output	Relay 4 (242)
Audio Alerts	Not Assigned (212 and 242)
REX	Triggers Lock Output
REX Operation	Always Triggers (regardless of Door Loop)
Error Lockout	Enabled
Error Lockout Threshold	3 Attempts
Error Lockout Duration	10 Seconds
Lock Output Time	5 Seconds
Propped Door Output Time	30 Seconds
Forced Door Output Time	10 Seconds
Visual Keypress Feedback	Enabled
Audio Keypress Feedback	Enabled
Auto-Entry	Disabled
User Lockout	Enabled

3. Keypad Tampering

To prevent tampering, a tamper switch can be installed in the single gang box used for mounting the keypad. The tamper switch must activate if the keypad is removed from the box and must disconnect power from the lock. The lock must be a fail-secure device, meaning the lock remains locked when power is removed. In addition, once the tamper device is activated, it must be configured so that it can only be reset from within the protected area. Only a Sentrol 3012 or Sentrol 3025T tamper switch can be used. The diagrams on the next page show the suggested mounting location for each device.

3.1 Tamper Power Supply

Our access system power supply is designed specifically for access control applications. It features a tamper circuit with a reset button mounted on the circuit board. Using the tamper switch as detailed and connected to the power supply tamper circuit, unauthorized opening of the case or prying the unit off the wall triggers this tamper loop, thus preventing the lock from being released until the reset button is pressed.

How to Order

- Access power supply with tamper circuit in cabinet:
  Model PWR/TMPR12P; Order Number 0-291200

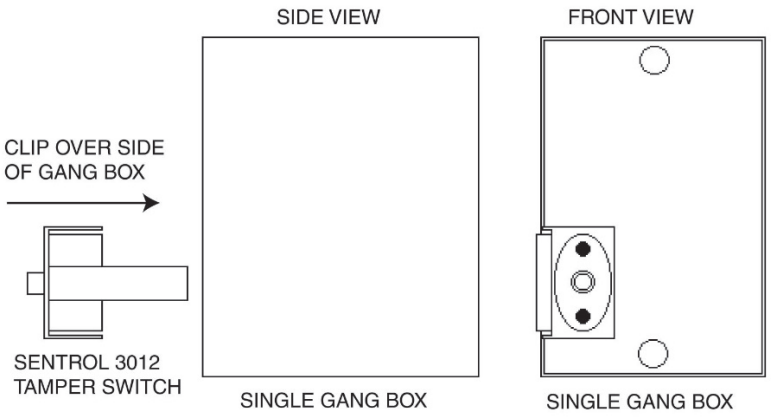

Figure 1. Mounting a Sentrol 3012 Tamper Switch

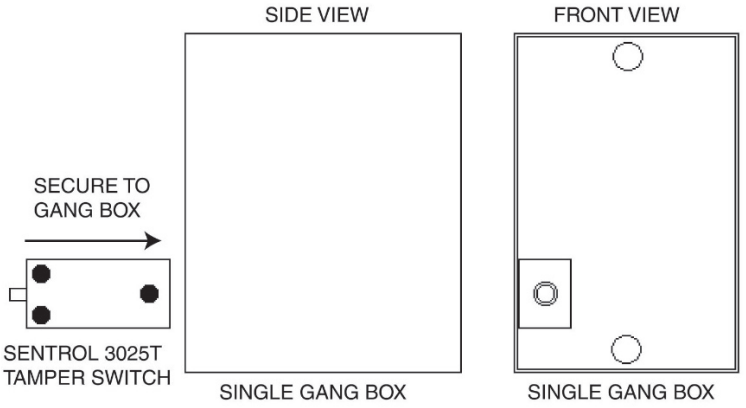

Figure 2. Mounting a Sentrol 3025T Tamper Switch

4. Mounting

The keypad is designed to be flush mounted using a standard single-gang electrical box. In addition, it can be flush mounted directly to the wall surface by cutting a hole in the wall. To properly size the mounting and wire access hole, use the installation template on the last page in this manual and on the unit's container.

Mounting height can vary depending on requirements. An appropriate range is typically between 48 and 52 inches on center off the floor.

For outdoor installations, use a weatherproof backbox and seal the wire entry locations with silicone and provide a drain hole. In addition, use the anti-oxidant grease pack for the wire harness connectors.

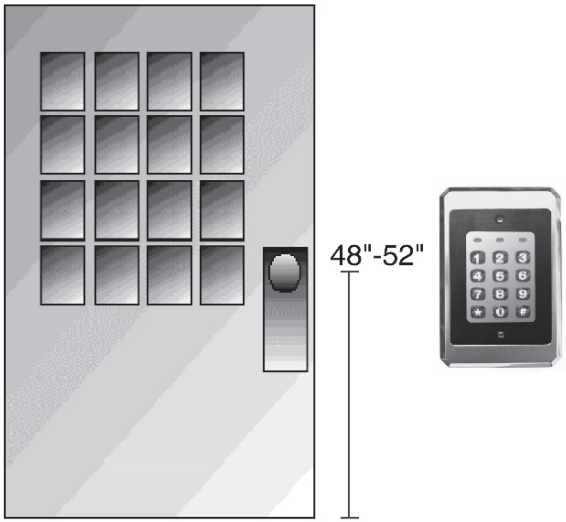

Figure 3. Keypad Mounting Height

5. Wiring

5.1 Wire Harness Configuration

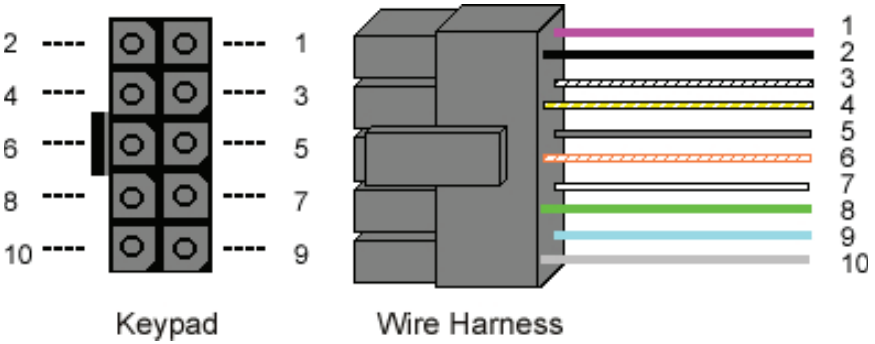

Figure 4. Keypad Connector and Wire Harness

Pin	Wire Color	Signal Name
1	Red	V+ (Keypad Power)
2	Black	V- (Keypad Power)
3	White/Black	Not Used
4	White/Yellow	Not Used
5	Brown	Remote Trigger (REX)
6	White/Orange	Loop Common (REX and Door Loop)
7	White	Door Loop Monitor
8	Green	Main Relay – Normally Open
9	Blue	Main Relay - Common
10	Gray	Main Relay – Normally Closed

Note: For wiring the accessory relay board, see Sections 5.6 and 5.7.

5.2 Wiring the Keypad to a Maglock (Fail-Safe)

Use the following steps to connect the keypad to a Maglock (Fail-Safe):

1. Connect the red wire (V+) to the blue wire (common), and then connect them to the positive on the power supply.
2. Connect the gray wire (normally closed) to the positive on the Maglock.
3. Connect the black wire (V-) to the negative on the Maglock, and then connect them to the negative on the power supply.

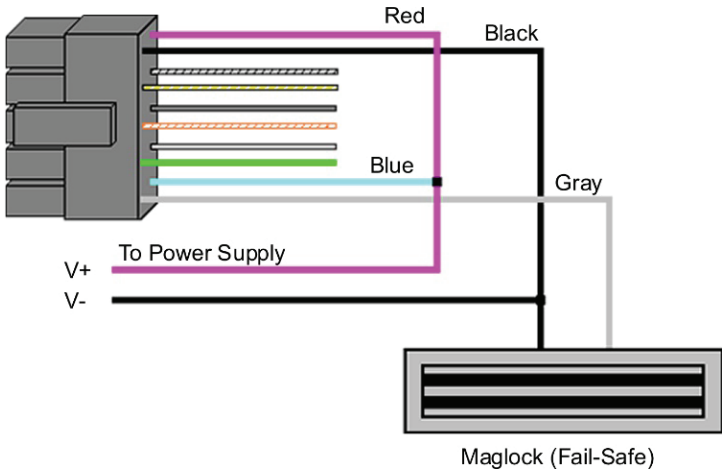

Figure 5. Wiring the Keypad to a Maglock (Fail-Safe)

5.3 Wiring the Keypad to an Electric Strike (Fail-Secure)

Use the following steps to connect the keypad to an electric strike (fail-secure) (see Figure 6 for reference):

1. Connect the red wire (V+) to the blue wire (common), and then connect them to the positive on the power supply.
2. Connect the green wire (normally open) to the positive on the strike.
3. Connect the black wire (V-) to the negative on the strike, and then connect them to the negative on the power supply.

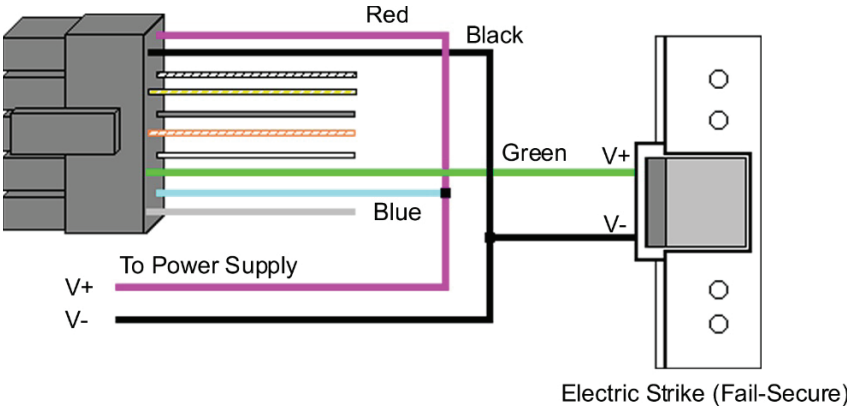

Figure 6. Wiring the Keypad to an Electric Strike (Fail-Secure)

5.4 Shunting a Normally Closed Zone

Use the following steps to use the keypad to shunt a normally closed zone:

1. Connect the blue wire (common) to the common connection on the door position switch.
2. Connect the green wire (normally open) to the normally closed connection on the door position switch.

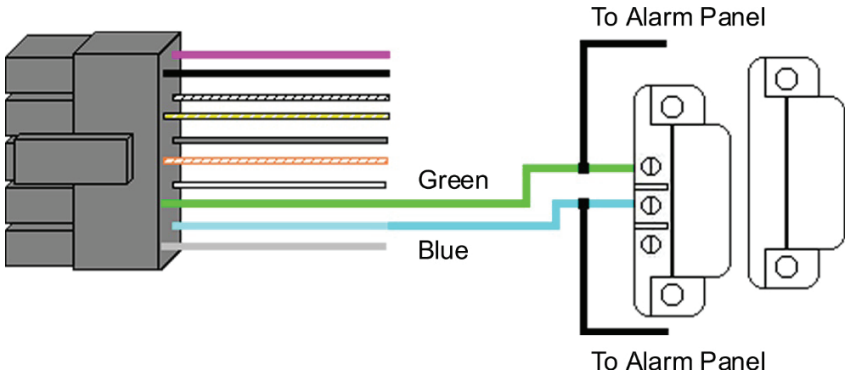

Figure 7. Shunting a Normally Closed Zone

5.5 Wiring Remote Trigger as Request to Exit (REX) Button and Door Contacts

Use the following steps to connect the keypad to a normally open REX device and normally closed door switch:

1. Connect the brown wire (REX Input) to the normally open connection on the REX device.
2. Connect the white/orange (loop common) to the common on the REX device and the common on the door switch.
3. Connect the white wire (door loop) to the normally closed connection on the door switch.

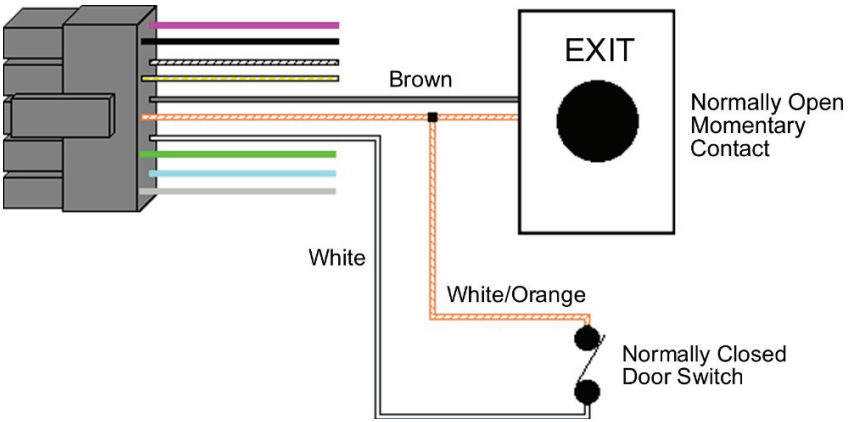

Figure 8. Wiring a REX Button and Door Contacts

NOTE: By default, the REX function operates the virtual lock output only, but you can change this using Command 49. In addition, the door loop doesn't need to be closed for the REX function to operate, by default, but setting Option 8 to 0 under Command 30, programs the REX function to operate only when the door loop is closed. This prevents the REX from re-triggering when the door is open.

5.6 Wiring an Accessory Relay Board (242 Only)

The accessory relay board contains physical outputs 2, 3, and 4 shown in the table below.

Physical Output	Relay	Connector
2	K2	P1
3	K3	P2
4	K4	P3

Use the wire harnesses supplied with the relay board to connect to the relays. The wire colors are shown in the table below.

Wire Color	Relay Connection
Gray	Normally Closed
Blue	Common
Green	Normally Open

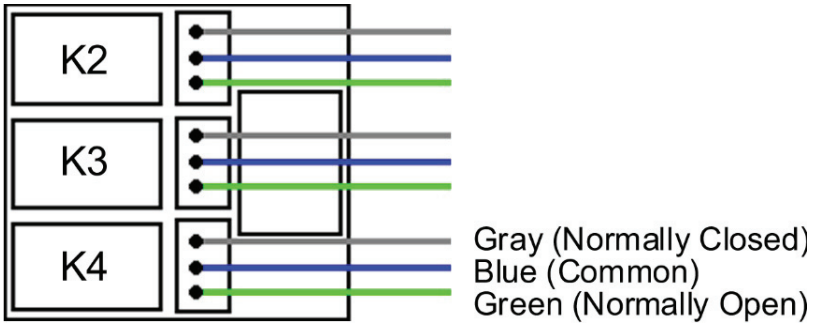

Figure 9. Wiring the Accessory Relay Board

5.7 Wiring an Integrated Access Control System Using the Accessory Relay Board

Physical outputs 2, 3, and 4 are **defaulted** to the alarm shunt, propped door, and forced door virtual outputs, respectively. Use the following steps to wire the alarm shunt, propped door alarm, and forced door alarm.

NOTE: You MUST wire a normally closed door switch, as shown in Figure 8 on Page 11, for these functions to work properly.

1. **(Wiring the alarm shunt)** Using P1 (K2), connect the blue wire (common) to common on the door switch. Connect the green wire (normally open) to the normally closed contact on the door switch.

2. **(Wiring the propped door alarm)** Using P2 (K3), connect the green wire (normally open) to the positive on the alarm device. Connect the blue wire (common) to the positive on the power supply. Connect the negative on the alarm device to the negative on the power supply.

3. **(Wiring the forced door alarm)** Using P3 (K4), connect the green wire (normally open) to the positive on the alarm device. Connect the blue wire (common) to the positive on the power supply. Connect the negative on the alarm device to the negative on the power supply.

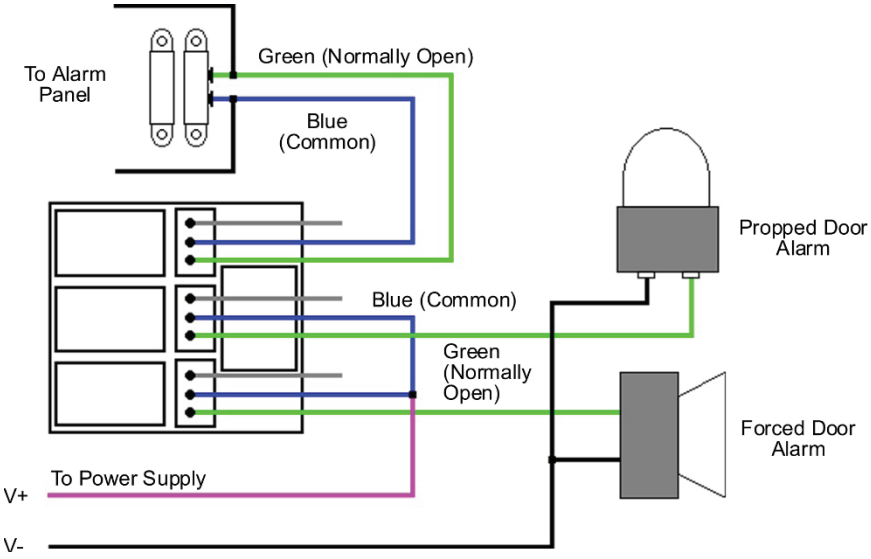

Figure 10. Wiring and Integrated Accessory Relay Board

To install the relay board, plug the relay board onto P3 on the keypad. The relays must face up towards the keypad wire harness connector P2. Use the included tie wrap to bundle all the wires together from the keypad wire harness and relay board.

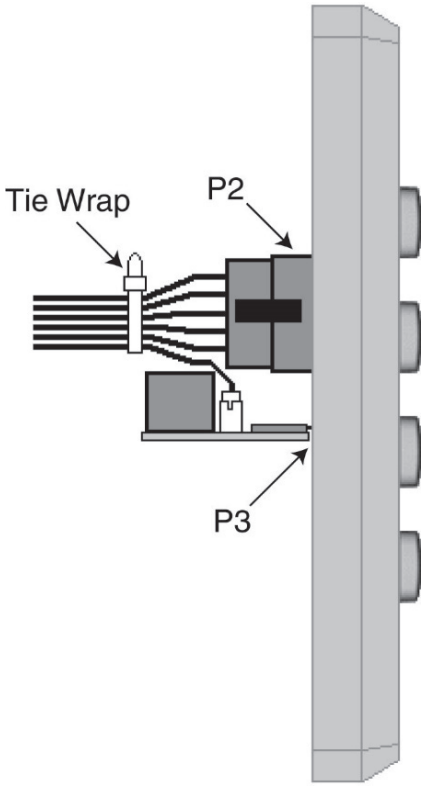

Figure 11. Plugging on Relay Board

6. Testing the Keypad

After installing the keypad, the manufacturer recommends that you perform the keypad self-test once a year, to ensure that the keypad works properly.

1. To perform the self-test, with the unit powered up, press the following keys on the keypad: **7890 # 123456 ✱**

- If all 12 key presses are accepted, the keypad enters self-test mode.
- The LEDs alternate green, yellow, and red followed by the sounder beeping three times.

2. Verify that the master code works correctly. (The master code accesses program mode and activates the main relay to verify that the locking device is working.)

The default master code is 1234.

(If the default is not working, refer to Section 9.)

7. Programming

To enter program mode, press **99 # Master Code ✱**. The yellow LED must then start blinking slowing (if not verify the master code is correct – refer to Section 9). The default Master Code is 1234.

NOTE: If auto-entry is enabled, the ✱ (asterisk) key is not used to enter Program mode.

To change the Master Code, enter:

1 # new Master Code ✱ new Master Code ✱
(When finished press the ✱ to exit program mode.)

Note: Refer to Section 7.4 for adding user codes

7.1 Programming Order

To ensure that the keypad is programmed properly in the initial installation, program the keypad in the following order:

- Step 1: Assigning Virtual Outputs to Physical Outputs
- Step 2: Programming Output Time Durations
- Step 3: Programming Users
- Step 4: Programming Keypad Options

7.2 Assigning Virtual Outputs to Physical Outputs

The keypad is equipped with both Virtual Outputs and Physical Outputs. Virtual Outputs are functions that you can assign to operate any Physical Output. Physical Outputs include the main relay, the three relays on the aux relay board, and the two audio alerts.

The 242 model has six physical outputs (four relays and two audio alerts). The 212 model has three physical outputs (a main relay and two audio alerts).

- Using Command 10, you can assign any Virtual Output to any Physical Output or disable a Physical Output.
- Each Physical Output can only have one Virtual Output assigned to it.

Command/Action	Keys to Enter/Details
Command 10. Assign Virtual Outputs to Physical Outputs	**10 # virtual output # physical output # ∗ ∗**

Virtual Output List	Physical Output List
0 – No Mapping (Physical output unused) 1 – Lock Output* 2 – Alarm Shunt Output (242) 3 – Propped Door Output** 4 – Forced Door Output** 5 – OUT2 (242) 6 – OUT3 (242) 7 – OUT4 (242) 8 – OUT5 (242) 13 – Duress Output (242) 14 – Panic Output (242) 15 – Keypad Active Output (242)	1 – Relay 1 (Main Relay) 2 – Relay 2 (K2); (242 model) 3 – Relay 3 (K3); (242 model) 4 – Relay 4 (K4); (242 model) 9 – Audio Alert #1 10 – Audio Alert #2 **Note: Audio alerts are described in Section 7.2.2**
* The bi-color red/green LED only follows the lock output. ** On the 212 model, you can assign these to the audio alerts.	
Defaults – The keypad comes programmed with the following default output assignments:	The Lock Output is assigned to Relay 1, the Alarm Shunt Output to Relay 2, the Propped Door Output to Relay 3 and the Forced Door Output to Relay 4.

7.2.1 Virtual Outputs

Virtual Outputs	Description/Details
Lock	This output is used for your locking device.
Alarm Shunt (242)	This is used to shunt out an existing alarm panel. It activates with the lock output and de-energizes one second after the lock time expires.
Propped Door	This output activates after entering a valid user code only if the door position switch is left open longer than the programmed propped door time.

Virtual Outputs	Description/Details
Forced Door	This output activates if the door position switch is opened without entering a valid user code.
OUT2, OUT3, OUT4, OUT5 (242)	These four independently controlled outputs are activated by user codes programmed to activate multiple outputs and the REX function. See programming Commands 59 and 49 in the Programming section.
Duress (242)	The duress output is activated when a duress user enters their code. See Duress User in the Programming section.
Panic (242)	Panic is activated by pressing the ✱ and # keys at the same time. This is used in case of emergency to activate an auxiliary device and should not be used to gain access.
Keypad Active (242)	The Keypad Active output is activated when any key is pressed. Do not use this output to gain access.

7.2.2 Audio Alerts

Audio Alerts are produced by the local sounder on the keypad and can be used as a local propped door alarm or forced door alarm to free up the relays for other functions.

- Alert #1 is a constant quick beep (¼ second on and ¼ second off).
- Alert #2 is a short beep (100 ms) every two seconds.
- Alert #1 takes priority over Alert #2.

7.2.3 Programming REX Outputs (242 Model)

For wiring information, see Section 5.5.

49 # output list # 0 # ✱ ✱

Use this command to program which outputs the REX operates.
1 = LOCK, 2 = OUT2, 3 = OUT3, 4 = OUT4, and 5 = OUT5.

Command/Action	Keys to Enter/Details	
Command 11. Set LOCK Time Duration	**11 # time # 0 # ∗ ∗** (time = 1 to 255 seconds)	
Command 12. Set OUT2 Time Duration	**12 # ttt # mmm # ∗ ∗**	To toggle, enter: **12 # 0 # 0 # ∗ ∗**
Command 13. Set OUT3 Time Duration	**13 # ttt # mmm # ∗ ∗**	To toggle, enter: **13 # 0 # 0 # ∗ ∗**
Command 14. Set OUT4 Time Duration	**14 # ttt # mmm # ∗ ∗**	To toggle, enter: **14 # 0 # 0 # ∗ ∗**
Command 15. Set OUT5 Time Duration	**15 # ttt # mmm # ∗ ∗**	To toggle, enter: **15 # 0 # 0 # ∗ ∗**
Options:		
ttt (time units)	Number of time units to operate OUTn when valid PIN entered (1-255)	
Examples:	**12 # 1 # 10 #** (for 10 seconds) (1 time unit multiplied by 10 seconds) **12 # 2 # 10 #** (for 20 seconds) (2 time units multiplied by 10 seconds)	
mmm (multiplier)	Number of seconds in each time unit (1-255)	
Examples:	**12 # 15 # 1 #** (for 15 seconds) (15 time units multiplied by 1 second) **12 # 15 # 2 #** (for 30 seconds) (15 time units multiplied by 2 seconds)	
Command 44. Set Propped Door Time	**44 # time # 0 # ∗ ∗**	
Options:		
time	Propped Door Time - rounded down to nearest 10's of seconds; entered as 00, 10 through 990, defaults to 30 seconds; entering a time of zero disables the propped door function.	
Command 45. Set Forced Door Time	**45 # time # 0 # ∗ ∗**	
Options:		
time	Forced Door Time - rounded down to nearest 10's of seconds; entered as 00, 10 through 990, defaults to 10 seconds; entering a time of zero latches the virtual forced door that can be cleared with any valid PIN or by entering program mode.	

Command/Action	Keys to Enter/Details
Command 32. Change Keypad Parameters	**32 # parameter # value # ∗ ∗**
Parameter	**Value**
0 – Duress Output Duration	1 – 255 (default = 5)
1 – Panic Output Duration	1 – 255 (default = 5)
2 – Error Lockout Threshold	1 – 50 (default = 3)
3 – Error Lockout Duration	1 – 255 (default = 10

7.4 Programming Users

Command/Action	Keys to Enter/Details
Master Code	User #1 is the master code; it can access all commands in program mode. The default code is 1234. **The master code can be programmed with Command 50 or Command 60 as a standard user only.**
Supervisor Code	User #2, when programmed, is the supervisor code. The supervisor can access program mode, but is limited to adding and deleting users, as well as enabling or disabling users. The supervisor code can't change, delete, or disable the master code or supervisor code itself.
Add Standard User (short version)	**user location # code ∗ code ∗**
Add User with Specific Unlock Time	**unlock time # user location # code ∗ code ∗** (This command is used to program a user with a specific unlock. This user activates the virtual lock output.)
Delete User	**user location # ∗ ∗**

Command/Action	Keys to Enter/Details
Command 60. Add/Modify Enhanced User	**60 # user type # user location # code ∗ code ∗** (codes can be from 1 to 10 digits in length)
	User Types 0 – Toggle User 1 – Standard User 3 – Lockout User 5 – Single Use Code 7 – Emergency User 8 – Duress User 9 – Two-Part User Type A 10 – Two-Part User Type B
Toggle User	A toggle user latches the virtual lock output.
Standard User	Activates the virtual lock output using the lock duration programmed with Command 11.
Lockout User	This user type locks out users in user locations higher than the lockout user when the lockout user code is entered. For example, if the lockout user is programmed for user 20, any user in location 21 to 120 is locked out and their codes no longer work to gain access. A lockout is removed by entering the same lockout code. If another lockout code in another user location is entered, the lockout user location level is set to the new lockout user location. The master code and emergency users can't be locked out. The current lockout is cleared when program mode is entered. "Lockout activated" is indicated by two double beeps. "Lockout canceled" is indicated by one double beep. "Access denied due to lockout" is indicated by 1 long beep followed by 3 short beeps. "User lockout" can be enabled or disabled with Command 30.
Single Use Code	This code can only be entered once to gain access using the lock virtual output. Once used, this code is no longer active. A single use code can be verified by entering **5 # code ∗**. If the code is a single use code, the green LED flashes for ½ a second. An "invalid code" is indicated by 3 quick beeps.

Command/Action	Keys to Enter/Details
Emergency User	This user type is a standard user that can not be locked out by a lockout user.
Duress User	Entering a duress code activates the lock and duress virtual outputs. This allows you to trigger another device silently, such as an alarm, and still gain access in case of an emergency.
Two-Part Users A and B	When the two-part user option is enabled, two codes are required to gain access. A "Two-Part Type A" and "Two-Part Type B" user **must** enter their code **(not necessarily in that order)**. After the first code is entered, the LED alternates between red and green, indicating another code is required. The second code **must** be entered within 15 seconds of the first code. When two codes of the same type are entered, a type mismatch is indicated by 5 beeps. When Two-Part User is disabled, all Type A and B user codes are converted to standard user codes. Two-Part users activate the virtual lock output. Two-Part Users can be enabled or disabled with Command 30.
Command 56. Enable/Disable User	**56 # enable/disable # user location # ∗ ∗**
Options:	1 = Disable 0 = Enable The master code and supervisor code can't be disabled.
Command 59. Program users to operate virtual outputs OUT2, OUT3, OUT4 and OUT5 as well as the virtual lock output.	**59 # output list # user location # code ∗ code ∗** Use this command to operate multiple outputs and the virtual lock output using a single code. This is useful when you want to operate a separate device while unlocking the door and still use some of the access control features such as alarm shunt, propped door, forced door and REX. The output list is specified by entering the output(s) you want the code to operate. 1 = LOCK, 2 = OUT2, 3 = OUT3, 4 = OUT4, and 5 = OUT5.

7.5 Programming Keypad Options

Command/Action	Keys to Enter/Details		
Command 30. Enable/Disable Keypad Options	**30 # option # enable/disable # ✱ ✱**		
Option		**Disable**	**Enable**
0 – Audio Keypress Feedback		0 = disabled	**1 = ENABLED**
1 – Visual Keypress Feedback		0 = disabled	**1 = ENABLED**
2 – Auto Entry		**0 = DISABLED**	1 = enabled
3 – Error Lockout		0 = disabled	**1 = ENABLED**
4 – User Lockout		0 = disabled	**1 = ENABLED**
5 – Two-Part Users		0 = disabled	**1 = ENABLED**
6 – Keypad Illumination		0 = disabled	**1 = ENABLED**
7 – Keypad Dimming		0 = disabled	**1 = ENABLED**
8 – REX Operation		0 = only when door loop closed	**1 = ALWAYS**
Auto Entry	When auto-entry is enabled, users with codes the same length as the master code do not have to press the ✱ key after entering their code. If you have a code greater than the master code, you can use Auto-Entry Suspend. Just enter the # key prior to your code followed by the ✱ key. Example: **# 23456 ✱** if the master code is four digits.		
Error Lockout	When enabled, the keypad keeps track of the number of consecutive invalid codes entered, including attempts to access program mode. When the threshold is reached, the yellow LED turns on solid and the keypad no longer responds to key presses for the programmed time duration. The count is reset by entering a valid code, including entering program mode. The error lockout threshold and duration is programmed with Command 32.		
Keypad Illumination	Keypad backlighting can be enabled or disabled.		
Keypad Dimming	When enabled, the backlighting illumination level decreases 15 seconds after the last key press. When disabled, the backlighting remains at full illumination at all times.		
Command 40. Reset Defaults Only	**40 # 00000 # 00000 # ✱ ✱** (master code, all keypad options and parameters)		
Command 46. Erase Users and Reset Default Settings.	**46 # 00000 # 00000 # ✱ ✱**		

7.6 Programming Options Chart – Quick Reference

To enter program mode press 99 # master code ∗.

Command/Action	Keys to Enter/Details
Add Standard User	**user location # code ∗ code ∗**
Add Standard User with Specific Unlock Time	**unlock time # user location # code ∗ code ∗**
Add/Modify Enhanced User	**60 # user type # user location # code ∗ code ∗** (refer to Section 7.4 for details)
Delete User	**user location # ∗ ∗**
Set LOCK Output Time Duration	**11 # time # 0 # ∗ ∗** (1 to 255 seconds)
Enable/Disable Keypad Options	**30 # option # enable/disable # ∗ ∗** (refer to Section 7.5 for details)
Enable/Disable User	**56 # enable/disable # user location # ∗ ∗**
Assign Virtual Outputs to Physical Outputs	**10 # virtual output # physical output # ∗ ∗** (refer to Section 7.2 for details)
Program REX Outputs	**49 # output list # 0 # ∗ ∗**
Program Users to Operate OUT2-5	**59 # output list # user location # code ∗ code ∗**
Set OUT2 Time Duration	**12 # ttt # mmm # ∗ ∗** (refer to page 19 for details)
Set OUT3 Time Duration	**13 # ttt # mmm # ∗ ∗** (refer to page 19 for details)
Set OUT4 Time Duration	**14 # ttt # mmm # ∗ ∗** (refer to page 19 for details)
Set OUT5 Time Duration	**15 # ttt # mmm # ∗ ∗** (refer to page 19 for details)
Set Propped Door Time	**44 # time # 0 # ∗ ∗** (10 to 990 seconds)
Set Forced Door Time	**45 # time # 0 # ∗ ∗** (10 to 990 seconds)
Change Keypad Parameters	**32 # parameter # value # ∗ ∗** (refer to page 20 for details)
Reset Defaults Only	**40 # 00000 # 00000 # ∗ ∗**
Erase Users and Reset Default Settings	**46 # 00000 # 00000 # ∗ ∗**

8. Troubleshooting

Refer to this section if the keypad is not operating correctly as described in this manual.

Problem	Solution
The LEDs are slowly cycling from right to left and backlighting is off.	The keypad is designed to monitor the input voltage and this is an indication of under-voltage. The under-voltage threshold is set to 8.5 VDC, and when the voltage drops below this limit, the low voltage warning starts and backlighting is turned off. To solve, raise the voltage to between 12-24 V.
The LEDs are rapidly cycling from left to right and the keypad has lost all operation.	The keypad is designed to monitor the input voltage, and this is an indication of over-voltage. The over-voltage threshold is set to 36 VDC, and when the voltage rises above this limit, the over-voltage warning starts and the keypad loses all operation. To solve, lower the voltage to between 12-24 V.
The master code does not work.	Perform the programming mode loopback and reset the master code using the programming command.
No LEDs are lit on the keypad.	Power is not reaching the keypad. Using a voltmeter, confirm that there is voltage at the keypad on the red and black wires. If there is no voltage at the keypad, verify that there is voltage at the power supply. If there is no voltage at the power supply, call the manufacturer of the power supply. If there is voltage at the power supply but not at the keypad, verify there is no break in the wires, then check continuity in the whole length of the wire run. To verify that the keypad is working, you can power the keypad with a 12-Volt Battery.

DEALERS/INSTALLERS ONLY! End users must contact the dealer/installer for support. If the keypad still does not work after troubleshooting, please call the Technical Services department at 1-800-421-1587.

9. Wire Harness Loopback Connections

If the Master Code is either not working or forgotten, power down the system, connect the wire harness as shown in Figure 12 below, and then power the system up again. The unit should now be in program mode. Next, change your Master Code using the programming command and power down the system and restore the wire harness to its original configuration and power the system back up.

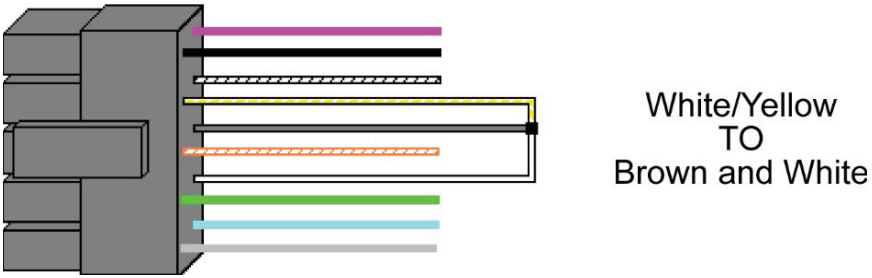

Figure 12. Program Mode Loopback

10. Limited Warranty

This Nortek Security & Control product is warranted against defects in material and workmanship for twenty four (24) months. **This warranty extends only to wholesale customers** who buy direct from Nortek Security & Control or through Nortek Security & Control's normal distribution channels. Nortek Security & Control does not warrant this product to consumers. Consumers should inquire from their selling dealer as to the nature of the dealer's warranty, if any. **There are no obligations or liabilities on the part of Nortek Security & Control LLC for consequential damages arising out of or in connection with use or performance of this product or other indirect damages with respect to loss of property, revenue, or profit, or cost of removal, installation, or reinstallation.** All implied warranties, including implied warranties for merchantability and implied warranties for fitness, are valid only until the warranty expires. **This Nortek Security & Control LLC Warranty is in lieu of all other warranties express or implied.**

All products returned for warranty service require a Return Authorization Number (RA#). Contact Returns at 1-855-546-3351 for an RA# and other important details.

11. 212iLW / 242iLW Keypad Surface-mount Template

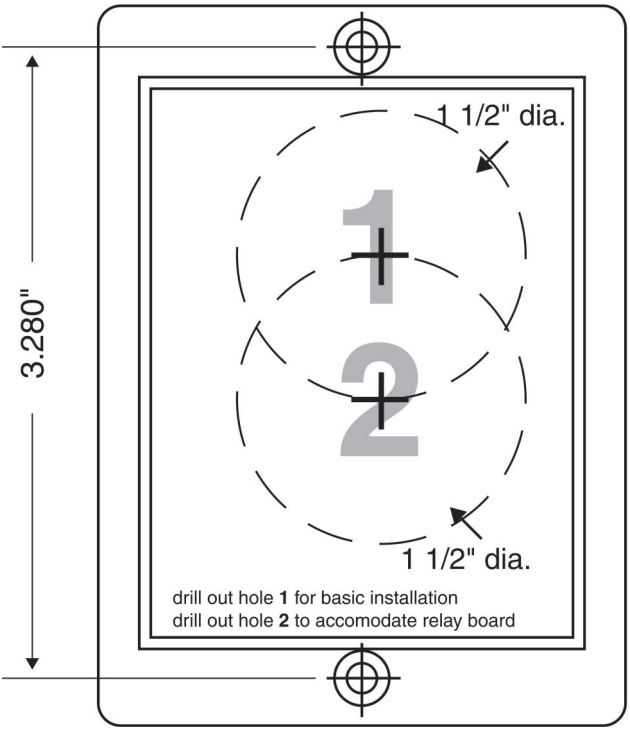

Copyright © 2015 Nortek Security & Control LLC

DOOR•GARD®

232FX Keypad Installation & Programming Instructions

Note: *This product is designed to be installed and serviced by security and lock industry professionals.*

Specifications



Keypad Case Dimensions:
5-1/8" L x 3-3/8" W x 5/8" D

Electrical:
Voltage: 12-24 VAC/VDC (controller)

Current (max): 54mA @ 12VDC; 65mA @ 24VDC; 118mA @ 12VAC; 157mA @ 24VAC

Relay Contacts:
Main Relay (controller): 12-24 VAC/DC, 2A
Aux Relays (controller): 12-24 VAC/DC, 1A

Environmental:
Temperature: -20º F to 130° F
232 Controller: For Indoor use Only
SSW-FX Keypad: For Indoor or Outdoor Use

Features

- Two-Piece Unit for Secured Applications
- Vandal Resistant Metal Case
- Sealed for Indoor or Outdoor Applications
- No Moving Parts
- Touch Sensitive Piezo Keys
- LED's for Relay Status Indication
- Surface Mount
- Rated for Greater than One Million Key Cycles

Applications

- Heavy Traffic Areas
- Rough Service Environments
- Low Profile

Description:

Combining elegant looks and flush mount design in a ruggedized vandal resistant case, the Door♦Gard Series 232FX keypad can be utilized for almost any application. Designed to perform in high traffic and rough duty environments, the keypad has solid state, touch sensitive piezo keys surrounded by an aesthetically appealing protective metal case. Encapsulated electronics make the keypad suitable for indoor or outdoor installations.

A complete 232FX access control system consists of two pieces: an SSW-FX keypad front end and a 232 Access Control Module.

Basic Operation:

To gain access through the door enter your code (1-6 digits) followed by the ✱ key on the keypad.

Packing List:

(1) SSW-FX Keypad
(1) 232 Access Control Module
(1) Six-Conductor Wire Harness
(4) Three-Conductor Wire Harness
(1) Four-Conductor Wire Harness
(1) Controller Hardware Pack
(2) 6-32 x 1-1/2 Machine Screws
(2) # 6 1-1/2 Sheet Metal Screws
(1) 11/64" Allen Wrench
(1) Anti-Oxidant Grease Pack
(1) 232FX Installation/Programming Manual
(1) Self-Contained Access Control Programming Guide

Wire Harness Configuration:

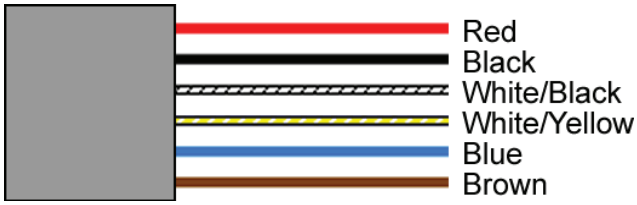

Pin	Wire Color	Signal Name
1	Red	Power (+)
2	Black	Power (-)
3	White/Black	Data 0
4	White/Yellow	Data 1
5	Blue	LED1
8	Brown	Not Used

TECHNICAL SUPPORT

DEALERS/INSTALLERS ONLY! End users must contact the dealer/installer for support. If the keypad still does not work after troubleshooting, please call the Technical Services department at 1-855-546-3351.

Keypad Installation Procedure:

Step 1: If you are mounting the keypad directly to a wall, drill a 3/4” hole into the mounting surface to allow the wire harness connector and wires to fit through.

Step 2: On the keypad end, strip back the insulator from the wire and tape the drain wire (shield) to the jacket. Now connect the four (see below) wires to the 6-conductor wire harness provided. The wire harness plugs into the 6-position connector on the keypad. At the other end of your wire run, strip back the insulator from the wire but **do not** tape the drain wire to the jacket. The drain wire **must** be connected to ground at the controller end. See the diagrams.

Step 3: Finally mount the SSW-FX keypad onto the mounting surface using the provided #6 screws. Do no over-tighten the screws, which may result in damage.

Note: The controller is designed for indoor mounting only and is intended for mounting in a secure location. It should be accessible for programming purposes, but should not be used as an entry or exit device.

Keypad Mounting Height

Mounting height can vary depending on requirements. An appropriate range is typically between 48 and 52 inches on center off the floor.

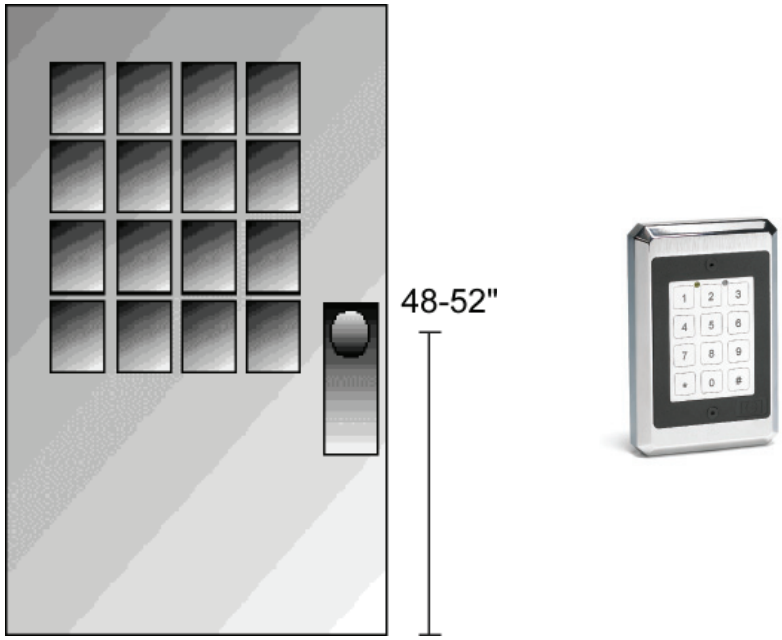

Wiring the SSW-FX Keypad to a 232 Access Control Module

The connection between the SSW-FX keypad and the 232 Controller requires a 4-conductor, stranded wire with overall foil shield. The 6-conductor wire harness from the keypad connects to connector P6 on the controller. Connect the wires, color to color (red to red, black to black, white/black to white/black and white/yellow to white/yellow). Refer to the wire lengths below. As mentioned in Step 2 previously, the drain wire must be attached to Ground on the controller side, which is the V- terminal or negative of your power supply.

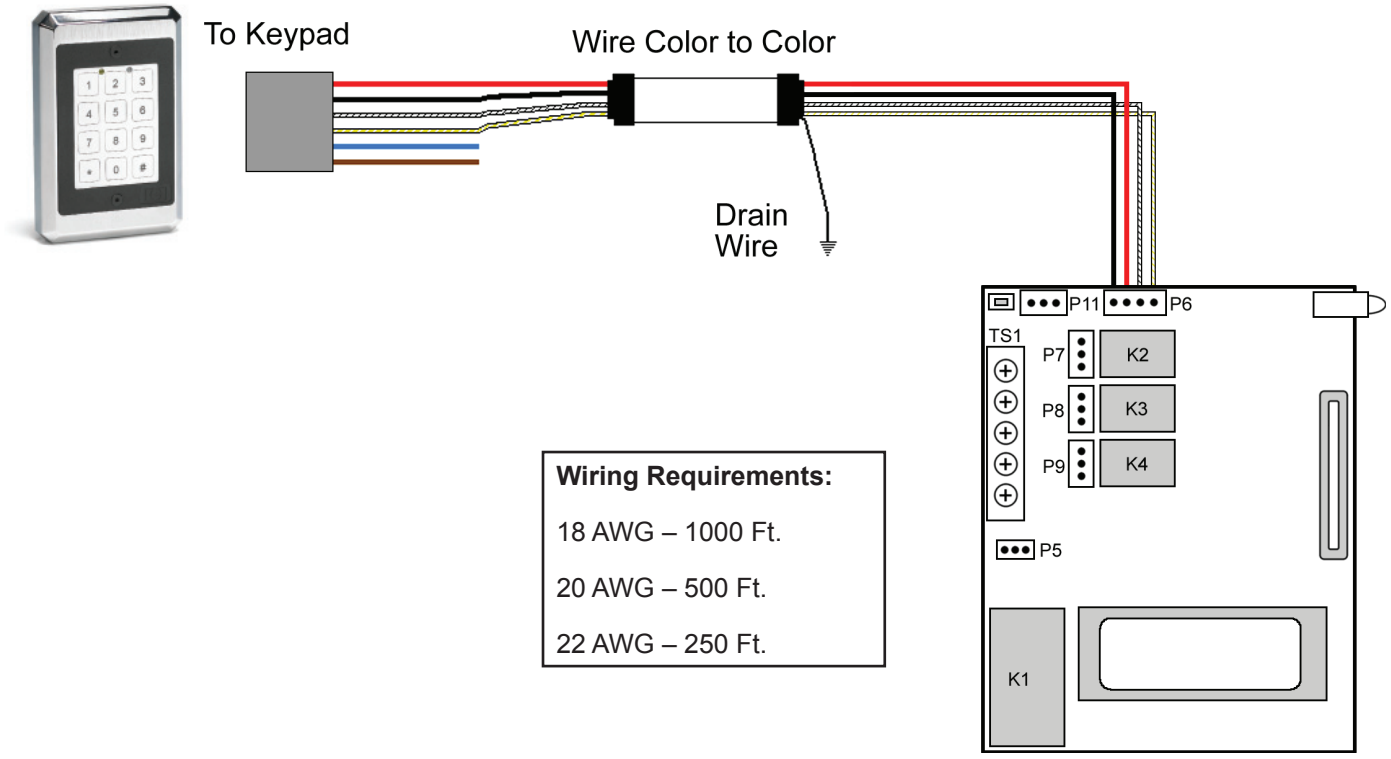

Wiring Requirements:

18 AWG – 1000 Ft.

20 AWG – 500 Ft.

22 AWG – 250 Ft.

Basic Access Control Using an Electromagnetic Lock (Maglock)

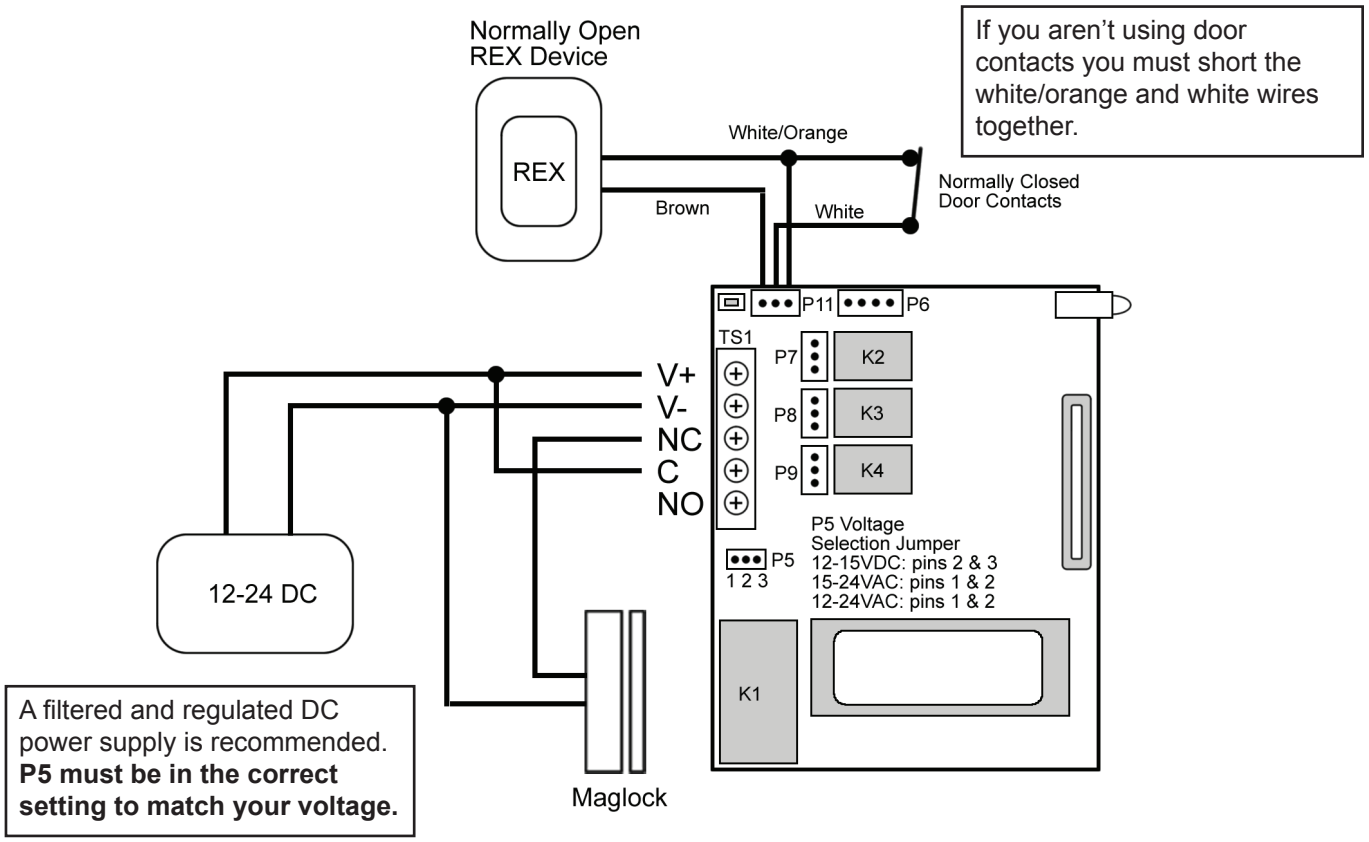

Basic Access Control Using an Electric Door Strike

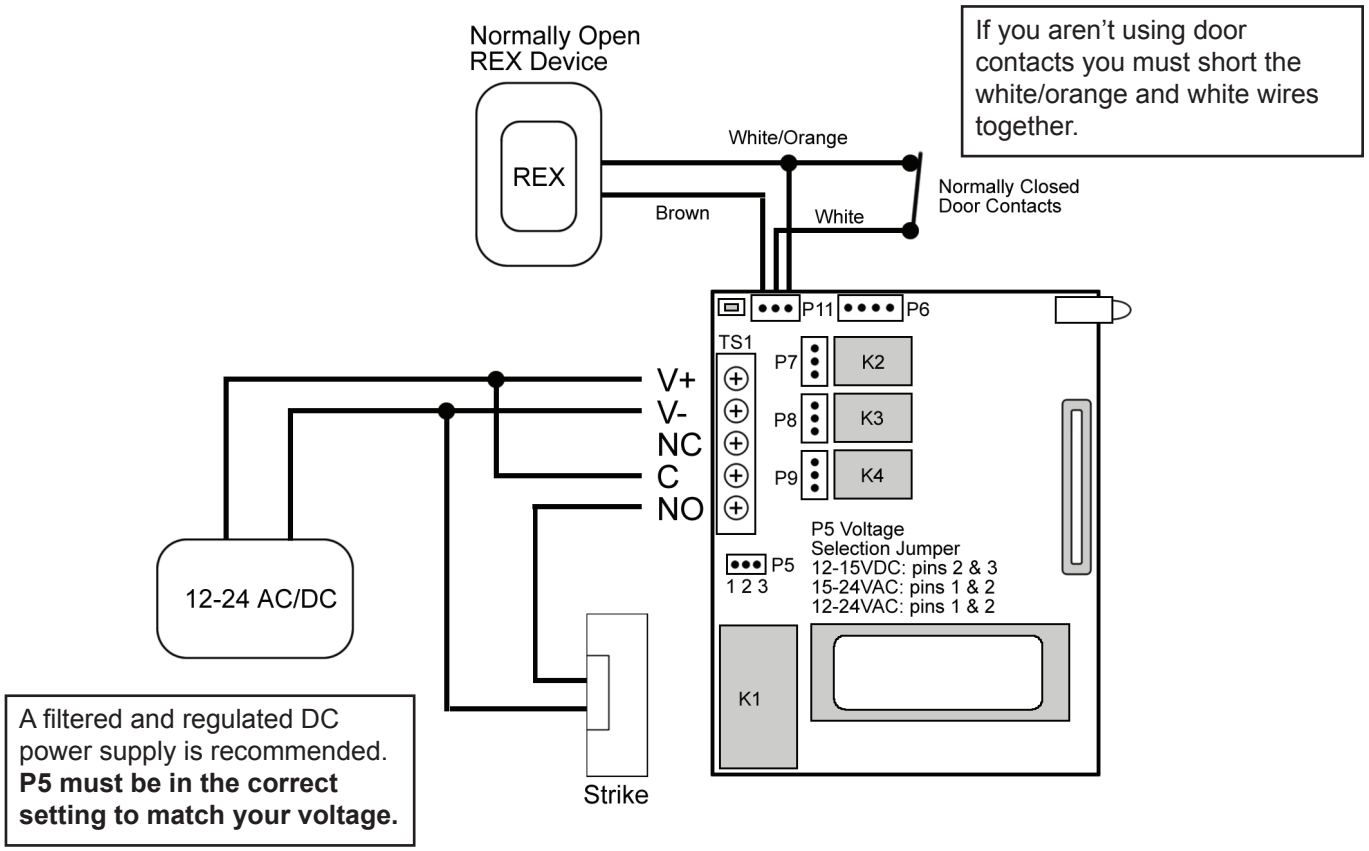

Integrated Access Control Wiring

Follow the diagram below for integrated access control wiring. This includes connecting door contacts, request-to-exit (REX), propped door alarm and forced door alarm.

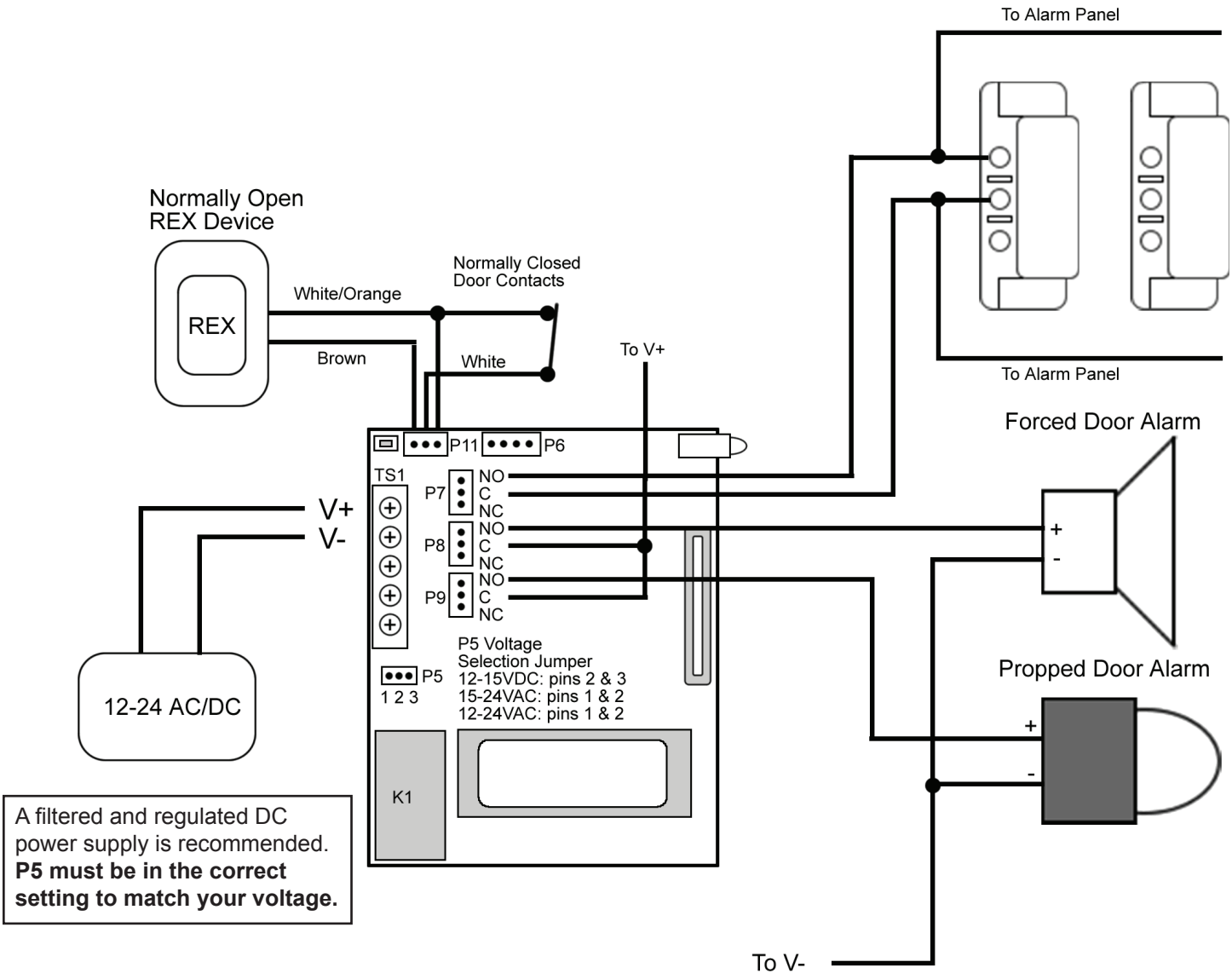

A filtered and regulated DC power supply is recommended. **P5 must be in the correct setting to match your voltage.**

Wire Color	Relay Connection
Gray	Normally Closed
Blue	Common
Green	Normally Open

Programming the Keypad

Note: This section contains details about programming the SSW-FX keypad only. All user codes and other access control features are programmed into the controller. Please refer to the Door♦Gard Self-Contained Access Control Systems Keypad Programming Guide for details about programming the controller.

The SSW-FX keypad has it's own local programming options. The programming options chart below shows all the programming commands available in the SSW-FX.

To program the SSW-FX you first must enter program mode.

To enter program mode enter the following on the keypad: **099 # program code ✱** (default program code is 6789).

Programming Options Chart

Command/Action	**Keys to Enter/Details**	
Command 90 Change Local Program Code	**90 # 0 # 0 # new code ✱ new code ✱** (default = 6789)	
Command 91 Set/Clear Keypad Options (options below, **defaults in bold**)	**91 # option # set/clear # ✱ ✱**	
Option	**Clear**	**Set**
0 – Visual Keypress Feedback	0 = Disabled	**1 = Enabled**
1 – Audio Keypress Feedback	0 = Disabled	**1 = Enabled**
Command 96 Reset Keypad to Default Settings	**96 # 0 # 0 # ✱ ✱**	
Exit Program Mode	**Press the ✱ Key**	

Note: Auto-Entry is not available in this model.

LED Indications

LED State	**Description**
Red Solid	Door Locked
Green Solid	Door Unlocked
Yellow Solid	Programming Error
Yellow Flashing Slowly (single flash)	Controller Program Mode
Yellow Flashing Slowly (double flash)	Front End Program Mode
Yellow Momentary Flash (key press)	Visual Keypress Feedback

Testing the Keypad

After installing the keypad, it is recommended that you perform the keypad self-test once a year, to ensure that the keypad is working properly.

To perform the self-test, with the unit powered up, press the following keys on the keypad: **7890 # 123456 ✱**

- If all 12 keypresses are accepted, the keypad enters self-test mode.
- The LEDs alternate three times followed by the sounder beeping three times.
- When finished the yellow LED starts flickering rapidly.
- Press ✱ to clear.

Program Mode Loopback

If you've forgotten the local program code use the following loopback connection to enter program mode. Power down the unit, short the wires in the configuration illustrated, then power the unit back up. The yellow LED should be flashing. Now change your local program code or reset the unit. Power the keypad down and reconnected the wire harness in the original configuration.

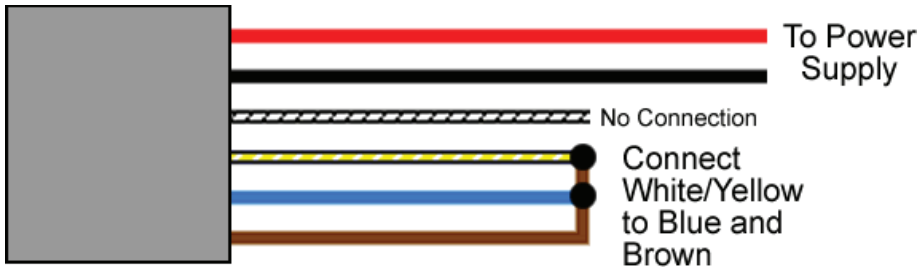

Front End Default Loopback Connection

The following loopback connection allows you to default the keypad in front end mode. Power down the unit, short the wires in the configuration illustrated, then power the unit back up. After you hear the three beeps, remove power and reconnect the wires in the proper configuration.

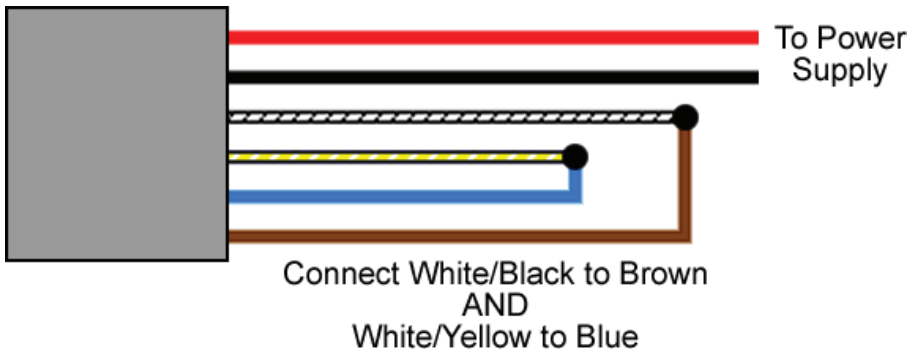

Limited Warranty

This Nortek Security & Control product is warranted against defects in material and workmanship for twenty four (24) months. **This warranty extends only to wholesale customers** who buy direct from Nortek Security & Control or through Nortek Security & Control's normal distribution channels. Nortek Security & Control does not warrant this product to consumers. Consumers should inquire from their selling dealer as to the nature of the dealer's warranty, if any. **There are no obligations or liabilities on the part of Nortek Security & Control LLC for consequential damages arising out of or in connection with use or performance of this product or other indirect damages with respect to loss of property, revenue, or profit, or cost of removal, installation, or reinstallation.** All implied warranties, including implied warranties for merchantability and implied warranties for fitness, are valid only until the warranty expires. **This Nortek Security & Control LLC Warranty is in lieu of all other warranties express or implied.**

All products returned for warranty service require a Return Authorization Number (RA#). Contact Returns at 1-855-546-3351 for an RA# and other important details.

Technical Support

DEALERS/INSTALLERS ONLY! End users must contact the dealer/installer for support. If the keypad still does not work after troubleshooting, please call the Technical Services department at 1-800-421-1587.

NORTEK
SECURITY & CONTROL
USA & Canada (800) 421-1587 & (800) 392-0123
(760) 438-7000 - Toll Free FAX (800) 468-1340
www.nortekcontrol.com

Copyright © 2015 Nortek Security & Control LLC











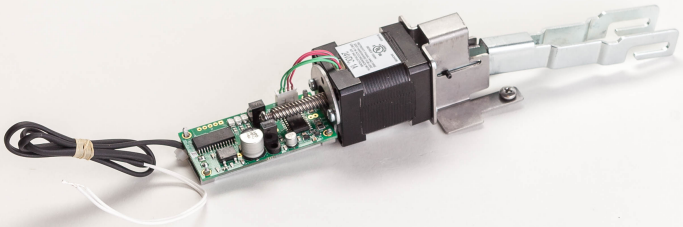



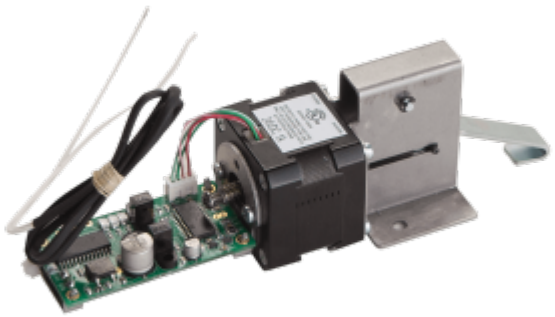

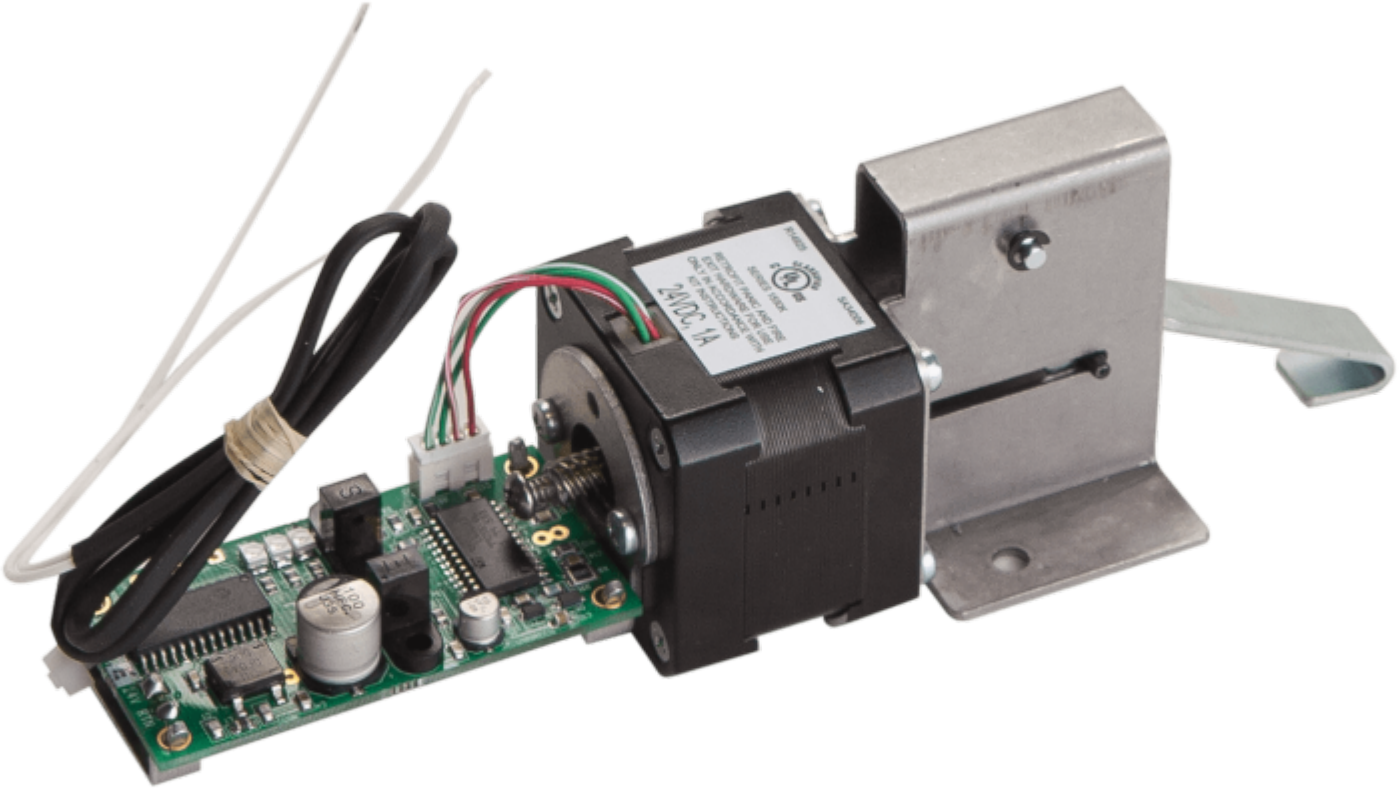
24VDC 1A

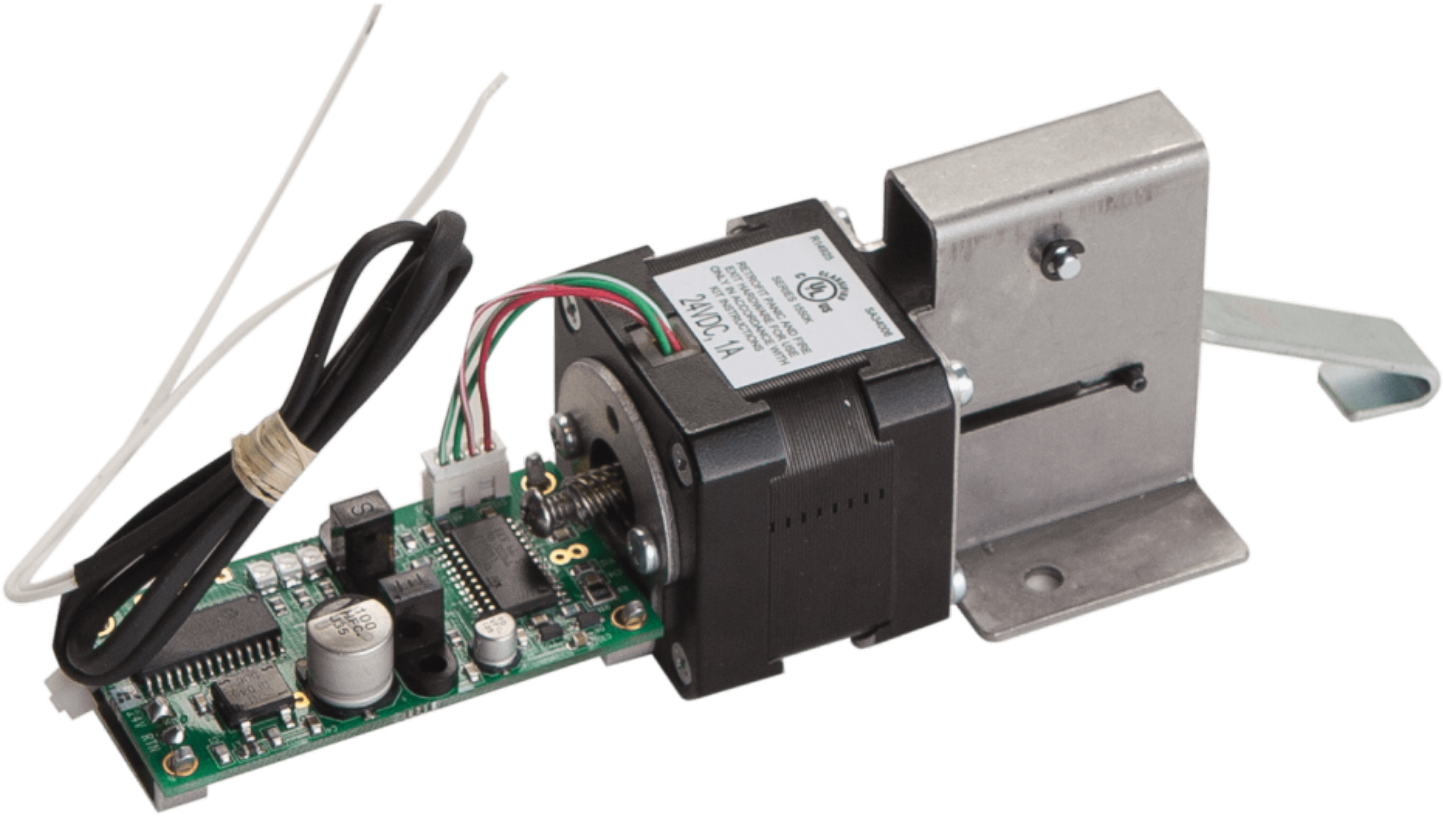
24VDC 1A

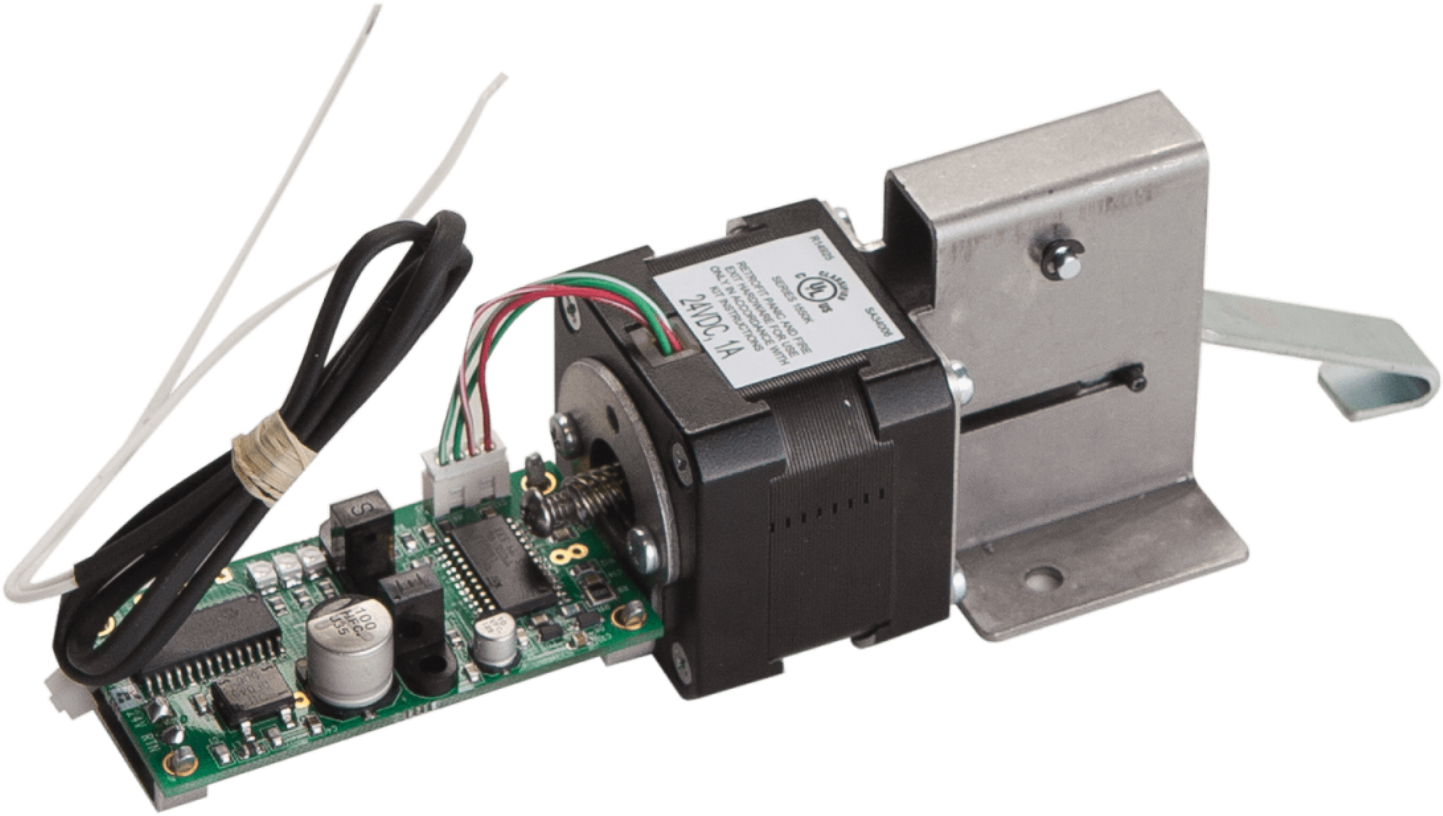
24VDC 1A

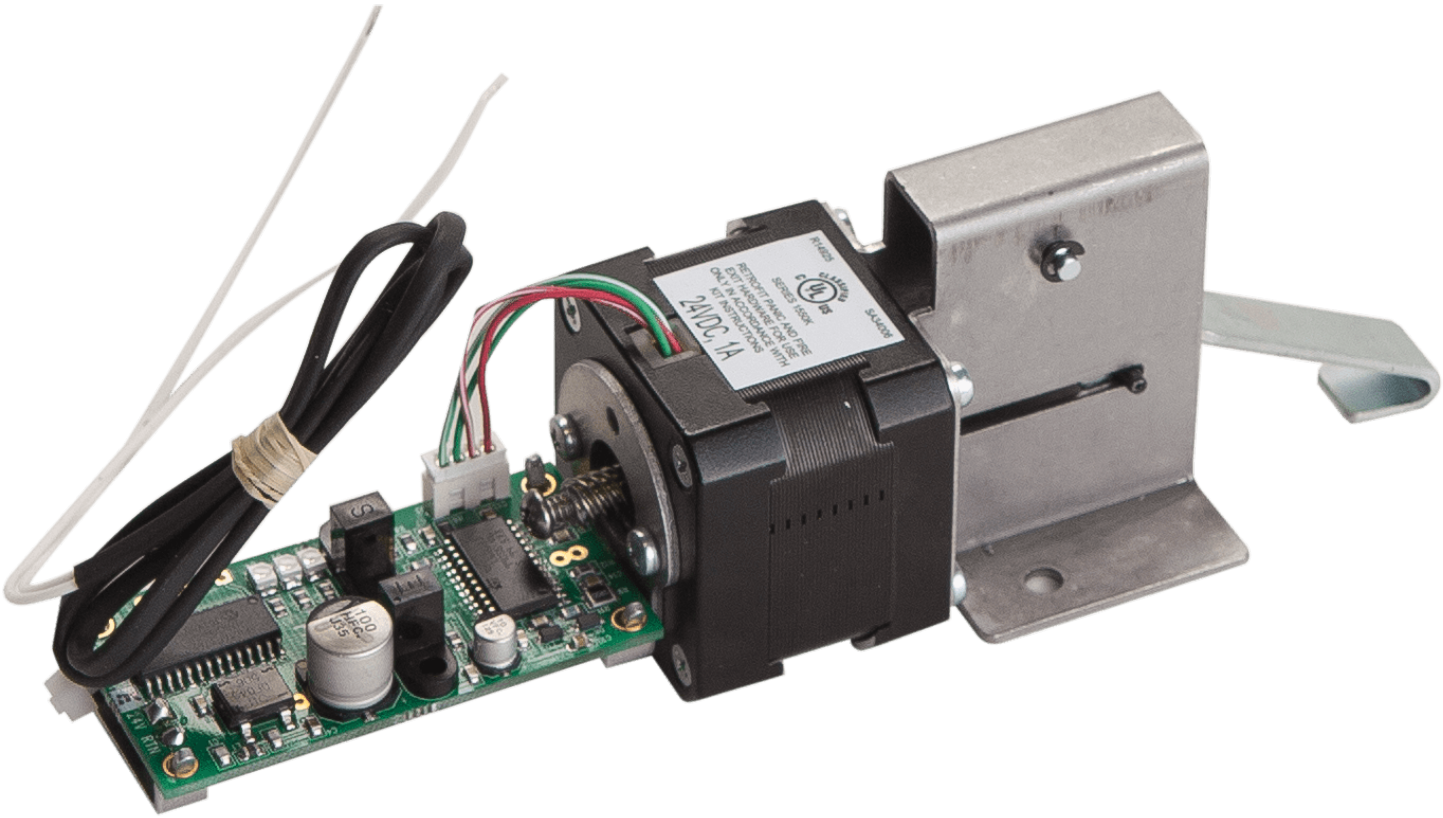
24VDC 1A



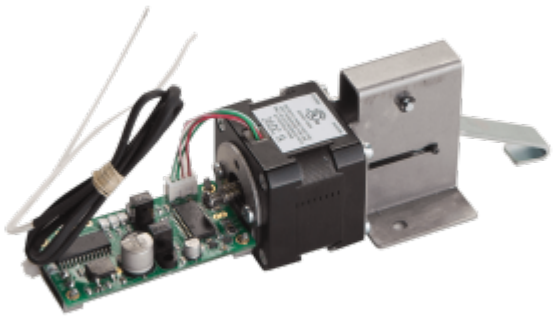

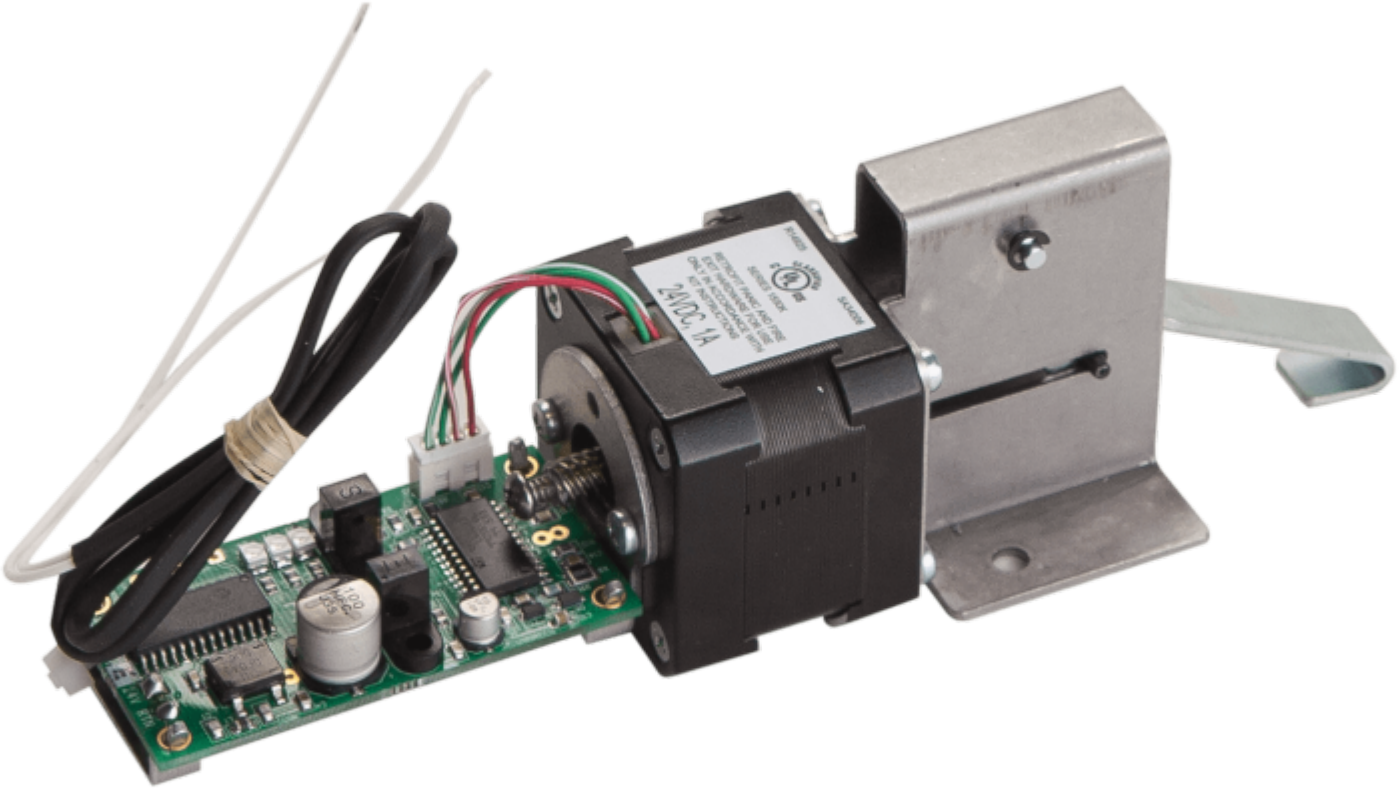
24VDC 1A

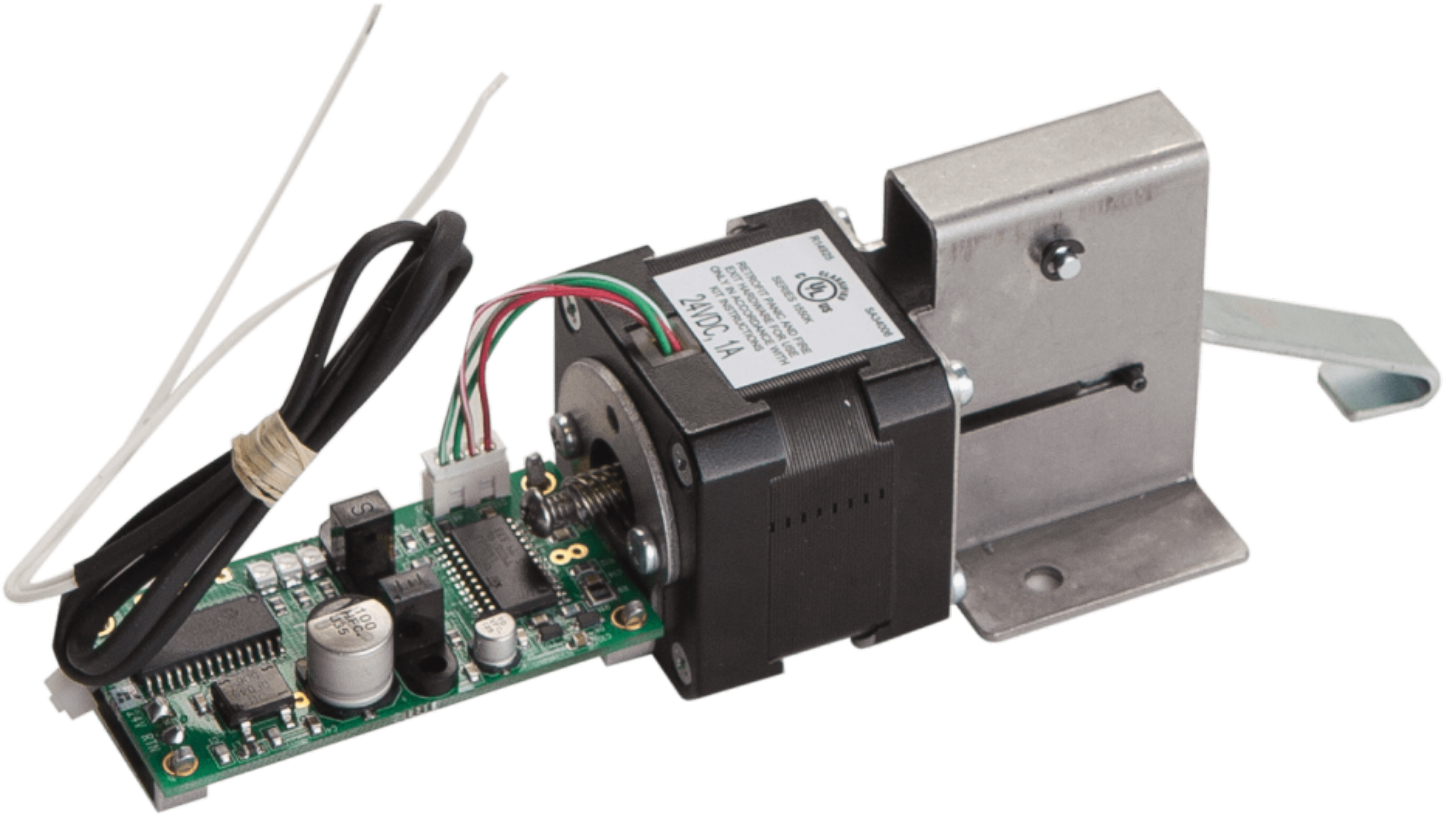
24VDC 1A

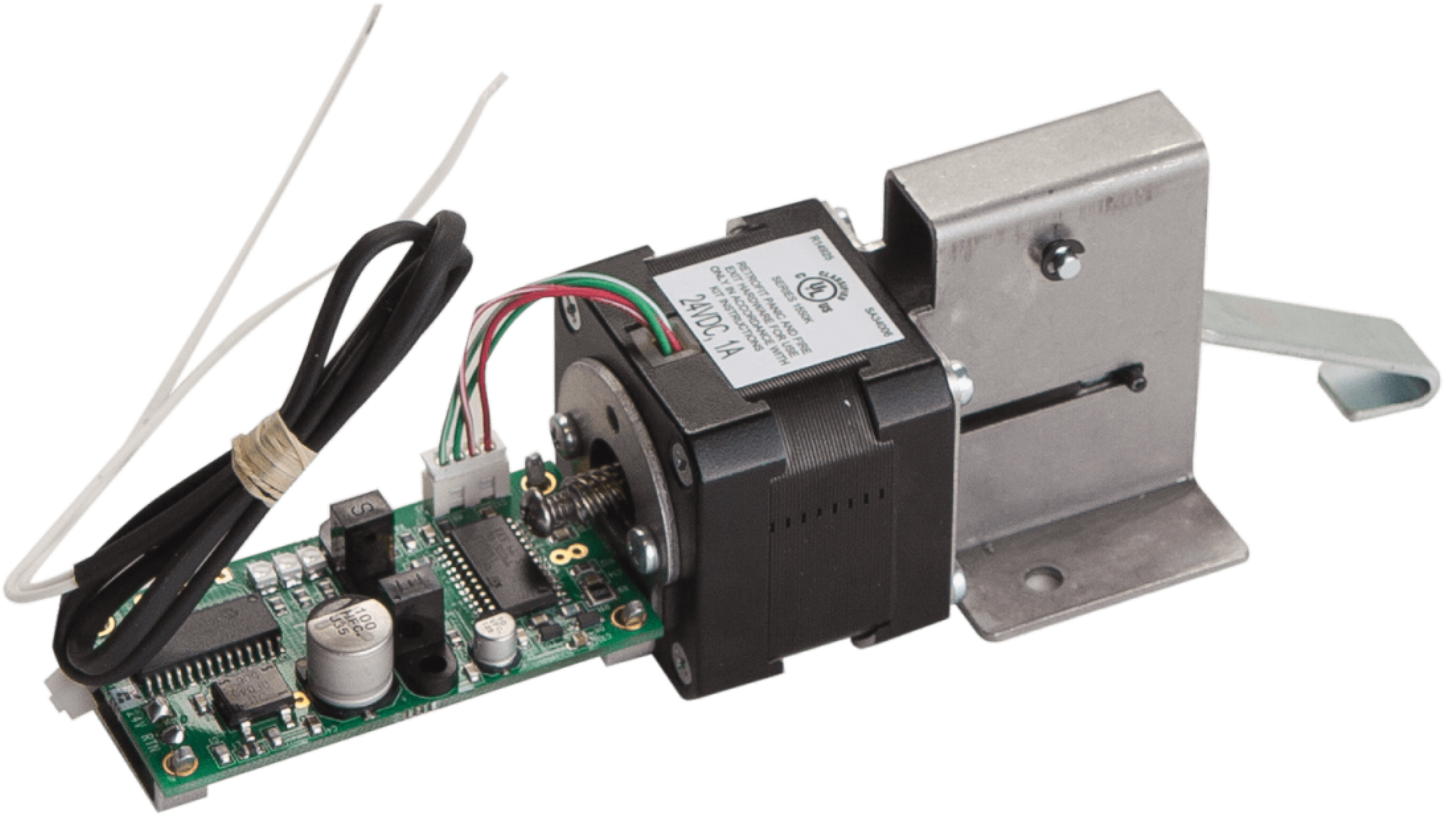
24VDC 1A

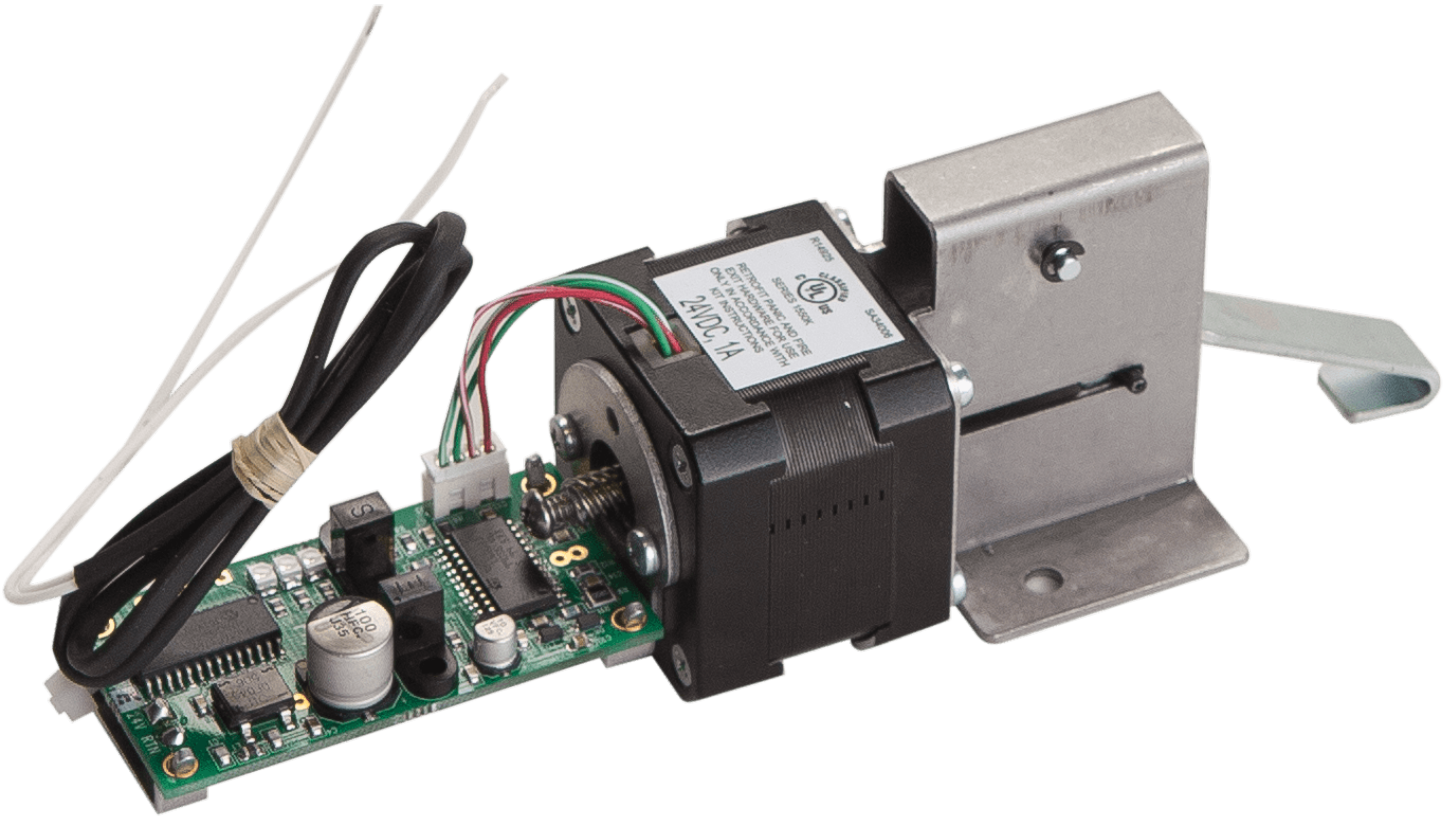
24VDC 1A





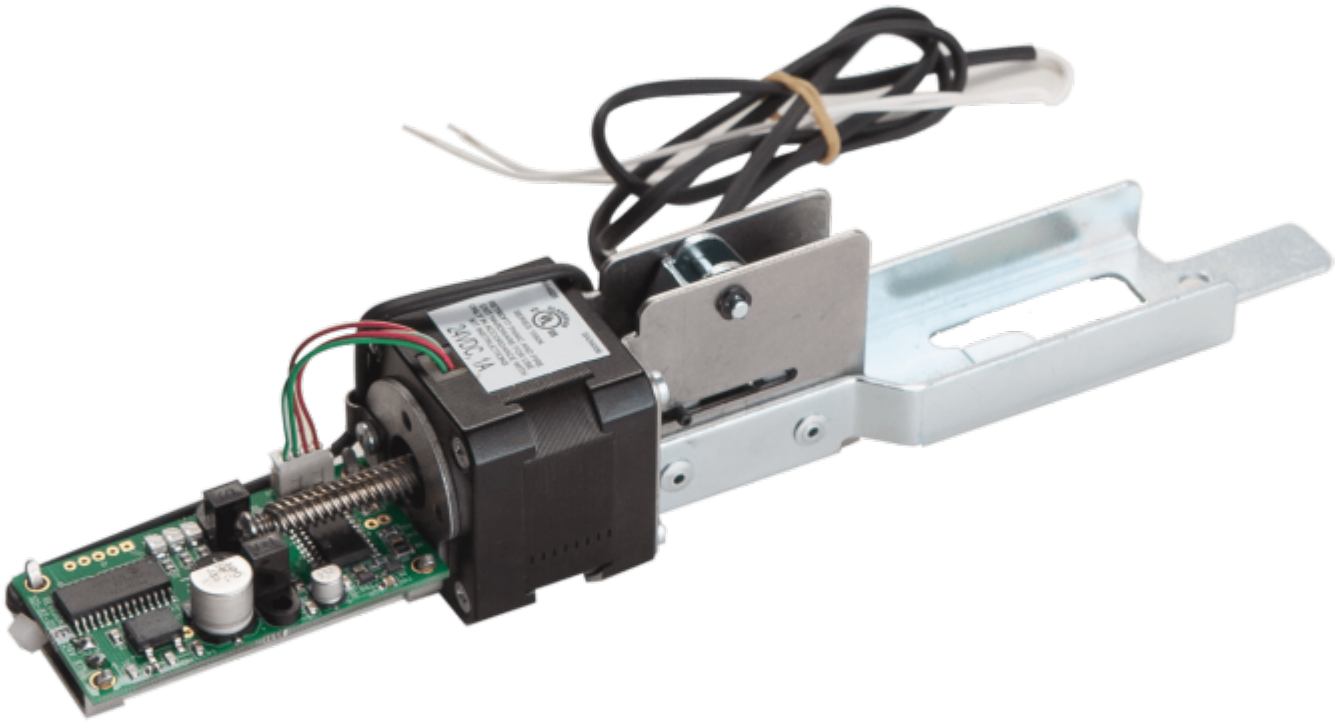

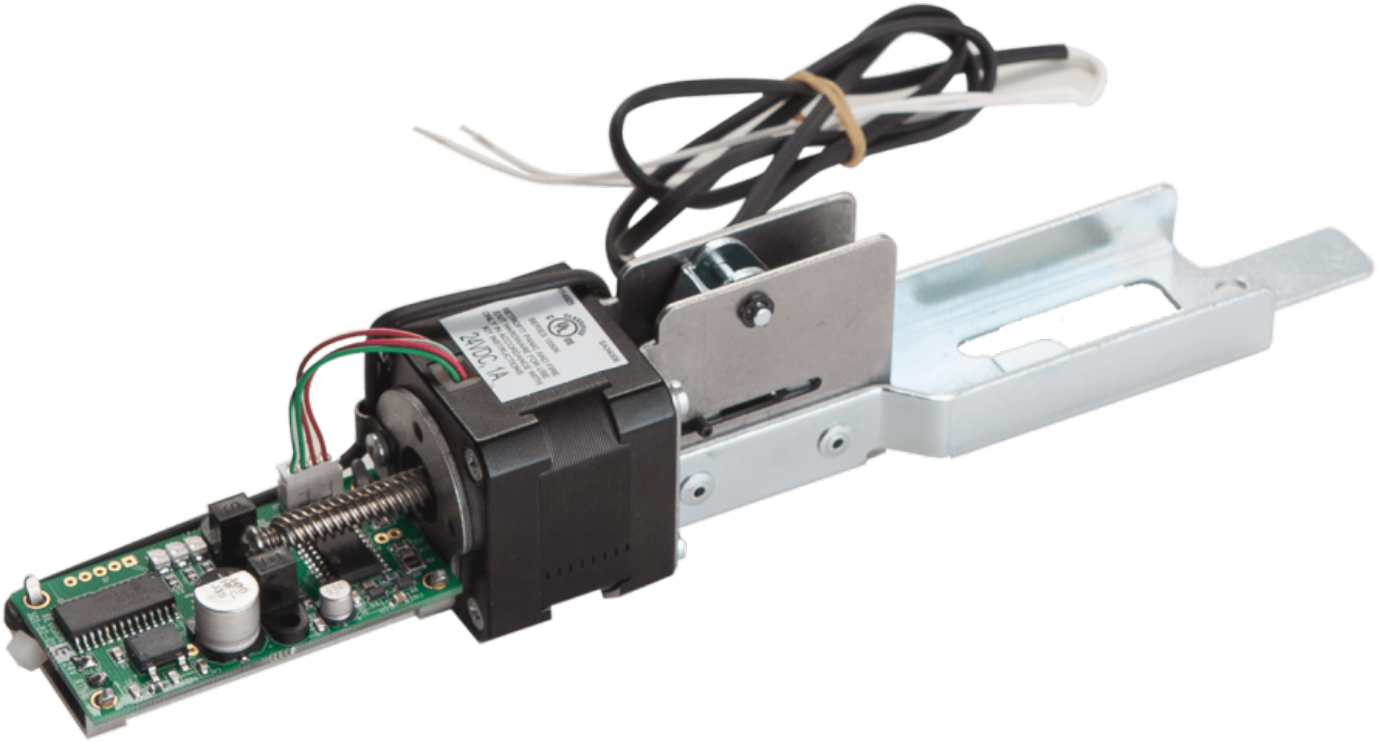

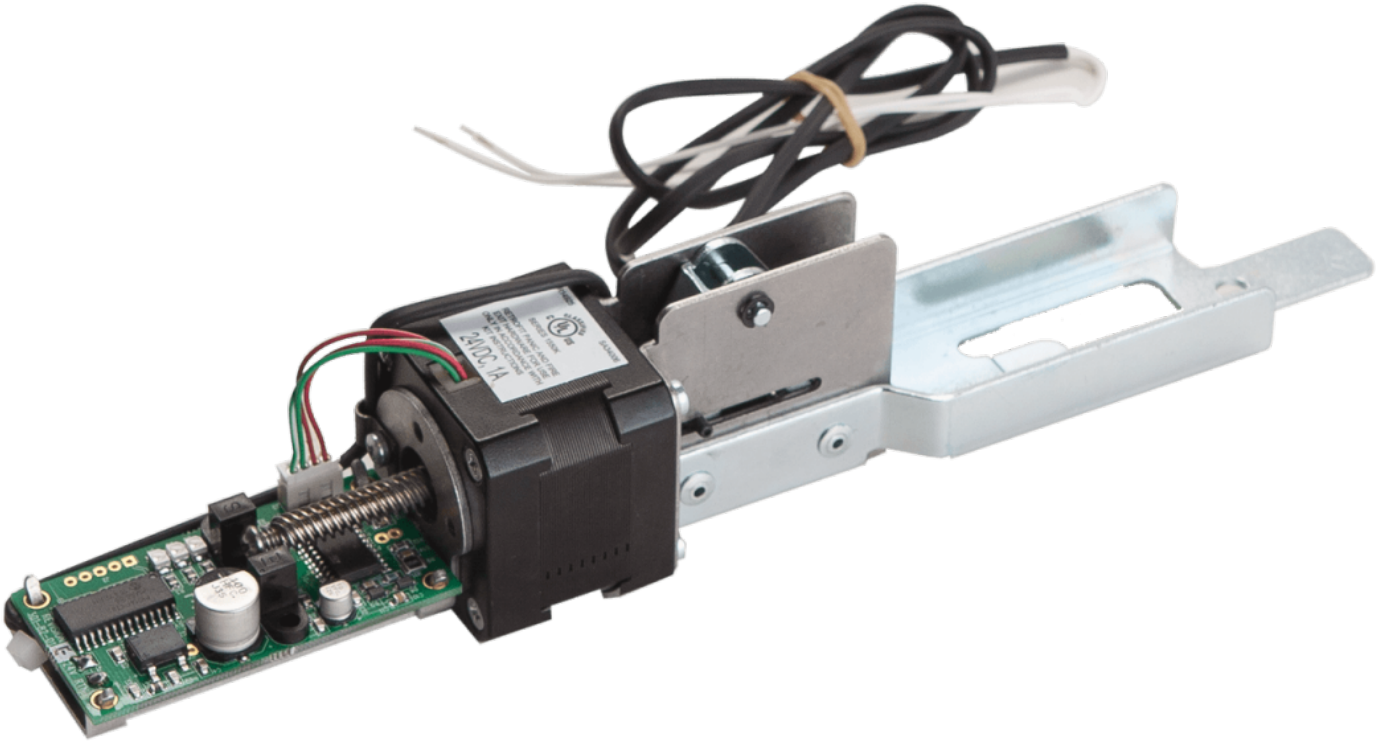

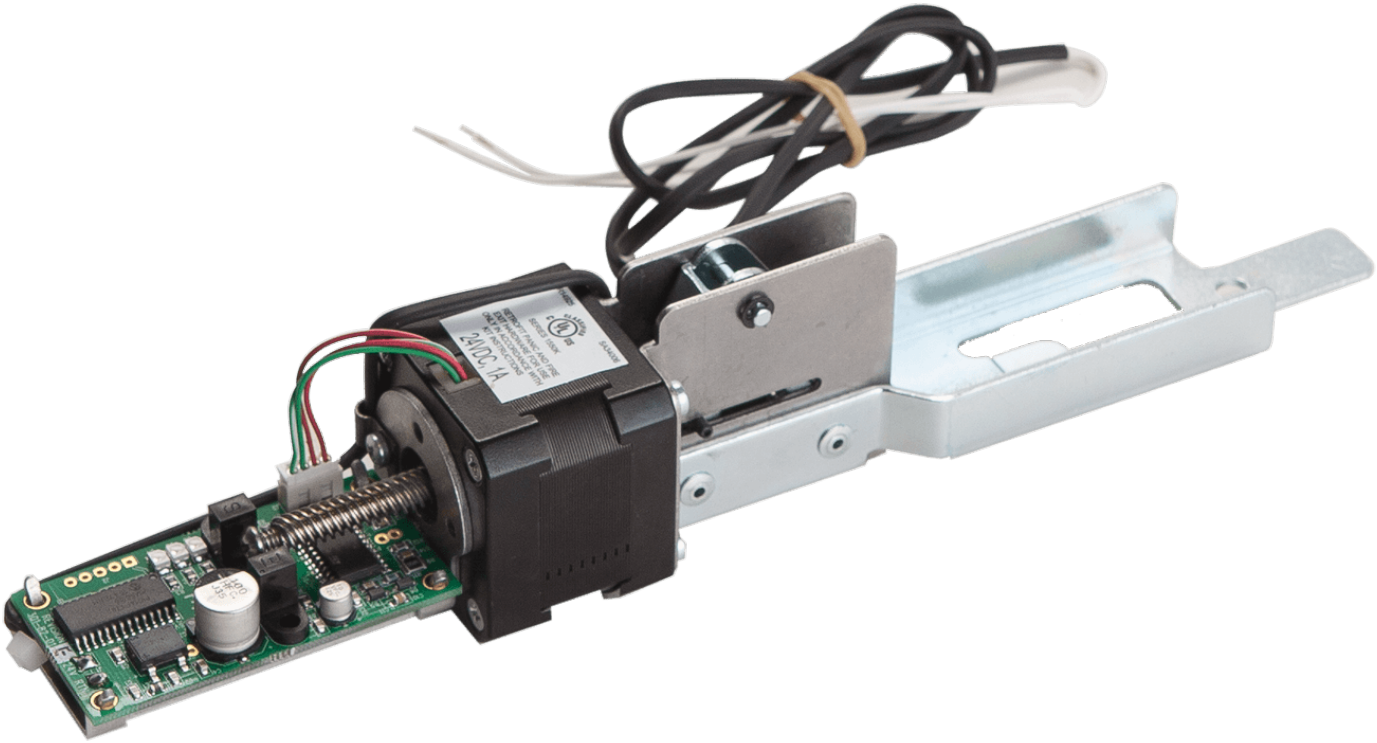



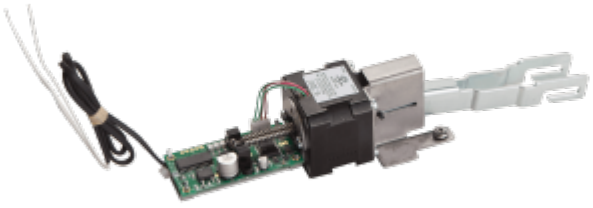

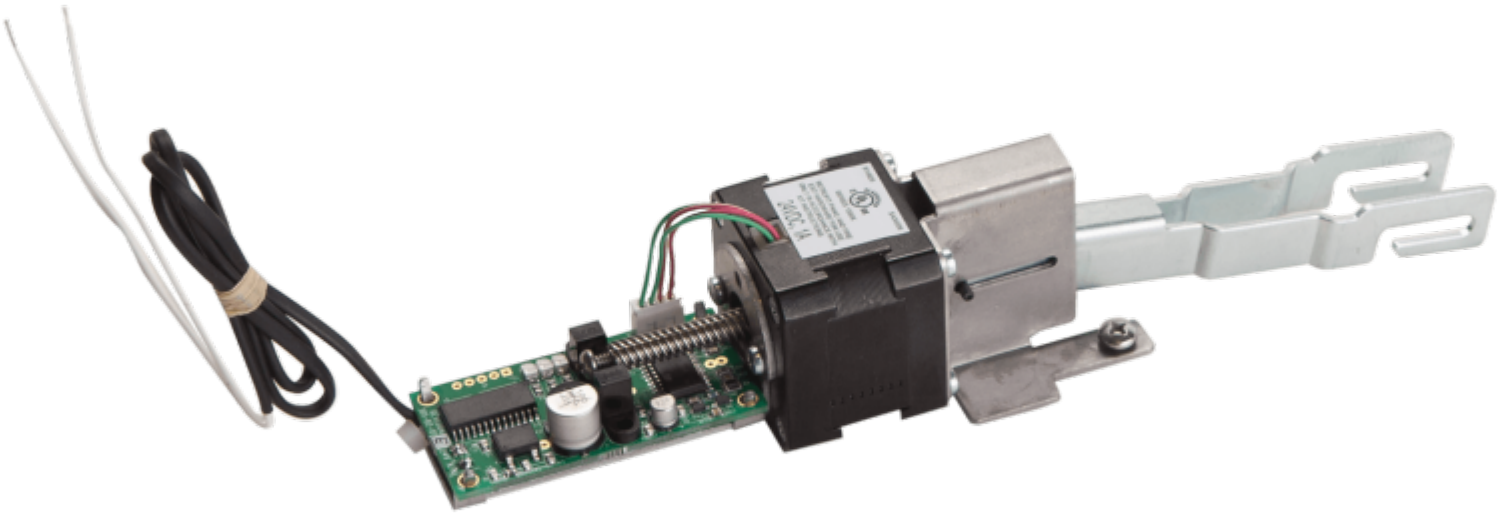

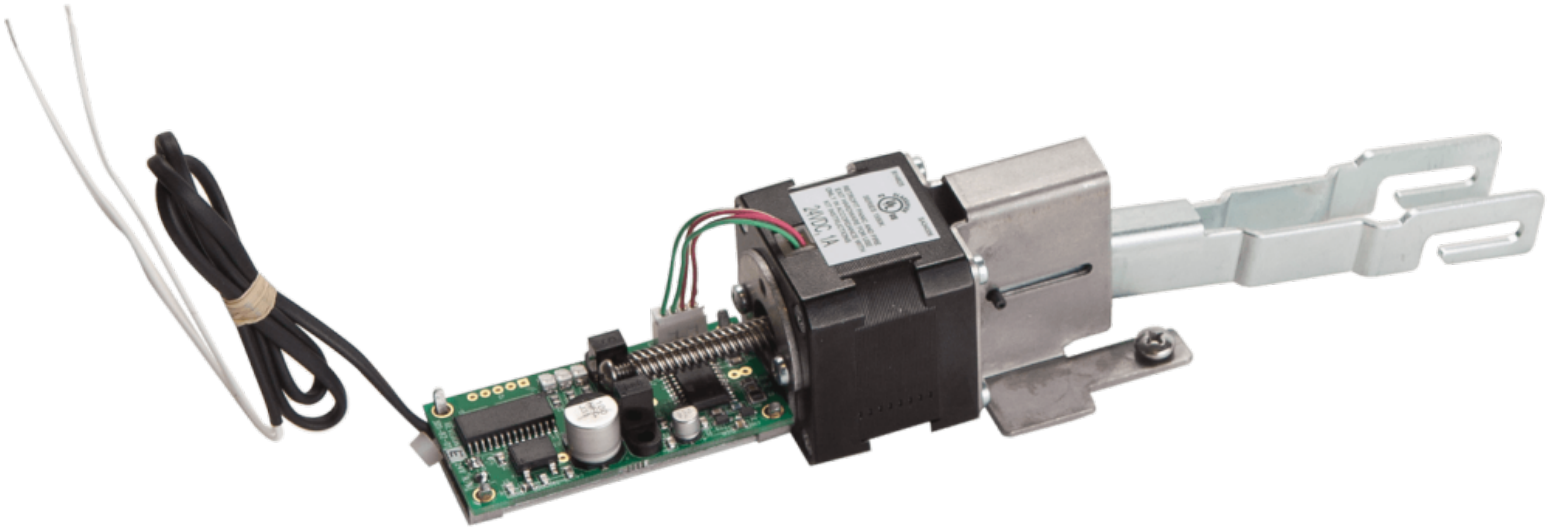

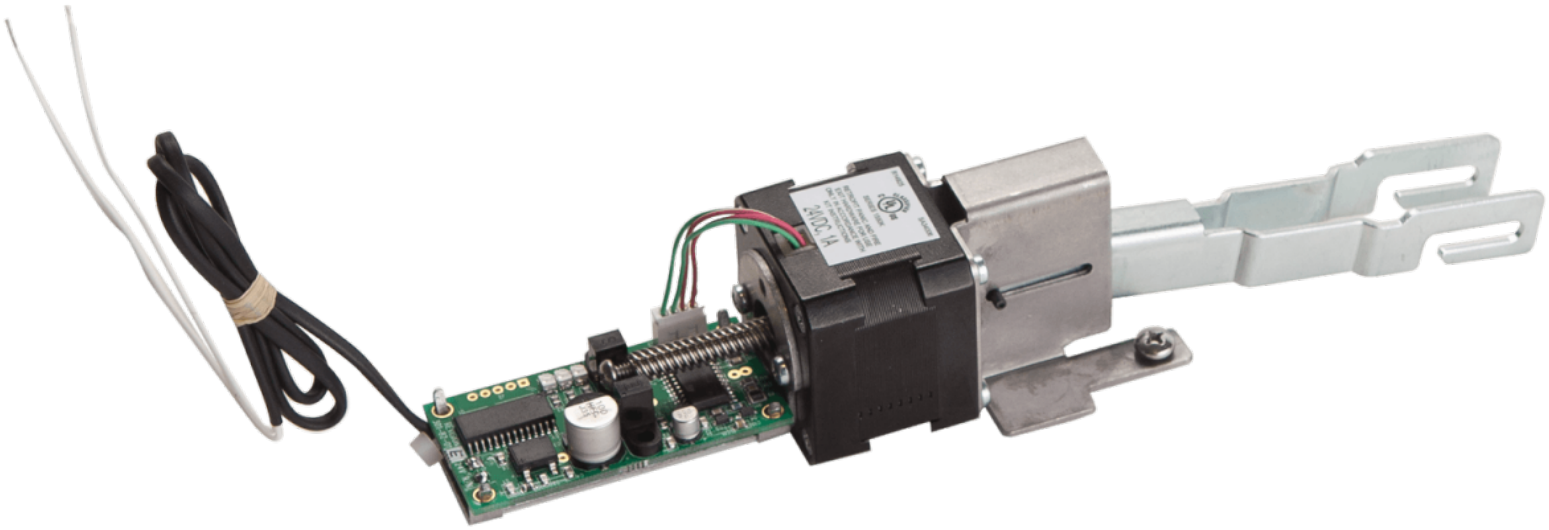

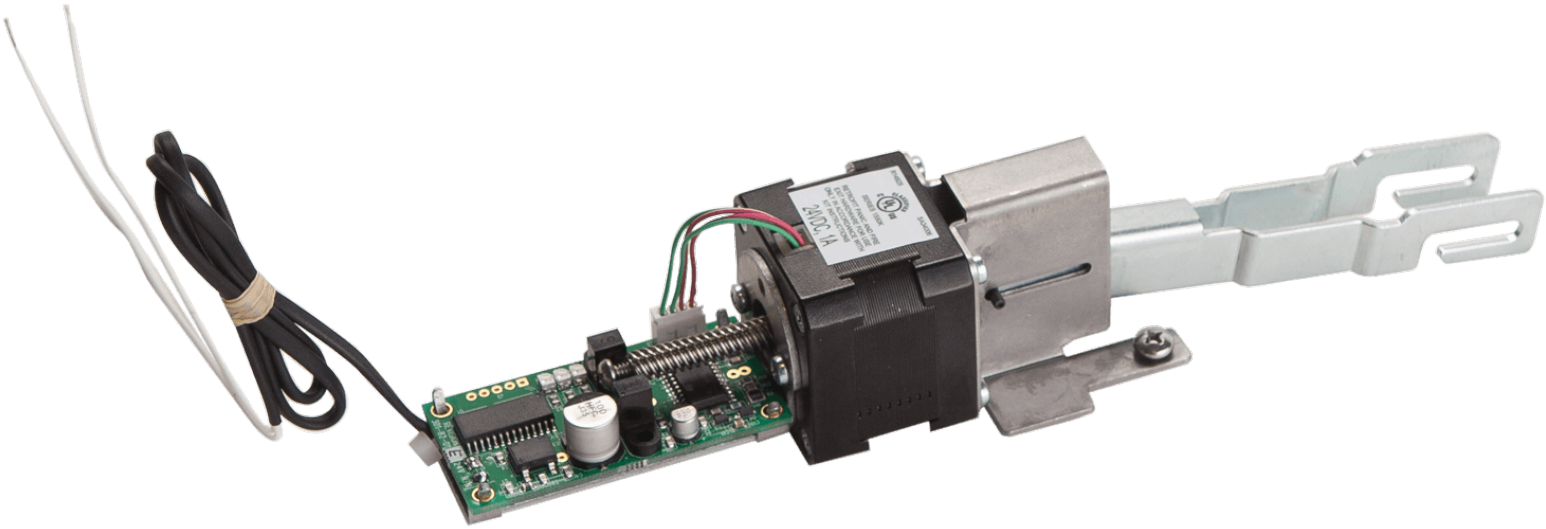








SS-5GL2


SS-5GL2







































A. For THRU BOLT mounting in hollow metal door(s) drill 11/32" (9 mm) DIA. hole thru door, enlarge hole in outside face to 1/2" (13 mm) DIA.

B. For THRU BOLT mounting in solid core wood door(s), drill 11/32" (9 mm) DIA. hole thru door(s), enlarge hole in outside face to 1/2" (13 mm) DIA. 1" (25 mm) deep.

C. For REINFORCED DOOR (Minimum 3/8" (10 mm) thickness) drill and tap thru reinforcement for 5/16-18 screw.

D. Drill for No. 14 sheet metal screws or drill and tap for 1/4"-20 machine screws.

E. Drill 7/8" (22 mm) DIA. hole thru filler (if used) and frame in either of locations marked (E) for wiring harness.

F. Using actual Magnetic Lock as template, drill and tap per STEP 12 of installation instructions.

ARMATURE LOCATION

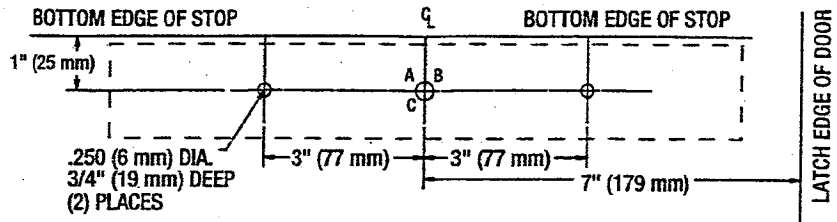

NOTE: SPRING PINS SHOULD FLOAT FREELY INSIDE OF HOLES.

MAGNETIC LOCK LOCATION

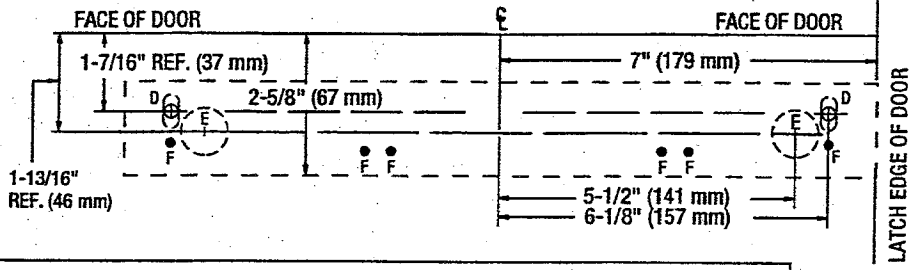

NOTE: FOR MACHINE SCREW MOUNTING, REINFORCEMENT AND STRUCTURING ARE REQUIRED TO WITHSTAND A 1200 LB (544 KG) LOAD. CLEARANCE HOLES FOR FILLER PLATE TO BE SPOTTED AT JOB SITE. CAUTION: "DO NOT ATTACH MOUNTING PLATE TO FILLER PLATE ONLY!"

MAGNETIC LOCK MOUNTING TO FRAME FIGURE 1

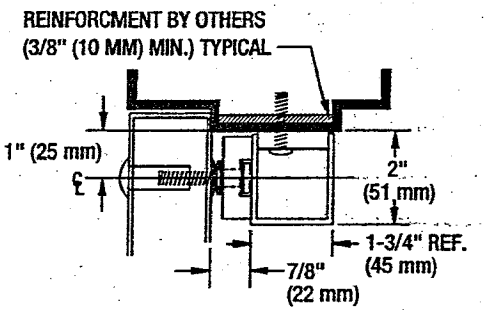

FIGURE 1A STANDARD INSTALLATION

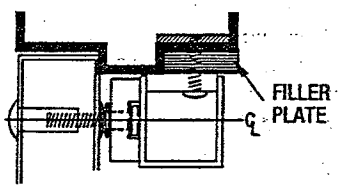

FIGURE 1B
WITH SERIES 178 FILLER PLATE

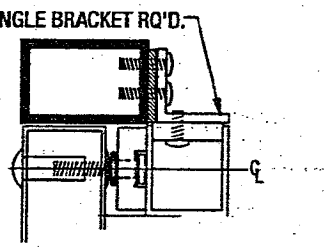

FIGURE 1C
WITH 179 SERIES ANGLE BRACKET

ARMATURE MOUNTING TO DOOR(S) FIGURE 2

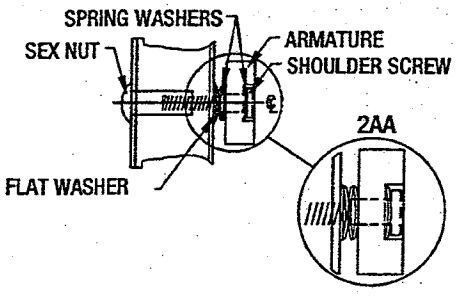

FIGURE 2A HOLLOW METAL DOOR

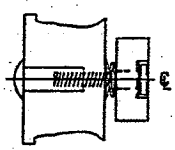

FIGURE 2B WOOD DOOR

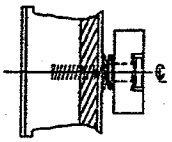

FIGURE 2C REINFORCED DOOR

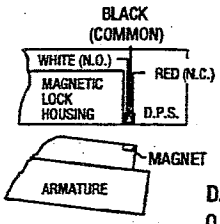

FIGURE 3

D.P.S. CONTACT RATING
0.1 AMP @ 30 VDC MAX.

WIRING FOR D.P.S (DOOR POSITION SWITCH).
DRAWING SHOWS DOOR IN OPEN POSITION

ELECTRICAL SPECIFICATIONS:	
CURRENT DRAW:	0.50 AMPS @ 12 VDC
	0.25 AMPS @ 24 VDC
WIRE COLOR CODE:	ORANGE/ORANGE (12VDC)
(NON-POLARIZED)	RED/RED (24VDC)
HOLDING FORCE:	1200 LB (544 KG)

NOTE: Use with Underwriter Laboratories Listed (ULC/UL) Compatible Power Supply

*NOTE: NOT TO SCALE

ASTERIX SECURITY
HARDWARE INTERNATIONAL INC.
7045 Tranmere Drive Unit 10
Mississagua Ontario Canada L5S 1M2
Phone: (905) 672-1245 Fax: (905) 672-1247
U.S. Phone/Fax.: (630) 350-7599

MODEL 171

MOUNTING INSTRUCTIONS FOR ASTERIX SERIES ELECTRO-MAGNETIC LOCKS

IMPORTANT! READ THOROUGHLY BEFORE ATTEMPTING INSTALLATION.
DO NOT DAMAGE OR MARK MAGNETIC LOCK OR ARMATURE FACE-MAY REDUCE HOLDING EFFICIENCY.

See Figure 1 elevation profiles to determine mounting application requirements for each individual application.

NOTE: *A 2-1/2" (64 MM) REVEAL IS REQUIRED TO ASSURE RIGID MOUNTING OF THE 171 SERIES MAGNETIC LOCK ASSEMBLY.*

STEP 1. Mark door(s) according to armature template and dimensions on reverse side.

STEP 2. Drill and prep holes in door per armature template on reverse side.

STEP 3. Gently tap (2) 3/16" (5 mm) diameter spring pins into rear side of armature(s).

NOTE: *IF MAGNETIC LOCK ASSEMBLY IS EQUIPPED WITH BDA (BUILT-IN DELAY ACTUATOR) OPTION STOP HERE AND REFER TO INSTRUCTION SHEET MAGOPT-2 FOR INSTRUCTIONS, THEN PROCEED TO STEP 5.*

STEP 4. Insert one (1) spring washer over 5/16"-18 "special" shoulder screw, insert screw through armature(s). Add three (3) conical spring washers and one (1) flat washer over shoulder screw(s). See Figure 2 details for each type of installation. All parts must be assembled properly before installing armature to door. Install complete armature assembly on door per Figure 2 details.

STEP 5. Tighten shoulder screw(s) securely with allen wrench. (Do not overtighten.)

NOTE: *ALL ARMATURES ARE NORMALLY EQUIPPED WITH A PERMANENT MAGNET ON ONE END. BE CERTAIN TO INSTALL ARMATURE SO MAGNET LINES UP WITH MAGNETIC SWITCH INSIDE HOUSING OF MAGNETIC LOCK ASSEMBLY. SEE FIGURE "3".*

STEP 6. Mark frame per magnetic lock template and dimensions on reverse side.

STEP 7. Remove housing cover of Magnetic Lock Assembly.

STEP 8. Drill and prep frame per "D" of Magnetic lock template, attach Magnetic Lock Assembly to frame using either (2) #14 sheet metal screws or (2) 1/4"-20 machine screws and toothed lock washers, tighten only enough to hold unit in place. (If filler plate is used assure that screws go thru both filler plate and frame.

STEP 9. Drill 7/8" (22 mm) diameter hole thru filler plate and frame per template for wiring harness.

STEP 10. Make all electrical connections per applicable wiring diagrams enclosed. Use wire nuts, crimp connectors or solder to assure good connections.

STEP 11. Energize Magnetic Lock Assembly; Adjust assembly so door is snug against door stop, tighten (2) preliminary screws securely.

FOR BDA (Built-in Delay Actuator) OPTION: see instruction sheet MAGOPT-2.

A. Verify that when door is closed plunger and push button are in the closed position. If proper continuity cannot be obtained, an stop washer may be required to move shoulder screw further into push button switch.

B. Energize the system with the door in the closed position. Apply pressure to door, having retracted latch bolt (if used). Verify compression of belleville washers and electrical state of push switch indicates door open mode. If electrical output of switch dictates door closed condition, the shoulder screw is adjusted to far into switch, not allowing switch to return to normal position. Stop washer may have to be removed to obtain proper operation.

C. After all adjustments have been made, verify that switch indicates both door closed and attempted exit.

For MBS (Magnetic Bond Sensor) additional wiring details see instruction sheet MAGOPT-1.

STEP 12. De-energize system. Using mounting plate as template, drill-#21 drill and tap for 10-32 screws (minimum (2) places). (See Magnetic Lock Template) Install screws and tighten securely. Re-energize system, recheck alignment of Magnetic Lock Assembly to Armature by opening and closing door(s).

STEP 13. Install Magnetic Lock housing cover.

ASTERIX SECURITY HARDWARE INTERNATIONAL INC.
7045 Tranmere Drive, Unit 10 • Mississagua, Ontario Canada L5S 1M2













MODEL 171 WITH "Z" BRACKET ASSEMBLY

MOUNTING INSTRUCTIONS FOR ASTERIX SERIES ELECTRO-MAGNETIC LOCKS

IMPORTANT! READ THOROUGHLY BEFORE ATTEMPTING INSTALLATION.
DO NOT DAMAGE OR MARK MAGNETIC LOCK OR ARMATURE FACE - MAY REDUCE HOLDING EFFICIENCY.

The Electro-Magnetic Lock Assembly mounts firmly and rigidly to the vertical face of the header on the pull side of the door. The Armature attaches to the 179 "Z" bracket assembly which is thru bolted to the door. The door and frame are flush to within 1/8" (3 mm). If the header projects more than 1/8" (3 mm) beyond the face of the door, a "special custom Z" bracket must be used in lieu of the 179. (Shimming the 179 bracket is NOT recommended.)

STEP 1. Mark door(s) and frame for drilling and tapping in accordance with template dimensions on reverse side. All measurements are to be taken with the door in the closed position.

STEP 2. Prep header for Magnetic Lock Assembly as shown on template on reverse side. Be sure header is adequately reinforced to hold mounting screws. If reinforcement has not been added, jack nuts, wingbolts or equivalent must be used. Drill hole for wiring per template.

STEP 3. Remove housing cover of Magnetic Lock Assembly. Attach mounting angle to face of header, be sure that the right angle flange is on bottom for maximum shear resistance. Bottom of flange should be flush with rabbet in frame. Use all screws and lock washers provided.

STEP 4. Prep door for "Z" bracket mounting assuring that bracket is centered on face of Magnetic Lock Assembly. All dimensions are taken from the end of the Magnetic Lock Assembly. Drill (3) 3/8" (9 mm) DIA. holes through the door per the template or drill and tap for 12-24 thread if the door has been properly reinforced. Mount the bracket to the pull side of the door.

STEP 5. Assemble Armature for mounting by pressing (2) spring pins into holes provided in one side of Armature, tap gently to firmly seat spring pins. Do not mar face of Armature. Insert (1) spring washer over shoulder screw and insert screw thru Armature as shown in details. Line up (2) spring pins with holes in "Z" bracket. Finish assembling Armature to "Z" bracket per details, assuring that the spring washers do not slip off of shoulder screw.

NOTE: *ALL ARMATURES ARE NORMALLY EQUIPPED WITH A PERMANENT MAGNET MOUNTED IN ONE END FOR ACTUATING THE DOOR POSITION SWITCH ATTACHED TO ONE END OF THE MAGNETIC LOCK ASSEMBLY. BE CERTAIN THAT BOTH MAGNETS LINE UP DURING THE INSTALLATION PROCESS. MAKE NO ATTEMPT TO REMOVE EITHER OF THESE MAGNETS.*

STEP 6. Check Armature and Magnetic Lock Assembly for proper alignment. If Armature does not quite sit against face of Magnetic Lock Assembly, a second flat washer may need to be added to Armature assembly. If door does not quite close, one of the washers may be removed.

STEP 7. Make all electrical connections.

STEP 8. Energize system and re-check alignment of Magnetic Lock Assembly and Armature, by opening and closing the door. Make any adjustments if required.

STEP 9. Install Magnetic Lock housing cover.

ASTERIX SECURITY HARDWARE INTERNATIONAL INC.
7045 Tranmere Drive, Unit 10 • Mississagua, Ontario Canada L5S 1M2

INSTALLATION TEMPLATE FOR MODEL 171 WITH "Z" BRACKET OPTION
PULL SIDE MOUNTING (STANDARD)

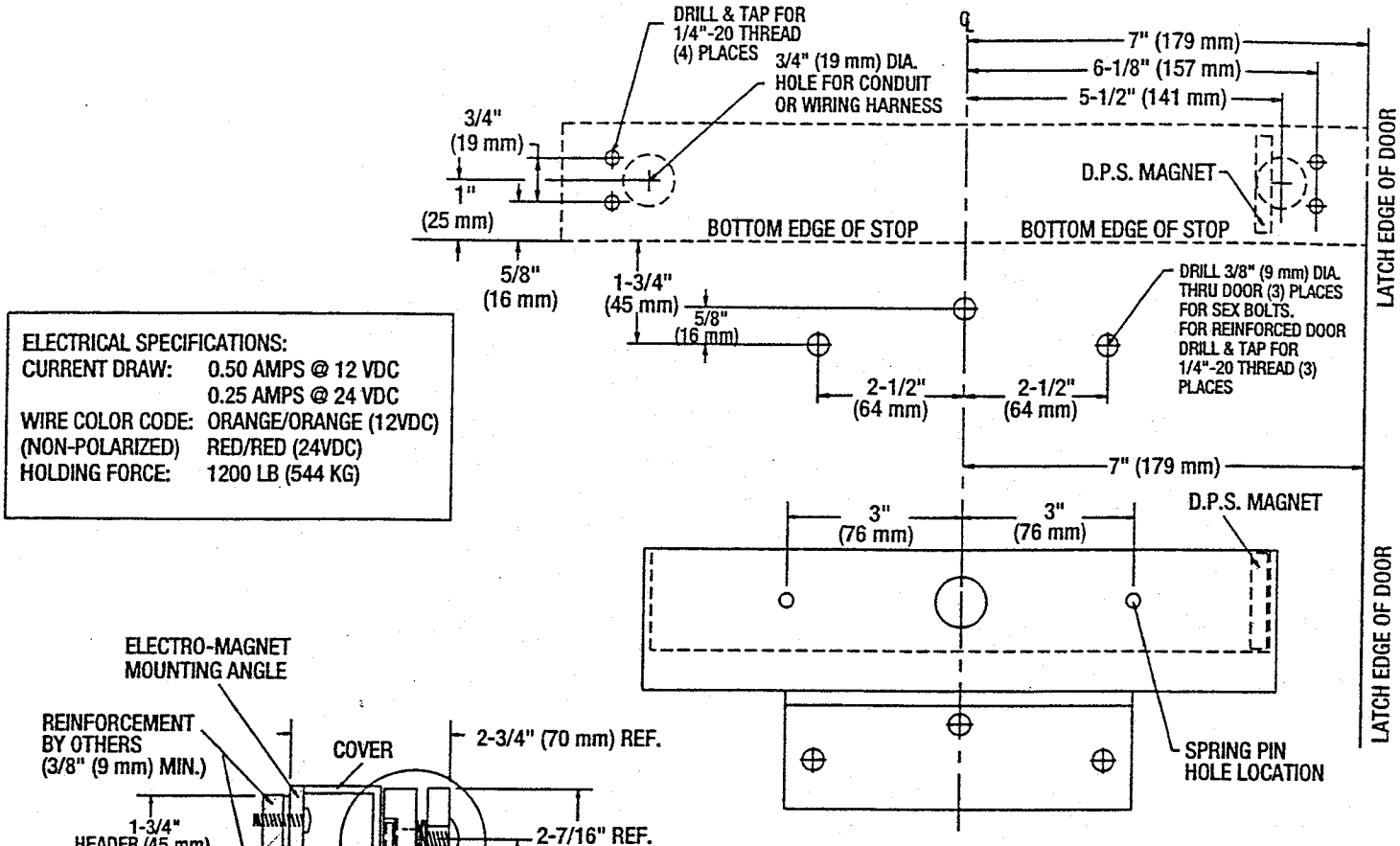

NOTE: NOT TO SCALE

ELECTRICAL SPECIFICATIONS:	
CURRENT DRAW:	0.50 AMPS @ 12 VDC
	0.25 AMPS @ 24 VDC
WIRE COLOR CODE:	ORANGE/ORANGE (12VDC)
(NON-POLARIZED)	RED/RED (24VDC)
HOLDING FORCE:	1200 LB (544 KG)

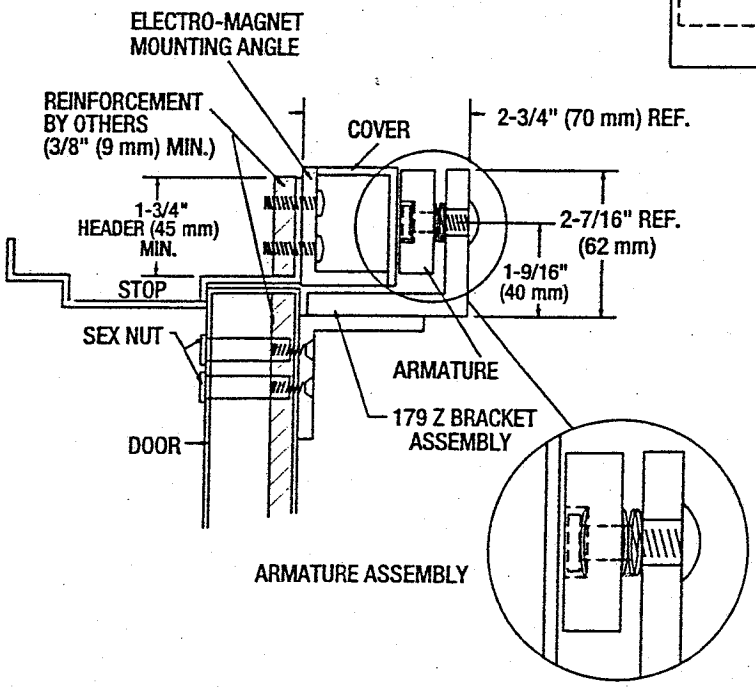

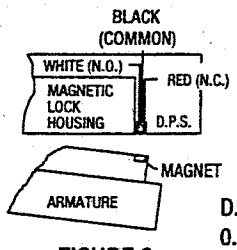

D.P.S. CONTACT RATING
0.1 AMP @ 30 VDC MAX.

FIGURE 3

WIRING FOR D.P.S (DOOR POSITION SWITCH).
DRAWING SHOWS DOOR IN OPEN POSITION

NOTE: REINFORCEMENT AND STRUCTURE IS REQUIRED TO WITHSTAND 1200 LBS. LOAD

NOTE: Use with Underwriter Laboratories Listed (ULC/UL) Compatible Power Supply

ASTERIX SECURITY
HARDWARE INTERNATIONAL INC.
7045 Tranmere Drive Unit 10
Mississagua Ontario Canada L5S 1M2
Phone: (905) 672-1245 Fax: (905) 672-1247
U.S. Phone/Fax.: (630) 350-7599



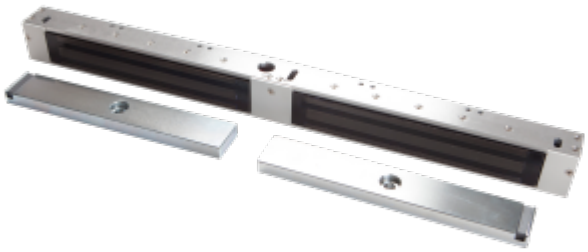

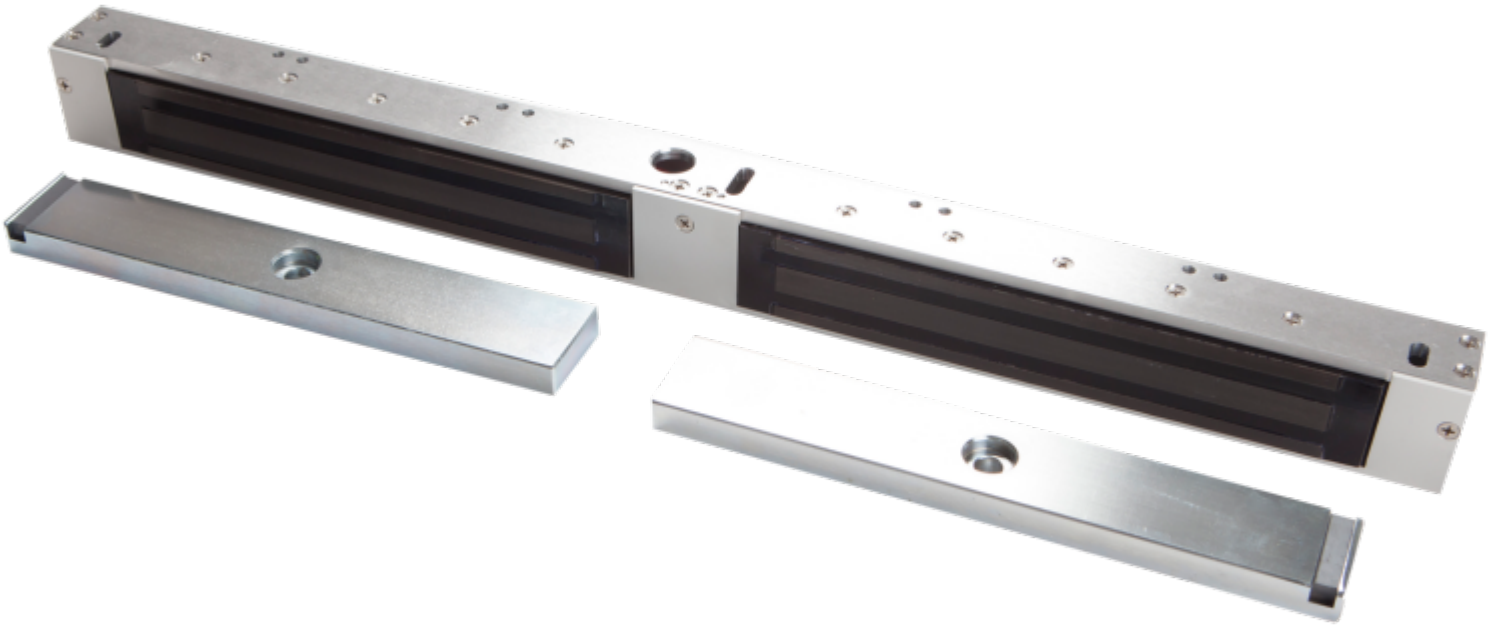

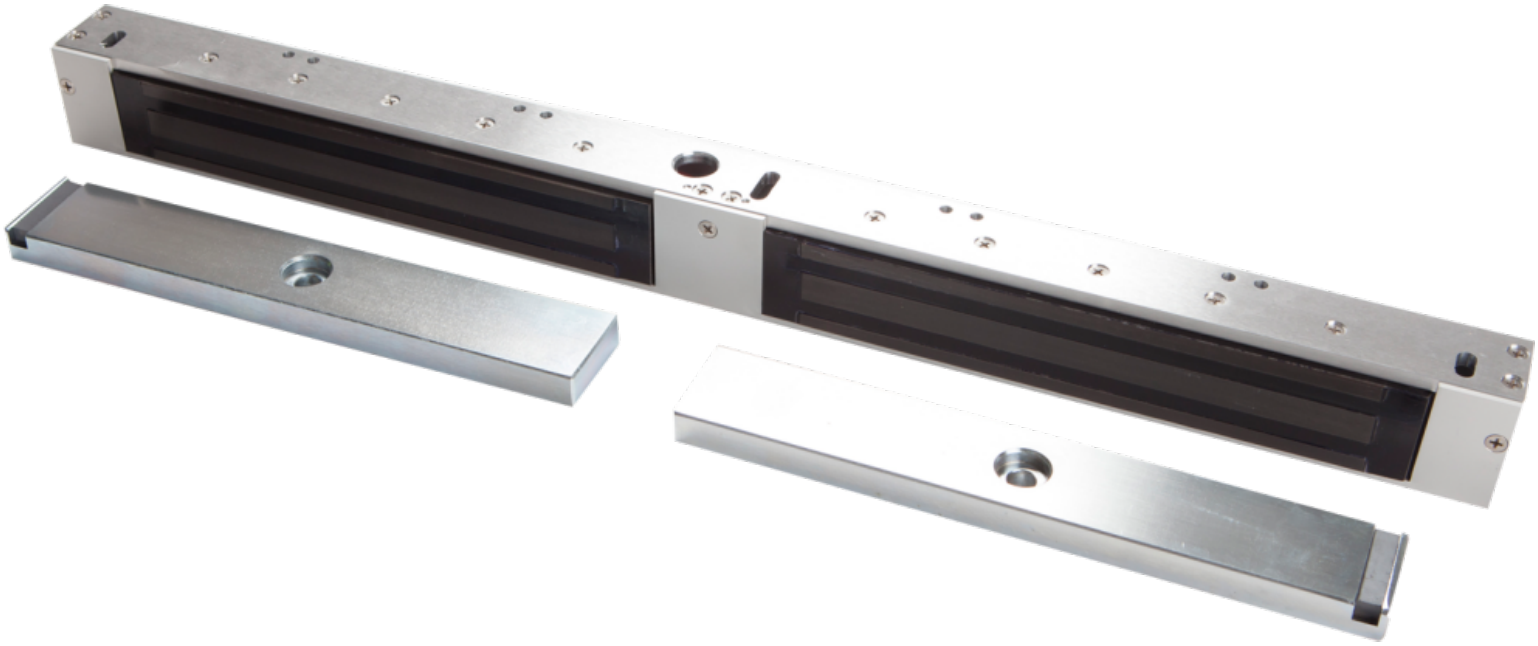

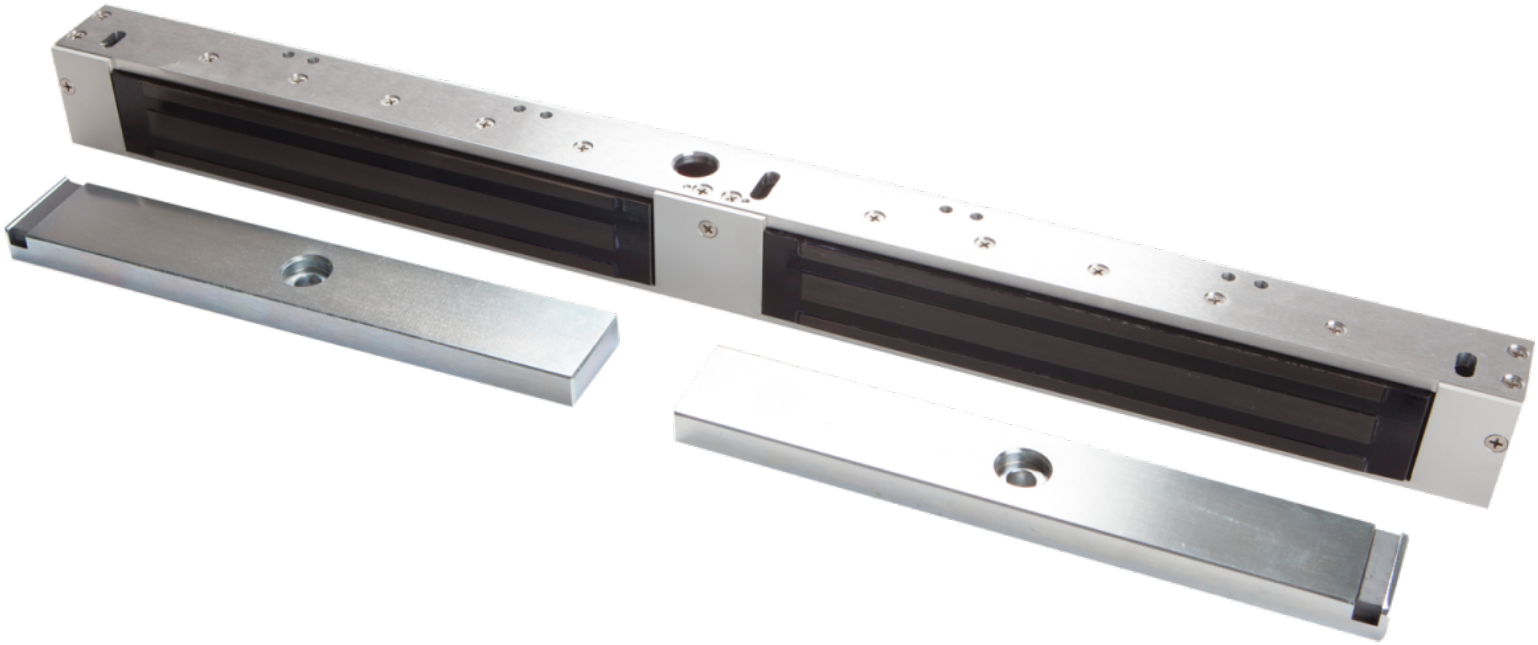

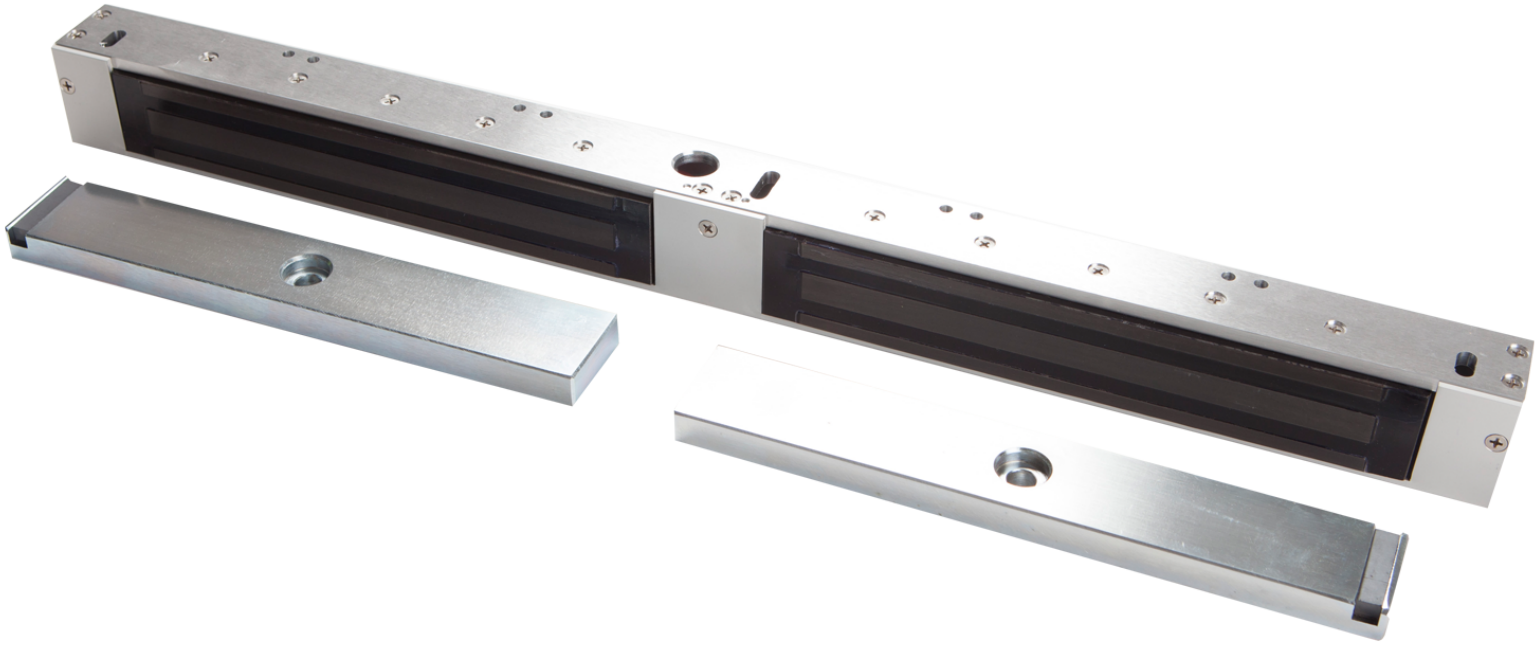

MODEL 172

MOUNTING INSTRUCTIONS FOR ASTERIX SERIES ELECTRO-MAGNETIC LOCKS

IMPORTANT! READ THOROUGHLY BEFORE ATTEMPTING INSTALLATION.
DO NOT DAMAGE OR MARK MAGNETIC LOCK OR ARMATURE FACE-MAY REDUCE HOLDING EFFICIENCY.

See Figure 1 elevation profiles to determine mounting application requirements for each individual application.

NOTE: *A 2-/2" (64 MM) REVEAL IS REQUIRED TO ASSURE RIGID MOUNTING OF THE 172 SERIES MAGNETIC LOCK ASSEMBLY.*

STEP 1. Mark door(s) according to armature template and dimensions on reverse side.

STEP 2. Drill and prep holes in door per armature template on reverse side.

STEP 3. Gently tap (2) 3/16" (5 mm) diameter spring pins into rear side of armature(s).

NOTE: *IF MAGNETIC LOCK ASSEMBLY IS EQUIPPED WITH BDA (BUILT-IN DELAY ACTUATOR) OPTION STOP HERE AND REFER TO INSTRUCTION SHEET MAGOPT-2 FOR INSTRUCTIONS, THEN PROCEED TO STEP 5.*

STEP 4. Insert one (1) spring washer over 5/16"-18 "special" shoulder screw, insert screw through armature(s). Add three (3) conical spring washers and one (1) flat washer over shoulder screw(s). See Figure 2 - details for each type of installation. All parts must be assembled properly before installing armature to door. Install complete armature assembly on door per Figure 2 details.

STEP 5. Tighten shoulder screw(s) securely with allen wrench. (Do not overtighten.)

NOTE: *ALL ARMATURES ARE NORMALLY EQUIPPED WITH A PERMANENT MAGNET ON ONE END. BE CERTAIN TO INSTALL ARMATURE SO MAGNET LINES UP WITH MAGNETIC SWITCH INSIDE HOUSING OF MAGNETIC LOCK ASSEMBLY. SEE FIGURE 3.*

STEP 6. Mark frame per magnetic lock template and dimensions on reverse side.

STEP 7. Remove housing cover of Magnetic Lock Assembly.

STEP 8. Drill and prep frame per "D" of Magnetic lock template, attach Magnetic Lock Assembly to frame using either (2) #14 sheet metal screws or (2) 1/4"-20 machine screws and toothed lock washers, tighten only enough to hold unit in place. (If filler plate is used assure that screws go thru both filler plate and frame.)

STEP 9. Drill 7/8" (22 mm) diameter. hole thru filler plate and frame per template for wiring harness.

STEP 10. Make all electrical connections per applicable wiring diagrams enclosed. Use wire nuts, crimp connectors or solder to assure good connections.

STEP 11. Energize Magnetic Lock Assembly; Adjust assembly so door is snug against door stop, tighten (2) preliminary screws securely.

FOR BDA (Built-in Delay Actuator) OPTION: See instruction sheet MAGOPT-2.

A. Verify that when door is closed plunger and push button are in the closed position. If proper continuity cannot be obtained, an additional stop washer may be required to move shoulder screw further into push button switch.

B. Energize the system with the door in the closed position. Apply pressure to door, having retracted latch bolt (if used). Verify that compression of belleville washers and electrical state of push button switch indicates door open mode. If electrical output of switch dictates door closed condition, the shoulder screw is adjusted to far into switch, not allowing switch to return to normal position. Stop washer may have to be removed to obtain proper operation.

C. After all adjustments have been made, verify that switch indicates both door closed and attempted exit.

For MBS (Magnetic Bond Sensor) additional wiring details, see instruction sheet MAGOPT-1.

STEP 12. De-energize system. Using mounting plate as template, drill-#21 drill and tap for 10-32 screws (minimum (2) places). (See Magnetic Lock Template) Install screws and tighten securely. Re-energize system, recheck alignment of Magnetic Lock Assembly to Armature by opening and closing door(s).

STEP 13. Install Magnetic Lock housing cover.

ASTERIX SECURITY HARDWARE INTERNATIONAL INC.
7045 Tranmere Drive, Unit 10 • Mississagua, Ontario Canada L5S 1M2

ARMATURE LOCATION

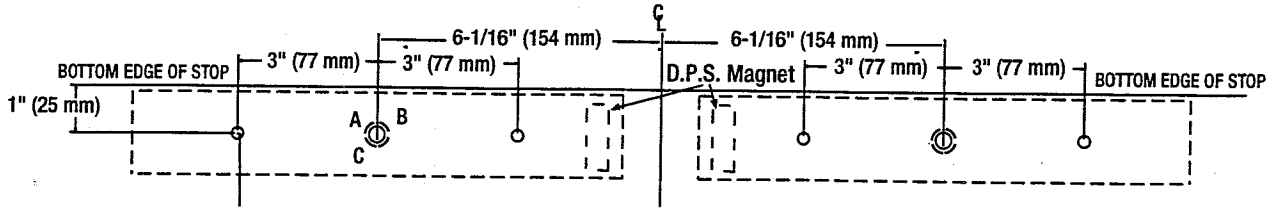

.250 (6 mm) DIA. 3/4" (19 mm) DEEP
NOTE: SPRING PINS OF (2) PLACES
EACH DOOR ARMATURE MUST FLOAT
FREELY INSIDE HOLES.

A. For THRU BOLT mounting in hollow metal door(s) drill 11/32" (9 mm) DIA. hole thru door, enlarge hole in outside face to 1/2" (13 mm) DIA.
B. For THRU BOLT mounting in solid core wood door(s), drill 11/32" (9 mm) DIA. hole thru door(s), enlarge hole in outside face to 1/2" (13 mm) DIA. 1" (25 mm) deep.
C. For REINFORCED DOOR (Minimum 3/8" (10 mm) thickness) drill and tap thru reinforcement for 5/16-18 screw.

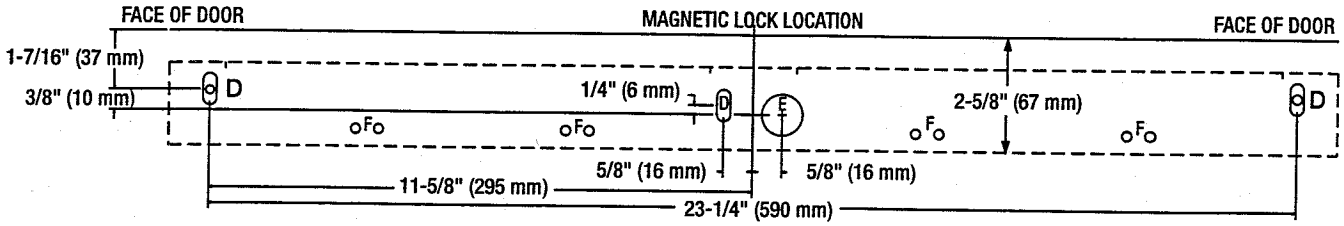

D. Drill for No. 14 sheet metal screws or drill and tap for 1/4"-20 machine screws.
E. Drill 7/8" (22 mm) DIA. hole thru filler (if used) and frame for wiring harness.
F. Using actual Magnetic Lock as template, drill and tap per STEP 12 of installation instructions.

NOTE: FOR MACHINE SCREW MOUNTING; REINFORCEMENT AND STRUCTURING ARE REQUIRED TO WITHSTAND A 1200 LB (544 KG) LOAD. CLEARANCE HOLES FOR FILLER PLATE TO BE SPOTTED AT JOB SITE. CAUTION: "DO NOT ATTACH MOUNTING PLATE TO FILLER PLATE ONLY!"

MAGNETIC LOCK MOUNTING TO FRAME FIGURE 1

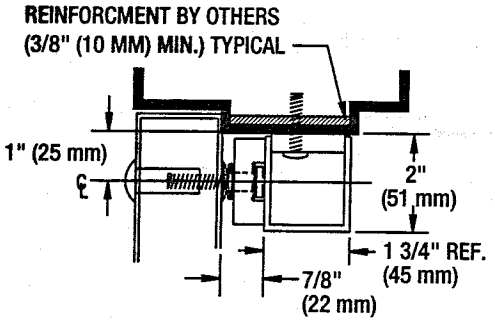

FIGURE 1A STANDARD INSTALLATION

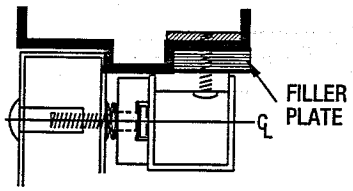

FIGURE 1B
WITH SERIES 178 FILLER PLATE

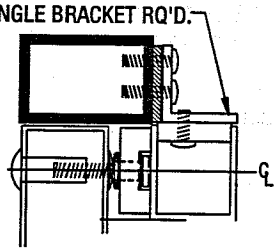

FIGURE 1C
WITH 179 SERIES ANGLE BRACKET

ARMATURE MOUNTING TO DOOR(S) FIGURE 2

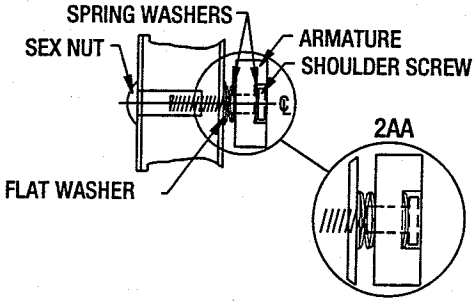

FIGURE 2A HOLLOW METAL DOOR

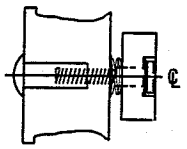

FIGURE 2B WOOD DOOR

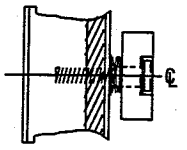

FIGURE 2C REINFORCED DOOR

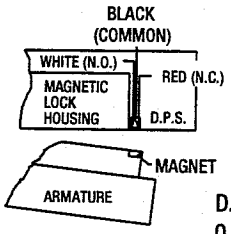

FIGURE 3

D.P.S. CONTACT RATING
0.1 AMP @ 30 VDC MAX.

WIRING FOR D.P.S (DOOR POSITION SWITCH).
DRAWING SHOWS DOOR IN OPEN POSITION

ELECTRICAL SPECIFICATIONS:	
CURRENT DRAW:	0.50 AMPS @ 12 VDC
	0.25 AMPS @ 24 VDC
WIRE COLOR CODE:	ORANGE/ORANGE (12VDC)
(NON-POLARIZED)	RED/RED (24VDC)
HOLDING FORCE:	1200 LB (544 KG)

NOTE: Use with Underwriters Laboratories Listed (ULC/UL) Compatible Power Supply

*NOTE: NOT TO SCALE

ASTERIX SECURITY
HARDWARE INTERNATIONAL INC.
7045 Tranmere Drive Unit 10
Mississagua Ontario Canada L5S 1M2
Phone: (905) 672-1245 Fax: (905) 672-1247
U.S. Phone/Fax.: (630) 350-7599

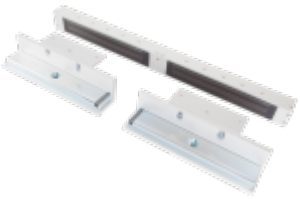











MODEL 172 WITH "Z" BRACKET ASSEMBLY

MOUNTING INSTRUCTIONS FOR ASTERIX SERIES ELECTRO-MAGNETIC LOCKS

IMPORTANT! READ THOROUGHLY BEFORE ATTEMPTING INSTALLATION.
DO NOT DAMAGE OR MARK MAGNETIC LOCK OR ARMATURE FACE-MAY REDUCE HOLDING EFFICIENCY.

The Electro-Magnetic Lock Assembly mounts firmly and rigidly to the vertical face of the header on the pull side of the door. The Armature attaches to the 179 "Z" bracket assembly which is thru bolted to the door. The door and frame are flush to within 1/8" (3 mm). If the header projects more than 1/8" (3 mm) beyond the face of the door, a "special custom Z" bracket must be used in lieu of the 179. (Shimming the 179 bracket is NOT recommended.)

STEP 1. Mark door(s) and frame for drilling and tapping in accordance with template dimensions on reverse side. All measurements are to be made with the door(s) in the closed position.

STEP 2. Prep header for Magnetic Lock Assembly as shown on template on reverse side. Be sure header is adequately reinforced to hold mounting screws. If reinforcement has not been added, jack nuts, wingbolts or equivalent must be used. Drill hole for wiring per template.

STEP 3. Remove housing cover of Magnetic Lock Assembly. Attach mounting angle to face of header, be sure that the right angle flange is on bottom for maximum shear resistance. Bottom of flange should be flush with rabbet in frame. Use all screws and lock washers provided.

STEP 4. Prep door for "Z" bracket mounting assuring that bracket is centered on face of Magnetic Lock Assembly. All dimensions must be taken from the centerline of the from end of Magnetic Lock Assembly. On a double door application all dimensions doors or mullion. Drill (3) 3/8" (9 mm) DIA. holes through the doors per per template or drill and tap for 12-24 thread if the doors have been properly reinforced. Mount the bracket to the pull side of the door.

STEP 5. Assemble Armature for mounting by pressing (2) spring pins into holes provided in one side of Armature, tap gently to firmly seat spring pins. Do not mar face of Armature. Insert (1) spring washer over shoulder screw and insert screw thru Armature as shown in details. Line up (2) spring pins with holes in "Z" bracket. Finish assembling Armature to "Z" bracket per details, assuring that the spring washers do not slip off of shoulder screw.

> **NOTE:** *ALL ARMATURES ARE NORMALLY EQUIPPED WITH A PERMANENT MAGNET MOUNTED IN ONE END FOR ACTUATING THE DOOR POSITION SWITCH ATTACHED TO ONE END OF THE MAGNETIC LOCK ASSEMBLY. BE CERTAIN THAT BOTH MAGNETS LINE UP DURING THE INSTALLATION PROCESS. MAKE NO ATTEMPT TO REMOVE EITHER OF THESE MAGNETS.*

STEP 6. Check Armature and Magnetic Lock Assembly for proper alignment. If Armature does not quite sit against face of Magnetic Lock Assembly, a second flat washer may need to be added to Armature assembly. If door does not quite close, one of the washers may be removed.

STEP 7. Make all electrical connections.

STEP 8. Energize system and re-check alignment of Magnetic Lock Assembly and Armature, by opening and closing doors. Make any adjustments if required.

STEP 9. Install Magnetic Lock housing cover.

ASTERIX SECURITY HARDWARE INTERNATIONAL INC.
7045 Tranmere Drive, Unit 10 • Mississagua, Ontario Canada L5S 1M2

INSTALLATION TEMPLATE FOR MODEL 172
WITH "Z" BRACKET OPTION PULL SIDE MOUNTING (STANDARD)

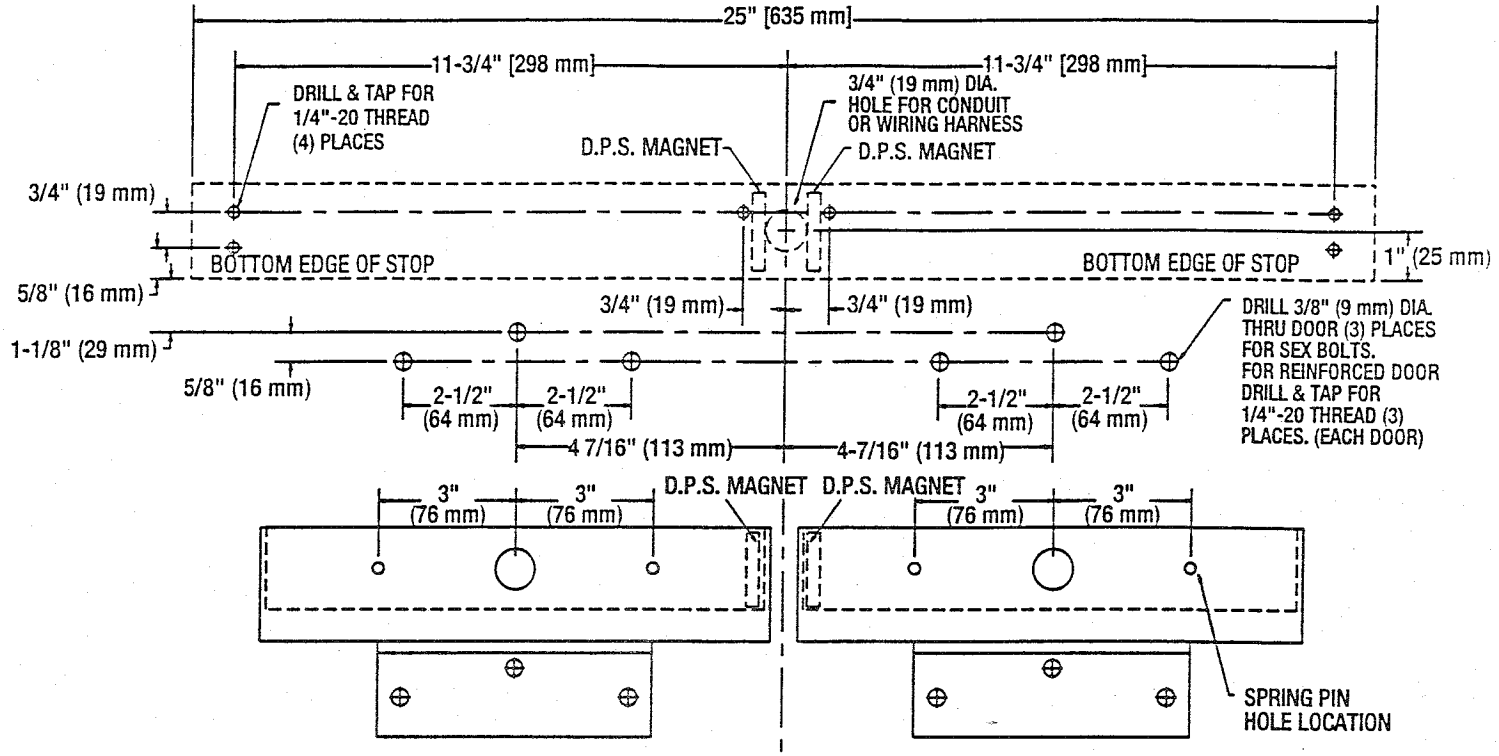

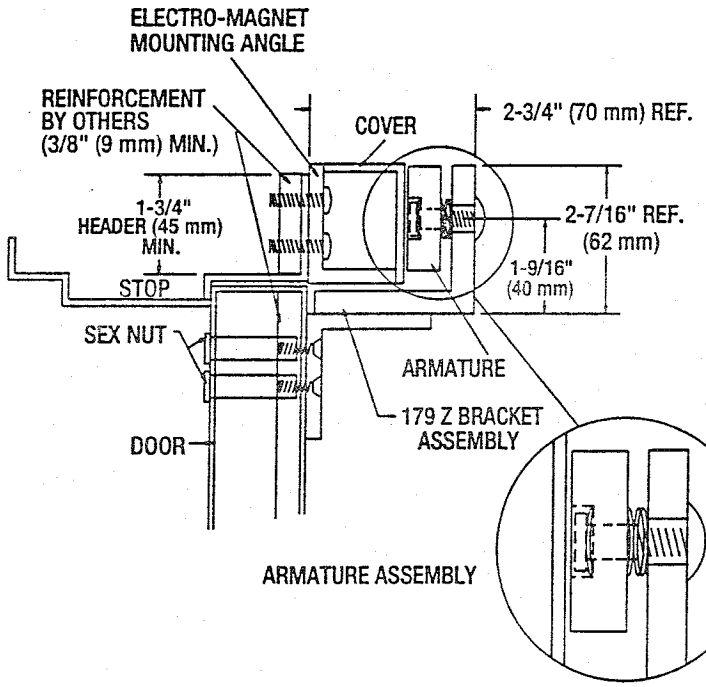

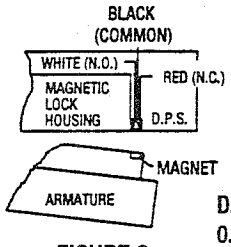

D.P.S. CONTACT RATING
0.1 AMP @ 30 VDC MAX.

FIGURE 3

WIRING FOR D.P.S (DOOR POSITION SWITCH).
DRAWING SHOWS DOOR IN OPEN POSITION

ELECTRICAL SPECIFICATIONS:	
CURRENT DRAW:	0.50 AMPS @ 12 VDC
	0.25 AMPS @ 24 VDC
WIRE COLOR CODE:	ORANGE/ORANGE (12VDC)
(NON-POLARIZED)	RED/RED (24VDC)
HOLDING FORCE:	1200 LB (544 KG)

NOTE: REINFORCEMENT AND STRUCTURE IS REQUIRED TO WITHSTAND 1200 LB (544 KG) LOAD

NOTE: Use with Underwriter Laboratories Listed (ULC/UL) Compatible Power Supply

NOTE: NOT TO SCALE

ASTERIX SECURITY
HARDWARE INTERNATIONAL INC.
7045 Tranmere Drive Unit 10
Mississagua Ontario Canada L5S 1M2
Phone: (905) 672-1245 Fax: (905) 672-1247
U.S. Phone/Fax.: (630) 350-7599

AB170 SERIES
MORTISED DOOR/FRAME

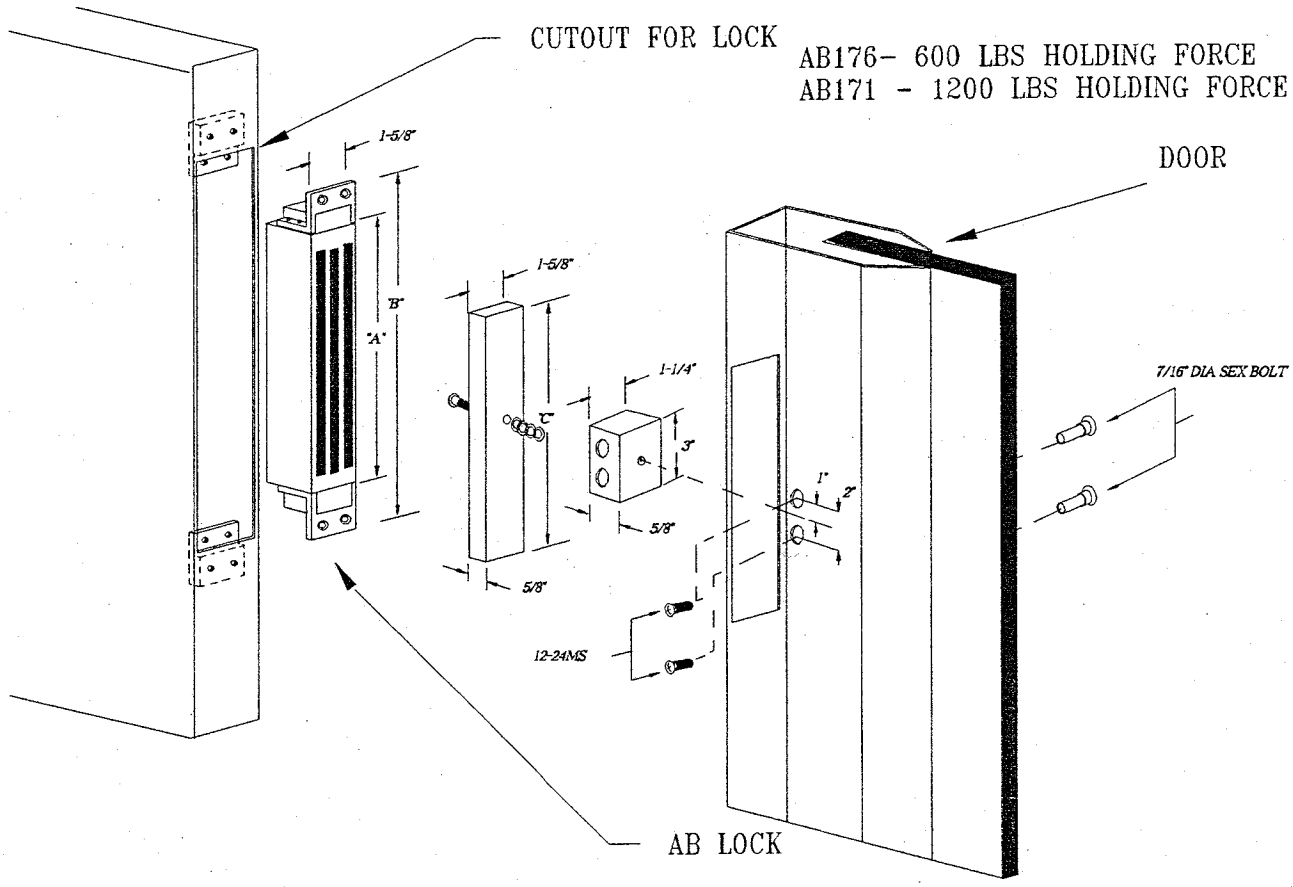

LOCK MODEL	"A"	"B"	"C"
AB171	10-1/2"	12-1/2"	10-1/2"
AB176	6-7/8"	9"	6-1/2"

ELECTRICAL SPECIFICATIONS:
0.25 AMP • 24VDC
0.50 AMP • 12VDC

ASTERIX

ASTERIX SECURITY HARDWARE INT'L
7045 TRANMERE DR. UNIT 10
MISSISSAUGA ONT. L5S 1M2
TEL:(905)672 1245
FAX:(905)672 1247

AB176- 600 LBS HOLDING FORCE
AB171 - 1200 LBS HOLDING FORCE

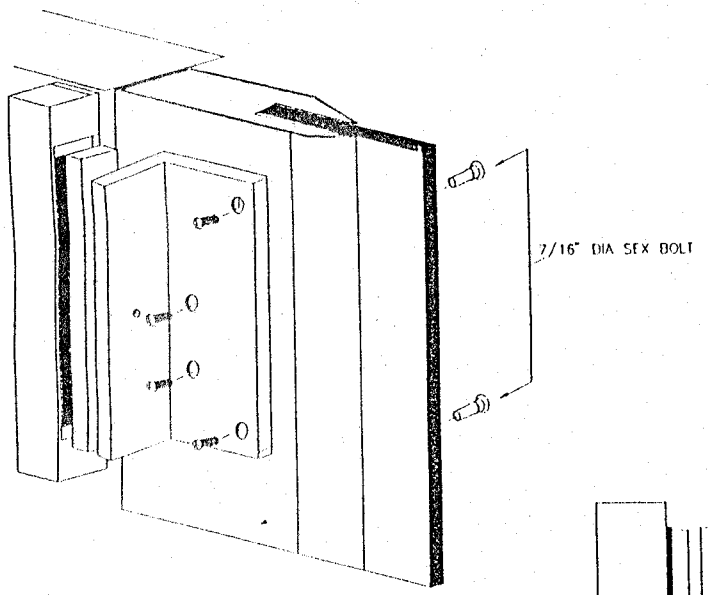

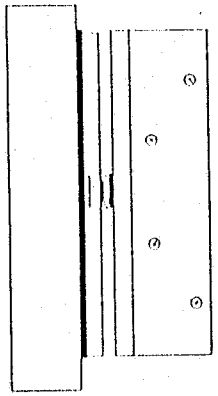

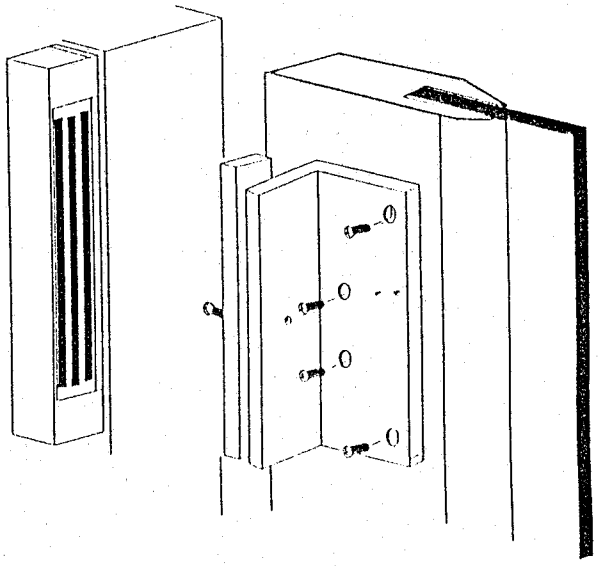

LOCK MODEL	"A"	"B"	"C"
AB171	10-1/2"	12-1/2"	10-1/2"
AB176	6-7/8"	9"	6-1/2"

ASTERIX SECURITY HARDWARE INT'NL INC.
7045 TRANMERE DR. UNIT 10
MISSISSAUGA, ONTARIO, CANADA L5S-1M2
TEL:(416)-672-1245 FAX:(416)-672-1247

DWG NAME: AB171-MORTISE		
DATE:	SCALE:	DWN BY:
DWG NO.: AB176/1		CHD BY:













A. For THRU BOLT mounting in hollow metal door(s) drill 11/32" (9 mm) DIA. hole thru door, enlarge hole in outside face to 1/2" (13 mm) DIA.
B. For THRU BOLT mounting in solid core wood door(s), drill 11/32" (9 mm) DIA. hole thru door(s), enlarge hole in outside face to 1/2" (13 mm) DIA. 1" (25 mm) deep.
C. For REINFORCED DOOR (Minimum 3/8" (10 mm) thickness) drill and tap thru reinforcement for 5/16-18 screw.
D. Drill for No. 14 sheet metal screws or drill and tap for 1/4"-20 machine screws.
E. Drill 7/8" (22 mm) DIA. hole thru filler (if used) and frame in either of locations marked (E) for wiring harness.
F. Using actual Magnetic Lock as template, drill and tap per STEP 12 of installation instructions.

ARMATURE LOCATION

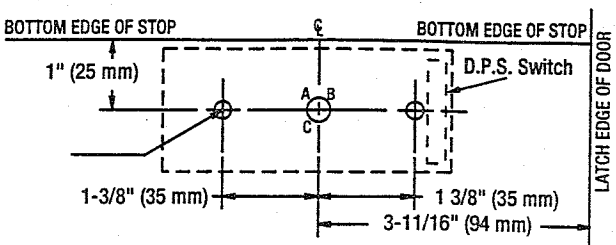

MAGNETIC LOCK LOCATION

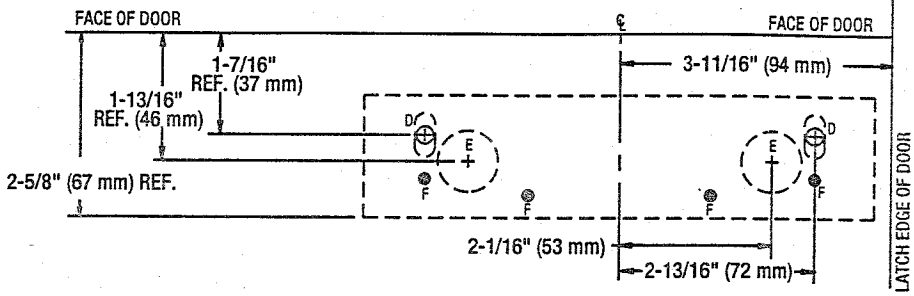

NOTE: FOR MACHINE SCREW MOUNTING; REINFORCEMENT AND STRUCTURING ARE REQUIRED TO WITHSTAND A 300 LB (136 KG) LOAD. CLEARANCE HOLES FOR FILLER PLATE TO BE SPOTTED AT JOB SITE. CAUTION: "DO NOT ATTACH MOUNTING PLATE TO FILLER PLATE ONLY!"

MAGNETIC LOCK MOUNTING TO FRAME FIGURE 1

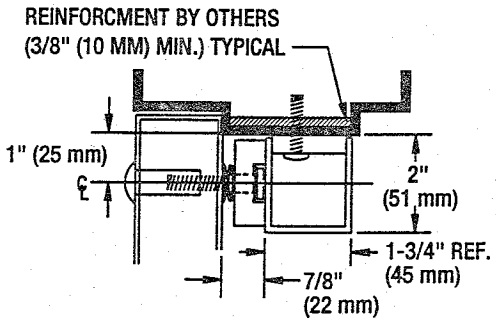

FIGURE 1A STANDARD INSTALLATION

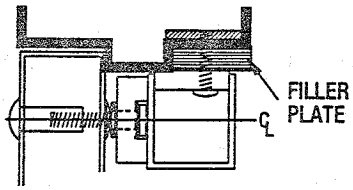

FIGURE 1B
WITH SERIES 178 FILLER PLATE

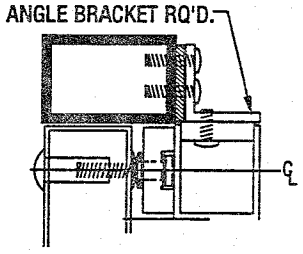

FIGURE 1C
WITH 179 SERIES ANGLE BRACKET

ARMATURE MOUNTING TO DOOR(S) FIGURE 2

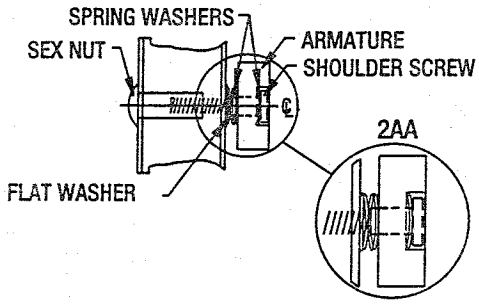

FIGURE 2A HOLLOW METAL DOOR

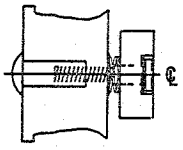

FIGURE 2B WOOD DOOR

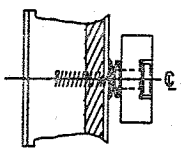

FIGURE 2C REINFORCED DOOR

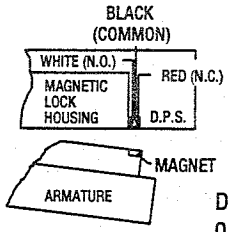

FIGURE 3

D.P.S. CONTACT RATING
0.1 AMP @ 30 VDC MAX.

WIRING FOR D.P.S (DOOR POSITION SWITCH).
DRAWING SHOWS DOOR IN OPEN POSITION

ELECTRICAL SPECIFICATIONS:	
CURRENT DRAW:	0.50 AMPS @ 12 VDC
	0.25 AMPS @ 24 VDC
WIRE COLOR CODE:	ORANGE/ORANGE (12VDC)
(NON-POLARIZED)	RED/RED (24VDC)
HOLDING FORCE:	300 LB (136 KG)

NOTE: Use with Underwriters Laboratories Listed (ULC/UL) Compatible Power Supply

ASTERIX SECURITY
HARDWARE INTERNATIONAL INC.
7045 Tranmere Drive Unit 10
Mississagua Ontario Canada L5S 1M2
Phone: (905) 672-1245 Fax: (905) 672-1247
U.S. Phone/Fax.: (630) 350-7599

*NOTE: NOT TO SCALE

MODEL 173

MOUNTING INSTRUCTIONS FOR ASTERIX SERIES ELECTRO-MAGNETIC LOCKS

IMPORTANT! READ THOROUGHLY BEFORE ATTEMPTING INSTALLATION.
DO NOT DAMAGE OR MARK MAGNETIC LOCK OR ARMATURE FACE-MAY REDUCE HOLDING EFFICIENCY.

See Figure 1 elevation profiles to determine mounting application requirements for each individual application.

NOTE: *A 2-1/2" (64 MM) REVEAL IS REQUIRED TO ASSURE RIGID MOUNTING OF THE 173 SERIES MAGNETIC LOCK ASSEMBLY.*

STEP 1. Mark door(s) according to armature template and dimensions on reverse side.

STEP 2. Drill and prep holes in door per armature template on reverse side.

STEP 3. Gently tap (2) 3/16" (5 mm) DIA. spring pins into rear side of armature(s).

NOTE: *IF MAGNETIC LOCK ASSEMBLY IS EQUIPPED WITH BDA (BUILT-IN DELAY ACTUATOR) OPTION STOP HERE AND REFER TO INSTRUCTION SHEET MAGOPT-2 FOR INSTRUCTIONS, THEN PROCEED TO STEP 5.*

STEP 4. Insert one (1) spring washer over 5/16"-18 "special" shoulder screw, insert screw through armature(s). Add three (3) conical spring washers and one (1) flat washer over shoulder screw(s). See Figure 2 - details for each type of installation. All parts must be assembled properly before installing armature to door. Install complete armature assembly on door per Figure 2 details.

STEP 5. Tighten shoulder screw(s) securely with allen wrench. (Do not overtighten.)

NOTE: *ALL ARMATURES ARE NORMALLY EQUIPPED WITH A PERMANENT MAGNET ON ONE END. BE CERTAIN TO INSTALL ARMATURE SO MAGNET LINES UP WITH MAGNETIC SWITCH INSIDE HOUSING OF MAGNETIC LOCK ASSEMBLY. SEE FIGURE 3. MAKE NO ATTEMPT TO REMOVE THIS MAGNET, MAY CAUSE DAMAGE TO UNIT.*

STEP 6. Mark frame per magnetic lock template and dimensions on reverse side.

STEP 7. Remove housing cover of Magnetic Lock Assembly.

STEP 8. Drill and prep frame per "D" of Magnetic lock template, attach Magnetic Lock Assembly to frame using either (2) #14 sheet metal screws or (2) 1/4"-20 machine screws and toothed lock washers, tighten only enough to hold unit in place. If filler plate is used, assure that screws go thru both filler plate and frame.

STEP 9. Drill 7/8" (22 mm) DIA. hole thru filler plate and frame per template for wiring harness.

STEP 10. Make all electrical connections per applicable wiring diagrams enclosed. Use wire nuts, crimp connectors or solder to assure good connections.

STEP 11. Energize Magnetic Lock Assembly; Adjust assembly so door is snug against door stop, tighten (2) preliminary screws securely.

FOR BDA (Built-in Delay Actuator) OPTION: (See instruction sheet MAGOPT-2)

A. Verify that when door is closed plunger and push button are in the closed position. If proper continuity cannot be obtained, an additional stop washer may be required to move shoulder screw further into push button switch.

B. Energize the system with the door in the closed position. Apply pressure to door, having retracted latch bolt (if used). Verify that compression of belleville washers and electrical state of push button switch indicates door open mode. If electrical output of switch indicates door closed condition, the shoulder screw is adjusted to far into switch, not allowing switch to return to normal position. Stop washer may have to be removed to obtain proper operation.

C. After all adjustments have been made, verify that switch indicates both door closed and attempted exit.

For MBS (Magnetic Bond Sensor) additional wiring details, see instruction sheet MAGOPT-1.

STEP 12. De-energize system. Using mounting plate as template, drill-#21 drill and tap for 10-32 screws (minimum (2) places). (See Magnetic Lock Template) Install screws and tighten securely. Re-energize system, recheck alignment of Magnetic Lock Assembly to Armature by opening and closing door(s).

STEP 13. Install Magnetic Lock housing cover.

ASTERIX SECURITY HARDWARE INTERNATIONAL INC.
7045 Tranmere Drive, Unit 10 • Mississagua, Ontario Canada L5S 1M2

MODEL 176S
MOUNTING INSTRUCTIONS FOR
ASTERIX SERIES ELECTRO-MAGNETIC LOCKS

IMPORTANT ! READ THOROUGHLY BEFORE ATTEMPTING INSTALLATION.
DO NOT DAMAGE OR MARK MAGNETIC LOCK OR ARMATURE FACE- MAY REDUCE HOLDING EFFICIENCY.

See Figure 1 elevation profiles to determine mounting application requirements for each individual application.

NOTE: *A 2-21/2" (64)mm reveal is required to assure rigid mounting of the 176 series magnetic lock assembly.*

STEP 1 . Mark door(s) according to armature template and dimensions on reverse side.

SIDE 2. Drill and prep holes in door per armature template on reverse side.

STEP 3. Gently tap (2) 3-16" (5mm) diameter springs pins into rear side of armature(s).

NOTE: *If magnetic lock assembly is equipped with bda (built-in delay actuator) option stop here and refer to instruction sheet magopt-2 for instructions, then proceed to step 5.*

STEP 4. Insert one (1) spring washer over 5/16-18 special shoulder screw, insert screw through armature(s). Add three(3) conical spring washers and one (1) flat washer over shoulder shrew(s) . See figure 2 - details for each type of to door . Install complete armature assembly on door per figure 2 details.

STEP 5. Tighten shoulder screws(s) securely with allen wrench. (do not overtighten.)

STEP 6. Mark frame for magnetic lock template and dimensions on reverse side.

STEP 7. Remove housing cover of magnetic lock assembly.

STEP 8. Drill and prep frame per d of magnetic lock template, attach magnetic lock assembly to frame using either (2) #14 sheet metal screws or (2) 1/4-20 machine screws and toothed lock washers, tighten only enough to hold unit place. (if filler plate is used, assure that screws go through both filler plate and frame.

STEP 9. Drill 7/8" (22mm) dia hole thru filler plate and frame per template for wiring harness.

STEP 10 . Make all electrical connections per applicable wiring diagrams enclosed. Use wire nuts, crimp connectors or solder to assure good connections.

STEP 11. Energize magnetic lock assembly: adjust assembly so door is snug against door stop, tighten (2) preliminary screws securely.

For BDA (Built -in Delay Actuator) OPTION: (See instruction sheet MAGOPT-2)

A. Verify that when door is closed plunger and push button are in the closed position. If proper continuity cannot be obtained, an additional stop washer may be required to move shoulder screw further into push button switch.

B. Energize the system with the door in the closed position. Apply pressure to door, having retracted latch bolt (if used). Verify that compression of belleville washers and electrical state of push button switch indicates door open mode. If electrical output of switch indicates door closed condition, the shoulder screw is adjusted to far into switch, not allowing switch to return to normal position. Stop washer may have to be removed to obtain proper operation.

C. After all adjustments have been made, verify that switch indicates both door closed and attempted exit.

For MBS (Magnetic Bond Sensor) additional wiring details see instruction sheet MAGOPT-1

STEP 12. De-energize system using mounting plate as template, drill and tap for 10-32 screws (minimum (2) places). (see magnetic lock template) install screws and tighten securely . Re-energize system, recheck alignment of magnetic lock assembly to armature by opening and closing door(s).

STEP 13. Install magnetic lock housing cover.

ASTERIX SECURITY HARDWARE INTERNATIONAL INC.
7045 Tranmere Drive. Unit 10. Mississauga, Ontario, Canada L5S 1M2

LEFT HAND DOOR INSTALLATION

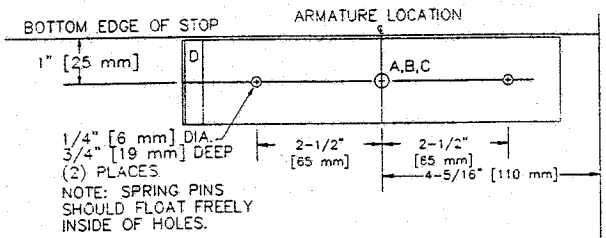

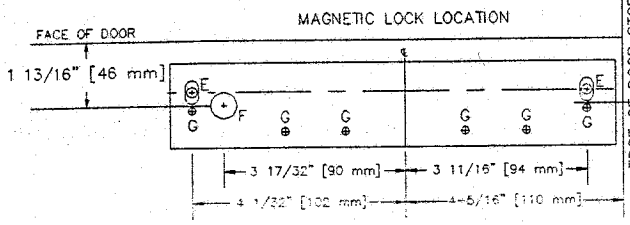

RIGHT HAND DOOR INSTALLATION

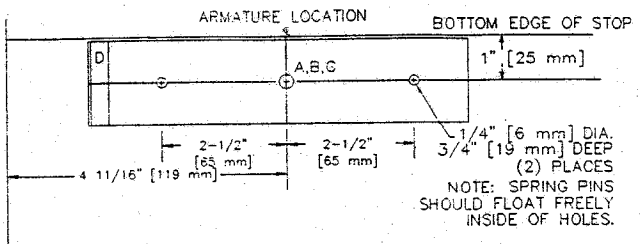

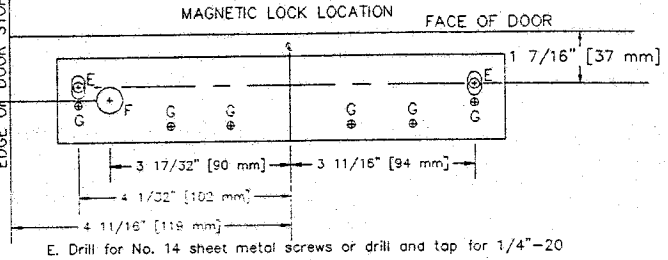

A. For THRU BOLT mounting in hollow metal door(s) drill 11/32" (9 mm) DIA. hole thru door, enlarge hole in outside face to 1/2" (13 mm) DIA. thru door, enlarge hole in outside face to 1/2" (13 mm) DIA.

B. For THRU BOLT mounting in solid core wood door(s), drill 11/32" (9 mm) DIA. hole thru door, enlarge hole in outside face to 1/2" (13 mm) DIA. 1" (25 mm) deep.

C. For REINFORCED DOOR (Minimum 3/8" (10 mm) thickness) drill and tap thru reinforcement for 5/16–18 screw.

D. Permanent magnet location. Insure that this magnet is aligned with the door position switch (conduit entry side) of the electo–magnet.

E. Drill for No. 14 sheet metal screws or drill and tap for 1/4"–20 machine screws.

F. Drill 7/8" (22 mm) DIA. hole thru filler (if used) and frame for wiring harness.

G. Using optional magnetic lock mounting plate, drill and tap per installation instructions for #10-32 machine screw.

NOTE:
FOR MACHINE SCREW MOUNTING; REINFORCEMENT AND STRUCTURING ARE REQUIRED TO WITHSTAND A 600 LB (272 KG) LOAD. CLEARANCE HOLES FOR FILLER PLATE TO BE SPOTTED AT JOB SITE. CAUTION: "DO NOT ATTACH MOUNTING PLATE TO FILLER PLATE ONLY!"

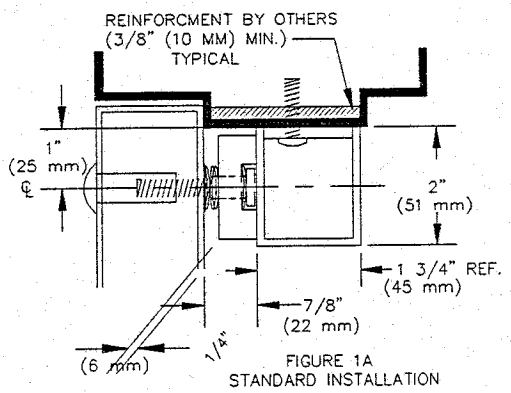

FIGURE 1A
STANDARD INSTALLATION

MAGNETIC LOCK MOUNTING TO FRAME
FIGURE 1

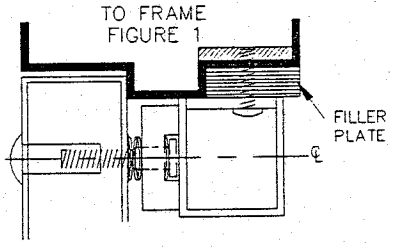

FIGURE 1B
WITH SERIES 178
FILLER PLATE

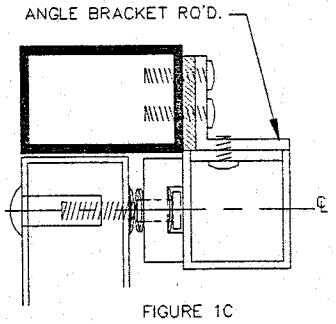

FIGURE 1C
WITH 179 SERIES
ANGLE BRACKET

ARMATURE MOUNTING TO DOOR(S)
FIGURE 2

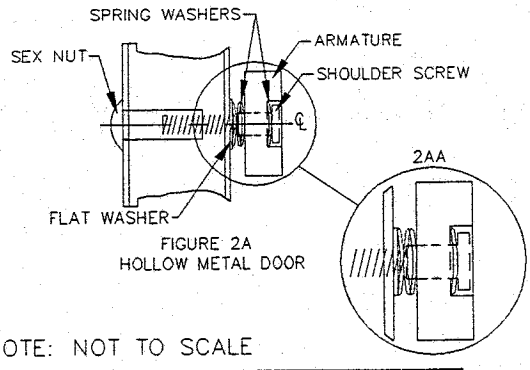

FIGURE 2A
HOLLOW METAL DOOR

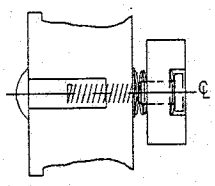

FIGURE 2B
WOOD DOOR

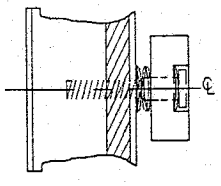

FIGURE 2C
REINFORCED DOOR

*NOTE: NOT TO SCALE

ELECTRICAL SPECS:	
CURRENT DRAW:	0.50 AMPS @ 12 VDC 0.25 AMPS @ 24 VDC
WIRE COLOR CODE: (NON–POLARIZED)	ORANGE/ORANGE (12VDC) RED/RED (24VDC)
HOLDING FORCE:	600 LB (272 KG)

D.P.S.
FIGURE 3

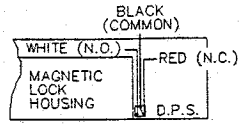

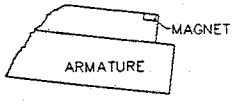

CONTACT RATING
0.1 AMP @ 30 VDC MAX.

WIRING FOR D.P.S.
(DOOR POSITION SWITCH)
DRAWING SHOWS DOOR
IN OPEN POSITION



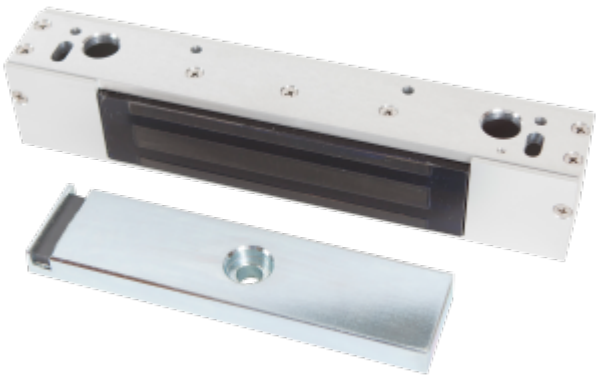









MODEL 175

MOUNTING INSTRUCTIONS FOR ASTERIX SERIES ELECTRO-MAGNETIC LOCKS

IMPORTANT! READ THOROUGHLY BEFORE ATTEMPTING INSTALLATION.
DO NOT DAMAGE OR MARK MAGNETIC LOCK OR ARMATURE FACE-MAY REDUCE HOLDING EFFICIENCY.

See Figure 1 elevation profiles to determine mounting application requirements for each individual application.

NOTE: *A 2-1/2" (64 MM) REVEAL IS REQUIRED TO ASSURE RIGID MOUNTING OF THE 175 SERIES MAGNETIC LOCK ASSEMBLY.*

STEP 1. Mark door(s) according to armature template and dimensions on reverse side.

STEP 2. Drill and prep holes in door per armature template on reverse side.

STEP 3. Gently tap (2) 3/16" (5 mm) DIA. spring pins into rear side of armature(s).

STEP 4. Insert one (1) spring washer over 5/16"-18 "special" shoulder screw, insert screw through armature(s). Add three (3) conical spring washers and one (1) flat washer over shoulder screw(s). See Figure 2 - details for each type of installation. All parts must be assembled properly before installing armature to door. Install complete armature assembly on door per Figure 2 details.

STEP 5. Tighten shoulder screw(s) securely with allen wrench. (Do not overtighten.)

NOTE: *ALL ARMATURES ARE NORMALLY EQUIPPED WITH A PERMANENT MAGNET ON ONE END. BE CERTAIN TO INSTALL ARMATURE SO MAGNET LINES UP WITH MAGNETIC SWITCH INSIDE HOUSING OF MAGNETIC LOCK ASSEMBLY. SEE FIGURE 3.*

STEP 6. Mark frame per magnetic lock template and dimensions on reverse side.

STEP 7. Remove housing cover of Magnetic Lock Assembly.

STEP 8. Drill and prep frame per "D" of Magnetic lock template, attach Magnetic Lock Assembly to frame using either (2) #14 sheet metal screws or (2) 1/4"-20 machine screws and toothed lock washers, tighten only enough to hold unit in place. If filler plate is used, assure that screws go thru both filler plate and frame.

STEP 9. Drill 7/8" (22 mm) DIA. hole thru filler plate and frame per template for wiring harness.

STEP 10. Make all electrical connections per applicable wiring diagrams enclosed. Use wire nuts, crimp connectors or solder to assure good connections.

STEP 11. Energize Magnetic Lock Assembly; Adjust assembly so door is snug against door stop, tighten (2) preliminary screws securely.

STEP 12. De-energize system. Using mounting plate as template, drill-#21 drill and tap for 10-32 screws (minimum (2) places). (See Magnetic Lock Template) Install screws and tighten securely. Re-energize system, recheck alignment of Magnetic Lock Assembly to Armature by opening and closing door(s).

STEP 13. Install Magnetic Lock housing cover.

ASTERIX SECURITY HARDWARE INTERNATIONAL INC.
7045 Tranmere Drive, Unit 10 • Mississagua, Ontario Canada L5S 1M2

A. For THRU BOLT mounting in hollow metal door(s) drill 11/32" (9 mm) DIA. hole thru door, enlarge hole in outside face to 1/2" (13 mm) DIA.

B. For THRU BOLT mounting in solid core wood door(s), drill 11/32" (9 mm) DIA. hole thru door(s), enlarge hole in outside face to 1/2" (13 mm) DIA. 1" (25 mm) deep.

C. For REINFORCED DOOR (Minimum 3/8" (10 mm) thickness) drill and tap thru reinforcement for 5/16-18 screw.

D. Drill for No. 14 sheet metal screws or drill and tap for 1/4"-20 machine screws.

E. Drill 7/8" (22 mm) DIA. hole thru filler (if used) and frame in either of locations marked (E) for wiring harness.

F. Using actual Magnetic Lock as template, drill and tap per STEP 12 of installation instructions.

ARMATURE LOCATION

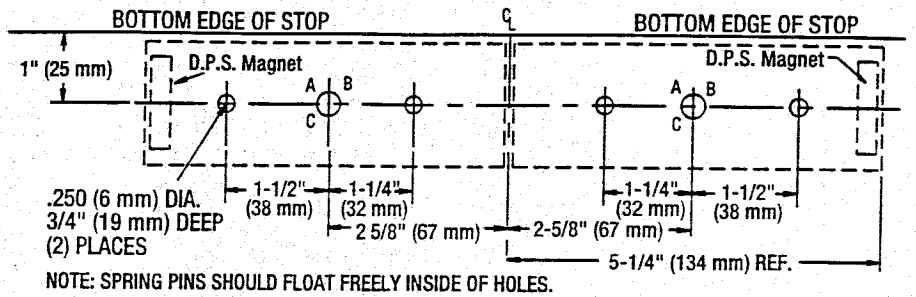

NOTE: SPRING PINS SHOULD FLOAT FREELY INSIDE OF HOLES.

MAGNETIC LOCK LOCATION

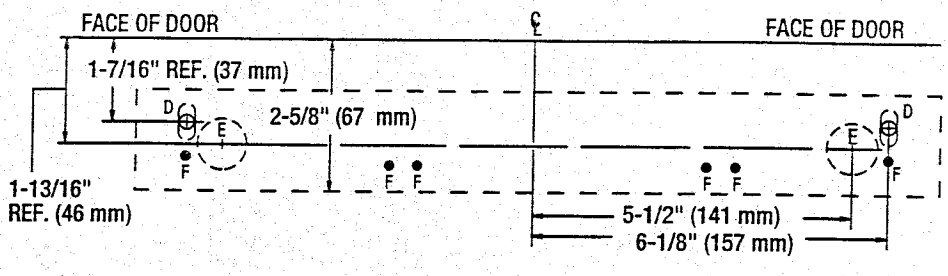

NOTE: FOR MACHINE SCREW MOUNTING; REINFORCEMENT AND STRUCTURING ARE REQUIRED TO WITHSTAND A 600 LB (272 KG) LOAD. CLEARANCE HOLES FOR FILLER PLATE TO BE SPOTTED AT JOB SITE. CAUTION: "DO NOT ATTACH MOUNTING PLATE TO FILLER PLATE ONLY!"

MAGNETIC LOCK MOUNTING TO FRAME FIGURE 1

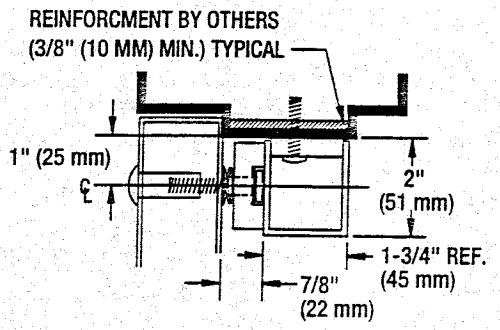

FIGURE 1A STANDARD INSTALLATION

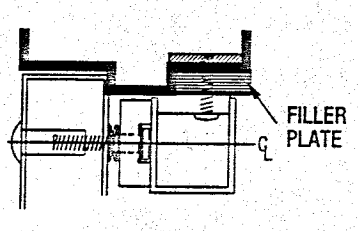

FIGURE 1B
WITH SERIES 178 FILLER PLATE

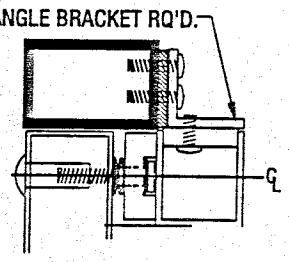

FIGURE 1C
WITH 179 SERIES ANGLE BRACKET

ARMATURE MOUNTING TO DOOR(S) FIGURE 2

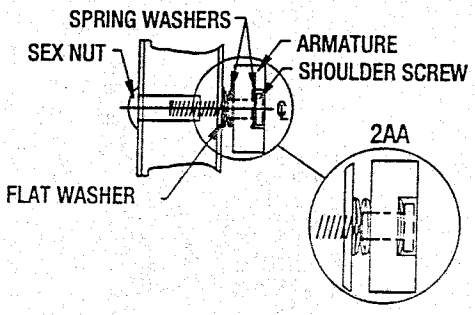

FIGURE 2A HOLLOW METAL DOOR

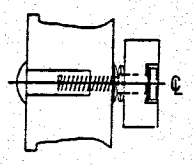

FIGURE 2B WOOD DOOR

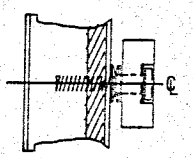

FIGURE 2C REINFORCED DOOR

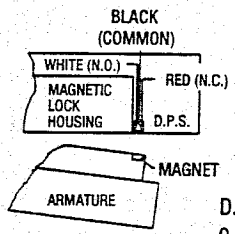

FIGURE 3

D.P.S. CONTACT RATING
0.1 AMP @ 30 VDC MAX.

WIRING FOR D.P.S (DOOR POSITION SWITCH). DRAWING SHOWS DOOR IN OPEN POSITION

ELECTRICAL SPECIFICATIONS:	
CURRENT DRAW:	0.50 AMPS @ 12 VDC
	0.25 AMPS @ 24 VDC
WIRE COLOR CODE:	ORANGE/ORANGE (12VDC)
(NON-POLARIZED)	RED/RED (24VDC)
HOLDING FORCE:	600 LB (272 KG)

NOTE: Use with Underwriter Laboratories Listed (ULC/UL) Compatible Power Supply

ASTERIX SECURITY
HARDWARE INTERNATIONAL INC.
7045 Tranmere Drive Unit 10
Mississagua Ontario Canada L5S 1M2
Phone: (905) 672-1245 Fax: (905) 672-1247
U.S. Phone/Fax.: (630) 350-7599



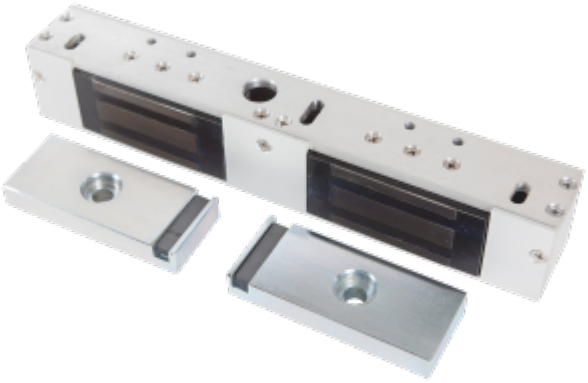









MODEL 1732

MOUNTING INSTRUCTIONS FOR ASTERIX SERIES ELECTRO-MAGNETIC LOCKS

IMPORTANT! *READ THOROUGHLY BEFORE ATTEMPTING INSTALLATION.*
DO NOT DAMAGE OR MARK MAGNETIC LOCK OR ARMATURE FACE-MAY REDUCE HOLDING EFFICIENCY.

See Figure 1 elevation profiles to determine mounting application requirements for each individual application.

NOTE: *A 2-1/2" (64 MM) REVEAL IS REQUIRED TO ASSURE RIGID MOUNTING OF THE 1762 SERIES MAGNETIC LOCK ASSEMBLY*

STEP 1. Mark door(s) according to armature template and dimensions on reverse side.

STEP 2. Drill and prep holes in door per armature template on reverse side.

STEP 3. Gently tap (2) 3/16" (5 mm) diameter spring pins into rear side of armature(s).

NOTE: *IF MAGNETIC LOCK ASSEMBLY IS EQUIPPED WITH BDA (BUILT-IN DELAY ACTUATOR) OPTION STOP HERE AND REFER TO INSTRUCTION SHEET MAGOPT-2 FOR INSTRUCTIONS THEN PROCEED TO STEP 5.*

STEP 4. Insert one (1) spring washer over 5/16"-18 "special" shoulder screw, insert screw through armature(s). Add three (3) conical spring washers and one (1) flat washer over shoulder screw(s). See Figure 2 - details for each type of installation. All parts must be assembled properly before installing armature to door. Install complete armature assembly on door per Figure 2 details.

STEP 5. Tighten shoulder screw(s) securely with allen wrench. (Do not overtighten.)

NOTE: *ALL ARMATURES ARE NORMALLY EQUIPPED WITH A PERMANENT MAGNET ON ONE END BE CERTAIN TO INSTALL ARMATURE SO MAGNET LINES UP WITH MAGNETIC SWITCH INSIDE HOUSING OF MAGNETIC LOCK ASSEMBLY SEE FIGURE 3.*

STEP 6. Mark frame per magnetic lock template and dimensions on reverse side.

STEP 7. Remove housing cover of Magnetic Lock Assembly.

STEP 8. Drill and prep frame per "D" of Magnetic lock template. Attach Magnetic Lock Assembly to frame using either (3) #14 sheet metal screws or (3) 1/4"-20 machine screws and toothed lock washers. Tighten only enough to hold unit in place. If filler plate is used, assure that screws go thru both filler plate and frame.

STEP 9. Drill 7/8" (22 mm) diameter. hole thru filler plate and frame per template for wiring harness.

STEP 10. Make all electrical connections per applicable wiring diagrams enclosed. Use wire nuts, crimp connectors or solder to assure good connections.

STEP 11. Energize Magnetic Lock Assembly; Adjust assembly so door is snug against door stop, tighten (3) preliminary screws securely.

FOR BDA (Built-in Delay Actuator) OPTION: See instruction sheet MAGOPT-2.

A. Verify that when door is closed plunger and push button are in the closed position. If proper continuity cannot be obtained, an additional stop washer may be required to move shoulder screw further into push button switch.

B. Energize the system with the door in the closed position. Apply pressure to door, having retracted latch bolt (if used). Verify that compression of belleville washers and electrical state of push button switch indicates door open mode. If electrical output of switch indicates door closed condition, the shoulder screw is adjusted to far into switch, not allowing switch to return to normal position. Stop washer may have to be removed to obtain proper operation.

C. After all adjustments have been made, verify that switch indicates both door closed and attempted exit.

For MBS (Magnetic Bond Sensor) additional wiring details, see instruction sheet MAGOPT-1.

STEP 12. De-energize system. Using mounting plate as template, drill-#21 drill and tap for 10-32 screws (minimum (2) places). (See Magnetic Lock Template) Install screws and tighten securely. Re-energize system, recheck alignment of Magnetic Lock Assembly to Armature by opening and closing door(s).

STEP 13. Install Magnetic Lock housing cover.

ASTERIX
ASTERIX SECURITY HARDWARE INTERNATIONAL INC.
7045 Tranmere Drive, Unit 10 • Mississagua, Ontario Canada L5S 1M2

ARMATURE LOCATION

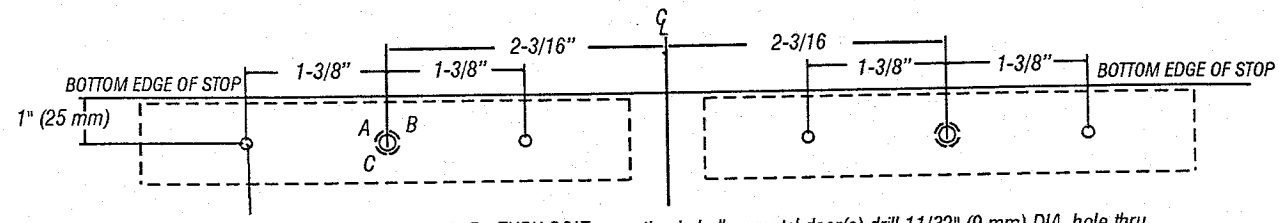

.250 (6 mm) DIA. 3/4" (19 mm) DEEP
NOTE: SPRING PINS OF (2) PLACES
EACH DOOR ARMATURE MUST FLOAT
FREELY INSIDE HOLES.

A. For THRU BOLT mounting in hollow metal door(s) drill 11/32" (9 mm) DIA. hole thru door, enlarge hole in outside face to 1/2" (13 mm) DIA.
B. For THRU BOLT mounting in solid core wood door(s), drill 11/32" (9 mm) DIA. hole thru door(s), enlarge hole in outside face to 1/2" (13 mm) DIA. 1" (25 mm) deep.
C. For REINFORCED DOOR (Minimum 3/8" (10 mm) thickness) drill and tap thru reinforcement for 5/16-18 screw.

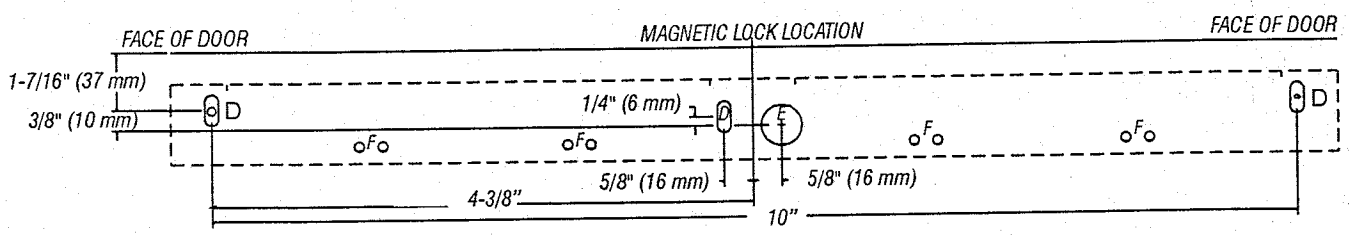

D. Drill for No. 14 sheet metal screws or drill and tap for 1/4"-20 machine screws.
E. Drill 7/8" (22 mm) DIA. hole thru filler (if used) and frame for wiring harness.
F. Using actual Magnetic Lock as template, drill and tap per STEP 12 of installation instructions.

NOTE: FOR MACHINE SCREW MOUNTING; REINFORCEMENT AND STRUCTURING ARE REQUIRED TO WITHSTAND A 600 LB (272 KG) LOAD. CLEARANCE HOLES FOR FILLER PLATE TO BE SPOTTED AT JOB SITE. CAUTION: "DO NOT ATTACH MOUNTING PLATE TO FILLER PLATE ONLY!"

MAGNETIC LOCK MOUNTING TO FRAME FIGURE 1

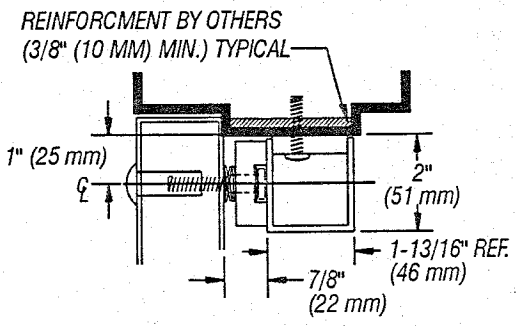

FIGURE 1A STANDARD INSTALLATION

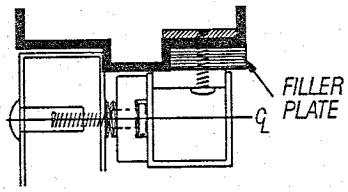

FIGURE 1B
WITH SERIES 178 FILLER PLATE

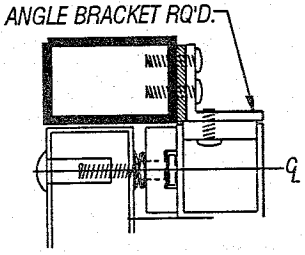

FIGURE 1C
WITH 179 SERIES ANGLE BRACKET

ARMATURE MOUNTING TO DOOR(S) FIGURE 2

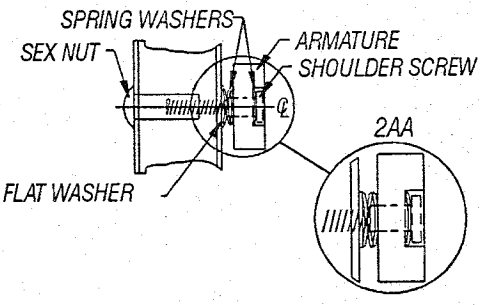

FIGURE 2A HOLLOW METAL DOOR

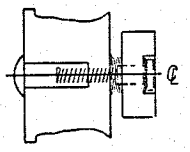

FIGURE 2B WOOD DOOR

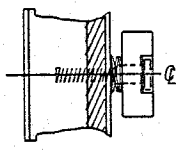

FIGURE 2C REINFORCED DOOR

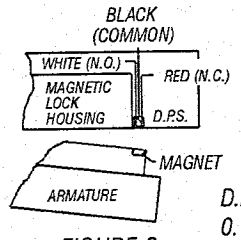

FIGURE 3

D.P.S. CONTACT RATING
0.1 AMP @ 30 VDC MAX.

WIRING FOR D.P.S (DOOR POSITION SWITCH).
DRAWING SHOWS DOOR IN OPEN POSITION

ELECTRICAL SPECIFICATIONS:
CURRENT DRAW: 0.50 AMPS @ 12 VDC
0.25 AMPS @ 24 VDC
WIRE COLOR CODE: ORANGE/ORANGE (12VDC)
(NON-POLARIZED) RED/RED (24VDC)
HOLDING FORCE: 600 LB (272 KG)

NOTE: Use with Underwriter Laboratories Listed (ULC/UL) Compatible Power Supply

ASTERIX SECURITY
HARDWARE INTERNATIONAL INC.
7045 Tranmere Drive Unit 10
Mississagua Ontario Canada L5S 1M2
Phone: (905) 672-1245 Fax: (905) 672-1247
U.S. Phone/Fax.: (630) 350-7599

T-1732 07/97



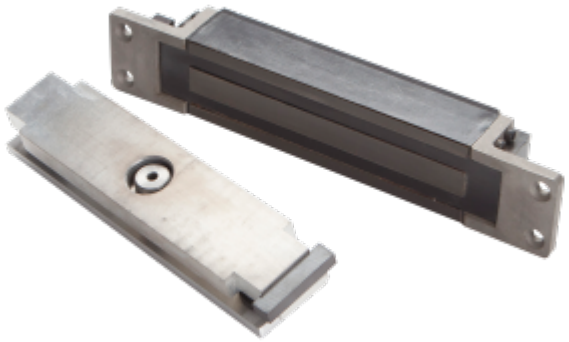

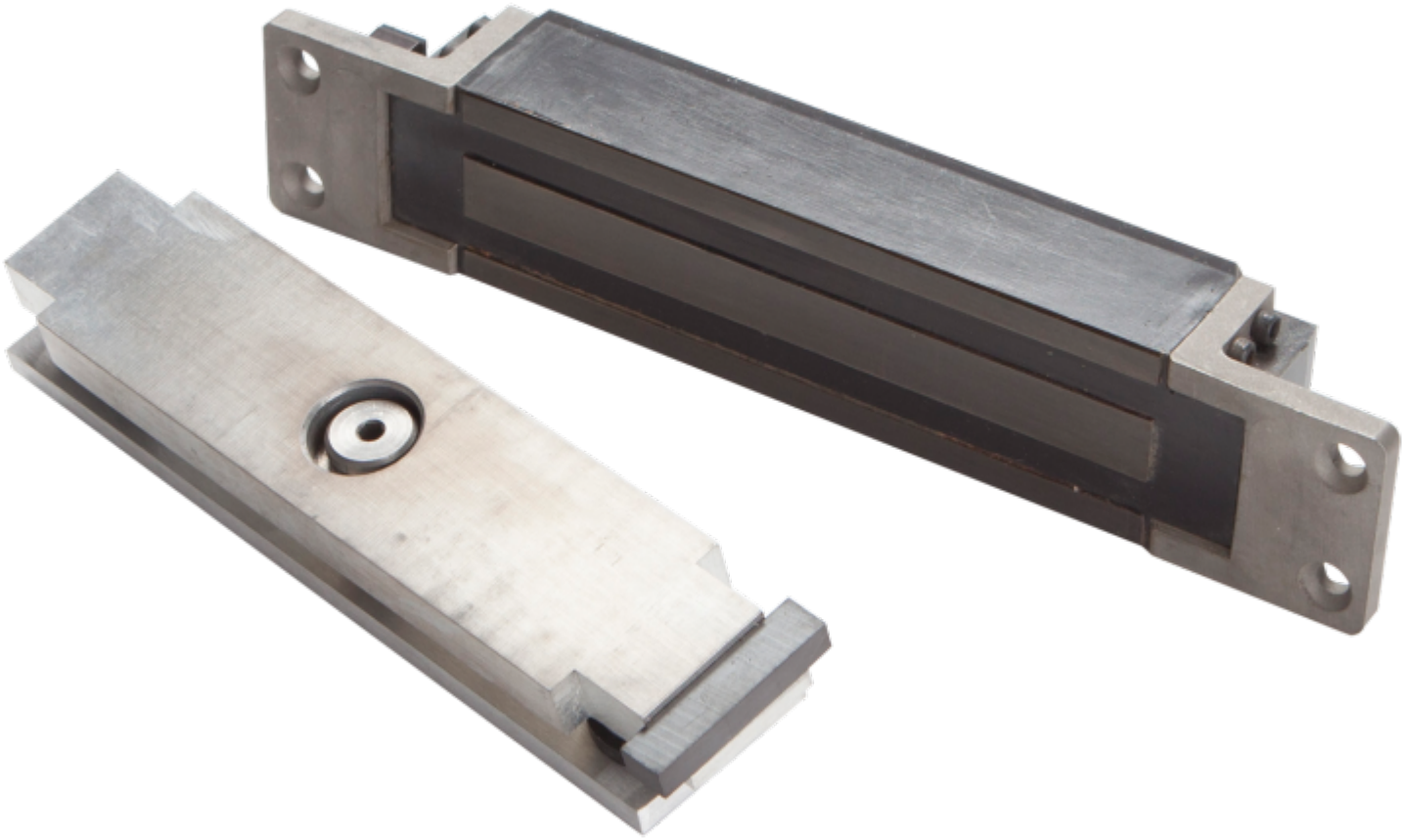

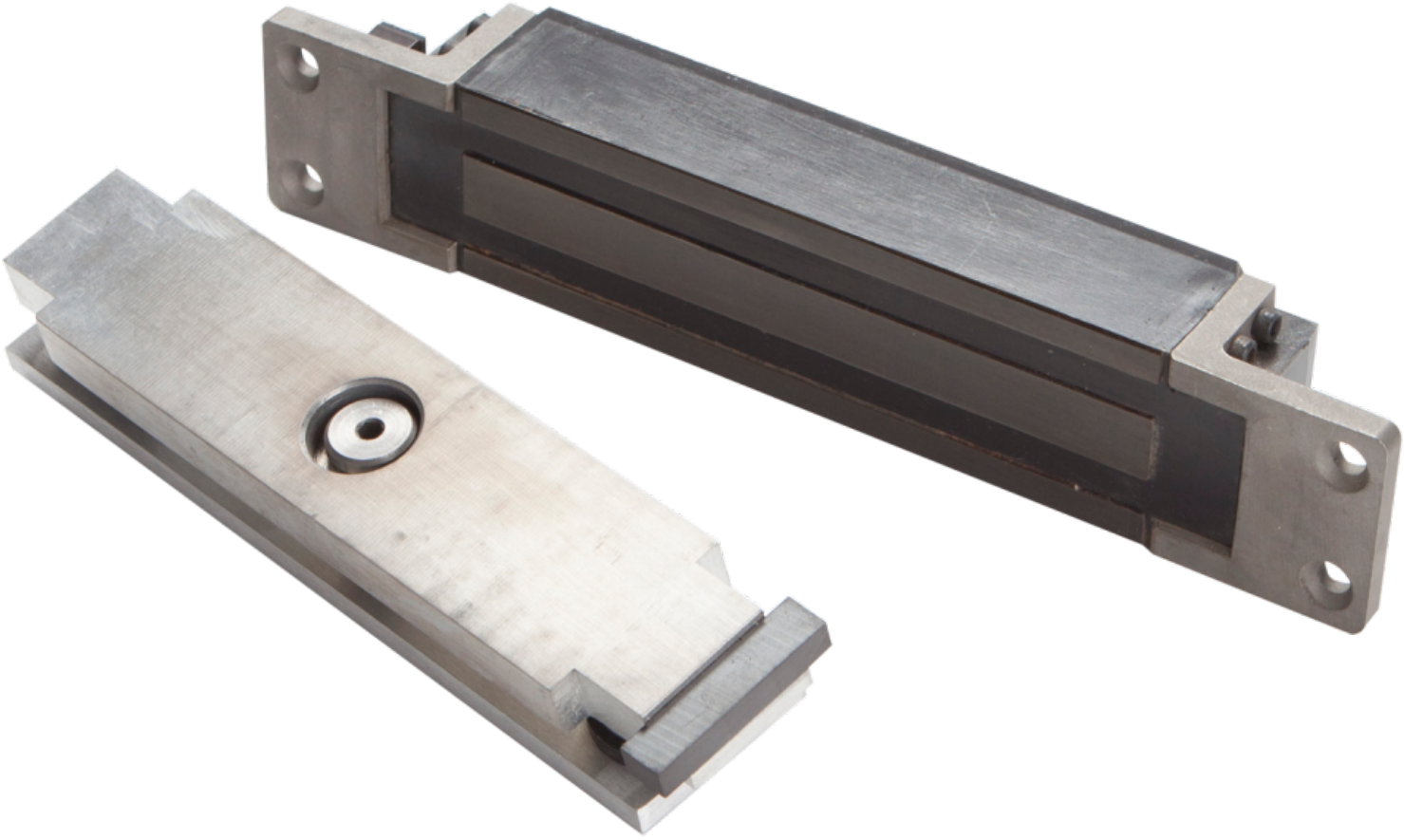

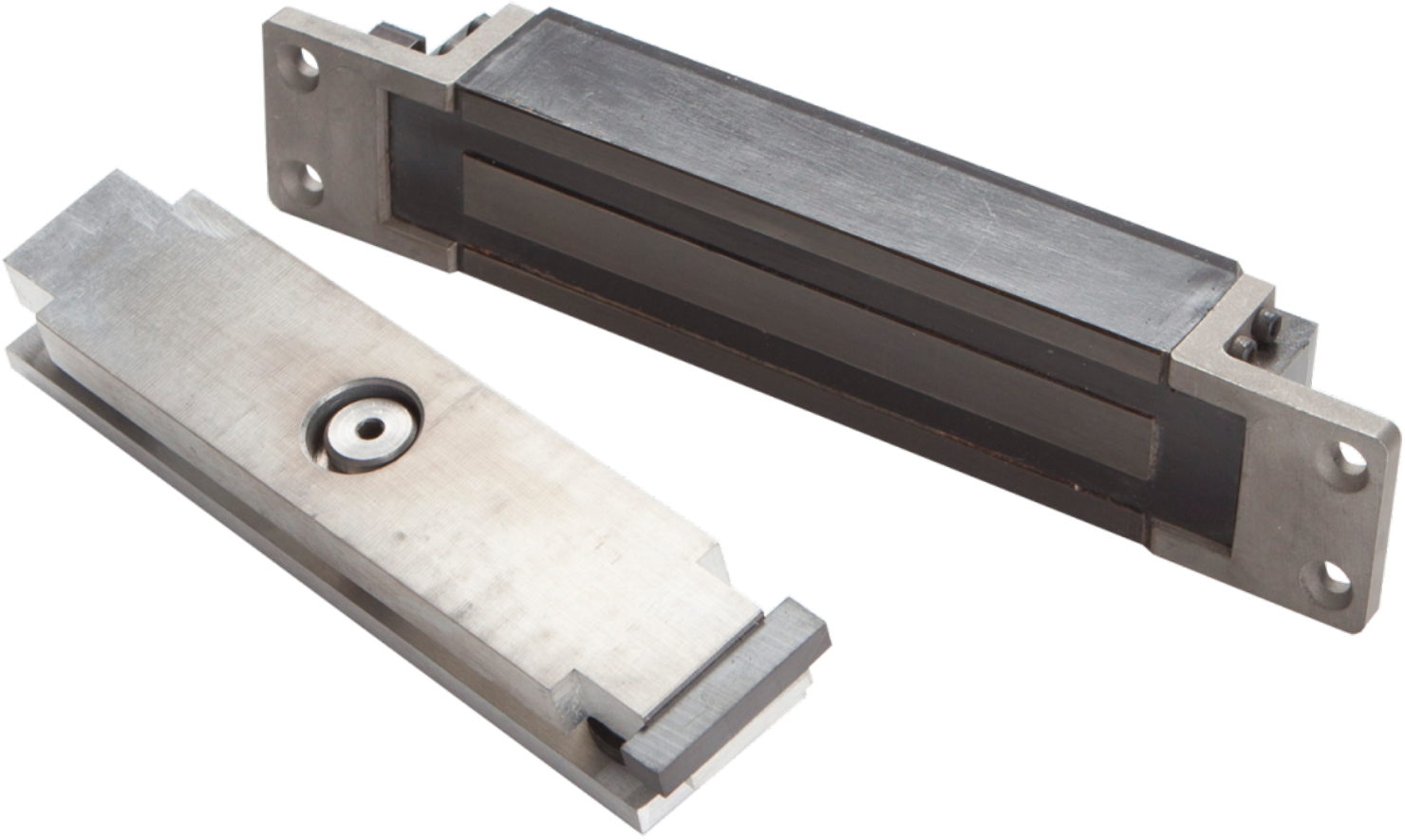

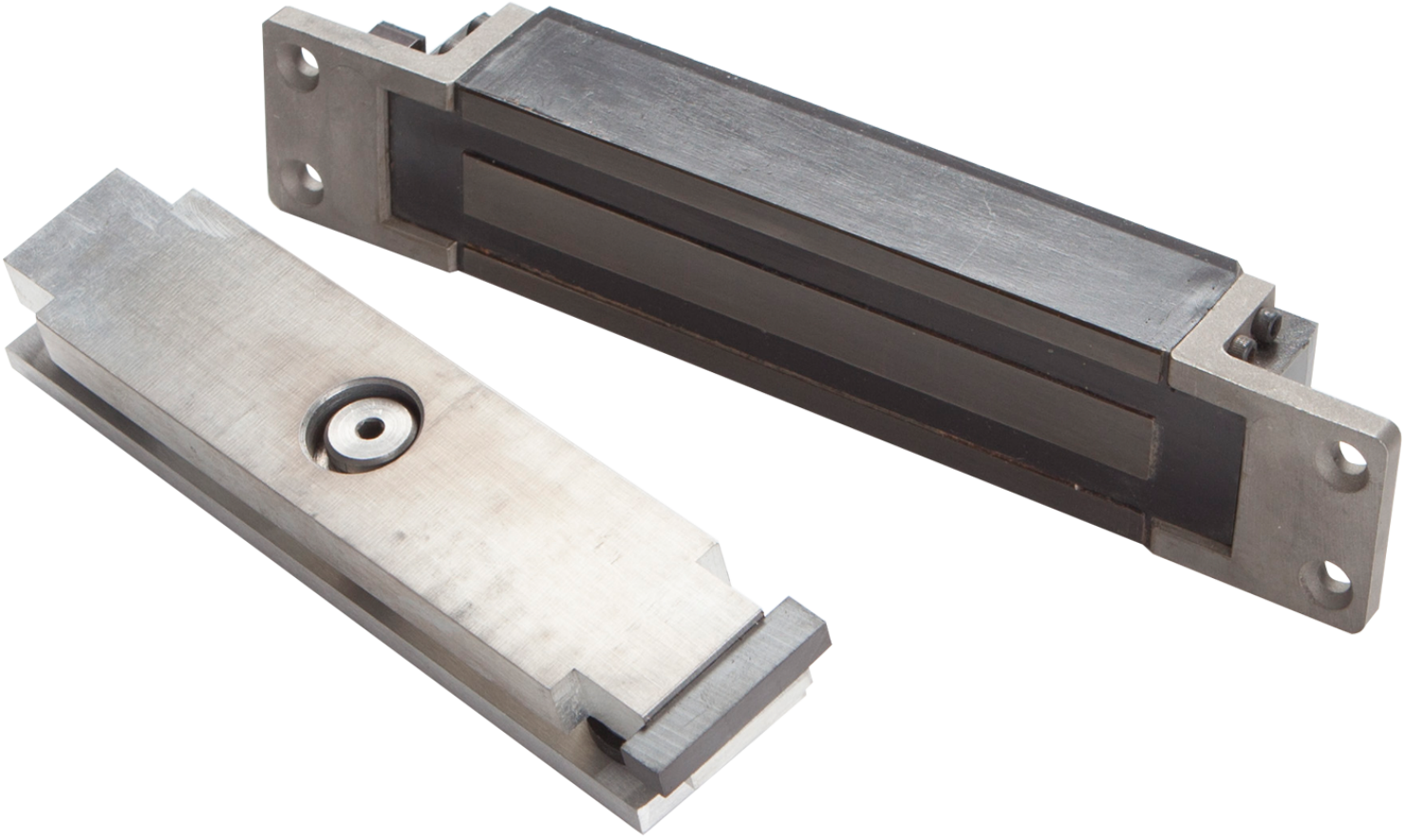



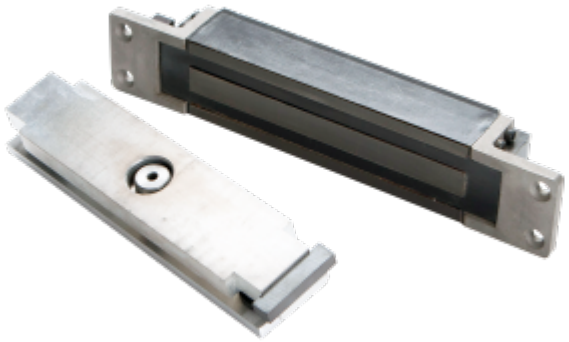

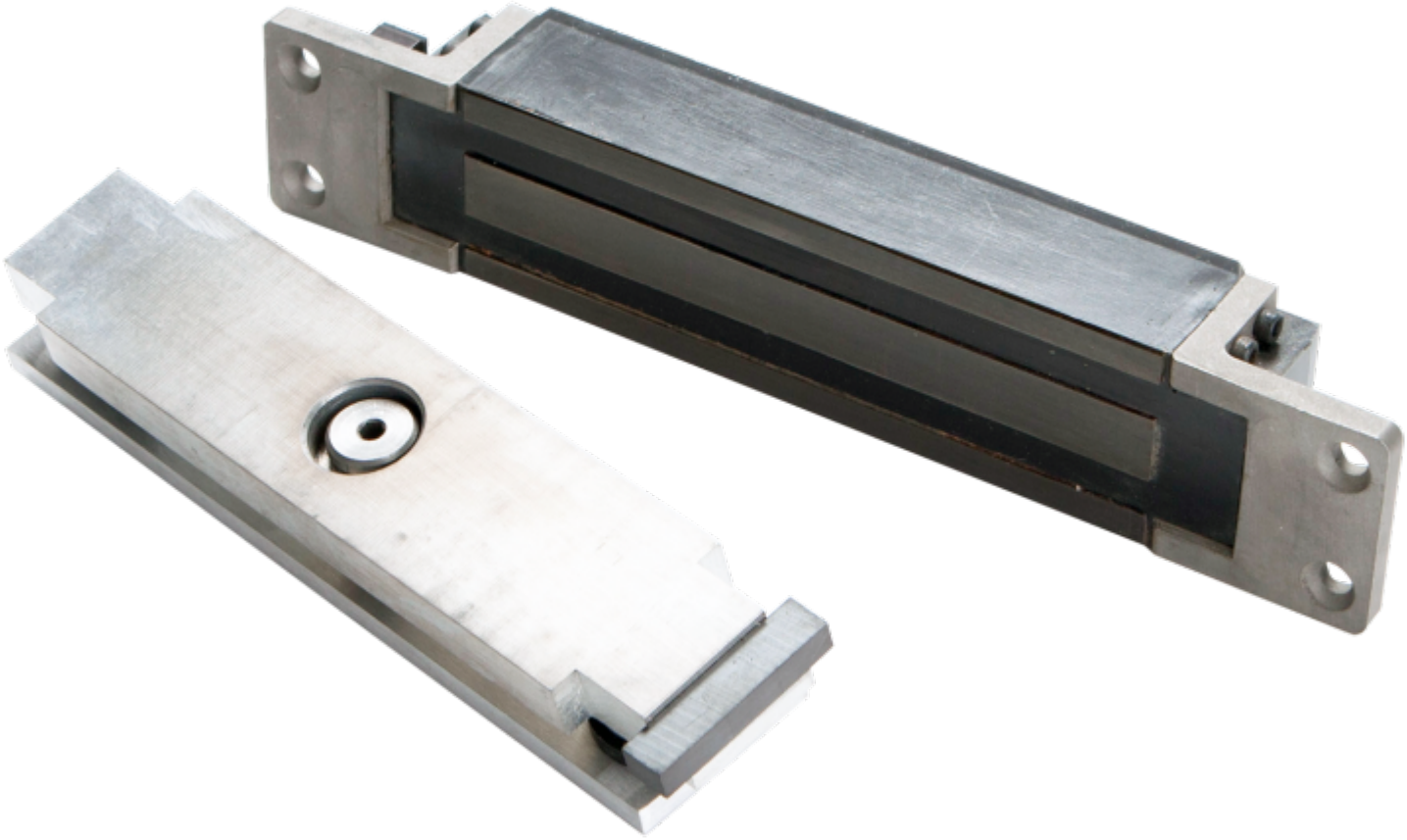

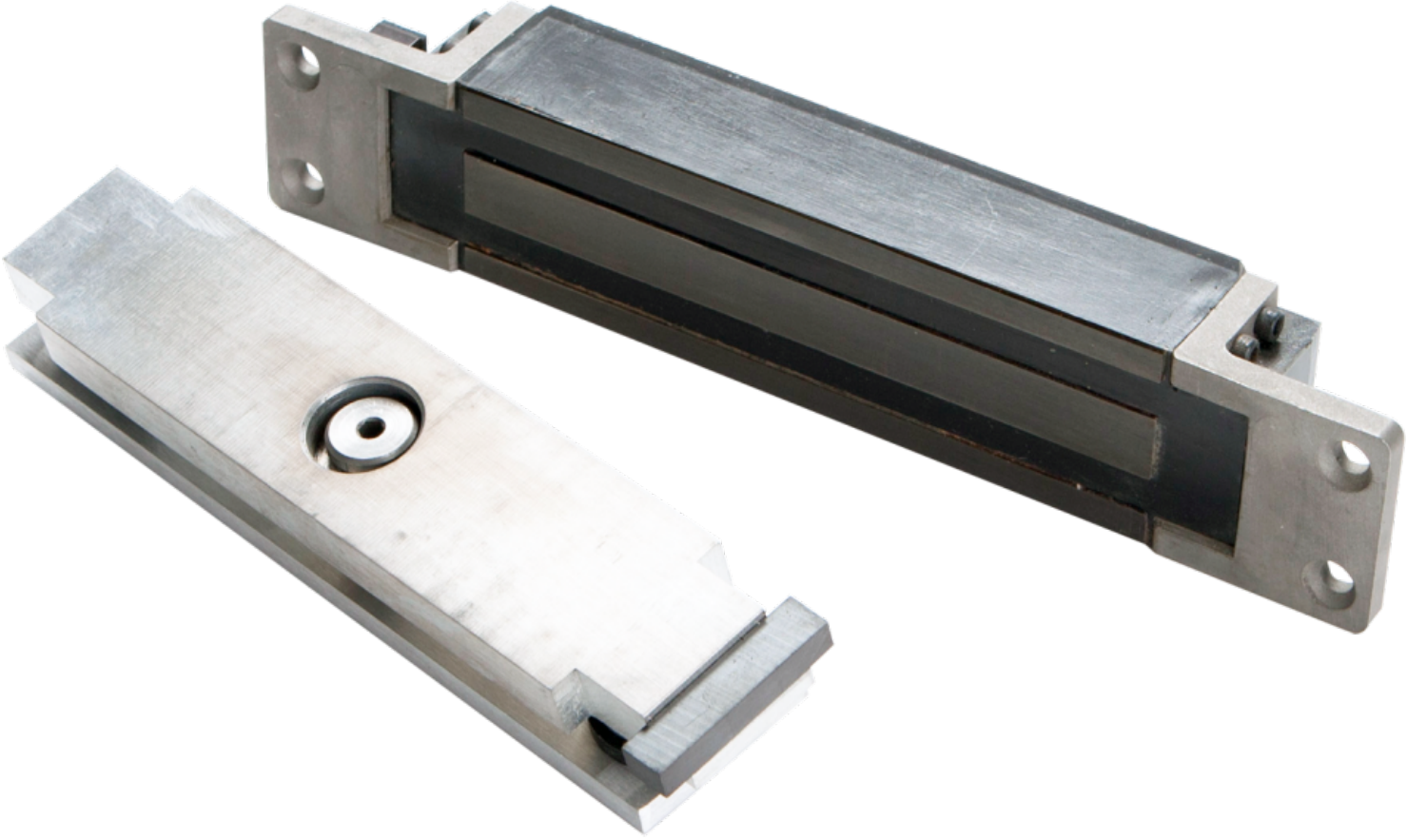

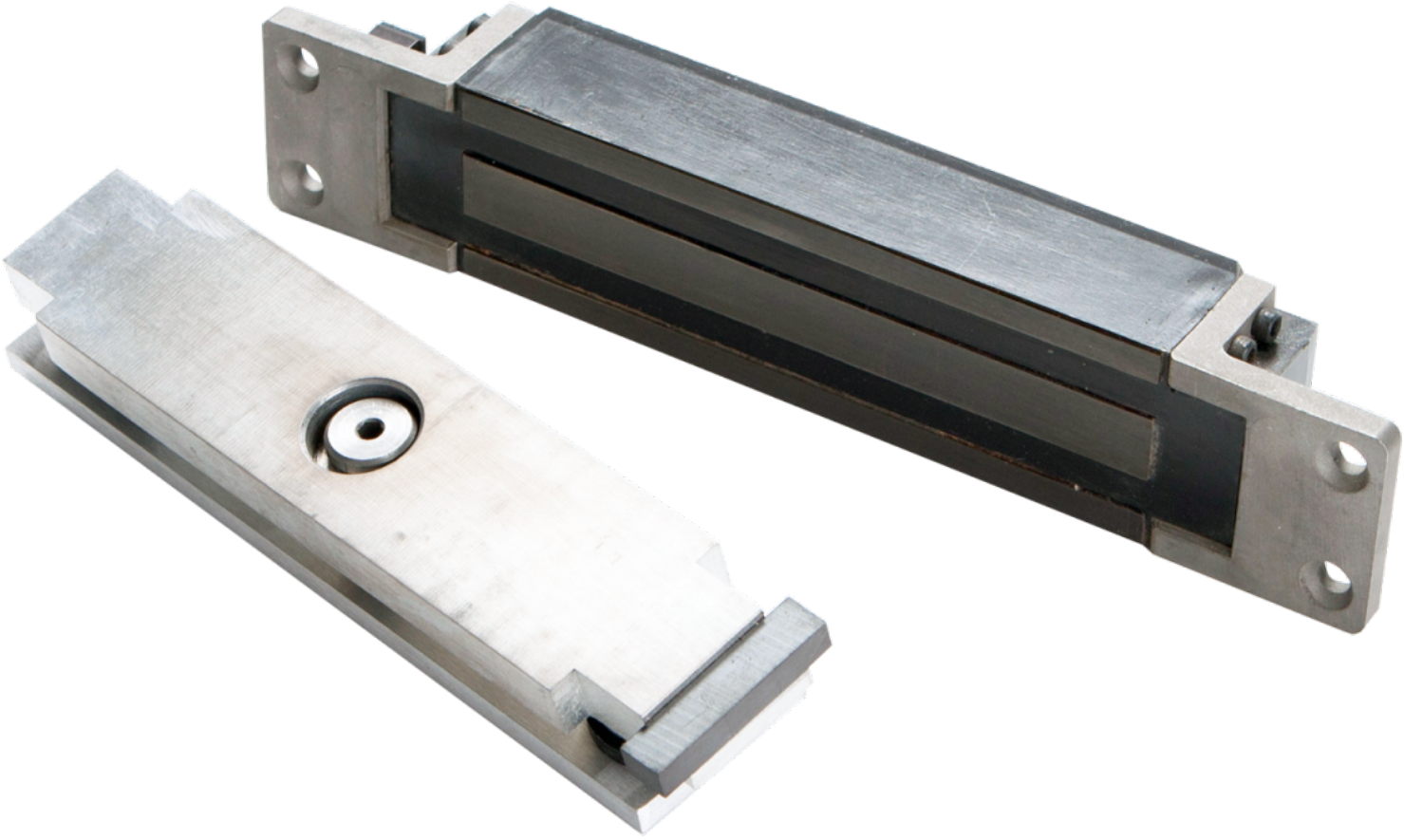

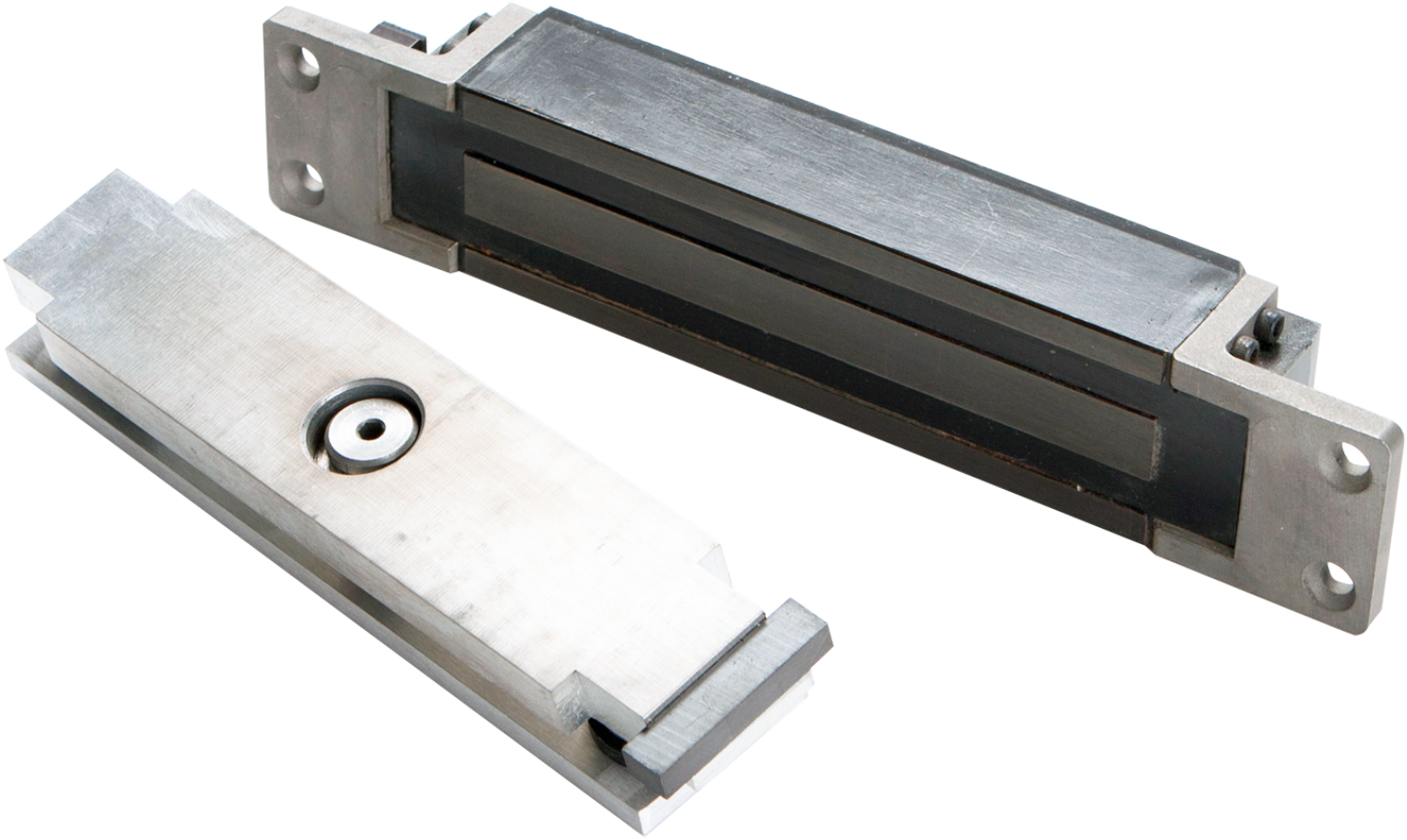

MODEL 177SL

MOUNTING INSTRUCTIONS FOR ASTERIX SERIES ELECTRO-MAGNETIC LOCKS

IMPORTANT! READ THOROUGHLY BEFORE ATTEMPTING INSTALLATION.
DO NOT DAMAGE OR MARK MAGNETIC LOCK OR ARMATURE FACE-MAY REDUCE HOLDING EFFICIENCY.

The SHEAR Electro-magnetic lock, although it provides aesthetics through concealment, is less forgiving than the regular pull type magnetic lock where alignment problems between the door and frame exists.

Careful and proper preparation / installation of the door frame, door, door hardware, and shear lock must be taken to attain positive lock action and trouble free operation.

Areas on each side of the door must not be pressurized, to insure the door will return to its closed position every time.

A high quality door closer should be used to ensure the door returns to its positive closed position, if the door is double acting, the door should be adjusted to sit in its positive center position.

All door latching problems should be corrected prior to installation.

PREPARATION:

Make sure there is a clearance of 1/8" (3 mm) between the top of the door and the bottom of the header. Make any adjustments, if required.

Adjust single acting door and door closer to close positively and rest against the door stop, taking into consideration any other door accessories, for example weather stripping, mutes and door seals.

Adjust double acting doors and door closer to close positively and settle at the centered position.

Locate the vertical center-line of the shear lock assembly and armature as close as possible to the lock edge, without interfering with any other door hardware.

Locate the horizontal center-line of the door, the center-line of the armature will be the same.

Mark the door as shown in the template.

To determine the frame header center-line; Single acting door must be in fully closed position, and positively rest against the door stop. Double acting door must be fully closed and dead stop positively in the dead center of the frame.

Transfer the door horizontal center-line to the frame to determine the frame center-line.

Mark the frame header per the template and prepare the door and frame accordingly.

WIRING THE SL177 SHEAR MAGNETIC LOCK:

The SL177 magnetic lock is supplied with a DCM-4 delay module.

The DCM-4 delay module is designed to provide electronic logic to lock and unlock doors with time adjustment to release and relock the door upon reactivation signals.

ADJUSTMENT #1 — Door Unlock Time Adjustment:

Momentary activation of the release switch or a normally open contact will de-energize the magnetic lock for a pre-determined period of time (0-45 seconds). If the door is opened and closed within the adjusted time period, the door will reset and relock after passing through the delay relock phase (see Adjustment #2). However, if the door is still not closed after the preset time set in adjustment #1, the magnetic lock will not re-energize until the door has been returned to its proper closed position.

ADJUSTMENT #2 — Delay Relock Time Adjustment:

This is the preset time to delay re-energizing the lock after the door is seated in its proper closed position (time adjustable from 0-45 seconds, adjustment to 0 will disable this feature).

INSTALLATION:

Install the SL177 shear lock magnetic lock assembly and armature assembly with the door position switch toward the lock edge of the door.

For trouble free operation , the armature must be adjusted upwards toward the lock face parallel and as close as possible, without interfering with the opening and closing cycle.

Optimum clearance with the magnet face and finish armature is 1/16" (1.5 mm). Use hex key and the extra shims provided to adjust the height for proper operation.

Turn lock power on when the door is closed, and check lateral alignment. Armature should draw up and sit snugly on the magnet face between the legs of the shear bracket.

If clearance is sufficient for proper drawing of the armature plate, cycle the doors to ensure the unit will positively lock and unlock each time.

If positive locking cannot be attained, check clearance and alignment again, then correct and repeat testing operation.

ASTERIX SECURITY HARDWARE INTERNATIONAL INC.
7045 Tranmere Drive, Unit 10 • Mississagua, Ontario Canada L5S 1M2

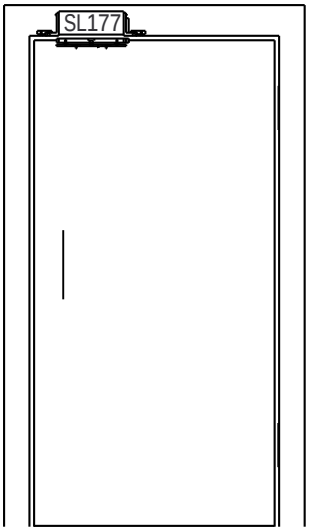

ELECTRICAL SPECIFICATIONS:	
CURRENT DRAW:	0.50 AMPS @ 12 VDC
	0.25 AMPS @ 24 VDC
WIRE COLOR CODE:	ORANGE/ORANGE (12VDC)
(NON-POLARIZED)	RED/RED (24VDC)
HOLDING FORCE:	600 LB (272 KG)
HOLDING FORCE:	1200 LB (544 KG)

DOOR UNLOCK TIME ADJUSTMENT (ADJUSTABLE 0-45 SECONDS)
MOMENTARY ACTIVATION OF THE RELEASE SWITCH WILL UNLOCK THE DOOR FOR A PRE-DETERMINED PERIOD. IF THE DOOR IS OPENED DURING THIS RELEASE, THE REST OF THE UNLOCK TIME WILL BE RESET. HOWEVER, THE MAGNET WILL NOT BE RE-ENERGIZED UNTIL THE DOOR IS IN ITS PROPER CLOSED POSITION.

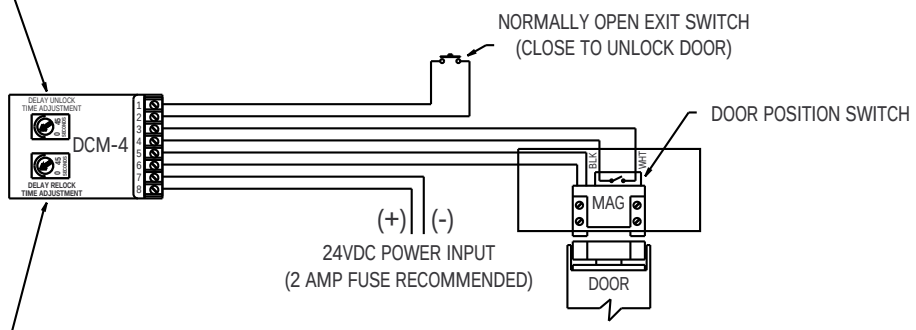

DELAY LOCK UPON DOOR LATCHING TIME ADJUSTMENT.
WHEN THE DOOR IS RETURNED TO THE CLOSED POSITION, THE DOOR CONTACT WILL ACTIVATE A PRE-DETERMINED DELAY RELOCK TIME. THIS DELAY WILL ALLOW THE DOOR TO BE PROPERLY SEATED BEFORE THE MAGNET IS ENERGIZED. (ADJUSTABLE 0 - 45 SECONDS, SETTING THE TIME TO 0 WILL DISABLE THIS FEATURE)

DCM-4 TERMINALS

1,2 REQUEST TO EXIT SWITCH (N.O.)
3,4 DOOR POSITION SWITCH (CLOSED)
5,6 OUTPUT POWER TO MAGNETIC LOCK (24VDC)/12 VDC
7,8 24/12 VDC INPUT POWER (7-NEG, 8-POS)

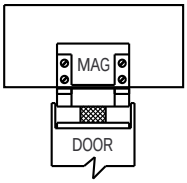

MAGNET IS ENERGIZED AND THE DOOR IS PROPERLY LOCKED.

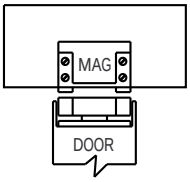

MAGNET IS DE-ENERGIZED AND THE DOOR IS UNLOCKED.

ASTERIX SECURITY HARDWARE INTERNATIONAL INC.
7045 Tranmere Drive Unit 10
Mississagua Ontario Canada L5S 1M2
Phone: (905) 672-1245 Fax: (905) 672-1247
U.S. Phone/Fax.: (630) 350-7599

FIGURE 3

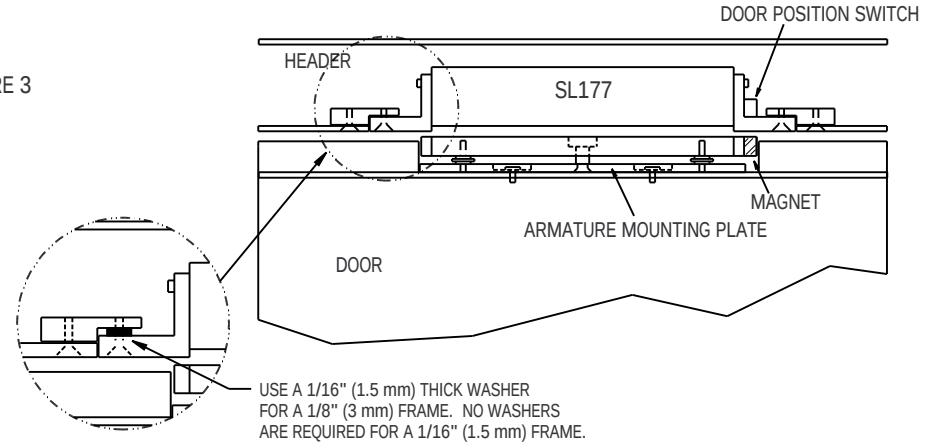

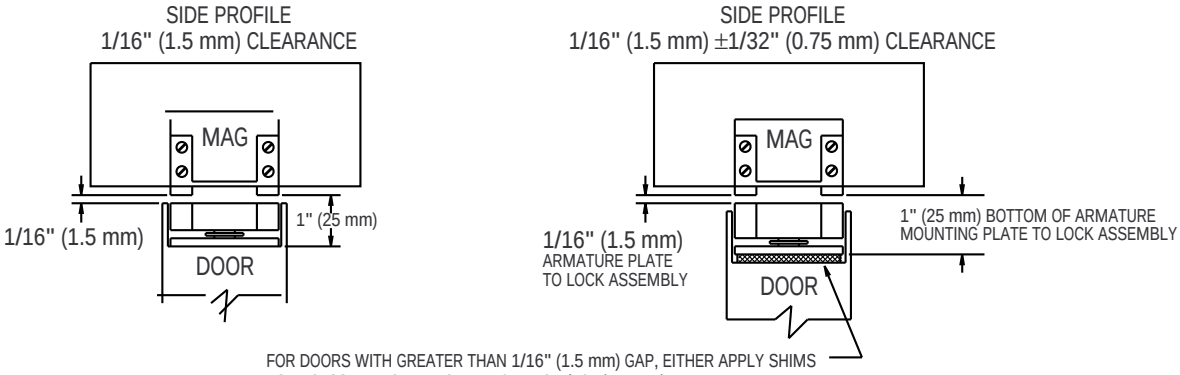

FOR DOORS WITH GREATER THAN 1/16" (1.5 mm) GAP, EITHER APPLY SHIMS AS NECESSARY TO REDUCE THE GAP TO 1/16" (1.5 mm) BETWEEN THE ARMATURE PLATE ANDTHE MAGNETIC LOCK ASSEMBLY, OR DO NOT MORTISE THE DOOR AS DEEP, SO AS TO PROVIDETHE NECESSARY 1/16" (1.5 mm) GAP BETWEEN THE ARMATURE PLATE AND THE MAGNETIC LOCK ASSEMBLY.

DRILL 1/4" [6 mm] DIA. HOLE 3/4" [17 mm] DEEP. (2 PLACES)

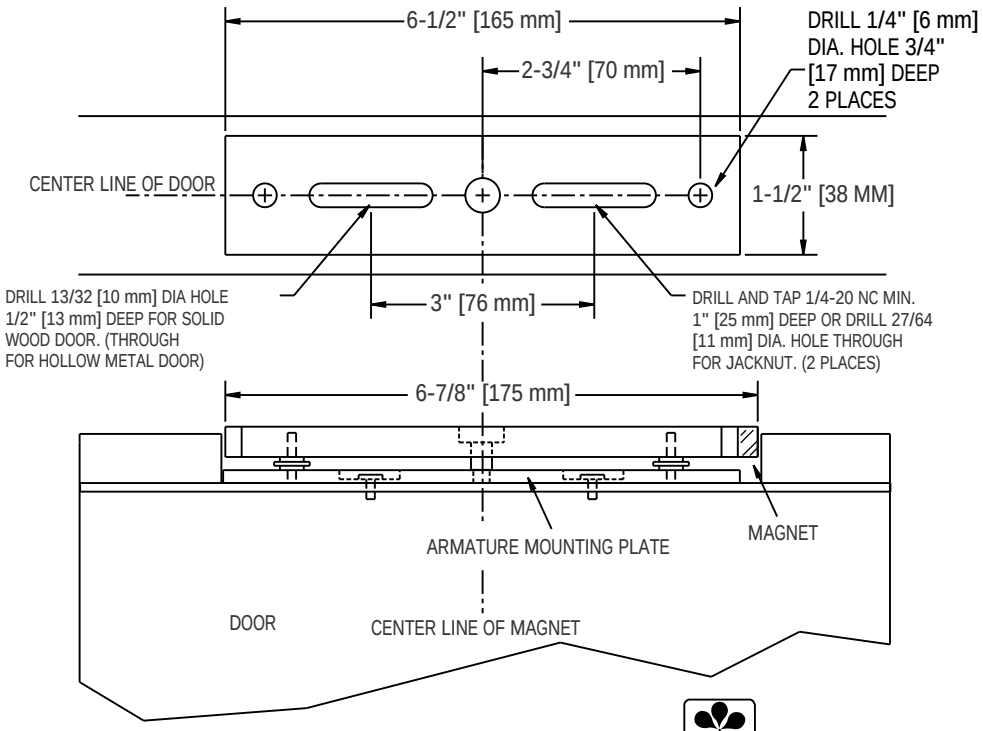

NOTES:

1. VERTICAL CENTER LINE (MAGNET AND ARMATURE) SHOULD BE LOCATED AS FAR FROM THE HINGE SIDE OF THE DOOR AS POSSIBILE. (ADJUST THIS LINE SO THAT THE MOUNTING OF THE ARMATURE PLATE AND MAGNET ARE FREE FROM STRUCTURAL INTERFERENCE.)

2. HORIZONTAL CENTER LINE IS DETERMINED BY THE DOOR'S THICKNESS. TRANSFER THIS LINE TO THE TOP JAMB OF THE DOOR FRAME. TOGETHER WITH THE VERTICAL CENTER LINE, THE CENTER OF THE MAGNET AND ARMATURE MOUNTING PLATE CAN BE DETERMINED.

CAUTION:
ON FRAME WITH A STOP, LOCATE HEADER CENTER LINE ON TOP JAMB WITH SLIGHT CLEARANCE BETWEEN THE DOOR AND THE STOP TO ENSURE FREE LOCKING ACTION.

3. IF THE DOOR'S TOP RAIL MATERIAL IS NOT SUFFICIENT TO SUPPORT THE ARMATURE PLATE, JACKNUTS SHOULD BE USED.

ASTERIX SECURITY
HARDWARE INTERNATIONAL INC.
7045 Tranmere Drive Unit 10
Mississagua Ontario Canada L5S 1M2
Phone: (905) 672-1245 Fax: (905) 672-1247
U.S. Phone/Fax.: (630) 350-7599

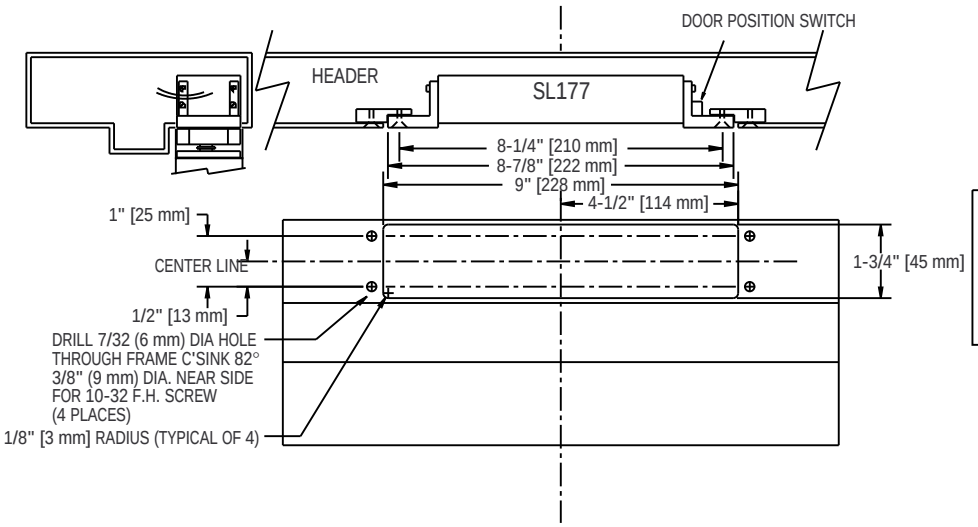

TOP JAMB TEMPLATE FOR OFFSET HUNG DOOR

ELECTRICAL SPECIFICATIONS:	
CURRENT DRAW:	0.50 AMPS @ 12 VDC 0.25 AMPS @ 24 VDC
WIRE COLOR CODE: (NON-POLARIZED)	ORANGE/ORANGE (12VDC) RED/RED (24VDC)
HOLDING FORCE (PULL):	600 LB (272 KG)
HOLDING FORCE (SHEAR):	1200 LB (544 KG)

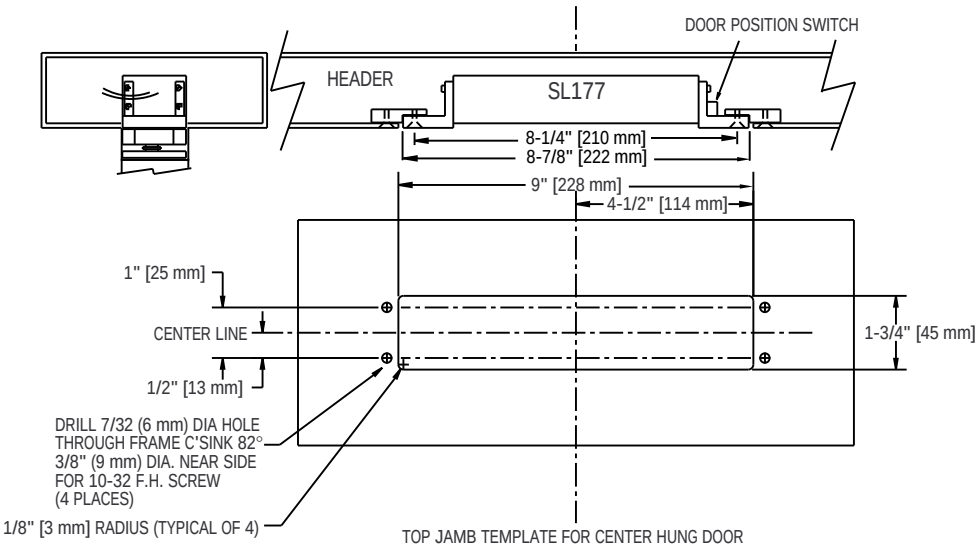

TOP JAMB TEMPLATE FOR CENTER HUNG DOOR

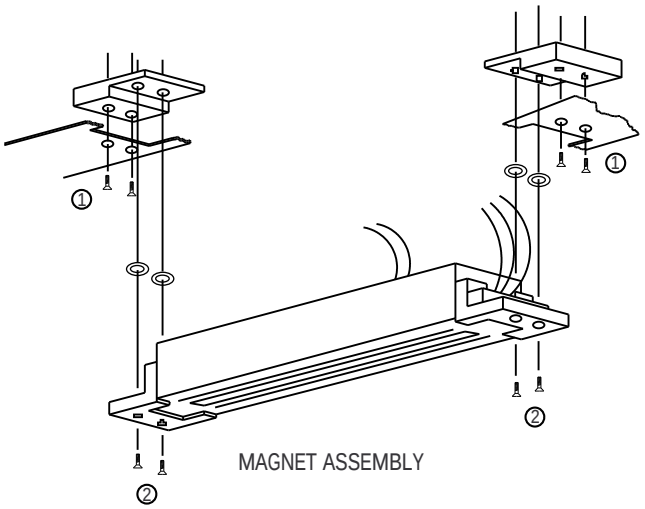

MAGNET ASSEMBLY

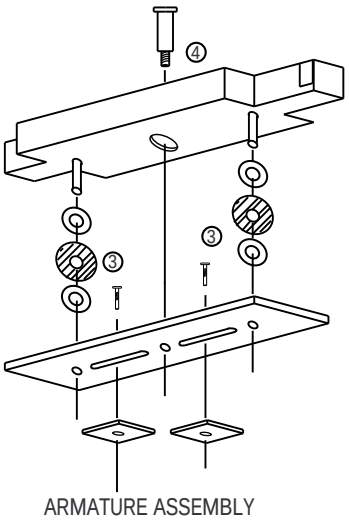

ARMATURE ASSEMBLY

INSTALLATION SHOULD PROCEED FOLLOWING STEPS 1 THROUGH 4 ON THE ASSEMBLY DIAGRAM TO THE LEFT.

NOTE: CHECK DOOR FRAME THICKNESS AND RAIL DEPTH USE NECESSARY SHIMS TO ACHIEVE PROPER INSTALLATION.

ASTERIX SECURITY HARDWARE INTERNATIONAL INC.
7045 Tranmere Drive Unit 10
Mississagua Ontario Canada L5S 1M2
Phone: (905) 672-1245 Fax: (905) 672-1247
U.S. Phone/Fax.: (630) 350-7599

SERIES 1310 MORTISE KEY SWITCHES WITH TIME DELAY



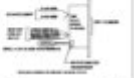

SERIES 1310 MORTISE KEY SWITCHES WITH TIME DELAY

COVERS THE FOLLOWING MODELS:

- 1310-3 KEYSWITCH WITH TIME DELAY MOUNTS IN A DOUBLE GANG WALL MOUNT ELECTRICAL BOX. SIZE 4" SQ. X 2-1/8" DEEP. (RACO #880 OR EQUIVALENT)

- 1310-3-1 KEYSWITCH WITH TIME DELAY AND STATUS INDICATOR (RED). MOUNTS IN A DOUBLE GANG WALL MOUNT ELECTRICAL BOX. SIZE 4" SQ. X 2-1/8" DEEP. (RACO #880 OR EQUIVALENT)



MODEL 1310-3 SHOWN

ELECTRICAL SPECIFICATIONS

- 24VAC/VDC +/- 10% INPUT
- 0.5A/12.5V, 0.3A/150, 0.1A @ 30VDC
- 0.5A/30VAC/VDC 30VAC @ 240VAC - 4mA (STANDBY); 23mA (1310-3 ACTIVATED); 48mA (1310-3-1 ACTIVATED)

RED LED STATUS INDICATOR

- RED LED (1310-3-1) IDENTIFIED WITH A RED CABLE TIE.
- RED WIRE LEAD IS (+) POSITIVE AND BLACK WIRE LEAD IS (-) NEGATIVE.

ADJUSTING THE TIME DELAY CIRCUIT

- TO INCREASE DELAY TIME, TURN POTENTIOMETER COUNTERCLOCKWISE.
- TO DECREASE DELAY TIME, TURN POTENTIOMETER CLOCKWISE.
- DELAY RANGE: 3 - 40 SECONDS

MOUNTING INSTRUCTIONS

IT MAY BE NECESSARY TO REMOVE THE KNOCKOUT, PACING THE TOGGLE SWITCH WIRE CONNECTIONS, TO ALLOW FOR MORE DEPTH CLEARANCE.

DO NOT USE GANGABLE SWITCH DOORS WHERE THE FACE PLATE MOUNTING HOLE TABS FACE OUTWARD FROM THE BOX. THERE WILL NOT BE ENOUGH HEIGHT CLEARANCE FOR TIME P.C. BOARD.



2720 CLARK AVE., ST. LOUIS, MO 63103 (866) 753-8558 REV. 05/2018 **S-1300-2**

SERIES 1310 MORTISE KEY SWITCHES WITH TIME DELAY

COVERS THE FOLLOWING MODELS:

- 1310-3 KEYSWITCH WITH TIME DELAY MOUNTS IN A DOUBLE GANG WALL MOUNT ELECTRICAL BOX. SIZE 4" SQ. X 2-1/8" DEEP. (RACO #680 OR EQUIVALENT)

- 1310-3-1 KEYSWITCH WITH TIME DELAY AND STATUS INDICATOR (RED). MOUNTS IN A DOUBLE GANG WALL MOUNT ELECTRICAL BOX. SIZE 4" SQ. X 2-1/8" DEEP. (RACO #680 OR EQUIVALENT)



MODEL 1310-3 SHOWN

ELECTRICAL SPECIFICATIONS

- 24VAC/VDC +/- 10% INPUT
- CONTACTS RATED AT 1A @ 30VDC
- CURRENT DRAW @ 24VDC: 5mA (STANDBY); 25mA (1310-3 ACTIVATED); 40mA (1310-3-1 ACTIVATED)

RED LED STATUS INDICATOR

- RED LED LEADS ARE IDENTIFIED WITH A RED CABLE TIE.
- RED WIRE LEAD IS (+) POSITIVE AND BLACK WIRE LEAD IS (-) NEGATIVE.

ADJUSTING THE TIME DELAY CIRCUIT

- TO INCREASE DELAY TIME, TURN POTENTIOMETER COUNTERCLOCKWISE.
- TO DECREASE DELAY TIME, TURN POTENTIOMETER CLOCKWISE.
- DELAY RANGE: 0 - 40 SECONDS

MOUNTING INSTRUCTIONS

IT MAY BE NECESSARY TO REMOVE THE KNOCKOUT, FACING THE TOGGLE SWITCH WIRE CONNECTIONS, TO ALLOW FOR MORE DEPTH CLEARANCE.

DO NOT USE GANGABLE SWITCH BOXES WHERE THE FACE PLATE MOUNTING HOLE TABS FACE OUTWARD FROM THE BOX. THERE WILL NOT BE ENOUGH HEIGHT CLEARANCE FOR THE P.C. BOARD.

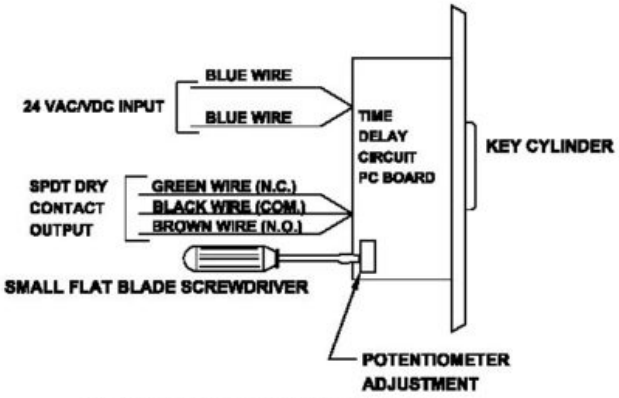

NOTE: RED LED INDICATOR USED ONLY ON MODEL 1310-3-1.

ACSI
ARCHITECTURAL CONTROL SYSTEMS INC

2720 CLARK AVE., ST. LOUIS, MO 63103 (800) 753-5558

REV. 05/2018

SERIES 1310 MORTISE KEY SWITCHES WITH TIME DELAY

COVERS THE FOLLOWING MODELS:

- 1310-3 KEYSWITCH WITH TIME DELAY MOUNTS IN A DOUBLE GANG WALL MOUNT ELECTRICAL BOX. SIZE 4" SQ. X 2-1/8" DEEP. (RACO #680 OR EQUIVALENT)

- 1310-3-1 KEYSWITCH WITH TIME DELAY AND STATUS INDICATOR (RED). MOUNTS IN A DOUBLE GANG WALL MOUNT ELECTRICAL BOX. SIZE 4" SQ. X 2-1/8" DEEP. (RACO #680 OR EQUIVALENT)



MODEL 1310-3 SHOWN

ELECTRICAL SPECIFICATIONS

- 24VAC/VDC +/- 10% INPUT
- CONTACTS RATED AT 1A @ 30VDC
- CURRENT DRAW @ 24VDC: 5mA (STANDBY); 25mA (1310-3 ACTIVATED); 40mA (1310-3-1 ACTIVATED)

RED LED STATUS INDICATOR

- RED LED LEADS ARE IDENTIFIED WITH A RED CABLE TIE.
- RED WIRE LEAD IS (+) POSITIVE AND BLACK WIRE LEAD IS (-) NEGATIVE.

ADJUSTING THE TIME DELAY CIRCUIT

- TO INCREASE DELAY TIME, TURN POTENTIOMETER COUNTERCLOCKWISE.
- TO DECREASE DELAY TIME, TURN POTENTIOMETER CLOCKWISE.
- DELAY RANGE: 0 - 40 SECONDS

MOUNTING INSTRUCTIONS

IT MAY BE NECESSARY TO REMOVE THE KNOCKOUT, FACING THE TOGGLE SWITCH WIRE CONNECTIONS, TO ALLOW FOR MORE DEPTH CLEARANCE.

DO NOT USE GANGABLE SWITCH BOXES WHERE THE FACE PLATE MOUNTING HOLE TABS FACE OUTWARD FROM THE BOX. THERE WILL NOT BE ENOUGH HEIGHT CLEARANCE FOR THE P.C. BOARD.

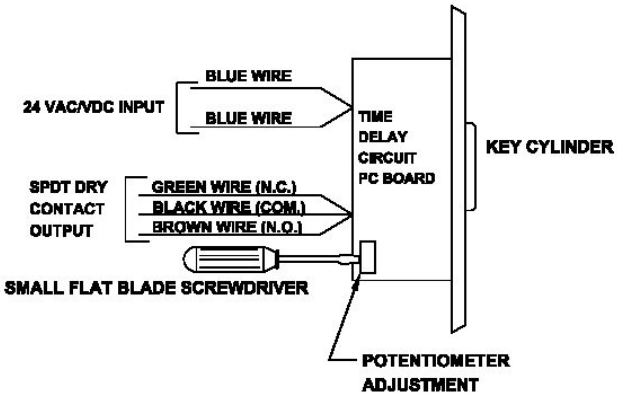

NOTE: RED LED INDICATOR USED ONLY ON MODEL 1310-3-1.

ACSI ARCHITECTURAL CONTROL SYSTEMS INC.

2720 CLARK AVE., ST. LOUIS, MO 63103 (800) 753-5558

REV. 05/2018

SERIES 1310 MORTISE KEY SWITCHES WITH TIME DELAY

COVERS THE FOLLOWING MODELS:

- 1310-3 KEYSWITCH WITH TIME DELAY MOUNTS IN A DOUBLE GANG WALL MOUNT ELECTRICAL BOX. SIZE 4" SQ. X 2-1/8" DEEP. (RACO #680 OR EQUIVALENT)

- 1310-3-1 KEYSWITCH WITH TIME DELAY AND STATUS INDICATOR (RED). MOUNTS IN A DOUBLE GANG WALL MOUNT ELECTRICAL BOX. SIZE 4" SQ. X 2-1/8" DEEP. (RACO #680 OR EQUIVALENT)



MODEL 1310-3 SHOWN

ELECTRICAL SPECIFICATIONS

- 24VAC/VDC +/- 10% INPUT
- CONTACTS RATED AT 1A @ 30VDC
- CURRENT DRAW @ 24VDC: 5mA (STANDBY); 25mA (1310-3 ACTIVATED); 40mA (1310-3-1 ACTIVATED)

RED LED STATUS INDICATOR

- RED LED LEADS ARE IDENTIFIED WITH A RED CABLE TIE.
- RED WIRE LEAD IS (+) POSITIVE AND BLACK WIRE LEAD IS (-) NEGATIVE.

ADJUSTING THE TIME DELAY CIRCUIT

- TO INCREASE DELAY TIME, TURN POTENTIOMETER COUNTERCLOCKWISE.
- TO DECREASE DELAY TIME, TURN POTENTIOMETER CLOCKWISE.
- DELAY RANGE: 0 - 40 SECONDS

MOUNTING INSTRUCTIONS

IT MAY BE NECESSARY TO REMOVE THE KNOCKOUT, FACING THE TOGGLE SWITCH WIRE CONNECTIONS, TO ALLOW FOR MORE DEPTH CLEARANCE.

DO NOT USE GANGABLE SWITCH BOXES WHERE THE FACE PLATE MOUNTING HOLE TABS FACE OUTWARD FROM THE BOX. THERE WILL NOT BE ENOUGH HEIGHT CLEARANCE FOR THE P.C. BOARD.

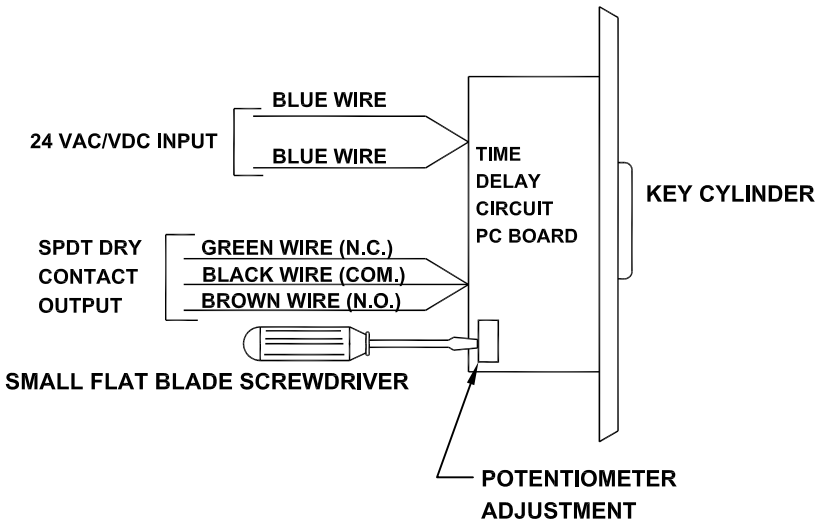

NOTE: RED LED INDICATOR USED ONLY ON MODEL 1310-3-1.

ACSI
ARCHITECTURAL CONTROL SYSTEMS INC.

2720 CLARK AVE., ST. LOUIS, MO 63103 (800) 753-5558

REV. 05/2018



SERIES 1320 PUSHBUTTON SWITCH WITH TIME DELAY

COVERS THE FOLLOWING MODELS:

- 1320-4 PUSH-BUTTON SWITCH WITH TIME DELAY AND 1 STATUS INDICATOR (RED).

MOUNTS IN A DOUBLE GANG WALL MOUNT ELECTRICAL BOX.
SIZE: 4" SQ. X 2-1/8" DEEP. (RACO 8680 OR EQUIVALENT)



ELECTRICAL SPECIFICATIONS

- 24VAC/VDC +/- 10% INPUT
- CONTACTS RATED AT 1A @ 30VDC
- CURRENT DRAW @ 24VDC: 5mA (STANDBY); 45mA (ACTIVATED)

RED LED STATUS INDICATOR

RED LED TURNS ON WHEN RELAY IS ENERGIZED FOR
A DELAYED AMOUNT OF TIME AFTER PUSHBUTTON IS DEPRESSED.

ADJUSTING THE TIME DELAY CIRCUIT

- TO INCREASE DELAY TIME, TURN POTENTIOMETER COUNTERCLOCKWISE.
- TO DECREASE DELAY TIME, TURN POTENTIOMETER CLOCKWISE.
- DELAY RANGE: 0 – 60 SECONDS

MOUNTING INSTRUCTIONS

DO NOT USE GANGABLE SWITCH BOXES WHERE THE FACE PLATE MOUNTING
HOLE TABS FACE OUTWARD FROM THE BOX. THERE WILL NOT BE ENOUGH
HEIGHT CLEARANCE FOR THE P.C. BOARD.

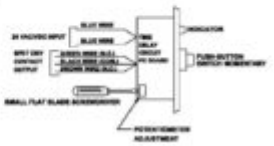

2720 CLARK AVE., ST. LOUIS, MO 63103 (800) 753-5558

REV. 05/2015

SERIES 1320 PUSHBUTTON SWITCH WITH TIME DELAY

COVERS THE FOLLOWING MODELS:

- 1320-4 PUSH-BUTTON SWITCH WITH TIME DELAY AND 1 STATUS INDICATOR (RED).



MOUNTS IN A DOUBLE GANG WALL MOUNT ELECTRICAL BOX.
SIZE 4" SQ. X 2-1/8" DEEP. (RACO #680 OR EQUIVALENT)

ELECTRICAL SPECIFICATIONS

- 24VAC/VDC +/- 10% INPUT
- CONTACTS RATED AT 1A @ 30VDC
- CURRENT DRAW @ 24VDC: 5mA (STANDBY); 40mA (ACTIVATED)

RED LED STATUS INDICATOR

RED LED TURNS ON WHEN RELAY IS ENERGIZED FOR
A DELAYED AMOUNT OF TIME AFTER PUSHBUTTON IS DEPRESSED.

ADJUSTING THE TIME DELAY CIRCUIT

- TO INCREASE DELAY TIME, TURN POTENTIOMETER COUNTERCLOCKWISE.
- TO DECREASE DELAY TIME, TURN POTENTIOMETER CLOCKWISE.
- DELAY RANGE: 0 - 40 SECONDS

MOUNTING INSTRUCTIONS

DO NOT USE GANGABLE SWITCH BOXES WHERE THE FACE PLATE MOUNTING HOLE TABS FACE OUTWARD FROM THE BOX. THERE WILL NOT BE ENOUGH HEIGHT CLEARANCE FOR THE P.C. BOARD.

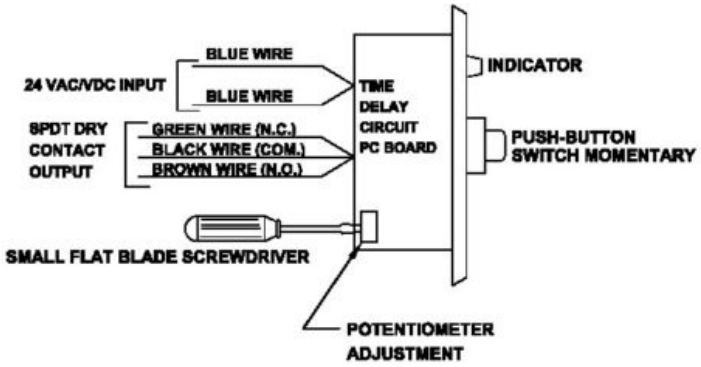

ACSI
ARCHITECTURAL CONTROL SYSTEMS INC

2720 CLARK AVE., ST. LOUIS, MO 63103 (800) 753-5558

REV. 05/2018

SERIES 1320 PUSHBUTTON SWITCH WITH TIME DELAY

COVERS THE FOLLOWING MODELS:

- 1320-4 PUSH-BUTTON SWITCH WITH TIME DELAY AND 1 STATUS INDICATOR (RED).

MOUNTS IN A DOUBLE GANG WALL MOUNT ELECTRICAL BOX.
SIZE 4" SQ. X 2-1/8" DEEP. (RACO #680 OR EQUIVALENT)



ELECTRICAL SPECIFICATIONS

- 24VAC/VDC +/- 10% INPUT
- CONTACTS RATED AT 1A @ 30VDC
- CURRENT DRAW @ 24VDC: 5mA (STANDBY); 40mA (ACTIVATED)

RED LED STATUS INDICATOR

RED LED TURNS ON WHEN RELAY IS ENERGIZED FOR
A DELAYED AMOUNT OF TIME AFTER PUSHBUTTON IS DEPRESSED.

ADJUSTING THE TIME DELAY CIRCUIT

- TO INCREASE DELAY TIME, TURN POTENTIOMETER COUNTERCLOCKWISE.
- TO DECREASE DELAY TIME, TURN POTENTIOMETER CLOCKWISE.
- DELAY RANGE: 0 - 40 SECONDS

MOUNTING INSTRUCTIONS

DO NOT USE GANGABLE SWITCH BOXES WHERE THE FACE PLATE MOUNTING HOLE TABS FACE OUTWARD FROM THE BOX. THERE WILL NOT BE ENOUGH HEIGHT CLEARANCE FOR THE P.C. BOARD.

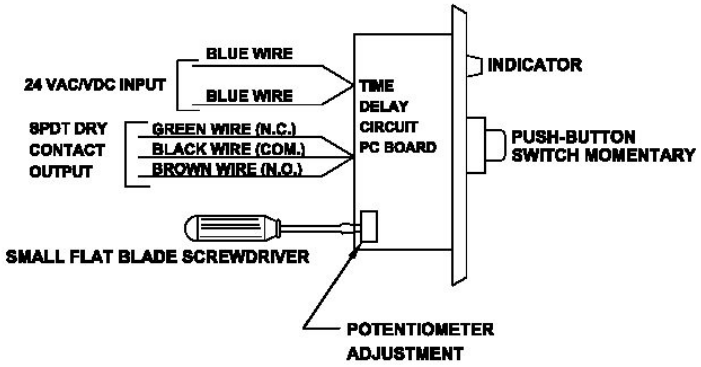

ACSI
ARCHITECTURAL
CONTROL SYSTEMS INC

2720 CLARK AVE., ST. LOUIS, MO 63103 (800) 753-5558

REV. 05/2018

SERIES 1320 PUSHBUTTON SWITCH WITH TIME DELAY

COVERS THE FOLLOWING MODELS:

- 1320-4 PUSH-BUTTON SWITCH WITH TIME DELAY AND 1 STATUS INDICATOR (RED).

MOUNTS IN A DOUBLE GANG WALL MOUNT ELECTRICAL BOX.
SIZE 4" SQ. X 2-1/8" DEEP. (RACO #680 OR EQUIVALENT)



ELECTRICAL SPECIFICATIONS

- 24VAC/VDC +/- 10% INPUT
- CONTACTS RATED AT 1A @ 30VDC
- CURRENT DRAW @ 24VDC: 5mA (STANDBY); 40mA (ACTIVATED)

RED LED STATUS INDICATOR

RED LED TURNS ON WHEN RELAY IS ENERGIZED FOR
A DELAYED AMOUNT OF TIME AFTER PUSHBUTTON IS DEPRESSED.

ADJUSTING THE TIME DELAY CIRCUIT

- TO INCREASE DELAY TIME, TURN POTENTIOMETER COUNTERCLOCKWISE.
- TO DECREASE DELAY TIME, TURN POTENTIOMETER CLOCKWISE.
- DELAY RANGE: 0 - 40 SECONDS

MOUNTING INSTRUCTIONS

DO NOT USE GANGABLE SWITCH BOXES WHERE THE FACE PLATE MOUNTING HOLE TABS FACE OUTWARD FROM THE BOX. THERE WILL NOT BE ENOUGH HEIGHT CLEARANCE FOR THE P.C. BOARD.

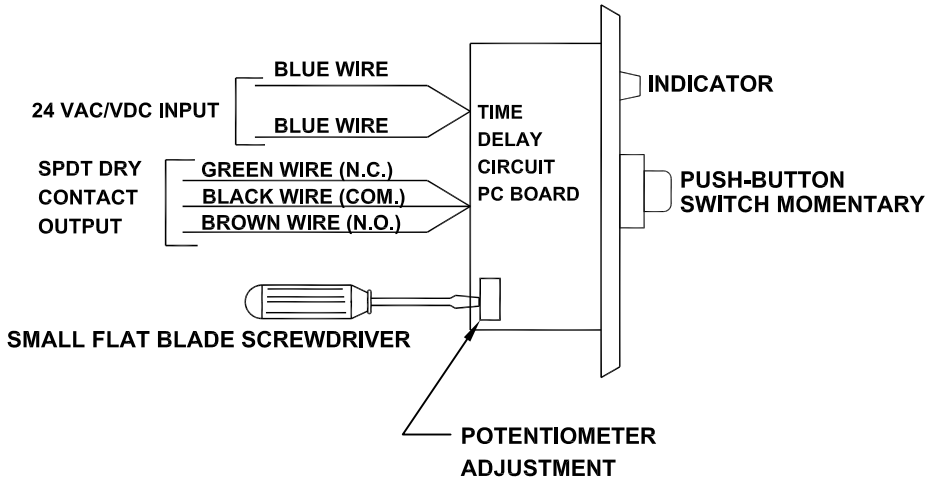

ACSI
ARCHITECTURAL
CONTROL SYSTEMS INC.

2720 CLARK AVE., ST. LOUIS, MO 63103 (800) 753-5558

REV. 05/2018

SERIES 1120 MUSHROOM PUSHBUTTON SWITCHES







SERIES 1320 MUSHROOM PUSHBUTTON SWITCHES

COVERS THE FOLLOWING MODELS:

- 1320-0 MUSHROOM PUSHBUTTON (RED), SINGLE GANG WALL MOUNT
- 1320-0-2 MUSHROOM PUSHBUTTON (RED) WITH TWO INDICATORS RED AND GREEN, SINGLE GANG WALL MOUNT



MODEL 1320-0 SHOWN

ELECTRICAL SPECIFICATIONS

- CONTACTS RATED AT 1A @ 30VDC
- LED INDICATORS RATED AT 20mA @ 28VDC

MOMENTARY MUSHROOM PUSHBUTTON

WHEN RED MUSHROOM BUTTON IS DEPRESSED AN INTERNAL SPRING RETURNS THE BUTTON TO IT'S NORMAL POSITION. THE MUSHROOM BUTTON USES SINGLE POLE STACKABLE CONTACT BLOCKS WITH SCREW CLAMP WIRE TERMINATION.

NORMALLY OPEN (GREEN CONTACT BLOCK): WHEN PUSHBUTTON IS DEPRESSED, THERE IS A MOMENTARY 1320 NOT CLOSURE. WHEN RELEASED, CONTACTS RETURN TO NORMALLY OPEN POSITION.

NORMALLY CLOSED (RED CONTACT BLOCK): WHEN PUSHBUTTON IS DEPRESSED, THERE IS A MOMENTARY OPENING OF THE CONTACTS. WHEN RELEASED, CONTACTS RETURN TO NORMALLY CLOSED POSITION.

MAINTAIN MUSHROOM PUSHBUTTON

PUSH THE RED MUSHROOM BUTTON TO PLACE IT IN THE MAINTAINED "IN" POSITION.
PULL THE RED PUSHBUTTON TO PLACE IT IN THE MAINTAINED "OUT" POSITION.
THE MUSHROOM BUTTON USES SINGLE POLE STACKABLE CONTACT BLOCKS WITH SCREW CLAMP WIRE TERMINATION.

NORMALLY OPEN (GREEN CONTACT BLOCK): WHEN PUSHBUTTON IS PUSHED IN, THERE IS A MAINTAINED CONTACT CLOSURE. WHEN BUTTON IS PULLED OUT, CONTACTS RETURN TO NORMALLY OPEN POSITION.

NORMALLY CLOSED (RED CONTACT BLOCK): WHEN PUSHBUTTON IS PUSHED IN, THERE IS A MAINTAINED OPENING OF THE CONTACT. WHEN BUTTON IS PULLED OUT, CONTACTS RETURN TO NORMALLY CLOSED POSITION.

RED/GREEN LED STATUS INDICATORS

RED LED LEADS ARE IDENTIFIED WITH A RED CABLE TIE, AND THE GREEN LED LEADS ARE IDENTIFIED WITH A GREEN CABLE TIE. RED WIRE LEADS ARE (+) POSITIVE AND BLACK WIRE LEADS ARE (-) NEGATIVE.



2720 CLARK AVE., ST. LOUIS, MO 63103 (800) 733-5858 REV. 06/2018

S-1300-7

SERIES 1320 MUSHROOM PUSHBUTTON SWITCHES



MODEL 1320-5 SHOWN

COVERS THE FOLLOWING MODELS:

- **1320-5 MUSHROOM PUSHBUTTON (RED), SINGLE GANG WALL MOUNT**
- **1320-5-2 MUSHROOM PUSHBUTTON (RED) WITH TWO INDICATORS RED AND GREEN, SINGLE GANG WALL MOUNT**

ELECTRICAL SPECIFICATIONS

- CONTACTS RATED AT 1A @ 30VDC
- LED INDICATORS RATED AT 20mA @ 24VDC

MOMENTARY MUSHROOM PUSHBUTTON

WHEN RED MUSHROOM BUTTON IS DEPRESSED AN INTERNAL SPRING RETURNS THE BUTTON TO ITS NORMAL POSITION.
THE MUSHROOM BUTTON USES SINGLE POLE STACKABLE CONTACT BLOCKS WITH SCREW CLAMP WIRE TERMINATION.

NORMALLY OPEN (GREEN CONTACT BLOCK): WHEN PUSHBUTTON IS DEPRESSED, THERE IS A MOMENTARY CONTACT CLOSURE. WHEN RELEASED, CONTACTS RETURN TO NORMALLY OPEN POSITION.

NORMALLY CLOSED (RED CONTACT BLOCK): WHEN PUSHBUTTON IS DEPRESSED, THERE IS A MOMENTARY OPENING OF THE CONTACTS. WHEN RELEASED, CONTACTS RETURN TO NORMALLY CLOSED POSITION.

MAINTAIN MUSHROOM PUSHBUTTON

PUSH THE RED MUSHROOM BUTTON TO PLACE IT IN THE MAINTAINED "IN" POSITION.
PULL THE RED PUSHBUTTON TO PLACE IT IN THE MAINTAINED "OUT" POSITION.
THE MUSHROOM BUTTON USES SINGLE POLE STACKABLE CONTACT BLOCKS WITH SCREW CLAMP WIRE TERMINATION.

NORMALLY OPEN (GREEN CONTACT BLOCK): WHEN PUSHBUTTON IS PUSHED IN, THERE IS A MAINTAINED CONTACT CLOSURE. WHEN BUTTON IS PULLED OUT, CONTACTS RETURN TO NORMALLY OPEN POSITION.

NORMALLY CLOSED (RED CONTACT BLOCK): WHEN PUSHBUTTON IS PUSHED IN, THERE IS A MAINTAINED OPENING OF THE CONTACT. WHEN BUTTON IS PULLED OUT, CONTACTS RETURN TO NORMALLY CLOSED POSITION.

RED/GREEN LED STATUS INDICATORS

RED LED LEADS ARE IDENTIFIED WITH A RED CABLE TIE, AND THE GREEN LED LEADS ARE IDENTIFIED WITH A GREEN CABLE TIE. RED WIRE LEADS ARE (+) POSITIVE AND BLACK WIRE LEADS ARE (-) NEGATIVE.

CONFIGURING CONTACT BLOCKS FOR SPDT OUTPUT

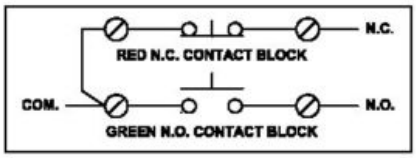

ACSI
ARCHITECTURAL CONTROL SYSTEMS INC

2720 CLARK AVE., ST. LOUIS, MO 63103 (800) 753-5558

REV. 05/2018

SERIES 1320 MUSHROOM PUSHBUTTON SWITCHES



MODEL 1320-5 SHOWN

COVERS THE FOLLOWING MODELS:

- **1320-5 MUSHROOM PUSHBUTTON (RED), SINGLE GANG WALL MOUNT**
- **1320-5-2 MUSHROOM PUSHBUTTON (RED) WITH TWO INDICATORS RED AND GREEN, SINGLE GANG WALL MOUNT**

ELECTRICAL SPECIFICATIONS

- CONTACTS RATED AT 1A @ 30VDC
- LED INDICATORS RATED AT 20mA @ 24VDC

MOMENTARY MUSHROOM PUSHBUTTON

WHEN RED MUSHROOM BUTTON IS DEPRESSED AN INTERNAL SPRING RETURNS THE BUTTON TO ITS NORMAL POSITION.
THE MUSHROOM BUTTON USES SINGLE POLE STACKABLE CONTACT BLOCKS WITH SCREW CLAMP WIRE TERMINATION.

NORMALLY OPEN (GREEN CONTACT BLOCK): WHEN PUSHBUTTON IS DEPRESSED, THERE IS A MOMENTARY CONTACT CLOSURE. WHEN RELEASED, CONTACTS RETURN TO NORMALLY OPEN POSITION.

NORMALLY CLOSED (RED CONTACT BLOCK): WHEN PUSHBUTTON IS DEPRESSED, THERE IS A MOMENTARY OPENING OF THE CONTACTS. WHEN RELEASED, CONTACTS RETURN TO NORMALLY CLOSED POSITION.

MAINTAIN MUSHROOM PUSHBUTTON

PUSH THE RED MUSHROOM BUTTON TO PLACE IT IN THE MAINTAINED "IN" POSITION.
PULL THE RED PUSHBUTTON TO PLACE IT IN THE MAINTAINED "OUT" POSITION.
THE MUSHROOM BUTTON USES SINGLE POLE STACKABLE CONTACT BLOCKS WITH SCREW CLAMP WIRE TERMINATION.

NORMALLY OPEN (GREEN CONTACT BLOCK): WHEN PUSHBUTTON IS PUSHED IN, THERE IS A MAINTAINED CONTACT CLOSURE. WHEN BUTTON IS PULLED OUT, CONTACTS RETURN TO NORMALLY OPEN POSITION.

NORMALLY CLOSED (RED CONTACT BLOCK): WHEN PUSHBUTTON IS PUSHED IN, THERE IS A MAINTAINED OPENING OF THE CONTACT. WHEN BUTTON IS PULLED OUT, CONTACTS RETURN TO NORMALLY CLOSED POSITION.

RED/GREEN LED STATUS INDICATORS

RED LED LEADS ARE IDENTIFIED WITH A RED CABLE TIE, AND THE GREEN LED LEADS ARE IDENTIFIED WITH A GREEN CABLE TIE. RED WIRE LEADS ARE (+) POSITIVE AND BLACK WIRE LEADS ARE (-) NEGATIVE.

CONFIGURING CONTACT BLOCKS FOR SPDT OUTPUT

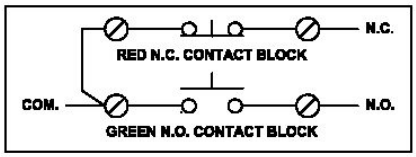

ACSI
ARCHITECTURAL CONTROL SYSTEMS INC
2720 CLARK AVE., ST. LOUIS, MO 63103 (800) 753-5558

REV. 05/2018

SERIES 1320 MUSHROOM PUSHBUTTON SWITCHES



MODEL 1320-5 SHOWN

COVERS THE FOLLOWING MODELS:

- 1320-5 MUSHROOM PUSHBUTTON (RED), SINGLE GANG WALL MOUNT
- 1320-5-2 MUSHROOM PUSHBUTTON (RED) WITH TWO INDICATORS RED AND GREEN, SINGLE GANG WALL MOUNT

ELECTRICAL SPECIFICATIONS

- CONTACTS RATED AT 1A @ 30VDC
- LED INDICATORS RATED AT 20mA @ 24VDC

MOMENTARY MUSHROOM PUSHBUTTON

WHEN RED MUSHROOM BUTTON IS DEPRESSED AN INTERNAL SPRING RETURNS THE BUTTON TO ITS NORMAL POSITION.
THE MUSHROOM BUTTON USES SINGLE POLE STACKABLE CONTACT BLOCKS WITH SCREW CLAMP WIRE TERMINATION.

NORMALLY OPEN (GREEN CONTACT BLOCK): WHEN PUSHBUTTON IS DEPRESSED, THERE IS A MOMENTARY CONTACT CLOSURE. WHEN RELEASED, CONTACTS RETURN TO NORMALLY OPEN POSITION.

NORMALLY CLOSED (RED CONTACT BLOCK): WHEN PUSHBUTTON IS DEPRESSED, THERE IS A MOMENTARY OPENING OF THE CONTACTS. WHEN RELEASED, CONTACTS RETURN TO NORMALLY CLOSED POSITION.

MAINTAIN MUSHROOM PUSHBUTTON

PUSH THE RED MUSHROOM BUTTON TO PLACE IT IN THE MAINTAINED "IN" POSITION.
PULL THE RED PUSHBUTTON TO PLACE IT IN THE MAINTAINED "OUT" POSITION.
THE MUSHROOM BUTTON USES SINGLE POLE STACKABLE CONTACT BLOCKS WITH SCREW CLAMP WIRE TERMINATION.

NORMALLY OPEN (GREEN CONTACT BLOCK): WHEN PUSHBUTTON IS PUSHED IN, THERE IS A MAINTAINED CONTACT CLOSURE. WHEN BUTTON IS PULLED OUT, CONTACTS RETURN TO NORMALLY OPEN POSITION.

NORMALLY CLOSED (RED CONTACT BLOCK): WHEN PUSHBUTTON IS PUSHED IN, THERE IS A MAINTAINED OPENING OF THE CONTACT. WHEN BUTTON IS PULLED OUT, CONTACTS RETURN TO NORMALLY CLOSED POSITION.

RED/GREEN LED STATUS INDICATORS

RED LED LEADS ARE IDENTIFIED WITH A RED CABLE TIE, AND THE GREEN LED LEADS ARE IDENTIFIED WITH A GREEN CABLE TIE. RED WIRE LEADS ARE (+) POSITIVE AND BLACK WIRE LEADS ARE (-) NEGATIVE.

CONFIGURING CONTACT BLOCKS FOR SPDT OUTPUT

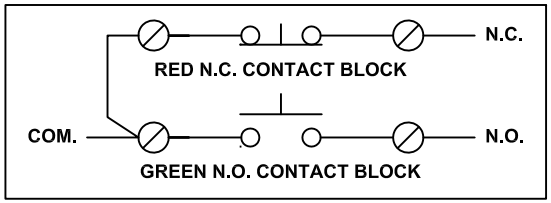

ACSI
ARCHITECTURAL CONTROL SYSTEMS INC.

2720 CLARK AVE., ST. LOUIS, MO 63103 (800) 753-5558

REV. 05/2018

SERIES 1320 DOOR POSITION SWITCHES, MORTISE / ANSI STRIKE





SERIES 1335 DOOR POSITION SWITCHES, MORTISE / ANSI STRIKE

COVERS THE FOLLOWING MODELS:

1335-1 DOOR POSITION SWITCH STANDARD MORTISE, SPDT CONTACTS
1335-2 DOOR POSITION SWITCH ANSI STRIKE, SPDT CONTACTS
1335-4 DOOR POSITION SWITCH STANDARD MORTISE, DPDT CONTACTS
1335-5 DOOR POSITION SWITCH ANSI STRIKE, DPDT CONTACTS



1335-1 DOOR POSITION SWITCH SHOWN

ELECTRICAL SPECIFICATIONS

- [illegible]
- [illegible]
- [illegible]

DOOR POSITION SENSORS

- MAGNETIC SENSORS MOUNTED WITH FRAME REACT TO THE PROXIMITY OF THE MAGNET MOUNTED IN THE DOOR. MAGNET IS THREADED FOR ADJUSTABILITY IF REQUIRED.
- NOMINAL GAP DISTANCE: 1/2"

WIRING DIAGRAM

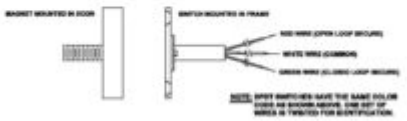

NOTE: SPDT SWITCHES HAVE THE SAME COLOR CODE AS SHOWN ABOVE. ONE SET OF WIRES IS TWISTED FOR IDENTIFICATION.

2720 CLARK AVE., ST. LOUIS, MO 63103 (800) 753-6858 REV. 11/2017 II-1300-10

SERIES 1335 DOOR POSITION SWITCHES, MORTISE / ANSI STRIKE

COVERS THE FOLLOWING MODELS:

1335-1 DOOR POSITION SWITCH STANDARD MORTISE, SPDT CONTACTS
1335-2 DOOR POSITION SWITCH ANSI STRIKE, SPDT CONTACTS
1335-4 DOOR POSITION SWITCH STANDARD MORTISE, DPDT CONTACTS
1335-5 DOOR POSITION SWITCH ANSI STRIKE, DPDT CONTACTS

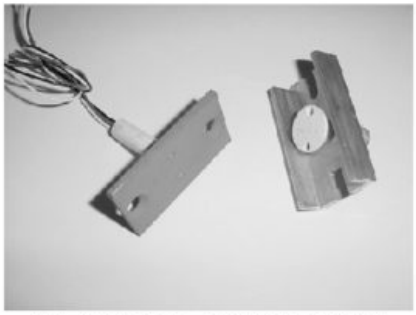

1335-1 DOOR POSITION SWITCH SHOWN

ELECTRICAL SPECIFICATIONS

- 28VDC (MAXIMUM)
- CURRENT DRAW 200mA @ 24VDC
- CONTACTS RATED AT 5W (MAXIMUM)

DOOR POSITION SENSORS

- MAGNETIC SENSORS MOUNTED INTHE FRAME REACT TO THE PROXIMITY OF THE MAGNET MOUNTED IN THE DOOR. MAGNET IS THREADED FOR ADJUSTABILITY IF REQUIRED.
- NOMINAL GAP DISTANCE: 1/2"

WIRING DIAGRAM

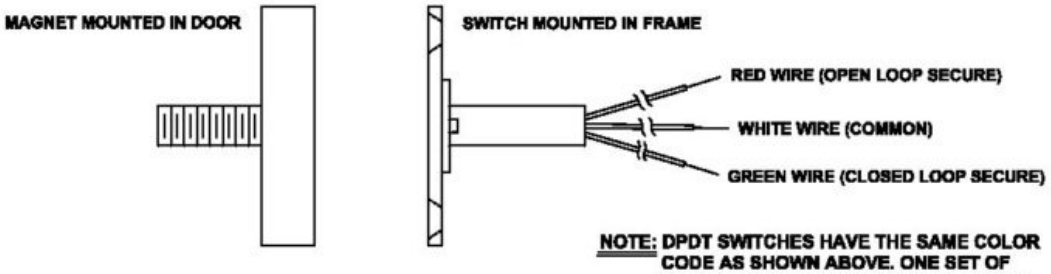

NOTE: DPDT SWITCHES HAVE THE SAME COLOR CODE AS SHOWN ABOVE. ONE SET OF WIRES IS TWISTED FOR IDENTIFICATION.

ACSI
ARCHITECTURAL CONTROL SYSTEMS INC.
2720 CLARK AVE., ST. LOUIS, MO 63103 (800) 753-5558

REV. 11/2017

SERIES 1335 DOOR POSITION SWITCHES, MORTISE / ANSI STRIKE

COVERS THE FOLLOWING MODELS:

1335-1 DOOR POSITION SWITCH STANDARD MORTISE, SPDT CONTACTS
1335-2 DOOR POSITION SWITCH ANSI STRIKE, SPDT CONTACTS
1335-4 DOOR POSITION SWITCH STANDARD MORTISE, DPDT CONTACTS
1335-5 DOOR POSITION SWITCH ANSI STRIKE, DPDT CONTACTS

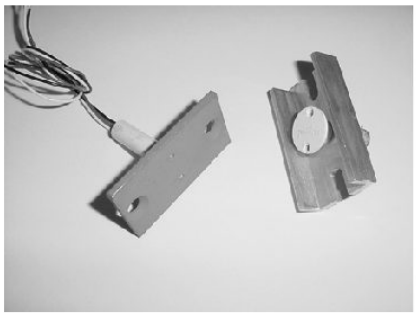

1335-1 DOOR POSITION SWITCH SHOWN

ELECTRICAL SPECIFICATIONS

- 28VDC (MAXIMUM)
- CURRENT DRAW 200mA @ 24VDC
- CONTACTS RATED AT 5W (MAXIMUM)

DOOR POSITION SENSORS

- MAGNETIC SENSORS MOUNTED INTHE FRAME REACT TO THE PROXIMITY OF THE MAGNET MOUNTED IN THE DOOR. MAGNET IS THREADED FOR ADJUSTABILITY IF REQUIRED.
- NOMINAL GAP DISTANCE: 1/2"

WIRING DIAGRAM

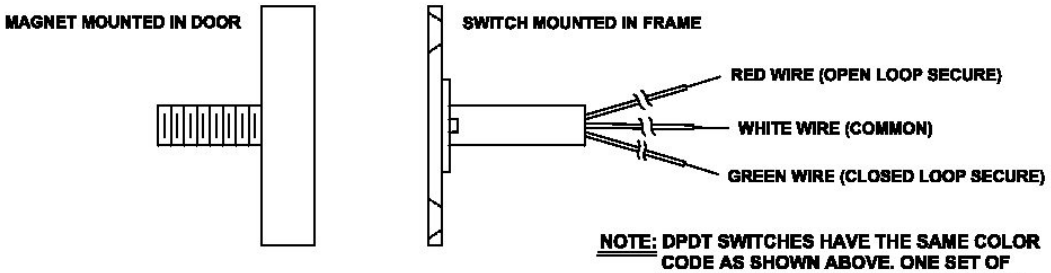

NOTE: DPDT SWITCHES HAVE THE SAME COLOR CODE AS SHOWN ABOVE. ONE SET OF WIRES IS TWISTED FOR IDENTIFICATION.

ACSI ARCHITECTURAL CONTROL SYSTEMS INC.
2720 CLARK AVE., ST. LOUIS, MO 63103 (800) 753-5558

REV. 11/2017

SERIES 1335 DOOR POSITION SWITCHES, MORTISE / ANSI STRIKE

COVERS THE FOLLOWING MODELS:

1335-1 DOOR POSITION SWITCH STANDARD MORTISE, SPDT CONTACTS
1335-2 DOOR POSITION SWITCH ANSI STRIKE, SPDT CONTACTS
1335-4 DOOR POSITION SWITCH STANDARD MORTISE, DPDT CONTACTS
1335-5 DOOR POSITION SWITCH ANSI STRIKE, DPDT CONTACTS

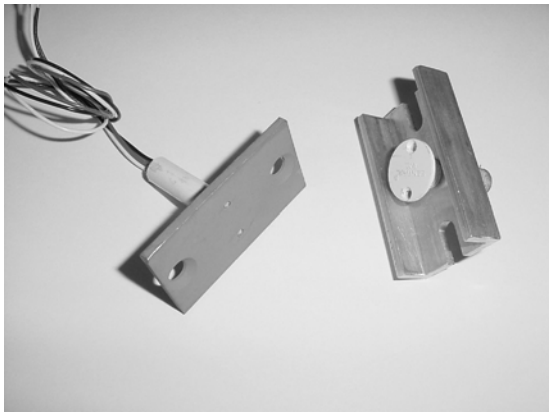

1335-1 DOOR POSITION SWITCH SHOWN

ELECTRICAL SPECIFICATIONS

- 28VDC (MAXIMUM)
- CURRENT DRAW 200mA @ 24VDC
- CONTACTS RATED AT 5W (MAXIMUM)

DOOR POSITION SENSORS

- MAGNETIC SENSORS MOUNTED INTHE FRAME REACT TO THE PROXIMITY OF THE MAGNET MOUNTED IN THE DOOR. MAGNET IS THREADED FOR ADJUSTABILITY IF REQUIRED.
- NOMINAL GAP DISTANCE: 1/2"

WIRING DIAGRAM

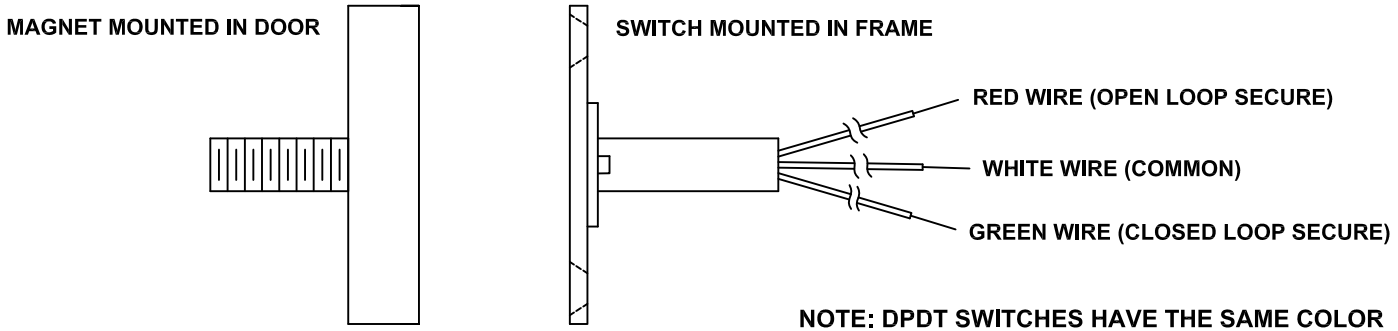

NOTE: DPDT SWITCHES HAVE THE SAME COLOR CODE AS SHOWN ABOVE. ONE SET OF WIRES IS TWISTED FOR IDENTIFICATION.

ACSI ARCHITECTURAL CONTROL SYSTEMS INC.
2720 CLARK AVE., ST. LOUIS, MO 63103 (800) 753-5558

SERIES 1335 DOOR POSITION SWITCHES, SURFACE MOUNT





D-1335-11

SERIES 1335 DOOR POSITION SWITCHES, SURFACE MOUNT

COVERS THE FOLLOWING MODELS:

- 1335-2 DOOR POSITION SWITCH SURFACE MOUNT, SPDT CONTACTS
- 1335-4 DOOR POSITION SWITCH SURFACE MOUNT, DPDT CONTACTS



1335-2 DOOR POSITION SWITCH SHOWN

ELECTRICAL SPECIFICATIONS

- SENSITIVE (MAXIMUM)
- CURRENT DRAW 100mA (MAXIMUM)
- CONTACTS RATED AT 5W (MAXIMUM)

DOOR POSITION SENSORS

- MAGNETIC SENSORS MOUNTED IN THE FRAME, READY TO THE PROXIMITY OF THE MAGNET MOUNTED IN THE DOOR.
- GAP DISTANCE IN WOOD UP TO 2", IN STEEL UP TO 1" FOR MODEL 1335-2
- GAP DISTANCE IN WOOD UP TO 24", IN STEEL UP TO 24" FOR MODEL 1335-4
- BREAK DISTANCE IS APPROXIMATELY 1.1 TO 1.2 TIMES MAKE.

NOTE: GAP SPECIFICATIONS ARE NOMINAL AND MAY VARY +/- 20%

WIRING DIAGRAM

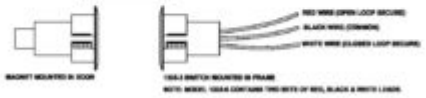

MAGNET MOUNTED IN DOOR

1335-2 SWITCH MOUNTED IN FRAME

NOTE: MODEL 1335-4 CONTAINS TWO SETS OF RED, BLACK & WHITE LEADS.

2720 CLARK AVE., ST. LOUIS, MO 63103 (800) 753-6558 REV. 11/2017

II-1300-11

SERIES 1335 DOOR POSITION SWITCHES, SURFACE MOUNT

COVERS THE FOLLOWING MODELS:

- 1335-3 DOOR POSITION SWITCH SURFACE MOUNT, SPDT CONTACTS
- 1335-6 DOOR POSITION SWITCH SURFACE MOUNT, DPDT CONTACTS

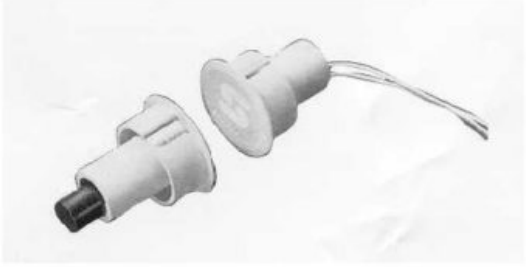

1335-3 DOOR POSITION SWITCH SHOWN

ELECTRICAL SPECIFICATIONS

- 30VAC/VDC (MAXIMUM)
- CURRENT DRAW 250mA (MAXIMUM)
- CONTACTS RATED AT 3W (MAXIMUM)

DOOR POSITION SENSORS

- MAGNETIC SENSORS MOUNTED INTHE FRAME REACT TO THE PROXIMITY OF THE MAGNET MOUNTED IN THE DOOR.
- GAP DISTANCE IN WOOD UP TO 2"; IN STEEL UP TO 1" FOR MODEL 1335-3
- GAP DISTANCE IN WOOD UP TO 3/4"; IN STEEL UP TO 3/8" FOR MODEL 1335-6
- BREAK DISTANCE IS APPROXIMATELY 1.1 TO 1.5 TIMES MAKE.

NOTE: GAP SPECIFICATIONS ARE NOMINAL AND MAY VERY +/- 20%

WIRING DIAGRAM

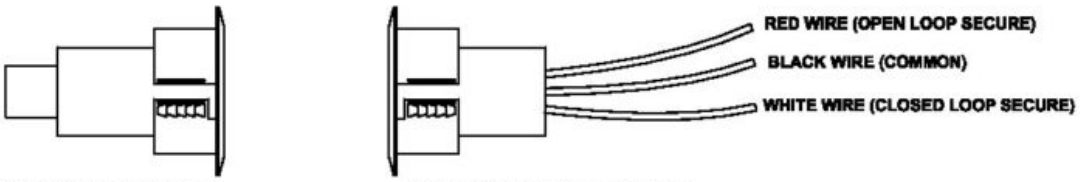

MAGNET MOUNTED IN DOOR

1335-3 SWITCH MOUNTED IN FRAME

NOTE: MODEL 1335-6 CONTAINS TWO SETS OF RED, BLACK & WHITE LEADS.

ACSI
ARCHITECTURAL CONTROL SYSTEMS INC.

2720 CLARK AVE., ST. LOUIS, MO 63103 (800) 753-5558

REV. 11/2017

SERIES 1335 DOOR POSITION SWITCHES, SURFACE MOUNT

COVERS THE FOLLOWING MODELS:

- 1335-3 DOOR POSITION SWITCH SURFACE MOUNT, SPDT CONTACTS
- 1335-6 DOOR POSITION SWITCH SURFACE MOUNT, DPDT CONTACTS

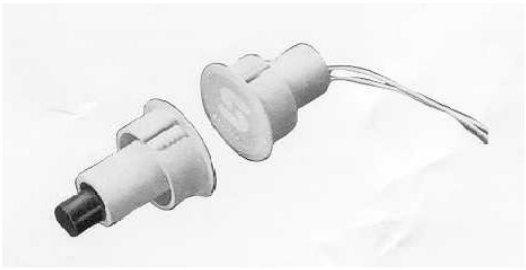

1335-3 DOOR POSITION SWITCH SHOWN

ELECTRICAL SPECIFICATIONS

- 30VAC/VDC (MAXIMUM)
- CURRENT DRAW 250mA (MAXIMUM)
- CONTACTS RATED AT 3W (MAXIMUM)

DOOR POSITION SENSORS

- MAGNETIC SENSORS MOUNTED INTHE FRAME REACT TO THE PROXIMITY OF THE MAGNET MOUNTED IN THE DOOR.
- GAP DISTANCE IN WOOD UP TO 2"; IN STEEL UP TO 1" FOR MODEL 1335-3
- GAP DISTANCE IN WOOD UP TO 3/4"; IN STEEL UP TO 3/8" FOR MODEL 1335-6
- BREAK DISTANCE IS APPROXIMATELY 1.1 TO 1.5 TIMES MAKE.

NOTE: GAP SPECIFICATIONS ARE NOMINAL AND MAY VERY +/- 20%

WIRING DIAGRAM

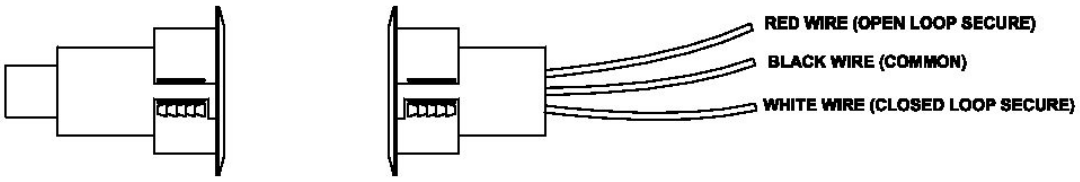

MAGNET MOUNTED IN DOOR

1335-3 SWITCH MOUNTED IN FRAME

NOTE: MODEL 1335-6 CONTAINS TWO SETS OF RED, BLACK & WHITE LEADS.

ACSI
ARCHITECTURAL CONTROL SYSTEMS INC.

2720 CLARK AVE., ST. LOUIS, MO 63103 (800) 753-5558

REV. 11/2017

SERIES 1335 DOOR POSITION SWITCHES, SURFACE MOUNT

COVERS THE FOLLOWING MODELS:

- 1335-3 DOOR POSITION SWITCH SURFACE MOUNT, SPDT CONTACTS
- 1335-6 DOOR POSITION SWITCH SURFACE MOUNT, DPDT CONTACTS

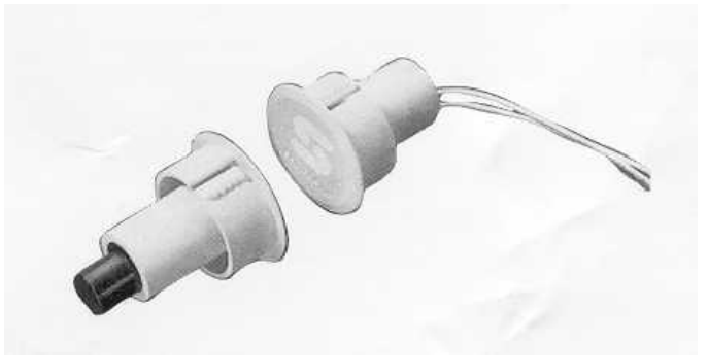

1335-3 DOOR POSITION SWITCH SHOWN

ELECTRICAL SPECIFICATIONS

- 30VAC/VDC (MAXIMUM)
- CURRENT DRAW 250mA (MAXIMUM)
- CONTACTS RATED AT 3W (MAXIMUM)

DOOR POSITION SENSORS

- MAGNETIC SENSORS MOUNTED INTHE FRAME REACT TO THE PROXIMITY OF THE MAGNET MOUNTED IN THE DOOR.
- GAP DISTANCE IN WOOD UP TO 2"; IN STEEL UP TO 1" FOR MODEL 1335-3
- GAP DISTANCE IN WOOD UP TO 3/4"; IN STEEL UP TO 3/8" FOR MODEL 1335-6
- BREAK DISTANCE IS APPROXIMATELY 1.1 TO 1.5 TIMES MAKE.

NOTE: GAP SPECIFICATIONS ARE NOMINAL AND MAY VERY +/- 20%

WIRING DIAGRAM

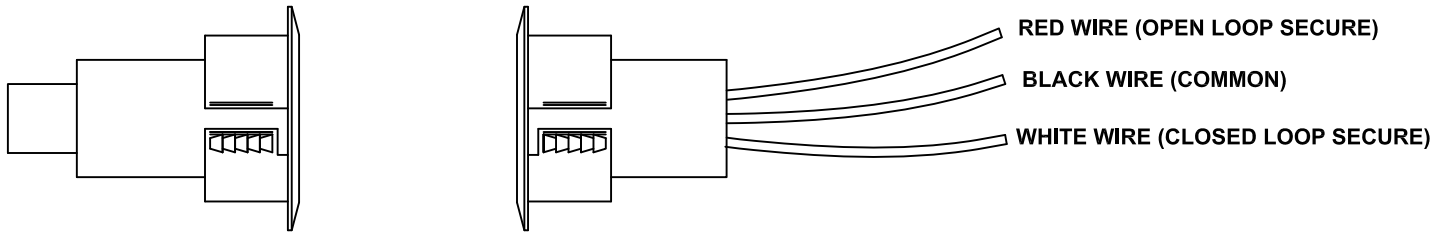

MAGNET MOUNTED IN DOOR

1335-3 SWITCH MOUNTED IN FRAME

NOTE: MODEL 1335-6 CONTAINS TWO SETS OF RED, BLACK & WHITE LEADS.

ACSI ARCHITECTURAL CONTROL SYSTEMS INC.

2720 CLARK AVE., ST. LOUIS, MO 63103 (800) 753-5558

REV. 11/2017

SERIES 1310 MORTISE KEYSWITCHES



MODEL 1310-2
SHOWN

COVERS THE FOLLOWING MODELS:

- 1310-1 KEYSWITCH SINGLE GANG WALL MOUNT IN STANDARD 2-1/8" ELECTRICAL BOX.

- 1310-2 KEYSWITCH WITH 2 STATUS INDICATORS (RED & GREEN). SINGLE GANG WALL MOUNT IN STANDARD 2-1/8" ELECTRICAL BOX.

ELECTRICAL SPECIFICATIONS

- DPDT CONTACT CONFIGURATION
- CONTACTS RATED AT 1A @ 30VDC
- LED INDICATORS RATED AT 20mA @ 24VDC

MOMENTARY ACTION FUNCTION

- WHEN THE KEY IS TURNED TO THE CLOCKWISE POSITION, THE BLACK LEAD MAKES CONTACT WITH THE WHITE LEAD AND BREAKS CONTACT WITH THE RED LEAD; THE BROWN LEAD MAKES CONTACT WITH THE BLUE LEAD AND BREAKS CONTACT WITH THE YELLOW LEAD. WHEN THE KEY IS RELEASED, THE CONTACTS RETURN TO THEIR NORMAL POSITION.

RED WIRE - N.C.	YELLOW WIRE - N.C.
BLACK WIRE - COM.	BROWN WIRE - COM.
WHITE WIRE - N.O.	BLUE WIRE - N.O.

MAINTAIN ACTION FUNCTION

- WHEN THE KEY IS TURNED TO SET THE SWITCH IN THE "MAINTAINED COUNTERCLOCKWISE" POSITION, THE CONTACTS ARE CONFIGURED, WITH RESPECT TO "COM.", AS SHOWN BELOW:

RED WIRE - CLOSED	YELLOW WIRE - CLOSED
BLACK WIRE - COM.	BROWN WIRE - COM.
WHITE WIRE - OPEN	BLUE WIRE - OPEN

- WHEN THE KEY IS TURNED TO SET THE SWITCH IN THE "MAINTAINED CLOCKWISE" POSITION, THE CONTACTS ARE CONFIGURED, WITH RESPECT TO "COM.", AS SHOWN BELOW:

RED WIRE - OPEN	YELLOW WIRE - OPEN
BLACK WIRE - COM.	BROWN WIRE - COM.
WHITE WIRE - CLOSED	BLUE WIRE - CLOSED

RED/GREEN LED STATUS INDICATORS

RED LED LEADS ARE IDENTIFIED WITH A RED CABLE TIE, AND THE GREEN LED LEADS ARE IDENTIFIED WITH A GREEN CABLE TIE. RED WIRE LEADS ARE (+) POSITIVE AND BLACK WIRE LEADS ARE (-) NEGATIVE.

ACSI
ARCHITECTURAL CONTROL SYSTEMS INC.
2720 CLARK AVE., ST. LOUIS, MO 63103 (800) 753-5558

REV. 11/2017

SERIES 1310 MORTISE KEYSWITCHES

COVERS THE FOLLOWING MODELS:

- 1310-1 KEYSWITCH SINGLE GANG WALL MOUNT IN STANDARD 2-1/8" ELECTRICAL BOX.

- 1310-2 KEYSWITCH WITH 2 STATUS INDICATORS (RED & GREEN). SINGLE GANG WALL MOUNT IN STANDARD 2-1/8" ELECTRICAL BOX.



MODEL 1310-2 SHOWN

ELECTRICAL SPECIFICATIONS

- DPDT CONTACT CONFIGURATION
- CONTACTS RATED AT 1A @ 30VDC
- LED INDICATORS RATED AT 20mA @ 24VDC

MOMENTARY ACTION FUNCTION

- WHEN THE KEY IS TURNED TO THE CLOCKWISE POSITION, THE BLACK LEAD MAKES CONTACT WITH THE WHITE LEAD AND BREAKS CONTACT WITH THE RED LEAD; THE BROWN LEAD MAKES CONTACT WITH THE BLUE LEAD AND BREAKS CONTACT WITH THE YELLOW LEAD. WHEN THE KEY IS RELEASED, THE CONTACTS RETURN TO THEIR NORMAL POSITION.

RED WIRE - N.C.	YELLOW WIRE - N.C.
BLACK WIRE - COM.	BROWN WIRE - COM.
WHITE WIRE - N.O.	BLUE WIRE - N.O.

MAINTAIN ACTION FUNCTION

- WHEN THE KEY IS TURNED TO SET THE SWITCH IN THE "MAINTAINED COUNTERCLOCKWISE" POSITION, THE CONTACTS ARE CONFIGURED, WITH RESPECT TO "COM.", AS SHOWN BELOW:

RED WIRE - CLOSED	YELLOW WIRE - CLOSED
BLACK WIRE - COM.	BROWN WIRE - COM.
WHITE WIRE - OPEN	BLUE WIRE - OPEN

- WHEN THE KEY IS TURNED TO SET THE SWITCH IN THE "MAINTAINED CLOCKWISE" POSITION, THE CONTACTS ARE CONFIGURED, WITH RESPECT TO "COM.", AS SHOWN BELOW:

RED WIRE - OPEN	YELLOW WIRE - OPEN
BLACK WIRE - COM.	BROWN WIRE - COM.
WHITE WIRE - CLOSED	BLUE WIRE - CLOSED

RED/GREEN LED STATUS INDICATORS

RED LED LEADS ARE IDENTIFIED WITH A RED CABLE TIE, AND THE GREEN LED LEADS ARE IDENTIFIED WITH A GREEN CABLE TIE. RED WIRE LEADS ARE (+) POSITIVE AND BLACK WIRE LEADS ARE (-) NEGATIVE.

ARCHITECTURAL CONTROL SYSTEMS, INCORPORATED

2720 CLARK AVE., ST. LOUIS, MO 63103 (800) 753-5558

REV. 08/2017

SERIES 1310 MORTISE KEY SWITCHES WITH TIME DELAY

COVERS THE FOLLOWING MODELS:

- 1310-3 KEYSWITCH WITH TIME DELAY MOUNTS IN A DOUBLE GANG WALL MOUNT ELECTRICAL BOX. SIZE 4" SQ. X 2-1/8" DEEP. (RACO #680 OR EQUIVALENT)

- 1310-3-1 KEYSWITCH WITH TIME DELAY AND STATUS INDICATOR (RED). MOUNTS IN A DOUBLE GANG WALL MOUNT ELECTRICAL BOX. SIZE 4" SQ. X 2-1/8" DEEP. (RACO #680 OR EQUIVALENT)



MODEL 1310-3 SHOWN

ELECTRICAL SPECIFICATIONS

- 24VAC/VDC +/- 10% INPUT
- MAXIMUM CONTACT RATING: 10A @ 30VDC (RESISTIVE LOAD)
- CURRENT DRAW @ 24VDC: 5mA (STANDBY); 25mA (1310-3 ACTIVATED); 40mA (1310-3-1 ACTIVATED)

RED LED STATUS INDICATOR

RED LED LEADS ARE IDENTIFIED WITH A RED CABLE TIE.
RED WIRE LEAD IS (+) POSITIVE AND BLACK WIRE LEAD IS (-) NEGATIVE.

ADJUSTING THE TIME DELAY CIRCUIT

- TO INCREASE DELAY TIME, TURN POTENTIOMETER COUNTERCLOCKWISE.
- TO DECREASE DELAY TIME, TURN POTENTIOMETER CLOCKWISE.
- DELAY RANGE: 0 - 40 SECONDS

MOUNTING INSTRUCTIONS

IT MAY BE NECESSARY TO REMOVE THE KNOCKOUT, FACING THE TOGGLE SWITCH WIRE CONNECTIONS, TO ALLOW FOR MORE DEPTH CLEARANCE.

DO NOT USE GANGABLE SWITCH BOXES WHERE THE FACE PLATE MOUNTING HOLE TABS FACE OUTWARD FROM THE BOX. THERE WILL NOT BE ENOUGH HEIGHT CLEARANCE FOR THE P.C. BOARD.

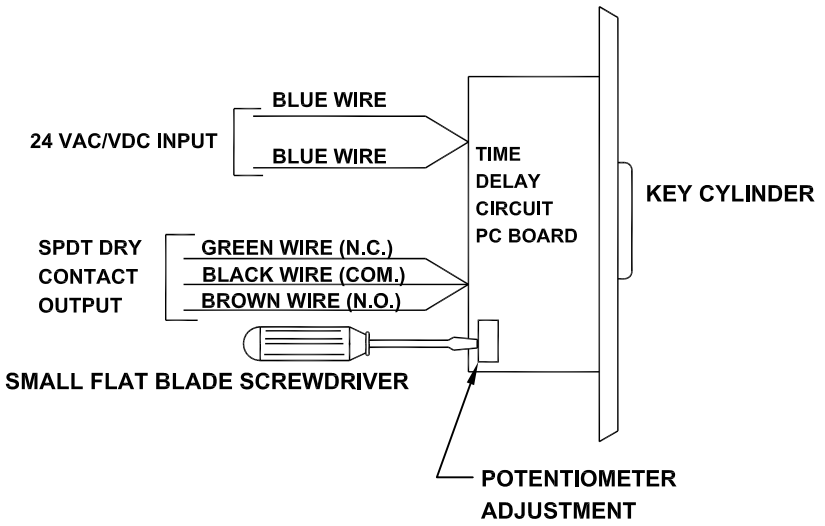

NOTE: RED LED INDICATOR USED ONLY ON MODEL 1310-3-1.

ACSI
ARCHITECTURAL CONTROL SYSTEMS INC.

2720 CLARK AVE., ST. LOUIS, MO 63103 (800) 753-5558

REV. 11/2017

SERIES 1310 MORTISE KEY SWITCHES WITH TIME DELAY

COVERS THE FOLLOWING MODELS:

- 1310-3 KEYSWITCH WITH TIME DELAY MOUNTS IN A DOUBLE GANG WALL MOUNT ELECTRICAL BOX. SIZE 4" SQ. X 2-1/8" DEEP. (RACO #680 OR EQUIVALENT)

- 1310-3-1 KEYSWITCH WITH TIME DELAY AND STATUS INDICATOR (RED). MOUNTS IN A DOUBLE GANG WALL MOUNT ELECTRICAL BOX. SIZE 4" SQ. X 2-1/8" DEEP. (RACO #680 OR EQUIVALENT)



MODEL 1310-3
SHOWN

ELECTRICAL SPECIFICATIONS

- 24VAC/VDC +/- 10% INPUT
- MAXIMUM CONTACT RATING: 10A @ 30VDC (RESISTIVE LOAD)
- CURRENT DRAW @ 24VDC: 5mA (STANDBY); 25mA (1310-3 ACTIVATED); 40mA (1310-3-1 ACTIVATED)

RED LED STATUS INDICATOR

RED LED LEADS ARE IDENTIFIED WITH A RED CABLE TIE.
RED WIRE LEAD IS (+) POSITIVE AND BLACK WIRE LEAD IS (-) NEGATIVE.

ADJUSTING THE TIME DELAY CIRCUIT

- TO INCREASE DELAY TIME, TURN POTENTIOMETER COUNTERCLOCKWISE.
- TO DECREASE DELAY TIME, TURN POTENTIOMETER CLOCKWISE.
- DELAY RANGE: 0 - 40 SECONDS

MOUNTING INSTRUCTIONS

IT MAY BE NECESSARY TO REMOVE THE KNOCKOUT, FACING THE TOGGLE SWITCH WIRE CONNECTIONS, TO ALLOW FOR MORE DEPTH CLEARANCE.

DO NOT USE GANGABLE SWITCH BOXES WHERE THE FACE PLATE MOUNTING HOLE TABS FACE OUTWARD FROM THE BOX. THERE WILL NOT BE ENOUGH HEIGHT CLEARANCE FOR THE P.C. BOARD.

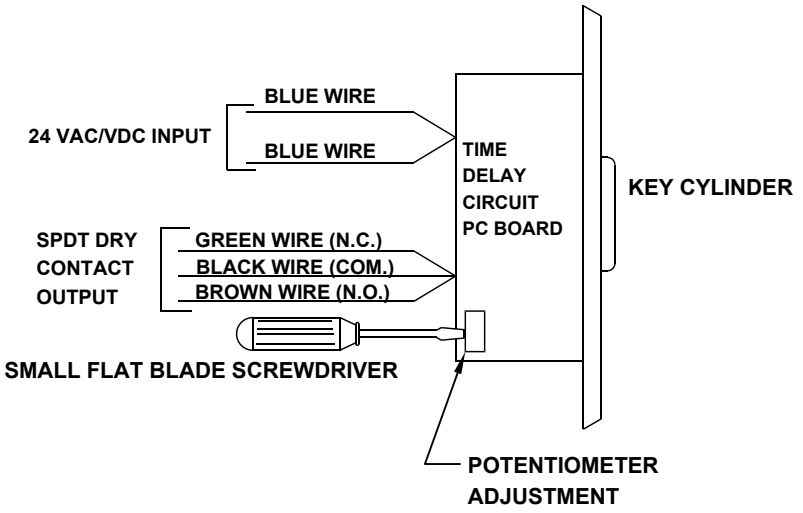

NOTE: RED LED INDICATOR USED ONLY ON MODEL 1310-3-1.

ARCHITECTURAL CONTROL SYSTEMS, INCORPORATED

2720 CLARK AVE., ST. LOUIS, MO 63103 (800) 753-5558

REV. 08/2017

SERIES 1310 MORTISE KEY SWITCHES, NARROW STYLE



MODEL 1310-4
SHOWN

COVERS THE FOLLOWING MODELS:

- 1310-4 KEYSWITCH NARROW STYLE, 1-3/4" FRAME MOUNT.
- 1310-4-2 KEYSWITCH NARROW STYLE WITH 2 STATUS INDICATORS (RED & GREEN). 1-3/4" FRAME MOUNT.

ELECTRICAL SPECIFICATIONS

- DPDT CONTACT CONFIGURATION
- CONTACTS RATED AT 1A @ 30VDC
- LED INDICATORS RATED AT 20mA @ 24VDC

MOMENTARY ACTION FUNCTION

- WHEN THE KEY IS TURNED TO THE CLOCKWISE POSITION, THE BLACK LEAD MAKES CONTACT WITH THE WHITE LEAD AND BREAKS CONTACT WITH THE RED LEAD; THE BROWN LEAD MAKES CONTACT WITH THE BLUE LEAD AND BREAKS CONTACT WITH THE YELLOW LEAD. WHEN THE KEY IS RELEASED, THE CONTACTS RETURN TO THEIR NORMAL POSITION.

RED WIRE - N.C.	YELLOW WIRE - N.C.
BLACK WIRE - COM.	BROWN WIRE - COM.
WHITE WIRE - N.O.	BLUE WIRE - N.O.

MAINTAIN ACTION FUNCTION

- WHEN THE KEY IS TURNED TO SET THE SWITCH IN THE "MAINTAINED COUNTERCLOCKWISE" POSITION, THE CONTACTS ARE CONFIGURED, WITH RESPECT TO "COM.", AS SHOWN BELOW:

RED WIRE - CLOSED	YELLOW WIRE - CLOSED
BLACK WIRE - COM.	BROWN WIRE - COM.
WHITE WIRE - OPEN	BLUE WIRE - OPEN

- WHEN THE KEY IS TURNED TO SET THE SWITCH IN THE "MAINTAINED CLOCKWISE" POSITION, THE CONTACTS ARE CONFIGURED, WITH RESPECT TO "COM.", AS SHOWN BELOW:

RED WIRE - OPEN	YELLOW WIRE - OPEN
BLACK WIRE - COM.	BROWN WIRE - COM.
WHITE WIRE - CLOSED	BLUE WIRE - CLOSED

RED/GREEN LED STATUS INDICATORS

RED LED LEADS ARE IDENTIFIED WITH A RED CABLE TIE, AND THE GREEN LED LEADS ARE IDENTIFIED WITH A GREEN CABLE TIE. RED WIRE LEADS ARE (+) POSITIVE AND BLACK WIRE LEADS ARE (-) NEGATIVE.

ACSI
ARCHITECTURAL CONTROL SYSTEMS INC.
2720 CLARK AVE., ST. LOUIS, MO 63103 (800) 753-5558

REV. 11/2017

SERIES 1310 MORTISE KEY SWITCHES, NARROW STYLE



MODEL 1310-4
SHOWN

COVERS THE FOLLOWING MODELS:

- 1310-4 KEYSWITCH NARROW STYLE, 1-3/4" FRAME MOUNT.
- 1310-4-2 KEYSWITCH NARROW STYLE WITH 2 STATUS INDICATORS (RED & GREEN). 1-3/4" FRAME MOUNT.

ELECTRICAL SPECIFICATIONS

- DPDT CONTACT CONFIGURATION
- CONTACTS RATED AT 1A @ 30VDC
- LED INDICATORS RATED AT 20mA @ 24VDC

MOMENTARY ACTION FUNCTION

- WHEN THE KEY IS TURNED TO THE CLOCKWISE POSITION, THE BLACK LEAD MAKES CONTACT WITH THE WHITE LEAD AND BREAKS CONTACT WITH THE RED LEAD; THE BROWN LEAD MAKES CONTACT WITH THE BLUE LEAD AND BREAKS CONTACT WITH THE YELLOW LEAD. WHEN THE KEY IS RELEASED, THE CONTACTS RETURN TO THEIR NORMAL POSITION.

RED WIRE - N.C.	YELLOW WIRE - N.C.
BLACK WIRE - COM.	BROWN WIRE - COM.
WHITE WIRE - N.O.	BLUE WIRE - N.O.

MAINTAIN ACTION FUNCTION

- WHEN THE KEY IS TURNED TO SET THE SWITCH IN THE "MAINTAINED COUNTERCLOCKWISE" POSITION, THE CONTACTS ARE CONFIGURED, WITH RESPECT TO "COM.", AS SHOWN BELOW:

RED WIRE - CLOSED	YELLOW WIRE - CLOSED
BLACK WIRE - COM.	BROWN WIRE - COM.
WHITE WIRE - OPEN	BLUE WIRE - OPEN

- WHEN THE KEY IS TURNED TO SET THE SWITCH IN THE "MAINTAINED CLOCKWISE" POSITION, THE CONTACTS ARE CONFIGURED, WITH RESPECT TO "COM.", AS SHOWN BELOW:

RED WIRE - OPEN	YELLOW WIRE - OPEN
BLACK WIRE - COM.	BROWN WIRE - COM.
WHITE WIRE - CLOSED	BLUE WIRE - CLOSED

RED/GREEN LED STATUS INDICATORS

RED LED LEADS ARE IDENTIFIED WITH A RED CABLE TIE, AND THE GREEN LED LEADS ARE IDENTIFIED WITH A GREEN CABLE TIE. RED WIRE LEADS ARE (+) POSITIVE AND BLACK WIRE LEADS ARE (-) NEGATIVE.

ARCHITECTURAL CONTROL SYSTEMS, INCORPORATED

2720 CLARK AVE., ST. LOUIS, MO 63103 (800) 753-5558

REV. 08/2017

SERIES 1310 MORTISE KEY SWITCHES WITH AUDIBLE ALARM

COVERS THE FOLLOWING MODELS:

- 1310-5 KEYSWITCH DOUBLE GANG WITH AUDIBLE ALARM.
  MOUNTS IN A DOUBLE GANG WALL MOUNT ELECTRICAL BOX.
  SIZE 4" SQ. X 2-1/8" DEEP. (RACO #680 OR EQUIVALENT)

- 1310-5-2 KEYSWITCH WITH 2 STATUS INDICATORS (RED & GREEN), AND AUDIBLE ALARM.
  MOUNTS IN A DOUBLE GANG WALL MOUNT ELECTRICAL BOX.
  SIZE 4" SQ. X 2-1/8" DEEP. (RACO #680 OR EQUIVALENT)



MODEL 1310-5-2
SHOWN

ELECTRICAL SPECIFICATIONS

- MOMENTARY DPDT CONTACT CONFIGURATION
- CONTACTS RATED AT 1A @ 30VDC
- LED INDICATORS RATED AT 20mA @ 24VDC
- AUDIBLE ALARM RATED 3-16mA @ 4-28VDC (FILTERED),
  TONE FREQUENCY: 2900Hz, SOUND INTENSITY: 64-76dB

MOMENTARY ACTION FUNCTION

- WHEN THE KEY IS TURNED TO THE CLOCKWISE POSITION, THE BLACK LEAD MAKES CONTACT WITH THE WHITE LEAD AND BREAKS CONTACT WITH THE RED LEAD; THE BROWN LEAD MAKES CONTACT WITH THE BLUE LEAD AND BREAKS CONTACT WITH THE YELLOW LEAD.

- WHEN THE KEY IS RETURNED TO THE NORMAL COUNTERCLOCKWISE POSITION, THE CONTACTS RETURN TO THEIR NORMAL POSITION.

RED WIRE - N.C.	YELLOW WIRE - N.C.
BLACK WIRE - COM.	BROWN WIRE - COM.
WHITE WIRE - N.O.	BLUE WIRE - N.O.

AUDIBLE ALARM

THE AUDIBLE ALARM HAS POLORIZED WIRE LEADS
RED WIRE LEAD IS (+) POSITIVE AND BLACK WIRE LEAD IS (-) NEGATIVE.

RED/GREEN LED STATUS INDICATORS

RED LED LEADS ARE IDENTIFIED WITH A RED CABLE TIE, AND THE GREEN LED LEADS ARE IDENTIFIED WITH A GREEN CABLE TIE. RED WIRE LEADS ARE (+) POSITIVE AND BLACK WIRE LEADS ARE (-) NEGATIVE.

ACSI
ARCHITECTURAL
CONTROL SYSTEMS INC.

2720 CLARK AVE., ST. LOUIS, MO 63103 (800) 753-5558

REV. 11/2017

SERIES 1310 MORTISE KEY SWITCHES WITH AUDIBLE ALARM

COVERS THE FOLLOWING MODELS:

- **1310-5 KEYSWITCH DOUBLE GANG WITH AUDIBLE ALARM.**
  MOUNTS IN A DOUBLE GANG WALL MOUNT ELECTRICAL BOX.
  SIZE 4" SQ. X 2-1/8" DEEP. (RACO #680 OR EQUIVALENT)
- **1310-5-2 KEYSWITCH WITH 2 STATUS INDICATORS (RED & GREEN), AND AUDIBLE ALARM.**
  MOUNTS IN A DOUBLE GANG WALL MOUNT ELECTRICAL BOX.
  SIZE 4" SQ. X 2-1/8" DEEP. (RACO #680 OR EQUIVALENT)



MODEL 1310-5-2 SHOWN

ELECTRICAL SPECIFICATIONS

- MOMENTARY DPDT CONTACT CONFIGURATION
- CONTACTS RATED AT 1A @ 30VDC
- LED INDICATORS RATED AT 20mA @ 24VDC
- AUDIBLE ALARM RATED 3-16mA @ 4-28VDC (FILTERED),
  TONE FREQUENCY: 2900Hz, SOUND INTENSITY: 64-76dB

MOMENTARY ACTION FUNCTION

- WHEN THE KEY IS TURNED TO THE CLOCKWISE POSITION, THE BLACK LEAD MAKES CONTACT WITH THE WHITE LEAD AND BREAKS CONTACT WITH THE RED LEAD; THE BROWN LEAD MAKES CONTACT WITH THE BLUE LEAD AND BREAKS CONTACT WITH THE YELLOW LEAD.
- WHEN THE KEY IS RETURNED TO THE NORMAL COUNTERCLOCKWISE POSITION, THE CONTACTS RETURN TO THEIR NORMAL POSITION.

RED WIRE - N.C.	YELLOW WIRE - N.C.
BLACK WIRE - COM.	BROWN WIRE - COM.
WHITE WIRE - N.O.	BLUE WIRE - N.O.

AUDIBLE ALARM

THE AUDIBLE ALARM HAS POLORIZED WIRE LEADS
RED WIRE LEAD IS (+) POSITIVE AND BLACK WIRE LEAD IS (-) NEGATIVE.

RED/GREEN LED STATUS INDICATORS

RED LED LEADS ARE IDENTIFIED WITH A RED CABLE TIE, AND THE GREEN LED LEADS ARE IDENTIFIED WITH A GREEN CABLE TIE. RED WIRE LEADS ARE (+) POSITIVE AND BLACK WIRE LEADS ARE (-) NEGATIVE.

ARCHITECTURAL CONTROL SYSTEMS, INCORPORATED

2720 CLARK AVE., ST. LOUIS, MO 63103 (800) 753-5558

REV. 08/2017

SERIES 1310 KEY SWITCHES WITH TWO INDEPENDENT SPDT OUTPUTS

COVERS THE FOLLOWING MODELS:

- 1310-6 KEY SWITCH SINGLE GANG WALL MOUNT IN STANDARD 2-1/8" ELECTRICAL BOX.
- 1310-7 KEY SWITCH WITH ONE STATUS INDICATOR (RED OR GREEN), SINGLE GANG WALL MOUNT IN STANDARD 2-1/8" ELECTRICAL BOX.
- 1310-8 KEY SWITCH WITH TWO STATUS INDICATORS (RED & GREEN), SINGLE GANG WALL MOUNT IN STANDARD 2-1/8" ELECTRICAL BOX.



MODEL 1310-8 SHOWN

FEATURES

-TWO INDEPENDENT SPDT MOMENTARY SWTICH OUTPUT CONTACTS CONTROLLED BY KEY CYLINDER CAM:
CLOCKWISE ROTATION ACTUATES FIRST SWITCH
COUNTER-CLOCKWISE ROTATION ACTUATES SECOND SWITCH

ELECTRICAL SPECIFICATIONS

- SPDT MOMENTARY CONTACT CONFIGURATION
- CONTACTS RATED AT 1A @ 30VDC
- LED INDICATORS RATED AT 20mA @ 24VDC

NORMAL CONTACT CONFIGURATION WITH KEY REMOVED FROM CYLINDER

FIRST SWITCH	SECOND SWITCH
ORANGE WIRE - N.C.	YELLOW WIRE - N.C.
GRAY WIRE - COM.	BROWN WIRE - COM.
GREEN WIRE - N.O.	BLUE WIRE - N.O.

CLOCKWISE ROTATION SWITCH FUNCTION

WHEN THE KEY IS MOMENTARILY ROTATED TO THE CLOCKWISE POSITION, THE FIRST SWITCH CONTACTS ARE CONFIGURED, WITH RESPECT TO "COM.", AS SHOWN BELOW:

ORANGE WIRE - OPEN
GRAY WIRE - COM.
GREEN WIRE - CLOSED

COUNTER-CLOCKWISE ROTATION SWITCH FUNCTION

WHEN THE KEY IS MOMENTARILY ROTATED TO THE COUNTER-CLOCKWISE POSITION, THE SECOND SWITCH CONTACTS ARE CONFIGURED, WITH RESPECT TO "COM.", AS SHOWN BELOW:

YELLOW WIRE - OPEN
BROWN WIRE - COM.
BLUE WIRE - CLOSED

RED/GREEN LED STATUS INDICATORS

RED LED LEADS ARE IDENTIFIED WITH A RED CABLE TIE, AND THE GREEN LED LEADS ARE IDENTIFIED WITH A GREEN CABLE TIE. RED WIRE LEADS ARE (+) POSITIVE AND BLACK WIRE LEADS ARE (-) NEGATIVE.

ACSI
ARCHITECTURAL CONTROL SYSTEMS INC.
2720 CLARK AVE., ST. LOUIS, MO 63103
(800) 753-5558

REV. 11/2017

SERIES 1310 KEY SWITCHES WITH TWO INDEPENDENT SPDT OUTPUTS

COVERS THE FOLLOWING MODELS:

- 1310-6 KEY SWITCH SINGLE GANG WALL MOUNT IN STANDARD 2-1/8" ELECTRICAL BOX.
- 1310-7 KEY SWITCH WITH ONE STATUS INDICATOR (RED OR GREEN), SINGLE GANG WALL MOUNT IN STANDARD 2-1/8" ELECTRICAL BOX.
- 1310-8 KEY SWITCH WITH TWO STATUS INDICATORS (RED & GREEN), SINGLE GANG WALL MOUNT IN STANDARD 2-1/8" ELECTRICAL BOX.



MODEL 1310-8 SHOWN

FEATURES

-TWO INDEPENDENT SPDT MOMENTARY SWTICH OUTPUT CONTACTS CONTROLLED BY KEY CYLINDER CAM:
- CLOCKWISE ROTATION ACTUATES FIRST SWITCH
- COUNTER-CLOCKWISE ROTATION ACTUATES SECOND SWITCH

ELECTRICAL SPECIFICATIONS

- SPDT MOMENTARY CONTACT CONFIGURATION
- CONTACTS RATED AT 1A @ 30VDC
- LED INDICATORS RATED AT 20mA @ 24VDC

NORMAL CONTACT CONFIGURATION WITH KEY REMOVED FROM CYLINDER

FIRST SWITCH	SECOND SWITCH
ORANGE WIRE - N.C.	YELLOW WIRE - N.C.
GRAY WIRE - COM.	BROWN WIRE - COM.
GREEN WIRE - N.O.	BLUE WIRE - N.O.

CLOCKWISE ROTATION SWITCH FUNCTION

WHEN THE KEY IS MOMENTARILY ROTATED TO THE CLOCKWISE POSITION, THE FIRST SWITCH CONTACTS ARE CONFIGURED, WITH RESPECT TO "COM.", AS SHOWN BELOW:

- ORANGE WIRE - OPEN
- GRAY WIRE - COM.
- GREEN WIRE - CLOSED

COUNTER-CLOCKWISE ROTATION SWITCH FUNCTION

WHEN THE KEY IS MOMENTARILY ROTATED TO THE COUNTER-CLOCKWISE POSITION, THE SECOND SWITCH CONTACTS ARE CONFIGURED, WITH RESPECT TO "COM.", AS SHOWN BELOW:

- YELLOW WIRE - OPEN
- BROWN WIRE - COM.
- BLUE WIRE - CLOSED

RED/GREEN LED STATUS INDICATORS

RED LED LEADS ARE IDENTIFIED WITH A RED CABLE TIE, AND THE GREEN LED LEADS ARE IDENTIFIED WITH A GREEN CABLE TIE. RED WIRE LEADS ARE (+) POSITIVE AND BLACK WIRE LEADS ARE (-) NEGATIVE.

ARCHITECTURAL CONTROL SYSTEMS, INCORPORATED

2720 CLARK AVE., ST. LOUIS, MO 63103
(800) 753-5558

REV. 08/2017

II-1300-16

SERIES 1320 PUSHBUTTON SWITCHES



MODEL 1320-3
SHOWN

COVERS THE FOLLOWING MODELS:

- 1320-1 PUSHBUTTON, SINGLE GANG WALL MOUNT
- 1320-2 PUSHBUTTON WITH ONE INDICATOR (RED OR GREEN), SINGLE GANG WALL MOUNT
- 1320-3 PUSHBUTTON WITH TWO INDICATORS RED AND GREEN, SINGLE GANG WALL MOUNT

ELECTRICAL SPECIFICATIONS

- DPDT CONTACT CONFIGURATION
- CONTACTS RATED AT 1A @ 30VDC
- LED INDICATORS RATED AT 20mA @ 24VDC

MOMENTARY ACTION FUNCTION

- WHEN THE PUSHBUTTON IS DEPRESSED, THE BLACK LEAD MAKES CONTACT WITH THE WHITE LEAD AND BREAKS CONTACT WITH THE RED LEAD; THE BROWN LEAD MAKES CONTACT WITH THE BLUE LEAD AND BREAKS CONTACT WITH THE YELLOW LEAD. WHEN THE PUSHBUTTON IS RELEASED, THE CONTACTS RETURN TO THEIR NORMAL POSITION.

RED WIRE - N.C.	YELLOW WIRE - N.C.
BLACK WIRE - COM.	BROWN WIRE - COM.
WHITE WIRE - N.O.	BLUE WIRE - N.O.

MAINTAIN ACTION FUNCTION

- WHEN THE PUSHBUTTON IS DEPRESSED, THE CONTACTS WILL BE SWITCHED (WITH RESPECT TO COMMON) TO EITHER ONE OF THE TWO POSITIONS SHOWN BELOW:

RED WIRE - CLOSED	YELLOW WIRE - CLOSED	
BLACK WIRE - COM.	BROWN WIRE - COM.	POSITION #1
WHITE WIRE - OPEN	BLUE WIRE - OPEN	
RED WIRE - OPEN	YELLOW WIRE - OPEN	
BLACK WIRE - COM.	BROWN WIRE - COM.	POSITION #2
WHITE WIRE - CLOSED	BLUE WIRE - CLOSED	

RED/GREEN LED STATUS INDICATORS

RED LED LEADS ARE IDENTIFIED WITH A RED CABLE TIE, AND THE GREEN LED LEADS ARE IDENTIFIED WITH A GREEN CABLE TIE. RED WIRE LEADS ARE (+) POSITIVE AND BLACK WIRE LEADS ARE (-) NEGATIVE.

ACSI
ARCHITECTURAL CONTROL SYSTEMS INC.

2720 CLARK AVE., ST. LOUIS, MO 63103 (800) 753-5558

REV. 11/2017

SERIES 1320 PUSHBUTTON SWITCHES



MODEL 1320-3
SHOWN

COVERS THE FOLLOWING MODELS:

- 1320-1 PUSHBUTTON, SINGLE GANG WALL MOUNT
- 1320-2 PUSHBUTTON WITH ONE INDICATOR (RED OR GREEN), SINGLE GANG WALL MOUNT
- 1320-3 PUSHBUTTON WITH TWO INDICATORS RED AND GREEN, SINGLE GANG WALL MOUNT

ELECTRICAL SPECIFICATIONS

- DPDT CONTACT CONFIGURATION
- CONTACTS RATED AT 1A @ 30VDC
- LED INDICATORS RATED AT 20mA @ 24VDC

MOMENTARY ACTION FUNCTION

- WHEN THE PUSHBUTTON IS DEPRESSED, THE BLACK LEAD MAKES CONTACT WITH THE WHITE LEAD AND BREAKS CONTACT WITH THE RED LEAD; THE BROWN LEAD MAKES CONTACT WITH THE BLUE LEAD AND BREAKS CONTACT WITH THE YELLOW LEAD. WHEN THE PUSHBUTTON IS RELEASED, THE CONTACTS RETURN TO THEIR NORMAL POSITION.

RED WIRE - N.C.	YELLOW WIRE - N.C.
BLACK WIRE - COM.	BROWN WIRE - COM.
WHITE WIRE - N.O.	BLUE WIRE - N.O.

MAINTAIN ACTION FUNCTION

- WHEN THE PUSHBUTTON IS DEPRESSED, THE CONTACTS WILL BE SWITCHED (WITH RESPECT TO COMMON) TO EITHER ONE OF THE TWO POSITIONS SHOWN BELOW:

RED WIRE - CLOSED	YELLOW WIRE - CLOSED	
BLACK WIRE - COM.	BROWN WIRE - COM.	POSITION #1
WHITE WIRE - OPEN	BLUE WIRE - OPEN	
RED WIRE - OPEN	YELLOW WIRE - OPEN	
BLACK WIRE - COM.	BROWN WIRE - COM.	POSITION #2
WHITE WIRE - CLOSED	BLUE WIRE - CLOSED	

RED/GREEN LED STATUS INDICATORS

RED LED LEADS ARE IDENTIFIED WITH A RED CABLE TIE, AND THE GREEN LED LEADS ARE IDENTIFIED WITH A GREEN CABLE TIE. RED WIRE LEADS ARE (+) POSITIVE AND BLACK WIRE LEADS ARE (-) NEGATIVE.

ARCHITECTURAL CONTROL SYSTEMS, INCORPORATED

2720 CLARK AVE., ST. LOUIS, MO 63103 (800) 753-5558

REV. 08/2017

SERIES 1320 PUSHBUTTON SWITCH WITH TIME DELAY

COVERS THE FOLLOWING MODELS:

- 1320-4 PUSH-BUTTON SWITCH WITH TIME DELAY AND 1 STATUS INDICATOR (RED).

MOUNTS IN A DOUBLE GANG WALL MOUNT ELECTRICAL BOX.
SIZE 4" SQ. X 2-1/8" DEEP. (RACO #680 OR EQUIVALENT)



ELECTRICAL SPECIFICATIONS

- 24VAC/VDC +/- 10% INPUT
- MAXIMUM CONTACT RATING: 10A @ 30VDC (RESISTIVE LOAD)
- CURRENT DRAW @ 24VDC: 5mA (STANDBY); 40mA (ACTIVATED)

RED LED STATUS INDICATOR

RED LED TURNS ON WHEN RELAY IS ENERGIZED FOR
A DELAYED AMOUNT OF TIME AFTER PUSHBUTTON IS DEPRESSED.

ADJUSTING THE TIME DELAY CIRCUIT

- TO INCREASE DELAY TIME, TURN POTENTIOMETER COUNTERCLOCKWISE.
- TO DECREASE DELAY TIME, TURN POTENTIOMETER CLOCKWISE.
- DELAY RANGE: 0 - 40 SECONDS

MOUNTING INSTRUCTIONS

DO NOT USE GANGABLE SWITCH BOXES WHERE THE FACE PLATE MOUNTING HOLE TABS FACE OUTWARD FROM THE BOX. THERE WILL NOT BE ENOUGH HEIGHT CLEARANCE FOR THE P.C. BOARD.

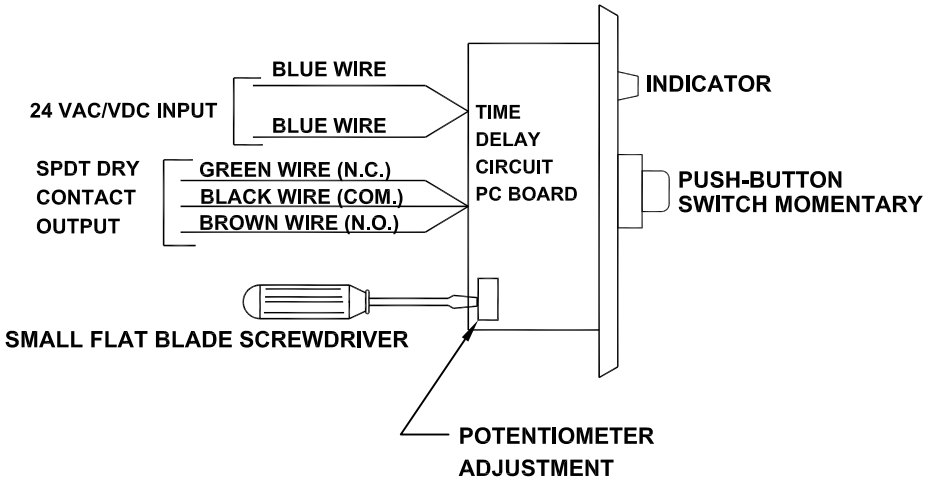

ACSI
ARCHITECTURAL
CONTROL SYSTEMS INC.

2720 CLARK AVE., ST. LOUIS, MO 63103 (800) 753-5558

REV. 11/2017

SERIES 1320 PUSHBUTTON SWITCH WITH TIME DELAY

COVERS THE FOLLOWING MODELS:

- 1320-4 PUSH-BUTTON SWITCH WITH TIME DELAY AND 1 STATUS INDICATOR (RED).

MOUNTS IN A DOUBLE GANG WALL MOUNT ELECTRICAL BOX.
SIZE 4" SQ. X 2-1/8" DEEP. (RACO #680 OR EQUIVALENT)



ELECTRICAL SPECIFICATIONS

- 24VAC/VDC +/- 10% INPUT
- MAXIMUM CONTACT RATING: 10A @ 30VDC (RESISTIVE LOAD)
- CURRENT DRAW @ 24VDC: 5mA (STANDBY); 40mA (ACTIVATED)

RED LED STATUS INDICATOR

RED LED TURNS ON WHEN RELAY IS ENERGIZED FOR
A DELAYED AMOUNT OF TIME AFTER PUSHBUTTON IS DEPRESSED.

ADJUSTING THE TIME DELAY CIRCUIT

- TO INCREASE DELAY TIME, TURN POTENTIOMETER COUNTERCLOCKWISE.
- TO DECREASE DELAY TIME, TURN POTENTIOMETER CLOCKWISE.
- DELAY RANGE: 0 - 40 SECONDS

MOUNTING INSTRUCTIONS

DO NOT USE GANGABLE SWITCH BOXES WHERE THE FACE PLATE MOUNTING HOLE TABS FACE OUTWARD FROM THE BOX. THERE WILL NOT BE ENOUGH HEIGHT CLEARANCE FOR THE P.C. BOARD.

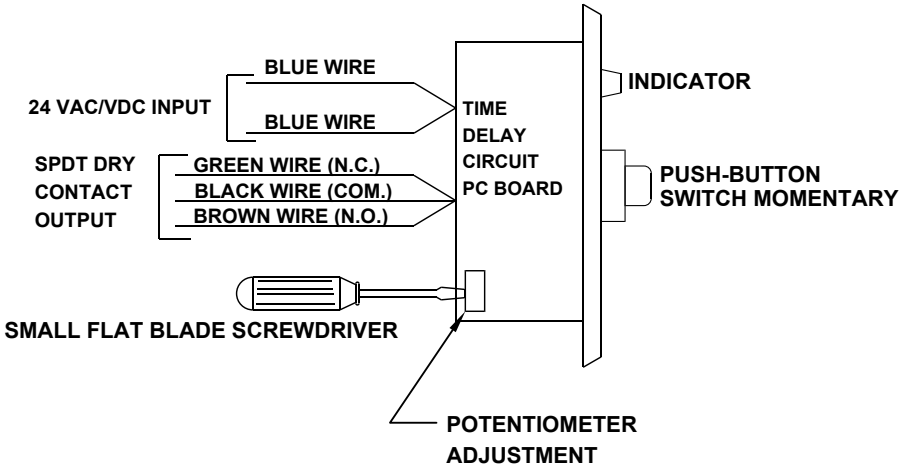

ARCHITECTURAL CONTROL SYSTEMS, INCORPORATED

2720 CLARK AVE., ST. LOUIS, MO 63103 (800) 753-5558

REV. 08/2017

SERIES 1320 MUSHROOM PUSHBUTTON SWITCHES



MODEL 1320-5 SHOWN

COVERS THE FOLLOWING MODELS:

- 1320-5 MUSHROOM PUSHBUTTON (RED), SINGLE GANG WALL MOUNT
- 1320-5-2 MUSHROOM PUSHBUTTON (RED) WITH TWO INDICATORS RED AND GREEN, SINGLE GANG WALL MOUNT

ELECTRICAL SPECIFICATIONS

- CONTACTS RATED AT 4A @ 24VDC
- LED INDICATORS RATED AT 20mA @ 24VDC

MOMENTARY MUSHROOM PUSHBUTTON

WHEN RED MUSHROOM BUTTON IS DEPRESSED AN INTERNAL SPRING RETURNS THE BUTTON TO ITS NORMAL POSITION.
THE MUSHROOM BUTTON USES SINGLE POLE STACKABLE CONTACT BLOCKS WITH SCREW CLAMP WIRE TERMINATION.

NORMALLY OPEN (GREEN CONTACT BLOCK): WHEN PUSHBUTTON IS DEPRESSED, THERE IS A MOMENTARY CONTACT CLOSURE. WHEN RELEASED, CONTACTS RETURN TO NORMALLY OPEN POSITION.

NORMALLY CLOSED (RED CONTACT BLOCK): WHEN PUSHBUTTON IS DEPRESSED, THERE IS A MOMENTARY OPENING OF THE CONTACTS. WHEN RELEASED, CONTACTS RETURN TO NORMALLY CLOSED POSITION.

MAINTAIN MUSHROOM PUSHBUTTON

PUSH THE RED MUSHROOM BUTTON TO PLACE IT IN THE MAINTAINED "IN" POSITION.
PULL THE RED PUSHBUTTON TO PLACE IT IN THE MAINTAINED "OUT" POSITION.
THE MUSHROOM BUTTON USES SINGLE POLE STACKABLE CONTACT BLOCKS WITH SCREW CLAMP WIRE TERMINATION.

NORMALLY OPEN (GREEN CONTACT BLOCK): WHEN PUSHBUTTON IS PUSHED IN, THERE IS A MAINTAINED CONTACT CLOSURE. WHEN BUTTON IS PULLED OUT, CONTACTS RETURN TO NORMALLY OPEN POSITION.

NORMALLY CLOSED (RED CONTACT BLOCK): WHEN PUSHBUTTON IS PUSHED IN, THERE IS A MAINTAINED OPENING OF THE CONTACT. WHEN BUTTON IS PULLED OUT, CONTACTS RETURN TO NORMALLY CLOSED POSITION.

RED/GREEN LED STATUS INDICATORS

RED LED LEADS ARE IDENTIFIED WITH A RED CABLE TIE, AND THE GREEN LED LEADS ARE IDENTIFIED WITH A GREEN CABLE TIE. RED WIRE LEADS ARE (+) POSITIVE AND BLACK WIRE LEADS ARE (-) NEGATIVE.

CONFIGURING CONTACT BLOCKS FOR SPDT OUTPUT

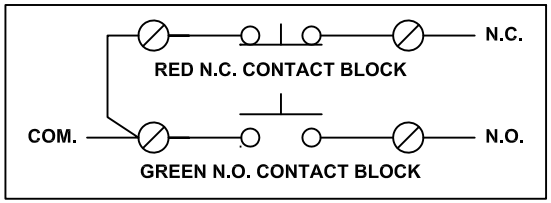

ACSI ARCHITECTURAL CONTROL SYSTEMS INC.
2720 CLARK AVE., ST. LOUIS, MO 63103 (800) 753-5558

REV. 11/2017

SERIES 1320 MUSHROOM PUSHBUTTON SWITCHES

COVERS THE FOLLOWING MODELS:

- **1320-5 MUSHROOM PUSHBUTTON (RED), SINGLE GANG WALL MOUNT**
- **1320-5-2 MUSHROOM PUSHBUTTON (RED) WITH TWO INDICATORS RED AND GREEN, SINGLE GANG WALL MOUNT**



MODEL 1320-5 SHOWN

ELECTRICAL SPECIFICATIONS

- CONTACTS RATED AT 4A @ 24VDC
- LED INDICATORS RATED AT 20mA @ 24VDC

MOMENTARY MUSHROOM PUSHBUTTON

WHEN RED MUSHROOM BUTTON IS DEPRESSED AN INTERNAL SPRING RETURNS THE BUTTON TO ITS NORMAL POSITION.
THE MUSHROOM BUTTON USES SINGLE POLE STACKABLE CONTACT BLOCKS WITH SCREW CLAMP WIRE TERMINATION.

NORMALLY OPEN (GREEN CONTACT BLOCK): WHEN PUSHBUTTON IS DEPRESSED, THERE IS A MOMENTARY CONTACT CLOSURE. WHEN RELEASED, CONTACTS RETURN TO NORMALLY OPEN POSITION.

NORMALLY CLOSED (RED CONTACT BLOCK): WHEN PUSHBUTTON IS DEPRESSED, THERE IS A MOMENTARY OPENING OF THE CONTACTS. WHEN RELEASED, CONTACTS RETURN TO NORMALLY CLOSED POSITION.

MAINTAIN MUSHROOM PUSHBUTTON

PUSH THE RED MUSHROOM BUTTON TO PLACE IT IN THE MAINTAINED "IN" POSITION.
PULL THE RED PUSHBUTTON TO PLACE IT IN THE MAINTAINED "OUT" POSITION.
THE MUSHROOM BUTTON USES SINGLE POLE STACKABLE CONTACT BLOCKS WITH SCREW CLAMP WIRE TERMINATION.

NORMALLY OPEN (GREEN CONTACT BLOCK): WHEN PUSHBUTTON IS PUSHED IN, THERE IS A MAINTAINED CONTACT CLOSURE. WHEN BUTTON IS PULLED OUT, CONTACTS RETURN TO NORMALLY OPEN POSITION.

NORMALLY CLOSED (RED CONTACT BLOCK): WHEN PUSHBUTTON IS PUSHED IN, THERE IS A MAINTAINED OPENING OF THE CONTACT. WHEN BUTTON IS PULLED OUT, CONTACTS RETURN TO NORMALLY CLOSED POSITION.

RED/GREEN LED STATUS INDICATORS

RED LED LEADS ARE IDENTIFIED WITH A RED CABLE TIE, AND THE GREEN LED LEADS ARE IDENTIFIED WITH A GREEN CABLE TIE. RED WIRE LEADS ARE (+) POSITIVE AND BLACK WIRE LEADS ARE (-) NEGATIVE.

CONFIGURING CONTACT BLOCKS FOR SPDT OUTPUT

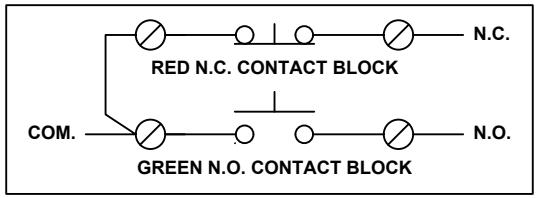

ARCHITECTURAL CONTROL SYSTEMS, INCORPORATED

2720 CLARK AVE., ST. LOUIS, MO 63103 (800) 753-5558

REV. 08/2017

SERIES 1320 PUSHBUTTON SWITCHES, NARROW STYLE

COVERS THE FOLLOWING MODELS:

- 1320-6 PUSHBUTTON NARROW STYLE, 1-3/4" FRAME MOUNT.
- 1320-6-2 PUSHBUTTON NARROW STYLE WITH TWO INDICATORS RED AND GREEN, 1-3/4" FRAME MOUNT.



MODEL 1320-6-2 SHOWN

ELECTRICAL SPECIFICATIONS

- DPDT CONTACT CONFIGURATION
- CONTACTS RATED AT 1A @ 30VDC
- LED INDICATORS RATED AT 20mA @ 24VDC

MOMENTARY ACTION FUNCTION

- WHEN THE PUSHBUTTON IS DEPRESSED, THE BLACK LEAD MAKES CONTACT WITH THE WHITE LEAD AND BREAKS CONTACT WITH THE RED LEAD; THE BROWN LEAD MAKES CONTACT WITH THE BLUE LEAD AND BREAKS CONTACT WITH THE YELLOW LEAD. WHEN THE PUSHBUTTON IS RELEASED, THE CONTACTS RETURN TO THEIR NORMAL POSITION.

RED WIRE - N.C.	YELLOW WIRE - N.C.
BLACK WIRE - COM.	BROWN WIRE - COM.
WHITE WIRE - N.O.	BLUE WIRE - N.O.

MAINTAIN ACTION FUNCTION

- WHEN THE PUSHBUTTON IS DEPRESSED, THE CONTACTS WILL BE SWITCHED (WITH RESPECT TO COMMON) TO EITHER ONE OF THE TWO POSITIONS SHOWN BELOW:

RED WIRE - CLOSED	YELLOW WIRE - CLOSED	
BLACK WIRE - COM.	BROWN WIRE - COM.	POSITION #1
WHITE WIRE - OPEN	BLUE WIRE - OPEN	
RED WIRE - OPEN	YELLOW WIRE - OPEN	
BLACK WIRE - COM.	BROWN WIRE - COM.	POSITION #2
WHITE WIRE - CLOSED	BLUE WIRE - CLOSED	

RED/GREEN LED STATUS INDICATORS

RED LED LEADS ARE IDENTIFIED WITH A RED CABLE TIE, AND THE GREEN LED LEADS ARE IDENTIFIED WITH A GREEN CABLE TIE. RED WIRE LEADS ARE (+) POSITIVE AND BLACK WIRE LEADS ARE (-) NEGATIVE.

ACSI
ARCHITECTURAL CONTROL SYSTEMS INC.

2720 CLARK AVE., ST. LOUIS, MO 63103 (800) 753-5558

REV. 11/2017

SERIES 1320 PUSHBUTTON SWITCHES, NARROW STYLE

COVERS THE FOLLOWING MODELS:

- **1320-6 PUSHBUTTON NARROW STYLE, 1-3/4" FRAME MOUNT.**
- **1320-6-2 PUSHBUTTON NARROW STYLE WITH TWO INDICATORS RED AND GREEN, 1-3/4" FRAME MOUNT.**



MODEL 1320-6-2 SHOWN

ELECTRICAL SPECIFICATIONS

- DPDT CONTACT CONFIGURATION
- CONTACTS RATED AT 1A @ 30VDC
- LED INDICATORS RATED AT 20mA @ 24VDC

MOMENTARY ACTION FUNCTION

- WHEN THE PUSHBUTTON IS DEPRESSED, THE BLACK LEAD MAKES CONTACT WITH THE WHITE LEAD AND BREAKS CONTACT WITH THE RED LEAD; THE BROWN LEAD MAKES CONTACT WITH THE BLUE LEAD AND BREAKS CONTACT WITH THE YELLOW LEAD. WHEN THE PUSHBUTTON IS RELEASED, THE CONTACTS RETURN TO THEIR NORMAL POSITION.

RED WIRE - N.C.	YELLOW WIRE - N.C.
BLACK WIRE - COM.	BROWN WIRE - COM.
WHITE WIRE - N.O.	BLUE WIRE - N.O.

MAINTAIN ACTION FUNCTION

- WHEN THE PUSHBUTTON IS DEPRESSED, THE CONTACTS WILL BE SWITCHED (WITH RESPECT TO COMMON) TO EITHER ONE OF THE TWO POSITIONS SHOWN BELOW:

RED WIRE - CLOSED	YELLOW WIRE - CLOSED	
BLACK WIRE - COM.	BROWN WIRE - COM.	POSITION #1
WHITE WIRE - OPEN	BLUE WIRE - OPEN	
RED WIRE - OPEN	YELLOW WIRE - OPEN	
BLACK WIRE - COM.	BROWN WIRE - COM.	POSITION #2
WHITE WIRE - CLOSED	BLUE WIRE - CLOSED	

RED/GREEN LED STATUS INDICATORS

RED LED LEADS ARE IDENTIFIED WITH A RED CABLE TIE, AND THE GREEN LED LEADS ARE IDENTIFIED WITH A GREEN CABLE TIE. RED WIRE LEADS ARE (+) POSITIVE AND BLACK WIRE LEADS ARE (-) NEGATIVE.

ARCHITECTURAL CONTROL SYSTEMS, INCORPORATED

2720 CLARK AVE., ST. LOUIS, MO 63103 (800) 753-5558

REV. 08/2017

SERIES 1335 DOOR POSITION SWITCHES, MORTISE / ANSI STRIKE

COVERS THE FOLLOWING MODELS:

1335-1 DOOR POSITION SWITCH STANDARD MORTISE, SPDT CONTACTS
1335-2 DOOR POSITION SWITCH ANSI STRIKE, SPDT CONTACTS
1335-4 DOOR POSITION SWITCH STANDARD MORTISE, DPDT CONTACTS
1335-5 DOOR POSITION SWITCH ANSI STRIKE, DPDT CONTACTS

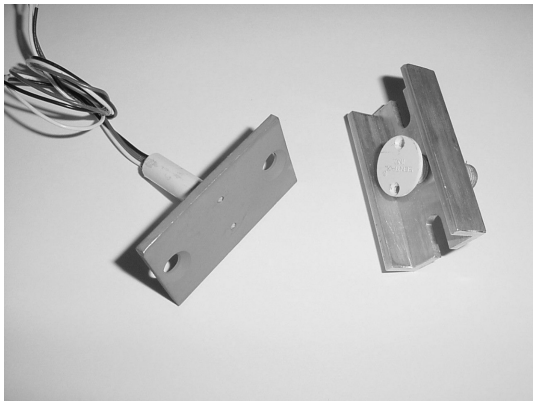

1335-1 DOOR POSITION SWITCH SHOWN

ELECTRICAL SPECIFICATIONS

- 28VDC (MAXIMUM)
- CURRENT DRAW 200mA @ 24VDC
- CONTACTS RATED AT 5W (MAXIMUM)

DOOR POSITION SENSORS

- MAGNETIC SENSORS MOUNTED INTHE FRAME REACT TO THE PROXIMITY OF THE MAGNET MOUNTED IN THE DOOR. MAGNET IS THREADED FOR ADJUSTABILITY IF REQUIRED.
- NOMINAL GAP DISTANCE: 1/2"

WIRING DIAGRAM

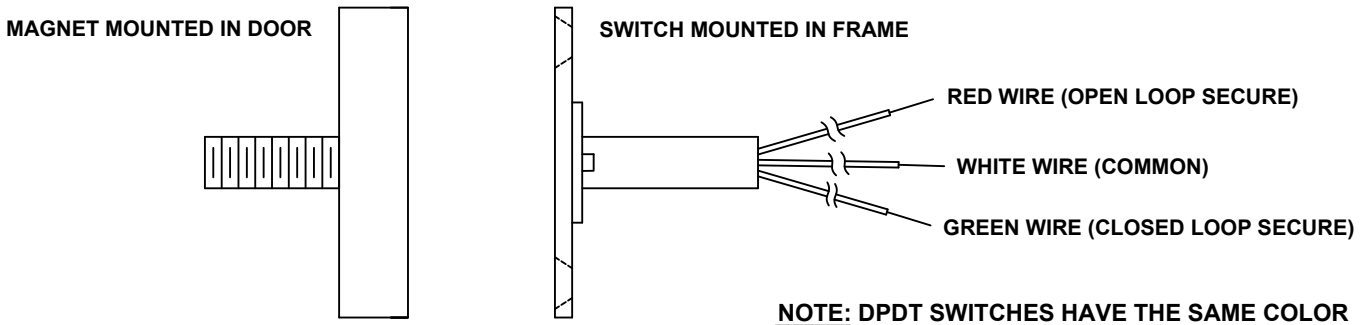

NOTE: DPDT SWITCHES HAVE THE SAME COLOR CODE AS SHOWN ABOVE. ONE SET OF WIRES IS TWISTED FOR IDENTIFICATION.

ARCHITECTURAL CONTROL SYSTEMS, INCORPORATED

2720 CLARK AVE., ST. LOUIS, MO 63103 (800) 753-5558

REV. 08/2017

SERIES 1335 DOOR POSITION SWITCHES, SURFACE MOUNT

COVERS THE FOLLOWING MODELS:

- 1335-3 DOOR POSITION SWITCH SURFACE MOUNT, SPDT CONTACTS
- 1335-6 DOOR POSITION SWITCH SURFACE MOUNT, DPDT CONTACTS

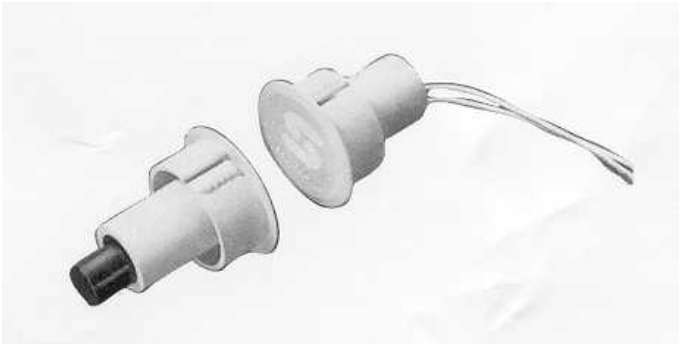

1335-3 DOOR POSITION SWITCH SHOWN

ELECTRICAL SPECIFICATIONS

- 30VAC/VDC (MAXIMUM)
- CURRENT DRAW 250mA (MAXIMUM)
- CONTACTS RATED AT 3W (MAXIMUM)

DOOR POSITION SENSORS

- MAGNETIC SENSORS MOUNTED INTHE FRAME REACT TO THE PROXIMITY OF THE MAGNET MOUNTED IN THE DOOR.
- GAP DISTANCE IN WOOD UP TO 2"; IN STEEL UP TO 1" FOR MODEL 1335-3
- GAP DISTANCE IN WOOD UP TO 3/4"; IN STEEL UP TO 3/8" FOR MODEL 1335-6
- BREAK DISTANCE IS APPROXIMATELY 1.1 TO 1.5 TIMES MAKE.

NOTE: GAP SPECIFICATIONS ARE NOMINAL AND MAY VERY +/- 20%

WIRING DIAGRAM

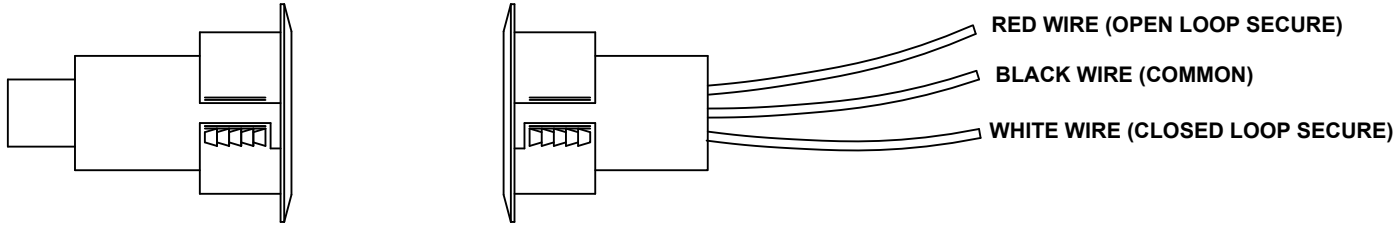

MAGNET MOUNTED IN DOOR

1335-3 SWITCH MOUNTED IN FRAME

NOTE: MODEL 1335-6 CONTAINS TWO SETS OF RED, BLACK & WHITE LEADS.

ARCHITECTURAL CONTROL SYSTEMS, INCORPORATED

2720 CLARK AVE., ST. LOUIS, MO 63103 (800) 753-5558

REV. 08/2017

SERIES 1340 VISUAL INDICATORS

COVERS THE FOLLOWING MODELS:

- 1340-1 ONE INDICATOR, SINGLE GANG, ROUND LED (RED OR GREEN), WALL MOUNT
- 1340-1-2 TWO INDICATORS, SINGLE GANG, ROUND LED (RED AND GREEN), WALL MOUNT

ELECTRICAL SPECIFICATIONS

- LED INDICATORS RATED AT 20mA @ 24VDC

LED INDICATORS

- MOUNTS IN A SINGLE GANG WALL MOUNT BOX 2-1/8" DEEP.

RED OR GREEN LED WIRING

- RED WIRE LEAD IS (+) POSITIVE AND BLACK WIRE LEAD IS (-) NEGATIVE.



1340-1 INDICATOR SHOWN

ARCHITECTURAL CONTROL SYSTEMS, INCORPORATED

2720 CLARK AVE., ST. LOUIS, MO 63103 (800) 753-5558

REV. 08/2017

SERIES 1340 AUDIBLE ALARMS

COVERS THE FOLLOWING MODELS:

- **1340-2 AUDIBLE ALARM, SINGLE GANG, WALL MOUNT**
- **1340-3 HIGH SECURITY AUDIBLE ALARM, SINGLE GANG, WALL MOUNT**

ELECTRICAL SPECIFICATIONS

- **AUDIBLE ALARM RATED 3-16mA @ 4-28VDC (FILTERED), TONE FREQUENCY: 2900Hz, SOUND INTENSITY: 64-76dB**

AUDIBLE ALARM

- **THE AUDIBLE ALARM HAS POLORIZED WIRE LEADS**
- **RED WIRE LEAD IS (+) POSITIVE AND BLACK WIRE LEAD IS (-) NEGATIVE.**
- **MOUNTS IN A SINGLE GANG BOX WITH A DEPTH OF 2-1/8".**



1340-2 AUDIBLE ALARM SHOWN



1340-3 AUDIBLE ALARM SHOWN

ARCHITECTURAL CONTROL SYSTEMS, INCORPORATED

2720 CLARK AVE., ST. LOUIS, MO 63103 (800) 753-5558

REV. 08/2017





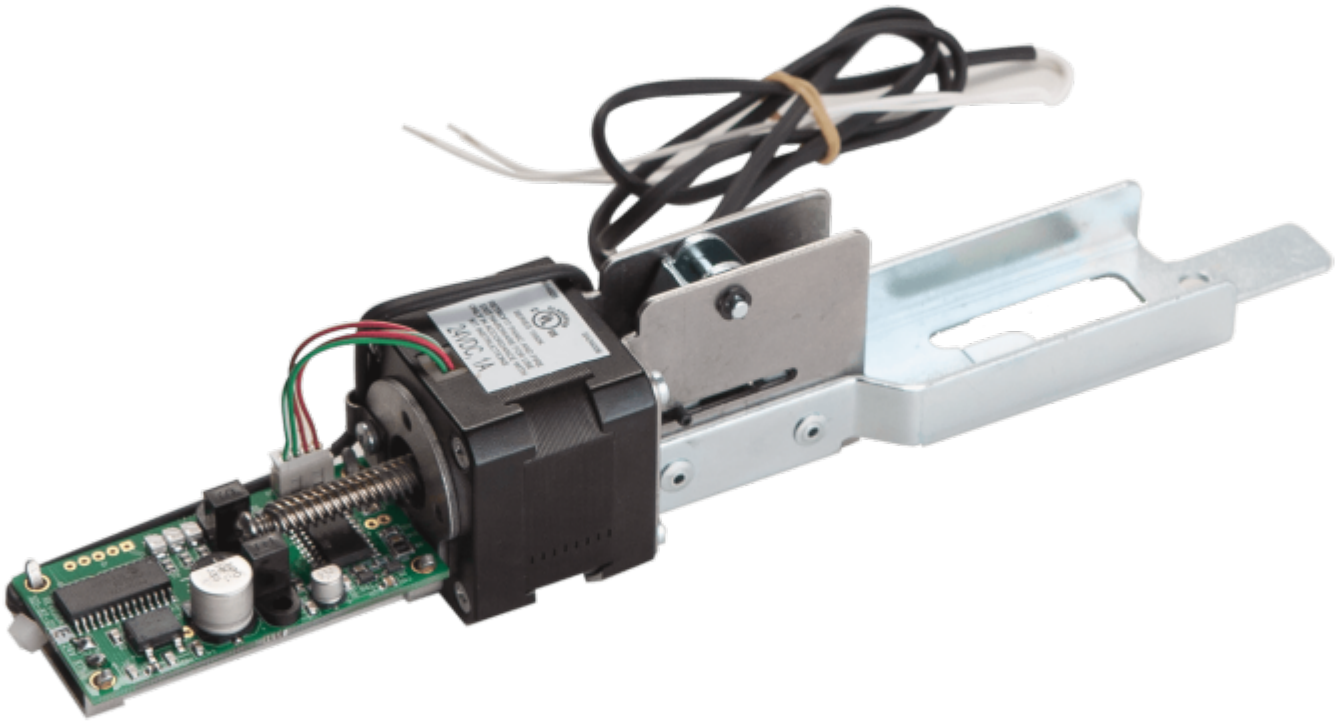

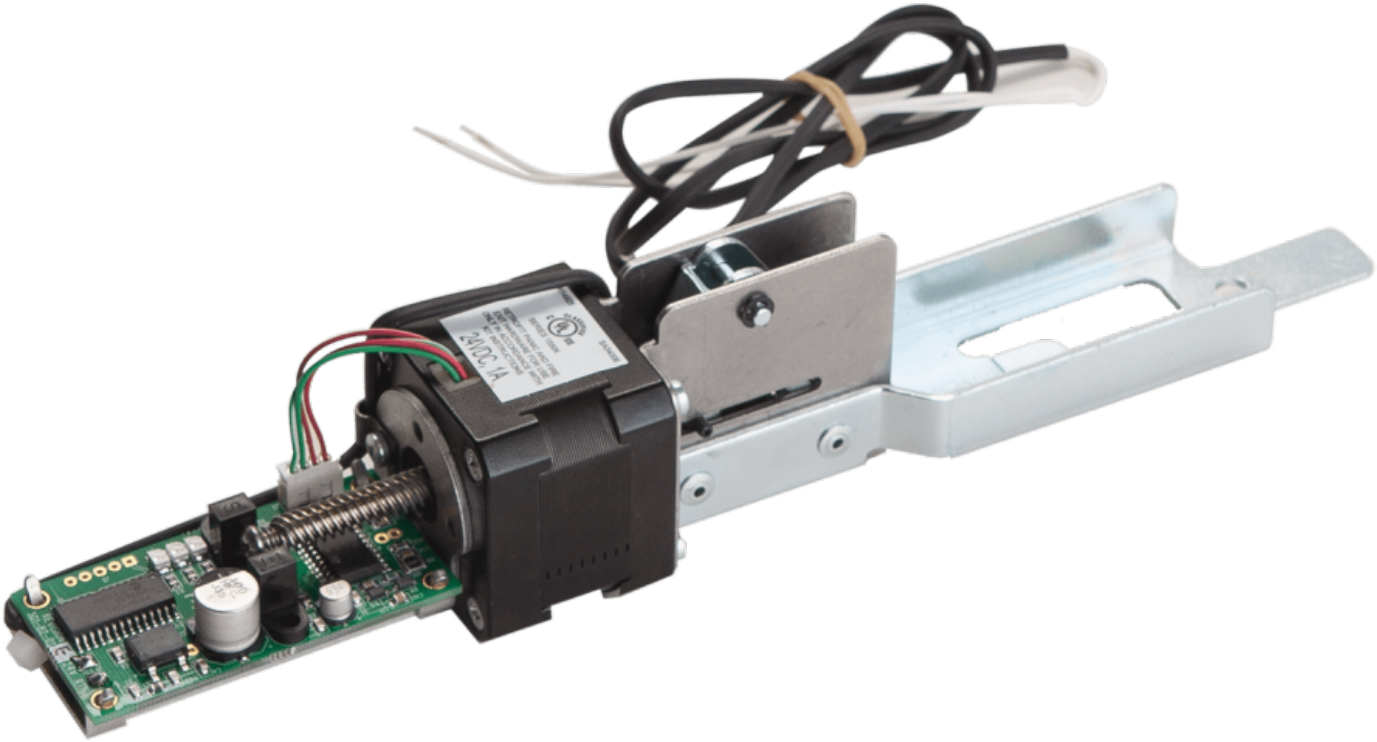

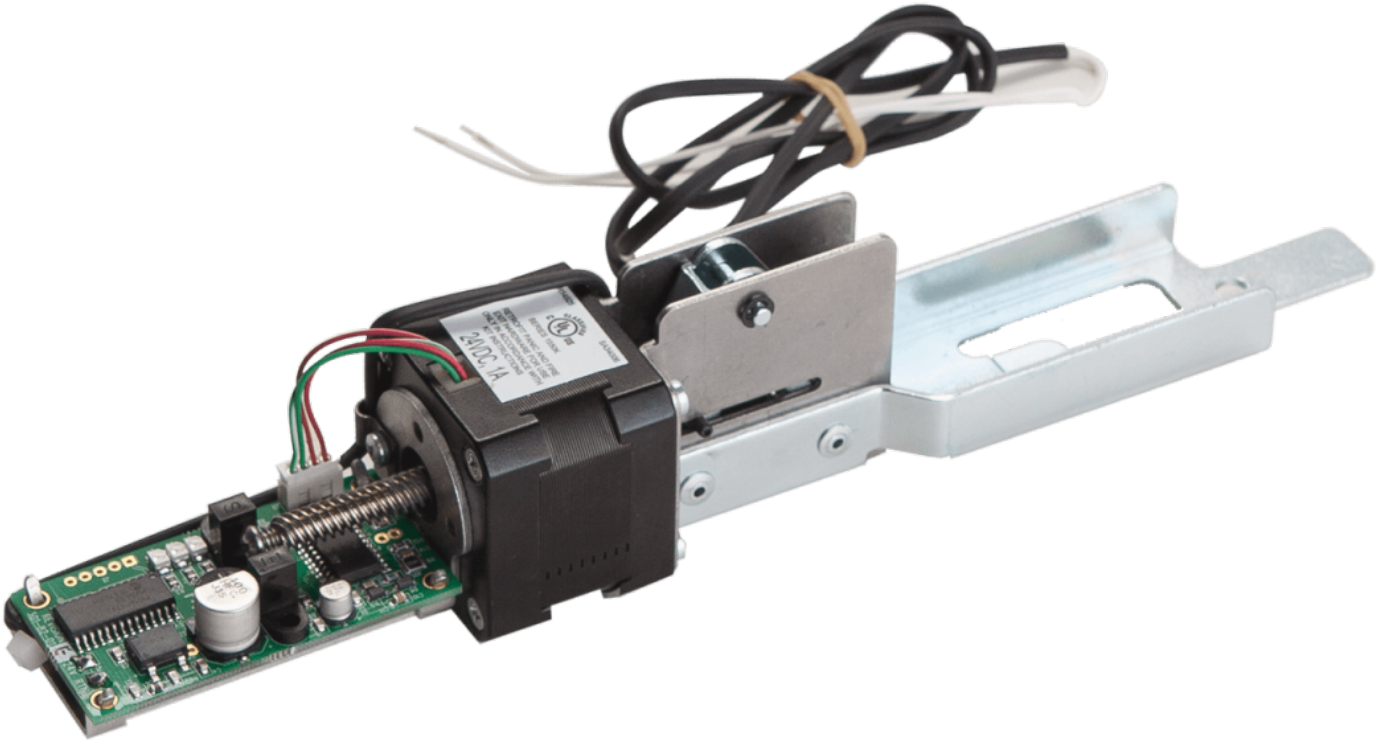

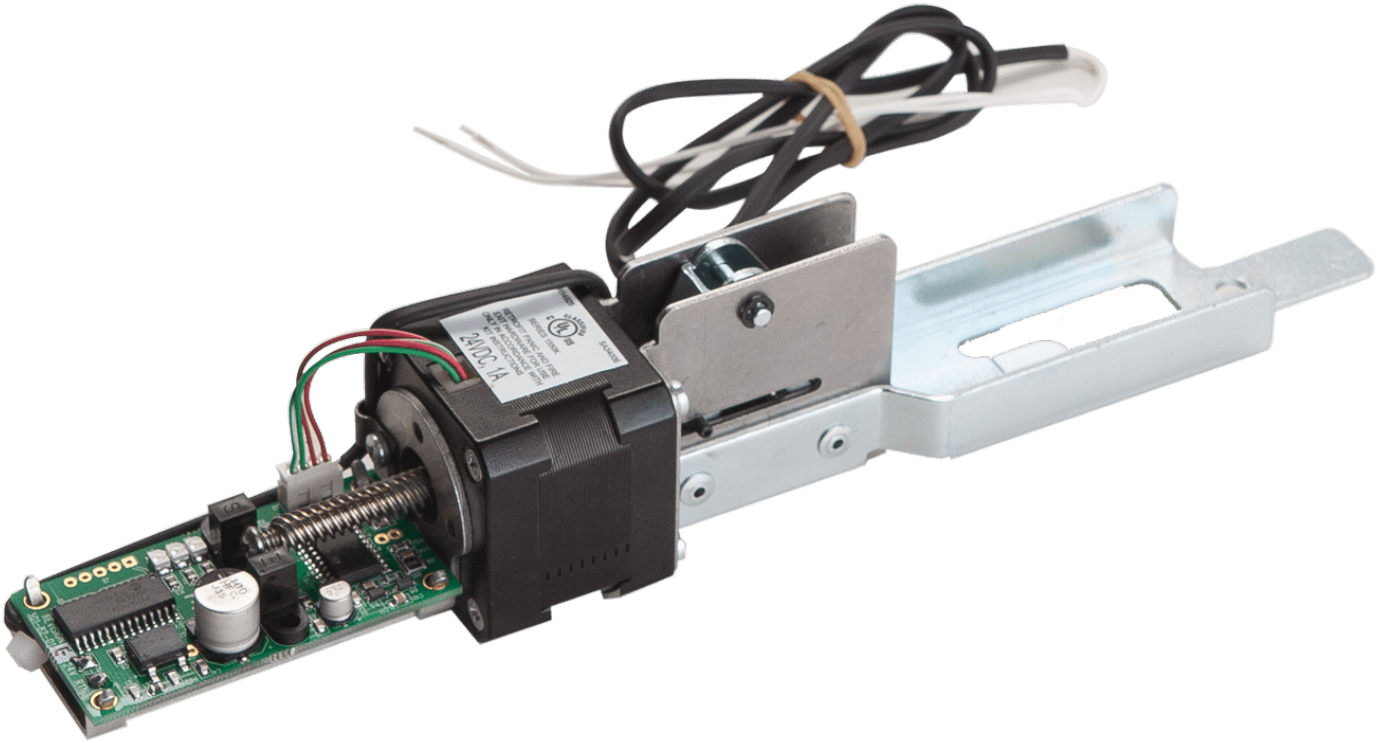



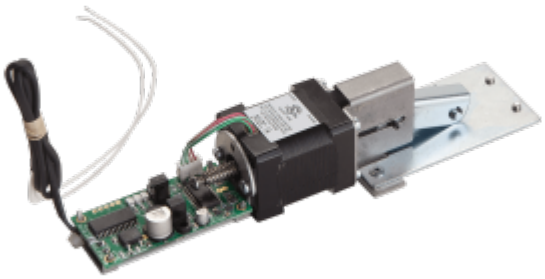

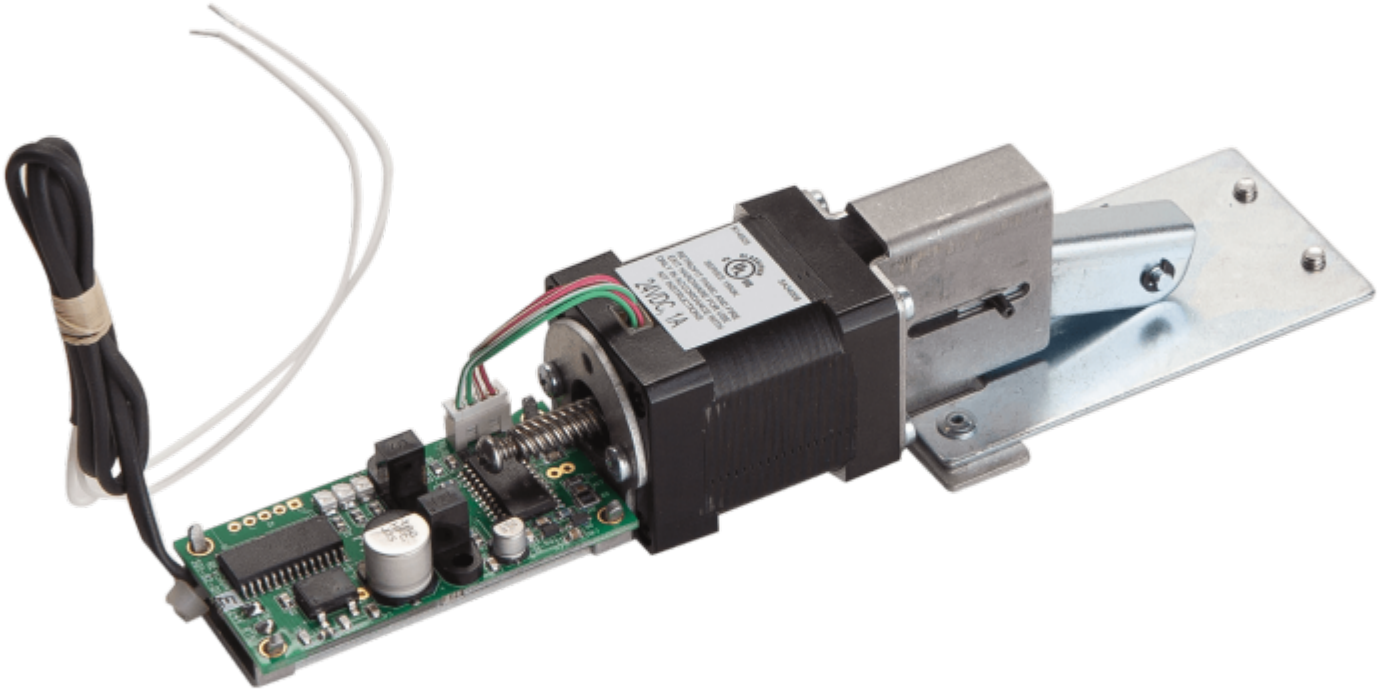

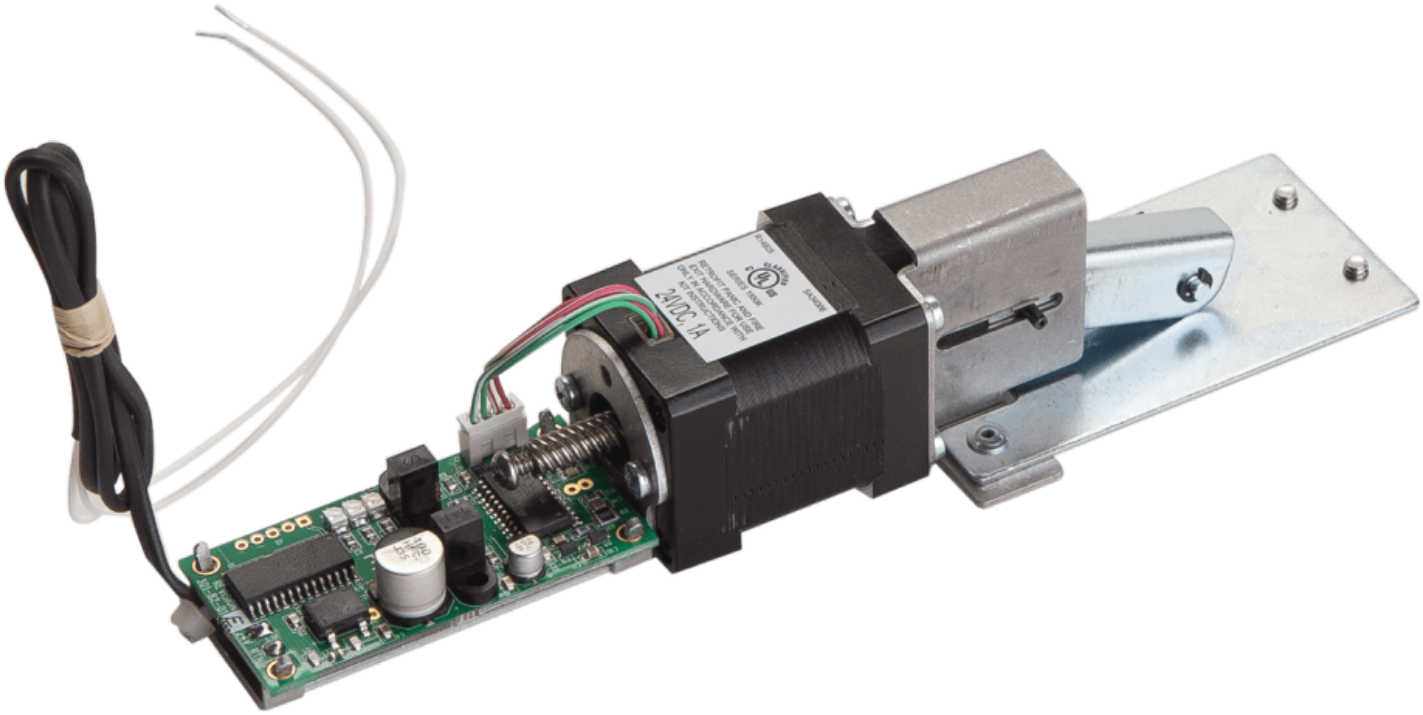

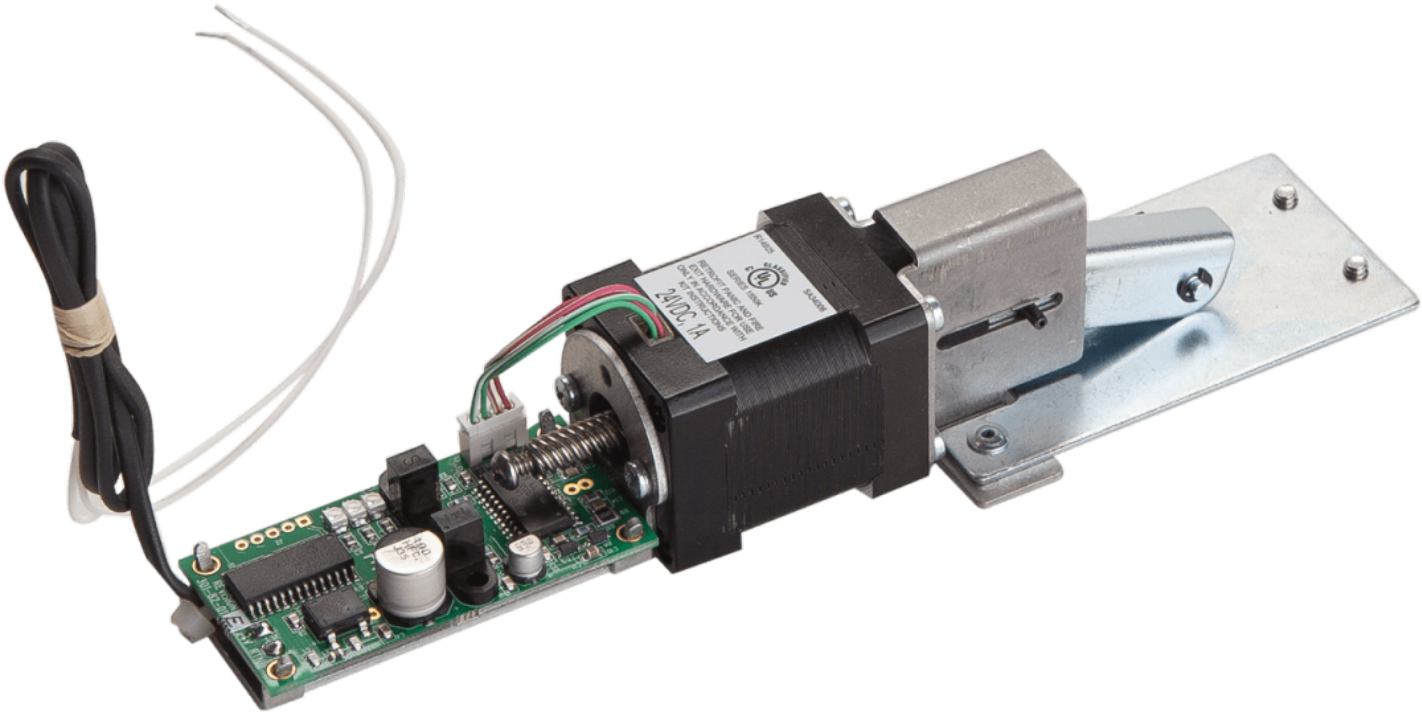
24VDC 1A

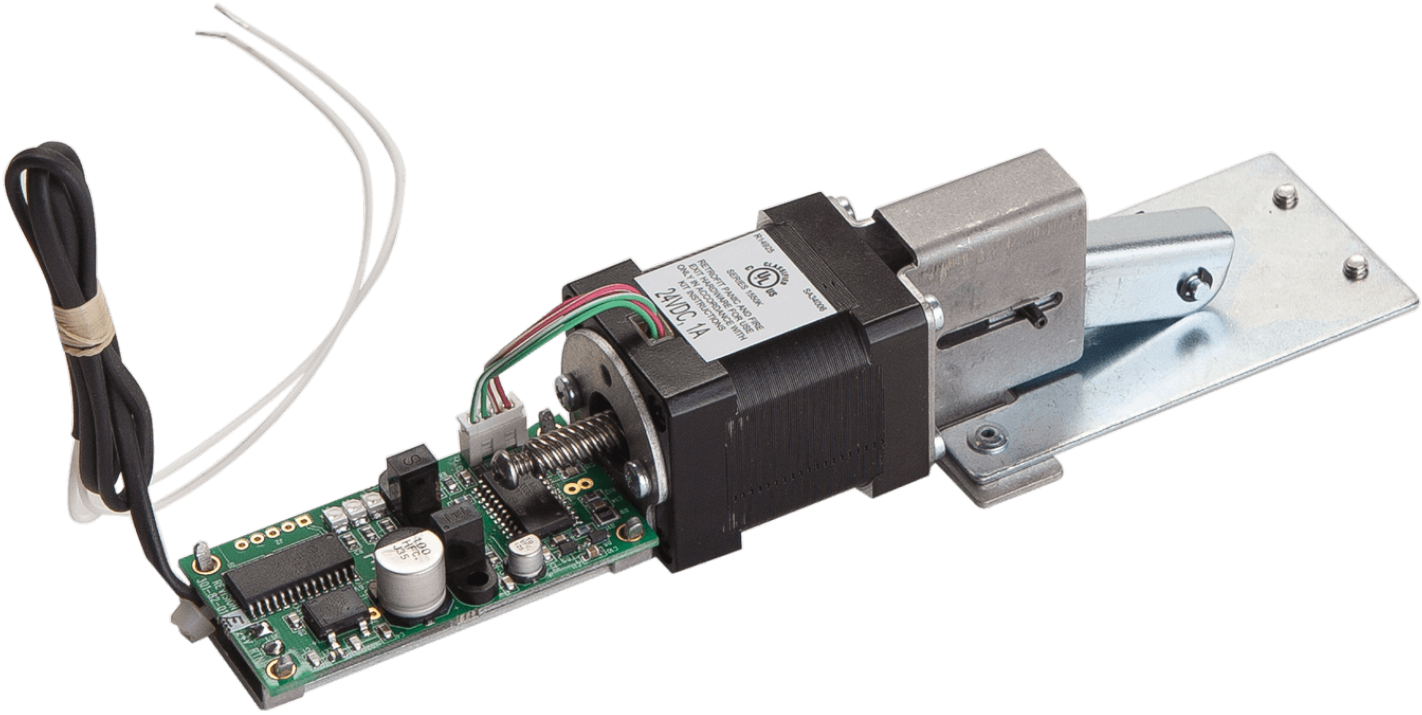
24VDC 1A





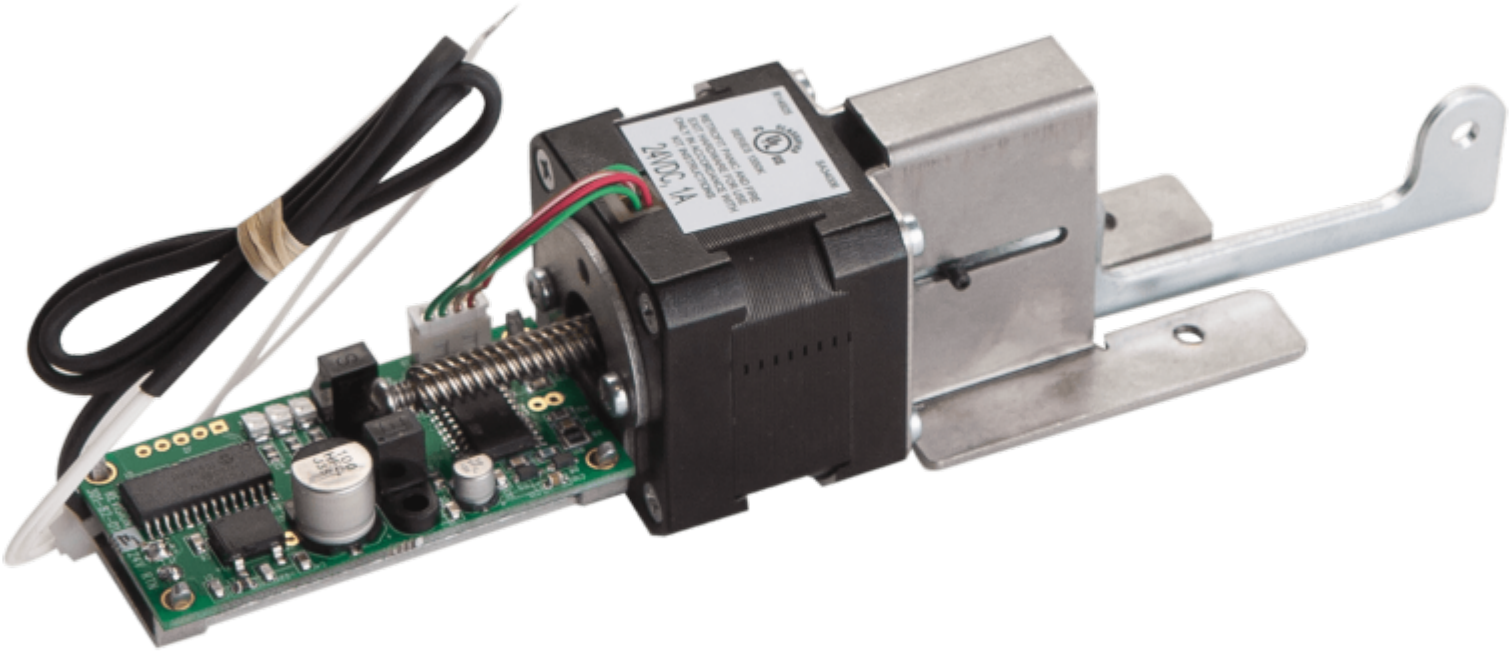

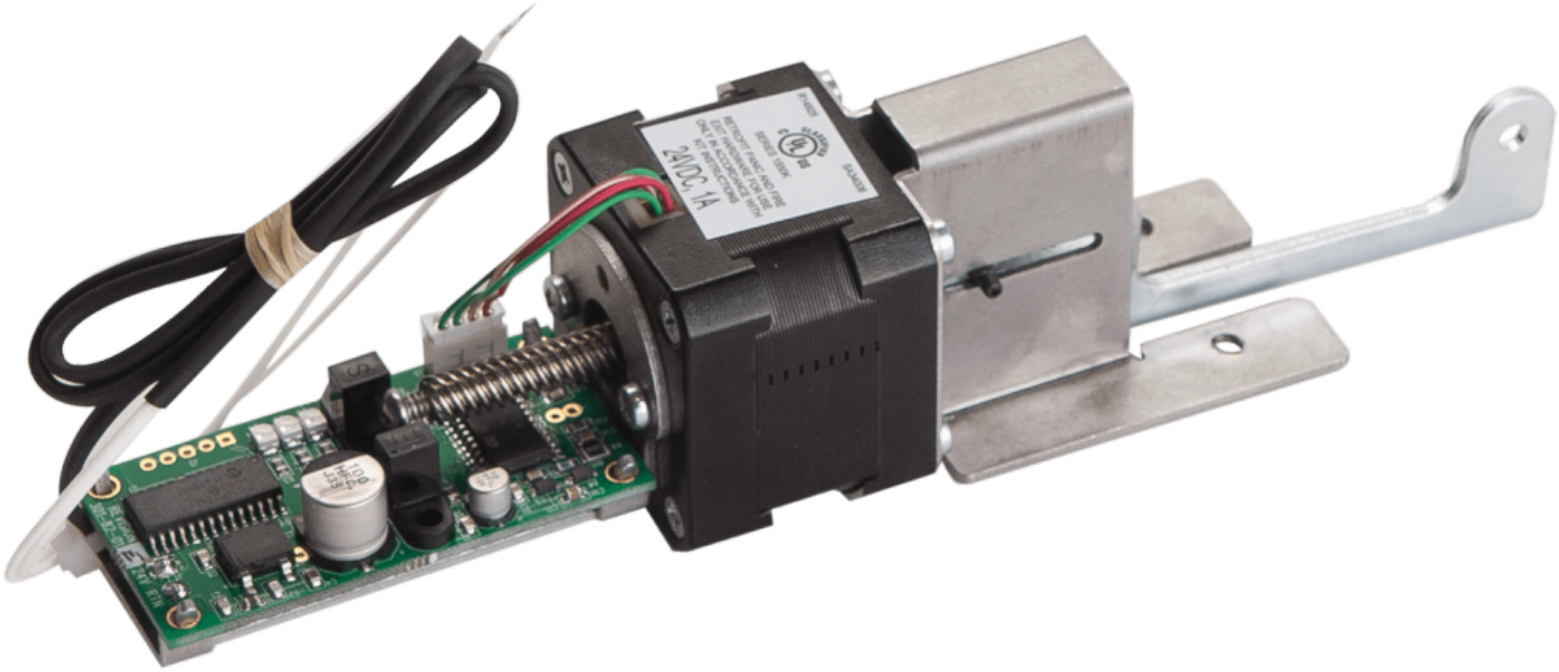
24VDC 1A

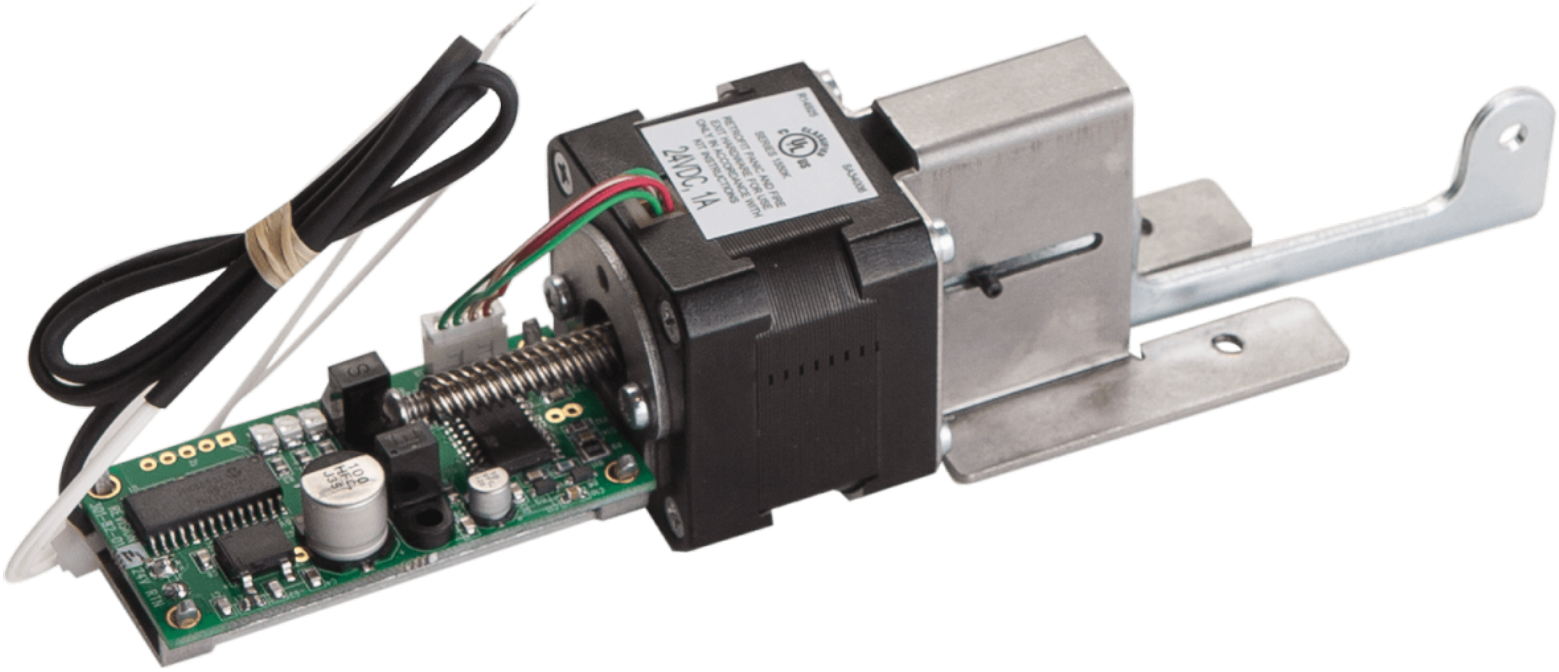
24VDC, 1A

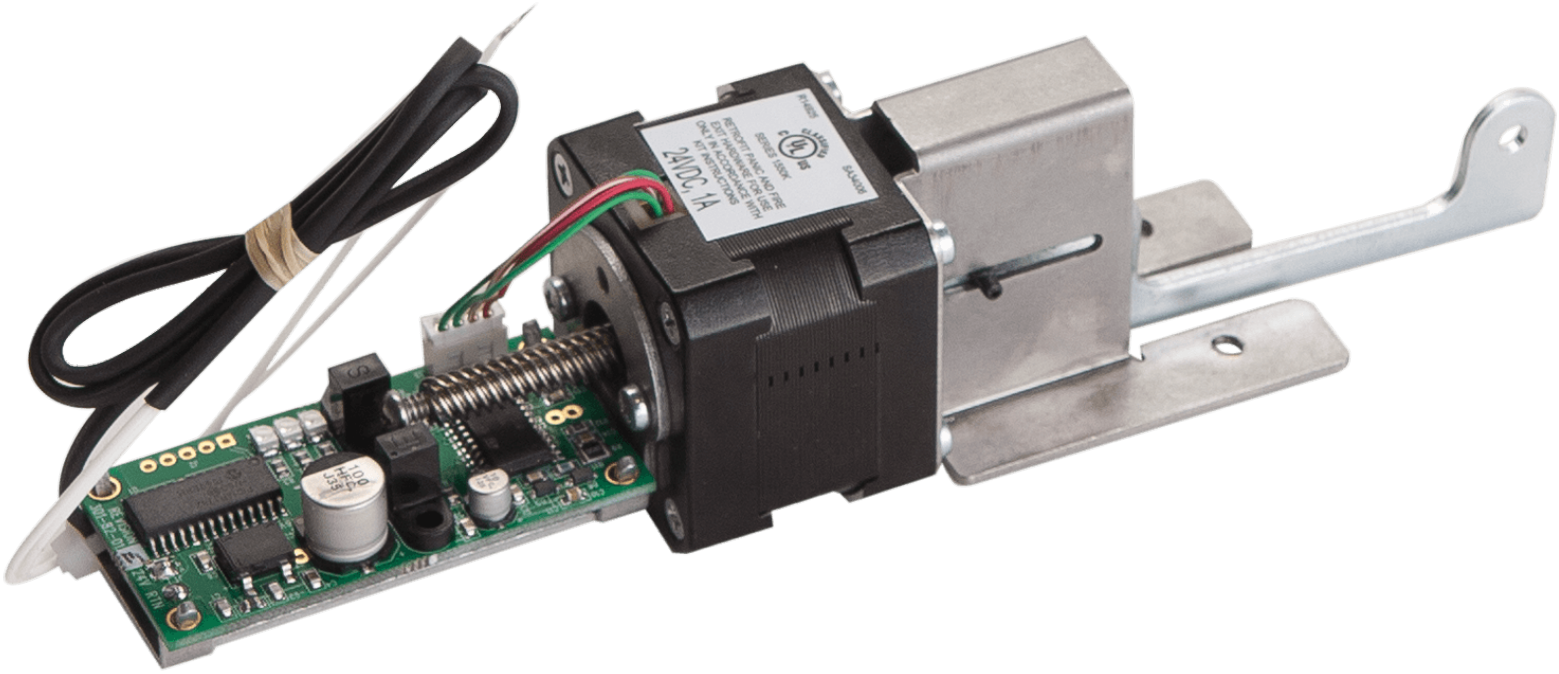
24VDC, 1A





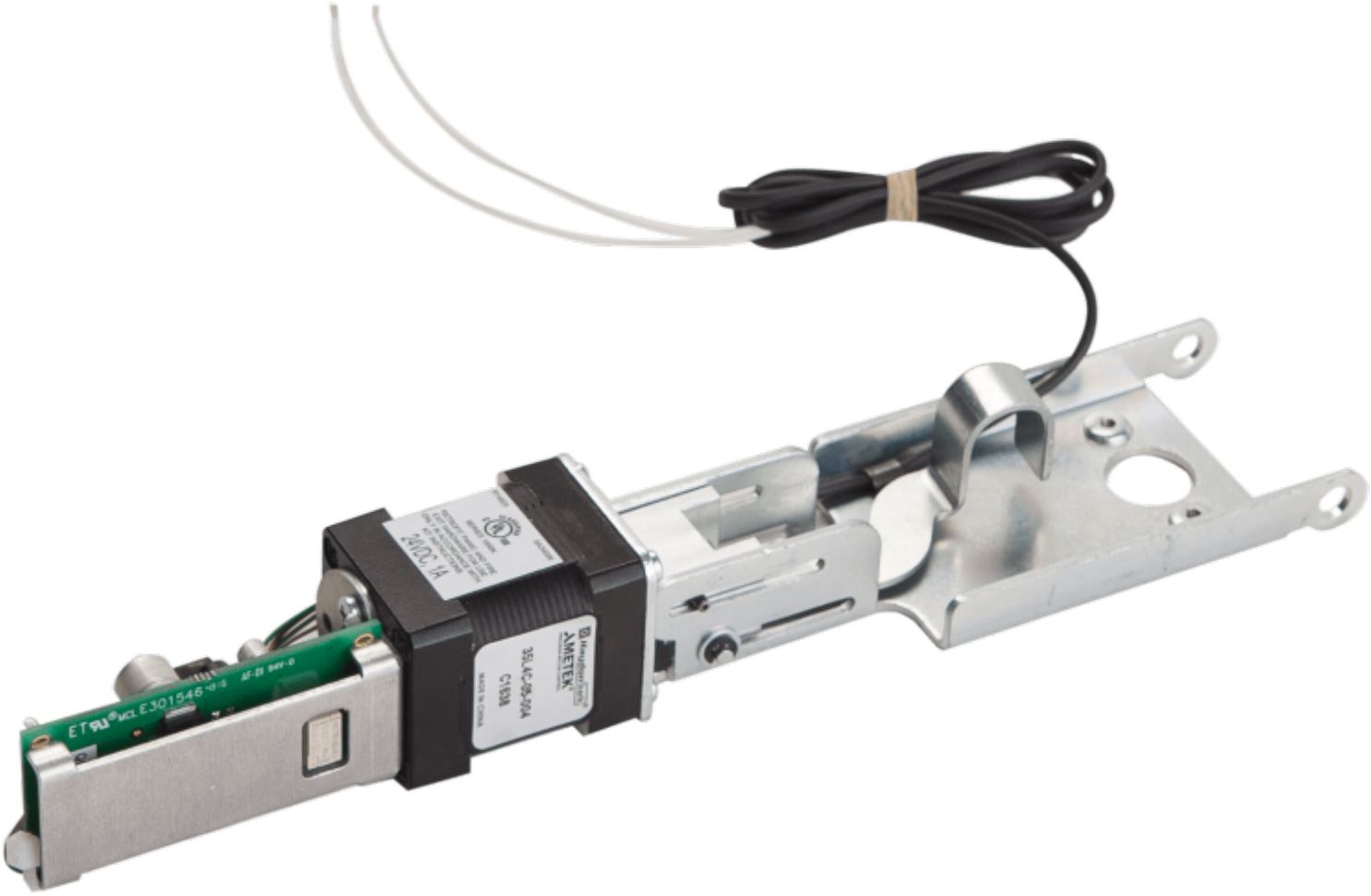
AMETEK
MCL E301546

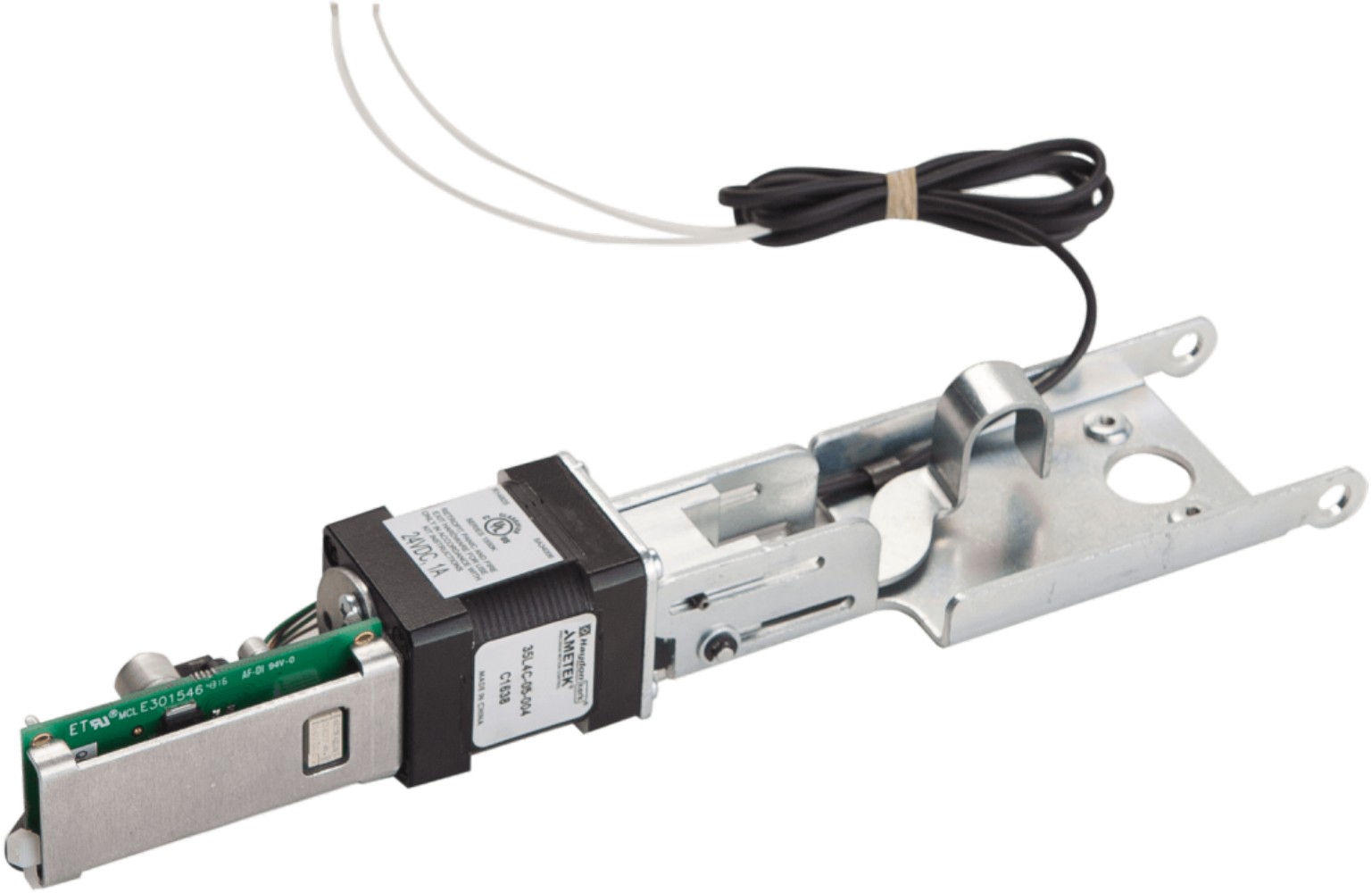
24VDC, 1A
AMETEK
35LAC-05-004
C1638
MADE IN CHINA
ETRU MCL E301546
AF-01 94V-0

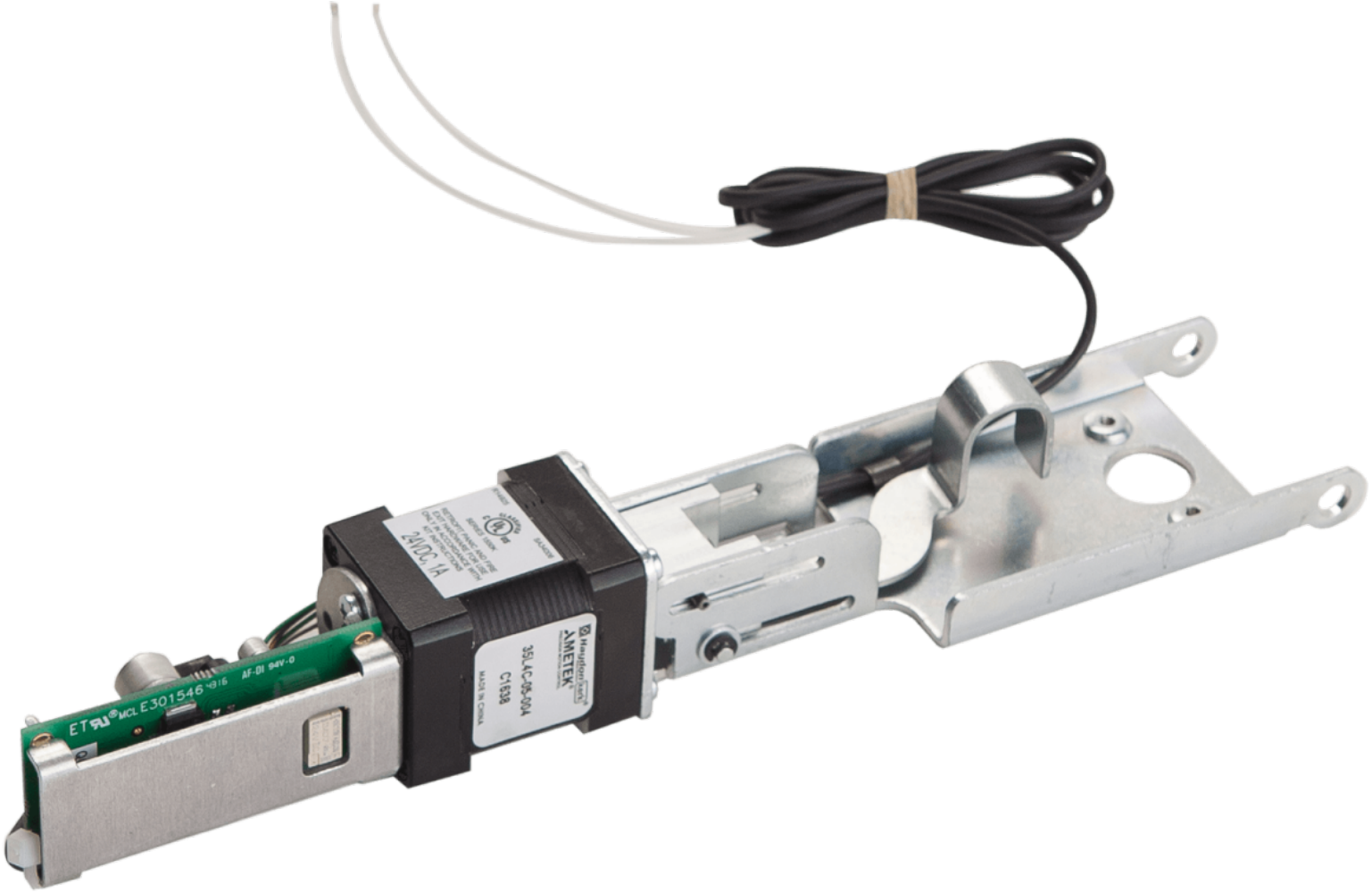
24VDC, 1A
AMETEK
35LAC-05-004
C1638
MADE IN CHINA
AF-01 94V-0

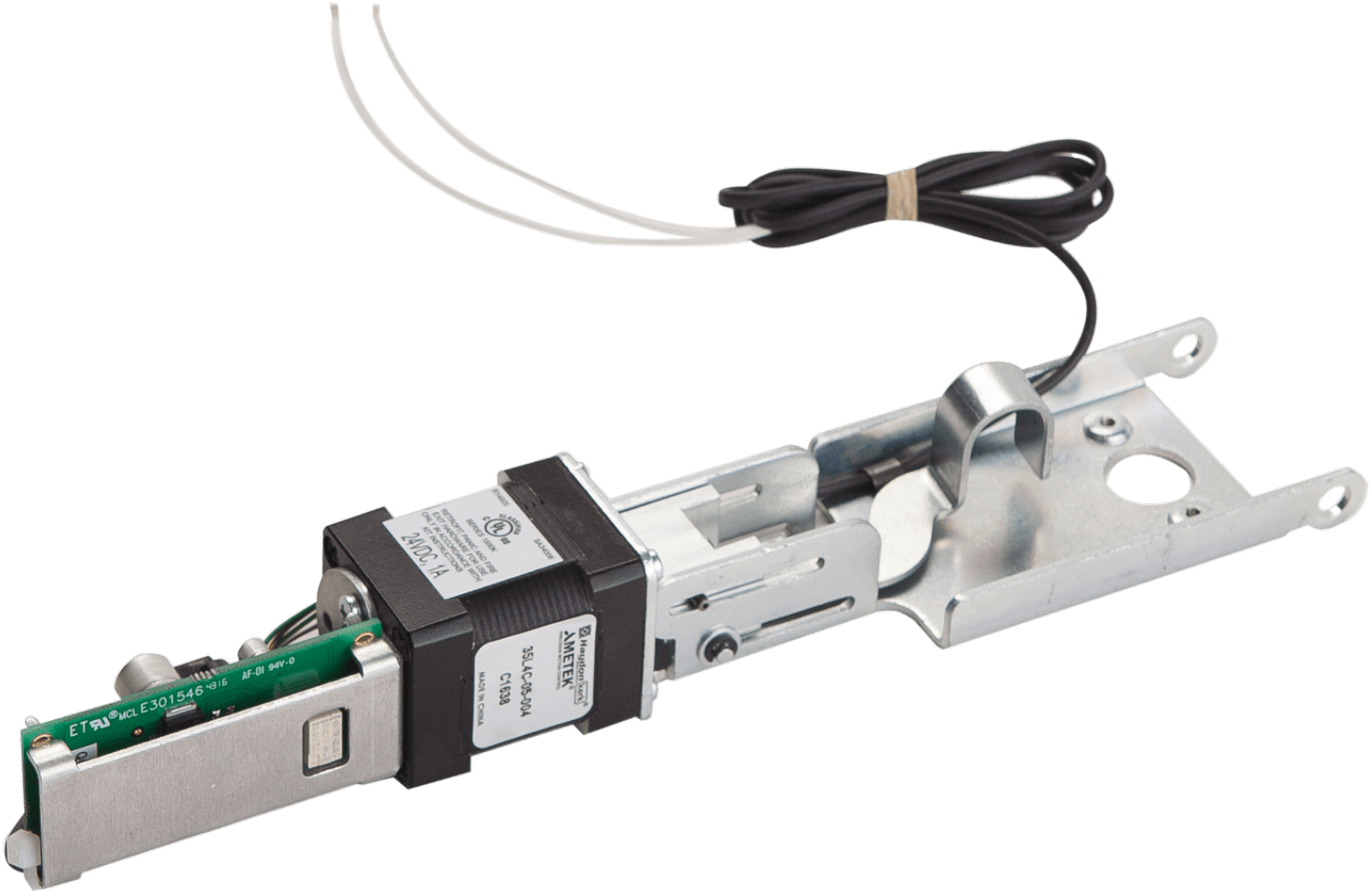
24VDC 1A
35LAC-05-004
C1538
AMETEK
Haydon Kerk
MADE IN CHINA
E301546
AF-01 94V-0





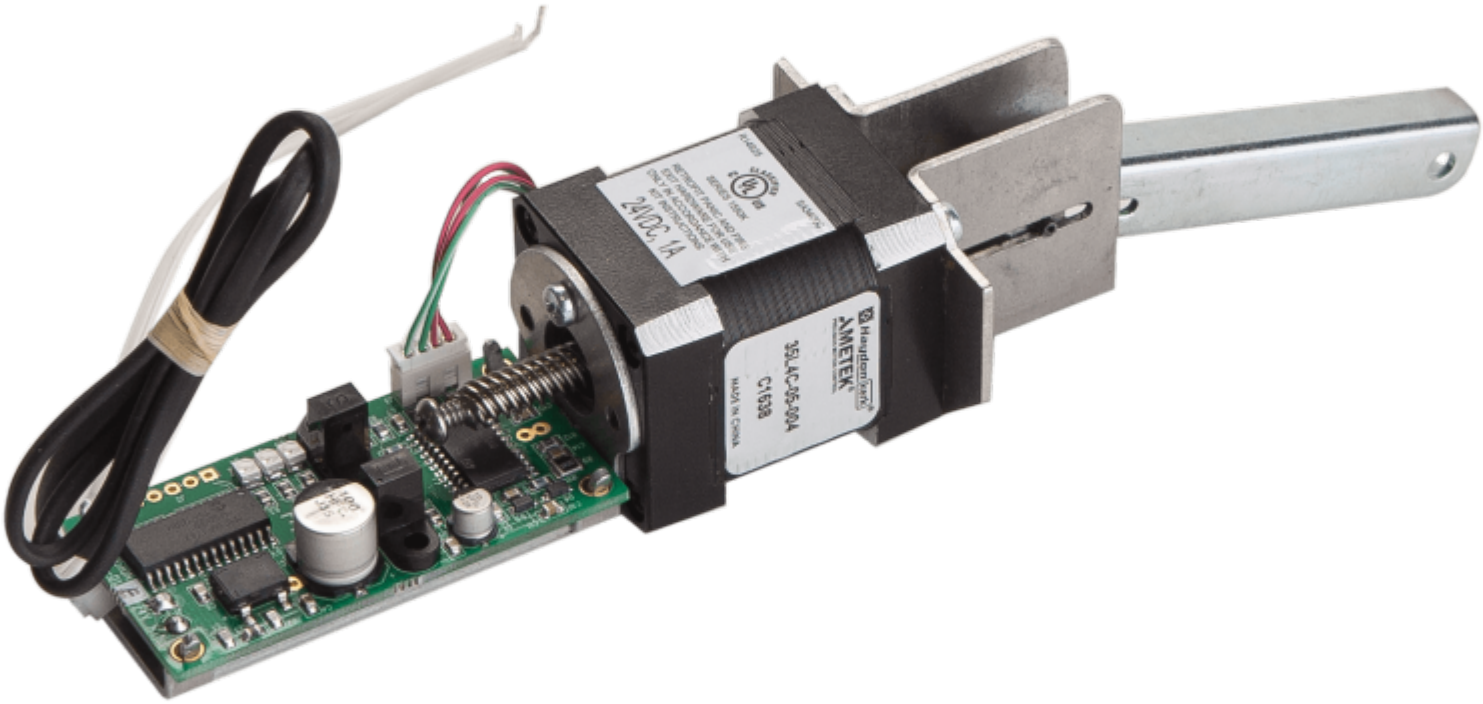
24VDC, 1A
AMETEK
35LAC-05-00A
C1638
MADE IN CHINA

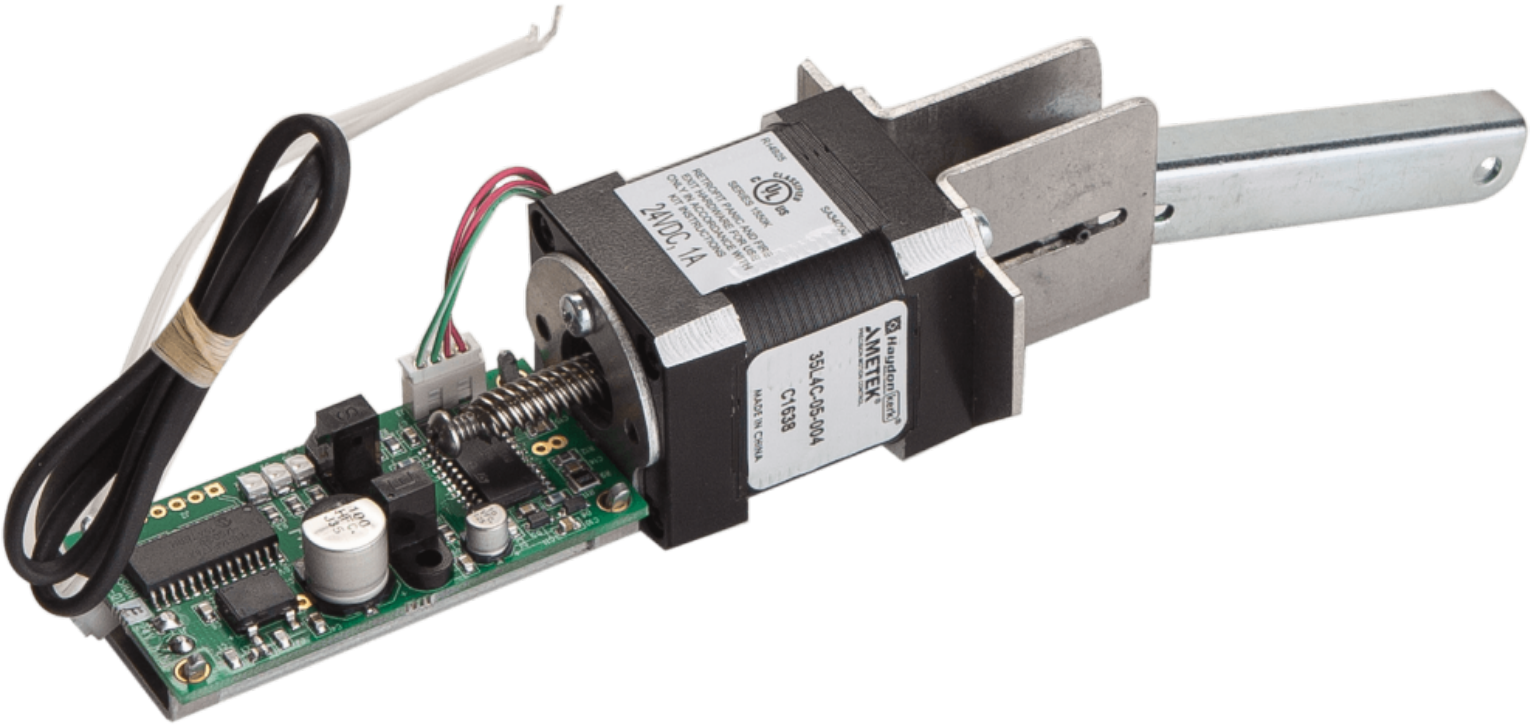
24VDC, 1A
35L4C-05-004
C1538
MADE IN CHINA
AMETEK
Haydon Kerk

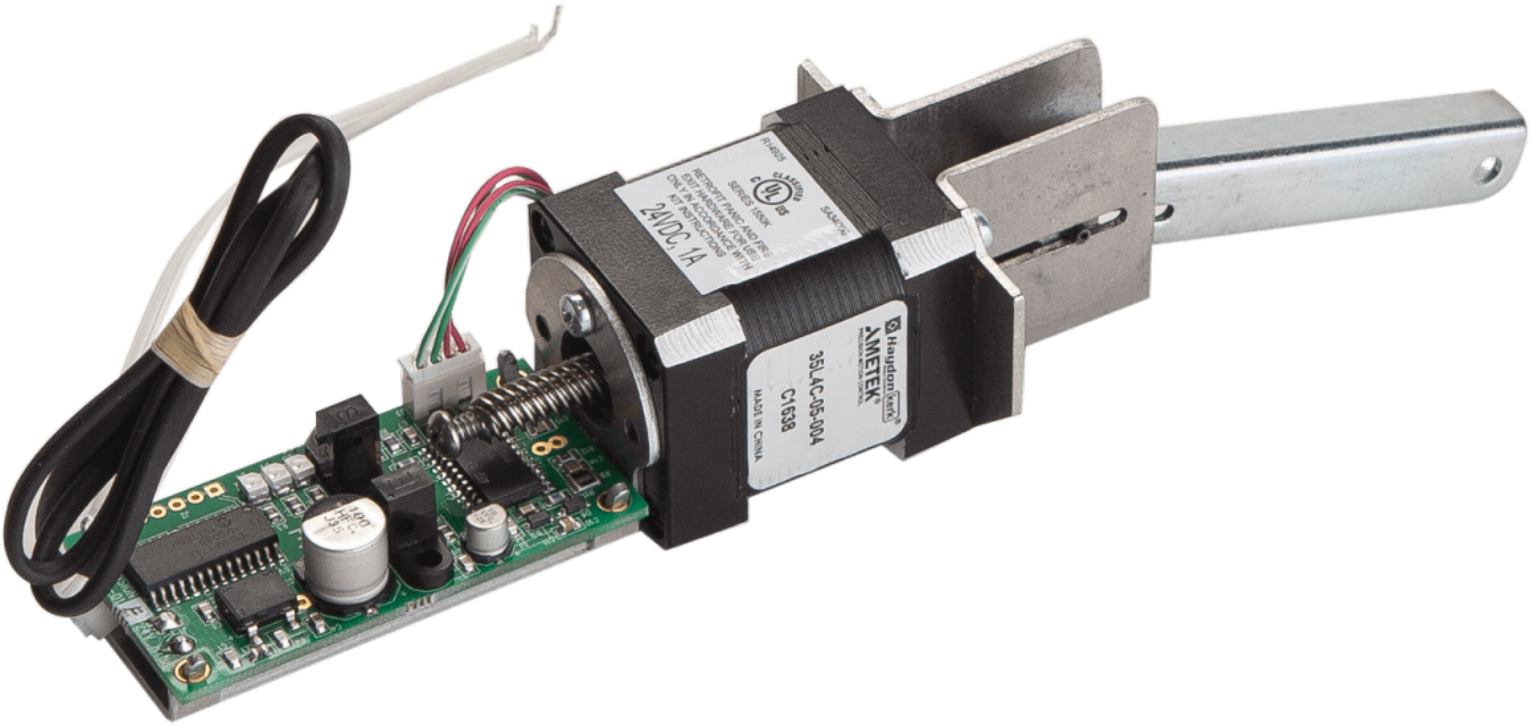
24VDC, 1A
AMETEK
Haydon Kerk
35L4C-05-004
C1538
MADE IN CHINA

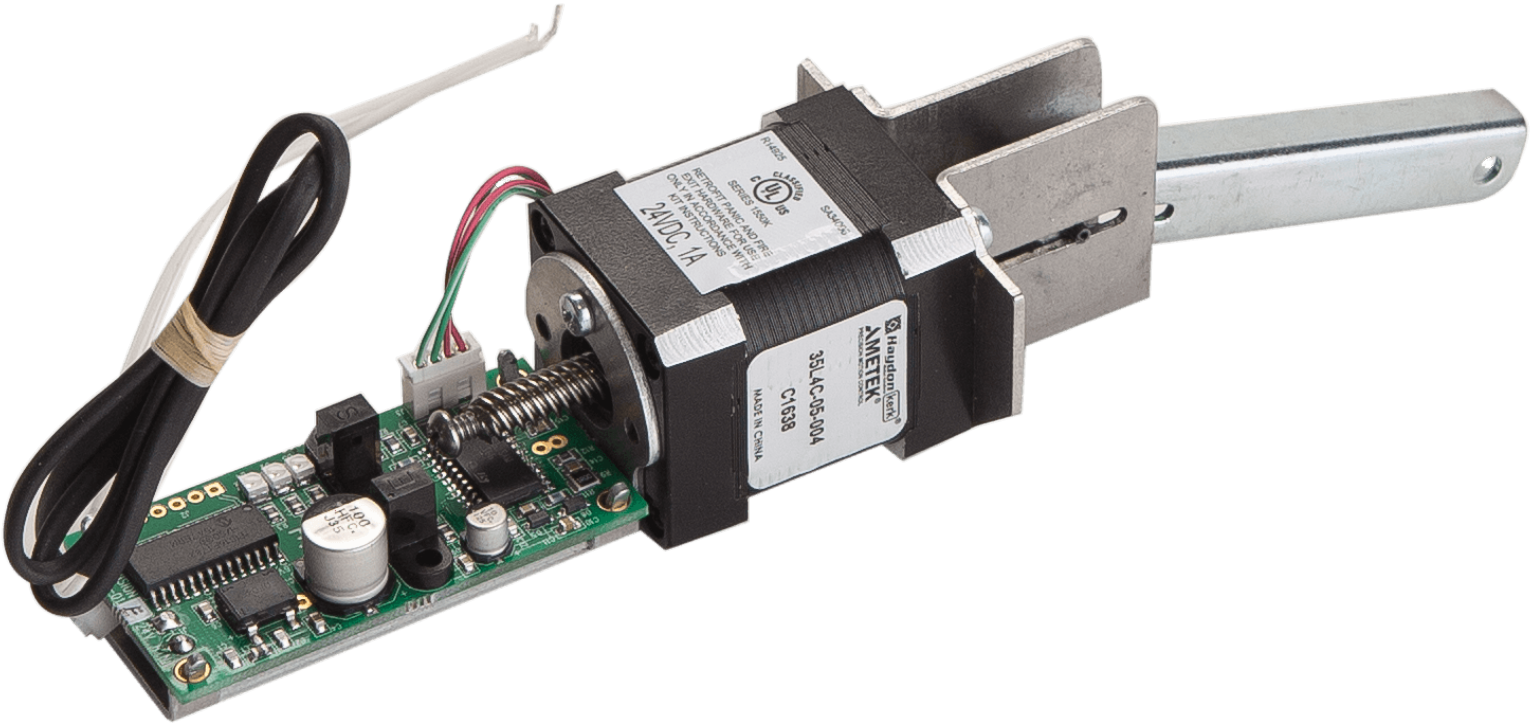
24VDC, 1A
35LAC-05-004
C1538
MADE IN CHINA
AMETEK
Haydon Kerk

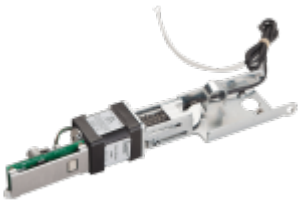

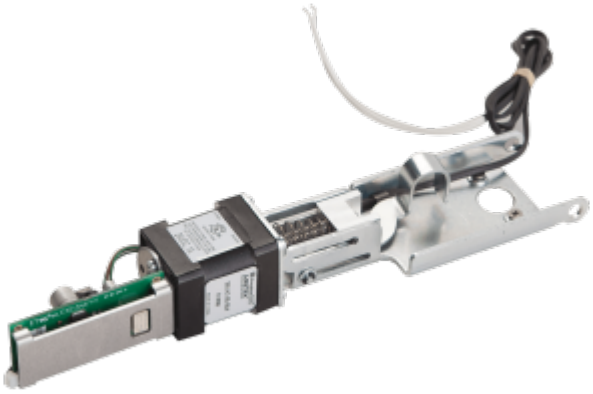

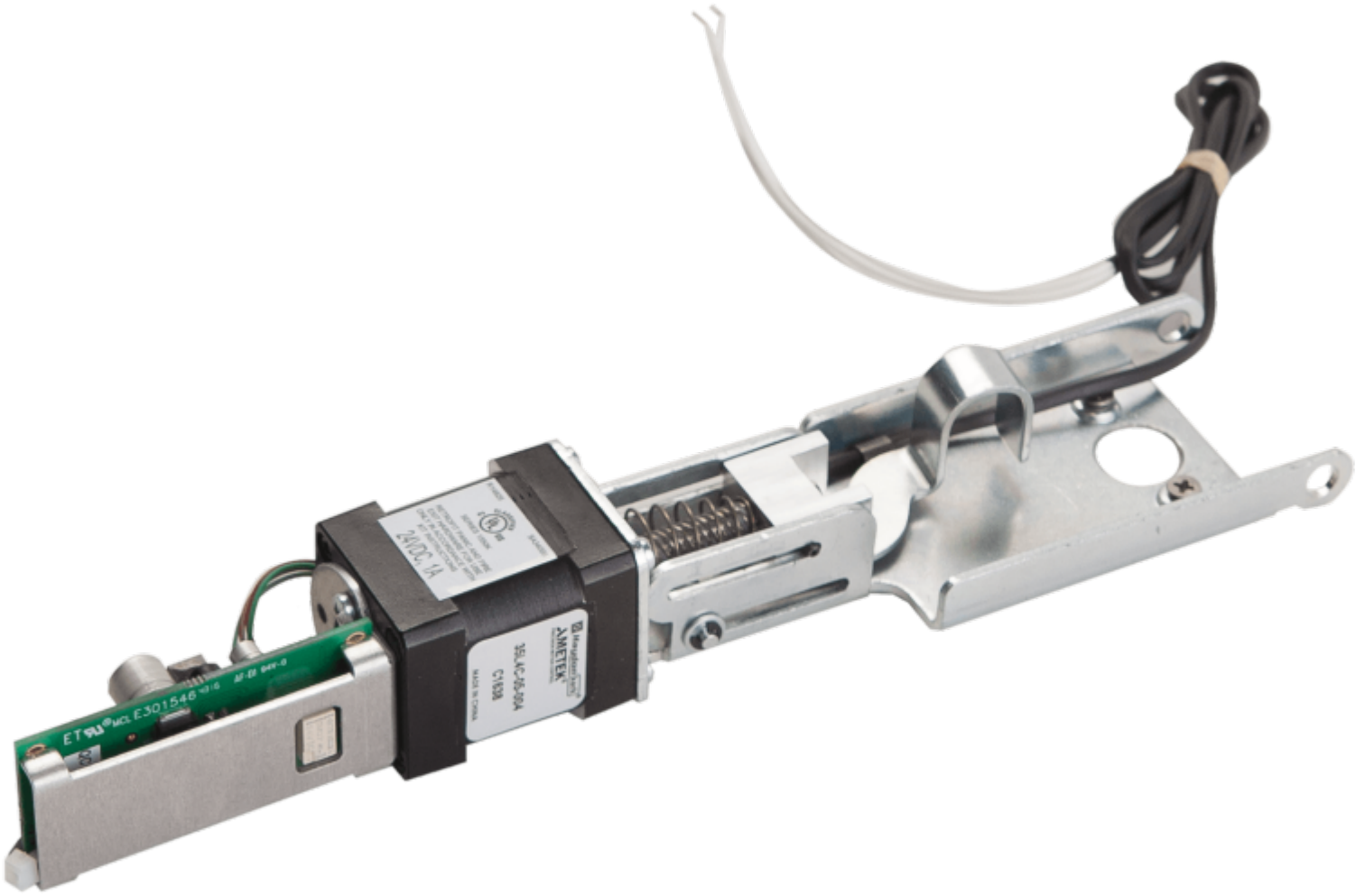
E301546
AMETEK

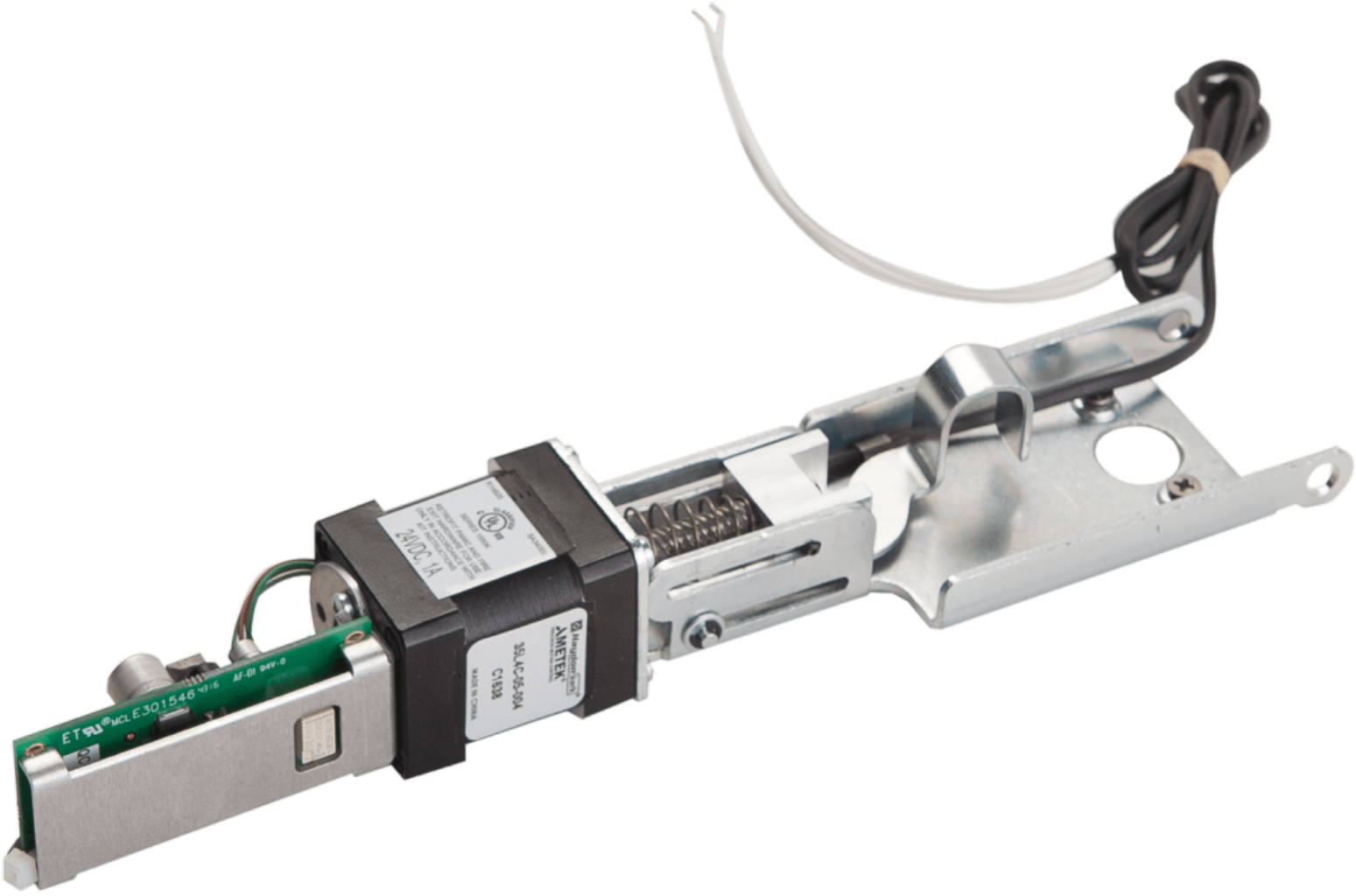
24VDC 1A
Haydon Kerk
AMETEK
35L4C-05-50A
C1938
MADE IN CHINA
ETL LISTED
MCL E301546
AF-DI 94V-0

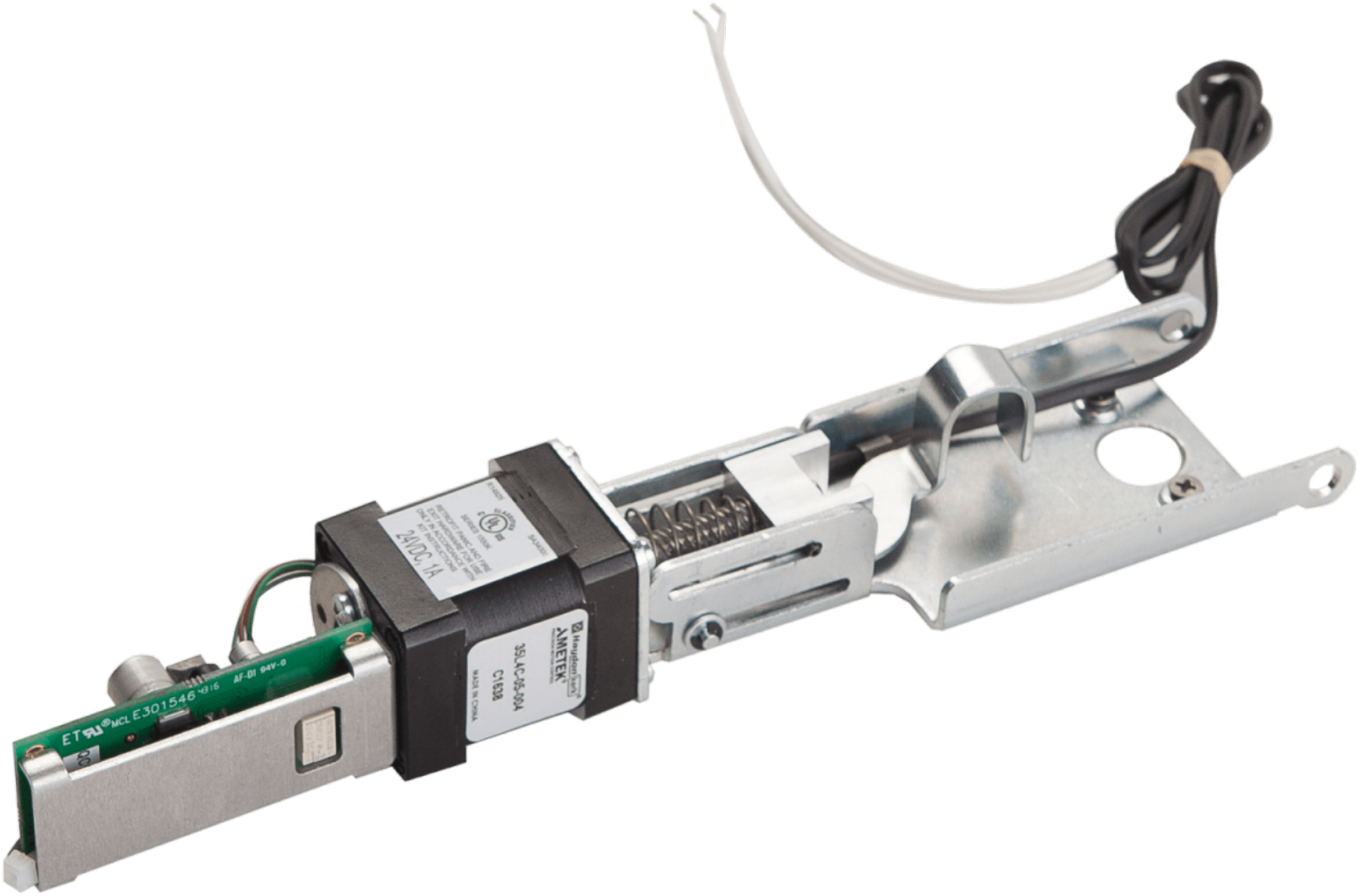
24VDC, 1A
AMETEK
35LAC-05-00A
C1638
MADE IN CHINA
AF-DI 94V-0

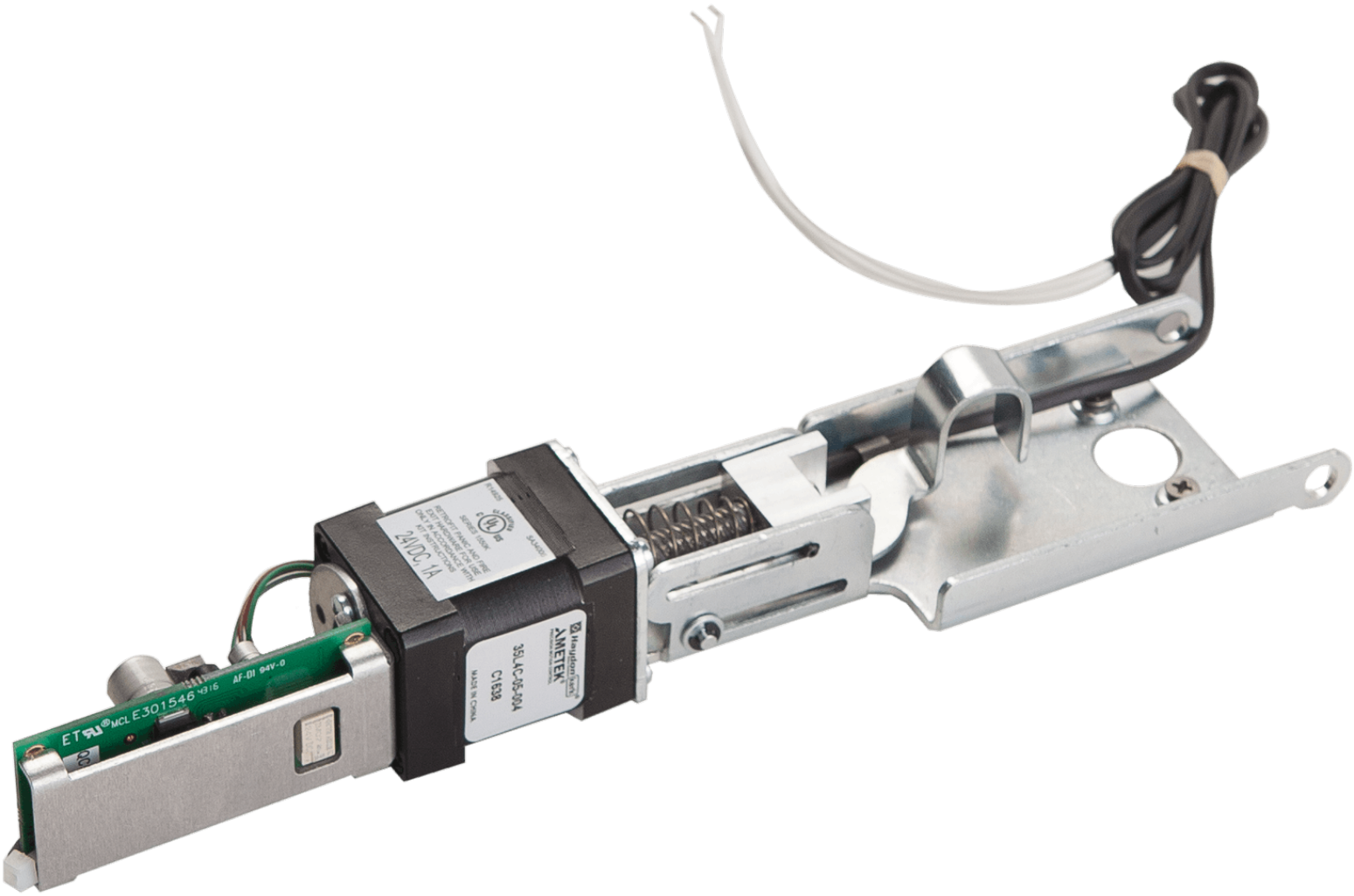
ETRI MCL E301546 4316
AF-DI 94V-0
24VDC, 1A
Haydon Kerk
AMETEK
35LAC-05-00A
C1638
MADE IN CHINA


PULL HANDLE
EMERGENCY


PULL HANDLE
EMERGENCY


PULL HANDLE
EMERGENCY


PULL HANDLE
EMERGENCY


PULL HANDLE
EMERGENCY


PULL HANDLE
EMERGENCY


PULL HANDLE
EMERGENCY


PULL HANDLE
EMERGENCY


PULL HANDLE
EMERGENCY


PULL HANDLE
EMERGENCY


PULL HANDLE
EMERGENCY


PULL HANDLE
EMERGENCY

SERIES 1330 EMERGENCY RELEASES



COVERS THE FOLLOWING MODELS:

1330-3 EMERGENCY RELEASE COLOR BLUE, PROVIDES MANUAL EMERGENCY REPORTING.

- **MOUNTS IN A STANDARD SINGLE GANG BOX 2-1/8" DEEP.**
- **DESIGNED FOR INDOOR AND OUTDOOR USE.**
- **UL LISTED 8P05 FIRE ALARM EQUIPMENT.**
- **STATE OF CALIFORNIA LISTING 7150-1665:0103 FIRE ALARM PULL BOXES.**

ELECTRICAL SPECIFICATIONS

- 1A @ 30VDC, 0.1A @ 125VAC
- MAXIMUM WIRE SIZE 18 AWG

EMERGENCY RELEASE FUNCTION

PULLING ON THE HANDLE WILL RELEASE THE INTERNAL SWITCHES TO CONTROL ANY PERIPHERAL DEVICE.
IF OPTIONAL BREAK GLASS IS USED IT WILL BREAK WHEN HANDLE IS PULLED.

RESETTING EMERGENCY RELEASE

RESETTING IS ACCOMPLISHED BY USING PROVIDED KEY FOR LOCK.

WIRING DIAGRAM

NORMALLY CLOSED OPERATION

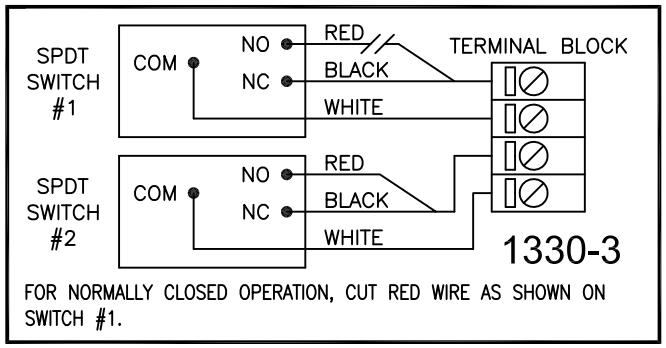

NORMALLY OPEN OPERATION

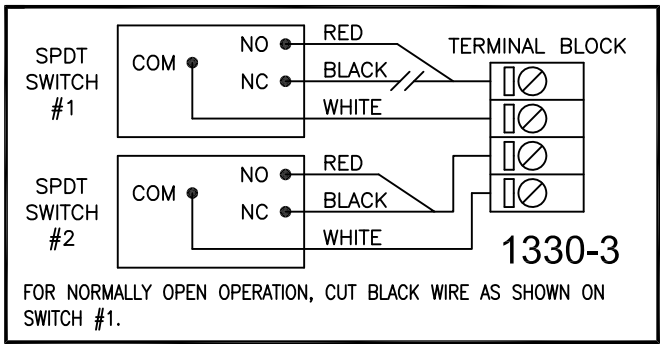

ACSI
ARCHITECTURAL CONTROL SYSTEMS INC.

2720 CLARK AVE., ST. LOUIS, MO 63103 (800) 753-5558

REV. 11/2017

SERIES 1330 EMERGENCY RELEASES



COVERS THE FOLLOWING MODELS:

1330-3 EMERGENCY RELEASE COLOR BLUE, PROVIDES MANUAL EMERGENCY REPORTING.

MOUNTS IN A STANDARD SINGLE GANG BOX 2-1/8" DEEP.

DESIGNED FOR INDOOR AND OUTDOOR USE.

UL LISTED 8P05 FIRE ALARM EQUIPMENT.

STATE OF CALIFORNIA LISTING 7150-1665:0103 FIRE ALARM PULL BOXES.

ELECTRICAL SPECIFICATIONS

- 1A @ 30VDC, 0.1A @ 125VAC
- MAXIMUM WIRE SIZE 18 AWG

EMERGENCY RELEASE FUNCTION

PULLING ON THE HANDLE WILL RELEASE THE INTERNAL SWITCHES TO CONTROL ANY PERIPHERAL DEVICE.
IF OPTIONAL BREAK GLASS IS USED IT WILL BREAK WHEN HANDLE IS PULLED.

RESETTING EMERGENCY RELEASE

RESETTING IS ACCOMPLISHED BY USING PROVIDED KEY
FOR LOCK.

WIRING DIAGRAM

NORMALLY CLOSED OPERATION

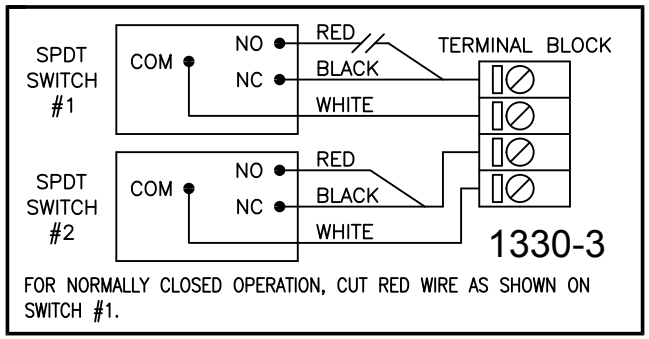

NORMALLY OPEN OPERATION

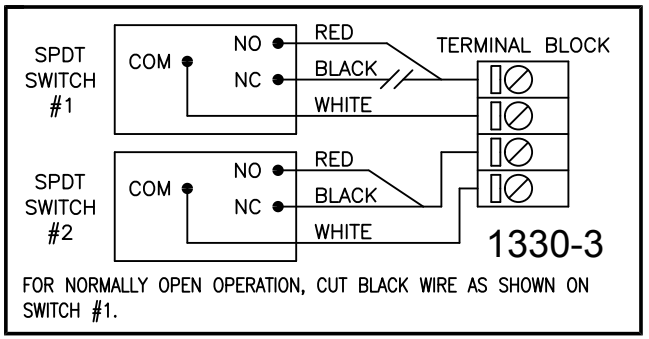

ARCHITECTURAL CONTROL SYSTEMS, INCORPORATED

2720 CLARK AVE., ST. LOUIS, MO 63103 (800) 753-5558

REV. 08/2017

FULL MORTISE ELECTRIC HINGE TEMPLATE

4.5" & 5.0", 5 KNUCKLE, STANDARD & HEAVY WEIGHT

DON-JO, HAGER, IVES

1102, 1104, 1106, 1108, 1114, 1116, 1118, 1110-10, 1120

CONCEALED ELECTRIC THROUGH-WIRE
CONCEALED ELECTRIC MONITOR AND THROUGH-WIRE
CONCEALED AIR TRANSFER

COMPATIBLE DOOR AND FRAME PREPARATION: DON-JO, HAGER, IVES

NOTES:

1. HINGES ARE NON-LOAD BEARING AND MUST BE MOUNTED IN THE CENTER POSITION.
2. DRILL AND DEBURR HOLES IN DOOR AND FRAME FOR WIRE ACCESS. WOOD DOORS AND FRAMES REQUIRE A 2" MINIMUM DEPTH.

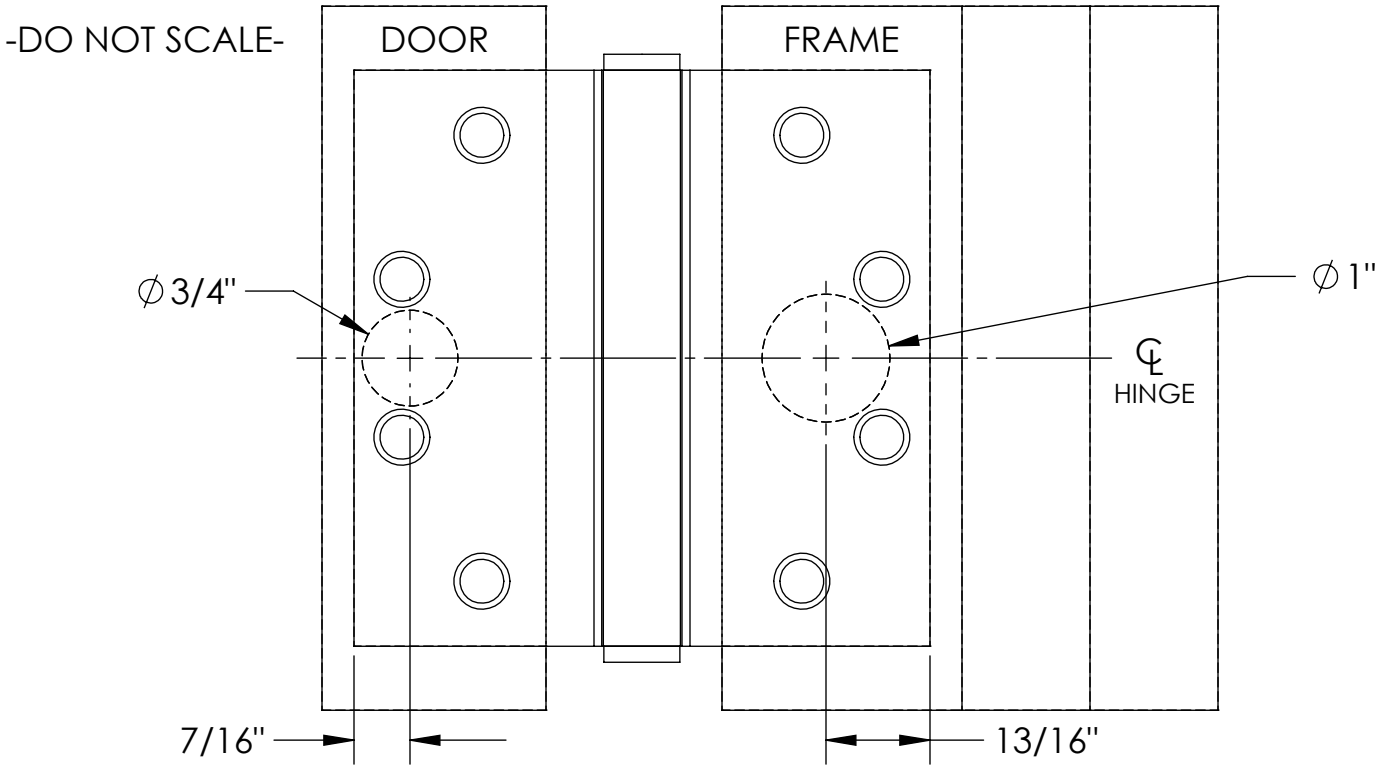

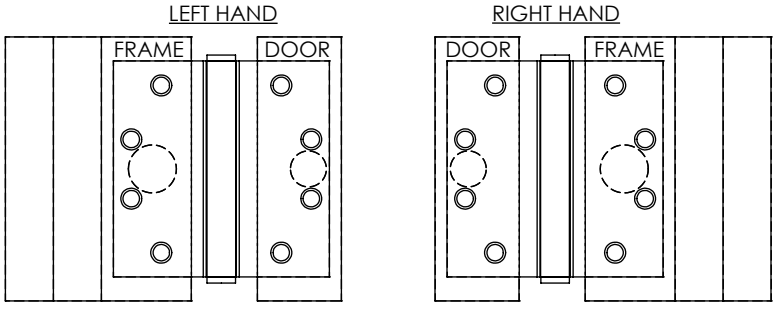

FULL MORTISE ELECTRIC HINGE TEMPLATE

4.5" & 5.0", 5 KNUCKLE, STANDARD & HEAVY WEIGHT

BOMMER, PBB, STANLEY

1102, 1104, 1106, 1108

CONCEALED ELECTRIC THROUGH-WIRE

COMPATIBLE DOOR AND FRAME PREPARATION: BOMMER, PBB, STANLEY

NOTES:

1. HINGES ARE NON-LOAD BEARING AND MUST BE MOUNTED IN THE CENTER POSITION.
2. DRILL AND DEBURR HOLES IN DOOR AND FRAME FOR WIRE ACCESS. WOOD DOORS AND FRAMES REQUIRE A 2" MINIMUM DEPTH.

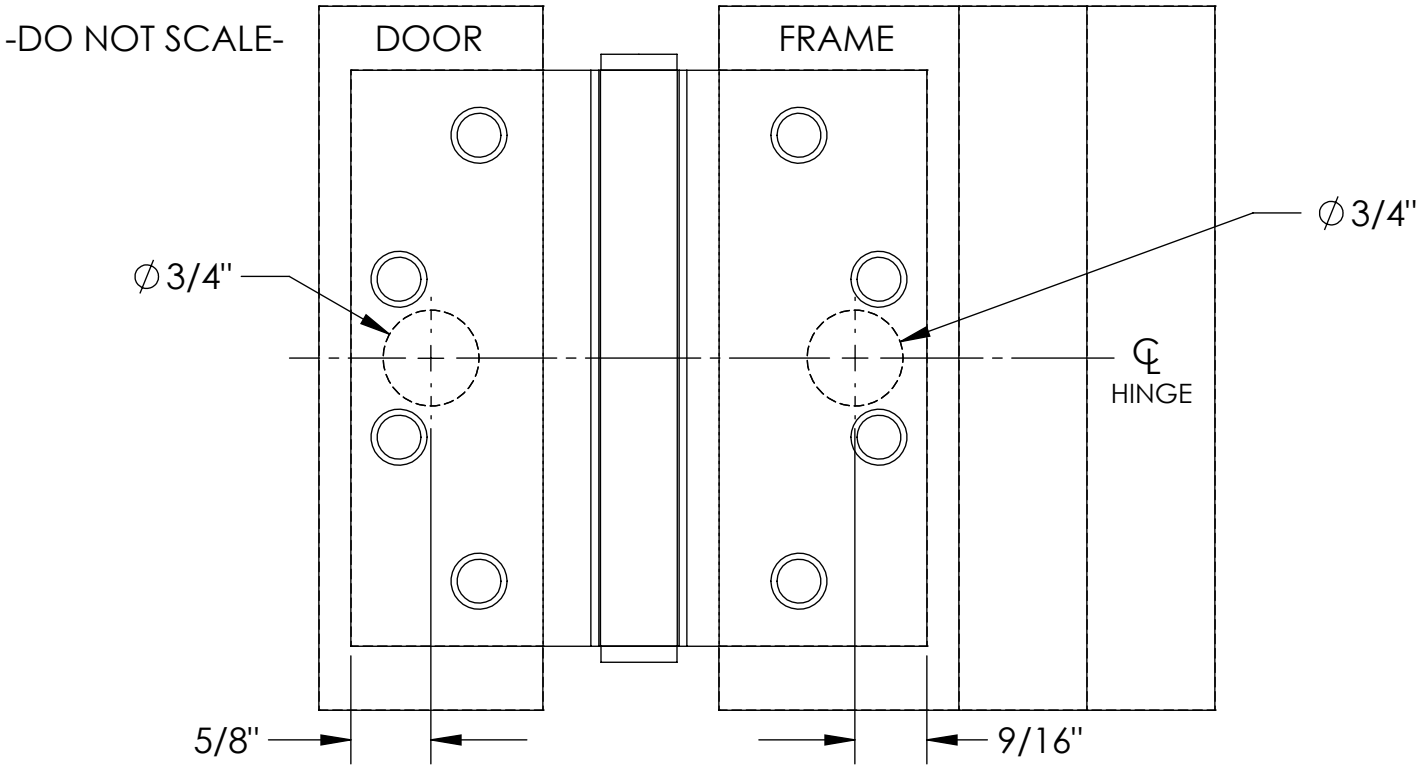

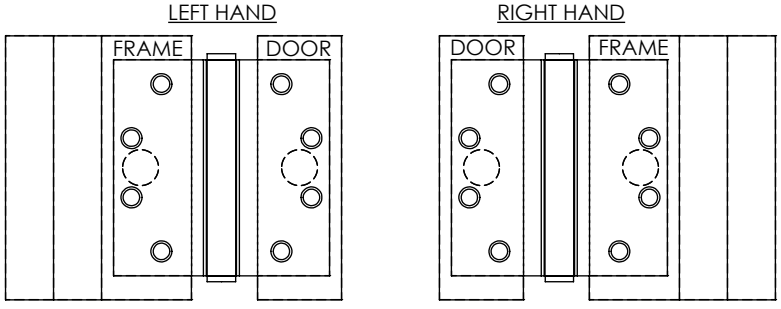

FULL MORTISE ELECTRIC HINGE TEMPLATE

4.5" & 5.0", 5 KNUCKLE, STANDARD & HEAVY WEIGHT

MCKINNEY

1102, 1104, 1106, 1108, 1100-10, 1100-12, 1102x4

CONCEALED ELECTRIC THROUGH-WIRE

COMPATIBLE DOOR AND FRAME PREPARATION: MCKINNEY

NOTES:

1. HINGES ARE NON-LOAD BEARING AND MUST BE MOUNTED IN THE CENTER POSITION.
2. DRILL AND DEBURR HOLES IN DOOR AND FRAME FOR WIRE ACCESS. WOOD DOORS AND FRAMES REQUIRE A 2" MINIMUM DEPTH.

-DO NOT SCALE-

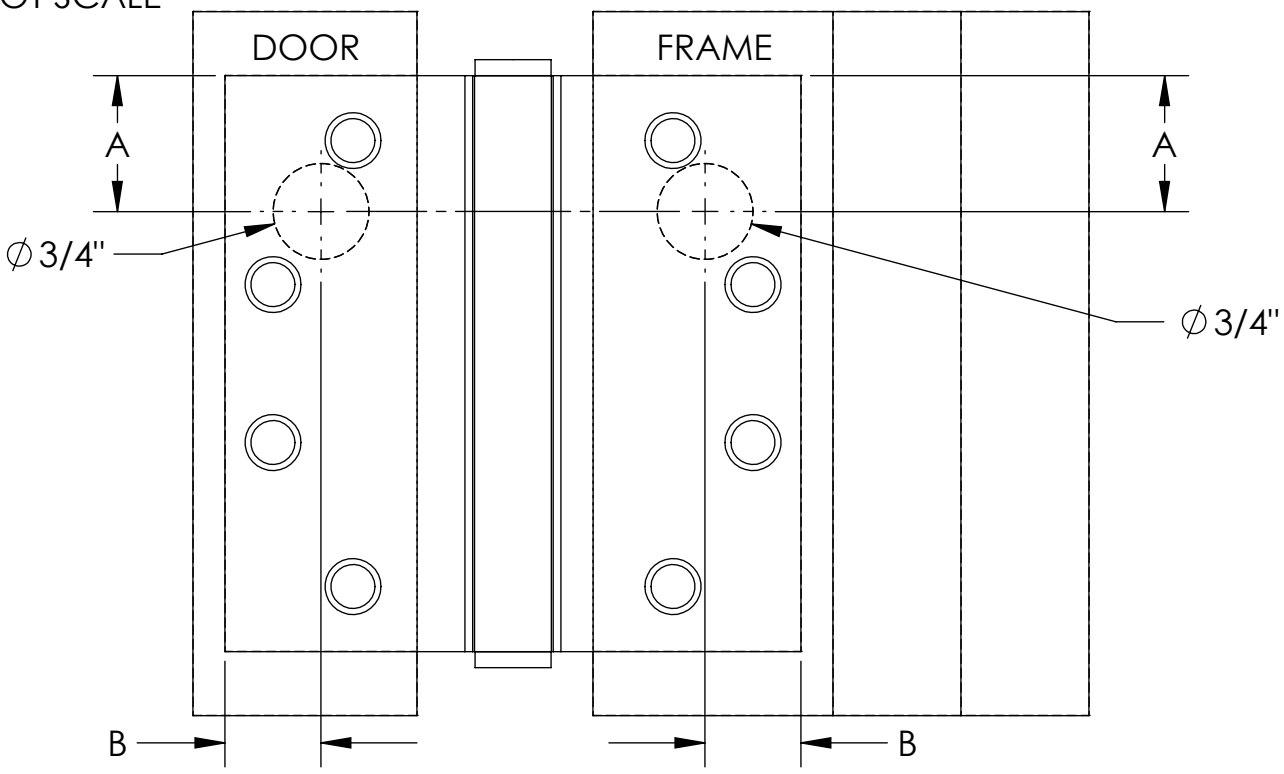

HINGE TYPE	A	B
4.5" STANDARD WEIGHT	1-1/8"	11/16"
4.5" HEAVY WEIGHT	1-1/16"	3/4"
5.0" STANDARD WEIGHT	1-1/8"	13/16"
5.0" HEAVY WEIGHT	1-1/16"	3/4"

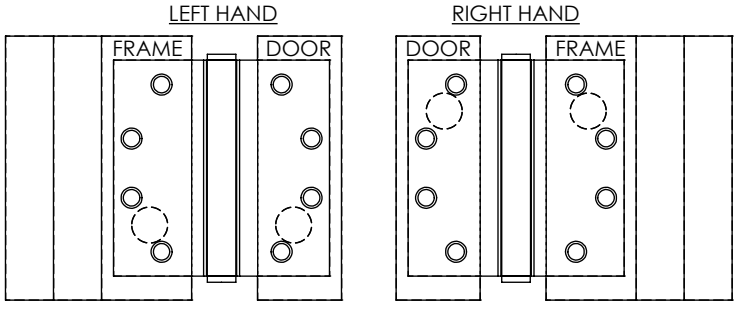

FULL MORTISE ELECTRIC HINGE TEMPLATE

4.5" & 5.0", 5 KNUCKLE, STANDARD & HEAVY WEIGHT

BOMMER, DON-JO, HAGER, IVES, PBB, STANLEY

1100-10, 1100-12, 1102x4, 1106-26, 1100-PG, 1182, 1182x4, 1182x6

CONCEALED ELECTRIC THROUGH-WIRE

COMPATIBLE DOOR AND FRAME PREPARATION: DON-JO, HAGER

NOTES:

1. HINGES ARE NON-LOAD BEARING AND MUST BE MOUNTED IN THE CENTER POSITION.
2. DRILL AND DEBURR HOLES IN DOOR AND FRAME FOR WIRE ACCESS. WOOD DOORS AND FRAMES REQUIRE A 2" MINIMUM DEPTH.

-DO NOT SCALE-

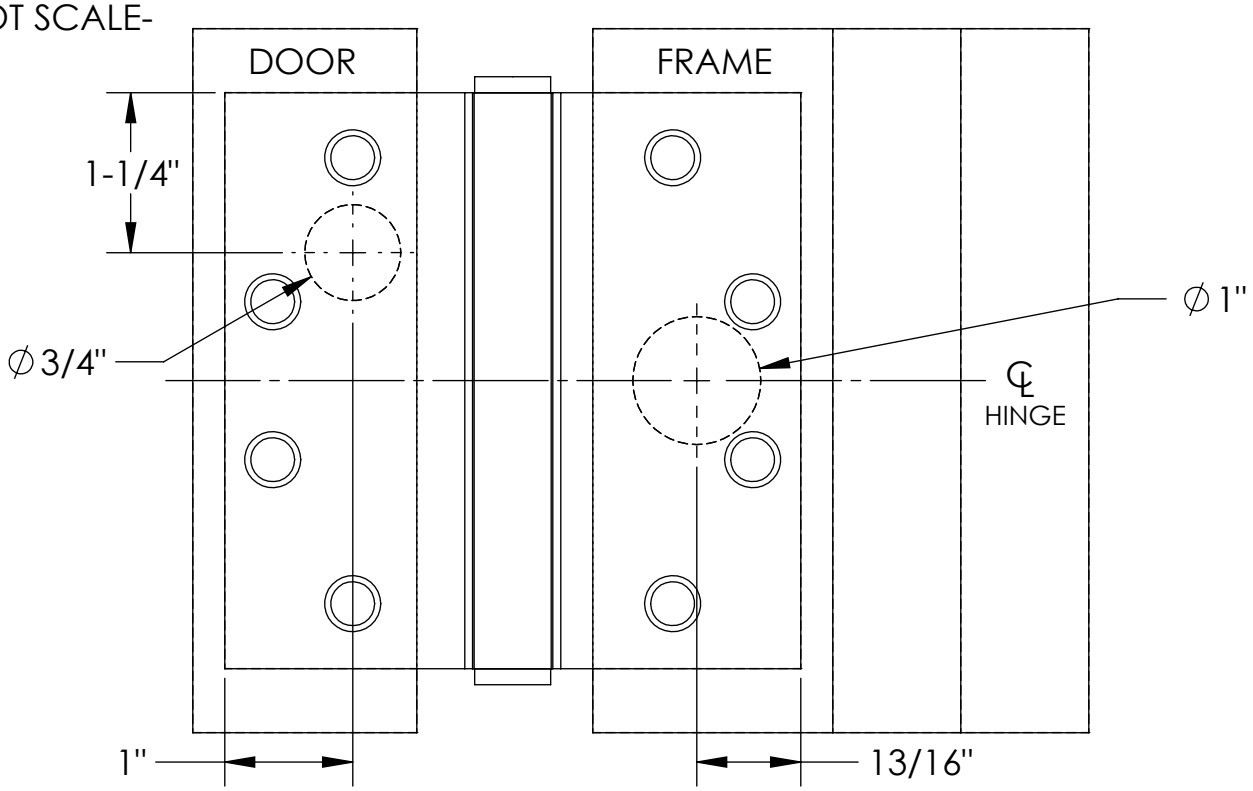

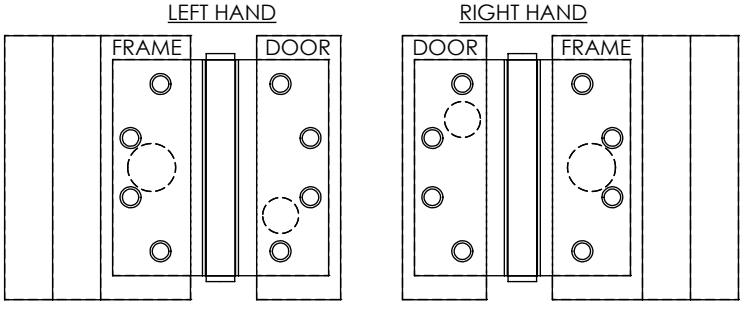

FULL MORTISE ELECTRIC HINGE TEMPLATE

4.5" & 5.0", 3 KNUCKLE, STANDARD & HEAVY WEIGHT

MCKINNEY

1102, 1104, 1106, 1108

CONCEALED ELECTRIC THROUGH-WIRE

COMPATIBLE DOOR AND FRAME PREPARATION: MCKINNEY

NOTES:

1. HINGES ARE NON-LOAD BEARING AND MUST BE MOUNTED IN THE CENTER POSITION.
2. DRILL AND DEBURR HOLES IN DOOR AND FRAME FOR WIRE ACCESS. WOOD DOORS AND FRAMES REQUIRE A 2" MINIMUM DEPTH.

-DO NOT SCALE-

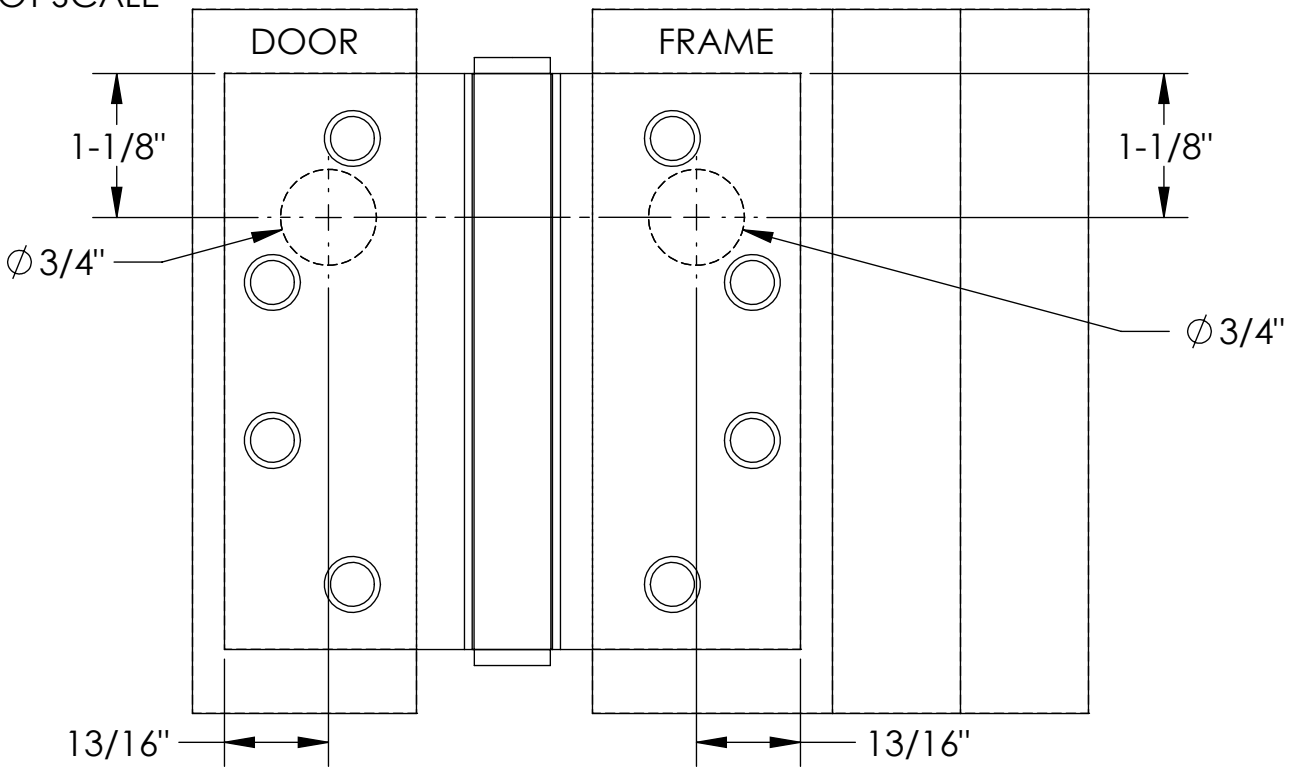

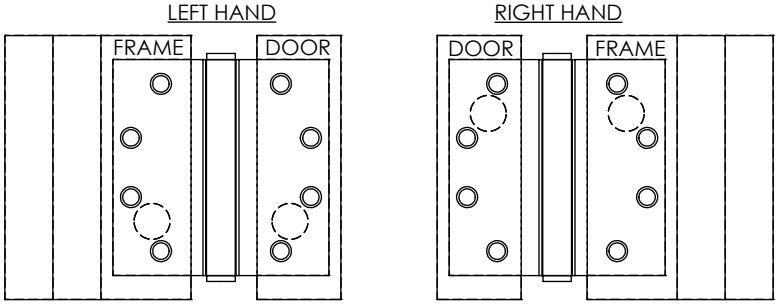

FULL MORTISE ELECTRIC HINGE TEMPLATE

4.5" & 5.0", 3 KNUCKLE, STANDARD & HEAVY WEIGHT

STANLEY

1102, 1104, 1106, 1108

CONCEALED ELECTRIC THROUGH-WIRE

COMPATIBLE DOOR AND FRAME PREPARATION: STANLEY

NOTES:

1. HINGES ARE NON-LOAD BEARING AND MUST BE MOUNTED IN THE CENTER POSITION.
2. DRILL AND DEBURR HOLES IN DOOR AND FRAME FOR WIRE ACCESS. WOOD DOORS AND FRAMES REQUIRE A 2" MINIMUM DEPTH.

-DO NOT SCALE-

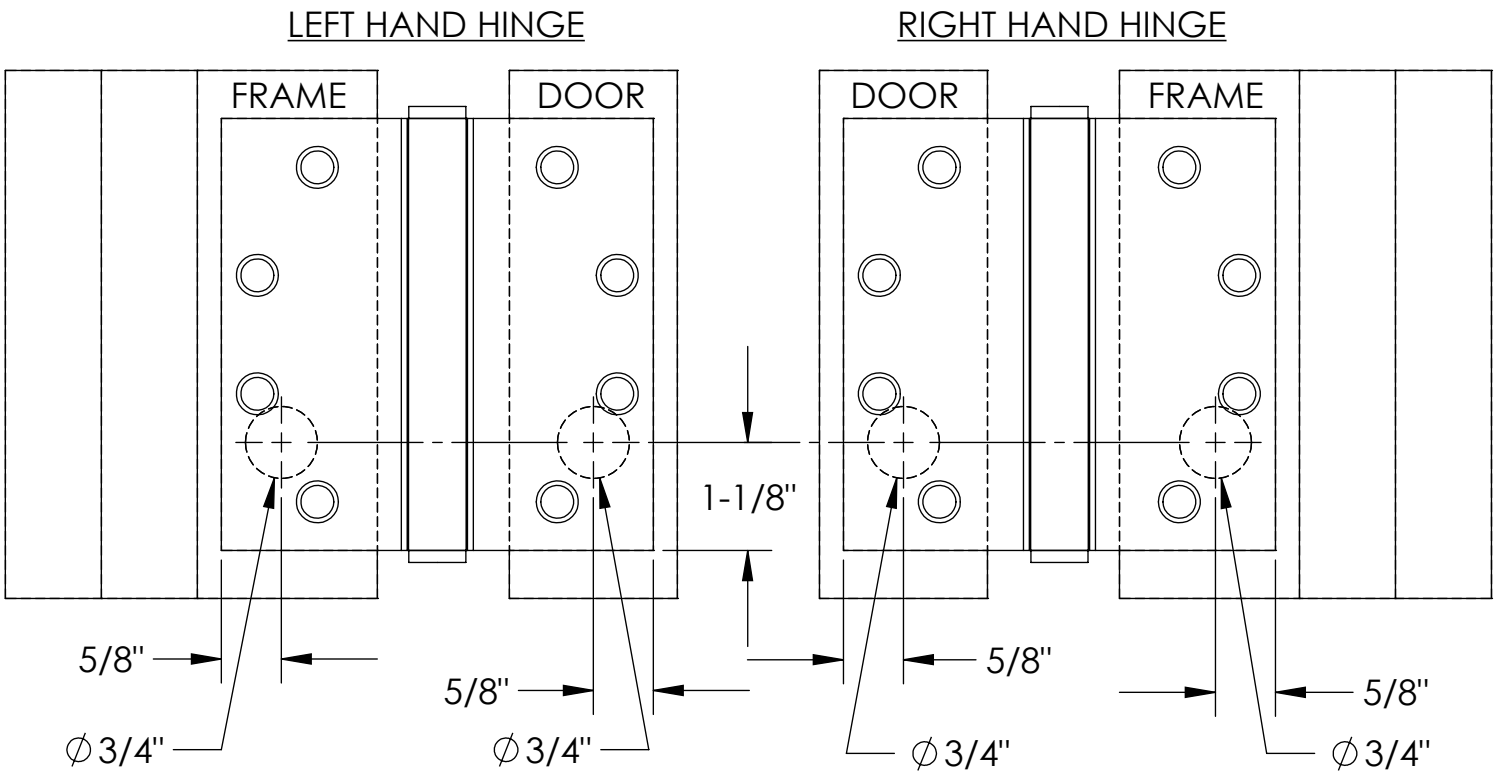

FULL MORTISE ELECTRIC HINGE TEMPLATE

4.5" & 5.0", 3 KNUCKLE, STANDARD & HEAVY WEIGHT

BOMMER, HAGER, IVES, PBB

1102, 1104, 1106, 1108, 1100-10, 1100-12, 1102x4, 1114, 1116, 1118, 1120

CONCEALED ELECTRIC THROUGH-WIRE
CONCEALED ELECTRIC MONITOR AND THROUGH-WIRE
CONCEALED AIR TRANSFER

COMPATIBLE DOOR AND FRAME PREPARATION: BOMMER, HAGER, IVES

NOTES:

1. HINGES ARE NON-LOAD BEARING AND MUST BE MOUNTED IN THE CENTER POSITION.
2. DRILL AND DEBURR HOLES IN DOOR AND FRAME FOR WIRE ACCESS. WOOD DOORS AND FRAMES REQUIRE A 2" MINIMUM DEPTH.

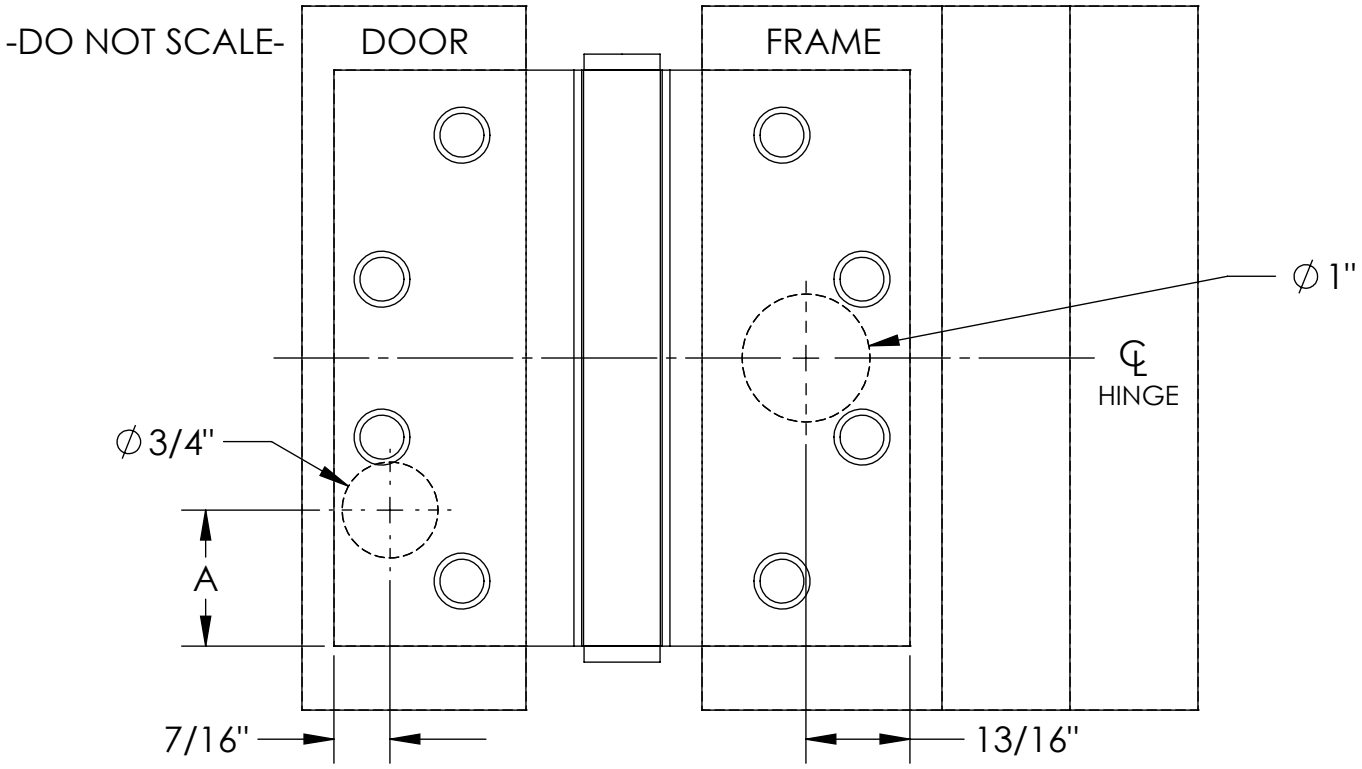

HINGE TYPE	A
4.5" STANDARD & HEAVY WEIGHT	1-1/16"
5.0" STANDARD & HEAVY WEIGHT	1-3/16"

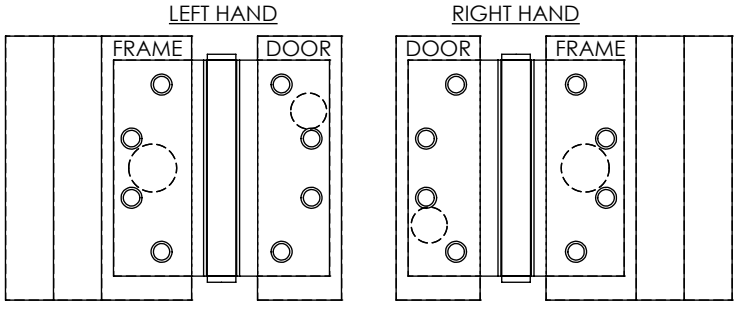

FULL MORTISE ELECTRIC HINGE TEMPLATE

4.5" & 5.0", 2 KNUCKLE, STANDARD & HEAVY WEIGHT

HAGER, MCKINNEY

1102, 1104, 1106, 1108

CONCEALED ELECTRIC THROUGH-WIRE

COMPATIBLE DOOR AND FRAME PREPARATION: HAGER, MCKINNEY

NOTES:

1. HINGES ARE NON-LOAD BEARING AND MUST BE MOUNTED IN THE CENTER POSITION.
2. DRILL AND DEBURR HOLES IN DOOR AND FRAME FOR WIRE ACCESS. WOOD DOORS AND FRAMES REQUIRE A 2" MINIMUM DEPTH.

-DO NOT SCALE-

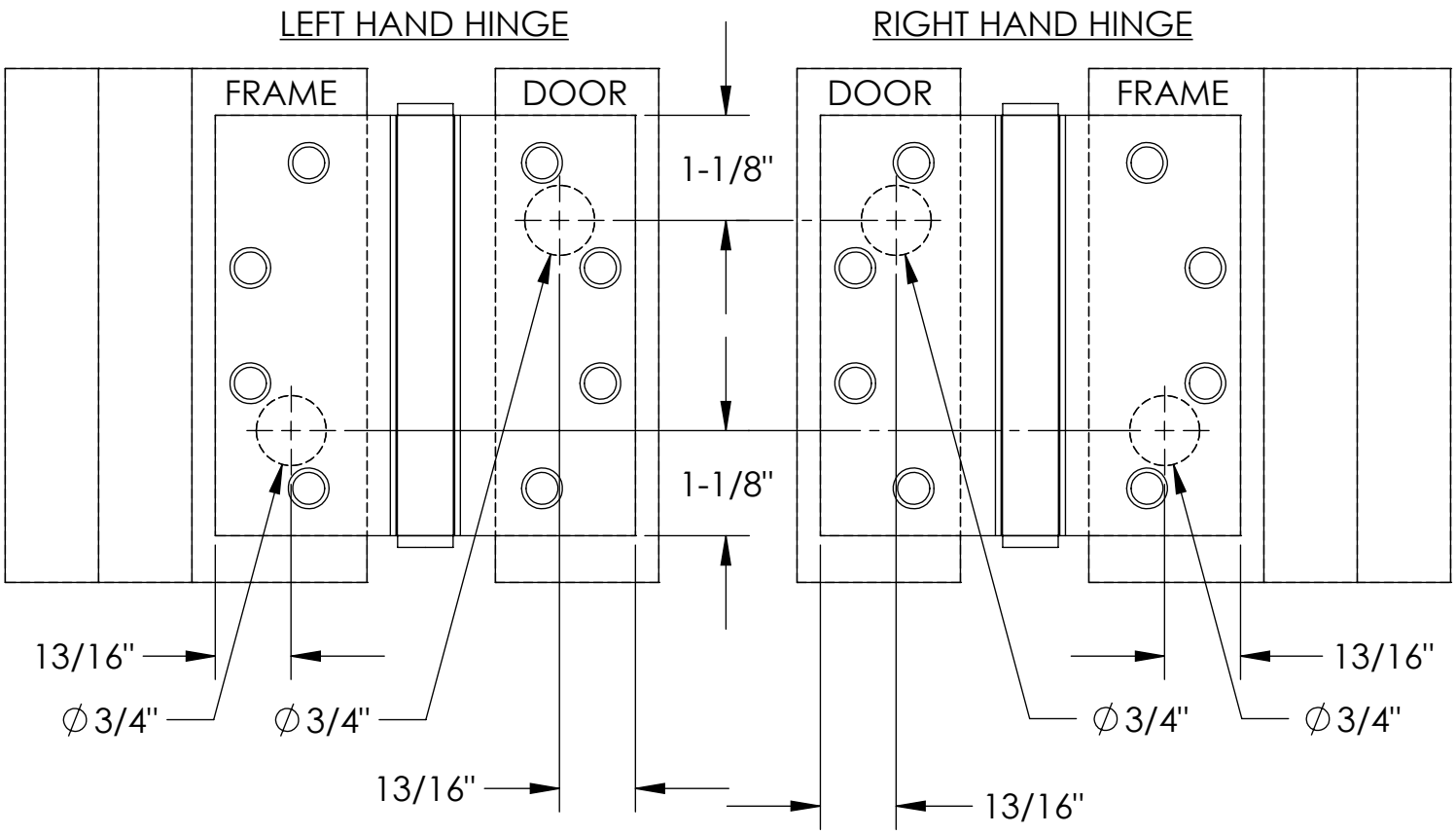

FULL MORTISE ELECTRIC HINGE TEMPLATE

4.0", 5 KNUCKLE, STANDARD & HEAVY WEIGHT

BOMMER, HAGER, IVES, MCKINNEY, PBB, STANLEY

1102, 1104, 1106, 1108

CONCEALED ELECTRIC THROUGH-WIRE

COMPATIBLE DOOR AND FRAME PREPARATION: BOMMER, PBB

NOTES:

1. HINGES ARE NON-LOAD BEARING AND MUST BE MOUNTED IN THE CENTER POSITION.
2. DRILL AND DEBURR HOLES IN DOOR AND FRAME FOR WIRE ACCESS. WOOD DOORS AND FRAMES REQUIRE A 2" MINIMUM DEPTH.

-DO NOT SCALE-

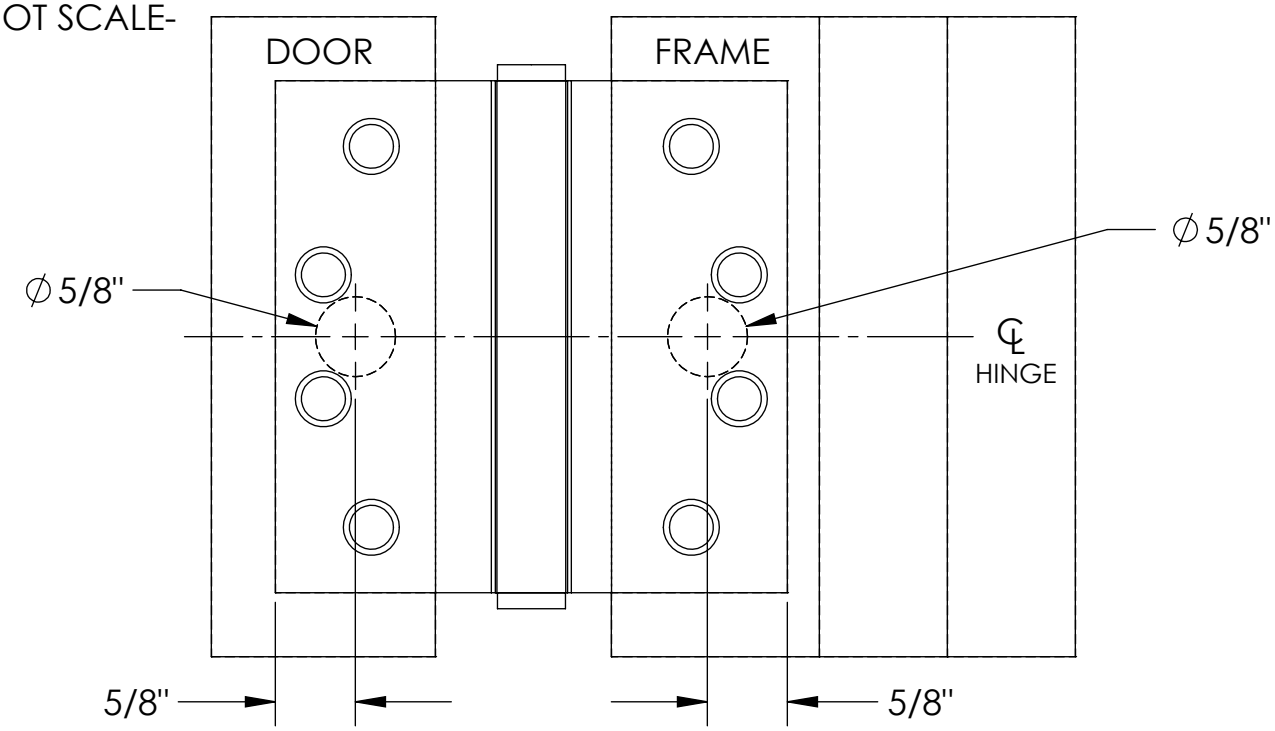

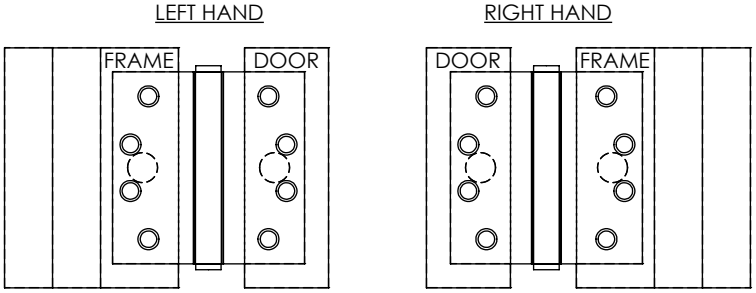

FULL MORTISE ELECTRIC HINGE TEMPLATE

4.5" X 6.0", 5 KNUCKLE, STANDARD & HEAVY WEIGHT

HAGER, IVES

1102, 1104, 1106, 1108

CONCEALED ELECTRIC THROUGH-WIRE

NOTES:

1. HINGES ARE NON-LOAD BEARING AND MUST BE MOUNTED IN THE CENTER POSITION.
2. DRILL AND DEBURR HOLES IN DOOR AND FRAME FOR WIRE ACCESS. WOOD DOORS AND FRAMES REQUIRE A 2" MINIMUM DEPTH.

-DO NOT SCALE-

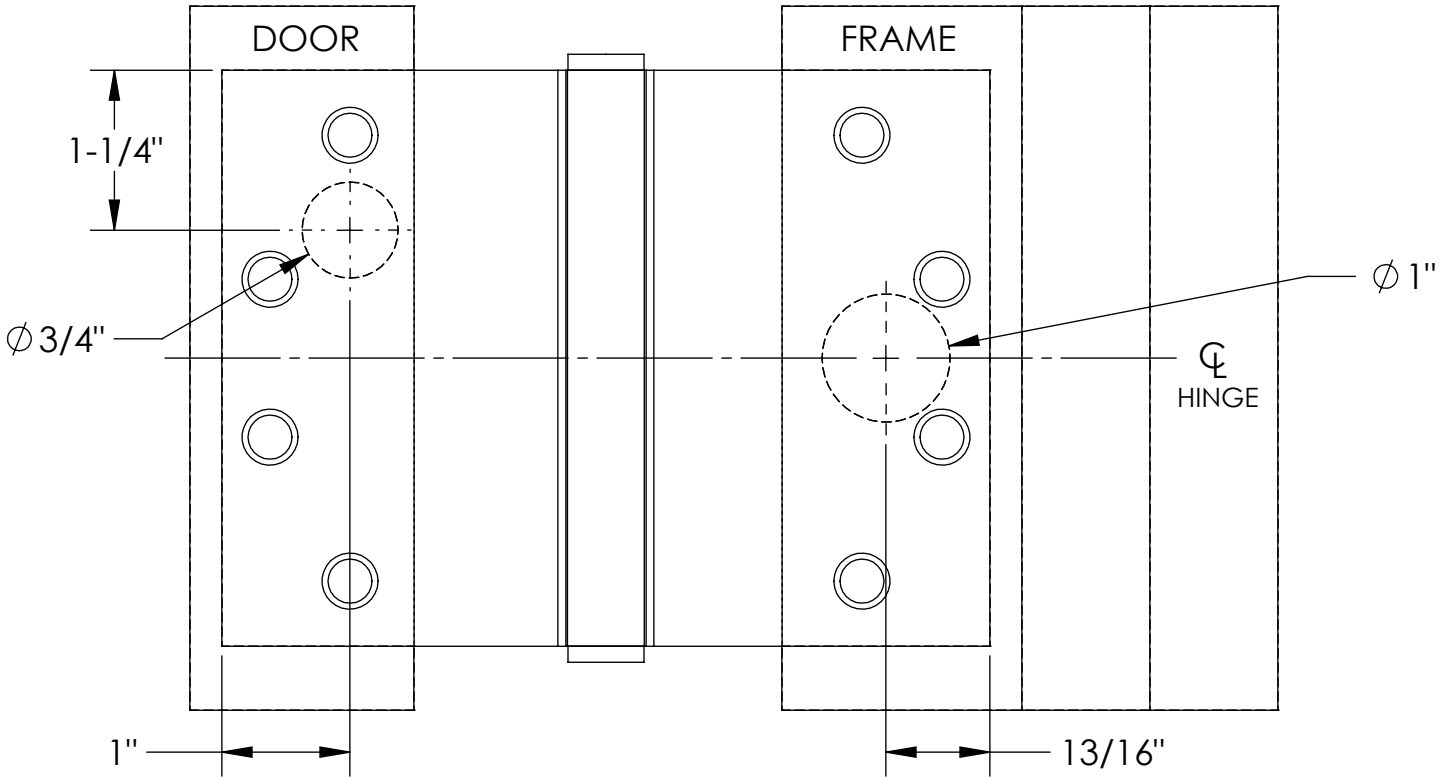

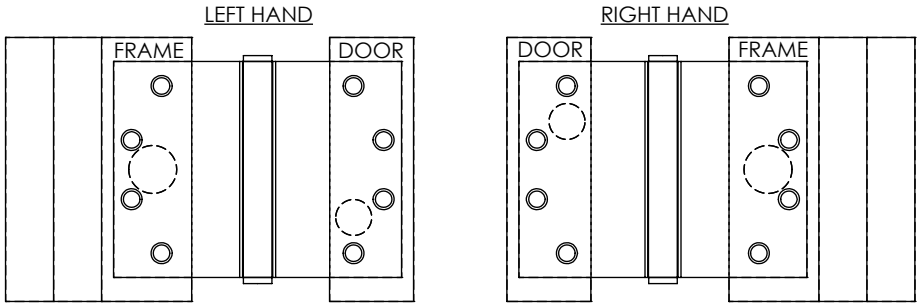

FULL MORTISE ELECTRIC HINGE TEMPLATE

6.0", 5 KNUCKLE, STANDARD & HEAVY WEIGHT

BOMMER, HAGER, IVES, MCKINNEY, PBB, STANLEY

1102, 1104, 1106, 1108

CONCEALED ELECTRIC THROUGH-WIRE

NOTES:

1. HINGES ARE NON-LOAD BEARING AND MUST BE MOUNTED IN THE CENTER POSITION.
2. DRILL AND DEBURR HOLES IN DOOR AND FRAME FOR WIRE ACCESS. WOOD DOORS AND FRAMES REQUIRE A 2" MINIMUM DEPTH.

-DO NOT SCALE-

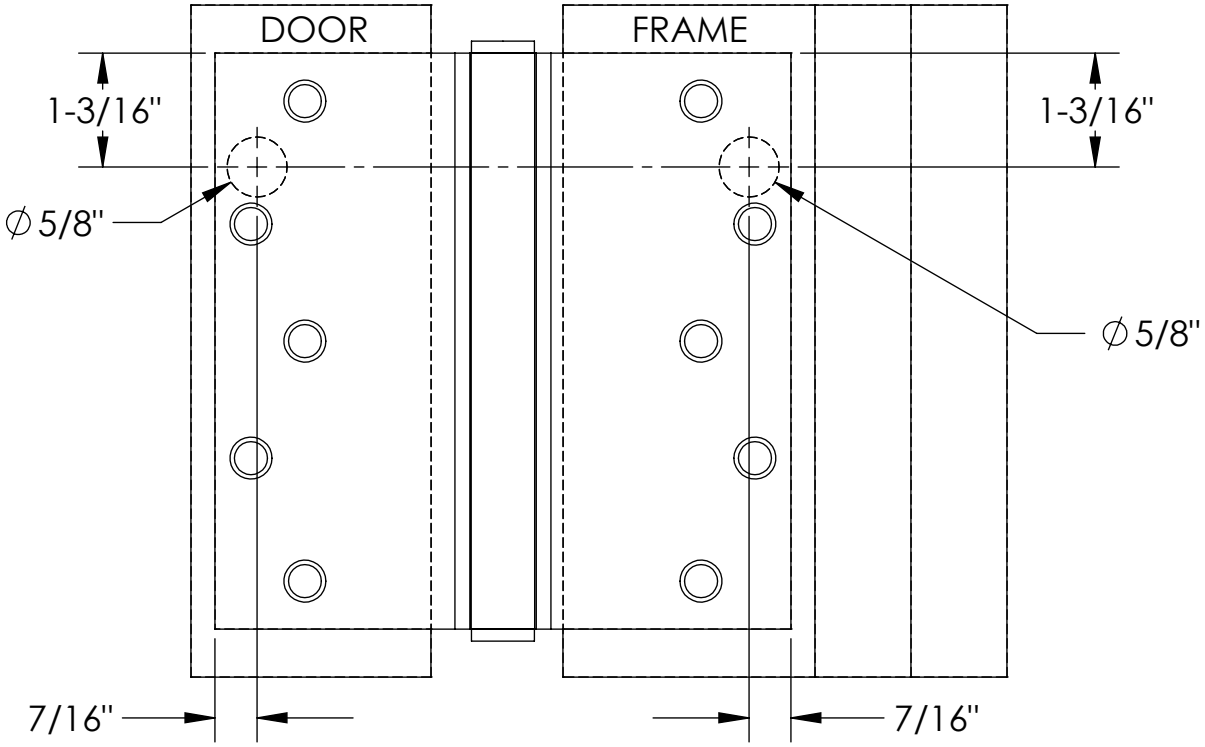

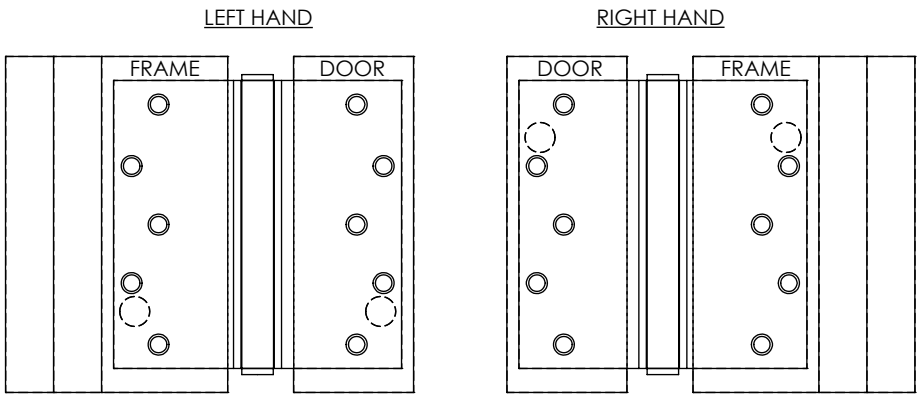

HALF SURFACE ELECTRIC HINGE TEMPLATE

4.5" & 5.0", 5 KNUCKLE, STANDARD & HEAVY WEIGHT

BOMMER, HAGER, MCKINNEY, STANLEY

1102, 1104, 1106, 1108

CONCEALED ELECTRIC THROUGH-WIRE

NOTES:

1. HINGES ARE NON-LOAD BEARING AND MUST BE MOUNTED IN THE CENTER POSITION.
2. DRILL AND DEBURR HOLES IN DOOR AND FRAME FOR WIRE ACCESS. WOOD DOORS AND FRAMES REQUIRE A 2" MINIMUM DEPTH.

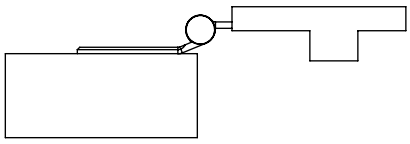

-DO NOT SCALE-

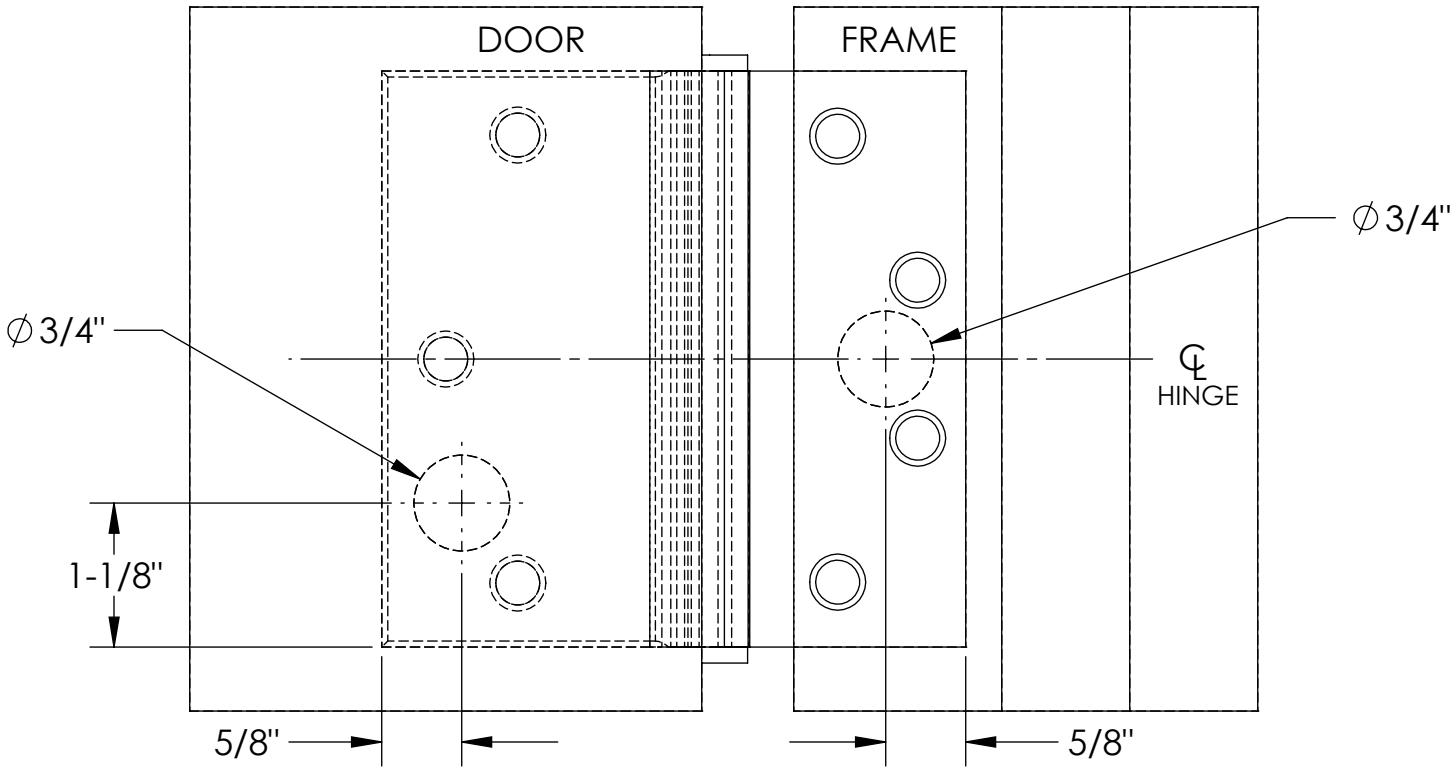

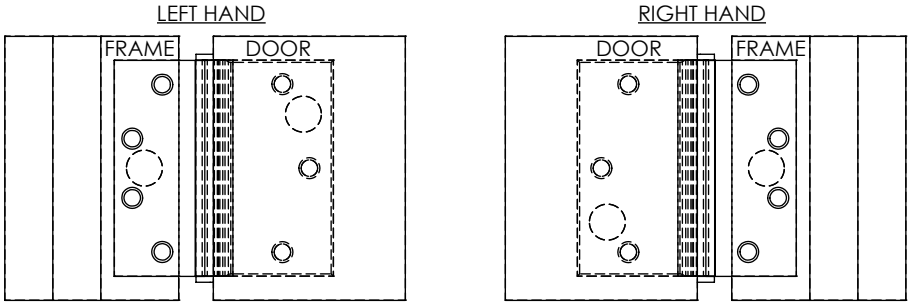

ELECTRIC PIVOT TEMPLATE

3/4" OFFSET INTERMEDIATE PIVOT

ABH, DORMA, IVES, RIXSON

1102, 1104, 1106, 1108, 1100-10, 1100-12, 1102x4

CONCEALED ELECTRIC THROUGH-WIRE
CONCEALED AIR TRANSFER

COMPATIBLE DOOR AND FRAME PREPARATION: ABH, DORMS, IVES, RIXSON

NOTES:

1. HINGES ARE NON-LOAD BEARING AND MUST BE MOUNTED IN THE CENTER POSITION.
2. DRILL AND DEBURR HOLES IN DOOR AND FRAME FOR WIRE ACCESS.

-DO NOT SCALE-

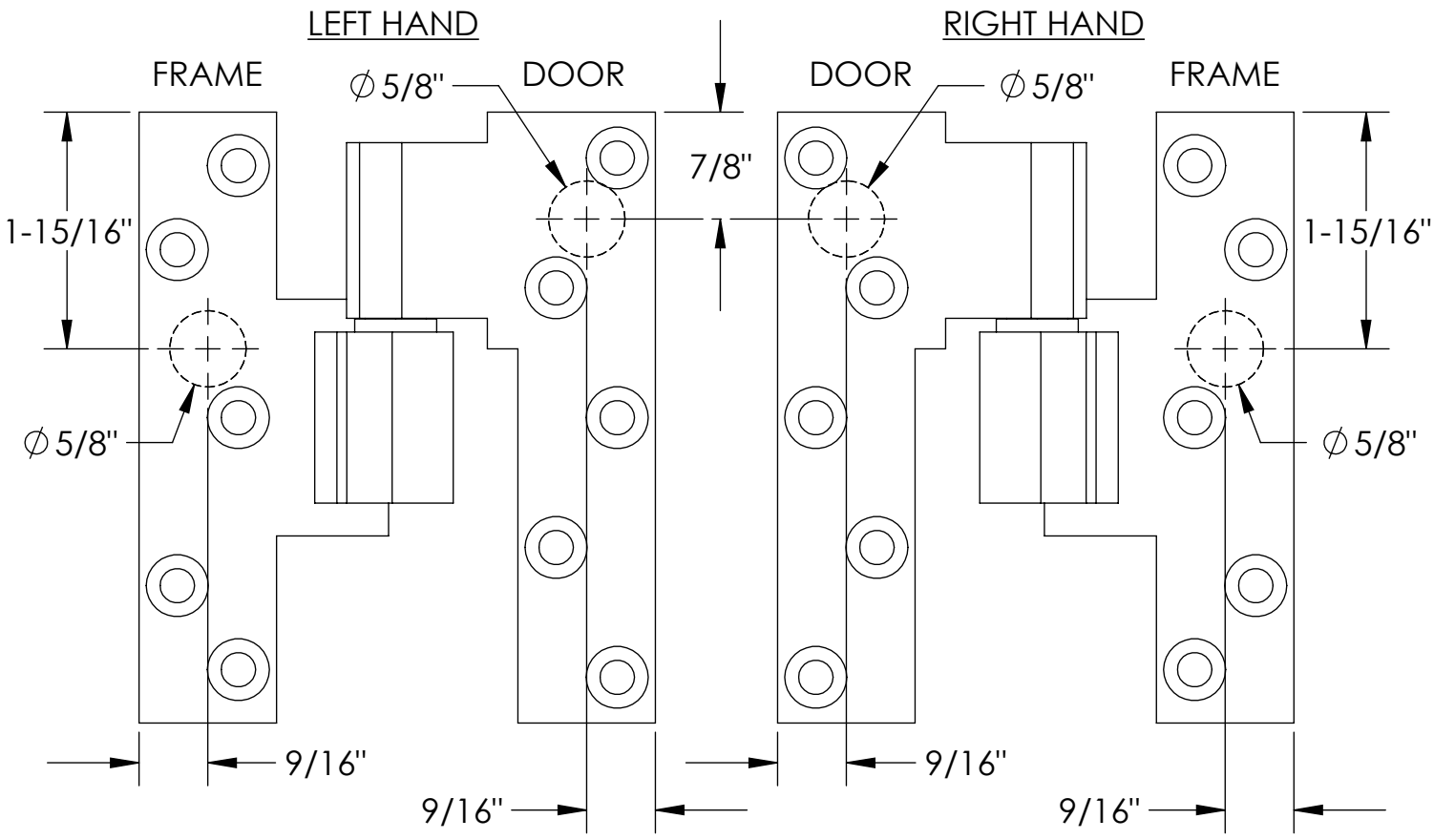

ELECTRIC PIVOT TEMPLATE

3/4" OFFSET INTERMEDIATE PIVOT

ABH, DORMA, IVES, RIXSON

1110

EXPOSED MAGNETIC MONITOR

COMPATIBLE DOOR AND FRAME PREPARATION: ABH

NOTES:

1. DRILL AND DEBURR HOLE IN FRAME FOR SWITCH CLEARANCE AND WIRE ACCESS.
2. DRILL AND DEBURR HOLE IN DOOR FOR MAGNET CLEARANCE.

-DO NOT SCALE-

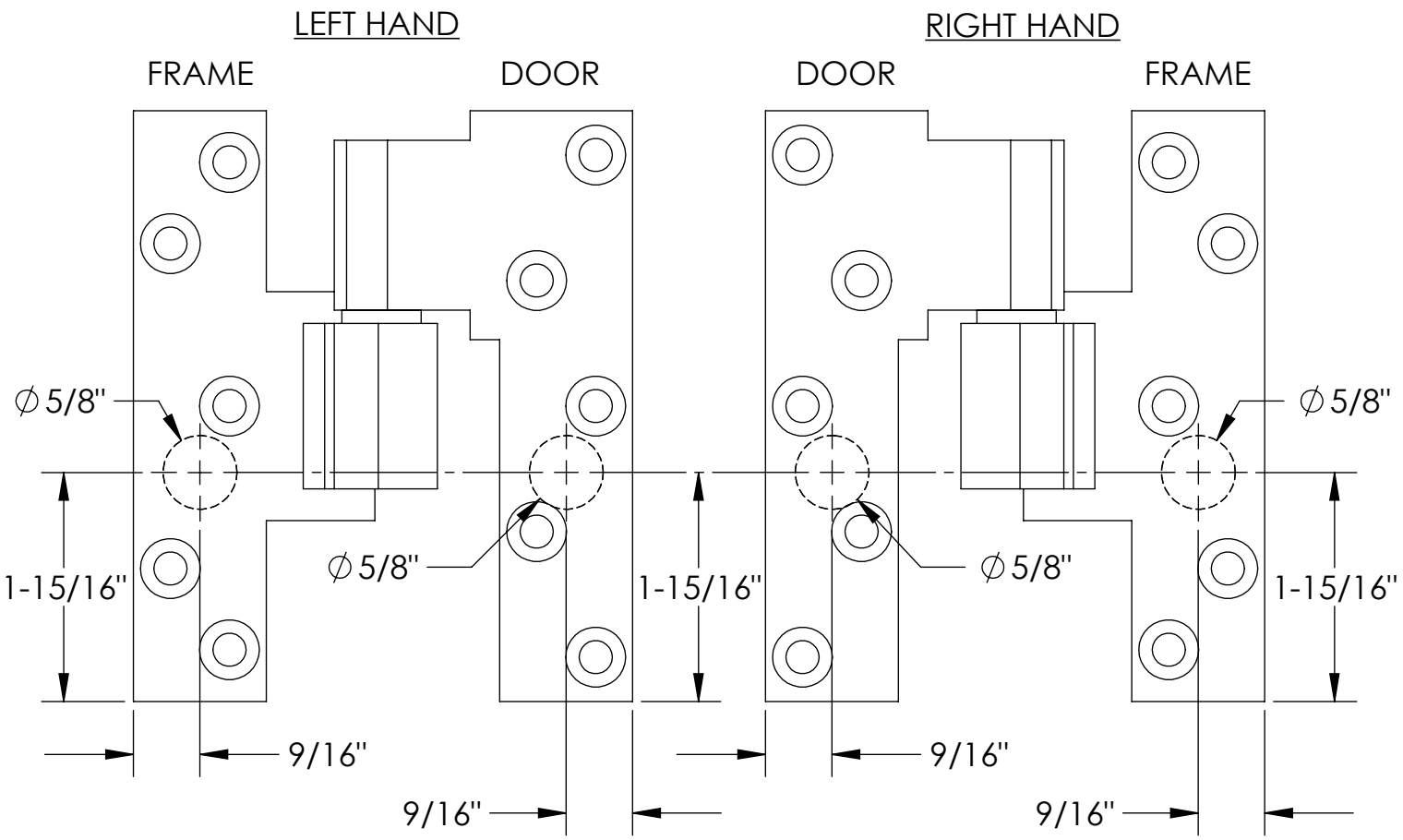

ELECTRIC PIVOT TEMPLATE

INTERMEDIATE PIVOT

IVES 7212

1102, 1104, 1106, 1108

CONCEALED ELECTRIC THROUGH-WIRE

NOTES:

1. HINGES ARE NON-LOAD BEARING AND MUST BE MOUNTED IN THE CENTER POSITION.
2. DRILL AND DEBURR HOLES IN DOOR AND FRAME FOR WIRE ACCESS.

-DO NOT SCALE-

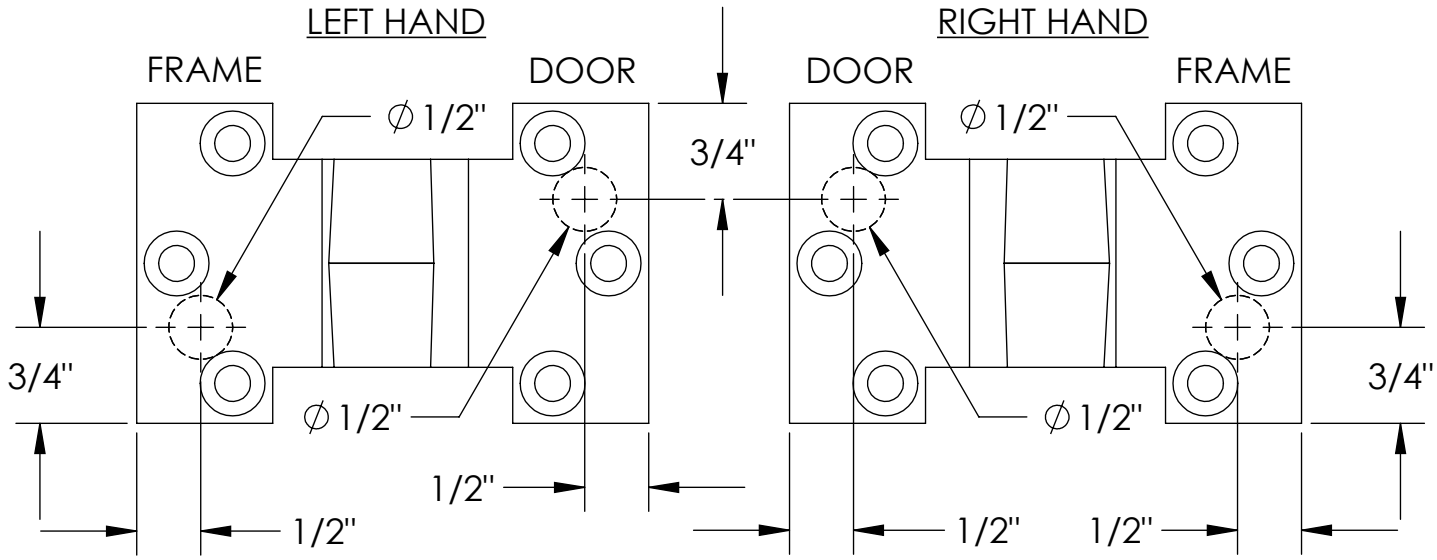

ELECTRIC PIVOT TEMPLATE

INTERMEDIATE PIVOT

KAWNEER 050-331

1102, 1104, 1106, 1108

CONCEALED ELECTRIC THROUGH-WIRE

NOTES:

1. DRILL AND DEBURR HOLES IN DOOR AND FRAME FOR WIRE ACCESS.

-DO NOT SCALE-

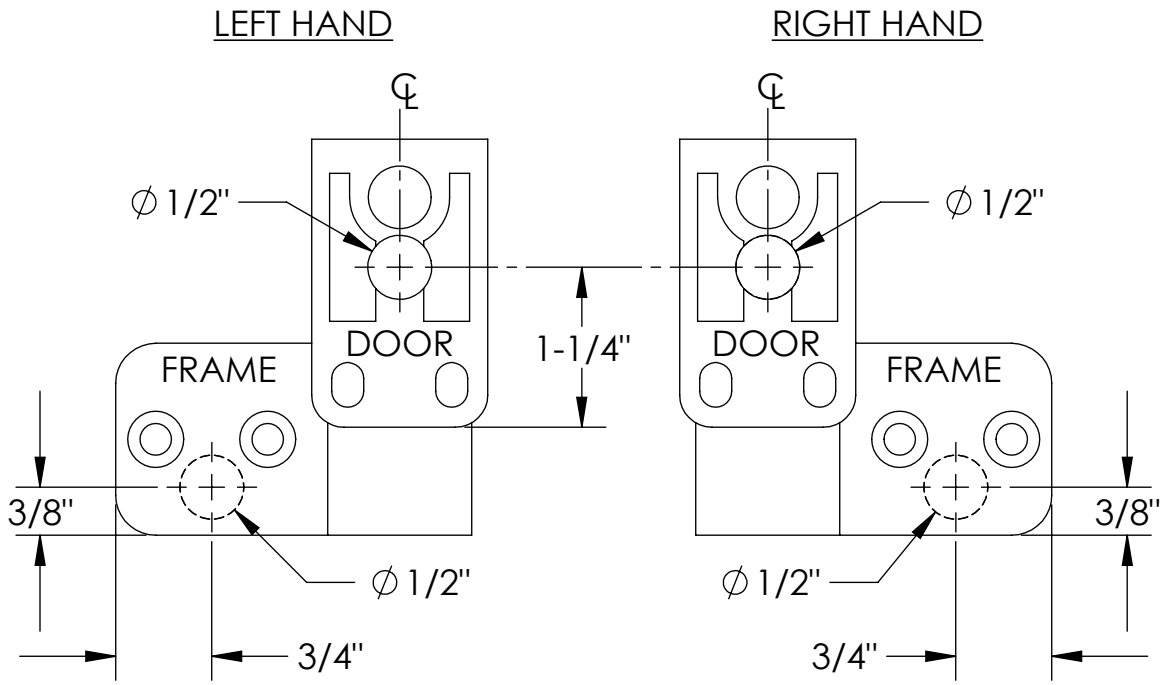

SWING CLEAR ELECTRIC HINGE TEMPLATE

4.5" & 5.0", 3 & 5 KNUCKLE, STANDARD & HEAVY WEIGHT

BOMMER, HAGER, IVES, MCKINNEY, PBB, STANLEY

1102, 1104, 1106, 1108, 1100-10, 1100-12, 1102x4

CONCEALED ELECTRIC THROUGH-WIRE

NOTES:

1. HINGES ARE NON-LOAD BEARING AND MUST BE MOUNTED IN THE CENTER POSITION.
2. DRILL AND DEBURR HOLES IN DOOR AND FRAME FOR WIRE ACCESS. WOOD DOORS AND FRAMES REQUIRE A 2" MINIMUM DEPTH.

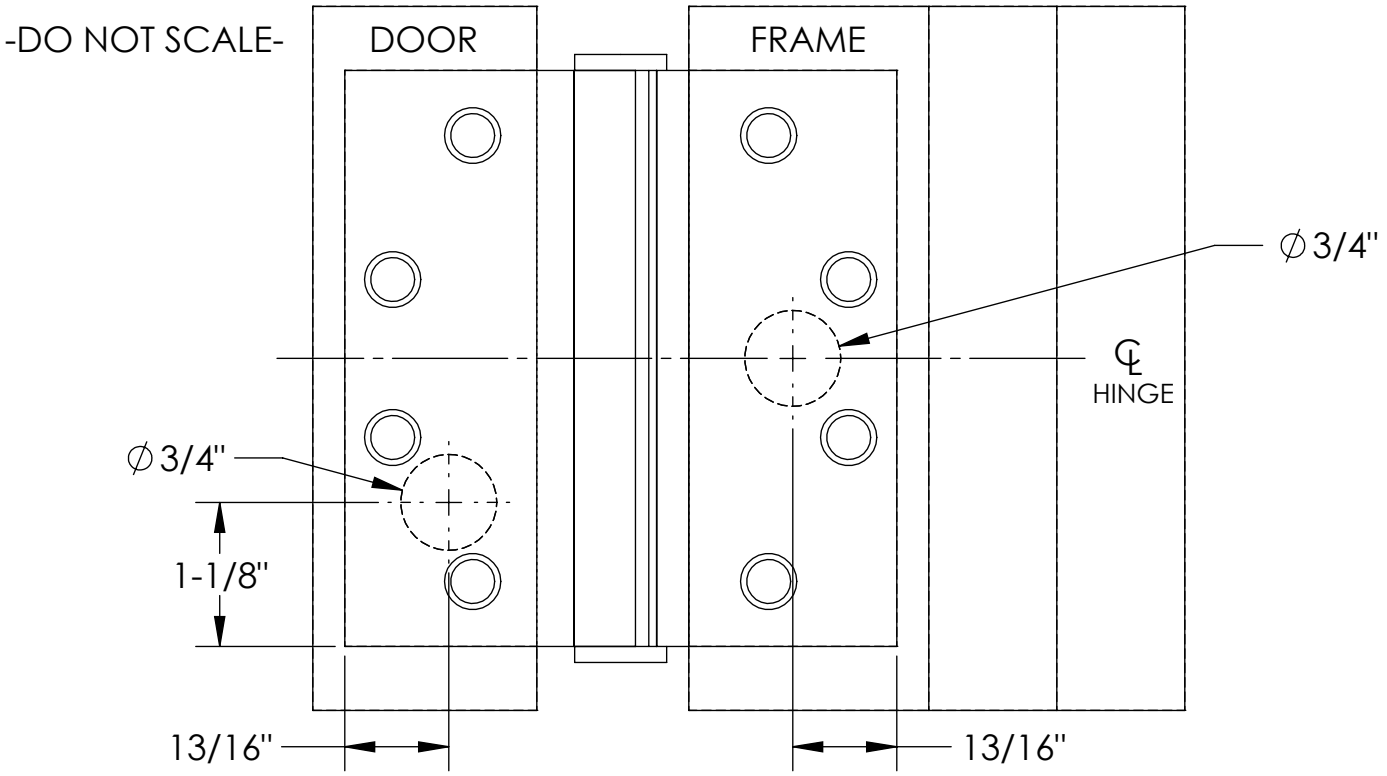

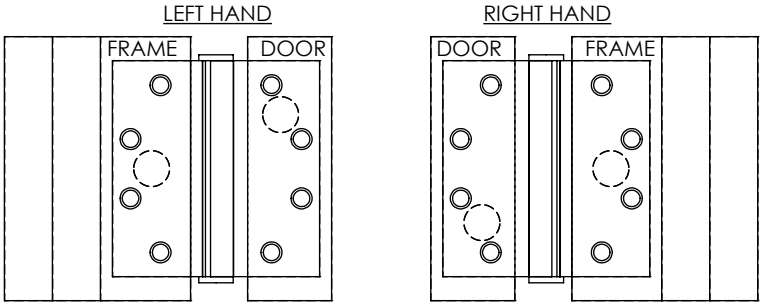

ELECTRIC HINGE INSTALLATION INSTRUCTIONS

CONCEALED ELECTRIC THROUGH-WIRE

1104, 1106, 1108, 1100-10, 1100-12

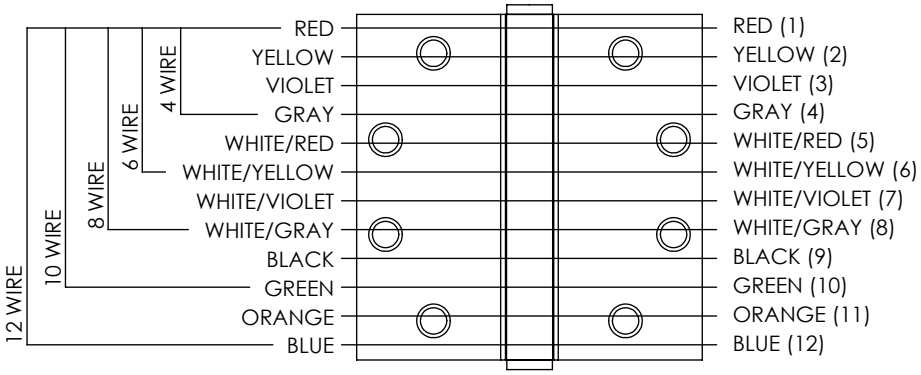

Model Descriptions:

1104: 4 wire, 28ga
1106: 6 wire, 28ga
1108: 8 wire, 28ga
1100-10: 10 wire, 28ga
1100-12: 12 wire, 28ga

Electrical Specifications:

Each 28ga through-wire rated:

- 3.5A continuous @ 50VAC/DC
- 16A pulse @ 50VAC/DC
  - 400msec maximum pulse-width
  - 10sec minimum off-time between pulses

Notes:

- Steel hinges are for interior use only.
- Brass and stainless steel hinges are for interior or exterior use.
- Do not disassemble the hinge as it will damage the hinge and void the warranty.
- Through-wire hinges are non-load bearing and must be mounted in the center position.

Door and Frame Preparation:

- Install a 7" mortar guard (part# 302-03-03, sold separately) in the electric hinge position on mortar filled frames or void the warranty.
- Door and frame must be prepared in accordance with the model's hinge template.
- Wire access holes must be free of burrs.
- Verify the hinge fits freely in the door and frame preparation before beginning installation.

Installation:

- Hang the door on the top and bottom hinges first (load bearing, non-electrical hinges).
- Extract the interior wiring from the prepared holes in the door and frame.
- Terminate the wire connections with appropriate crimp splices or wire nuts for individual wires or by mating female connectors (hinge) to male connectors (door and frame).
  - **Do not hang the hinge by wires during installation or serious damage may occur.**
- Insulate all ends of unused wires.
- After all terminations are completed, carefully insert the wires into the prepared holes making sure they will not be cut or pinched as the hinge is installed.

Optional Connectors:

- ASSA Electrolynx
- Allegion Connect
- Hager Quick Connect

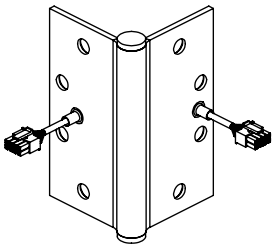

4, 6, & 8 WIRE

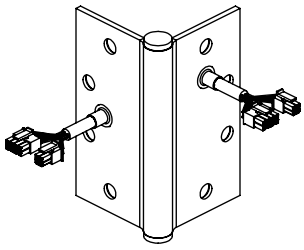

10 & 12 WIRE

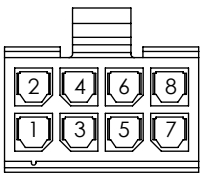

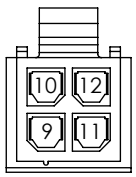

SEE FIGURE ABOVE FOR WIRE COLORS

ELECTRIC HINGE INSTALLATION INSTRUCTIONS

CONCEALED ELECTRIC MONITOR

1110

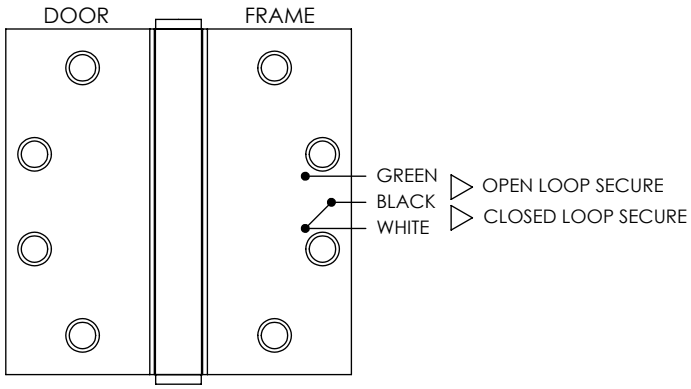

Model Descriptions:
1110: 3 wire, 28ga monitor

Electrical Specifications:
Switch contacts rated: 0.5A @ 30VDC

Notes:

- All concealed monitor hinges are pre-adjusted at the factory for 3/16"-3/8" gap between the hinge leaves. The switch contacts should change state before the door opens 2" from the frame on the latch side.
- Steel hinges are for interior use only.
- Brass and stainless steel hinges are for interior or exterior use.
- Do not disassemble the hinge as it will damage the hinge and void the warranty.
- Monitor hinges are non-load bearing and must be mounted in the center position.

Door and Frame Preparation:

- Install a 7" mortar guard (part# 302-03-03, sold separately) in the electric hinge position on mortar filled frames or void the warranty.
- Frame must be prepared in accordance with the model's hinge template.
- Wire access hole must be free of burrs.
- Verify the hinge fits freely in the frame preparation before beginning installation.

Installation:

- Hang the door on the top and bottom hinges first (load bearing, non-electrical hinges).
- Extract the interior wiring from the prepared hole in the frame.
- Terminate the wire connections with appropriate crimp splices or wire nuts.
  - **Do not hang the hinge by wires during installation or serious damage may occur.**
- Insulate all ends of unused wires.
- After all terminations are completed, carefully insert the wires into the prepared hole making sure they will not be cut or pinched as the hinge is installed.

Monitor Switch Hinge Gap Adjustment:

- Swing the hinge from the frame preparation to expose the brass switch enclosure.
- Using a small standard blade screwdriver, turn the adjustment screw clockwise in 1/2 turn increments to increase the gap, checking the gap between the hinge leaves each time, until the desired gap is achieved. **Consult the factory if the desired gap is not achieved in 2 full turns.**
- Re-install the hinge into the frame preparation.

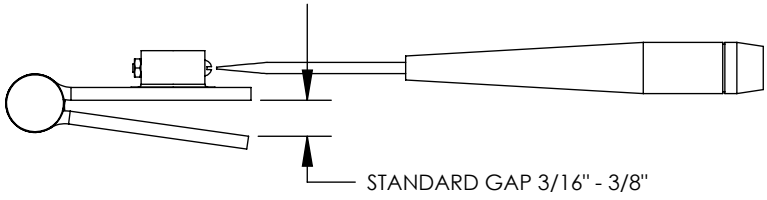

ELECTRIC HINGE INSTALLATION INSTRUCTIONS

CONCEALED ELECTRIC THROUGH-WIRE

1106-26

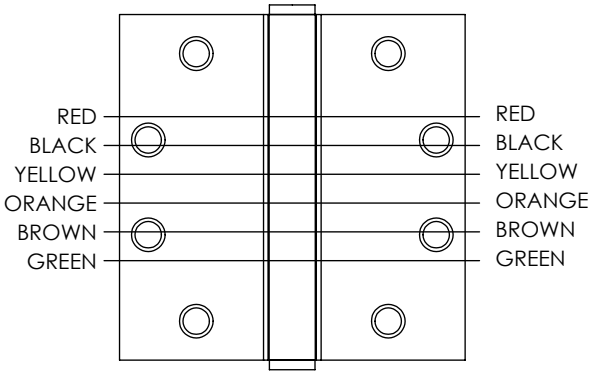

Model Descriptions:

1106-26: 6 wire, 26ga

Electrical Specifications:

Each 26ga through-wire rated:

- 3.5A continuous @ 50VAC/DC
- 16A pulse @ 50VAC/DC
  - 400msec maximum pulse-width
  - 10sec minimum off-time between pulses

Notes:

- Steel hinges are for interior use only.
- Brass and stainless steel hinges are for interior or exterior use.
- Do not disassemble the hinge as it will damage the hinge and void the warranty.
- Through-wire hinges are non-load bearing and must be mounted in the center position.

Door and Frame Preparation:

- Install a 7" mortar guard (part# 302-03-03, sold separately) in the electric hinge position on mortar filled frames or void the warranty.
- Door and frame must be prepared in accordance with the model's hinge template.
- Wire access holes must be free of burrs.
- Verify the hinge fits freely in the door and frame preparation before beginning installation.

Installation:

- Hang the door on the top and bottom hinges first (load bearing, non-electrical hinges).
- Extract the interior wiring from the prepared holes in the door and frame.
- Terminate the wire connections with appropriate crimp splices or wire nuts.
  - **Do not hang the hinge by wires during installation or serious damage may occur.**
- Insulate all ends of unused wires.
- After all terminations are completed, carefully insert the wires into the prepared holes making sure they will not be cut or pinched as the hinge is installed.

ELECTRIC PIVOT INSTALLATION INSTRUCTIONS

CONCEALED ELECTRIC THROUGH-WIRE

1102, 1102x4

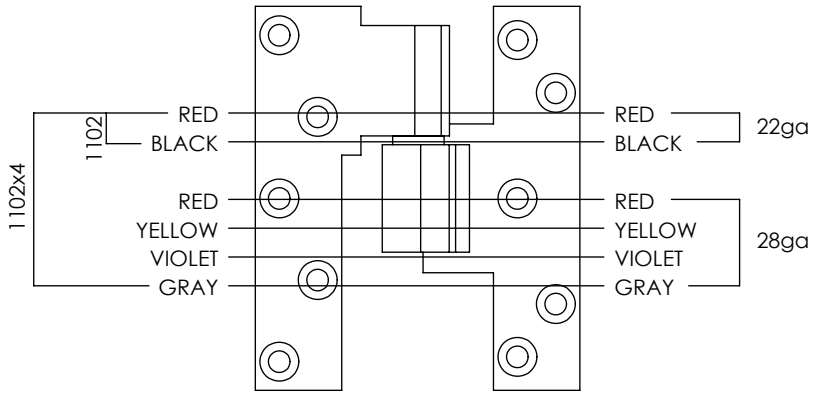

Model Descriptions:

1102: 2 wire, 22ga
1102x4: 2 wire, 22ga x 4 wire, 28ga

Electrical Specifications:

Each 22ga and 28ga through-wire rated:

- 3.5A continuous @ 50VAC/DC
- 16A pulse @ 50VAC/DC
  - 400msec maximum pulse-width
  - 10sec minimum off-time between pulses

Notes:

- Steel pivots are for interior use only.
- Brass, stainless steel, and aluminim pivots are for interior or exterior use.
- Do not disassemble the pivot as it will damage the pivot and void the warranty.
- Through-wire pivots are non-load bearing and must be mounted in the center position.

Door and Frame Preparation:

- Door and frame must be prepared in accordance with the model's pivot template.
- Wire access holes must be free of burrs.
- Verify the pivot fits freely in the door and frame preparation before beginning installation.

Installation:

- Hang the door on the top and bottom pivots first (load bearing, non-electrical pivots).
- Extract the interior wiring from the prepared holes in the door and frame.
- Terminate the wire connections with appropriate crimp splices or wire nuts.
  - **Do not hang the pivot by wires during installation or serious damage may occur.**
- Insulate all ends of unused wires.
- After all terminations are completed, carefully insert the wires into the prepared holes making sure they will not be cut or pinched as the pivot is installed.

ELECTRIC HINGE INSTALLATION INSTRUCTIONS

CONCEALED ELECTRIC THROUGH-WIRE

1182, 1182x4, 1182x6

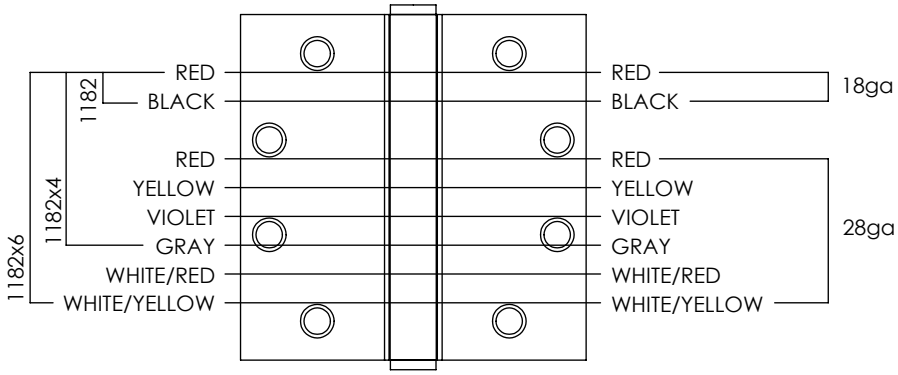

Model Descriptions:

1182: 2 wire, 18ga
1182x4: 2 wire, 18ga x 4 wire, 28ga
1182x6: 2 wire, 18ga x 6 wire, 28ga

Electrical Specifications:

Each 18ga through-wire rated:
- 10A continuous @ 50VAC/DC
- 20A inrush @ 50VAC/DC for 4sec

Each 28ga through-wire rated:
- 3.5A continuous @ 50VAC/DC
- 16A pulse @ 50VAC/DC
  - 400msec maximum pulse-width
  - 10sec minimum off-time between pulses

Notes:

- Steel hinges are for interior use only.
- Brass and stainless steel hinges are for interior or exterior use.
- Do not disassemble the hinge as it will damage the hinge and void the warranty.
- Through-wire hinges are non-load bearing and must be mounted in the center position.

Door and Frame Preparation:

- Install a 7" mortar guard (part# 302-03-03, sold separately) in the electric hinge position on mortar filled frames or void the warranty.
- Door and frame must be prepared in accordance with the model's hinge template.
- Wire access holes must be free of burrs.
- Verify the hinge fits freely in the door and frame preparation before beginning installation.

Installation:

- Hang the door on the top and bottom hinges first (load bearing, non-electrical hinges).
- Extract the interior wiring from the prepared holes in the door and frame.
- Terminate the wire connections with appropriate crimp splices or wire nuts.
  - **Do not hang the hinge by wires during installation or serious damage may occur.**
- Insulate all ends of unused wires.
- After all terminations are completed, carefully insert the wires into the prepared holes making sure they will not be cut or pinched as the hinge is installed.

ELECTRIC HINGE INSTALLATION INSTRUCTIONS

CONCEALED ELECTRIC THROUGH-WIRE

1100-PG

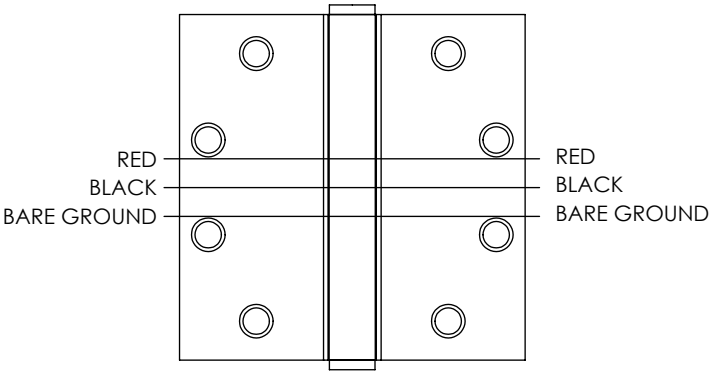

Model Descriptions:

1100-PG: 2 wire, 18ga x ground

Electrical Specifications:

Each 18ga through-wire rated:

- 0.6A continuous @ 120VAC 50/60Hz

Notes:

- Steel hinges are for interior use only.
- Brass and stainless steel hinges are for interior or exterior use.
- Do not disassemble the hinge as it will damage the hinge and void the warranty.
- Through-wire hinges are non-load bearing and must be mounted in the center position.

Door and Frame Preparation:

- Install a 7" mortar guard (part# 302-03-03, sold separately) and conduit with proper earth ground attached to the mortar guard in the electric hinge position on all hollow metal frames or void the warranty.
- Door and frame must be prepared in accordance with the model's hinge template.
- Wire access holes must be free of burrs.
- Verify the hinge fits freely in the door and frame preparation before beginning installation.

Installation:

- Hinges are intended to be installed in accordance with:
  - Article 725 of the National Electrical Code, NFPA 70
  - Standard for Installation and Classification of Burglar and Holdup Alarm Systems, UL 681
  - Standard for Installation and Classification of Residential Burglar Alarm Systems, UL 1641
- Hang the door on the top and bottom hinges first (load bearing, non-electrical hinges).
- Extract the interior wiring from the prepared holes in the door and frame.
- Terminate the wire connections with appropriate crimp splices or wire nuts.
  - **Do not hang the hinge by wires during installation or serious damage may occur.**
- Insulate all ends of unused wires.
- After all terminations are completed, carefully insert the wires into the prepared holes making sure they will not be cut or pinched as the hinge is installed.

1540-Elec.-Dogging-1..>	2018-05-04 13:51	557K
1540-Elec.-Dogging.png	2018-05-04 13:51	904K
1540-Elec.DoggingUL-..>	2018-05-04 13:51	15K
1540-Elec.DoggingUL-..>	2018-05-04 13:51	48K
1540-Elec.DoggingUL-..>	2018-05-04 13:51	257K
1540-Elec.DoggingUL-..>	2018-05-04 13:51	426K
1540-Elec.DoggingUL-..>	2018-05-04 13:51	561K
1540-Elec.DoggingUL.png	2018-05-04 13:51	912K
1550K-MDD-150x150.png	2018-05-15 16:46	11K
1550K-MDD-300x300.png	2018-05-15 16:46	37K
1550K-MDD-768x768.png	2018-05-04 13:51	195K
1550K-MDD-1024x1024.png	2018-05-04 13:51	330K
1550K-MDD-1200x1200.png	2018-05-04 13:51	435K
1550K-MDD.png	2018-05-04 13:51	203K
1550K-MDF-150x150.png	2018-05-15 16:46	13K
1550K-MDF-300x300.png	2018-05-15 16:46	43K
1550K-MDF-768x768.png	2018-05-04 13:51	250K
1550K-MDF-1024x1024.png	2018-05-04 13:51	428K
1550K-MDF-1200x1200.png	2018-05-04 13:51	570K
1550K-MDF.png	2018-05-04 13:51	275K
1550K-MDH-150x150.png	2018-05-15 16:46	9.4K
1550K-MDH-300x300.png	2018-05-15 16:46	30K
1550K-MDH-768x768.png	2018-05-04 13:51	163K
1550K-MDH-1024x1024.png	2018-05-04 13:51	274K
1550K-MDH-1200x1200.png	2018-05-04 13:51	362K
1550K-MDH.png	2018-05-04 13:51	171K
1550K-MDO-150x150.png	2018-05-15 16:46	14K
1550K-MDO-300x300.png	2018-05-15 16:46	46K
1550K-MDO-768x768.png	2018-05-04 13:51	254K
1550K-MDO-1024x1024.png	2018-05-04 13:51	426K
1550K-MDO-1200x1200.png	2018-05-04 13:51	561K
1550K-MDO.png	2018-05-04 13:51	275K
1550K-MDS-150x150.png	2018-05-04 13:51	13K
1550K-MDS-300x300.png	2018-05-04 13:51	40K
1550K-MDS-768x768.png	2018-05-04 13:51	208K
1550K-MDS-1024x1024.png	2018-05-04 13:51	349K
1550K-MDS-1200x1200.png	2018-05-04 13:51	462K
1550K-MDS.png	2018-05-04 13:51	772K
1550K-MDT-150x150.png	2018-05-15 16:46	11K
1550K-MDT-300x300.png	2018-05-15 16:46	36K
1550K-MDT-768x768.png	2018-05-04 13:51	203K
1550K-MDT-1024x1024.png	2018-05-04 13:51	347K
1550K-MDT-1200x1200.png	2018-05-04 13:51	460K
1550K-MDT.png	2018-05-04 13:51	216K
1550K-MDV_4-1-150x15..>	2018-05-04 13:51	14K
1550K-MDV_4-1-300x21..>	2018-05-04 13:51	34K
1550K-MDV_4-1-768x56..>	2018-05-04 13:51	176K
1550K-MDV_4-1-1024x7..>	2018-05-04 13:51	292K
1550K-MDV_4-1-1200x8..>	2018-05-04 13:51	384K
1550K-MDV_4-1.png	2018-05-04 13:51	2.2M
1550K-MDV_4-150x150.png	2018-06-05 09:55	9.1K

1550K-MDV_4-300x200.png	2018-06-05 09:55	15K
1550K-MDV_4-768x512.png	2018-05-04 13:51	77K
1550K-MDV_4-1024x683..>	2018-05-04 13:51	127K
1550K-MDV_4-1200x800..>	2018-05-04 13:51	168K
1550K-MDV_4.png	2018-05-15 16:47	423K
1550K-MDV_4Fit-150x1..>	2018-05-04 13:51	11K
1550K-MDV_4Fit-300x3..>	2018-05-04 13:51	35K
1550K-MDV_4Fit-768x7..>	2018-05-04 13:51	177K
1550K-MDV_4Fit-1024x..>	2018-05-04 13:51	294K
1550K-MDV_4Fit-1200x..>	2018-05-04 13:51	386K
1550K-MDV_4Fit.png	2018-05-04 13:51	2.2M
1550K-MDX-150x150.png	2018-05-15 16:45	12K
1550K-MDX-300x300.png	2018-05-15 16:45	40K
1550K-MDX-768x768.png	2018-05-04 13:51	214K
1550K-MDX-1024x1024.png	2018-05-04 13:51	360K
1550K-MDX-1200x1200.png	2018-05-04 13:51	476K
1550K-MDX.png	2018-05-04 13:51	241K
1550K-MDp-150x150.png	2018-05-04 13:51	13K
1550K-MDp-300x300.png	2018-05-04 13:51	42K
1550K-MDp-768x768.png	2018-05-04 13:51	222K
1550K-MDp-1024x1024.png	2018-05-04 13:51	372K
1550K-MDp-1200x1200.png	2018-05-04 13:51	493K
1550K-MDp.png	2018-05-04 13:51	810K
1550K-VD-4_UL-150x15..>	2018-05-04 13:51	7.2K
1550K-VD-4_UL-300x30..>	2018-05-04 13:51	21K
1550K-VD-4_UL-768x76..>	2018-05-04 13:51	103K
1550K-VD-4_UL-1024x1..>	2018-05-04 13:51	168K
1550K-VD-4_UL-1200x1..>	2018-05-04 13:51	219K
1550K-VD-4_UL.png	2018-05-04 13:51	379K
1550K-VD-4_ULSM-150x..>	2018-05-04 13:51	6.7K
1550K-VD-4_ULSM-300x..>	2018-05-04 13:51	20K
1550K-VD-4_ULSM-768x..>	2018-05-04 13:51	99K
1550K-VD-4_ULSM-1024..>	2018-05-04 13:51	164K
1550K-VD-4_ULSM-1200..>	2018-05-04 13:51	214K
1550K-VD-4_ULSM.png	2018-05-04 13:51	368K
1550KMDV22-150x150.png	2018-05-15 16:40	7.1K
1550KMDV22-300x300.png	2018-05-15 16:40	23K
1550KMDV22-768x768.png	2018-05-04 13:51	117K
1550KMDV22-1024x1024..>	2018-05-04 13:51	191K
1550KMDV22-1200x1200..>	2018-05-04 13:51	249K
1550KMDV22.png	2018-05-04 13:51	410K
1550MDC-150x150.png	2018-05-15 16:47	14K
1550MDC-300x300.png	2018-05-15 16:47	47K
1550MDC-768x768.png	2018-05-04 13:51	269K
1550MDC-1024x1024.png	2018-05-04 13:51	458K
1550MDC-1200x1200.png	2018-05-04 13:51	609K
1550MDC.png	2018-05-04 13:51	304K
1570-150x150.png	2018-05-04 13:51	14K
1570-300x300.png	2018-05-04 13:51	47K
1570-768x768.png	2018-05-04 13:51	272K
1570-1024x1024.png	2018-05-04 13:51	473K

1570-1200x1200.png	2018-05-04 13:51	637K
1570.png	2018-05-04 13:51	372K
6100-Web-pic-coverSm..>	2018-05-04 13:51	28K
6100-Web-pic-coverSm..>	2018-05-04 13:51	106K
6100-Web-pic-coverSm..>	2018-05-15 16:42	686K
6100-Web-pic-coverSm..>	2018-05-04 13:51	1.2M
6100-Web-pic-coverSm..>	2018-05-04 13:51	1.6M
6100-Web-pic-coverSm..>	2018-05-04 13:51	4.3M
8500Gemini_UL-150x15..>	2018-05-04 13:51	25K
8500Gemini_UL-240x30..>	2018-05-04 13:51	55K
8500Gemini_UL-768x95..>	2018-05-04 13:51	438K
8500Gemini_UL-821x10..>	2018-05-04 13:51	498K
8500Gemini_UL-1200x1..>	2018-05-04 13:51	1.0M
8500Gemini_UL.png	2018-05-15 16:42	1.8M
8500Gemini_ULB-150x1..>	2018-05-04 13:51	24K
8500Gemini_ULB-240x3..>	2018-05-04 13:51	53K
8500Gemini_ULB-768x9..>	2018-05-04 13:51	431K
8500Gemini_ULB-821x1..>	2018-05-04 13:51	491K
8500Gemini_ULB-1200x..>	2018-05-04 13:51	1.0M
8500Gemini_ULB.png	2018-05-15 16:34	1.8M
E1500-19-1.pdf	2018-05-04 13:51	99K
E1500-19.pdf	2018-05-04 13:51	99K
II-1400-09.pdf	2018-05-04 13:51	1.1M
II-8500-01.pdf	2018-05-04 13:51	456K
II-8500-MG.pdf	2018-05-04 13:51	145K
II-8500F-01.pdf	2018-05-04 13:51	469K
II-E1500-01.pdf	2018-05-04 13:51	205K
II-E1500-02.pdf	2018-05-04 13:51	148K
II-E1500-03.pdf	2018-05-04 13:51	83K
II-E1500-04.pdf	2018-05-04 13:51	128K
II-E1500-05.pdf	2018-05-04 13:51	193K
II-E1500-06.pdf	2018-05-04 13:51	120K
II-E1500-08.pdf	2018-05-04 13:51	1.2M
II-E1500-09.pdf	2018-05-04 13:51	792K
II-E1500-10.pdf	2018-05-04 13:51	227K
II-E1500-11.pdf	2018-05-04 13:51	2.7M
II-E1500-12-1-pdf-11..>	2020-11-19 10:48	4.4K
II-E1500-12-1-pdf-23..>	2020-11-19 10:48	14K
II-E1500-12-1-pdf-79..>	2020-11-19 10:48	111K
II-E1500-12-1-pdf.jpg	2020-11-19 10:48	203K
II-E1500-12-1.pdf	2020-11-19 10:48	360K
II-E1500-12.pdf	2018-05-04 13:51	146K
II-E1500-13-1.pdf	2018-05-04 13:51	72K
II-E1500-13.pdf	2018-05-04 13:51	72K
II-E1500-15.pdf	2018-05-04 13:51	311K
II-E1500-16-1-pdf-11..>	2020-11-19 10:49	4.7K
II-E1500-16-1-pdf-23..>	2020-11-19 10:49	15K
II-E1500-16-1-pdf-79..>	2020-11-19 10:49	128K
II-E1500-16-1-pdf.jpg	2020-11-19 10:49	236K
II-E1500-16-1.pdf	2020-11-19 10:49	432K
II-E1500-16.pdf	2018-05-04 13:51	212K

II-E1500-17.pdf	2018-05-04 13:51	294K
II-E1500-18.pdf	2018-05-04 13:51	949K
II-E1500-19.pdf	2018-05-04 13:51	222K
II-E1500-21.pdf	2018-05-04 13:51	163K
II-E1500-23.pdf	2018-05-04 13:51	89K
II-E1500-25.pdf	2018-05-04 13:51	118K
II-E1500-26.pdf	2018-05-04 13:51	941K
II-E1500-27.pdf	2018-05-04 13:51	597K
II-E1500-28-1-pdf-11..>	2020-01-15 09:43	5.3K
II-E1500-28-1-pdf-23..>	2020-01-15 09:43	19K
II-E1500-28-1-pdf-79..>	2020-01-15 09:43	162K
II-E1500-28-1-pdf.jpg	2020-01-15 09:43	313K
II-E1500-28-1.pdf	2020-01-15 09:43	502K
II-E1500-28-2-pdf-11..>	2020-02-19 15:31	5.3K
II-E1500-28-2-pdf-23..>	2020-02-19 15:31	19K
II-E1500-28-2-pdf-79..>	2020-02-19 15:31	162K
II-E1500-28-2-pdf.jpg	2020-02-19 15:31	313K
II-E1500-28-2.pdf	2020-02-19 15:31	502K
II-E1500-28.pdf	2018-05-04 13:51	496K
II-E1500-29-pdf-116x..>	2020-09-17 10:10	5.3K
II-E1500-29-pdf-232x..>	2020-09-17 10:10	18K
II-E1500-29-pdf-791x..>	2020-09-17 10:10	159K
II-E1500-29-pdf.jpg	2020-09-17 10:10	305K
II-E1500-29.pdf	2020-09-17 10:10	469K
II-E1500-30.pdf	2018-05-04 13:51	219K
II-E1500-31.pdf	2018-05-04 13:51	303K
II-E1500-32.pdf	2018-05-04 13:51	787K
II-E1500-33.pdf	2018-05-04 13:51	416K
II-E1500-34-1.pdf	2018-05-04 13:51	362K
II-E1500-34.pdf	2018-05-04 13:51	362K
II-E1500-35-1.pdf	2018-05-04 13:51	183K
II-E1500-35.pdf	2018-05-04 13:51	183K
II-E1500-36.pdf	2018-05-04 13:51	222K
II-E1500-37.pdf	2018-05-04 13:51	268K
II-E1500-38-1.pdf	2018-05-04 13:51	194K
II-E1500-38.pdf	2018-05-04 13:51	194K
II-E1500-39_1550K-MD..>	2019-11-19 08:45	5.7K
II-E1500-39_1550K-MD..>	2019-11-19 08:45	20K
II-E1500-39_1550K-MD..>	2019-11-19 08:45	200K
II-E1500-39_1550K-MD..>	2019-11-19 08:45	393K
II-E1500-39_1550K-MD..>	2019-11-19 08:45	483K
II-E1500-40.pdf	2018-05-04 13:51	214K
II-E1500-41.pdf	2018-05-04 13:51	311K
II-E1500-44-1-pdf-11..>	2020-11-19 10:51	4.8K
II-E1500-44-1-pdf-23..>	2020-11-19 10:51	15K
II-E1500-44-1-pdf-79..>	2020-11-19 10:51	130K
II-E1500-44-1-pdf.jpg	2020-11-19 10:51	243K
II-E1500-44-1.pdf	2020-11-19 10:51	411K
II-E1500-44.pdf	2018-05-04 13:51	267K
II-E1500-45-pdf-116x..>	2020-01-15 10:02	4.7K
II-E1500-45-pdf-232x..>	2020-01-15 10:02	15K

II-E1500-45-pdf-791x..>	2020-01-15 10:02	122K
II-E1500-45-pdf.jpg	2020-01-15 10:02	228K
II-E1500-45.pdf	2020-01-15 10:02	395K
II-M1500-13.pdf	2018-05-04 13:51	96K
II-M1500-19.pdf	2018-05-04 13:51	533K
K-101.pdf	2018-05-04 13:51	17K
K-104.pdf	2018-05-04 13:51	23K
K-105.pdf	2018-05-04 13:51	17K
K-107.pdf	2018-05-04 13:51	22K
K-112-1.pdf	2018-05-04 13:51	22K
K-112.pdf	2018-05-04 13:51	22K
M1500-06.pdf	2018-05-04 13:51	65K
MainUnitLockImage-15..>	2018-05-04 13:51	21K
MainUnitLockImage-30..>	2018-05-04 13:51	68K
MainUnitLockImage-76..>	2018-05-04 13:51	360K
MainUnitLockImage-10..>	2018-05-04 13:51	600K
MainUnitLockImage-12..>	2018-05-04 13:51	789K
MainUnitLockImage.png	2018-05-04 13:51	1.3M
MainUnitLockImageUL-..>	2018-05-04 13:51	21K
MainUnitLockImageUL-..>	2018-05-04 13:51	67K
MainUnitLockImageUL-..>	2018-05-04 13:51	357K
MainUnitLockImageUL-..>	2018-05-04 13:51	596K
MainUnitLockImageUL-..>	2018-05-04 13:51	785K
MainUnitLockImageUL.png	2018-05-04 13:51	1.3M
UnitLock-150x150.png	2018-05-04 13:51	15K
UnitLock-300x225.png	2018-05-04 13:51	34K
UnitLock-768x576.png	2018-05-04 13:51	191K
UnitLock-1024x768.png	2018-05-04 13:51	329K
UnitLock-1200x900.png	2018-05-04 13:51	442K
UnitLock.png	2018-05-04 13:51	1.1M
acsI_71_K-106Clip-1-..>	2018-05-04 13:51	7.0K
acsI_71_K-106Clip-1-..>	2018-05-04 13:51	22K
acsI_71_K-106Clip-1-..>	2018-05-04 13:51	102K
acsI_71_K-106Clip-1-..>	2018-05-04 13:51	161K
acsI_71_K-106Clip-1-..>	2018-05-04 13:51	201K
acsI_71_K-106Clip-1.png	2018-05-04 13:51	239K
acsI_71_K-106Clip-15..>	2018-05-04 13:51	12K
acsI_71_K-106Clip-30..>	2018-05-04 13:51	20K
acsI_71_K-106Clip.png	2018-05-15 16:44	32K
acsi_64_K-200Clip-1-..>	2018-05-04 13:51	7.7K
acsi_64_K-200Clip-1-..>	2018-05-04 13:51	25K
acsi_64_K-200Clip-1-..>	2018-05-04 13:51	114K
acsi_64_K-200Clip-1-..>	2018-05-04 13:51	179K
acsi_64_K-200Clip-1-..>	2018-05-04 13:51	228K
acsi_64_K-200Clip-1.png	2018-05-04 13:51	254K
acsi_64_K-200Clip-15..>	2018-05-04 13:51	11K
acsi_64_K-200Clip-30..>	2018-05-04 13:51	23K
acsi_64_K-200Clip.png	2018-05-15 16:45	37K
acsi_64_K-203clipped..>	2018-05-04 13:51	6.3K
acsi_64_K-203clipped..>	2018-05-04 13:51	20K
acsi_64_K-203clipped..>	2018-05-04 13:51	96K

acsi_64_K-203clipped..>	2018-05-04 13:51	150K
acsi_64_K-203clipped..>	2018-05-04 13:51	190K
acsi_64_K-203clipped..>	2018-05-04 13:51	221K
acsi_64_K-203clipped..>	2018-05-04 13:51	12K
acsi_64_K-203clipped..>	2018-05-04 13:51	27K
acsi_64_K-203clipped..>	2018-05-04 13:51	56K
acsi_65_K-101clipped..>	2018-05-15 16:38	6.9K
acsi_65_K-101clipped..>	2018-05-04 13:51	21K
acsi_65_K-101clipped..>	2018-05-04 13:51	94K
acsi_65_K-101clipped..>	2018-05-04 13:51	148K
acsi_65_K-101clipped..>	2018-05-04 13:51	182K
acsi_65_K-101clipped..>	2018-05-04 13:51	239K
acsi_65_K-101clipped..>	2018-05-04 13:51	10K
acsi_65_K-101clipped..>	2018-05-04 13:51	21K
acsi_65_K-101clipped..>	2018-05-15 16:44	23K
acsi_66_K-102Clip-1-..>	2018-05-04 13:51	14K
acsi_66_K-102Clip-1-..>	2018-05-04 13:51	16K
acsi_66_K-102Clip-1-..>	2018-05-04 13:51	75K
acsi_66_K-102Clip-1-..>	2018-05-04 13:51	116K
acsi_66_K-102Clip-1.png	2018-05-04 13:51	148K
acsi_66_K-102Clip-2-..>	2018-05-04 13:51	9.9K
acsi_66_K-102Clip-2-..>	2018-05-04 13:51	31K
acsi_66_K-102Clip-2-..>	2018-05-04 13:51	133K
acsi_66_K-102Clip-2-..>	2018-05-04 13:51	205K
acsi_66_K-102Clip-2-..>	2018-05-04 13:51	253K
acsi_66_K-102Clip-2.png	2018-05-04 13:51	291K
acsi_66_K-102Clip-15..>	2018-05-04 13:51	13K
acsi_66_K-102Clip-30..>	2018-05-04 13:51	15K
acsi_66_K-102Clip.png	2018-05-15 16:44	27K
acsi_67_K-103Clip-1-..>	2018-05-04 13:51	6.3K
acsi_67_K-103Clip-1-..>	2018-05-04 13:51	20K
acsi_67_K-103Clip-1-..>	2018-05-04 13:51	92K
acsi_67_K-103Clip-1-..>	2018-05-04 13:51	144K
acsi_67_K-103Clip-1-..>	2018-05-04 13:51	180K
acsi_67_K-103Clip-1.png	2018-05-04 13:51	209K
acsi_67_K-103Clip-15..>	2018-05-04 13:51	15K
acsi_67_K-103Clip-30..>	2018-05-04 13:51	18K
acsi_67_K-103Clip.png	2018-05-15 16:44	23K
acsi_69_K-104Clip-1-..>	2018-05-04 13:51	2.8K
acsi_69_K-104Clip-1-..>	2018-05-04 13:51	8.2K
acsi_69_K-104Clip-1-..>	2018-05-04 13:51	37K
acsi_69_K-104Clip-1-..>	2018-05-04 13:51	58K
acsi_69_K-104Clip-1-..>	2018-05-04 13:51	71K
acsi_69_K-104Clip-1.png	2018-05-04 13:51	92K
acsi_69_K-104Clip-15..>	2018-05-04 13:51	3.2K
acsi_69_K-104Clip-30..>	2018-05-04 13:51	7.1K
acsi_69_K-104Clip.png	2018-05-15 16:44	12K
acsi_70_K-105Clip-1-..>	2018-05-15 16:37	5.6K
acsi_70_K-105Clip-1-..>	2018-05-04 13:51	17K
acsi_70_K-105Clip-1-..>	2018-05-04 13:51	78K
acsi_70_K-105Clip-1-..>	2018-05-04 13:51	123K

acsi_70_K-105Clip-1-..>	2018-05-04 13:51	152K
acsi_70_K-105Clip-1.png	2018-05-04 13:51	203K
acsi_70_K-105Clip-15..>	2018-05-04 13:51	9.9K
acsi_70_K-105Clip-30..>	2018-05-04 13:51	13K
acsi_70_K-105Clip.png	2018-05-15 16:44	27K
acsi_72_K-107Clip-1-..>	2018-05-04 13:51	11K
acsi_72_K-107Clip-1-..>	2018-05-04 13:51	35K
acsi_72_K-107Clip-1-..>	2018-05-04 13:51	158K
acsi_72_K-107Clip-1-..>	2018-05-04 13:51	247K
acsi_72_K-107Clip-1-..>	2018-05-04 13:51	309K
acsi_72_K-107Clip-1.png	2018-05-04 13:51	346K
acsi_72_K-107Clip-15..>	2018-05-04 13:51	17K
acsi_72_K-107Clip-30..>	2018-05-04 13:51	25K
acsi_72_K-107Clip.png	2018-05-15 16:44	35K
acsi_73_K-108-150x15..>	2018-05-04 13:51	8.5K
acsi_73_K-108-300x16..>	2018-05-04 13:51	12K
acsi_73_K-108-768x42..>	2018-05-04 13:51	57K
acsi_73_K-108-1024x5..>	2018-05-04 13:51	89K
acsi_73_K-108.png	2018-05-04 13:51	118K
acsi_73_K-108Clip-1-..>	2018-05-15 16:37	4.2K
acsi_73_K-108Clip-1-..>	2018-05-04 13:51	13K
acsi_73_K-108Clip-1-..>	2018-05-04 13:51	61K
acsi_73_K-108Clip-1-..>	2018-05-04 13:51	95K
acsi_73_K-108Clip-1-..>	2018-05-04 13:51	118K
acsi_73_K-108Clip-1.png	2018-05-04 13:51	147K
acsi_73_K-108Clip-15..>	2018-05-15 16:44	3.0K
acsi_73_K-108Clip-30..>	2018-05-15 16:44	4.7K
acsi_73_K-108Clip-76..>	2018-05-04 13:51	23K
acsi_73_K-108Clip.png	2018-05-15 16:44	36K
acsi_74_K-109Clip-1-..>	2018-05-04 13:51	6.4K
acsi_74_K-109Clip-1-..>	2018-05-04 13:51	21K
acsi_74_K-109Clip-1-..>	2018-05-04 13:51	98K
acsi_74_K-109Clip-1-..>	2018-05-04 13:51	154K
acsi_74_K-109Clip-1-..>	2018-05-04 13:51	194K
acsi_74_K-109Clip-1.png	2018-05-04 13:51	222K
acsi_74_K-109Clip-15..>	2018-05-04 13:51	13K
acsi_74_K-109Clip-30..>	2018-05-04 13:51	17K
acsi_74_K-109Clip.png	2018-05-15 16:44	27K
acsi_75_K-110-150x15..>	2018-05-04 13:51	14K
acsi_75_K-110-300x14..>	2018-05-04 13:51	16K
acsi_75_K-110-768x36..>	2018-05-04 13:51	76K
acsi_75_K-110-1024x4..>	2018-05-04 13:51	119K
acsi_75_K-110.png	2018-05-04 13:51	170K
acsi_75_K-110Clip-1-..>	2018-05-04 13:51	8.7K
acsi_75_K-110Clip-1-..>	2018-05-04 13:51	15K
acsi_75_K-110Clip-1-..>	2018-05-04 13:51	67K
acsi_75_K-110Clip-1.png	2018-05-04 13:51	122K
acsi_75_K-110Clip-2-..>	2018-05-04 13:51	8.7K
acsi_75_K-110Clip-2-..>	2018-05-04 13:51	15K
acsi_75_K-110Clip-2-..>	2018-05-04 13:51	67K
acsi_75_K-110Clip-2.png	2018-05-04 13:51	122K

acsi_75_K-110Clip-3-..>	2018-05-15 16:35	4.5K
acsi_75_K-110Clip-3-..>	2018-05-04 13:51	14K
acsi_75_K-110Clip-3-..>	2018-05-04 13:51	65K
acsi_75_K-110Clip-3-..>	2018-05-04 13:51	103K
acsi_75_K-110Clip-3-..>	2018-05-04 13:51	129K
acsi_75_K-110Clip-3.png	2018-05-04 13:51	152K
acsi_75_K-110Clip-15..>	2018-05-15 16:44	1.8K
acsi_75_K-110Clip-30..>	2018-05-15 16:44	2.8K
acsi_75_K-110Clip-76..>	2018-05-04 13:51	14K
acsi_75_K-110Clip.png	2018-05-15 16:44	22K
acsi_76_K-111-150x15..>	2018-05-04 13:51	7.3K
acsi_76_K-111-300x20..>	2018-05-04 13:51	12K
acsi_76_K-111-768x51..>	2018-05-04 13:51	61K
acsi_76_K-111-1024x6..>	2018-05-04 13:51	96K
acsi_76_K-111.png	2018-05-04 13:51	121K
acsi_76_K-111Clip-1-..>	2018-05-04 13:51	11K
acsi_76_K-111Clip-1-..>	2018-05-04 13:51	19K
acsi_76_K-111Clip-1-..>	2018-05-04 13:51	88K
acsi_76_K-111Clip-1.png	2018-05-04 13:51	149K
acsi_76_K-111Clip-2-..>	2018-05-04 13:51	5.8K
acsi_76_K-111Clip-2-..>	2018-05-04 13:51	19K
acsi_76_K-111Clip-2-..>	2018-05-04 13:51	89K
acsi_76_K-111Clip-2-..>	2018-05-04 13:51	141K
acsi_76_K-111Clip-2-..>	2018-05-04 13:51	179K
acsi_76_K-111Clip-2.png	2018-05-04 13:51	198K
acsi_76_K-111Clip-15..>	2018-05-04 13:51	2.5K
acsi_76_K-111Clip-30..>	2018-05-04 13:51	4.1K
acsi_76_K-111Clip-76..>	2018-05-04 13:51	20K
acsi_76_K-111Clip.png	2018-05-15 16:44	35K
acsi_77_K-112Clip-1-..>	2018-05-04 13:51	4.8K
acsi_77_K-112Clip-1-..>	2018-05-04 13:51	15K
acsi_77_K-112Clip-1-..>	2018-05-04 13:51	69K
acsi_77_K-112Clip-1-..>	2018-05-04 13:51	108K
acsi_77_K-112Clip-1-..>	2018-05-04 13:51	136K
acsi_77_K-112Clip-1.png	2018-05-04 13:51	157K
acsi_77_K-112Clip-15..>	2018-05-04 13:51	10K
acsi_77_K-112Clip-30..>	2018-05-04 13:51	15K
acsi_77_K-112Clip.png	2018-05-15 16:44	16K
acsi_78_K-124Clip-1-..>	2018-05-04 13:51	5.4K
acsi_78_K-124Clip-1-..>	2018-05-04 13:51	17K
acsi_78_K-124Clip-1-..>	2018-05-04 13:51	78K
acsi_78_K-124Clip-1-..>	2018-05-04 13:51	122K
acsi_78_K-124Clip-1-..>	2018-05-04 13:51	153K
acsi_78_K-124Clip-1.png	2018-05-04 13:51	177K
acsi_78_K-124Clip-15..>	2018-05-04 13:51	10K
acsi_78_K-124Clip-30..>	2018-05-04 13:51	14K
acsi_78_K-124Clip.png	2018-05-15 16:44	22K
acsi_79_K-125Clip-1-..>	2018-05-15 16:36	5.3K
acsi_79_K-125Clip-1-..>	2018-05-04 13:51	17K
acsi_79_K-125Clip-1-..>	2018-05-04 13:51	77K
acsi_79_K-125Clip-1-..>	2018-05-04 13:51	121K

acsi_79_K-125Clip-1-..>	2018-05-04 13:51	152K
acsi_79_K-125Clip-1.png	2018-05-04 13:51	178K
acsi_79_K-125Clip-15..>	2018-05-04 13:51	12K
acsi_79_K-125Clip-30..>	2018-05-04 13:51	21K
acsi_79_K-125Clip.png	2018-05-15 16:43	26K
acsi_80_K-126Clip-1-..>	2018-05-04 13:51	14K
acsi_80_K-126Clip-1-..>	2018-05-04 13:51	17K
acsi_80_K-126Clip-1.png	2018-05-15 16:30	31K
acsi_80_K-126Clip-15..>	2018-05-04 13:51	14K
acsi_80_K-126Clip-30..>	2018-05-04 13:51	17K
acsi_80_K-126Clip.png	2018-05-15 16:43	31K
acsi_80_K-126ClipB-1..>	2018-05-04 13:51	8.0K
acsi_80_K-126ClipB-3..>	2018-05-04 13:51	26K
acsi_80_K-126ClipB-7..>	2018-05-04 13:51	123K
acsi_80_K-126ClipB-1..>	2018-05-04 13:51	194K
acsi_80_K-126ClipB-1..>	2018-05-04 13:51	247K
acsi_80_K-126ClipB.png	2018-05-04 13:51	372K
acsi_81_K-226Clip-1-..>	2018-05-04 13:51	9.4K
acsi_81_K-226Clip-1-..>	2018-05-04 13:51	30K
acsi_81_K-226Clip-1-..>	2018-05-04 13:51	139K
acsi_81_K-226Clip-1-..>	2018-05-04 13:51	218K
acsi_81_K-226Clip-1-..>	2018-05-04 13:51	276K
acsi_81_K-226Clip-1.png	2018-05-04 13:51	305K
acsi_81_K-226Clip-2-..>	2018-05-04 13:51	9.4K
acsi_81_K-226Clip-2-..>	2018-05-04 13:51	30K
acsi_81_K-226Clip-2-..>	2018-05-04 13:51	139K
acsi_81_K-226Clip-2-..>	2018-05-04 13:51	218K
acsi_81_K-226Clip-2-..>	2018-05-04 13:51	276K
acsi_81_K-226Clip-2.png	2018-05-04 13:51	305K
acsi_81_K-226Clip-15..>	2018-05-04 13:51	24K
acsi_81_K-226Clip-30..>	2018-05-04 13:51	34K
acsi_81_K-226Clip.png	2018-05-15 16:43	43K
acsi_82_K-128Clip-1-..>	2018-05-04 13:51	5.7K
acsi_82_K-128Clip-1-..>	2018-05-04 13:51	19K
acsi_82_K-128Clip-1-..>	2018-05-04 13:51	88K
acsi_82_K-128Clip-1-..>	2018-05-04 13:51	139K
acsi_82_K-128Clip-1-..>	2018-05-04 13:51	176K
acsi_82_K-128Clip-1.png	2018-05-04 13:51	199K
acsi_82_K-128Clip-15..>	2018-05-04 13:51	11K
acsi_82_K-128Clip-30..>	2018-05-04 13:51	11K
acsi_82_K-128Clip.png	2018-05-15 16:43	31K
acsi_83_K-129Clip-1-..>	2018-05-04 13:51	7.2K
acsi_83_K-129Clip-1-..>	2018-05-04 13:51	24K
acsi_83_K-129Clip-1-..>	2018-05-04 13:51	110K
acsi_83_K-129Clip-1-..>	2018-05-04 13:51	172K
acsi_83_K-129Clip-1-..>	2018-05-04 13:51	219K
acsi_83_K-129Clip-1.png	2018-05-04 13:51	239K
acsi_83_K-129Clip-15..>	2018-05-04 13:51	16K
acsi_83_K-129Clip-30..>	2018-05-04 13:51	24K
acsi_83_K-129Clip.png	2018-05-15 16:43	31K
acsi_84_K-130Clip-1-..>	2018-05-04 13:51	4.3K

acsi_84_K-130Clip-1-..>	2018-05-04 13:51	14K
acsi_84_K-130Clip-1-..>	2018-05-04 13:51	62K
acsi_84_K-130Clip-1-..>	2018-05-04 13:51	96K
acsi_84_K-130Clip-1-..>	2018-05-04 13:51	119K
acsi_84_K-130Clip-1.png	2018-05-04 13:51	140K
acsi_84_K-130Clip-15..>	2018-05-04 13:51	10K
acsi_84_K-130Clip-30..>	2018-05-04 13:51	15K
acsi_84_K-130Clip.png	2018-05-15 16:43	26K
acsi_85_K-131Clip-1-..>	2018-05-04 13:51	4.1K
acsi_85_K-131Clip-1-..>	2018-05-04 13:51	13K
acsi_85_K-131Clip-1-..>	2018-05-04 13:51	59K
acsi_85_K-131Clip-1-..>	2018-05-04 13:51	93K
acsi_85_K-131Clip-1-..>	2018-05-04 13:51	116K
acsi_85_K-131Clip-1.png	2018-05-04 13:51	140K
acsi_85_K-131Clip-15..>	2018-05-04 13:51	8.7K
acsi_85_K-131Clip-30..>	2018-05-04 13:51	11K
acsi_85_K-131Clip.png	2018-05-15 16:43	17K
acsi_86_K-123Clip-1-..>	2018-05-04 13:51	8.7K
acsi_86_K-123Clip-1-..>	2018-05-04 13:51	28K
acsi_86_K-123Clip-1-..>	2018-05-04 13:51	131K
acsi_86_K-123Clip-1-..>	2018-05-04 13:51	206K
acsi_86_K-123Clip-1-..>	2018-05-04 13:51	258K
acsi_86_K-123Clip-1.png	2018-05-04 13:51	300K
acsi_86_K-123Clip-15..>	2018-05-04 13:51	20K
acsi_86_K-123Clip-30..>	2018-05-04 13:51	29K
acsi_86_K-123Clip.png	2018-05-15 16:43	47K
acsi_87_K-127Clip-1-..>	2018-05-15 16:35	7.6K
acsi_87_K-127Clip-1-..>	2018-05-04 13:51	26K
acsi_87_K-127Clip-1-..>	2018-05-04 13:51	121K
acsi_87_K-127Clip-1-..>	2018-05-04 13:51	189K
acsi_87_K-127Clip-1-..>	2018-05-04 13:51	240K
acsi_87_K-127Clip-1.png	2018-05-04 13:51	277K
acsi_87_K-127Clip-15..>	2018-05-04 13:51	17K
acsi_87_K-127Clip-30..>	2018-05-04 13:51	27K
acsi_87_K-127Clip.png	2018-05-15 16:43	45K










SS-5GL2


SS-5GL2










SS-5GL2



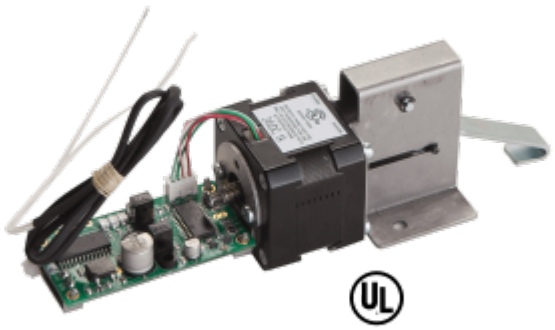

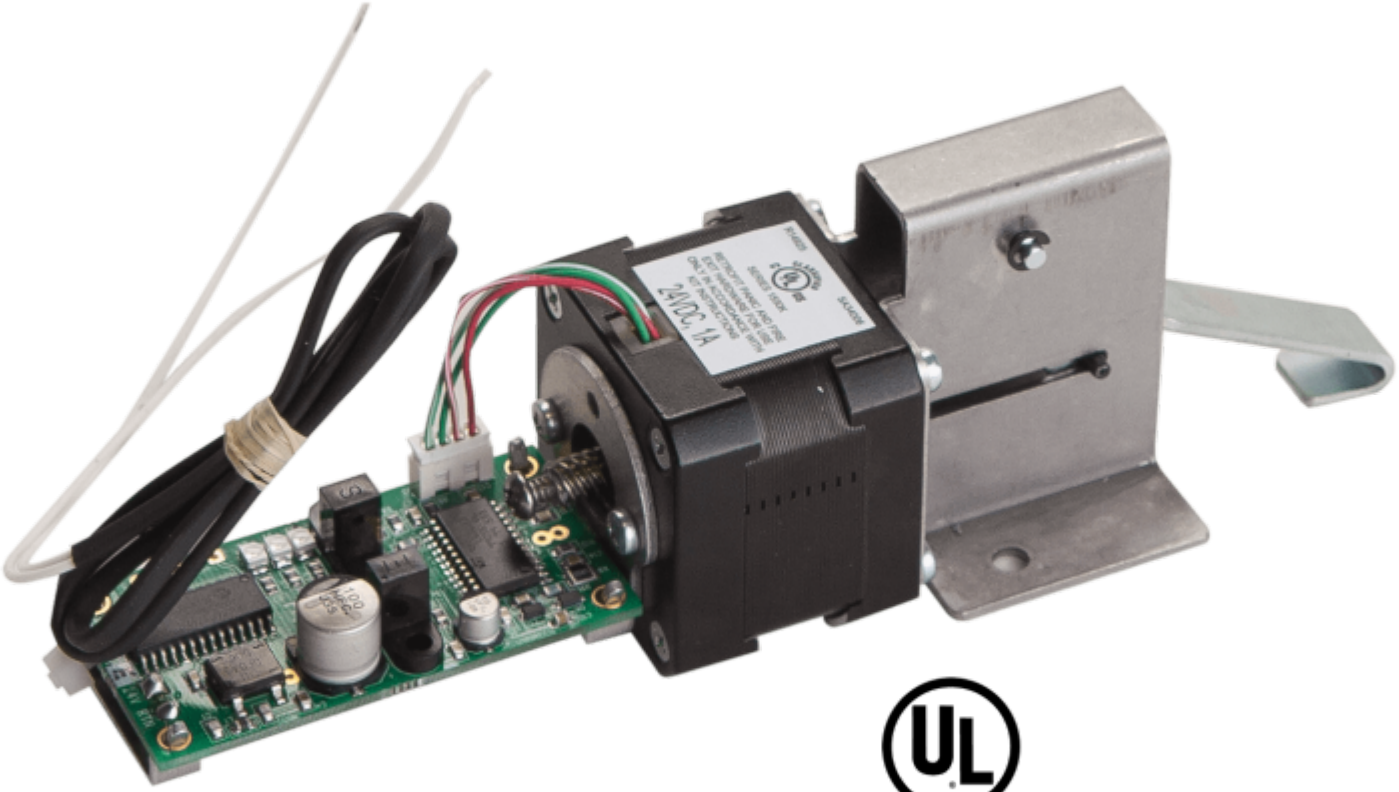
24VDC 1A

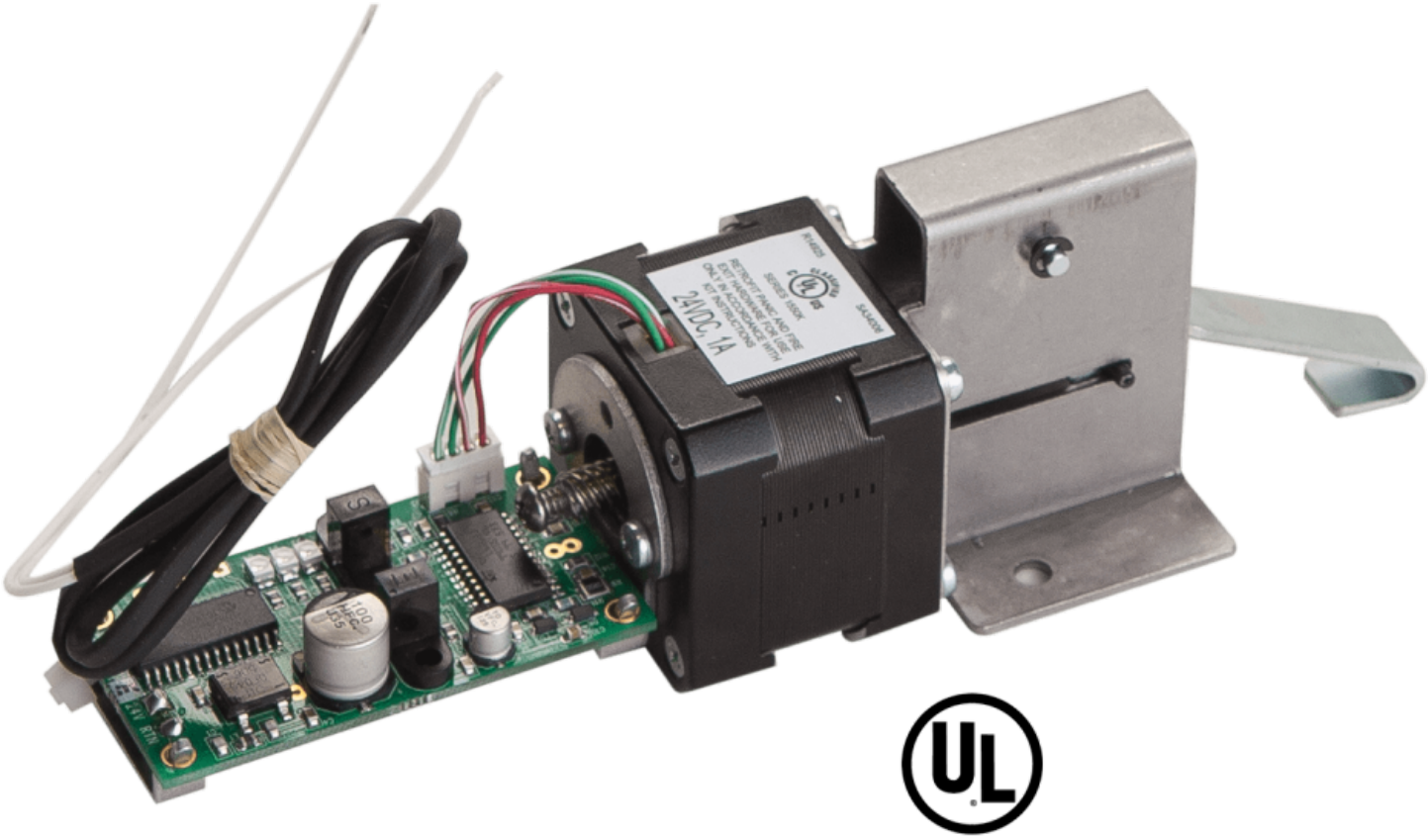
24VDC 1A

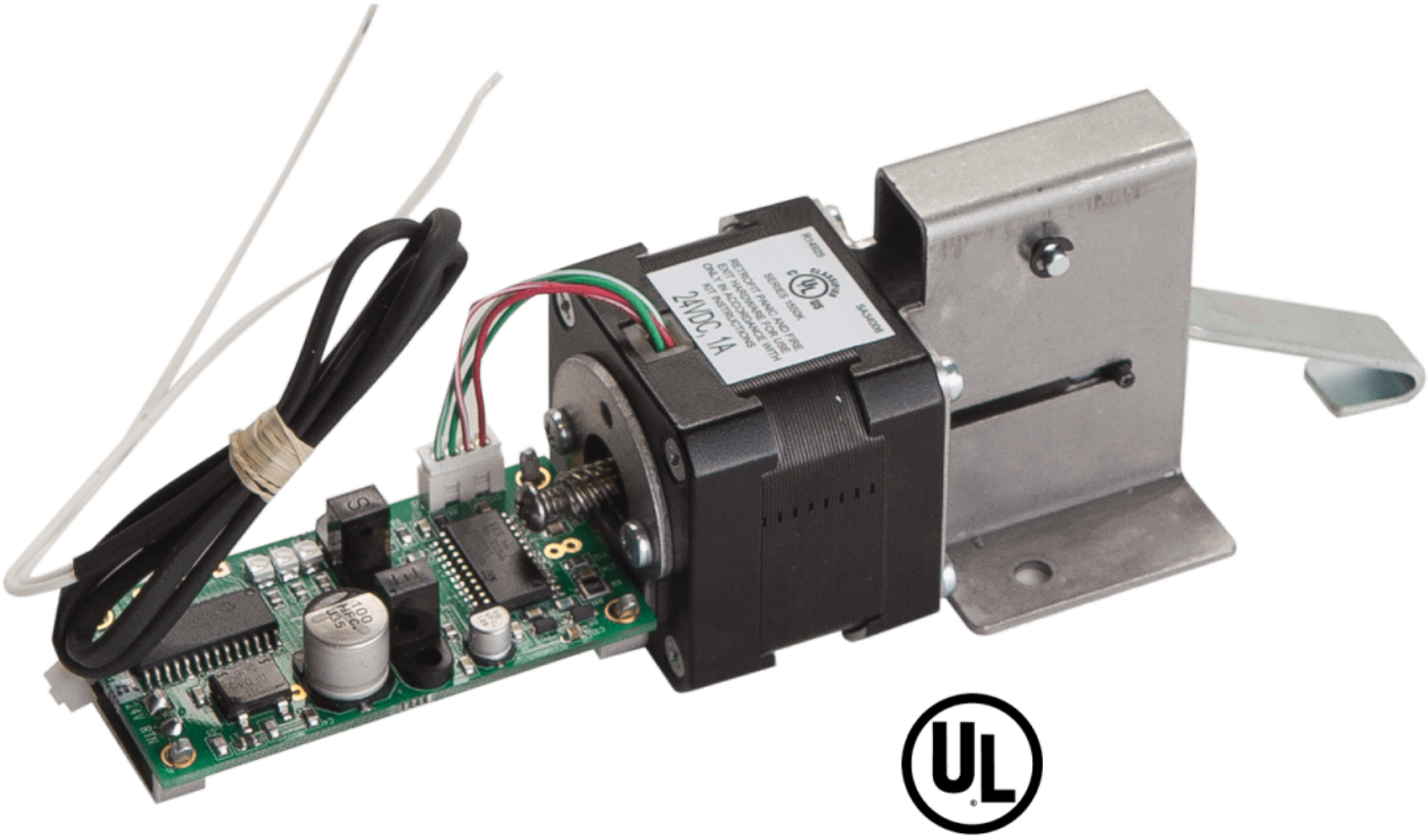
24VDC 1A

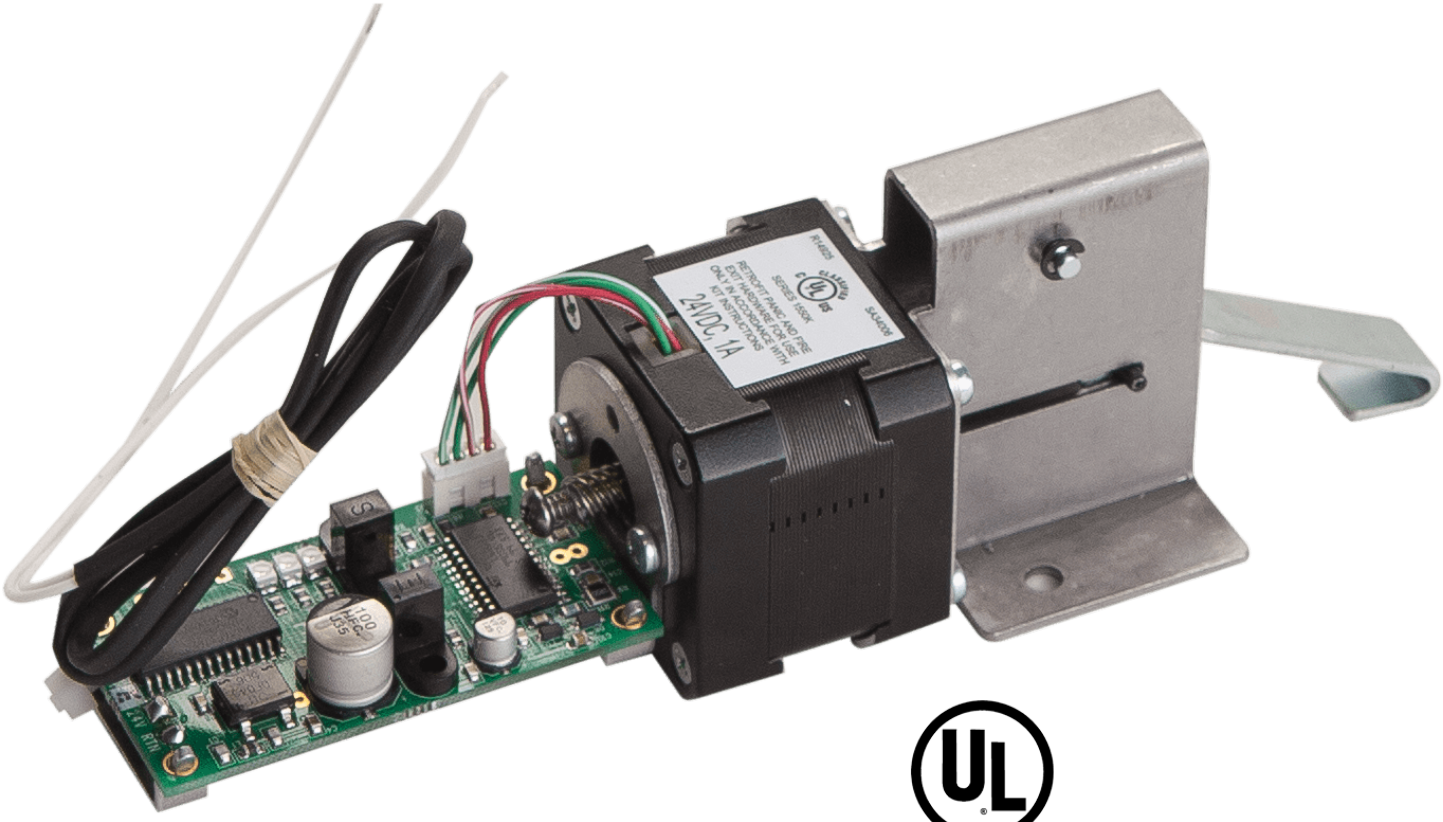
24VDC 1A



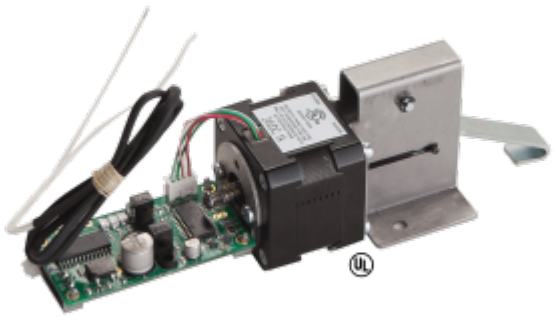

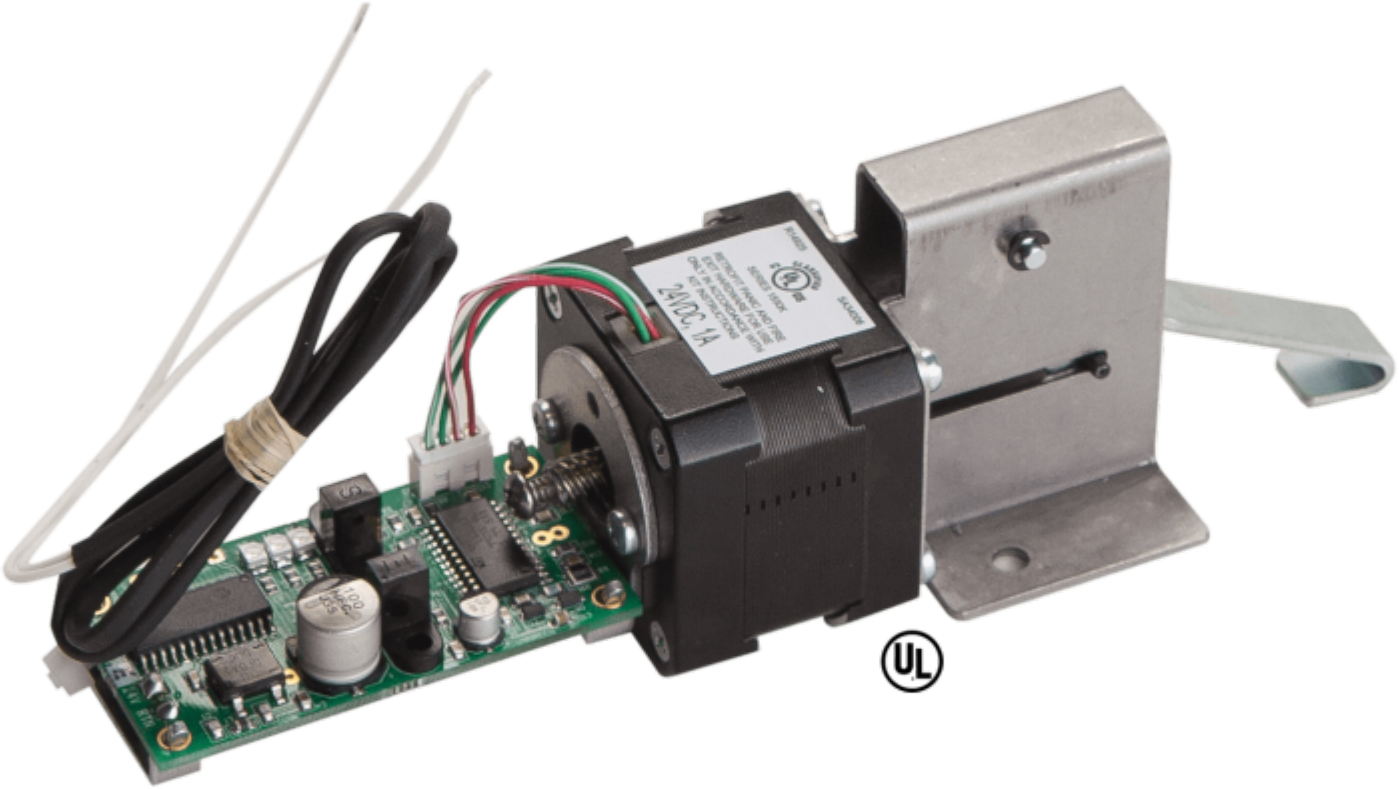
24VDC 1A

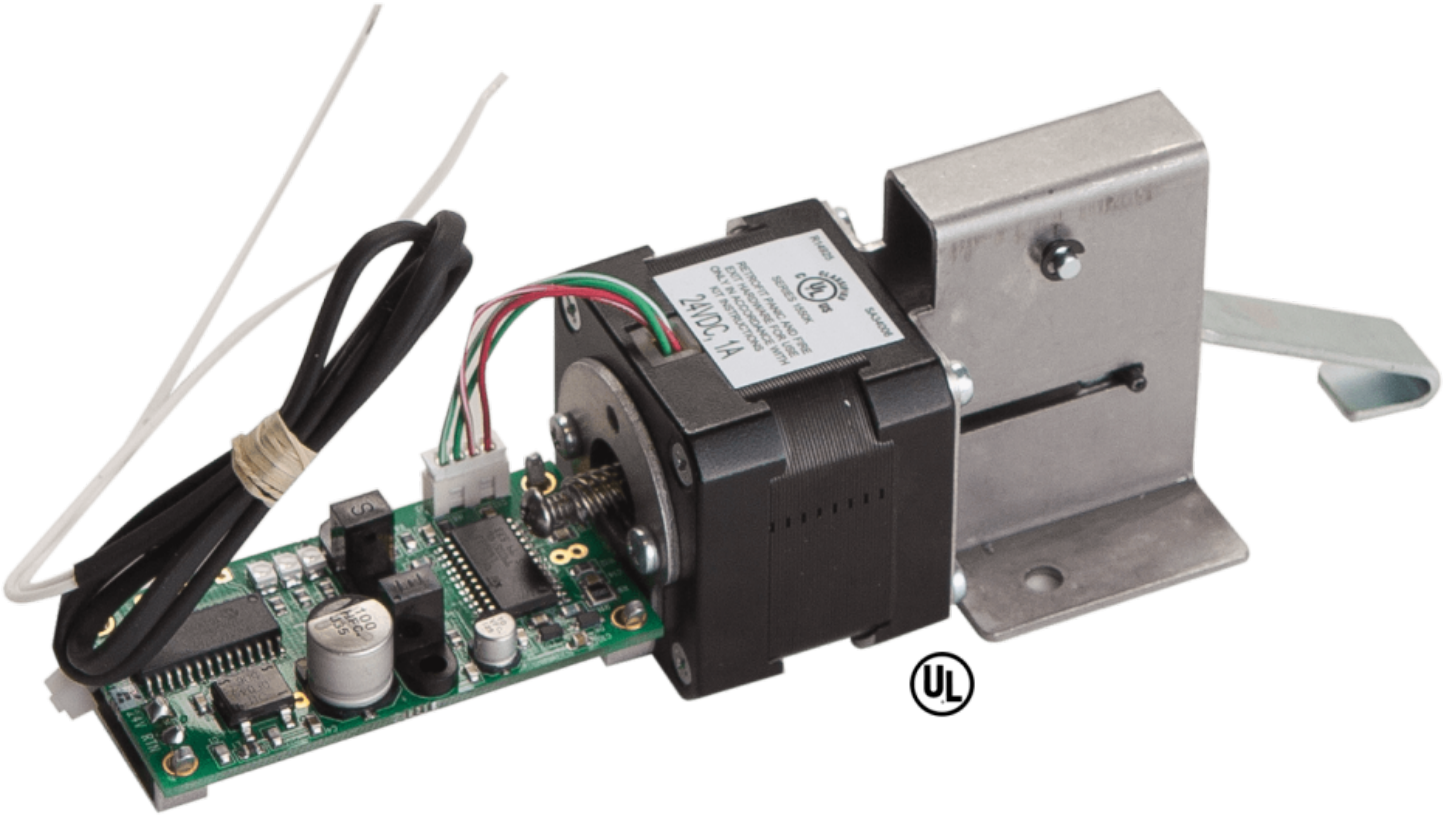
24VDC 1A

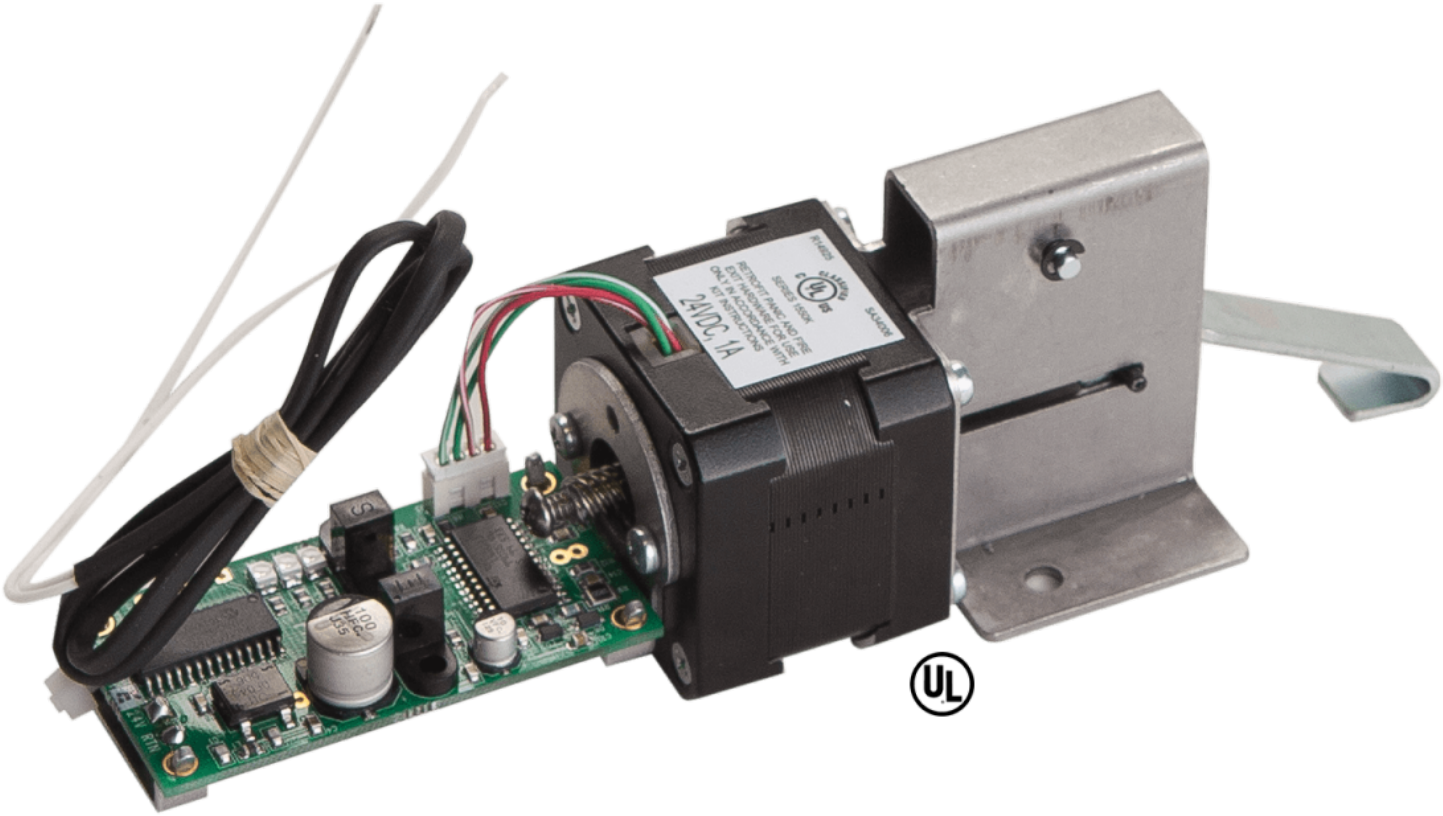
24VDC 1A

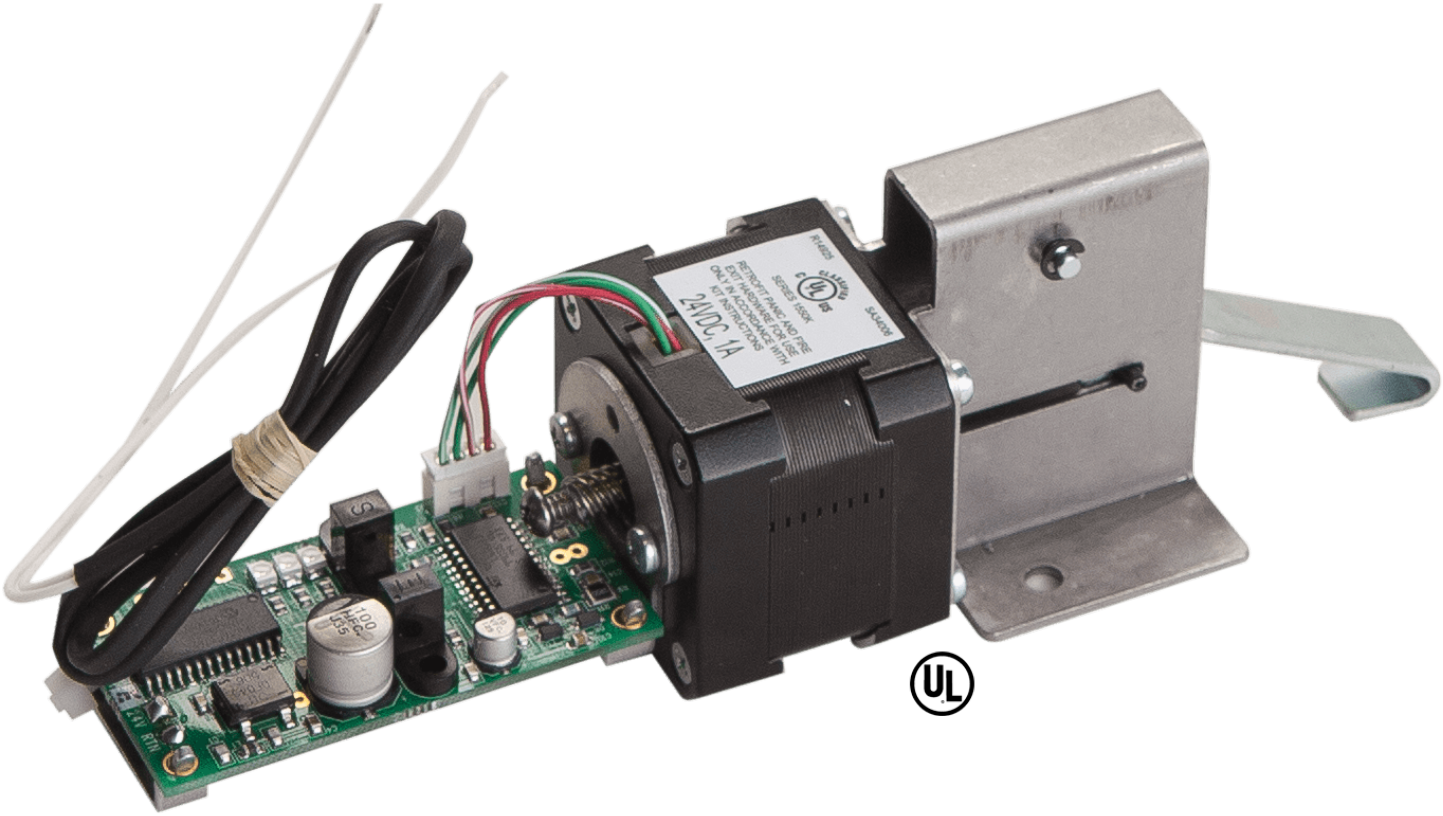
24VDC 1A







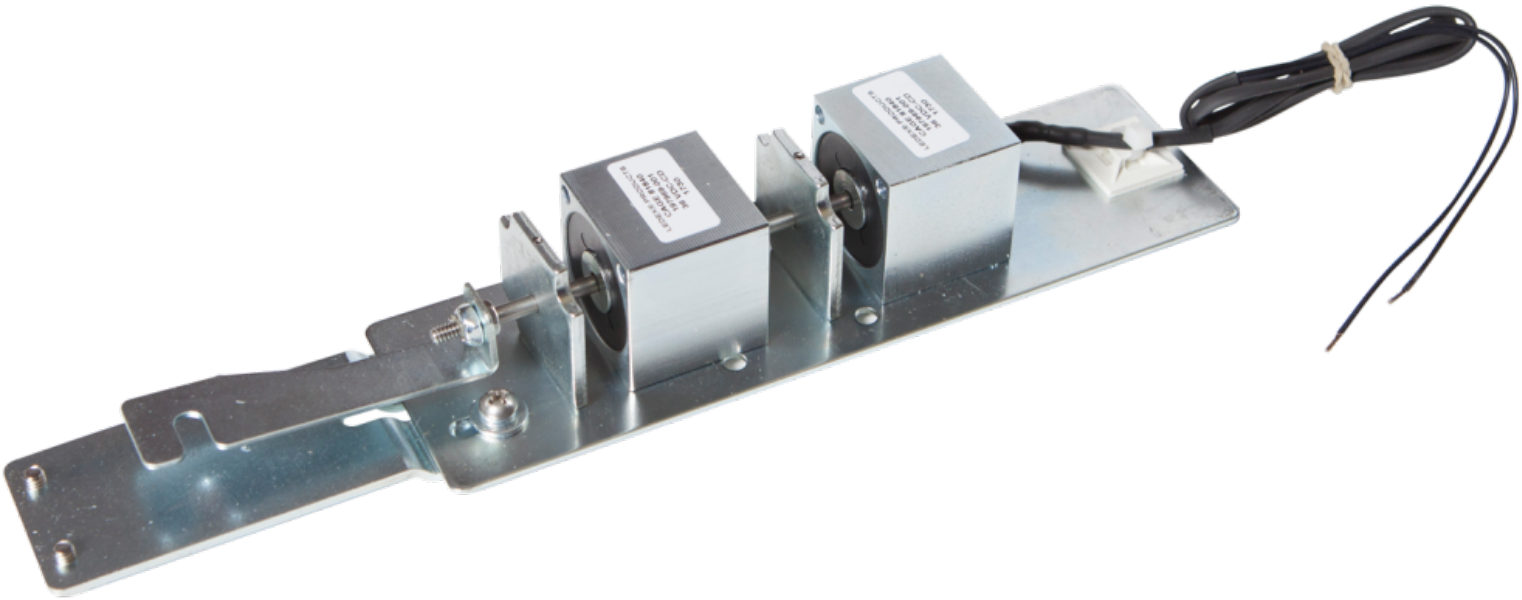

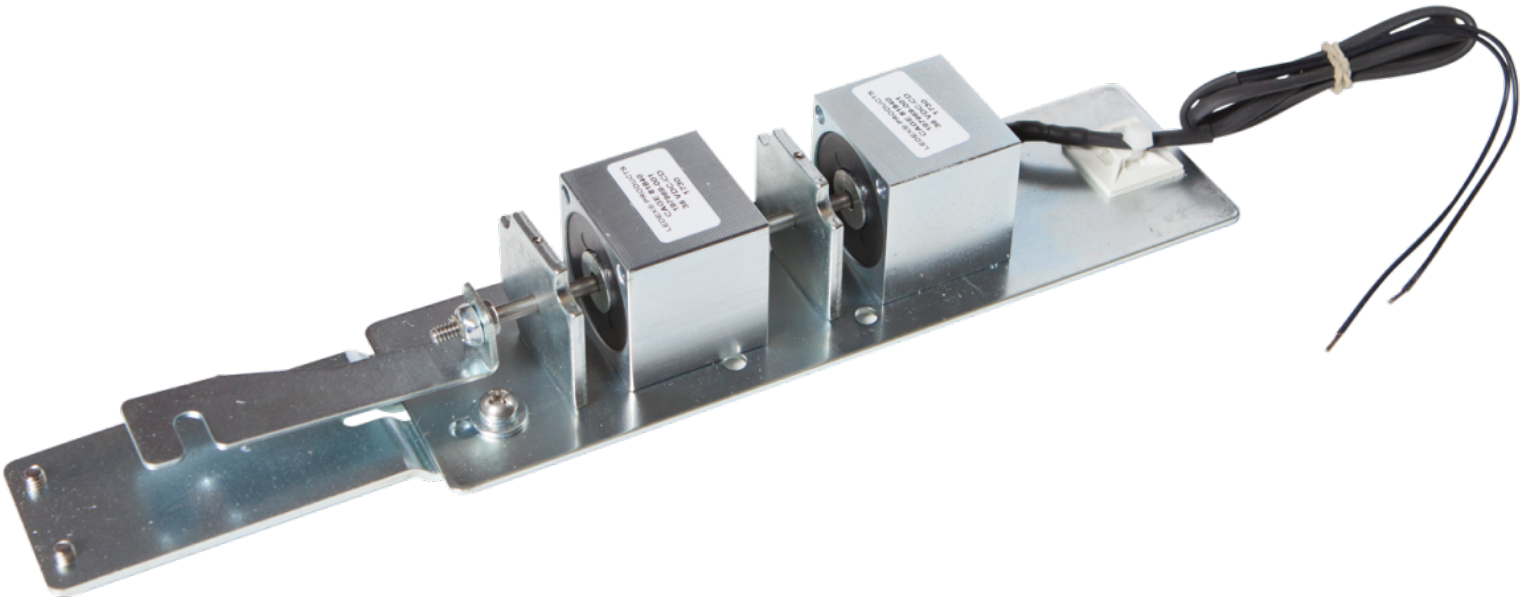

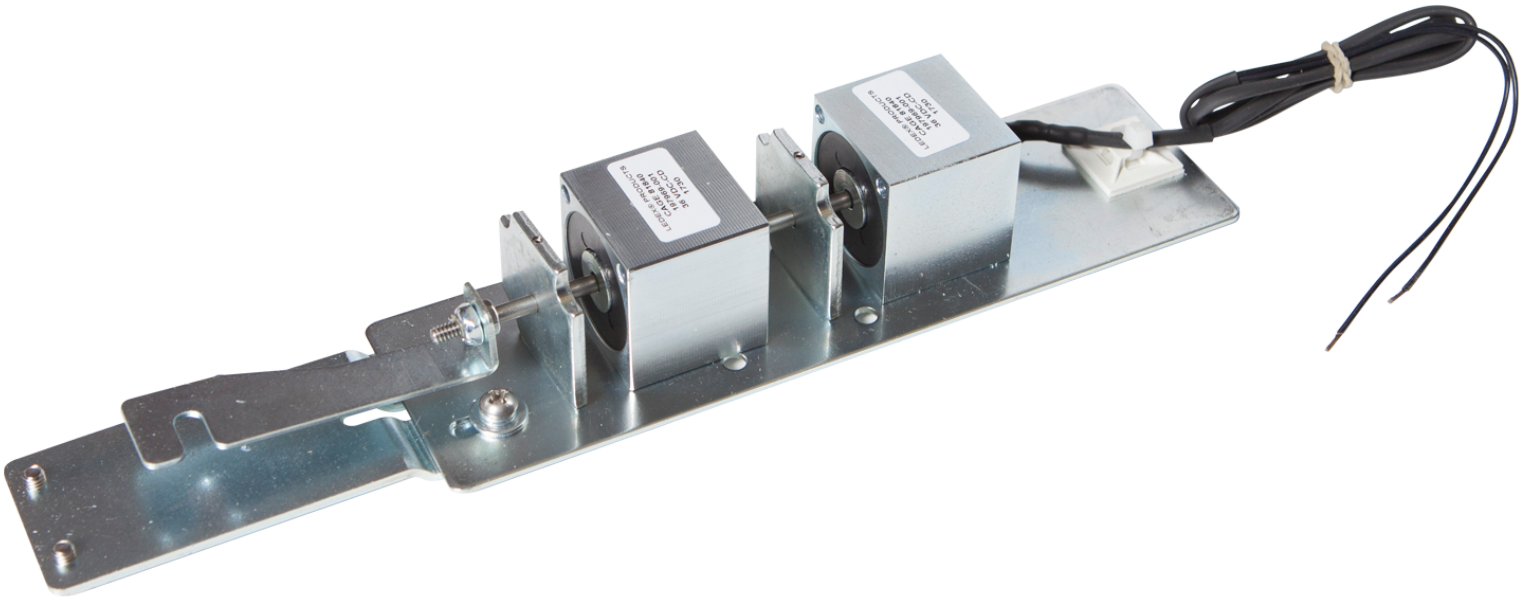

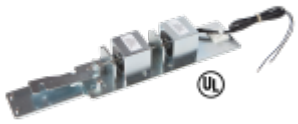

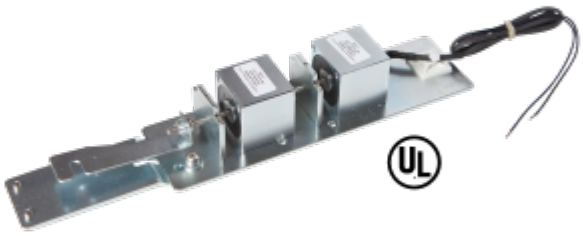

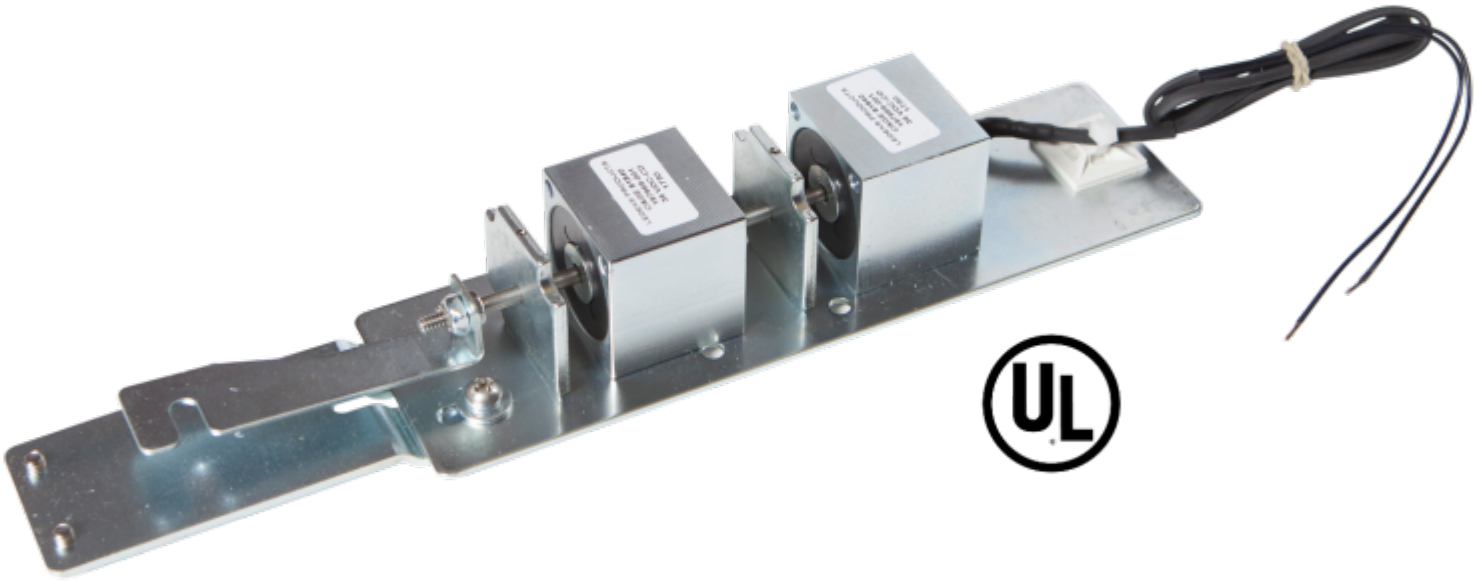

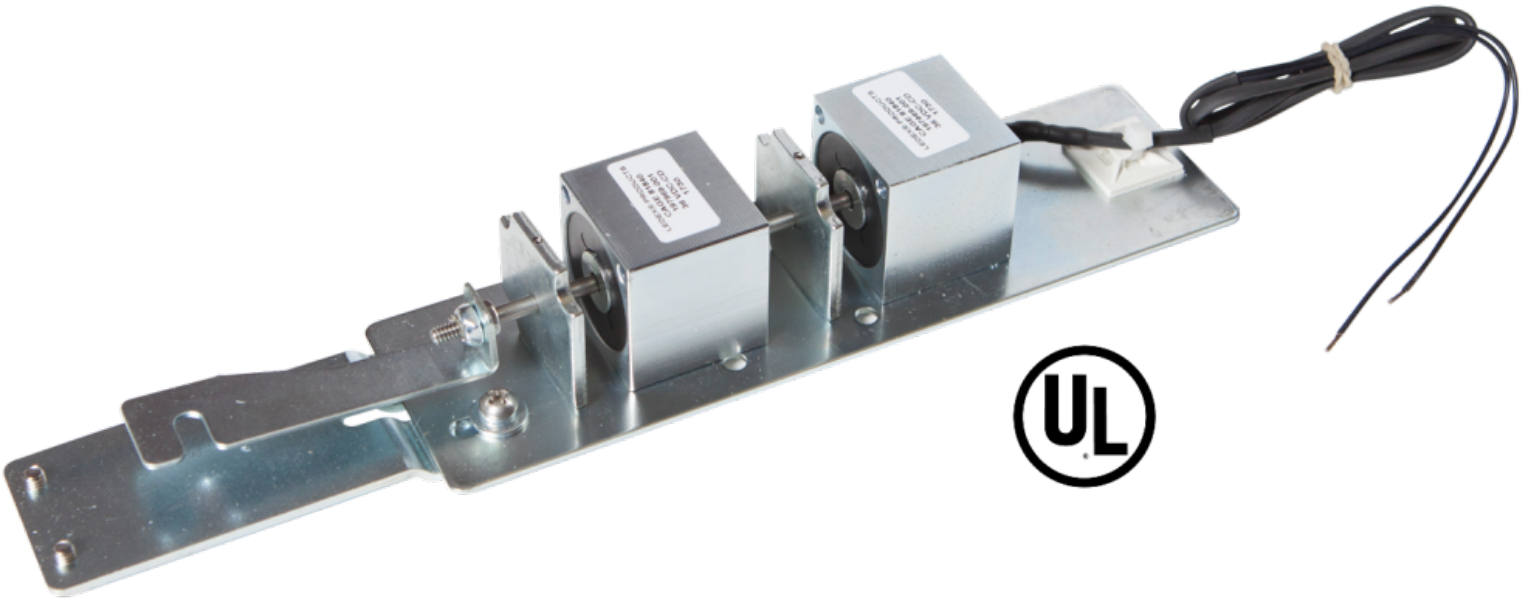

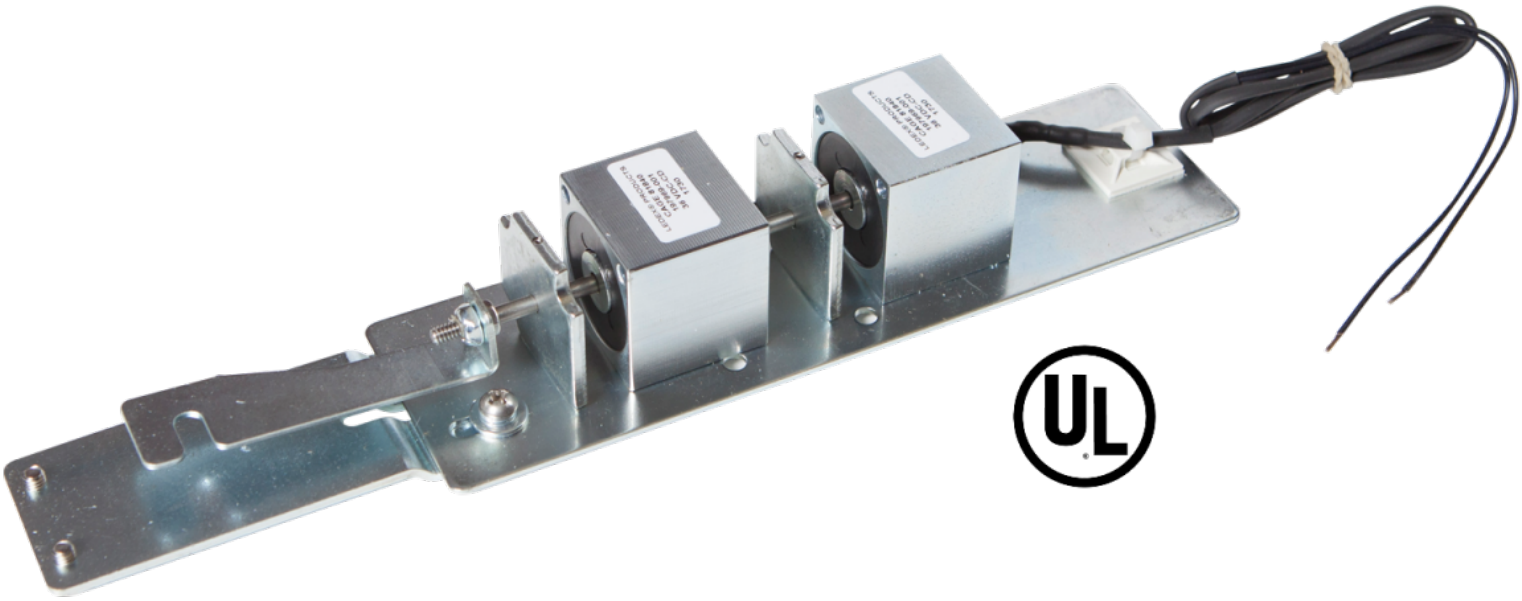

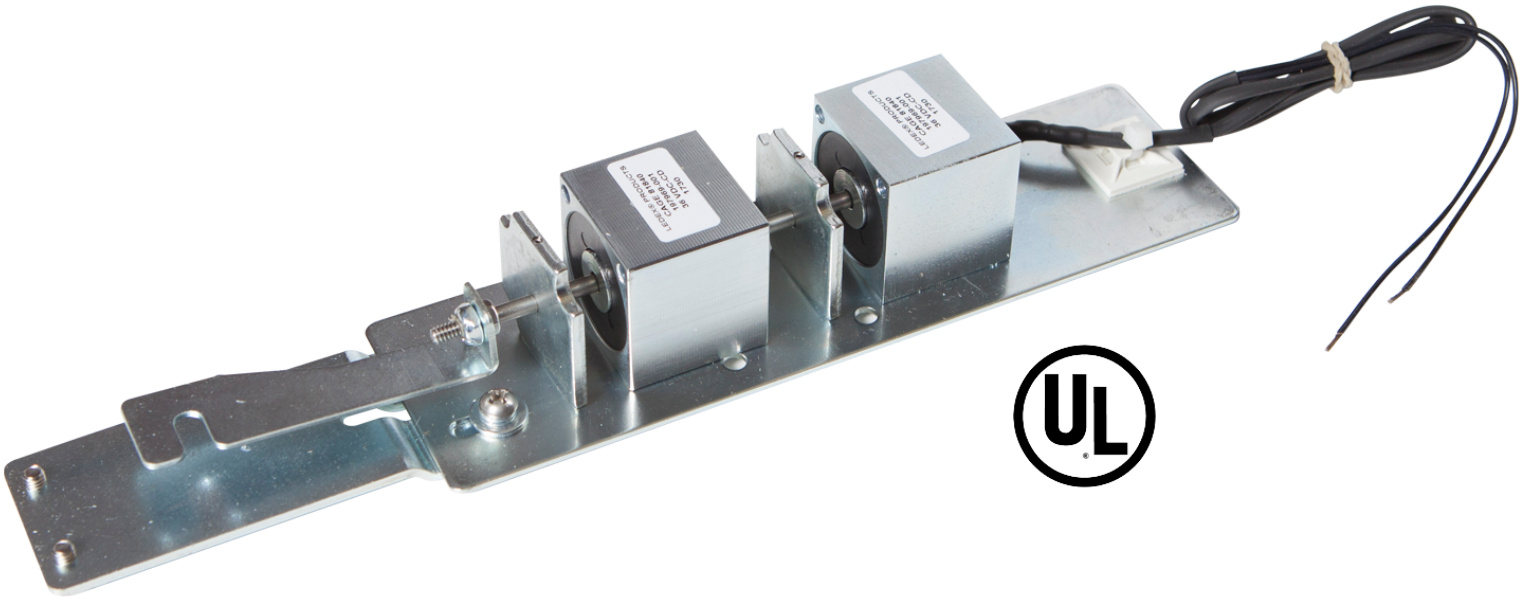







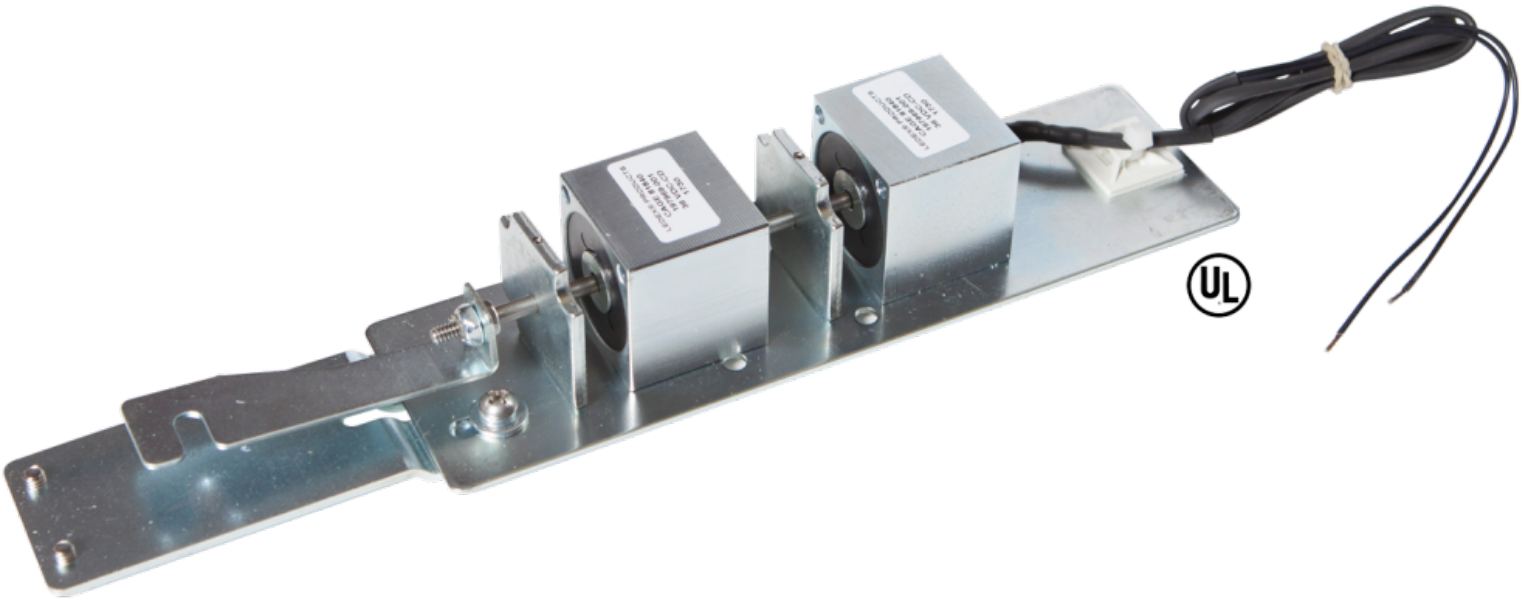

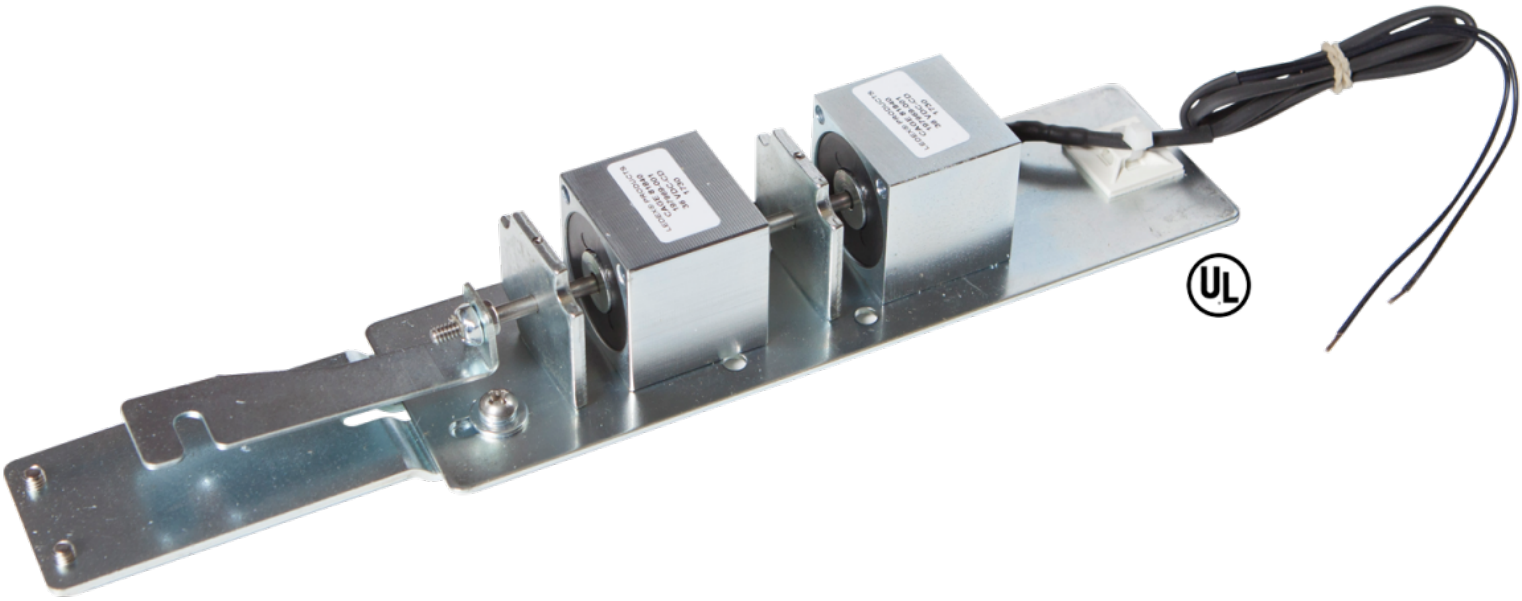

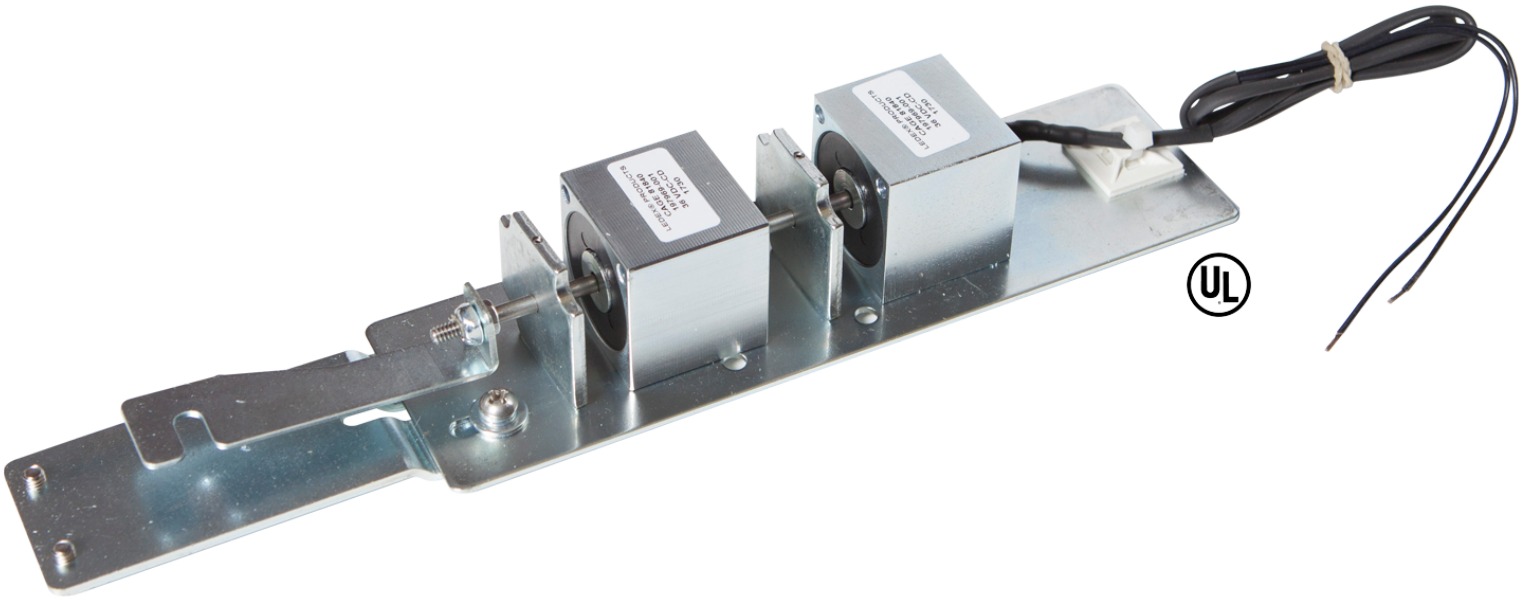






VON DUPRIN
7500


VON DUPRIN
7500
MOD ME1500C/00-1-7500-24VAC/DC-VON DUPRIN
JOB 28111632
VOLT 24VAC/DC
AMPS 3A
ARCHITECTURAL CONTROL SYSTEMS,INC.,ST.LOUIS,MO
800-753-5858


VON DUPRIN
7500
MOD ME1500C-00-1-7500-24VAC/DC-VON DUPRIN
JOB 28111632
VOLT 24VAC/DC
AMPS 3A
ARCHITECTURAL CONTROL SYSTEMS,INC.-ST.LOUIS,MO
800-753-5588


VON DUPRIN
7500
MOD ME1520C-00-1-7500-24VAC/DC-VON DUPRIN
JOB 28111632
VOLT 24VAC/DC
AMPS 3A
ARCHITECTURAL CONTROL SYSTEMS,INC.-ST.LOUIS,MO
800-753-5958






VON DUPRIN
7500


VON DUPRIN
7500
MOD ME1500C/00-1-7500-24VAC/DC-VON DUPRIN
JOB 28111632
VOLT 24VAC/DC
AMPS 3A
ARCHITECTURAL CONTROL SYSTEMS,INC.-ST.LOUIS,MO
800-753-5958
UL


VON DUPRIN
7500
MOD ME1500C-00-1-7500-24VAC/DC-VON DUPRIN
JOB 2811-1632
VOLT 24VAC/DC
AMPS 3A
ARCHITECTURAL CONTROL SYSTEMS,INC.-ST.LOUIS,MO
800-753-5588
UL


VON DUPRIN
7500
MOD ME1520C-00-1-7500-24VAC/DC-VON DUPRIN
JOB 28111632
VOLT 24VAC/DC
AMPS 3A
ARCHITECTURAL CONTROL SYSTEMS,INC.-ST.LOUIS,MO
800-753-5958
UL





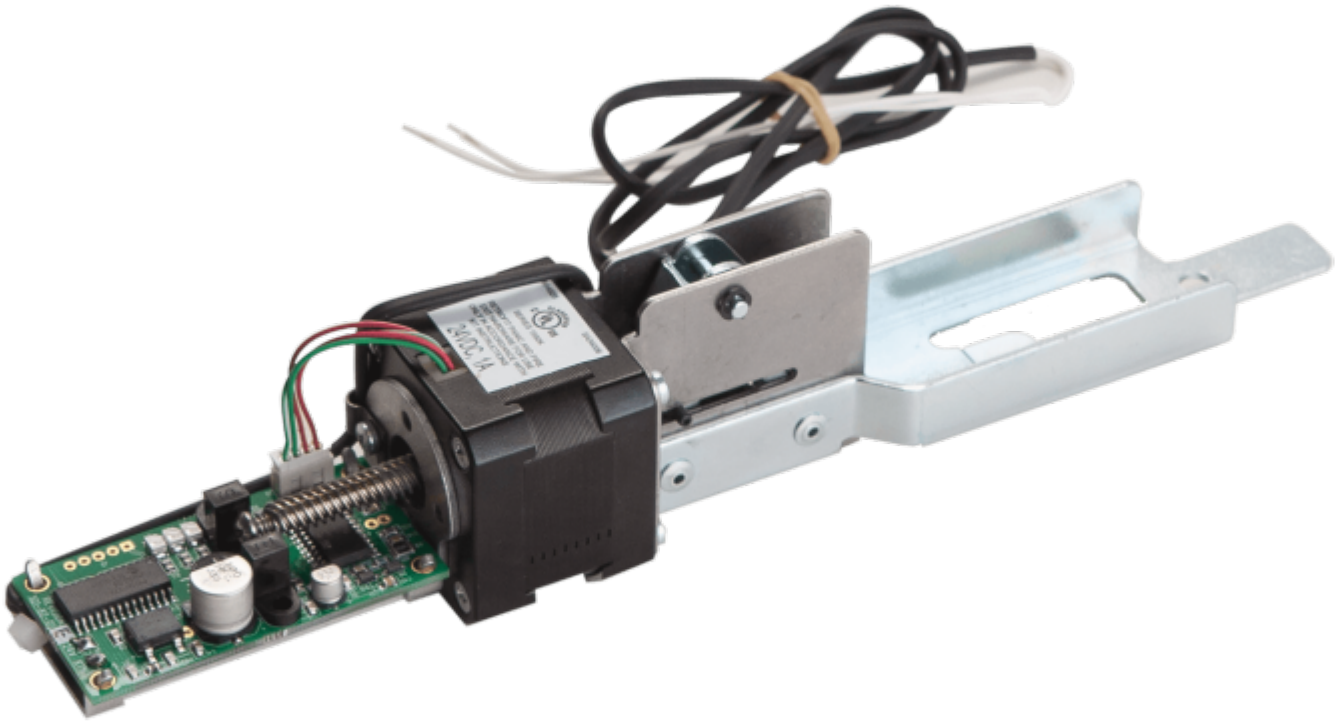

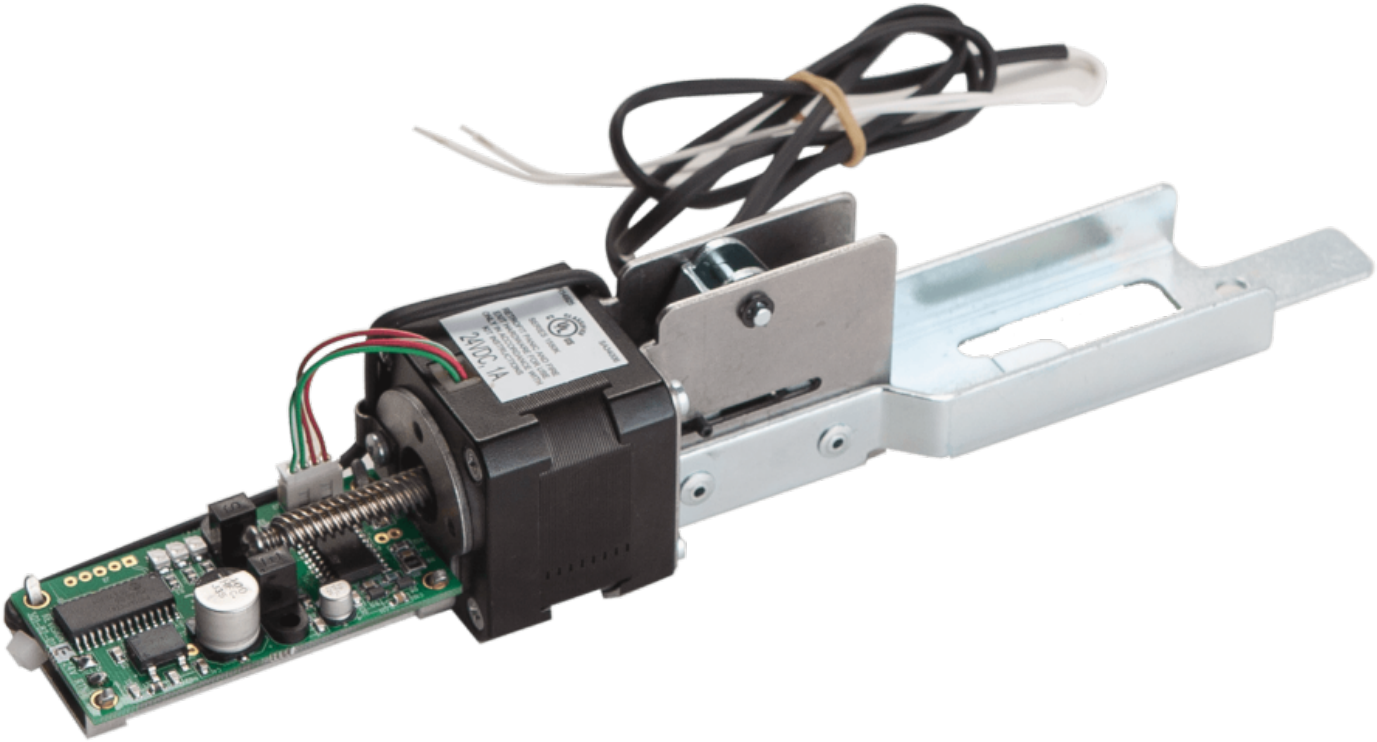

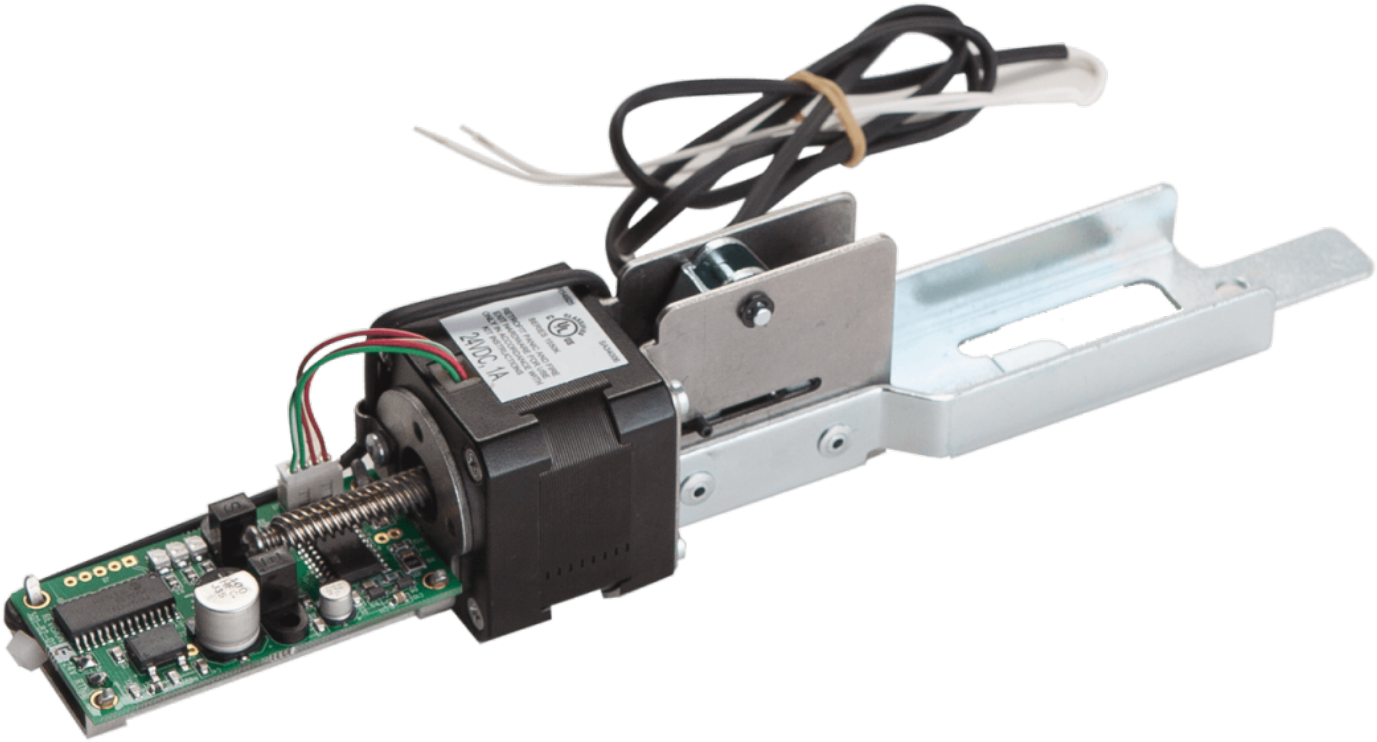

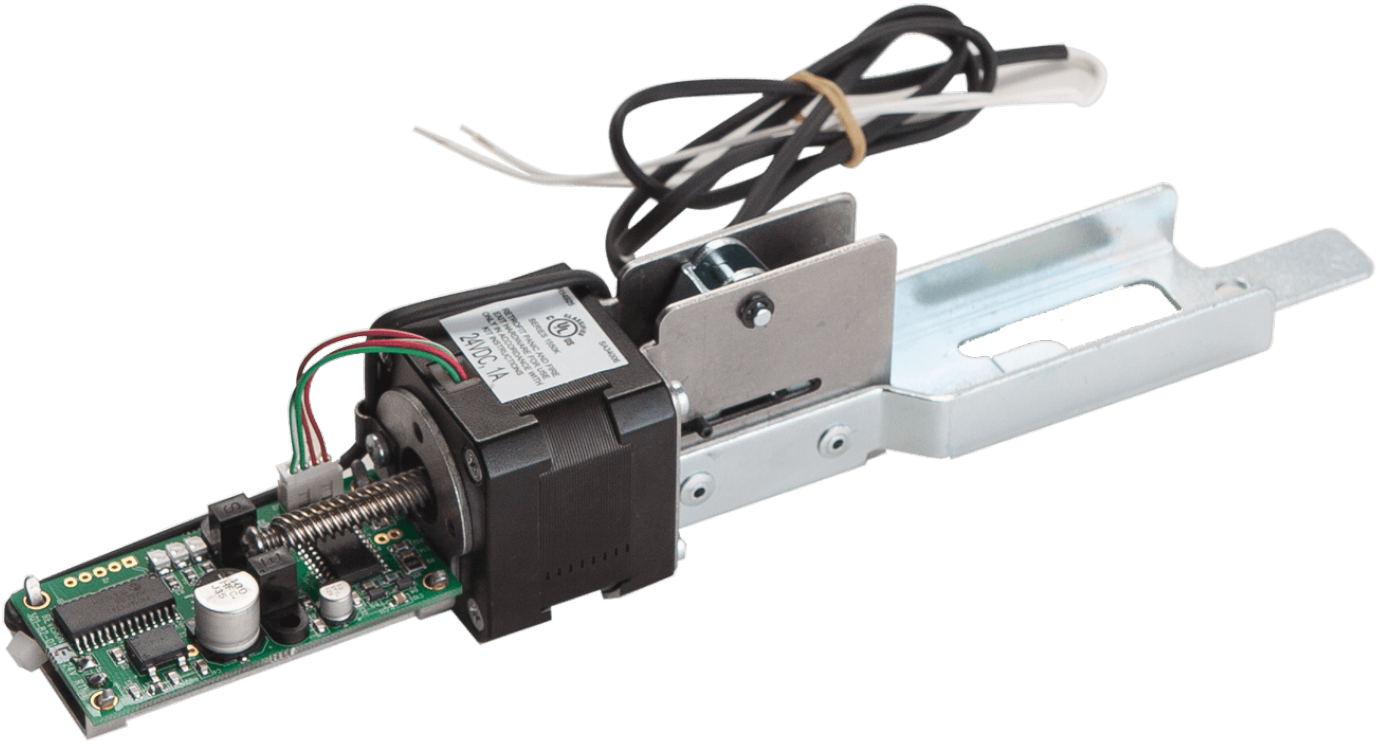





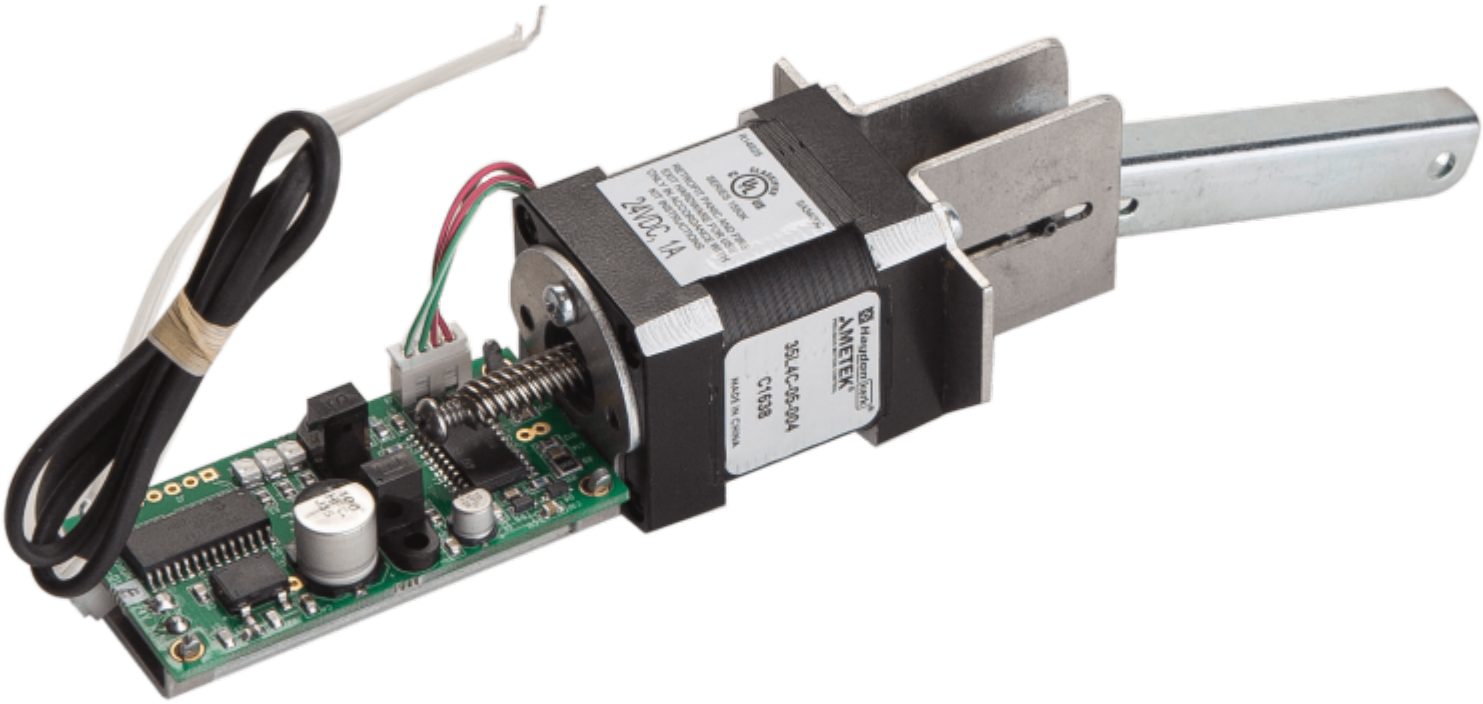
24VDC, 1A
AMETEK
35LAC-05-00A
C1638
MADE IN CHINA

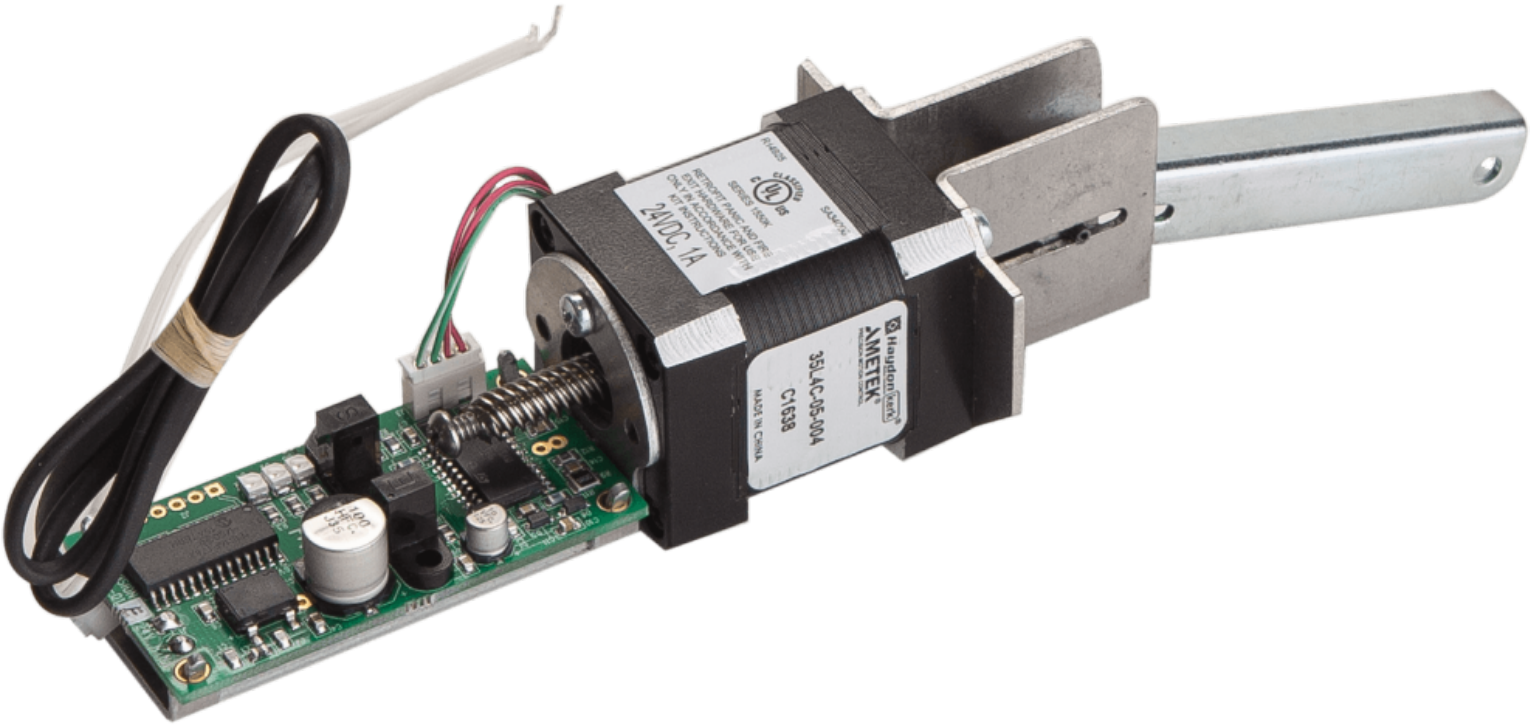
24VDC, 1A
35L4C-05-004
C1538
MADE IN CHINA
AMETEK
Haydon Kerk

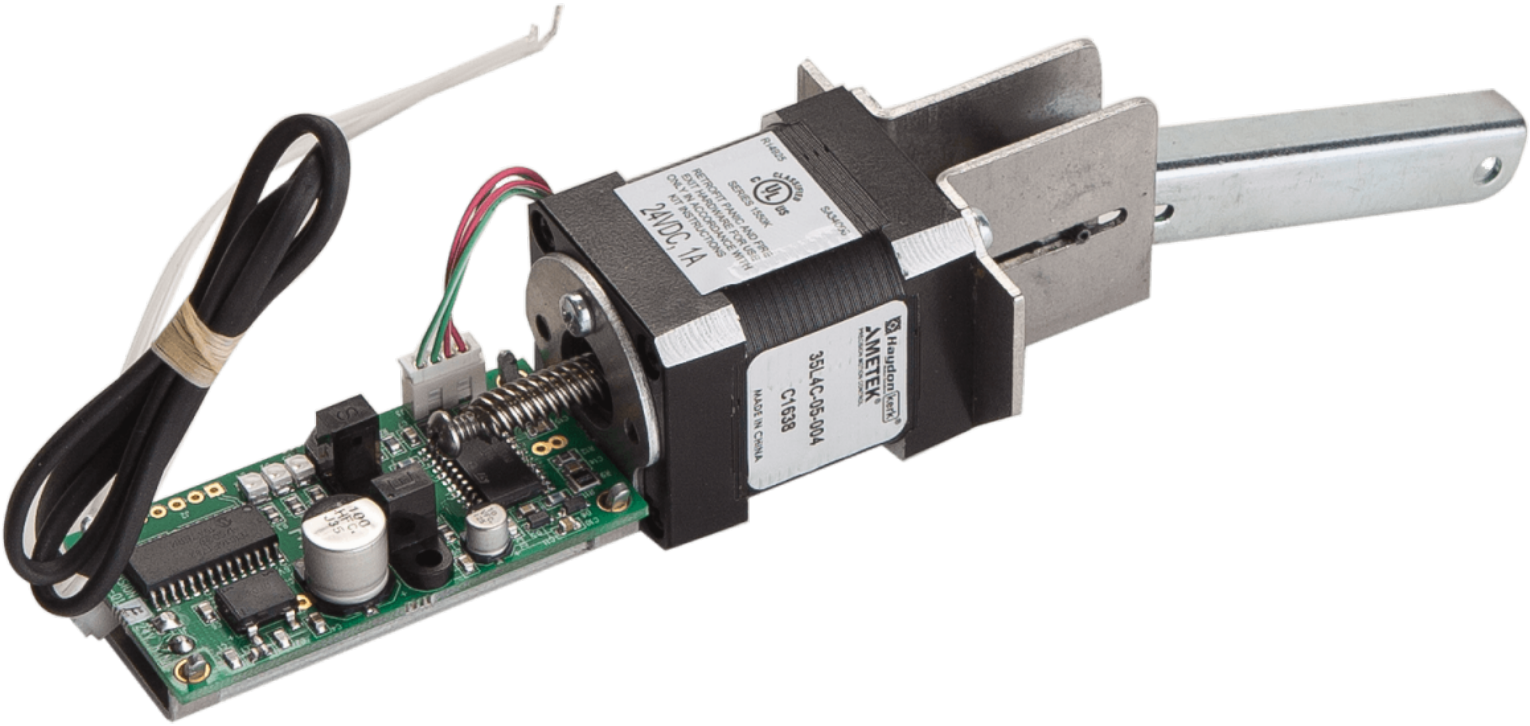
24VDC, 1A
AMETEK
Haydon Kerk
35L4C-05-004
C1538
MADE IN CHINA

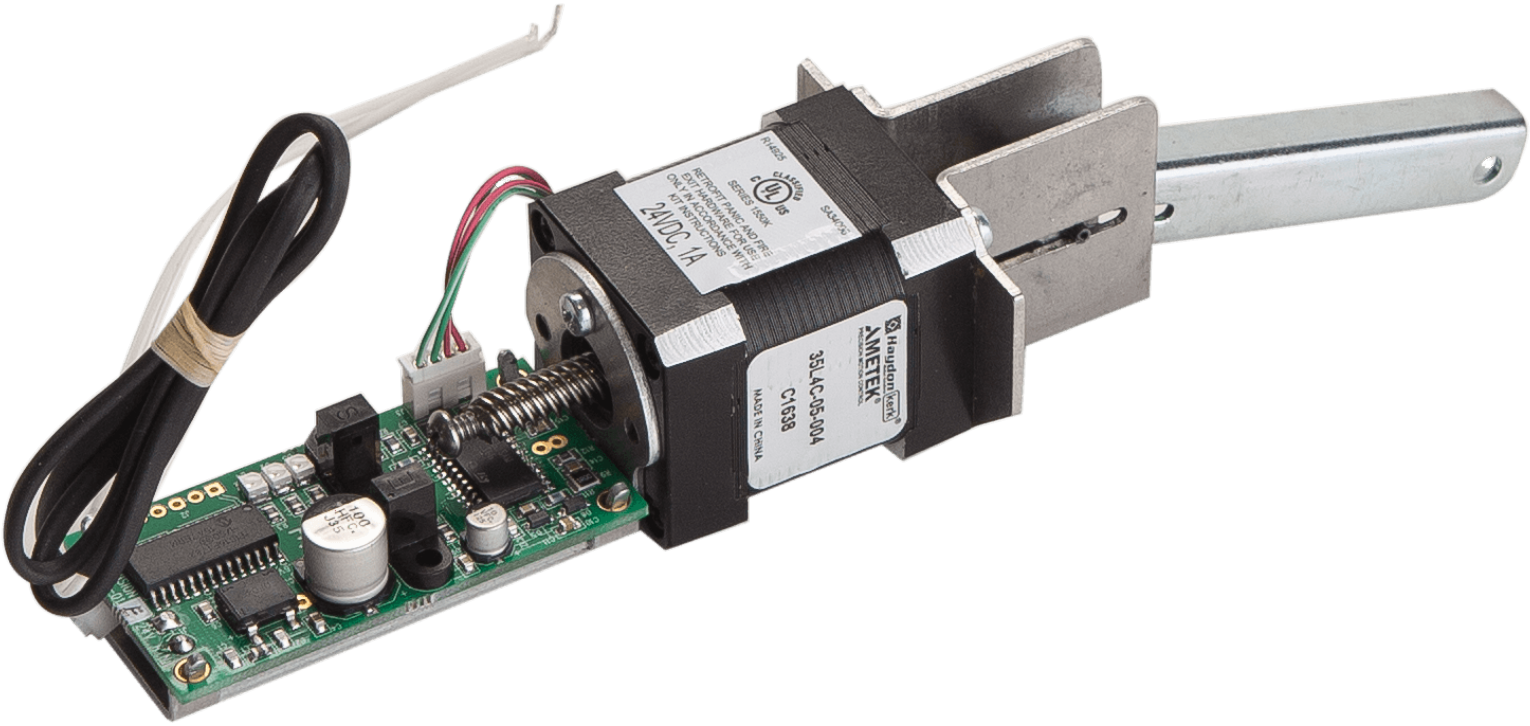
24VDC, 1A
35LAC-05-004
C1538
MADE IN CHINA
AMETEK
Haydon Kerk





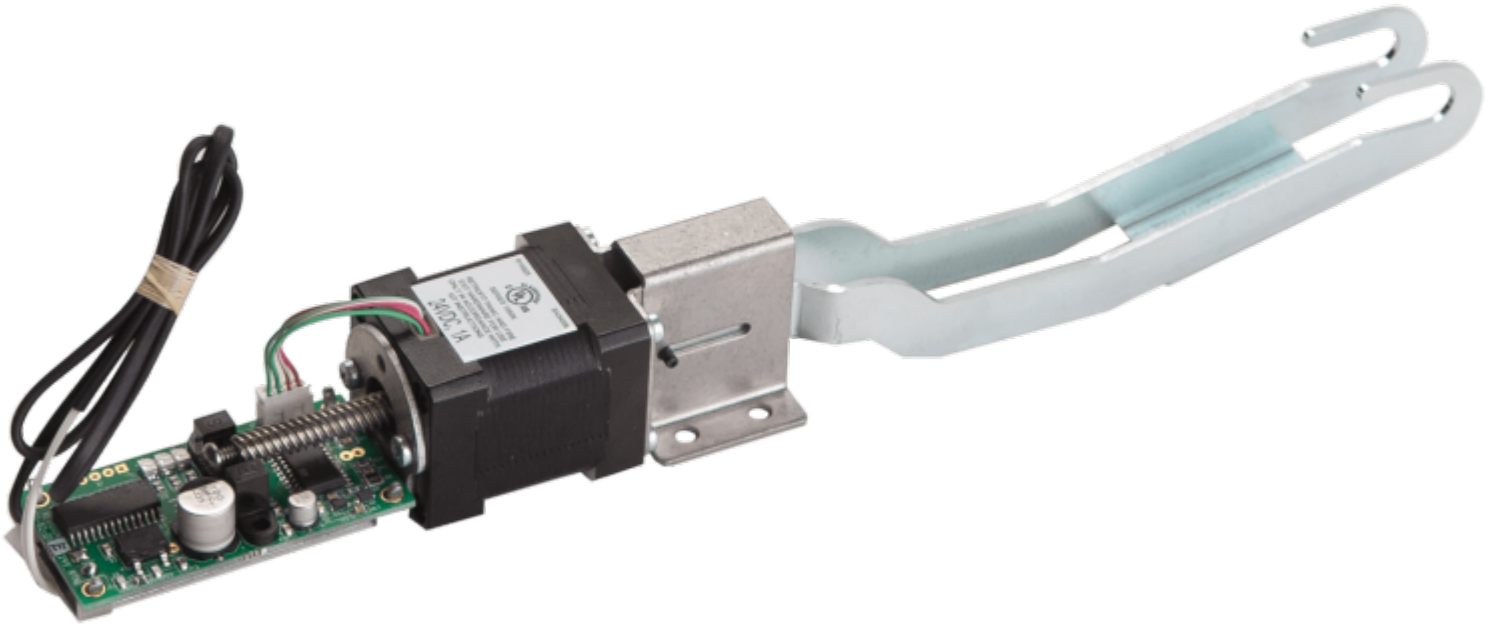

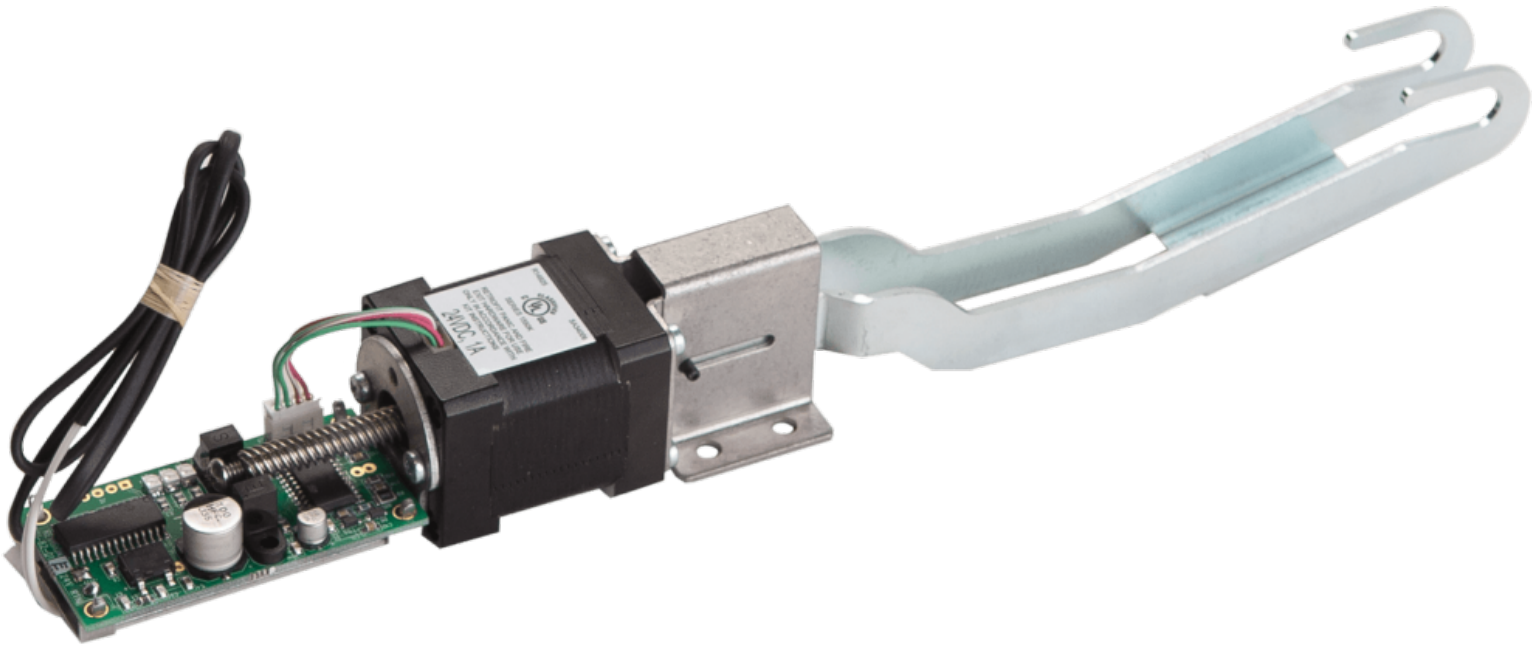

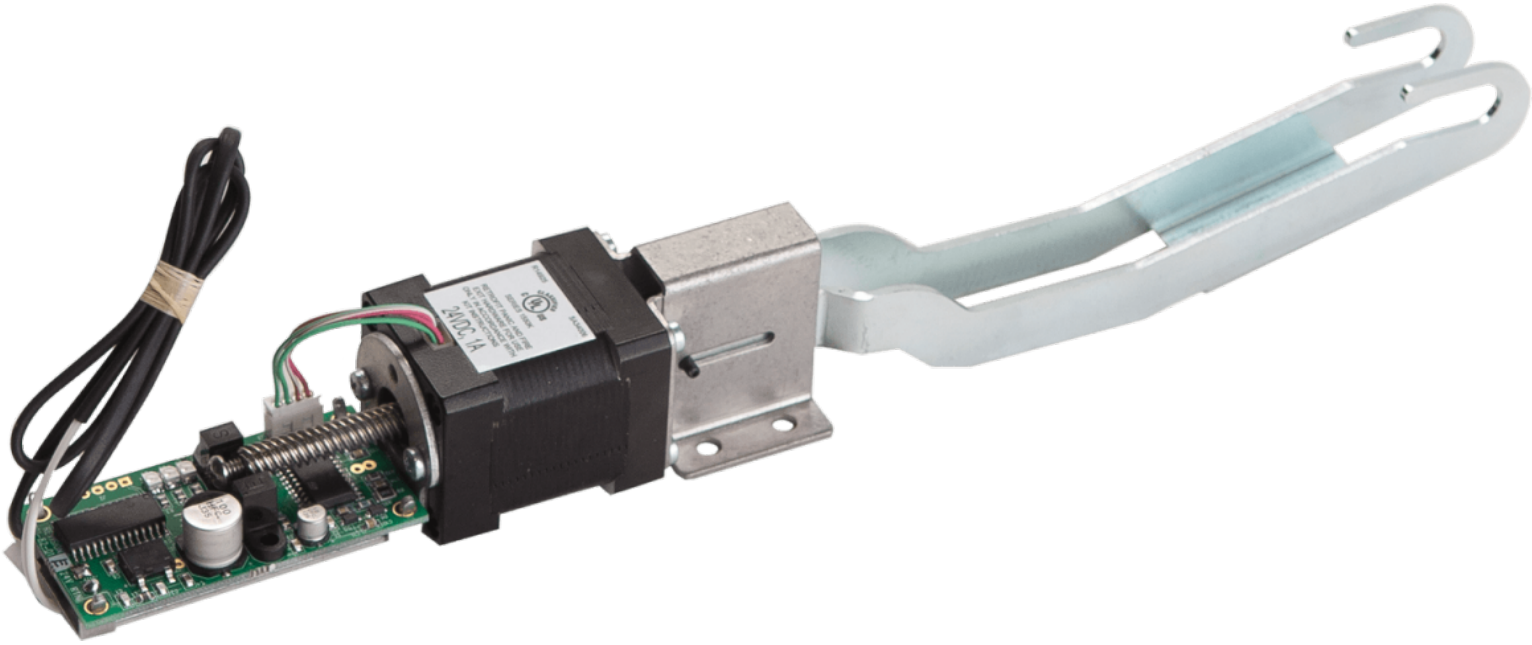

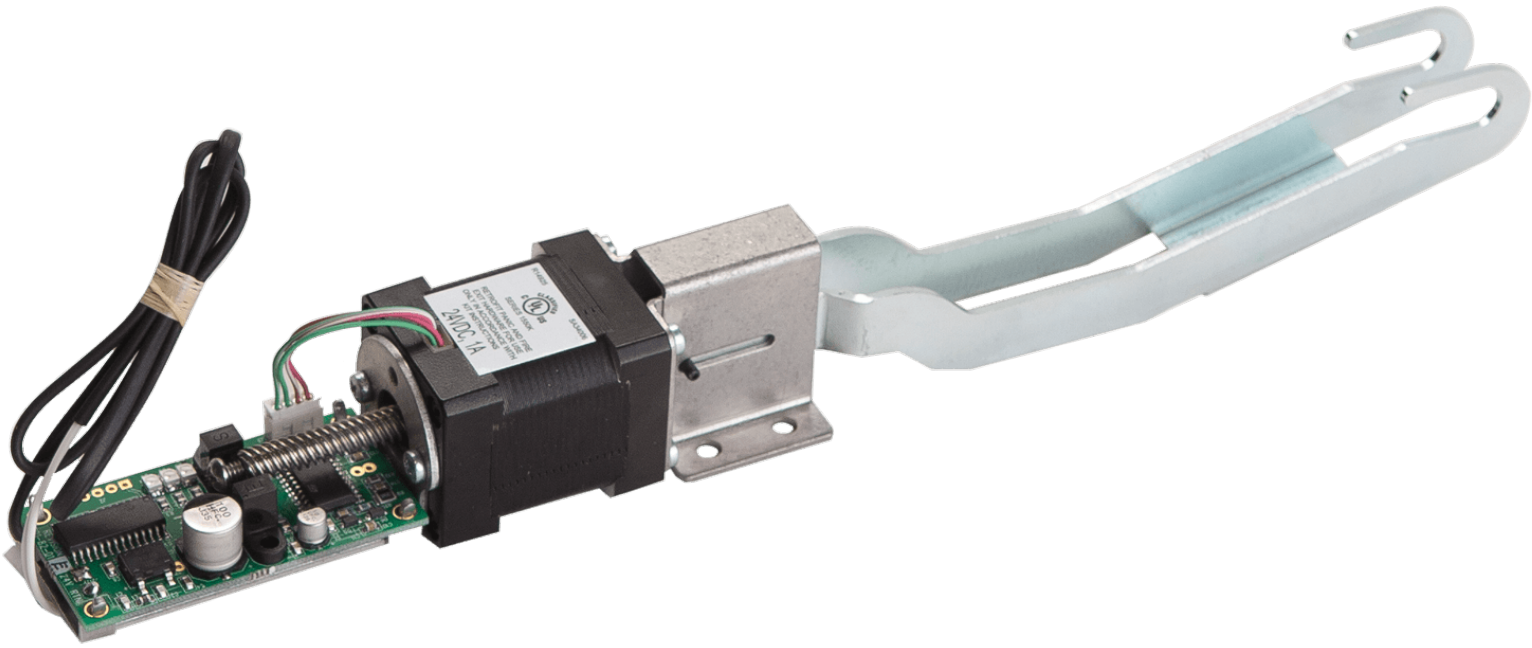





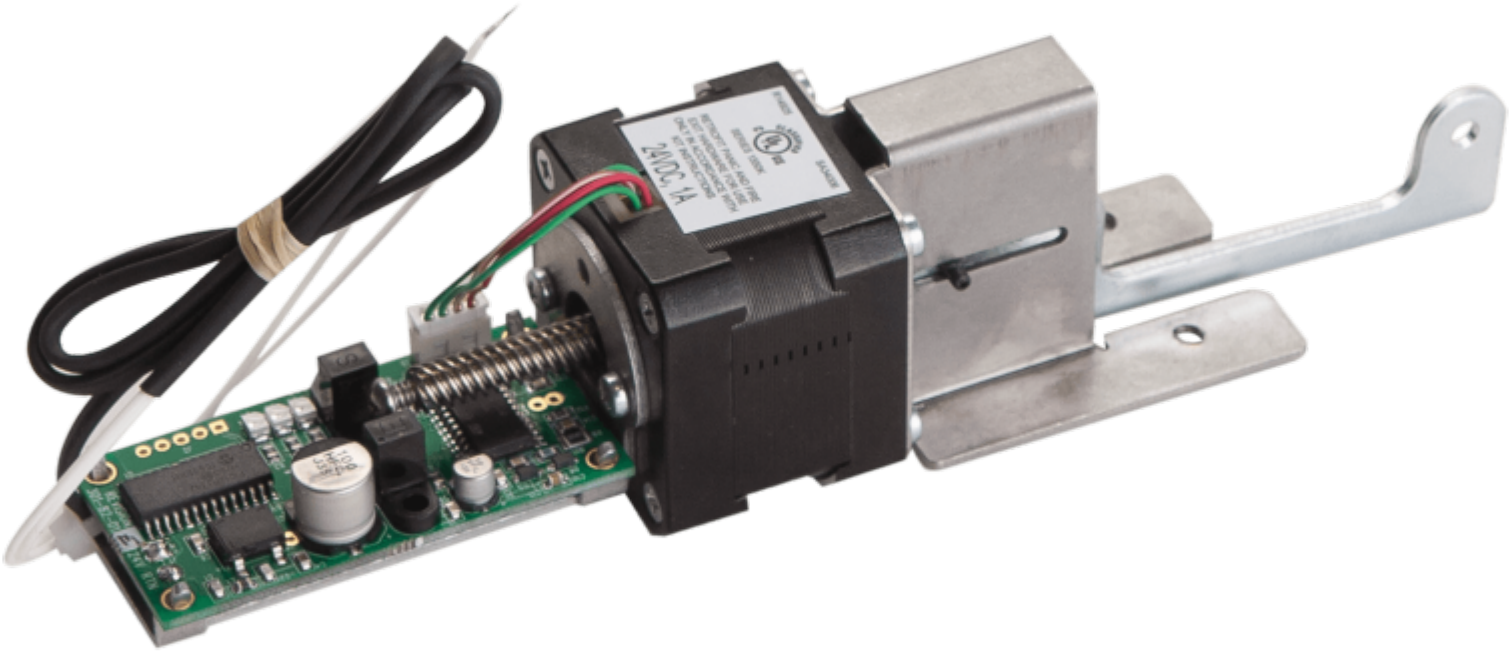

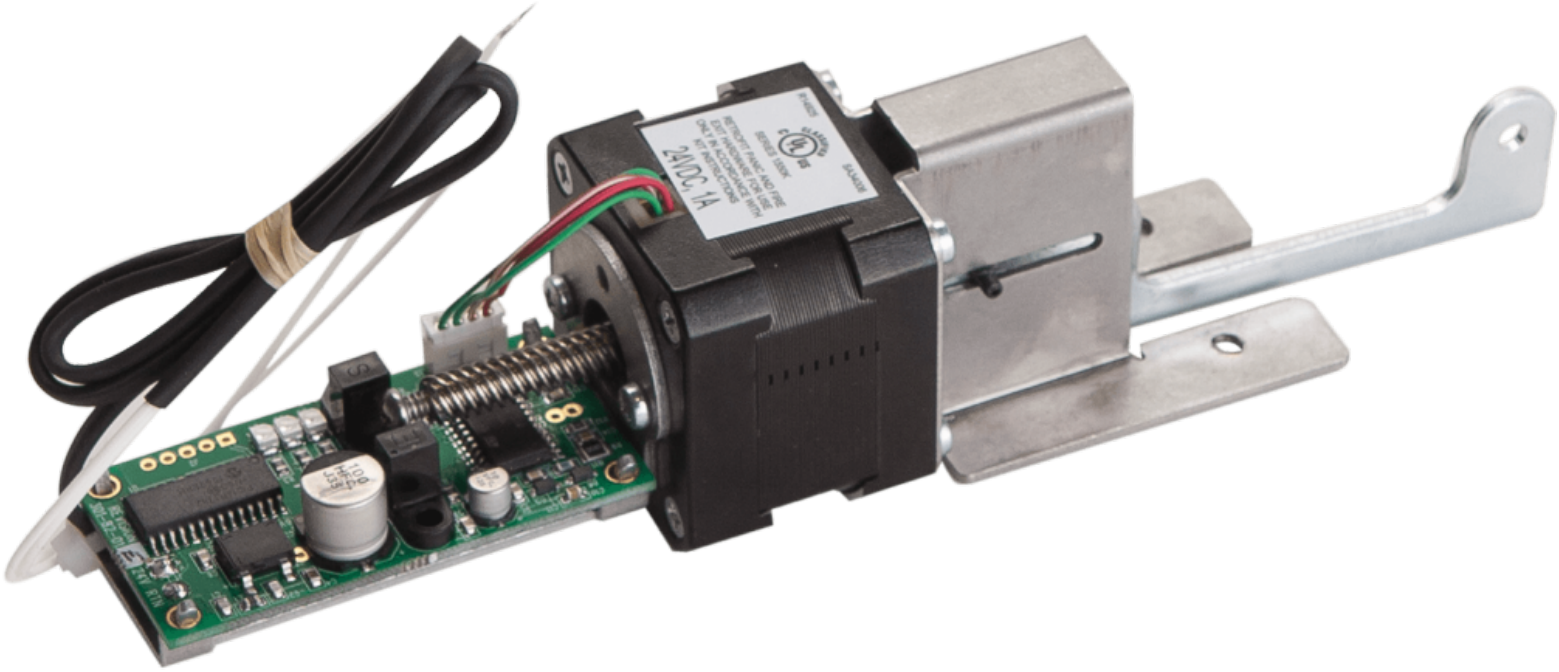
24VDC 1A

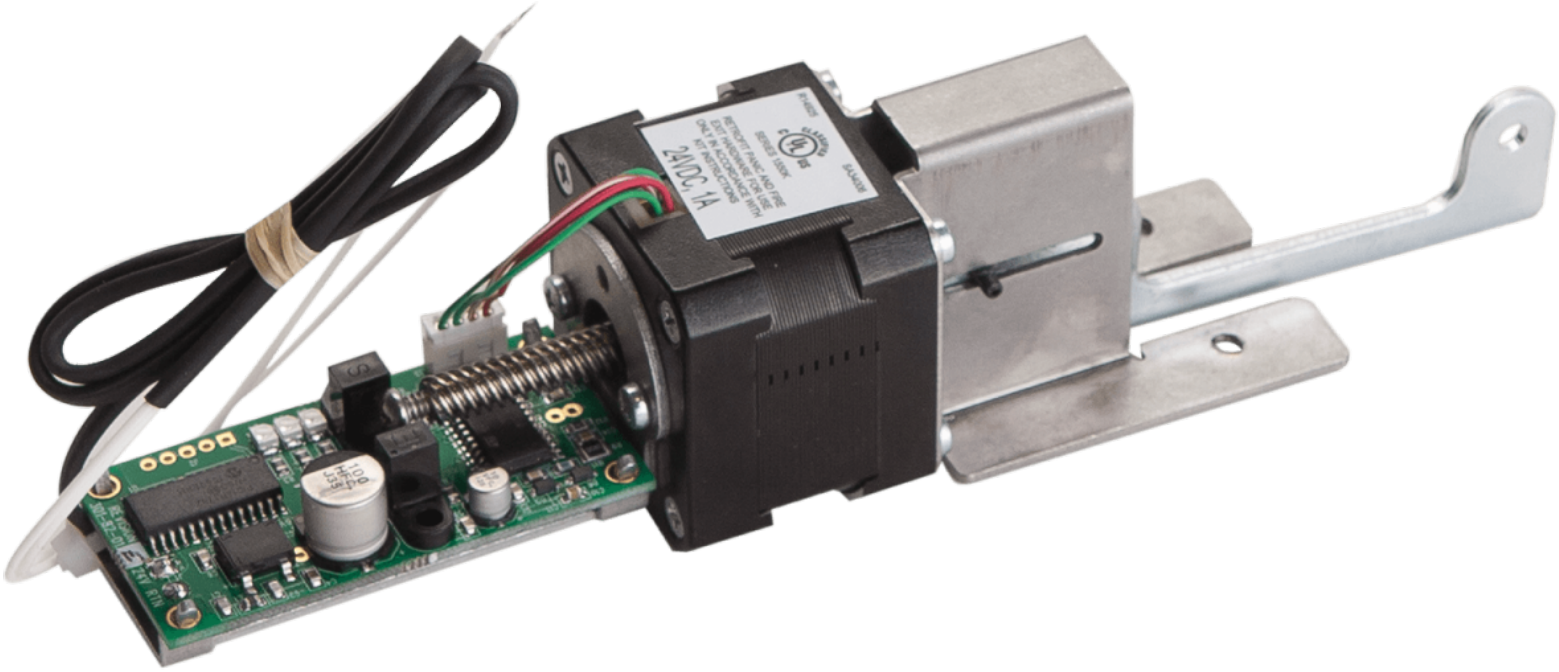
24VDC, 1A

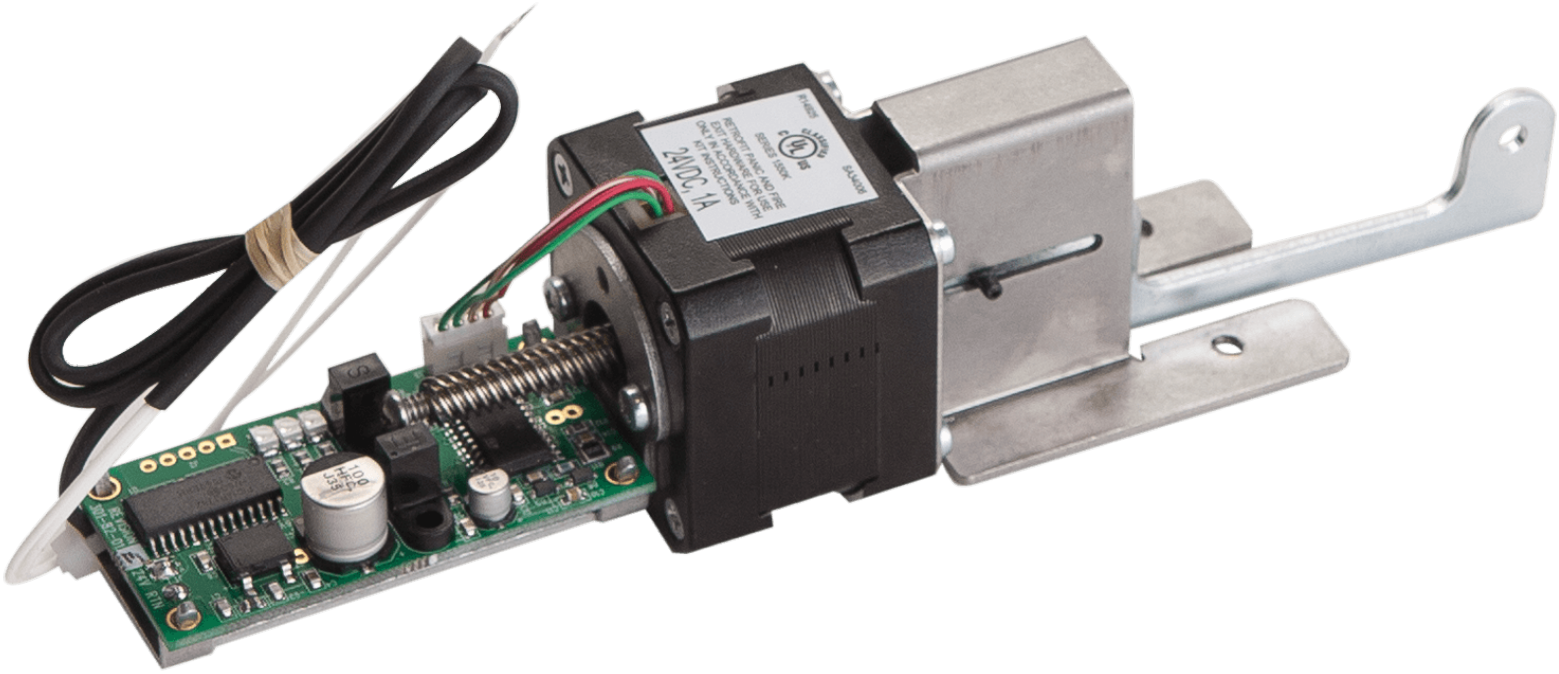
24VDC, 1A





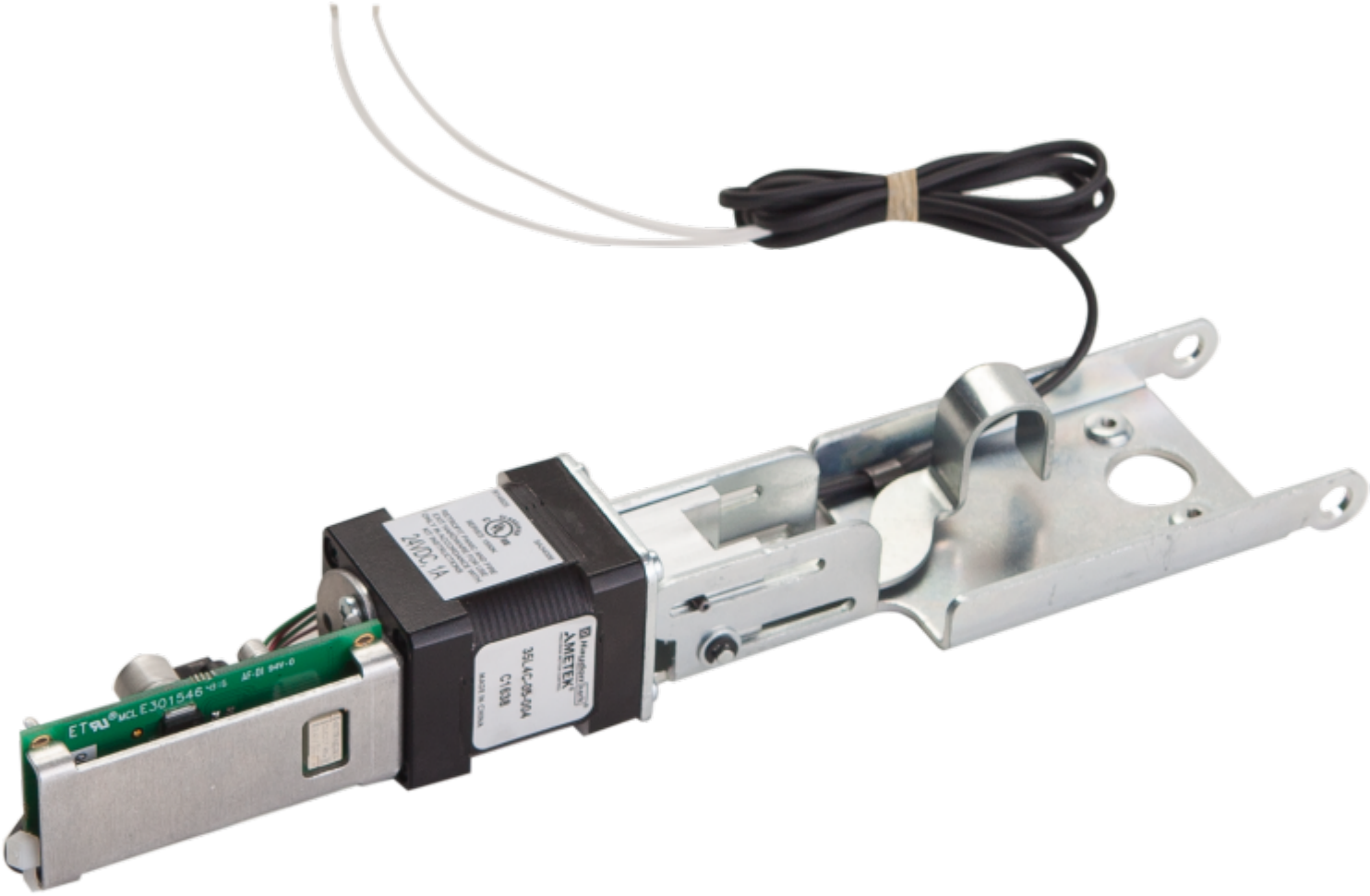
AMETEK
MCL E301546

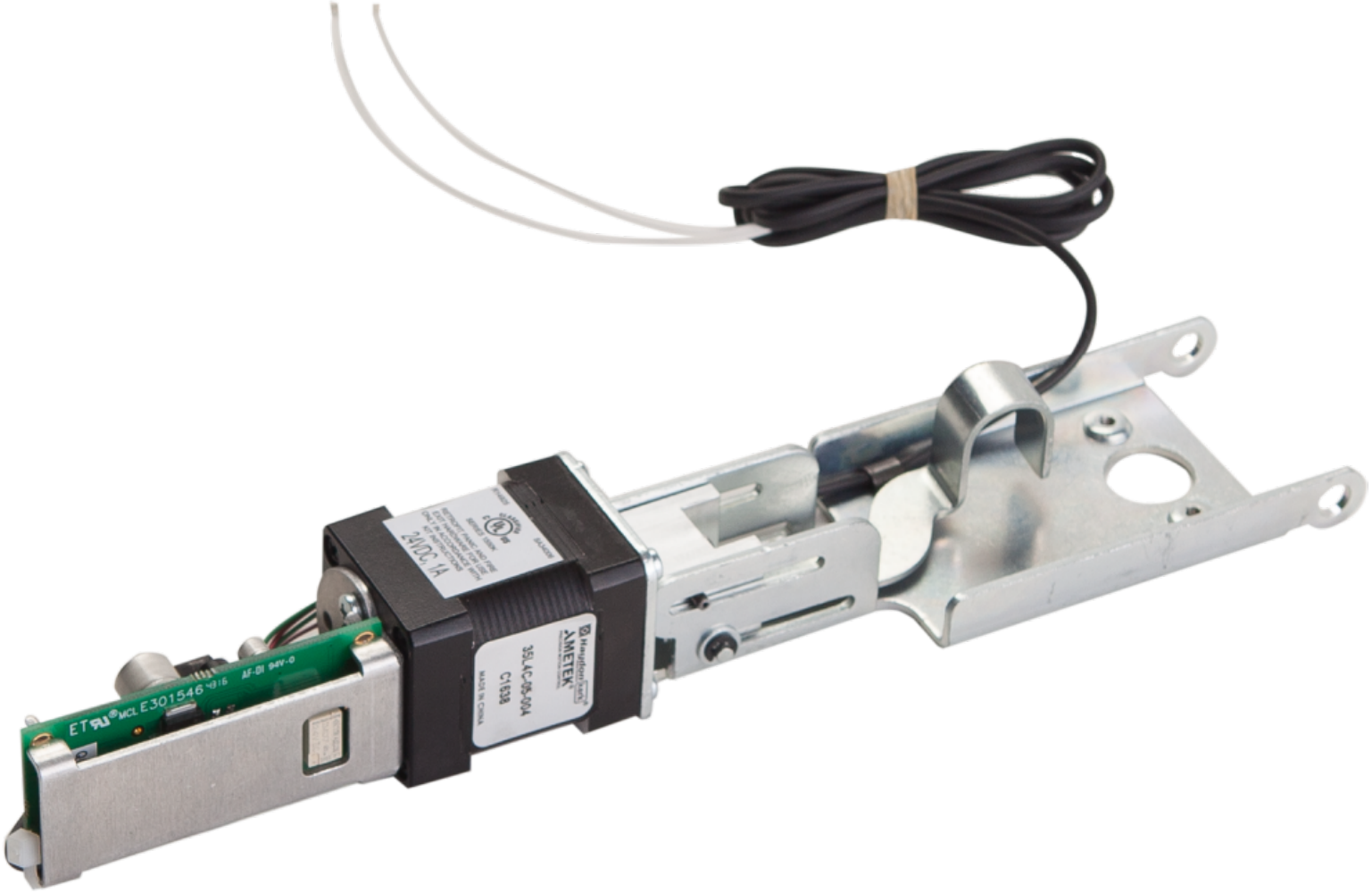
24VDC, 1A
AMETEK
35LAC-05-004
C1638
MADE IN CHINA
ETL MCL E301546
AF-01 94V-0

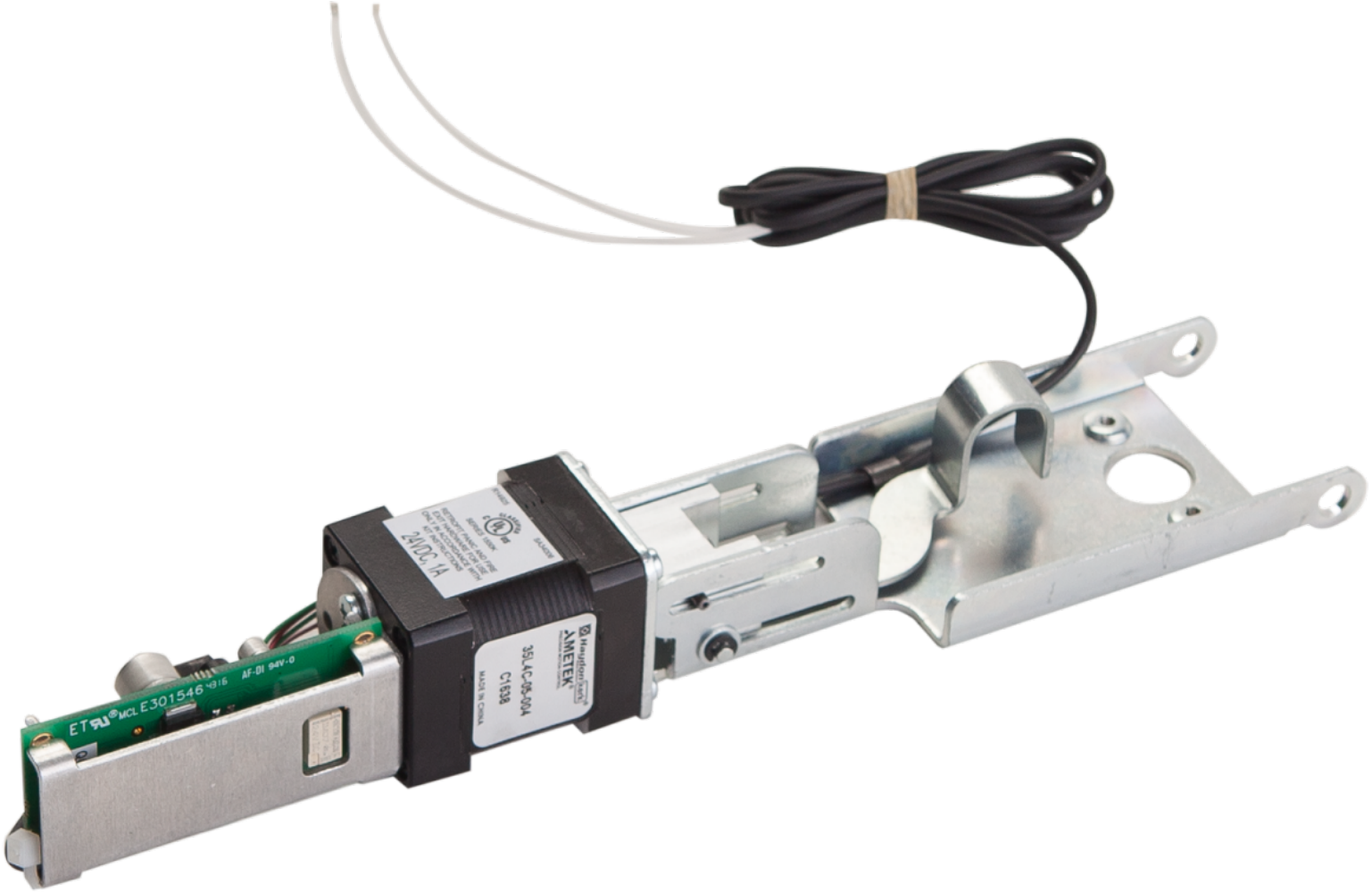
24VDC 1A
35L4C-05-004
C1538
AMETEK
Haydon Kerk
E301546
AF-01 94V-0

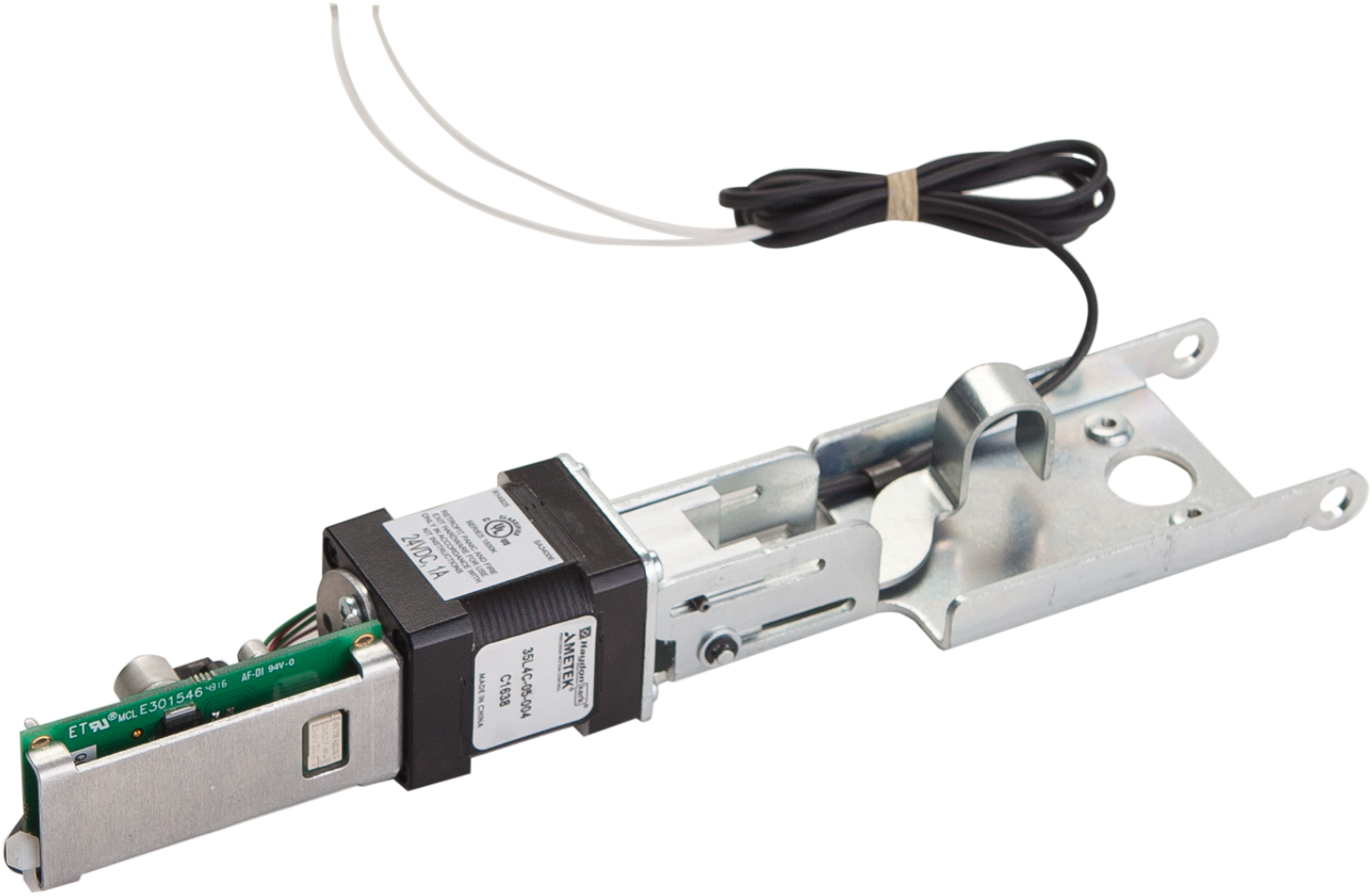
24VDC 1A
35LAC-05-004
C1538
MADE IN CHINA
AMETEK
Haydon Kerk
E301546
AF-DI 94V-0



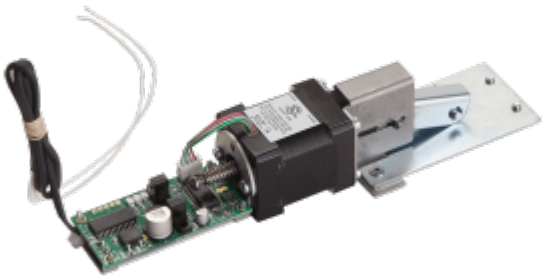

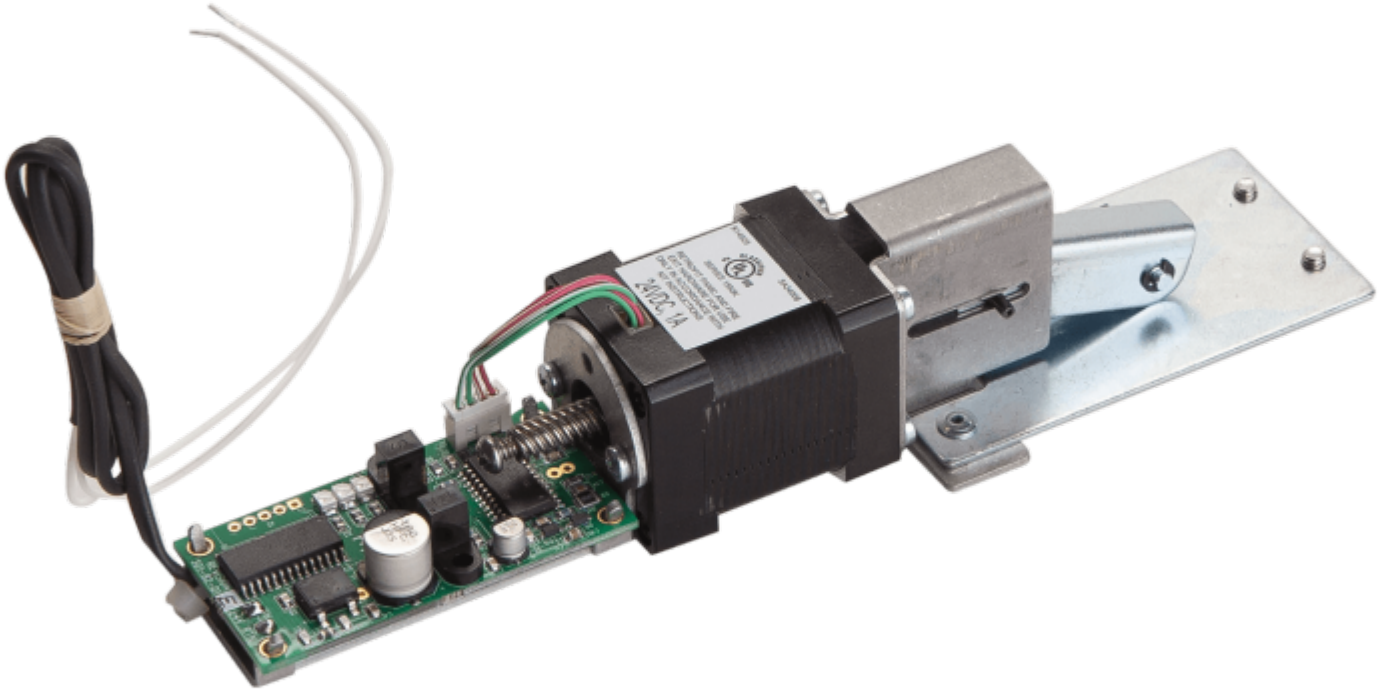

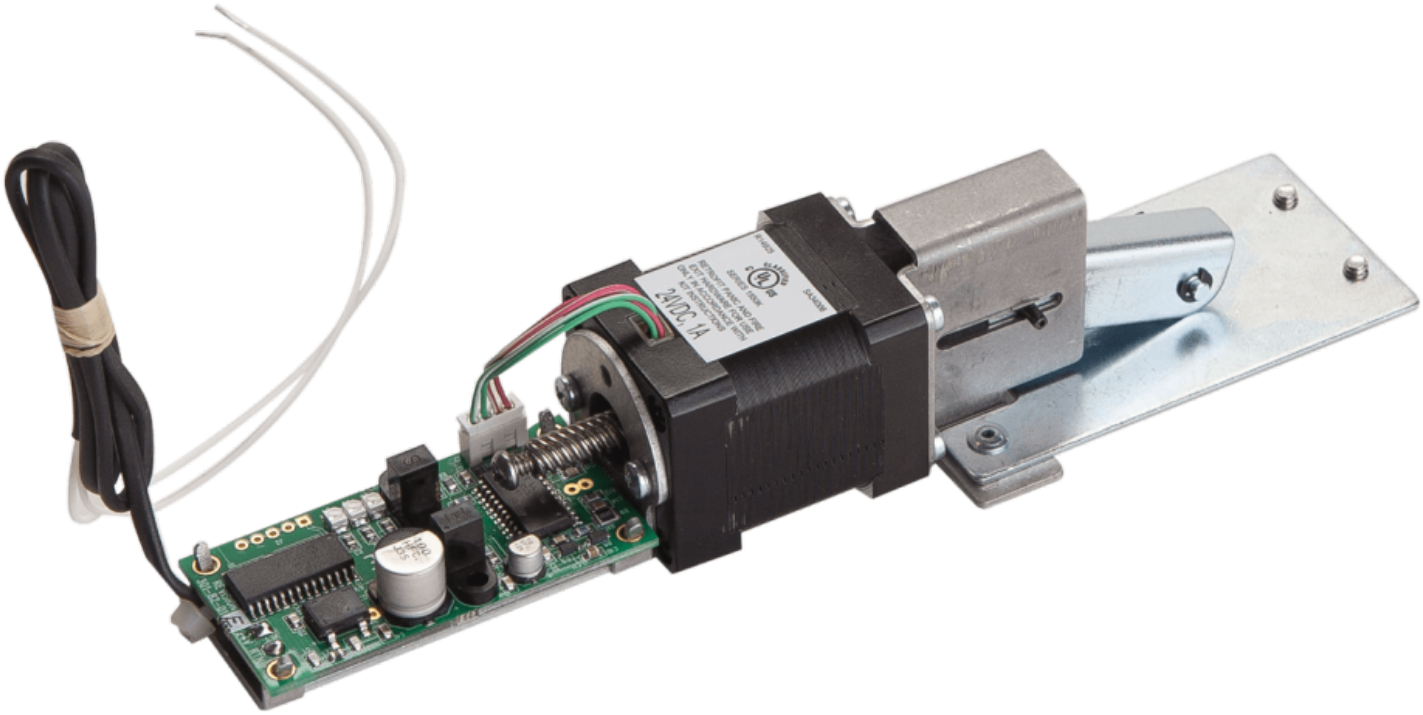

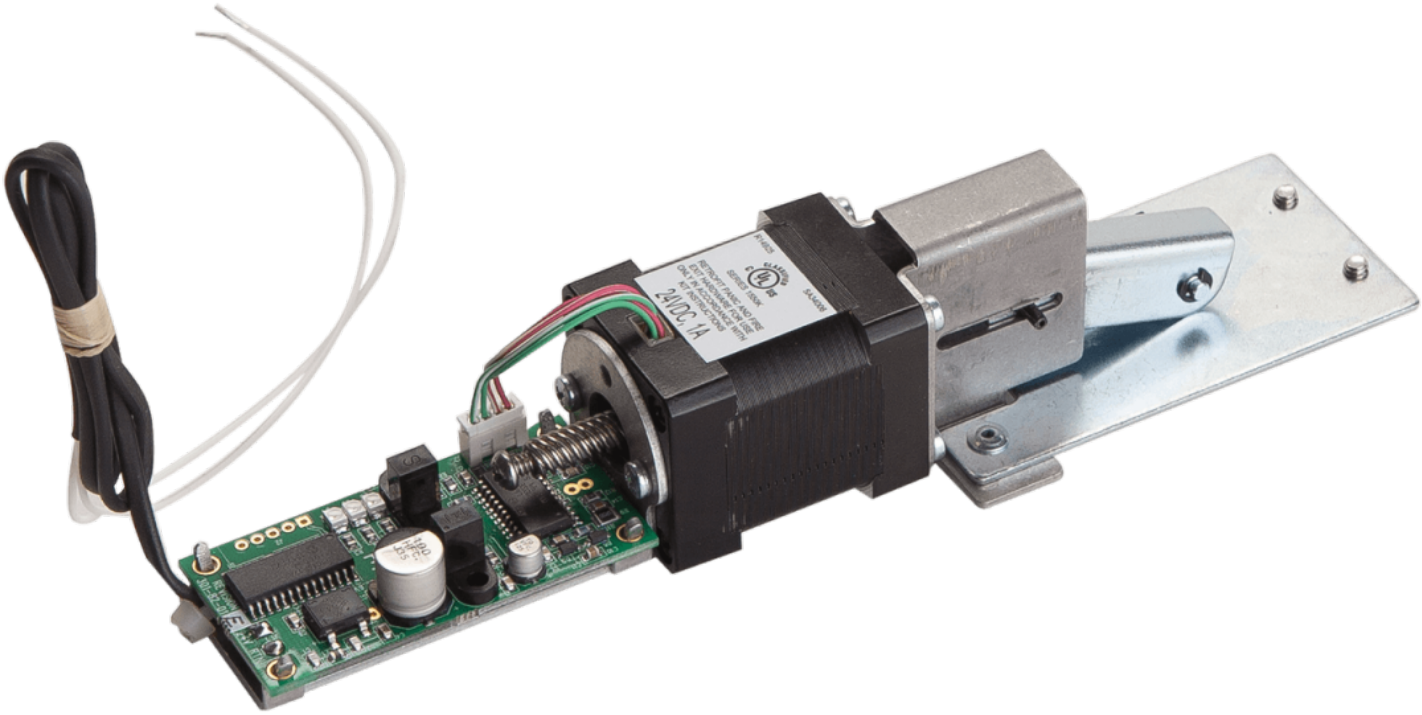
24VDC 1A

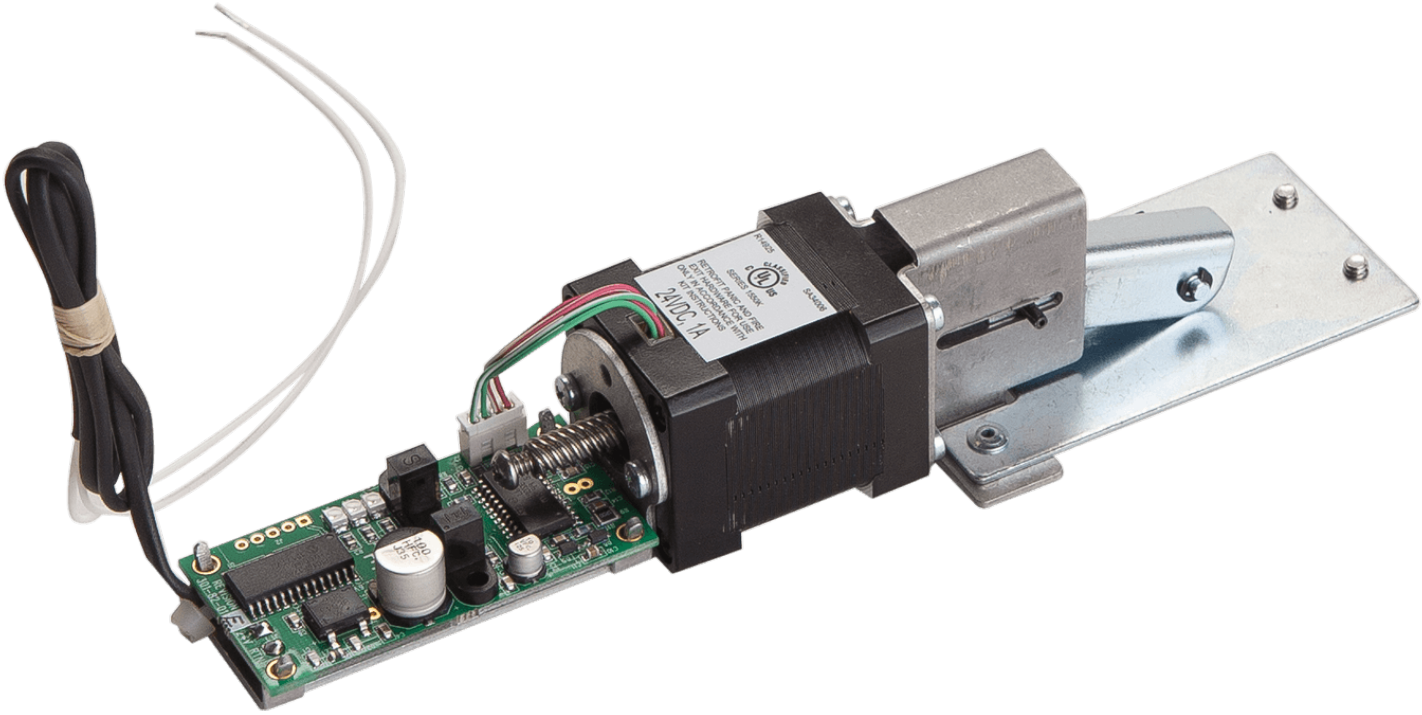
24VDC 1A



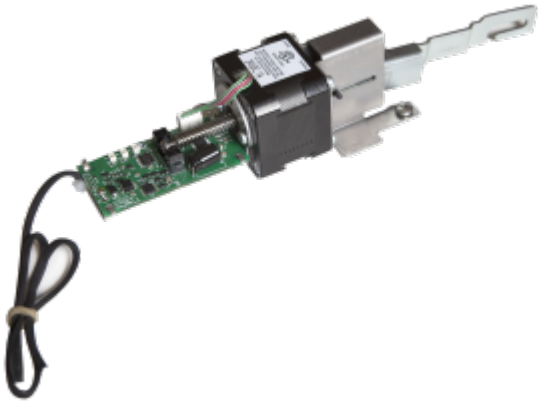

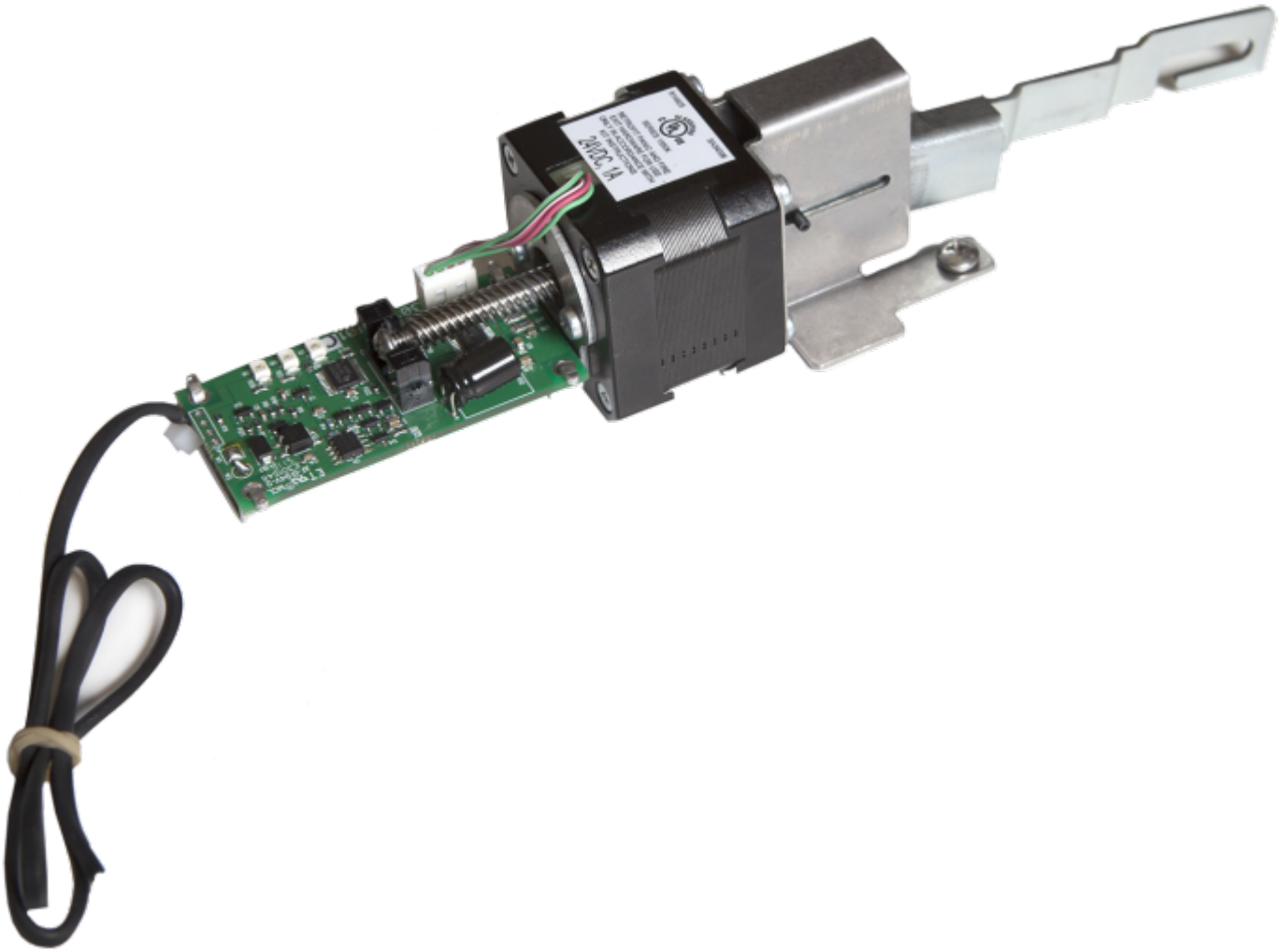

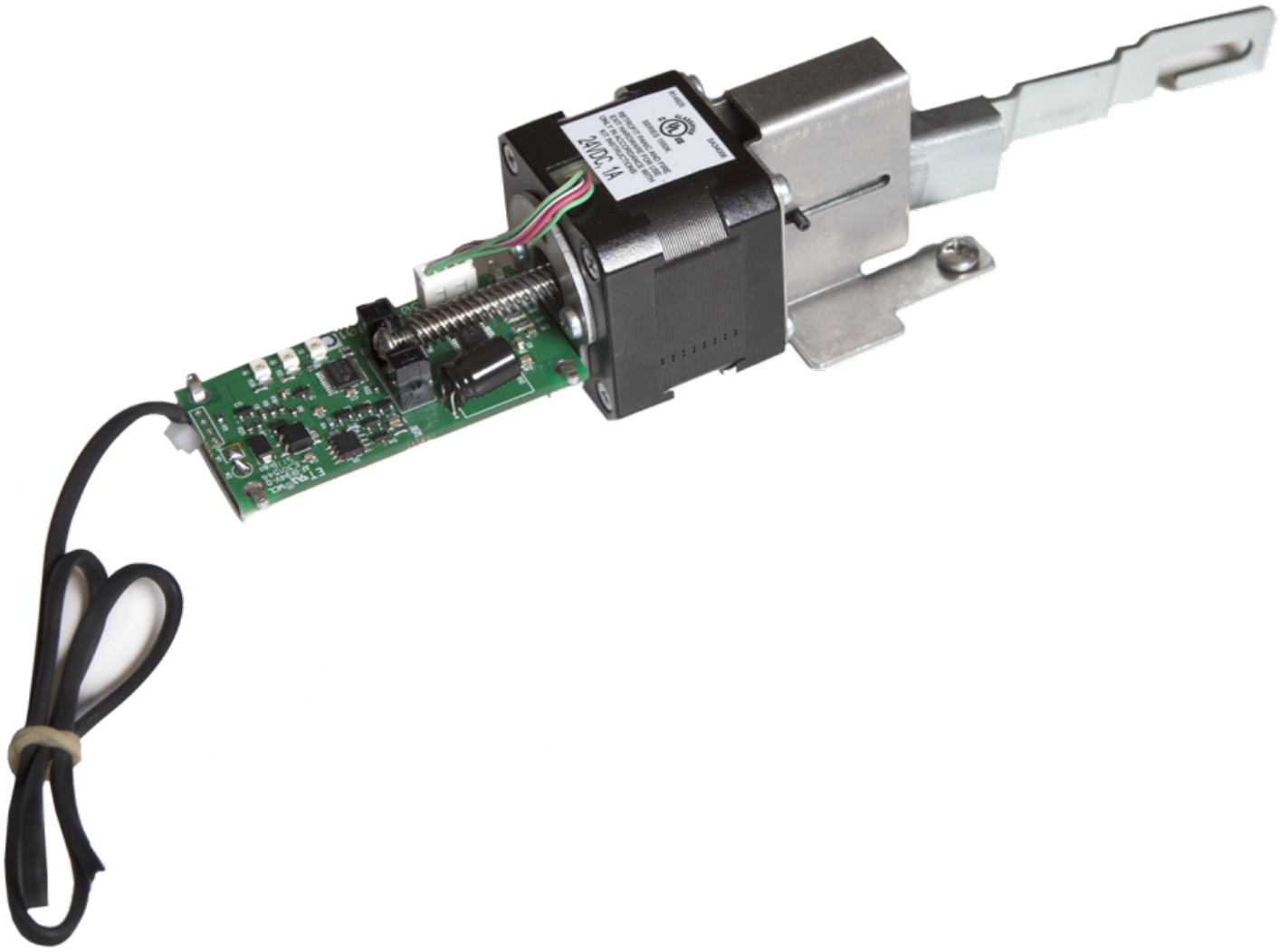
24VDC 1A

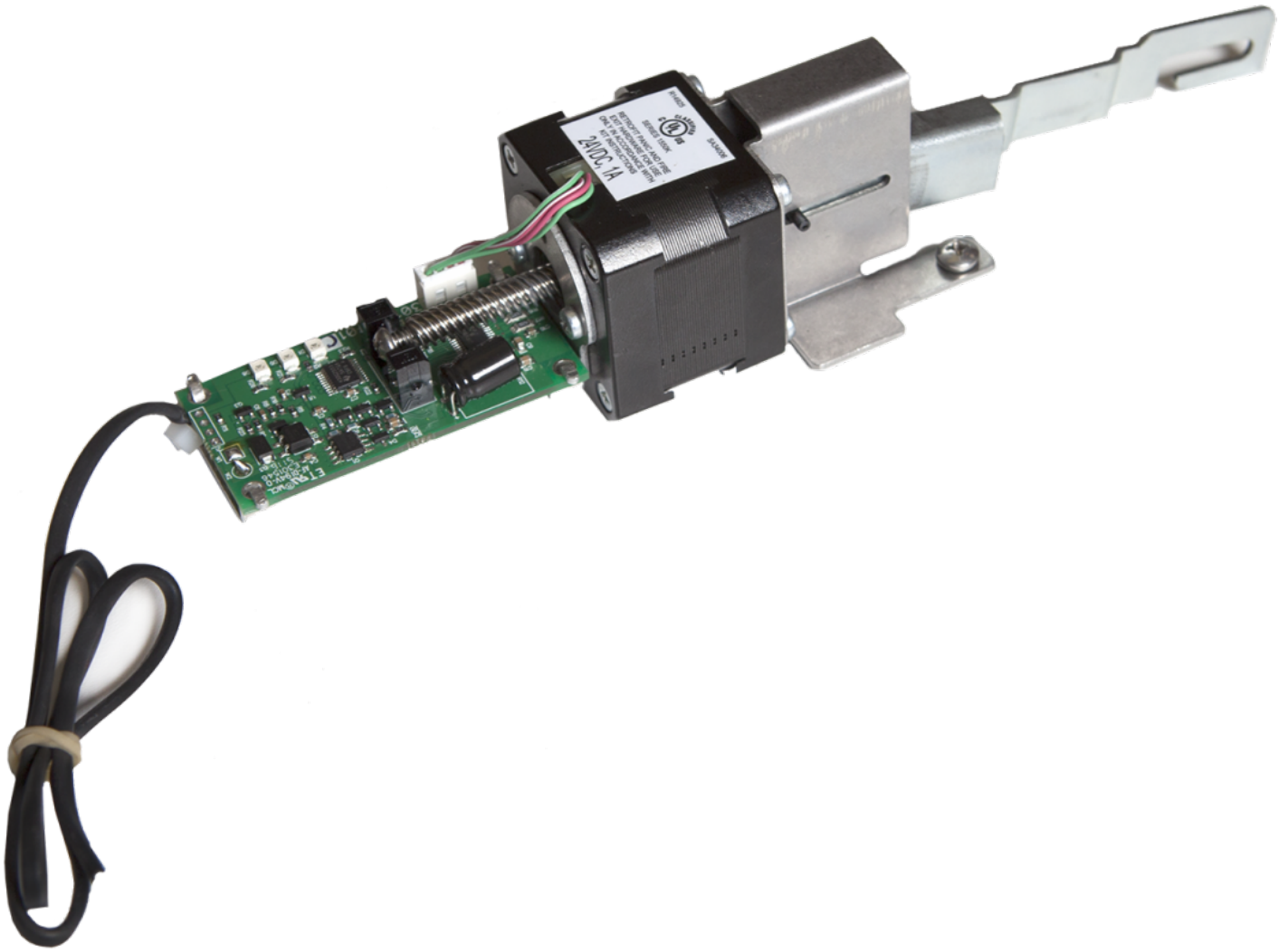
24VDC 1A

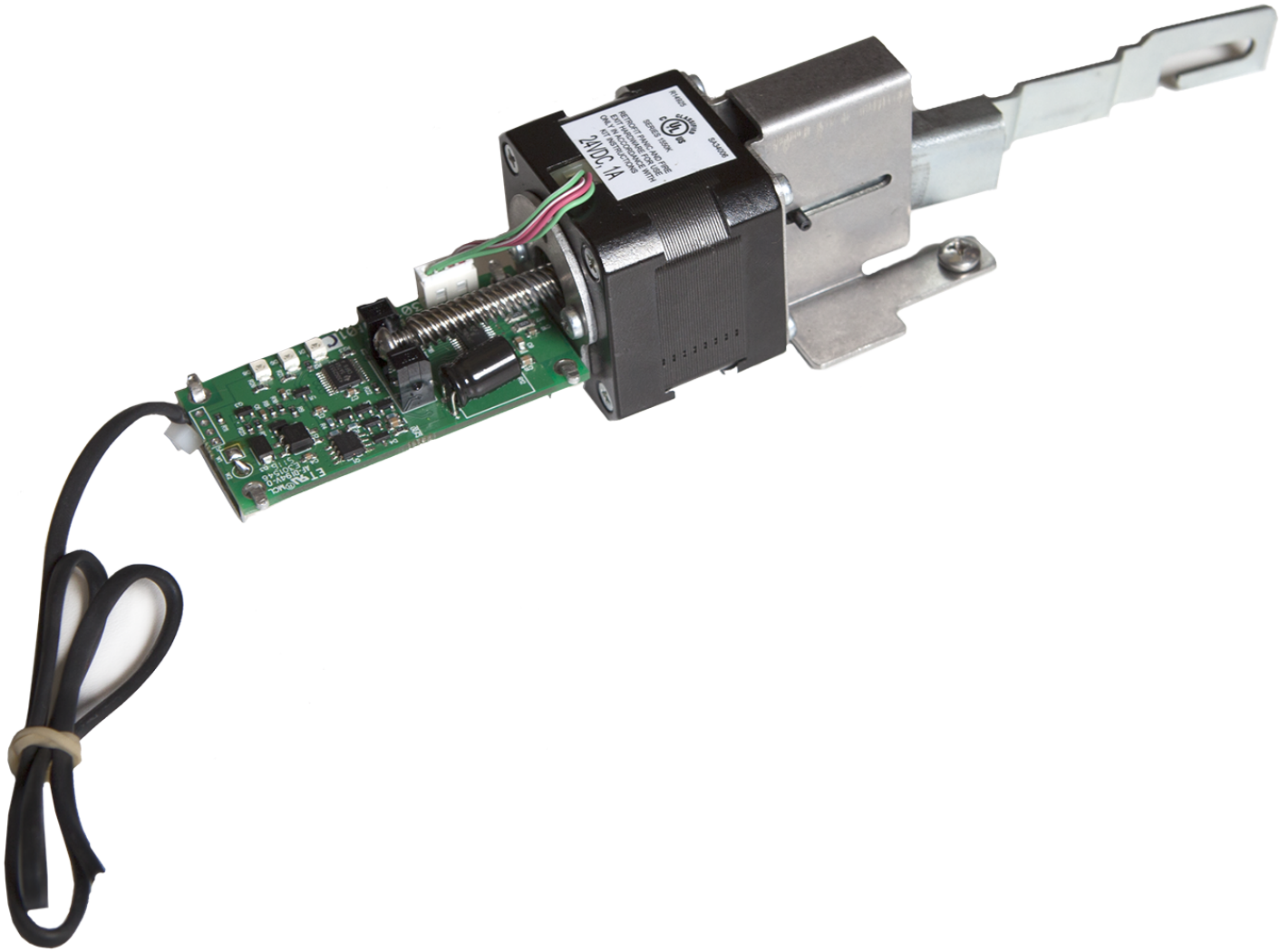
24VDC, 1A



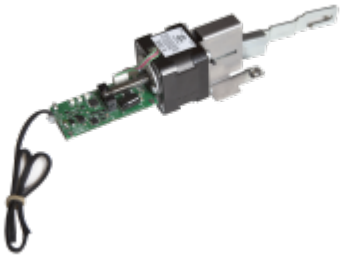

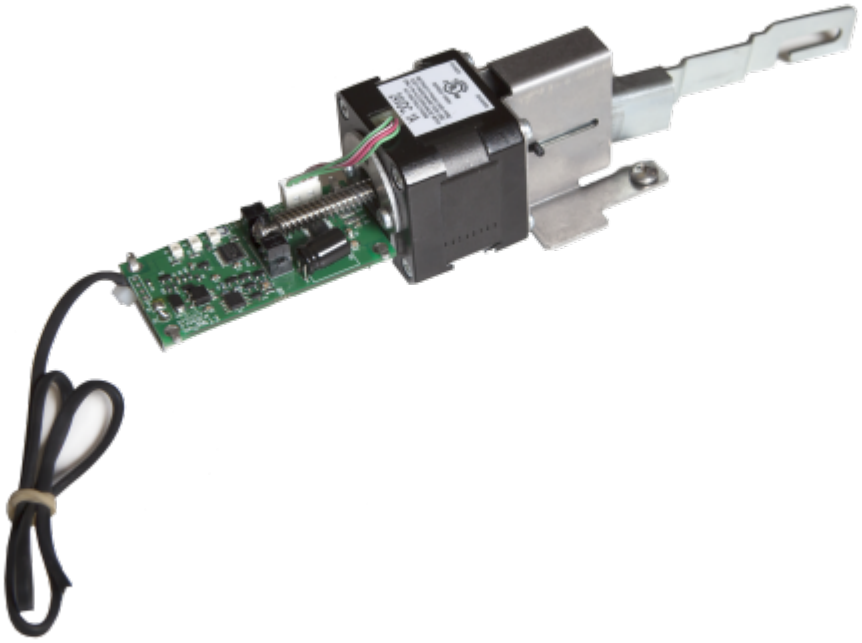

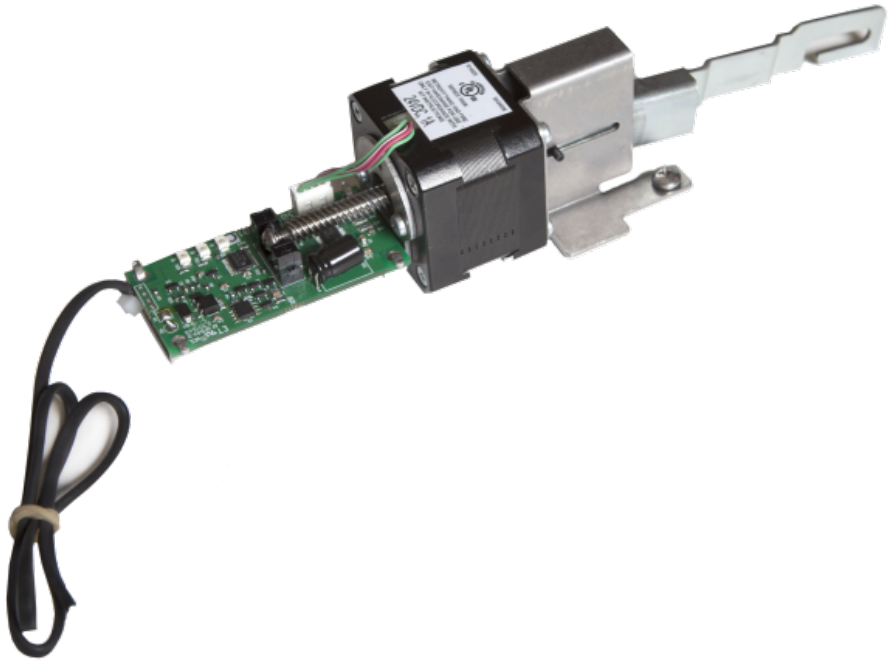

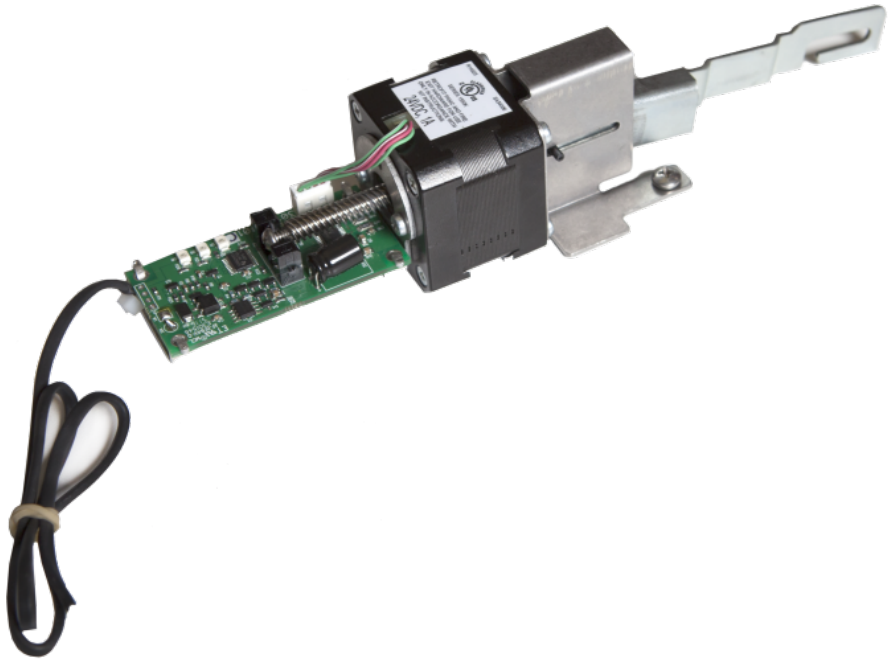

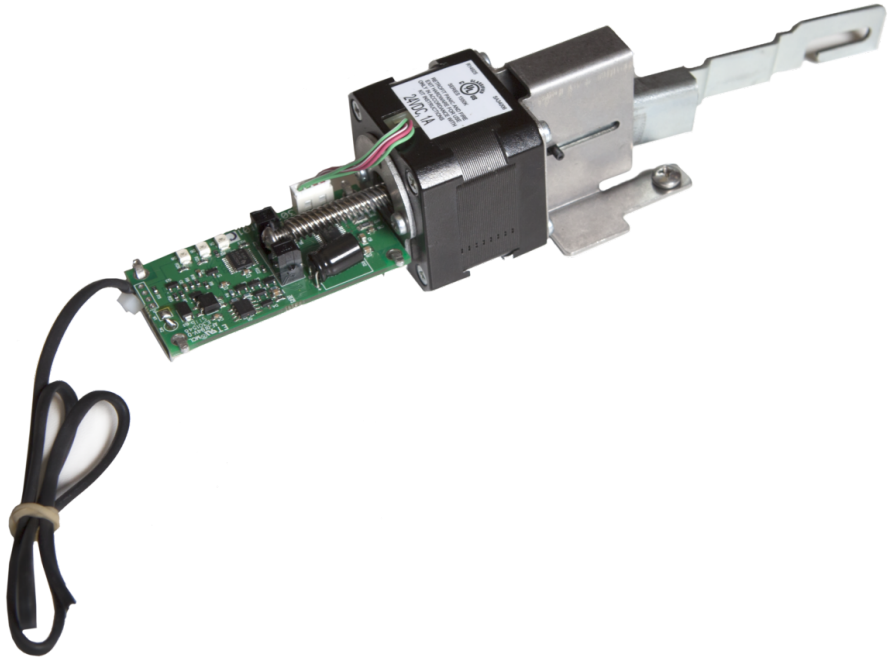

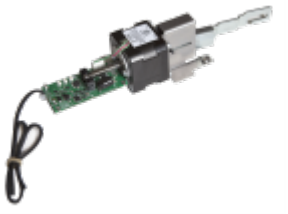

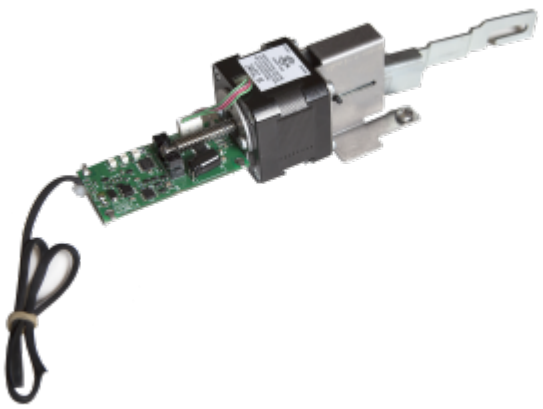

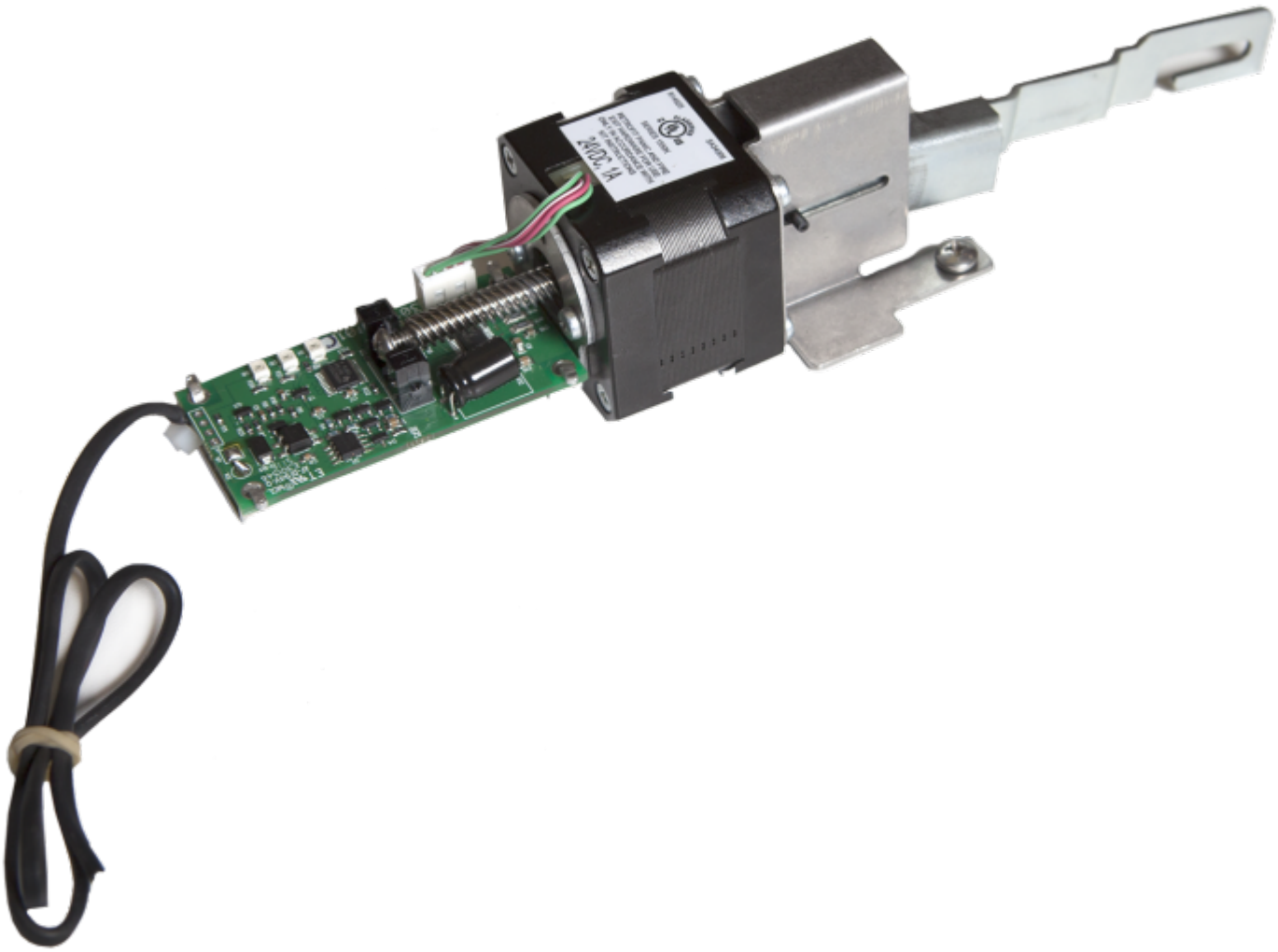

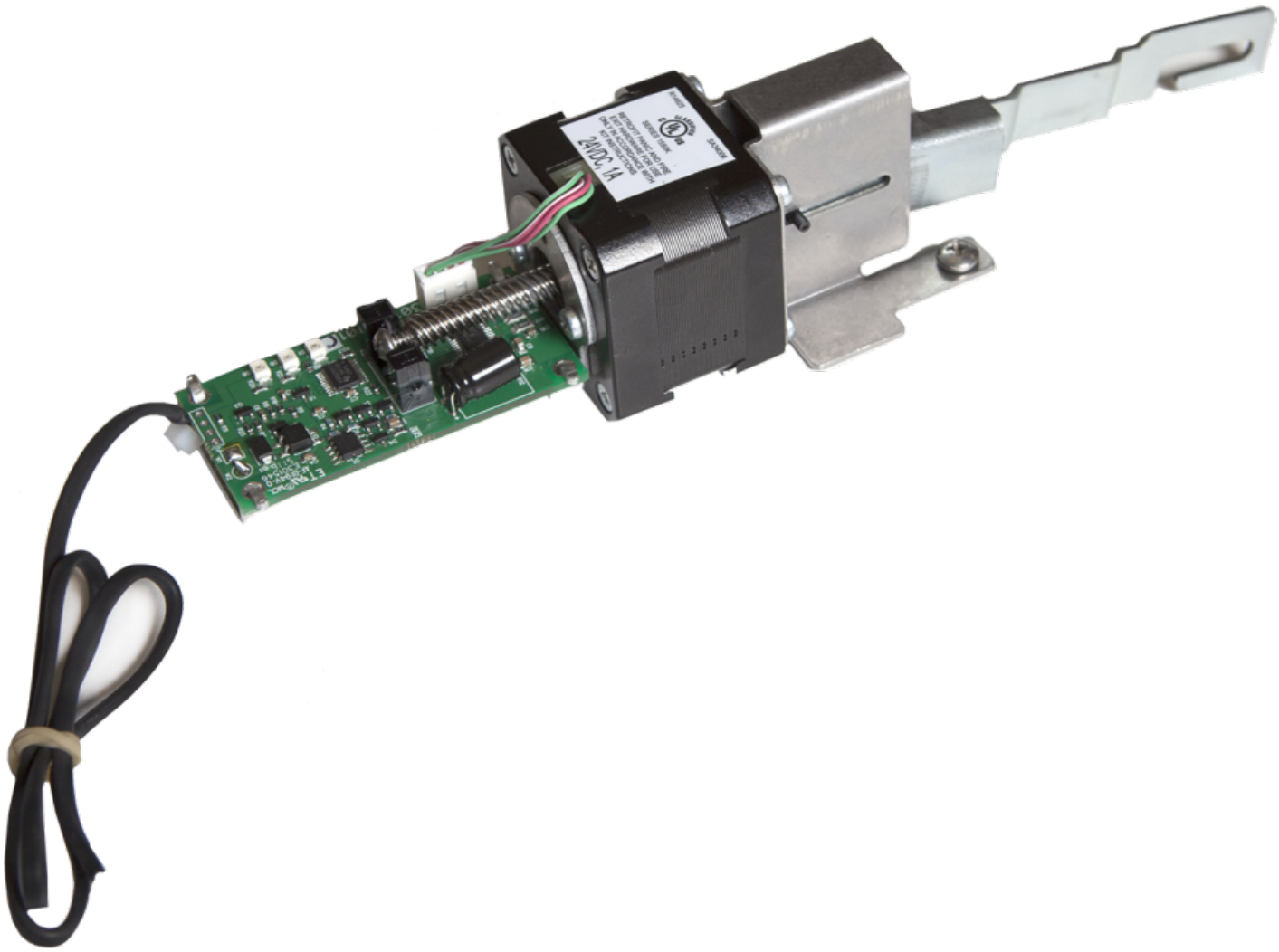

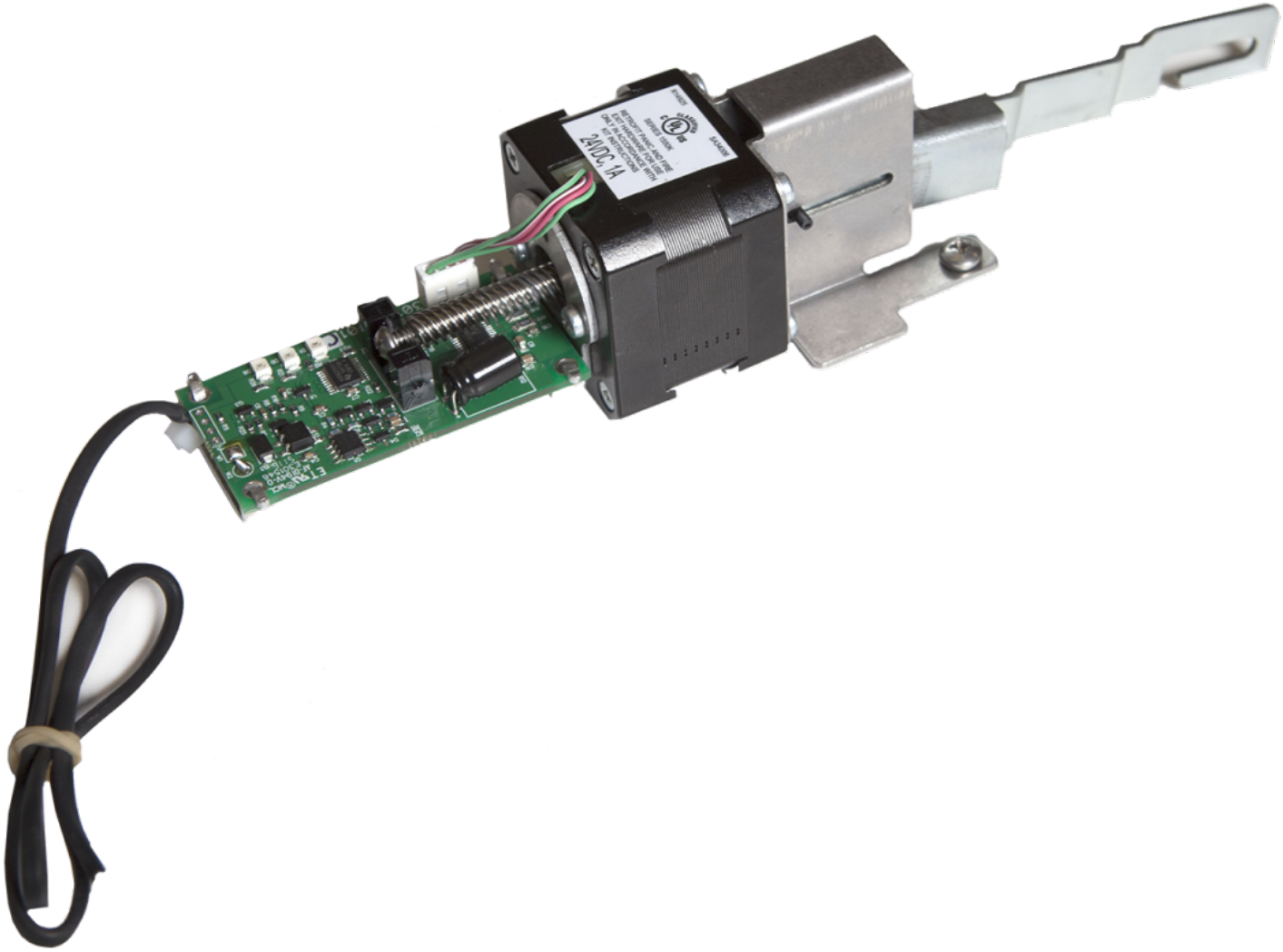

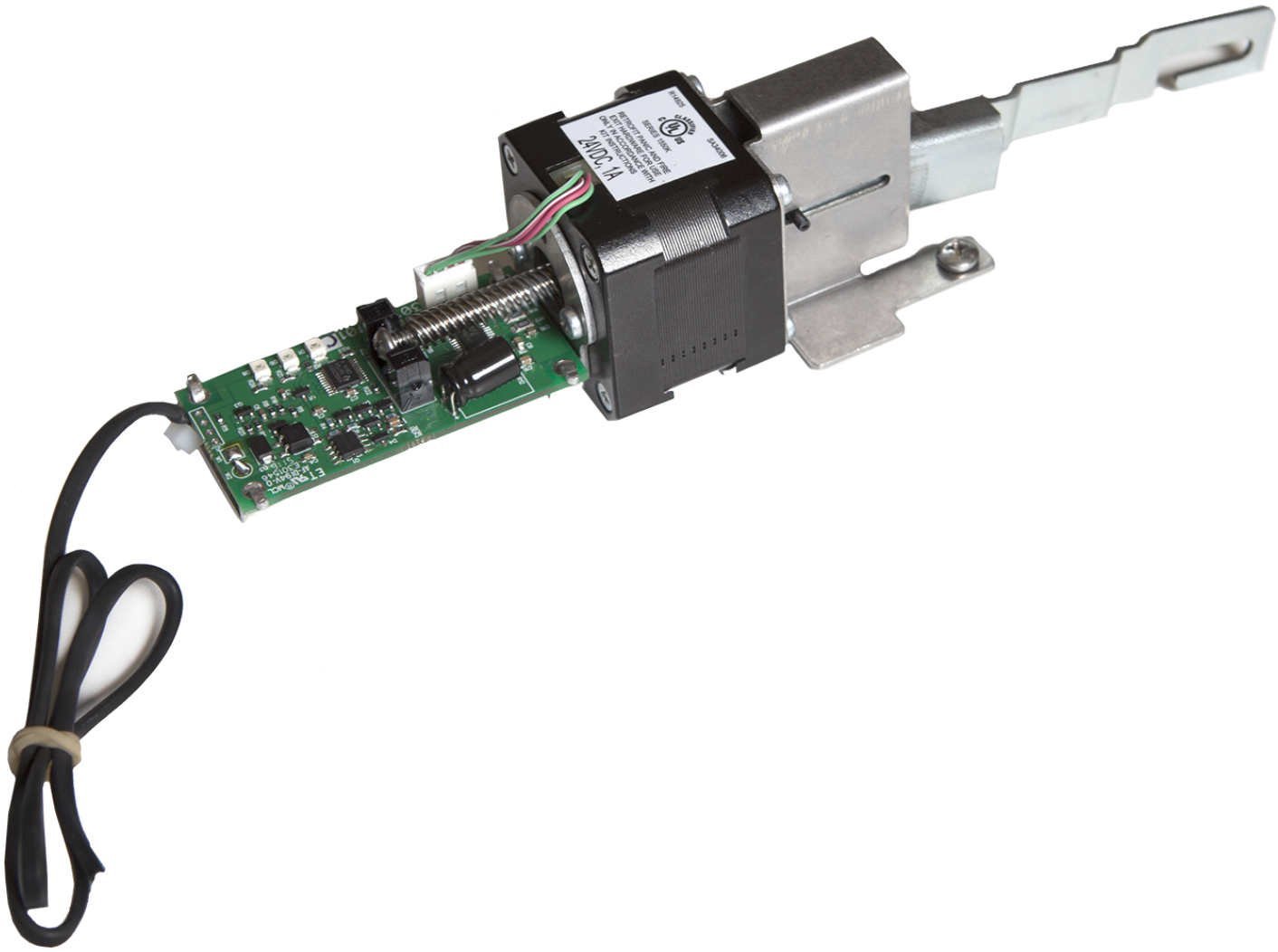
24VDC 1A

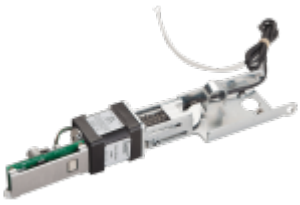

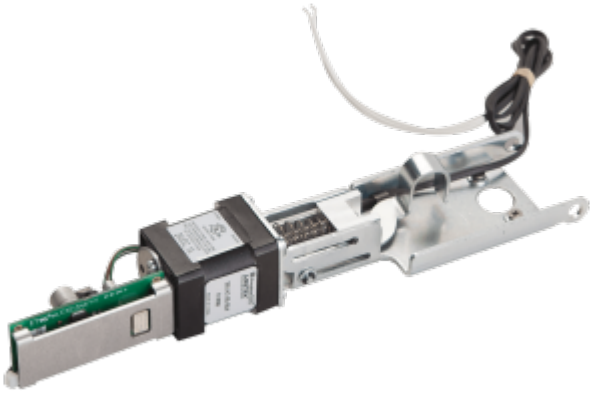

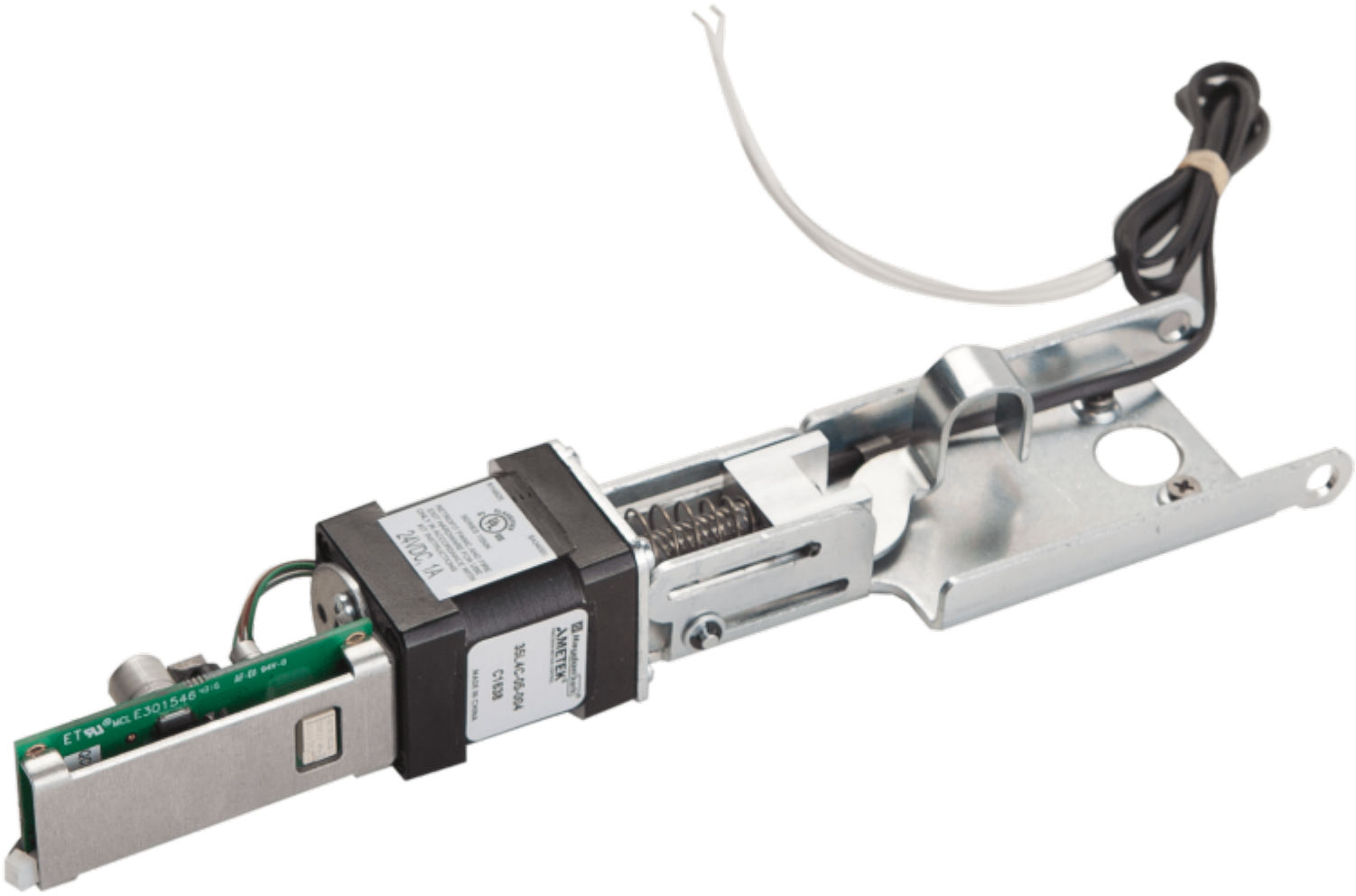
E301546
AMETEK

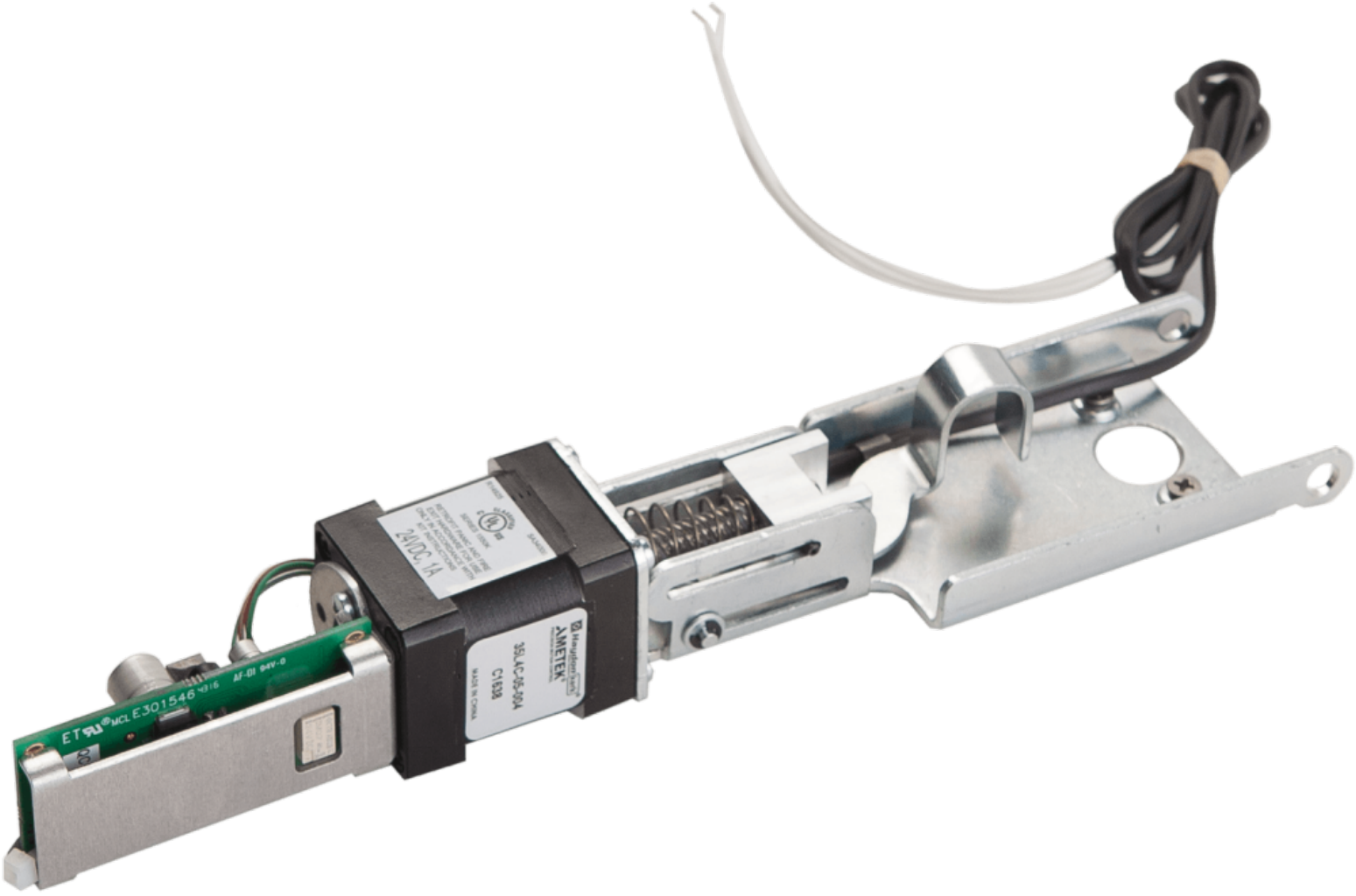
24VDC 1A
Haydon Kerk
AMETEK
35L4C-05-50A
C1938
MADE IN CHINA
ETL LISTED
MCL E301546
AF-DI 94V-0

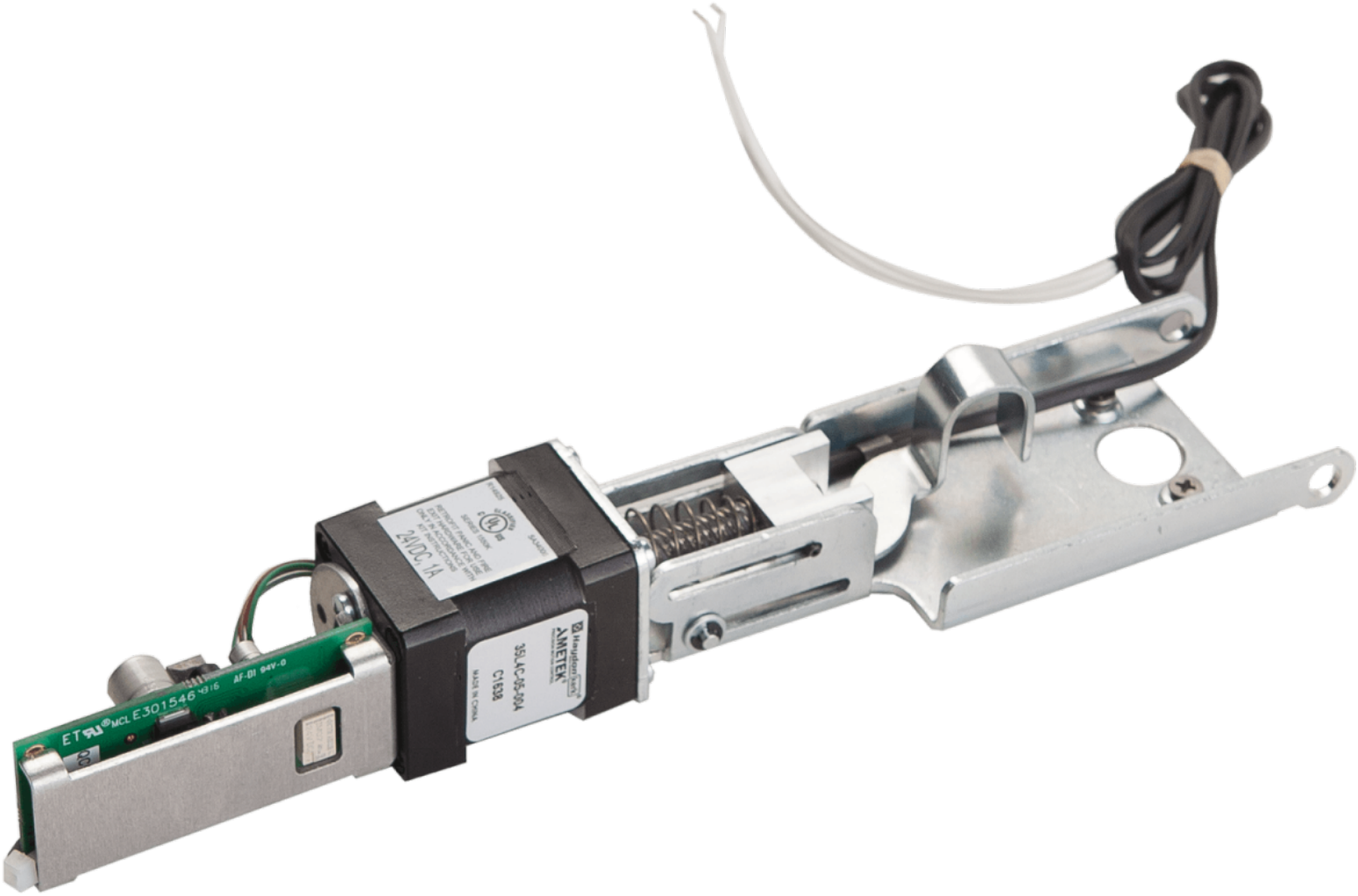
24VDC, 1A
AMETEK
35LAC-05-00A
C1638
MADE IN CHINA
AF-DI 94V-0

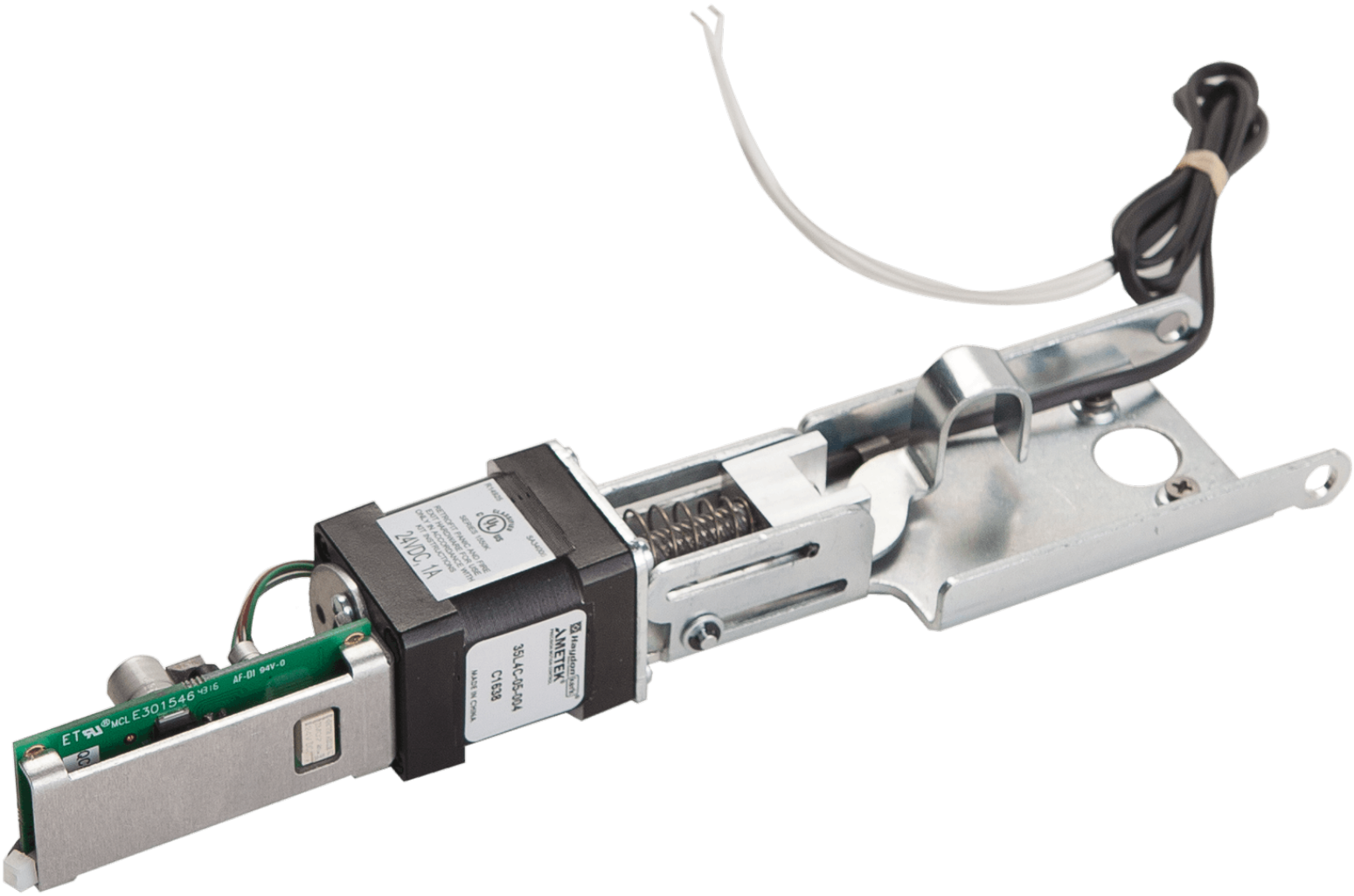
ETRI MCL E301546 4316
AF-DI 94V-0
24VDC, 1A
Haydon Kerk
AMETEK
35LAC-05-00A
C1638
MADE IN CHINA





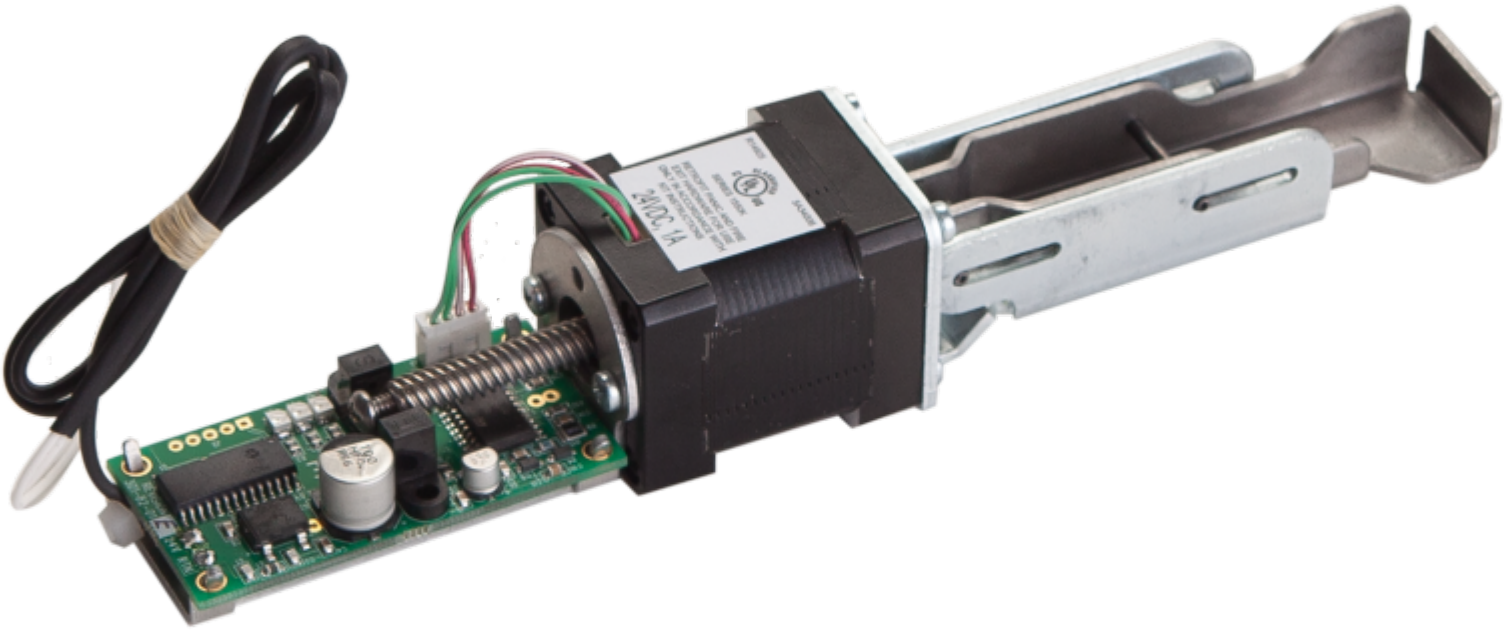

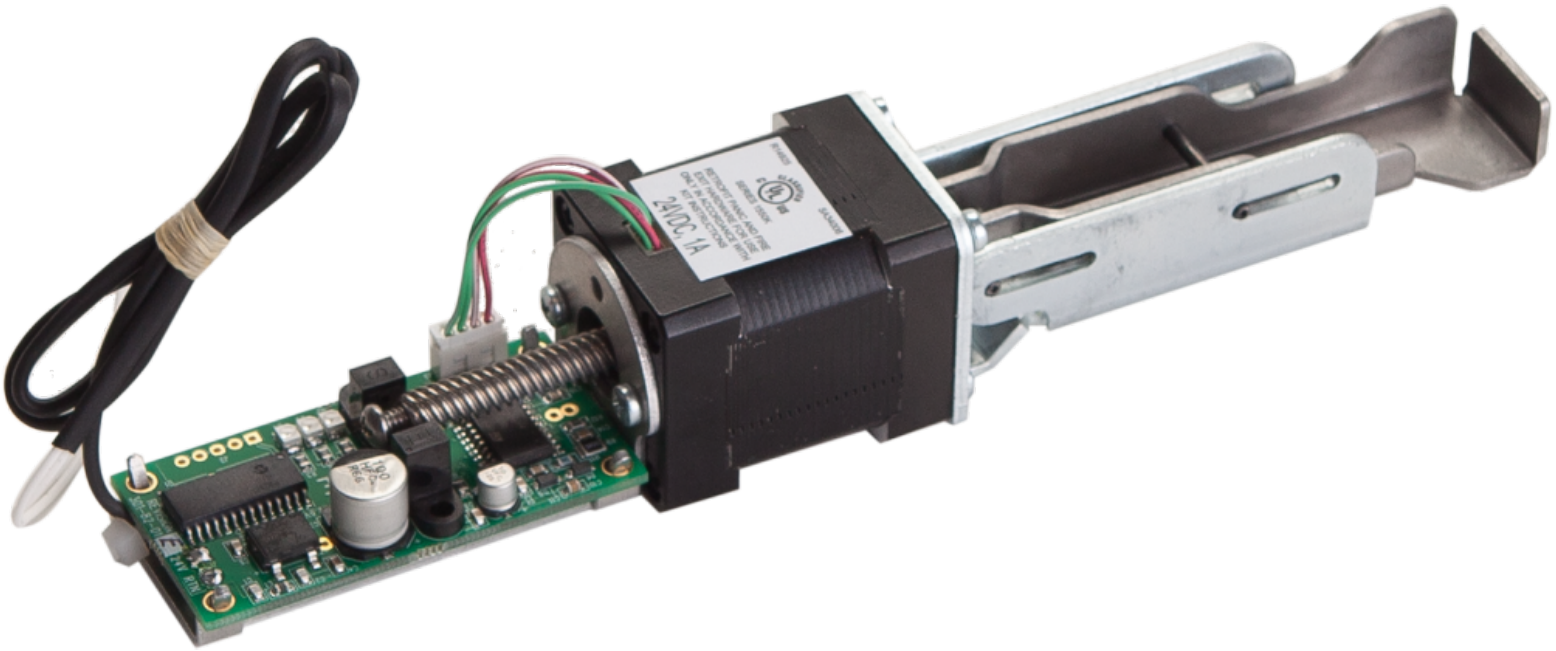
24DC.1A

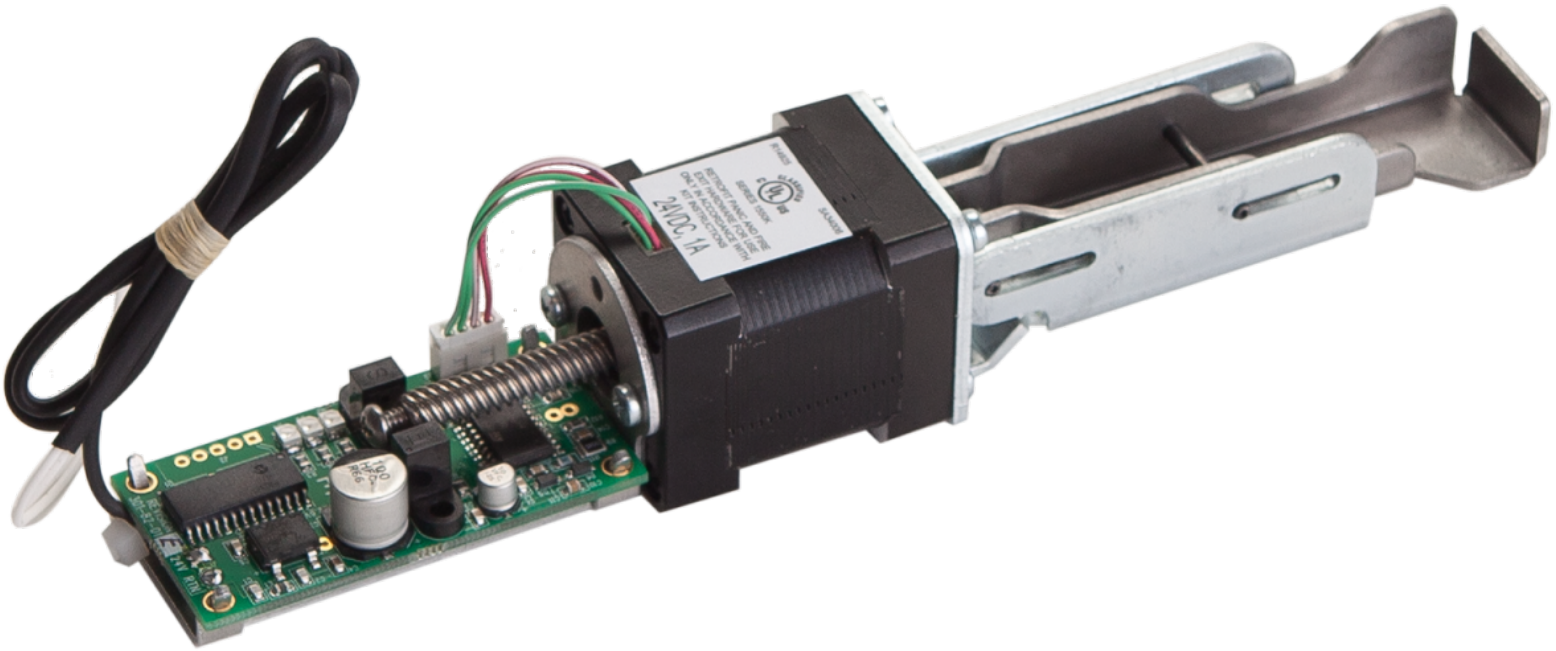
24DC.1A

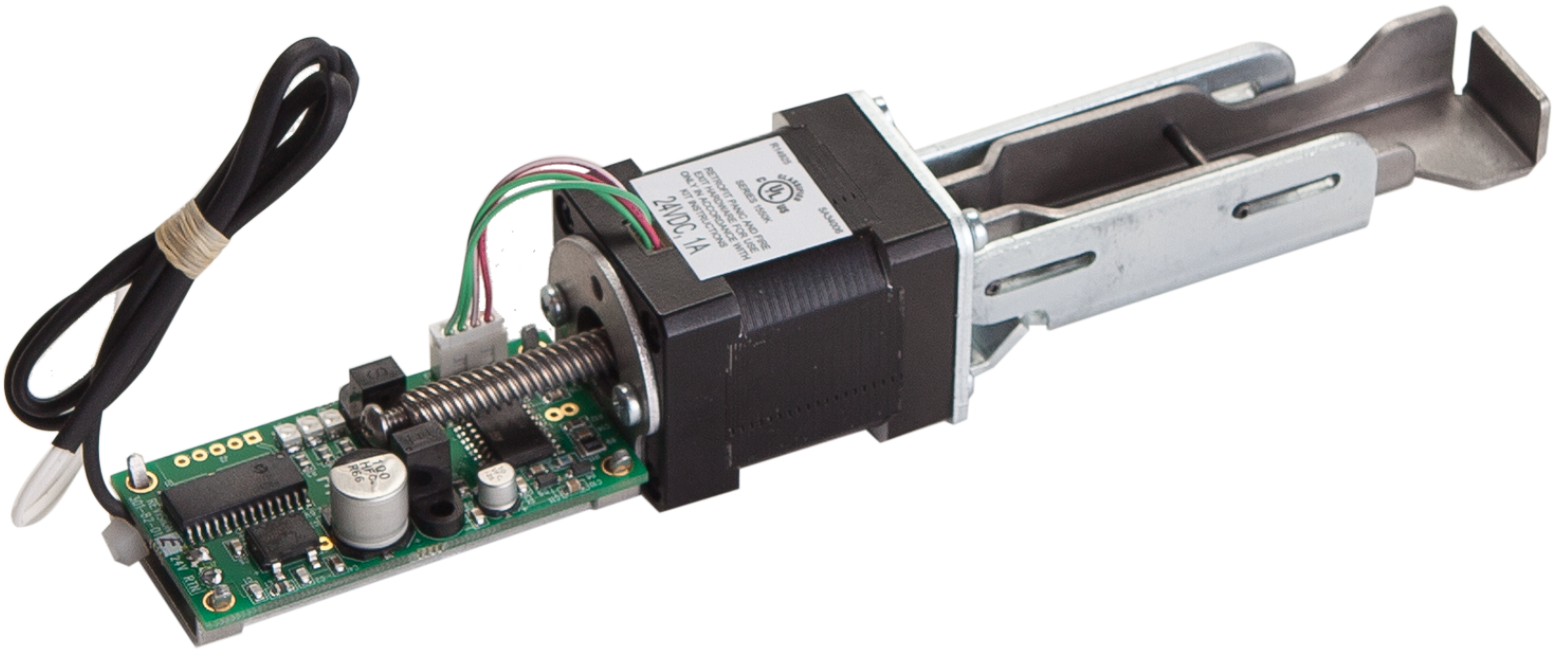
24DC.1A



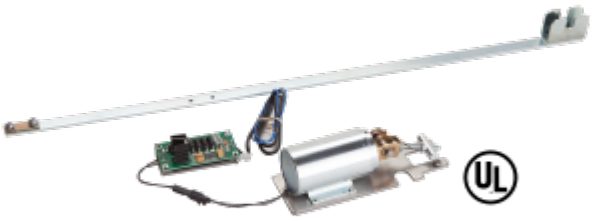











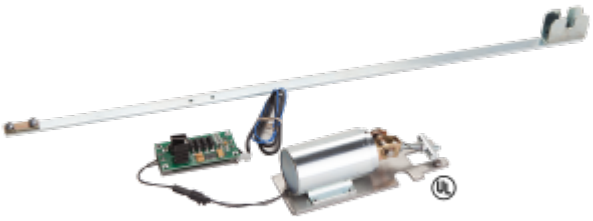













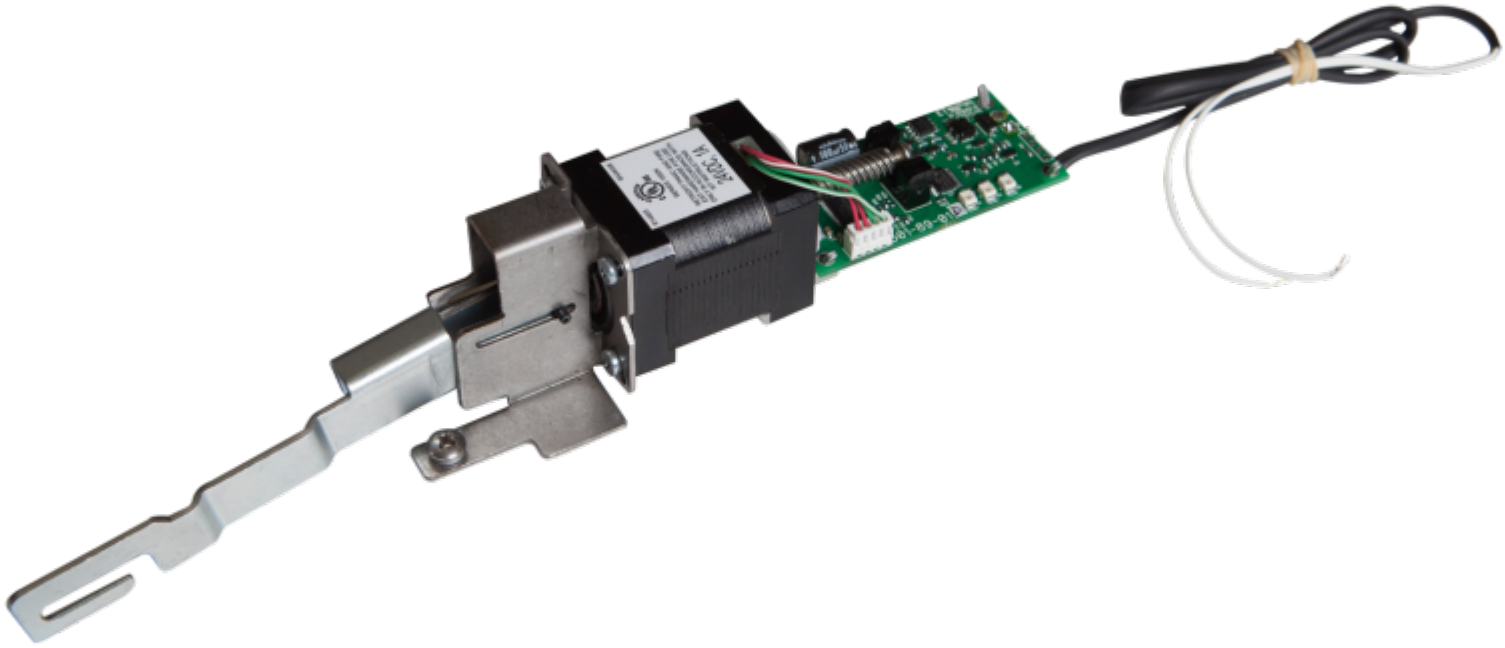

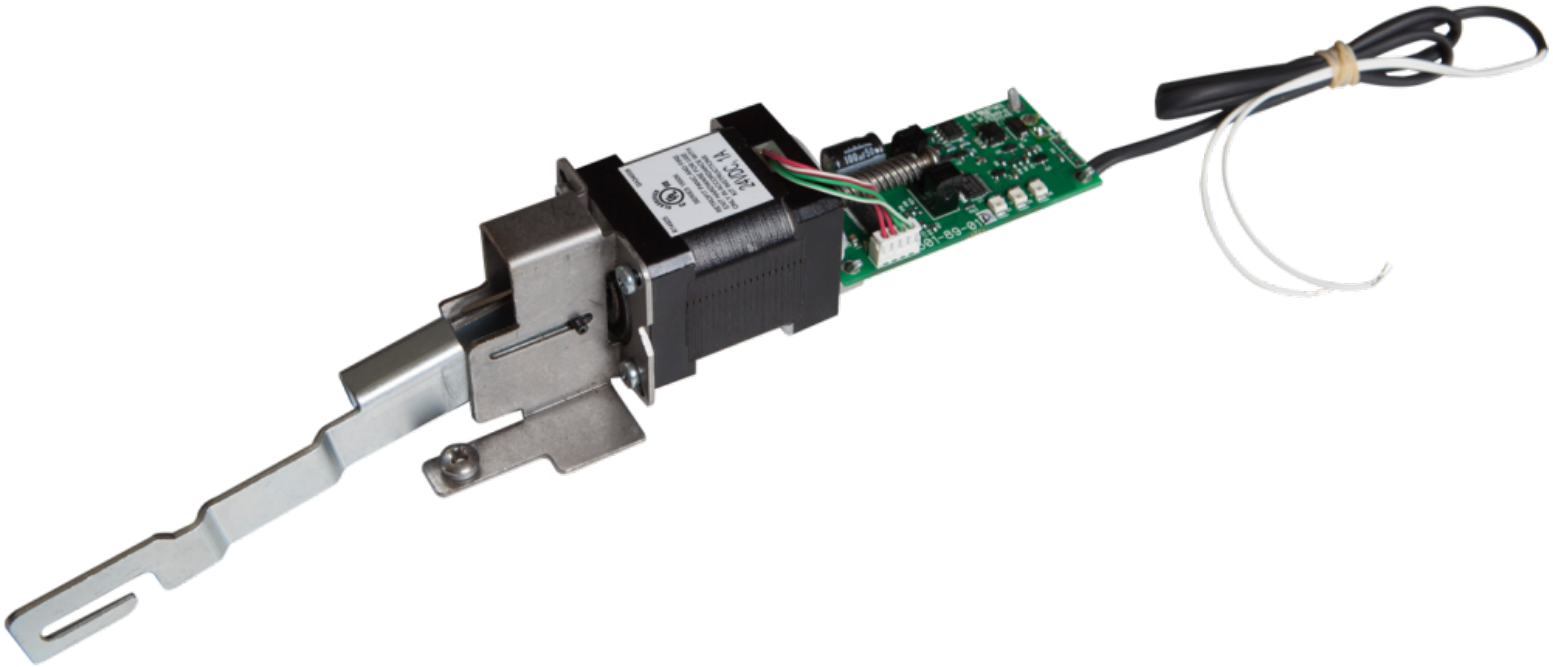

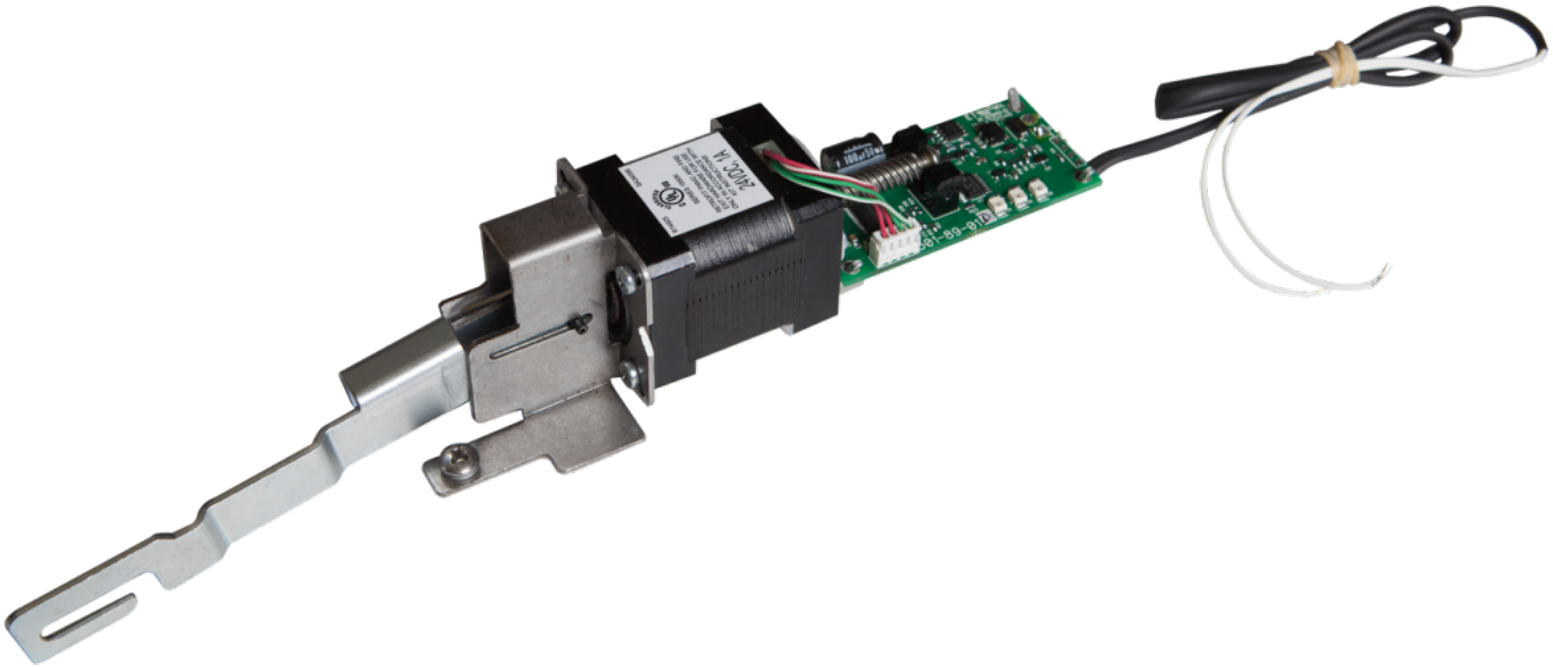

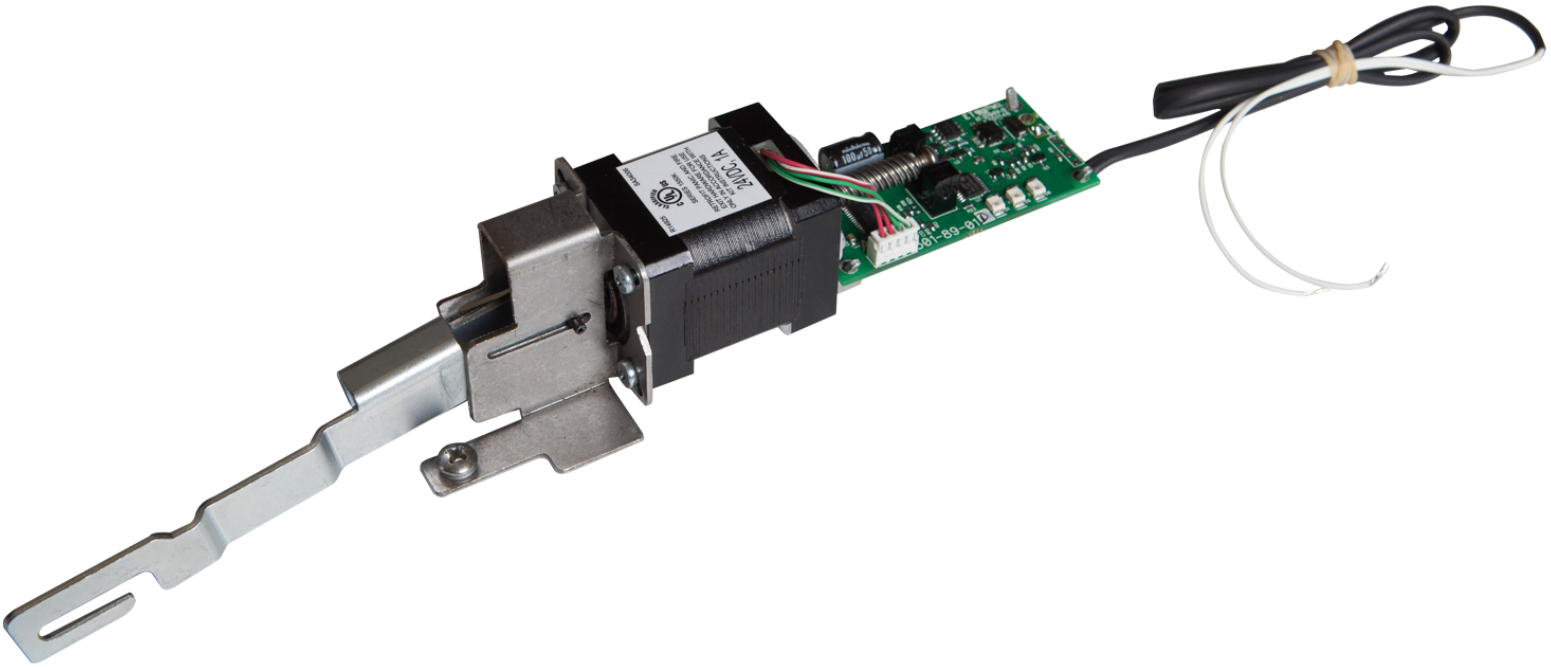



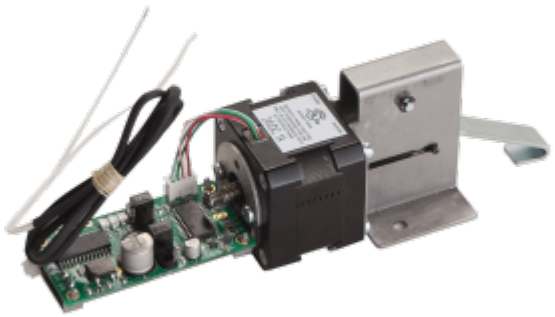

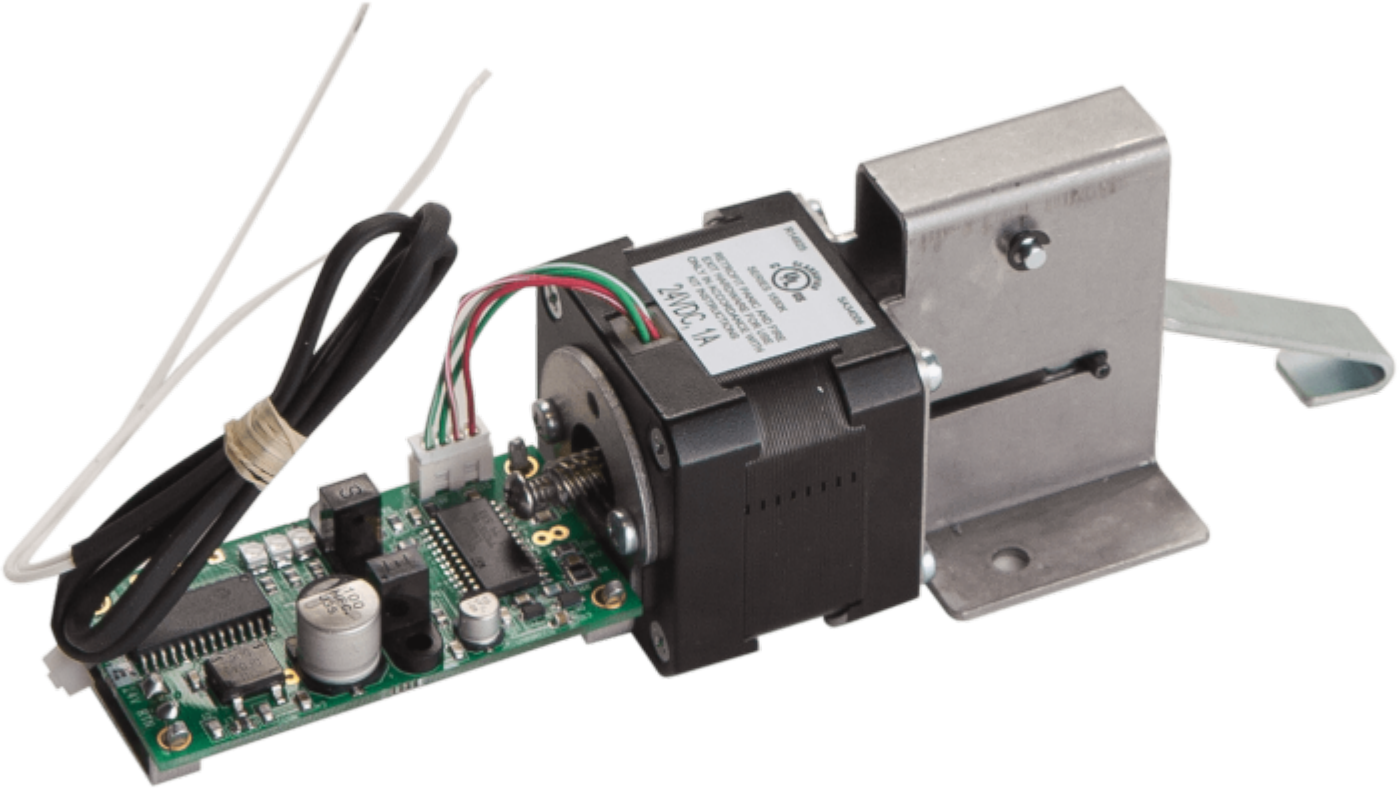
24VDC 1A

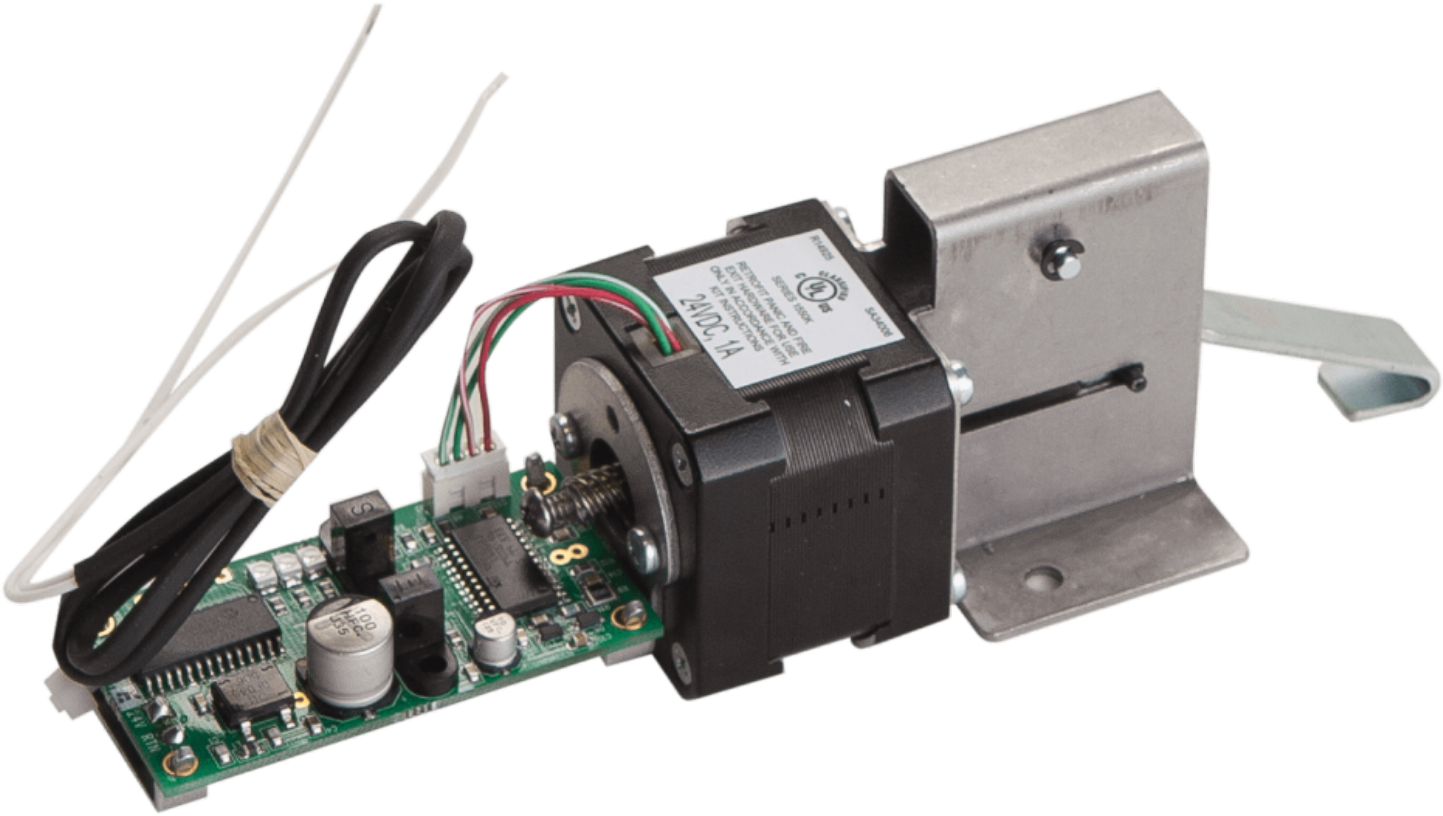
24VDC 1A

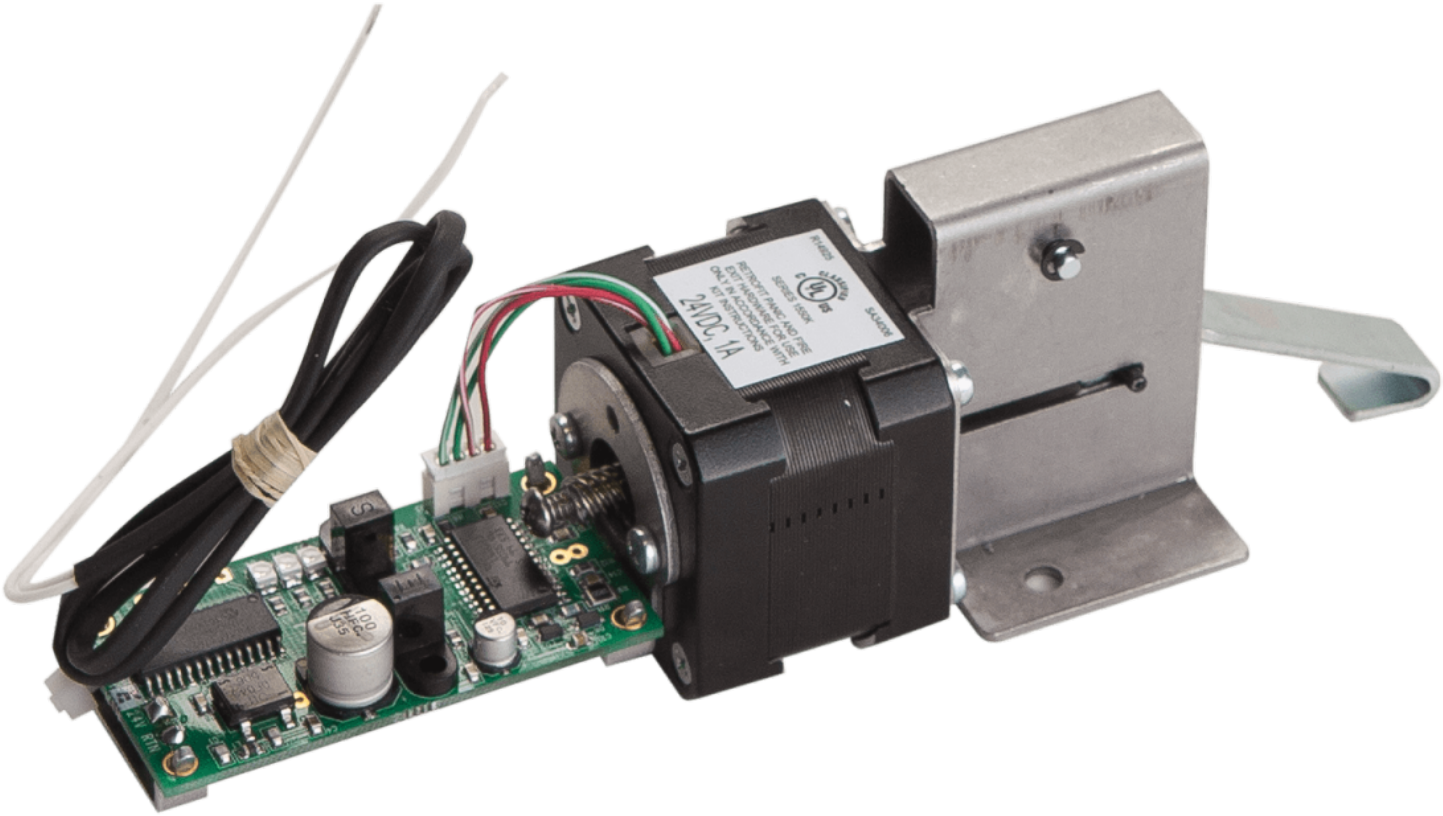
24VDC 1A

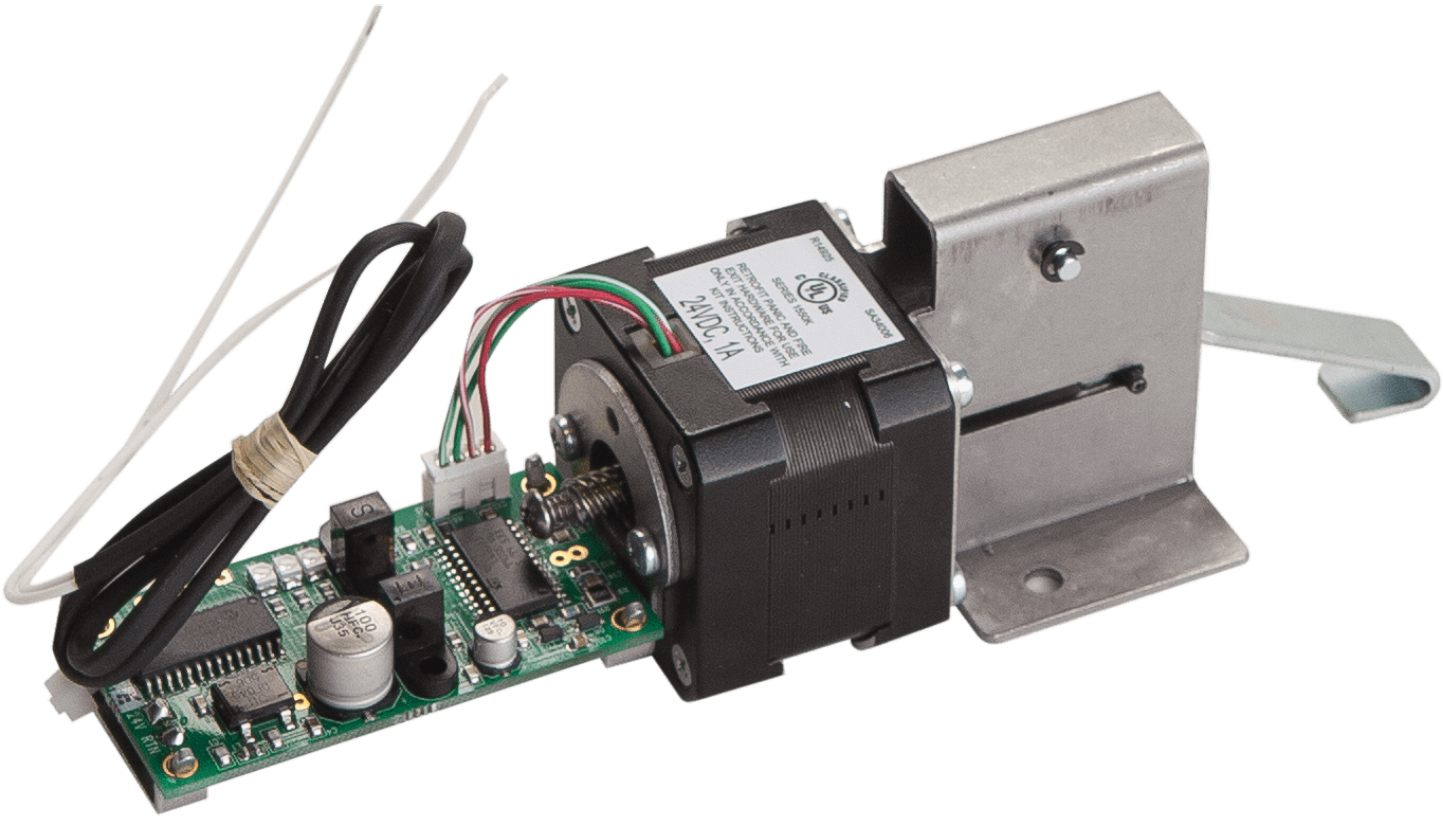
24VDC 1A







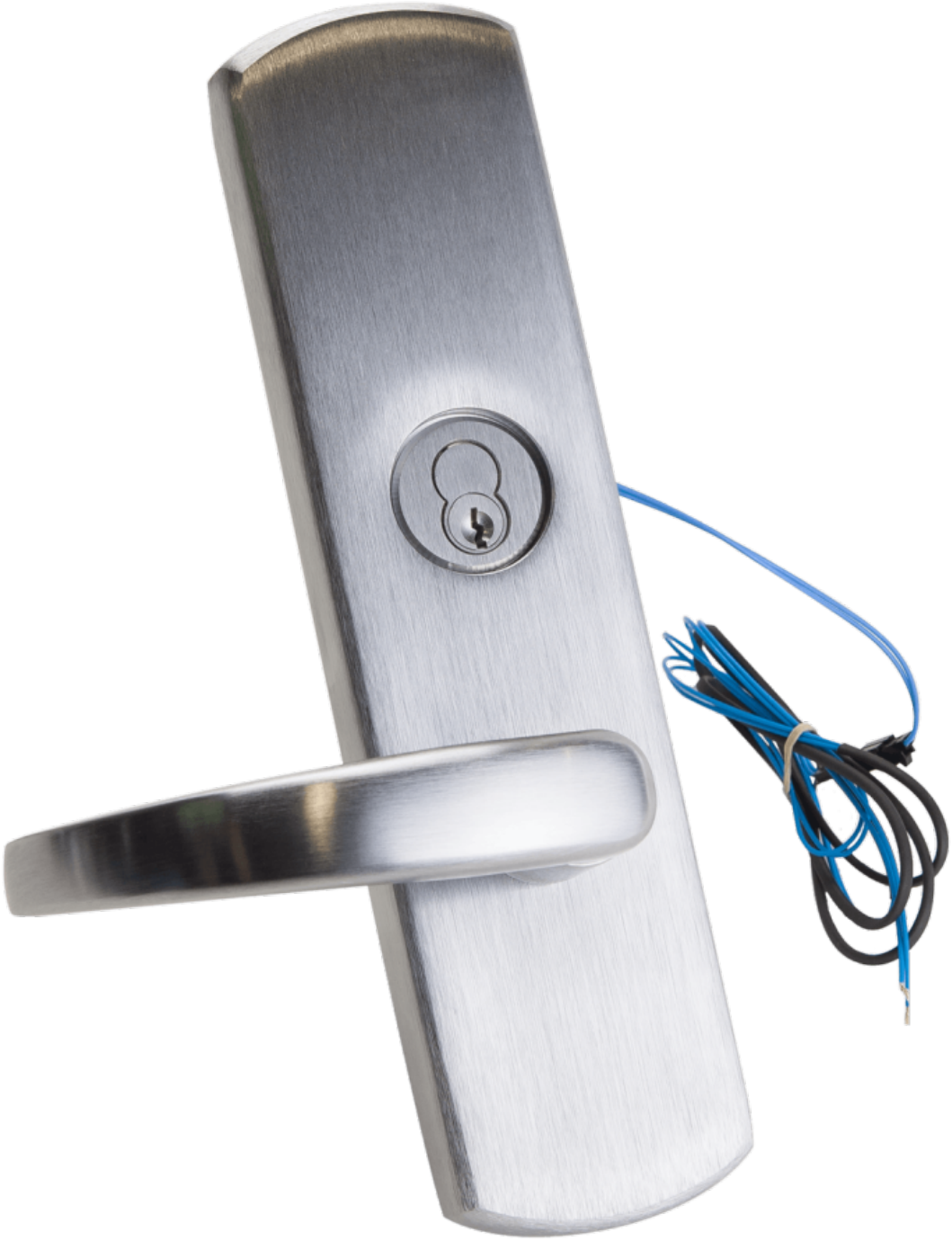

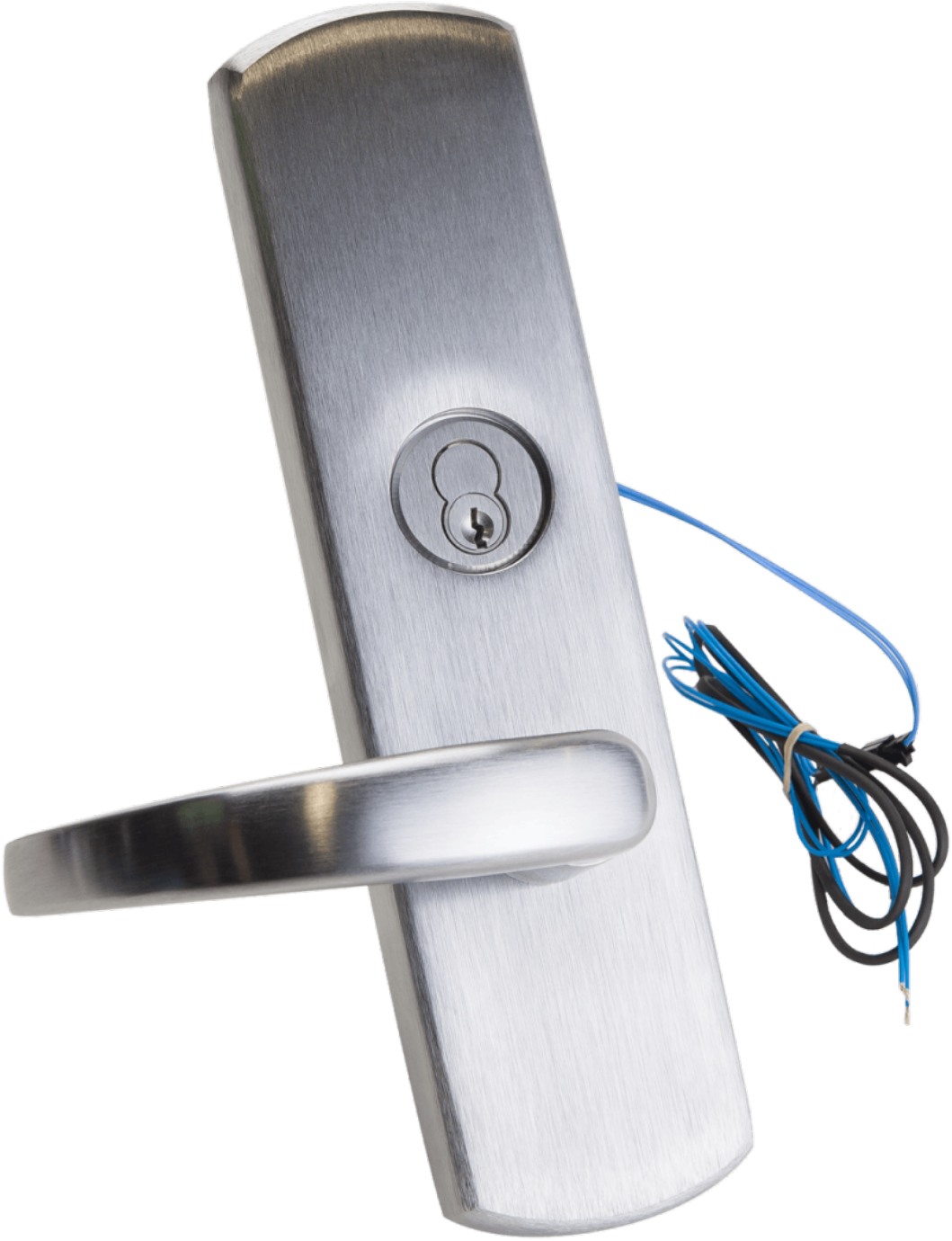

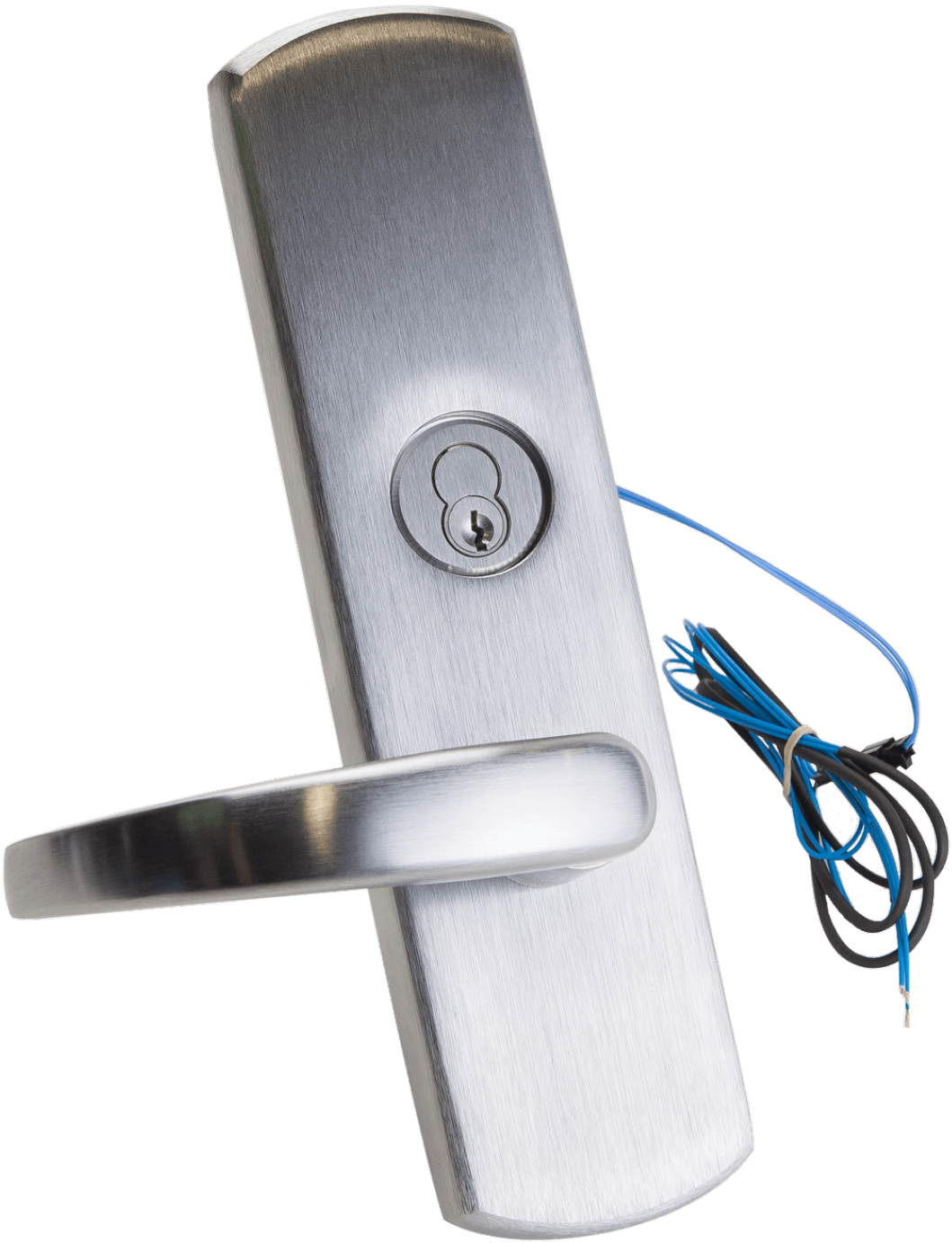




PUSH TO LOCK
OCCUPIED

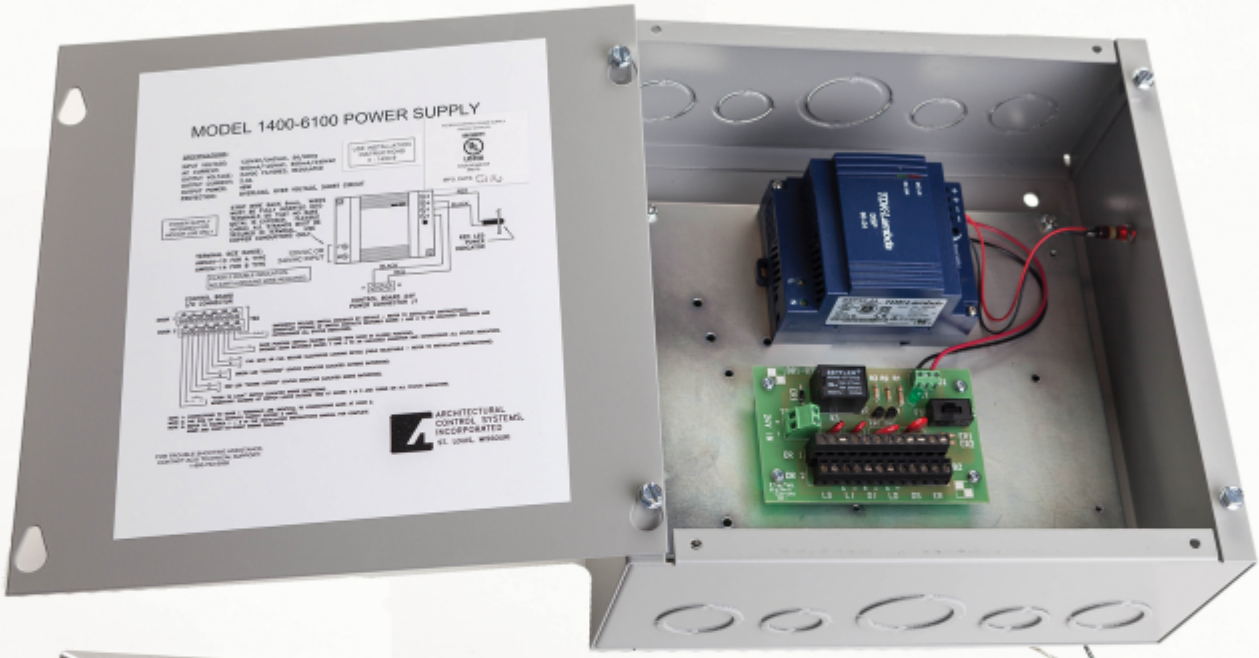
MODEL 1400-6100 POWER SUPPLY


PUSH TO LOCK

OCCUPIED



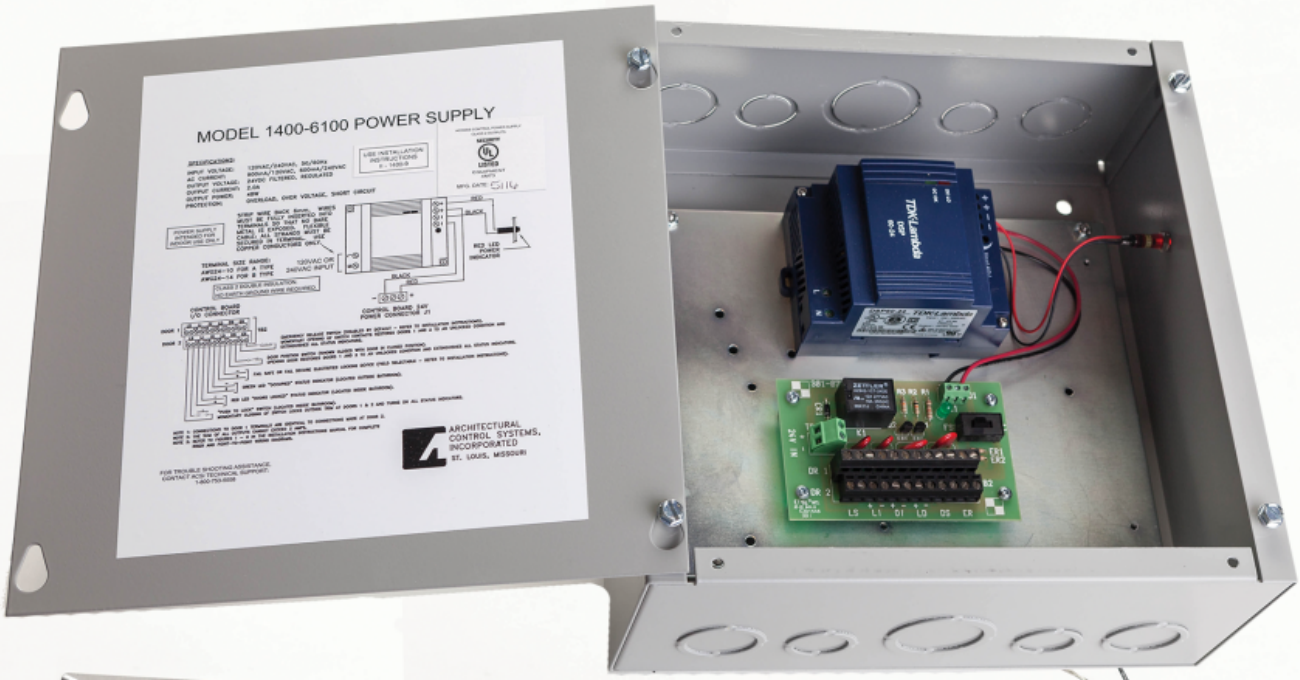
MODEL 1400-6100 POWER SUPPLY
ARCHITECTURAL CONTROL SYSTEMS, INCORPORATED
ST. LOUIS, MISSOURI
TDK·Lambda


PUSH TO LOCK

OCCUPIED



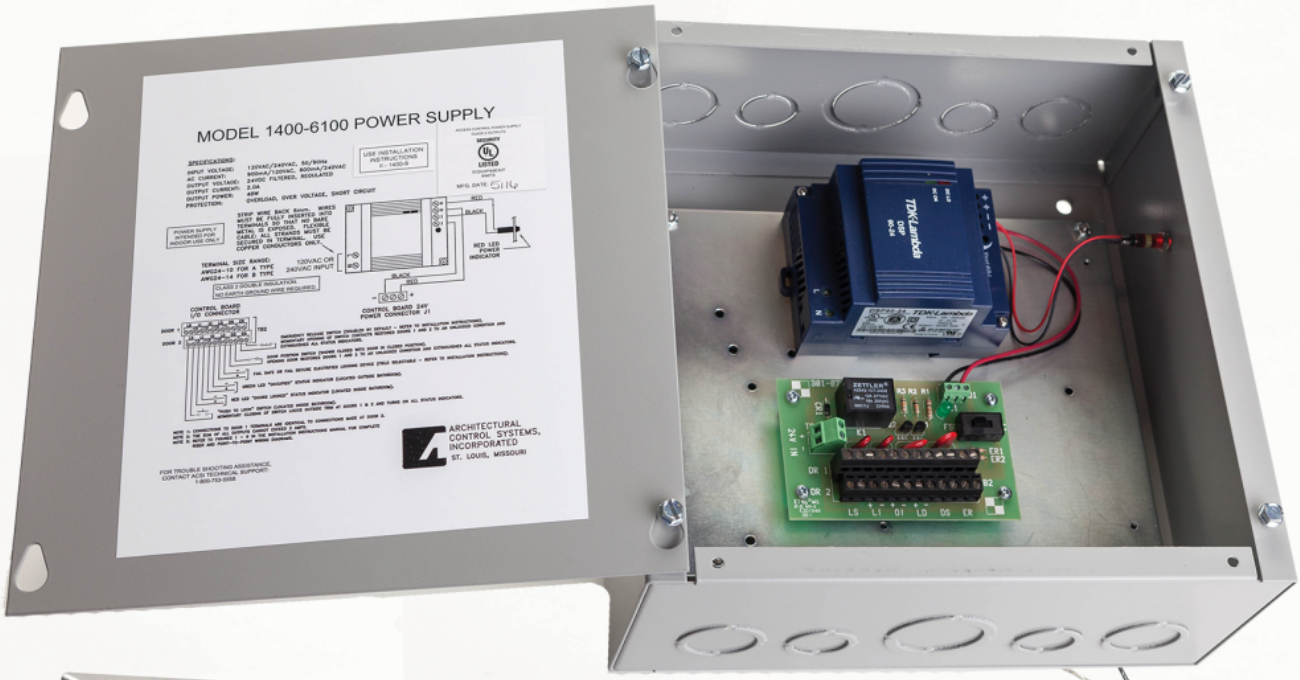
MODEL 1400-6100 POWER SUPPLY
ARCHITECTURAL CONTROL SYSTEMS, INCORPORATED
ST. LOUIS, MISSOURI
TDK·Lambda


PUSH TO LOCK

OCCUPIED



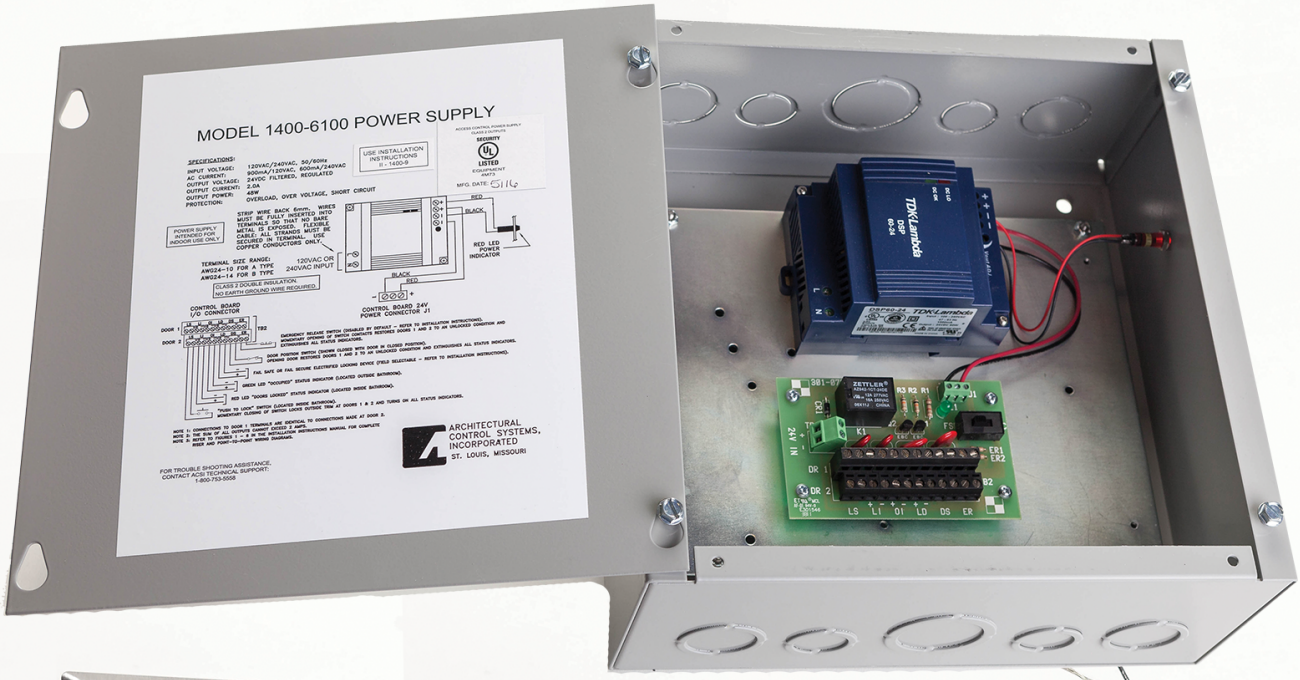
MODEL 1400-6100 POWER SUPPLY
SPECIFICATIONS:
INPUT VOLTAGE: 120VAC/240VAC, 50/60Hz
AC CURRENT: 900mA/120VAC, 600mA/240VAC
OUTPUT VOLTAGE: 24VDC FILTERED, REGULATED
OUTPUT CURRENT: 2.0A
OUTPUT POWER: 48W
PROTECTION: OVERLOAD, OVER VOLTAGE, SHORT CIRCUIT
USE INSTALLATION INSTRUCTIONS #: 1400-9
MFG. DATE: 5/16
POWER SUPPLY INTENDED FOR INDOOR USE ONLY
STRIP WIRE BACK 6mm. WIRES MUST BE FULLY INSERTED INTO TERMINALS SO THAT NO BARE WIRE IS EXPOSED. FLEXIBLE CABLE: ALL STRANDS MUST BE SECURED IN TERMINAL. USE COPPER CONDUCTORS ONLY.
TERMINAL SIZE RANGE: AWG24-10 FOR A TYPE, AWG24-14 FOR B TYPE
120VAC OR 240VAC INPUT
CLASS 2 DOUBLE INSULATION. NO EARTH GROUND WIRE REQUIRED.
RED
BLACK
RED LED POWER INDICATOR
CONTROL BOARD 24V POWER CONNECTOR J1
CONTROL BOARD I/O CONNECTOR
DOOR 1
DOOR 2
TB2
EMERGENCY RELEASE SWITCH (DISABLED BY DEFAULT – REFER TO INSTALLATION INSTRUCTIONS).
MOMENTARY OPENING OF SWITCH CONTACTS RESTORES DOORS 1 AND 2 TO AN UNLOCKED CONDITION AND EXTINGUISHES ALL STATUS INDICATORS.
DOOR POSITION SWITCH (SHOWN CLOSED WITH DOOR IN CLOSED POSITION). MOMENTARY CLOSING OF SWITCH CONTACTS RESTORES DOORS 1 AND 2 TO AN UNLOCKED CONDITION AND EXTINGUISHES ALL STATUS INDICATORS.
FAIL SAFE OR FAIL SECURE ELECTRIFIED LOCKING DEVICE (FIELD SELECTABLE – REFER TO INSTALLATION INSTRUCTIONS).
GREEN LED "OCCUPIED" STATUS INDICATOR (LOCATED OUTSIDE BATHROOM).
RED LED "DOORS LOCKED" STATUS INDICATOR (LOCATED INSIDE BATHROOM).
"PUSH TO LOCK" SWITCH (LOCATED INSIDE BATHROOM). MOMENTARY CLOSING OF SWITCH LOCKS OUTSIDE DOW AT DOORS 1 & 2.
NOTE 1: CONNECTIONS TO DOOR 1 TERMINALS ARE IDENTICAL TO CONNECTIONS MADE AT DOOR 2.
NOTE 2: THE SUM OF ALL OUTPUTS CANNOT EXCEED 2.0A. REFER TO INSTALLATION INSTRUCTIONS MANUAL FOR COMPLETE DETAILS.
NOTE 3: REFER TO FIGURES 1 – 8 IN THE INSTALLATION INSTRUCTIONS MANUAL FOR COMPLETE WIRING AND POINT-TO-POINT WIRING DIAGRAMS.
ARCHITECTURAL CONTROL SYSTEMS, INCORPORATED
ST. LOUIS, MISSOURI
FOR TROUBLE SHOOTING ASSISTANCE, CONTACT ACS TECHNICAL SUPPORT: 1-800-753-5558
TDK·Lambda
ZETTLER
J1
J2
K1
F1
TB1
TB2
ER1
ER2
DR 1
DR 2
LS LI OI LD DS ER


PUSH TO LOCK

OCCUPIED



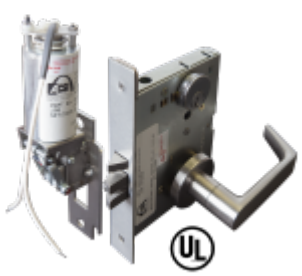

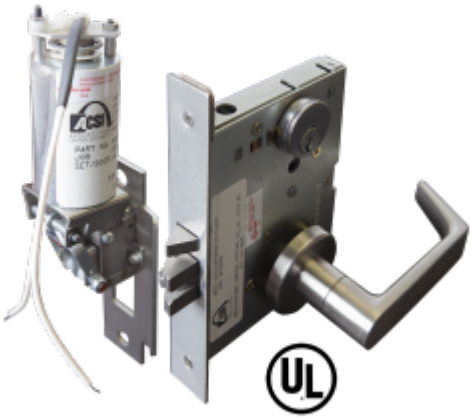

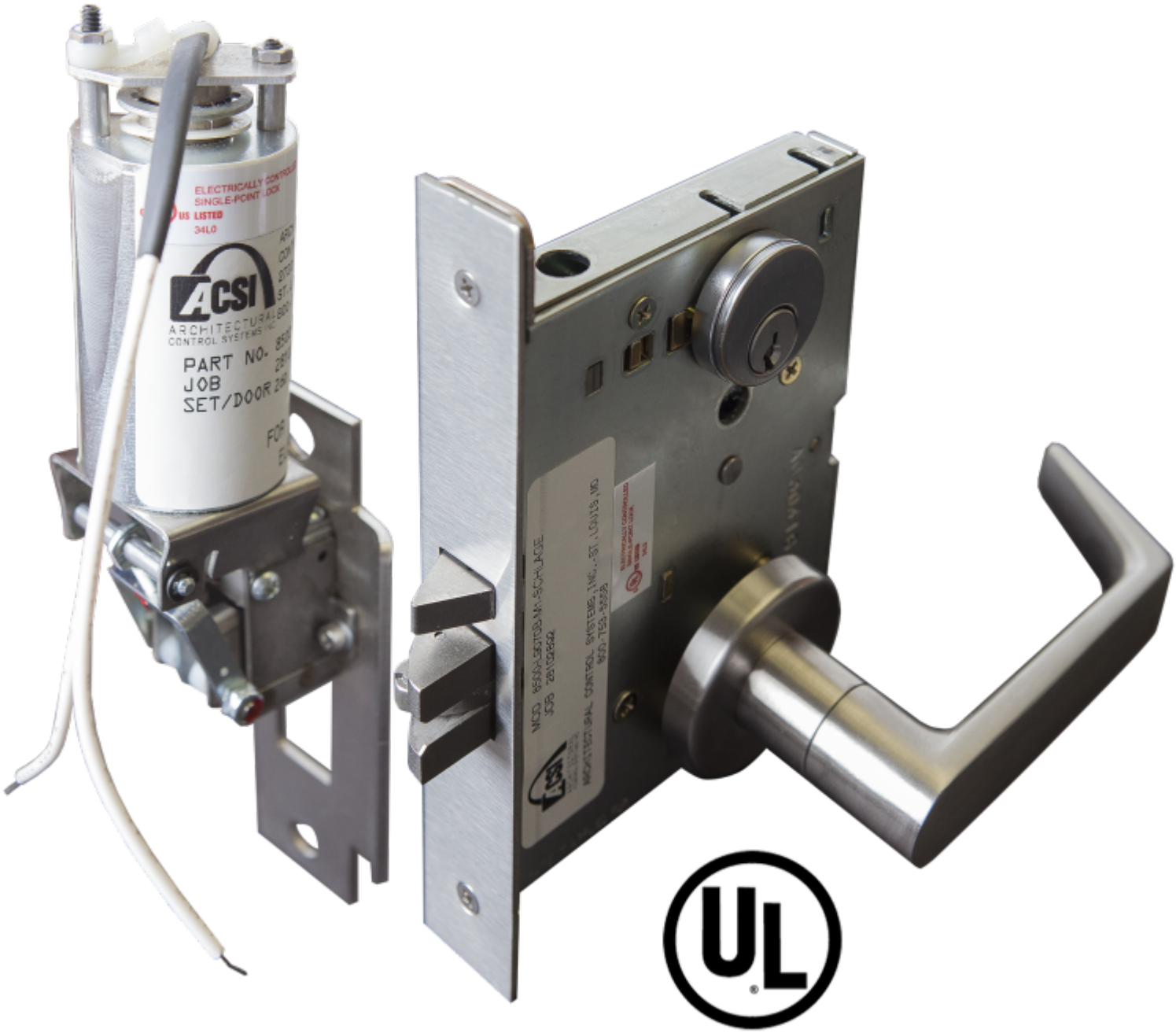
ELECTRICALLY CONTROLLED
SINGLE-POINT LOCK
US LISTED
34L0
ACSI
ARCHITECTURAL
CONTROL SYSTEMS INC
PART NO.
JOB
SET/DOOR
MCD 8500ALSOTOBAM-SCHLAGE
JOB 28102800
ARCHITECTURAL CONTROL SYSTEMS, INC.-ST. LOUIS, MO
800-753-5858

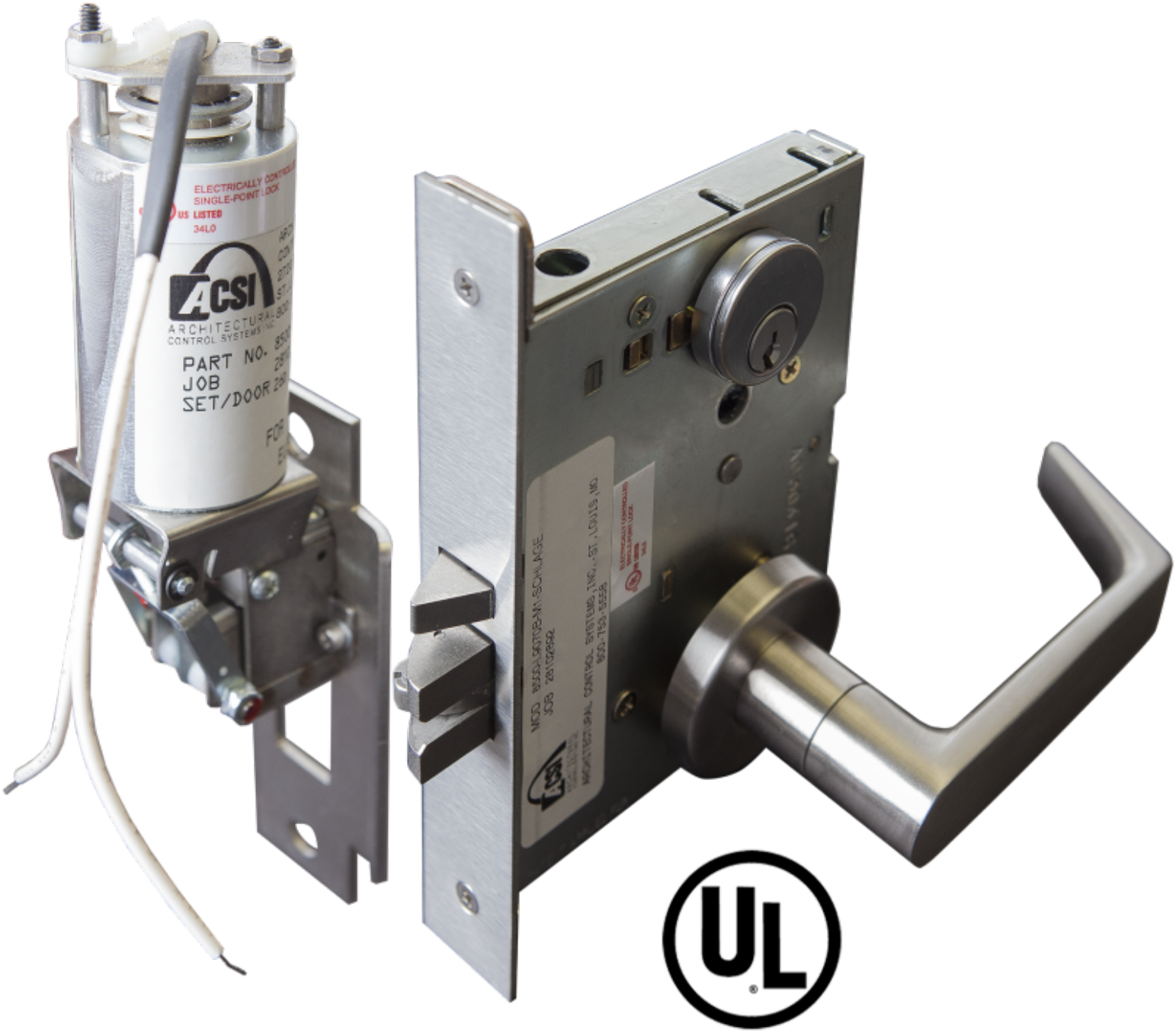
ELECTRICALLY CONTROLLED
SINGLE-POINT LOCK
US LISTED
34L0
ACSI
ARCHITECTURAL
CONTROL SYSTEMS INC
PART NO.
JOB
SET/DOOR
MOD 8550-LOCTOB-M1-SCHLAGE
JOB 28102892
ARCHITECTURAL CONTROL SYSTEMS, INC.-ST. LOUIS, MO
800-753-5558
ACSI

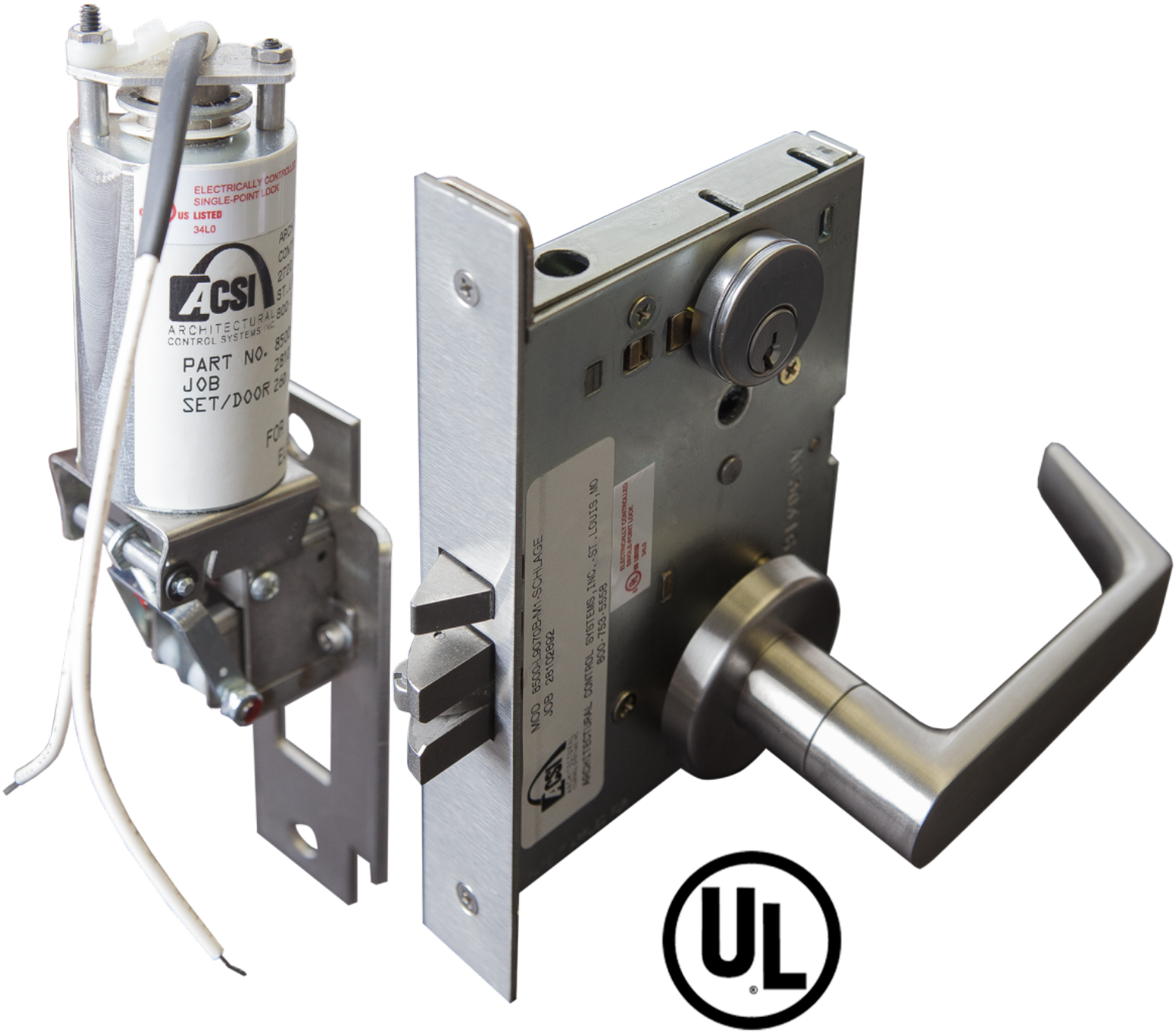
ELECTRICALLY CONTROLLED
SINGLE-POINT LOCK
US LISTED
34L0
ACSI
ARCHITECTURAL
CONTROL SYSTEMS INC
PART NO.
JOB
SET/DOOR
MOD 8500-L9070B-M1-SCHLAGE
JOB 28102892
ARCHITECTURAL CONTROL SYSTEMS, INC. - ST. LOUIS, MO
800-753-5558
ELECTRICALLY CONTROLLED
SINGLE-POINT LOCK
UL

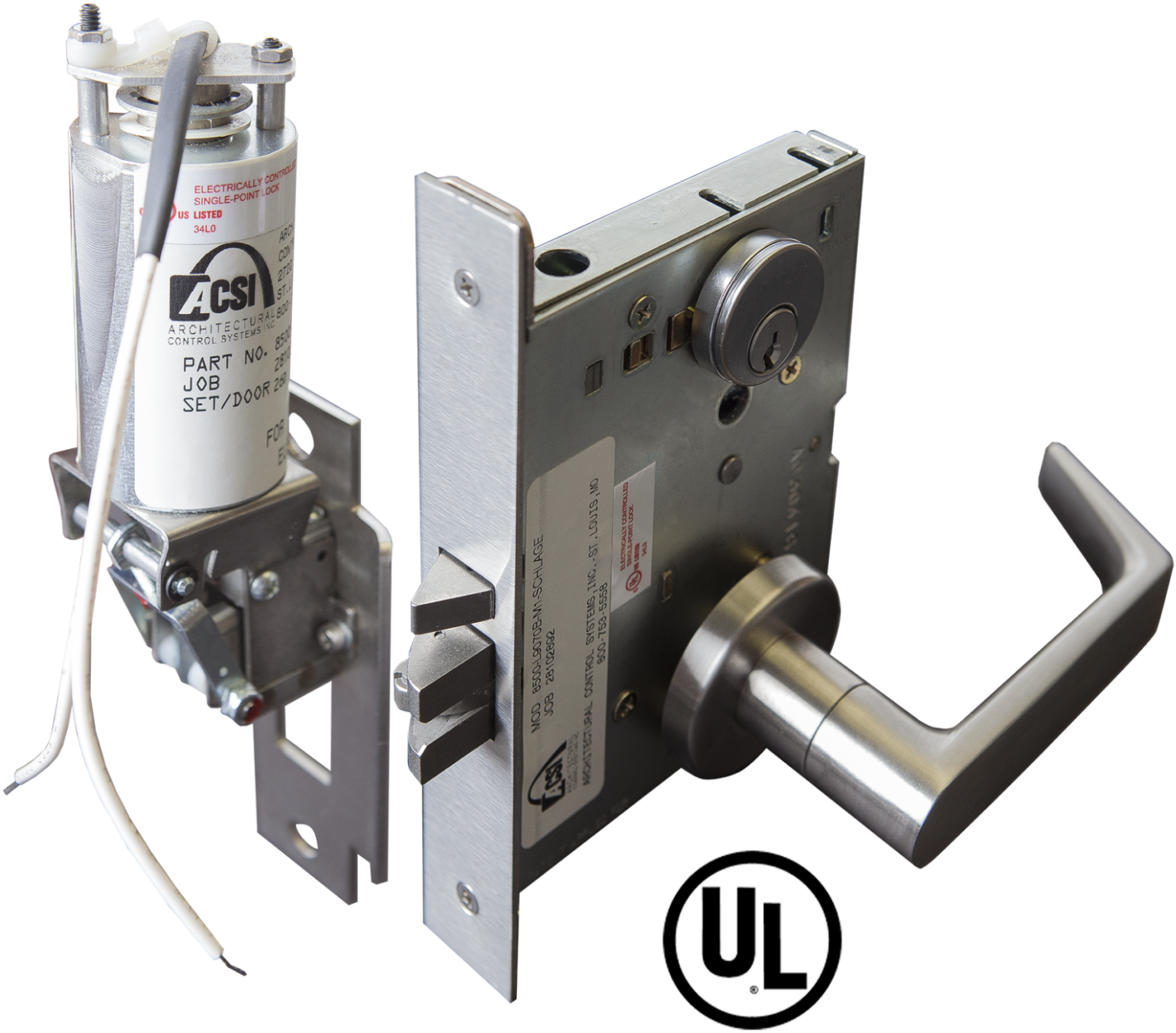
ELECTRICALLY CONTROLLED
SINGLE-POINT LOCK
US LISTED
34L0
ACSI
ARCHITECTURAL
CONTROL SYSTEMS INC
PART NO.
JOB
SET/DOOR
MOD 8500-09TOEM-SCHLAGE
JOB 28102892
ELECTRICAL CONTROL SYSTEMS, INC., ST. LOUIS, MO
800-753-5558
ELECTRICALLY CONTROLLED
SINGLE-POINT LOCK
UL

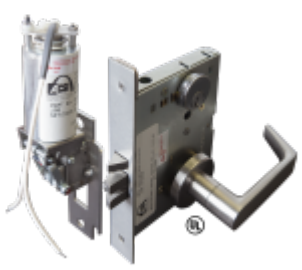



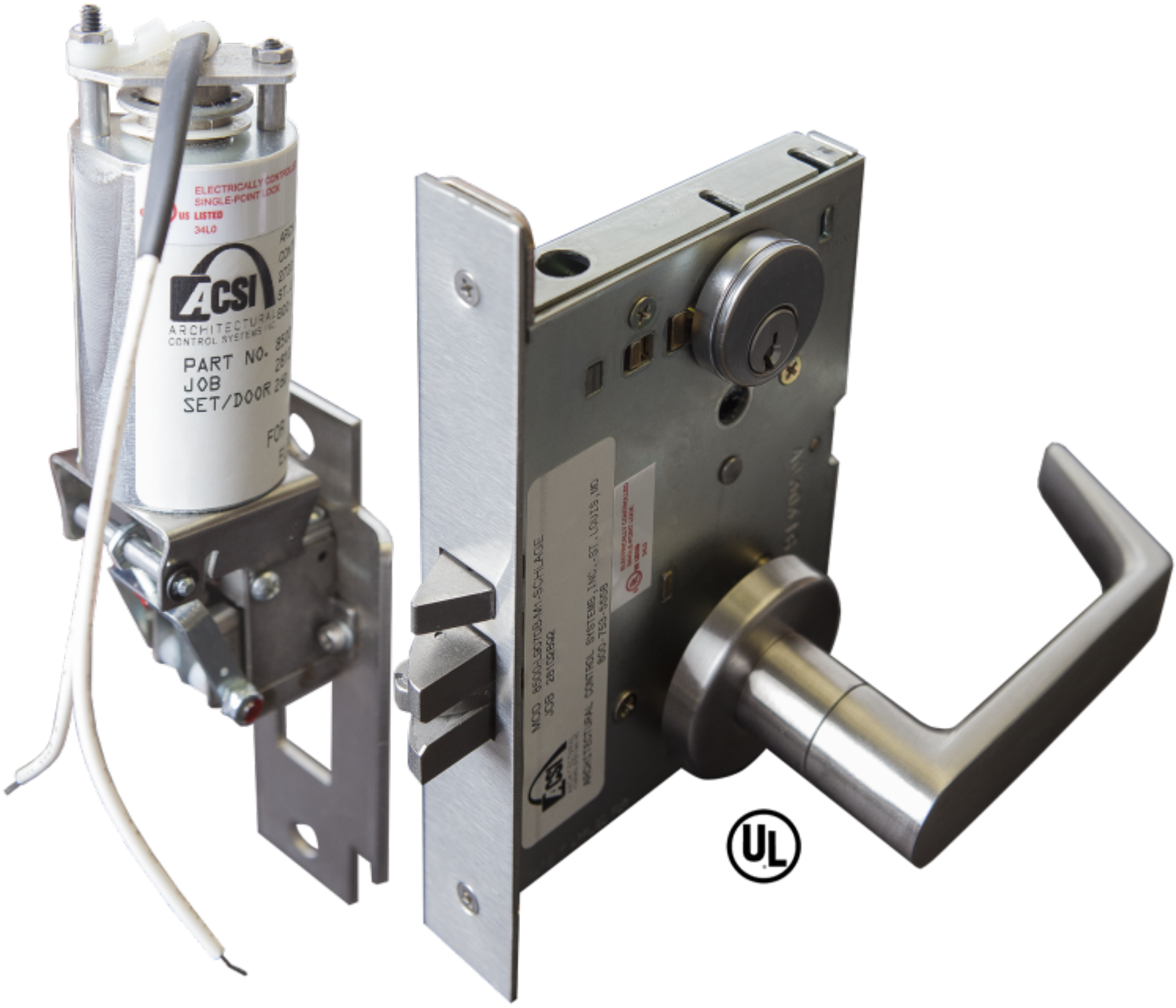
ELECTRICALLY CONTROLLED
SINGLE-POINT LOCK
US LISTED
34L0
ACSI
ARCHITECTURAL
CONTROL SYSTEMS INC
PART NO.
JOB
SET/DOOR
UL

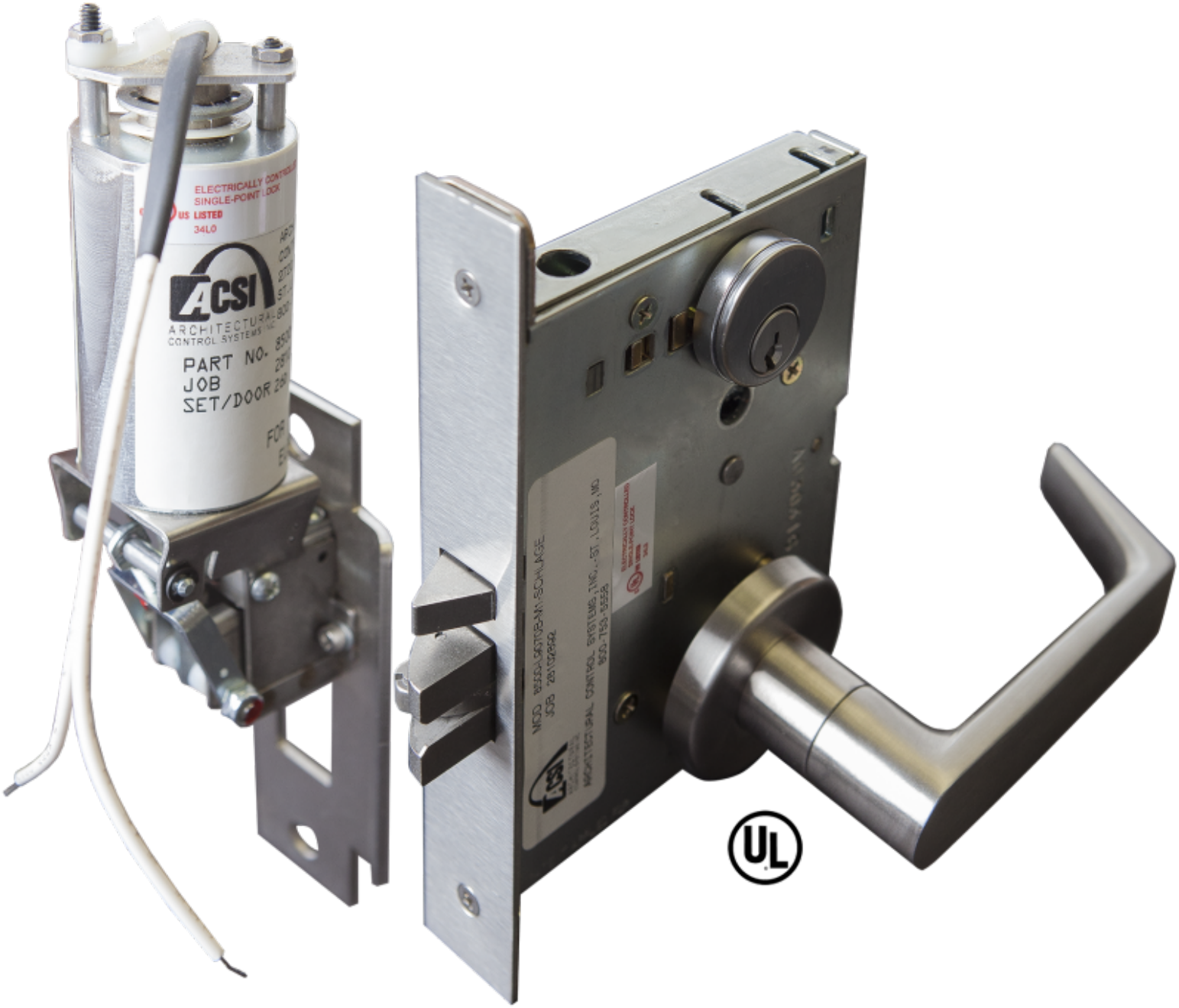
ELECTRICALLY CONTROLLED
SINGLE-POINT LOCK
US LISTED
34L0
ACSI
ARCHITECTURAL
CONTROL SYSTEMS INC
PART NO.
JOB
SET/DOOR
MOD 8550-LOCTOB-M1-SCHLAGE
JOB 28102892
ARCHITECTURAL CONTROL SYSTEMS, INC.-ST. LOUIS, MO
800-753-5558
UL

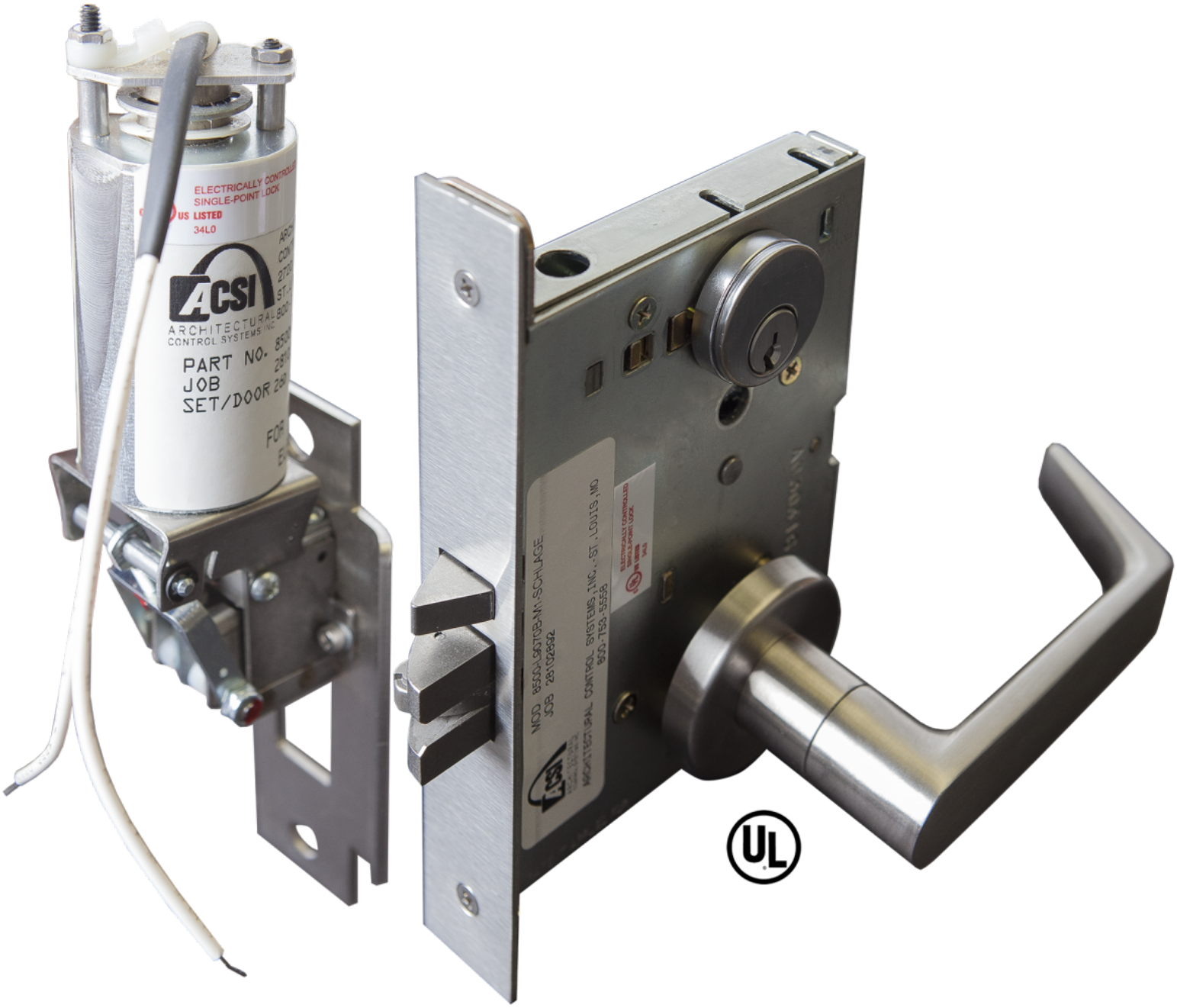
ELECTRICALLY CONTROLLED
SINGLE-POINT LOCK
US LISTED
34L0
ACSI
ARCHITECTURAL
CONTROL SYSTEMS INC
PART NO.
JOB
SET/DOOR
MOD 8500-L9070B-M1-SCHLAGE
JOB 28102892
ARCHITECTURAL CONTROL SYSTEMS, INC. - ST. LOUIS, MO
800-753-5558
UL

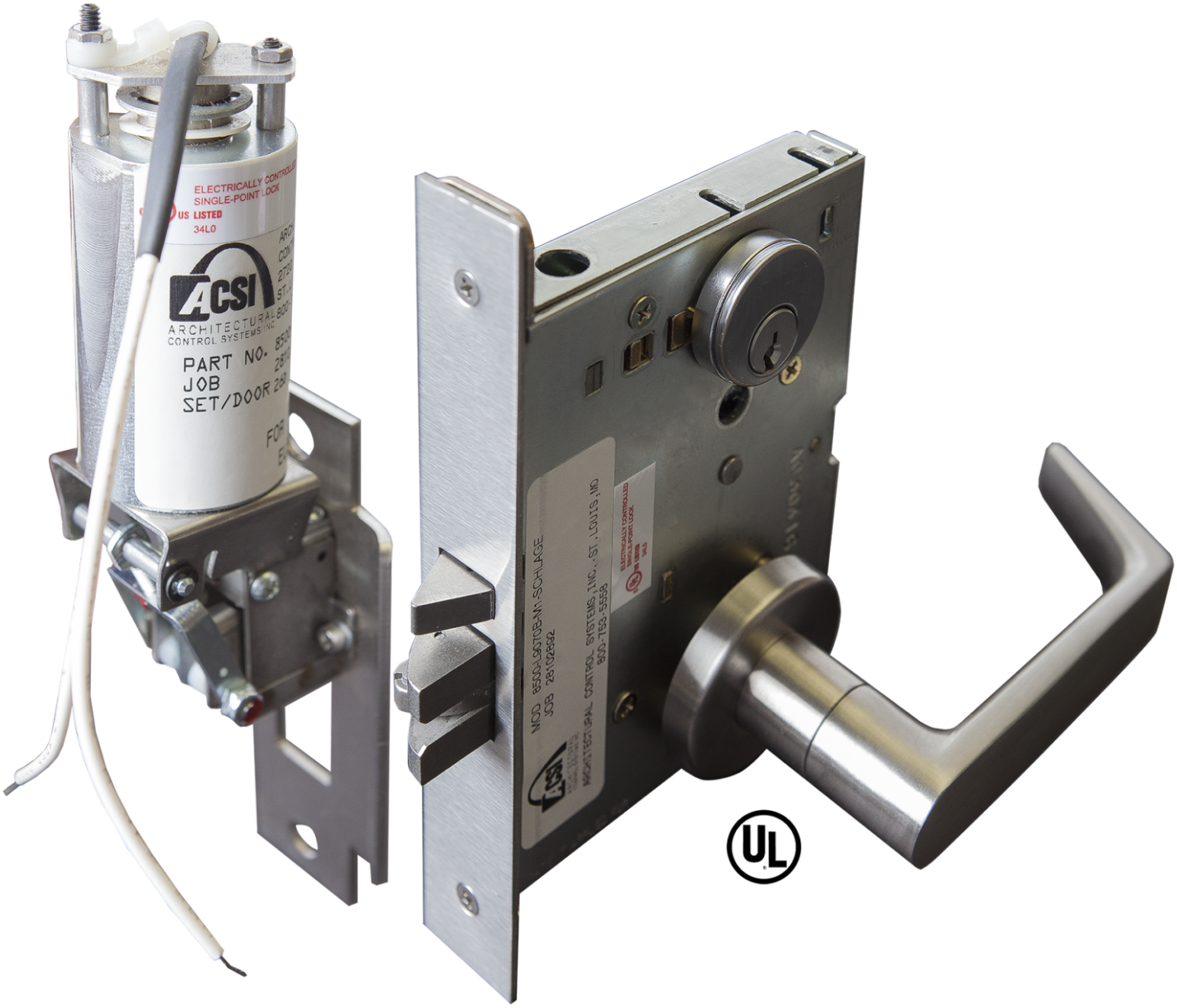
ELECTRICALLY CONTROLLED
SINGLE-POINT LOCK
US LISTED
34L0
ACSI
ARCHITECTURAL
CONTROL SYSTEMS INC
PART NO.
JOB
SET/DOOR
MOD 8500-06TOEM-SCHLAGE
JOB 28102892
ARCHITECTURAL CONTROL SYSTEMS, INC., ST. LOUIS, MO
800-753-5558
UL

ELECTRIC EXIT DEVICE TEMPLATE
DOOR PREPARATION

1500 ELECTRIC MONITOR
1540 ELECTRIC DOGGING
1550 ELECTRIC LATCH RETRACTION
1560/1570 ELECTRIC TRIM CONTROL

Notes:

1. This door preparation is in addition to the door preparation shown on the manufacturer's mechanical exit device template.
2. The door manufacturer to provide the door with adequate construction and reinforcement for proper support and installation of the door hardware.
3. The door manufacturer to provide a ∅3/8" raceway through the door between the exit device's wire access feature and the low voltage power transfer for wire routing.

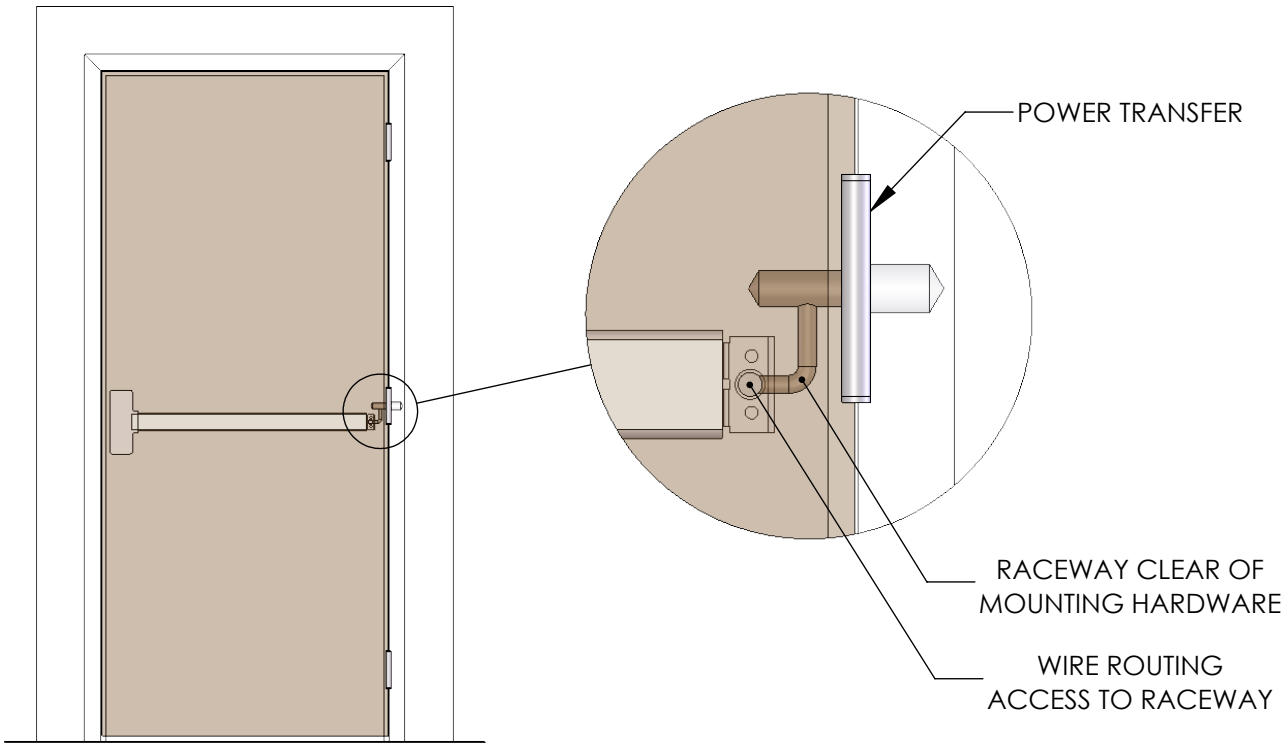

VIEW FROM OUTSIDE OF DOORWAY

ACSI MODEL 1400-6100 POWER SUPPLY
INSTALLATION INSTRUCTIONS

Features:

- Used exclusively with the ACSI Series 6100 Communicating Bath Door (Common Bath) System
- Two separate and identical rows of terminals provided for convenient field wiring of system components at each door - Only one wire per terminal opening required
- Up to 1 amp current draw allowable for each of two outputs to electrified locking device
- Outputs to electrified locking device can be field selected for fail safe or fail secure function by using on board switch
- Inputs available for optional emergency release switch when urgent unlocking of door is required
- Filtered/Regulated 24 Volts DC
- Class 2 Rated Outputs
- Overload, over voltage, and short circuit protection
- Automatically accepts 120VAC or 240VAC input
- UL listed and Tested to 294 Standard for Access Control System Units with Security Levels Rated I for Physical Attack, IV for Endurance, I for Line Security, I for Standby Power

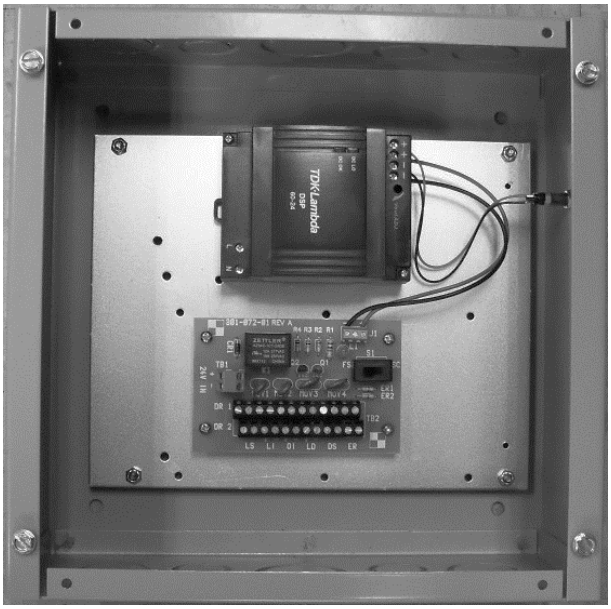

Installing the 1400-6100

For UL installations, the product is to be used only with other UL Listed and compatible security products. The unit must be mounted indoors, avoiding moist or wet areas. Some common locations for mounting the 1400-6100 would be in the plenum near the door containing the electric locking device, or in a nearby closet or electrical room. When installing the unit in the plenum, wires must be plenum rated or contained inside conduit. The unit must be mounted in a vertical position with the power supply module located at the top, as shown in the photograph above. Four 1/4” holes are provided for mounting the box to the wall or other rigid surface. If the surface material is wood, it must be at least 1 inch thick. Use either a truss or pan head, 1 inch long sheet metal screw (#10 or larger) for fastening the box to the wood surface. When mounting the unit to 1/2 inch or 5/8 inch dry wall, it is recommended that 3/16 inch or 1/4 inch diameter toggle bolts be used for maximum support. Use the same size toggle bolts for mounting the unit to hollow concrete blocks. For mounting to concrete, solid block, or brick, it is recommended to use 1-3/4 inch long (minimum) x 1/4 inch diameter hex head bolt anchors (sometimes called power-bolts) in 18-8 stainless steel or Grade 5 zinc-plated steel. The sub plate of this unit can be removed from the enclosure for providing easier access to the

mounting holes. To remove the sub plate, locate the four #6 locknuts near each corner of the plate and remove. The 6-32 studs, from which the sub plate mounts to, are held in place to the box by threaded standoffs.

Wiring the AC Input

The 1400-6100 power supply is rated for use with a 20 amp branch circuit and is capable of accepting either 120VAC or 240VAC input without the need for making any changes, or reconfiguring to convert from one input voltage to the other. Because the power supply module contains Class 2 double insulation, an earth ground wire is not required. For wiring 120VAC or 240VAC input, run 14 AWG 2-conductor to the power supply module's input terminals marked **L** (Line) and **N** (Neutral). Ensure that the conductors are fully inserted into the input terminals with no bare metal exposed. (Refer to the wire stripping instructions included on the wiring diagram attached to the cover plate of this power supply.)

CAUTION! It is important to maintain separation between the primary (high voltage AC) wiring and secondary (low voltage DC) wiring as they are routed inside the power supply enclosure. The primary wiring must be run inside conduit; and the conduit must be connected to one of the knockouts located towards the left end of the top wall of the enclosure (above and to the left of the power supply module's input terminals). All secondary wiring must be routed through any one of the knockouts located along the bottom wall of the enclosure.

Note: This unit is not equipped with a battery standby power feature.

ACSI Communicating Bath Door System - General Description

System Layout (see illustration on next page)

The standard 6100 common bath system consists of two doors leading from separate patient rooms into a bathroom facility that is situated between the two rooms. Inside the bathroom next to each door is a push-button switch with a red status indicator marked, “PUSH TO LOCK”. Outside the bathroom next to each door is a green status indicator marked, “OCCUPIED”.

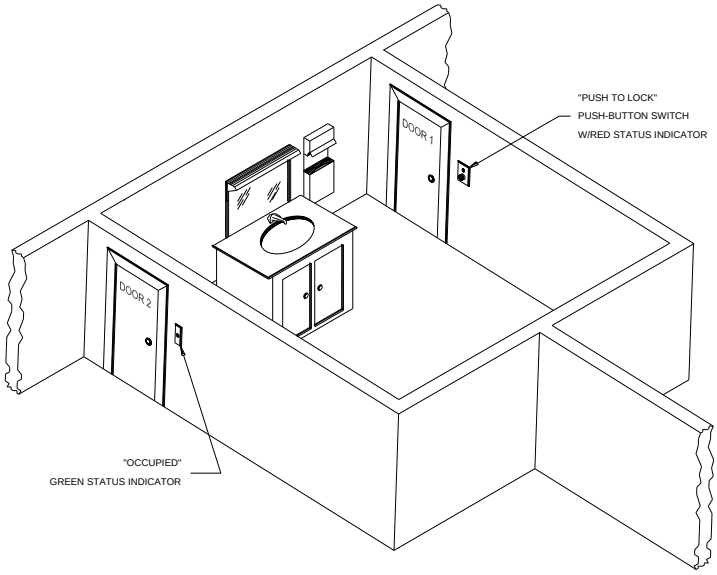

System Operation

When the bathroom is not occupied, both doors are unlocked; the red “Push To Lock” and green “Occupied” status indicators are extinguished. A patient entering the bathroom depresses the inside push-button switch to lock the doors. (Each door must be fully closed in order for both to lock.) When the doors lock, the lighted red status indicators inside the bathroom inform the patient that both doors are currently locked from the outside for privacy. The lighted green status indicators outside the bathroom inform other patients that the bathroom is currently occupied and entry is denied. When the patient exits through either door, the system automatically resets: both doors unlock; all status indicators are extinguished. The system is now ready for another patient’s use.

Note: Both doors provide free egress from the bathroom facility to the patient’s room. When electrically locked, the outside trim on either door can be mechanically overridden with a key.

Emergency Release

An optional emergency release switch can be used to gain immediate access into the bathroom facility from either patient’s room. Activating this switch will reset the system by unlocking both doors and extinguishing all status indicators.

Common Bath Component Package

- 1320-6100 “PUSH TO LOCK” Push-button Switch W/Red LED Indicator

  A normally open, momentary switch used for locking the outside trim of the two doors leading into the bathroom facility from the patients’ rooms. This switch is wired to the terminals marked as “LS” on the small p.c. board inside the 1400-6100 power supply.

Above this switch is a red LED status indicator that lights when both bathroom doors electrically lock, and informs the patient that the doors are currently locked on the patient room sides for privacy. This indicator is wired to the terminals marked as “LI” on the small p.c. board.

- 1340-6100 “OCCUPIED” Green LED Indicator

  Stationed next to the bathroom door on the patient’s room side, this status indicator informs the patient that the bath facility is currently being used by another patient and access is denied. This indicator is wired to the terminals marked as “OI” on the small p.c. board.

- 1335-3 Door Position Switch

  A magnetic contact, closed loop switch is mounted into the header of each door. The switch ensures that both doors will be latched when electrically locked. If either door is not fully closed and latched, then both doors will not electrically lock when commanded to by the Push-to-Lock switch. The switch also resets the common bath system when in the “locked” state. When the switch senses that the door is opened from inside the bathroom, both doors unlock and all status indicators are extinguished. This switch is wired to the terminals marked as “DS” on the small p.c. board.

- 1400-6100 Power Supply

  This unit is designed to provide the power and control for the entire Series 6100 Common Bath System.

Electrified Locking Devices

The following door mounted electrified locking devices can be used with the Series 6100 Common Bath System:

- ACSI Series M1510C or M1520C electrically modified mortise locksets
- ACSI Series C1510C or C1520C electrically modified cylindrical locksets
- Any electrically modified mortise or cylindrical lockset rated 24 volts DC at 1 amp (max.)

The following jamb mounted electrified locking devices can be used with the Series 6100 Common Bath System:

- ACSI Series 8500 Gemini Locking System
- ACSI Series 1700 Electric Door Strikes
- Any electric door strike, or other type of jamb-mount electrified locking device, rated 24 volts DC at 1 amp (max.)

The electrified locking device is wired to the terminals marked as “LD” on the small p.c. board inside the 1400-6100 power supply.

Fail Secure Option

The 1400-6100 power supply is provided with a slide switch (located on the small p.c. board) that can be used for field selecting the “fail” status of the electric locking device being supplied for the common bath application. The switch is factory preset for electrified locksets modified as “fail safe” (power to lock). For applications requiring fail secure electrified locksets (power to unlock), move the slide switch from the “FSF” position to the “FSC” position (see the illustration below).



Emergency Release Option

Certain conditions within a particular application may require the nursing staff to have a means of quickly accessing the bathroom facility when occupied by a patient. If an emergency situation is suspected, activating a switch would prove to be a much faster method of overriding the common bath system than by taking the time to locate a key to unlock the door. The emergency release switch would normally be located somewhere conveniently near the bathroom door inside the patient’s room.

The following controls can be used as optional emergency release devices for the Series 6100 Common Bath System:

- ACSI Model 1320-1MOM push-button switch
- ACSI Model 1330-2 emergency pull station
- Any momentary action switching device containing normally closed contacts (Contacts must open momentarily to deactivate the system when currently locked.)

The emergency release switch is wired to the terminals marked as “ER” on the small p.c. board inside the 1400-6100 power supply. The unit is shipped from the factory with the emergency release input terminals disabled. Jumpers ER1 and ER2 are internally strapped across the ER inputs on the small p.c. board. To enable the input for use with an emergency release switch, jumpers ER1 and/or ER2 must be removed by cutting them out with wire cutters – a common electrician’s tool, and available at hardware or wholesale/retail electronics stores. Removing jumper ER1 enables the ER input for Door 1; removing ER2 enables the ER input for Door 2.

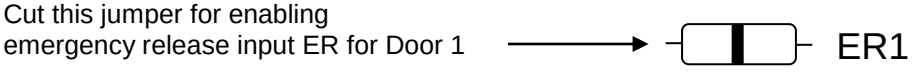

Cut this jumper for enabling
emergency release input ER for Door 2



Application Drawings

Six complete sets of drawings (riser diagram and point-to-point wire diagram) depicting six typical common bath system applications can be found at the end of this manual. Figures 1a and 1b illustrate an application using a door mounted electrified locking device and an ACSI Model 1320-1 emergency release push-button switch. Figures 2a and 2b illustrate an application using a jamb mounted electrified locking device and an ACSI Model 1330-2 emergency release pull station. The remaining figures cover special common bath applications involving three door and one door systems.

Trouble Shooting Tips

Listed below are some problems that might be encountered during installation, or at any other time, and possible solutions for correcting them.

! CAUTION !

THIS UNIT CONTAINS AREAS OF EXPOSED HIGH VOLTAGE. ALL TROUBLE SHOOTING AND MAINTENANCE SHOULD BE PERFORMED BY A QUALIFIED ELECTRICIAN.

- **The doors do not lock, nor do the status indicators light up when the push-to-lock switch is depressed.**
  - Check to see if the LED power indicator L1 on the small p.c. board inside the 1400-6100 power supply is lit. If not, there may be a shorted output; or there may be no power being applied to the small p.c. board from the power supply above.
  - Check for 120VAC across terminals of input to power supply module.
  - If 120VAC is present, disconnect field wires from all used outputs (LI, OI, LD) and measure for 24VDC across these terminals after depressing one of the two push-to-lock switches. Check to see if power indicator L1 has lighted.
  - If 24VDC is now present and L1 is lit, check for shorts across field wires for each output . If the load is an electrified locking device mounted in the door, check the electric hinge for pinched wires behind each leaf. Also check for shorted wires between the locking device and raceway in the door.
  - If 24VDC is not present across terminals marked “24V IN" at TB1 (with field wires still disconnected from all outputs) and L1 is not lit, disconnect the red and black wire leads connected to the +,- terminals of the output to the power supply module and check for 24VDC at this output. If voltage is now present across the power supply module's output, it can be assumed that there is a short circuit somewhere on the control board and it will need to be replaced. If voltage is still

not present across the output to the power supply module, then it can be assumed the power supply module itself is damaged and must be replaced.

- **The electrified locking device behaves the opposite of what was expected, i.e., it locks when intended to unlock, or unlocks when intended to lock.**
    - Determine if the locking device is fail secure or fail safe function by checking the outside trim of the door with power removed from the locking device. If the outside trim (patient room side) is unlocked, then the locking device is fail safe. If the outside trim is locked, then the locking device is fail secure.
    - Once the locking device has been determined to be either fail safe or fail secure function, set slide switch S1 on the small p.c. board inside the 1400-6100 power supply to the position that matches the function of the locking device: Set to FSF for a fail safe lock; set to FSC for a fail secure lock.

- **When the emergency release switch is activated during the time the common bath system is in the "locked" state, the doors do not unlock and the status indicators remain lit.**
    - Make sure that jumpers ER1 (for Door 1) and ER2 (for Door 2) are removed from the small p.c. board inside the 1400-6100 power supply. Whichever ER input is wired to an emergency release switch, the corresponding jumper for that input must be removed.

- **While the push-to-lock switch is <u>held</u> depressed, both doors lock and all status indicators light up, as expected. But when the push-to-lock switch is then released, both doors unlock and all status indicators are extinguished.**
    - The cause for this symptom usually involves the door position switches. Some common problems and checks are listed below:

      The magnet to the door position switch may be missing or misaligned. Remove the door position switch field wires at the DS terminals located on the small p.c. board inside the 1400-6100 power supply. With both bathroom doors fully closed and latched, and using an ohmmeter, measure across the two field wires for continuity (closed loop circuit) at each door. If one or both doors indicate no continuity through the field wires, then the door position switch must be inspected. Check to make sure there is a corresponding magnet mounted in the top of the door and, with the door fully closed, it must be positioned directly below where the door position switch is located in the door frame header. For steel doors, the air gap between the magnet and door position switch should not exceed 1/2 inch, but this could also vary. Adjust the gap until a closed loop circuit is achieved.

      The door position switch may be incorrectly wired. For the required closed loop circuit, use the black and white wires. The red wire is not used.

      BLACK WIRE: COMMON WHITE WIRE: NORMALLY OPEN RED WIRE: NORMALLY CLOSED

      The internal contacts of the door position switch itself may be defective or damaged. Using a magnet and an ohmmeter, check the operation of the contacts attached to the black and white wires: The switch should be open

circuit with no magnet near it. The switch contacts should close when the magnet is brought up near to the switch (1/4" – 1/2" gap).

For trouble shooting assistance, contact ACSI Technical Support: 1-800-753-5558

SPECIFICATIONS:

Input Voltage:	120VAC/240VAC, 50/60Hz
AC Current:	900mA/120VAC, 600mA/240VAC
Output Voltage:	24VDC Filtered, Regulated
Output Current:	2.0A
Output Power:	48W
Protection:	Overload, Over Voltage, Short Circuit

ACSI
ARCHITECTURAL
CONTROL SYSTEMS INC.

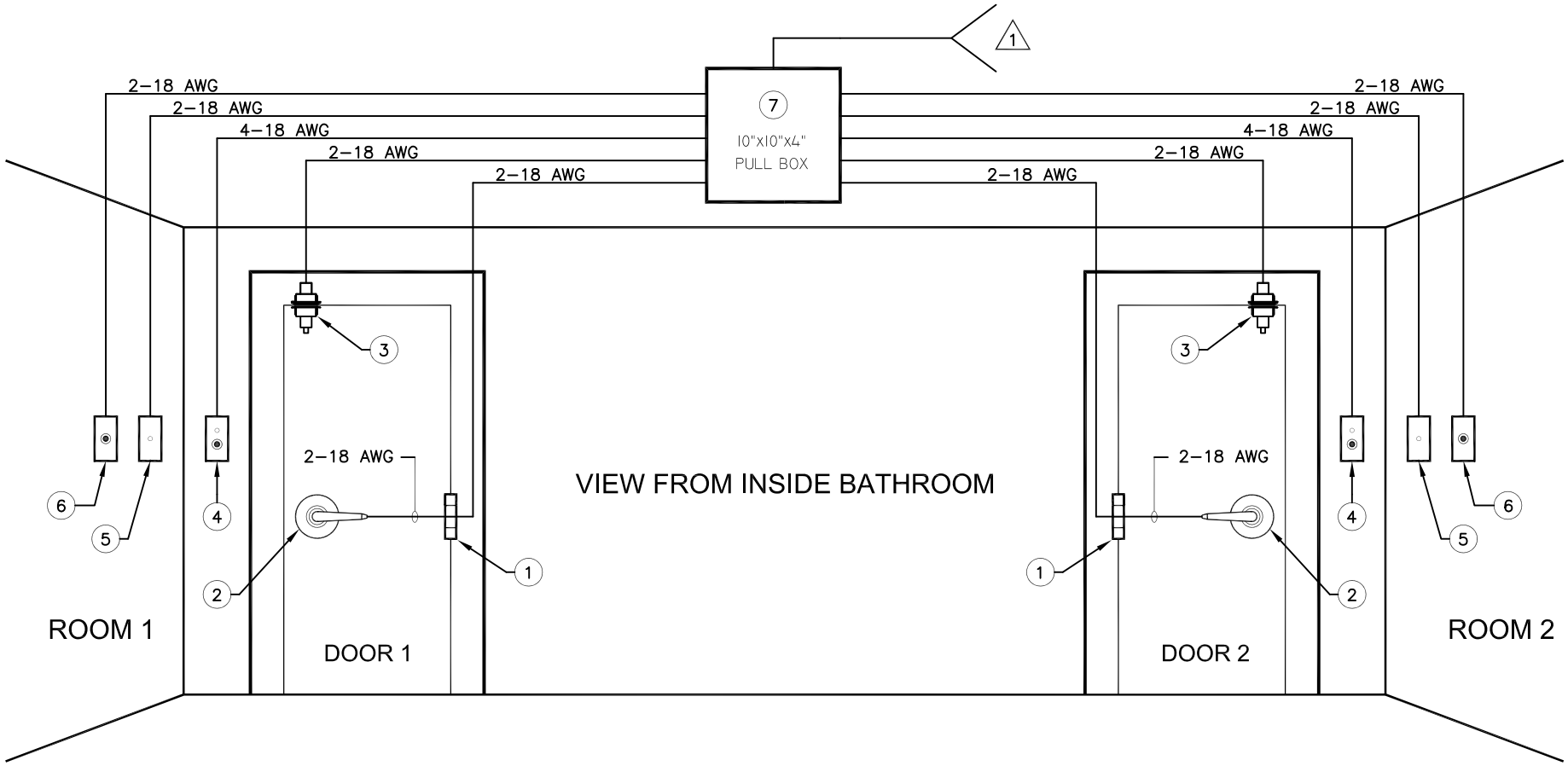

RISER DIAGRAM FOR A COMMON BATH SYSTEM APPLICATION USING A DOOR MOUNTED ELECTRIFIED LOCKING DEVICE

SYSTEM COMPONENTS:

(1) ACSI MODEL 1104 ELECTRIC THRU–WIRE HINGE, OR OTHER POWER TRANSFER DEVICE

(2)
- ACSI SERIES M1500C FAIL SAFE OR FAIL SECURE ELECTRIFIED MORTISE LOCK
- ACSI SERIES C1500C FAIL SAFE OR FAIL SECURE ELECTRIFIED CYLINDRICAL LOCK
- MISCELLANEOUS ELECTRIFIED MORTISE OR CYLINDRICAL LOCK RATED 24VDC @ 1 AMP (MAX.)

(3) 1335–3 DOOR POSITION SWITCH*

(4) 1320–6100 "PUSH–TO–LOCK" SWITCH W/INDICATOR*

(5) 1340–6100 "OCCUPIED" INDICATOR*

(6) ACSI MODEL 1320–1 OPTIONAL EMERGENCY RELEASE PUSH–BUTTON SWITCH

(7) 1400–6100 POWER SUPPLY*

*PART OF 6100 COMMON BATH PACKAGE

NOTES:

(1) TO 115V., 60HZ., 5A. SERVICE.

FIG. 1a

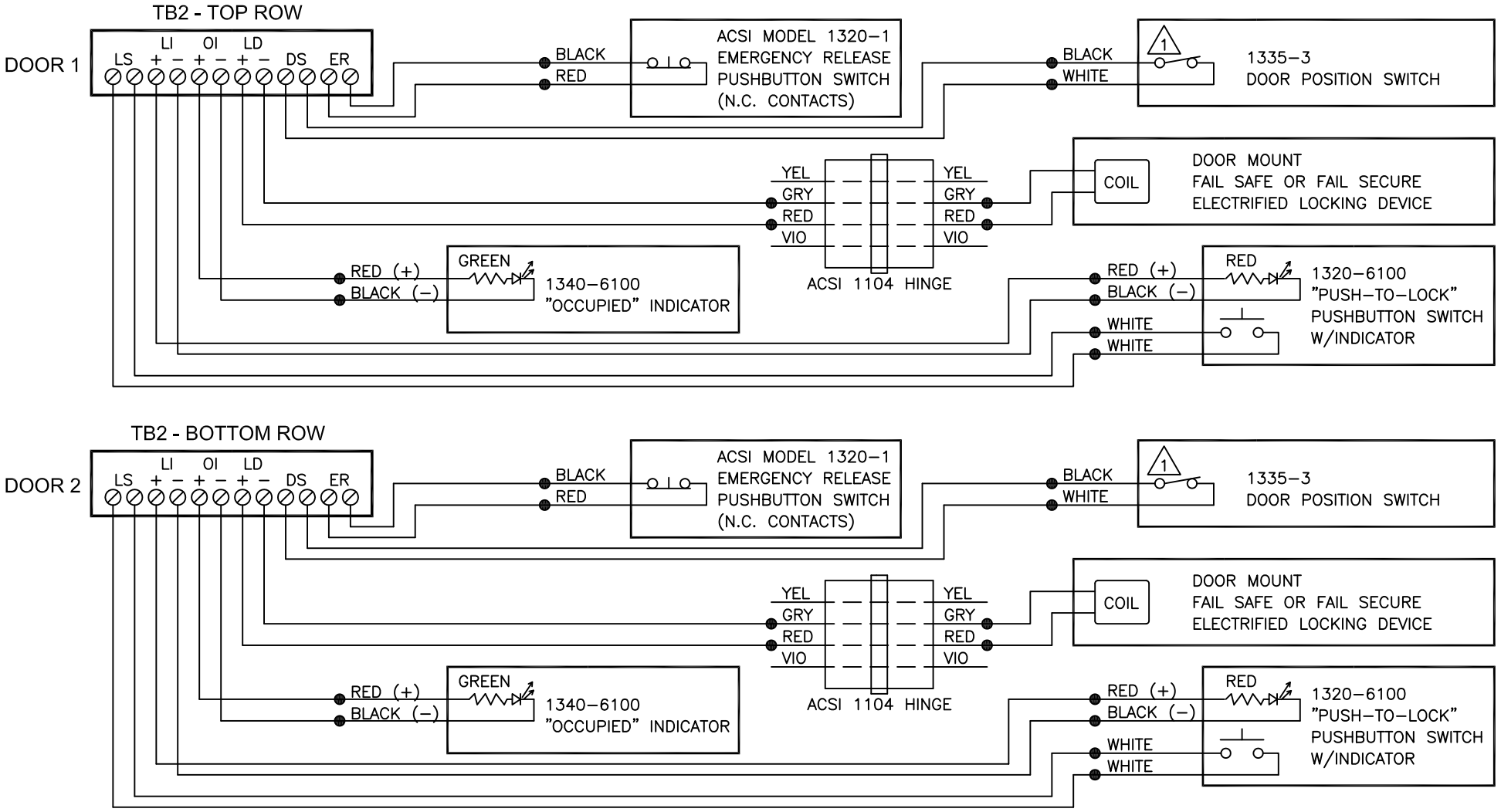

POINT-TO-POINT WIRE DIAGRAM FOR A COMMON BATH SYSTEM APPLICATION USING A DOOR MOUNTED ELECTRIFIED LOCKING DEVICE

FIG. 1b

NOTES:

1. DOOR POSITION SWITCH SHOWN CLOSED WITH DOOR IN CLOSED POSITION.

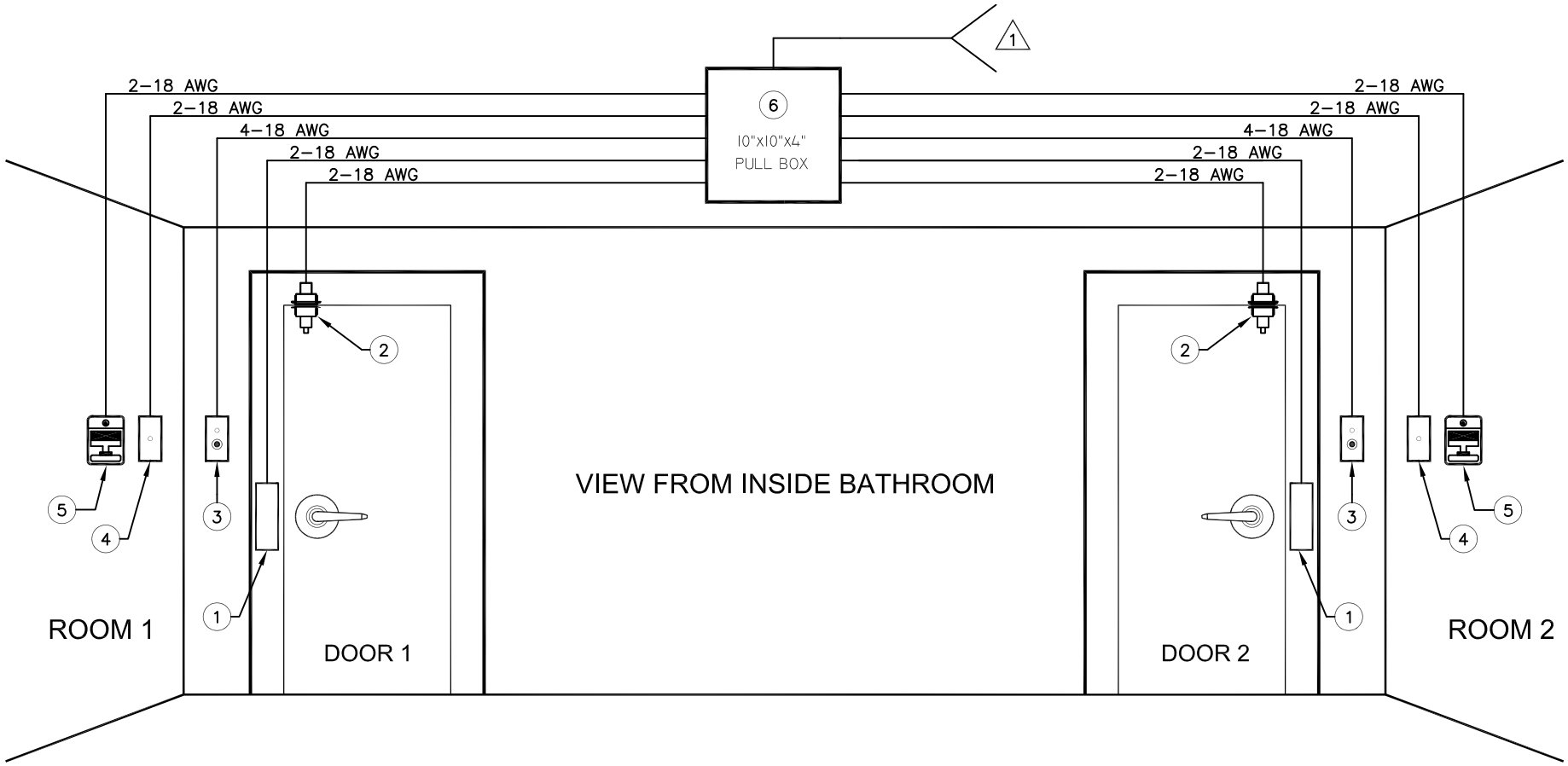

RISER DIAGRAM FOR A COMMON BATH SYSTEM APPLICATION USING A JAMB MOUNTED ELECTRIFIED LOCKING DEVICE

SYSTEM COMPONENTS:

(1) • ACSI SERIES 8500 FAIL SAFE OR FAIL SECURE GEMINI LOCKING SYSTEM
• ACSI SERIES 1700 FAIL SAFE OR FAIL SECURE ELECTRIC DOOR STRIKE
• MISCELLANEOUS ELECTRIC DOOR STRIKE RATED 24VDC @ 1 AMP (MAX.)

(2) 1335–3 DOOR POSITION SWITCH*

(3) 1320–6100 "PUSH–TO–LOCK" SWITCH W/INDICATOR*

(4) 1340–6100 "OCCUPIED" INDICATOR*

(5) ACSI MODEL 1330–3 OPTIONAL EMERGENCY RELEASE PULL STATION

(6) 1400–6100 POWER SUPPLY*

*PART OF 6100 COMMON BATH PACKAGE

NOTES:

(1) TO 115V., 60HZ., 5A. SERVICE.

FIG. 2a

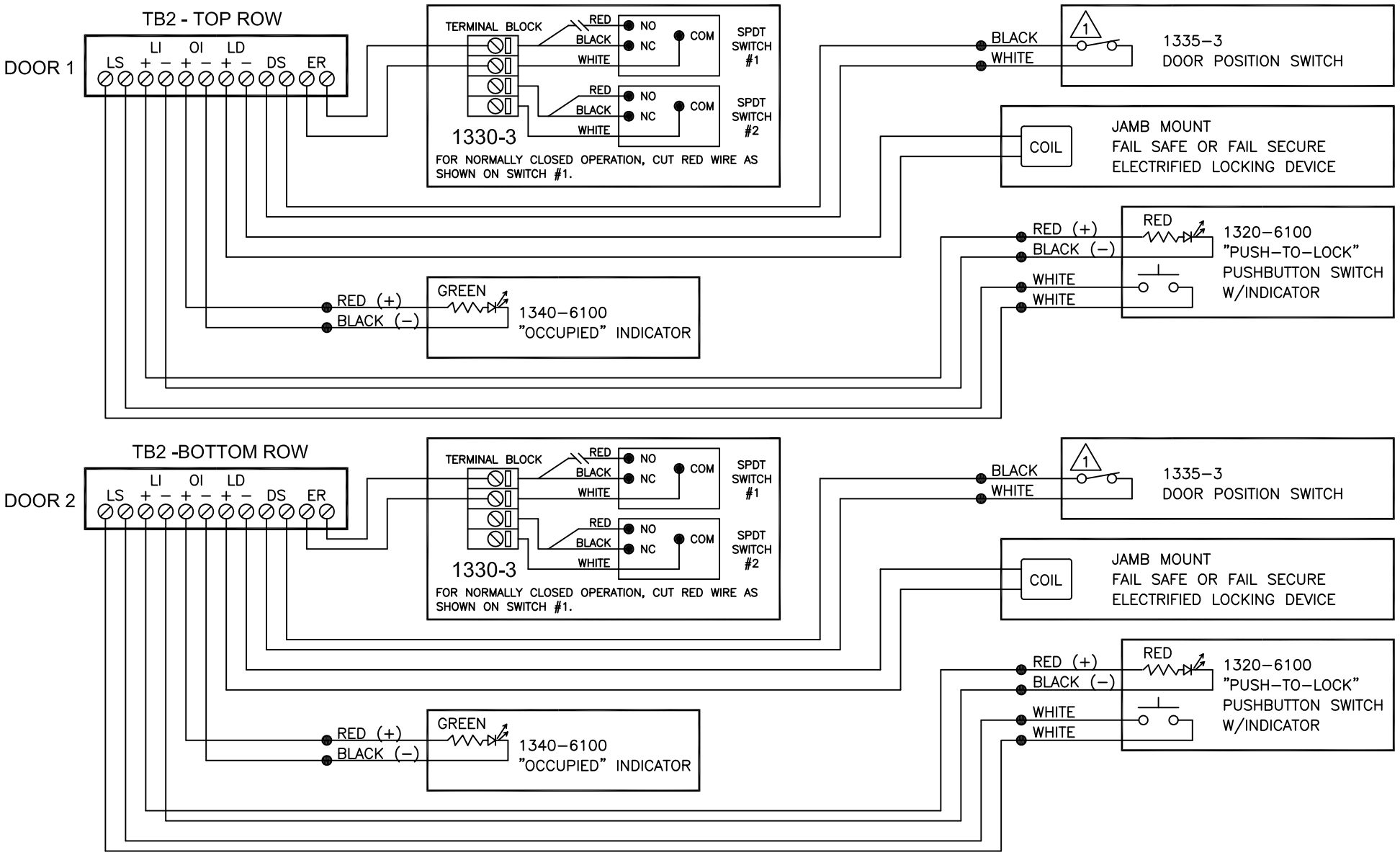

POINT-TO-POINT WIRE DIAGRAM FOR A COMMON BATH SYSTEM APPLICATION USING A JAMB MOUNTED ELECTRIFIED LOCKING DEVICE

FIG. 2b

NOTES:

1. DOOR POSITION SWITCH SHOWN CLOSED WITH DOOR IN CLOSED POSITION.

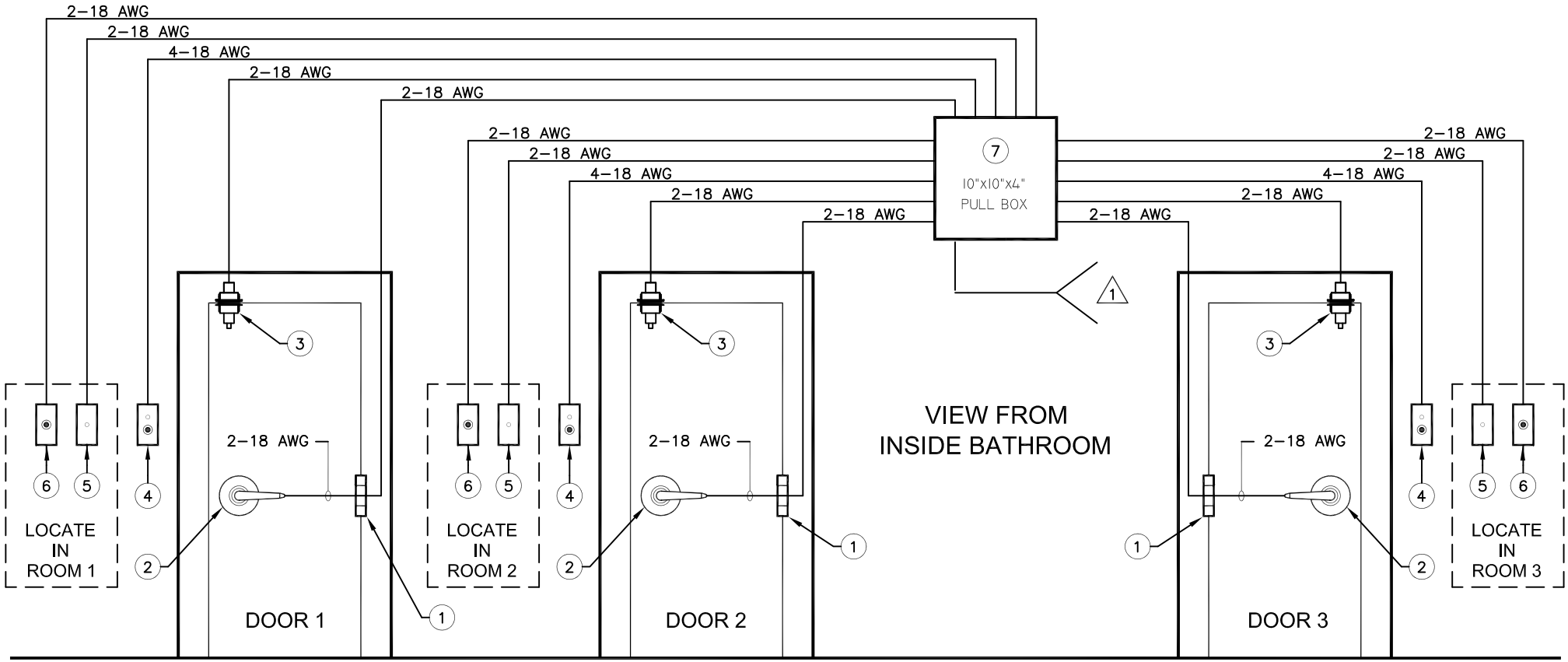

RISER DIAGRAM FOR A 3 DOOR COMMON BATH SYSTEM APPLICATION USING A DOOR MOUNTED ELECTRIFIED LOCKING DEVICE

SYSTEM COMPONENTS:

(1) ACSI MODEL 1104 ELECTRIC THRU–WIRE HINGE, OR OTHER POWER TRANSFER DEVICE

(2)
- ACSI SERIES M1500C FAIL SAFE OR FAIL SECURE ELECTRIFIED MORTISE LOCK
- ACSI SERIES C1500C FAIL SAFE OR FAIL SECURE ELECTRIFIED CYLINDRICAL LOCK
- MISCELLANEOUS ELECTRIFIED MORTISE OR CYLINDRICAL LOCK RATED 24VDC @ 1 AMP (MAX.)

(3) 1335–3 DOOR POSITION SWITCH*

(4) 1320–6100 "PUSH–TO–LOCK" SWITCH W/INDICATOR*

(5) 1340–6100 "OCCUPIED" INDICATOR*

(6) ACSI MODEL 1320–1 OPTIONAL EMERGENCY RELEASE PUSH–BUTTON SWITCH

(7) 1400–6100 POWER SUPPLY*

*PART OF 6100 COMMON BATH PACKAGE

NOTES:

(1) TO 115V., 60HZ., 5A. SERVICE.

FIG. 3a

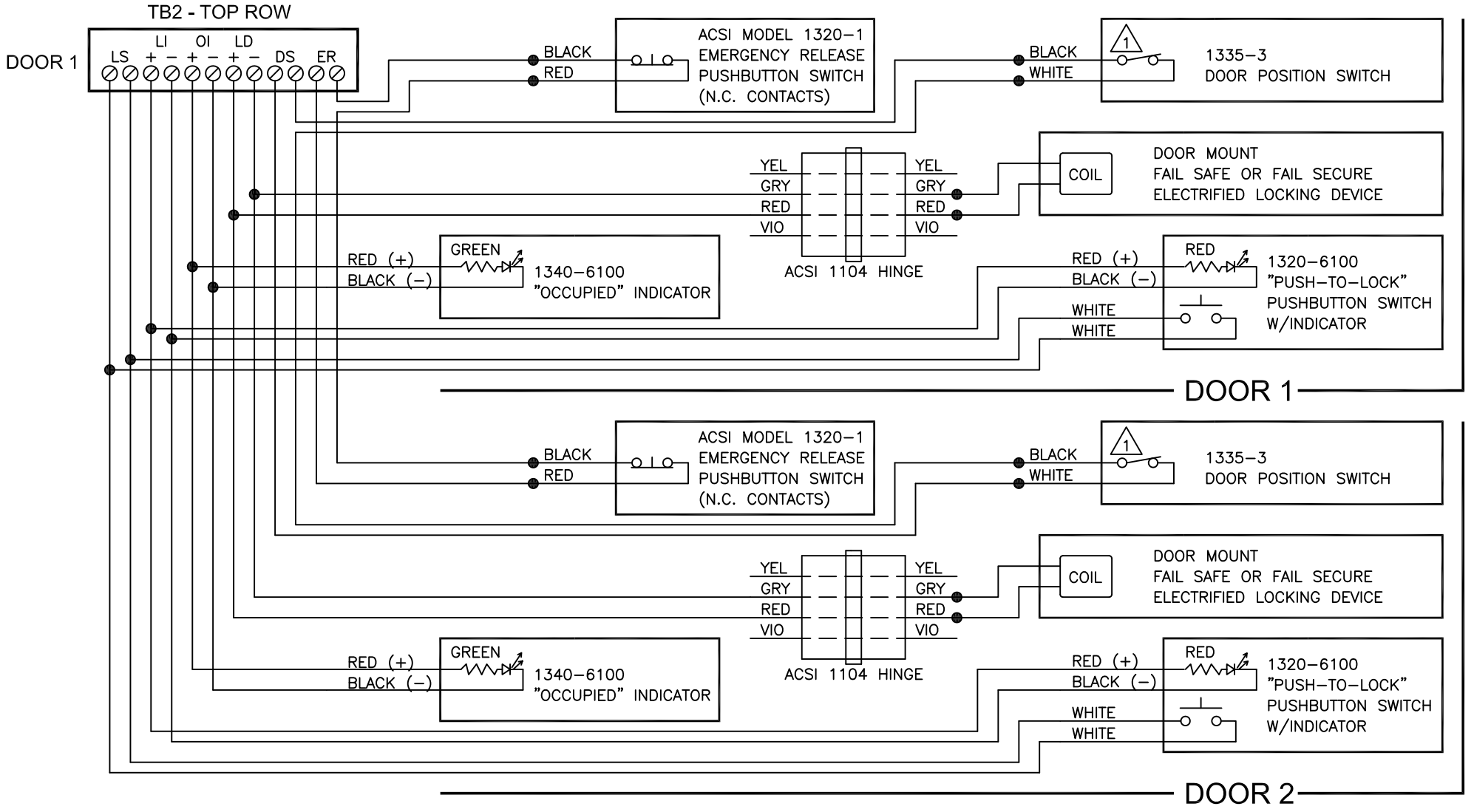

POINT-TO-POINT WIRE DIAGRAM FOR A 3 DOOR COMMON BATH SYSTEM APPLICATION USING A DOOR MOUNTED ELECTRIFIED LOCKING DEVICE

FIG. 3b

NOTES:

1. DOOR POSITION SWITCH SHOWN CLOSED WITH DOOR IN CLOSED POSITION.

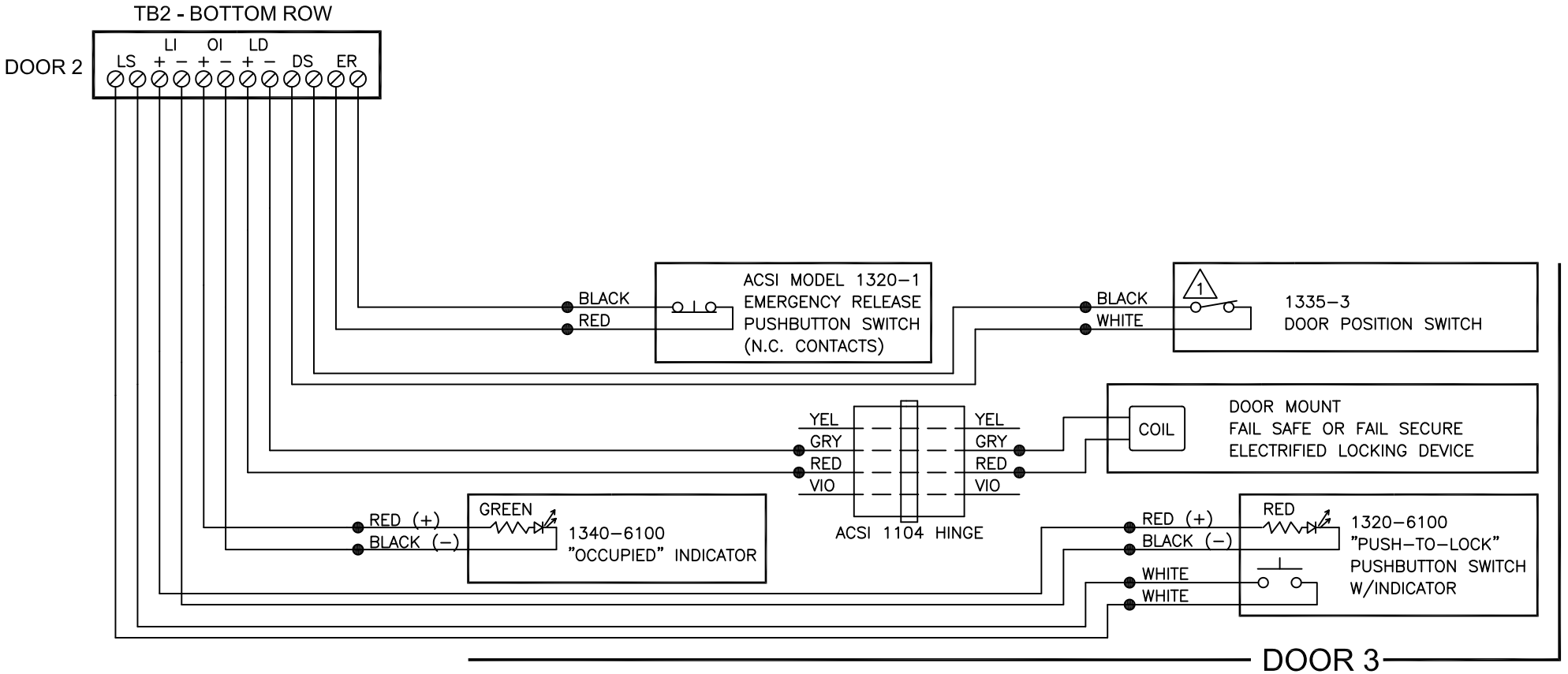

POINT-TO-POINT WIRE DIAGRAM FOR A 3 DOOR COMMON BATH SYSTEM APPLICATION USING A DOOR MOUNTED ELECTRIFIED LOCKING DEVICE

FIG. 3c

NOTES:

1. DOOR POSITION SWITCH SHOWN CLOSED WITH DOOR IN CLOSED POSITION.

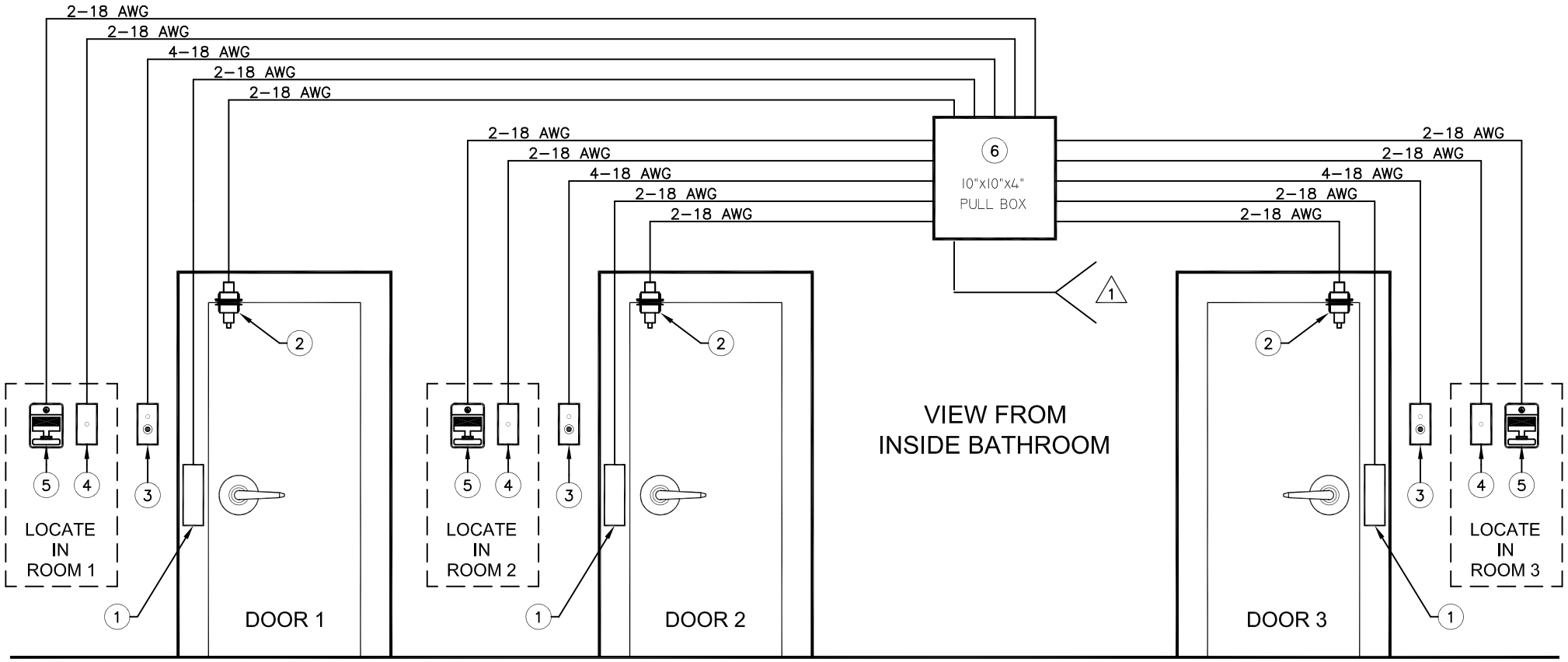

RISER DIAGRAM FOR A 3 DOOR COMMON BATH SYSTEM APPLICATION USING A JAMB MOUNTED ELECTRIFIED LOCKING DEVICE

SYSTEM COMPONENTS:

(1) • ACSI SERIES 8500 FAIL SAFE OR FAIL SECURE GEMINI LOCKING SYSTEM
• ACSI SERIES 1700 FAIL SAFE OR FAIL SECURE ELECTRIC DOOR STRIKE
• MISCELLANEOUS ELECTRIC DOOR STRIKE RATED 24VDC @ 1 AMP (MAX.)

(2) 1335–3 DOOR POSITION SWITCH*

(3) 1320–6100 "PUSH–TO–LOCK" SWITCH W/INDICATOR*

(4) 1340–6100 "OCCUPIED" INDICATOR*

(5) ACSI MODEL 1330–3 OPTIONAL EMERGENCY RELEASE PULL STATION

(6) 1400–6100 POWER SUPPLY*

*PART OF 6100 COMMON BATH PACKAGE

NOTES:

(1) TO 115V., 60HZ., 5A. SERVICE.

FIG. 4a

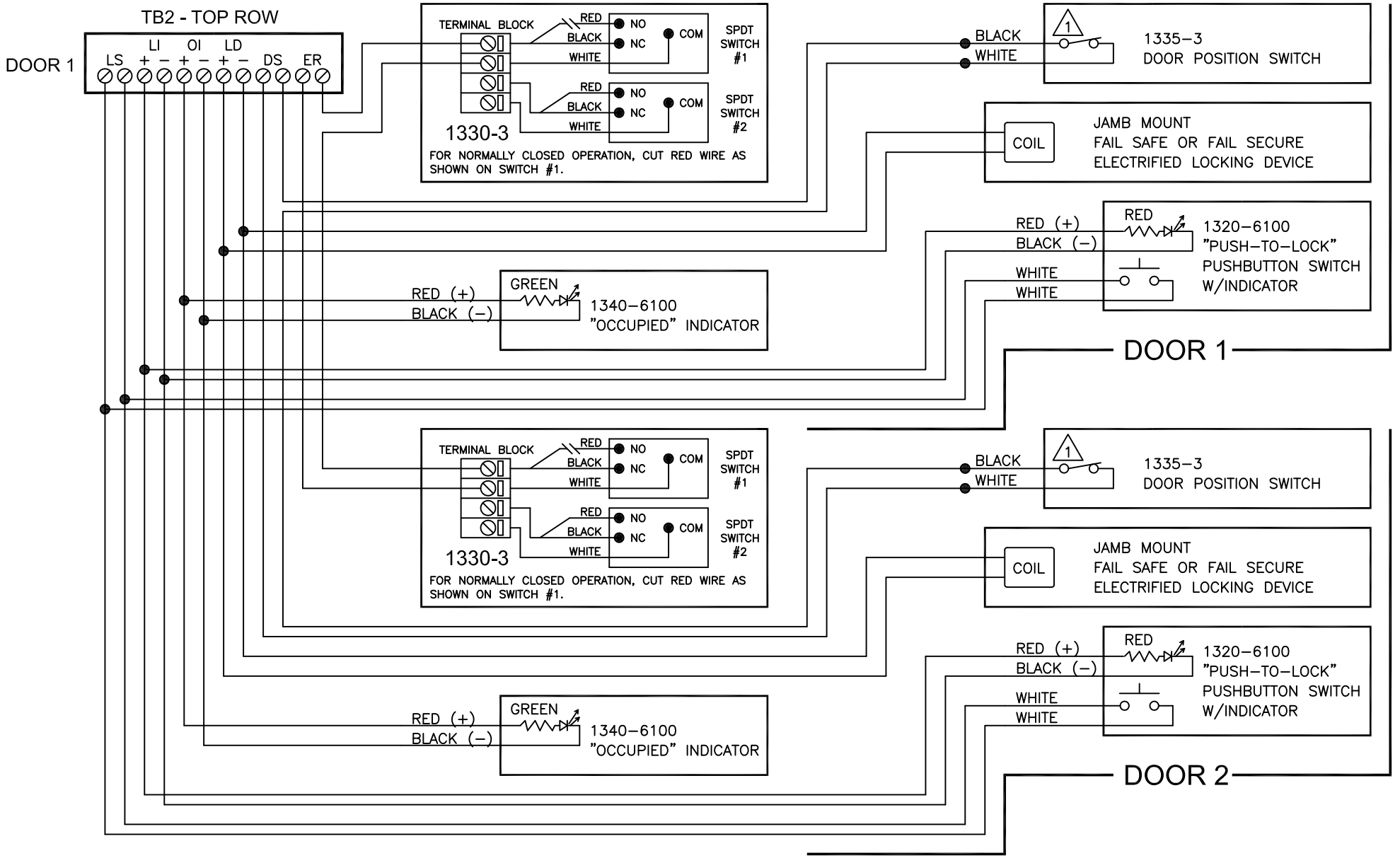

POINT-TO-POINT WIRE DIAGRAM FOR A 3 DOOR COMMON BATH SYSTEM APPLICATION USING A JAMB MOUNTED ELECTRIFIED LOCKING DEVICE

FIG. 4b

NOTES:

1. DOOR POSITION SWITCH SHOWN CLOSED WITH DOOR IN CLOSED POSITION.

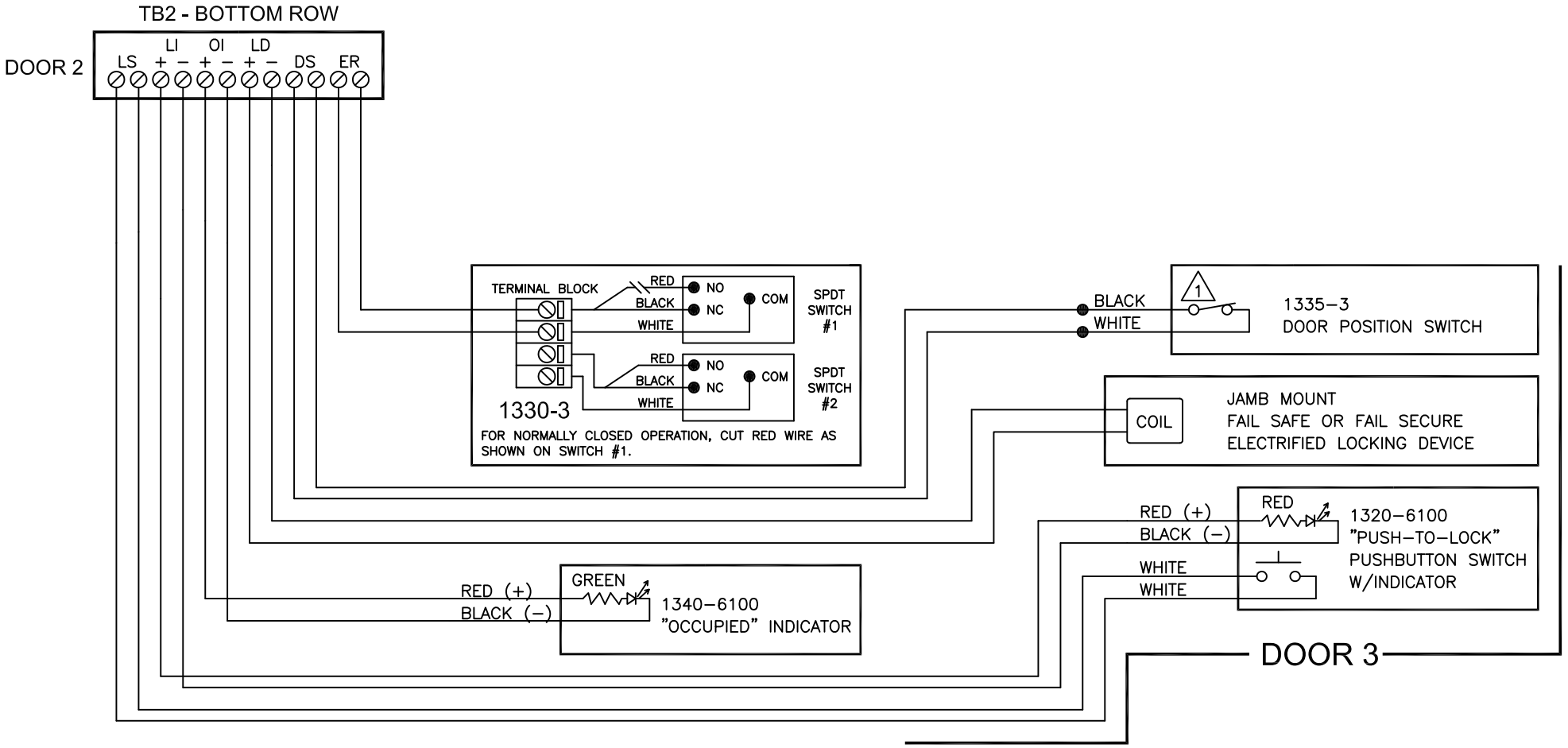

POINT-TO-POINT WIRE DIAGRAM FOR A 3 DOOR COMMON BATH SYSTEM APPLICATION USING A JAMB MOUNTED ELECTRIFIED LOCKING DEVICE

FIG. 4c

NOTES:

1. DOOR POSITION SWITCH SHOWN CLOSED WITH DOOR IN CLOSED POSITION.

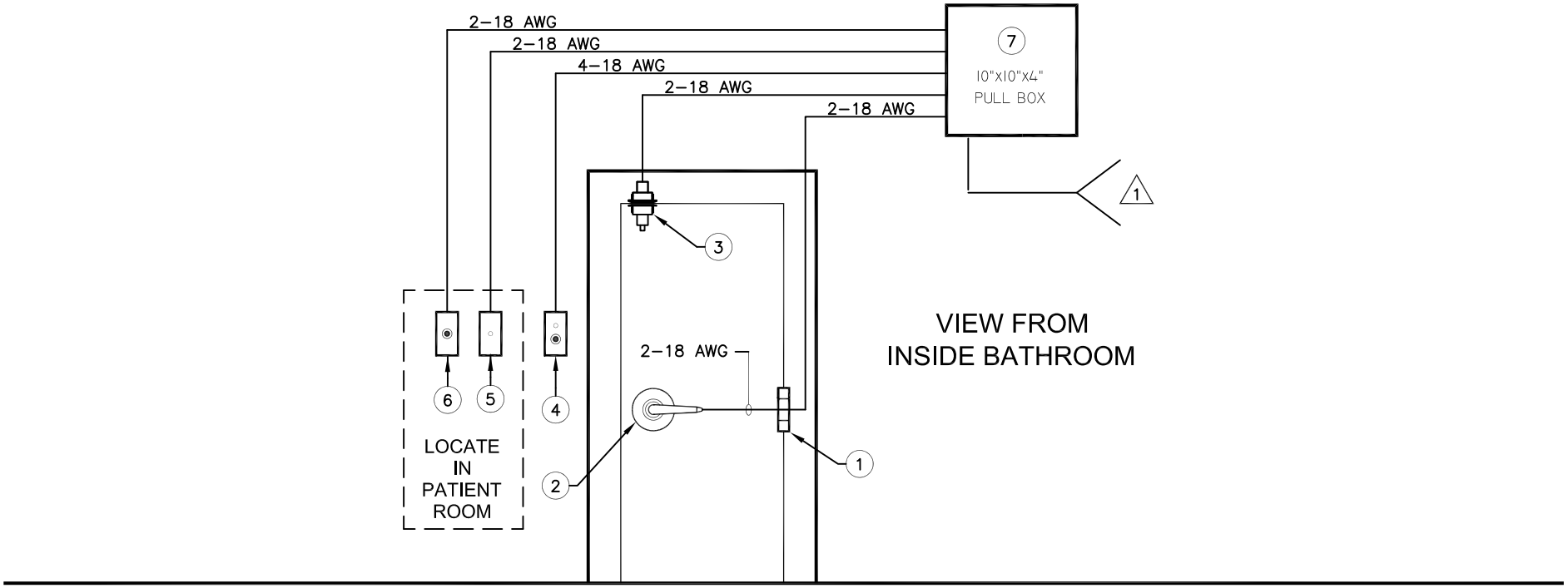

RISER DIAGRAM FOR SINGLE DOOR COMMON BATH SYSTEM APPLICATION USING A DOOR MOUNTED ELECTRIFIED LOCKING DEVICE

SYSTEM COMPONENTS:

1. ACSI MODEL 1104 ELECTRIC THRU–WIRE HINGE, OR OTHER POWER TRANSFER DEVICE
2. • ACSI SERIES M1500C FAIL SAFE OR FAIL SECURE ELECTRIFIED MORTISE LOCK
   • ACSI SERIES C1500C FAIL SAFE OR FAIL SECURE ELECTRIFIED CYLINDRICAL LOCK
   • MISCELLANEOUS ELECTRIFIED MORTISE OR CYLINDRICAL LOCK RATED 24VDC @ 1 AMP (MAX.)
3. 1335–3 DOOR POSITION SWITCH*
4. 1320–6100 "PUSH–TO–LOCK" SWITCH W/INDICATOR*
5. 1340–6100 "OCCUPIED" INDICATOR*
6. ACSI MODEL 1320–1 OPTIONAL EMERGENCY RELEASE PUSH–BUTTON SWITCH
7. 1400–6100 POWER SUPPLY*

*PART OF 6100 COMMON BATH PACKAGE

NOTES:

1. TO 115V., 60HZ., 5A. SERVICE.

FIG. 5a

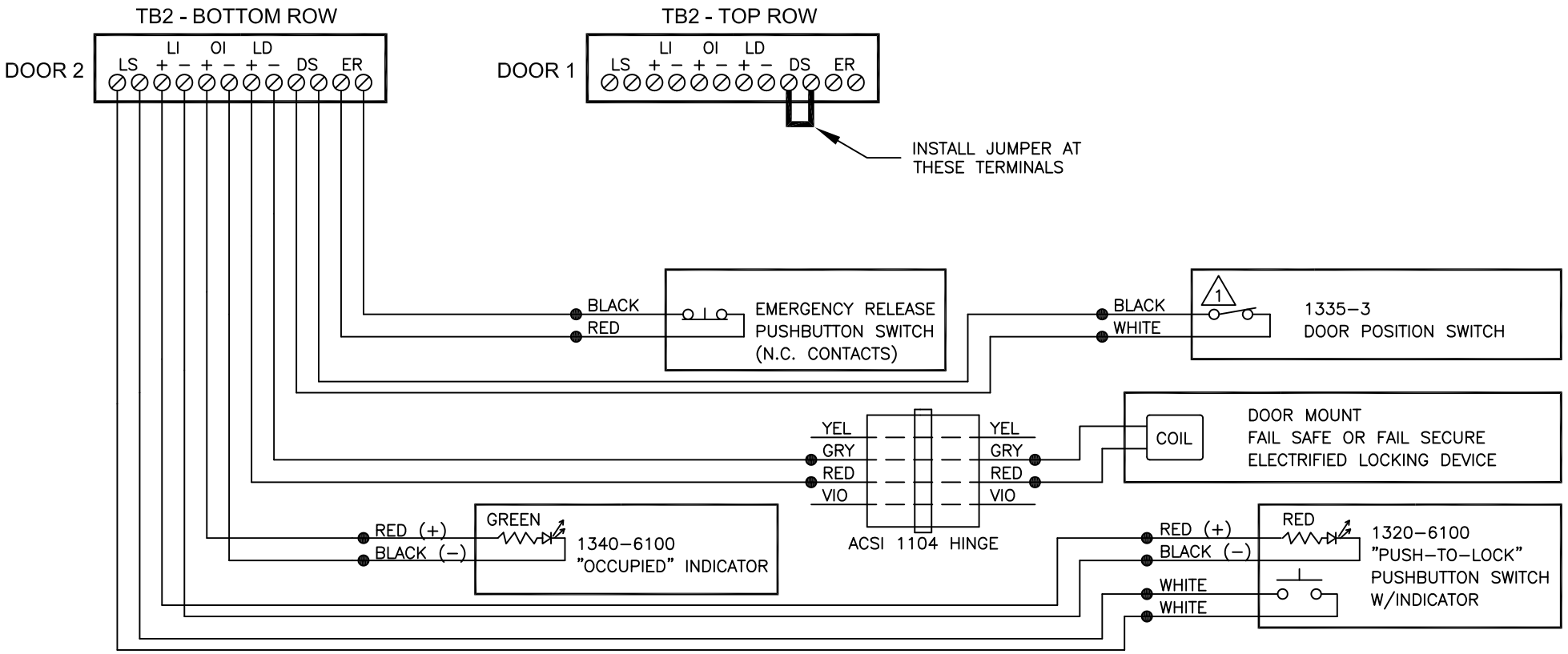

POINT-TO-POINT WIRE DIAGRAM FOR A SINGLE DOOR COMMON BATH SYSTEM APPLICATION USING A DOOR MOUNTED ELECTRIFIED LOCKING DEVICE

FIG. 5b

NOTES:

1. DOOR POSITION SWITCH SHOWN CLOSED WITH DOOR IN CLOSED POSITION.

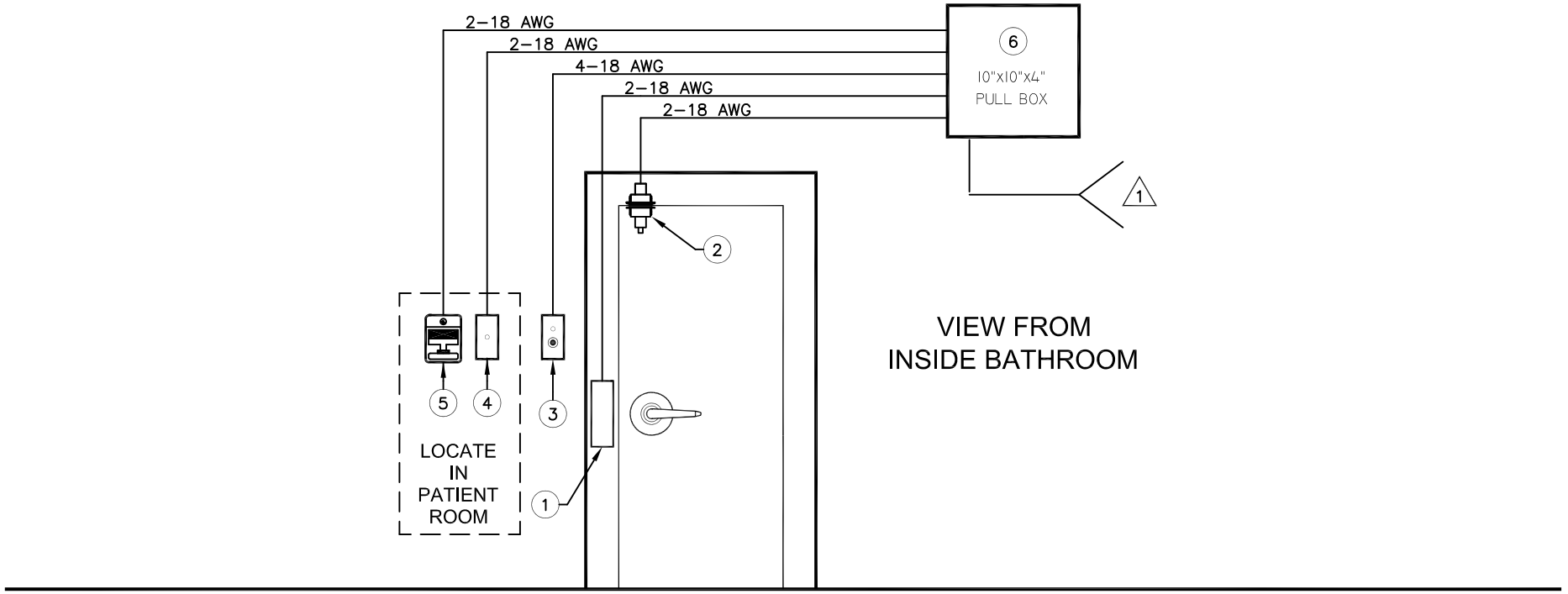

RISER DIAGRAM FOR SINGLE DOOR COMMON BATH SYSTEM APPLICATION USING A JAMB MOUNTED ELECTRIFIED LOCKING DEVICE

SYSTEM COMPONENTS:

1. • ACSI SERIES 8500 FAIL SAFE OR FAIL SECURE GEMINI LOCKING SYSTEM
   • ACSI SERIES 1700 FAIL SAFE OR FAIL SECURE ELECTRIC DOOR STRIKE
   • MISCELLANEOUS ELECTRIC DOOR STRIKE RATED 24VDC @ 1 AMP (MAX.)
2. 1335–3 DOOR POSITION SWITCH*
3. 1320–6100 "PUSH–TO–LOCK" SWITCH W/INDICATOR*
4. 1340–6100 "OCCUPIED" INDICATOR*
5. ACSI MODEL 1330–3 OPTIONAL EMERGENCY RELEASE PULL STATION
6. 1400–6100 POWER SUPPLY*

*PART OF 6100 COMMON BATH PACKAGE

NOTES:

1. TO 115V., 60HZ., 5A. SERVICE.

FIG. 6a

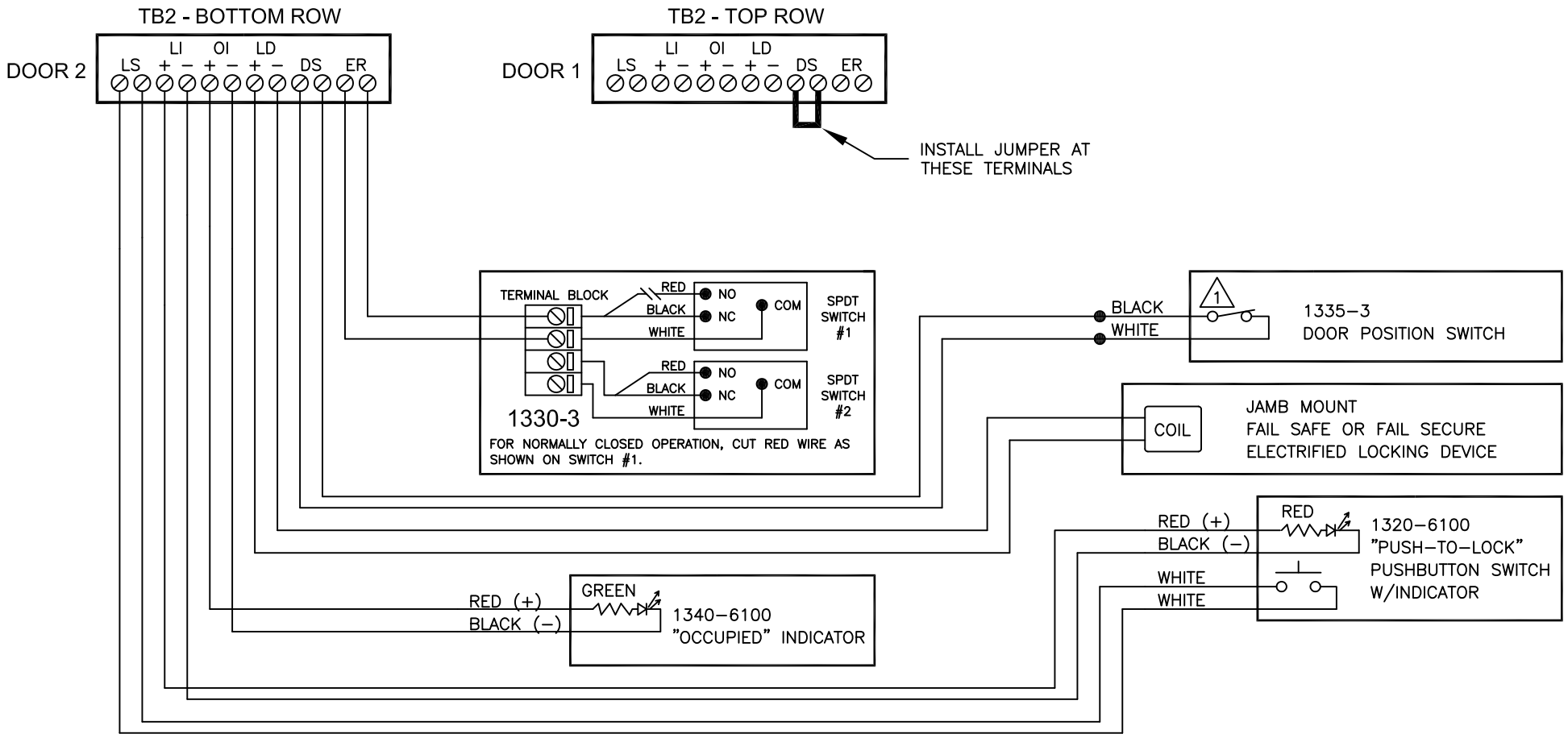

POINT-TO-POINT WIRE DIAGRAM FOR A SINGLE DOOR COMMON BATH SYSTEM APPLICATION USING A JAMB MOUNTED ELECTRIFIED LOCKING DEVICE

FIG. 6b

NOTES:

1. DOOR POSITION SWITCH SHOWN CLOSED WITH DOOR IN CLOSED POSITION.

MODEL 1400-6100 POWER SUPPLY

ACCESS CONTROL POWER SUPPLY
CLASS 2 OUTPUTS

SECURITY
UL
LISTED
EQUIPMENT
4M73

MFG. DATE:

SPECIFICATIONS:

INPUT VOLTAGE:	120VAC/240VAC, 50/60Hz
AC CURRENT:	900mA/120VAC, 600mA/240VAC
OUTPUT VOLTAGE:	24VDC FILTERED, REGULATED
OUTPUT CURRENT:	2.0A
OUTPUT POWER:	48W
PROTECTION:	OVERLOAD, OVER VOLTAGE, SHORT CIRCUIT

USE INSTALLATION INSTRUCTIONS II - 1400-9

POWER SUPPLY INTENDED FOR INDOOR USE ONLY

STRIP WIRE BACK 6mm. WIRES MUST BE FULLY INSERTED INTO TERMINALS SO THAT NO BARE METAL IS EXPOSED. FLEXIBLE CABLE: ALL STRANDS MUST BE SECURED IN TERMINAL. USE COPPER CONDUCTORS ONLY.

TERMINAL SIZE RANGE:
AWG24–10 FOR A TYPE
AWG24–14 FOR B TYPE

120VAC OR 240VAC INPUT

CLASS 2 DOUBLE INSULATION.
NO EARTH GROUND WIRE REQUIRED.

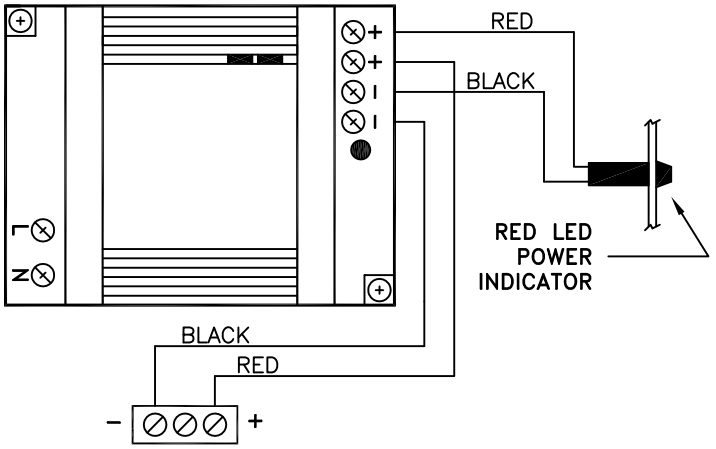

CONTROL BOARD 24V POWER CONNECTOR J1

CONTROL BOARD I/O CONNECTOR

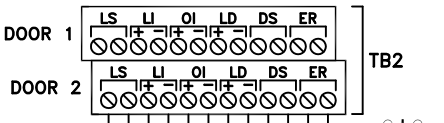

EMERGENCY RELEASE SWITCH (DISABLED BY DEFAULT – REFER TO INSTALLATION INSTRUCTIONS). MOMENTARY OPENING OF SWITCH CONTACTS RESTORES DOORS 1 AND 2 TO AN UNLOCKED CONDITION AND EXTINGUISHES ALL STATUS INDICATORS.

DOOR POSITION SWITCH (SHOWN CLOSED WITH DOOR IN CLOSED POSITION). OPENING DOOR RESTORES DOORS 1 AND 2 TO AN UNLOCKED CONDITION AND EXTINGUISHES ALL STATUS INDICATORS.

FAIL SAFE OR FAIL SECURE ELECTRIFIED LOCKING DEVICE (FIELD SELECTABLE – REFER TO INSTALLATION INSTRUCTIONS).

GREEN LED "OCCUPIED" STATUS INDICATOR (LOCATED OUTSIDE BATHROOM).

RED LED "DOORS LOCKED" STATUS INDICATOR (LOCATED INSIDE BATHROOM).

"PUSH TO LOCK" SWITCH (LOCATED INSIDE BATHROOM). MOMENTARY CLOSING OF SWITCH LOCKS OUTSIDE TRIM AT DOORS 1 & 2 AND TURNS ON ALL STATUS INDICATORS.

NOTE 1: CONNECTIONS TO DOOR 1 TERMINALS ARE IDENTICAL TO CONNECTIONS MADE AT DOOR 2.
NOTE 2: THE SUM OF ALL OUTPUTS CANNOT EXCEED 2 AMPS.
NOTE 3: REFER TO FIGURES 1 – 6 IN THE INSTALLATION INSTRUCTIONS MANUAL FOR COMPLETE RISER AND POINT–TO–POINT WIRING DIAGRAMS.

FOR TROUBLE SHOOTING ASSISTANCE,
CONTACT ACSI TECHNICAL SUPPORT:
1-800-753-5558

REV. 06/15

ACSI
ARCHITECTURAL CONTROL SYSTEMS INC.

GEMINI LOCKING SYSTEM INSTALLATION INSTRUCTIONS

ELECTRICAL SPECIFICATIONS

THE GEMINI OPERATOR'S LABEL SPECIFIES THE CORRECT OPERATING VOLTAGE, AC OR DC, AND THE OPERATING CURRENT.

12 VOLT @ 1.25 AMP / 24 VOLT @ 0.6 AMP / 115 VOLT @ 0.13 AMP

FRAME PREPERATION

CHECK DEPTH OF FRAME FOR CLEARANCE AREA. DEPTH AT STRIKE SHOULD BE 1 7/8" ± 1/16". IF DEPTH IS NOT AS SPECIFIED DO NOT ATTEMPT TO INSTALL THE GEMINI OPERATOR.

302-03-02 MORTAR GUARD

RECOMMENDED FOR ALL VOLTAGES. MUST BE USED ON MORTAR FILLED FRAMES AND IS REQUIRED ON ALL 115 VOLT APPLICATIONS IN ACCORDANCE WITH THE NATIONAL ELECTRICAL CODE ANSI/NFPA 70-1996.

INSTALLATION

STEP 1: CUT HOOKUP CABLE OR WIRES APPROXIMATELY 1" BELOW CUTOUT IN FRAME.

STEP 2: IF CABLE IS USED STRIP OUTER JACKET BACK APPROXIMATELY 2".

STEP 3: STRIP WIRES BACK 1/4" – 3/8" INCH.

STEP 4: CRIMP GEMINI WIRES TO CABLE HOOK-UP WIRE USING STANDARD CRIMP SPLICES. PUSH EXCESS WIRE UP TOWARDS THE TOP OF MORTAR BOX, MAKING SURE WIRES ARE CLEAR OF ALL GEMINI LINKAGE.

STEP 5: IF OPTIONAL QUICK CONNECT CABLE IS USED, PASS CONNECTOR THROUGH CONDUIT OF MORTAR BOX UNTIL IT CAN BE REACHED THROUGH THE FRAME PREP OPENING. PLUG THE CONNECTOR ON GEMINI OPERATOR TO MATING CONNECTOR OF CABLE. PUSH EXCESS WIRE UP TOWARDS THE TOP OF MORTAR BOX, MAKING SURE WIRES ARE CLEAR OF ALL GEMINI LINKAGE. TRIM EXCESS CABLE IN CEILING AND TERMINATE TO ELECTRICAL SOURCE.

STEP 6: INSTALL GEMINI OPERATOR IN FRAME OPENING AS SHOWN. SECURE WITH SCREWS PROVIDED. USE SHORT SCREW ON UPPER MOUNTING POSITION.
NOTE: IF FULL STRIKE IS USED, GEMINI OPERATOR MAY BE PUSHED STRAIGHT INTO FRAME PREP.

STEP 7: TO REMOVE FAIL SAFE (POWER LOCK) OPERATORS FROM THE FRAME PLACE A SCREWDRIVER BEHIND THE GEMINI OPERATOR AND MOVE THE PLUNGER FORWARD UNTIL IT IS FLUSH WITH THE STRIKEPLATE. THE OPERATOR MAY THEN BE LOWERED OUT OF THE FRAME PREP.

ARCHITECTURAL CONTROL SYSTEMS, INCORPORATED

2720 CLARK AVE., ST. LOUIS, MO 63103 (800) 753-5558 **REV. 12/2017 II-8500-01**

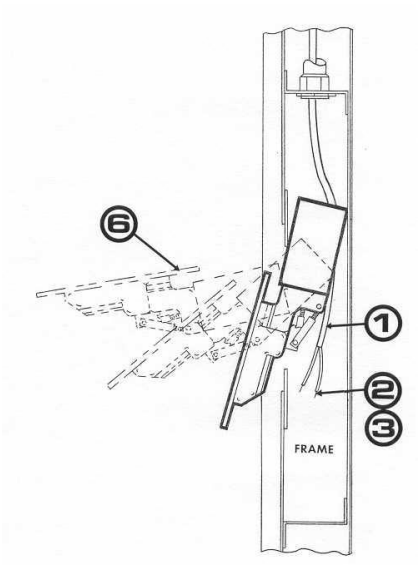

STEPS 1, 2, 3 & 6

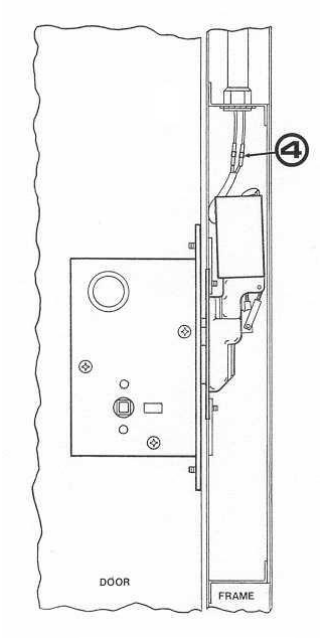

STEP 4

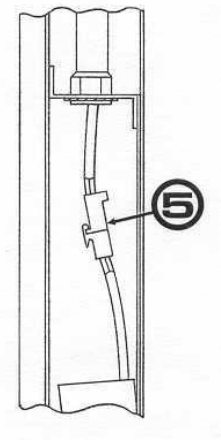

STEP 5

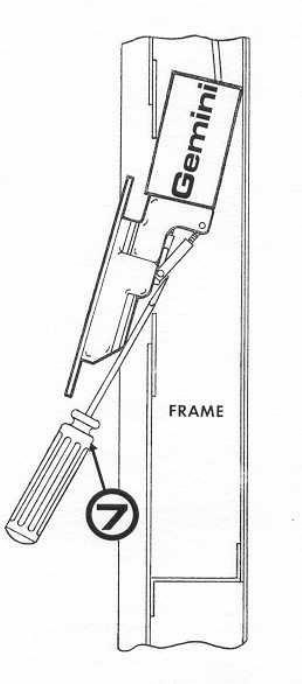

STEP 7

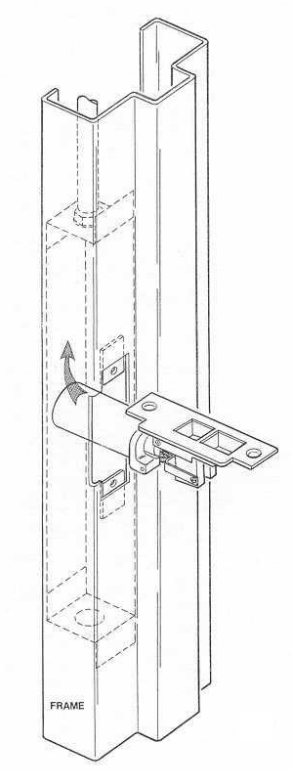

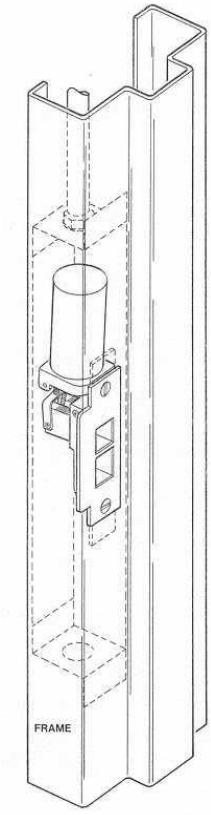

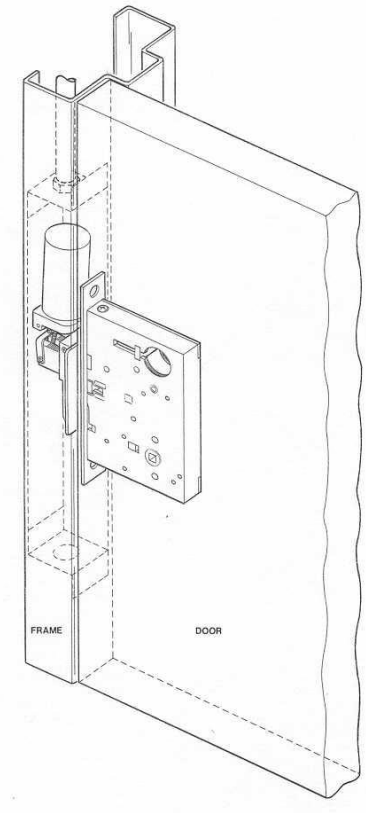

ARCHITECTURAL CONTROL SYSTEMS, INCORPORATED

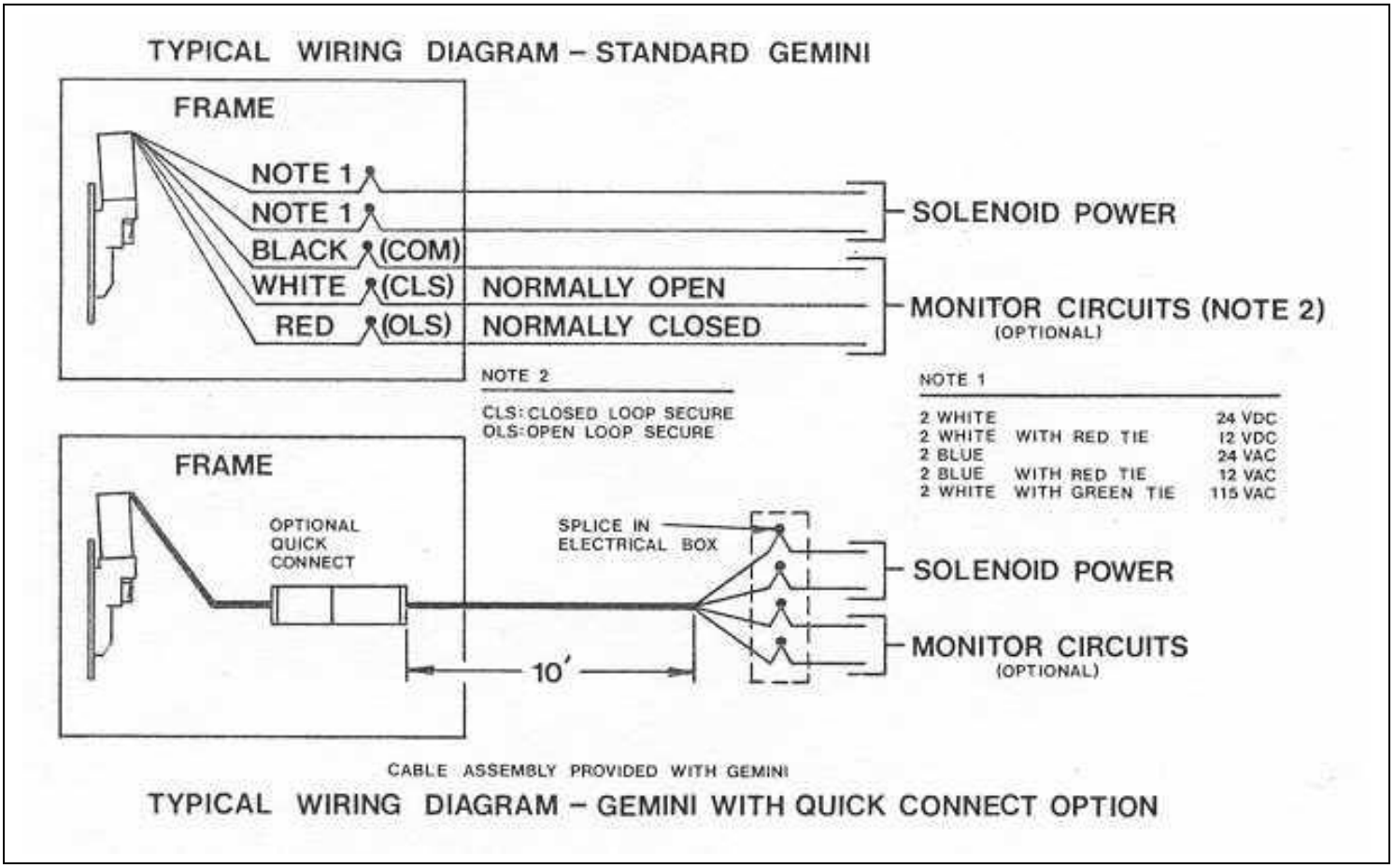

ADJUSTMENT AND TROUBLE SHOOTING

FOR THE GEMINI SYSTEM TO PERFORM PROPERLY, THE MAIN LATCH MUST DROP INTO THE STRIKEPLATE HOLE FREELY. THE AUXILIARY LATCH MUST DROP FREELY INTO THE GEMINI PLUNGER HOLE. IF THE LATCH IS TOO HIGH OR LOW, ADJUSTMENTS TO THE DOOR MUST BE MADE. IF THE MAIN LATCH DOES NOT CLEAR THE STRIKE IN A LATERAL DIRECTION, THE STRIKE OPENING MAY BE FILED SLIGHTLY.

DO NOT FILE THE PLUNGER OPENING IN THE GEMINI OPERATOR!
IF THE PLUNGER FAILS TO EXTEND ON FAIL SAFE (PL) UNITS OR TO RETRACT ON FAIL SECURE (PUL) UNITS, CHECK WIRING AND CONFIRM THAT GEMINI OPERATOR HAS THE PROPER VOLTAGE ± 10%.

THE LINKAGE THAT CONNECTS THE PLUNGER TO THE SOLENOID AND HOUSING ARE NOT FIELD ADJUSTABLE. BREAKING SEALS MAY VOID WARRANTY.

ARCHITECTURAL CONTROL SYSTEMS, INCORPORATED

2720 CLARK AVE., ST. LOUIS, MO 63103 (800) 753-5558 REV. 12/2017

8500-ANSI

GEMINI ANSI FRAME PREPERATION TEMPLATE

FOR USE WITH ANSI STANDARD DOOR AND FRAME PREP WITH MORTISE LOCKS OR MORTISE EXIT DEVICES

TEMPLATE SHOWN FOR RH/LHR OPPOSITE FOR LH/RHR

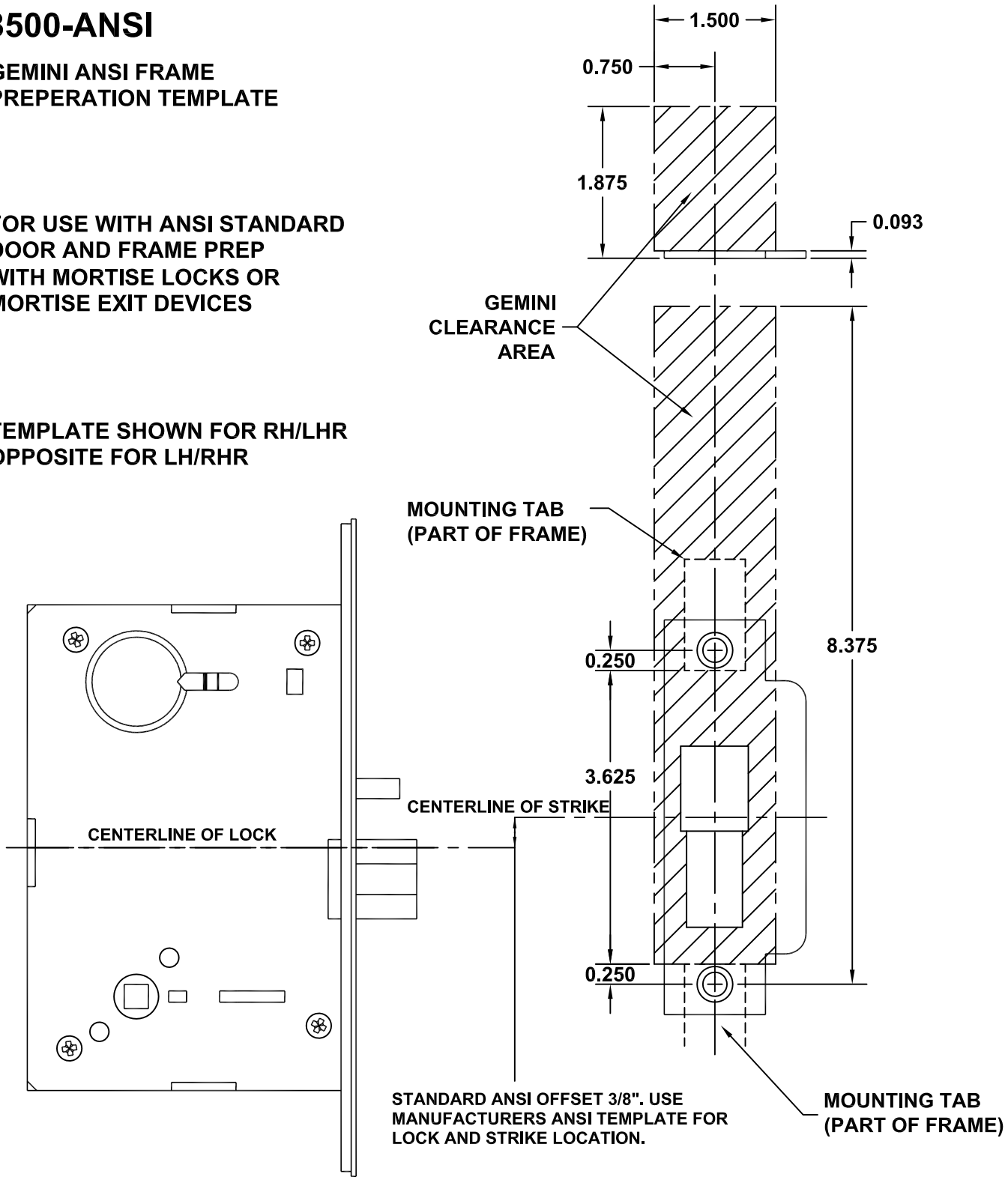

ARCHITECTURAL CONTROL SYSTEMS, INCORPORATED

2720 CLARK AVE., ST. LOUIS, MO 63103 (800) 753-5558

REV. 8/11

302-03-02 MORTAR GUARD INSTALLATION INSTRUCTIONS

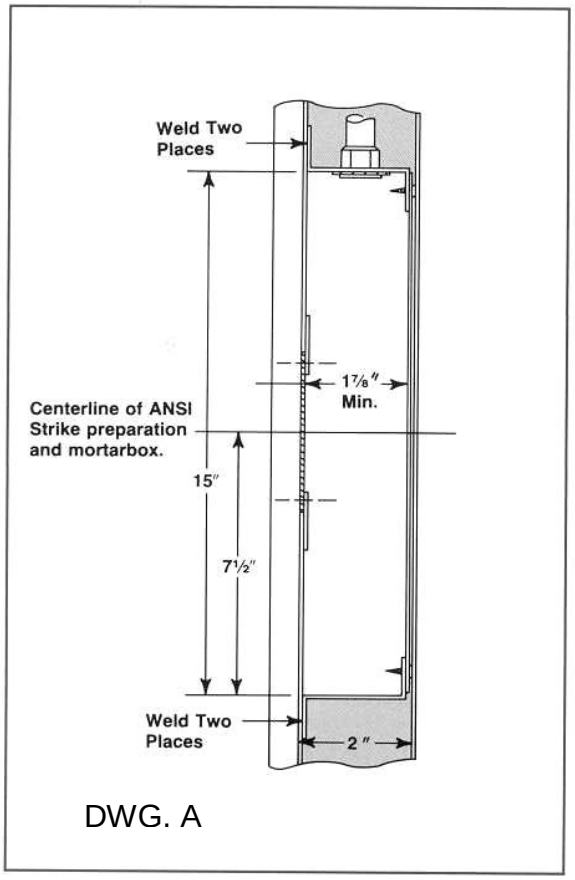

DWG. A

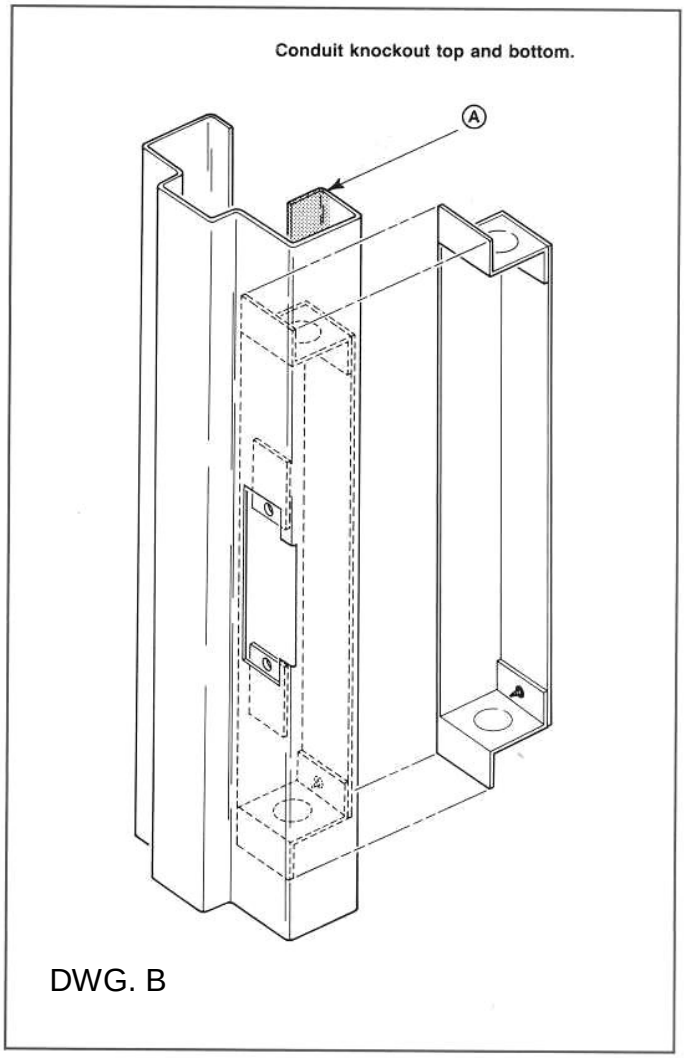

DWG. B

1.) READ INSTRUCTIONS FULLY BEFORE INSTALLING MORTAR GUARD.
2.) CENTER MORTAR GUARD ON THE ANSI STRIKE PREPARATION IN A 2" FACE HOLLOW METAL FRAME AS SHOWN IN FIGURES DWG. A AND DWG. B.
3.) IF FRAME HAS A SECOND RETURN, REMOVE SUFFICIENT MATERIAL FROM THE SECOND RETURN TO CLEAR THE MORTAR GUARD. REFER TO DWG. B NOTE "A".
3A.) ON FIRE LABELED FRAMES, USE FRAMES WITHOUT A SECOND RETURN. DO NOT REMOVE MATERIAL TO ACCEPT MORTAR GUARD FROM THE SECOND RETURN ON FIRE LABELED FRAMES. IF A SECOND RETURN IS USED, A MINIMUM 2" DEPTH IS REQUIRED.
4.) A MINIMUM DEPTH OF 1 7/8" MEASURED FROM THE OUTER FACE OF THE FRAME, THROUGH THE PREP, TO THE BACK OF THE MORTAR GUARD MUST BE MAINTAINED. REFER TO DWG. A. THIS DIMENSION IS CRITICAL FOR PROPER INSTALLATION OF THE GEMINI LOCKING SYSTEM.
5.) WELD EACH TAB IN TWO PLACES TO SECURE THE BOX TO THE FRAME.
6.) DO NOT DISASSEMBLE THE MORTAR GUARD DURING INSTALLATION. IT MUST BE INSTALLED AS A UNIT.

ARCHITECTURAL CONTROL SYSTEMS, INCORPORATED

2720 CLARK AVE., ST. LOUIS, MO 63103 (800) 753-5558 **REV. 07/2017 II-8500-MG**

GEMINI LOCKING SYSTEM INSTALLATION INSTRUCTIONS

ELECTRICAL SPECIFICATIONS

THE GEMINI OPERATOR'S LABEL SPECIFIES THE CORRECT OPERATING VOLTAGE, AC OR DC, AND THE OPERATING CURRENT.

12 VOLT @ 1.25 AMP / 24 VOLT @ 0.6 AMP / 115 VOLT @ 0.13 AMP

FRAME PREPERATION

CHECK DEPTH OF FRAME FOR CLEARANCE AREA. DEPTH AT STRIKE SHOULD BE 1 7/8" ± 1/16". IF DEPTH IS NOT AS SPECIFIED DO NOT ATTEMPT TO INSTALL THE GEMINI OPERATOR.

302-03-02 MORTAR GUARD

RECOMMENDED FOR ALL VOLTAGES. MUST BE USED ON MORTAR FILLED FRAMES AND IS REQUIRED ON ALL 115 VOLT APPLICATIONS IN ACCORDANCE WITH THE NATIONAL ELECTRICAL CODE ANSI/NFPA 70-1996.

INSTALLATION

STEP 1: CUT HOOKUP CABLE OR WIRES APPROXIMATELY 1" BELOW CUTOUT IN FRAME.

STEP 2: IF CABLE IS USED STRIP OUTER JACKET BACK APPROXIMATELY 2".

STEP 3: STRIP WIRES BACK 1/4" – 3/8" INCH.

STEP 4: CRIMP GEMINI WIRES TO CABLE HOOK-UP WIRE USING STANDARD CRIMP SPLICES. PUSH EXCESS WIRE UP TOWARDS THE TOP OF MORTAR BOX, MAKING SURE WIRES ARE CLEAR OF ALL GEMINI LINKAGE.

STEP 5: IF OPTIONAL QUICK CONNECT CABLE IS USED, PASS CONNECTOR THROUGH CONDUIT OF MORTAR BOX UNTIL IT CAN BE REACHED THROUGH THE FRAME PREP OPENING. PLUG THE CONNECTOR ON GEMINI OPERATOR TO MATING CONNECTOR OF CABLE. PUSH EXCESS WIRE UP TOWARDS THE TOP OF MORTAR BOX, MAKING SURE WIRES ARE CLEAR OF ALL GEMINI LINKAGE. TRIM EXCESS CABLE IN CEILING AND TERMINATE TO ELECTRICAL SOURCE.

STEP 6: INSTALL GEMINI OPERATOR IN FRAME OPENING AS SHOWN. SECURE WITH SCREWS PROVIDED. USE SHORT SCREW ON UPPER MOUNTING POSITION.
NOTE: IF FULL STRIKE IS USED, GEMINI OPERATOR MAY BE PUSHED STRAIGHT INTO FRAME PREP.

STEP 7: TO REMOVE FAIL SAFE (POWER LOCK) OPERATORS FROM THE FRAME PLACE A SCREWDRIVER BEHIND THE GEMINI OPERATOR AND MOVE THE PLUNGER FORWARD UNTIL IT IS FLUSH WITH THE STRIKEPLATE. THE OPERATOR MAY THEN BE LOWERED OUT OF THE FRAME PREP.

ARCHITECTURAL CONTROL SYSTEMS, INCORPORATED

2720 CLARK AVE., ST. LOUIS, MO 63103 (800) 753-5558 **REV. 12/2017 II-8500-01**

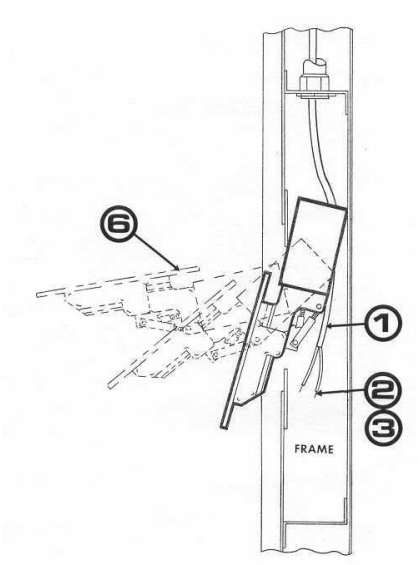

STEPS 1, 2, 3 & 6

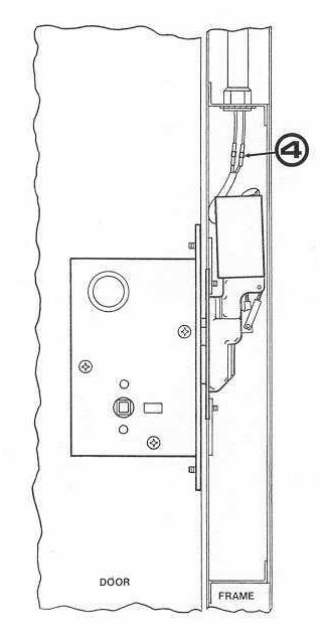

STEP 4

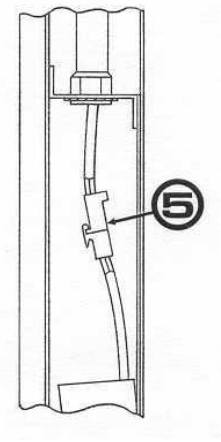

STEP 5

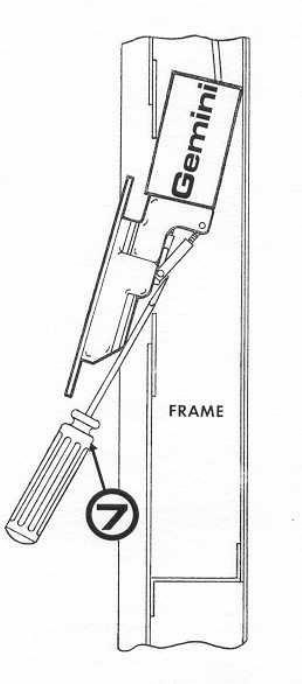

STEP 7

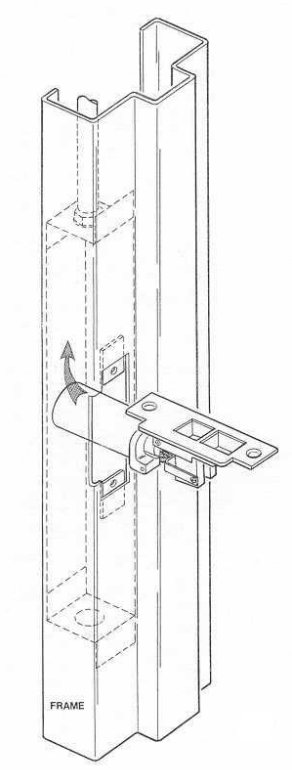

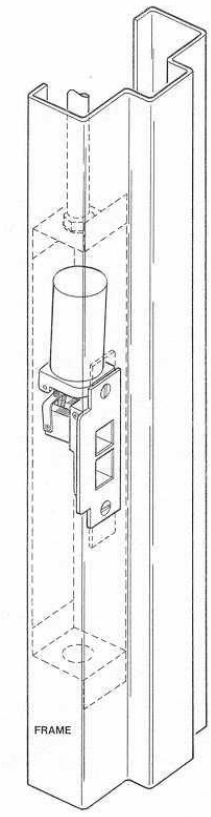

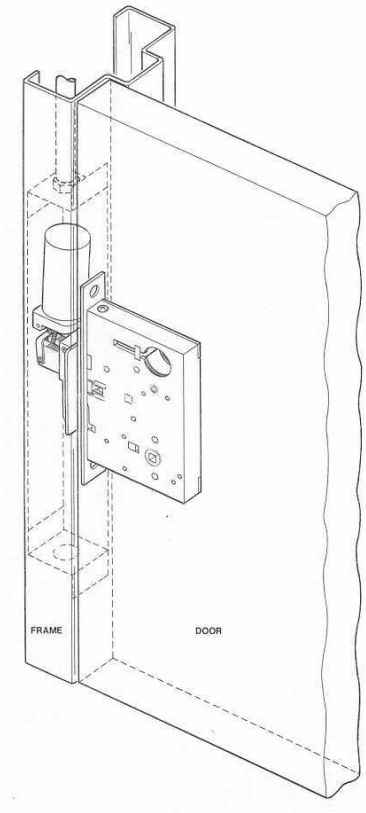

ARCHITECTURAL CONTROL SYSTEMS, INCORPORATED

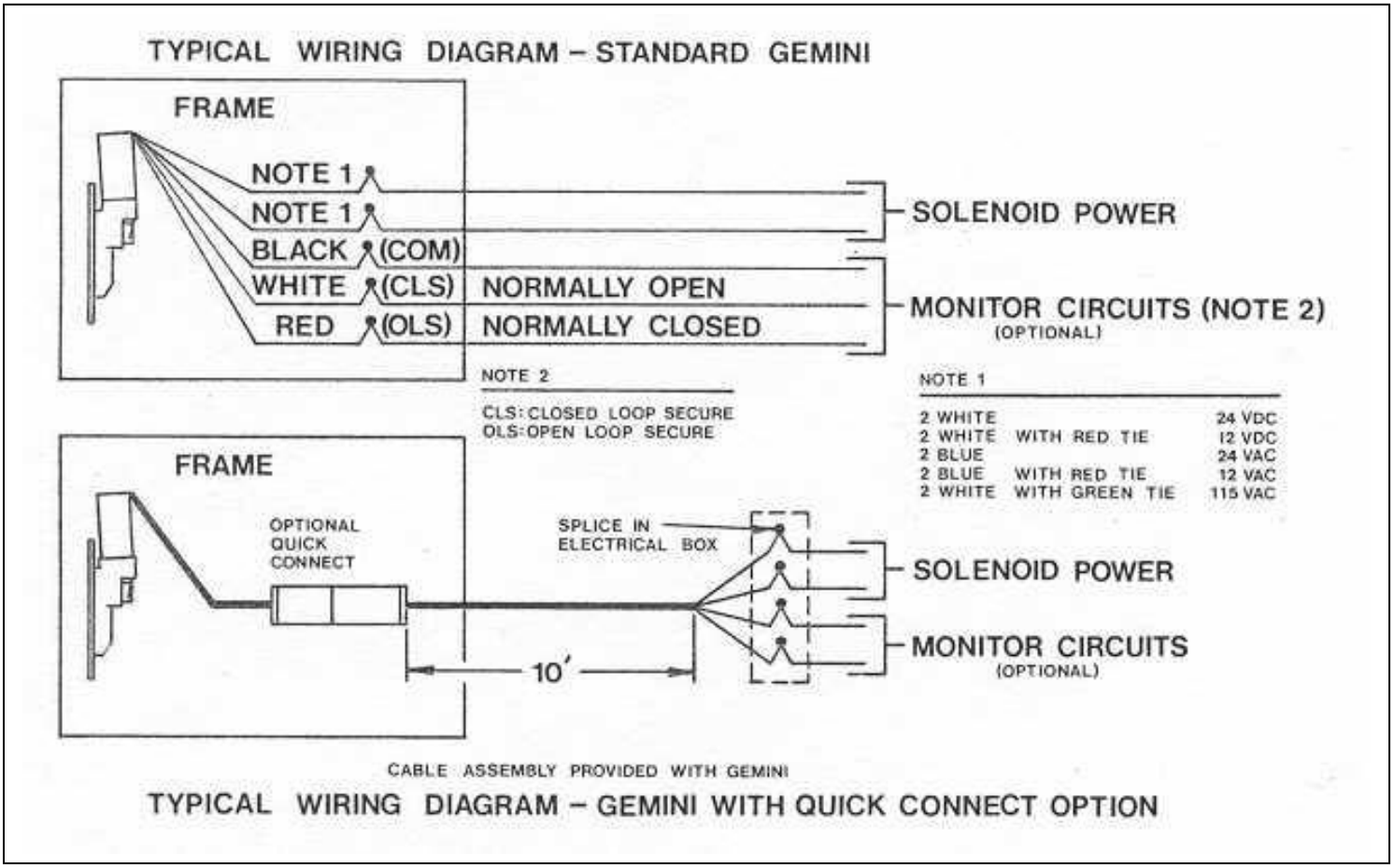

ADJUSTMENT AND TROUBLE SHOOTING

FOR THE GEMINI SYSTEM TO PERFORM PROPERLY, THE MAIN LATCH MUST DROP INTO THE STRIKEPLATE HOLE FREELY. THE AUXILIARY LATCH MUST DROP FREELY INTO THE GEMINI PLUNGER HOLE. IF THE LATCH IS TOO HIGH OR LOW, ADJUSTMENTS TO THE DOOR MUST BE MADE. IF THE MAIN LATCH DOES NOT CLEAR THE STRIKE IN A LATERAL DIRECTION, THE STRIKE OPENING MAY BE FILED SLIGHTLY.

DO NOT FILE THE PLUNGER OPENING IN THE GEMINI OPERATOR!
IF THE PLUNGER FAILS TO EXTEND ON FAIL SAFE (PL) UNITS OR TO RETRACT ON FAIL SECURE (PUL) UNITS, CHECK WIRING AND CONFIRM THAT GEMINI OPERATOR HAS THE PROPER VOLTAGE ± 10%.

THE LINKAGE THAT CONNECTS THE PLUNGER TO THE SOLENOID AND HOUSING ARE NOT FIELD ADJUSTABLE. BREAKING SEALS MAY VOID WARRANTY.

ARCHITECTURAL CONTROL SYSTEMS, INCORPORATED

2720 CLARK AVE., ST. LOUIS, MO 63103 (800) 753-5558 REV. 12/2017

8500-FULL

GEMINI FULL STANDARD FRAME PREPERATION TEMPLATE

FOR USE WITH NEW AND EXISTING FRAMES AND OTHER SPECIAL APPLICATIONS. BOTTOM OF STRIKE PLATE CONFORMS TO ANSI. PREPARE FRAME TO DIMENSIONS SHOWN.

TEMPLATE SHOWN FOR RH/LHR OPPOSITE FOR LH/RHR

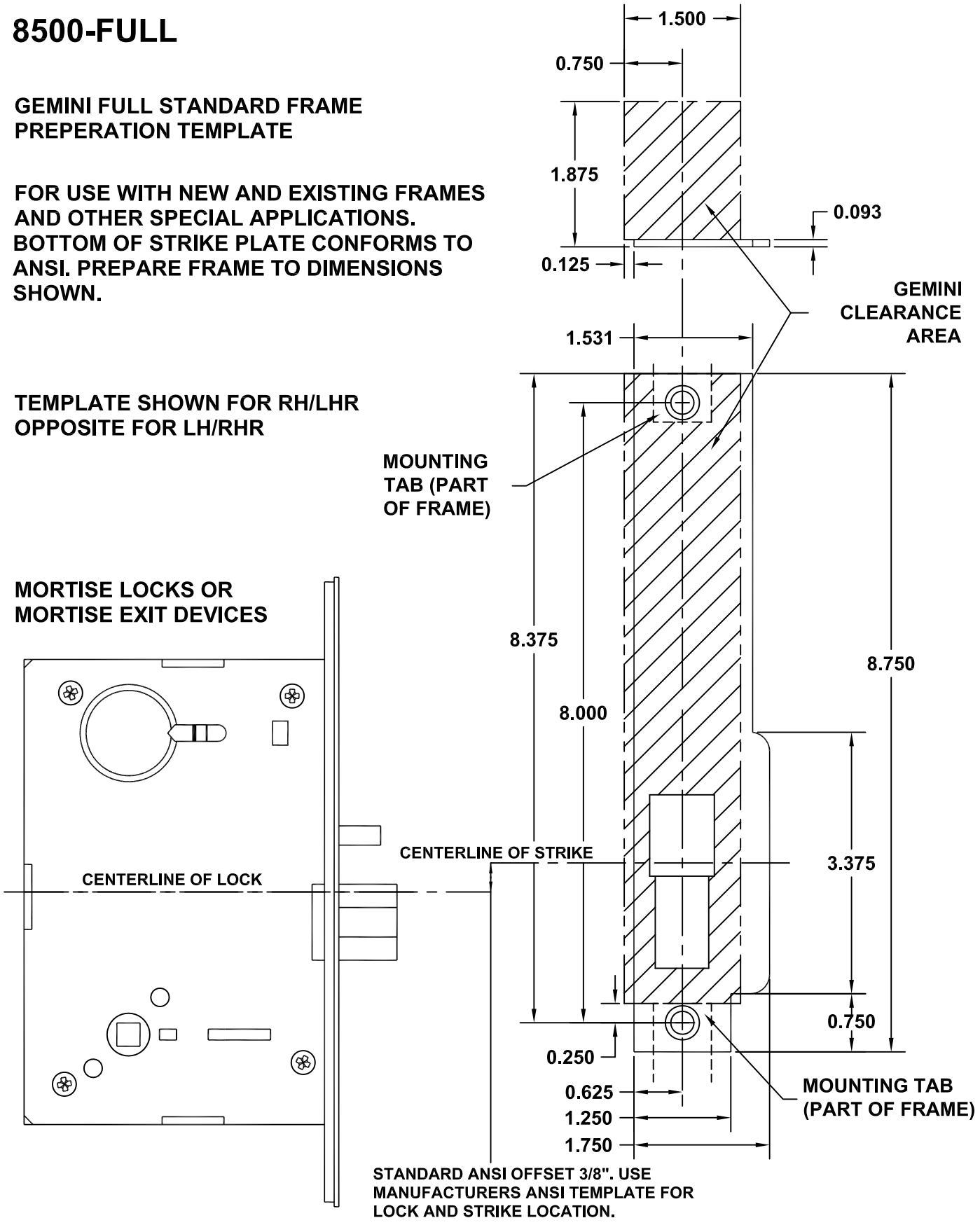

ARCHITECTURAL CONTROL SYSTEMS, INCORPORATED

2720 CLARK AVE., ST. LOUIS, MO 63103 (800) 753-5558

REV. 8/11

EXIT DEVICE INSTALLATION INSTRUCTIONS

K-100 (SINGLE) AND K-200 (DUAL) SWITCH KIT

VON DUPRIN MODELS: 22, 33A/35A AND 98/99 SERIES EXIT DEVICES

SWITCH MONITORS EGRESS BY PUSH BAR ACTIVATION OF EXIT DEVICE



ELECTRICAL SPECIFICATIONS

- SPDT MONITOR SWITCH
- CONTACT RATING: 5A @125VAC
  4A @ 30VDC

COLOR CODE FOR WIRES

- YELLOW WIRE: COMMON
- RED WIRE: NORMALLY OPEN — SWITCH 1
- GRAY WIRE: NORMALLY CLOSED
- BLACK WIRE: COMMON
- ORANGE WIRE: NORMALLY OPEN — SWITCH 2
- VIOLET WIRE: NORMALLY CLOSED

USE # 4-40 X .187" LONG SCREW
WITH WASHER PROVIDED

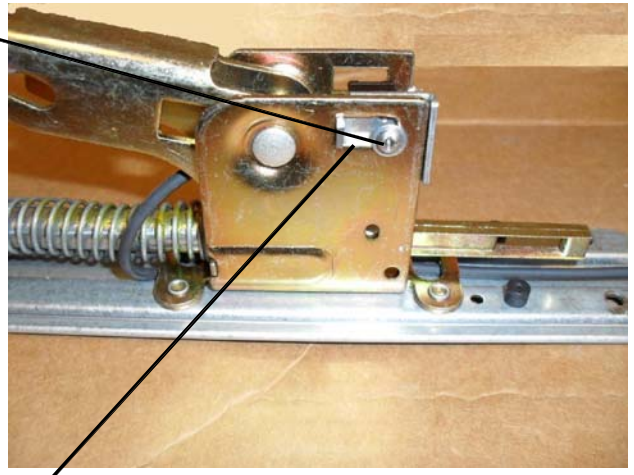

USE EXISTING CUTOUT IN EXIT DEVICE



INSTALLATION INSTRUCTIONS

STEP 1: REMOVE PUSH BAR AND BASE PLATE ASSEMBLY FROM ALUMINUM CHANNEL.
STEP 2: SEPARATE PUSH BAR FROM BASE PLATE ASSEMBLY.
STEP 3: INSTALL SWITCH KIT AS SHOWN IN THE DETAIL. SECURE SWITCH KIT BRACKET THROUGH EXISTING CUTOUT IN THE DEVICE.
STEP 4: REPLACE PUSH BAR ASSEMBLY AND DEPRESS BAR TO MAKE SURE CONTACTS OF SWITCH ARE ACTIVATING PROPERLY.
STEP 5: RUN WIRES AS SHOWN DOWN THE CENTER OF BASE PLATE ASSEMBLY, MAKE SURE THAT WIRES DO NOT COME INTO CONTACT WITH MOVING PARTS OF PUSH BAR ASSEMBLY, OR THE MECHANICAL DOGGING FEATURE.
STEP 6: SLIDE PUSH BAR AND BASE PLATE ASSEMBLY INTO ALUMINUM CHANNEL.
STEP 7: MOUNT DEVICE, TERMINATE WIRES ACCORDINGLY WITH PROPER WIRE NUTS OR CRIMPS.

ACSI
ARCHITECTURAL
CONTROL SYSTEMS INC.

2720 CLARK AVE., ST. LOUIS, MO 63103 (800) 753-5558

REV. 11/2017

EXIT DEVICE INSTALLATION INSTRUCTIONS

K-103 SWITCH KIT

SARGENT 80 SERIES EXIT DEVICES, ARROW 1000, 3000 & 4000 SERIES EXIT DEVICES AND DOREX 9500 SERIES EXIT DEVICES
SWITCH MONITORS EGRESS BY PUSHBAR ACTIVATION OF EXIT DEVICE

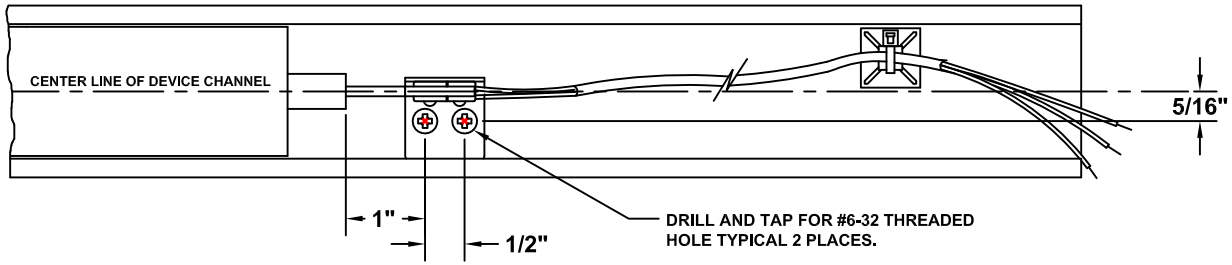

ELECTRICAL SPECIFICATIONS

- SPDT MONITOR SWITCH
- CONTACT RATING: 4 AMP @ 250VAC

COLOR CODE FOR WIRES

- YELLOW WIRE: COMMON
- RED WIRE: NORMALLY OPEN
- GRAY WIRE: NORMALLY CLOSED

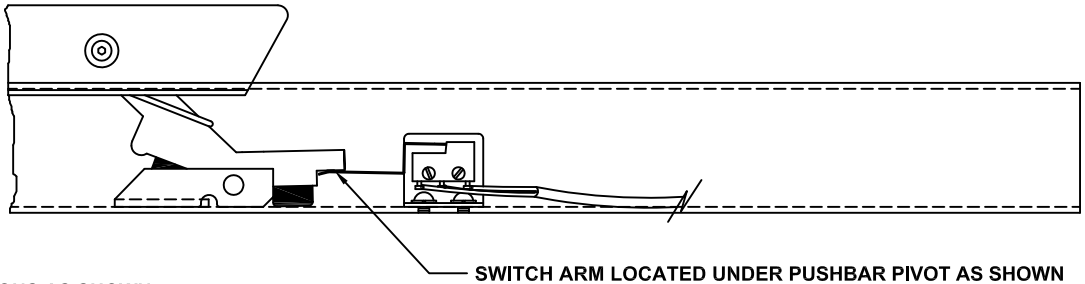

INSTALLATION INSTRUCTIONS

STEP 1: REMOVE END COVER FROM CHANNEL.
STEP 2: LOCATE CENTER OF CHANNEL, THEN MARK DIMENSIONS AS SHOWN.
STEP 3: AFTER DIMENSIONS ARE MARKED CENTER PUNCH FOR 2 DRILL HOLES.
USE A #36 (.106 DIA.) DRILL BIT FOR PROPER TAP DRILL SIZE.
STEP 4: DRILL HOLES FOR BRACKET, NEXT USING A #6-32 TAPER TAP, TAP THE 2 HOLES.
STEP 5: DEBURR HOLES SO THAT BRACKET WILL SIT FLAT.
STEP 6: DEPRESS PUSHBAR THEN MAKE SURE THAT SWITCH ARM IS LOCATED UNDER END OF PIVOT,
THEN SECURE BRACKET WITH PROVIDED HARDWARE.
STEP 7: SWITCH SHOULD FUNTION AS FOLLOWS: SWITCH ARM SHOULD BE ACTIVATED WHEN PUSHBAR IS IN RELAXED POSITION.
SWITCH ARM SHOULD DE-ACTIVATE WHEN PUSHBAR IS DEPRESSED.
STEP 8: MOUNT DEVICE, TERMINATE WIRES ACCORDINGLY WITH PROPER WIRE NUTS OR CRIMPS.

ACSI
ARCHITECTURAL CONTROL SYSTEMS INC.

2720 CLARK AVE., ST. LOUIS, MO 63103 (800) 753-5558

REV. 11/2017

EXIT DEVICE INSTALLATION INSTRUCTIONS

K-108 SWITCH KIT

JACKSON MODELS: 1085 AND 1095 EXIT DEVICES
SWITCH MONITORS EGRESS BY PUSHBAR ACTIVATION OF EXIT DEVICE

ELECTRICAL SPECIFICATIONS

- SPDT MONITOR SWITCH
- CONTACT RATING: 4 AMP @ 250VAC

COLOR CODE FOR WIRES

- YELLOW WIRE: COMMON
- RED WIRE: NORMALLY OPEN
- GRAY WIRE: NORMALLY CLOSED

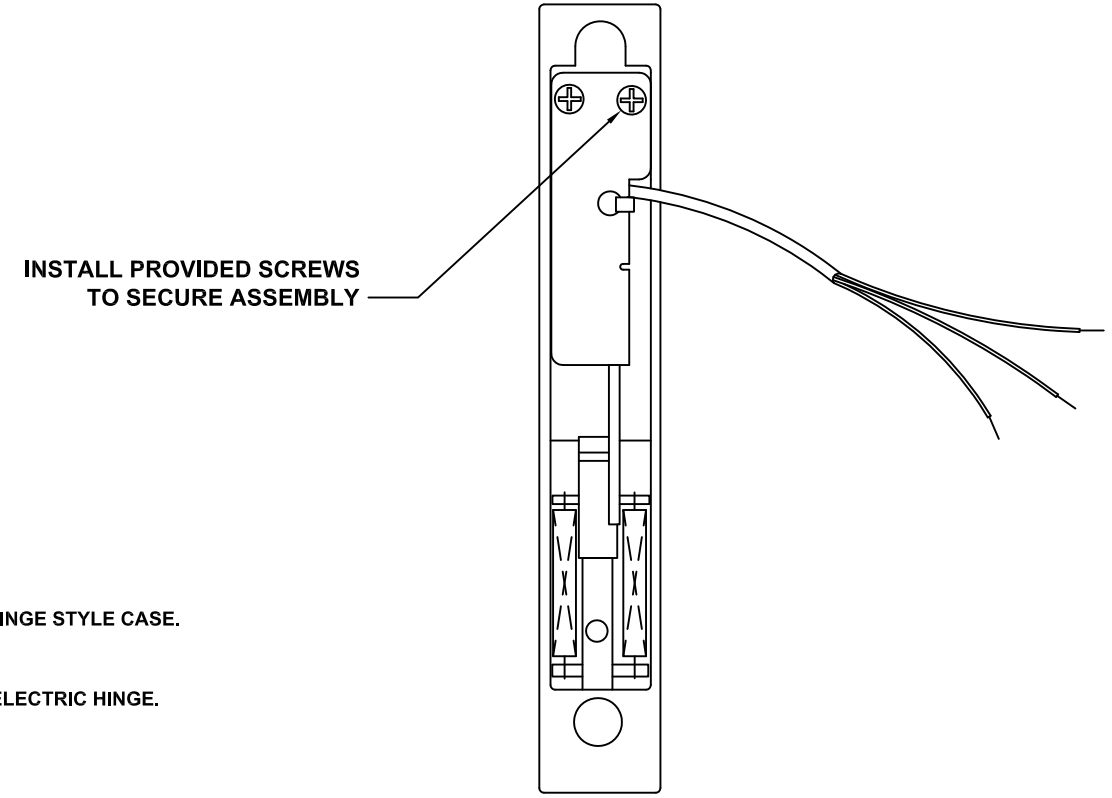

INSTALLATION INSTRUCTIONS

STEP 1: MOUNT THE SWITCH KIT ASSEMBLY ON THE BACK OF THE HINGE STYLE CASE.
STEP 2: LOCATE SWITCH AS SHOWN.
STEP 3: SECURE ASSEMBLY WITH SCREWS PROVIDED.
STEP 4: DRILL PREP HOLE FOR WIRES AND PROVIDE RACEWAY TO ELECTRIC HINGE.

ACSI
ARCHITECTURAL
CONTROL SYSTEMS INC.

2720 CLARK AVE., ST. LOUIS, MO 63103 (800) 753-5558

REV. 11/2017

EXIT DEVICE INSTALLATION INSTRUCTIONS

K-109 SWITCH KIT

CORBIN RUSSWIN ED4000, ED5000 AND YALE 7000 SERIES EXIT DEVICES
SWITCH MONITORS EGRESS BY PUSHBAR ACTIVATION OF EXIT DEVICE

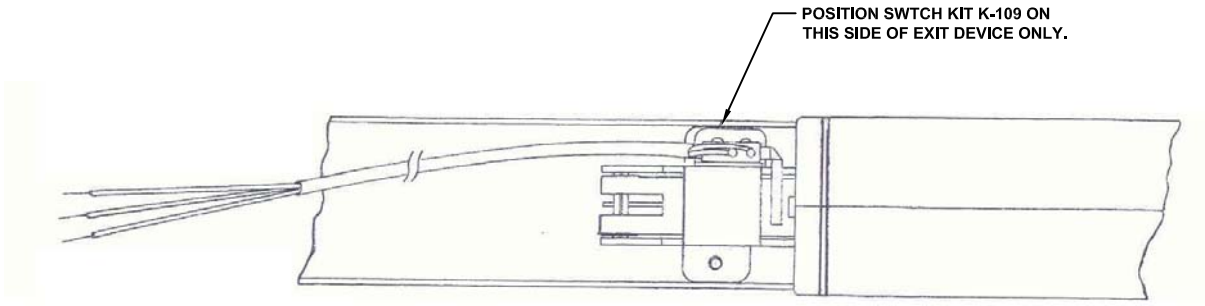

ELECTRICAL SPECIFICATIONS

- SPDT MONITOR SWITCH
- CONTACT RATING: 4 AMP @ 250VAC

COLOR CODE FOR WIRES

- YELLOW WIRE: COMMON
- RED WIRE: NORMALLY OPEN
- GRAY WIRE: NORMALLY CLOSED

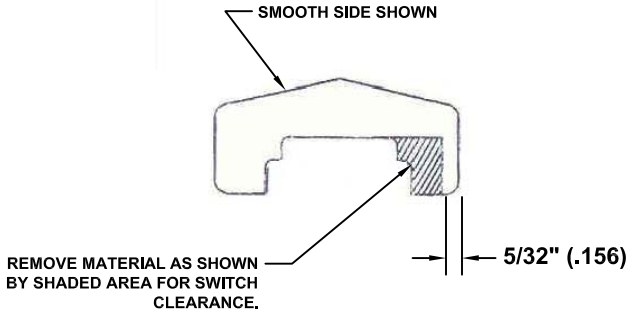

INSTALLATION INSTRUCTIONS

STEP 1: REMOVE REAR COVER AND BOTTOM CHANNEL COVER.
STEP 2: LOCATE EXPOSED REAR CRASH BAR MECHANISM.
STEP 3: REMOVE SCREW INDICATED IN ILLUSTRATION
FROM BOTTOM OF DEVICE AND DISCARD.
STEP 4: POSITION SWITCH BRACKET AS SHOWN AND
REPLACEWITH SCREW THAT IS PROVIDED.
STEP 5: MODIFY REAR BLACK END CAP COVER AS SHOWN.
STEP 6: REPLACE BOTTOM CHANNEL, COVER AND REAR END CAP.

ACSI
ARCHITECTURAL
CONTROL SYSTEMS INC.

2720 CLARK AVE., ST. LOUIS, MO 63103 (800) 753-5558

11/2017

EXIT DEVICE INSTALLATION INSTRUCTIONS

K-110 SWITCH KIT

MONARCH 18 AND 19 SERIES EXIT DEVICES
SWITCH MONITORS EGRESS BY PUSHBAR ACTIVATION OF EXIT DEVICE

ELECTRICAL SPECIFICATIONS

- SPDT MONITOR SWITCH
- CONTACT RATING: 4 AMP @ 250VAC

COLOR CODE FOR WIRES

- YELLOW WIRE: COMMON
- RED WIRE: NORMALLY OPEN
- GRAY WIRE: NORMALLY CLOSED

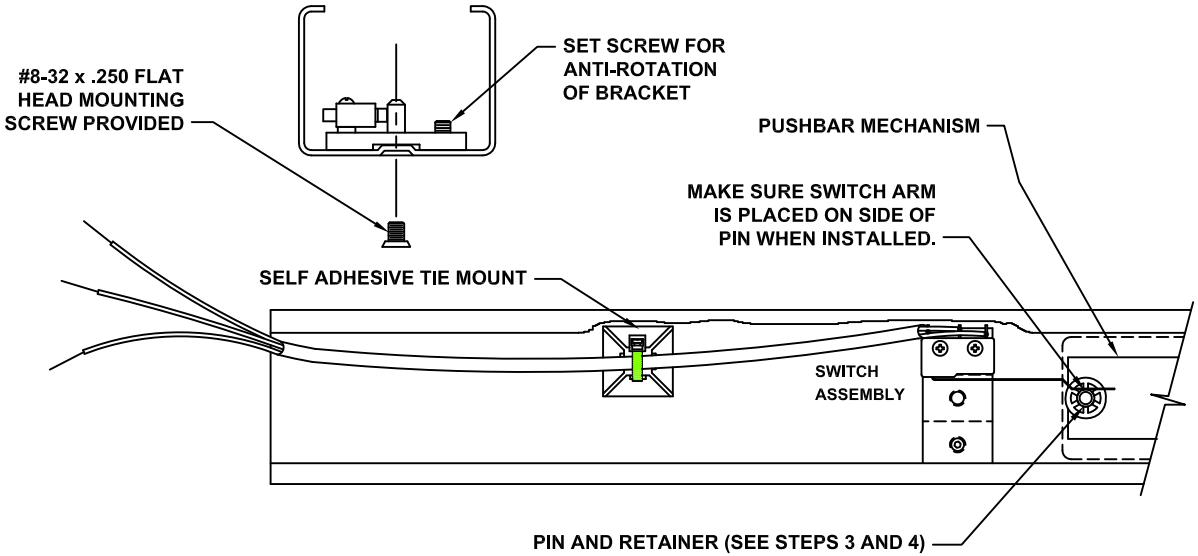

INSTALLATION INSTRUCTIONS

STEP 1: REMOVE REAR COVER FROM END OF DEVICE.
STEP 2: SEPERATE PUSHBAR MECHANISM FROM MAIN CHANNEL ON FIRE EXIT DEVICES ONLY IF THE FACTORY DOGGING PIN AND RETAINER ARE NOT INCLUDED.
STEP 3: IF USING FIRE EXIT HARDWARE AND NEED TO INSTALL PIN AND RETAINER, INSTALL AS SHOWN ONTO PUSHBAR MECHANISM.
IF USING PANIC HARDWARE REMOVE PUSHBAR DOGGING ASSEMBLY FROM MAIN CHANNEL. (NOTE: USE EXISTING DOGGING PIN AND RETAINER)
STEP 4: RE-INSTALL PUSHBAR MECHANISM INTO TRIM CHANNEL AND SECURE WITH ORIGINAL SCREWS.
STEP 5: PLACE SWITCH ASSEMBLY INTO DEVICE AS SHOWN. ASSEMBLY FITS OVER TOP OF EXISTING COUNTERSUNK HOLE.
STEP 6: MAKE SURE SWITCH ARM IS PLACED ON OUTSIDE OF PIN SO THAT THE SWITCH IS PREACTIVATED.
STEP 7: USE PROVIDED FLAT HEAD SCREW TO SECURE SWITCH ASSEMBLY TO TRIM CHANNEL, MAKE SURE BRACKET IS PROPERLY ALIGNED IN CHANNEL.
STEP 8: CHECK FOR PROPER SWITCH ACTIVATION WHEN PUSHBAR IS FULLY DEPRESSED, THEN TIGHTEN SET SCREW TO PREVENT SWITCH ASSEMBLY FROM ROTATING.
STEP 9: SECURE SELF ADHESIVE TIE MOUNT HOLDER TO BOTTOM OF CHANNEL AS SHOWN.
NOTE: WHEN INSTALLING COVER ON PANIC DEVICES IT IS NECESSARY TO TURN THE DOGGING MECHANISM IN COVER TO AVOID INTEFERENCE WITH THE TIE MOUNT.
STEP 10: MAKE SURE COLOR CODE FOR WIRES CHART IS USED FOR PROPER HOOK-UP OF SWITCH CONTACTS.

ACSI ARCHITECTURAL CONTROL SYSTEMS INC.
2720 CLARK AVE., ST. LOUIS, MO 63103 (800) 753-5558

REV. 11/2017

EXIT DEVICE INSTALLATION INSTRUCTIONS

K-111 SWITCH KIT

DOR-O-MATIC SERIES 990 AND 1090 EXIT DEVICES SWITCH MONITORS EGRESS BY PUSHBAR ACTIVATION OF EXIT DEVICE

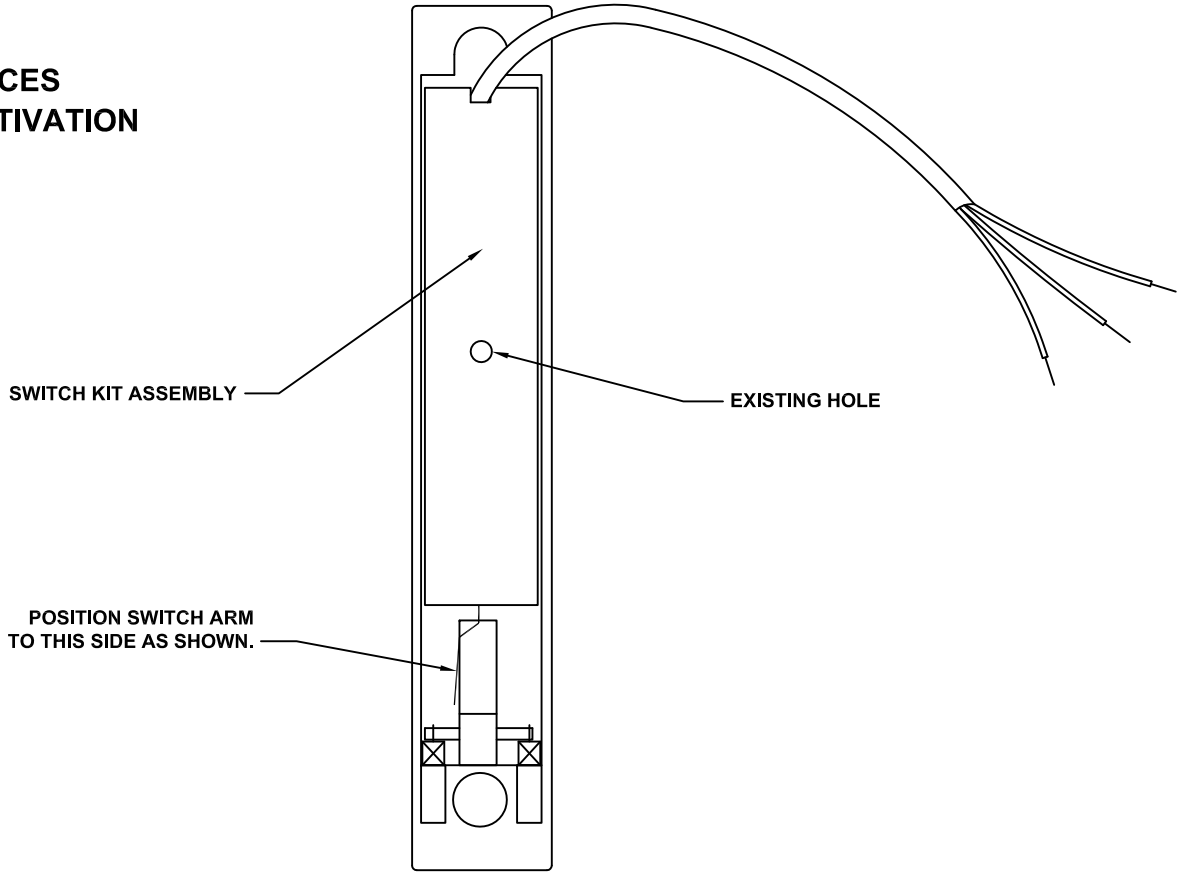

ELECTRICAL SPECIFICATIONS

- SPDT MONITOR SWITCH
- CONTACT RATING: 4 AMP @ 250VAC

COLOR CODE FOR WIRES

- YELLOW WIRE: COMMON
- RED WIRE: NORMALLY OPEN
- GRAY WIRE: NORMALLY CLOSED

INSTALLATION INSTRUCTIONS

STEP 1: REMOVE HINGE STYLE CASE.
STEP 2: PLACE SWITCH ASSEMBLY INTO DEVICE AS SHOWN. ASSEMBLY FITS OVER TOP OF EXISTING HOLE.
SET SCREW OF SWITCH KIT BRACKET FITS INSIDE HOLE.
STEP 3: MAKE SURE SWITCH ARM IS PLACED ON CORRECT SIDE OF ACTIVE MECHANISM AS SHOWN.
STEP 4: SWITCH KIT IS CAPTURED BETWEEN DOOR SURFACE AND HINGE STYLE MAKE SURE BRACKET IS FLUSH WITH MOUNTING SURFACE.
STEP 5: CHECK FOR PROPER SWITCH ACTIVATION WHEN PUSHBAR IS FULLY DEPRESSED, REFER TO COLOR CODE CHART FOR PROPER WIRING FOR APPLICATION.
STEP 6: MAKE SURE COLOR CODE FOR WIRES CHART IS USED FOR PROPER HOOK-UP OF SWITCH CONTACTS.

ACSI
ARCHITECTURAL CONTROL SYSTEMS INC.

2720 CLARK AVE., ST. LOUIS, MO 63103 (800) 753-5558

REV. 11/2017

ELECTRIC TRIM CONTROL INSTALLATION INSTRUCTIONS
MODEL 1560 AND 1570

CORBIN 955 AND YALE 626F HEAVY DUTY TRIM

FUNCTION DESCRIPTION

1560 – FAIL SAFE

- LEVER IS LOCKED WHEN POWER IS ON (CLUTCH IS FREE WHEELING)
- WHEN POWER IS REMOVED ALLOWS ENTRY BY LEVER HANDLE.
- EXIT DEVICE ALWAYS ALLOWS FREE EGRESS.
- MECHANICAL KEY OVERRIDE ALLOWS SOLENOID CONTROL TO BE MOMENTARILY OVERRIDED SO THAT LEVER ENGAGES CLUTCH AND CAN BE TURNED TO ALLOW ENTRANCE. TURN KEY 90 DEGREES CLOCKWISE AND HOLD, NEXT TURN LEVER TO RETRACT DEVICE LATCH AND ENTER. NOTE KEY MUST BE RETURNED TO ORIGINAL POSITION TO BE REMOVED.

1570 – FAIL SECURE

- LEVER IS LOCKED WHEN POWER IS OFF (CLUTCH IS FREE WHEELING)
- WHEN POWER IS APPLIED ALLOWS ENTRY BY LEVER HANDLE.
- EXIT DEVICE ALWAYS ALLOWS FREE EGRESS.
- MECHANICAL KEY OVERRIDE ALLOWS SOLENOID CONTROL TO BE MOMENTARILY OVERRIDED SO THAT LEVER ENGAGES CLUTCH AND CAN BE TURNED TO ALLOW ENTRANCE. TURN KEY 90 DEGREES CLOCKWISE AND HOLD, NEXT TURN LEVER TO RETRACT DEVICE LATCH AND ENTER. NOTE KEY MUST BE RETURNED TO ORIGINAL POSITION TO BE REMOVED.

ELECTRIC TRIM SOLENOID CONTROL RATING

MODELS: 1560 – FAIL SAFE CONTROL (POWER LOCK)
1570 – FAIL SECURE CONTROL (POWER UNLOCK)

.33 AMP @ 24 VOLTS AC OR DC ± 2 VOLT (CONTINUOUS DUTY)

MONITORING CONTACT RATING

4 AMP @ 250VAC

WIRING DIAGRAMS

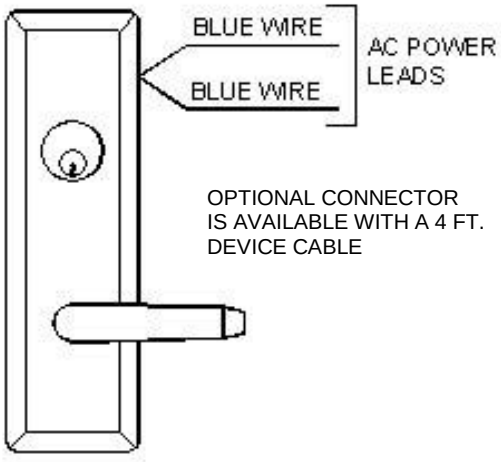

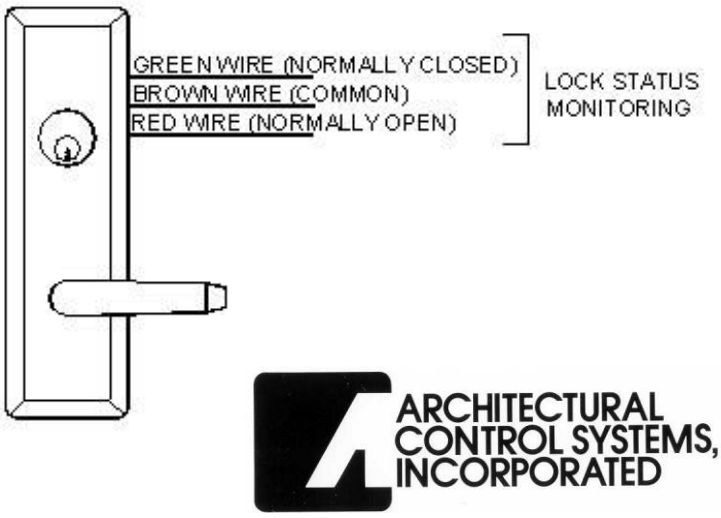

ARCHITECTURAL CONTROL SYSTEMS, INCORPORATED

INSTALLATION INSTRUCTIONS 1560 AND 1570 ELECTRIC TRIM CONTROL

YALE AND CORBIN/RUSSWIN HEAVY DUTY TRIM

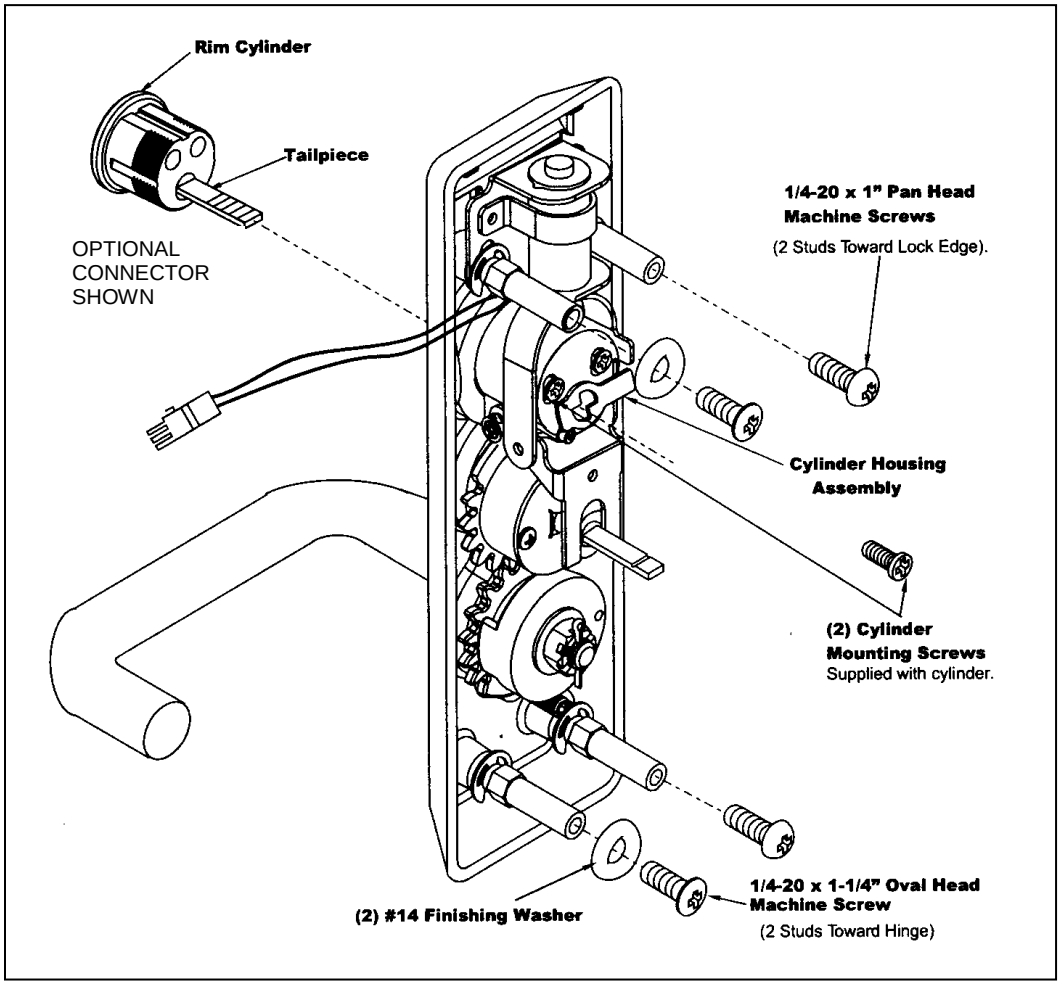

RIM CYLINDER INSTALLATION

STANDARD RIM CYLINDER SUPPLIED BY OTHERS

- INSERT RIM CYLINDER THROUGH TRIM ESCUTCHEON AND CYLINDER HOUSING ASSEMBLY. CYLINDER TAILPIECE INSERTS THROUGH CAM SLOT.
- MAKE SURE CYLINDER IS SEATED INTO RECESSED AREA OF ESCUTCHEON, THEN SECURE WITH (2) CYLINDER MOUNTING SCREWS SUPLLIED BY OTHERS.
- CUT TAILPIECE OFF TO CORRECT LENGTH. 1/16" TO 3/16" BEYOND CAM.

DOOR PREPARATION

NOTE: YOUR DOOR MAY ALREADY BE PROPERLY PREPED BY THE DOOR MANUFACTURER IF SO PROCEDE TO NEXT SECTION.

- USE MANUFACTURERS SUPPLIED DOOR PREP TEMPLATE FOR LOCATING THE VERTICAL AND HORIZONTAL CENTERLINES AND ALSO FOR MARKING THE 4 EACH MOUNTING HOLES.
- USE THE FOLLOWING TEMPLATES TO PROVIDE ADDITIONAL CUTOUTS FOR THE CLEARANCE OF THE ELECTRONICS.
  USE TEMPLATE NO. 5013-14 FOR HOLLOW METAL DOOR PREPS.
  USE TEMPLATE NO. 5013-15 FOR WOOD AND COMPOSITE DOOR PREPS.

ARCHITECTURAL CONTROL SYSTEMS, INCORPORATED

TEMPLATE 5013-14
YALE AND CORBIN ELECTRIC TRIM CONTROL PREPARATION FOR USE ON HOLLOW METAL TYPE DOORS

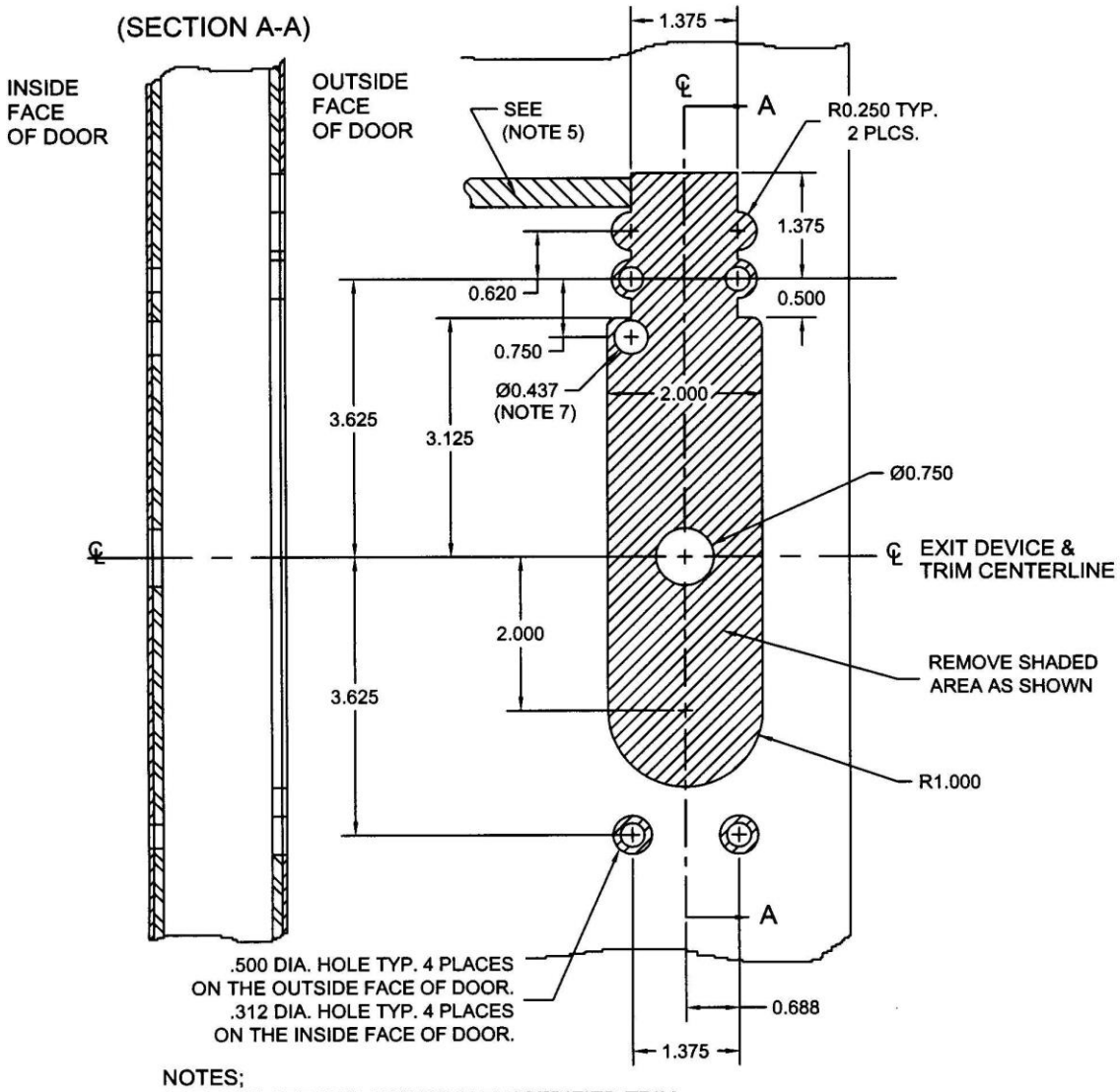

NOTES;

1.) TEMPLATE FOR USE WITH ELECTRIFIED TRIM MODELS 1560 & 1570. USE MANUFACTURERS DEVICE TEMPLATE FOR ADDITIONAL INFORMATION.

2.) DO NOT SCALE DRAWING.

3.) DIMENSIONS ARE SHOWN IN INCHES.

4.) LHR DOOR PREP SHOWN. PREPARATION IS TYPICAL FOR BOTH LHR & RHR DOOR HANDINGS.

5.) FOR USE ONLY WHEN PWER TRANSFER IS NOT RAN THROUGH DEVICE. DOOR FABRICATOR TO PROVIDE A 3/8" DIAMETER (MINIMUM) RACEWAY THROUGH THE DOOR TO ALLOW THE INSERTION OF ELECTRICAL WIRES RUNNING BETWEEN THE TRIM CONTROL AND ELECTRIC HINGE.

6.) PROVIDE ADEQUATE INTERNAL SUPPORT TO PREVENT DOOR DEFORMATION AFTER TRIM IS BOLTED TO THE DEVICE.

NOTE: FOR DOOR REINFORCEMENT INFORMATION USE YALE SECURITY INC. TEMPLATE 7400-0000.

7.) PROVIDE WIRE ACCESS HOLE WHEN USING EXIT DEVICE AS WIRE RACEWAY. THROUGH HOLE FOR LHR DEVICE SHOWN. LOCATE HOLE ON OPPOSITE SIDE FOR RHR DEVICES.

ARCHITECTURAL CONTROL SYSTEMS, INCORPORATED

TEMPLATE 5013-15
YALE AND CORBIN ELECTRIC TRIM CONTROL PREPARATION FOR USE ON WOOD OR COMPOSITE TYPE DOORS

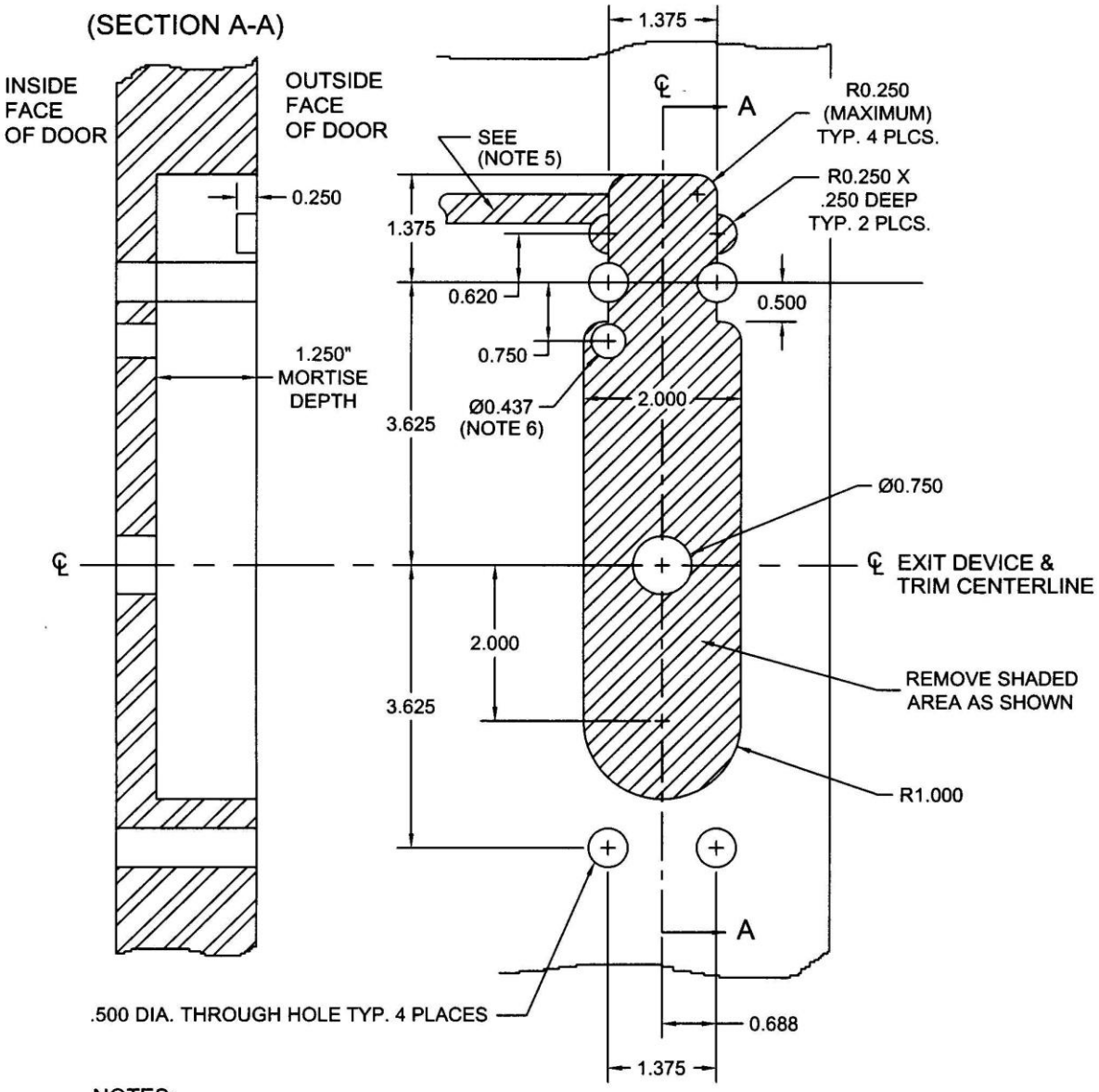

NOTES;

1.) TEMPLATE FOR USE WITH ELECTRIFIED TRIM MODELS 1560 & 1570. USE MANUFACTURERS DEVICE TEMPLATE FOR ADDITIONAL INFORMATION.

2.) DO NOT SCALE DRAWING.

3.) DIMENSIONS ARE SHOWN IN INCHES.

4.) LHR DOOR PREP SHOWN. PREPARATION IS TYPICAL FOR BOTH LHR & RHR DOOR HANDINGS.

5.) FOR USE ONLY WHEN POWER TRANSFER IS NOT RAN THROUGH DEVICE DOOR FABRICATOR TO PROVIDE A 3/8" DIAMETER (MINIMUM) RACEWAY THROUGH THE DOOR TO ALLOW THE INSERTION OF ELECTRICAL WIRES RUNNING BETWEEN THE TRIM CONTROL AND ELECTRIC HINGE.

6.) PROVIDE WIRE ACCESS HOLE WHEN USING EXIT DEVICE AS WIRE RACEWAY. THROUGH HOLE FOR LHR DEVICE SHOWN. LOCATE HOLE ON OPPOSITE SIDE FOR RHR DEVICES.

ARCHITECTURAL CONTROL SYSTEMS, INCORPORATED

TRIM CONTROL MOUNTING INSTRUCTIONS

- PULL WIRE THROUGH 7/16" DIA. ACCESS HOLE FOR USE WITH OPTIONAL CONNECTOR AND CABLE ASSEMBLY OR CONNECT WIRES WITH PROPER CRIMPS OR WIRE NUTS TO DOOR CABLE INSIDE OF WIRE RACEWAY.

  (NOTE: MAKE SURE WIRES DO NOT INTERFERE WITH MOVEMENT OF MECHANICAL LINKAGE)

- MOUNT TRIM SECURELY WITH (2) SCREWS AND FINISHING WASHERS IN HOLES "B" OF FIGURE 1

  NOTE: FOR SEVERE OUTDOOR ENVIRONMENTAL CONDITIONS IT IS RECOMMENDED THAT TRIM ESCUTCHEON BE SEALED WITH THIN BEAD OF SILICONE SEALENT AROUND EDGE OF HOUSING PRIOR TO MOUNTING.

Figure 1: LHR Door Shown

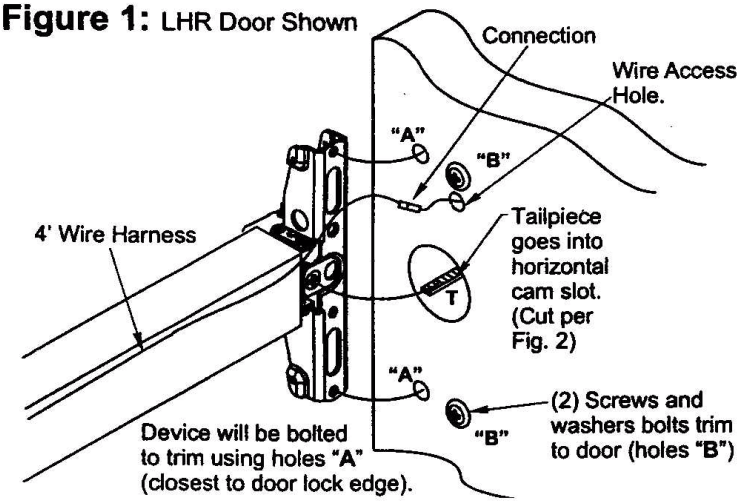

Figure 2

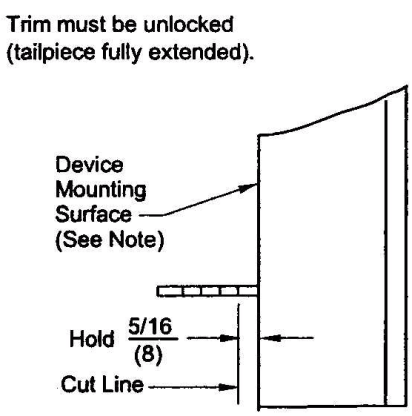

- WITH TRIM IN THE UNLOCKED POSITION CUT TAILPIECE TO 5/16" AS SHOWN ABOVE IN FIGURE 2. REMOVE ALL SHARP EDGES AND BURRS FROM END OF TAILPIECE AFTER CUTTING.

  NOTE: FOR 1560 (FAIL SAFE) DEVICES TAILPIECE IS IN UNLOCKED POSITION WHEN NO POWER IS APPLIED. AND FOR 1570 (FAIL SECURE) DEVICES POWER MUST BE APPLIED TO DEVICE TO POSITION TAILPIECE IN UNLOCKED POSITION PRIOR TO CUTTING.

NOTE: IF OPTIONAL CONNECTOR AND 4' FT. CABLE ASSEMBLY IS USED FOLLOW CABLE ASSEMBLY WIRING INSTUCTIONS NEXT.

- MOUNT DEVICE SO THAT TRIM TAILPIECE IS INSERTED INTO DEVICE CAM SLOT IN HORIZONTAL POSITION AS SHOWN ABOVE IN FIGURE 1.

- CONTINUE MOUNTING DEVICE ACCORDING TO MANUFACTURERS INSTRUCTIONS.

NOTE: IF RACEWAY IS USED FOR WIRE TRANSFER PROCEED TO POWER TRANSFER HOOKUP.

ARCHITECTURAL CONTROL SYSTEMS, INCORPORATED

CABLE ASSEMBLY WIRING

- REMOVE END COVER AND BOTTOM COVER FROM DEVICE SEE FIGURE 3.
- PLACE WIRE HARNESS ON THE CARRIER WITH THE CONNECTOR AT THE HEAD OF THE DEVICE. ALLOW 6" FOR CONNECTION TO TRIM CONTROL CONNECTOR, WHICH HAS BEEN PULLED THROUGH ACESS HOLE IN DOOR.
- SECURE CABLE IN 2 PLACES WITH SELF ADHESIVE MOUNTS AND TY-WRAPS INCLUDED WITH CABLE ASSEMBLY. LOCATE TY-WRAPS SO THAT CABLE DOES NOT INTERFERE WITH TRIM SLIDE OR OTHER MOVING MECHANICAL PARTS.
- REPLACE END COVER AND BOTTOM COVER.
- MOUNT DEVICE SO THAT TRIM TAILPIECE IS INSERTED INTO DEVICE CAM SLOT IN HORIZONTAL POSITION AS SHOWN ABOVE IN FIGURE 1.
- CONNECT CABLE CONNECTOR TO TRIM CONNECTOR AND CONTINUE MOUNTING DEVICE ACCORDING TO MANUFACTURERS INSTRUCTIONS.

FIGURE 3

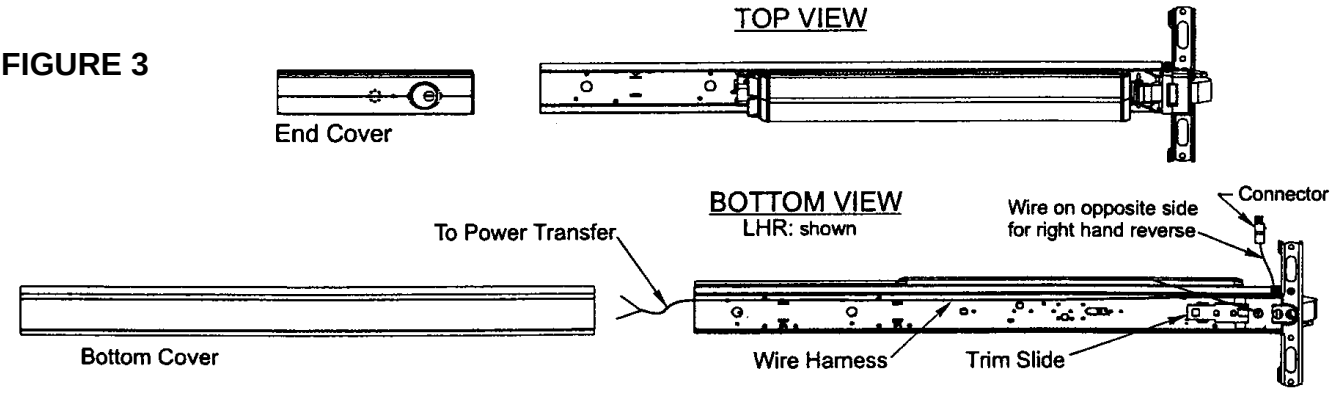

POWER TRANSFER HOOKUP DIAGRAM

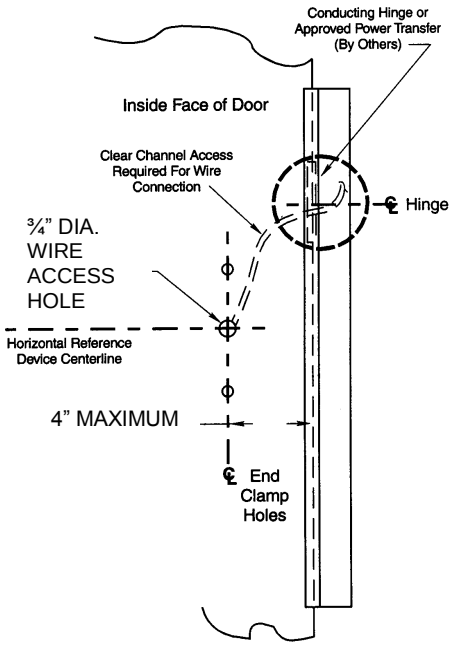

LOCATE AND PREPARE WIRE ACCESS HOLE TO POWER TRANSFER DEVICE AS SHOWN.

ARCHITECTURAL CONTROL SYSTEMS, INCORPORATED

2720 CLARK AVE.
ST. LOUIS, MO 63103
(800) 753-5558

ELECTRIC TRIM CONTROL INSTALLATION INSTRUCTIONS
MODEL 1560 AND 1570

VON DUPRIN 994L AND 996L LEVER TRIM

FUNCTION DESCRIPTION

1560 – FAIL SAFE

- LEVER IS LOCKED WHEN POWER IS APPLIED.
- WHEN POWER IS REMOVED ALLOWS ENTRY BY LEVER HANDLE.
- EXIT DEVICE ALWAYS ALLOWS FREE EGRESS.
- OUTSIDE KEY CYLINDER FUNCTIONS AS A NIGHT LATCH. THIS ALLOWS THE LATCH TO BE RETRACTED BY KEY WHEN OUTSIDE TRIM IS SECURE.

1570 – FAIL SECURE

- LEVER IS LOCKED WHEN POWER IS OFF.
- WHEN POWER IS APPLIED ALLOWS ENTRY BY LEVER HANDLE.
- EXIT DEVICE ALWAYS ALLOWS FREE EGRESS.
- OUTSIDE KEY CYLINDER FUNCTIONS AS A NIGHT LATCH. THIS ALLOWS THE LATCH TO BE RETRACTED BY KEY WHEN OUTSIDE TRIM IS SECURE.

ELECTRIC TRIM SOLENOID CONTROL RATING

MODELS: 1560 – FAIL SAFE CONTROL (POWER LOCK)
1570 – FAIL SECURE CONTROL (POWER UNLOCK)
NOTE: FOR FUNCTION CHANGE SEE DIAGRAM ATTACHED AT END OF INSTRUCTIONS.

.33 AMP @ 24 VOLTS AC OR DC ± 10% (CONTINUOUS DUTY)

WIRING DIAGRAM

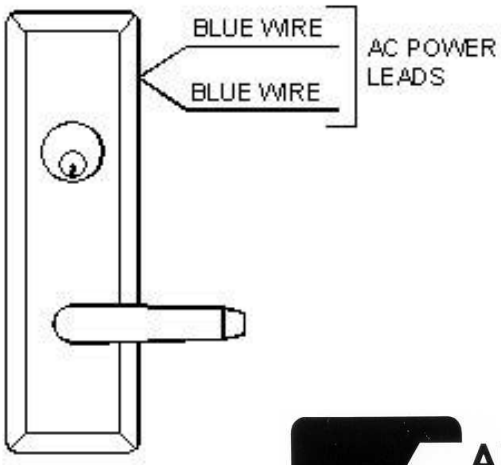

ARCHITECTURAL CONTROL SYSTEMS, INCORPORATED

INSTALLATION INSTRUCTIONS 1560 AND 1570 ELECTRIC TRIM CONTROL

VON DUPRIN 994L/996L RIM AND VERTICAL BREAKAWAY TRIM

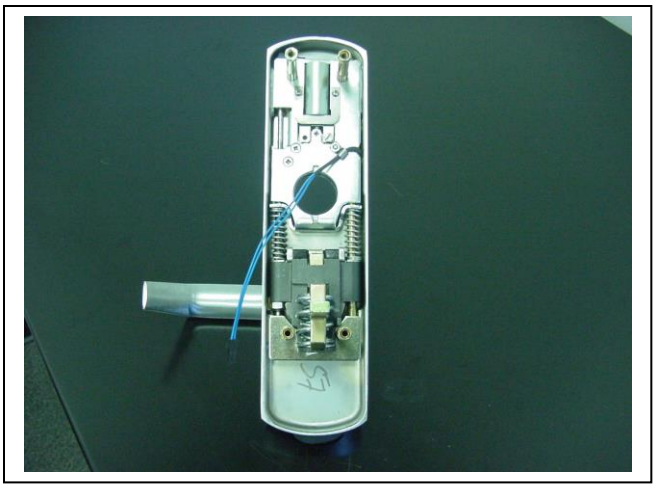

EXIT DEVICE PREPARATION

NOTE: USE MANUFACTURERS INSTRUCTIONS FOR DEVICE MOUNTING.

- DO NOT REMOVE (NL) DRIVE SCREW FROM BACK OF DEVICE. SCREW MUST BE LEFT IN PLACE FOR PROPER KEY FUNCTION (NIGHT LATCH).

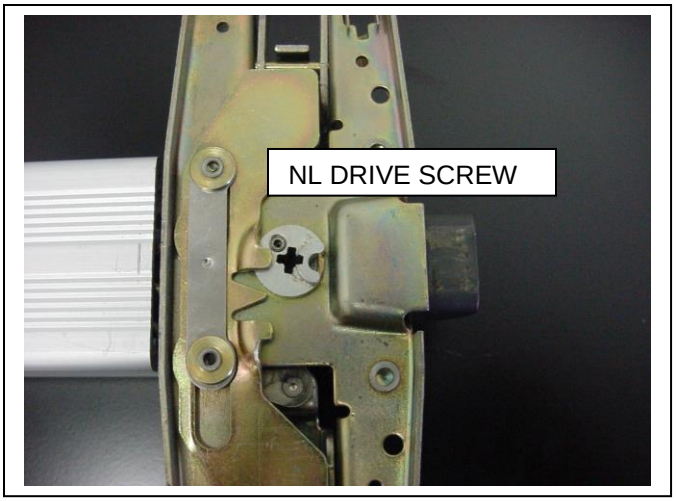

- SLIDE OUTSIDE CHANNEL FROM DEVICE AND INSTALL DOOR CABLE IN BOTTOM OF DEVICE BASEPLATE ASSEMBLY AS SHOWN BELOW.

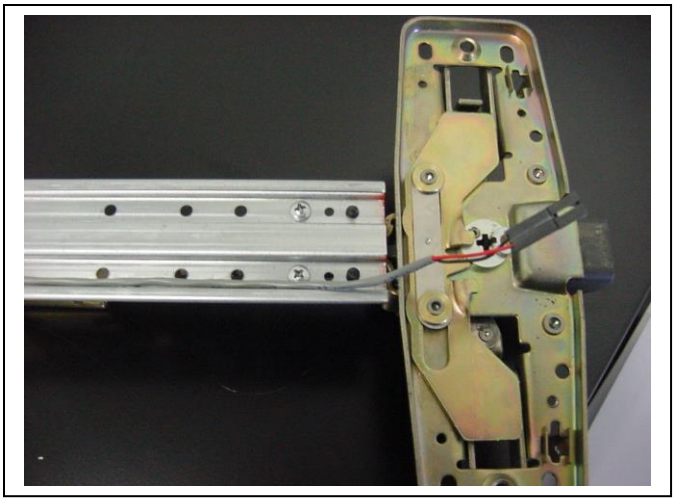

- ALLOW APPROXIMATELY 2” INCHES OF CABLE PLUS THE CONNECTOR TO BE LEFT ON THE LATCH SIDE AS SHOWN.
- SLIDE THE CHANNEL BACK ONTO THE BASE PLATE ASSEMBLY.

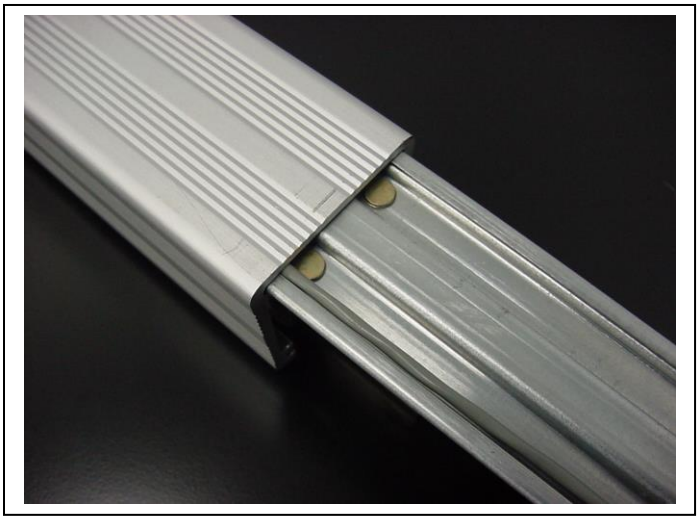

- WRAP WIRES AROUND TO THE ACTIVE SIDE OF DEVICE CENTER CASE.

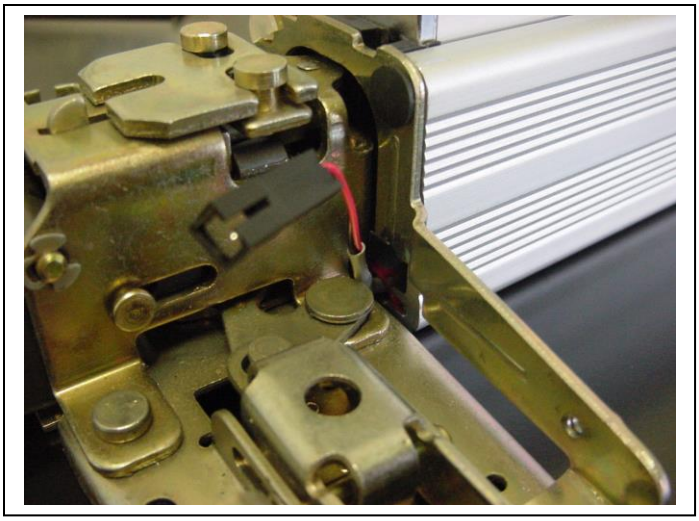

- PUSH WIRES AND CONNECTOR FROM TRIM THROUGH THE PREP HOLE IN DOOR. PREP HOLE IS SHOWN ON TEMPLATE NUMBER (E1500-11 ATTACHED AT END OF INSTRUCTIONS).
- USE MANUFACTURERS INSTALLATION INSTRUCTIONS FOR MOUNTING TRIM AND EXIT DEVICE.
- BRING WIRES FROM TRIM CONTROL THROUGH THE DEVICE CENTER CASE AS SHOWN BELOW.

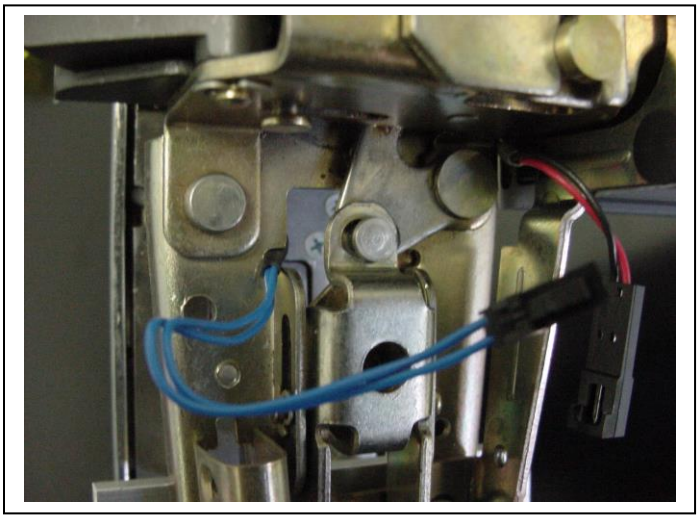

- STRAIN RELIEF WIRES TO EXISTING HOLE IN CENTER CASE. USE THE WIRE CLAMP AND SELF-TAPPING SCREW PROVIDED WITH TRIM.

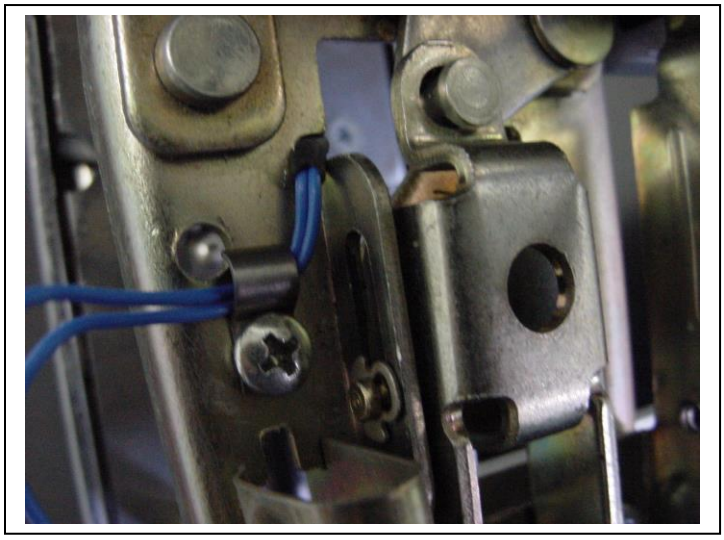

- CONNECT THE WIRES FROM THE TRIM TO THE CABLE CONNECTOR AS SHOWN.

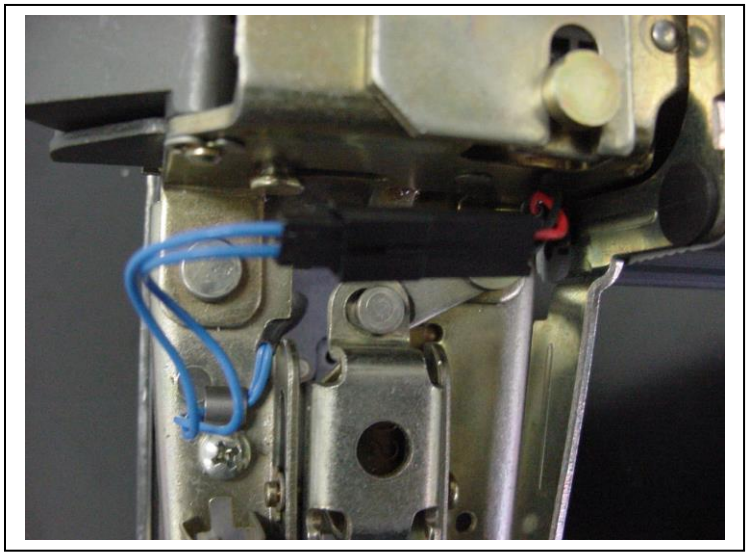

- USE TEMPLATE NO. E1500-3 (EXIT DEVICE TEMPLATE) FOR PROPER TERMINATION OF WIRES TO THE POWER TRANSFER DEVICE.

ARCHITECTURAL CONTROL SYSTEMS, INCORPORATED

E1500-11

EXIT DEVICE TEMPLATE FOR WOOD, COMPOSITE AND HOLLOW METAL DOORS
FOR USE WITH MODEL 1560 AND 1570 VON DUPRIN 994L AND 996L TRIM CONTROL

- USE MANUFACTURERS TEMPLATE FOR BASIC PREP LOCATION OF HOLES AND CUTOUTS IN DOOR.
- PROVIDE ADDITIONAL .750 DIA. HOLE THROUGH DOOR TO ALLOW FOR WIRE ENTRY FROM ELECTRIC TRIM CONTROL.

NOTE: .750 DIAMETER HOLE IS NOT HANDED. HOLE SHOULD BE LOCATED AS SHOWN FOR ALL HANDINGS.

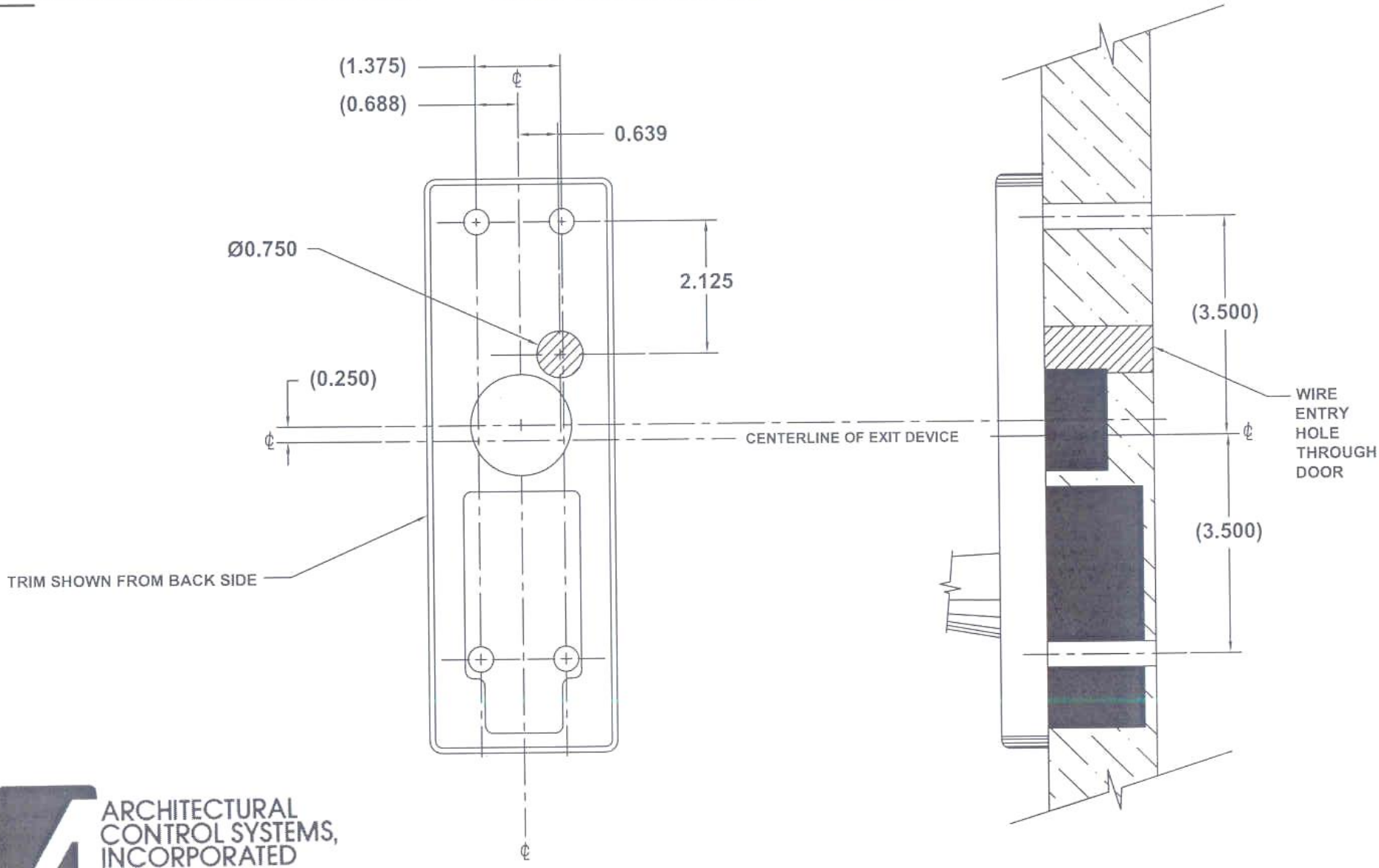

ARCHITECTURAL CONTROL SYSTEMS, INCORPORATED

FUNCTION CHANGE DIAGRAM

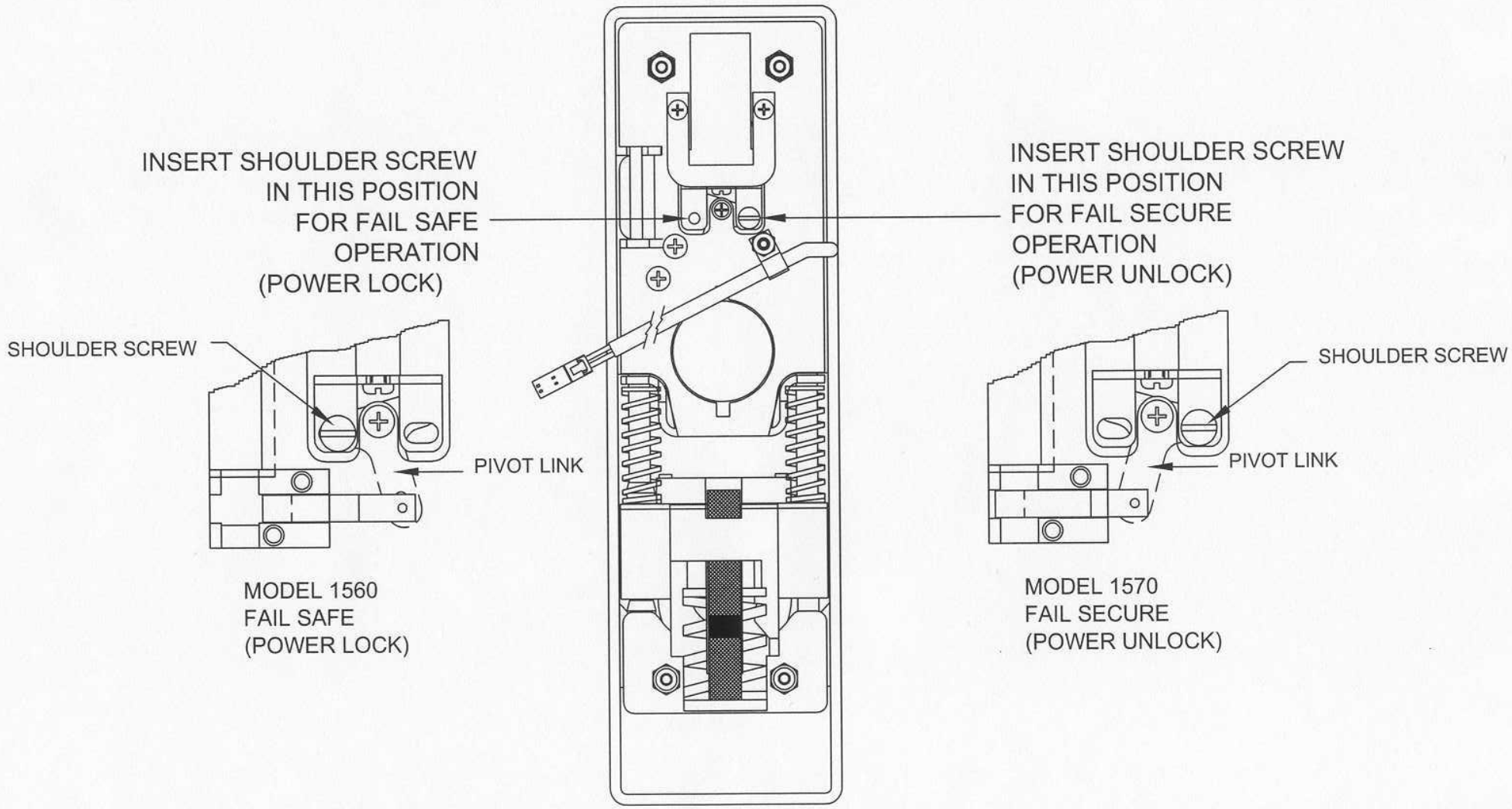

- SHOULDER OF SCREW MUST BE INSERTED THROUGH PIVOT LINK.
- SHOULDER SCREW MUST BE TIGHTENED FULLY TO AVOID INTERFERENCE.

EXIT DEVICE INSTALLATION INSTRUCTIONS

K-123 SWITCH KIT

VON DUPRIN MODEL 33 AND 99 EXIT DEVICES
SWITCH MONITORS LATCH MECHANISM OF EXIT DEVICE

ELECTRICAL SPECIFICATIONS

- SPDT MONITOR SWITCH
- CONTACT RATING: 5A @ 125VAC
  4A @ 30VDC

COLOR CODE FOR WIRES

- BLACK WIRE: COMMON
- WHITE WIRE: NORMALLY OPEN
- RED WIRE: NORMALLY CLOSED

INSTALLATION INSTRUCTIONS

STEP 1: REMOVE PUSH BAR AND BASE PLATE ASSEMBLY FROM ALUMINUM CHANNEL.

STEP 2: SEPARATE PUSH BAR FROM BASE PLATE ASSEMBLY.

STEP 3: REMOVE CONTROL LINK PIN AND RETAINING RING.

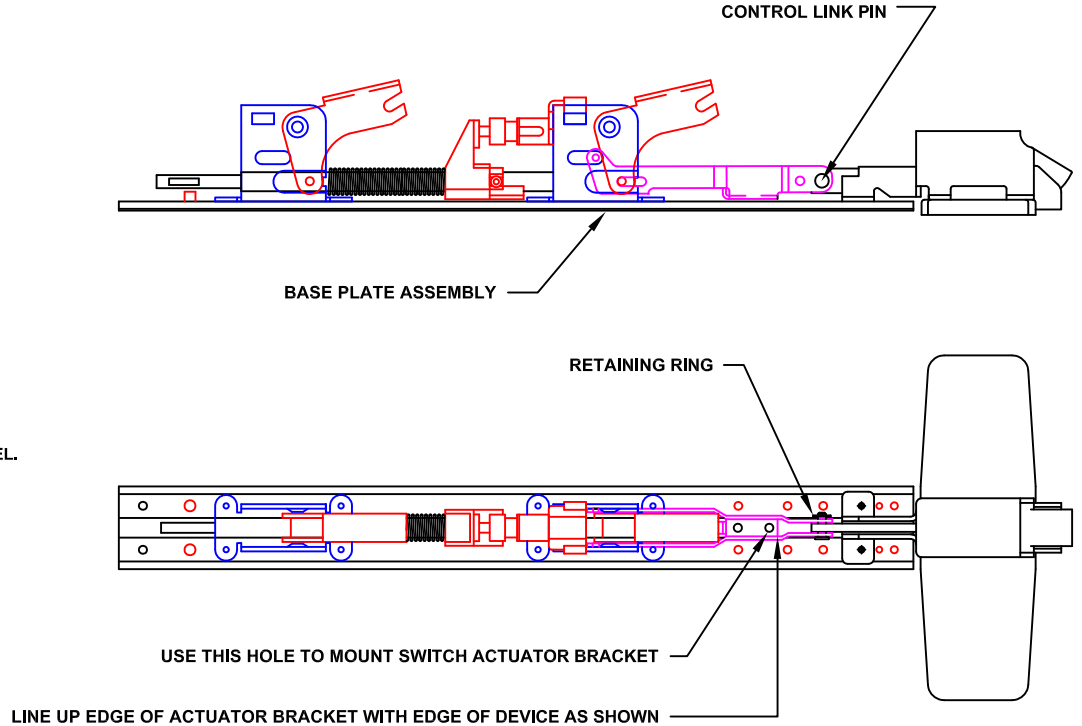

ACSI ARCHITECTURAL CONTROL SYSTEMS INC
2720 CLARK AVE., ST. LOUIS, MO 63103 (800) 753-5558

REV. 11/2017

STEP 4: MOUNT SWITCH ACTUATOR BRACKET TO BASEPLATE ASSEMBLY AS SHOWN.

STEP 5: REINSTALL CONTROL LINK PIN AND RETAINING RING.

STEP 6: SECURE SWITCH ASSEMBLY TO BASEPLATE. USE EXISTING HOLES IN DEVICE AS SHOWN.
USE THE TWO EACH #6-32 X .25 RHMS TO MOUNT SWITCH BRACKET, SCREWS ENTER FROM BOTTOM OF BASE PLATE AND THREAD INTO BRACKET. MAKE SURE ROLLER END OF SWITCH IS AGAINST ACTUATOR ASSEMBLY.

STEP 7: FEED WIRES THROUGH EXISTING HOLE IN BASEPLATE ASSEMBLY.

STEP 8: DEPRESS LATCH AND MAKE SURE SWITCH CONTACT IS RELEASED WHEN ACTUATOR MOVES AWAY FROM ROLLER OF SWITCH.

STEP 9: SLIDE PUSH BAR AND BASE PLATE ASSEMBLY INTO ALUMINUM CHANNEL.

STEP 10: MOUNT DEVICE, TERMINATE WIRES ACCORDINGLY WITH PROPER WIRE NUTS OR CRIMPS.

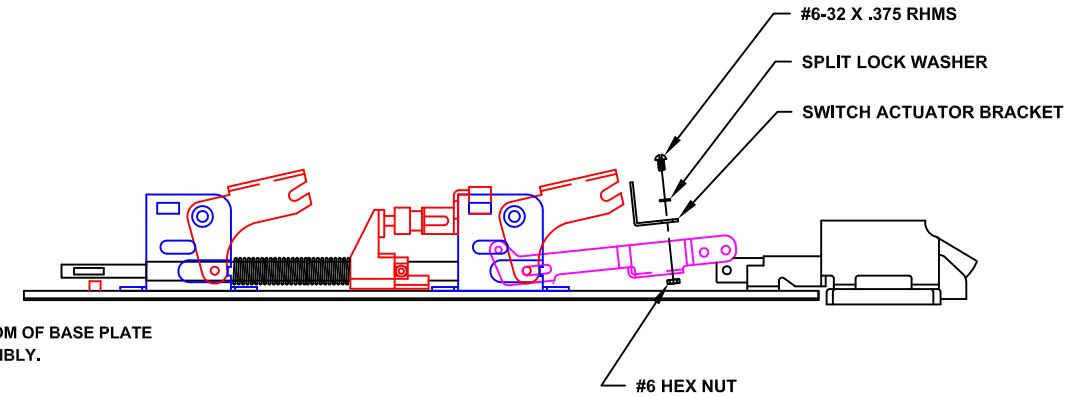

SWITCH ACTUATOR BRACKET SHOWN MOUNTED
WITH CONTROL LINK PIN AND RETAINING RING REINSTALLED

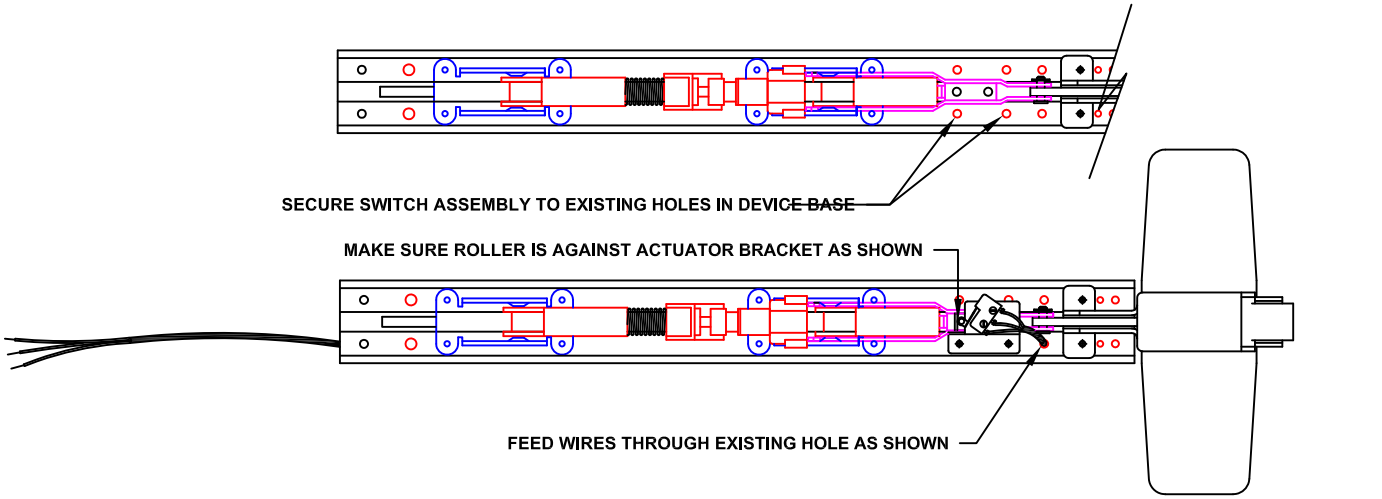

ACSI
ARCHITECTURAL CONTROL SYSTEMS INC.
2720 CLARK AVE., ST. LOUIS, MO 63103 (800) 753-5558

REV. 11/2017

INSTALLATION INSTRUCTIONS
MODEL 1550K-VD ELR
FIELD INSTALLABLE KIT



INDEX

FUNCTION DESCRIPTION	PAGE 1
PARTS LIST	PAGE 2
TOOLS REQUIRED	PAGE 2
KIT INSTALLATION INSTRUCTIONS	PAGE 2 - 10
KIT ADJUSTMENT INSTRUCTIONS	PAGE 11
MECHANICAL DEVICE ADJUSTMENTS	PAGE 12 – 13
DOOR PREP INFORMATION	PAGE 14
TYPICAL INSTALLATION DIAGRAM	PAGE 15

ARCHITECTURAL CONTROL SYSTEMS, INCORPORATED

2720 CLARK AVE., ST. LOUIS, MO 63103 (800) 753-5558

REV. 11/2017 II-E1500-11

FOR USE WITH VON DUPRIN MODELS 33A/35A AND 98/99 EXIT DEVICES

MODEL: 1550K-VD-3 ELECTRIC LATCH RETRACTION KIT 3 FT. DEVICES

MODEL: 1550K-VD-4 ELECTRIC LATCH RETRACTION KIT 4 FT. DEVICES

NOTE: CONSULT FACTORY FOR 30" EXIT DEVICE APPLICATIONS.

FUNCTION DESCRIPTION

ACSI – SERIES 1550 ELECTRIC LATCH RETRACTION, RETRACTS LATCH-BOLT FOR MOMENTARY OR EXTENDED PERIODS OF TIME.

NOTE: THE 1550K-VD KIT IS DESIGNED ONLY FOR USE WITH THE FOLLOWING ACSI POWER SUPPLIES: 1406-04-AO, 1406BB-04-AO, 1426-04-AO, 1426BB-04-AO

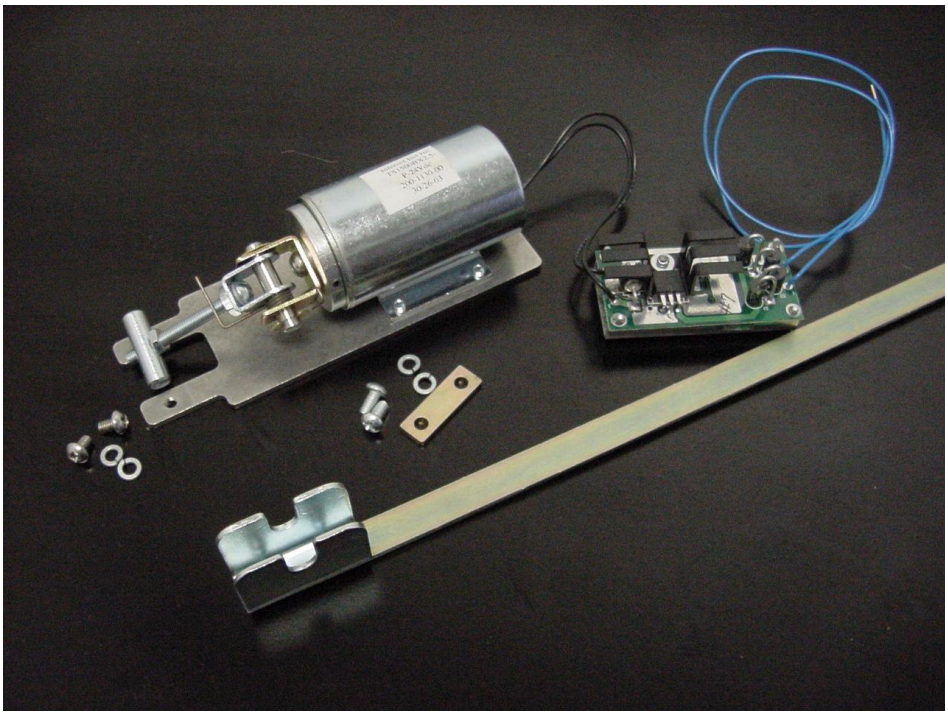

ACSI – VON DUPRIN 1550K-VD ELECTRIC LATCH RETRACTION KIT SHOWN IN ABOVE PICTURE.

ARCHITECTURAL CONTROL SYSTEMS, INCORPORATED

2720 CLARK AVE., ST. LOUIS, MO 63103 (800) 753-5558

KIT INCLUDES THE FOLLOWING PARTS

1 EACH: SOLENOID ASSEMBLY WITH CIRCUIT BOARD
1 EACH: 3FT./4FT. DEVICE LINK
1 EACH: SPACER PLATE
2 EACH: #8-32 X .250” SCREWS
2 EACH: #8-32 X .312” SCREWS
4 EACH: #8 LOCK WASHERS
1 EACH: BLACK RATCHET CLIP
1 EACH: ALCOHOL PREP PAD
2 EACH: ACSI MODIFICATION LABELS

TOOLS NEEDED

3/16” DIAMETER DRILL BIT
5/8” DIAMETER DRILL BIT
#2 PHILLIPS SCREWDRIVER
5/16” OPEN END WRENCH

INSTALLING KIT

NOTE: REMOVE DEVICE FROM DOOR BEFORE INSTALLING KIT ON DEVICE

STEP 1: REMOVE 4 EACH SCREWS AND REMOVE CASE COVER.

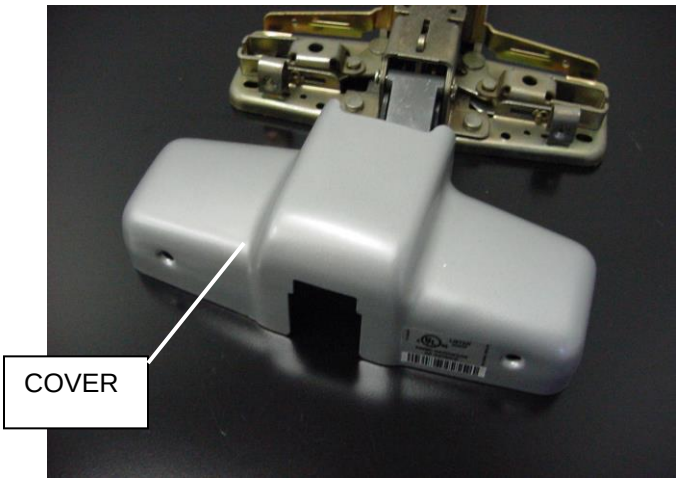

STEP 2: REMOVE 2 BOLTS AND PUSH-BAR RETAINER.

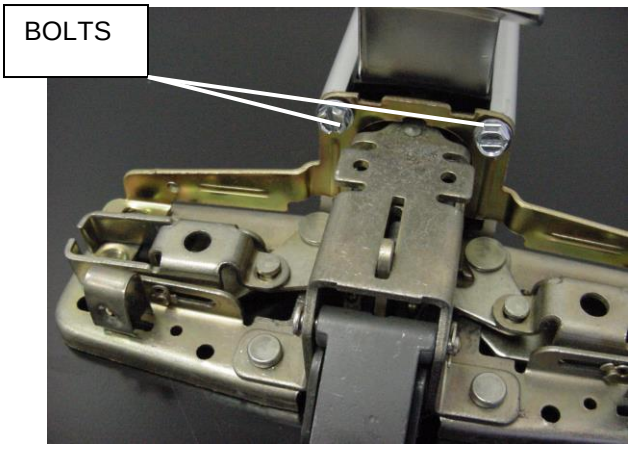

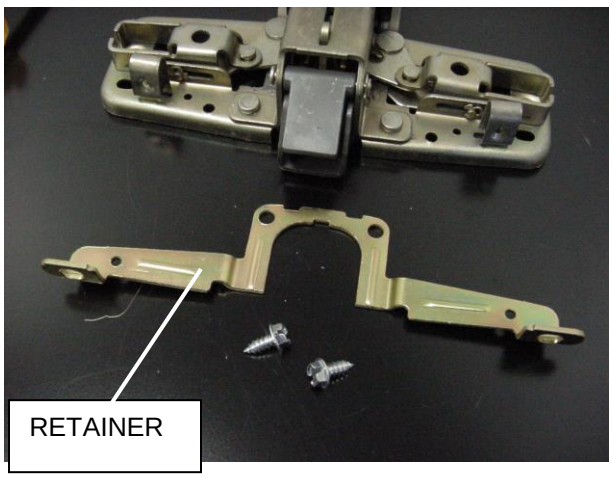

STEP 3: SLIDE REAR COVER PLATE OFF OF DEVICE CHANNEL.

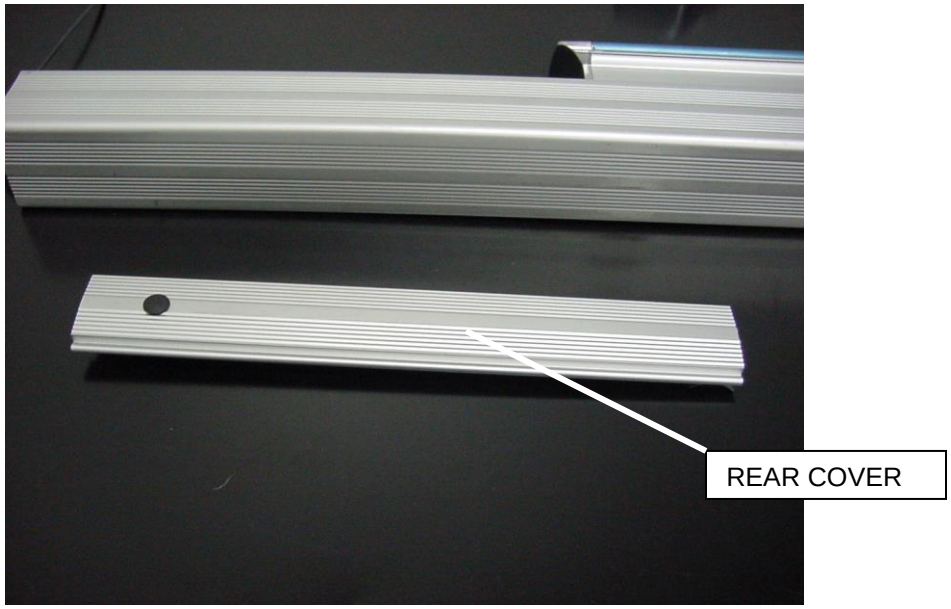

STEP 4: SLIDE ACTIVE PUSH-BAR ASSEMBLY APART FROM DEVICE CHANNEL.

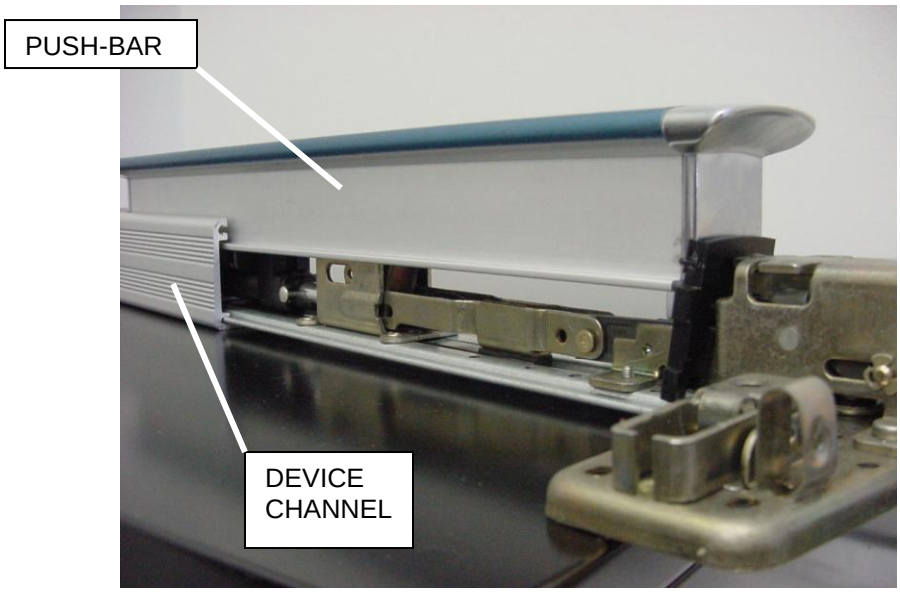

ARCHITECTURAL CONTROL SYSTEMS, INCORPORATED

2720 CLARK AVE., ST. LOUIS, MO 63103 (800) 753-5558

STEP 5: SEPARATE PUSH-PAD FROM ACTIVE MECHANISM. SLIDE PUSH-PAD TOWARDS DEVICE HEAD TO SEPARATE.

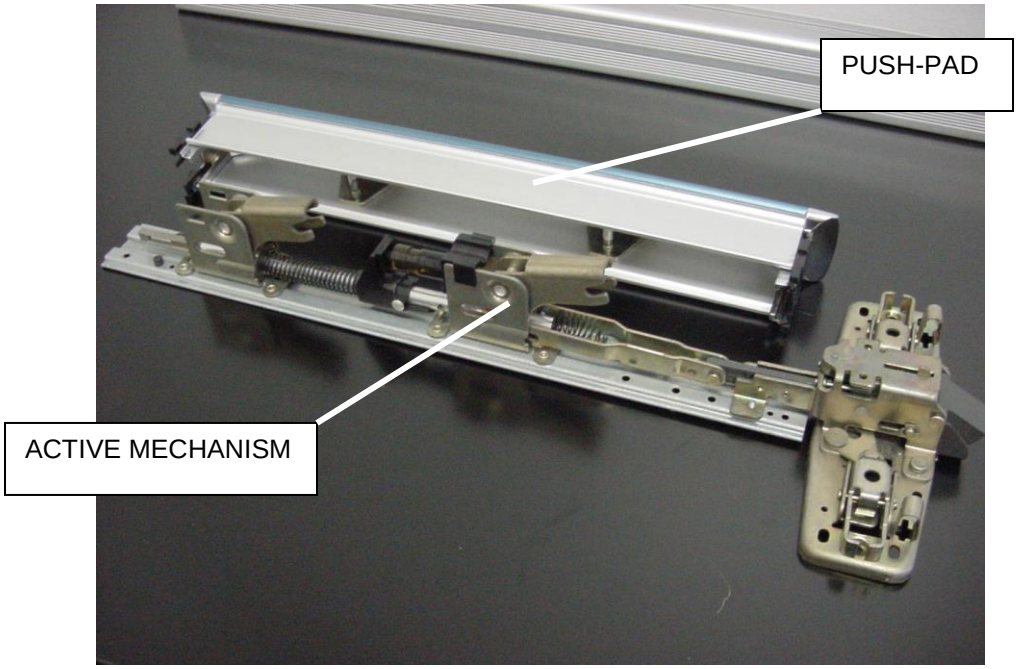

STEP 6: DEVICES WITH DOGGING, THE DOGGING MECHANISM MUST BE REMOVED BY DRILLING OUT THE TWO RIVETS THAT SECURE THE DOGGING MECHANISM TO THE ACTIVE PUSH-BAR. USE A 3/16" DIAMETER DRILL BIT TO REMOVE RIVETS. WHEN REMOVING RIVETS BE CAREFULL NOT TO DRILL THROUGH THE BASE.

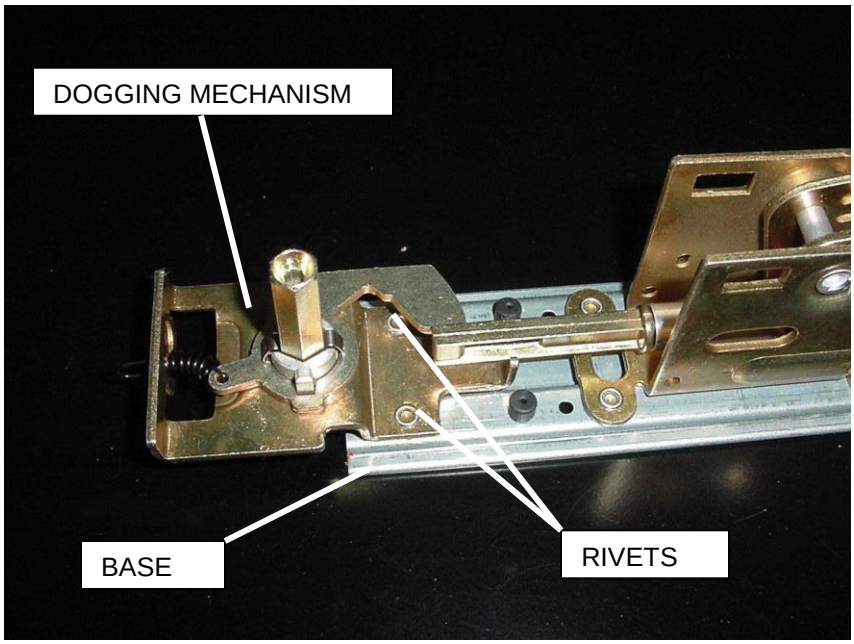

STEP 7: RETRACTION LINK MUST BE SIZED FOR 3 FT. DEVICES. IF YOUR DEVICE IS 4 FT. PROCEED TO STEP 8. TO SIZE THE RETRACTION LINK FOR 3 FT. DEVICES CUT LINK OFF AT SCRIBED LINE AS SHOWN IN PHOTO BELOW. AFTER LINK HAS BEEN CUT DEBURR EDGES AND DISCARD THE UNUSED END.

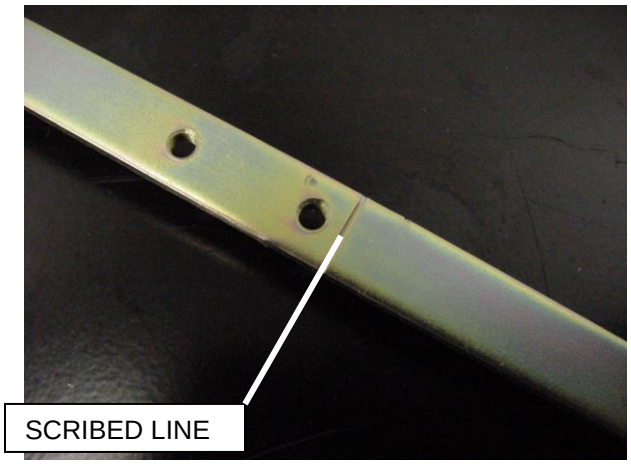

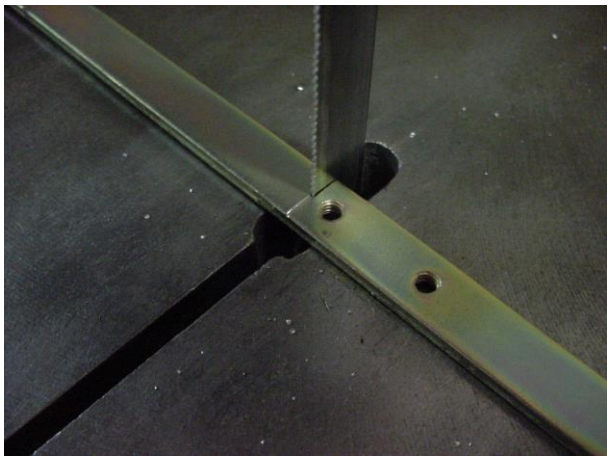

STEP 8: SLIDE ACSI RETRACTION LINK FROM REAR OF ACTIVE ASSEMBLY UP TO THE TWO EXISTING HOLES LOCATED IN FRONT OF THE PUSH-BAR MECHANISM.

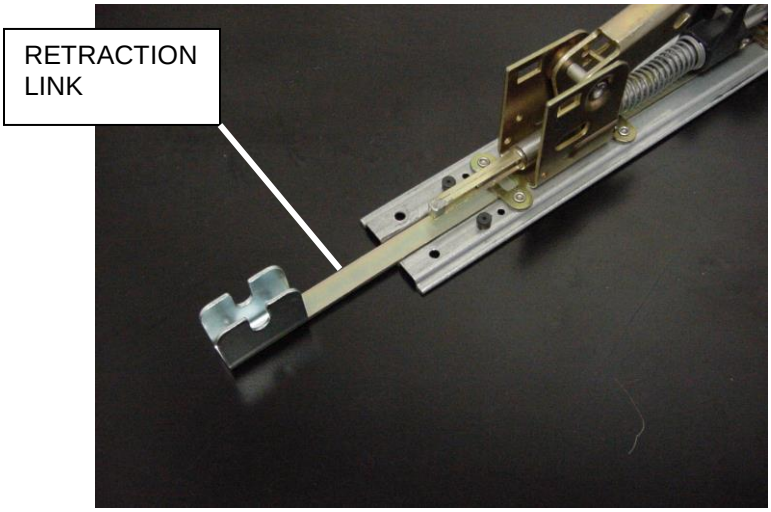

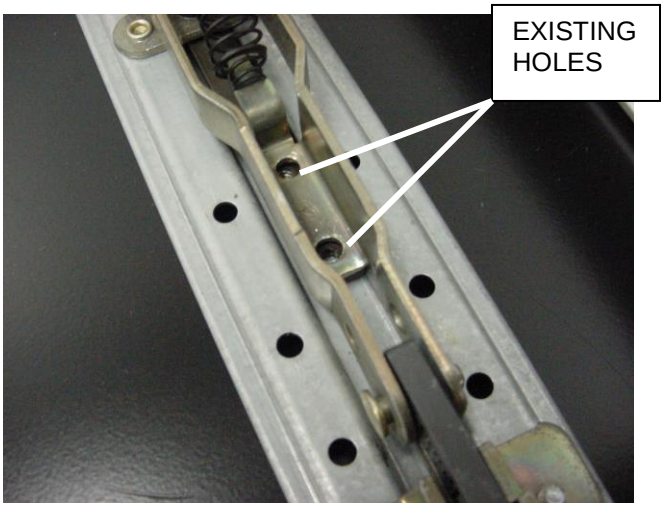

STEP 9: NEXT SLIDE ACSI LINK SPACER UNDER THE TWO EXISTING HOLES, BEING CAREFUL TO PLACE SPACER **ON TOP** OF ACSI RETRACTION LINK.

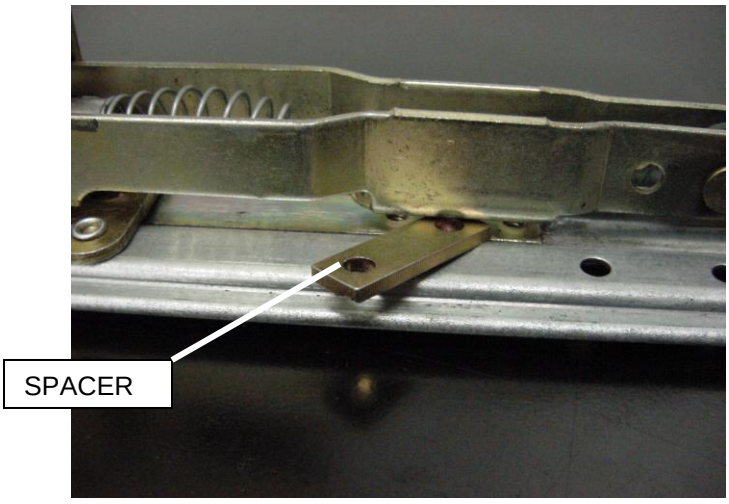

STEP 10: SECURE ACSI RETRACTION LINK WITH THE 2 EACH #8-32 X 5/16" ROUND HEAD PHILLIPS SCREWS AND #8 LOCK WASHERS PROVIDED.



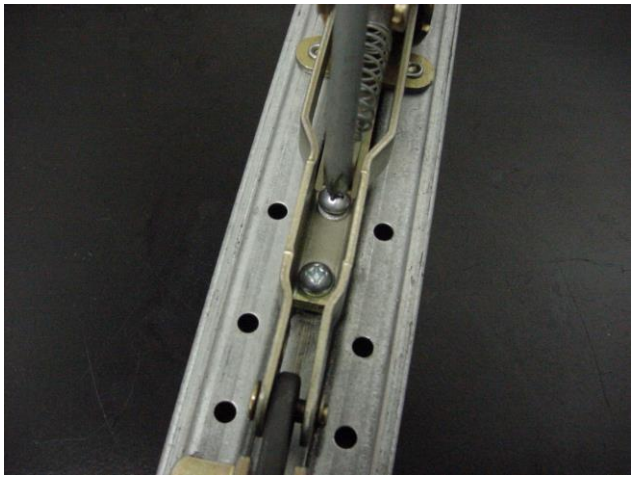

STEP 11: SLIDE SOLENOID ASSEMBLY TO REAR OF PUSH-BAR MECHANISM. SLIDE SOLENOID ASSEMBLY UP TO THE TWO EXISTING HOLES THAT THE ORIGINAL MANUAL DOGGING MOUNTED TO AND DROP THE T-BAR INTO THE SLOT OF THE RETRACTION LINK AS SHOWN IN THE PICTURE BELOW. (MAKE SURE TORSION SPRING IS ORIENTED ON TOP AS SHOWN) NEXT INSERT AND SECURE THE SOLENOID ASSEMBLY WITH 2 EACH #8-32 X 1/4" ROUND HEAD PHILLIPS SCREWS AND #8 LOCK WASHERS PROVIDED. DO NOT TIGHTEN SCREWS. THIS WILL ALLOW UNIT TO EASILY SLIDE BACK INTO DEVICE CHANNEL.

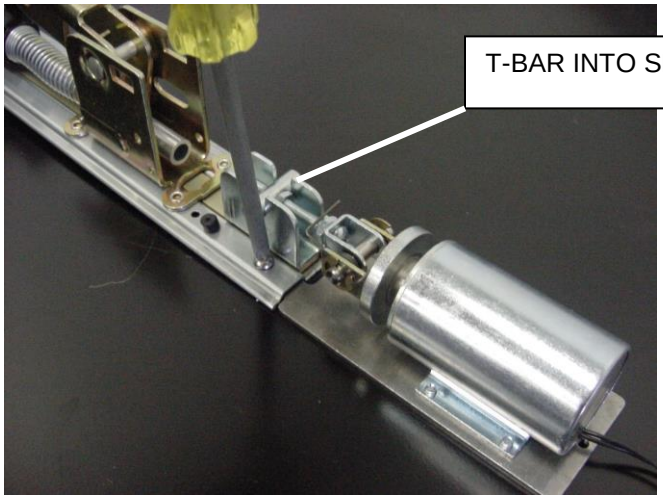

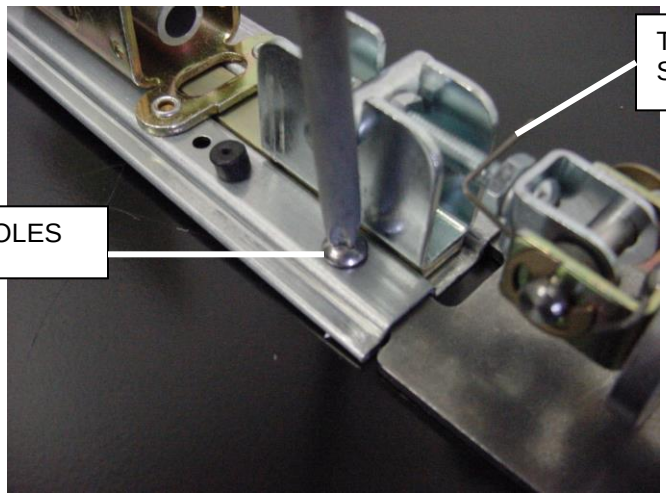

STEP 12: REPLACE PUSH-BAR ONTO ACTIVE PUSH-BAR MECHANISM AND SLIDE DEVICE CHANNEL WITH SOLENOID ASSEMBLY BACK ONTO PUSH-BAR.

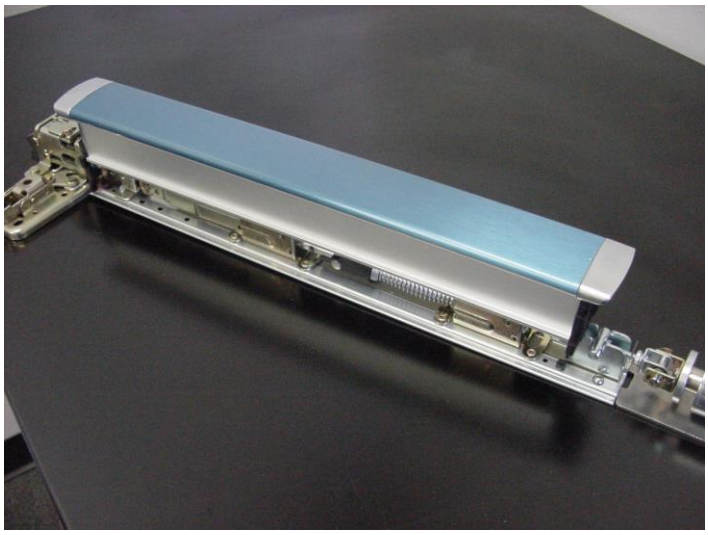

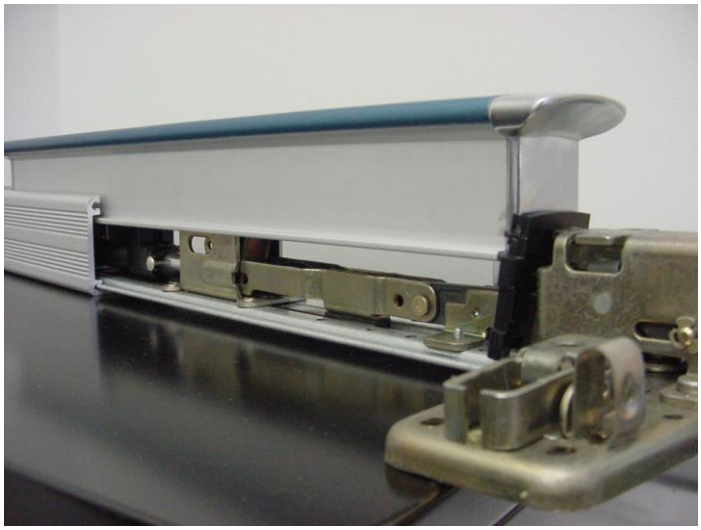

STEP 13: RE-INSTALL PUSH-BAR RETAINER AND TWO BOLTS.

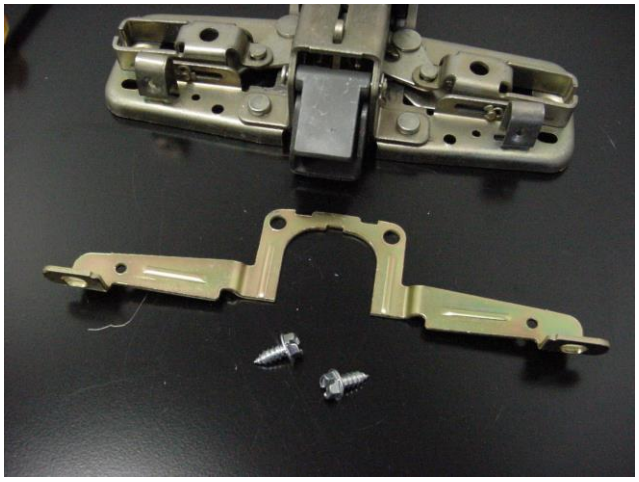

STEP 14: NEXT TIGHTEN THE 2 EACH #8-32 X 1/4" ROUND HEAD PHILLIPS SCREWS WITH #8 LOCK WASHERS.





STEP 15: AFTER SOLENOID ASSEMBLY IS SECURED. THE AREA BEHIND THE SOLENOID IN THE DEVICE CHANNEL MUST BE CLEANED. CLEAN THE AREA WITH WINDOW CLEANER OR RUBBING ALCOHOL (NOTE: ALCOHOL PREP PAD IS INCLUDED) THIS WILL OPTIMIZE THE BONDING OF THE PCBD/BRACKET ASSEMBLY. WHEN USING SOLVENTS BE SURE TO FOLLOW THE MANUFACTURERS PRECAUTIONS AND DIRECTIONS FOR USE WHEN HANDLING SUCH MATERIALS.



ARCHITECTURAL CONTROL SYSTEMS, INCORPORATED

2720 CLARK AVE., ST. LOUIS, MO 63103 (800) 753-5558

STEP 16: AFTER THE SURFACE IS CLEAN AND DRY, REMOVE THE TAPE LINER FROM THE BOTTOM OF PCBD/BRACKET ASSEMBLY. PLACE ASSEMBLY IN THE CLEANED AREA AND APPLY PRESSURE DOWN ON THE CORNERS ONLY TO ENSURE PROPER BONDING.

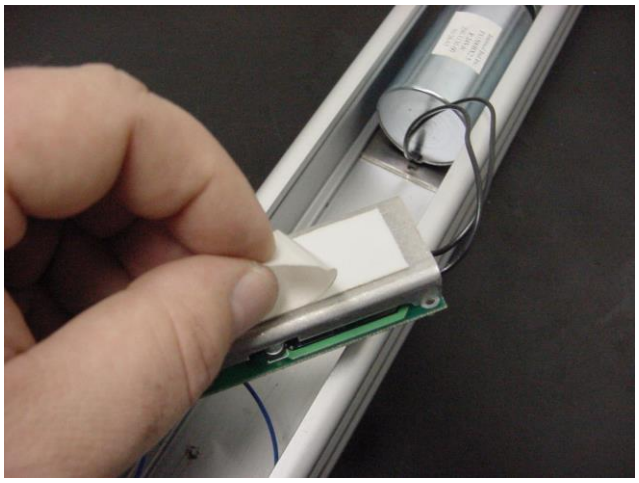

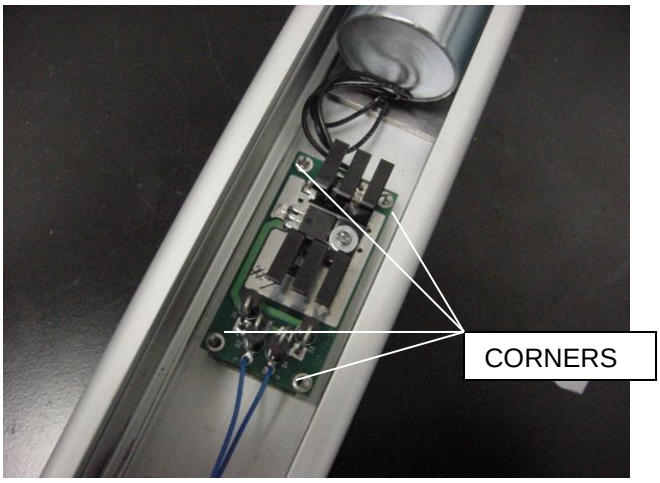

STEP 17: SLIDE REAR COVER PLATE BACK ONTO DEVICE. FOR DEVICES THAT THE MECHANICAL DOGGING HAS BEEN REMOVED ROTATE COVER SO HOLE IS NEAR END CAP. REMOVE ANTI-RATTLE SPRING AND RE-INSTALL ON END WITH HOLE. THEN INSTALL BLACK RATCHET CLIP INTO HOLE.

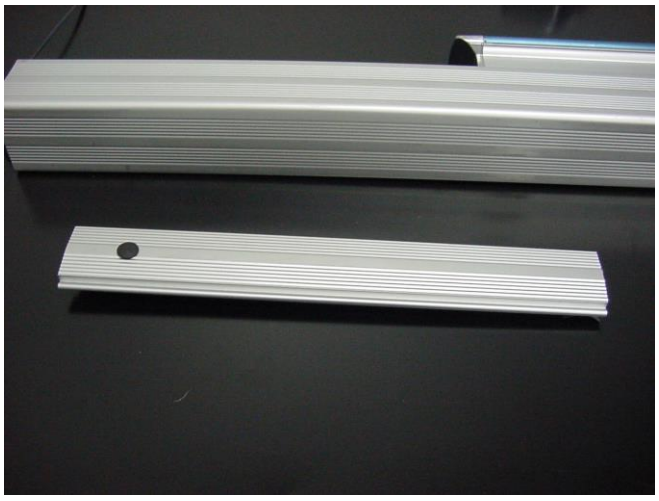

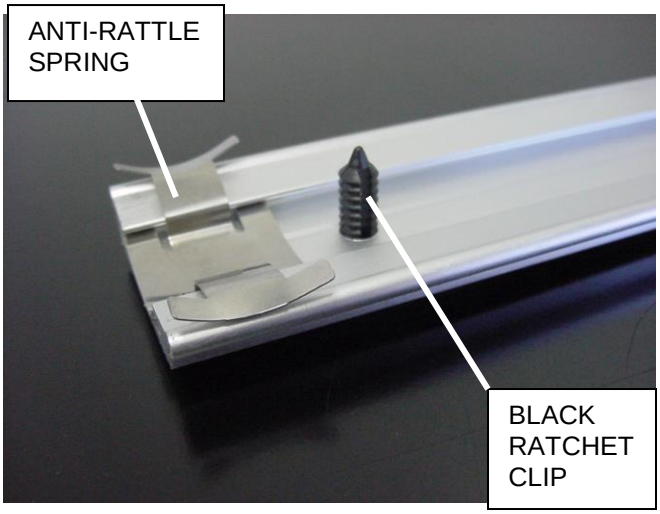

ARCHITECTURAL CONTROL SYSTEMS, INCORPORATED

2720 CLARK AVE., ST. LOUIS, MO 63103 (800) 753-5558

STEP 18: APPLY THE ACSI ELECTRIC MODIFICATION LABELS TO THE CASE COVER AND END CAP.



NOTE: IT IS IMPORTANT THAT THE LABELS BE APPLIED AS SHOWN. THE LABEL CONTAINS THE PHONE NUMBER FOR TECHNICAL ASSISTANCE.

STEP 19: FOR PROPER CONNECTION OF WIRES REFER TO INSTRUCTIONS INCLUDED WITH THE ACSI 1406-04-AO OR 1426-04-AO POWER SUPPLY.

ARCHITECTURAL CONTROL SYSTEMS, INCORPORATED

2720 CLARK AVE., ST. LOUIS, MO 63103 (800) 753-5558

VON DUPRIN ELECTRIC LATCH RETRACTION KIT ADJUSTMENT INSTRUCTIONS

MAKE SURE DEVICE IS PROPERLY ADJUSTED FOR MECHANICAL OPERATION FIRST.

NOTE: ALL KITS ARE FACTORY ADJUSTED FOR THE SOLENOID ONLY. USE ADJUSTMENT INSTRUCTIONS IF LATCH BOLTS OR RODS DO NOT RETRACT FULLY OR DO NOT CLEAR STRIKE PLATE.

LATCH BOLT SHOULD BE FLUSH WITHIN 1/16" OF DEVICE HEAD COVER. IF NOT, PROCEED TO STEP 1.

STEP 1: BACK OFF JAMB NUT AND LIFT SPRING LOADED T-BAR UP OUT OF SLOT IN PULL LINKAGE.

STEP 2: TURN END CLOCKWISE A HALF TURN UNTIL CORRECT ADJUSTMENT IS ACHIEVED. RE-TIGHTEN JAMB NUT AFTER ADJUSTMENT IS FINISHED.

STEP 3: TO CHECK ADJUSTMENT EITHER MANUALLY PULL THE SOLENOID PLUNGER AND LINKAGE BACK FROM THE FRONT SOLENOID OR SIMPLY ACTUATE THE SOLENOID MOMENTARILY WITH THE 1406-04-AO POWER SUPPLY.
NOTE: IF CHECKING ADJUSTMENT WITH POWER SUPPLY MAKE SURE HANDS ARE CLEAR OF THE SOLENOID ASSEMBLY.

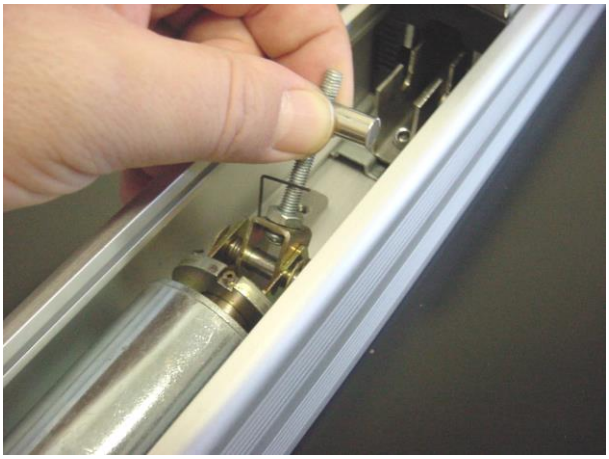

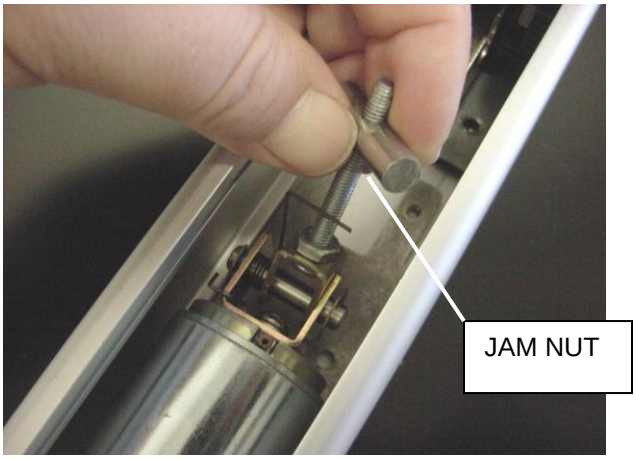



LATCH BOLT IS FLUSH WITHIN 1/16" OF COVER. DEAD LATCH MAY EXTEND OUT PAST LATCH BOLT.

ARCHITECTURAL CONTROL SYSTEMS, INCORPORATED

2720 CLARK AVE., ST. LOUIS, MO 63103 (800) 753-5558

9827/9927 OR 3327A/3527A SURFACE VERTICAL ROD EXIT DEVICE MECHANICAL ROD ADJUSTMENT INSTRUCTIONS

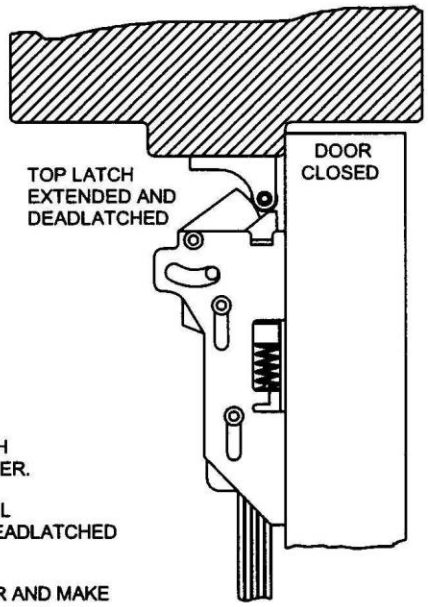

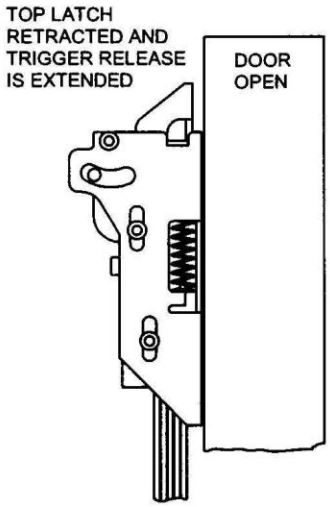

ADJUSTMENT INSTRUCTIONS

STEP 1: OPEN DOOR AND RELEASE TOP LATCH BY DEPRESSING THE RELEASE TRIGGER.

STEP 2: SCREW THE TOP ROD IN OR OUT UNTIL TOP ROD IS FULLY EXTENDED AND DEADLATCHED (WILL NOT PUSH IN FULLY).

STEP 3: WITH DOOR OPEN DEPRESS PUSHBAR AND MAKE SURE TOP LATCH REMAINS FULLY RETRACTED AND TRIGGER RELEASE IS EXTENDED.

STEP 4: WITH DOOR CLOSED SCREW THE BOTTOM ROD IN OR OUT UNTIL BOTTOM LATCH IS ENGAGED INTO STRIKE AND IS DEADLATCHED.

STEP 5: CHECK BOTTOM LATCH BY DEPRESSING THE PUSHBAR AND OPENING THE DOOR, THE BOTTOM LATCH SHOULD CLEAR THE STRIKE AND FLOOR.

STEP 6: OPEN AND CLOSE DOOR SEVERAL TIMES AND MAKE SURE LATCHES ARE DEADLATCHED WHEN DOOR IS CLOSED. (READJUST RODS IF NEEDED)

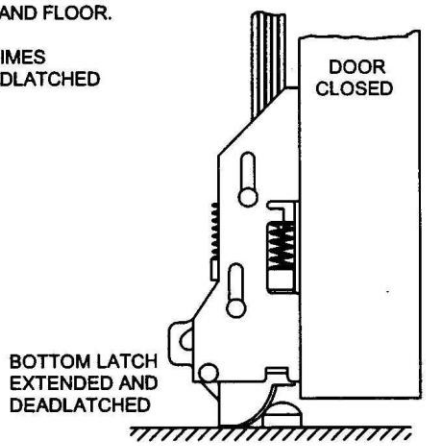

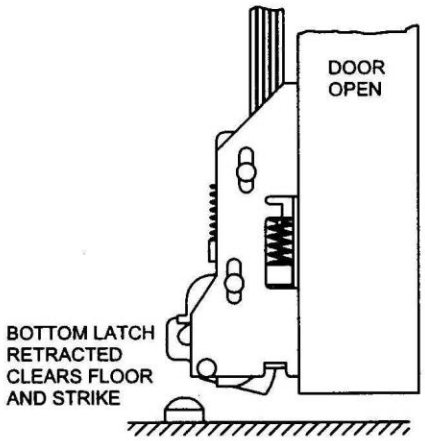

ARCHITECTURAL CONTROL SYSTEMS, INCORPORATED

9847/9947 OR 3347A/3547A CONCEALED VERTICAL ROD EXIT DEVICE MECHANICAL ROD ADJUSTMENT INSTRUCTIONS

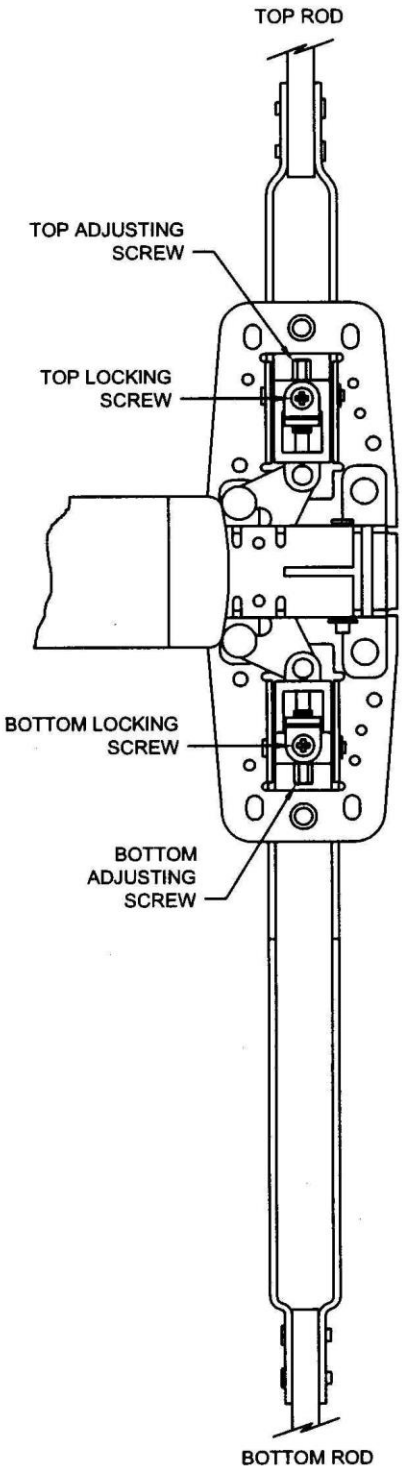

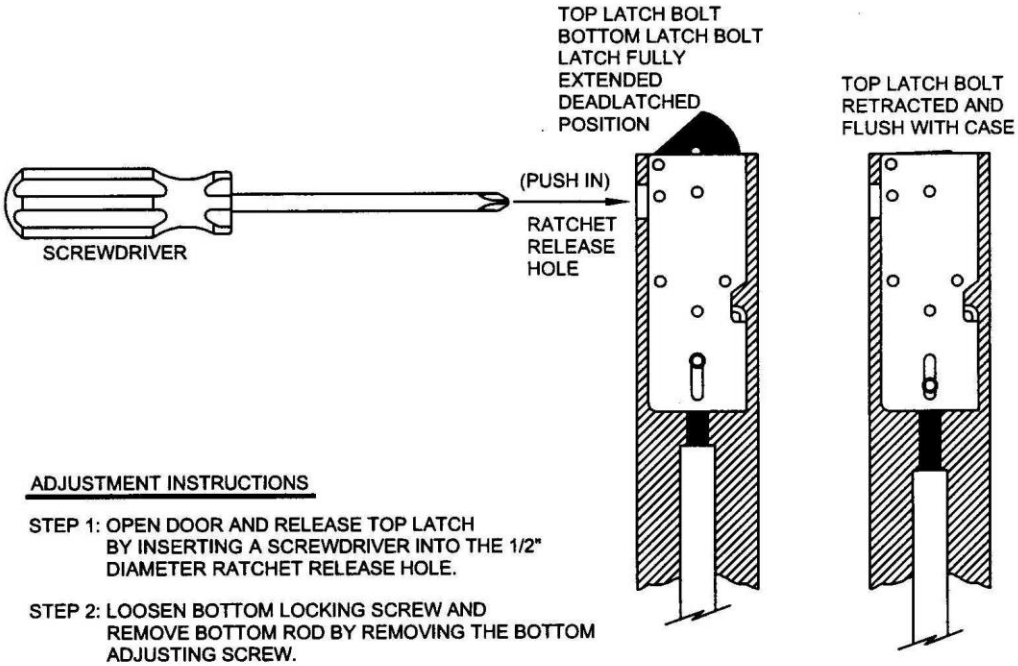

ADJUSTMENT INSTRUCTIONS

STEP 1: OPEN DOOR AND RELEASE TOP LATCH BY INSERTING A SCREWDRIVER INTO THE 1/2" DIAMETER RATCHET RELEASE HOLE.

STEP 2: LOOSEN BOTTOM LOCKING SCREW AND REMOVE BOTTOM ROD BY REMOVING THE BOTTOM ADJUSTING SCREW.

STEP 3: LOOSEN TOP LOCKING SCREW AND TURN THE TOP ADJUSTING SCREW CLOCKWISE UNTIL THE TOP LATCH IS FULLY EXTENDED.

STEP 4: MAKE SURE THE TOP LATCH IS EXTENDED AND DEADLOCKED BY PUSHING THE LATCH. IF THE LATCH DOES NOT PUSH IN THEN IT IS PROPERLY DEADLATCHED.

STEP 5: TIGHTEN THE TOP LOCKING SCREW. (DO NOT OVERTIGHTEN)

STEP 6: DEPRESS PUSHBAR AND RELEASE. MAKE SURE THAT THE TOP LATCH STAYS IN THE RETRACTED POSITION AND IS FLUSH WITH LATCH CASE.

STEP 7: REINSTALL BOTTOM ADJUSTING SCREW INTO THE BOTTOM ROD.

STEP 8: DEPRESS PUSHBAR TO RETRACT THE TOP LATCH, THEN ADJUST BOTTOM ROD BY TURNING BOTTOM ADJUSTING SCREW CLOCKWISE UNTIL THE BOTTOM LATCH BOLT CLEARS THE BOTTOM STRIKE AND FLOOR.

STEP 9: TIGHTEN THE BOTTOM LOCKING SCREW. (DO NOT OVERTIGHTEN)

STEP 10: CHECK FOR PROPER OPERATION BY OPENING AND CLOSING DOOR SEVERAL TIMES. IF DEVICE DOES NOT OPEN AND CLOSE PROPERLY REPEAT ADJUSTMENT INSTRUCTIONS.

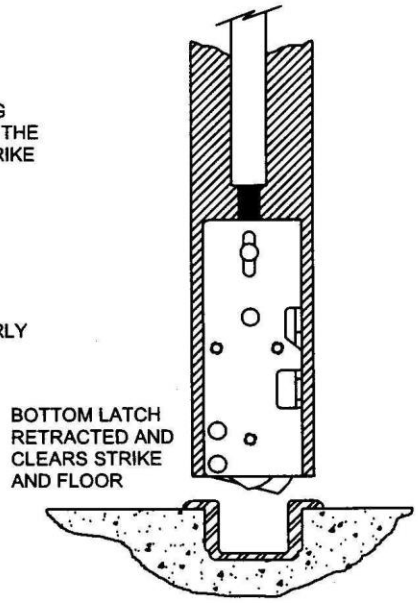

ARCHITECTURAL CONTROL SYSTEMS, INCORPORATED

DOOR PREPARATION INSTRUCTIONS
FOR USE ON ALL VON DUPRIN EXIT DEVICE MODELS

DRILL 5/8" DIAMETER HOLE THROUGH EXIT DEVICE SIDE OF DOOR ONLY
FOR ENTRY OF WIRES FROM EXIT DEVICE TO ELECTRIC HINGE.
LOCATE HOLE AS SHOWN BELOW IN ILLUSTRATION.

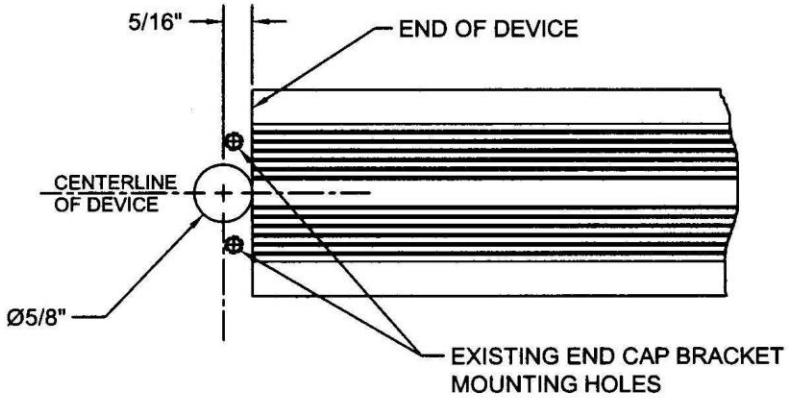

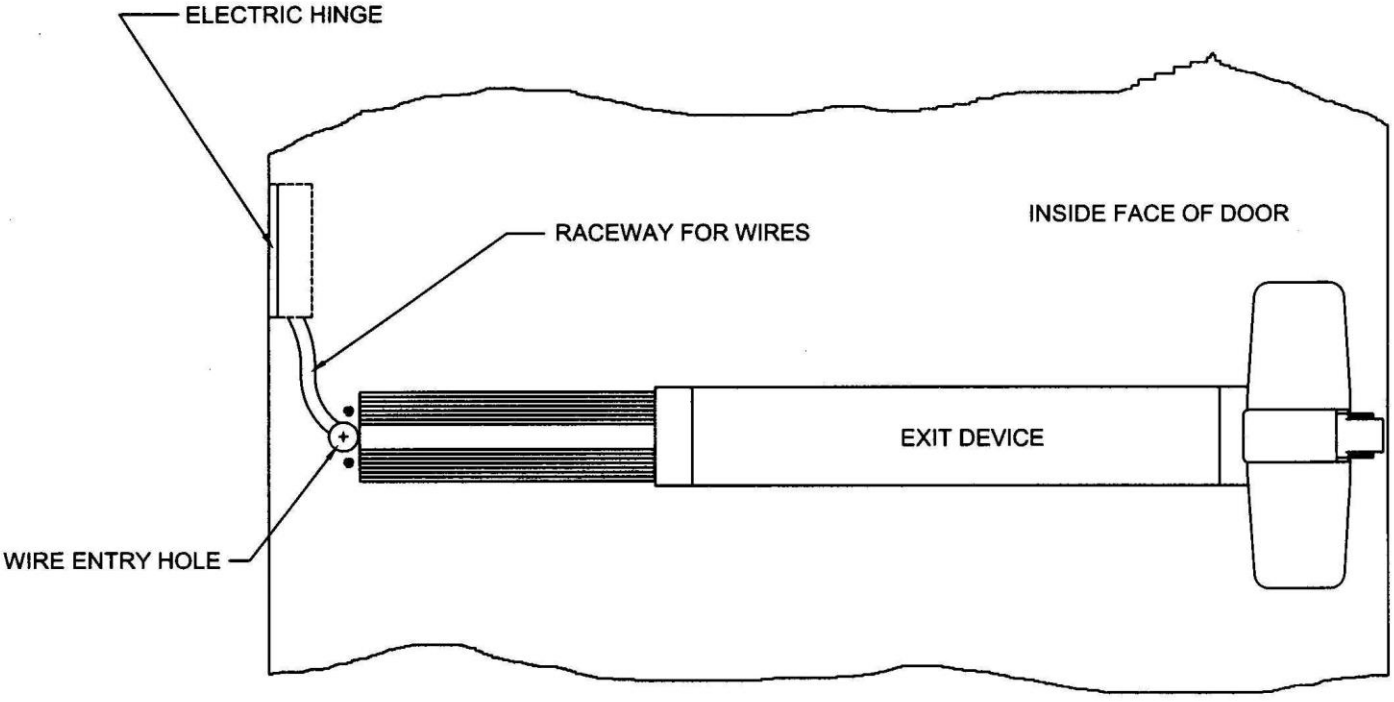

ARCHITECTURAL
CONTROL SYSTEMS,
INCORPORATED

MODEL 1550K-VD TYPICAL INSTALLATION

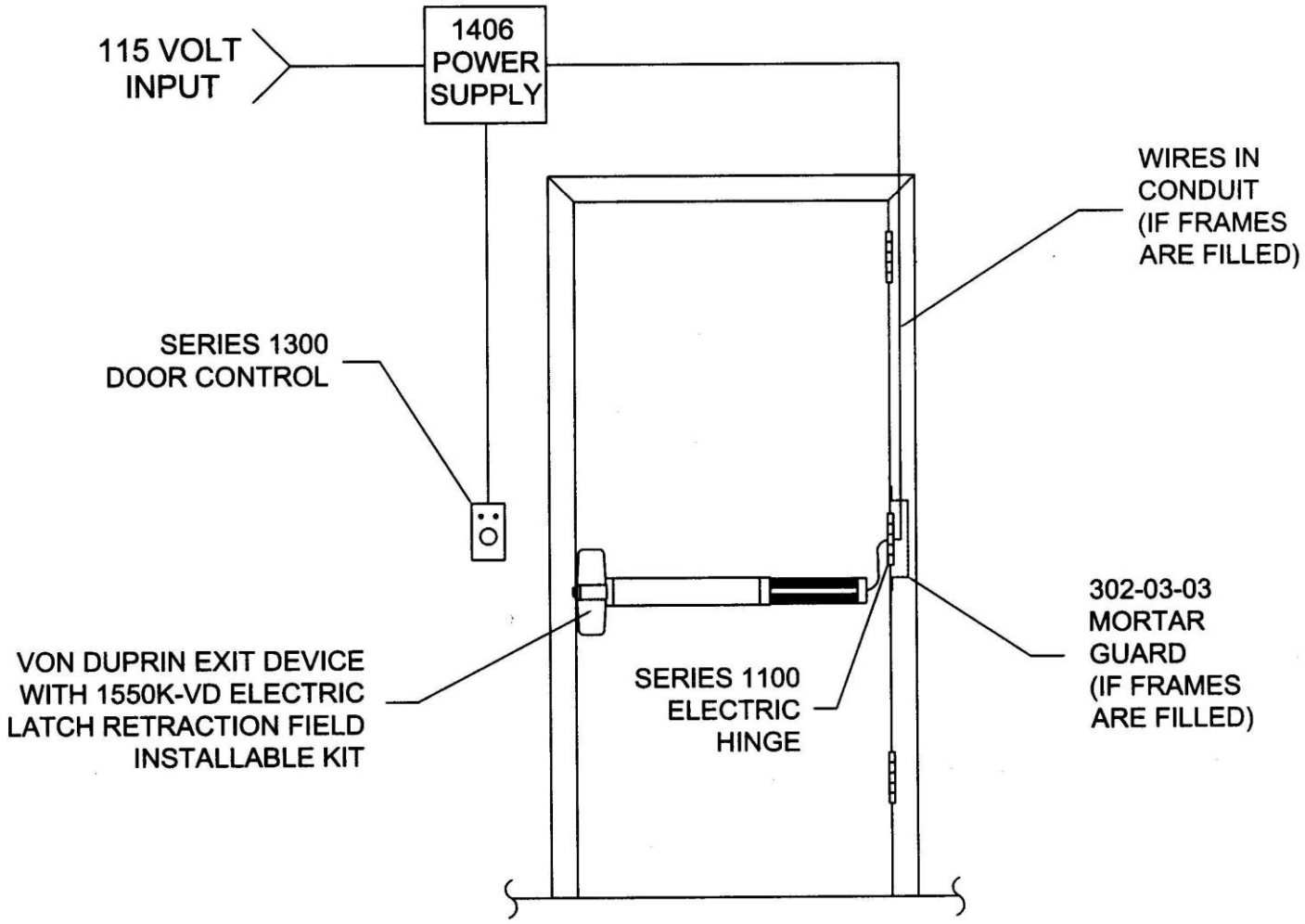

ARCHITECTURAL CONTROL SYSTEMS, INCORPORATED

2720 CLARK AVE., ST. LOUIS, MO 63103 (800) 753-5558



ELECTRIC EXIT DEVICE KIT INSTALLATION INSTRUCTIONS
AUTHORIZED EGRESS

K-124
PRECISION 2000 AND 5000 SERIES

MONITORS THE USE OF THE TOUCHBAR

Electrical Specifications
[illegible]

Wire Color Codes
[illegible]

Installation
1. Separate the device channel from the touchbar assembly.
2. Separate the touchbar from the touchbar mechanism.
3. Attach the K-124 to the two rear holes of the touchbar mechanism using the supplied screws and bolsterplates.
4. Route the lead wires along the holes of the touchbar mechanism.
5. Secure the lead wires to the holes of the touchbar mechanism using the supplied tie-wraps mount and tie-wraps.
6. Attach the touchbar to the touchbar mechanism.
7. Attach the device channel to the touchbar assembly.

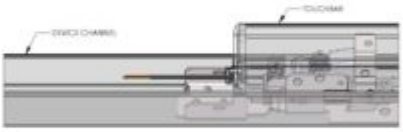



2720 CLARK AVE. • ST. LOUIS, MO 63103 • 1.800.753.0338 • www.acsi-inc.com

ELECTRIC EXIT DEVICE KIT INSTALLATION INSTRUCTIONS
AUTHORIZED EGRESS

K-124
PRECISION 2000 AND 5000 SERIES

MONITORS THE USE OF THE TOUCHBAR

Electrical Specifications:
SPDT Monitor Switch
Contacts Rated: 3A @ 125VAC
2A @ 30VDC

Wire Color Codes:
YELLOW - Common
RED - Normally Open
GRAY - Normally Closed

Installation:
1. Separate the device channel from the touchbar assembly.
2. Separate the touchbar from the touchbar mechanism.
3. Attach the K-124 Kit to the two rear holes of the touchbar mechanism using the supplied screws and lockwashers.
4. Route the lead wires along the inside of the touchbar mechanism.
5. Secure the lead wires to the inside of the touchbar mechanism using the supplied ty-wrap mount and ty-wrap.
6. Attach the touchbar to the touchbar mechanism.
7. Attach the device channel to the touchbar assembly.

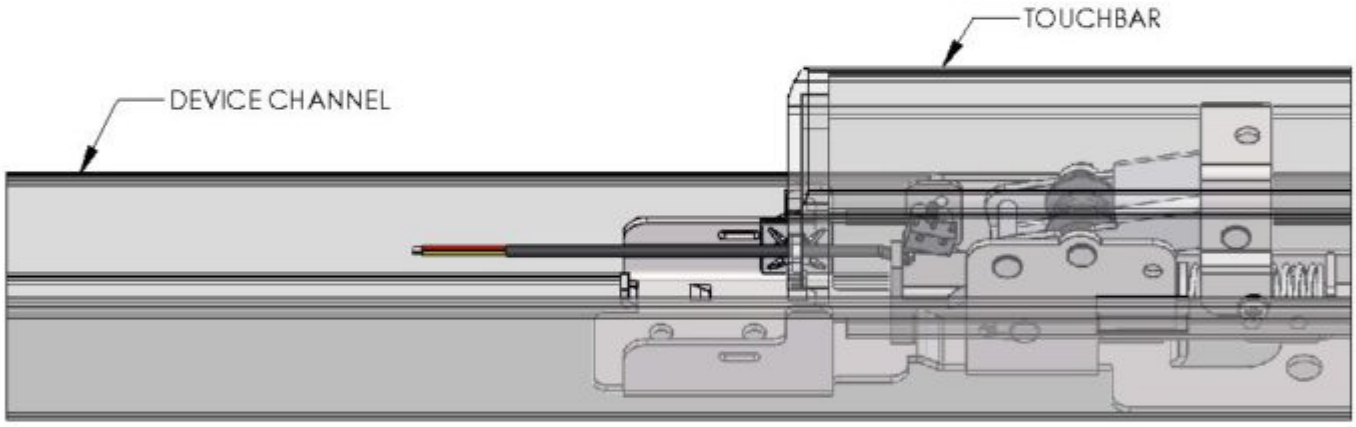

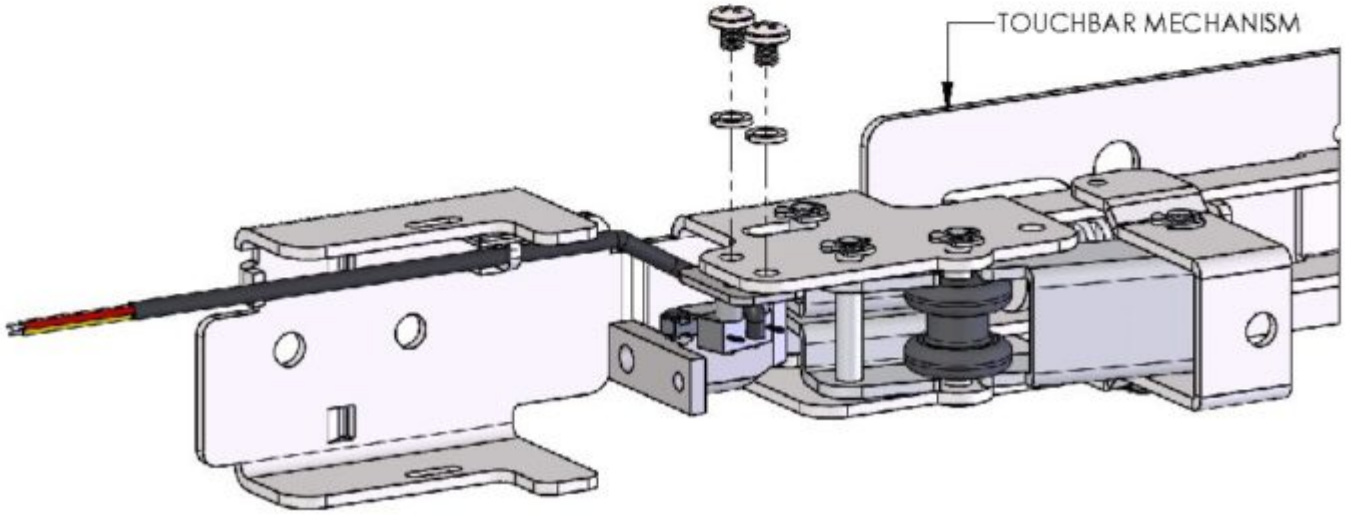

ELECTRIC EXIT DEVICE KIT INSTALLATION INSTRUCTIONS
AUTHORIZED EGRESS

K-124
PRECISION 2000 AND 5000 SERIES

MONITORS THE USE OF THE TOUCHBAR

Electrical Specifications:
SPDT Monitor Switch
Contacts Rated: 3A @ 125VAC
2A @ 30VDC

Wire Color Codes:
YELLOW - Common
RED - Normally Open
GRAY - Normally Closed

Installation:
1. Separate the device channel from the touchbar assembly.
2. Separate the touchbar from the touchbar mechanism.
3. Attach the K-124 Kit to the two rear holes of the touchbar mechanism using the supplied screws and lockwashers.
4. Route the lead wires along the inside of the touchbar mechanism.
5. Secure the lead wires to the inside of the touchbar mechanism using the supplied ty-wrap mount and ty-wrap.
6. Attach the touchbar to the touchbar mechanism.
7. Attach the device channel to the touchbar assembly.

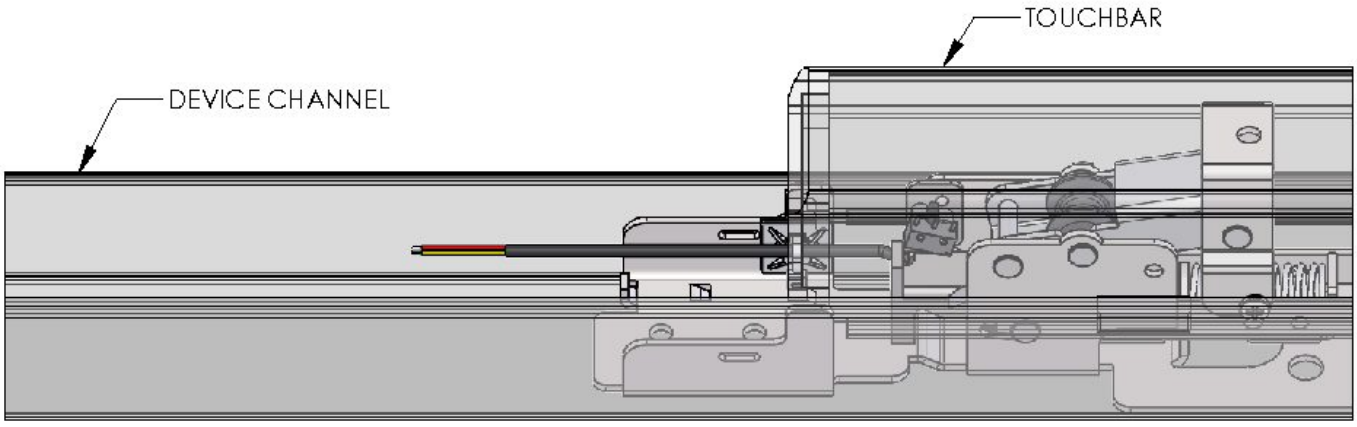

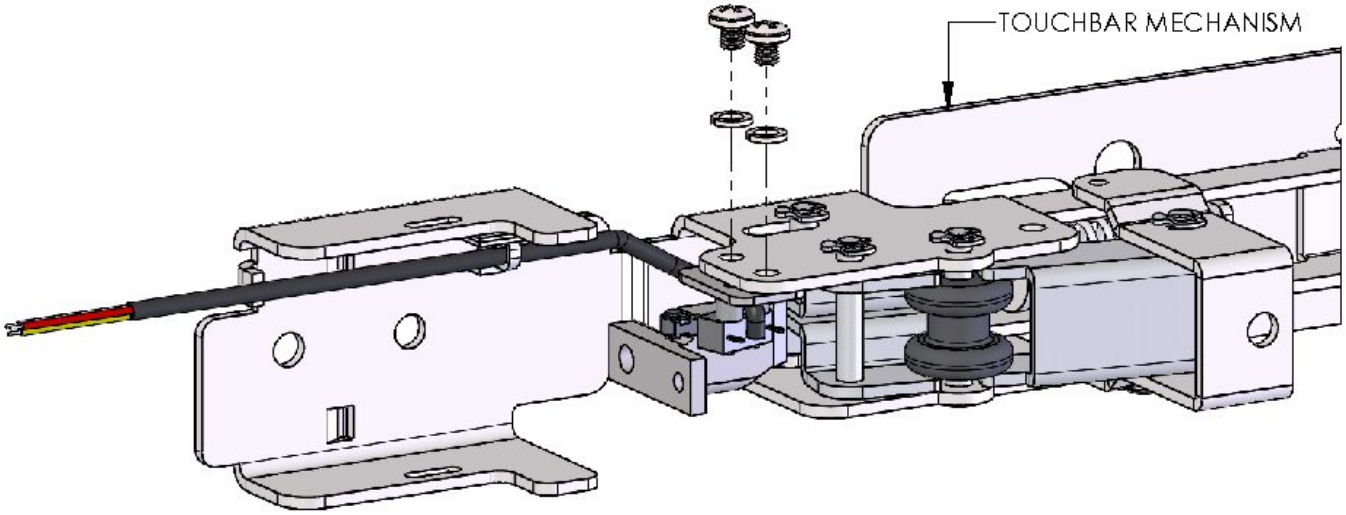

ELECTRIC EXIT DEVICE KIT INSTALLATION INSTRUCTIONS
AUTHORIZED EGRESS

K-124
PRECISION 2000 AND 5000 SERIES

MONITORS THE USE OF THE TOUCHBAR

Electrical Specifications:
SPDT Monitor Switch
Contacts Rated: 3A @ 125VAC
2A @ 30VDC

Wire Color Codes:
YELLOW - Common
RED - Normally Open
GRAY - Normally Closed

Installation:
1. Separate the device channel from the touchbar assembly.
2. Separate the touchbar from the touchbar mechanism.
3. Attach the K-124 Kit to the two rear holes of the touchbar mechanism using the supplied screws and lockwashers.
4. Route the lead wires along the inside of the touchbar mechanism.
5. Secure the lead wires to the inside of the touchbar mechanism using the supplied ty-wrap mount and ty-wrap.
6. Attach the touchbar to the touchbar mechanism.
7. Attach the device channel to the touchbar assembly.

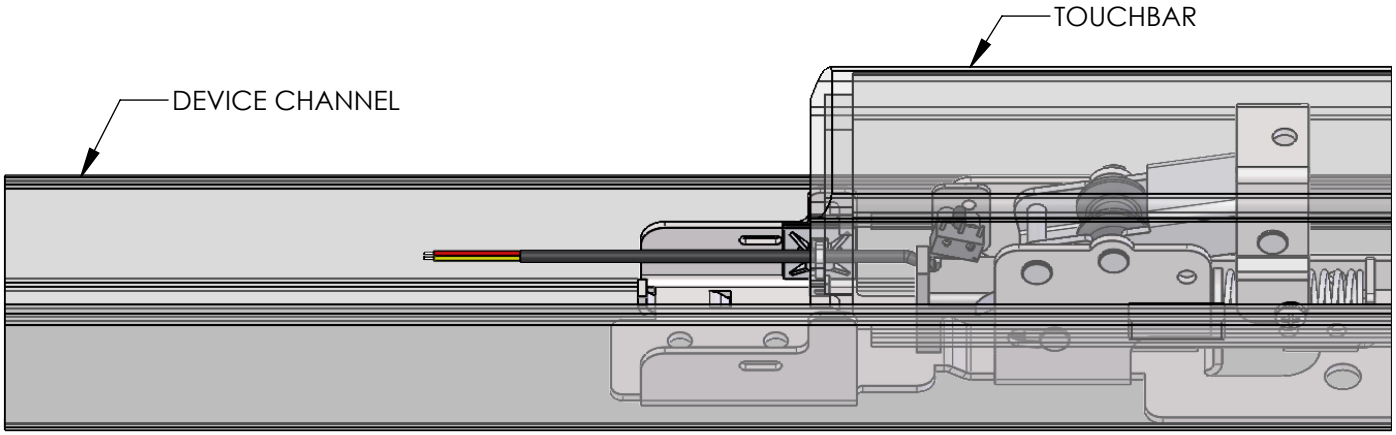

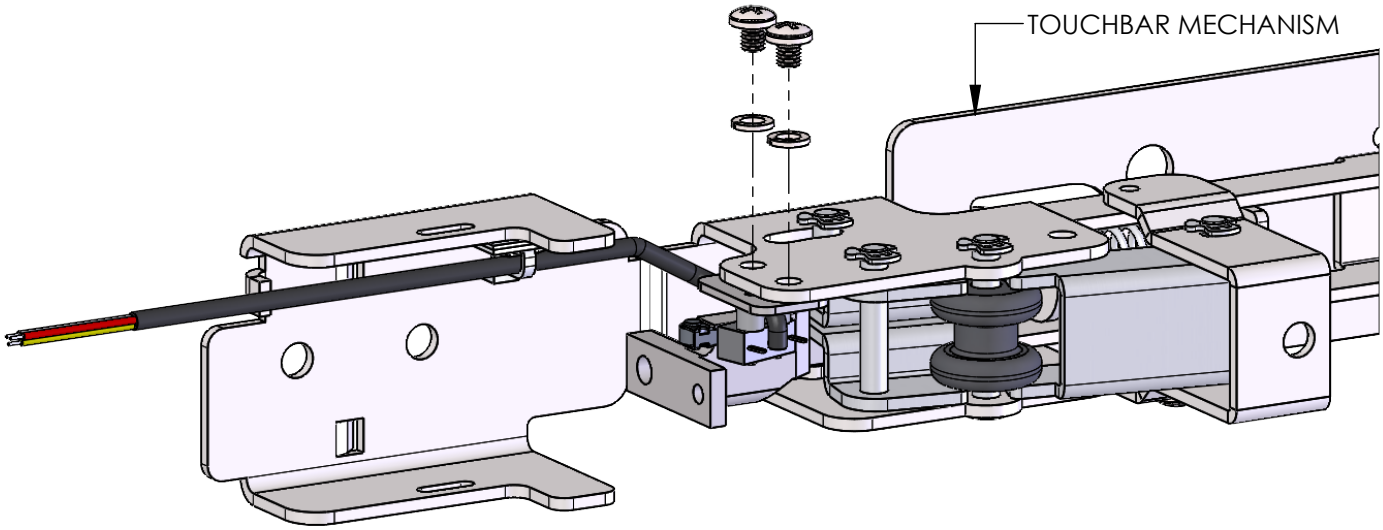

EXIT DEVICE INSTALLATION INSTRUCTIONS

K-124 SWITCH KIT

PRECISION 2000 SERIES EXIT DEVICES

SWITCH MONITORS EGRESS BY PUSHBAR ACTIVATION OF EXIT DEVICE

DIRECTIONS

STEP 1:REMOVE 2 SCREWS THAT RETAIN DEVICE CHANNEL TO PUSH PAD MECHANISM LOCATED NEAR HEAD OF DEVICE ON BOTTOM.
STEP 2: REMOVE DEVICE CHANNEL.
STEP 3: REMOVE 4 SCREWS THAT RETAIN PUSH PAD TO DEVICE MECHANISM 2 PER SIDE AND REMOVE PUSH PAD.
STEP 4: PLACE K-124 SWITCH ASSEMBLY ON THE BACK SIDE OF THE REAR PUSH BAR MECHANISM. MAKE SURE THAT SWITCH ARM IS LOCATED ON TOP OF PUSH PAD MECHANISM AS SHOWN IN DRAWING ABOVE.
STEP 5: USE THE 2 EACH #6 X 3/16" SCREWS TO FASTEN BRACKET TO SIDE OF PUSH PAD MECHANISM. BRACKET HOLES LINE UP WITH EXISTING SLOTS IN THE PUSH PAD MECHANISM.
STEP 6: TIGHTEN SCREWS, CHECK SWITCH FOR PROPER ACTIVATION ADJUST AS NECESSARY.
STEP 7: REPLACE PUSH PAD AND 4 SCREWS. THEN REPLACE DEVICE CHANNEL AND 2 SCREWS.
STEP 8: TEST DEVICE FOR PROPER PUSH PAD ACTIVATION.

WIRING DIAGRAM

YELLOW - COMMON
RED - NORMALLY OPEN
GRAY - NORMALLY CLOSED

ELECTRICAL SPECIFICATIONS

3 AMP @ 125 VAC
2 AMP @ 30 VDC

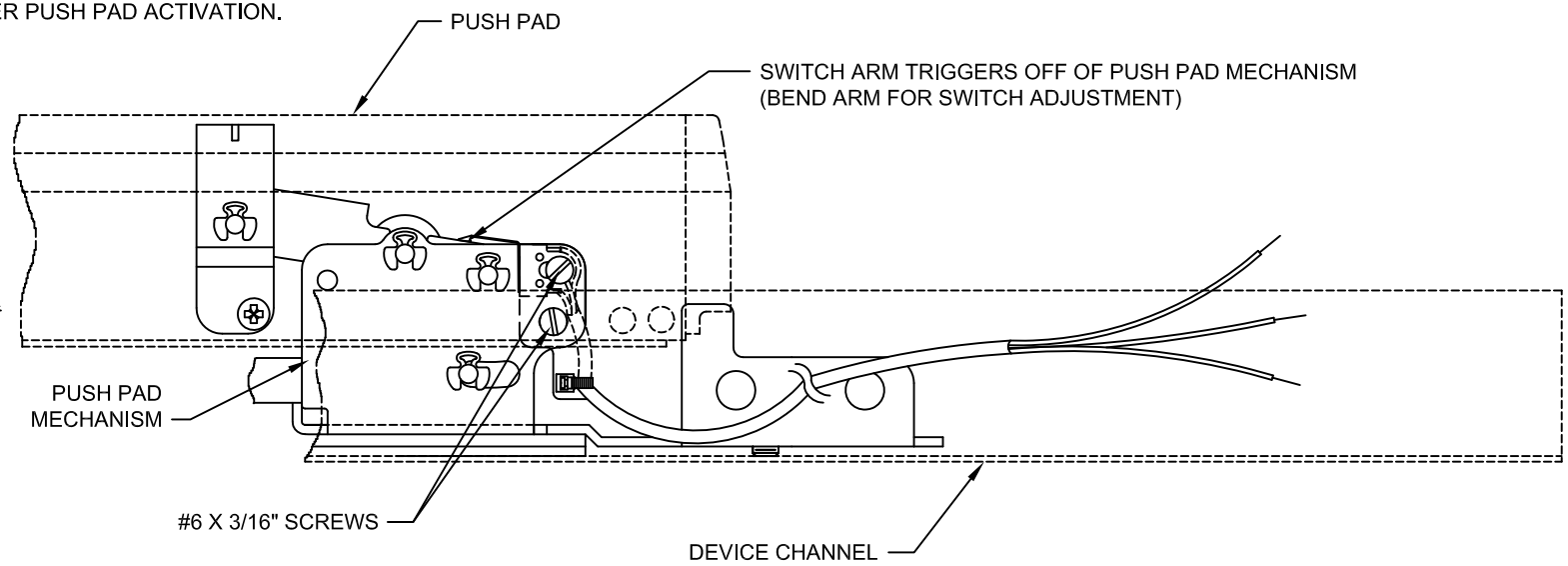

ACSI
ARCHITECTURAL
CONTROL SYSTEMS INC.

2720 CLARK AVE., ST. LOUIS, MO 63103 (800) 753-5558

REV. 11/2017

EXIT DEVICE INSTALLATION INSTRUCTIONS

K-125 SWITCH KIT

DORMA 9000 SERIES EXIT DEVICES
SWITCH MONITORS EGRESS BY PUSHBAR ACTIVATION OF EXIT DEVICE

INSTALLATION INSTRUCTIONS

STEP 1: REMOVE DEVICE FROM DOOR IF APPLICABLE.
STEP 2: SLIDE END COVER OFF OF DEVICE.
STEP 3: REMOVE 2 SCREWS THAT HOLD HEAD ASSEMBLY TO CHANNEL AND REMOVE HEAD.
STEP 4: REMOVE SIX SCREWS FROM BACK OF DEVICE AND SLIDE PUSH-BAR ASSEMBLY OUT OF CHANNEL.
STEP 5: REMOVE E-CLIP FROM REAR PIVOT ASSEMBLY ON SIDE THAT IS SHOWN IN ILLUSTRATION.
STEP 6: INSTALL SWITCH KIT K-125 ONTO PIVOT PIN AND REASSEMBLE E-CLIP.
(NOTE: MAKE SURE THAT SWITCH ARM IS LOCATED UNDER PIVOT ARM AS SHOWN IN ILLUSTRATION).
STEP 7: CHECK FOR PROPER SWITCH ACTIVATION WHEN PUSHBAR IS FULLY DEPRESSED,
REFER TO COLOR CODE CHART FOR PROPER WIRING PER APPLICATION.
STEP 8: MAKE SURE COLOR CODE FOR WIRES CHART IS USED FOR PROPER HOOK-UP OF SWITCH CONTACTS.
STEP 9: RE-ASSEMBLE EXIT DECIVE. (REVERSE STEPS 1 THROUGH 4)

COLOR CODE FOR WIRES

- YELLOW WIRE: COMMON
- RED WIRE: NORMALLY OPEN
- GRAY WIRE: NORMALLY CLOSED

ELECTRICAL SPECIFICATIONS

- SPDT MONITOR SWITCH
- CONTACT RATING: 4 AMP @ 250VAC

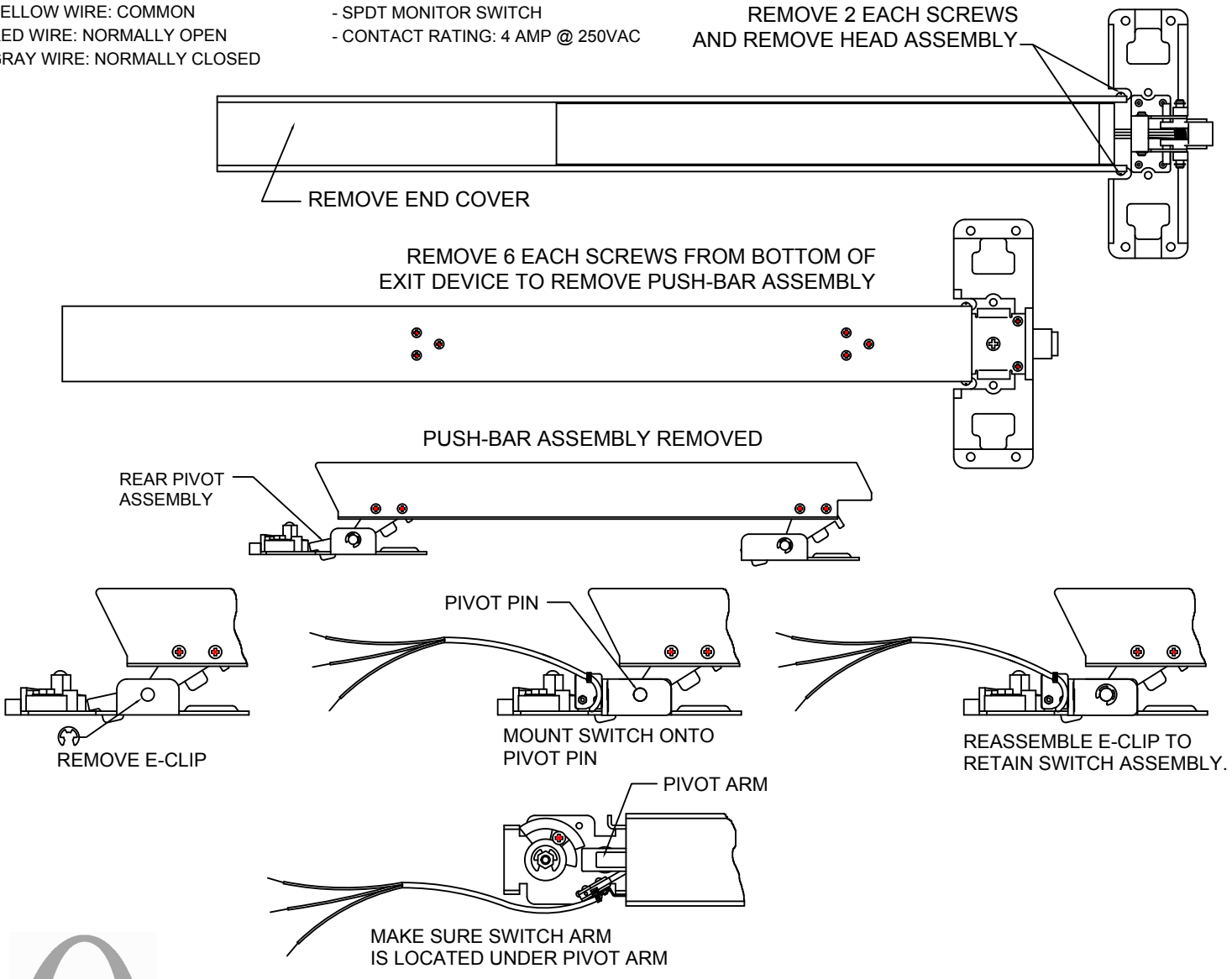

ACSI
ARCHITECTURAL
CONTROL SYSTEMS INC.

2720 CLARK AVE., ST. LOUIS, MO 63103 (800) 753-5558

REV. 11/2017

ELECTRIC TRIM CONTROL TEMPLATE

MODEL ME1510C AND ME1520C

VON DUPRIN 7500 SERIES
WIRE ROUTING LOCK TO EXIT DEVICE DOOR PREP

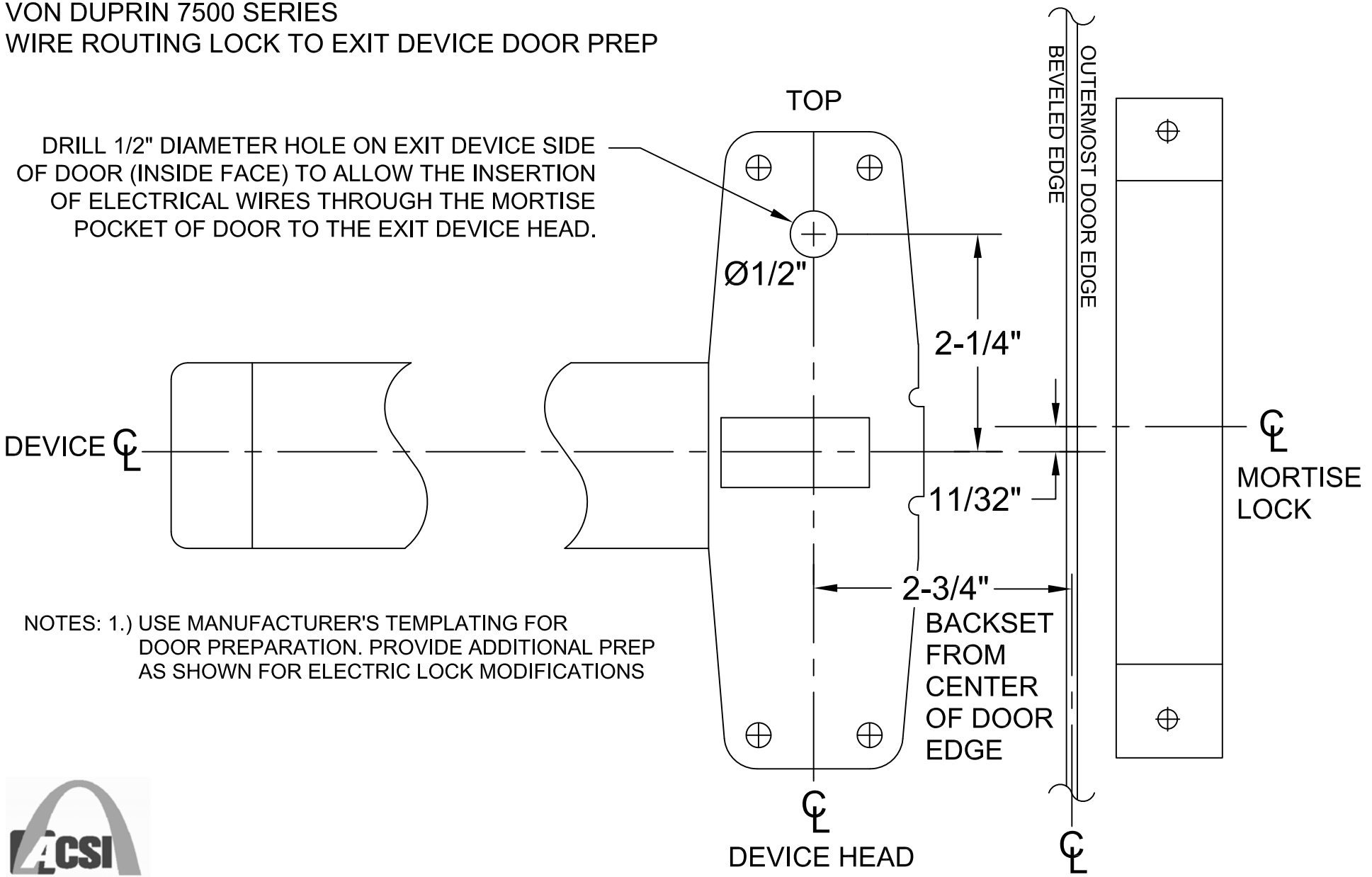

NOTES: 1.) USE MANUFACTURER'S TEMPLATING FOR DOOR PREPARATION. PROVIDE ADDITIONAL PREP AS SHOWN FOR ELECTRIC LOCK MODIFICATIONS

ACSI ARCHITECTURAL CONTROL SYSTEMS INC.

2720 CLARK AVE., ST. LOUIS, MO 63103 (800) 753-5558

REV. 11/2017

E1500-16

VON DUPRIN 7500 SERIES ELECTRIC LOCK ME1510/1520C FUNCTION CHANGE INSTRUCTIONS

TO CHANGE THE LOCKING FUNCTION FOLLOW THE INSTRUCTIONS BELOW CAREFULLY.

ME1510C FAIL SAFE FUNCTION (POWER LOCK)

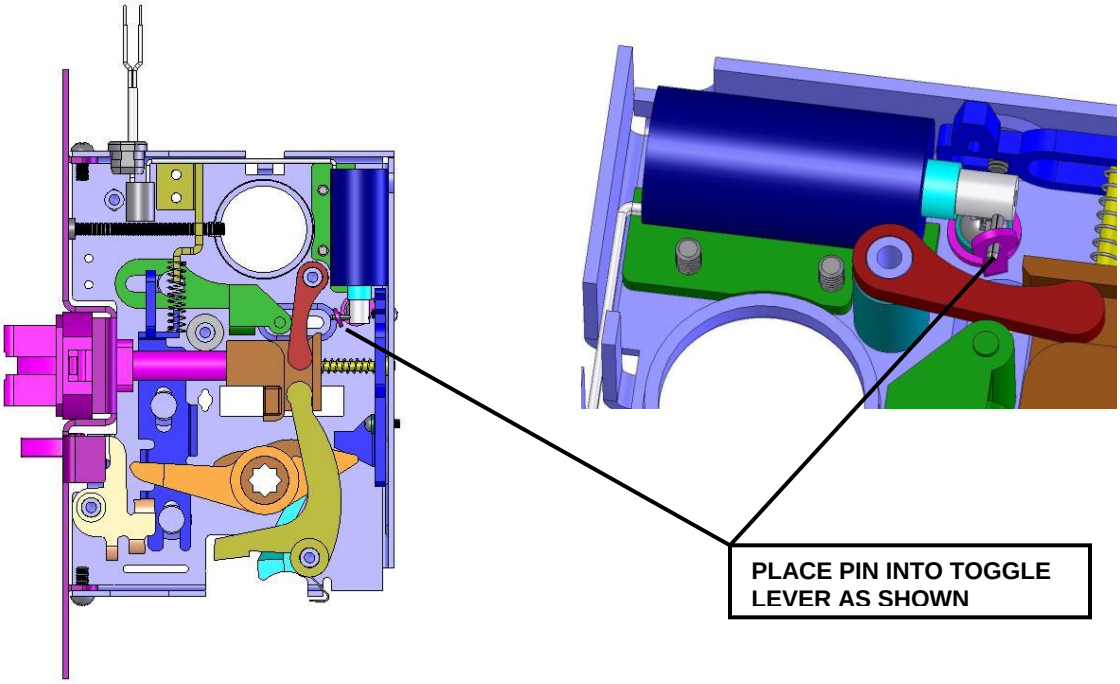

- REMOVE THE 4 COVER SCREWS AND THE COVER.
- LIFT SOLENOID AND PLUNGER UP ENOUGH TO ROTATE THE PIN INTO THE HOLE OF THE TOGGLE LEVER AS SHOWN ABOVE.
- MAKE SURE THAT SOLENOID IS POSITIONED BACK INTO HOLDER.
- REPLACE COVER AND SCREWS.

ARCHITECTURAL CONTROL SYSTEMS, INCORPORATED

2720 CLARK AVE., ST. LOUIS, MO 63103 (800) 753-5558

ME1520C FAIL SECURE FUNCTION (POWER UNLOCK)

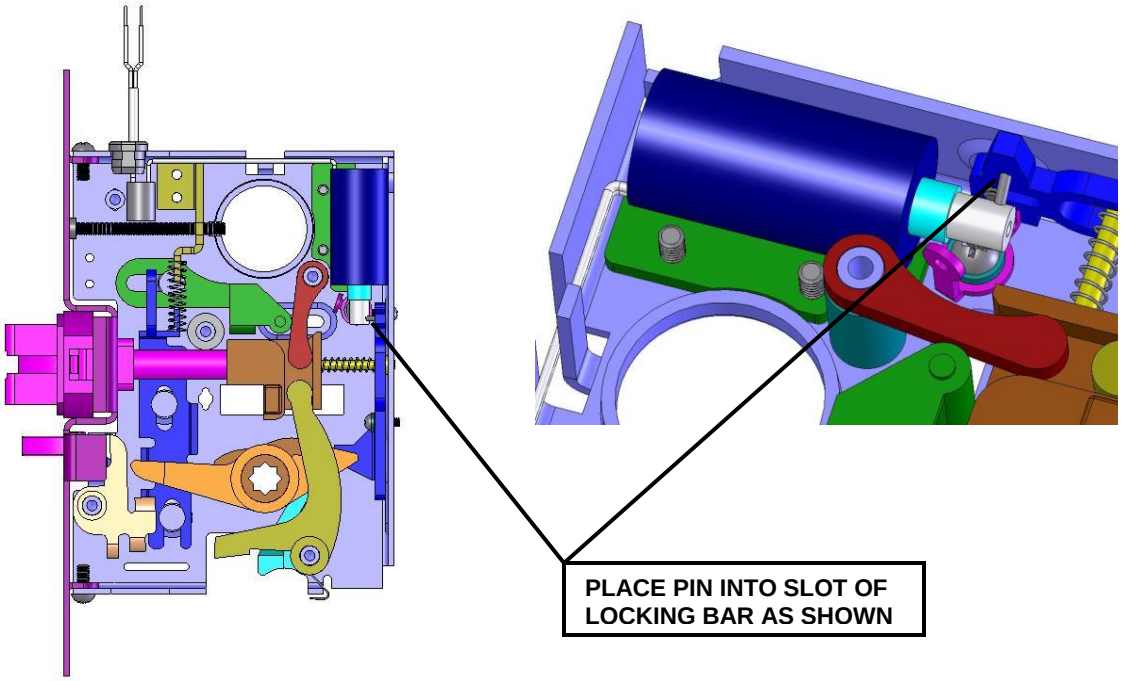

- REMOVE THE 4 COVER SCREWS AND THE COVER.
- LIFT SOLENOID AND PLUNGER UP ENOUGH TO ROTATE THE PIN INTO THE SLOT OF THE LOCKING BAR AS SHOWN ABOVE.
- MAKE SURE THAT SOLENOID IS POSITIONED BACK INTO HOLDER.
- REPLACE COVER AND SCREWS.

ELECTRICAL SPECIFICATION

NOTE: ALL SOLENOIDS ARE CONTINUOUS DUTY TYPE. KEEP OPERATING VOLTAGE AT +/- 10% OF RATED VOLTAGE.

VOLTAGE	AMP
12 VAC/DC	.612 A
12 VDC	.612 A
24 VAC/DC	.330 A
24 VDC	.330 A

ARCHITECTURAL CONTROL SYSTEMS, INCORPORATED

2720 CLARK AVE., ST. LOUIS, MO 63103 (800) 753-5558

ELECTRIC EYE DEVICE KIT INSTALLATION INSTRUCTIONS
AUTOMATED GARAGE

K-126 AND K-226

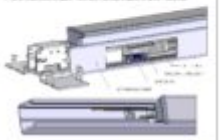

ELECTRIC EXIT DEVICE KIT INSTALLATION INSTRUCTIONS
AUTHORIZED EGRESS

K-126 AND K-226

THASE ENTERPRISE 8000 SERIES
HAGER 4500 AND 4600 SERIES
PDQ 6200 SERIES
STANLEY QED100 AND QED200 SERIES

MONITORS THE USE OF THE PUSH BAR

Electrical Specifications

Electrical Rating:
Contacts Rated: 24 @ 120VAC
24 @ 220VDC

Wire Color Codes

RED - Normally Open GRAY - Normally Closed	SWITCH 1
BLACK - Common ORANGE - Normally Open VIOLET - Normally Closed	SWITCH 2

Installation

1. Separate the mechanism case from the baseplate assembly.
2. Attach the K-126 or K-226 kit to the baseplate assembly through the existing holes using the supplied screws and backwashers. Verify the switch cam & pressed rolled by the center link.
3. Route the lead wire along the outside edge of the baseplate assembly.
4. Attach the mechanism case to the baseplate assembly.
5. Secure the lead wire to the holes of the mechanism case using the supplied hydrogen mount and hydrogen.

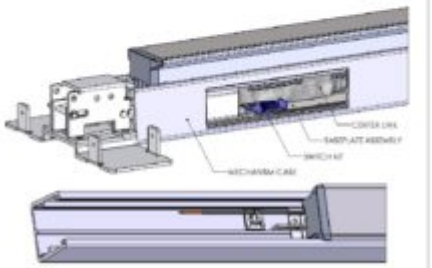

2720 CLARK AVE. • ST. LOUIS, MO 63103 • 1 800 753 0338 • www.ucsf.com

ELECTRIC EXIT DEVICE KIT INSTALLATION INSTRUCTIONS
AUTHORIZED EGRESS

K-126 AND K-226

THASE ENTERPRISE 8000 SERIES
HAGER 4500 AND 4600 SERIES
PDQ 6200 SERIES
STANLEY QED100 AND QED200 SERIES

MONITORS THE USE OF THE PUSH BAR

Electrical Specifications:
SPDT Monitor Switch
Contacts Rated: 3A @ 125VAC
2A @ 30VDC

Wire Color Codes:
YELLOW - Common
RED - Normally Open
GRAY - Normally Closed
SWITCH 1

BLACK - Common
ORANGE - Normally Open
VIOLET - Normally Closed
SWITCH 2

Installation:
1. Separate the mechanism case from the baseplate assembly.
2. Attach the K-126 or K-226 Kit to the baseplate assembly through the existing holes using the supplied screws and lockwashers. Verify the switch arm is pre-actuated by the center link.
3. Route the lead wires along the outside edge of the baseplate assembly.
4. Attach the mechanism case to the baseplate assembly.
5. Secure the lead wires to the inside of the mechanism case using the supplied ty-wrap mount and ty-wrap.

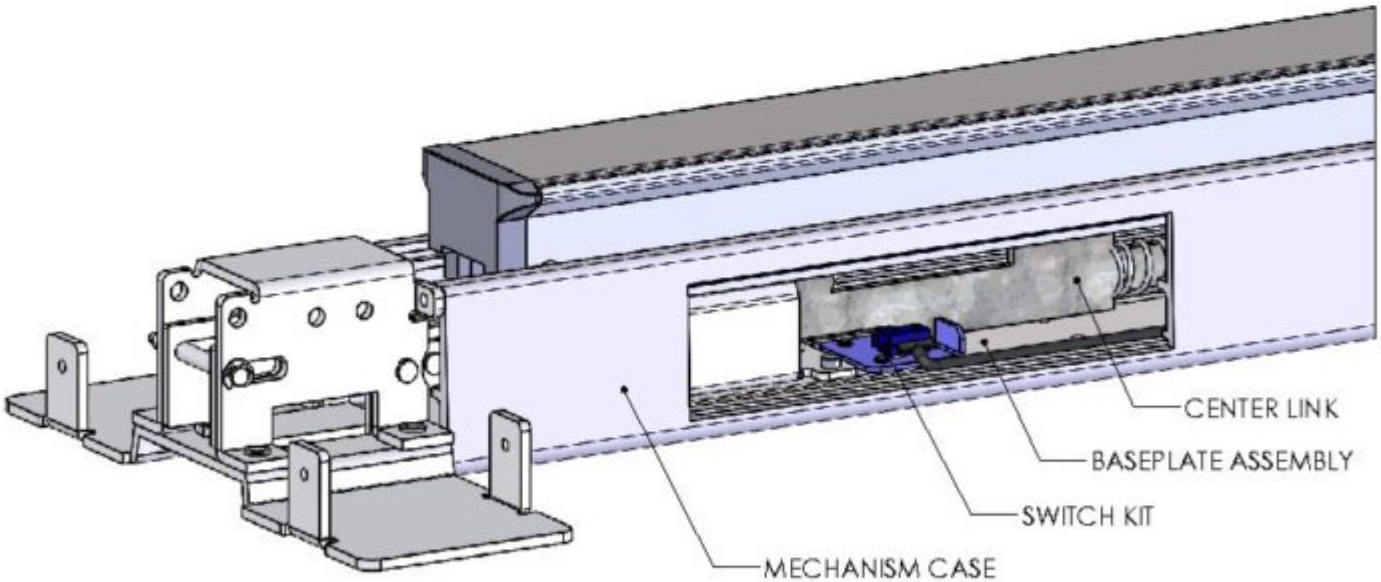

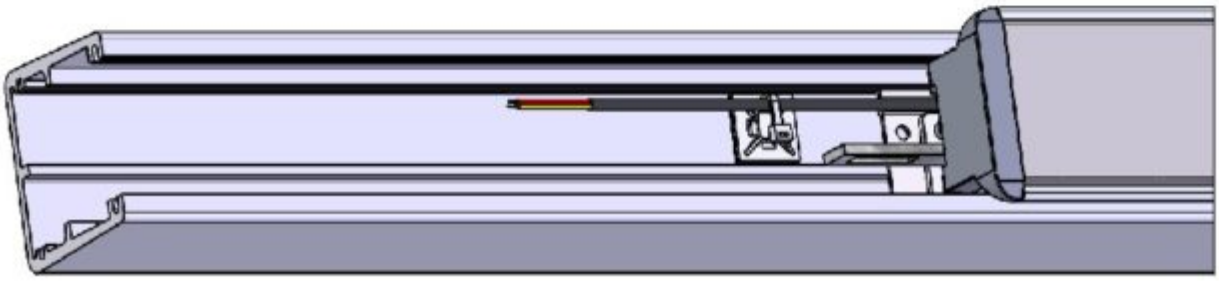

ELECTRIC EXIT DEVICE KIT INSTALLATION INSTRUCTIONS
AUTHORIZED EGRESS

K-126 AND K-226

THASE ENTERPRISE 8000 SERIES
HAGER 4500 AND 4600 SERIES
PDQ 6200 SERIES
STANLEY QED100 AND QED200 SERIES

MONITORS THE USE OF THE PUSH BAR

Electrical Specifications:
SPDT Monitor Switch
Contacts Rated: 3A @ 125VAC
2A @ 30VDC

Wire Color Codes:
YELLOW - Common
RED - Normally Open
GRAY - Normally Closed
SWITCH 1

BLACK - Common
ORANGE - Normally Open
VIOLET - Normally Closed
SWITCH 2

Installation:
1. Separate the mechanism case from the baseplate assembly.
2. Attach the K-126 or K-226 Kit to the baseplate assembly through the existing holes using the supplied screws and lockwashers. Verify the switch arm is pre-actuated by the center link.
3. Route the lead wires along the outside edge of the baseplate assembly.
4. Attach the mechanism case to the baseplate assembly.
5. Secure the lead wires to the inside of the mechanism case using the supplied ty-wrap mount and ty-wrap.

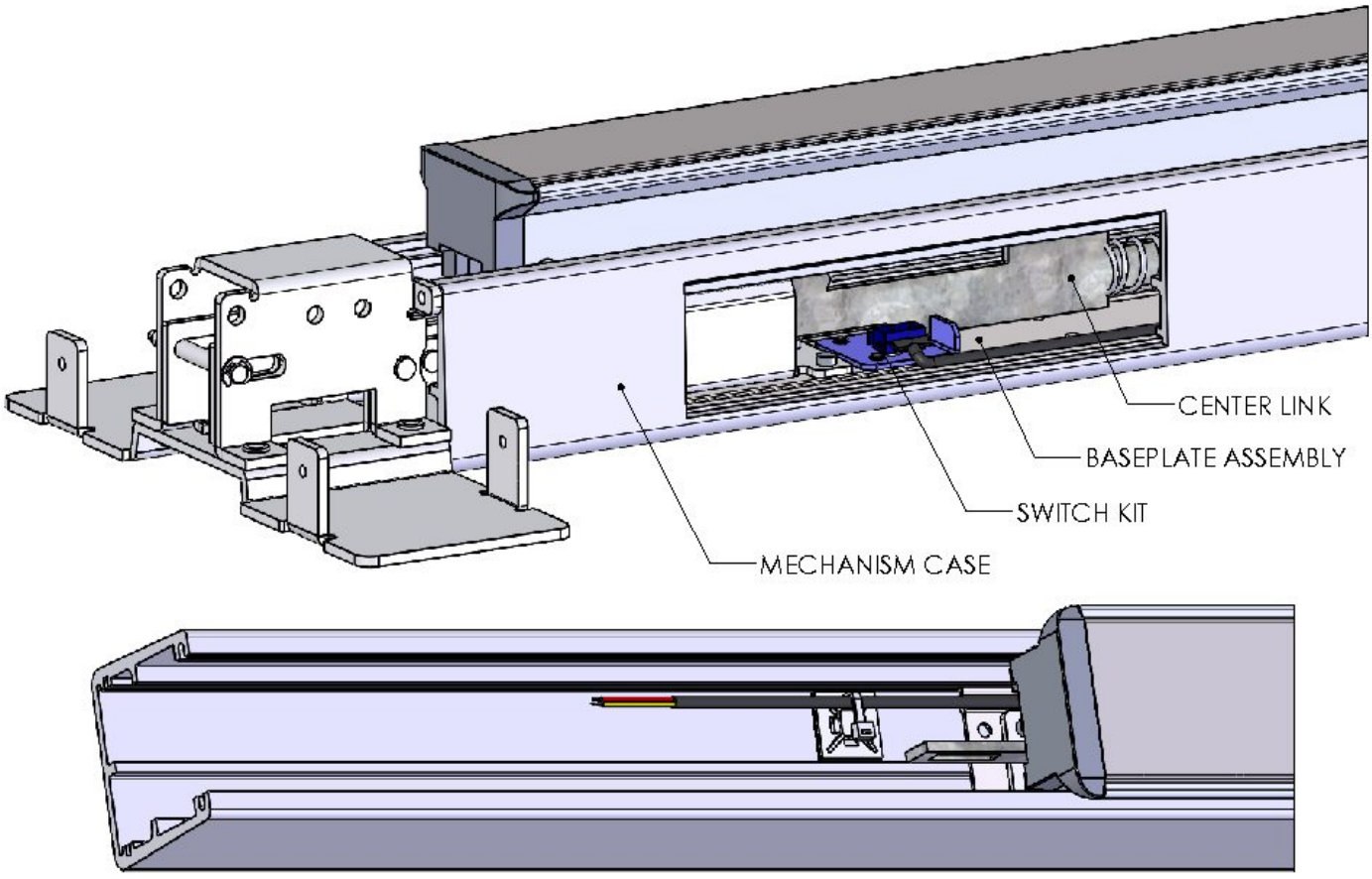

ELECTRIC EXIT DEVICE KIT INSTALLATION INSTRUCTIONS
AUTHORIZED EGRESS

K-126 AND K-226

THASE ENTERPRISE 8000 SERIES
HAGER 4500 AND 4600 SERIES
PDQ 6200 SERIES
STANLEY QED100 AND QED200 SERIES

MONITORS THE USE OF THE PUSH BAR

Electrical Specifications:
SPDT Monitor Switch
Contacts Rated: 3A @ 125VAC
2A @ 30VDC

Wire Color Codes:
YELLOW - Common
RED - Normally Open
GRAY - Normally Closed
SWITCH 1

BLACK - Common
ORANGE - Normally Open
VIOLET - Normally Closed
SWITCH 2

Installation:
1. Separate the mechanism case from the baseplate assembly.
2. Attach the K-126 or K-226 Kit to the baseplate assembly through the existing holes using the supplied screws and lockwashers. Verify the switch arm is pre-actuated by the center link.
3. Route the lead wires along the outside edge of the baseplate assembly.
4. Attach the mechanism case to the baseplate assembly.
5. Secure the lead wires to the inside of the mechanism case using the supplied ty-wrap mount and ty-wrap.

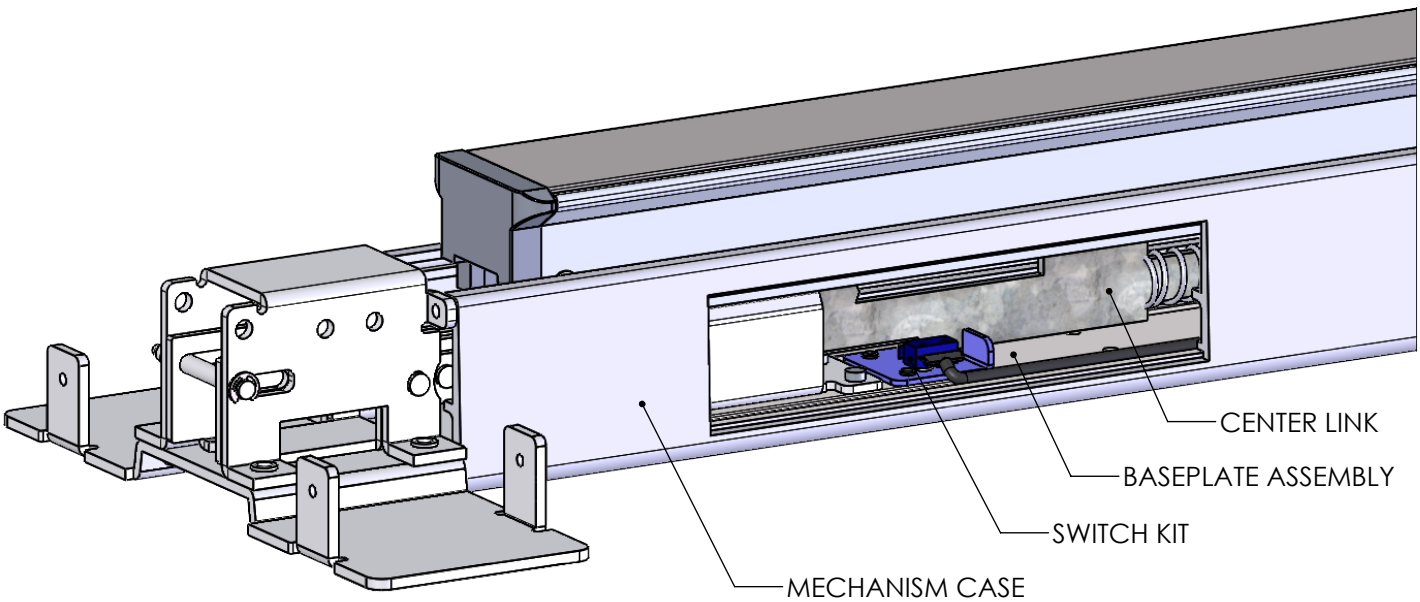

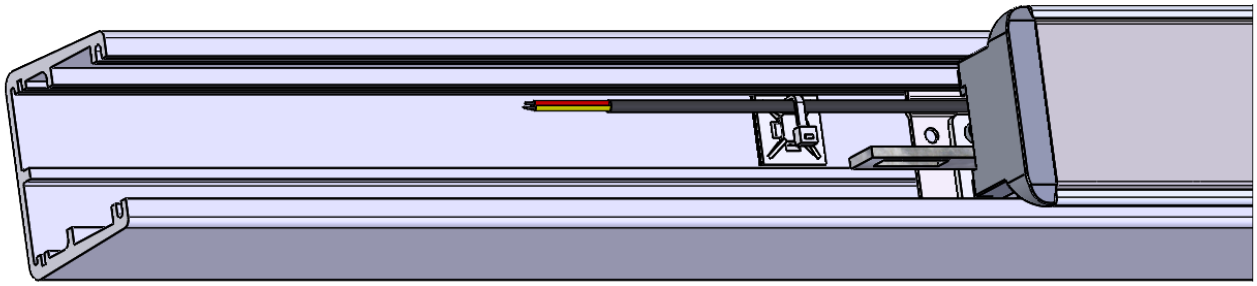

EXIT DEVICE INSTALLATION INSTRUCTIONS

K-126 (SINGLE) AND K-226 (DUAL) SWITCH KIT

THASE ENTERPRISE 8000 SERIES
HAGER 4500 AND 4600 SERIES
PDQ 6200 SERIES
STANLEY COMMERCIAL QED100, QED200, AND QED300 SERIES
SWITCH MONITORS EGRESS BY PUSHBAR
ACTIVATION OF EXIT DEVICE

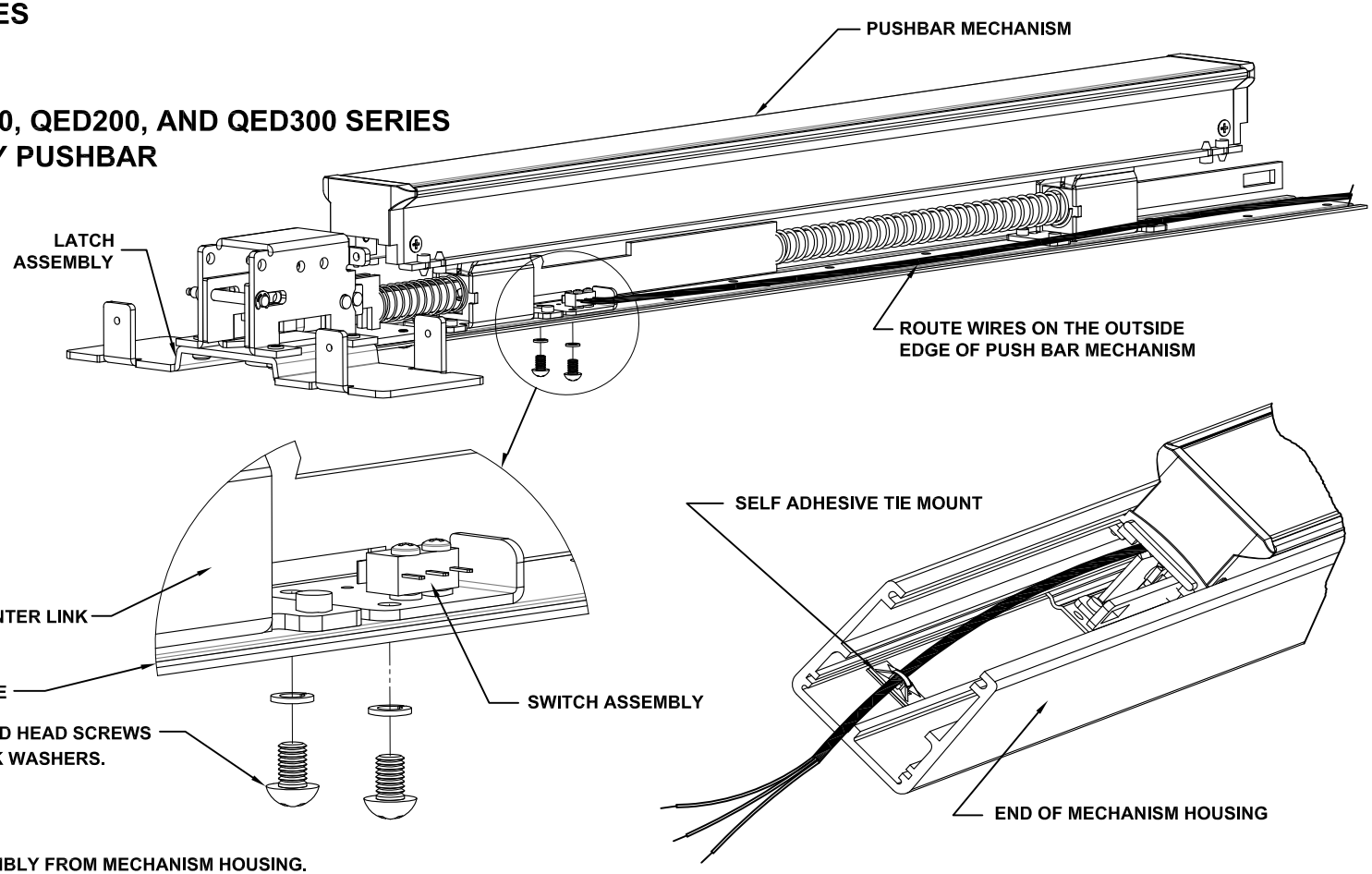

ELECTRICAL SPECIFICATIONS

- SPDT MONITOR SWITCH
- CONTACT RATING: 3 AMP @ 125VAC
  2 AMP @ 30VDC

COLOR CODE FOR WIRES

- YELLOW WIRE: COMMON
- RED WIRE: NORMALLY OPEN — SWITCH 1
- GRAY WIRE: NORMALLY CLOSED
- BLACK WIRE: COMMON
- ORANGE WIRE: NORMALLY OPEN — SWITCH 2
- VIOLET WIRE: NORMALLY CLOSED

INSTALLATION INSTRUCTIONS

STEP 1: REMOVE CHASSIS COVER FROM DEVICE.
STEP 2: SEPARATE PUSHBAR AND LATCH ASSEMBLY FROM MECHANISM HOUSING.
STEP 3: PLACE SWITCH ASSEMBLY INTO DEVICE AS SHOWN. ASSEMBLY FITS OVER TOP OF EXISTING HOLES.
STEP 4: MAKE SURE SWITCH ARM IS PLACED ON OUTSIDE OF THE CENTER LINK ON THE PUSHBAR SO THAT THE SWITCH IS PREACTIVATED.
STEP 5: USE PROVIDED ROUND HEAD SCREWS AND LOCK WASHERS TO SECURE SWITCH ASSEMBLY TO PUSHBAR BASEPLATE.
STEP 6: CHECK FOR PROPER SWITCH ACTIVATION WHEN PUSHBAR IS FULLY DEPRESSED SWITCH SHOULD ACTIVATE.
STEP 7: RUN THE WIRES ALONG THE OUTSIDE EDGE OF THE PUSHBAR MECHANISM.
STEP 8: RE-ASSEMBLE THE MECHANISM HOUSING ONTO THE PUSHBAR MECHANISM.
STEP 9: SECURE SELF ADHESIVE TIE MOUNT HOLDER TO BOTTOM OF MECHANISM HOUSING IN THE END OF DEVICE AS SHOWN.
STEP 10: MAKE SURE COLOR CODE FOR WIRES IS USED FOR PROPER HOOK-UP OF SWITCH CONTACTS.

ACSI ARCHITECTURAL CONTROL SYSTEMS INC.
2720 CLARK AVE., ST. LOUIS, MO 63103 (800) 753-5558

REV. 11/2017

EXIT DEVICE INSTALLATION INSTRUCTIONS

K-127 SWITCH KIT

FOR USE WITH 1550K-VD ELR KIT ON
VON DUPRIN MODEL 33 AND 99 EXIT DEVICES
SWITCH MONITORS LATCH MECHANISM OF EXIT DEVICE

ELECTRICAL SPECIFICATIONS

- SPDT MONITOR SWITCH
- CONTACT RATING: 5A @ 125VAC
  4A @ 30VDC

COLOR CODE FOR WIRES

- BLACK WIRE: COMMON
- WHITE WIRE: NORMALLY OPEN
- RED WIRE: NORMALLY CLOSED

INSTALLATION INSTRUCTIONS

STEP 1: REMOVE PUSHBAR AND BASE PLATE ASSEMBLY FROM ALUMINUM CHANNEL.

STEP 2: SEPARATE PUSHBAR FROM BASE PLATE ASSEMBLY.

STEP 3: AFTER BASE PLATE ASSEMBLY IS SEPARATED FROM THE DEVICE, INSTALL THE ELR KIT DEVICE LINK AND FOLLOW INSTALLATION INSTRUCTIONS II-E1500-11 1550K-VD ELR KIT STEPS 1 THROUGH 10. AFTER DEVICE LINK HAS BEEN PROPERLY INSTALLED PROCEED WITH STEP 4 OF K-127 SWITCH KIT.

STEP 4: DRILL OUT EXISTING HOLE IN BASE PLATE ASSEMBLE TO 1/4" DIAMETER. THIS HOLE WILL BE USED AS A WIRE ENTRY HOLE FOR THE SWITCH WIRES.

STEP 5: REMOVE DEVICE LINK SCREW FROM FRONT POSITION AND DISCARD.

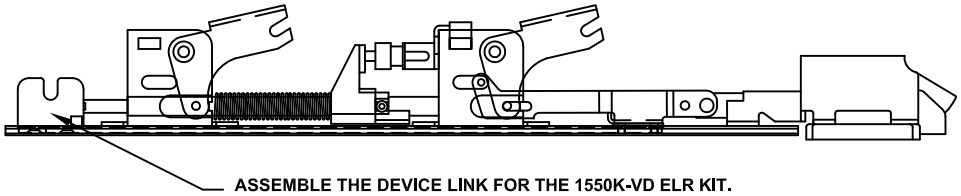

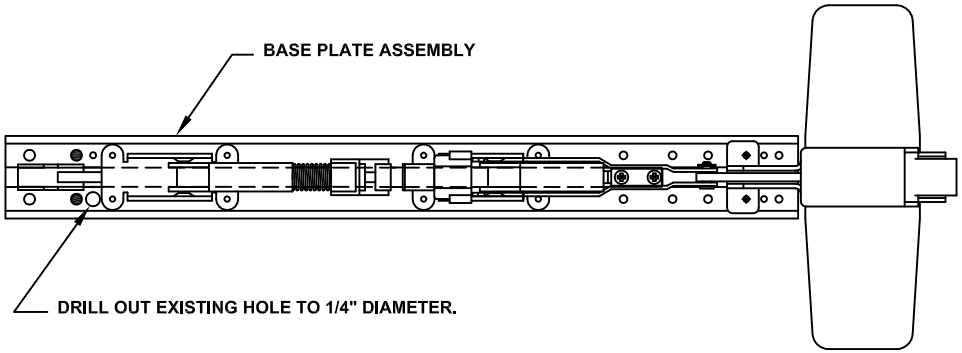

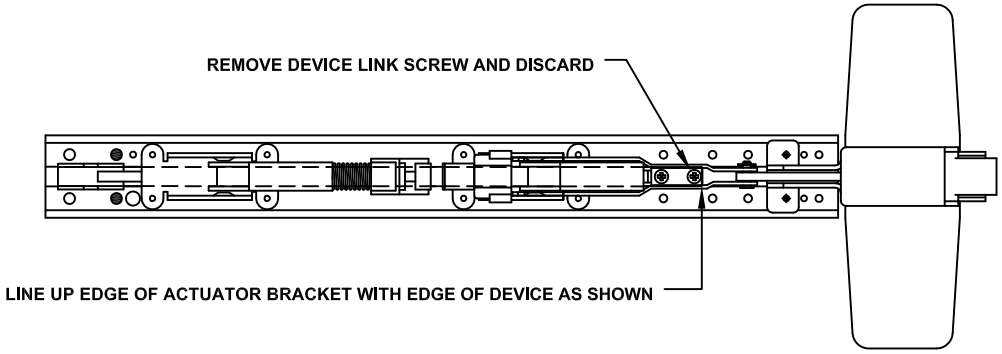

ACSI
ARCHITECTURAL CONTROL SYSTEMS INC.
2720 CLARK AVE., ST. LOUIS, MO 63103 (800) 753-5558

REV. 11/2017

STEP 6: MOUNT SWITCH ACTUATOR BRACKET TO BASEPLATE ASSEMBLY AS SHOWN. FOLLOW THE ILLUSTRATION FOR PROPER PLACEMENT OF ACTUATOR BRACKET HARDWARE.

STEP 7: SECURE SWITCH ASSEMBLY TO BASEPLATE. USE EXISTING HOLES IN DEVICE AS SHOWN. USE THE TWO EACH #6-32 X .25 RHMS TO MOUNT SWITCH BRACKET, SCREWS ENTER FROM BOTTOM OF BASEPLATE AND THREAD INTO BRACKET. MAKE SURE ROLLER END OF SWITCH IS AGAINST ACTUATOR ASSEMBLY.

STEP 8: FEED WIRES THROUGH EXISTING HOLE IN BASEPLATE ASSEMBLY. THEN ROUTE WIRES BACK THROUGH THE 1/4" DIAMETER HOLE NEAR END OF BASE PLATE AS SHOWN

STEP 9: DEPRESS LATCH AND MAKE SURE SWITCH CONTACT IS RELEASED WHEN ACTUATOR MOVES AWAY FROM ROLLER OF SWITCH.

STEP 10: SLIDE PUSHBAR AND BASE PLATE ASSEMBLY INTO ALUMINUM CHANNEL.

STEP 11: PROCEED WITH FINAL INSTALLATION OF 1550K-VD ELR KIT FOLLOW STEPS 11 THROUGH 19 OF II-E1500-11 1550K-VD ELR KIT INSTALLATION INSTRUCTIONS, THEN PROCEED WITH FINAL STEP OF K-127 SWITCH KIT.

STEP 12: MOUNT DEVICE, TERMINATE WIRES ACCORDINGLY WITH PROPER WIRE NUTS OR CRIMPS.

HARDWARE MUST BE INSTALLED IN ORDER AS SHOWN.

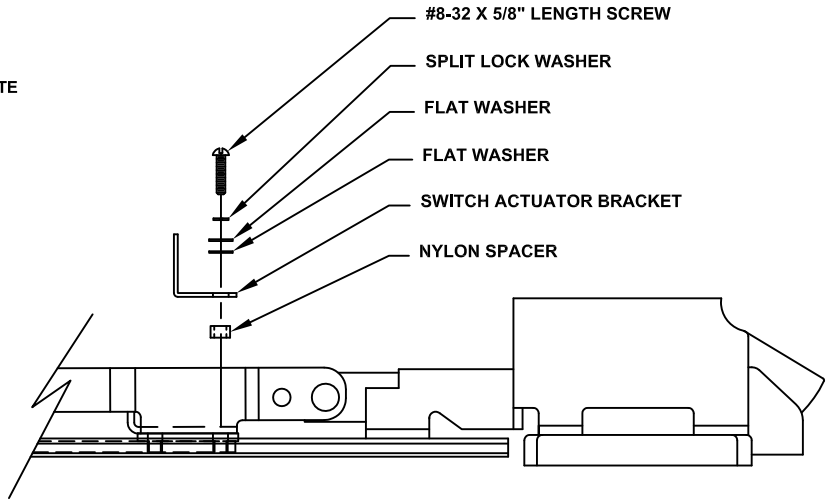

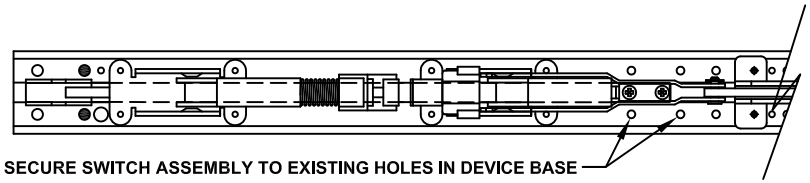

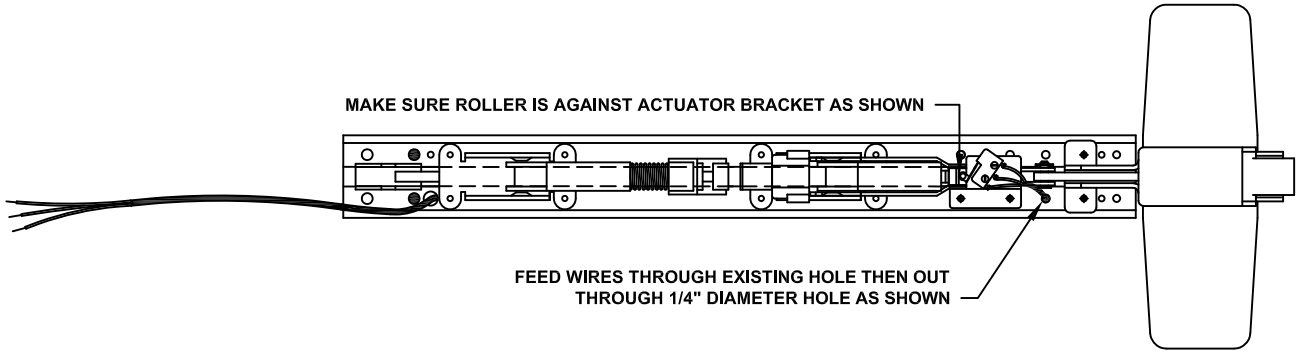

ACSI ARCHITECTURAL CONTROL SYSTEMS INC.
2720 CLARK AVE., ST. LOUIS, MO 63103 (800) 753-5558

REV. 11/2017

ELECTRIC TRIM CONTROL INSTALLATION INSTRUCTIONS
MODEL 1560 AND 1570

HAGER 45CE LEVER TRIM ON RIM AND VERTICAL ROD EXIT DEVICES





FUNCTION DESCRIPTION

1560 – FAIL SAFE (POWER LOCK)

- LEVER IS LOCKED WHEN POWER IS APPLIED.
- WHEN POWER IS REMOVED ALLOWS ENTRY BY LEVER HANDLE.
- EXIT DEVICE ALWAYS ALLOWS FREE EGRESS.
- OUTSIDE KEY CYLINDER MOMENTARILY OVERRIDES LOCKING CONTROL.

1570 – FAIL SECURE (POWER UNLOCK)

- LEVER IS LOCKED WHEN POWER IS REMOVED.
- WHEN POWER IS APPLIED ALLOWS ENTRY BY LEVER HANDLE.
- EXIT DEVICE ALWAYS ALLOWS FREE EGRESS.
- OUTSIDE KEY CYLINDER MOMENTARILY OVERRIDES LOCKING CONTROL.

ARCHITECTURAL CONTROL SYSTEMS, INCORPORATED

2720 CLARK AVE., ST. LOUIS, MO 63103 (800) 753-5558

REV. 11/2017 II-E1500-18

ELECTRIC TRIM SOLENOID CONTROL RATING

POWER REQUIREMENTS

.33 AMP @ 24 VOLTS AC OR DC ± 10% (CONTINUOUS DUTY)
.61 AMP @ 12 VOLTS AC OR DC ± 10% (CONTINUOUS DUTY)

1560 FAIL SAFE

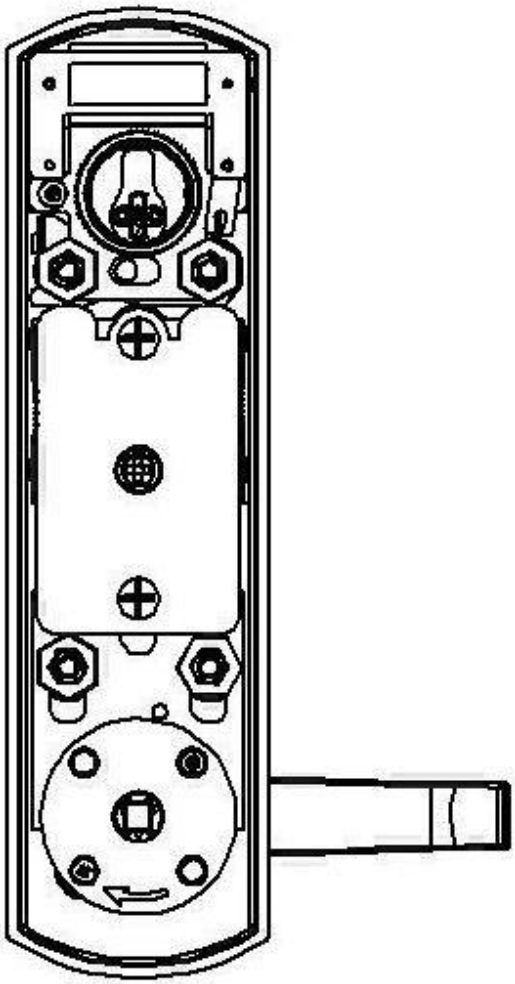

1570 FAIL SECURE

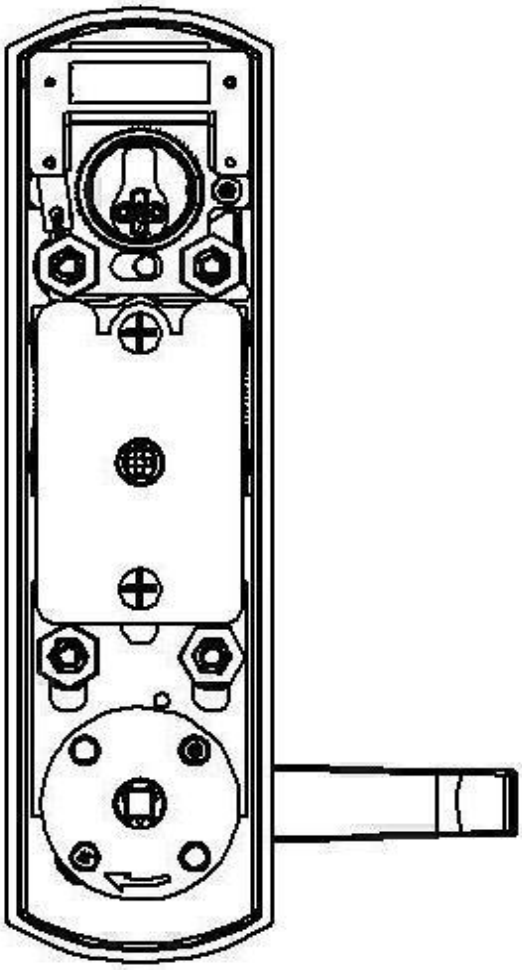

ARCHITECTURAL CONTROL SYSTEMS, INCORPORATED

2720 CLARK AVE., ST. LOUIS, MO 63103 (800) 753-5558

ELECTRIC TRIM CONTROL DOOR PREPARATION

NOTE: USE MANUFACTURERS INSTRUCTIONS AND TEMPLATES FOR BASIC PREP LOCATIONS IN DOOR

- PROVIDE ADDITIONAL .500 DIAMETER HOLE THROUGH DOOR TO ALLOW FOR WIRE ENTRY FROM ELECTRIC TRIM CONTROL.
- .500 DIAMETER HOLE THROUGH DOOR IS HANDED USE PROPER HOLE AS SHOWN.

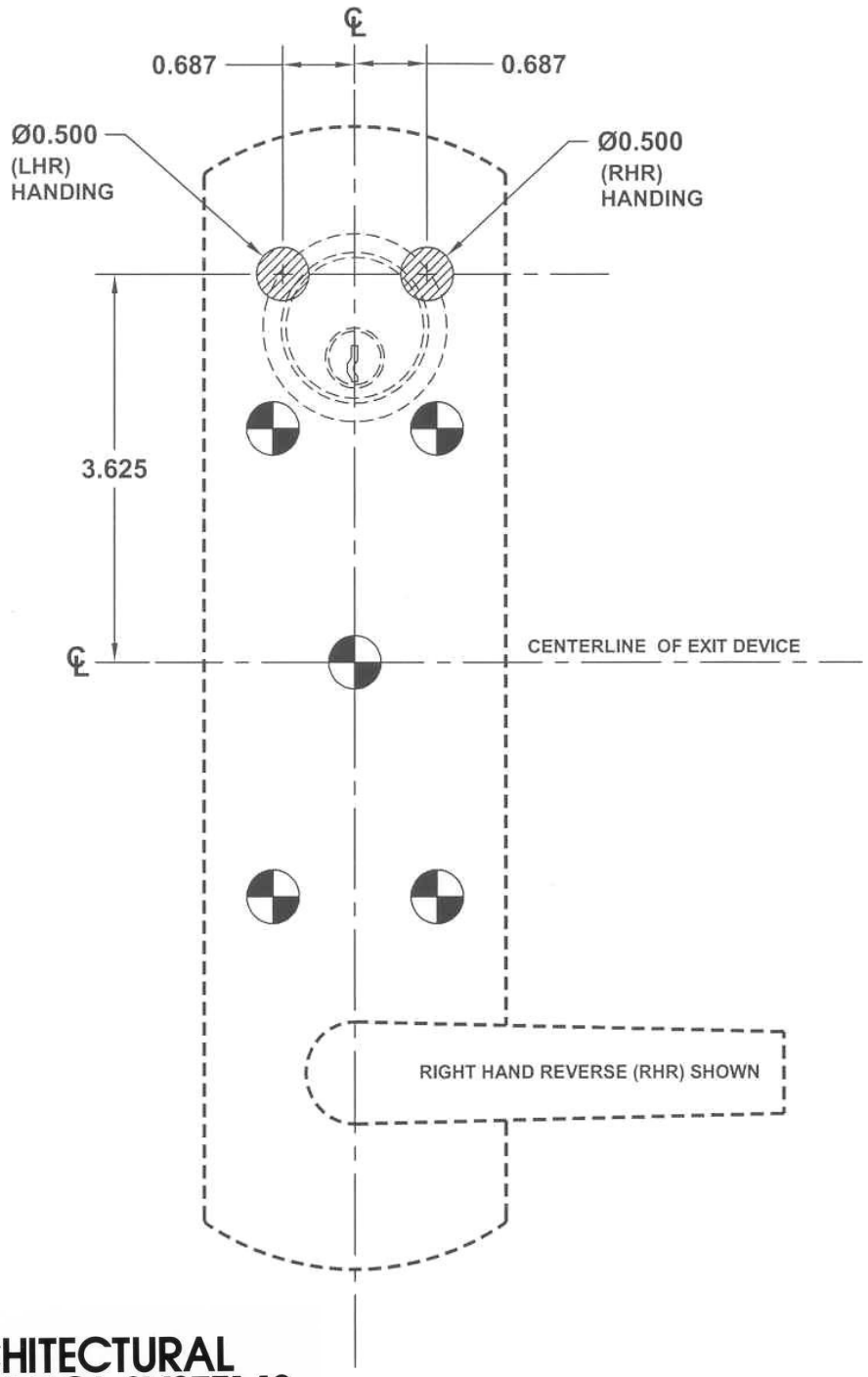

ARCHITECTURAL CONTROL SYSTEMS, INCORPORATED

2720 CLARK AVE., ST. LOUIS, MO 63103 (800) 753-5558

EXIT DEVICE DOOR PREPARATION

NOTE: USE MANUFACTURERS INSTRUCTIONS AND TEMPLATES FOR BASIC PREP LOCATIONS IN DOOR

- PROVIDE 3/8" DIAMETER RACEWAY FOR ELECTRIC TRIM WIRE TERMINATION AT END OF EXIT DEVICE AS SHOWN.

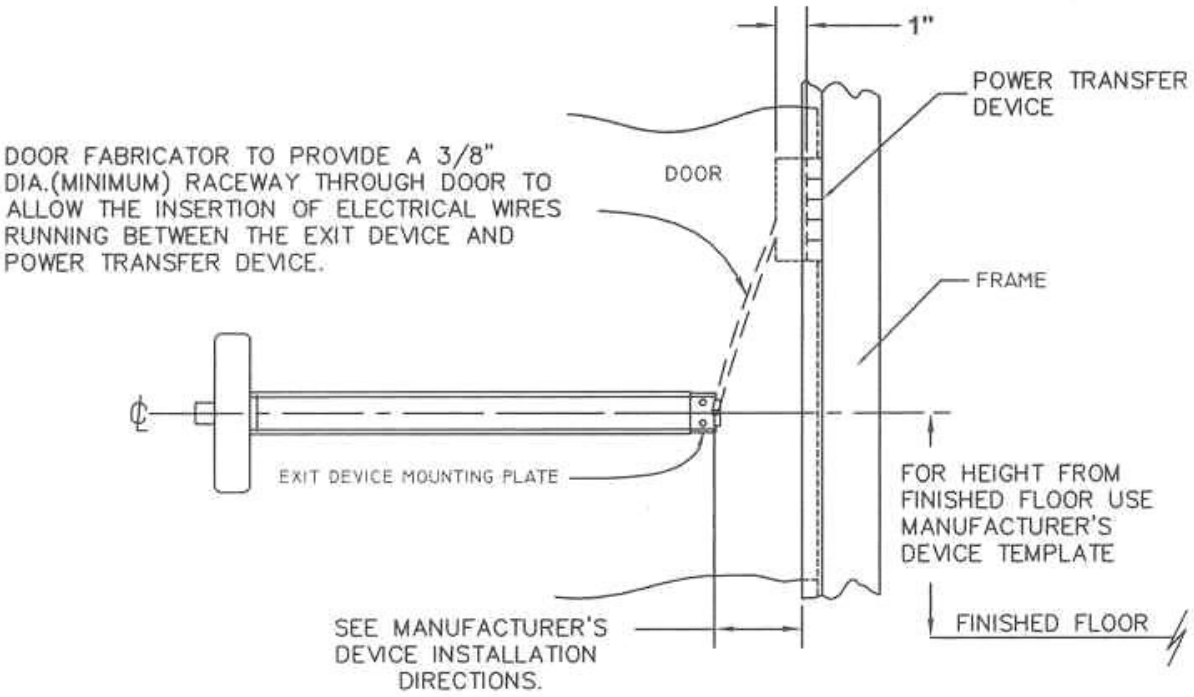

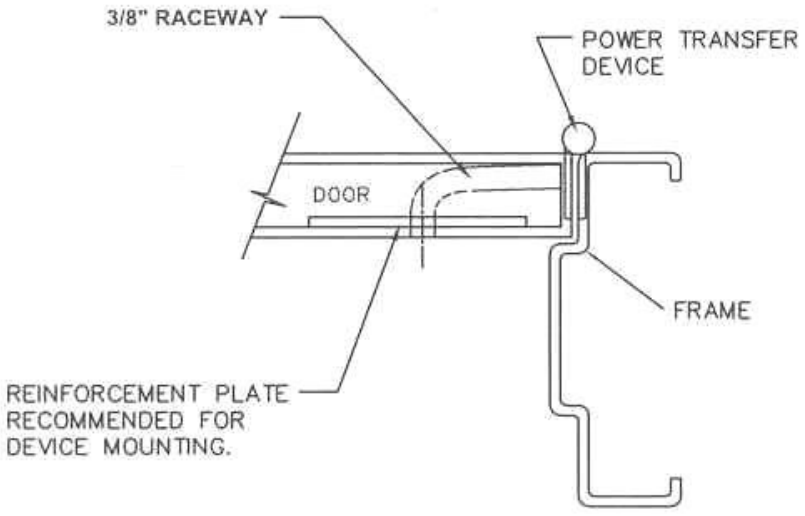

ARCHITECTURAL CONTROL SYSTEMS, INCORPORATED

2720 CLARK AVE., ST. LOUIS, MO 63103 (800) 753-5558

EXIT DEVICE PREPARATION

- REMOVE 4 SCREWS FROM CHASSIS COVER AND REMOVE.
- SEPARATE CHASSIS/PUSH BAR FROM DEVICE BODY BY REMOVING 2 SCREWS LOCATED ON CHASSIS.

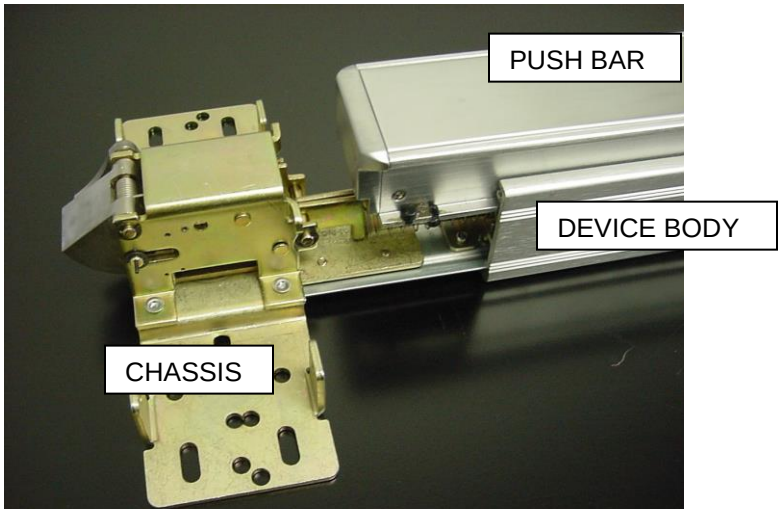

- AFTER CHASSIS/PUSH BAR HAS BEEN REMOVED FROM DEVICE BODY, INSERT CABLE ASSEMBLY ALONG THE SIDE OF PUSH BAR. MAKE SURE THAT CONNECTOR END IS LOCATED ON THE CHASSIS SIDE.

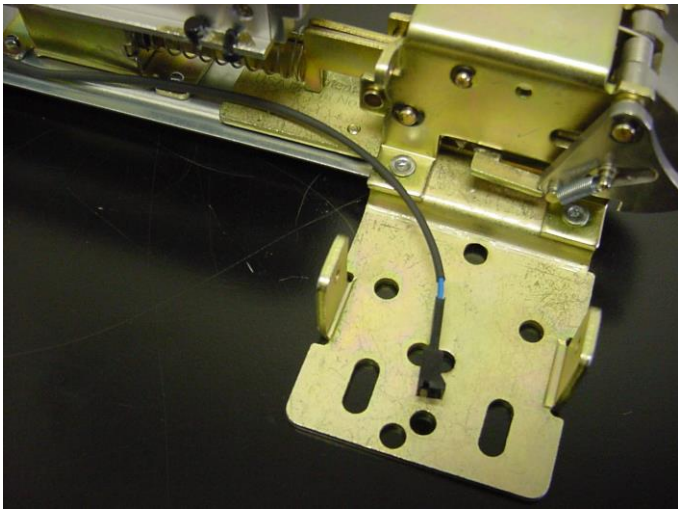

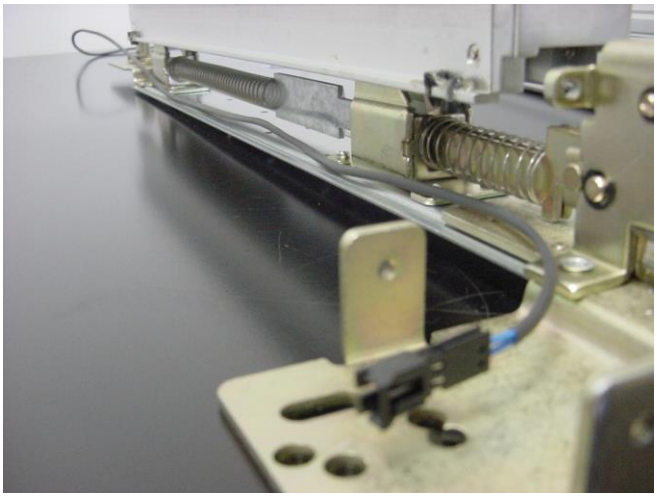

- AFTER CABLE ASSEMBLY HAS BEEN ROUTED ON THE SIDE OF THE PUSH BAR, RE-INSTALL THE DEVICE BODY AND SECURE WITH THE 2 SCREWS.

ARCHITECTURAL CONTROL SYSTEMS, INCORPORATED

2720 CLARK AVE., ST. LOUIS, MO 63103 (800) 753-5558

CABLE ROUTING

RIM DEVICE

- FEED THE CONNECTOR ON THE TRIM CONTROL THROUGH THE .500 DIAMETER PREP HOLE OF DOOR AND THROUGH THE SLOTTED HOLE IN RIM DEVICE CHASSIS.

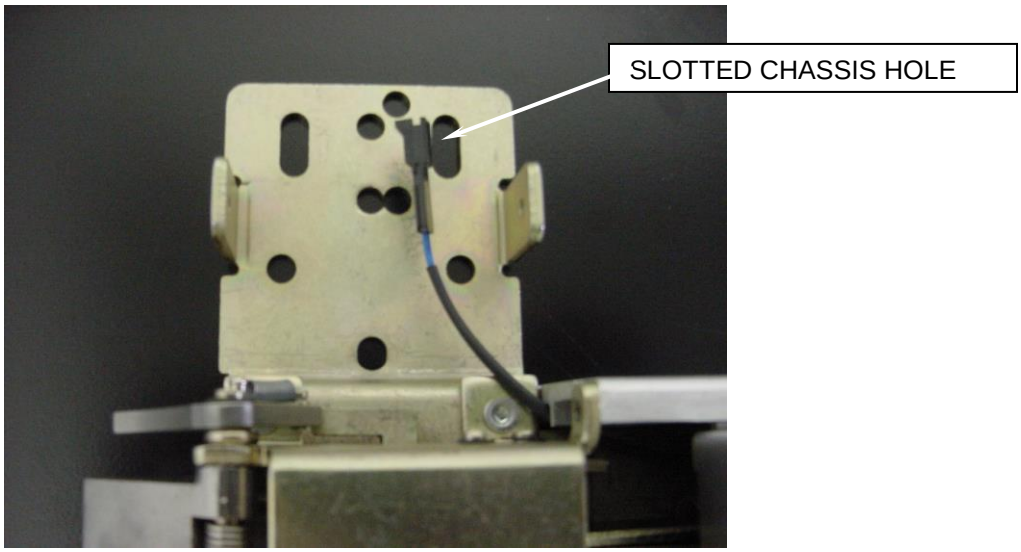

- CONNECT THE CABLE ASSEMBLY TO THE CONNECTOR ON THE TRIM AND FINISH MOUNTING THE DEVICES PER THE MANUFACTURERS INSTRUCTIONS.

VERTICAL ROD DEVICE

- FEED THE CONNECTOR ON THE TRIM CONTROL THROUGH THE .500 DIAMETER PREP HOLE OF DOOR AND THROUGH THE HOLE IN VERTICAL ROD CHASSIS.

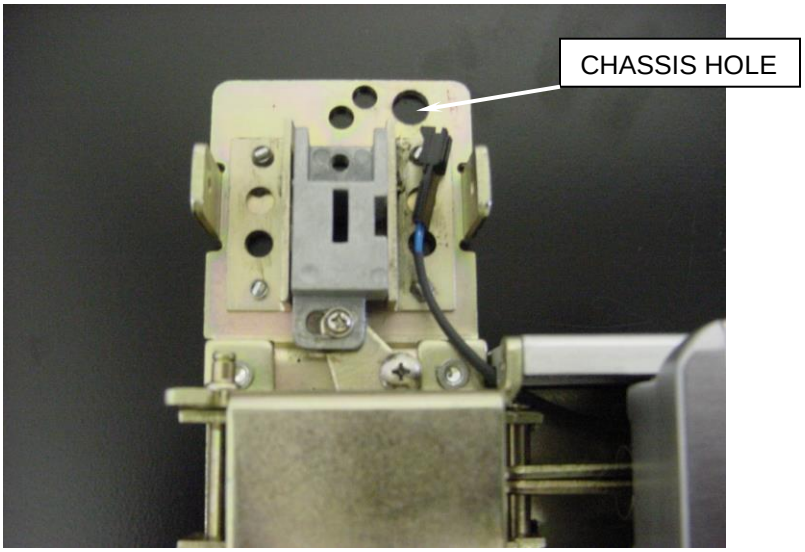

- CONNECT THE CABLE ASSEMBLY TO THE CONNECTOR ON THE TRIM AND FINISH MOUNTING THE DEVICES PER THE MANUFACTURERS INSTRUCTIONS.

ARCHITECTURAL CONTROL SYSTEMS, INCORPORATED

2720 CLARK AVE., ST. LOUIS, MO 63103 (800) 753-5558

WIRE STRAIN RELIEF

- AFTER THE EXIT DEVICE AND TRIM IS MOUNTED, SECURE THE WIRES IN THE BACK OF EXIT DEVICE BODY WITH THE SELF ADHESIVE TY-WRAP MOUNT AND TY-WRAP.

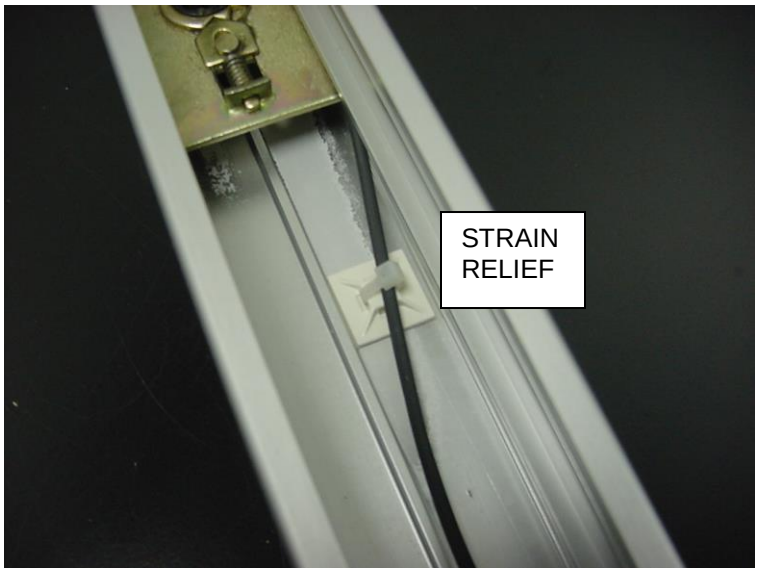

WIRING DIAGRAM

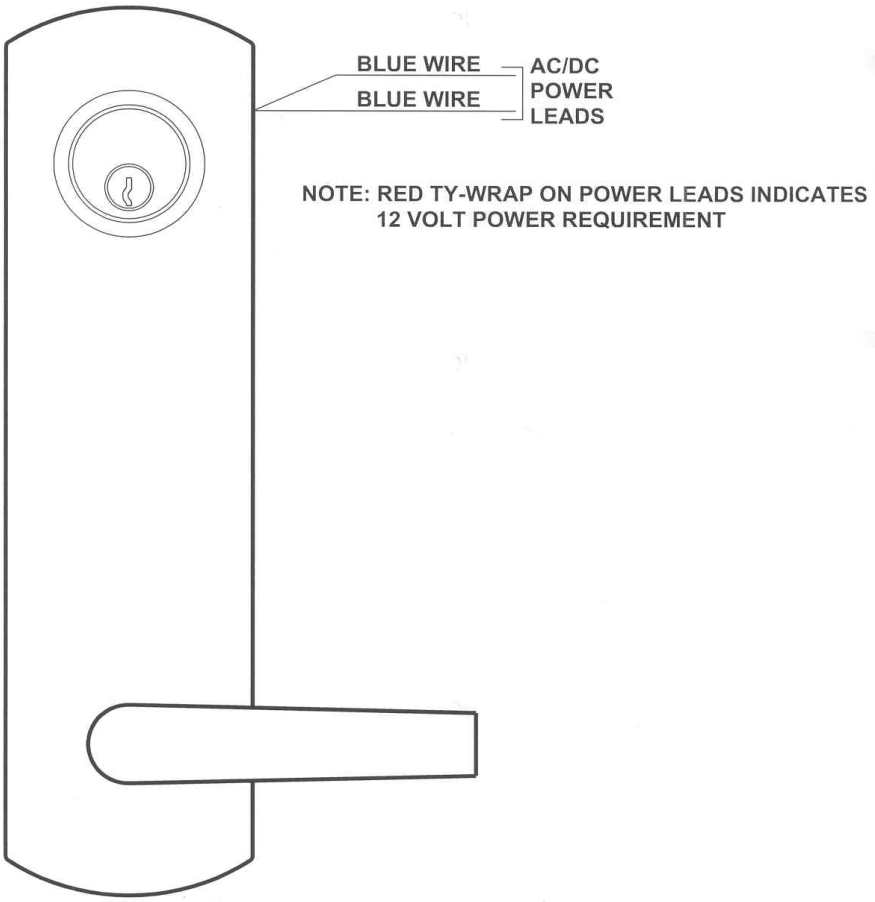

ARCHITECTURAL
CONTROL SYSTEMS,
INCORPORATED

2720 CLARK AVE., ST. LOUIS, MO 63103 (800) 753-5558

WIRING TERMINATION

- TERMINATE WIRE CONNECTIONS WITH APPROPRIATE CRIMP SPLICES OR WIRE NUTS.

  NOTE: IT IS HELPFUL TO STAGGER TERMINATIONS. THIS ALLOWS FOR EASY INSERTION OF WIRES THROUGH PREP HOLES.

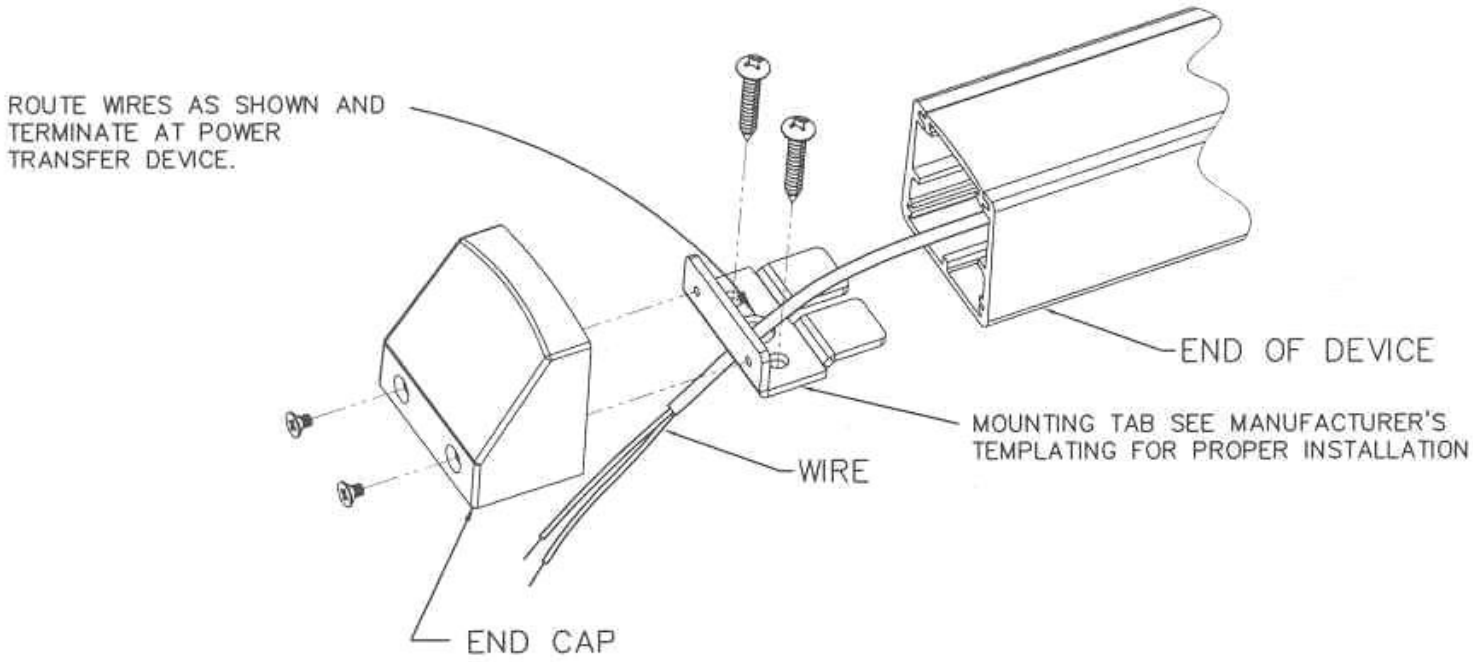

ARCHITECTURAL CONTROL SYSTEMS, INCORPORATED

2720 CLARK AVE., ST. LOUIS, MO 63103 (800) 753-5558

EXIT DEVICE INSTALLATION INSTRUCTIONS

K-102 SWITCH KIT

VON DUPRIN MODEL 88 EXIT DEVICES
SWITCH MONITORS EGRESS BY PUSH BAR ACTIVATION OF EXIT DEVICE

ELECTRICAL SPECIFICATIONS

- SPDT MONITOR SWITCH
- CONTACT RATING: 4 AMP @ 250VAC

COLOR CODE FOR WIRES

- YELLOW WIRE: COMMON
- RED WIRE: NORMALLY OPEN
- GRAY WIRE: NORMALLY CLOSED

INSTALLATION INSTRUCTIONS

STEP 1: REMOVE TWO SCREWS AND HOLD DOWN CLAMP (NOTE POSITION OF CLAMP, THE HIGH END IS POSITIONED TOWARD TOP OF HOUSING, THE SHORT END GOES TOWARDS THE BOTTOM).
STEP 2: REMOVE SPRING MECHANISM FROM HOUSING. NEXT PLACE SWITCH ASSEMBLY INTO HOUSING AS SHOWN. CAREFULLY REPLACE THE SPRING MECHANISM BACK INTO HOUSING.
STEP 3: REPLACE HOLD DOWN CLAMP WITH SCREWS REMOVED IN STEP 1. BEFORE FULLY TIGHTENING THE SCREWS, MAKE SURE SPRING MECHANISM IS ACTIVATING THE SWITCH. ADJUST BRACKET ASSEMBLY AS NECESSARY FOR PROPER SWITCH ACTIVATION THEN TIGHTEN SCREWS FULLY.

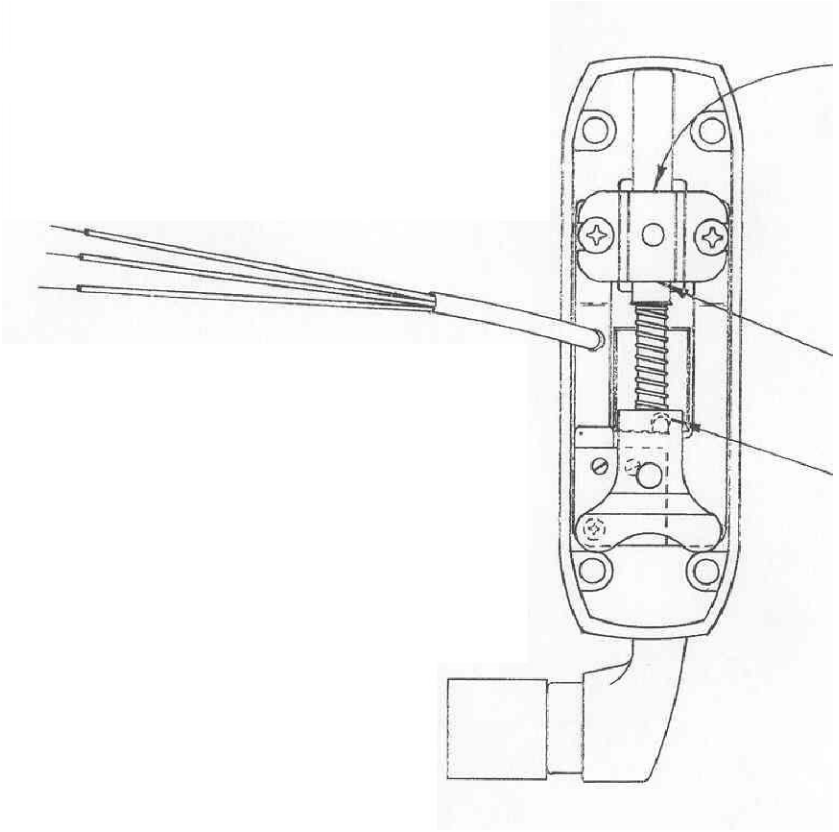

ACSI
ARCHITECTURAL CONTROL SYSTEMS INC.

2720 CLARK AVE., ST. LOUIS, MO 63103 (800) 753-5558

REV. 11/2017

EXIT DEVICE INSTALLATION INSTRUCTIONS

K-203 SWITCH KIT

SARGENT 80 SERIES
ARROW 1000, 3000, AND 4000 SERIES
DOREX 9500 SERIES
SWITCH MONITORS EGRESS BY PUSHBAR ACTIVATION OF EXIT DEVICE

ELECTRICAL SPECIFICATIONS

- 2 EACH SPDT MONITOR SWITCH
- CONTACT RATING: 4 AMP @ 250VAC

COLOR CODE FOR WIRES

SWITCH #1
- YELLOW WIRE: COMMON
- RED WIRE: NORMALLY OPEN
- GRAY WIRE: NORMALLY CLOSED

SWITCH #2
- BLACK WIRE: COMMON
- ORANGE WIRE: NORMALLY OPEN
- VIOLET WIRE: NORMALLY CLOSED

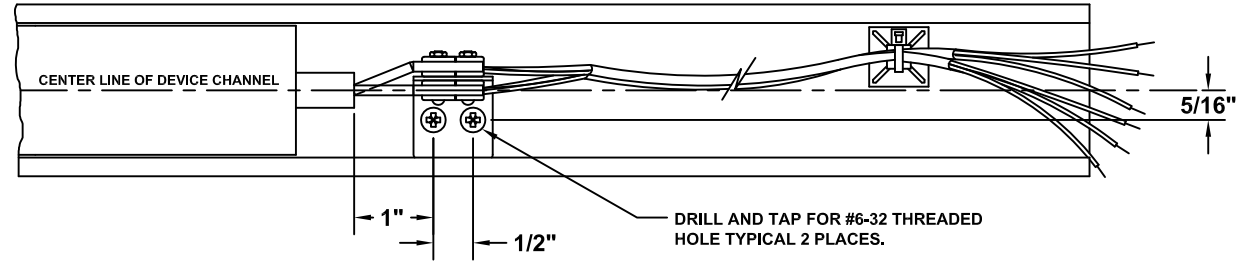

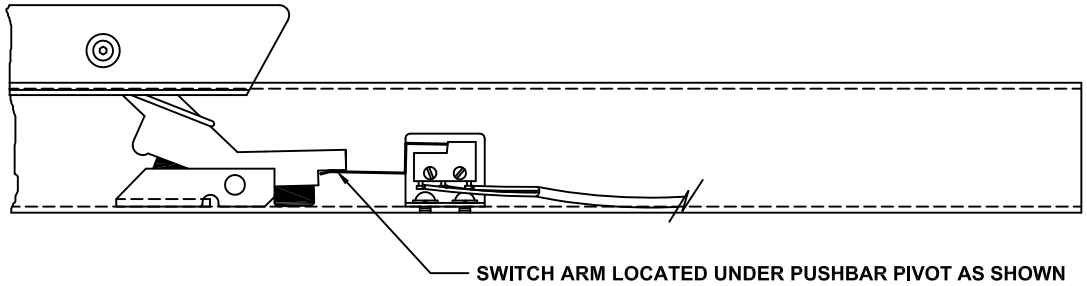

INSTALLATION INSTRUCTIONS

STEP 1: REMOVE END COVER FROM CHANNEL.
STEP 2: LOCATE CENTER OF CHANNEL, THEN MARK DIMENSIONS AS SHOWN.
STEP 3: AFTER DIMENSIONS ARE MARKED CENTER PUNCH FOR 2 DRILL HOLES.
USE A #36 (.106 DIA.) DRILL BIT FOR PROPER TAP DRILL SIZE.
STEP 4: DRILL HOLES FOR BRACKET, NEXT USING A #6-32 TAPER TAP, TAP THE 2 HOLES.
STEP 5: DEBURR HOLES SO THAT BRACKET WILL SIT FLAT.
STEP 6: DEPRESS PUSHBAR THEN MAKE SURE THAT SWITCH ARM IS LOCATED UNDER END OF PIVOT,
THEN SECURE BRACKET WITH PROVIDED HARDWARE.
STEP 7: SWITCH SHOULD FUNTION AS FOLLOWS: SWITCH ARM SHOULD BE ACTIVATED WHEN PUSHBAR IS IN RELAXED POSITION.
SWITCH ARM SHOULD DE-ACTIVATE WHEN PUSHBAR IS DEPRESSED.
STEP 8: MOUNT DEVICE, TERMINATE WIRES ACCORDINGLY WITH PROPER WIRE NUTS OR CRIMPS.

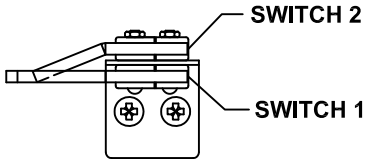

ARM OF SWITCH 2
IS LOCATED UNDER
ARM OF SWITCH 1

ACSI
ARCHITECTURAL
CONTROL SYSTEMS INC.

2720 CLARK AVE., ST. LOUIS, MO 63103 (800) 753-5558

REV. 11/2017

EXIT DEVICE INSTALLATION INSTRUCTIONS
AUTHORIZED EGRESS SWITCH (AE) AND LATCH MONITORING SWITCH (LM)

FOR USE WITH ALL ACSI MONITORED EXIT DEVICE MODIFICATIONS

AUTHORIZED EGRESS (AE) SWITCH MONITORS EGRESS BY PUSHBAR ACTIVATION OF EXIT DEVICE

LATCH MONITORING (LM) SWITCH MONITORS THE LATCH MECHANISM OF EXIT DEVICE

AUTHORIZED EGRESS (AE)

ELECTRICAL SPECIFICATIONS

- SPDT MONITOR SWITCH
- CONTACT RATING: 3 AMP @ 125VAC
  2 AMP @ 30VDC

COLOR CODE FOR WIRES

- YELLOW WIRE: COMMON
- RED WIRE: NORMALLY OPEN
- GRAY WIRE: NORMALLY CLOSED

LATCH MONITORING (LM)

ELECTRICAL SPECIFICATIONS

- SPDT MONITOR SWITCH
- CONTACT RATING: 3 AMP @ 125VAC
  2 AMP @ 30VDC

COLOR CODE FOR WIRES

- BLACK WIRE: COMMON
- WHITE WIRE: NORMALLY OPEN
- RED WIRE: NORMALLY CLOSED

ACSI
ARCHITECTURAL
CONTROL SYSTEMS INC

2720 CLARK AVE., ST. LOUIS, MO 63103 (800) 753-5558

REV. 11/2017

EXIT DEVICE INSTALLATION INSTRUCTIONS

K-128 SWITCH KIT

DESIGN HARDWARE 1000 SERIES EXIT DEVICES

SWITCH MONITORS EGRESS BY ACTIVATION OF ACTUATING BAR OF EXIT DEVICE

ELECTRICAL SPECIFICATIONS

- SPDT MONITOR SWITCH
- CONTACT RATING: 3 AMP @ 125VAC
  2 AMP @ 30VDC

COLOR CODE FOR WIRES

- YELLOW WIRE: COMMON
- RED WIRE: NORMALLY OPEN
- GRAY WIRE: NORMALLY CLOSED

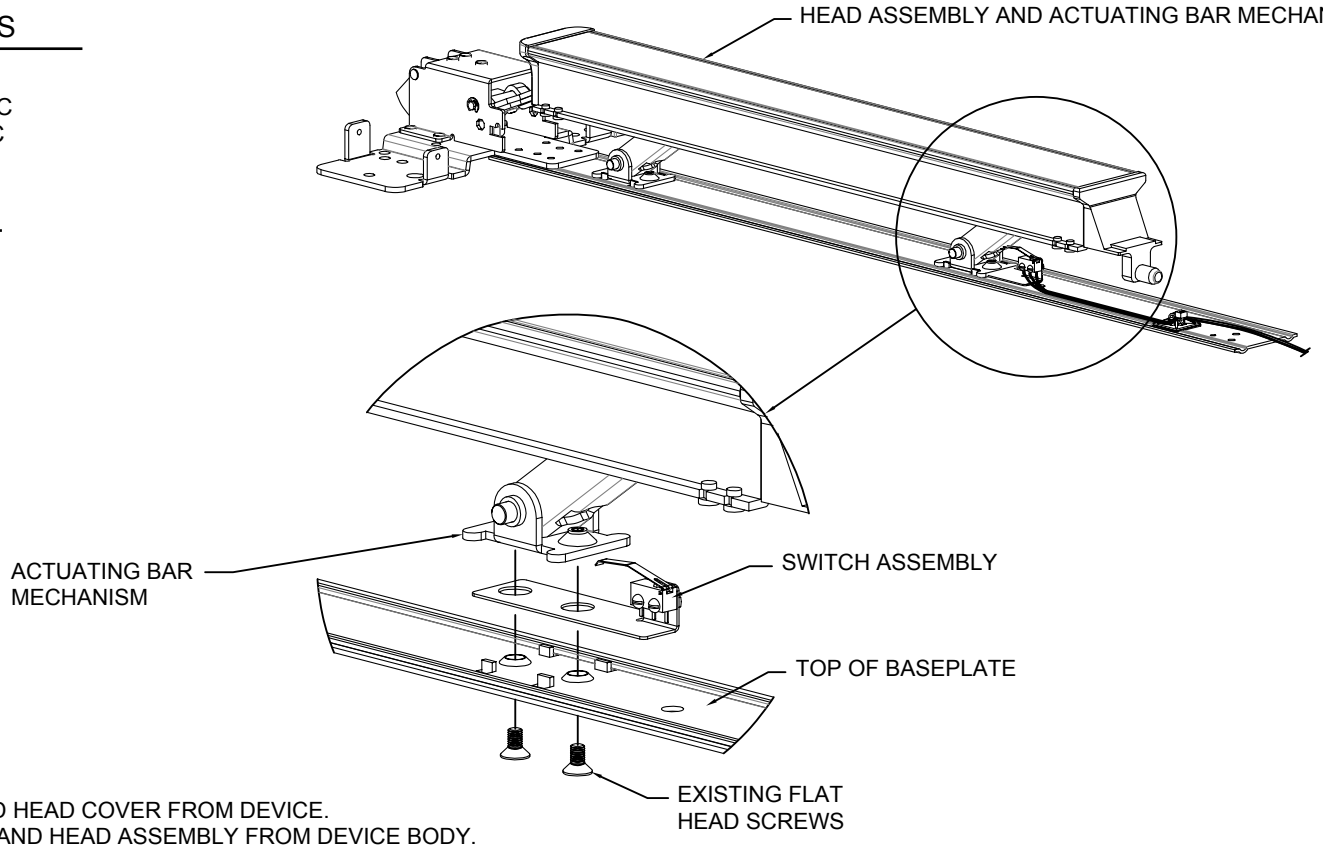

INSTALLATION INSTRUCTIONS

STEP 1: REMOVE FOUR SCREWS AND HEAD COVER FROM DEVICE.
STEP 2: SEPERATE ACTUATING BAR AND HEAD ASSEMBLY FROM DEVICE BODY.
STEP 3: REMOVE 2 EXISTING FLAT HEAD SCREWS FROM REAR ACTUATING BAR MECHANISM AS SHOWN.
STEP 4: PLACE SWITCH ASSEMBLY BETWEEN THE TOP OF BASEPLATE AND ACTUATING BAR MECHANISM.
STEP 5: REPLACE 2 EXISTING FLAT HEAD SCREWS AND TIGHTEN.
STEP 6: CHECK FOR PROPER SWITCH ACTIVATION BY FULLY DEPRESSING ACTUATING BAR FOR SWITCH CONTACT ACTIVATION.

STEP 7: SECURE THE SELF ADHESIVE TIE MOUNT TO THE BASEPLATE. KEEP THE TIE MOUNT TO THE SIDE AS SHOWN AND MAKE SURE THAT THE DOGGING FEATURE LOCATED ON THE END OF ACTUATING BAR DOES NOT INTERFERE WITH THE TIE MOUNT.
STEP 8: RUN THE WIRES ALONG THE SIDE OF THE BASEPLATE AS SHOWN. ROUTE WIRES FROM THE SIDE TO THE CENTER AS SHOWN.
STEP 9: 1/2" DIAMETER HOLE MUST BE PROVIDED IN END COVER MOUNTING BRACKET FOR WIRE ACCESS TO POWER TRANSFER DEVICE.
STEP 10: MAKE SURE COLOR CODE FOR WIRES IS USED FOR PROPER HOOK-UP OF SWITCH CONTACTS.
STEP 11: REASSEMBLE DEVICE AND FOLLOW THE STANDARD INSTALLATION INSTRUCTIONS FOR DEVICE MOUNTING.

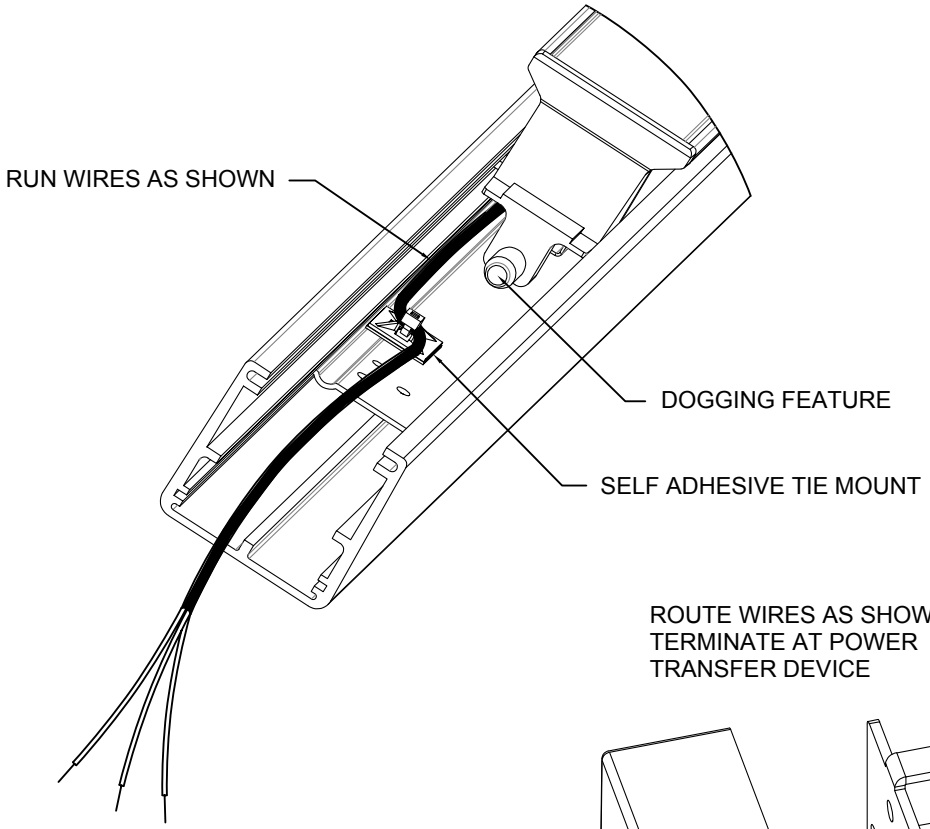

END COVER MOUNTING BRACKET

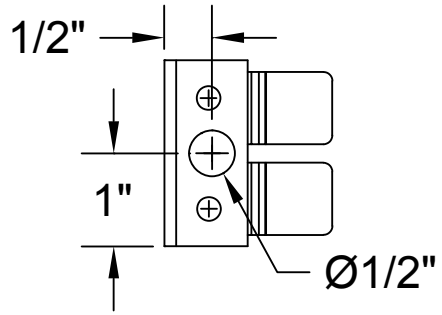

PROVIDE 1/2" DIAMETER HOLE
IN END COVER MOUNTING BRACKET
FOR WIRE ACCESS.

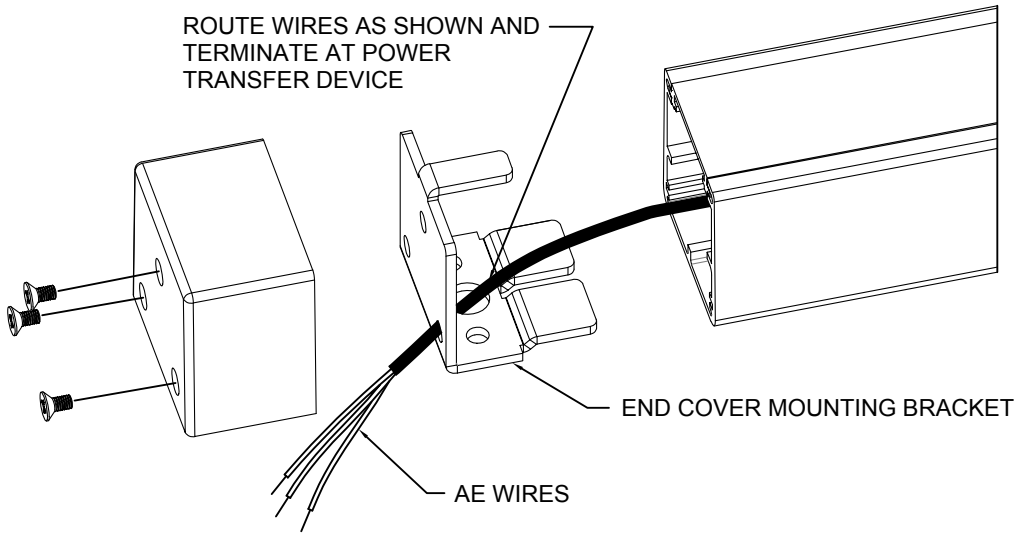

ELECTRIC EXIT DEVICE KIT INSTALLATION INSTRUCTIONS
MOTOR DRIVE ELECTRIC LATCH RETRACTION

1550K-MDV

VON DUPRIN 33A/35A AND 98/99 SERIES

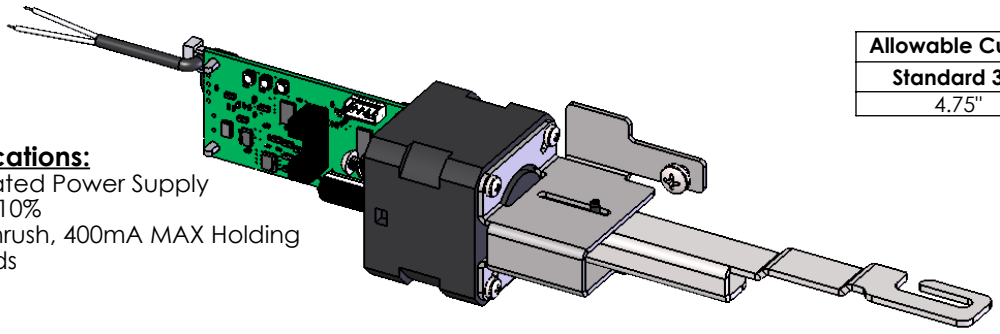

Allowable Cutoff From Device Length	
Standard 36"	**Standard 48"**
4.75"	10.75"

Electrical Specifications:
Filtered and Regulated Power Supply
Voltage: 24VDC ± 10%
Current: 1A MAX Inrush, 400mA MAX Holding
Non-polarized Leads

PROVIDES SIMULTANEOUS ELECTRIC LATCH RETRACTION AND DOGGING (PUSH BAR DEPRESSED)

Installation:

1. Separate the mechanism case from the baseplate assembly.
2. Separate the push bar from the baseplate assembly.
3. Remove the manual dogging assembly, if present, from the baseplate assembly and discard.
4. Locate the 1550K-MDV Kit near the holes that secured the manual dogging assembly.
5. Attach the connecting link to the rear mechanism of the baseplate assembly.
6. Attach the motor bracket to the baseplate assembly using the supplied screws through the holes that secured the manual dogging assembly. **Do not tighten the screws.** This will allow the assembly to slide back into the mechanism case easily.
7. Attach the push bar to the baseplate assembly.
8. Attach the mechanism case to the baseplate assembly. Verify the flanges on the motor bracket are located with the baseplate assembly in the same mounting grooves of the mechanism case.
9. Tighten the motor bracket screws.
10. Apply the supplied technical assistance labels to the center case cover and the end cap. **Do not remove any regulatory labels adhered to the device.**

2-Conductor Wire Run	
Distance	**Wire Gauge**
70'	22
110'	20
180'	18
280'	16
450'	14
720'	12

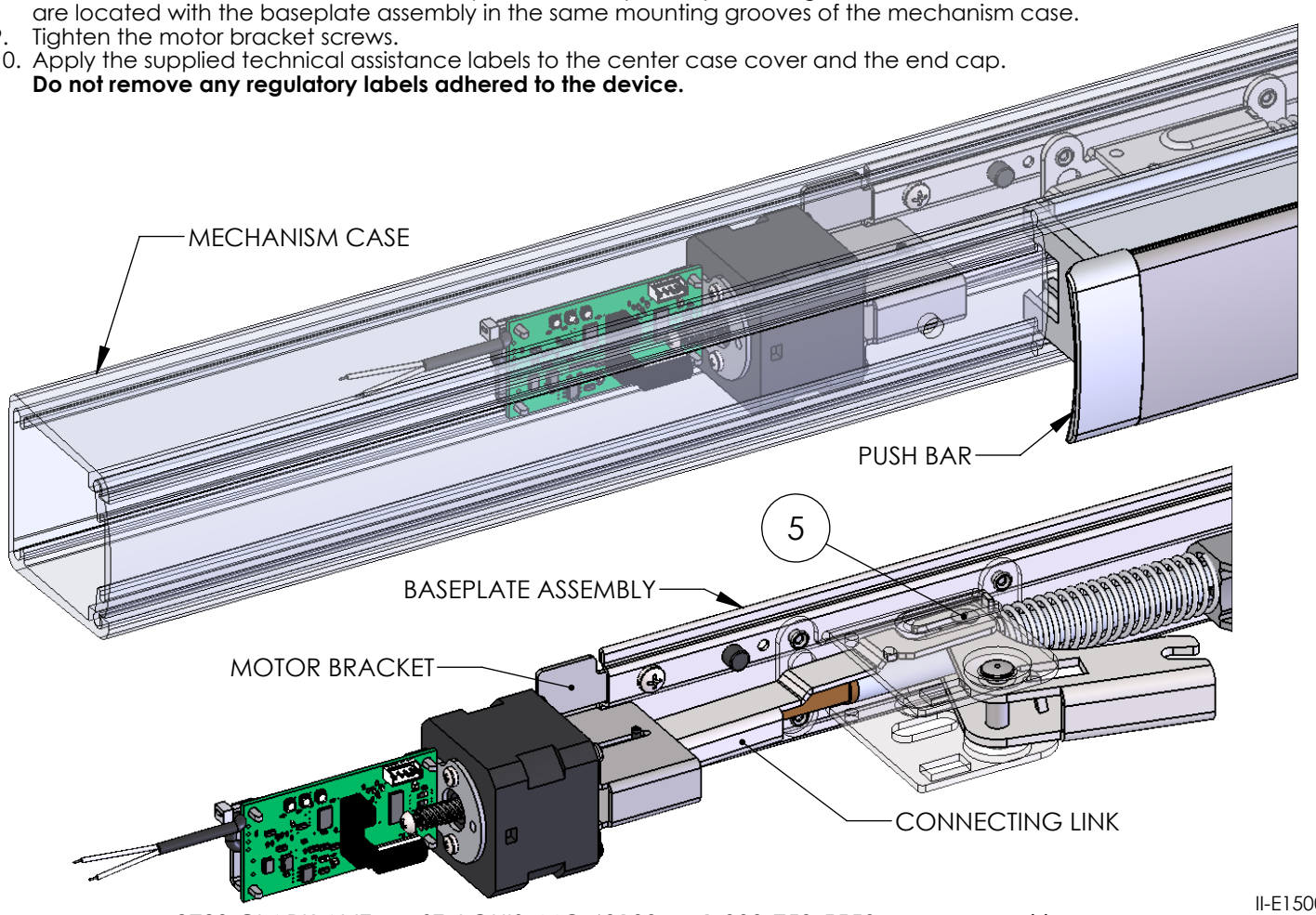

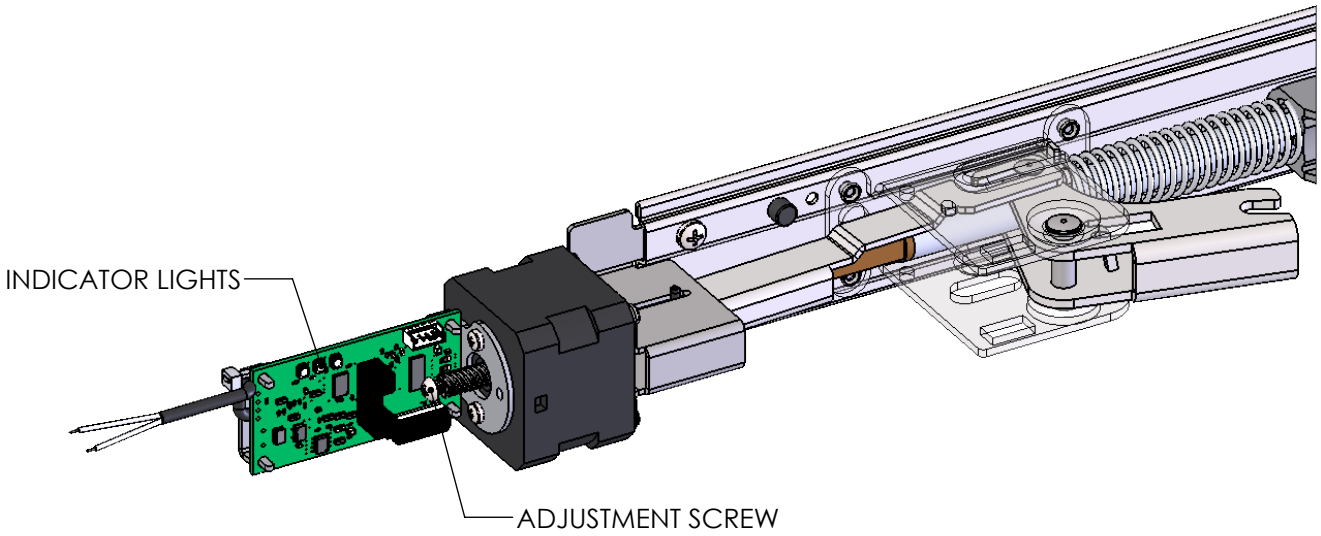

Motor Drive Electric Latch Retraction Adjustment:

1. Verify the device is properly adjusted for mechanical operation. Electric operation should not exceed the mechanical operation or there will be a high risk of damage to the device. **We suggest setting the latch retraction under electric operation at 1/16" less than the latch retraction under mechanical operation.**
2. Locate the adjustment screw in the rear of the motor assembly. Rotate the adjustment screw clockwise to increase the latch retraction or counterclockwise to decrease the latch retraction.

Onboard Indicator Light Assignments:

Maintain input power to the exit device and check the onboard indicator lights.
Remove input power before attempting a solution.

Green (Power)	Yellow (Sensor)	Red (Error)	Indication	Possible Solution
Off	Off	Off	No Power.	Connect the wiring between the power supply and the exit device.
On	On	Off	Normal Operation. The push bar is retracted to the dogged position and dogged; the latch is retracted by default. The device is allowed 2 attempts.	
On	Off	On	Error in operation. The push bar did not retract to the dogged position within 2 attempts.	Rotate the adjustment screw counterclockwise to decrease the latch retraction.
On	On	On	Error in operation. Without power being removed, the push bar went from being dogged to unintentionally being extended, and then the push bar did not retract to the dogged position within 2 attempts.	Clear the jam condition manually.
On	Blink	On	Error in operation. The push bar did not extend from the dogged position when the power was last removed. The device will not attempt a retraction.	Clear the jam condition manually.
On	Simultaneous Blink		Error in operation. The input voltage dropped below the specification during operation.	Decrease the wire run or increase the wire gauge.
On	Alternating Blink		Error in operation. An electronics fault was detected.	An electronics replacement is required.

ELECTRIC EXIT DEVICE KIT INSTALLATION INSTRUCTIONS
MOTOR DRIVE ELECTRIC LATCH RETRACTION

1550K-MDD
DORMA 9000 SERIES

Electrical Input Requirements:
Filtered and Regulated Power Supply
Voltage: 24VDC ± 10%
Current: 1A MAX Inrush, 400mA MAX Holding
Non-polarized Leads

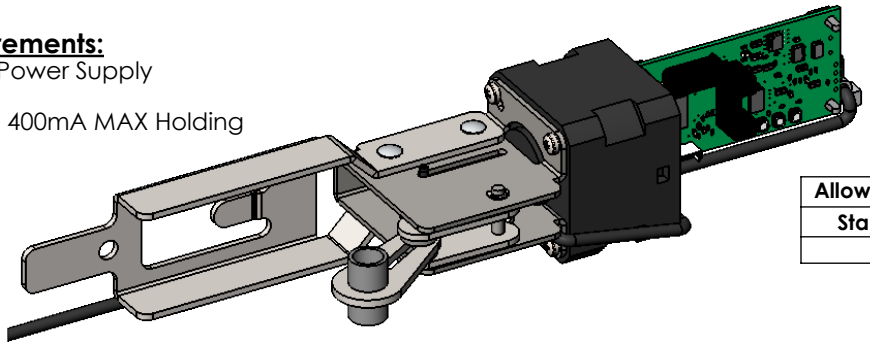

Allowable Cutoff From Device Length	
Standard 36"	**Standard 48"**
8.00"	14.00"

PROVIDES SIMULTANEOUS ELECTRIC LATCH RETRACTION AND DOGGING (TOUCH BAR DEPRESSED)

Installation:
1. Separate the rail from the touch bar assembly.
2. Separate the sub-plate from the front arm assembly.
3. Remove and discard the pivot bumper from the front pivot arm.
4. Attach the sub-plate to the front arm assembly.
5. Separate the rear arm assembly from the touch bar assembly.
6. Separate the sub-plate from the rear arm assembly and modify.
7. Remove and discard the pivot bumper from the rear pivot arm.

2-Conductor Wire Run	
Distance	**Wire Gauge**
70'	22
110'	20
180'	18
280'	16
450'	14
720'	12

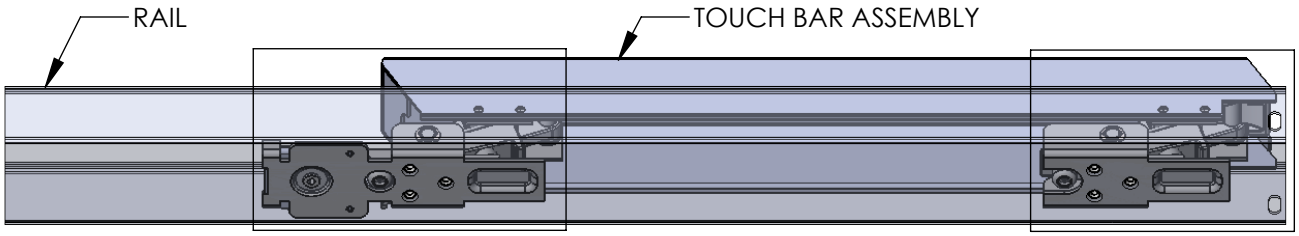

REAR ARM ASSEMBLY

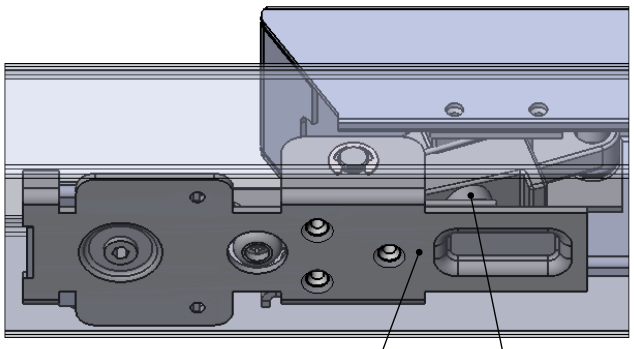

FRONT ARM ASSEMBLY

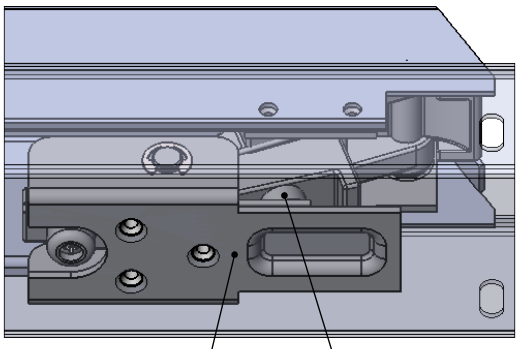

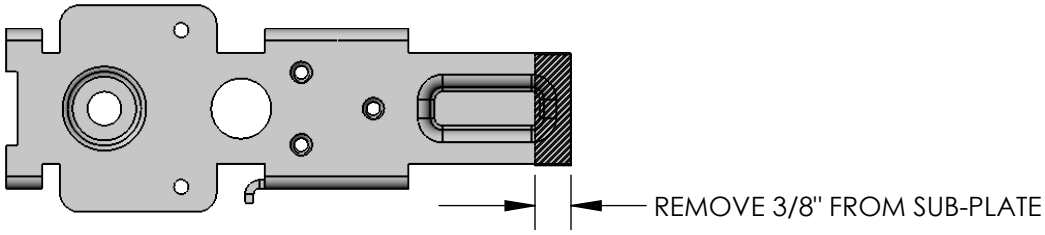

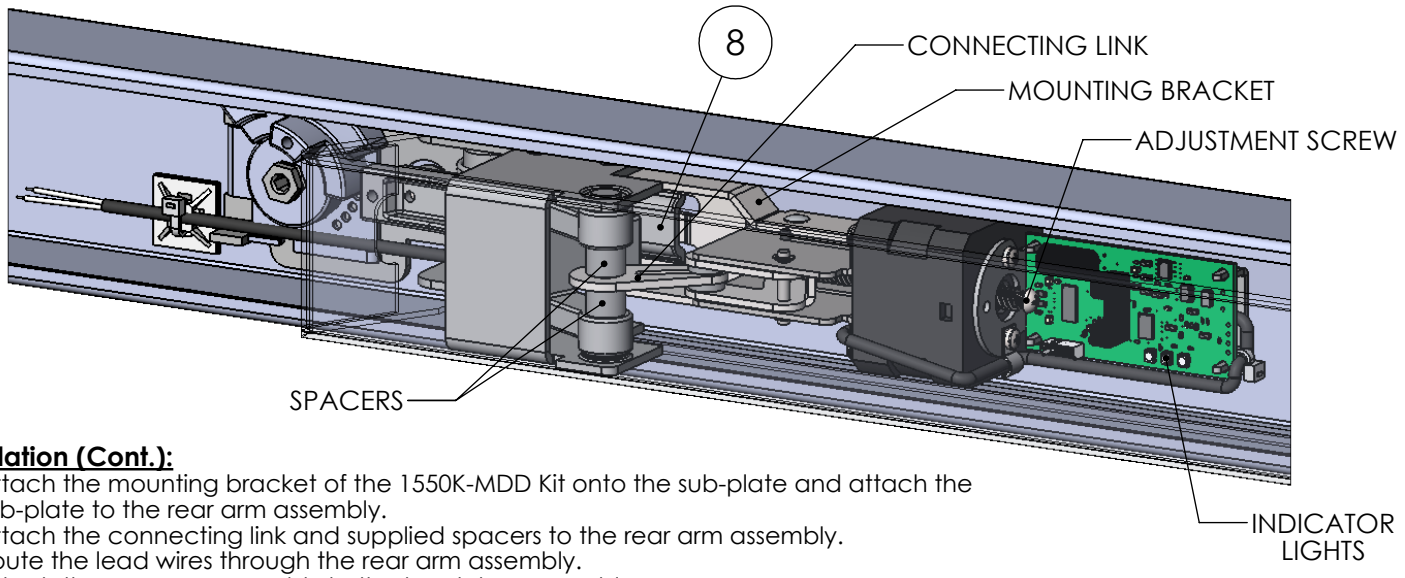

Installation (Cont.):

8. Attach the mounting bracket of the 1550K-MDD Kit onto the sub-plate and attach the sub-plate to the rear arm assembly.
9. Attach the connecting link and supplied spacers to the rear arm assembly.
10. Route the lead wires through the rear arm assembly.
11. Attach the rear arm assembly to the touch bar assembly.
12. Attach the rail to the touch bar assembly.
13. Secure the lead wires to the inside of the rail using the supplied ty-wrap mount and ty-wrap.
14. Apply the supplied technical assistance labels to the chassis cover and the end cap.
    Do not remove any regulatory labels adhered to the device.

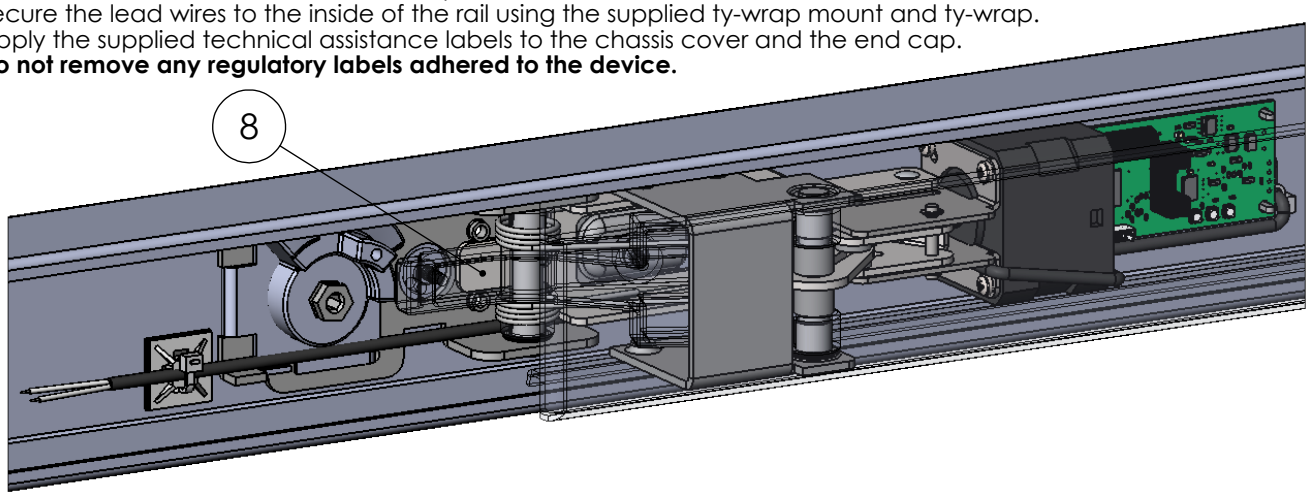

Motor Drive Electric Latch Retraction Adjustment:

1. Verify the device is properly adjusted for mechanical operation. Electric operation should not exceed the mechanical operation or there will be a high risk of damage to the device. **We suggest setting the latch retraction under electric operation at 1/16" less than the latch retraction under mechanical operation.**
2. Locate the adjustment screw in the rear of the motor assembly. Rotate the adjustment screw clockwise to increase the latch retraction or counterclockwise to decrease the latch retraction.

Onboard Indicator Light Assignments:

Maintain input power to the exit device and check the onboard indicator lights.
Remove input power before attempting a solution.

Green (Power)	Yellow (Sensor)	Red (Error)	Indication	Possible Solution
Off	Off	Off	No Power.	Connect the wiring between the power supply and the exit device.
On	On	Off	Normal Operation. The touch bar is retracted to the dogged position and dogged; the latch is retracted by default. The device is allowed 2 attempts.	
On	Off	On	Error in operation. The touch bar did not retract to the dogged position within 2 attempts.	Rotate the adjustment screw counterclockwise to decrease the latch retraction.
On	On	On	Error in operation. Without power being removed, the touch bar went from being dogged to unintentionally being extended, and then the touch bar did not retract to the dogged position within 2 attempts.	Clear the jam condition manually.
On	Blink	On	Error in operation. The touch bar did not extend from the dogged position when the power was last removed. The device will not attempt a retraction.	Clear the jam condition manually.
On	Simultaneous Blink		Error in operation. The input voltage dropped below the specification during operation.	Decrease the wire run or increase the wire gauge.
On	Alternating Blink		Error in operation. An electronics fault was detected.	An electronics replacement is required.



ELECTRIC EXIT DEVICE KIT INSTALLATION INSTRUCTIONS
MOTOR DRIVE ELECTRIC LATCH RETRACTION

1550K-MDC

CORBIN RUSSWIN ED4000 AND ED5000 SERIES
FOR USE WITH YALE 7000 SERIES



Allowable Cutoff from Device Length	
Standard 36"	Standard 48"
0.25"	0.13"

Electrical Input Requirements:
Filtered and Regulated Power Supply
Voltage: 24VDC ± 10%
Current: 1A latch in/out, 400mA while holding
Non-polarized Leads

PROVIDES SIMULTANEOUS ELECTRIC LATCH RETRACTION AND DOGGING (TOUCH BAR DEPRESSED)

Installation:

1. Disconnect the end cover from the exit device.
2. Remove the main slide mounting screw(s). If present, from the slot and come assemble and discard.
3. Locate the 1550K-MDC. Remove the holes that secures the manual dogging assembly.
4. Disarm the bench tool to isolate the connecting pin of the slide mechanism closer to the cable connecting the.
5. Rotate the pin to allow the connecting link to slide between the pivot pin and connecting pin of the rear mechanism and be positioned forward of the connecting pin. Reinsert the hex pin back.
6. Attach the motor bracket to the rear door mortise assembly using the supplied thread-forming screws and fasteners through the holes that secured the manual dogging assembly. The supplied washers may also be used if the holes are stripped or threads. This will require the bench tool to be disassembly from the end cap mortise assembly.
7. Attach the end cover to the exit device.
8. Apply the supplied mechanical assistance stickers to the active-head cover and the end cap.

Do not remove any regulatory labels adhered to the device

2 Conductor Wire Run	
Distance	Wire Gauge
[illegible]	[illegible]
[illegible]	[illegible]
[illegible]	[illegible]
[illegible]	[illegible]
[illegible]	[illegible]
[illegible]	[illegible]

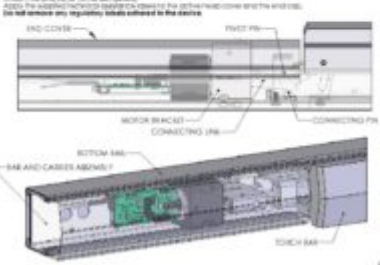

ELECTRIC EXIT DEVICE KIT INSTALLATION INSTRUCTIONS
MOTOR DRIVE ELECTRIC LATCH RETRACTION

1550K-MDC

CORBIN RUSSWIN ED4000 AND ED5000 SERIES
FOR USE WITH YALE 7000 SERIES

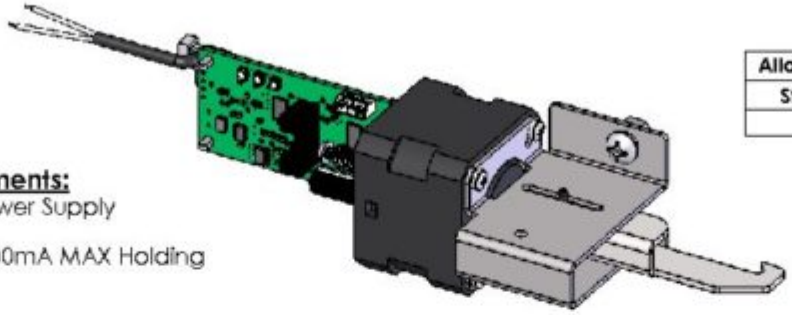

Allowable Cutoff From Device Length	
Standard 36"	Standard 48"
3.00"	10.75"

Electrical Input Requirements:
Filtered and Regulated Power Supply
Voltage: 24VDC ± 10%
Current: 1A MAX Inrush, 400mA MAX Holding
Non-polarized Leads

PROVIDES SIMULTANEOUS ELECTRIC LATCH RETRACTION AND DOGGING (TOUCH BAR DEPRESSED)

Installation:

1. Separate the end cover from the exit device.
2. Remove the manual dogging assembly, if present, from the bar and carrier assembly and discard.
3. Locate the 1550K-MDC Kit near the holes that secured the manual dogging assembly.
4. Depress the touch bar to locate the connecting pin of the rear mechanism closer to the connecting link.
5. Rotate the kit to allow the connecting link to slide between the pivot pin and connecting pin of the rear mechanism and be positioned forward of the connecting pin. Release the touch bar.
6. Attach the motor bracket to the bar and carrier assembly using the supplied threadforming screws and lockwashers through the holes that secured the manual dogging assembly. The supplied locknuts may also be used if the holes are stripped of threads. This will require the bottom rail to be separated from the bar and carrier assembly.
7. Attach the end cover to the exit device.
8. Apply the supplied technical assistance labels to the active head cover and the end cap. **Do not remove any regulatory labels adhered to the device.**

2-Conductor Wire Run	
Distance	Wire Gauge
70'	22
110'	20
180'	18
280'	16
450'	14
720'	12

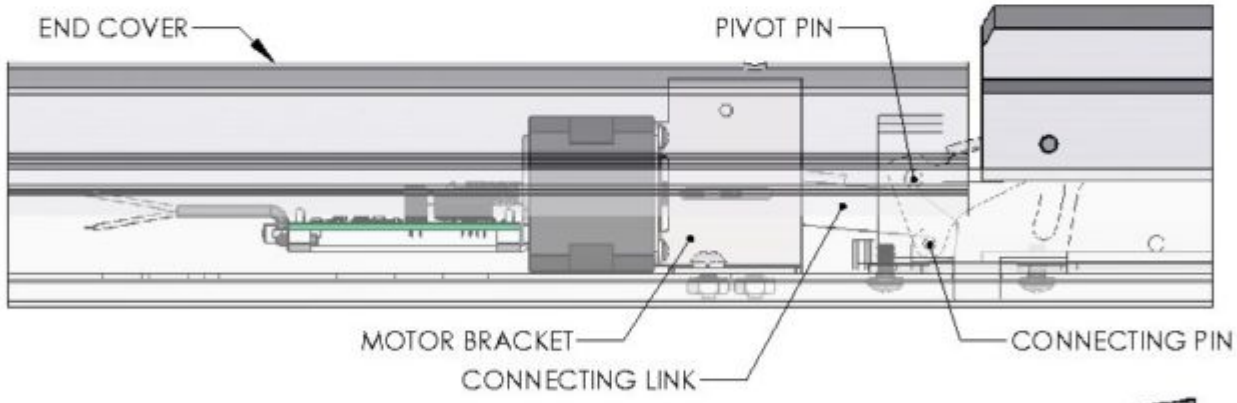

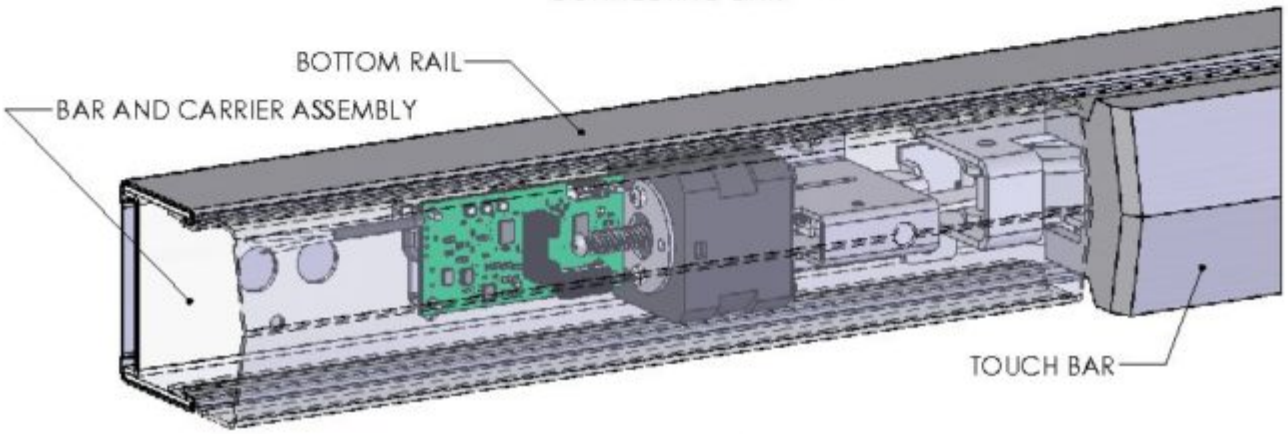

ELECTRIC EXIT DEVICE KIT INSTALLATION INSTRUCTIONS
MOTOR DRIVE ELECTRIC LATCH RETRACTION

1550K-MDC

CORBIN RUSSWIN ED4000 AND ED5000 SERIES
FOR USE WITH YALE 7000 SERIES

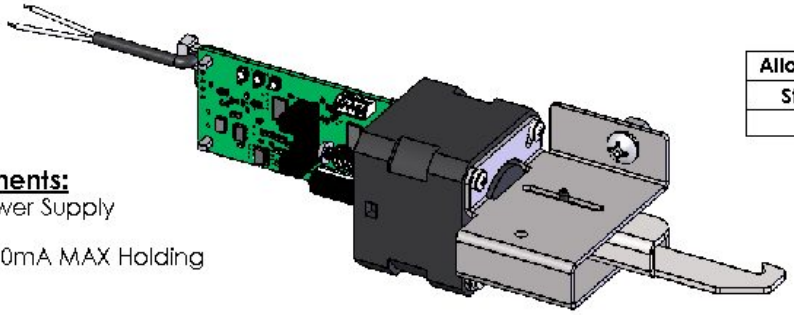

Allowable Cutoff From Device Length	
Standard 36"	Standard 48"
3.00"	10.75"

Electrical Input Requirements:
Filtered and Regulated Power Supply
Voltage: 24VDC ± 10%
Current: 1A MAX Inrush, 400mA MAX Holding
Non-polarized Leads

PROVIDES SIMULTANEOUS ELECTRIC LATCH RETRACTION AND DOGGING (TOUCH BAR DEPRESSED)

Installation:

1. Separate the end cover from the exit device.
2. Remove the manual dogging assembly, if present, from the bar and carrier assembly and discard.
3. Locate the 1550K-MDC Kit near the holes that secured the manual dogging assembly.
4. Depress the touch bar to locate the connecting pin of the rear mechanism closer to the connecting link.
5. Rotate the kit to allow the connecting link to slide between the pivot pin and connecting pin of the rear mechanism and be positioned forward of the connecting pin. Release the touch bar.
6. Attach the motor bracket to the bar and carrier assembly using the supplied threadforming screws and lockwashers through the holes that secured the manual dogging assembly. The supplied locknuts may also be used if the holes are stripped of threads. This will require the bottom rail to be separated from the bar and carrier assembly.
7. Attach the end cover to the exit device.
8. Apply the supplied technical assistance labels to the active head cover and the end cap. **Do not remove any regulatory labels adhered to the device.**

2-Conductor Wire Run	
Distance	Wire Gauge
70'	22
110'	20
180'	18
280'	16
450'	14
720'	12

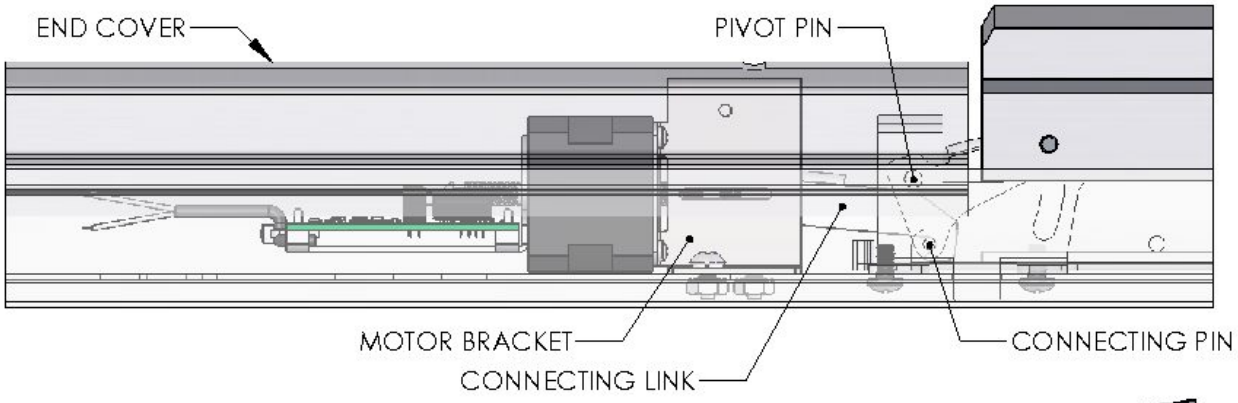

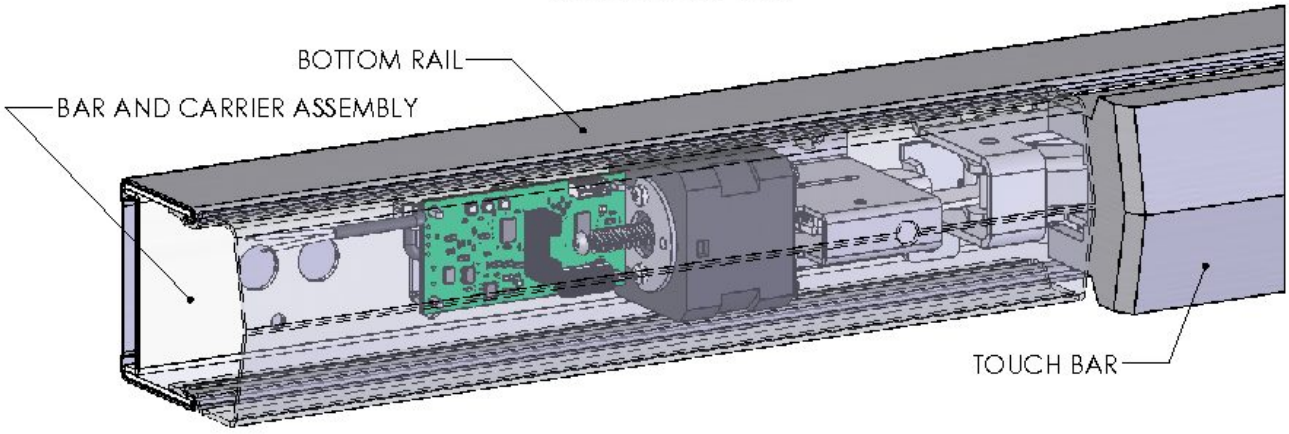

ELECTRIC EXIT DEVICE KIT INSTALLATION INSTRUCTIONS
MOTOR DRIVE ELECTRIC LATCH RETRACTION

1550K-MDC

CORBIN RUSSWIN ED4000 AND ED5000 SERIES
FOR USE WITH YALE 7000 SERIES

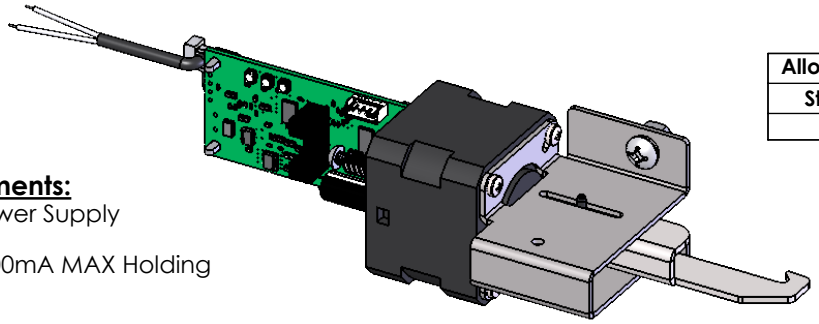

Allowable Cutoff From Device Length	
Standard 36"	**Standard 48"**
3.00"	10.75"

Electrical Input Requirements:
Filtered and Regulated Power Supply
Voltage: 24VDC ± 10%
Current: 1A MAX Inrush, 400mA MAX Holding
Non-polarized Leads

PROVIDES SIMULTANEOUS ELECTRIC LATCH RETRACTION AND DOGGING (TOUCH BAR DEPRESSED)

Installation:

1. Separate the end cover from the exit device.
2. Remove the manual dogging assembly, if present, from the bar and carrier assembly and discard.
3. Locate the 1550K-MDC Kit near the holes that secured the manual dogging assembly.
4. Depress the touch bar to locate the connecting pin of the rear mechanism closer to the connecting link.
5. Rotate the kit to allow the connecting link to slide between the pivot pin and connecting pin of the rear mechanism and be positioned forward of the connecting pin. Release the touch bar.
6. Attach the motor bracket to the bar and carrier assembly using the supplied threadforming screws and lockwashers through the holes that secured the manual dogging assembly. The supplied locknuts may also be used if the holes are stripped of threads. This will require the bottom rail to be separated from the bar and carrier assembly.
7. Attach the end cover to the exit device.
8. Apply the supplied technical assistance labels to the active head cover and the end cap. **Do not remove any regulatory labels adhered to the device.**

2-Conductor Wire Run	
Distance	**Wire Gauge**
70'	22
110'	20
180'	18
280'	16
450'	14
720'	12

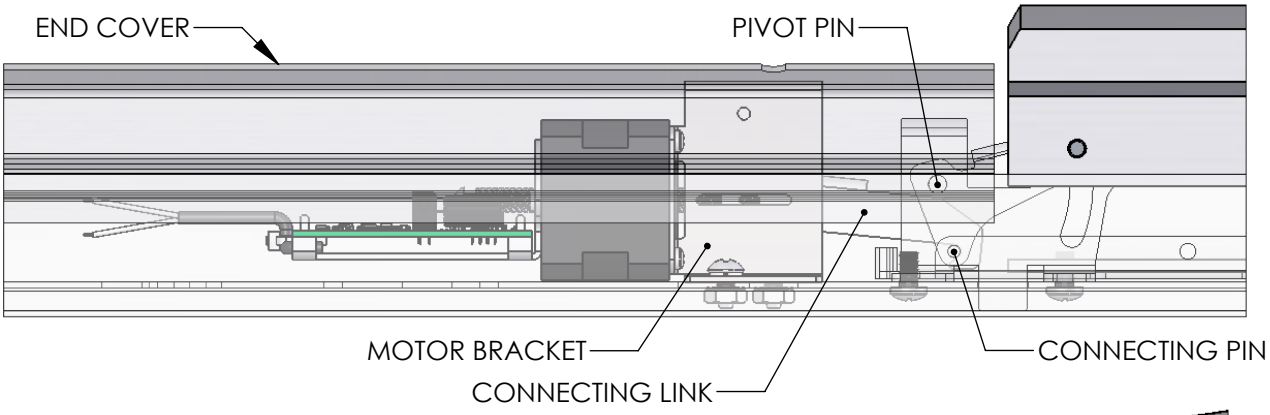

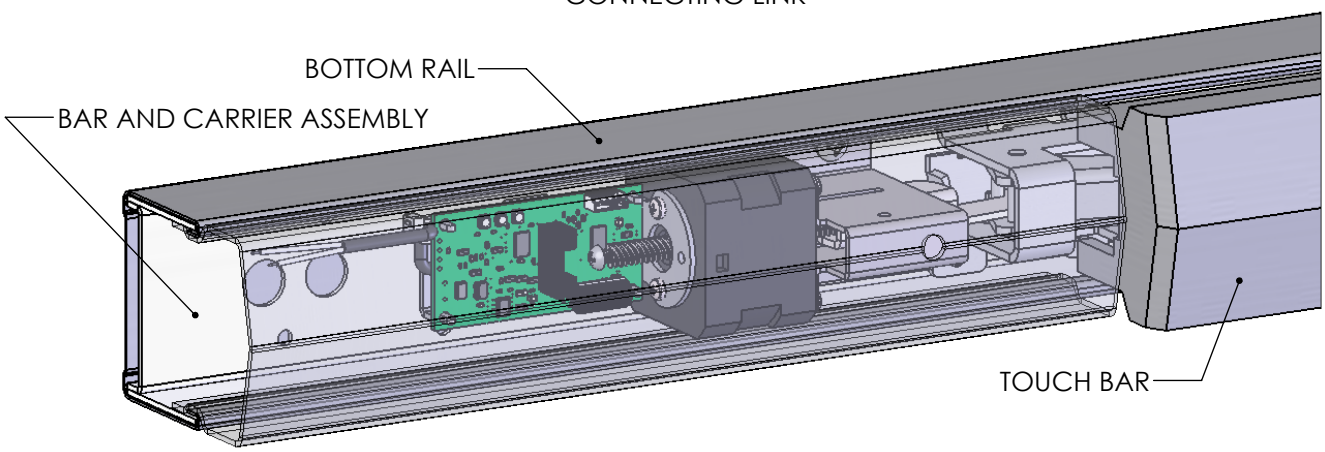

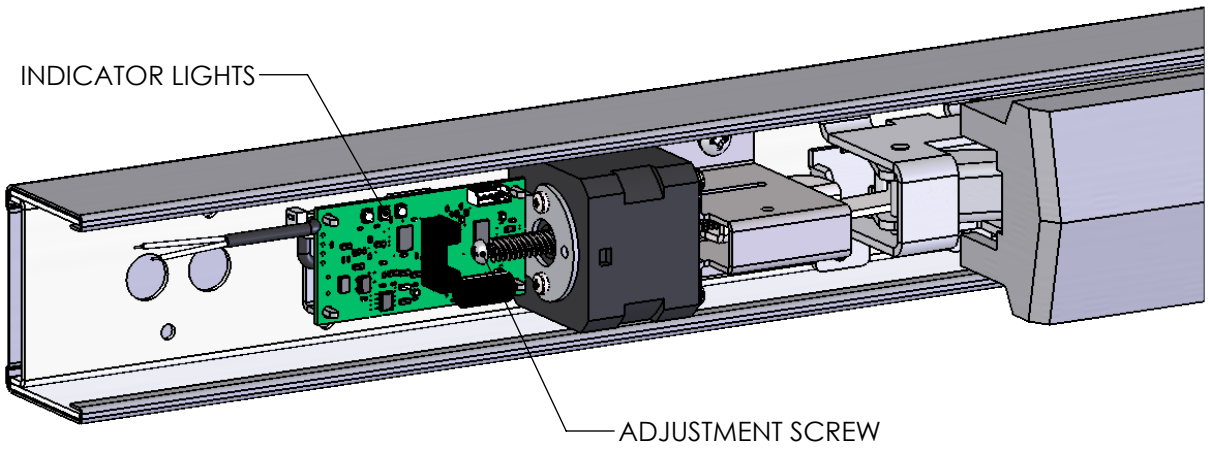

Motor Drive Electric Latch Retraction Adjustment:

1. Verify the device is properly adjusted for mechanical operation. Electric operation should not exceed the mechanical operation or there will be a high risk of damage to the device. **We suggest setting the latch retraction under electric operation at 1/16" less than the latch retraction under mechanical operation.**
2. Locate the adjustment screw in the rear of the motor assembly. Rotate the adjustment screw clockwise to increase the latch retraction or counterclockwise to decrease the latch retraction.

Onboard Indicator Light Assignments:

Maintain input power to the exit device and check the onboard indicator lights.
Remove input power before attempting a solution.

Green (Power)	Yellow (Sensor)	Red (Error)	Indication	Possible Solution
Off	Off	Off	No Power.	Connect the wiring between the power supply and the exit device.
On	On	Off	Normal Operation. The touch bar is retracted to the dogged position and dogged; the latch is retracted by default. The device is allowed 2 attempts.	
On	Off	On	Error in operation. The touch bar did not retract to the dogged position within 2 attempts.	Rotate the adjustment screw counterclockwise to decrease the latch retraction.
On	On	On	Error in operation. Without power being removed, the touch bar went from being dogged to unintentionally being extended, and then the touch bar did not retract to the dogged position within 2 attempts.	Clear the jam condition manually.
On	Blink	On	Error in operation. The touch bar did not extend from the dogged position when the power was last removed. The device will not attempt a retraction.	Clear the jam condition manually.
On	Simultaneous Blink		Error in operation. The input voltage dropped below the specification during operation.	Decrease the wire run or increase the wire gauge.
On	Alternating Blink		Error in operation. An electronics fault was detected.	An electronics replacement is required.



ELECTRIC EXIT DEVICE KIT INSTALLATION INSTRUCTIONS
MOTOR DRIVE ELECTRIC LATCH RETRACTION

1550K-MDC

CORBIN RUSSWIN ED4000 AND ED5000 SERIES
FOR USE WITH YALE 7000 SERIES



Allowable Cutoff from Device Length	
Standard 36"	Standard 48"
0.25"	0.13"

Electrical Input Requirements:
Filtered and Regulated Power Supply
Voltage: 24VDC ± 10%
Current: 1A latch in/out, 400mA while holding
Non-polarized Leads

PROVIDES SIMULTANEOUS ELECTRIC LATCH RETRACTION AND DOGGING (TOUCH BAR DEPRESSED)

Installation:

1. Disconnect the end cover from the exit device.
2. Remove the main slide mounting screw(s). If present, from the slot and come assemble and discard.
3. Locate the 1550K-MDC. Remove the holes that secures the manual dogging assembly.
4. Disarm the bench tool to isolate the connecting pin of the slide mechanism closer to the cable connecting the.
5. Rotate the pin to allow the connecting link to slide between the pivot pin and connecting pin of the rear mechanism and be positioned forward of the connecting pin. Reinsert the hex pin back.
6. Attach the motor bracket to the rear door mortise assembly using the supplied thread-forming screws and fasteners through the holes that secured the manual dogging assembly. The supplied washers may also be used if the holes are stripped or threads. This will require the bench tool to be disassembly from the end cap mortise assembly.
7. Attach the end cover to the exit device.
8. Apply the supplied mechanical assistance stickers to the active-head cover and the end cap.

Do not remove any regulatory labels adhered to the device

2 Conductor Wire Run	
Distance	Wire Gauge
[illegible]	[illegible]
[illegible]	[illegible]
[illegible]	[illegible]
[illegible]	[illegible]
[illegible]	[illegible]
[illegible]	[illegible]

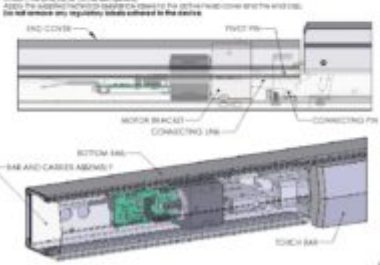

ELECTRIC EXIT DEVICE KIT INSTALLATION INSTRUCTIONS
MOTOR DRIVE ELECTRIC LATCH RETRACTION

1550K-MDC

CORBIN RUSSWIN ED4000 AND ED5000 SERIES
FOR USE WITH YALE 7000 SERIES

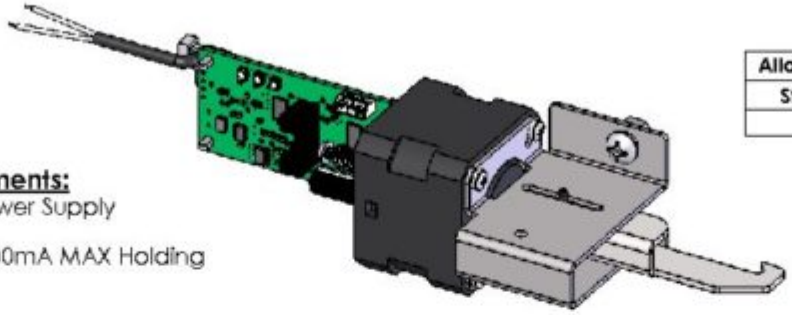

Allowable Cutoff From Device Length	
Standard 36"	Standard 48"
3.00"	10.75"

Electrical Input Requirements:
Filtered and Regulated Power Supply
Voltage: 24VDC ± 10%
Current: 1A MAX Inrush, 400mA MAX Holding
Non-polarized Leads

PROVIDES SIMULTANEOUS ELECTRIC LATCH RETRACTION AND DOGGING (TOUCH BAR DEPRESSED)

Installation:

1. Separate the end cover from the exit device.
2. Remove the manual dogging assembly, if present, from the bar and carrier assembly and discard.
3. Locate the 1550K-MDC Kit near the holes that secured the manual dogging assembly.
4. Depress the touch bar to locate the connecting pin of the rear mechanism closer to the connecting link.
5. Rotate the kit to allow the connecting link to slide between the pivot pin and connecting pin of the rear mechanism and be positioned forward of the connecting pin. Release the touch bar.
6. Attach the motor bracket to the bar and carrier assembly using the supplied threadforming screws and lockwashers through the holes that secured the manual dogging assembly. The supplied locknuts may also be used if the holes are stripped of threads. This will require the bottom rail to be separated from the bar and carrier assembly.
7. Attach the end cover to the exit device.
8. Apply the supplied technical assistance labels to the active head cover and the end cap. **Do not remove any regulatory labels adhered to the device.**

2-Conductor Wire Run	
Distance	Wire Gauge
70'	22
110'	20
180'	18
280'	16
450'	14
720'	12

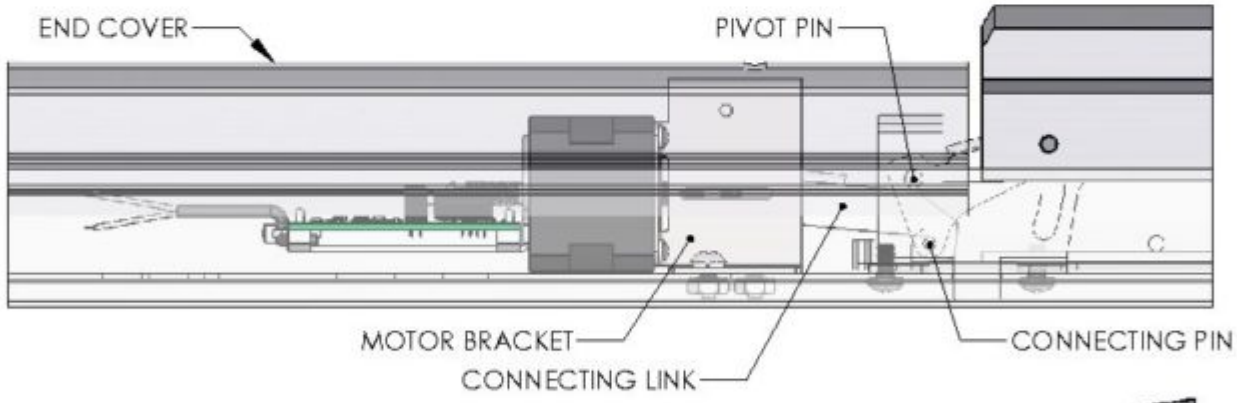

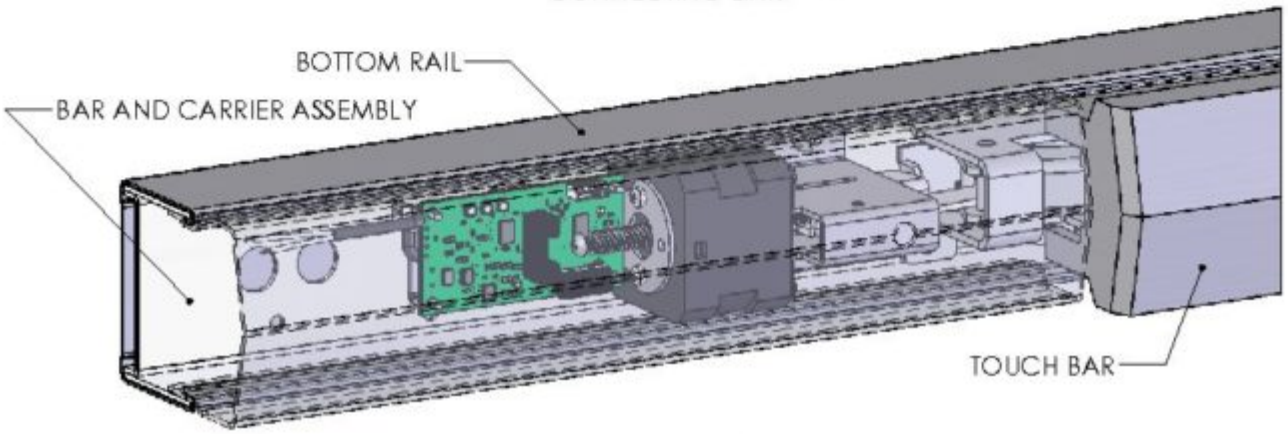

ELECTRIC EXIT DEVICE KIT INSTALLATION INSTRUCTIONS
MOTOR DRIVE ELECTRIC LATCH RETRACTION

1550K-MDC

CORBIN RUSSWIN ED4000 AND ED5000 SERIES
FOR USE WITH YALE 7000 SERIES

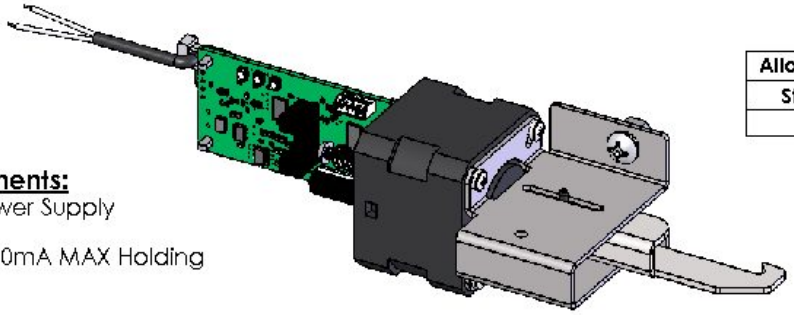

Allowable Cutoff From Device Length	
Standard 36"	Standard 48"
3.00"	10.75"

Electrical Input Requirements:
Filtered and Regulated Power Supply
Voltage: 24VDC ± 10%
Current: 1A MAX Inrush, 400mA MAX Holding
Non-polarized Leads

PROVIDES SIMULTANEOUS ELECTRIC LATCH RETRACTION AND DOGGING (TOUCH BAR DEPRESSED)

Installation:

1. Separate the end cover from the exit device.
2. Remove the manual dogging assembly, if present, from the bar and carrier assembly and discard.
3. Locate the 1550K-MDC Kit near the holes that secured the manual dogging assembly.
4. Depress the touch bar to locate the connecting pin of the rear mechanism closer to the connecting link.
5. Rotate the kit to allow the connecting link to slide between the pivot pin and connecting pin of the rear mechanism and be positioned forward of the connecting pin. Release the touch bar.
6. Attach the motor bracket to the bar and carrier assembly using the supplied threadforming screws and lockwashers through the holes that secured the manual dogging assembly. The supplied locknuts may also be used if the holes are stripped of threads. This will require the bottom rail to be separated from the bar and carrier assembly.
7. Attach the end cover to the exit device.
8. Apply the supplied technical assistance labels to the active head cover and the end cap. **Do not remove any regulatory labels adhered to the device.**

2-Conductor Wire Run	
Distance	Wire Gauge
70'	22
110'	20
180'	18
280'	16
450'	14
720'	12

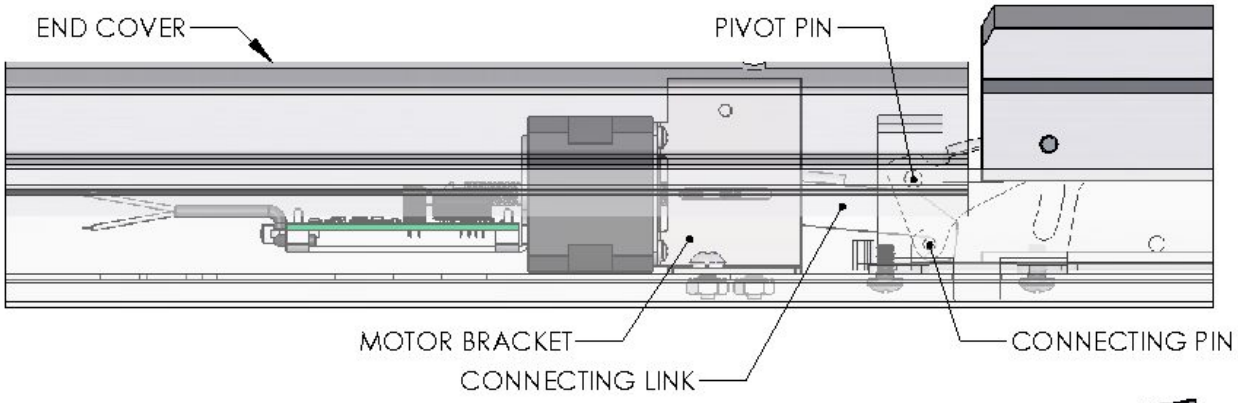

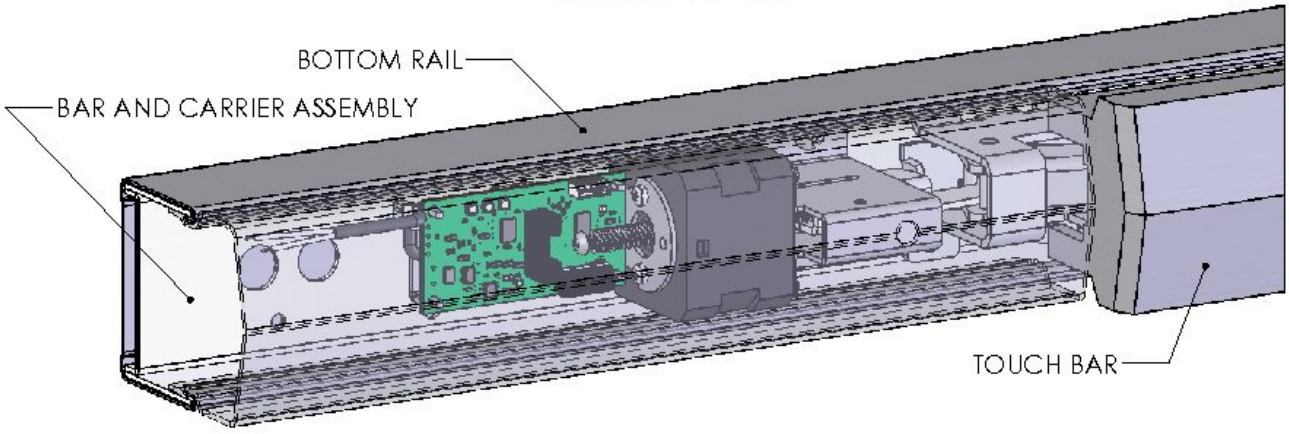

ELECTRIC EXIT DEVICE KIT INSTALLATION INSTRUCTIONS
MOTOR DRIVE ELECTRIC LATCH RETRACTION

1550K-MDC

CORBIN RUSSWIN ED4000 AND ED5000 SERIES
FOR USE WITH YALE 7000 SERIES

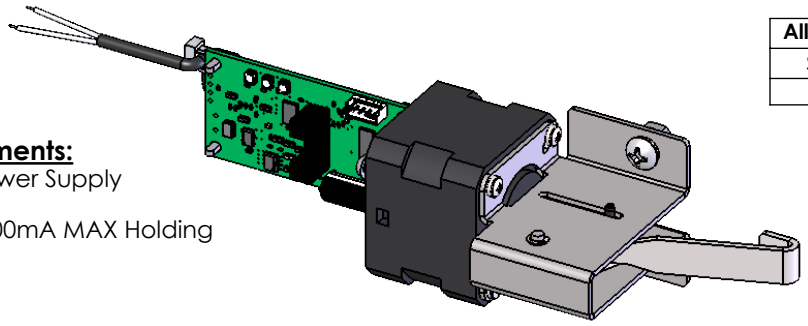

Allowable Cutoff From Device Length	
Standard 36"	Standard 48"
3.00"	10.75"

Electrical Input Requirements:
Filtered and Regulated Power Supply
Voltage: 24VDC ± 10%
Current: 1A MAX Inrush, 400mA MAX Holding
Non-polarized Leads

PROVIDES SIMULTANEOUS ELECTRIC LATCH RETRACTION AND DOGGING (TOUCH BAR DEPRESSED)

Installation:

1. Separate the end cover from the exit device.
2. Remove the manual dogging assembly, if present, from the bar and carrier assembly and discard.
3. Locate the 1550K-MDC Kit near the holes that secured the manual dogging assembly.
4. Attach the connecting link to the rear mechanism of the bar and carrier assembly.
5. Attach the motor bracket to the bar and carrier assembly using the supplied threadforming screws and lockwashers through the holes that secured the manual dogging assembly. The supplied locknuts may also be used if the holes are stripped of threads. This will require the bottom rail to be separated from the bar and carrier assembly.
6. Attach the end cover to the exit device.
7. Apply the supplied technical assistance labels to the active head cover and the end cap. **Do not remove any regulatory labels adhered to the device.**

2-Conductor Wire Run	
Distance	Wire Gauge
70'	22
110'	20
180'	18
280'	16
450'	14
720'	12

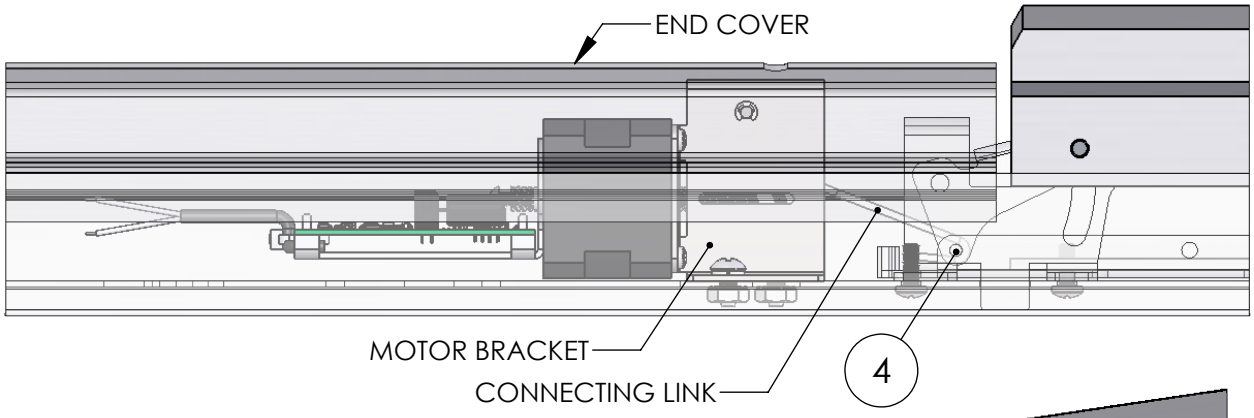

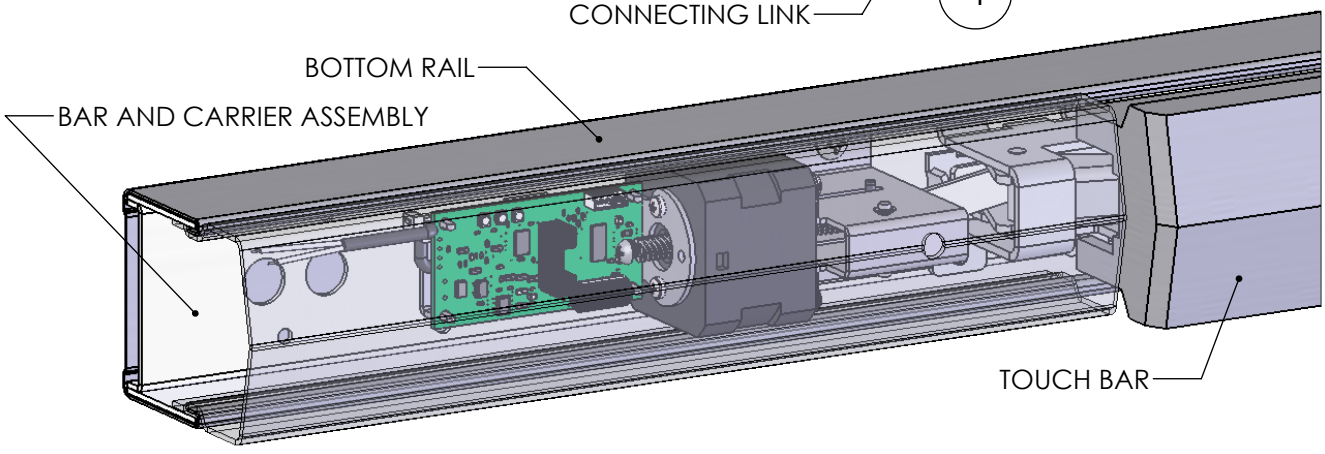

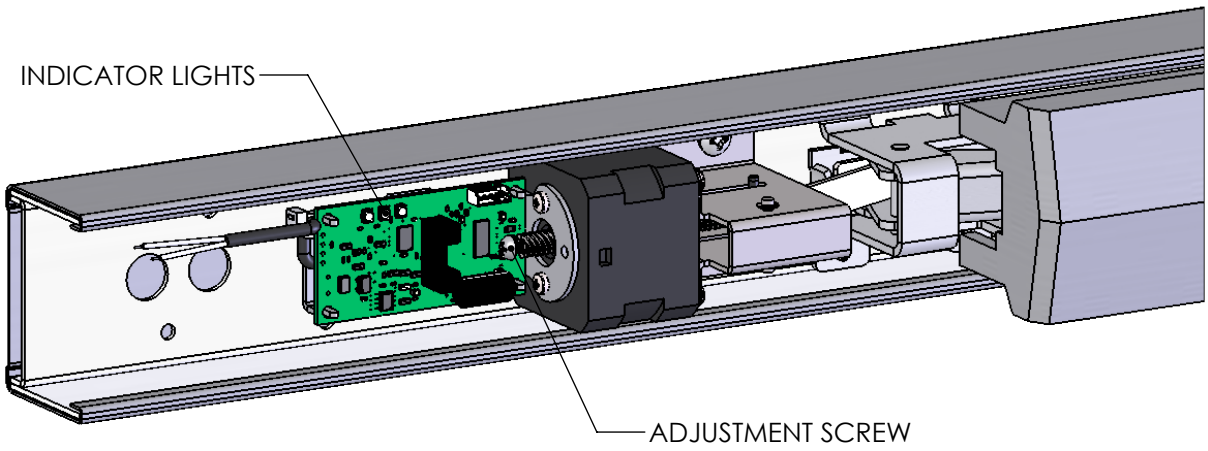

Motor Drive Electric Latch Retraction Adjustment:

1. Verify the device is properly adjusted for mechanical operation. Electric operation should not exceed the mechanical operation or there will be a high risk of damage to the device. **We suggest setting the latch retraction under electric operation at 1/16" less than the latch retraction under mechanical operation.**
2. Locate the adjustment screw in the rear of the motor assembly. Rotate the adjustment screw clockwise to increase the latch retraction or counterclockwise to decrease the latch retraction.

Onboard Indicator Light Assignments:

Maintain input power to the exit device and check the onboard indicator lights.
Remove input power before attempting a solution.

Green (Power)	Yellow (Sensor)	Red (Error)	Indication	Possible Solution
Off	Off	Off	No Power.	Connect the wiring between the power supply and the exit device.
On	On	Off	Normal Operation. The touch bar is retracted to the dogged position and dogged; the latch is retracted by default. The device is allowed 2 attempts.	
On	Off	On	Error in operation. The touch bar did not retract to the dogged position within 2 attempts.	Rotate the adjustment screw counterclockwise to decrease the latch retraction.
On	On	On	Error in operation. Without power being removed, the touch bar went from being dogged to unintentionally being extended, and then the touch bar did not retract to the dogged position within 2 attempts.	Clear the jam condition manually.
On	Blink	On	Error in operation. The touch bar did not extend from the dogged position when the power was last removed. The device will not attempt a retraction.	Clear the jam condition manually.
On	Simultaneous Blink		Error in operation. The input voltage dropped below the specification during operation.	Decrease the wire run or increase the wire gauge.
On	Alternating Blink		Error in operation. An electronics fault was detected.	An electronics replacement is required.



ELECTRIC EXIT DEVICE KIT INSTALLATION INSTRUCTIONS
MOTOR DRIVE ELECTRIC LATCH RETRACTION

1550K-MDT

THASE ENTERPRISE 8000 SERIES
HAGER 4500 AND 4600 SERIES
PDQ 6200 SERIES
STANLEY COMMERCIAL QED100 AND QED200 SERIES



Alternative Cutoff From Service Length	
Standard 36"	Standard 48"
4.75"	6.75"

Electrical Input Requirements:
Commercial Regulated Power Supply
Voltage: 24VDC ± 10%
Current: 1.5 amps in-rush, 400mA static holding
Non-supervised inputs

PROVIDES SIMULTANEOUS ELECTRIC LATCH RETRACTION AND DOGGING (PUSH BAR DEPRESSED)

2 Conductor Wire Run	
Distance	Wire Gauge
100'	22
150'	20
200'	18
250'	16
300'	14
400'	12
500'	10

Installation:

1. Separate the mechanism case from the baseplate assembly.
2. Remove the mortise dogging assembly. If present, from the baseplate assembly and discard.
3. Attach the mounting posts off the 1550K-MDT kit to the baseplate assembly using the supplied screws and lockwashers. Through this holes that secured the mortise dogging assembly.
4. Attach the connecting link to the center link of the baseplate assembly using the supplied cleviz pin and retaining ring.
5. Attach the mechanism case to the baseplate assembly. Verify the flanges on the motor bracket are inserted with the baseplate assembly in the same mounting grooves of the mechanism case.
6. Install the rainstop into into the mechanism stepping tabs of the cover plate.
7. Attach the supplied ACP615 dogging screw to the LH (latch) side and RH (throw) side.

Do NOT remove any regulatory labels adhered to the device.

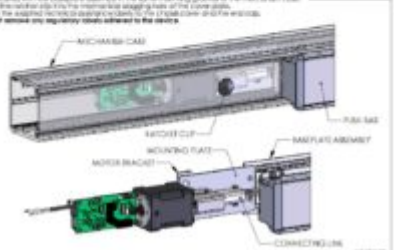

ELECTRIC EXIT DEVICE KIT INSTALLATION INSTRUCTIONS
MOTOR DRIVE ELECTRIC LATCH RETRACTION

1550K-MDT

THASE ENTERPRISE 8000 SERIES
HAGER 4500 AND 4600 SERIES
PDQ 6200 SERIES
STANLEY COMMERCIAL QED100 AND QED200 SERIES

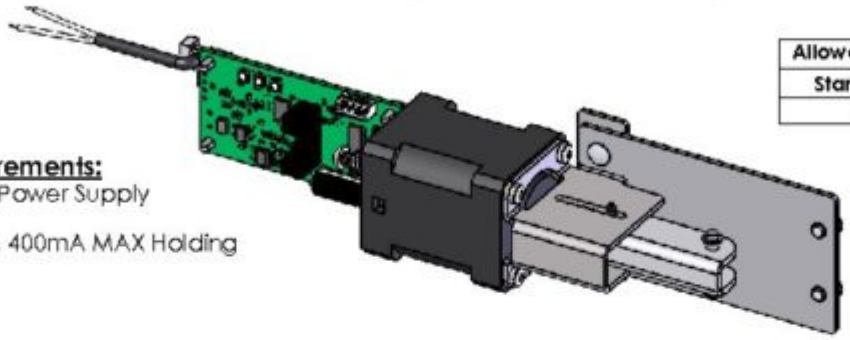

Allowable Cutoff From Device Length	
Standard 36"	Standard 48"
3.25"	9.75"

Electrical Input Requirements:
Filtered and Regulated Power Supply
Voltage: 24VDC ± 10%
Current: 1A MAX Inrush, 400mA MAX Holding
Non-polarized Leads

PROVIDES SIMULTANEOUS ELECTRIC LATCH RETRACTION AND DOGGING (PUSH BAR DEPRESSED)

Installation:

1. Separate the mechanism case from the baseplate assembly.
2. Remove the manual dogging assembly, if present, from the baseplate assembly and discard.
3. Attach the mounting plate of the 1550K-MDT Kit to the baseplate assembly using the supplied screws and lockwashers through the holes that secured the manual dogging assembly.
4. Attach the connecting link to the center link of the baseplate assembly using the supplied clevis pin and retaining rings.
5. Attach the mechanism case to the baseplate assembly. Verify the flanges on the motor bracket are located with the baseplate assembly in the same mounting grooves of the mechanism case.
6. Install the ratchet clip into the mechanical dogging hole of the cover plate.
7. Apply the supplied technical assistance labels to the chassis cover and the end cap.
   Do not remove any regulatory labels adhered to the device.

2-Conductor Wire Run	
Distance	Wire Gauge
70'	22
110'	20
180'	18
280'	16
450'	14
720'	12

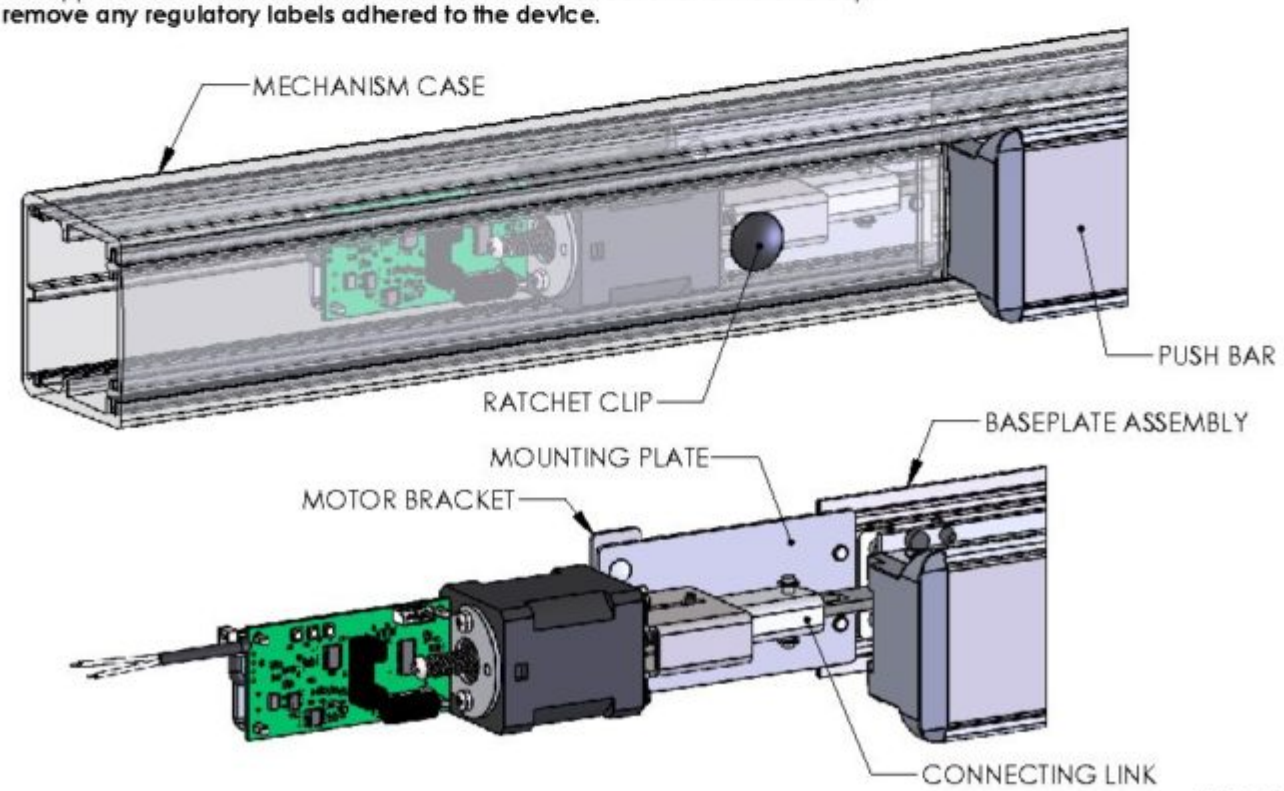

ELECTRIC EXIT DEVICE KIT INSTALLATION INSTRUCTIONS
MOTOR DRIVE ELECTRIC LATCH RETRACTION

1550K-MDT

THASE ENTERPRISE 8000 SERIES
HAGER 4500 AND 4600 SERIES
PDQ 6200 SERIES
STANLEY COMMERCIAL QED100 AND QED200 SERIES

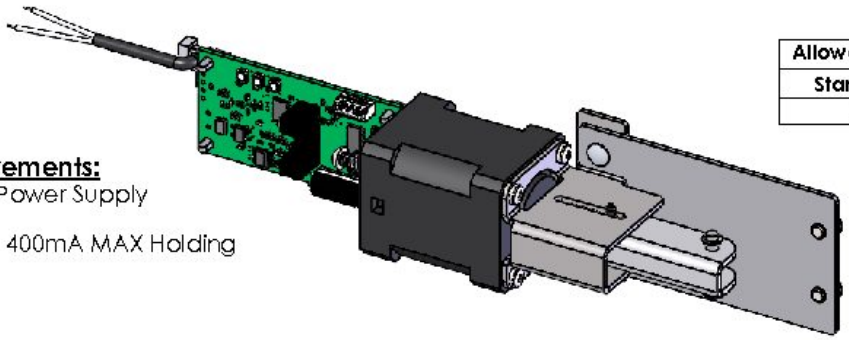

Allowable Cutoff From Device Length	
Standard 36"	Standard 48"
3.25"	9.75"

Electrical Input Requirements:
Filtered and Regulated Power Supply
Voltage: 24VDC ± 10%
Current: 1A MAX Inrush, 400mA MAX Holding
Non-polarized Leads

PROVIDES SIMULTANEOUS ELECTRIC LATCH RETRACTION AND DOGGING (PUSH BAR DEPRESSED)

Installation:

1. Separate the mechanism case from the baseplate assembly.
2. Remove the manual dogging assembly, if present, from the baseplate assembly and discard.
3. Attach the mounting plate of the 1550K-MDT Kit to the baseplate assembly using the supplied screws and lockwashers through the holes that secured the manual dogging assembly.
4. Attach the connecting link to the center link of the baseplate assembly using the supplied clevis pin and retaining rings.
5. Attach the mechanism case to the baseplate assembly. Verify the flanges on the motor bracket are located with the baseplate assembly in the same mounting grooves of the mechanism case.
6. Install the ratchet clip into the mechanical dogging hole of the cover plate.
7. Apply the supplied technical assistance labels to the chassis cover and the end cap.
   Do not remove any regulatory labels adhered to the device.

2-Conductor Wire Run	
Distance	Wire Gauge
70'	22
110'	20
180'	18
280'	16
450'	14
720'	12

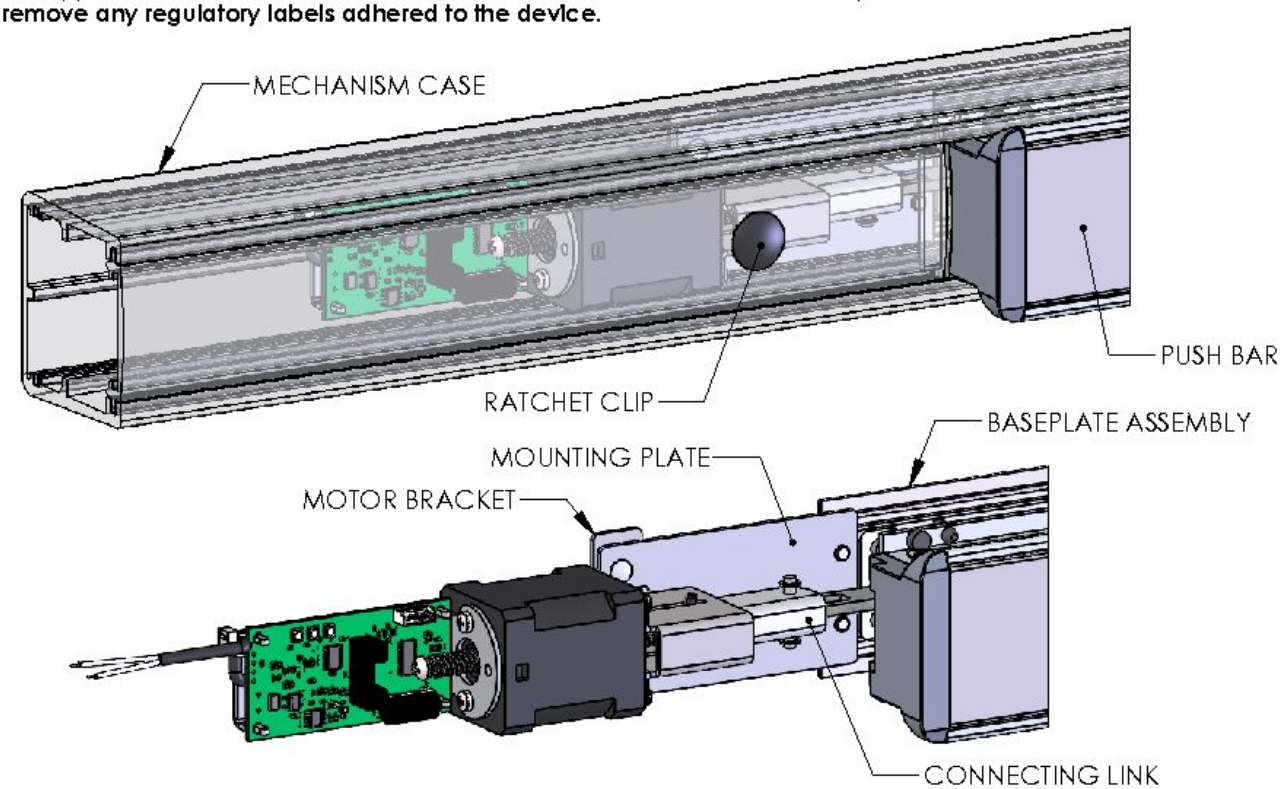

ELECTRIC EXIT DEVICE KIT INSTALLATION INSTRUCTIONS
MOTOR DRIVE ELECTRIC LATCH RETRACTION

1550K-MDT

THASE ENTERPRISE 8000 SERIES
HAGER 4500 AND 4600 SERIES
PDQ 6200 SERIES
STANLEY COMMERCIAL QED100 AND QED200 SERIES

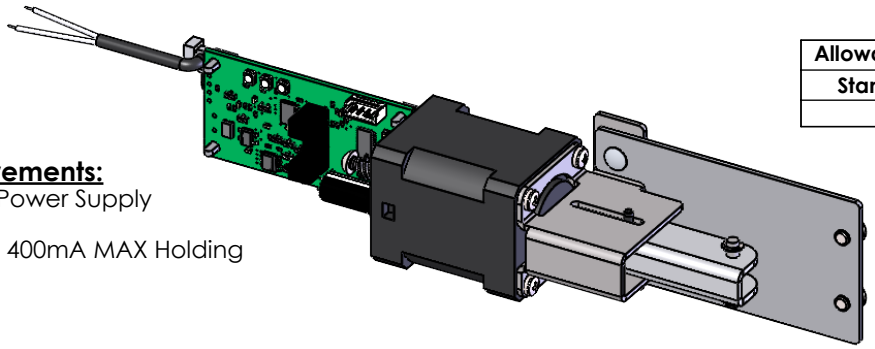

Allowable Cutoff From Device Length	
Standard 36"	**Standard 48"**
3.25"	9.75"

Electrical Input Requirements:
Filtered and Regulated Power Supply
Voltage: 24VDC ± 10%
Current: 1A MAX Inrush, 400mA MAX Holding
Non-polarized Leads

PROVIDES SIMULTANEOUS ELECTRIC LATCH RETRACTION AND DOGGING (PUSH BAR DEPRESSED)

Installation:

1. Separate the mechanism case from the baseplate assembly.
2. Remove the manual dogging assembly, if present, from the baseplate assembly and discard.
3. Attach the mounting plate of the 1550K-MDT Kit to the baseplate assembly using the supplied screws and lockwashers through the holes that secured the manual dogging assembly.
4. Attach the connecting link to the center link of the baseplate assembly using the supplied clevis pin and retaining rings.
5. Attach the mechanism case to the baseplate assembly. Verify the flanges on the motor bracket are located with the baseplate assembly in the same mounting grooves of the mechanism case.
6. Install the ratchet clip into the mechanical dogging hole of the cover plate.
7. Apply the supplied technical assistance labels to the chassis cover and the end cap.
   Do not remove any regulatory labels adhered to the device.

2-Conductor Wire Run	
Distance	**Wire Gauge**
70'	22
110'	20
180'	18
280'	16
450'	14
720'	12

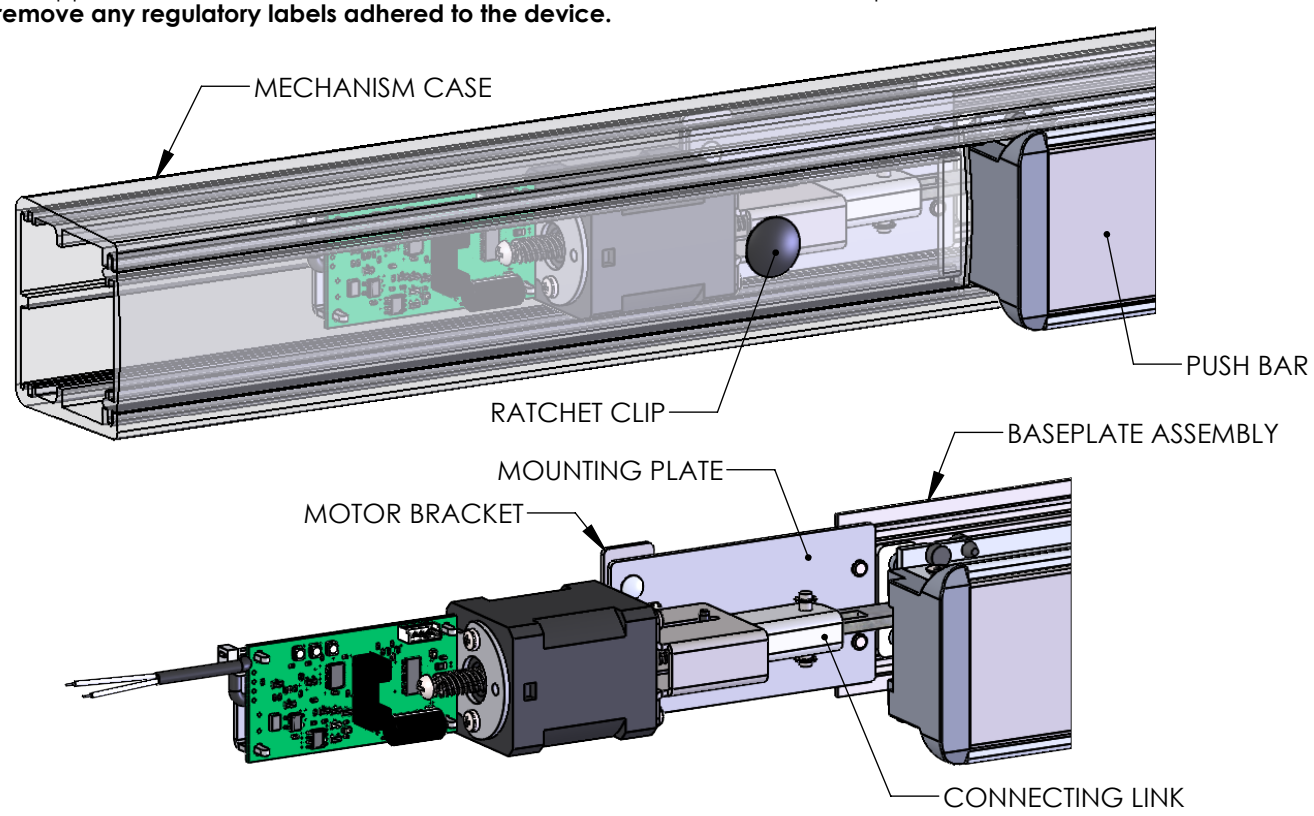

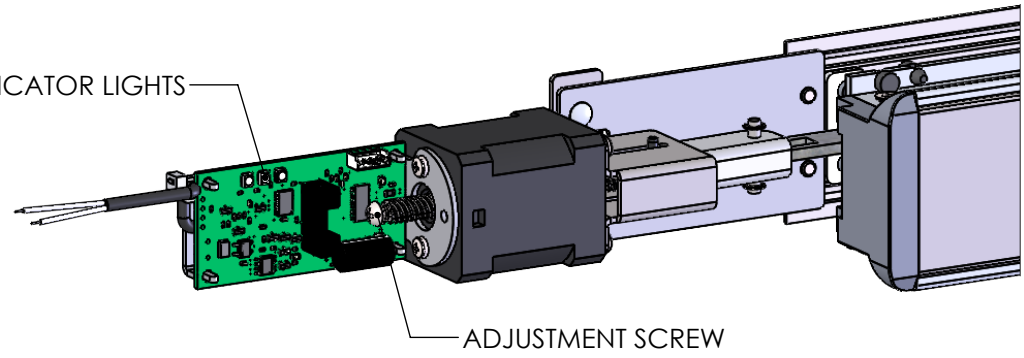

Motor Drive Electric Latch Retraction Adjustment:

1. Verify the device is properly adjusted for mechanical operation. Electric operation should not exceed the mechanical operation or there will be a high risk of damage to the device. **We suggest setting the latch retraction under electric operation at 1/16" less than the latch retraction under mechanical operation.**
2. Locate the adjustment screw in the rear of the motor assembly. Rotate the adjustment screw clockwise to increase the latch retraction or counterclockwise to decrease the latch retraction.

Onboard Indicator Light Assignments:

Maintain input power to the exit device and check the onboard indicator lights.
Remove input power before attempting a solution.

Green (Power)	Yellow (Sensor)	Red (Error)	Indication	Possible Solution
Off	Off	Off	No Power.	Connect the wiring between the power supply and the exit device.
On	On	Off	Normal Operation. The push bar is retracted to the dogged position and dogged; the latch is retracted by default. The device is allowed 2 attempts.	
On	Off	On	Error in operation. The push bar did not retract to the dogged position within 2 attempts.	Rotate the adjustment screw counterclockwise to decrease the latch retraction.
On	On	On	Error in operation. Without power being removed, the push bar went from being dogged to unintentionally being extended, and then the push bar did not retract to the dogged position within 2 attempts.	Clear the jam condition manually.
On	Blink	On	Error in operation. The push bar did not extend from the dogged position when the power was last removed. The device will not attempt a retraction.	Clear the jam condition manually.
On	Simultaneous Blink		Error in operation. The input voltage dropped below the specification during operation.	Decrease the wire run or increase the wire gauge.
On	Alternating Blink		Error in operation. An electronics fault was detected.	An electronics replacement is required.

ELECTRIC EXIT DEVICE KIT INSTALLATION INSTRUCTIONS
MOTOR DRIVE ELECTRIC LATCH RETRACTION

1550K-MDS

SARGENT 80 SERIES
ARROW 1000, 3000 AND 4000 SERIES

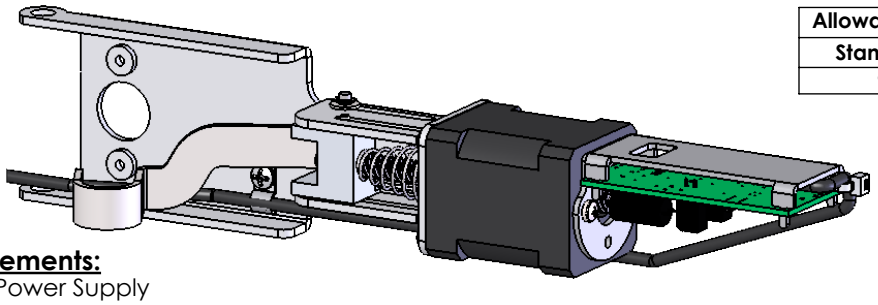

Allowable Cutoff From Device Length	
Standard 36"	**Standard 48"**
9.00"	12.00"

Electrical Input Requirements:
Filtered and Regulated Power Supply
Voltage: 24VDC ± 10%
Current: 1A MAX Inrush, 400mA MAX Holding
Non-polarized Leads

PROVIDES SIMULTANEOUS ELECTRIC LATCH RETRACTION AND DOGGING (TOUCH BAR DEPRESSED)

Installation:
1. Separate the mounting rail from the touch bar assembly.
2. Remove and discard the connecting arm bumper from both the front and rear connecting arm assemblies.
3. Remove and discard the connecting arm bracket from the rear connecting arm assembly.
4. Separate the manual dogging assembly, if present, from the touch bar assembly.
5. Locate the 1550K-MDS Kit near the rear connecting arm assembly.
6. Attach the connecting link to the rear connecting arm assembly.
7. Attach the motor bracket to the rear connecting arm assembly.
8. Attach the manual dogging assembly, if present, to the touch bar assembly.

2-Conductor Wire Run	
Distance	**Wire Gauge**
70'	22
110'	20
180'	18
280'	16
450'	14
720'	12

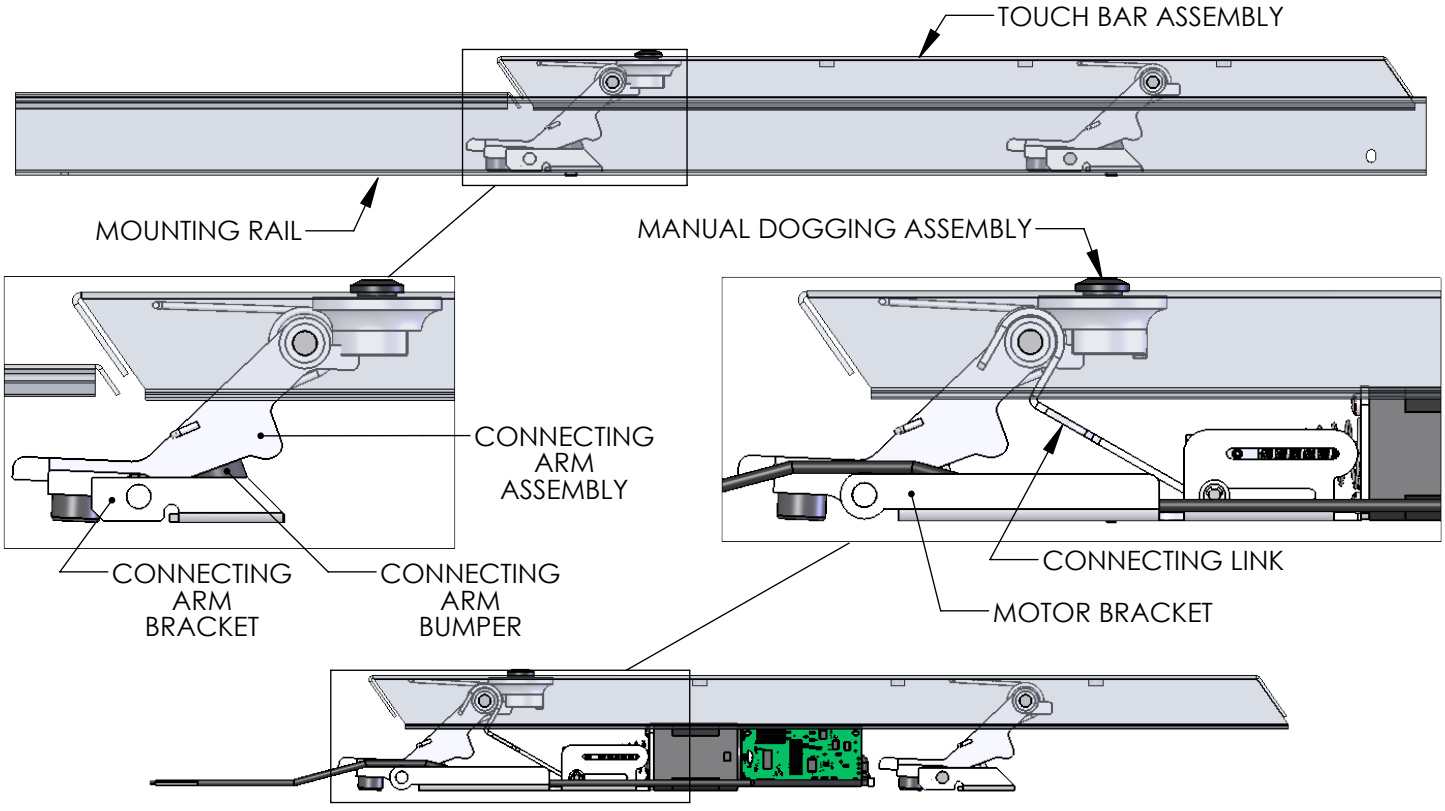

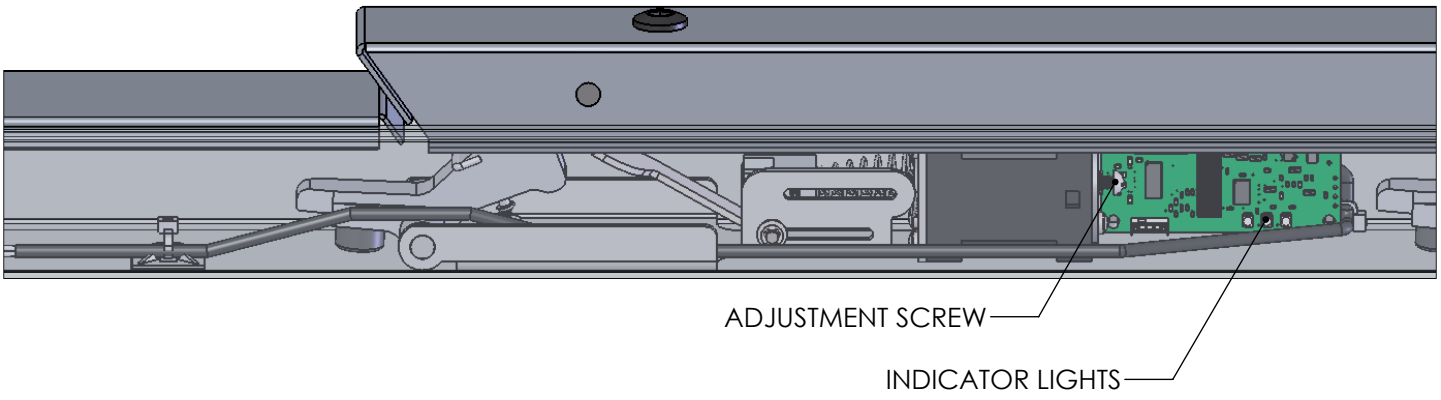

Installation (Cont.):

9. Route the lead wires over the rear connecting arm assembly.
10. Attach the mounting rail to the touch bar assembly.
11. Secure the lead wires to the inside of the mounting rail using the supplied ty-wrap mount and ty-wrap.
12. Apply the supplied technical assistance labels to the chassis cover and the end cap.
    Do not remove any regulatory labels adhered to the device.

Motor Drive Electric Latch Retraction Adjustment:

1. Verify the device is properly adjusted for mechanical operation. Electric operation should not exceed the mechanical operation or there will be a high risk of damage to the device. **We suggest setting the latch retraction under electric operation at 1/16" less than the latch retraction under mechanical operation.**
2. Locate the adjustment screw in the rear of the motor assembly. Rotate the adjustment screw clockwise to increase the latch retraction or counterclockwise to decrease the latch retraction.

Onboard Indicator Light Assignments:

Maintain input power to the exit device and check the onboard indicator lights.
Remove input power before attempting a solution.

Green (Power)	Yellow (Sensor)	Red (Error)	Indication	Possible Solution
Off	Off	Off	No Power.	Connect the wiring between the power supply and the exit device.
On	On	Off	Normal Operation. The touch bar is retracted to the dogged position and dogged; the latch is retracted by default. The device is allowed 2 attempts.	
On	Off	On	Error in operation. The touch bar did not retract to the dogged position within 2 attempts.	Rotate the adjustment screw counterclockwise to decrease the latch retraction.
On	On	On	Error in operation. Without power being removed, the touch bar went from being dogged to unintentionally being extended, and then the touch bar did not retract to the dogged position within 2 attempts.	Clear the jam condition manually.
On	Blink	On	Error in operation. The touch bar did not extend from the dogged position when the power was last removed. The device will not attempt a retraction.	Clear the jam condition manually.
On	Simultaneous Blink		Error in operation. The input voltage dropped below the specification during operation.	Decrease the wire run or increase the wire gauge.
On	Alternating Blink		Error in operation. An electronics fault was detected.	An electronics replacement is required.

ELECTRIC EXIT DEVICE KIT INSTALLATION INSTRUCTIONS
MOTOR DRIVE ELECTRIC LATCH RETRACTION

1550K-MDP
PRECISION 2000 AND 5000 SERIES

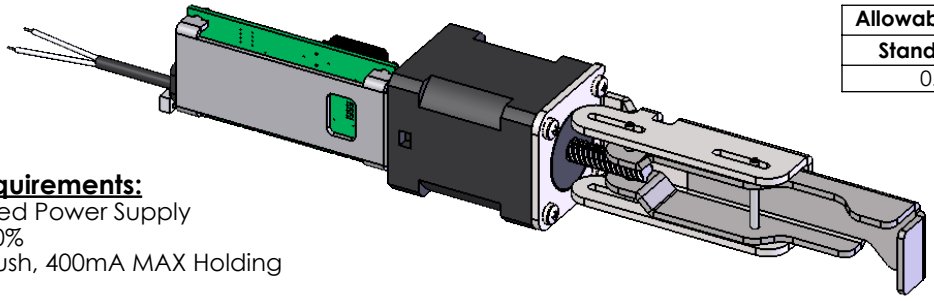

Allowable Cutoff From Device Length	
Standard 36"	**Standard 48"**
0.50"	8.50"

Electrical Input Requirements:
Filtered and Regulated Power Supply
Voltage: 24VDC ± 10%
Current: 1A MAX Inrush, 400mA MAX Holding
Non-polarized Leads

PROVIDES SIMULTANEOUS ELECTRIC LATCH RETRACTION AND DOGGING (TOUCHBAR DEPRESSED)

Installation:
1. Separate the device channel from the touchbar assembly.
2. Remove the manual dogging components, if present, from the touchbar assembly and discard.
3. Remove the manual dogging adjustment screw, if present, from the dogging bar and discard.
4. Attach the motor bracket of the 1550K-MDP Kit to the touchbar assembly using the supplied screws through the holes that secured the manual dogging components. Verify the flange of the connecting link is positioned forward of the dogging bar.
5. Attach the device channel to the touchbar assembly.
6. Install the ratchet clip into the mechanical dogging hole of the filler plate.
7. Apply the supplied technical assistance labels to the active case cover and the end cap cover. **Do not remove any regulatory labels adhered to the device.**

2-Conductor Wire Run	
Distance	**Wire Gauge**
70'	22
110'	20
180'	18
280'	16
450'	14
720'	12

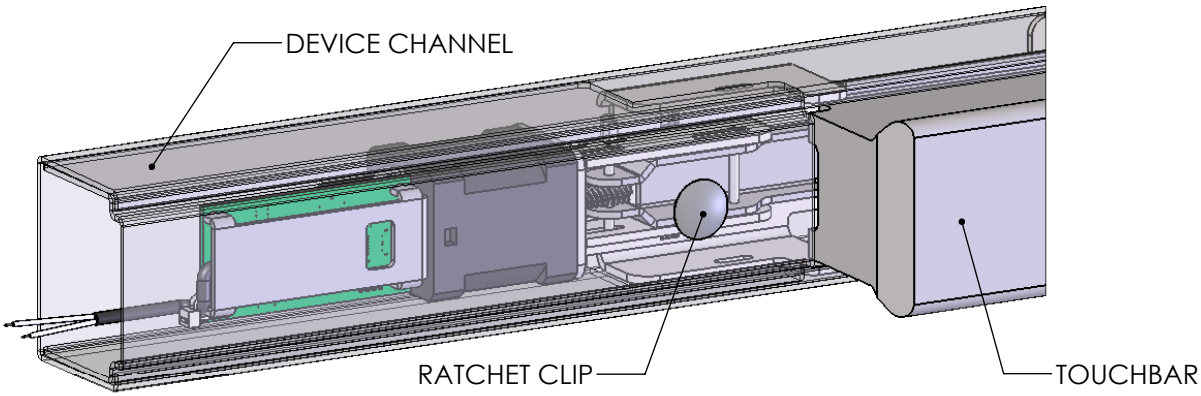

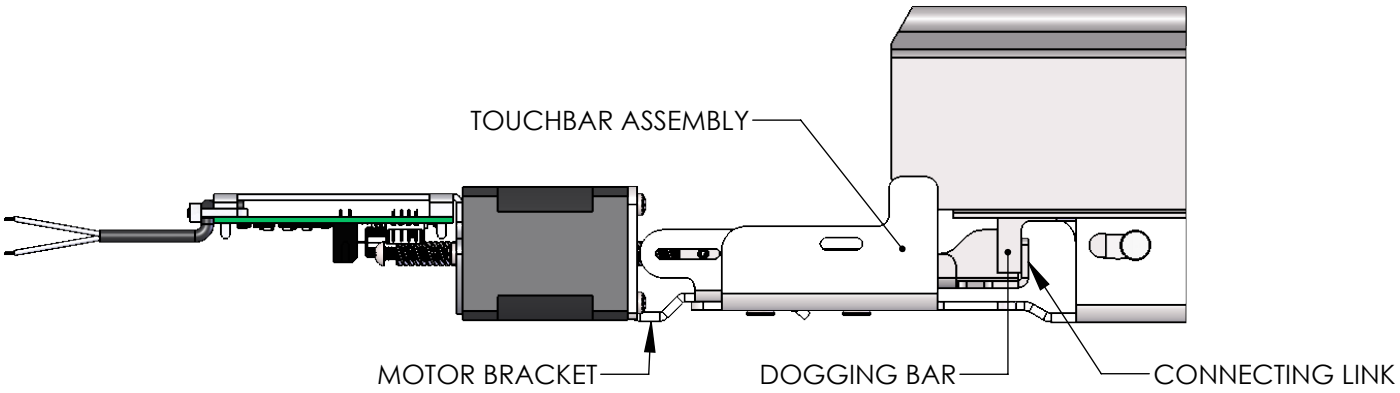

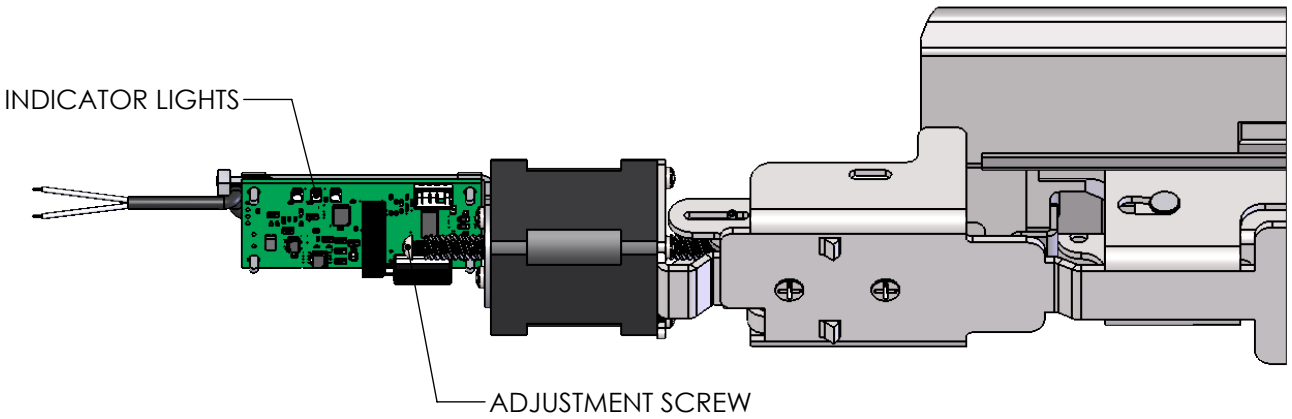

Motor Drive Electric Latch Retraction Adjustment:

1. Verify the device is properly adjusted for mechanical operation. Electric operation should not exceed the mechanical operation or there will be a high risk of damage to the device. **We suggest setting the latch retraction under electric operation at 1/16" less than the latch retraction under mechanical operation.**
2. Locate the adjustment screw in the rear of the motor assembly. Rotate the adjustment screw clockwise to increase the latch retraction or counterclockwise to decrease the latch retraction.

Onboard Indicator Light Assignments:

Maintain input power to the exit device and check the onboard indicator lights.
Remove input power before attempting a solution.

Green (Power)	Yellow (Sensor)	Red (Error)	Indication	Possible Solution
Off	Off	Off	No Power.	Connect the wiring between the power supply and the exit device.
On	On	Off	Normal Operation. The touchbar is retracted to the dogged position and dogged; the latch is retracted by default. The device is allowed 2 attempts.	
On	Off	On	Error in operation. The touchbar did not retract to the dogged position within 2 attempts.	Rotate the adjustment screw counterclockwise to decrease the latch retraction.
On	On	On	Error in operation. Without power being removed, the touchbar went from being dogged to unintentionally being extended, and then the touchbar did not retract to the dogged position within 2 attempts.	Clear the jam condition manually.
On	Blink	On	Error in operation. The touchbar did not extend from the dogged position when the power was last removed. The device will not attempt a retraction.	Clear the jam condition manually.
On	Simultaneous Blink		Error in operation. The input voltage dropped below the specification during operation.	Decrease the wire run or increase the wire gauge.
On	Alternating Blink		Error in operation. An electronics fault was detected.	An electronics replacement is required.

ELECTRIC EXIT DEVICE KIT INSTALLATION INSTRUCTIONS
MOTOR DRIVE ELECTRIC LATCH RETRACTION

1550K-MDV22
VON DUPRIN 22 SERIES

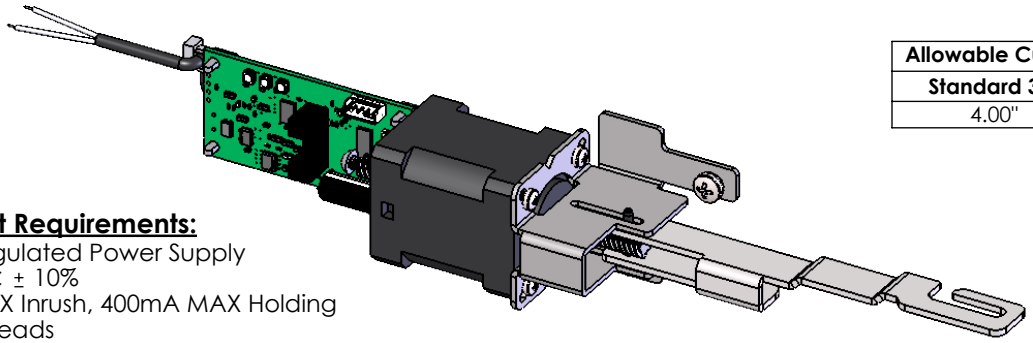

Allowable Cutoff From Device Length	
Standard 36"	**Standard 48"**
4.00"	10.00"

Electrical Input Requirements:
Filtered and Regulated Power Supply
Voltage: 24VDC ± 10%
Current: 1A MAX Inrush, 400mA MAX Holding
Non-polarized Leads

PROVIDES SIMULTANEOUS ELECTRIC LATCH RETRACTION AND DOGGING (PUSH BAR DEPRESSED)

Installation:
1. Separate the mechanism case from the baseplate assembly.
2. Separate the push bar from the baseplate assembly.
3. Remove the manual dogging assembly, if present, from the baseplate assembly and discard.
4. Locate the 1550K-MDV22 Kit near the holes that secured the manual dogging assembly.
5. Attach the connecting link to the rear mechanism of the baseplate assembly.
6. Attach the motor bracket to the baseplate assembly using the supplied screws and lockwashers through the holes that secured the manual dogging assembly.
7. Attach the push bar to the baseplate assembly.
8. Attach the mechanism case to the baseplate assembly.
9. Apply the supplied technical assistance labels to the center case cover and the end cap. **Do not remove any regulatory labels adhered to the device.**

2-Conductor Wire Run	
Distance	**Wire Gauge**
70'	22
110'	20
180'	18
280'	16
450'	14
720'	12

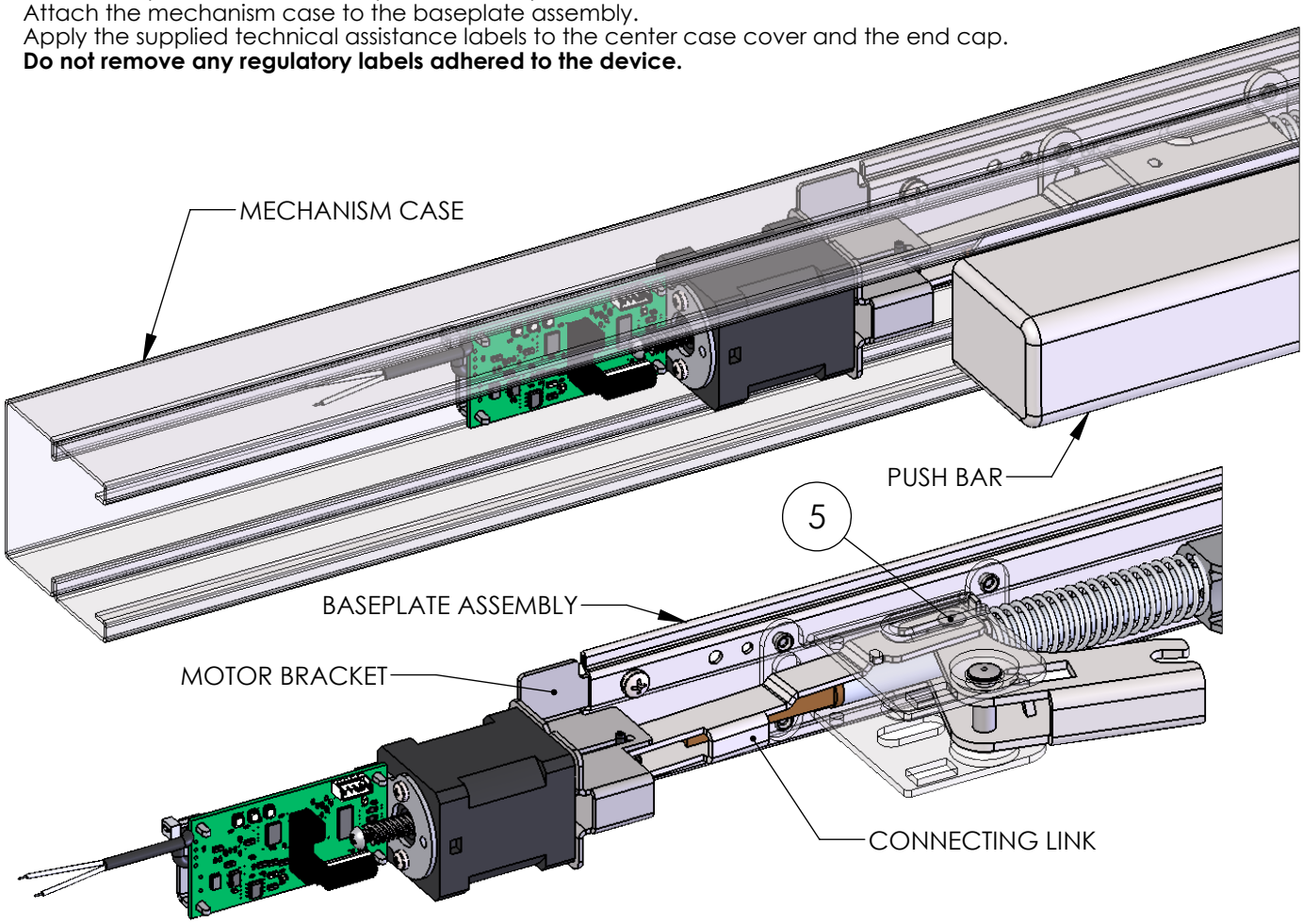

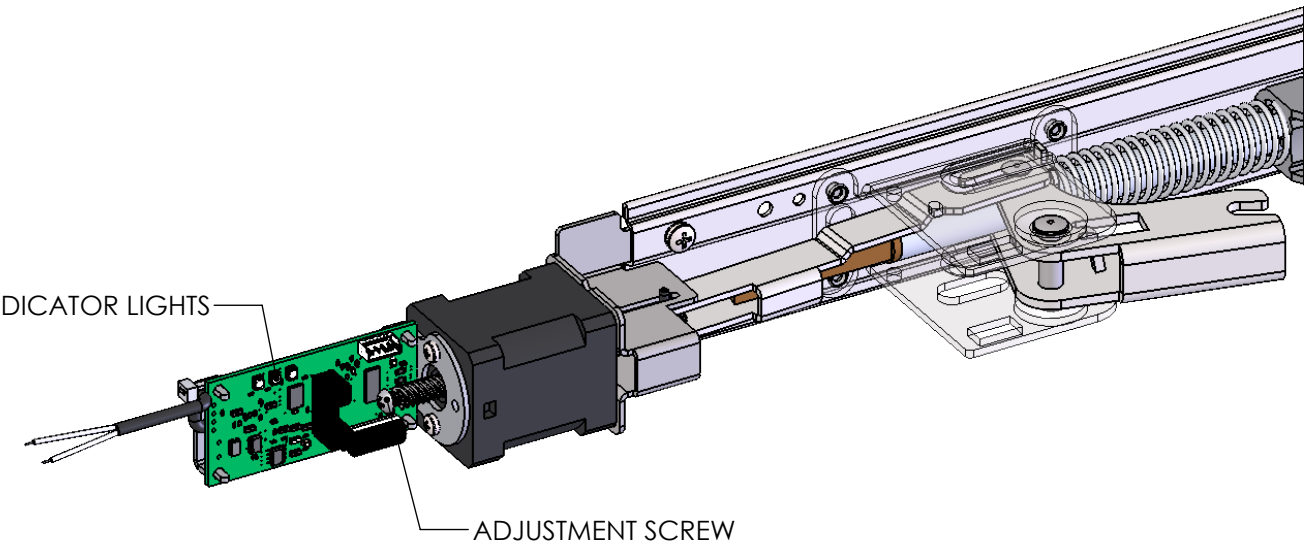

Motor Drive Electric Latch Retraction Adjustment:

1. Verify the device is properly adjusted for mechanical operation. Electric operation should not exceed the mechanical operation or there will be a high risk of damage to the device. **We suggest setting the latch retraction under electric operation at 1/16" less than the latch retraction under mechanical operation.**
2. Locate the adjustment screw in the rear of the motor assembly. Rotate the adjustment screw clockwise to increase the latch retraction or counterclockwise to decrease the latch retraction.

Onboard Indicator Light Assignments:

Maintain input power to the exit device and check the onboard indicator lights.
Remove input power before attempting a solution.

Green (Power)	Yellow (Sensor)	Red (Error)	Indication	Possible Solution
Off	Off	Off	No Power.	Connect the wiring between the power supply and the exit device.
On	On	Off	Normal Operation. The push bar is retracted to the dogged position and dogged; the latch is retracted by default. The device is allowed 2 attempts.	
On	Off	On	Error in operation. The push bar did not retract to the dogged position within 2 attempts.	Rotate the adjustment screw counterclockwise to decrease the latch retraction.
On	On	On	Error in operation. Without power being removed, the push bar went from being dogged to unintentionally being extended, and then the push bar did not retract to the dogged position within 2 attempts.	Clear the jam condition manually.
On	Blink	On	Error in operation. The push bar did not extend from the dogged position when the power was last removed. The device will not attempt a retraction.	Clear the jam condition manually.
On	Simultaneous Blink		Error in operation. The input voltage dropped below the specification during operation.	Decrease the wire run or increase the wire gauge.
On	Alternating Blink		Error in operation. An electronics fault was detected.	An electronics replacement is required.

ELECTRIC EXIT DEVICE KIT INSTALLATION INSTRUCTIONS
MOTOR DRIVE ELECTRIC LATCH RETRACTION

1550K-MDF
FALCON 24 AND 25 SERIES

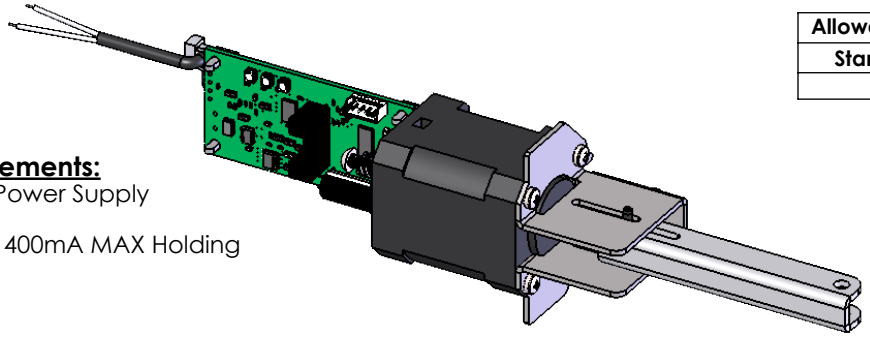

Allowable Cutoff From Device Length	
Standard 36"	**Standard 48"**
1.50"	7.50"

Electrical Input Requirements:
Filtered and Regulated Power Supply
Voltage: 24VDC ± 10%
Current: 1A MAX Inrush, 400mA MAX Holding
Non-polarized Leads

PROVIDES SIMULTANEOUS ELECTRIC LATCH RETRACTION AND DOGGING (PUSHBAR DEPRESSED)

Installation:
1. Separate the channel from the pushbar assembly.
2. Remove the manual dogging assembly, if present, from the pushbar assembly and discard.
3. Locate the 1550K-MDF Kit near the hole that secured the manual dogging assembly.
4. Attach the connecting link to the pin of the pushbar assembly.
5. Attach the motor bracket to the pushbar assembly using the supplied screw through the hole that secured the manual dogging assembly. Verify the tabs on the motor bracket are located in the cutout of the pushbar assembly.
6. Attach the channel to the pushbar assembly. Verify the flanges on the motor bracket are located between the mounting features of the channel.
7. Remove the manual dogging actuator assembly, if present, from the cover plate and discard.
8. Install the supplied hole plug into the manual dogging hole of the cover plate.
9. Attach the cover plate to the channel with the manual dogging hole biased to the end of the device.
10. Apply the supplied technical assistance labels to the center case cover and the channel end cap. **Do not remove any regulatory labels adhered to the device.**

2-Conductor Wire Run	
Distance	**Wire Gauge**
70'	22
110'	20
180'	18
280'	16
450'	14
720'	12

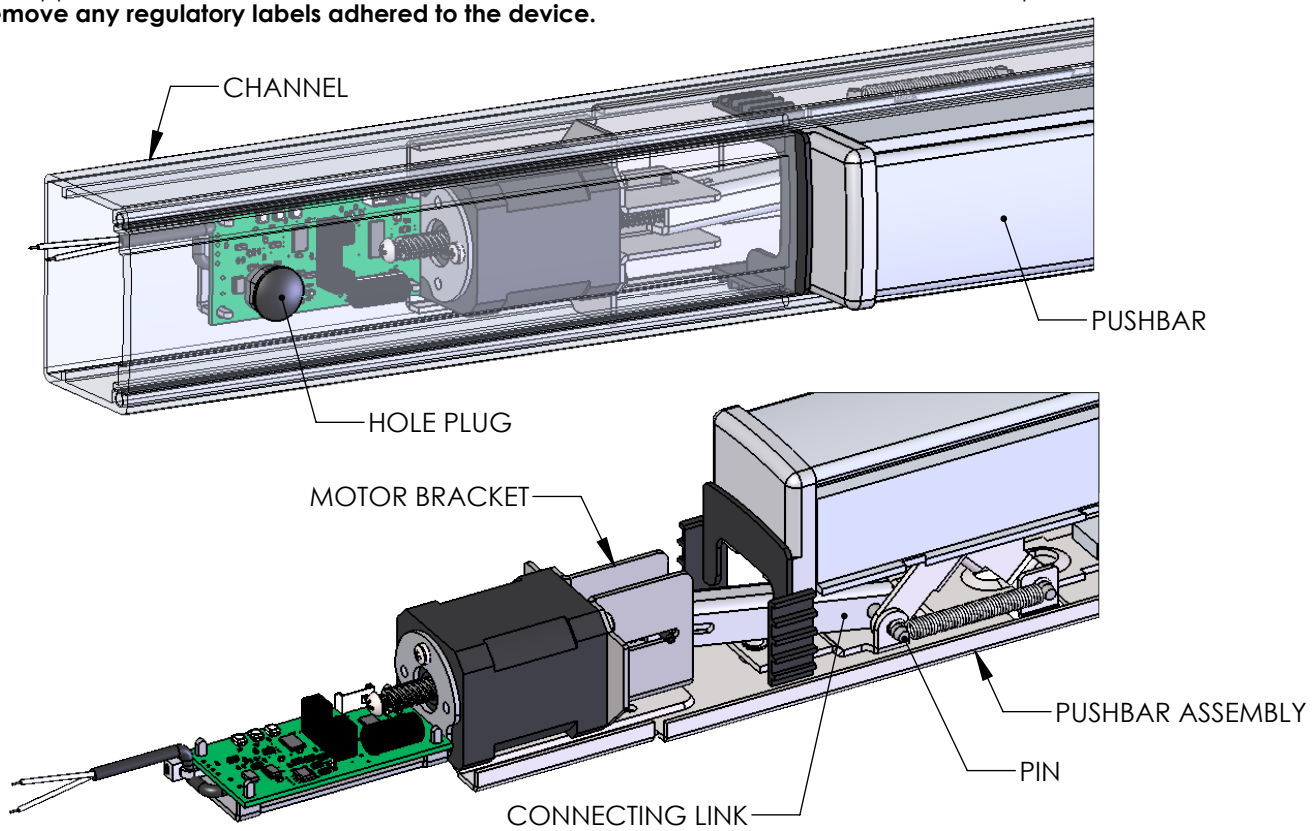

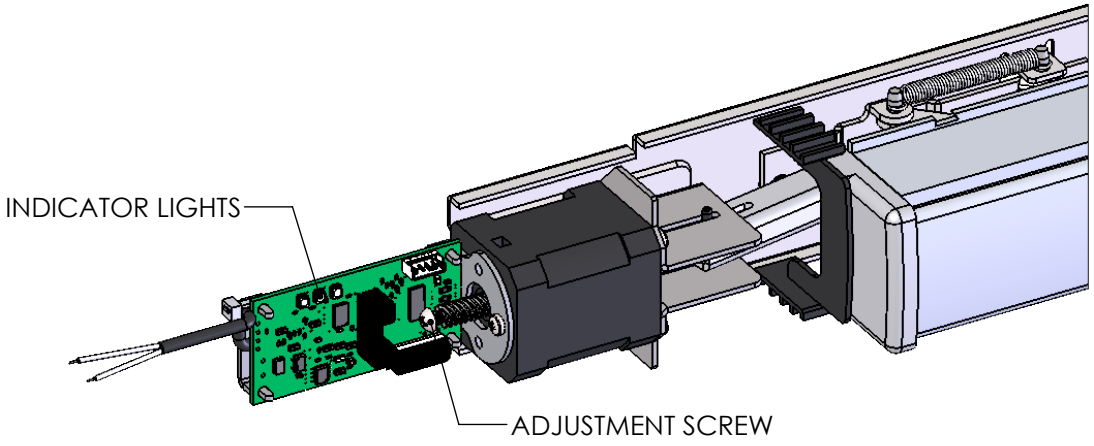

Motor Drive Electric Latch Retraction Adjustment:

1. Verify the device is properly adjusted for mechanical operation. Electric operation should not exceed the mechanical operation or there will be a high risk of damage to the device. **We suggest setting the latch retraction under electric operation at 1/16" less than the latch retraction under mechanical operation.**
2. Locate the adjustment screw in the rear of the motor assembly. Rotate the adjustment screw clockwise to increase the latch retraction or counterclockwise to decrease the latch retraction.

Onboard Indicator Light Assignments:

Maintain input power to the exit device and check the onboard indicator lights.
Remove input power before attempting a solution.

Green (Power)	Yellow (Sensor)	Red (Error)	Indication	Possible Solution
Off	Off	Off	No Power.	Connect the wiring between the power supply and the exit device.
On	On	Off	Normal Operation. The pushbar is retracted to the dogged position and dogged; the latch is retracted by default. The device is allowed 2 attempts.	
On	Off	On	Error in operation. The pushbar did not retract to the dogged position within 2 attempts.	Rotate the adjustment screw counterclockwise to decrease the latch retraction.
On	On	On	Error in operation. Without power being removed, the pushbar went from being dogged to unintentionally being extended, and then the pushbar did not retract to the dogged position within 2 attempts.	Clear the jam condition manually.
On	Blink	On	Error in operation. The pushbar did not extend from the dogged position when the power was last removed. The device will not attempt a retraction.	Clear the jam condition manually.
On	Simultaneous Blink		Error in operation. The input voltage dropped below the specification during operation.	Decrease the wire run or increase the wire gauge.
On	Alternating Blink		Error in operation. An electronics fault was detected.	An electronics replacement is required.

ELECTRIC EXIT DEVICE KIT INSTALLATION INSTRUCTIONS
AUTHORIZED EGRESS

K-129
FALCON 24 AND 25 SERIES

MONITORS THE USE OF THE PUSHBAR

Electrical Specifications:
SPDT Monitor Switch
Contacts Rated: 3A @ 125VAC
2A @ 30VDC

Wire Color Codes:
YELLOW - Common
RED - Normally Open
GRAY - Normally Closed

Installation:
1. Separate the channel from the pushbar assembly.
2. Remove the rear pin securing the pushbar assembly to the sub-plate and elevate the rear of the pushbar assembly.
3. Locate the K-129 Kit between the sub-plate and the pushbar assembly.
4. Lower the pushbar assembly back into position and replace the rear pin to secure the pushbar assembly to the sub-plate. Verify the tabs of the pushbar assembly linkage are between the tabs of the switch bracket.
5. Route the lead wires along the outside edge of the pushbar assembly.
6. Attach the channel to the pushbar assembly.
7. Secure the lead wires to the inside of the channel using the supplied ty-wrap mount and ty-wrap.

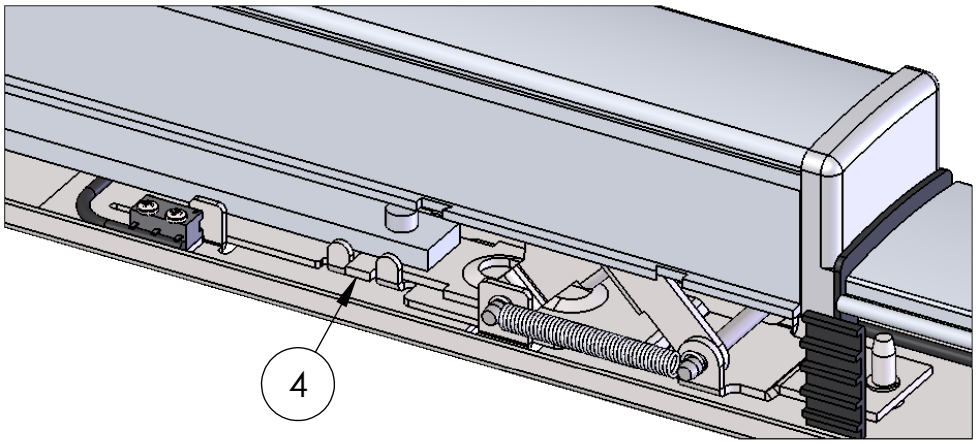

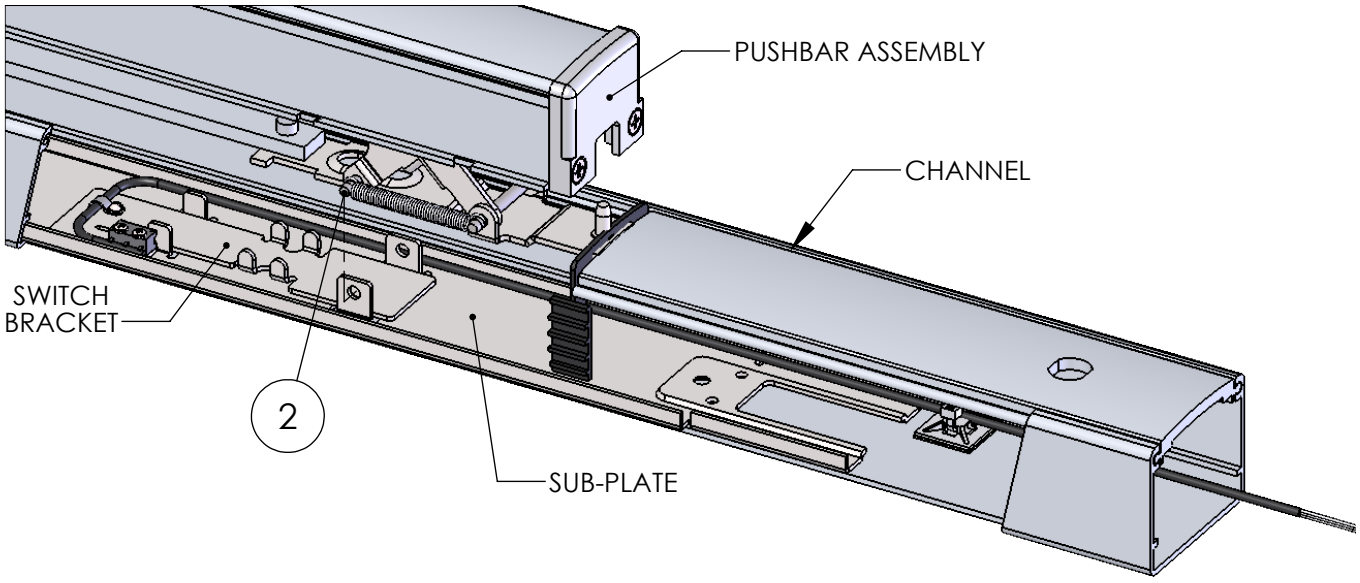

ELECTRIC EXIT DEVICE KIT INSTALLATION INSTRUCTIONS
AUTHORIZED EGRESS

K-130
JACKSON 20 SERIES

MONITORS THE USE OF THE TOUCH BAR

Electrical Specifications:
SPDT Monitor Switch
Contacts Rated: 3A @ 125VAC
2A @ 30VDC

Wire Color Codes:
YELLOW - Common
RED - Normally Open
GRAY - Normally Closed

Installation:
1. Separate the touch bar cover from the touch bar assembly.
2. Separate the touch bar assembly from the mechanism housing at the front and rear mechanism housing mounts.
3. Remove the rear touch bar mount from the touch bar assembly.
4. Locate the K-130 Kit between the rear touch bar mount and the touch bar assembly.
5. Attach the rear touch bar mount to the touch bar assembly. Verify the switch bracket is not prohibiting the rear touch bar mount from being secured flush to the touch bar assembly.
6. Route the lead wires along the side opposite of the dogging assembly location.
7. Secure the lead wires to the inside of the touch bar assembly using the supplied ty-wrap mount and ty-wrap.
8. Attach the touch bar assembly to the mechanism housing at the front and rear mechanism housing mounts.
9. Attach the touch bar cover to the touch bar assembly.
10. Drill a 1/4" diameter hole through the end cap for wire access from the access control system to the exit device.

RIGHT HAND REVERSE DEVICE SHOWN

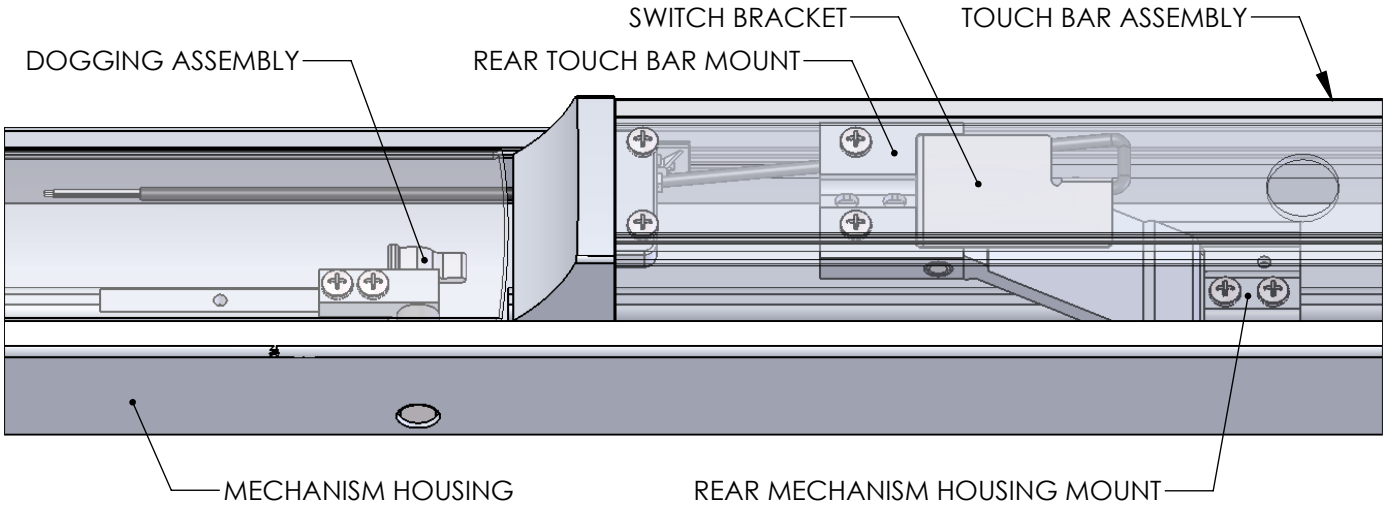

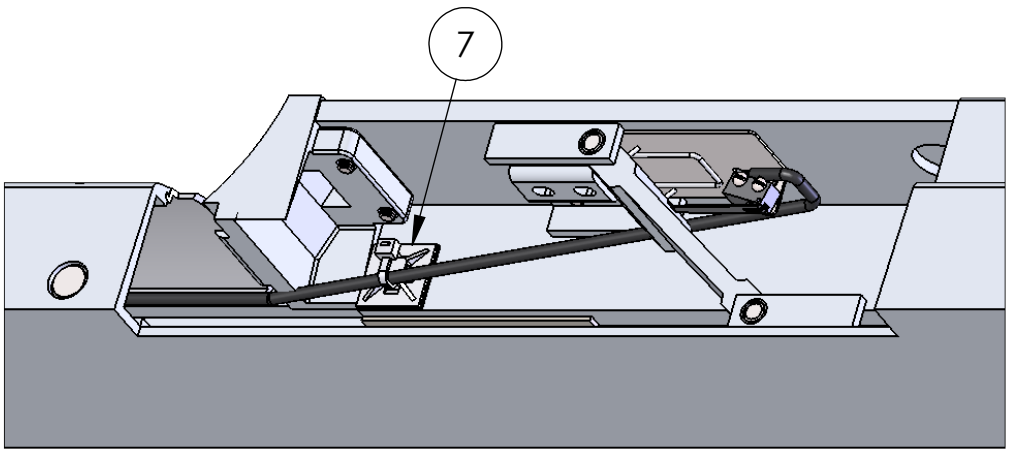

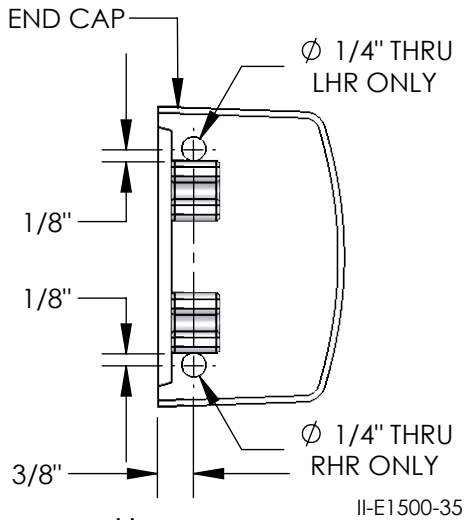

ELECTRIC EXIT DEVICE OPERATING INSTRUCTIONS
MOTOR DRIVE ELECTRIC LATCH RETRACTION

1550-MDJ
JACKSON 20 SERIES

PROVIDES SIMULTANEOUS ELECTRIC LATCH RETRACTION AND DOGGING (TOUCH BAR DEPRESSED)

Electrical Input Requirements:
Filtered and Regulated Power Supply
Voltage: 24VDC ± 10%
Current: 1A MAX Inrush, 400mA MAX Holding
Non-polarized Leads

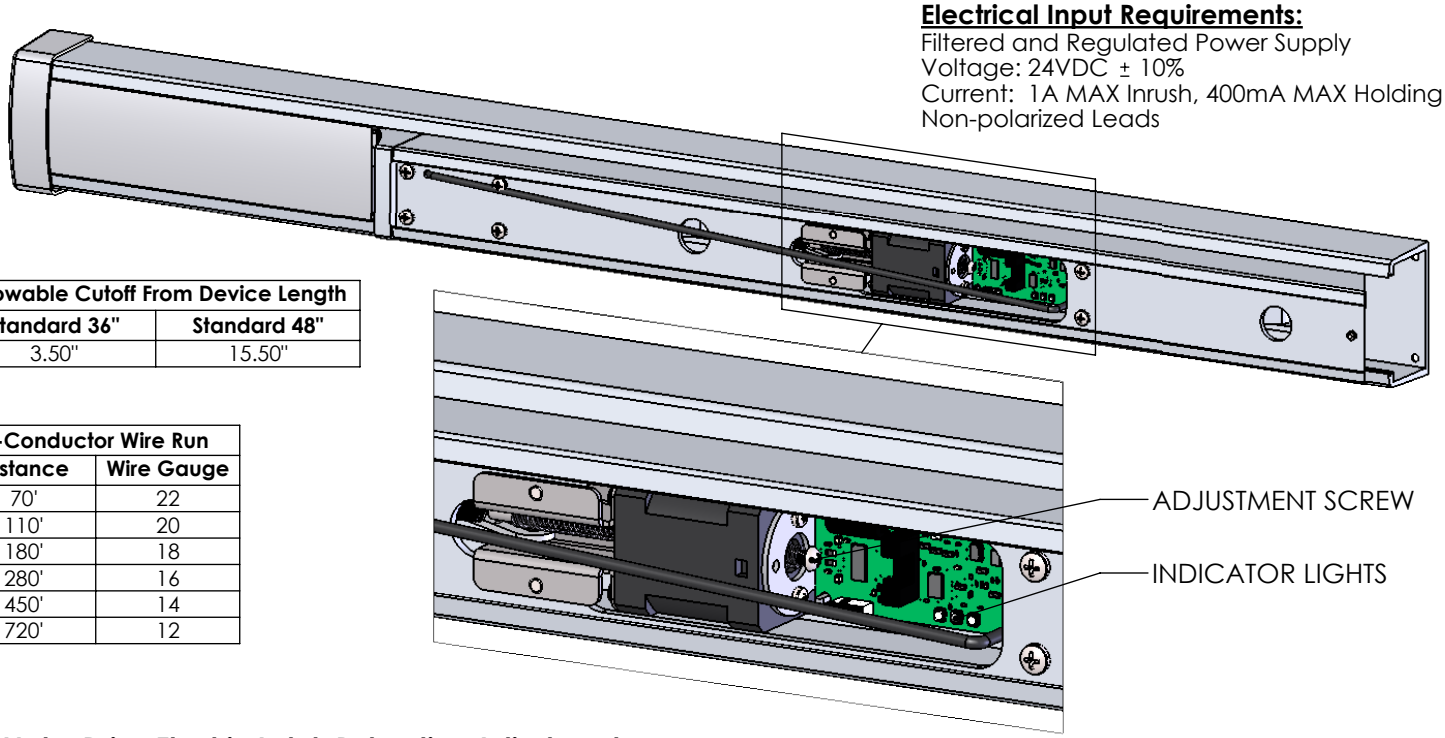

Allowable Cutoff From Device Length	
Standard 36"	**Standard 48"**
3.50"	15.50"

2-Conductor Wire Run	
Distance	**Wire Gauge**
70'	22
110'	20
180'	18
280'	16
450'	14
720'	12

Motor Drive Electric Latch Retraction Adjustment:

1. Verify the device is properly adjusted for mechanical operation. Electric operation should not exceed the mechanical operation or there will be a high risk of damage to the device. **We suggest setting the latch retraction under electric operation at 1/16" less than the latch retraction under mechanical operation.**
2. Locate the adjustment screw in the rear of the motor assembly. Rotate the adjustment screw clockwise to increase the latch retraction or counterclockwise to decrease the latch retraction.

Onboard Indicator Light Assignments:

Maintain input power to the exit device and check the onboard indicator lights.
Remove input power before attempting a solution.

Green (Power)	Yellow (Sensor)	Red (Error)	Indication	Possible Solution
Off	Off	Off	No Power.	Connect the wiring between the power supply and the exit device.
On	On	Off	Normal Operation. The touch bar is retracted to the dogged position and dogged; the latch is retracted by default. The device is allowed 2 attempts.	
On	Off	On	Error in operation. The touch bar did not retract to the dogged position within 2 attempts.	Rotate the adjustment screw counterclockwise to decrease the latch retraction.
On	On	On	Error in operation. Without power being removed, the touch bar went from being dogged to unintentionally being extended, and then the touch bar did not retract to the dogged position within 2 attempts.	Clear the jam condition manually.
On	Blink	On	Error in operation. The touch bar did not extend from the dogged position when the power was last removed. The device will not attempt a retraction.	Clear the jam condition manually.
On	Simultaneous Blink		Error in operation. The input voltage dropped below the specification during operation.	Decrease the wire run or increase the wire gauge.
On	Alternating Blink		Error in operation. An electronics fault was detected.	An electronics replacement is required.

ELECTRIC EXIT DEVICE OPERATING INSTRUCTIONS
MOTOR DRIVE ELECTRIC LATCH RETRACTION

1550-MDA
ADAMS RITE 3000 AND 8000 SERIES

PROVIDES SIMULTANEOUS ELECTRIC LATCH RETRACTION AND DOGGING (PUSH BAR DEPRESSED)

Electrical Input Requirements:
Filtered and Regulated Power Supply
Voltage: 24VDC ± 10%
Current: 1A MAX Inrush, 400mA MAX Holding
Non-polarized Leads

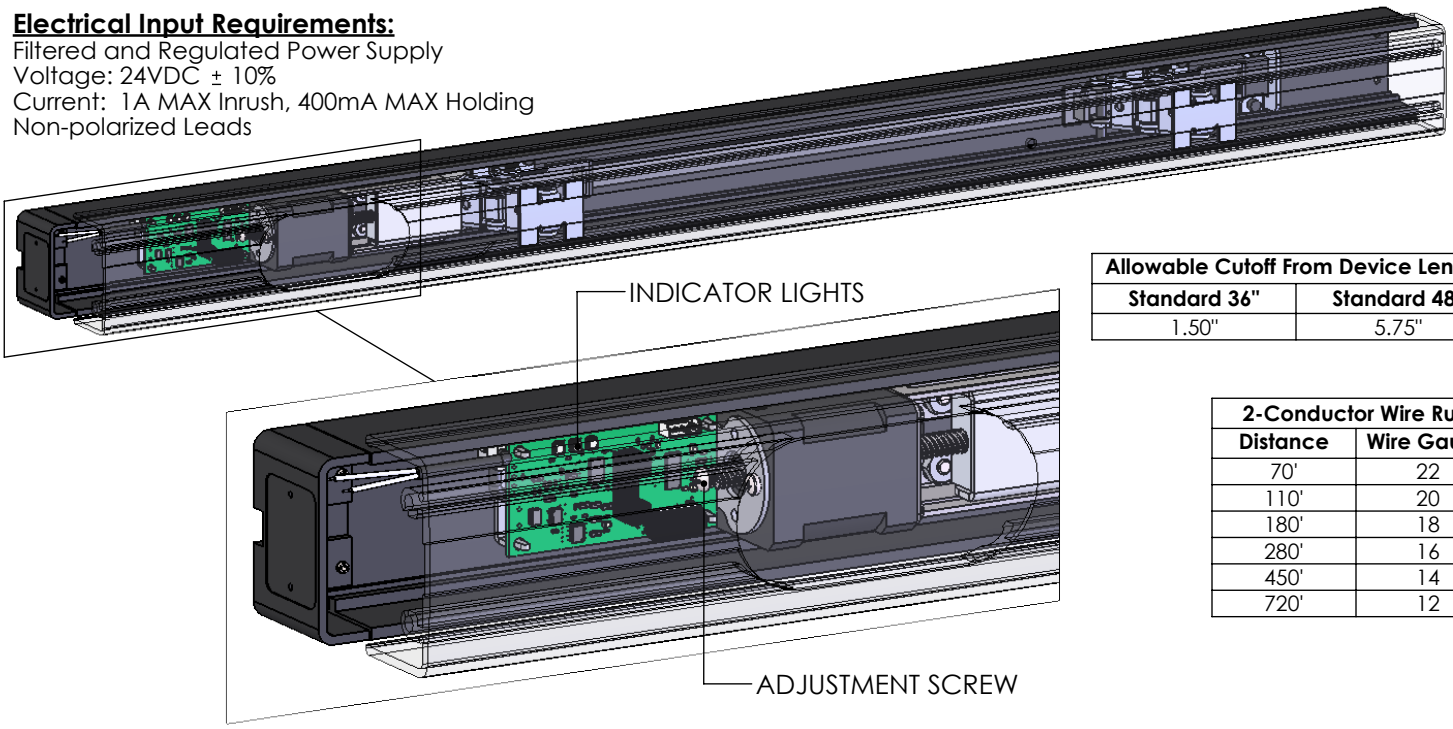

Allowable Cutoff From Device Length	
Standard 36"	**Standard 48"**
1.50"	5.75"

2-Conductor Wire Run	
Distance	**Wire Gauge**
70'	22
110'	20
180'	18
280'	16
450'	14
720'	12

Motor Drive Electric Latch Retraction Adjustment:

1. Verify the device is properly adjusted for mechanical operation. Electric operation should not exceed the mechanical operation or there will be a high risk of damage to the device. **We suggest setting the latch retraction under electric operation at 1/16" less than the latch retraction under mechanical operation.**
2. Locate the adjustment screw in the rear of the motor assembly. Rotate the adjustment screw clockwise to increase the latch retraction or counterclockwise to decrease the latch retraction.

Onboard Indicator Light Assignments:
Maintain input power to the exit device and check the onboard indicator lights.
Remove input power before attempting a solution.

Green (Power)	Yellow (Sensor)	Red (Error)	Indication	Possible Solution
Off	Off	Off	No Power.	Connect the wiring between the power supply and the exit device.
On	On	Off	Normal Operation. The push bar is retracted to the dogged position and dogged; the latch is retracted by default. The device is allowed 2 attempts.	
On	Off	On	Error in operation. The push bar did not retract to the dogged position within 2 attempts.	Rotate the adjustment screw counterclockwise to decrease the latch retraction.
On	On	On	Error in operation. Without power being removed, the push bar went from being dogged to unintentionally being extended, and then the push bar did not retract to the dogged position within 2 attempts.	Clear the jam condition manually.
On	Blink	On	Error in operation. The push bar did not extend from the dogged position when the power was last removed. The device will not attempt a retraction.	Clear the jam condition manually.
On	Simultaneous Blink		Error in operation. The input voltage dropped below the specification during operation.	Decrease the wire run or increase the wire gauge.
On	Alternating Blink		Error in operation. An electronics fault was detected.	An electronics replacement is required.

ELECTRIC EXIT DEVICE KIT INSTALLATION INSTRUCTIONS
AUTHORIZED EGRESS

K-106
ADAMS RITE 3000 AND 8000 SERIES

MONITORS THE USE OF THE PUSH BAR

Electrical Specifications:
SPDT Monitor Switch
Contacts Rated: 4A @ 250VAC

Wire Color Codes:
YELLOW - Common
RED - Normally Open
GRAY - Normally Closed

Installation:
1. Separate the push bar from the mounting bar assembly.
2. Locate the K-106 Kit near the rear push bar mechanism.
3. Rotate the switch plate clockwise to engage the upper mounting bar groove and slide toward the rear push bar mechanism. Verify the switch arm is positioned behind the center link flange.
4. Secure the switch plate to the mounting bar by tightening the set screws.
5. Route the lead wires along the side of the mounting bar, into the lower mounting bar groove, and under the pin.
6. Secure the lead wires to the mounting bar using the supplied ty-wrap mount and ty-wrap.
7. Attach the push bar to the mounting bar assembly.

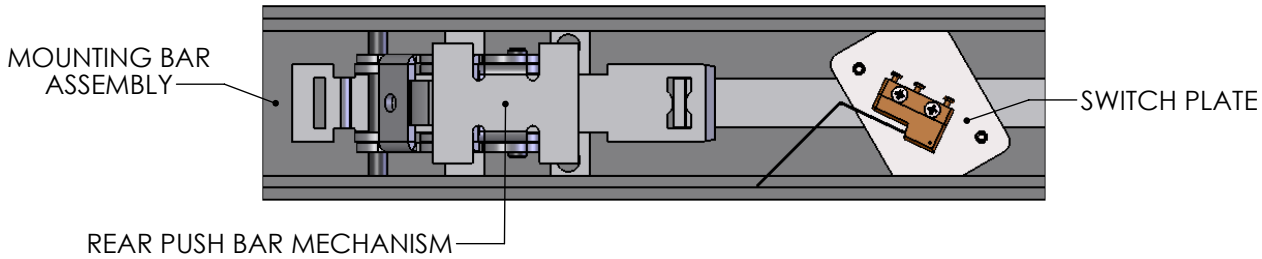

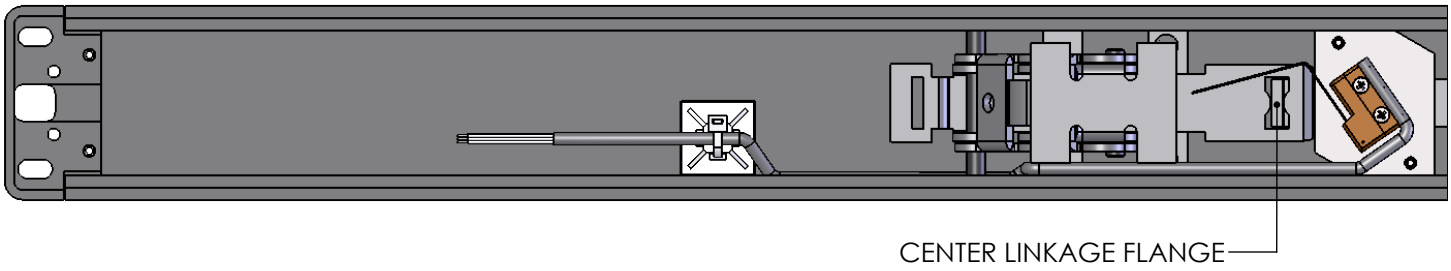

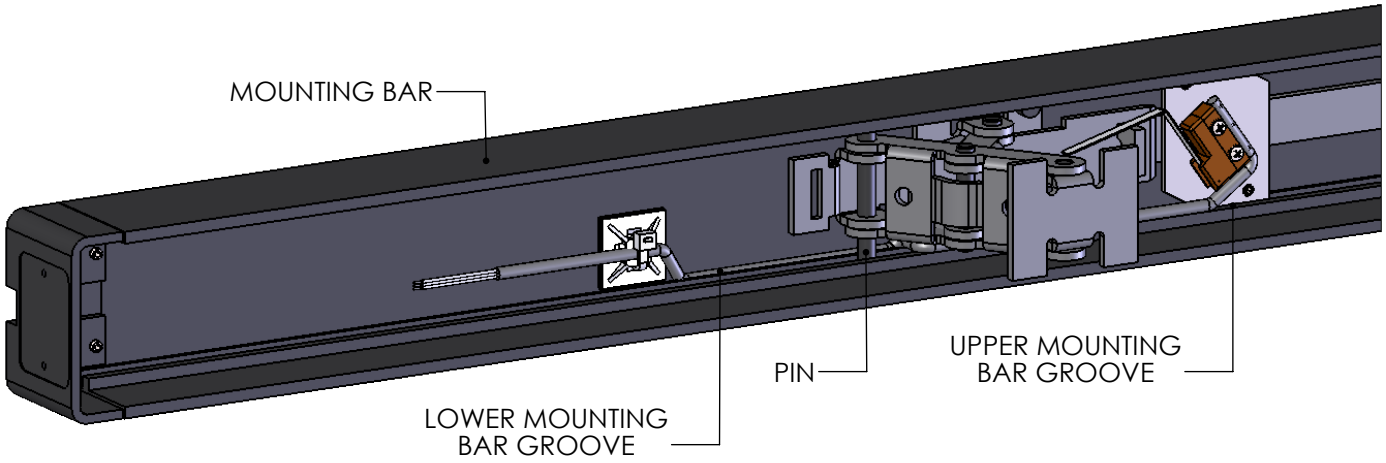



ELECTRIC EXIT DEVICE KIT INSTALLATION INSTRUCTIONS
MOTOR DRIVE ELECTRIC LATCH RETRACTION
1550K-MDH
DESIGN HARDWARE 1000 SERIES
MARKS USA M9900 SERIES



Electrical Input Requirements:
Mounted 40 Amp Motor Trigger
Voltage: 24VDC ± 10%
Current: 1A RMS Inputs, 400mA RMS Holding
Non-polarized Leads

PROVIDES SIMULTANEOUS ELECTRIC LATCH RETRACTION AND DOGGING (PUSH BAR DEPRESSED)

Installation:

1. Separate the mechanism case from the baseplate assembly.
2. Remove the manual dogging assembly, if present, from the baseplate assembly and discard.
3. Skip to step 11 installing to a 20" device or a 40" device with an 18" push bar.
4. Separate the push bar from the baseplate assembly by removing the lower push bar mounting pins.
5. Separate the front push bar and cap from the push bar.
6. Slide the push bar cover forward to replace the rear push bar and cap mounting screws.
7. Replace the rear push bar and cap mounting screws one at a time with the supplied screws to maintain the correct position of the end cap.
8. Attach the supplied connecting bracket with connecting pin installed using the supplied screws.
9. Slide the push bar cover back to the original position and attach the front push bar and cap to the push bar.
10. Attach the push bar to the baseplate assembly using the lower push bar mounting pins.
11. Locate the 1550K-MDH kit over the holes that secured the manual dogging assembly.
12. Attach the connecting pin to the installed connecting bracket and pull the 40" device with 24" push bar or the rear mechanism of the push bar for the 20" device or for the 40" device with 18" push bar.
13. Attach the motor trigger to the baseplate assembly using the supplied screws and terminals through the holes that secured the manual dogging assembly.
14. Attach the mechanism case to the baseplate assembly.
15. Insert the terminal clip into the mechanism dogging hole of the slide cover.
16. Apply the supplied terminal of appliance labels to the metal cover and the end cover.
Do not remove any regulatory labels adhered to the device.

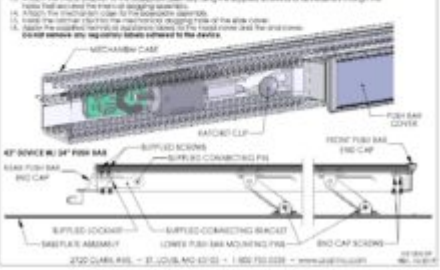

2720 CLARK AVE. • ST. LOUIS, MO 63103 • 1 800 753 0338 • www.usaphilco.com

ELECTRIC EXIT DEVICE KIT INSTALLATION INSTRUCTIONS
MOTOR DRIVE ELECTRIC LATCH RETRACTION
1550K-MDH
DESIGN HARDWARE 1000 SERIES
MARKS USA M9900 SERIES

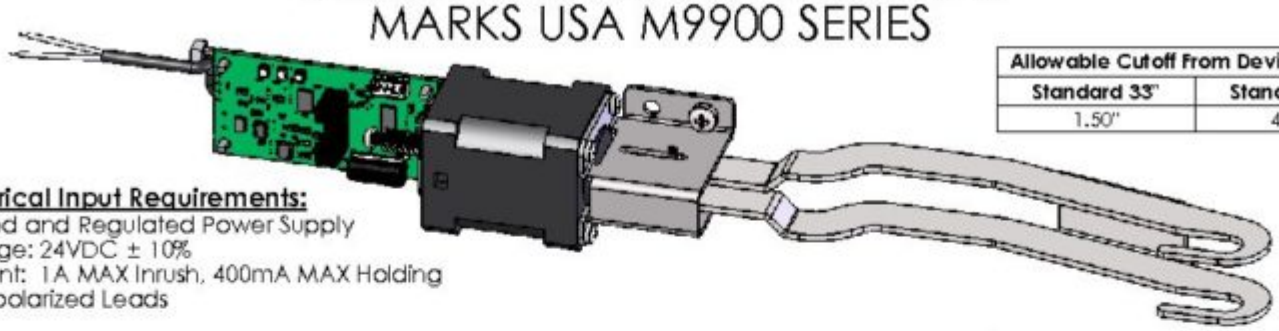

Allowable Cutoff From Device Length	
Standard 33"	Standard 42"
1.50"	4.25"

Electrical Input Requirements:
Filtered and Regulated Power Supply
Voltage: 24VDC ± 10%
Current: 1A MAX Inrush, 400mA MAX Holding
Non-polarized Leads

PROVIDES SIMULTANEOUS ELECTRIC LATCH RETRACTION AND DOGGING (PUSH BAR DEPRESSED)

2-Conductor Wire Run	
Distance	Wire Gauge
70'	22
110'	20
180'	18
280'	16
450'	14
720'	12

Installation:
1. Separate the mechanism case from the baseplate assembly.
2. Remove the manual dogging assembly, if present, from the baseplate assembly and discard.
3. Skip to step 11 if installing in a 33" device or a 42" device with an 18" push bar.
4. Separate the push bar from the baseplate assembly by removing the lower push bar mounting pins.
5. Separate the front push bar end cap from the push bar.
6. Slide the push bar cover forward to expose the rear push bar end cap mounting screws.
7. Replace the rear push bar end cap mounting screws one at a time with the supplied screws to maintain the correct position of the end cap.
8. Attach the supplied connecting bracket with connecting pin installed using the supplied locknut.
9. Slide the push bar cover back to the original position and attach the front push bar end cap to the push bar.
10. Attach the push bar to the baseplate assembly using the lower push bar mounting pins.
11. Locate the 1550K-MDH Kit near the holes that secured the manual dogging assembly.
12. Attach the connecting link to the installed connecting bracket and pin for the 42" device with 24" push bar or the rear mechanism of the push bar for the 33" device or for the 42" device with 18" push bar.
13. Attach the motor bracket to the baseplate assembly using the supplied screws and lockwashers through the holes that secured the manual dogging assembly.
14. Attach the mechanism case to the baseplate assembly.
15. Install the ratchet clip into the mechanical dogging hole of the slide cover.
16. Apply the supplied technical assistance labels to the head cover and the end cover.
Do not remove any regulatory labels adhered to the device.

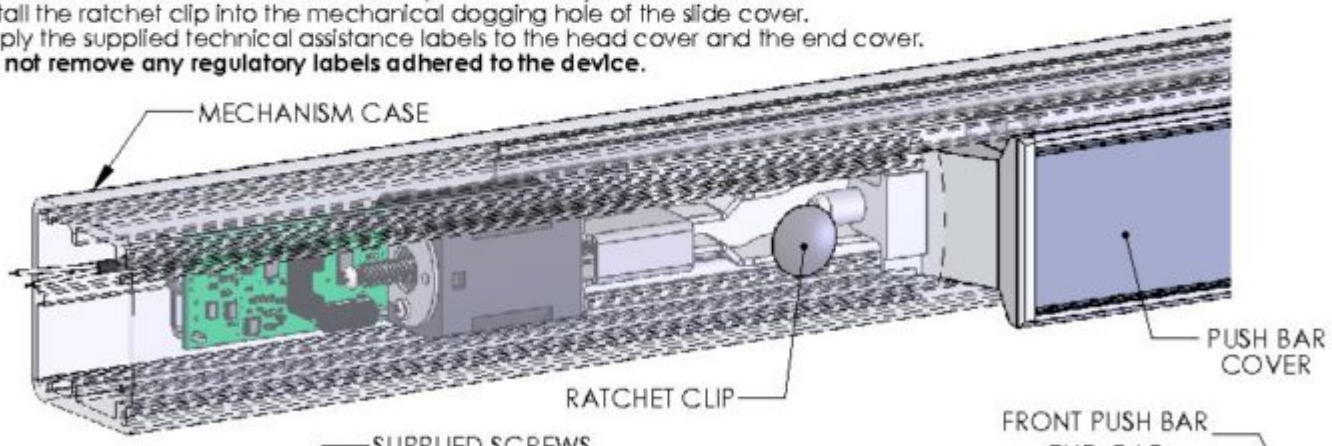

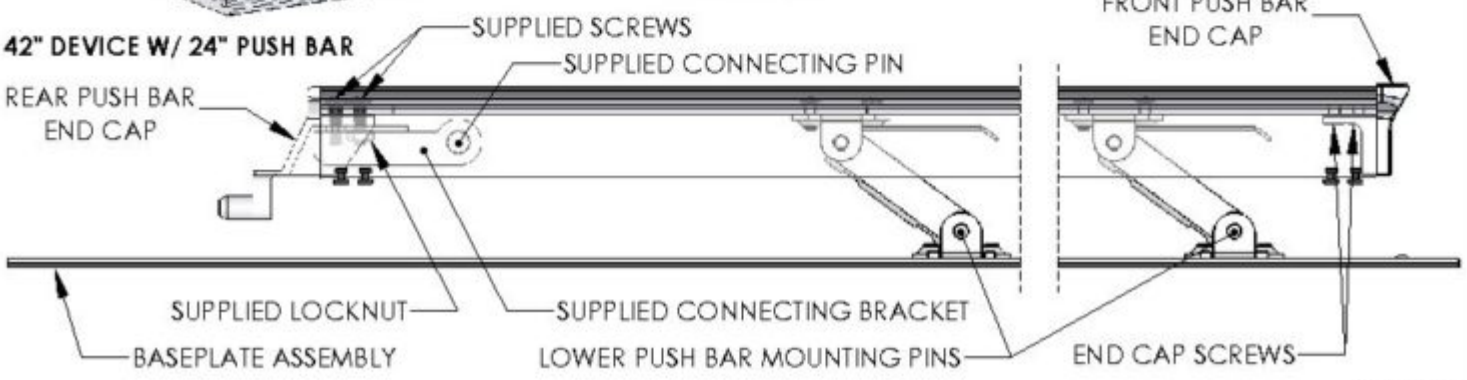

2720 CLARK AVE. ~ ST. LOUIS, MO 63103 ~ 1-800-753-5558 ~ www.acsi-inc.com
II-E1500-39
REV. 10/2019

ELECTRIC EXIT DEVICE KIT INSTALLATION INSTRUCTIONS
MOTOR DRIVE ELECTRIC LATCH RETRACTION
1550K-MDH
DESIGN HARDWARE 1000 SERIES
MARKS USA M9900 SERIES

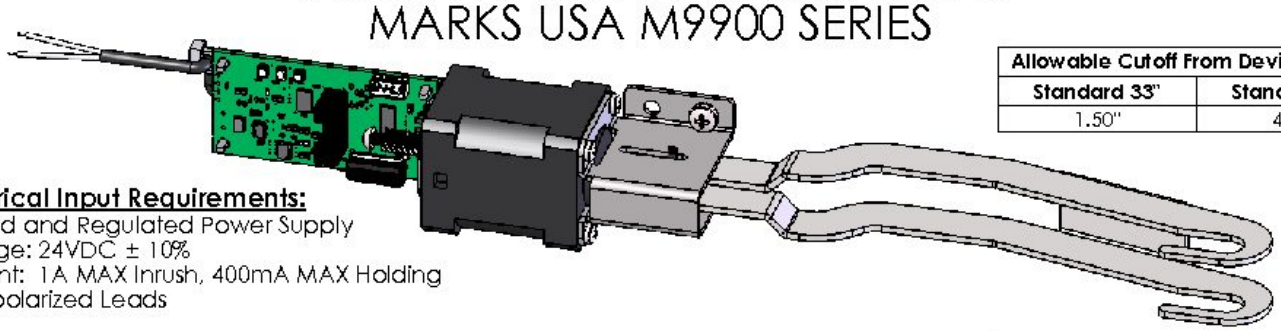

Allowable Cutoff From Device Length	
Standard 33"	Standard 42"
1.50"	4.25"

Electrical Input Requirements:
Filtered and Regulated Power Supply
Voltage: 24VDC ± 10%
Current: 1A MAX Inrush, 400mA MAX Holding
Non-polarized Leads

PROVIDES SIMULTANEOUS ELECTRIC LATCH RETRACTION AND DOGGING (PUSH BAR DEPRESSED)

2-Conductor Wire Run	
Distance	Wire Gauge
70'	22
110'	20
180'	18
280'	16
450'	14
720'	12

Installation:
1. Separate the mechanism case from the baseplate assembly.
2. Remove the manual dogging assembly, if present, from the baseplate assembly and discard.
3. Skip to step 11 if installing in a 33" device or a 42" device with an 18" push bar.
4. Separate the push bar from the baseplate assembly by removing the lower push bar mounting pins.
5. Separate the front push bar end cap from the push bar.
6. Slide the push bar cover forward to expose the rear push bar end cap mounting screws.
7. Replace the rear push bar end cap mounting screws one at a time with the supplied screws to maintain the correct position of the end cap.
8. Attach the supplied connecting bracket with connecting pin installed using the supplied locknut.
9. Slide the push bar cover back to the original position and attach the front push bar end cap to the push bar.
10. Attach the push bar to the baseplate assembly using the lower push bar mounting pins.
11. Locate the 1550K-MDH Kit near the holes that secured the manual dogging assembly.
12. Attach the connecting link to the installed connecting bracket and pin for the 42" device with 24" push bar or the rear mechanism of the push bar for the 33" device or for the 42" device with 18" push bar.
13. Attach the motor bracket to the baseplate assembly using the supplied screws and lockwashers through the holes that secured the manual dogging assembly.
14. Attach the mechanism case to the baseplate assembly.
15. Install the ratchet clip into the mechanical dogging hole of the slide cover.
16. Apply the supplied technical assistance labels to the head cover and the end cover.
    Do not remove any regulatory labels adhered to the device.

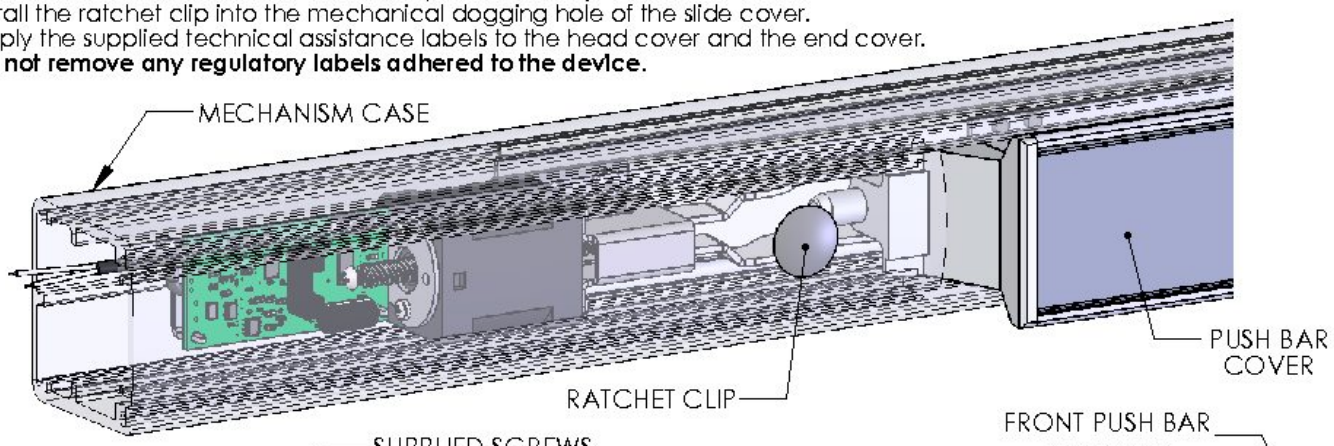

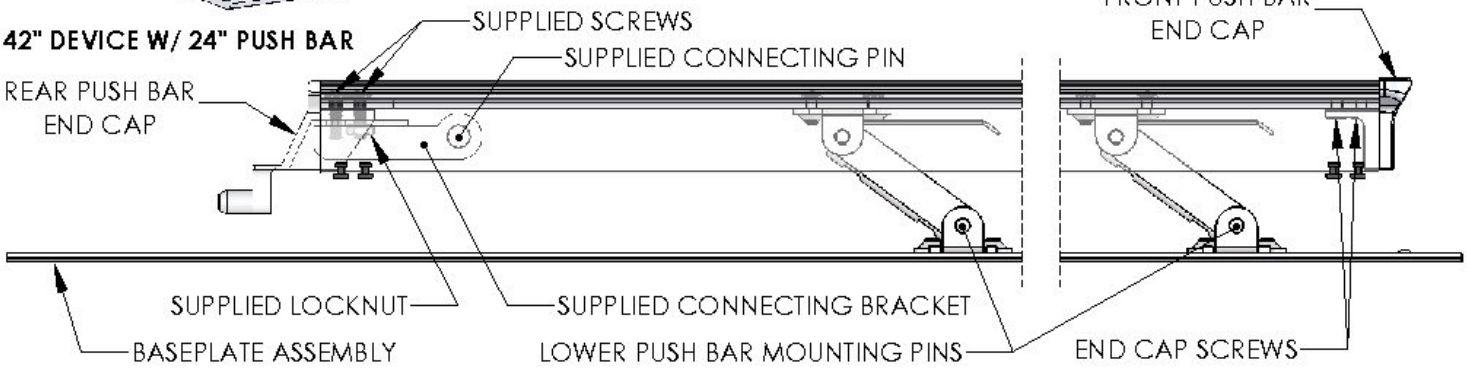

ELECTRIC EXIT DEVICE KIT INSTALLATION INSTRUCTIONS
MOTOR DRIVE ELECTRIC LATCH RETRACTION
1550K-MDH
DESIGN HARDWARE 1000 SERIES
MARKS USA M9900 SERIES

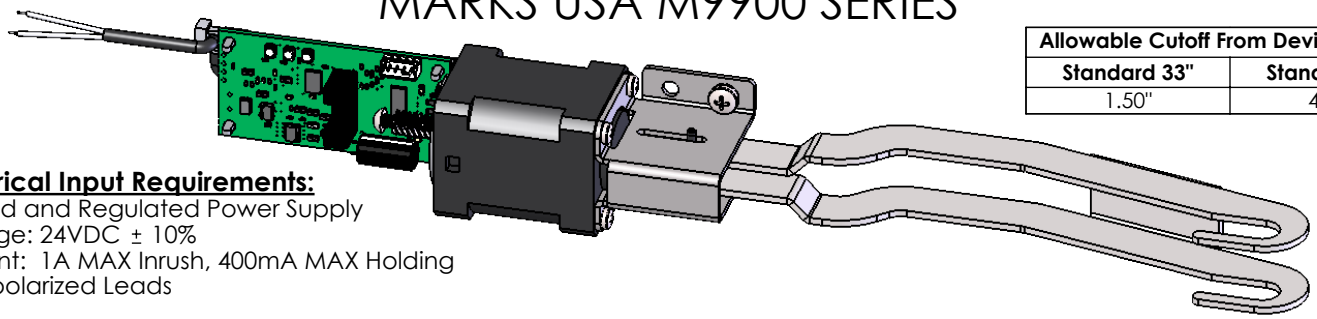

Allowable Cutoff From Device Length	
Standard 33"	Standard 42"
1.50"	4.25"

Electrical Input Requirements:
Filtered and Regulated Power Supply
Voltage: 24VDC ± 10%
Current: 1A MAX Inrush, 400mA MAX Holding
Non-polarized Leads

PROVIDES SIMULTANEOUS ELECTRIC LATCH RETRACTION AND DOGGING (PUSH BAR DEPRESSED)

2-Conductor Wire Run	
Distance	Wire Gauge
70'	22
110'	20
180'	18
280'	16
450'	14
720'	12

Installation:
1. Separate the mechanism case from the baseplate assembly.
2. Remove the manual dogging assembly, if present, from the baseplate assembly and discard.
3. Skip to step 11 if installing in a 33" device or a 42" device with an 18" push bar.
4. Separate the push bar from the baseplate assembly by removing the lower push bar mounting pins.
5. Separate the front push bar end cap from the push bar.
6. Slide the push bar cover forward to expose the rear push bar end cap mounting screws.
7. Replace the rear push bar end cap mounting screws one at a time with the supplied screws to maintain the correct position of the end cap.
8. Attach the supplied connecting bracket with connecting pin installed using the supplied locknut.
9. Slide the push bar cover back to the original position and attach the front push bar end cap to the push bar.
10. Attach the push bar to the baseplate assembly using the lower push bar mounting pins.
11. Locate the 1550K-MDH Kit near the holes that secured the manual dogging assembly.
12. Attach the connecting link to the installed connecting bracket and pin for the 42" device with 24" push bar or the rear mechanism of the push bar for the 33" device or for the 42" device with 18" push bar.
13. Attach the motor bracket to the baseplate assembly using the supplied screws and lockwashers through the holes that secured the manual dogging assembly.
14. Attach the mechanism case to the baseplate assembly.
15. Install the ratchet clip into the mechanical dogging hole of the slide cover.
16. Apply the supplied technical assistance labels to the head cover and the end cover.
    Do not remove any regulatory labels adhered to the device.

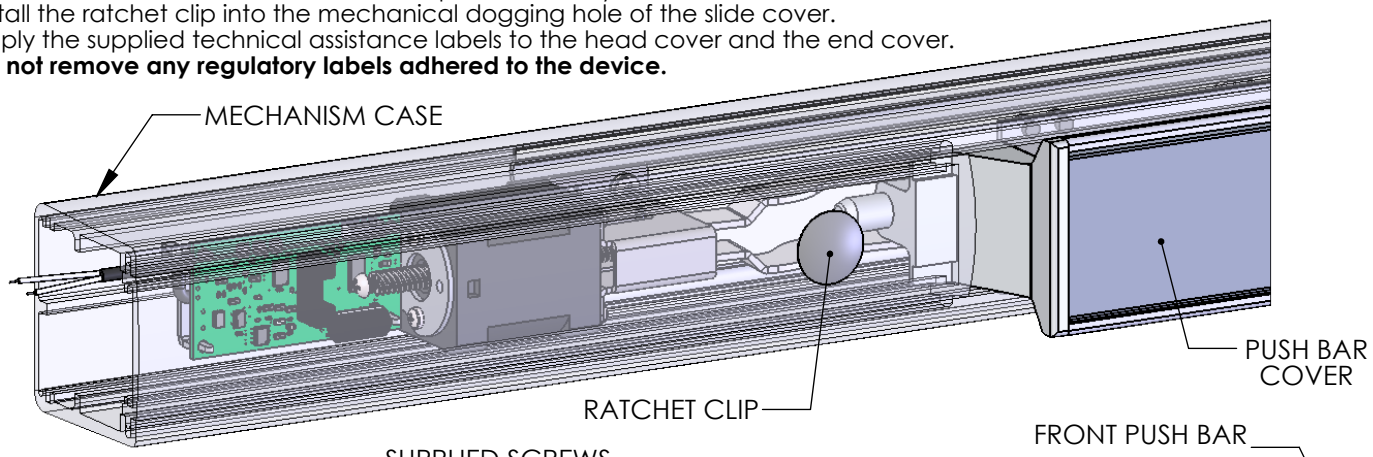

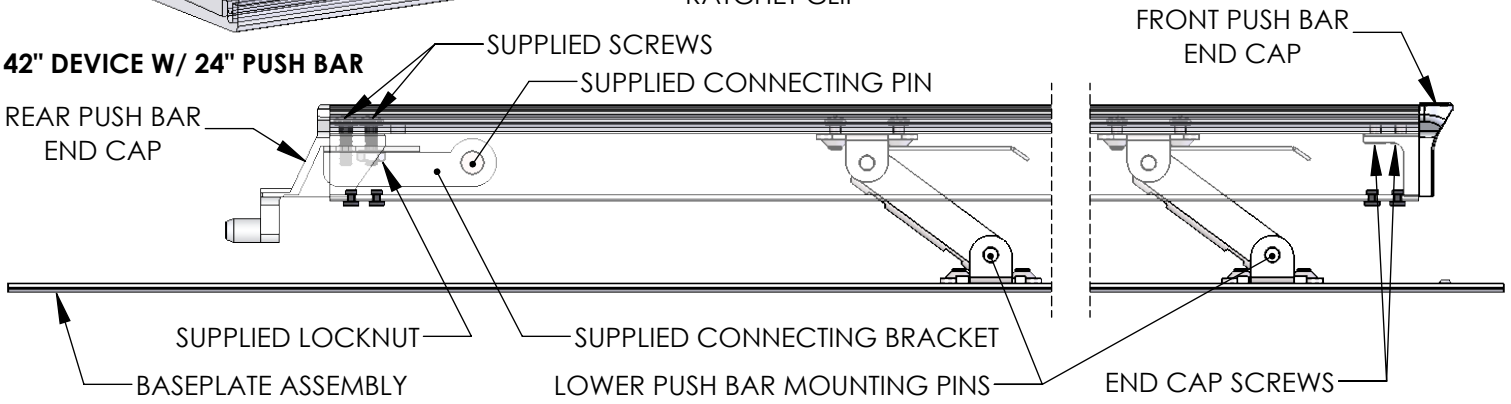

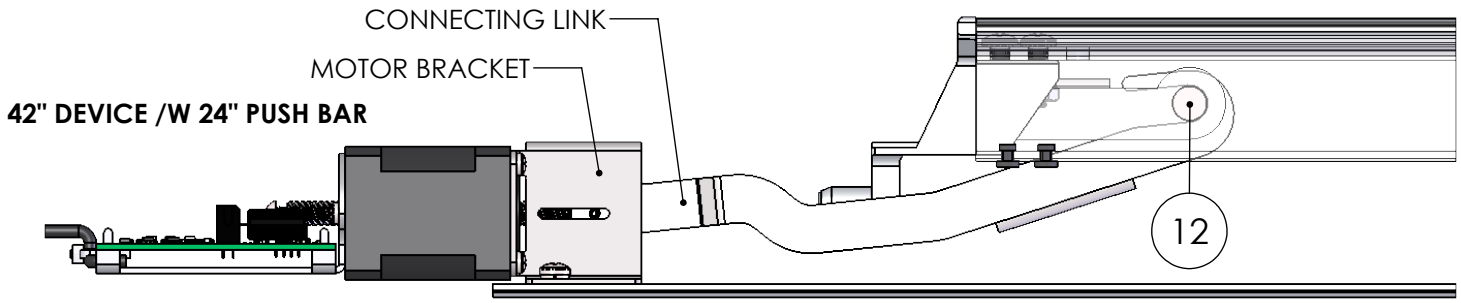

42" DEVICE /W 24" PUSH BAR

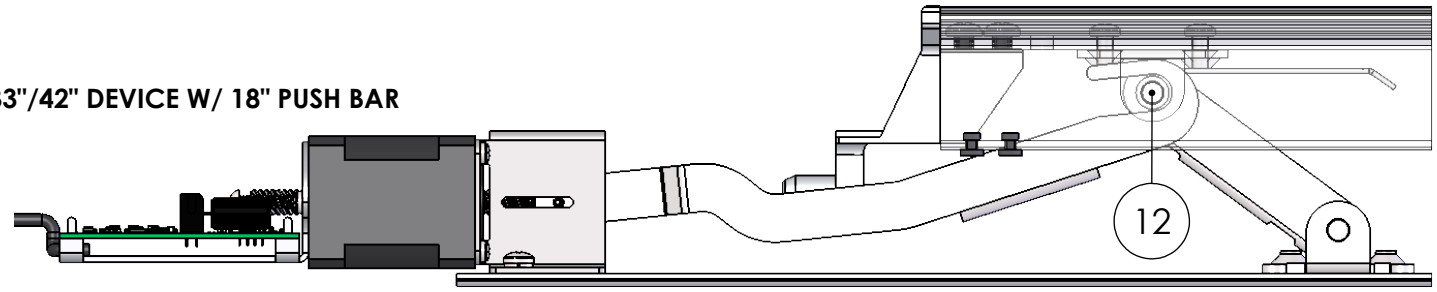

33"/42" DEVICE W/ 18" PUSH BAR

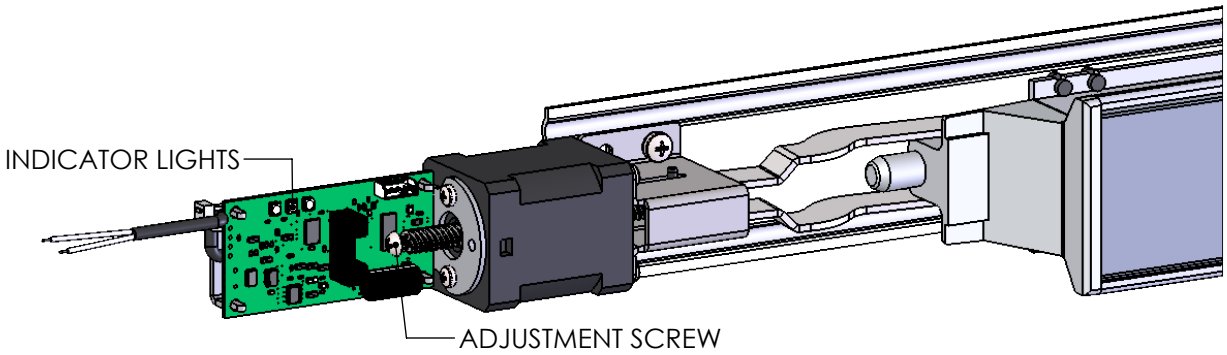

Motor Drive Electric Latch Retraction Adjustment:

1. Verify the device is properly adjusted for mechanical operation. Electric operation should not exceed the mechanical operation or there will be a high risk of damage to the device. **We suggest setting the latch retraction under electric operation at 1/16" less than the latch retraction under mechanical operation.**
2. Locate the adjustment screw in the rear of the motor assembly. Rotate the adjustment screw clockwise to increase the latch retraction or counterclockwise to decrease the latch retraction.

Onboard Indicator Light Assignments:

Maintain input power to the exit device and check the onboard indicator lights.
Remove input power before attempting a solution.

Green (Power)	Yellow (Sensor)	Red (Error)	Indication	Possible Solution
Off	Off	Off	No Power.	Connect the wiring between the power supply and the exit device.
On	On	Off	Normal Operation. The push bar is retracted to the dogged position and dogged; the latch is retracted by default. The device is allowed 2 attempts.	
On	Off	On	Error in operation. The push bar did not retract to the dogged position within 2 attempts.	Rotate the adjustment screw counterclockwise to decrease the latch retraction.
On	On	On	Error in operation. Without power being removed, the push bar went from being dogged to unintentionally being extended, and then the push bar did not retract to the dogged position within 2 attempts.	Clear the jam condition manually.
On	Blink	On	Error in operation. The push bar did not extend from the dogged position when the power was last removed. The device will not attempt a retraction.	Clear the jam condition manually.
On	Simultaneous Blink		Error in operation. The input voltage dropped below the specification during operation.	Decrease the wire run or increase the wire gauge.
On	Alternating Blink		Error in operation. An electronics fault was detected.	An electronics replacement is required.

ELECTRIC EXIT DEVICE KIT INSTALLATION INSTRUCTIONS
MOTOR DRIVE ELECTRIC LATCH RETRACTION

1550K-MDX
DOREX 9500 SERIES

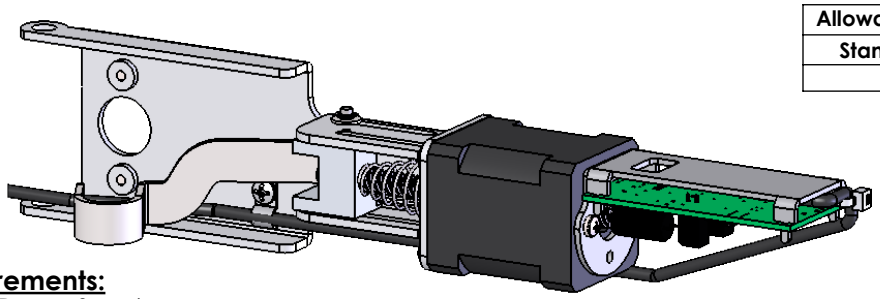

Allowable Cutoff From Device Length	
Standard 36"	**Standard 48"**
6.00"	12.25"

Electrical Input Requirements:
Filtered and Regulated Power Supply
Voltage: 24VDC ± 10%
Current: 1A MAX Inrush, 400mA MAX Holding
Non-polarized Leads

PROVIDES SIMULTANEOUS ELECTRIC LATCH RETRACTION AND DOGGING (TOUCH PAD DEPRESSED)

Installation:
1. Separate the rail assembly from the touch pad assembly.
2. Remove and discard the connecting arm bumper from both the front and rear connecting arm assemblies.
3. Remove and discard the connecting arm bracket from the rear connecting arm assembly.
4. Locate the 1550K-MDX Kit near the rear connecting arm assembly.
5. Attach the connecting link to the rear connecting arm assembly.
6. Attach the motor bracket to the rear connecting arm assembly.

2-Conductor Wire Run	
Distance	**Wire Gauge**
70'	22
110'	20
180'	18
280'	16
450'	14
720'	12

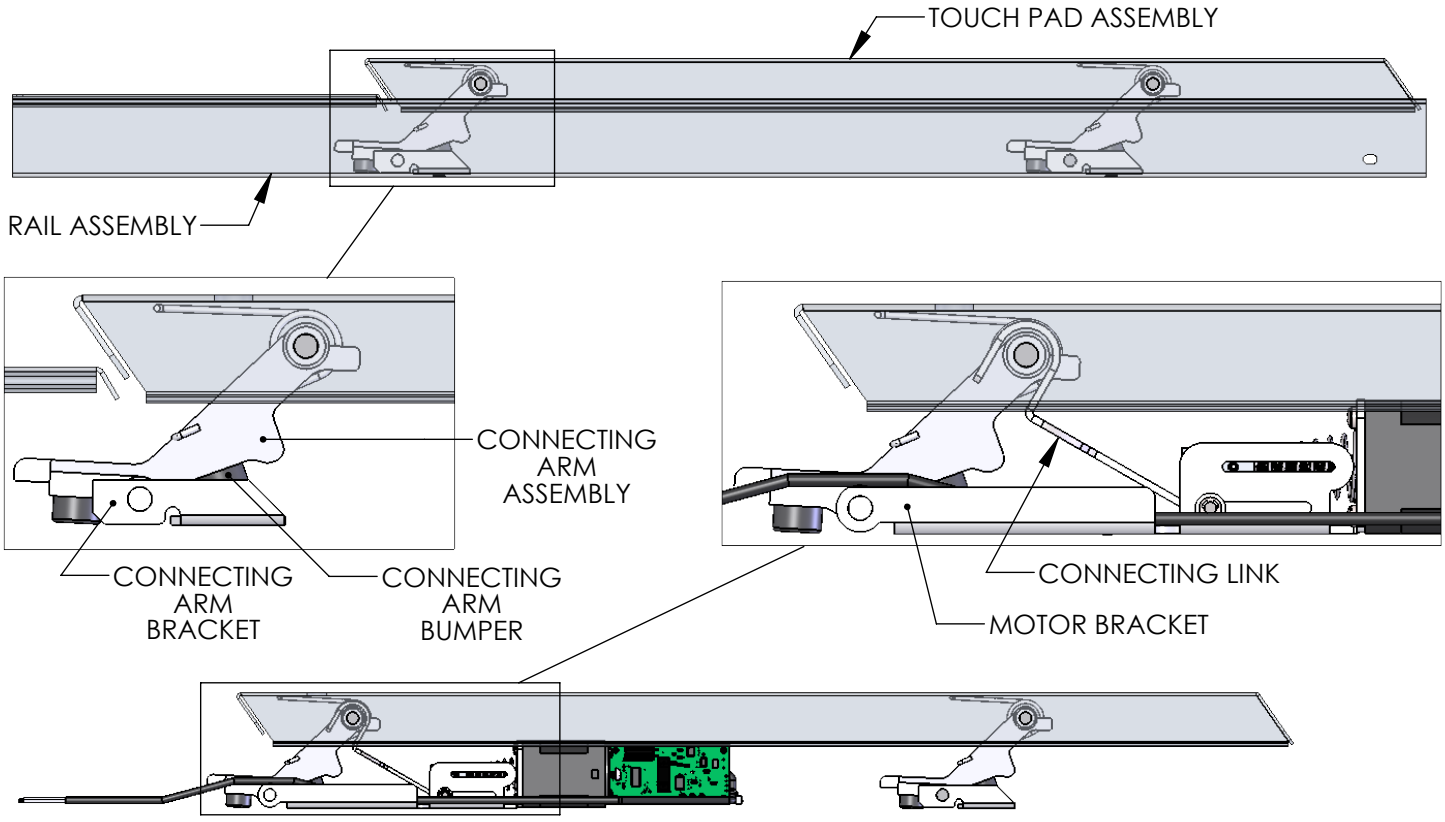

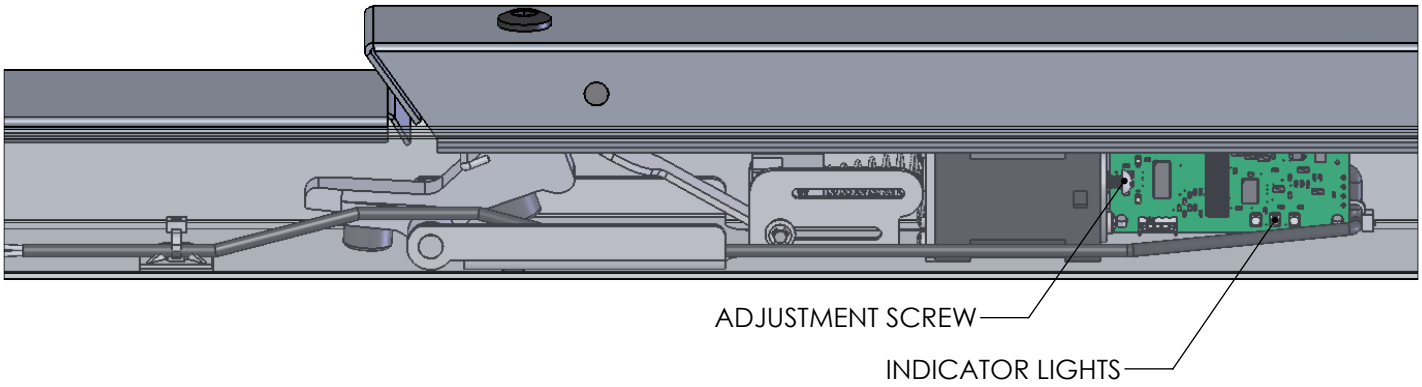

Installation (Cont.):

9. Route the lead wires over the rear connecting arm assembly.
10. Attach the rail assembly to the touch pad assembly using the device screws for the front connecting arm bracket and the supplied screws for the motor bracket.
11. Secure the lead wires to the inside of the rail assembly using the supplied ty-wrap mount and ty-wrap.
12. Apply the supplied technical assistance labels to the head cover and the end cap. **Do not remove any regulatory labels adhered to the device.**

Motor Drive Electric Latch Retraction Adjustment:

1. Verify the device is properly adjusted for mechanical operation. Electric operation should not exceed the mechanical operation or there will be a high risk of damage to the device. **We suggest setting the latch retraction under electric operation at 1/16" less than the latch retraction under mechanical operation.**
2. Locate the adjustment screw in the rear of the motor assembly. Rotate the adjustment screw clockwise to increase the latch retraction or counterclockwise to decrease the latch retraction.

Onboard Indicator Light Assignments:

Maintain input power to the exit device and check the onboard indicator lights.
Remove input power before attempting a solution.

Green (Power)	Yellow (Sensor)	Red (Error)	Indication	Possible Solution
Off	Off	Off	No Power.	Connect the wiring between the power supply and the exit device.
On	On	Off	Normal Operation. The touch pad is retracted to the dogged position and dogged; the latch is retracted by default. The device is allowed 2 attempts.	
On	Off	On	Error in operation. The touch pad did not retract to the dogged position within 2 attempts.	Rotate the adjustment screw counterclockwise to decrease the latch retraction.
On	On	On	Error in operation. Without power being removed, the touch pad went from being dogged to unintentionally being extended, and then the touch pad did not retract to the dogged position within 2 attempts.	Clear the jam condition manually.
On	Blink	On	Error in operation. The touch pad did not extend from the dogged position when the power was last removed. The device will not attempt a retraction.	Clear the jam condition manually.
On	Simultaneous Blink		Error in operation. The input voltage dropped below the specification during operation.	Decrease the wire run or increase the wire gauge.
On	Alternating Blink		Error in operation. An electronics fault was detected.	An electronics replacement is required.

ELECTRIC EXIT DEVICE OPERATING INSTRUCTIONS
MOTOR DRIVE ELECTRIC LATCH RETRACTION

1550-MDR
REGENT 5700 SERIES

PROVIDES SIMULTANEOUS ELECTRIC LATCH RETRACTION AND DOGGING (PUSHBAR DEPRESSED)

Electrical Input Requirements:
Filtered and Regulated Power Supply
Voltage: 24VDC ± 10%
Current: 1A MAX Inrush, 400mA MAX Holding
Non-polarized Leads

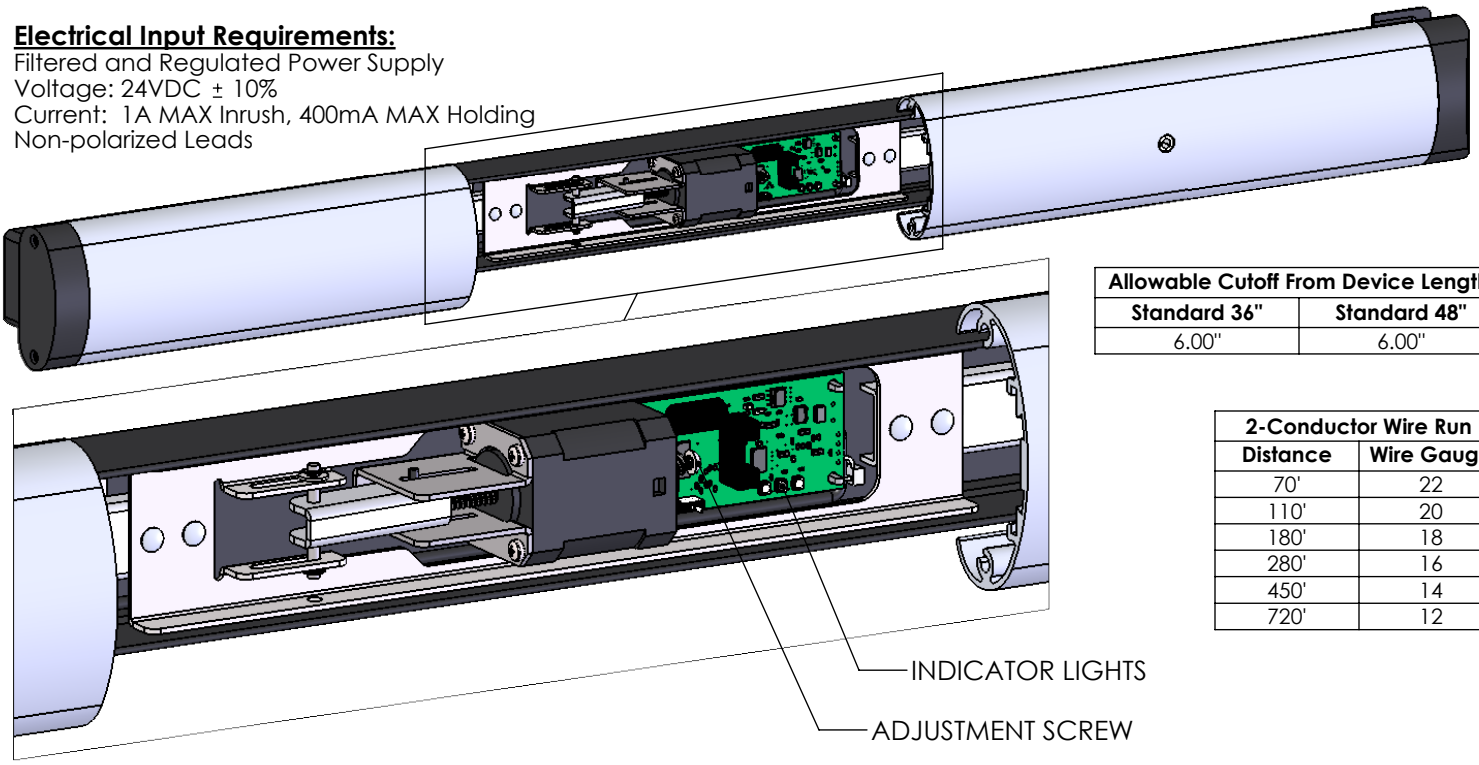

Allowable Cutoff From Device Length	
Standard 36"	**Standard 48"**
6.00"	6.00"

2-Conductor Wire Run	
Distance	**Wire Gauge**
70'	22
110'	20
180'	18
280'	16
450'	14
720'	12

Motor Drive Electric Latch Retraction Adjustment:
1. Verify the device is properly adjusted for mechanical operation. Electric operation should not exceed the mechanical operation or there will be a high risk of damage to the device. **We suggest setting the latch retraction under electric operation at 1/16" less than the latch retraction under mechanical operation.**
2. Locate the adjustment screw in the rear of the motor assembly. Rotate the adjustment screw clockwise to increase the latch retraction or counterclockwise to decrease the latch retraction.

Onboard Indicator Light Assignments:
Maintain input power to the exit device and check the onboard indicator lights.
Remove input power before attempting a solution.

Green (Power)	Yellow (Sensor)	Red (Error)	Indication	Possible Solution
Off	Off	Off	No Power.	Connect the wiring between the power supply and the exit device.
On	On	Off	Normal Operation. The pushbar is retracted to the dogged position and dogged; the latch is retracted by default. The device is allowed 2 attempts.	
On	Off	On	Error in operation. The pushbar did not retract to the dogged position within 2 attempts.	Rotate the adjustment screw counterclockwise to decrease the latch retraction.
On	On	On	Error in operation. Without power being removed, the pushbar went from being dogged to unintentionally being extended, and then the pushbar did not retract to the dogged position within 2 attempts.	Clear the jam condition manually.
On	Blink	On	Error in operation. The pushbar did not extend from the dogged position when the power was last removed. The device will not attempt a retraction.	Clear the jam condition manually.
On	Simultaneous Blink		Error in operation. The input voltage dropped below the specification during operation.	Decrease the wire run or increase the wire gauge.
On	Alternating Blink		Error in operation. An electronics fault was detected.	An electronics replacement is required.



ELECTRIC EXIT DEVICE KIT INSTALLATION INSTRUCTIONS
AUTHORIZED EGRESS

K-131

FALCON 1690 AND 1790 SERIES
FIRST CHOICE 3600 AND 3700 SERIES

MONITORS THE USE OF THE TOUCHBAR

Electrical Specifications
[illegible]
[illegible]

Wire Color Codes
[illegible]
[illegible]
[illegible]

Installation:

1. Separate the touchbar from the exit device.
2. Drill a 3/8" diameter hole through the channel end cap and device channel to wire access from the access control system to the exit device.
3. Locate the K-131-10 on the rear touchbar anchor assembly using the slit and flanges of the rear touchbar anchor assembly for assembling. Verify the switch anchor pin actuated by the actuating pin of the rear touchbar anchor assembly.
4. Bend the tabs of the switch anchor to secure the switch bracket to the rear touchbar anchor assembly.
5. Verify the wire wire strength to tabs edge of the device channel.
6. Secure the bead wire to the holes of the device channel using the supplied to wrap mount and to wrap.
7. Attach the touchbar to the exit device.

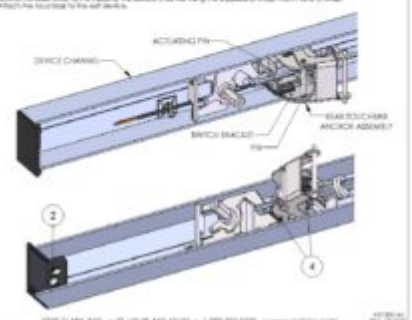

2720 CLARK AVE. • ST. LOUIS, MO 63103 • 1 800 733 0338 • www.csiinc.com

ELECTRIC EXIT DEVICE KIT INSTALLATION INSTRUCTIONS
AUTHORIZED EGRESS

K-131

FALCON 1690 AND 1790 SERIES
FIRST CHOICE 3600 AND 3700 SERIES

MONITORS THE USE OF THE TOUCHBAR

Electrical Specifications:
SPDT Monitor Switch
Contacts Rated: 3A @ 125VAC
2A @ 30VDC

Wire Color Codes:
YELLOW - Common
RED - Normally Open
GRAY - Normally Closed

Installation:

1. Separate the touchbar from the exit device.
2. Drill a 3/8" diameter hole through the channel end cap and device channel for wire access from the access control system to the exit device.
3. Locate the K-131 Kit on the rear touchbar anchor assembly using the pin and flanges of the rear touchbar anchor assembly for positioning. Verify the switch arm is pre-actuated by the actuating pin of the rear touchbar anchor assembly.
4. Bend the tabs of the switch bracket to secure the switch bracket to the rear touchbar anchor assembly.
5. Route the lead wires along the outside edge of the device channel.
6. Secure the lead wires to the inside of the device channel using the supplied ty-wrap mount and ty-wrap.
7. Attach the touchbar to the exit device.

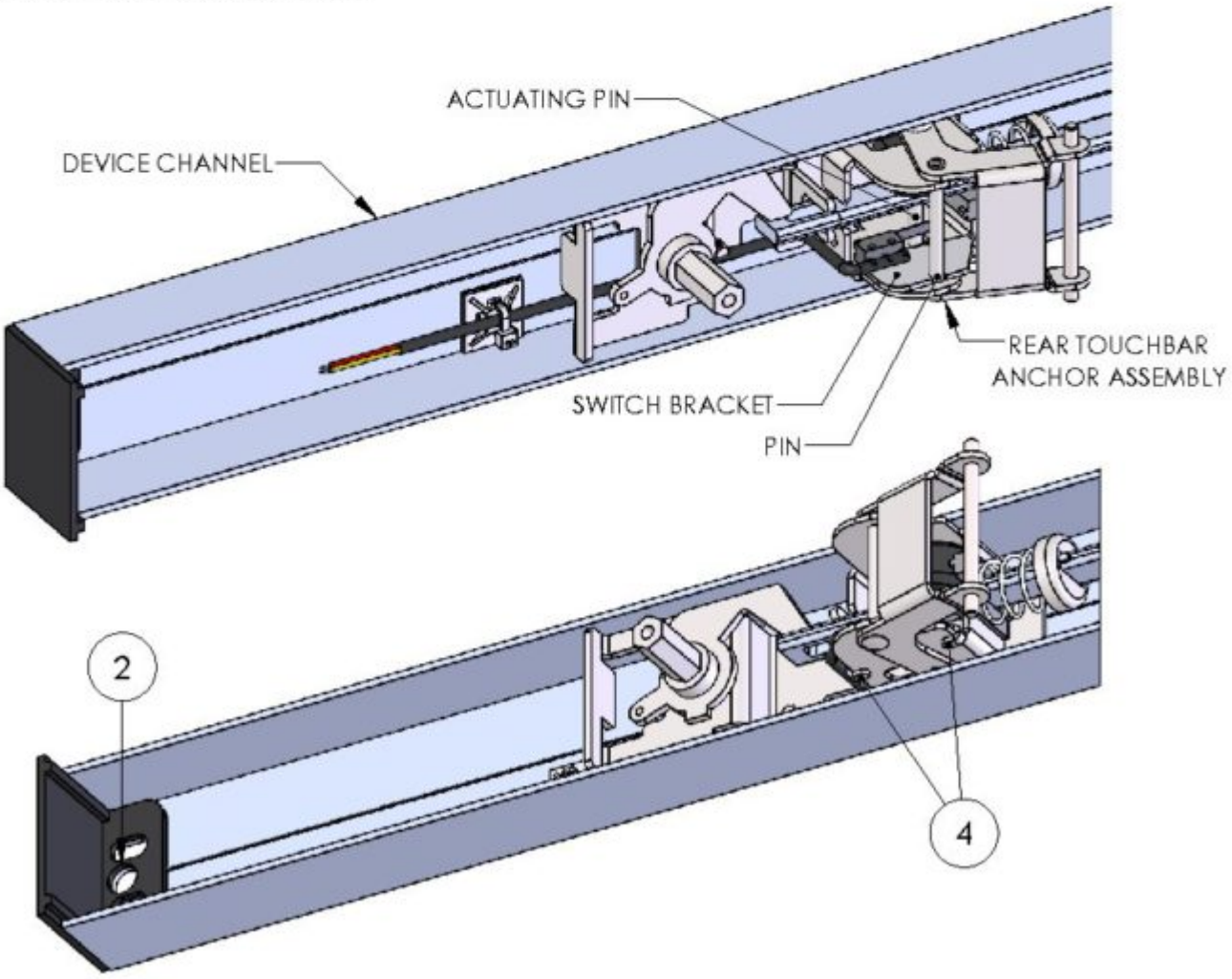

ELECTRIC EXIT DEVICE KIT INSTALLATION INSTRUCTIONS
AUTHORIZED EGRESS

K-131

FALCON 1690 AND 1790 SERIES
FIRST CHOICE 3600 AND 3700 SERIES

MONITORS THE USE OF THE TOUCHBAR

Electrical Specifications:
SPDT Monitor Switch
Contacts Rated: 3A @ 125VAC
2A @ 30VDC

Wire Color Codes:
YELLOW - Common
RED - Normally Open
GRAY - Normally Closed

Installation:

1. Separate the touchbar from the exit device.
2. Drill a 3/8" diameter hole through the channel end cap and device channel for wire access from the access control system to the exit device.
3. Locate the K-131 Kit on the rear touchbar anchor assembly using the pin and flanges of the rear touchbar anchor assembly for positioning. Verify the switch arm is pre-actuated by the actuating pin of the rear touchbar anchor assembly.
4. Bend the tabs of the switch bracket to secure the switch bracket to the rear touchbar anchor assembly.
5. Route the lead wires along the outside edge of the device channel.
6. Secure the lead wires to the inside of the device channel using the supplied ty-wrap mount and ty-wrap.
7. Attach the touchbar to the exit device.

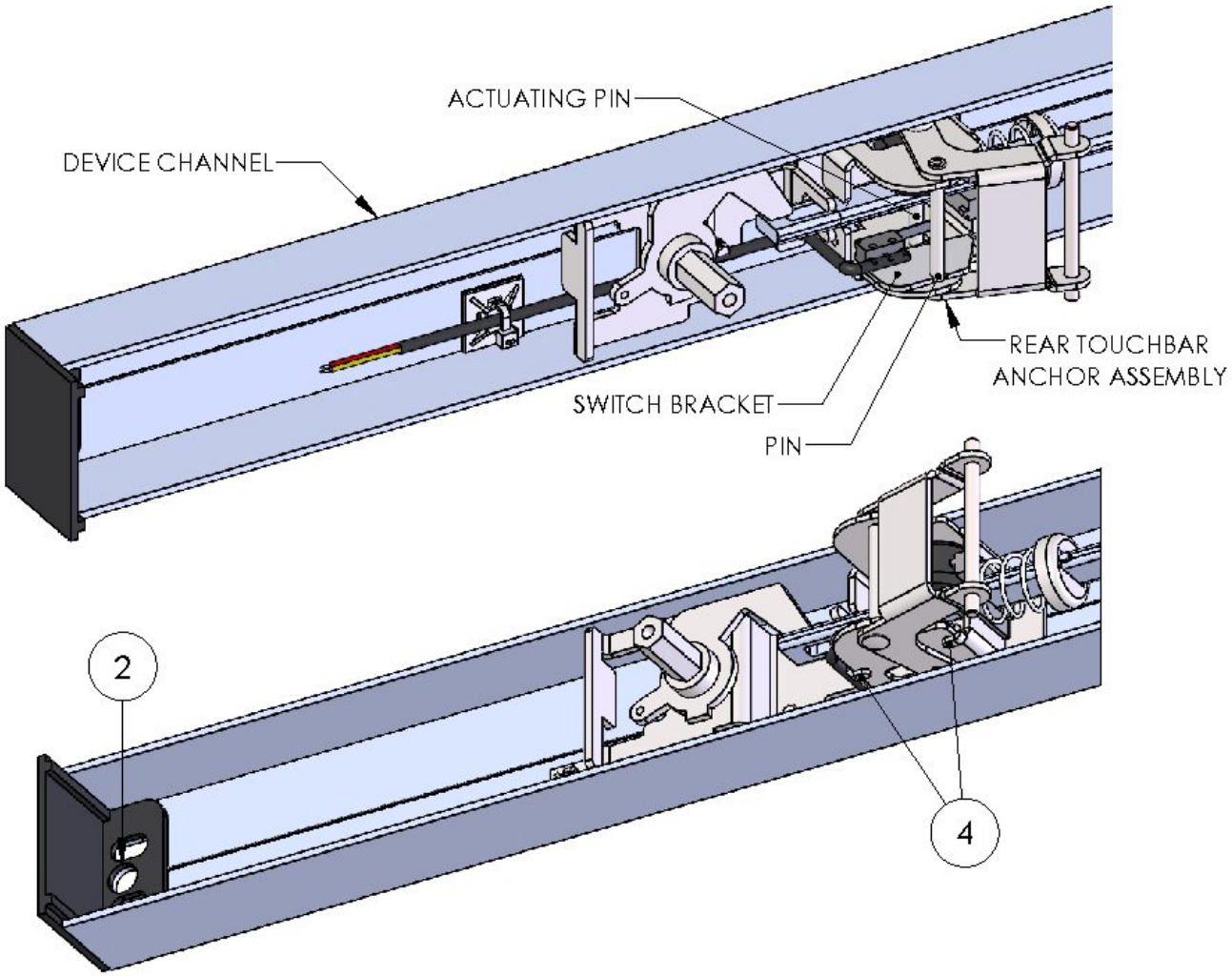

2720 CLARK AVE. ~ ST. LOUIS, MO 63103 ~ 1-800-753-5558 ~ www.acsi-inc.com

II-E1500-44
REV. 08/2020

ELECTRIC EXIT DEVICE KIT INSTALLATION INSTRUCTIONS
AUTHORIZED EGRESS

K-131

FALCON 1690 AND 1790 SERIES
FIRST CHOICE 3600 AND 3700 SERIES

MONITORS THE USE OF THE TOUCHBAR

Electrical Specifications:
SPDT Monitor Switch
Contacts Rated: 3A @ 125VAC
2A @ 30VDC

Wire Color Codes:
YELLOW - Common
RED - Normally Open
GRAY - Normally Closed

Installation:
1. Separate the touchbar from the exit device.
2. Drill a 3/8" diameter hole through the channel end cap and device channel for wire access from the access control system to the exit device.
3. Locate the K-131 Kit on the rear touchbar anchor assembly using the pin and flanges of the rear touchbar anchor assembly for positioning. Verify the switch arm is pre-actuated by the actuating pin of the rear touchbar anchor assembly.
4. Bend the tabs of the switch bracket to secure the switch bracket to the rear touchbar anchor assembly.
5. Route the lead wires along the outside edge of the device channel.
6. Secure the lead wires to the inside of the device channel using the supplied ty-wrap mount and ty-wrap.
7. Attach the touchbar to the exit device.

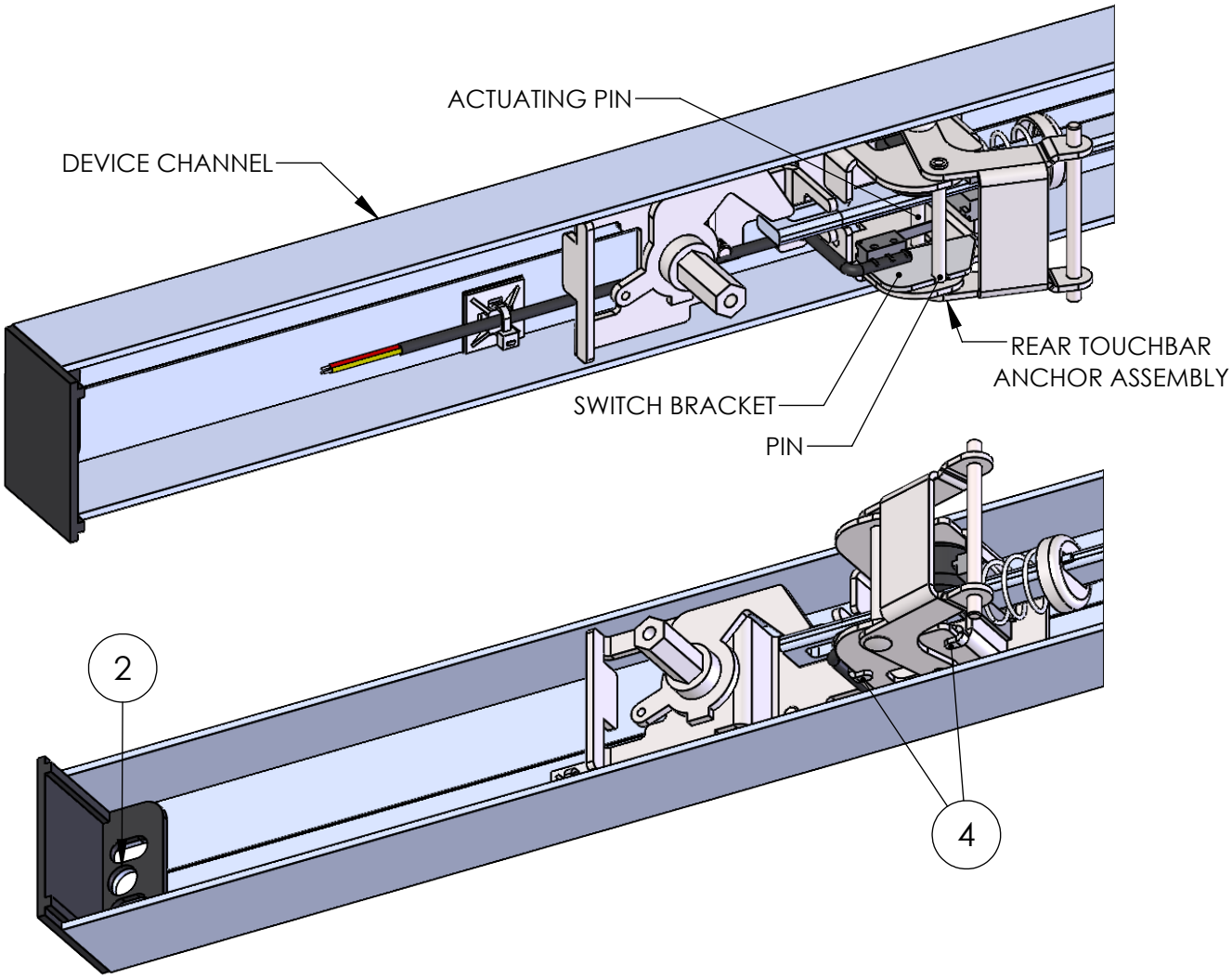

ELECTRIC EXIT DEVICE KIT INSTALLATION INSTRUCTIONS
AUTHORIZED EGRESS

K-131

FALCON 1690 AND 1790 SERIES
FIRST CHOICE 3600 AND 3700 SERIES

MONITORS THE USE OF THE TOUCHBAR

Electrical Specifications:
SPDT Monitor Switch
Contacts Rated: 3A @ 125VAC
2A @ 30VDC

Wire Color Codes:
YELLOW - Common
RED - Normally Open
GRAY - Normally Closed

Installation:

1. Separate the touchbar from the exit device.
2. Drill a 3/8" diameter hole through the channel end cap and device channel for wire access from the access control system to the exit device.
3. Locate the K-131 Kit on the rear touchbar anchor assembly using the pin and flanges of the rear touchbar anchor assembly for positioning. Verify the switch arm is pre-actuated by the actuating pin of the rear touchbar anchor assembly.
4. Bend the tabs of the switch bracket to secure the switch bracket to the rear touchbar anchor assembly.
5. Route the lead wires along the outside edge of the device channel.
6. Secure the lead wires to the inside of the device channel using the supplied ty-wrap mount and ty-wrap.
7. Attach the touchbar to the exit device.

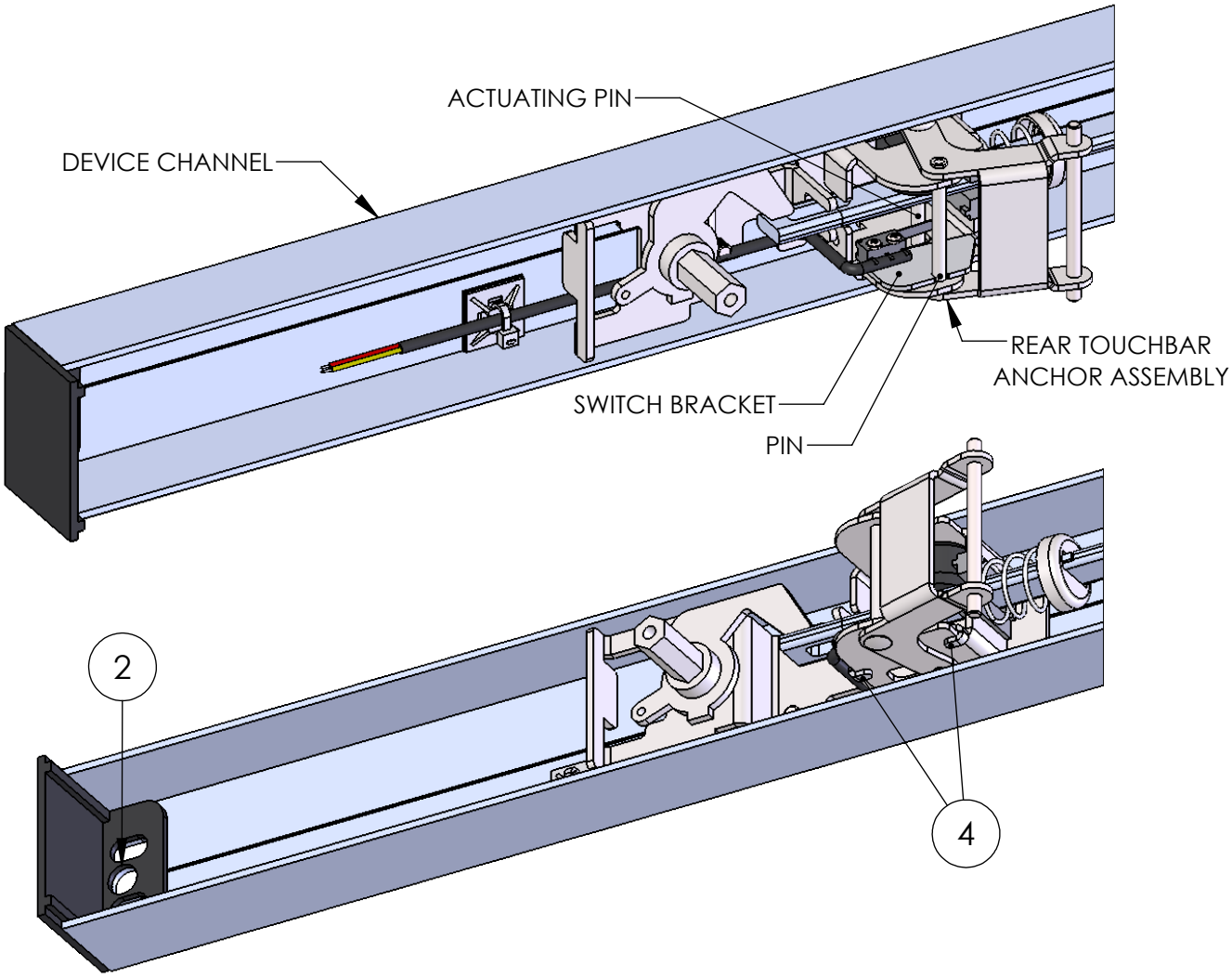

ELECTRIC TRIM CONTROL INSTRUCTIONS
MORTISE CONTROLLED ELECTRIC LOCKING HARDWARE

HAGER 45CE



ELECTRIC TRIM CONTROL INSTRUCTIONS
MOTOR-CONTROLLED ELECTRIC LOCKING/UNLOCKING

HAGER 45CE

1560 - Fail Safe (Power Lock):
Outside trim is locked when power is applied and unlocked when power is removed.
Trim control will unlock in the event of a power failure.

1570 - Fail Secure (Power Unlock):
Outside trim is unlocked when power is applied and locked when power is removed.
Trim control will lock in the event of a power failure.

Key Function:
The outside trim may be momentarily unlocked with a key even though the trim control is electrically locked.

Electrical Specifications:
Voltage: 12-24V AC/DC (11V - 30V)
Current: 250mA MAX Inrush, 30mA MAX Holding
Non-polarized break

2-Conductor Wire Run	
Distance 12V/24V	Wire Gauge
[illegible]	[illegible]
[illegible]	[illegible]
[illegible]	[illegible]
[illegible]	[illegible]
[illegible]	[illegible]
[illegible]	[illegible]

Note: Power must be applied to the trim control after a switch slider setting change.

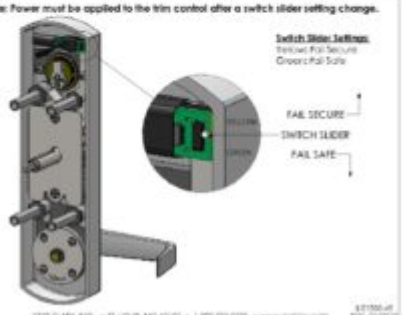

Switch Slider Settings:
Yellow: Fail Secure
Green: Fail Safe

ELECTRIC TRIM CONTROL INSTRUCTIONS
MOTOR-CONTROLLED ELECTRIC LOCKING/UNLOCKING

HAGER 45CE

1560 - Fail Safe (Power Lock):
Outside trim is locked when power is applied and unlocked when power is removed.
Trim control will unlock in the event of a power failure.

1570 - Fail Secure (Power Unlock):
Outside trim is unlocked when power is applied and locked when power is removed.
Trim control will lock in the event of a power failure.

Key Function:
The outside trim may be momentarily unlocked with a key even though the trim control is electrically locked.

Electrical Specifications:
Voltage: 12-24V AC/DC (11V - 30V)
Current: 250mA MAX Inrush, 10mA MAX Holding
Non-polarized Leads

2-Conductor Wire Run	
Distance 12V/24V	Wire Gauge
125'/250'	22
200'/400'	20
300'/600'	18
500'/1000'	16
750'/1500'	14
1250'/2500'	12

Note: Power must be applied to the trim control after a switch slider setting change.

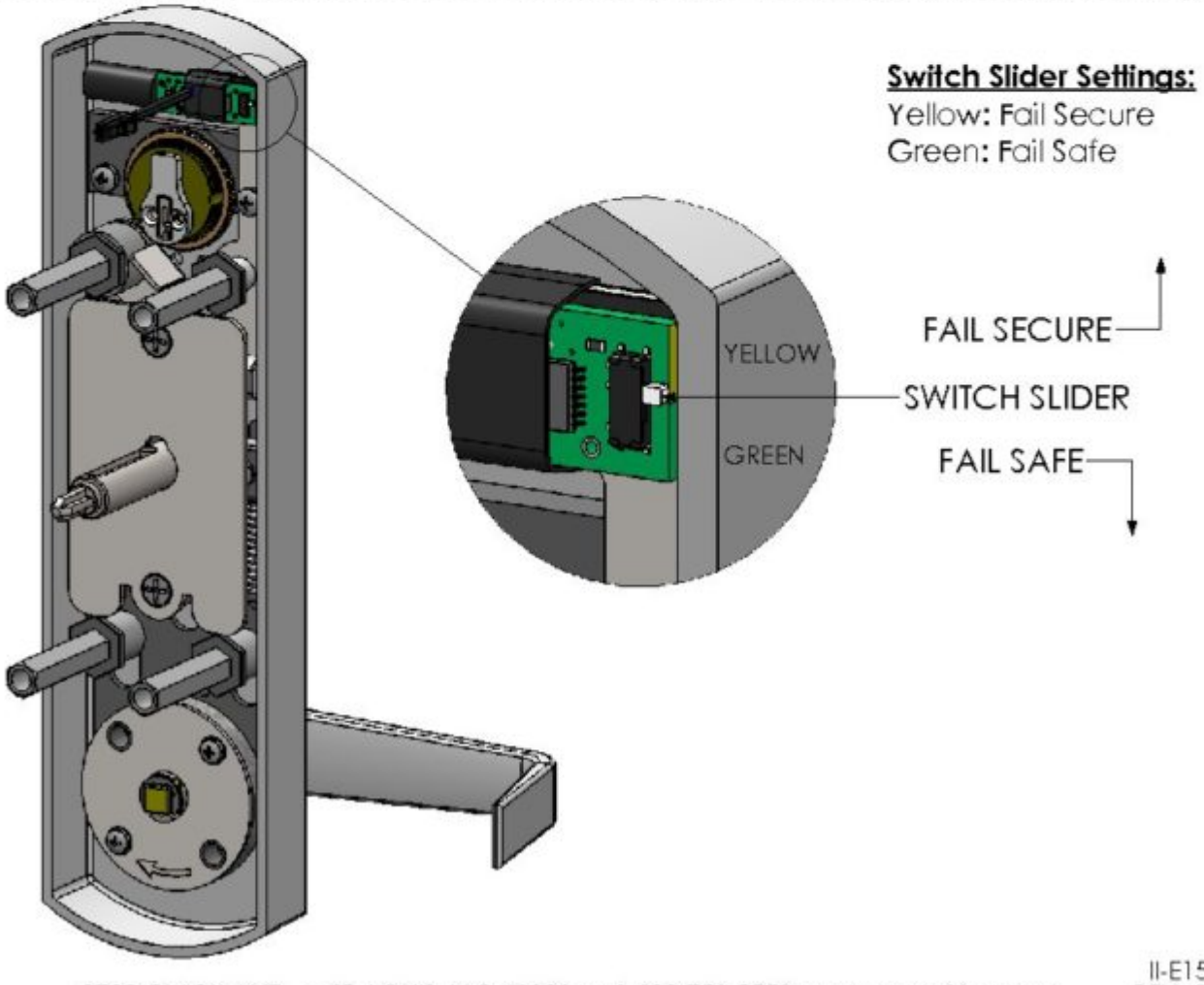

Switch Slider Settings:
Yellow: Fail Secure
Green: Fail Safe

2720 CLARK AVE. ~ ST. LOUIS, MO 63103 ~ 1-800-753-5558 ~ www.acsi-inc.com
II-E1500-45
REV. 01/2019

ELECTRIC TRIM CONTROL INSTRUCTIONS
MOTOR-CONTROLLED ELECTRIC LOCKING/UNLOCKING

HAGER 45CE

1560 - Fail Safe (Power Lock):
Outside trim is locked when power is applied and unlocked when power is removed.
Trim control will unlock in the event of a power failure.

1570 - Fail Secure (Power Unlock):
Outside trim is unlocked when power is applied and locked when power is removed.
Trim control will lock in the event of a power failure.

Key Function:
The outside trim may be momentarily unlocked with a key even though the trim control is electrically locked.

Electrical Specifications:
Voltage: 12-24V AC/DC (11V - 30V)
Current: 250mA MAX Inrush, 10mA MAX Holding
Non-polarized Leads

2-Conductor Wire Run	
Distance 12V/24V	Wire Gauge
125'/250'	22
200'/400'	20
300'/600'	18
500'/1000'	16
750'/1500'	14
1250'/2500'	12

Note: Power must be applied to the trim control after a switch slider setting change.

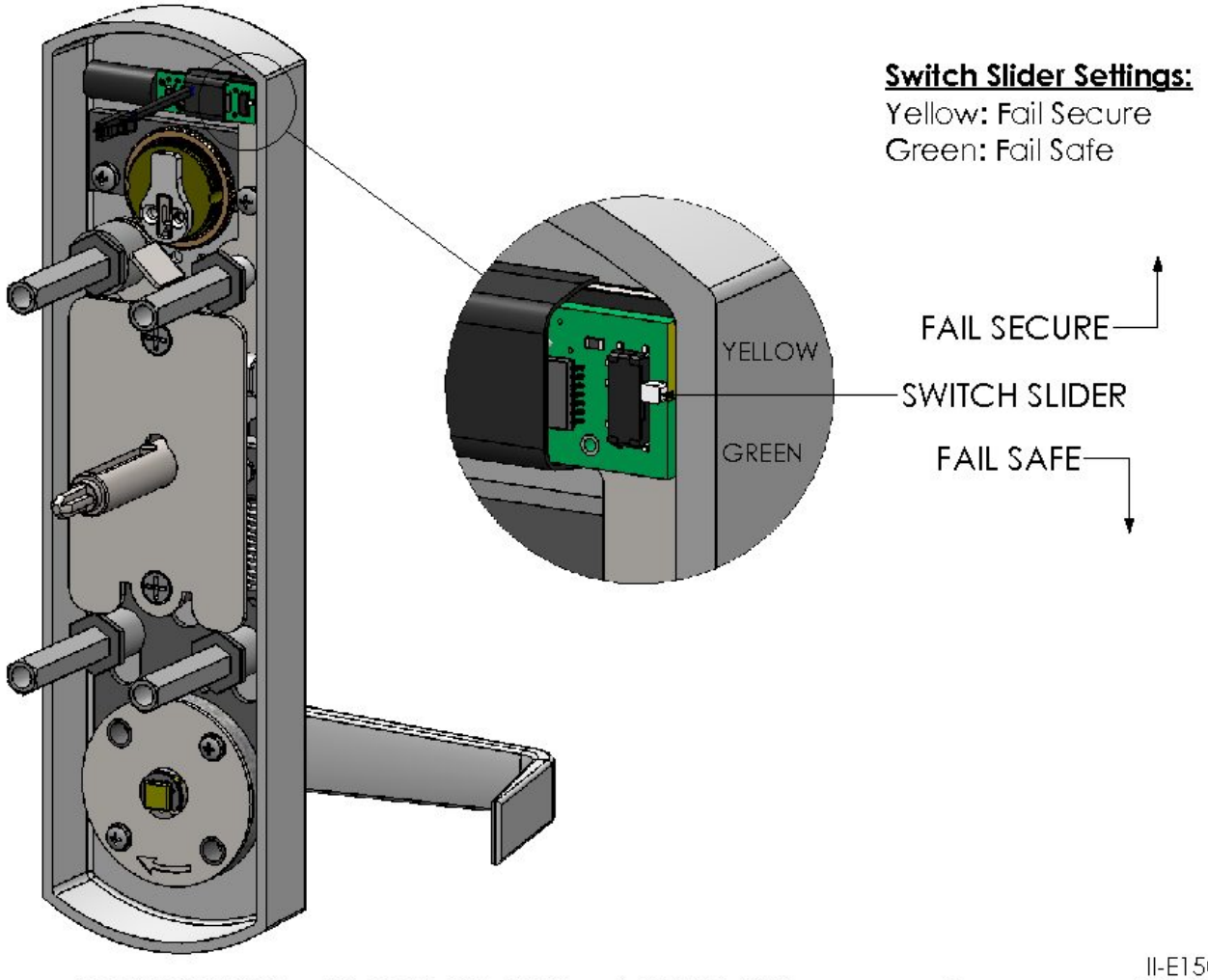

Switch Slider Settings:
Yellow: Fail Secure
Green: Fail Safe

ELECTRIC TRIM CONTROL INSTRUCTIONS
MOTOR-CONTROLLED ELECTRIC LOCKING/UNLOCKING

HAGER 45CE

1560 - Fail Safe (Power Lock):
Outside trim is locked when power is applied and unlocked when power is removed.
Trim control will unlock in the event of a power failure.

1570 - Fail Secure (Power Unlock):
Outside trim is unlocked when power is applied and locked when power is removed.
Trim control will lock in the event of a power failure.

Key Function:
The outside trim may be momentarily unlocked with a key even though the trim control is electrically locked.

Electrical Specifications:
Voltage: 12-24V AC/DC (11V - 30V)
Current: 250mA MAX Inrush, 10mA MAX Holding
Non-polarized Leads

2-Conductor Wire Run	
Distance 12V/24V	**Wire Gauge**
125'/250'	22
200'/400'	20
300'/600'	18
500'/1000'	16
750'/1500'	14
1250'/2500'	12

Note: Power must be applied to the trim control after a switch slider setting change.

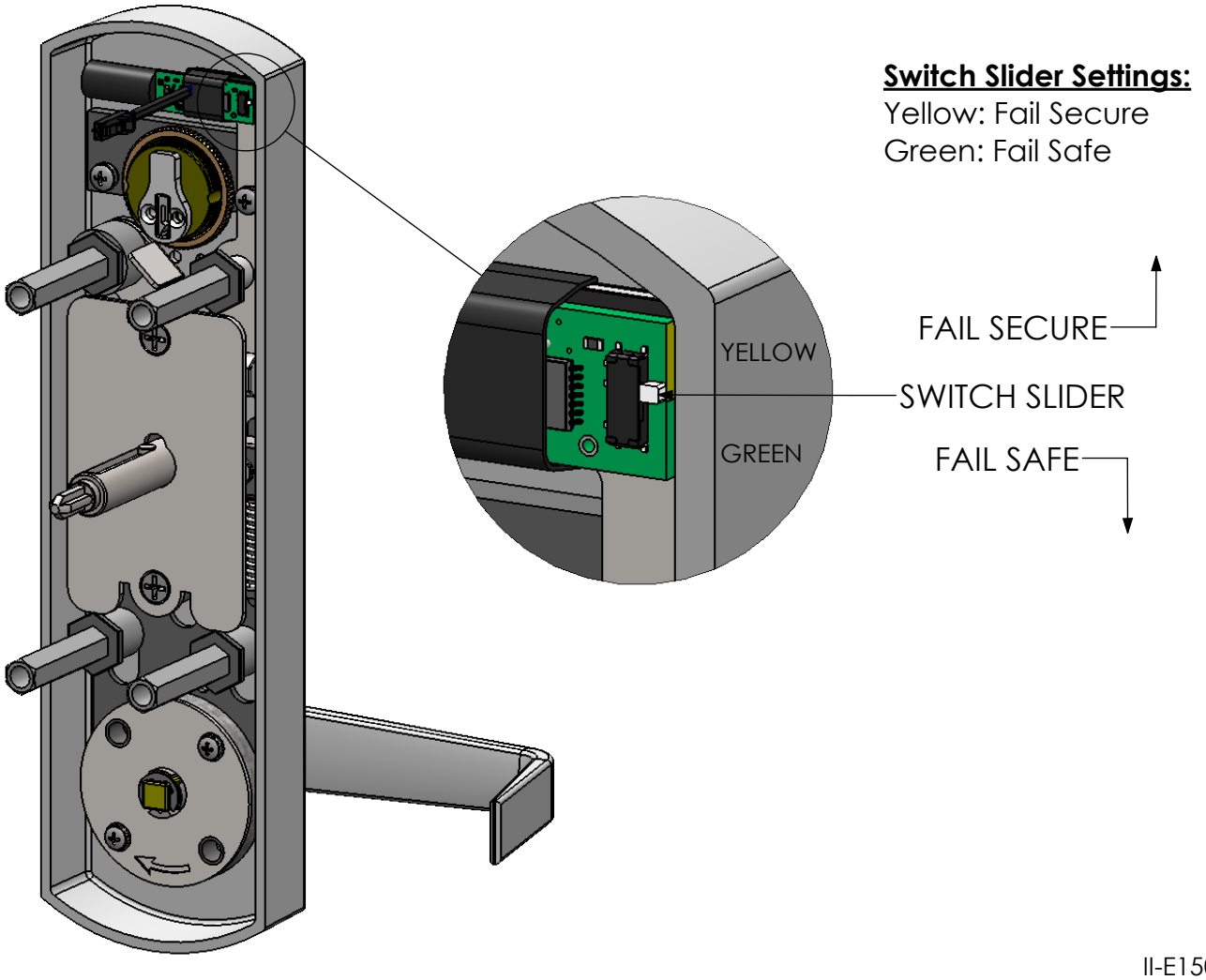

Switch Slider Settings:
Yellow: Fail Secure
Green: Fail Safe

Door Preparation:

1. This door preparation is in addition to the door preparation shown for an electric exit device (see document E-1500-19).
2. Drill and deburr a ∅1/2" hole through the door for wire routing from the electric trim control to the exit device head.

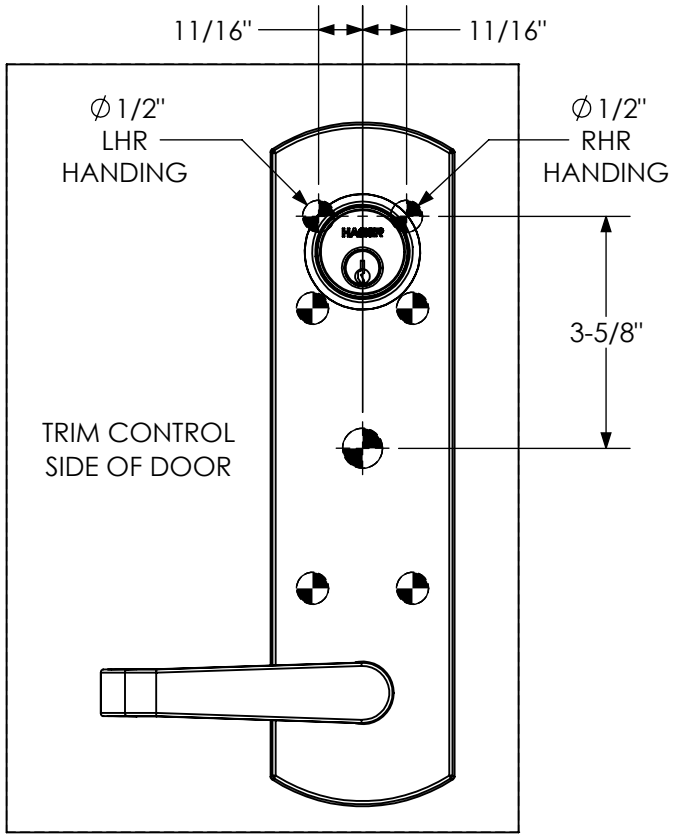

Installation:

1. These instructions are in addition to the manufacturer's installation instructions for the exit device and cylinder escutcheon trim.
2. Install the supplied exit device harness along the side of the baseplate assembly with the connector end located in the exit device head and the wire lead end secured to the inside of the mechanism case near the end of the device using the supplied ty-wrap mount and ty-wrap.
3. Route the wiring from the electric trim control through the door preparation hole into the exit device head and mate the connectors.
4. Connect the wire leads of the exit device harness to the power transfer device.
5. Verify the operation of the electric trim control and that all wiring is not interfering with the operation of both devices.

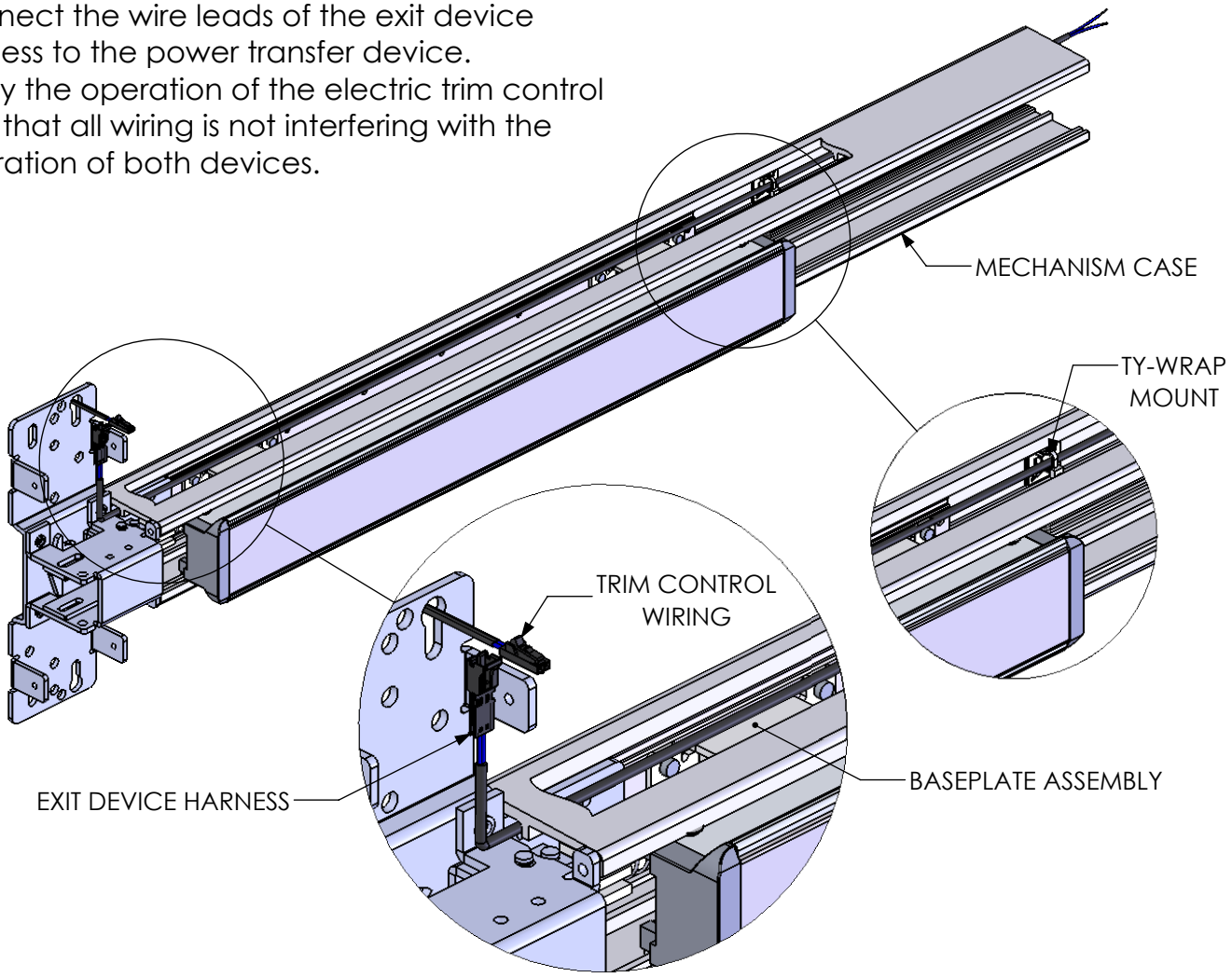

FOR USE WITH MU1500 MORTISE UNIT LOCKS WITH MU1510 AND MU1520 MODIFICATIONS.

1510 - FAIL SAFE CONTROL (POWER LOCK)

OUTSIDE TRIM IS LOCKED WHEN POWER IS APPLIED AND UNLOCKED WHEN POWER IS REMOVED. (STOREROOM FUNCTION WHEN ENERGIZED). LOCKSET WILL UNLOCK IN THE EVENT OF A POWER FAILURE.

1520 - FAIL SECURE CONTROL (POWER UNLOCK)

OUTSIDE TRIM IS UNLOCKED WHEN POWER IS APPLIED AND LOCKED WHEN POWER IS REMOVED. LOCKSET WILL LOCK IN THE EVENT OF A POWER FAILURE.

KEY FUNCTION

WHEN KEY CYLINDERS ARE INSTALLED INTO LOCKS, THE LATCHBOLT MAY BE MOMENTARILY RETRACTED FROM THE OUTSIDE WITH KEY EVEN IF LOCKSET IS ELECTRICALLY LOCKED.

ELECTRICAL SPECIFICATIONS

NOTE: ALL SOLENOIDS ARE CONTINUOUS DUTY TYPE. KEEP OPERATING VOLTAGE AT + / - 10% OF RATED VOLTAGE.

VOLTAGE	AMP
24 VAC/DC	.330 A
24 VDC	.330 A

AC/DC VOLTAGE

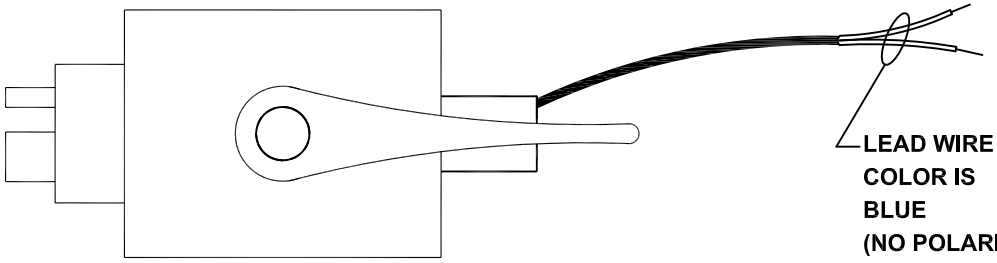

DC VOLTAGE

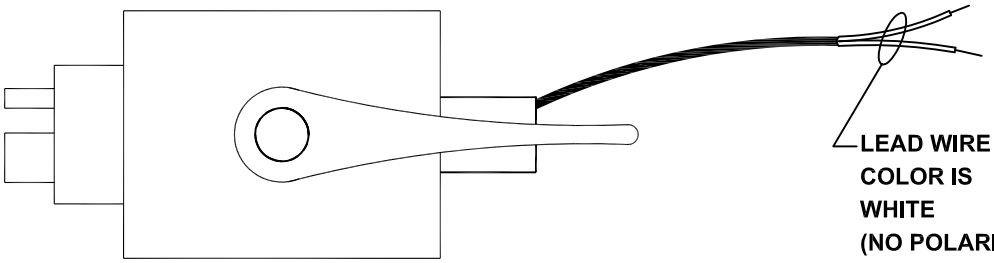

ACSI
ARCHITECTURAL CONTROL SYSTEMS INC.

2720 CLARK AVE., ST. LOUIS, MO 63103 (800) 753-5558

SWITCH KIT K-101

STEP 1: Remove two screws from bottom of hinge style case.

STEP 2: With plate and spring removed, position switch assembly on plate as shown. Run wires thru existing hole of the formed tab opposite of tab used to position return spring.

STEP 3: Resecure plate, spring and switch assembly to the hinge style housing with screws.

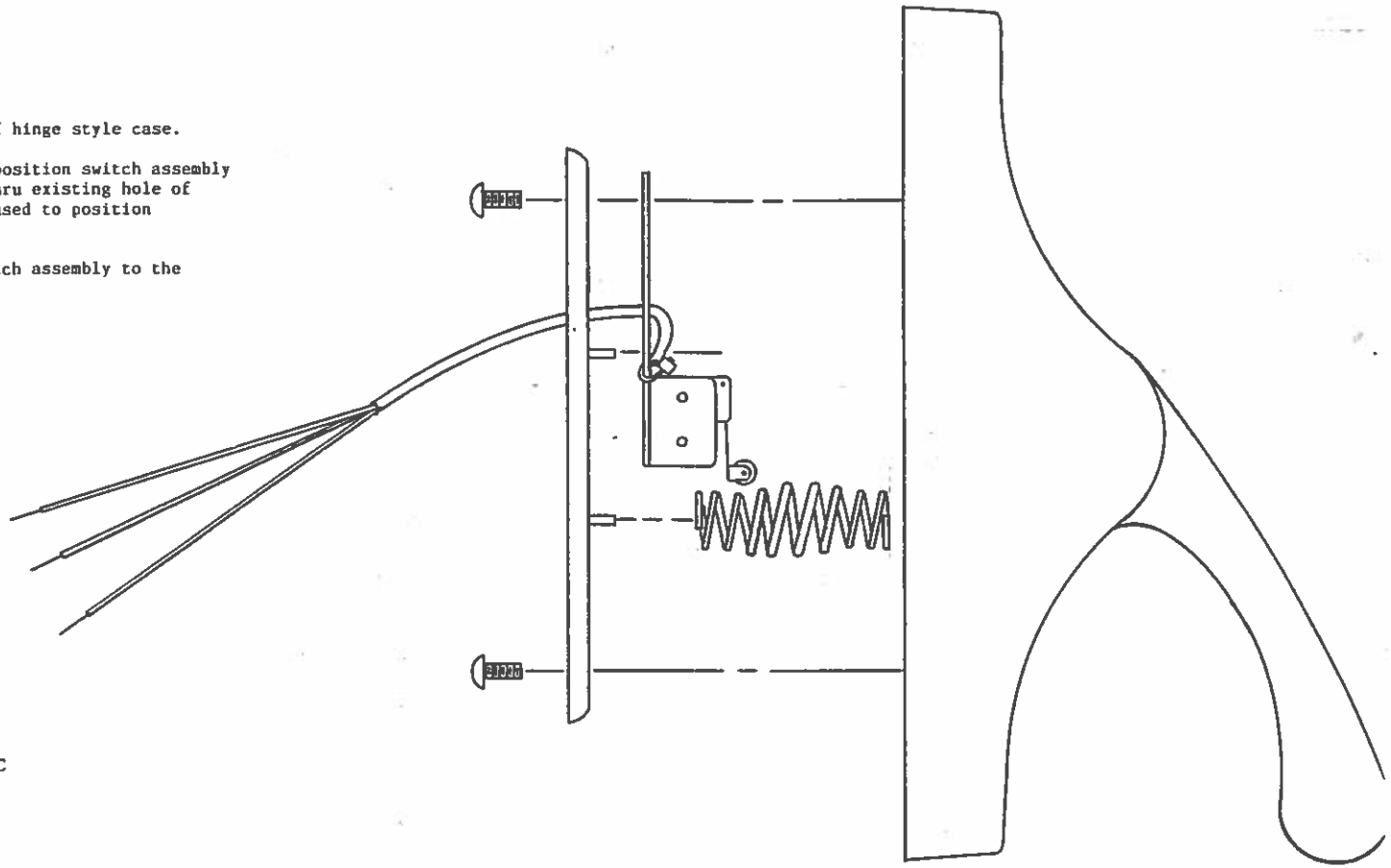

ELECTRICAL SPECIFICATION

SWITCH RATING: 4 AMP, 250VAC

RED WIRE (NORMALLY OPEN)

GRAY WIRE (NORMALLY CLOSED)

YELLOW WIRE (COMMON)

ARCHITECTURAL CONTROL SYSTEMS, INCORPORATED
ST. LOUIS, MISSOURI

TOLERANCES UNLESS NOTED
FRACTION ± 1/64 DRILL +.007 -.000
DECIMAL ± .005 REAM +.001 -.000
ANGULAR ± 1° PUNCH +.004 -.001

DATE	REV	ENG. ORDER	APPRV.

DESCRIPTION	DRAWING NO.	MATERIAL	SCALE	DRAWN BY	DATE
K101 SWITCH KIT VON DUPRIN #55	I.D. 1072		CAD	[illegible]	2-4-94
			SHEET 1 OF 1	APPRV. BY [illegible]	DATE 2-4-94

DO NOT SCALE THIS DWG.

SWITCH KIT K-104

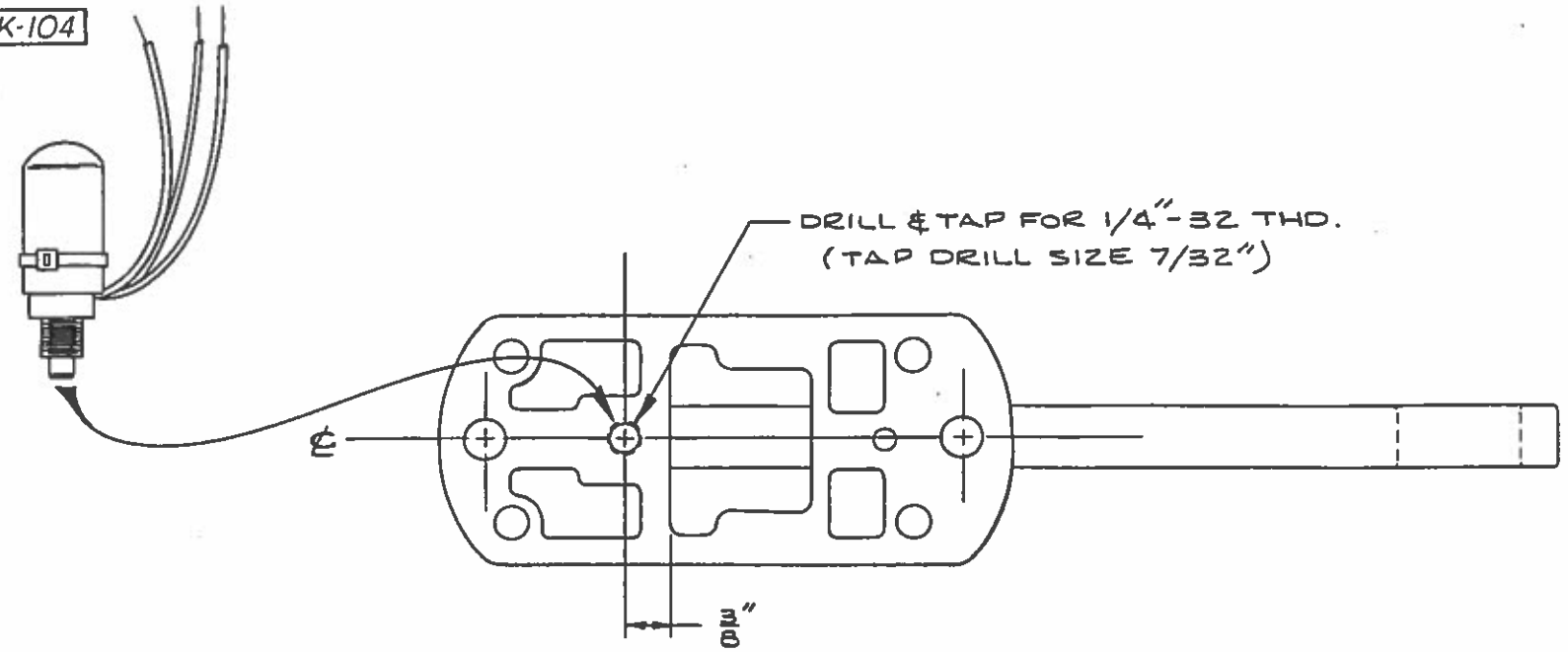

INSTALLATION INSTRUCTIONS

STEP 1: LOCATE HINGE STYLE CASE AND DOG MECHANISM.

STEP 2: MARK HOLE ON BACK OF CASE TO DIMENSION SHOWN. DRILL AND TAP HOLE FOR 1/4" - 32 THREAD.

STEP 3: SCREW SWITCH COMPLETELY IN. THEN RELEASE DOGGING MECHANISM.

STEP 4: PROVIDE ADEQUATE CLEARANCE FOR SWITCH IN DOOR CUTOUT. TERMINATE WIRES TO POWER TRANSFER HINGE AND MOUNT DEVICE.

ELECTRICAL SPECIFICATIONS

SWITCH RATING: 250 mA, 30 WATTS MAX. AC, NON INDUCTIVE

RED WIRE: NORMALLY OPEN

GRAY WIRE: NORMALLY CLOSED

YELLOW WIRE: COMMON

ARCHITECTURAL CONTROL SYSTEMS, INCORPORATED
ST LOUIS, MISSOURI

TOLERANCES UNLESS NOTED
FRACTION ± 1/64 DRILL +.007 -.000
DECIMAL ± .005 REAM +.001 -.000
ANGULAR ± 1° PUNCH +.004 -.001

DATE	REV	ENG. ORDER	APPRV.

DESCRIPTION	DRAWING NO.	MATERIAL
AE SWITCH KIT SARGENT 90 SERIES	I.D. 1070	

SCALE CAD | DRAWN BY M.L. | DATE 11-11-93
SHEET 1 OF 1 | APPRV. BY M.L. | DATE 11-11-93

DO NOT SCALE THIS DWG.

SWITCH KIT - K-105

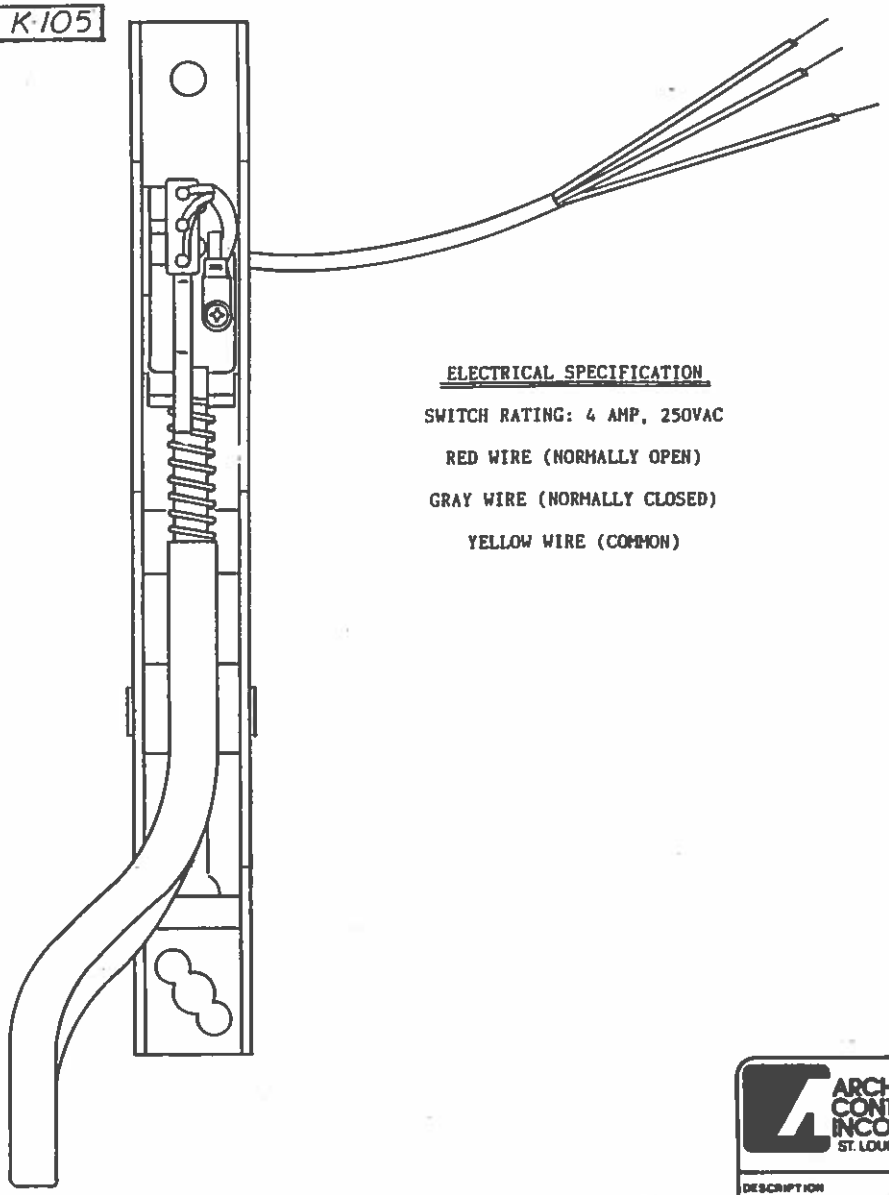

ELECTRICAL SPECIFICATION

SWITCH RATING: 4 AMP, 250VAC

RED WIRE (NORMALLY OPEN)

GRAY WIRE (NORMALLY CLOSED)

YELLOW WIRE (COMMON)

STEP 1: Remove four cover screws from hinge style.

STEP 2: Place switch assembly in unit as shown. Switch arm rides over the top of spring and rod. Run wires thru existing hole in unit. Switch assembly sits flat against bottom of unit.

STEP 3: Turn entire unit over. An existing hole in unit will line up with threaded hole of switch assembly. Using the provided flat head screw secure switch assembly.

STEP 4: Replace cover with four screws.

ARCHITECTURAL CONTROL SYSTEMS, INCORPORATED
ST. LOUIS, MISSOURI

TOLERANCES UNLESS NOTED
FRACTION ±1/64 DRILL +.007 -.000
DECIMAL ±.005 REAM +.001 -.000
ANGULAR ±1° PUNCH +.000 -.001

DESCRIPTION	DRAWING NO.	MATERIAL
K105 SWITCH KIT SARGENT	I.D. 1073	

DATE	REV	ENG. ORDER	APPRV.

SCALE CAD | DRAWN BY [illegible] | DATE 2-4-94
SHEET 1 OF 1 | APPRV. BY [illegible] | DATE 4-94

DO NOT SCALE THIS DWG.

K-107

AUTHORIZED EGRESS SWITCH KIT FOR YALE 2100 / CORBIN 8000

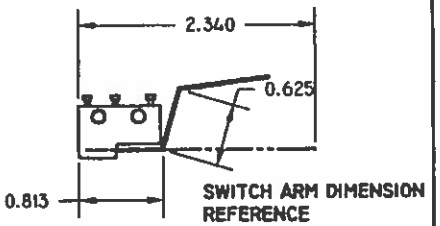

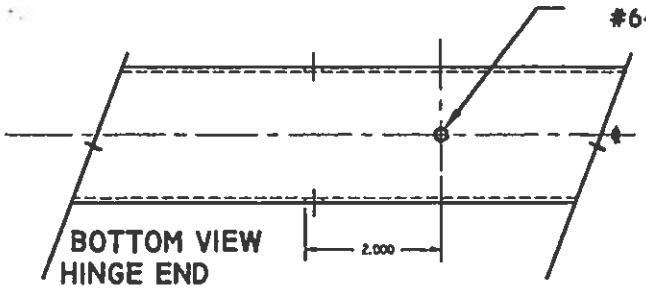

MODIFICATION INSTRUCTIONS

1.) FROM THE BOTTOM OF THE BASE, DIMENSION, DRILL AND COUNTERSINK FOR #6-32 X 3/16" FLAT HEAD MACHINE SCREW (PROVIDED WITH KIT).
NOTE: HOLE CENTERED ON CENTER LINE OF THE DEVICE AND 2" FROM THE BACK EDGE OF THE PIVOT HOLE.
2.) DEBURR SURFACE.

NOTE: MEASUREMENT TAKEN FROM BACK SIDE OR HINGE SIDE OF PIN HOLE.

NOTE:
CIRCLED AREA OF DRAWING SHOWS GENERAL LOCATION OF SWITCH AND BAR RETURN.

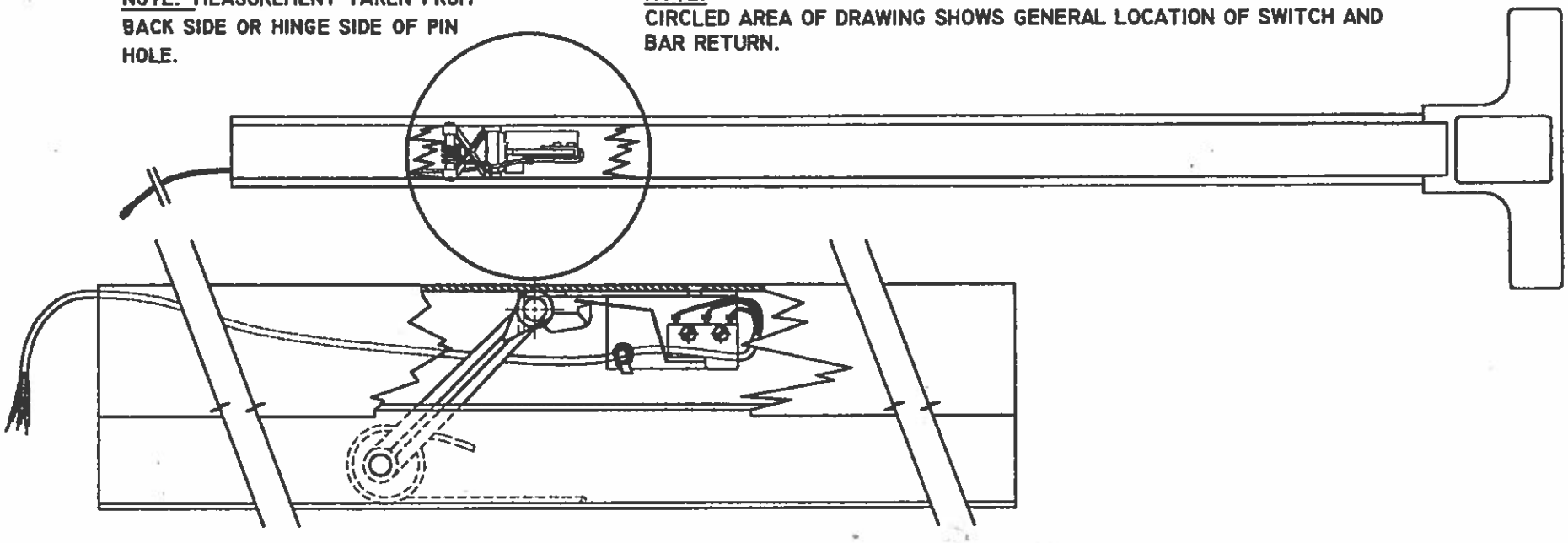

HINGE END — SIDE VIEW — HEAD END

SIDE CUT AWAY TO EXPOSE BRACKET, SWITCH AND RELATED MECHANICS.

INSTALLATION INSTRUCTIONS

START BY SLIDING BASE INTO PLACE OVER HEAD END BAR RETURN MECHANISM TO ABOUT HALF WAY. PLACE RIGHT ANGLED END OF SWITCH BRACKET INTO OPENING OF THE HINGE END BAR RETURN (AS SHOWN) HOLDING LIGHT STRAIN ON WIRES TO HOLD BRACKET IN PLACE AT HINGE END OF DEVICE. CONTINUE HOLDING STRAIN AND FINISH SLIDING BASE OVER SWITCH AND HINGE END RETURN MECHANISM, WATCHING FOR HOLE IN BASE TO ALIGN WITH THREADED HOLE IN SWITCH. START #6-32 FHMS THROUGH BASE INTO SWITCH BRACKET, BEFORE SECURING SCREW REPLACE PIVOT PIN AND FINISH TIGHTENING SCREW (DO NOT LOCKTITE THREADS UNTIL SWITCH HAS BEEN TESTED). TEMPORARILY CONNECT WIRES AND TEST SWITCH. NOTE: SWITCH MOST ACTIVATE BETWEEN ONE QUARTER AND ONE HALF DEPRESSION OF BAR. IF SWITCH IS NOT OPERATING OR AT THE WRONG POINT OF DEPRESSION, SHINE LIGHT INSIDE BAR AND BASE, NOTE POSITION OF SWITCH LEVER, IT SHOULD BE AS SHOWN IN DRAWING, BETWEEN MECHANISM TAB AND BASE. ONCE TESTING IS COMPLETE LOOSEN SCREW, LOCKTITE, AND SECURE.

SWITCH KIT · K-112

STEP 1: SEPARATE ACTIVE PUSH PAD ASSEMBLY FROM CHANNEL.

STEP 2: REMOVE PUSH PAD FROM ASSEMBLY BY REMOVING EIGHT SCREWS.

STEP 3: MOUNT SWITCH ASSEMBLY ON SCREW AS SHOWN AND FASTEN WITH NUT PROVIDED.
NOTE: MAKE SURE SWITCH ARM IS POSITIC AS SHOWN BELOW.

STEP 4: RE-ASSEMBLE DEVICE

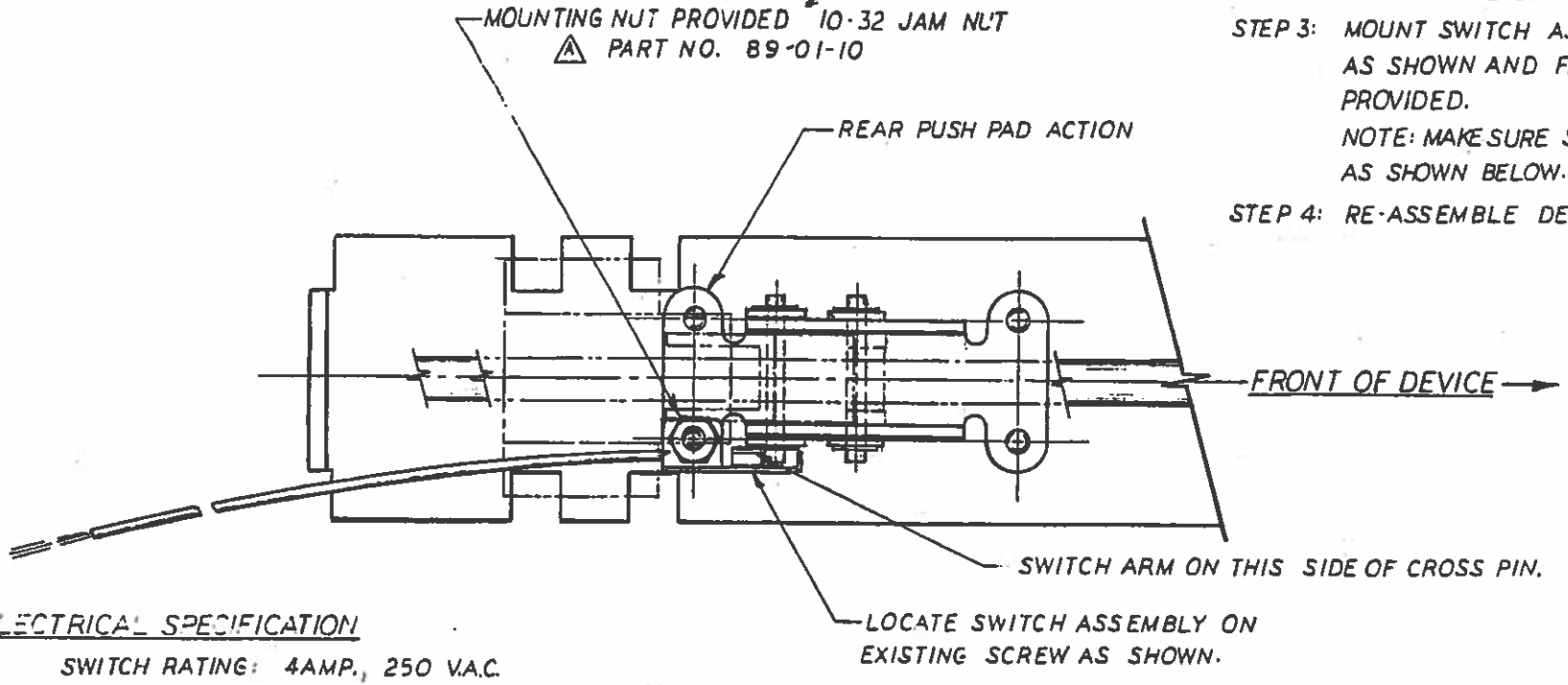

ELECTRICAL SPECIFICATION

SWITCH RATING: 4AMP., 250 V.A.C.
RED WIRE (NORMALLY OPEN)
GRAY WIRE (NORMALLY CLOSED)
YELLOW WIRE (COMMON)

ARCHITECTURAL CONTROL SYSTEMS INCORPORATED
ST. LOUIS, MISSOURI

TOLERANCES UNLESS NOTED
FRACTION ± .1/64 DRILL ±.007 -.000
DECIMAL ±.005 REAM ±.001 -.000
ANGULAR ±1° PUNCH ±.001 -.001

DATE	REV	ENG. ORDER	APPRV.
1-2-96	F	ADDED NUT PART NO	MJK

DESCRIPTION	DRAWING NO.	MATERIAL			
K112 SWITCH KIT: DOROMATIC 1490, 1590	I.D. 1075	—	SCALE NTS	DRAWN BY PWW	DATE 10-24-9
			SHEET 1 OF 1	APPRV. BY MJO	DATE 10-26-9

DO NOT SCALE THIS DWG.

ELECTRIC UNIT LOCK TEMPLATE

"A" CONFIGURATION DOOR PREPARATION
1510/1520 ELECTRIC LOCKING/UNLOCKING

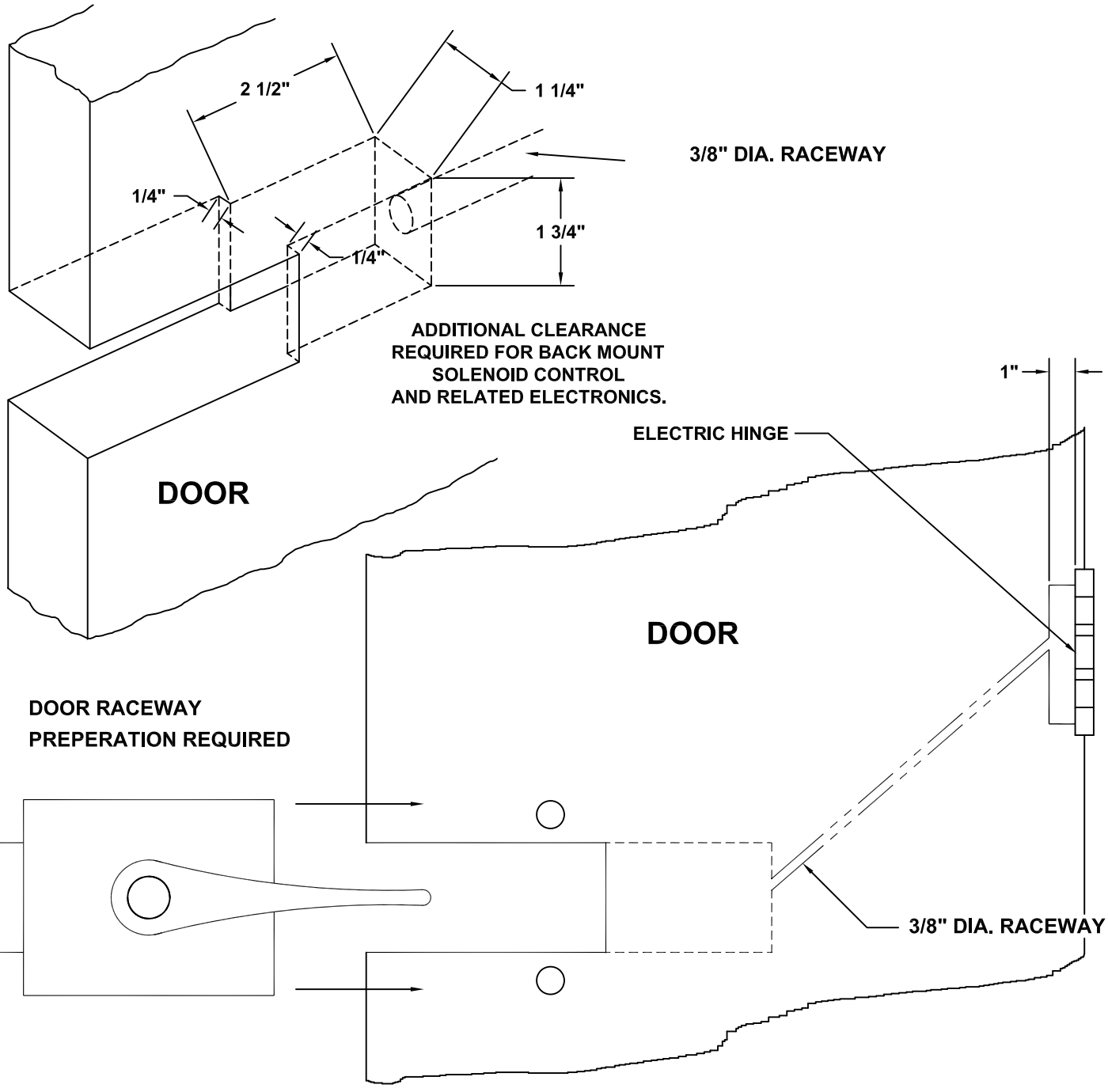

DOOR FABRICATOR TO PROVIDE A 3/8" DIAMETER (MINIMUM) RACEWAY THROUGH DOOR TO ALLOW THE INSERTION OF ELECTRICAL WIRES RUNNING BETWEEN THE LOCK MORTISE AND THE ELECTRIC HINGE.

ACSI
ARCHITECTURAL
CONTROL SYSTEMS INC.

2720 CLARK AVE., ST. LOUIS, MO 63103 (800) 753-5558

REV. 12/2017

M1500-06



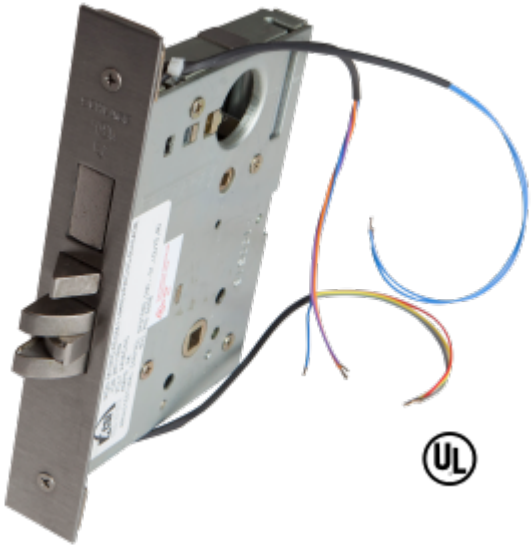

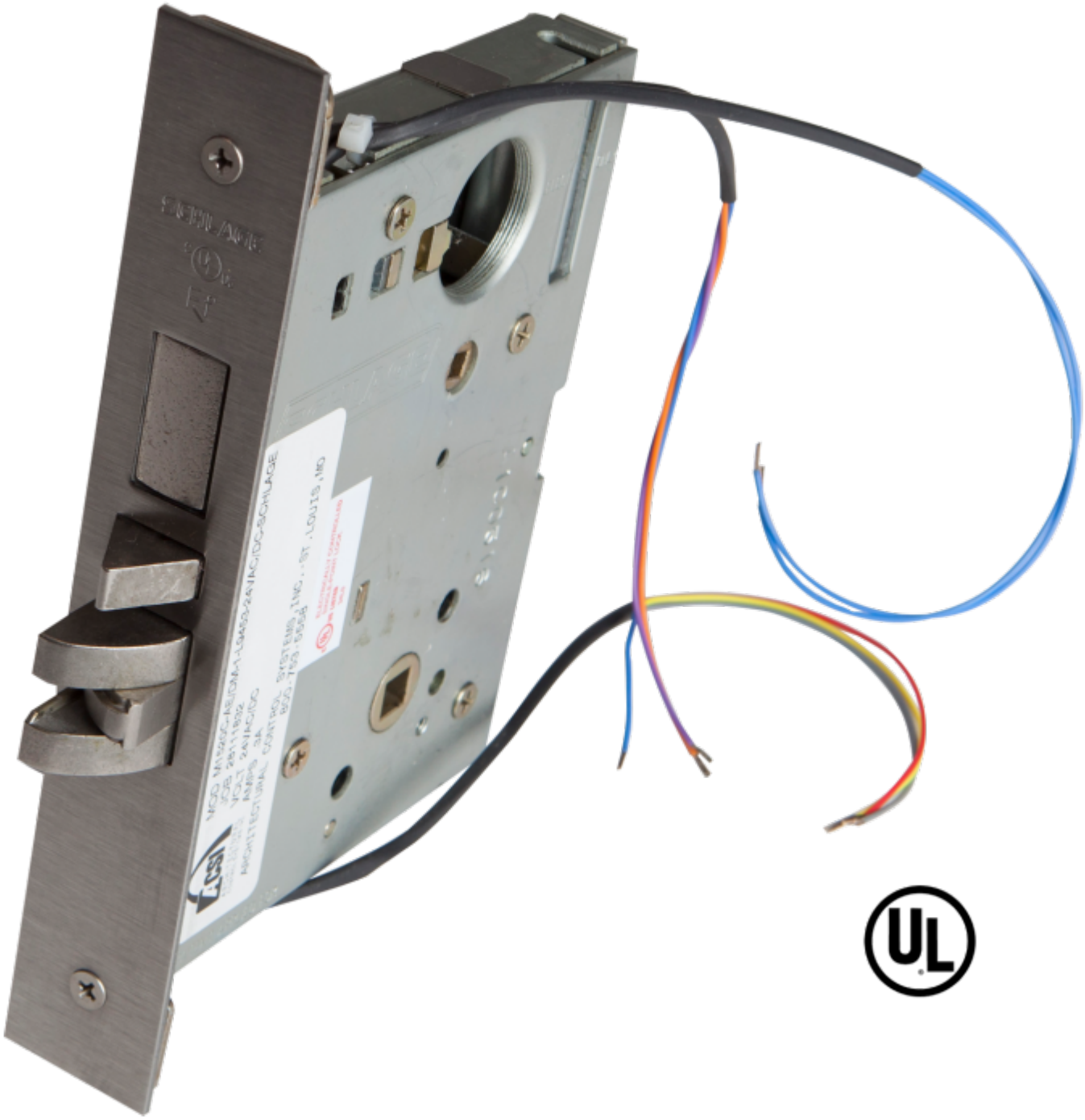

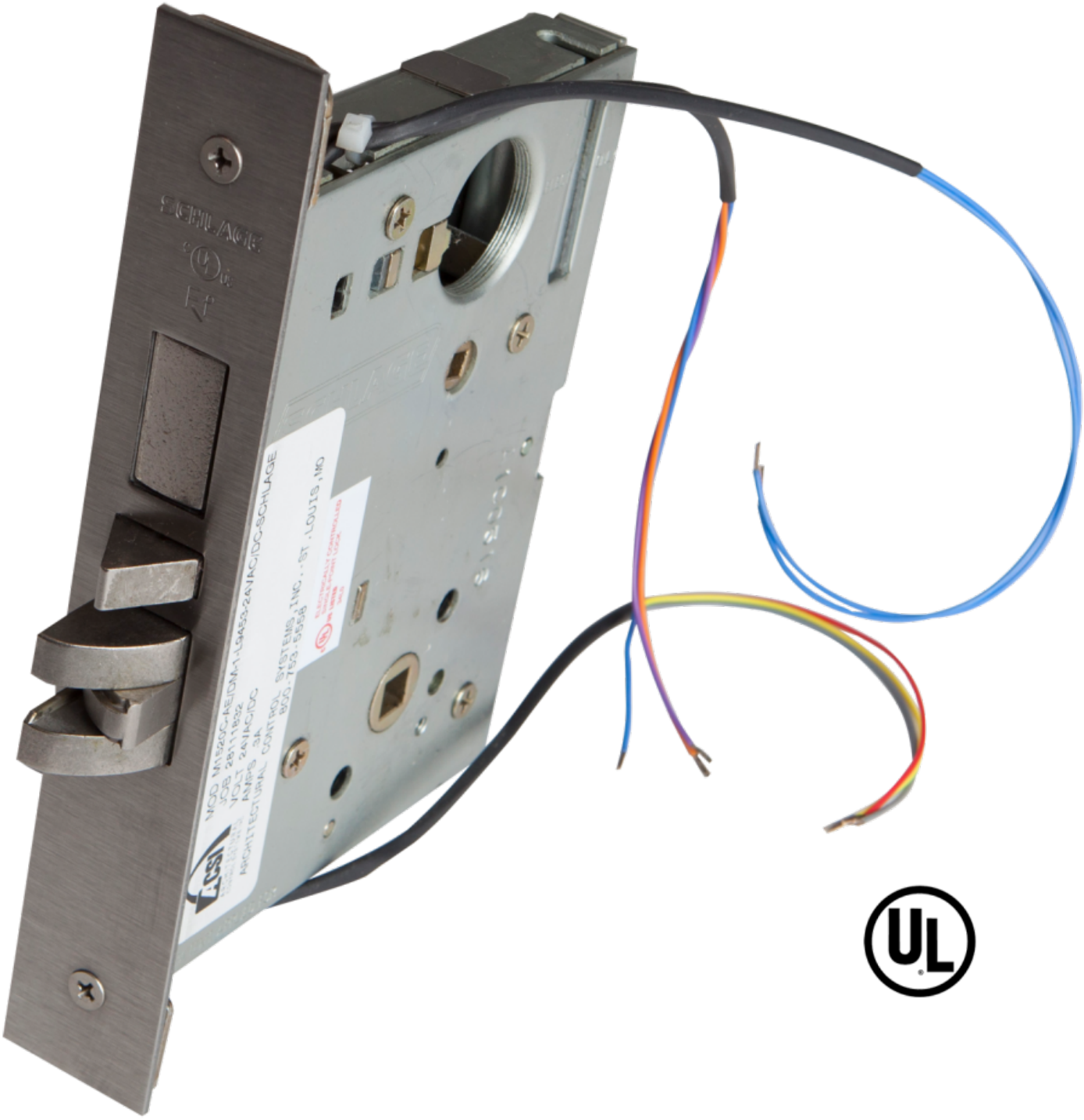
SCHLAGE

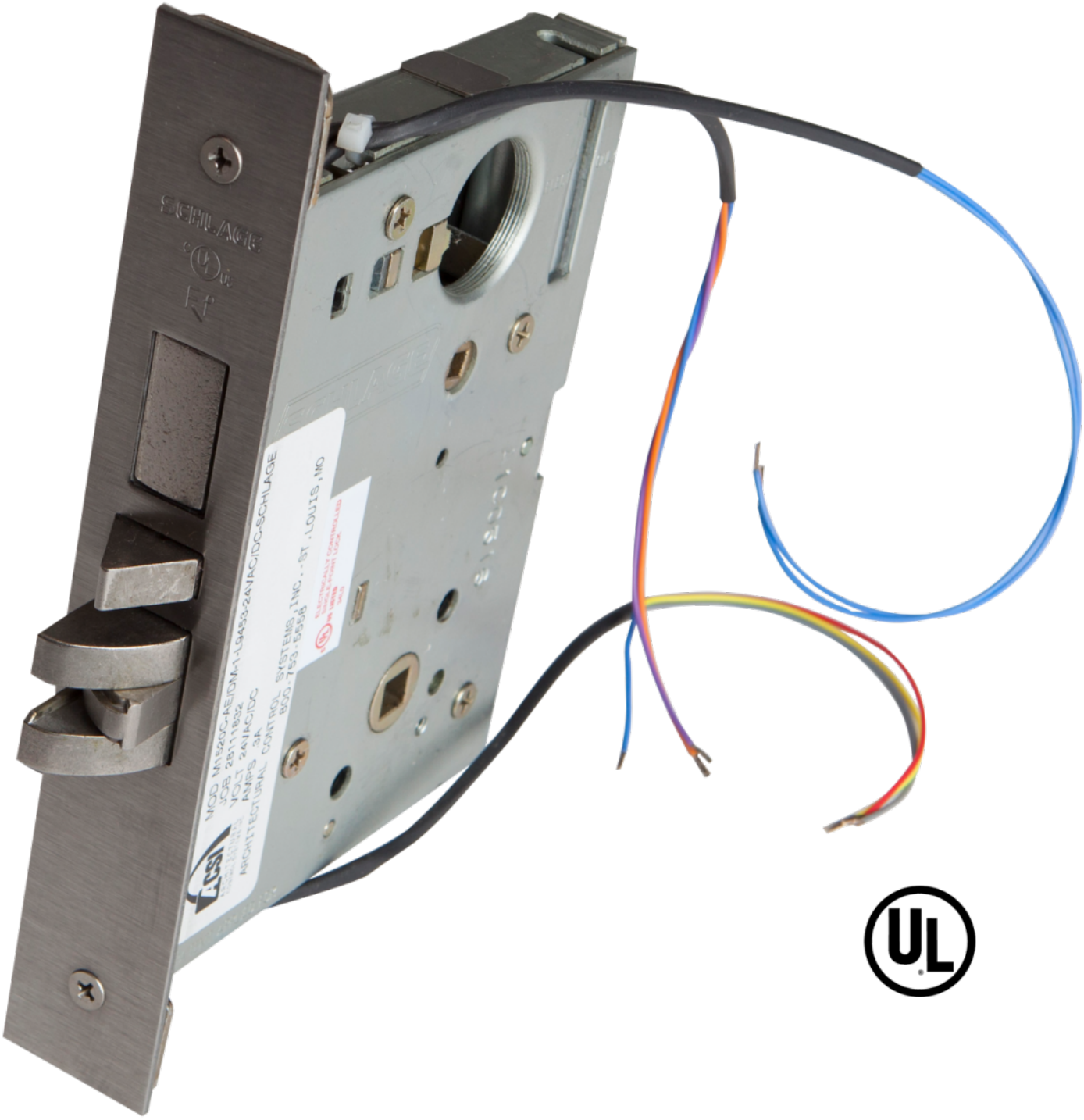
SCHLAGE
MOD M1582C-AE/DM-LS453-24VAC/DC-SCHLAGE
VOLT 24VAC/DC
AMPS 3A
ARCHITECTURAL CONTROL SYSTEMS,INC., ST.LOUIS,MO
800.753.5558

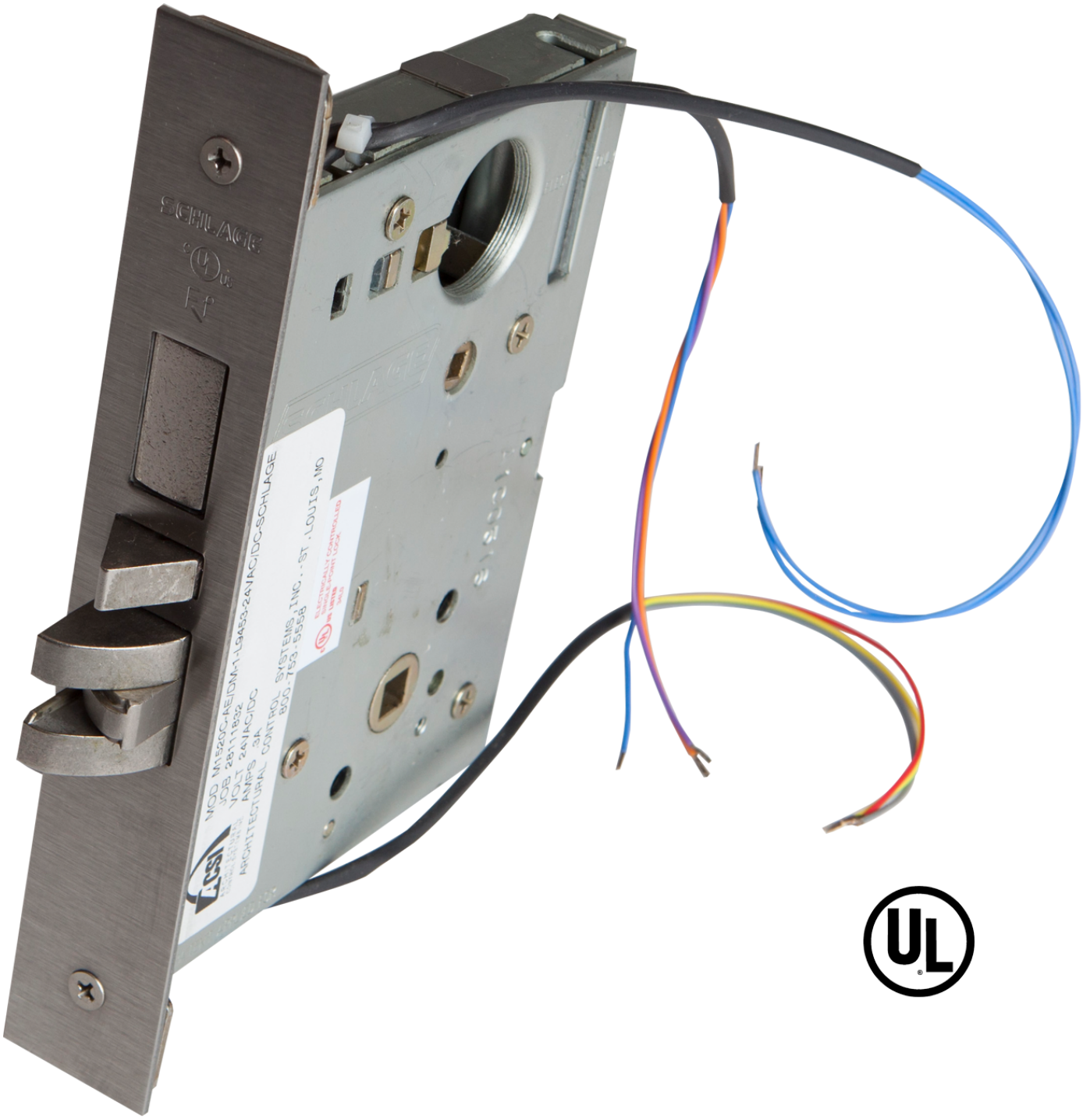
SCHLAGE
MOD M1525C-AE/DM-L9453-24VAC/DC-SCHLAGE
POS 281-118-32
VOLT 24VAC/DC
AMPS 3A
ARCHITECTURAL CONTROL SYSTEMS,INC.-ST.LOUIS,MO
800-753-5558
ELECTRICALLY CONTROLLED
MORTISE LOCK





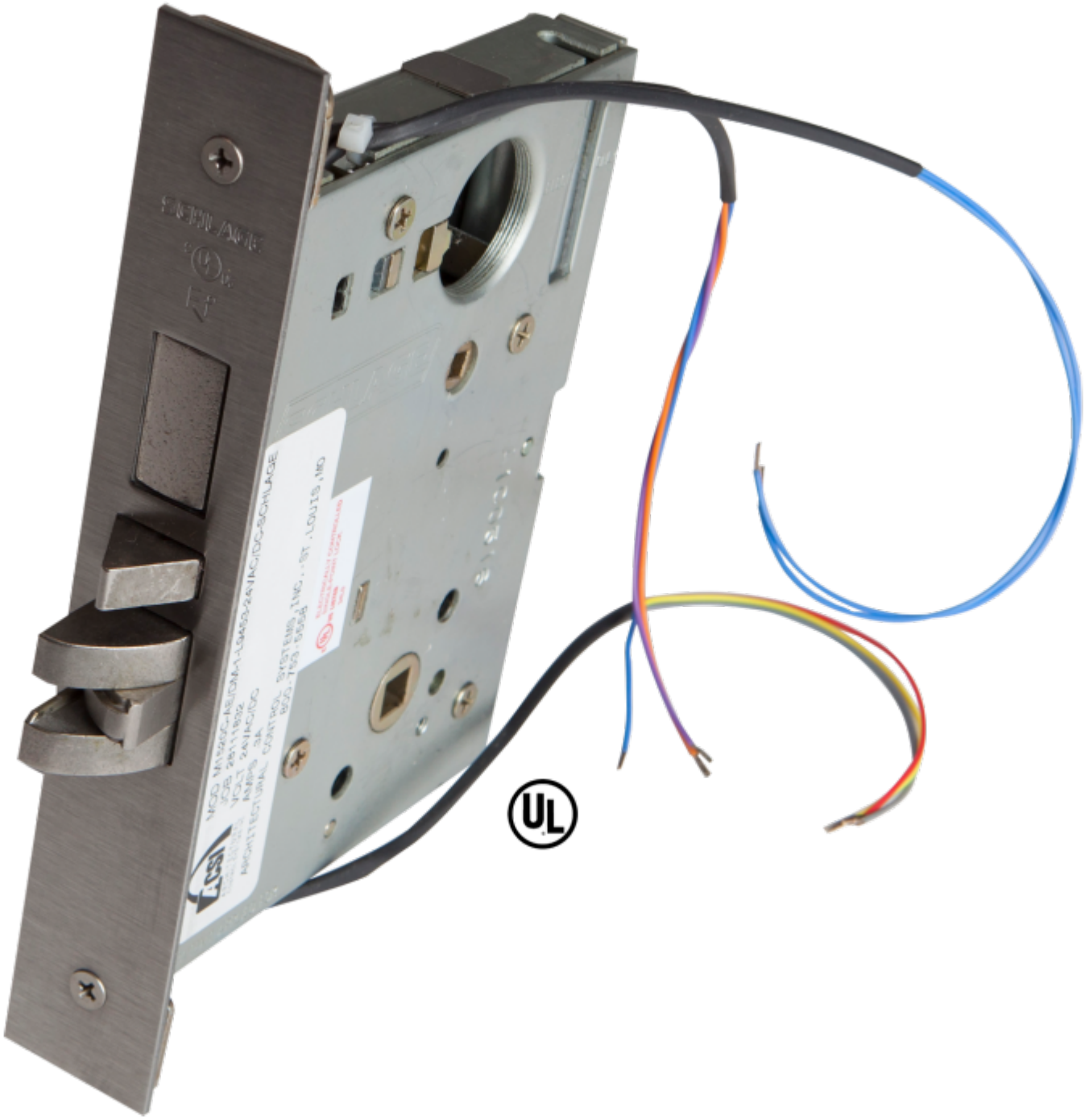

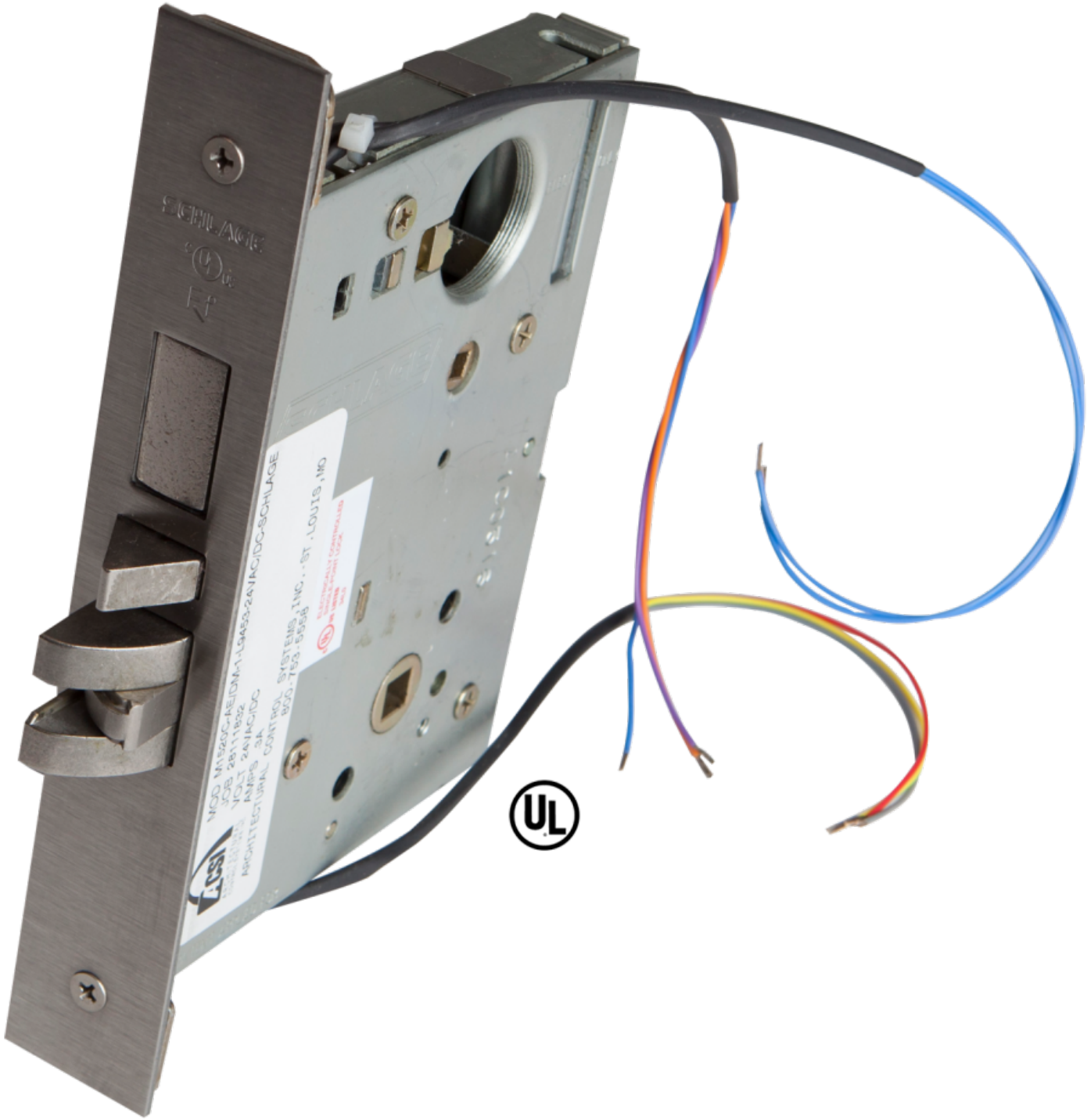
SCHLAGE
MOD M1582C-AE/DM-LS453-24VAC/DC-SCHLAGE
VOLT 24VAC/DC
AMPS 3A
ARCHITECTURAL CONTROL SYSTEMS, INC., ST. LOUIS, MO
UL

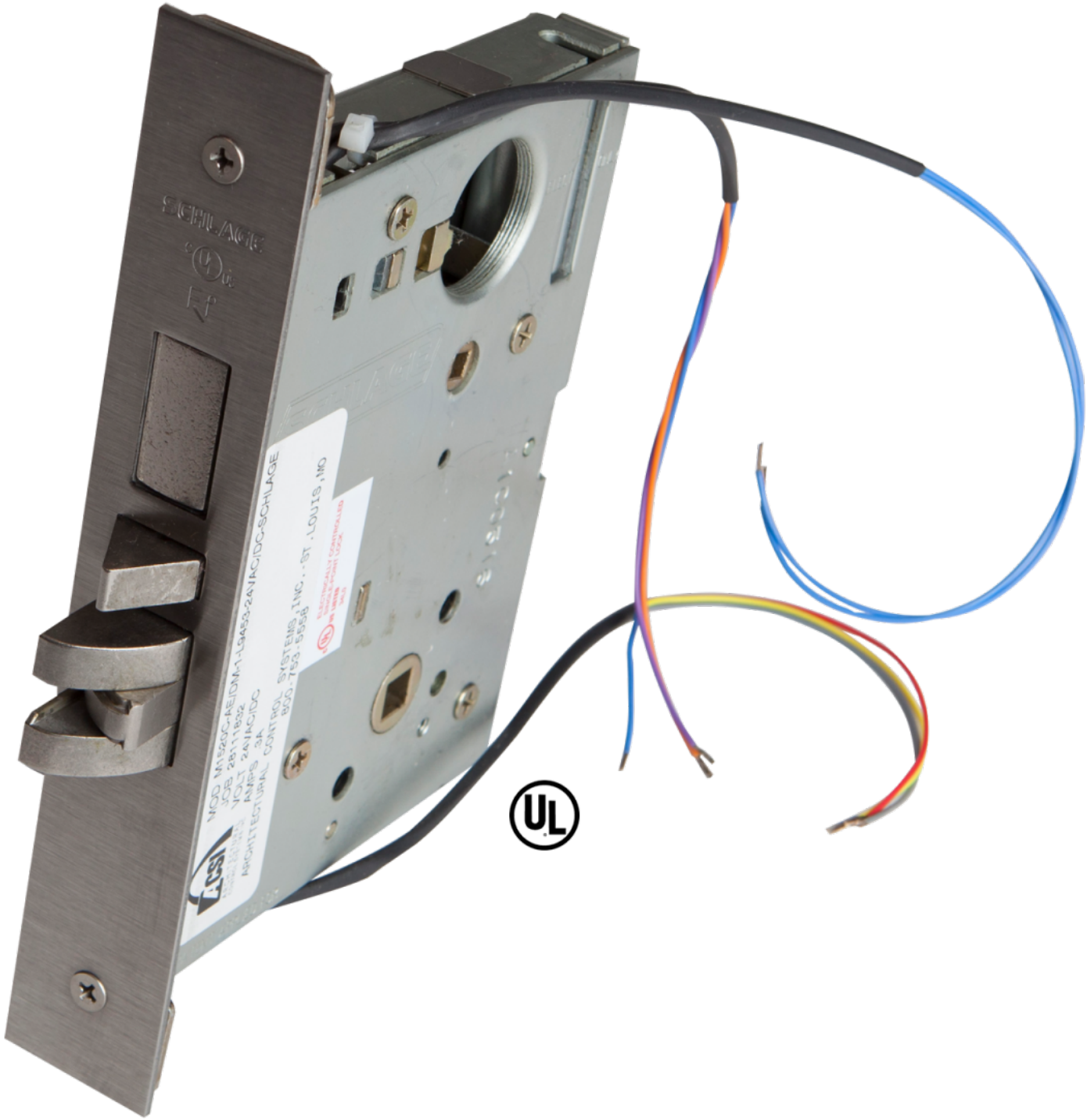
SCHLAGE
MOD M1520C-AEIDM-1-L9453-24VAC/DC-SCHLAGE
JOB 28111832
VOLT 24VAC/DC
AMPS 3A
ARCHITECTURAL CONTROL SYSTEMS, INC. - ST. LOUIS, MO
800-753-5558
ELECTRICALLY CONTROLLED
SINGLE POINT LOCK
UL

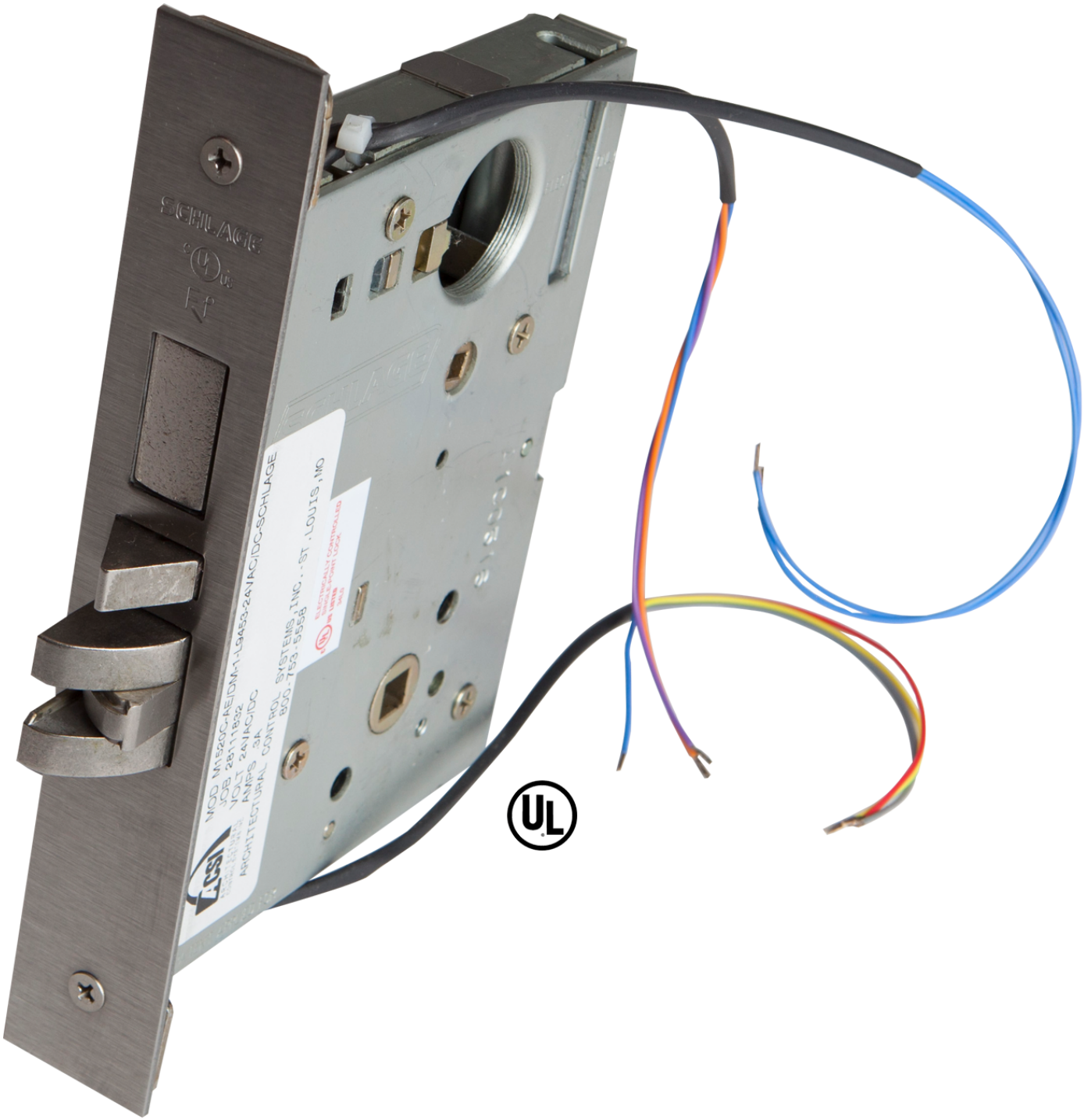
SCHLAGE
MOD M1520C-AEIDM-1-L9453-24VAC/DC-SCHLAGE
JOB 28111832
VOLT 24VAC/DC
AMPS .3A
ARCHITECTURAL CONTROL SYSTEMS, INC. - ST. LOUIS, MO
800-753-5558
ELECTRICALLY CONTROLLED
SINGLE-POINT LOCK
UL

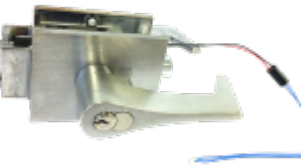

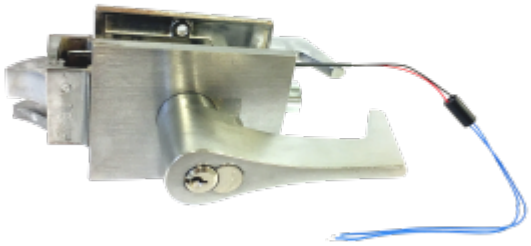

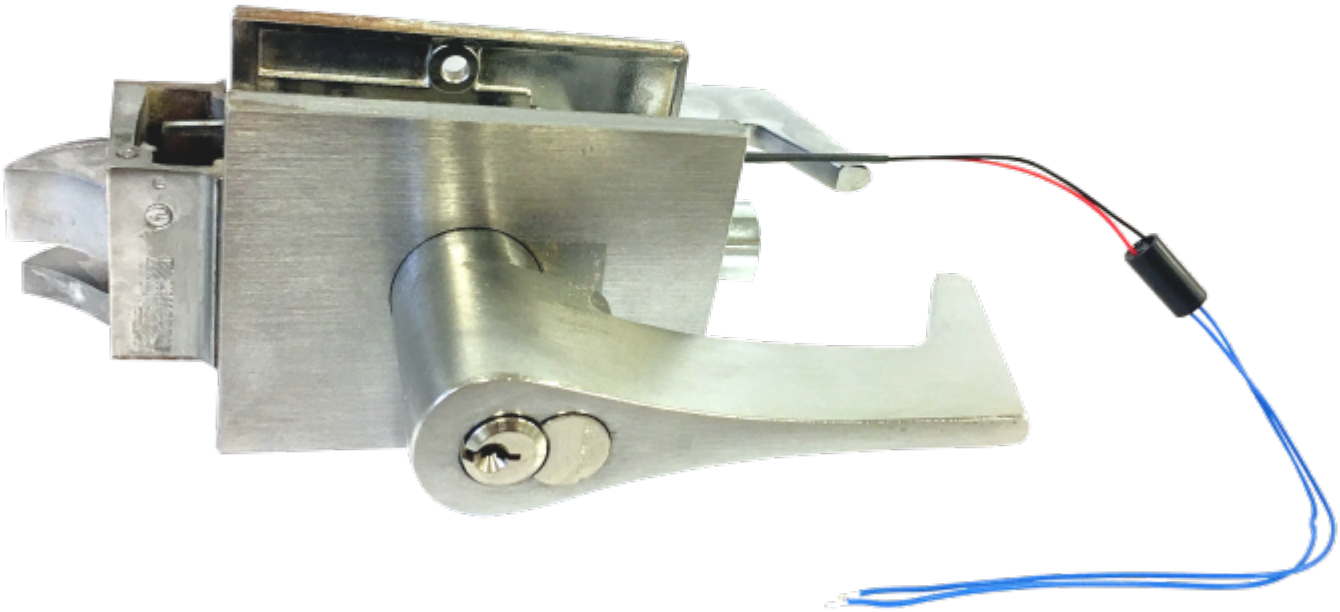

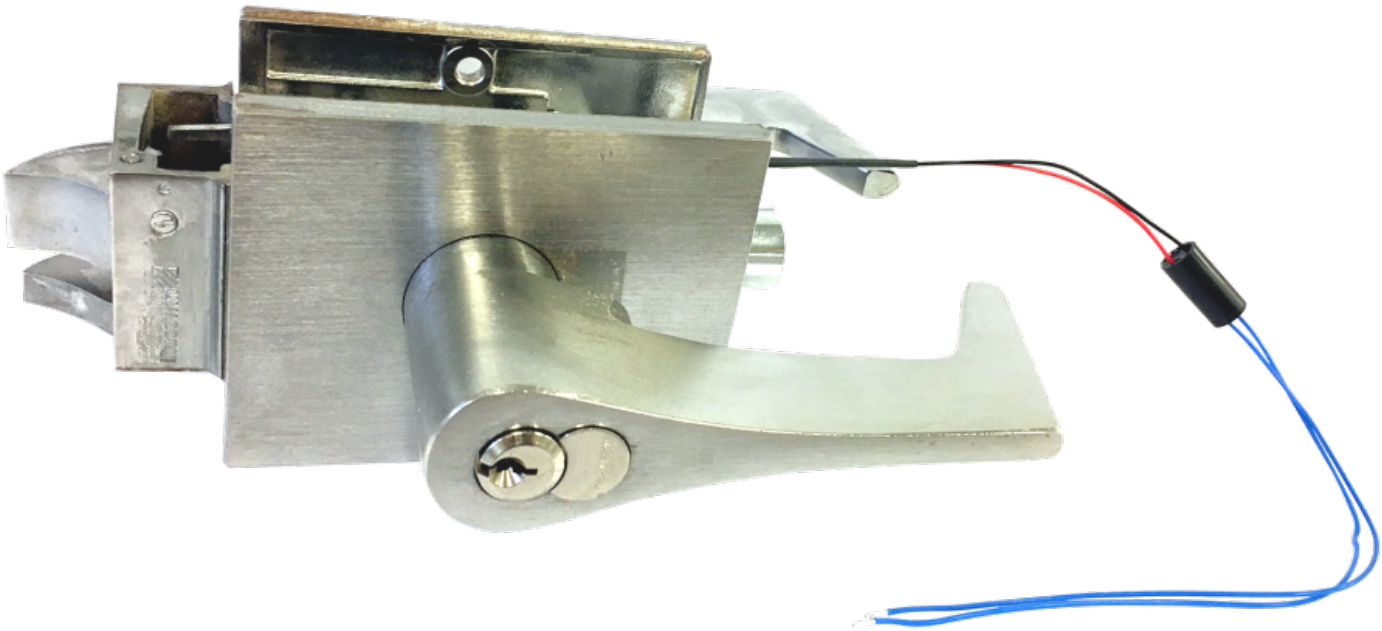

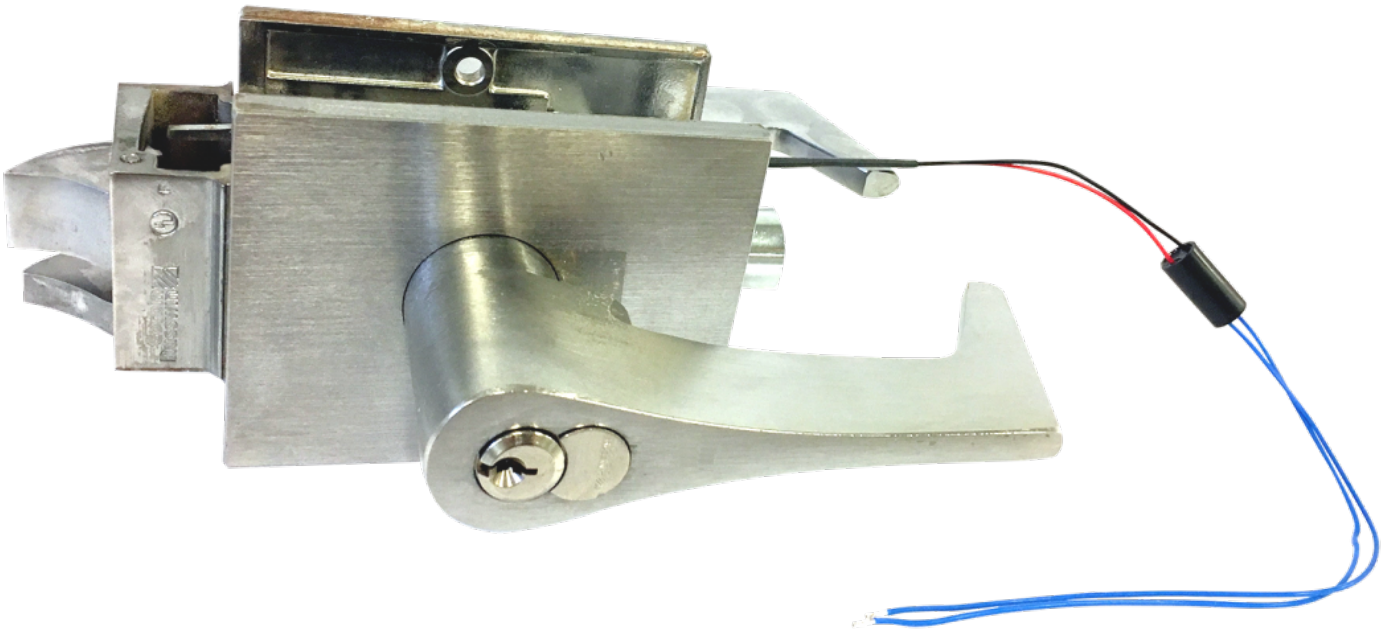

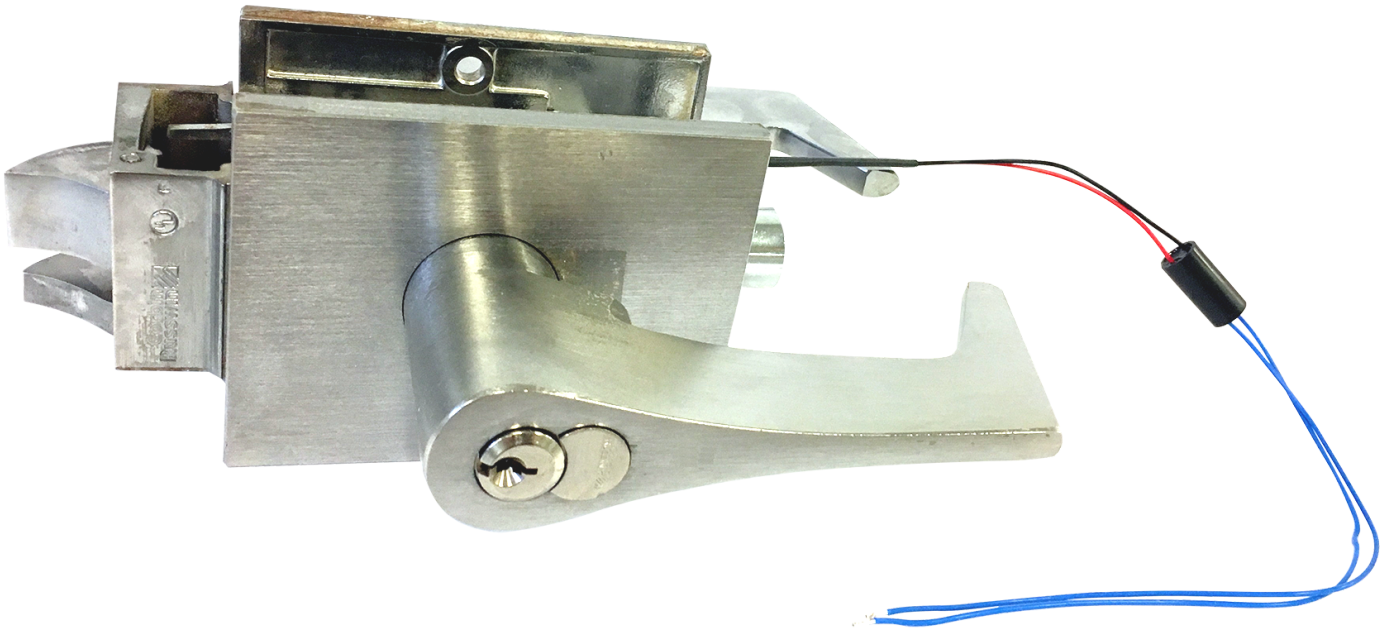



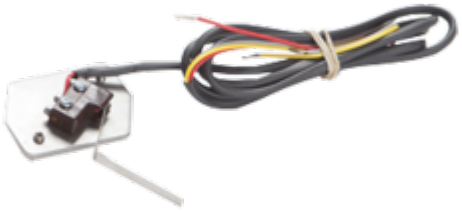











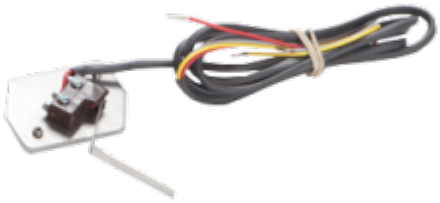

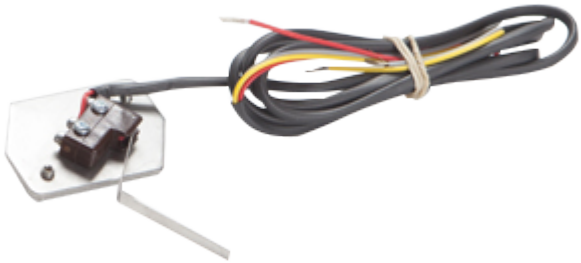





















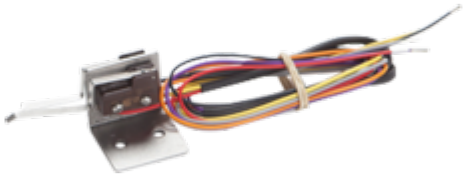





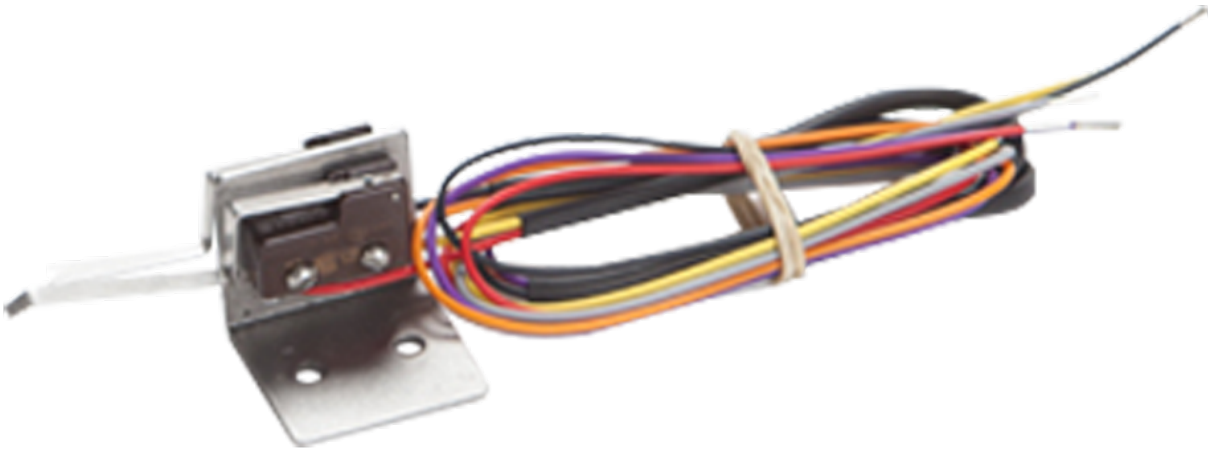





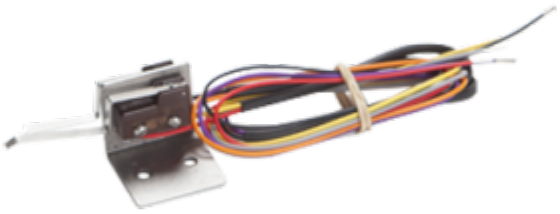

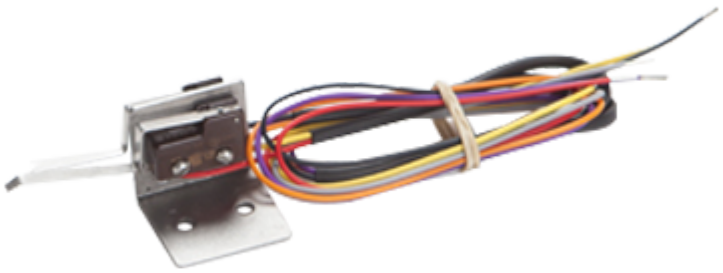





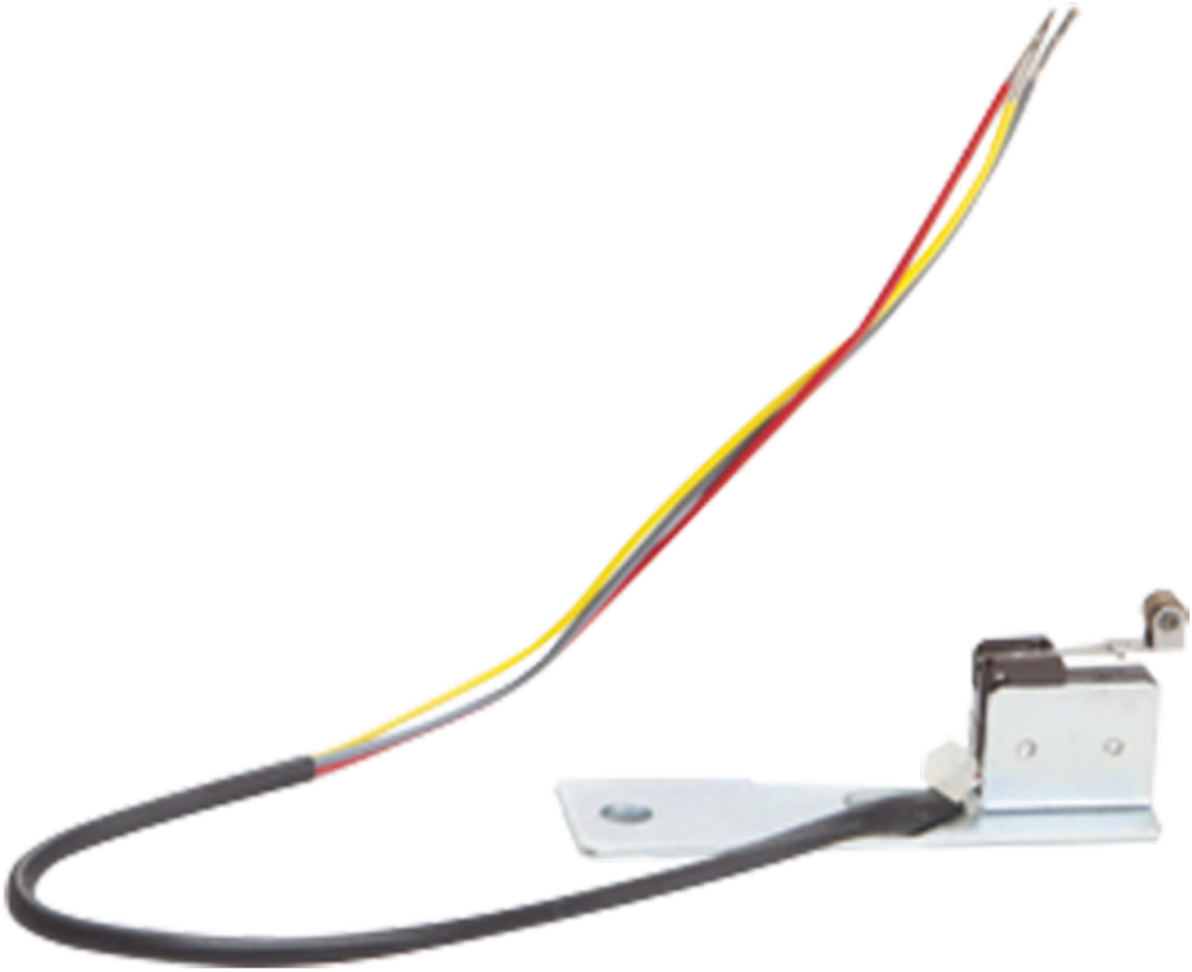

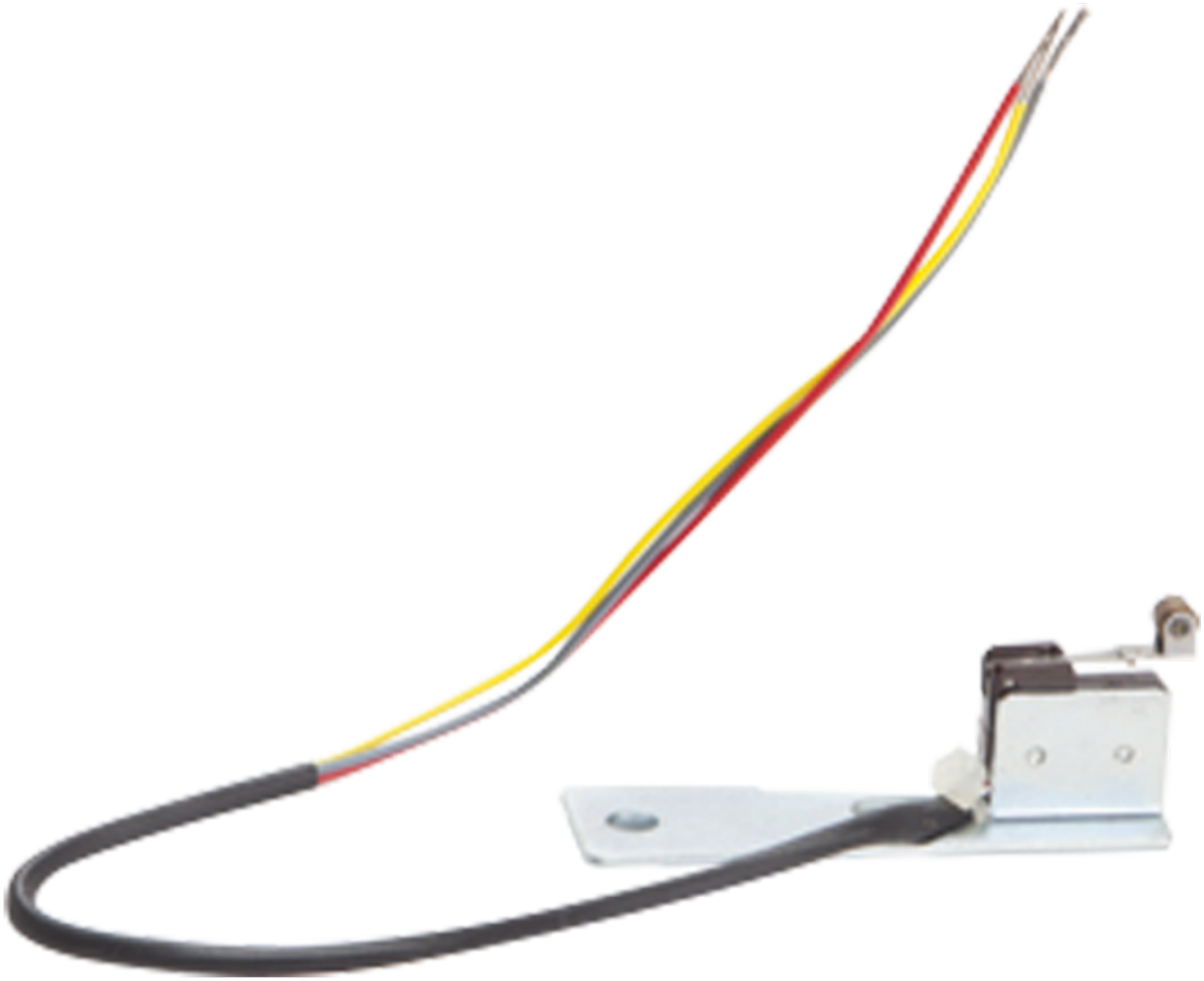

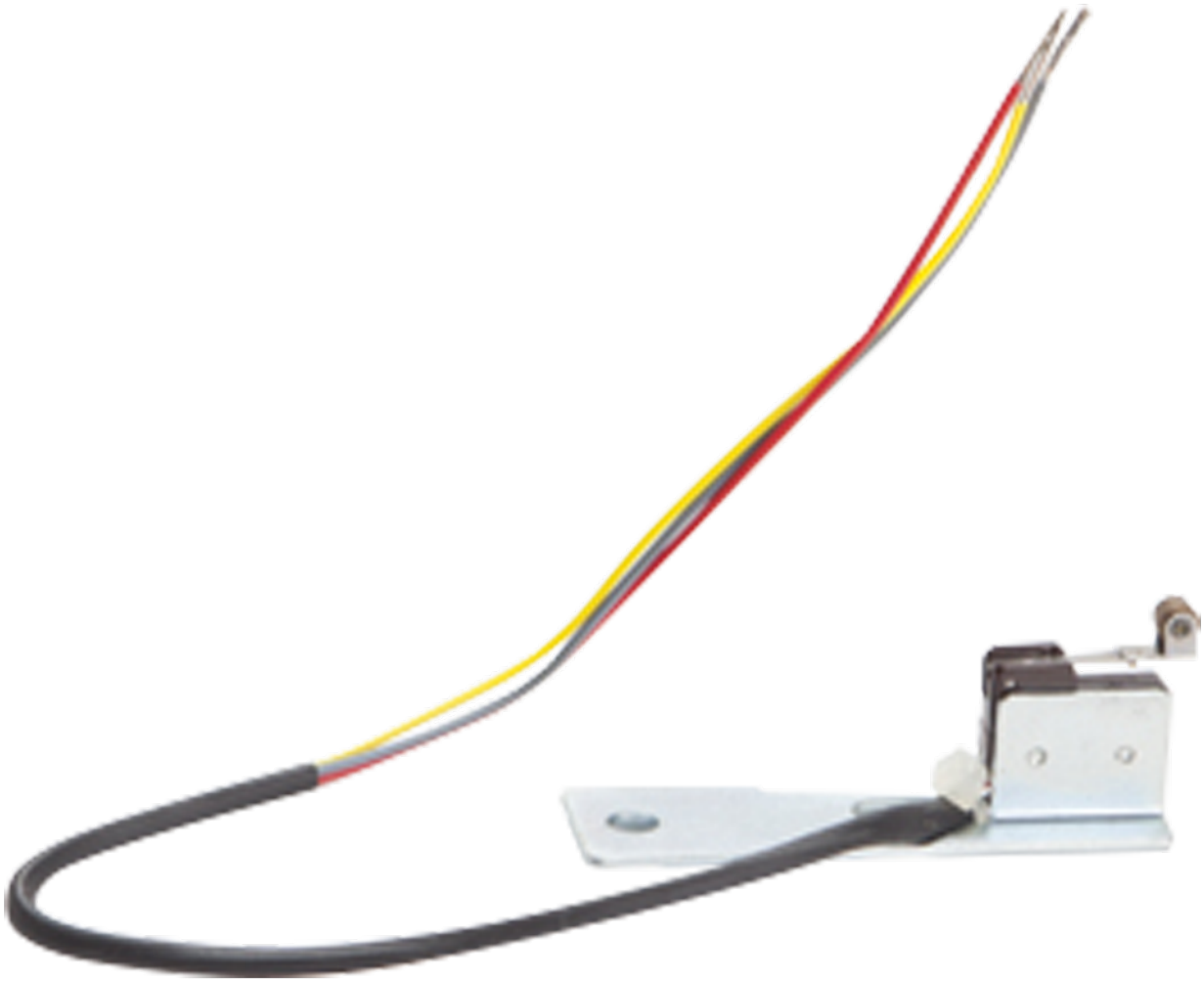

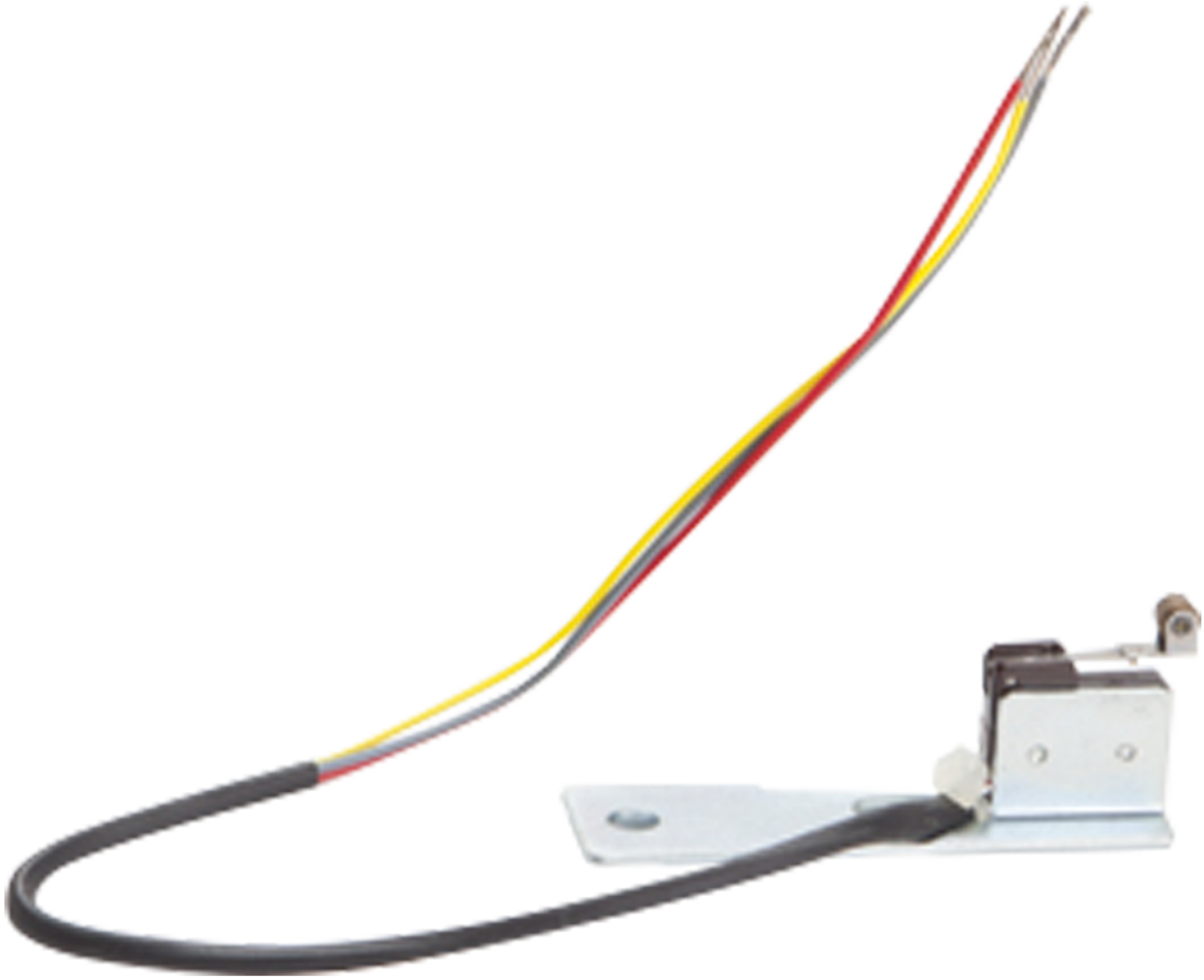





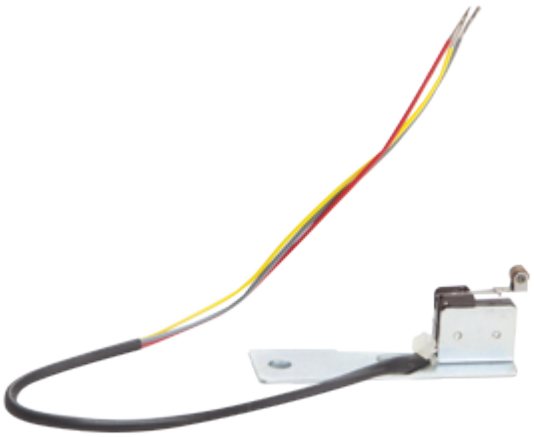





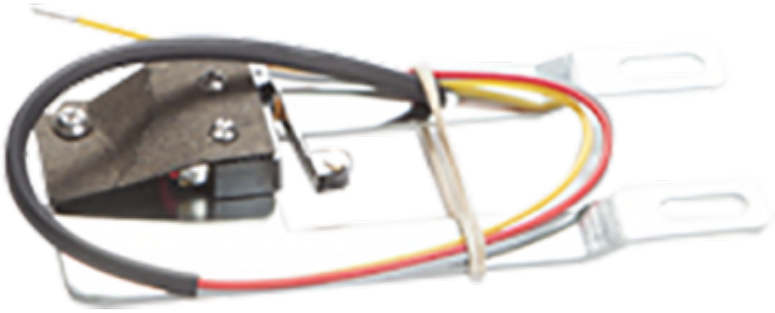

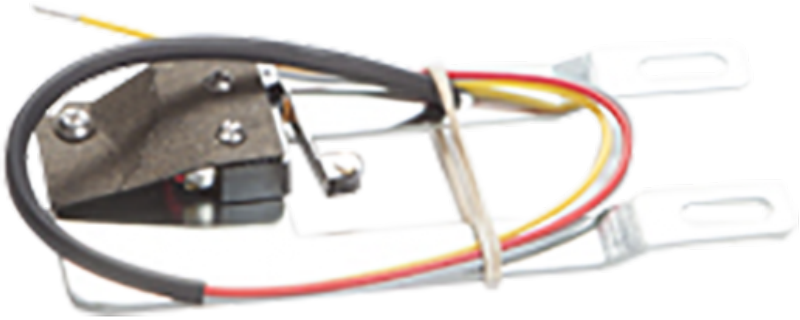

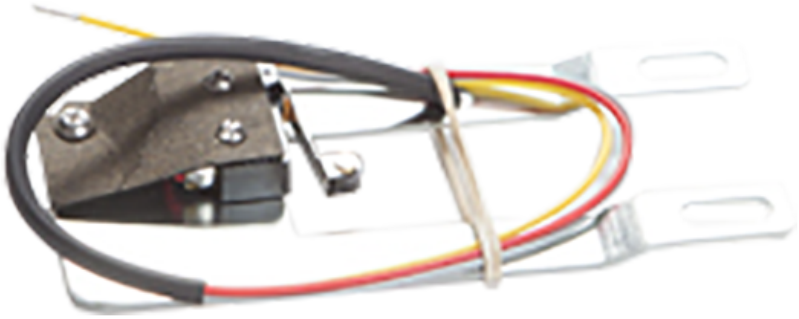



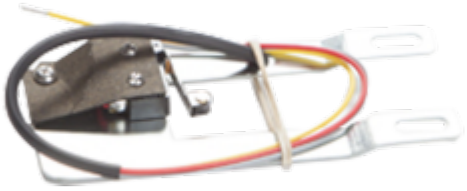

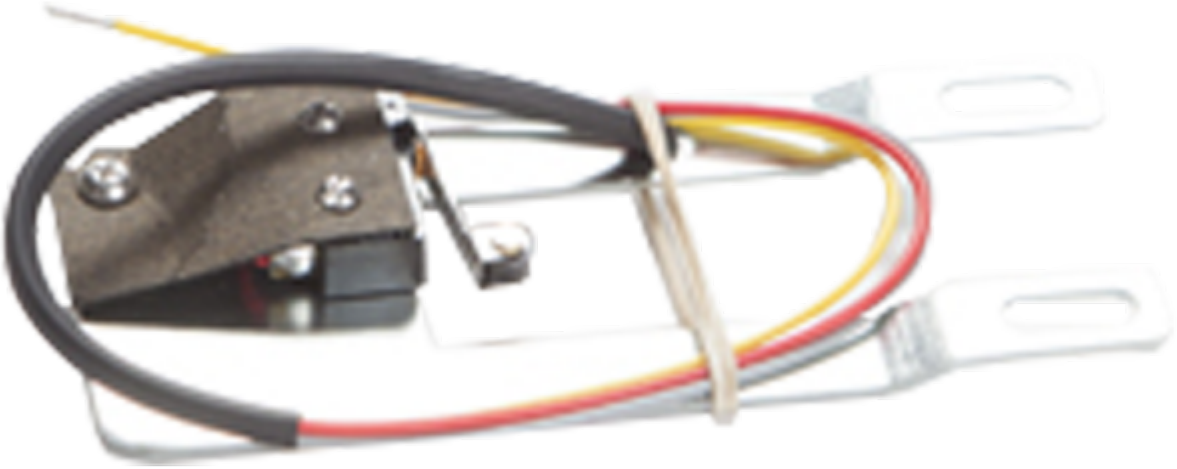

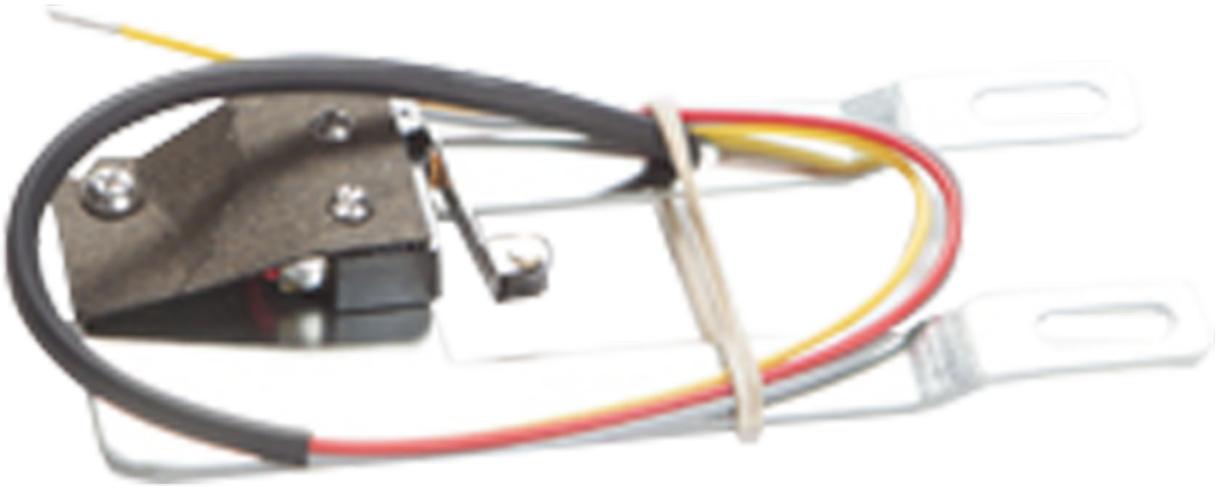

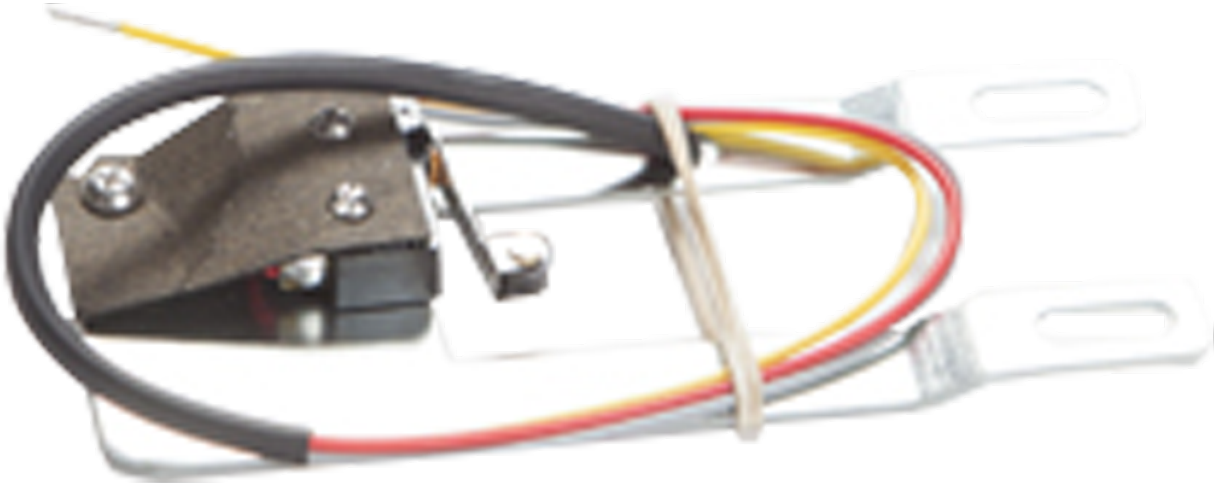

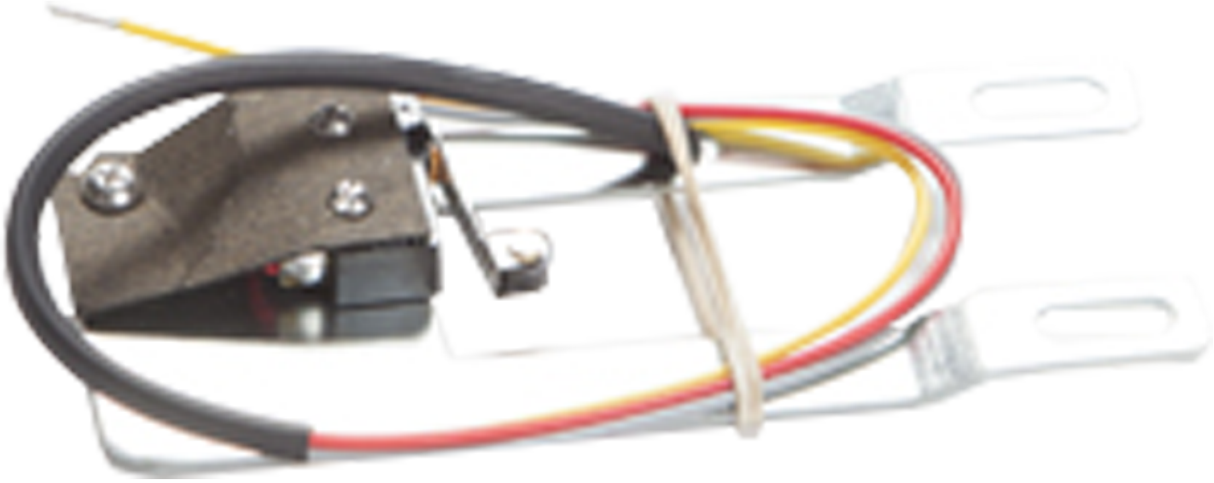





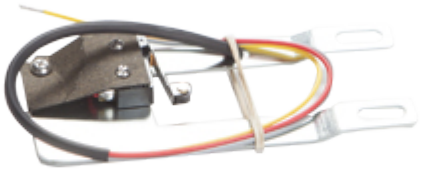



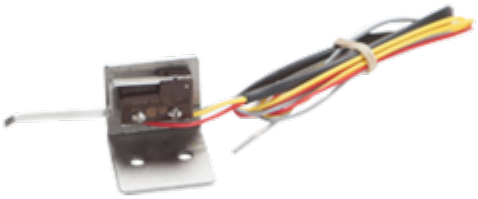









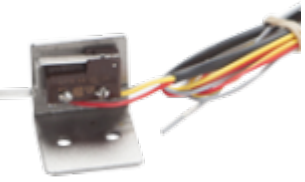

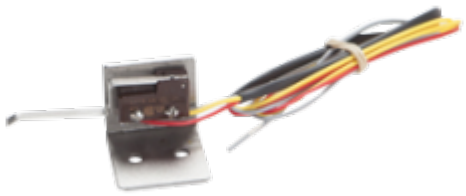

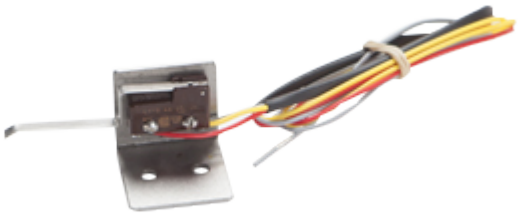













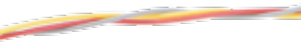









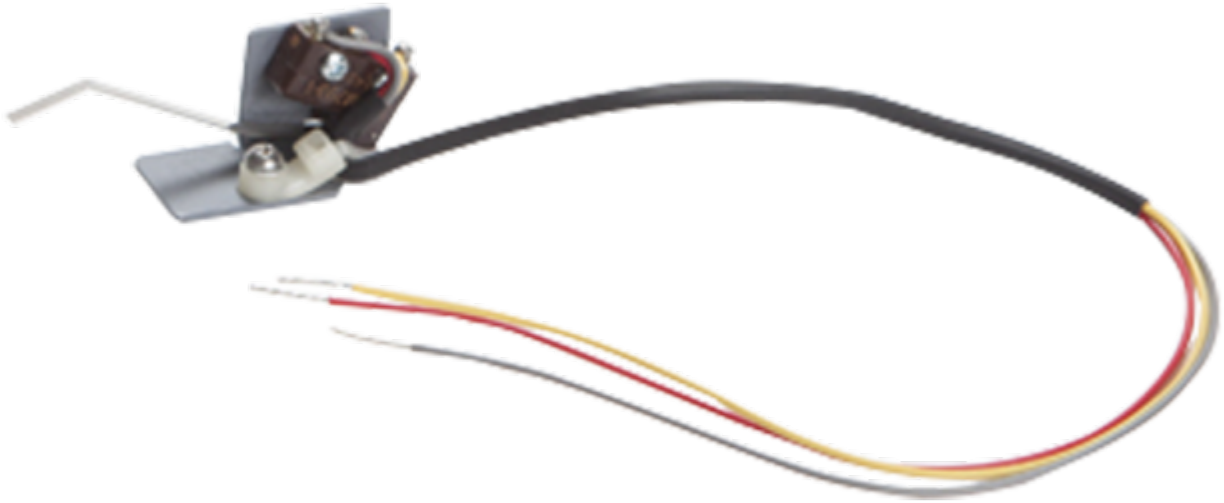

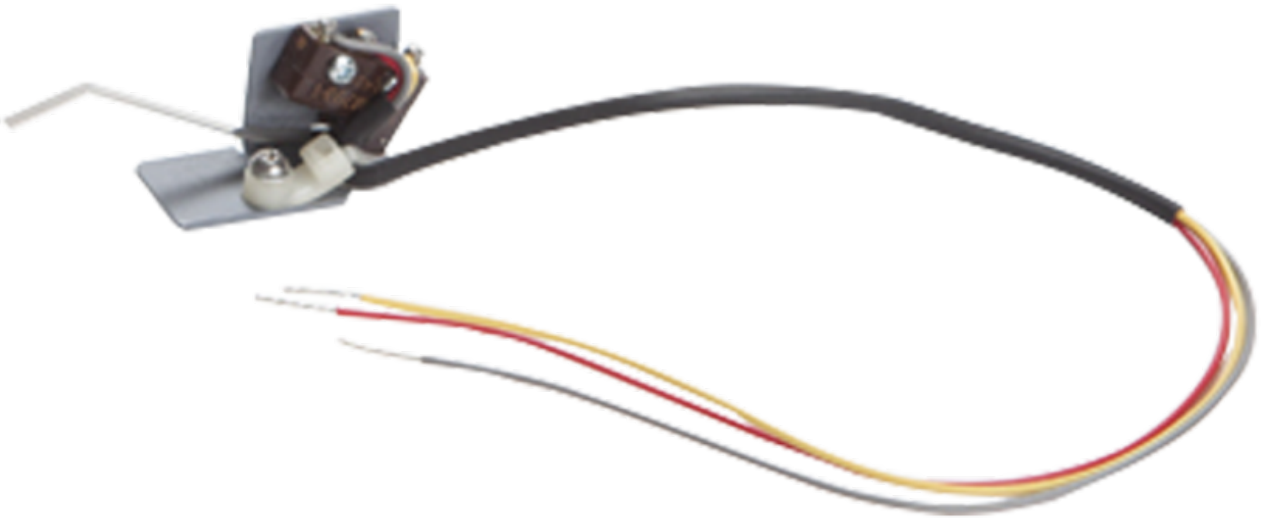

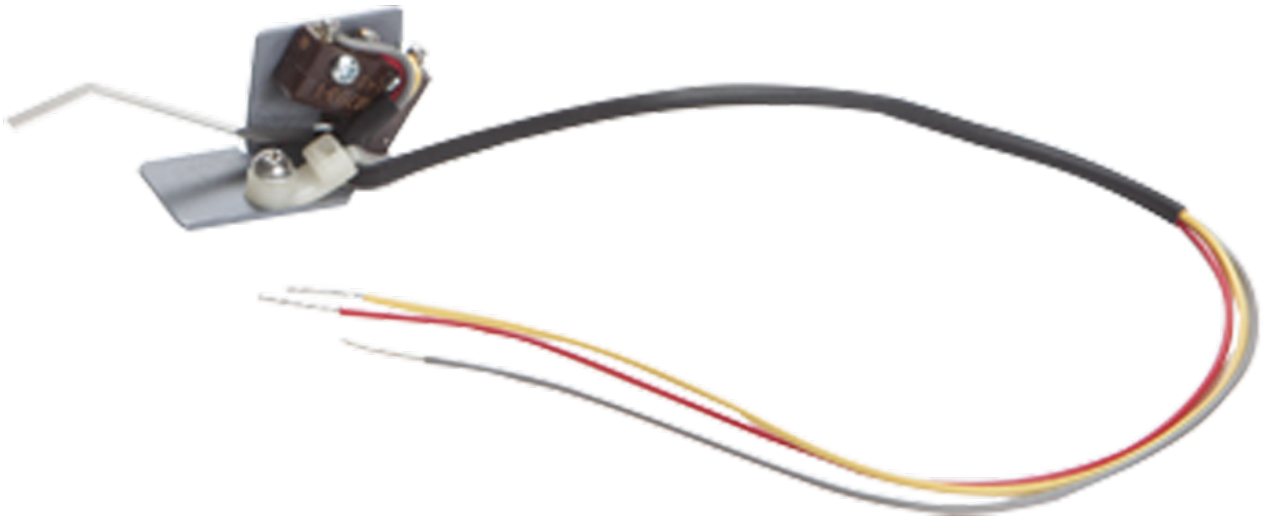

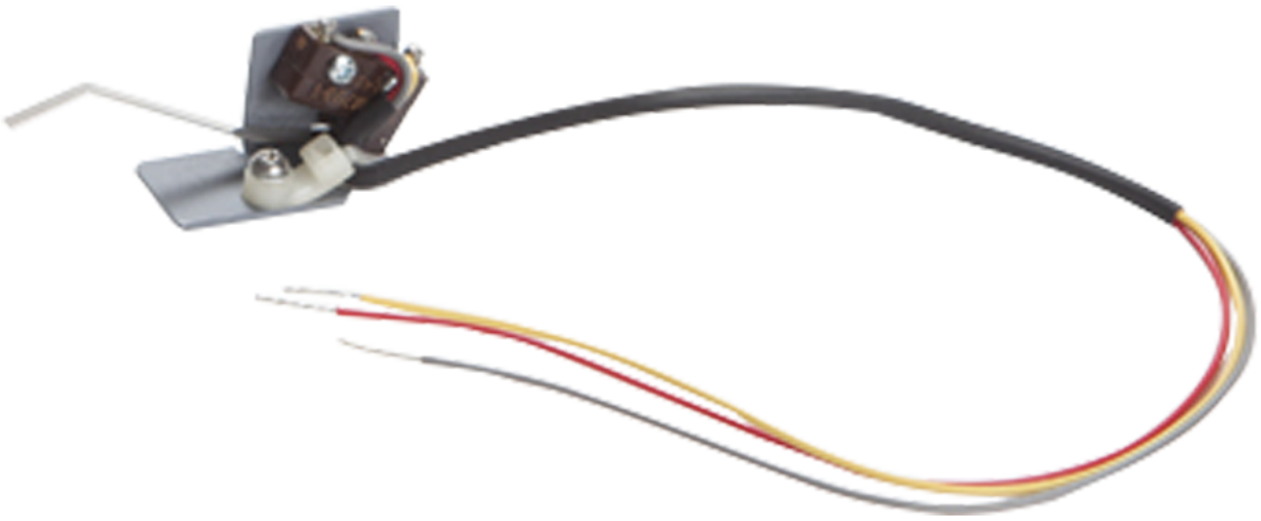





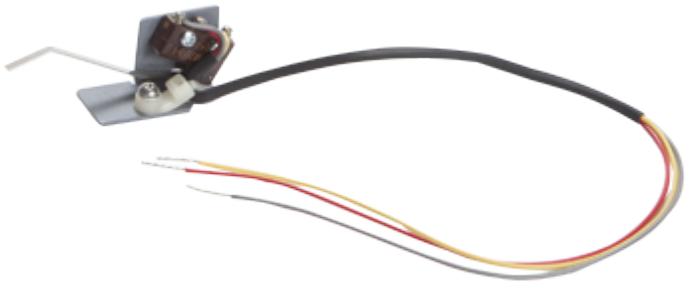

















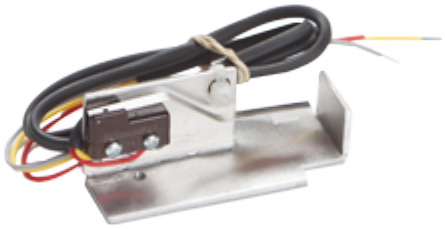



































































































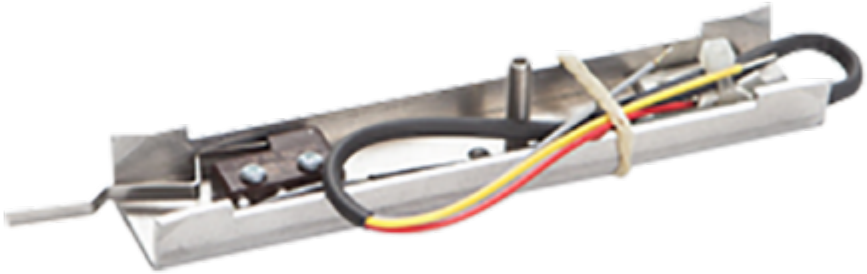



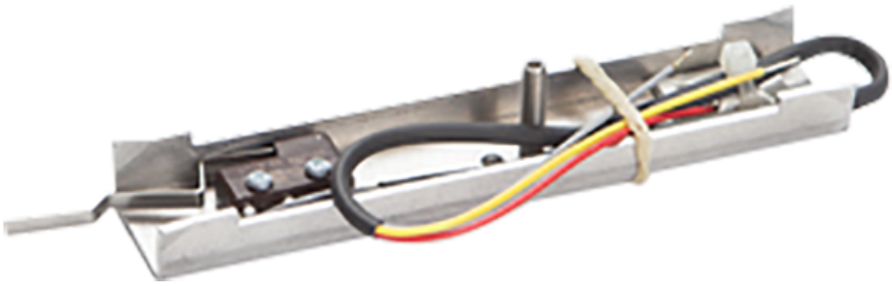



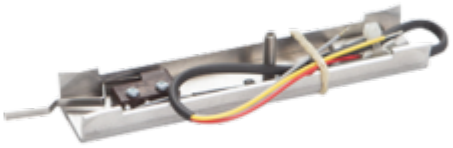







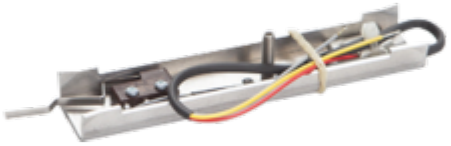



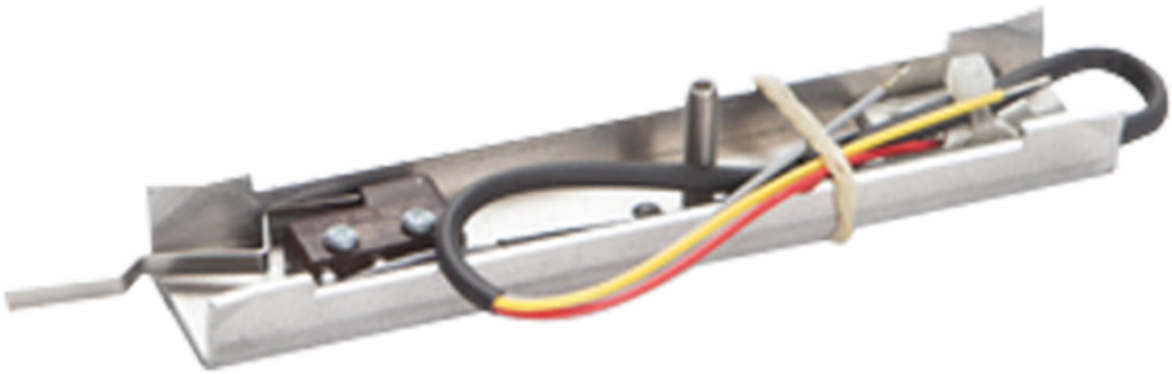

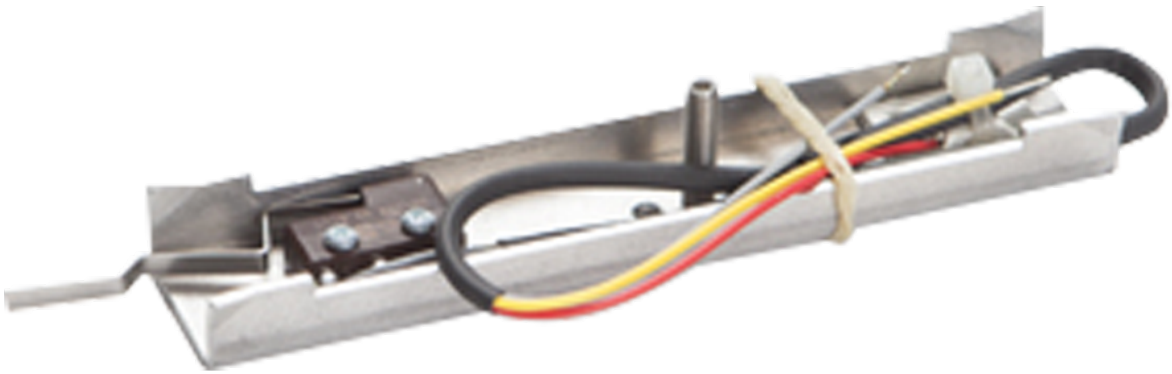







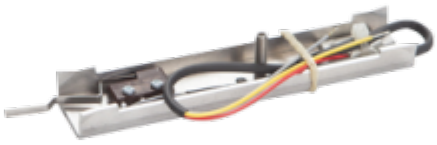

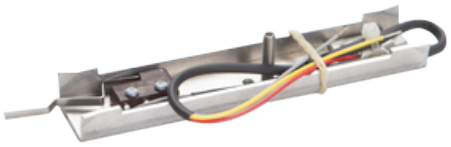























































































































































































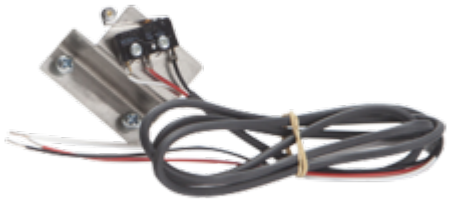











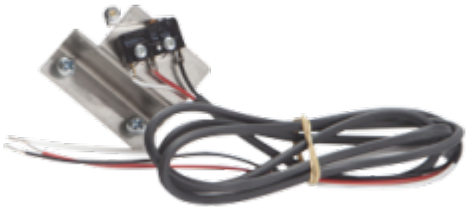

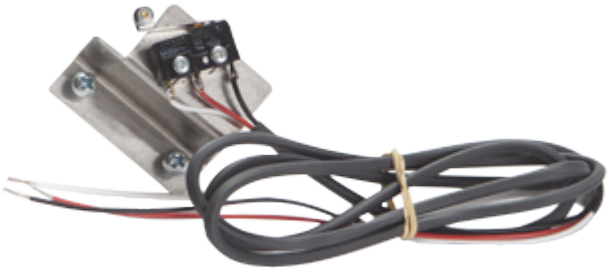



















SecurityBW-768x134.png	2018-06-05 09:54	35K
SecurityBW-1024x179.png	2018-06-05 09:54	56K
SecurityBW-1200x210.png	2018-06-05 09:54	75K
SecurityBW.png	2018-05-15 16:32	130K
accreditedlocksupply..>	2018-05-15 16:32	1.7K
accreditedlocksupply..>	2018-05-15 16:32	2.2K
accreditedlocksupply..>	2018-05-15 16:33	6.5K
accreditedlocksupply..>	2018-05-15 16:33	2.5K
accreditedlocksupply..>	2018-05-15 16:33	4.1K
accreditedlocksupply..>	2018-05-15 16:33	8.3K
akronhardwareBW-150x..>	2018-05-15 16:32	3.0K
akronhardwareBW-300x..>	2018-05-15 16:32	3.9K
akronhardwareBW-768x..>	2018-05-15 16:32	11K
akronhardwareBW-1024..>	2018-05-15 16:32	15K
akronhardwareBW-1200..>	2018-05-15 16:32	19K
akronhardwareBW.jpg	2018-05-04 13:51	52K
akronhardware_101736..>	2018-05-15 16:33	3.3K
akronhardware_101736..>	2018-05-15 16:33	4.2K
akronhardware_101736..>	2018-05-15 16:33	12K
akronhardware_101736..>	2018-05-15 16:33	17K
akronhardware_101736..>	2018-05-15 16:33	21K
akronhardware_101736..>	2018-05-04 13:51	37K
fairway-150x84.png	2018-05-15 16:33	3.5K
fairway-300x82.png	2018-05-15 16:33	11K
fairway.png	2018-05-15 16:33	6.1K
fairwayBW-150x84.png	2018-05-15 16:32	4.1K
fairwayBW-300x82.png	2018-05-15 16:32	10K
fairwayBW.png	2018-05-04 13:51	12K
instanthardwaredeliv..>	2018-05-15 16:32	3.1K
instanthardwaredeliv..>	2018-05-15 16:32	11K
instanthardwaredeliv..>	2018-05-15 16:32	9.3K
instanthardwaredeliv..>	2018-05-15 16:33	3.1K
instanthardwaredeliv..>	2018-05-15 16:33	11K
instanthardwaredeliv..>	2018-05-15 16:33	9.3K
sld_logoeps-Converte..>	2018-06-05 09:54	8.7K
sld_logoeps-Converte..>	2018-06-05 09:54	11K
sld_logoeps-Converte..>	2018-06-05 09:54	42K
sld_logoeps-Converte..>	2018-06-05 09:54	66K
sld_logoeps-Converte..>	2018-06-05 09:54	91K
sld_logoeps-Converte..>	2018-05-04 13:51	140K
tnd-logo-BW-150x150.jpg	2018-05-15 16:32	5.6K
tnd-logo-BW-300x148.jpg	2018-05-15 16:32	8.6K
tnd-logo-BW.jpg	2018-05-15 16:32	26K
tnd-logo-cmyk_114861..>	2018-05-15 16:33	6.5K
tnd-logo-cmyk_114861..>	2018-05-15 16:33	9.9K
tnd-logo-cmyk_114861..>	2018-05-15 16:33	41K
tnd-logo-cmyk_114861..>	2018-05-15 16:33	4.0K
tnd-logo-cmyk_114861..>	2018-05-15 16:33	4.9K
tnd-logo-cmyk_114861..>	2018-05-15 16:33	23K



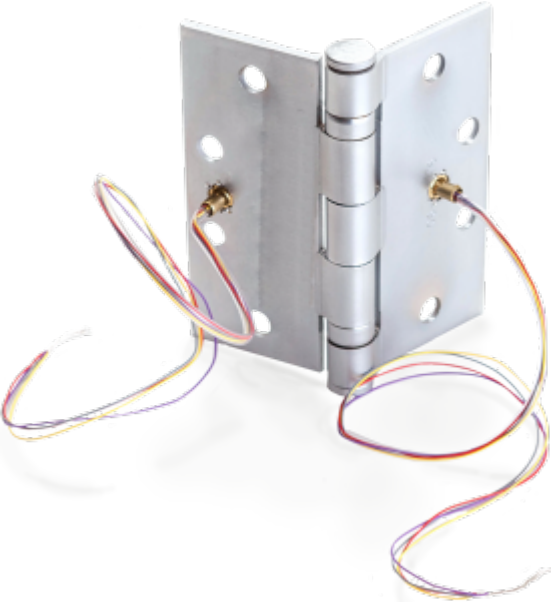

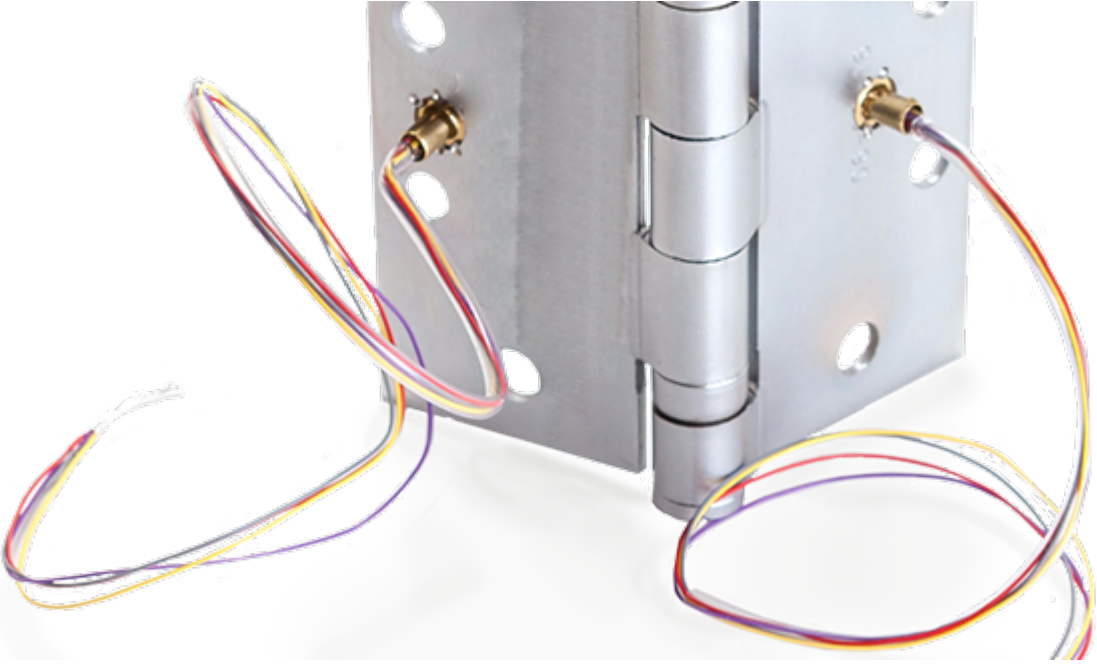

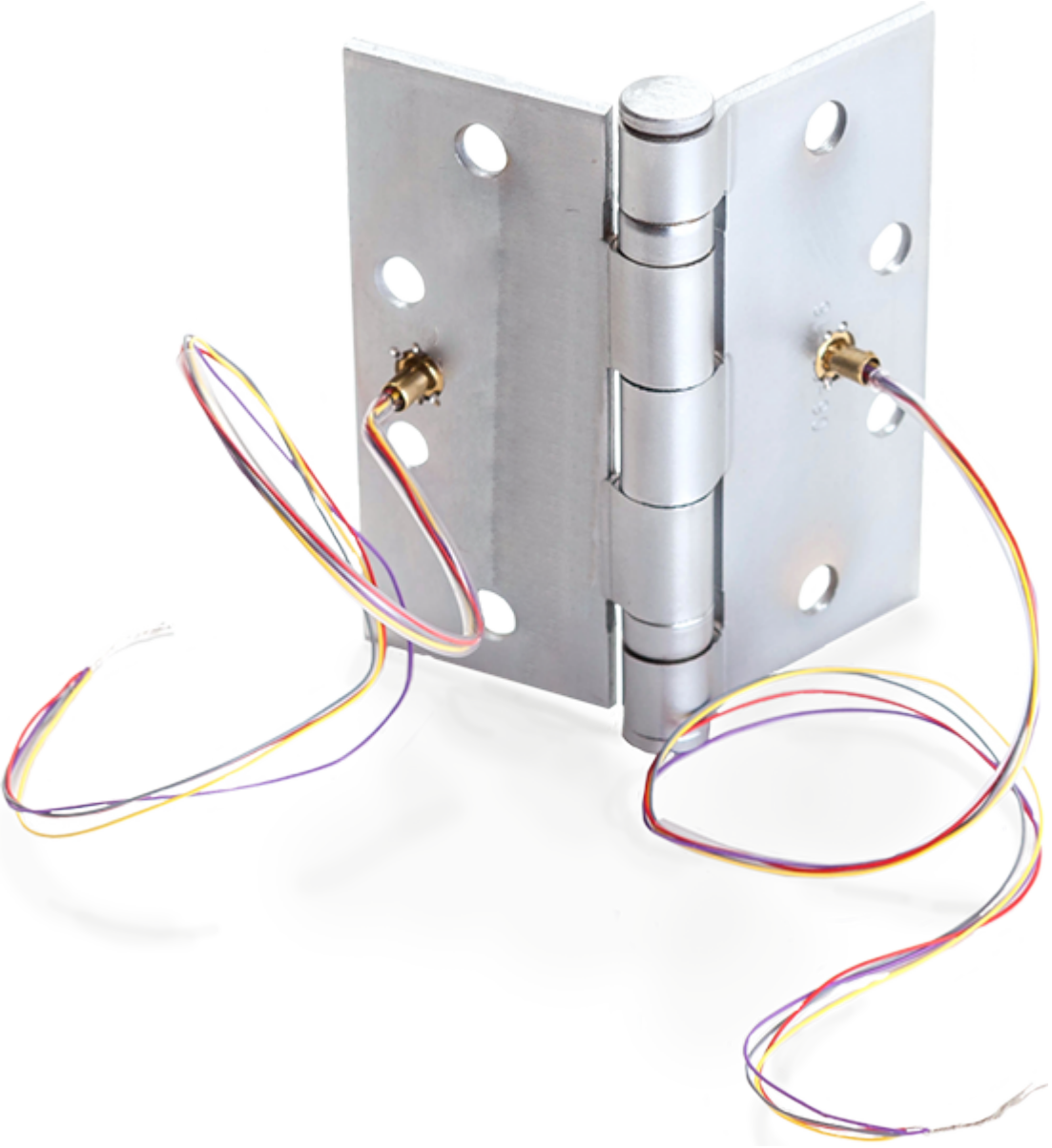





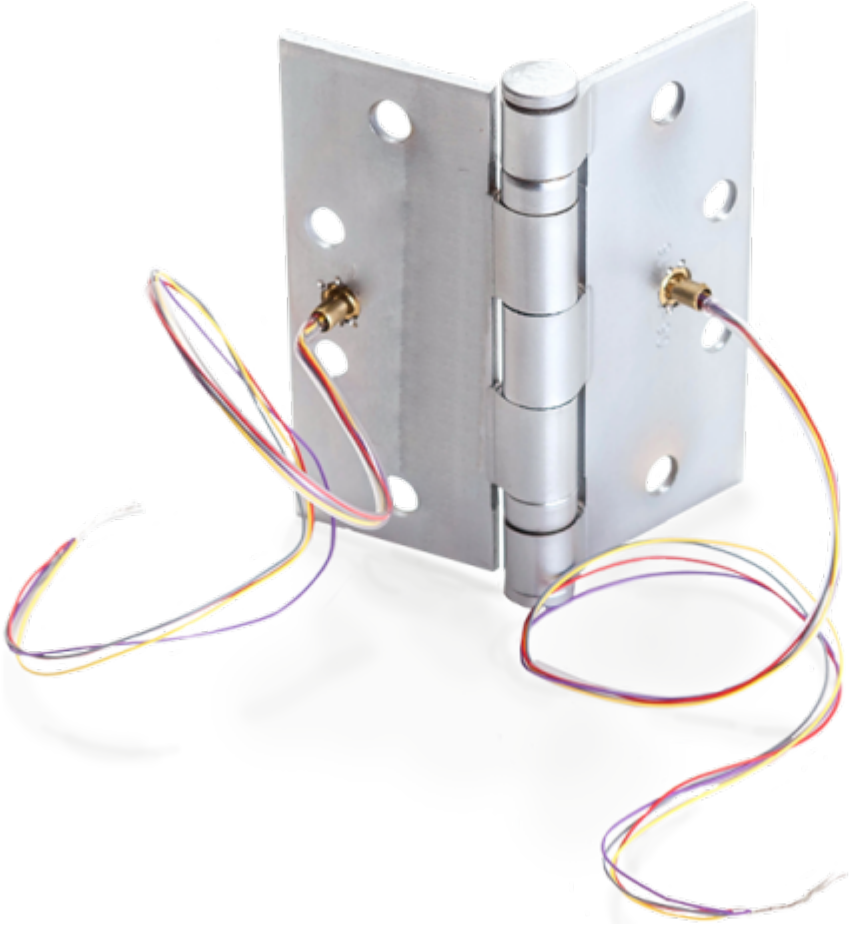

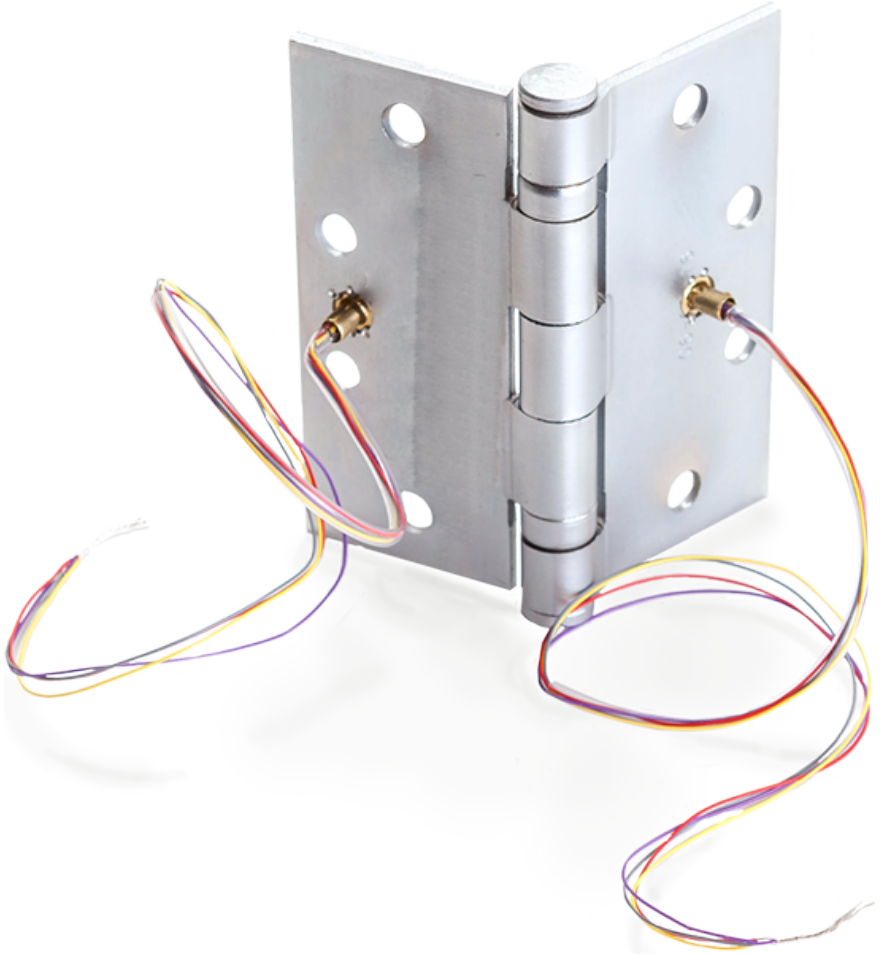

Series 1100

Electric Hinges/Pivots

Hager
Ives
McKinney
Stanley
PBB
Bommer
Rixson
ABH
and more

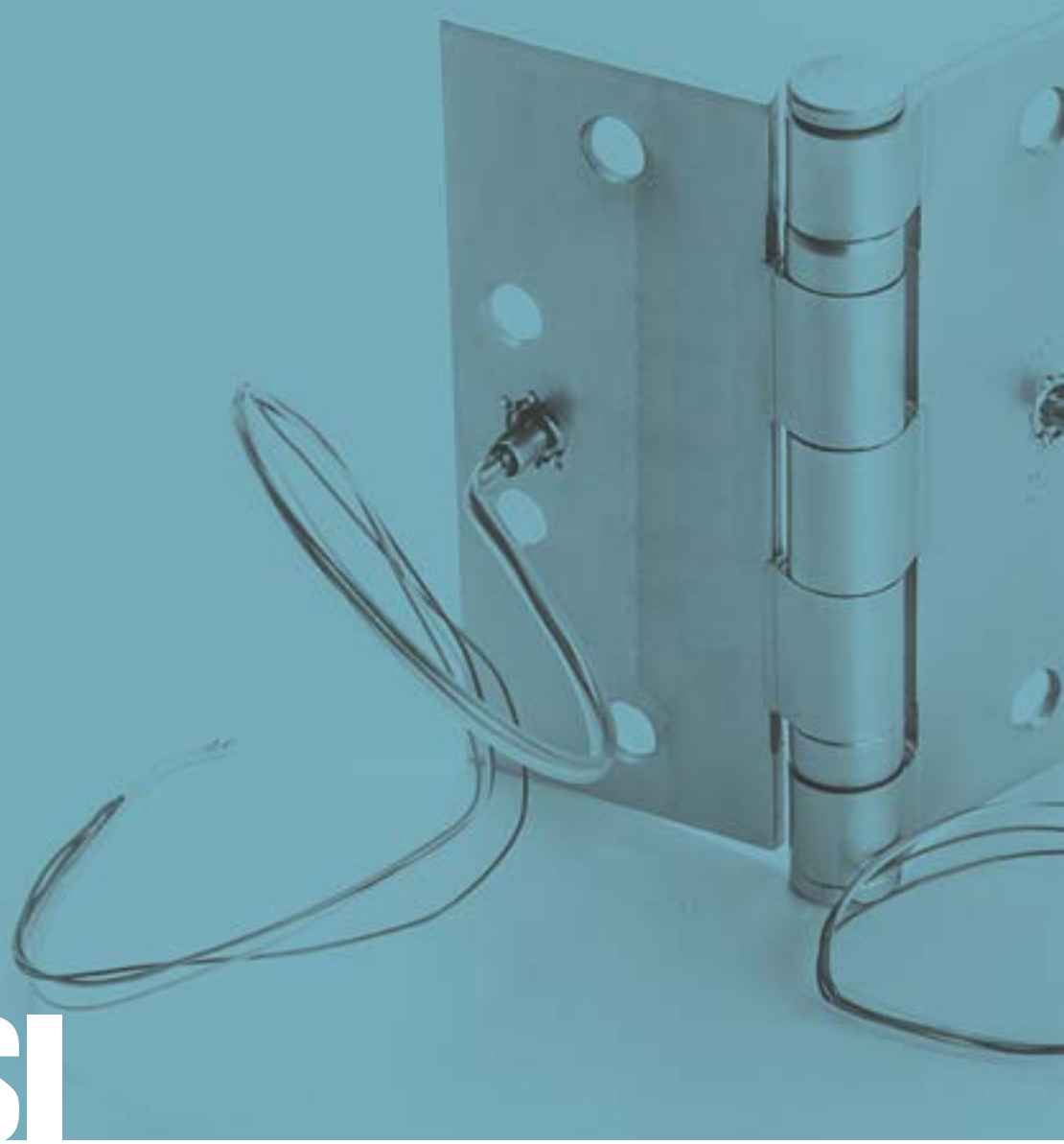

ACSI

2720 Clark Avenue
St. Louis, MO 63103
(314) 652-5588
(314) 652-2090 FAX
www.acsi-inc.com

1-800-753-5558

Series 1100 | Electric Hinges/Pivots

ACSI Series 1100 Electric Hinges/Pivots are designed for doors that require concealed low voltage power transfer, concealed electric monitoring or concealed low voltage power transfer with monitoring. ACSI Series 1100 products are UL Listed and carry a full one-year warranty.

Manufacturers

Hager, Ives, McKinney, Stanley, PBB, Bommer, Rixson, ABH, Dorma, Design Hardware, Don-Jo and more*

***Consult factory for manufacturers not listed**

Options

- Custom wire lead lengths
- Universal Molex® Connectors
- Connectors available in Hager, ASSA or Ives specifications

Features

- UL Listed
- UL Fire Rating on steel and stainless electric hinges
- All architectural finishes in sizes 4x4 through 6x6
- **Hinges/Pivots in stock for same-day shipments**

Notes

- Electric hinge must be placed in the center position only.
- ACSI requires NON-NRP hinges for modification. Hinge pin is not field removable after modification.
- ACSI part #302-03-03 mortar guard is required for all application with grout-filled frames. Failure to install mortar guard will void the electric hinge warranty.

Comparison Chart

ACSI	STANLEY	HAGER	McKINNEY	IVES
1104	CE-54	ETW-4	CC-4	TW4
1106	CE-56	ETW-6	CC-6	TW6
1108	CE-58	ETW-8	CC-8	TW8
1110	CS	EMN	CS	MON
1114	CECS-54	ETM-4	CSCC-4	TW4M
1116	CECS-56	ETM-6	CSCC-6	TW6M
1118	CECS-58	ETM-8	CSCC-8	TW8M

Models Available

Model	Description
1102	Concealed electric through-wire (2 wire, 22ga)
1104	Concealed electric through-wire (4 wire, 28ga)
1106	Concealed electric through-wire (6 wire, 28ga)
1108	Concealed electric through-wire (8 wire, 28ga)
1100-10	Concealed electric through-wire (10 wire, 28ga)
1100-12	Concealed electric through-wire (12 wire, 28ga)
1102x4	Concealed electric through-wire (2 wire, 22ga x 4 wire, 28ga)
1182*	Concealed electric through-wire (2 wire, 18ga)
1182x4*	Concealed electric through-wire (2 wire, 18ga x 4 wire, 28ga)
1182x6*	Concealed electric through-wire (2 wire, 18ga x 6 wire, 28ga)
1110	Concealed electric monitor
1114	Concealed electric monitor and through-wire (4 wire, 28ga)
1116	Concealed electric monitor and through-wire (6 wire, 28ga)
1118	Concealed electric monitor and through-wire (8 wire, 28ga)
1120*	Concealed air transfer hinge

** Not available in pivot modification*

How to Order

Manufacturer's Model	ACSI Model
Stanley FBB179 4.5x4.5 26D	1104
Hager BB1279 5.0x4.5 10B	1108
Rixson M19 US26 LH	1110

Electrical Specifications

Concealed electric through-wire

- 22ga, 28ga conductors, 12 inch wire lead length both sides
  - 3.5A continuous @ 50VAC/VDC
  - 16A pulse @ 50VAC/DC
    - 400msec maximum pulse-width
    - 10sec minimum off-time between pulses
- 18ga conductors, 12 inch wire lead length both sides
  - 10A continuous @ 50VAC/VDC
  - 20A inrush @ 50VAC/DC for 4sec

Concealed electric monitor

- 0.5A @ 30VDC

1-800-753-5558

Series 1300

Door Controls

Mortise Keyswitches
Pushbutton Switches
Emergency Release
Door Position Sensors
Indicators
Digital Keypads



ACSI

2720 Clark Avenue
St. Louis, MO 63103
(314) 652-5588
(314) 652-2090 FAX
www.acsi-inc.com

1-800-753-5558

Mortise Keyswitches

ACSI Series 1310 Mortise Keyswitches are designed to control electric locks, electric strikes, electric exit devices and a variety of other control applications. The keyswitches allow keying the electrically controlled openings to facility master key systems. DPDT contacts unless otherwise noted.

Model		Description
1310-1		Single gang, wall mount
1310-2		Single gang, 2 LEDs (red and green), wall mount
1310-3		Adjustable time delay, double gang, SPDT contacts, wall mount
1310-3-1		Adjustable time delay, double gang, 1 LED (red or green), SPDT contacts, wall mount
1310-4		Narrow style, 1-3/4" frame mount
1310-4-2		Narrow style, 2 LEDs (red and green), 1-3/4" frame mount
1310-5		Audible alarm, double gang, wall mount
1310-5-2		Audible alarm, double gang, 2 LEDs (red and green), wall mount
1310-6		Single gang, 2 momentary switches, wall mount
1310-7		Single gang, 2 momentary switches, 1 LED (red or green), wall mount
1310-8		Single gang, 2 momentary switches, 2 LEDs (red and green), wall mount

**When ordering 1310 Keyswitches, specify momentary or maintained action.*

Pushbutton Switches

ACSI Series 1320 Pushbutton Switches provide a variety of functions for commercial and industrial door control applications. DPDT contacts unless otherwise noted.

Model		Description
1320-1		Single gang, wall mount
1320-2		Single gang, 1 LED (red or green), wall mount
1320-3		Single gang, 2 LEDs (red and green), wall mount
1320-4		Adjustable time delay, double gang, 1 LED (red or green), wall mount
1320-5		Mushroom button, single gang, SPDT contacts, wall mount*
1320-5-2		Mushroom button, single gang, 2 LEDs (red and green), SPDT contacts, wall mount*
1320-6		Narrow style, 1-3/4" frame mount
1320-6-2		Narrow style, 2 LEDs (red and green), 1-3/4" frame mount

**When ordering 1320 Pushbuttons, specify momentary or maintained action.*

Emergency Release

ACSI 1330-3 Emergency Release provides manual emergency reporting; attractive/durable and finished in blue enamel.

Features

- UL Listed
- California State Fire Marshall approved
- Normally open or normally closed contacts
- Key resettable for increased security
- Designed for indoor or outdoor use
- Mounts in a standard single gang box
- Comes packaged with two spare keys, mounting hardware and one glass break tube

Model		Description
1330-3		Emergency Release

Door Position Sensors

ACSI Series 1335 Door Position Sensors are used to confirm door position. Magnetic sensors mounted in the frame react to the proximity of the magnet mounted in the door. Pneumatic models also available for use in hazardous locations.

Model		Description
1335-1		D.P.S. Standard mortise, SPDT, N.O./N.C. contacts
1335-2		D.P.S. ANSI, SPDT, N.O./N.C. contacts
1335-3		D.P.S. 1" Recessed mount, SPDT, N.O./N.C. contacts
1335-4		D.P.S. Standard mortise, DPDT, N.O./N.C. contacts
1335-5		D.P.S. ANSI, DPDT, N.O./N.C. contacts
1335-6		D.P.S. 1" Recessed mount, DPDT, N.O./N.C. contacts

Indicators

ACSI Series 1340 Indicators provide visual or audible indication of system status.

Model		Description
1340-1		Single gang, 1 LED (red or green), wall mount
1340-1-2		Single gang, 2 LEDs (red and green), wall mount
1340-2		Audible alarm, single gang, wall mount
1340-3		High security audible alarm, single gang, wall mount

Electrical Specifications

1310/1320 Switches

- Contacts Rated 1A @ 30VDC

1330-3 Emergency Release Switch

- Separate N.O./N.C. Outputs
- Can be wired for SPDT Contact Configuration
- Contacts Rated 1A @ 30VDC

1340-2 & 1340-3 Audible Alarm

- DC Voltage Range: 4V - 28V
- DC Current Range: 3mA - 16mA
- Frequency: 2900 Hz
- Sound Intensity: 64dB @ Min.V; 76dB @ Max.V

Red/Green LED Indicator used with 1310/1320/1340 Controls

- 20mA @ 24VDC

Digital Keypads

ACSI Series 1355 Digital Keypads offer proven reliability for commercial, industrial and residential applications. The keypads are designed to control any electric locking device.

Features

- Keypad programmable
- 10-30 VDC; 12-24VAC-auto adjusting (12-24VAC/DC for 1355-5)
- 120 user capability
- Codes can be 1 to 6 digits including repeated digits
- 1-90 sec. adjustable relock delay (1-255 sec. for 1355-6)
- LED status indicators (for all models except 1355-4)
- Request-to-exit switch input
- Main relay ON/OFF latching (toggle mode)
- Panic output (for all models except 1355-5 and 1355-6)
- Remote alarm panel interface capability
- Main relay: 5A, form C @ 24VDC with 10A surge (2A for 1355-3, 1355-4 and 1355-6)
- Non-volatile memory remembers codes and instructions when power is removed

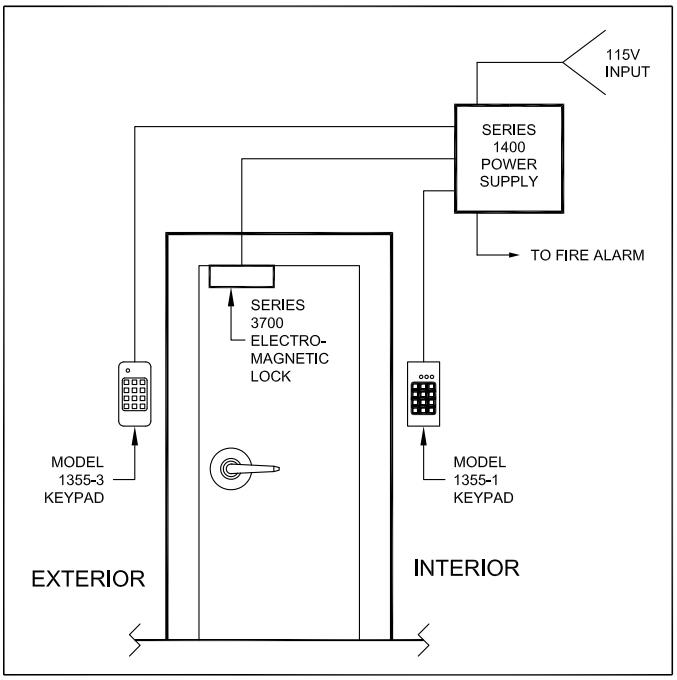

Model		Description
1355-1		Digital Indoor Keypad
1355-2		Weather Resistant Keypad
1355-3		Sealed Environmental Keypad • Weather resistant, self-contained metal housing • Vandal resistant • Small design suitable for commercial, industrial and residential applications
1355-4		Ruggedized Digital Keypad • Weather resistant, self-contained metal housing • Vandal resistant • One piece housing suitable for wall, post or gooseneck mounting • Internal audible multi-status indicator (sounder) • Available in white or black
1355-5		Mullion Digital Keypad • Weather resistant for outdoor as well as indoor applications • Backlit hardened keys • Doorbell key with associated relay output • Narrow style suitable for aluminum door frame mounting • Available in bronze or satin aluminum
1355-6		Indoor/Outdoor Backlit Keypad • Weather resistant • Illuminated backlit hardened keys • Flush mount design • Includes audible indicator (sounder)
1355-7		Harsh Environment Keypad • Vandal and weather resistant case • Indoor/outdoor applications • Touch sensitive flat key design • 12/24 volts AC/DC jumper selectable

Series 1400

Power Supplies

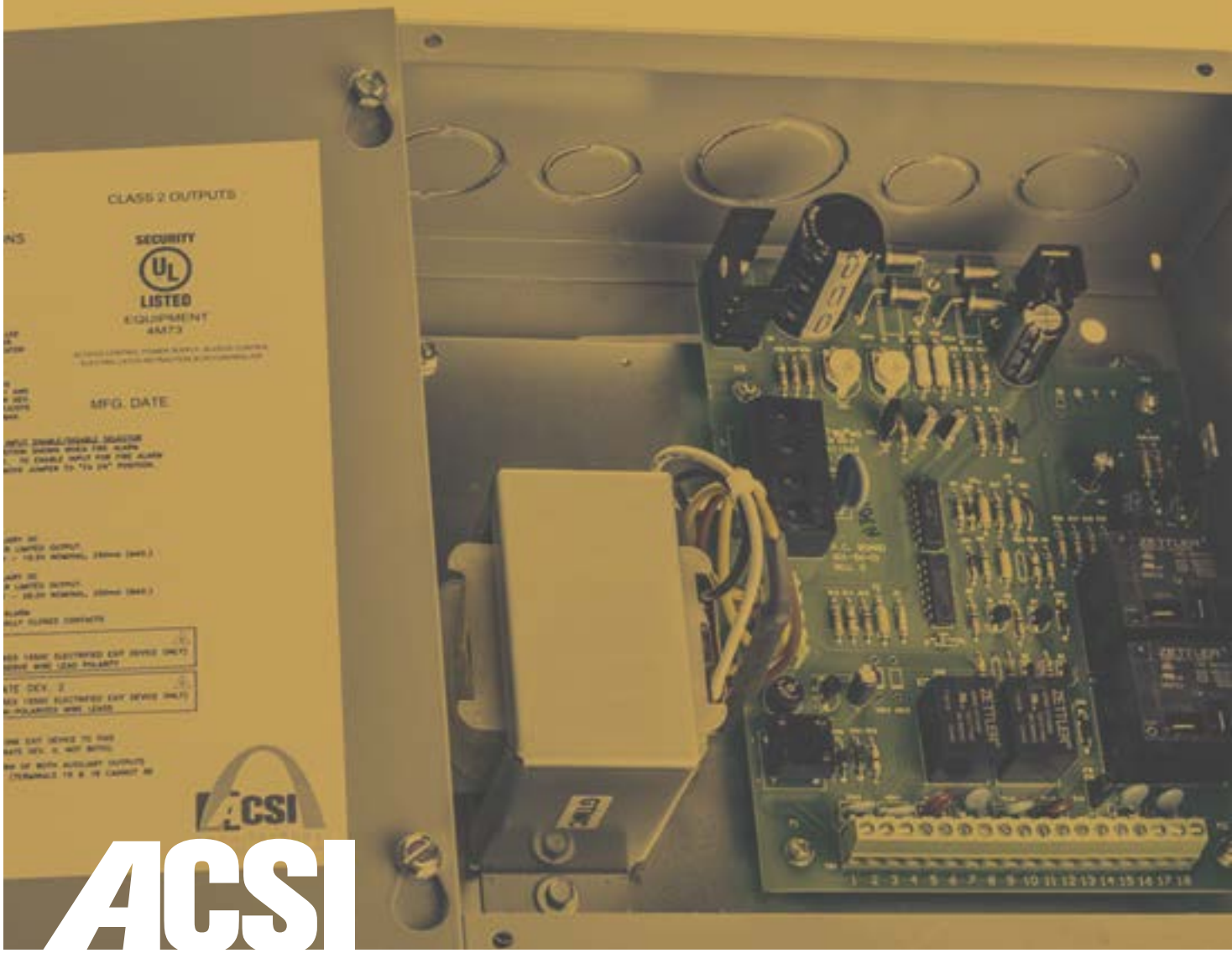

ACSI

2720 Clark Avenue
St. Louis, MO 63103
(314) 652-5588
(314) 652-2090 FAX
www.acsi-inc.com

1-800-753-5558

1406/1426 Power Supplies

ACSI 1406 and 1426 Power Supplies are designed to operate exit devices equipped with ACSI Series 1550 Electric Latch Retraction (required with 1550 Electric Solenoid Latch Retraction).

Features

- UL Listed and tested to UL 294 standard
- Class 2 rated outputs
- 2A load capacity
- Overload, over voltage, and short circuit protection
- 1406 Series only: select from independent control of single exit devices from separate inputs (one or two single doors) or sequential operation of two exit devices from a single input (pair of doors)
- Automatic door operator interface
- Fire alarm interface
- Field adjustable latch retraction time delay
- 24VDC, 12VDC* constant voltage outputs (250mA each)

**Not available in battery backup models*

ACSI 1406 Application

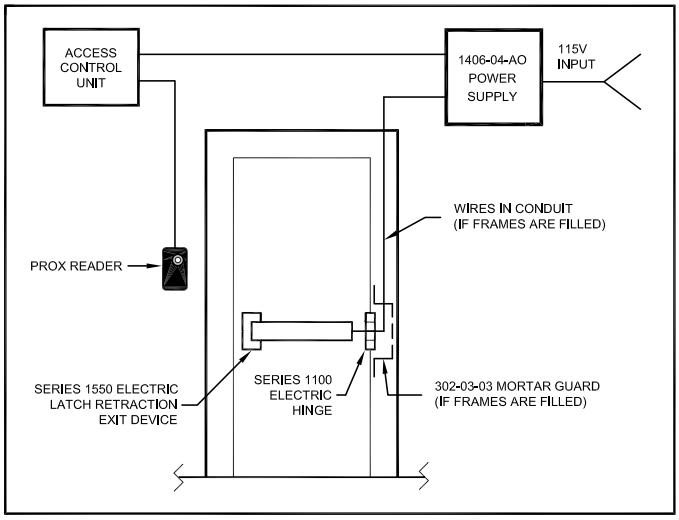

Day/Night Mode-ACSI 1426 Power Supply

Provides a separate input for retracting one exit device or two exit devices sequentially without activating the automatic door operator. While the latches are held retracted, the auto-operator can be activated independently from a different input.

ACSI 1426 Application

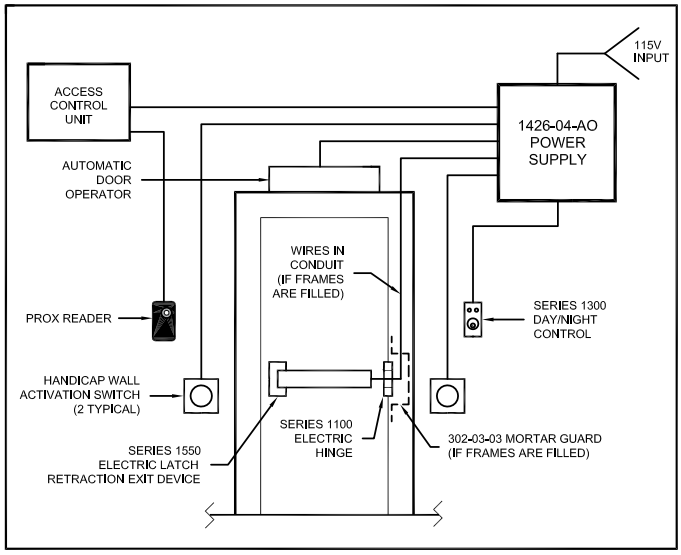

1406BB/1426BB Power Supplies with Battery Backup

All the same features as above, but includes built-in battery backup power:

- 4 hours of backup power at full load during AC power failure
- Standby battery power with a supervised AC failure output and low battery output
- Supplied with (2) 12V, 7Ah lead acid batteries



1406



1406BB

1410 Interlock Power Supply

ACSI 1410 Interlock Power Supply is designed to interconnect two or more doors using fail safe locking devices. Each supply can control up to four doors and the system can be expanded for requirements in excess of four doors. Any one door can be programmed to be a part of (common to) as many as three separate interlocking systems. Separate plug-in p.c. boards used to control interlocking doors can be programmed for normally locked or normally unlocked operation.

Inputs are available for fire alarm and optional emergency release interface for override of the interlocking system. Applications include darkrooms, laboratories, pharmaceuticals, detention centers, money counting rooms, airlocks, clean rooms, etc.

ACSI system engineers are available for design and consultation services to coordinate all aspects of the system. ACSI electric locking systems and all documentation including riser diagrams and point-to-point wiring diagrams can give distributors a single source for their system requirements.

Features

- UL Listed and tested to UL 294 standard
- Filtered/Regulated 24VDC
- Class 2 rated outputs
- 2.2A load capacity
- Overload, over voltage, and short circuit protection
- Automatically accepts 120VAC or 240VAC input



1410

Model	Description
1410-2	2 Door Interlock
1410-3	3 Door Interlock
1410-4	4 Door Interlock

ACSI Interlock System

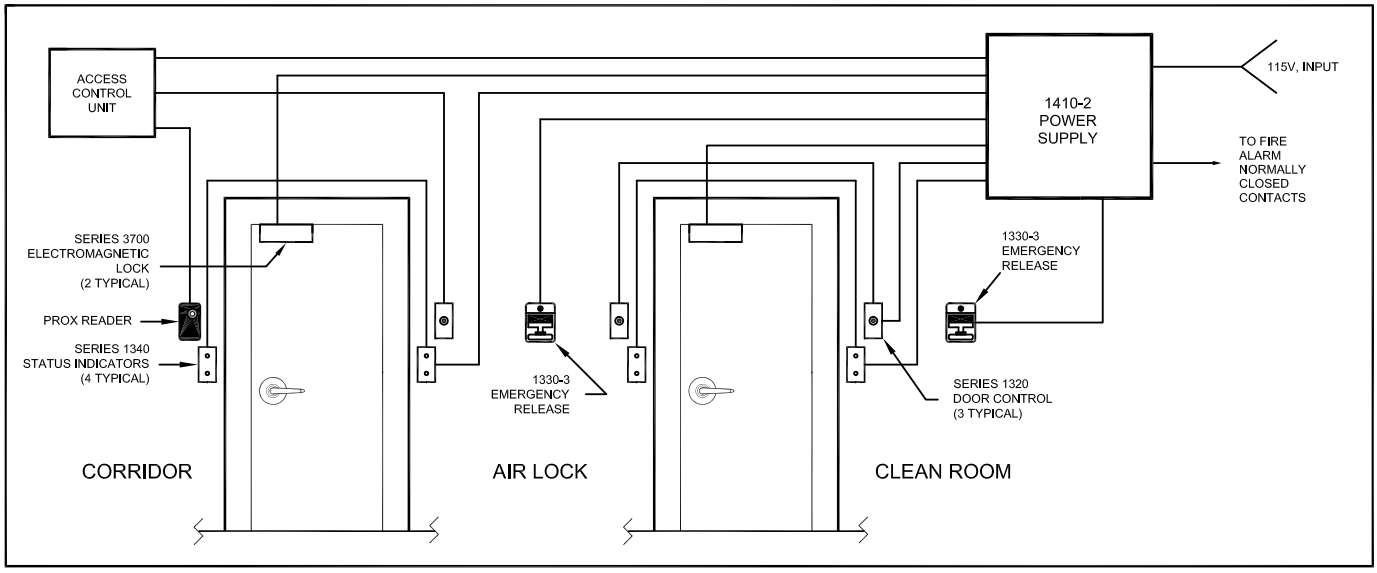

1420 Power Supply

ACSI 1420 Power Supply can be used in the following applications:

- Provide power/control to exit devices equipped with the ACSI Series 1550-MD Motor Drive Electric Latch Retraction. (See ACSI Series 1500 Electric Exit Device Catalog)
- Provide power/control to electrified door hardware in applications requiring automatic door operator interface.

Features

- UL Listed and tested to UL 294 standard
- Filtered/Regulated 24VDC
- Class 2 rated outputs
- 2A load capacity
- Overload, over voltage, and short circuit protection
- Automatically accepts 120VAC or 240VAC input

Each 1420 Includes

- Separate inputs for activation switch on entry and exit sides of the opening.
- Relay dry contact output to automatic door operator input.
- Built-in 0.5 second time delay between activation of the electrified door hardware and automatic door operator.
- Input for optional fire alarm or emergency release switch when urgent unlocking of door is required.
- Auxiliary 24VDC constant voltage output
- Separate 24VDC outputs for fail safe and fail secure electrified door hardware.

Options

DN – Day/Night mode provides a separate input for retracting one exit device or two exit devices simultaneously without activating the automatic door operator. While the latches are held retracted, the auto-operator can be activated independently from a different input.

ACSI Automated Door Opening System

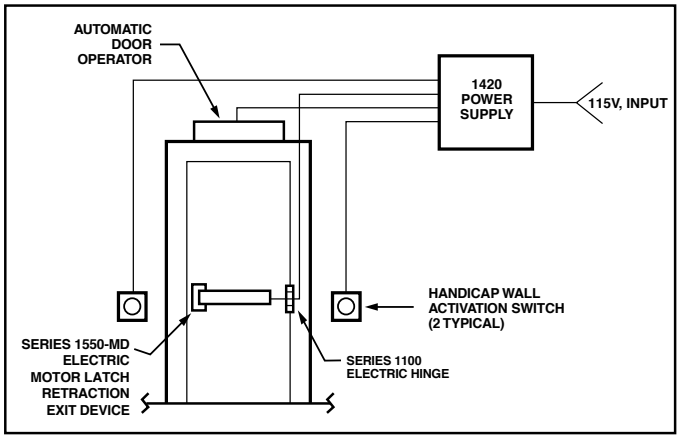



1420

1440 Power Supply

ACSI 1440 Power Supply provides power for fail safe or fail secure locking devices.

Features

- UL Listed and tested to UL 294 standard
- Filtered/Regulated 24VDC
- Class 2 rated outputs
- 2A load capacity
- Overload, over voltage, and short circuit protection
- Surge suppression on fail safe and fail secure outputs
- Automatically accepts 120VAC or 240VAC input

Each 1440 Includes

- Interface relay to isolate the locking device current from the control switch
- Auxiliary 24VDC constant voltage for powering standalone devices such as keypads, motion detectors, status indicators, etc.
- Field terminal block set at 45° for ease of installation

Options

TD – Adjustable time delay for 1 second to 60 minutes

ACSI Locking System

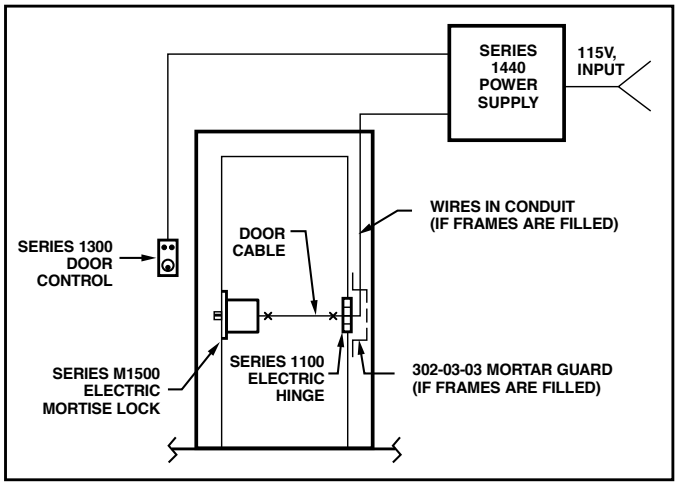



1440

1451/1452 Power Supplies with Battery Backup

ACSI 1451 and 1452 Power Supplies can be used in the following applications:

- Provide power/control to exit devices equipped with the ACSI Series 1550-MD Motor Drive Electric Latch Retraction. (See ACSI Series 1500 Electric Exit Device Catalog)
- Provide power/control to electrified door hardware in applications requiring automatic door operator interface.
- Provide power for fail safe or fail secure locking devices.

Features

- 1451-1A load capacity
- 1452-1.75A load capacity
- UL Listed for US and Canada
- Filtered/Regulated 12VDC or 24VDC
- Class 2 rated outputs
- Fire alarm interface
- Overload and short circuit protection
- Automatic switchover to standby battery when AC fails
- Built-in battery charger
- Supplied with (2) 12V, 7Ah lead acid batteries



1451

Options

- TD – Adjustable time delay for 1 second to 60 minutes
- DN – Day/Night mode provides a separate input for retracting one exit device or two exit devices simultaneously without activating the automatic door operator. While the latches are held retracted, the auto operator can be activated independently from a different input.
- AO – Automatic Operator Interface



1452

1490 Delayed Egress Power Supply

ACSI 1490 Power Supply is designed to interface with ACSI electromagnetic locks in a delayed egress locking application.

Features

- UL Listed
- Compliance with NFPA code requirements
- Filtered/Unregulated 24VDC
- 2A load capacity
- Input for delayed egress activation
- Manual reset of delayed egress alarm
- Optional auto reset available
- Fire alarm interface
- Output for audible alarm
- Field adjustable delay for nuisance alarm, door release, request-to-exit and auto reset delay times
- One power supply can provide up to 4 delayed egress alarm zones

Model	Description
1490-21	1 zone card
1490-22	2 zone cards
1490-23	3 zone cards
1490-24	4 zone cards

ACSI 1490 Application

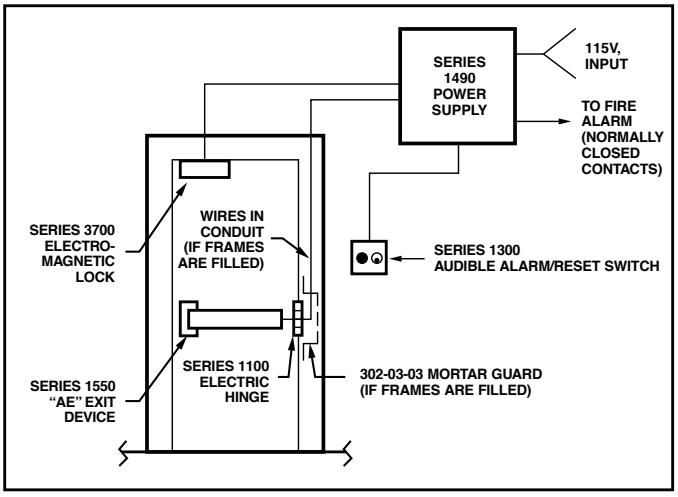

Description of System Operation

The delayed egress alarm becomes activated when the push bar of the Series 1500 modified exit device is depressed. A concealed AE (request-to-exit) switch initiates an irreversible cycle that begins with the Series 1300 audible alarm sounding for a predetermined time (field adjustable) while the Series 3700 electromagnetic lock remains energized locking the door.

At the end of the timing cycle, the electromagnetic lock de-energizes and unlocks the door while the audible alarm continues sounding. The door will remain unlocked and in an alarm state until manually reset by the Series 1300 keyswitch. Resetting the system will lock the door by energizing the electromagnetic lock and will turn off the audible alarm.

Note: When using the system with a door position switch, the door must be fully closed prior to resetting the system. Resetting with the door open will energize the electromagnetic lock, but will not turn off the audible alarm. The audible alarm will also begin sounding if a forced entry occurs while the system is armed.

In the event of a fire alarm, the electromagnetic lock will immediately de-energize to unlock the door. Upon resetting the fire alarm, the system will return to normal standby operation.

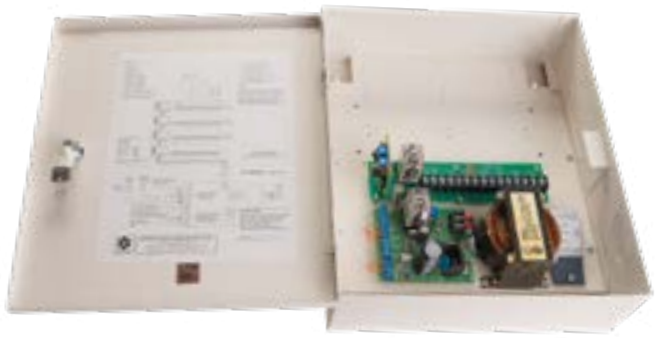

1490-21

Series 1400 Power Supply Specifications

ACSI Series 1400 Power Supplies are designed and manufactured by ACSI engineers to operate a variety of electric locking devices that will meet the most sophisticated specifications.

ACSI system engineers are available to assist you in the selection of the power supply that best meets your application. All ACSI designed systems include riser diagrams and point-to-point wiring diagrams that allow ease of interface with life-safety and security systems.

Input

1406, 1426, 1490
120VAC, 0.75A, 60Hz

1406BB, 1426BB
120VAC, 1.08A, 60Hz

1410, 1420, 1440, 1400-6100
120VAC, 0.9A, 50/60Hz
240VAC, 0.6A, 50/60Hz

1451
115VAC, 0.6A, 50/60Hz

1452
115VAC, 0.6A, 50/60Hz

Output

1406, 1426
1550 Device Outputs: 40VDC, 1.5A (combined) Filtered/Unregulated

Auxiliary 24V Output: 24VDC, 0.25A Filtered/Regulated

Auxiliary 12V Output: 12VDC, 0.25A Filtered/Regulated

1406BB, 1426BB
1550 Device Outputs: 40VDC, 1.8A (combined) Filtered/Unregulated

Auxiliary 24V Output: 24VDC, 0.2A Filtered/Regulated

1490
24VDC, 2A Filtered/Unregulated

1420, 1440, 1400-6100
24VDC, 2A Filtered/Regulated

1410
24VDC, 2.2A Filtered/Regulated

1451
24VDC, 1A Filtered/Regulated

1452
24VDC, 1.75A Filtered/Regulated

Enclosure Dimensions/Type

1406, 1410, 1420, 1426, 1440, 1400-6100
10"x10"x4", NEMA Type 1 Screw Cover Junction Box

1406BB, 1426BB
12"x16"x4", NEMA Type 1 Screw Cover Junction Box

1490
12"x14"x4", Surface Mount Cabinet w/Hinged Door and Keyed Lock

1451, 1452
13.5"x13"x3.25", Surface Mount Cabinet w/Hinged Door and Cam Key Lock

Enclosure Weight

1410
9 lbs (with all four plug-in boards installed onto motherboard)

1406, 1426
12 lbs

1406BB, 1426BB
26 lbs (with batteries)

1420, 1440, 1400-6100
8 lbs

1490
15 lbs (with all zone cards installed)

1451, 1452
18 lbs (with batteries)

Series 1500

Electric Exit Devices

Von Duprin
Corbin Russwin
Sargent
Yale
Dorma
Hager
Jackson
Stanley Commercial
Precision
Design Hardware
PDQ
First Choice
Falcon
Arrow
and more

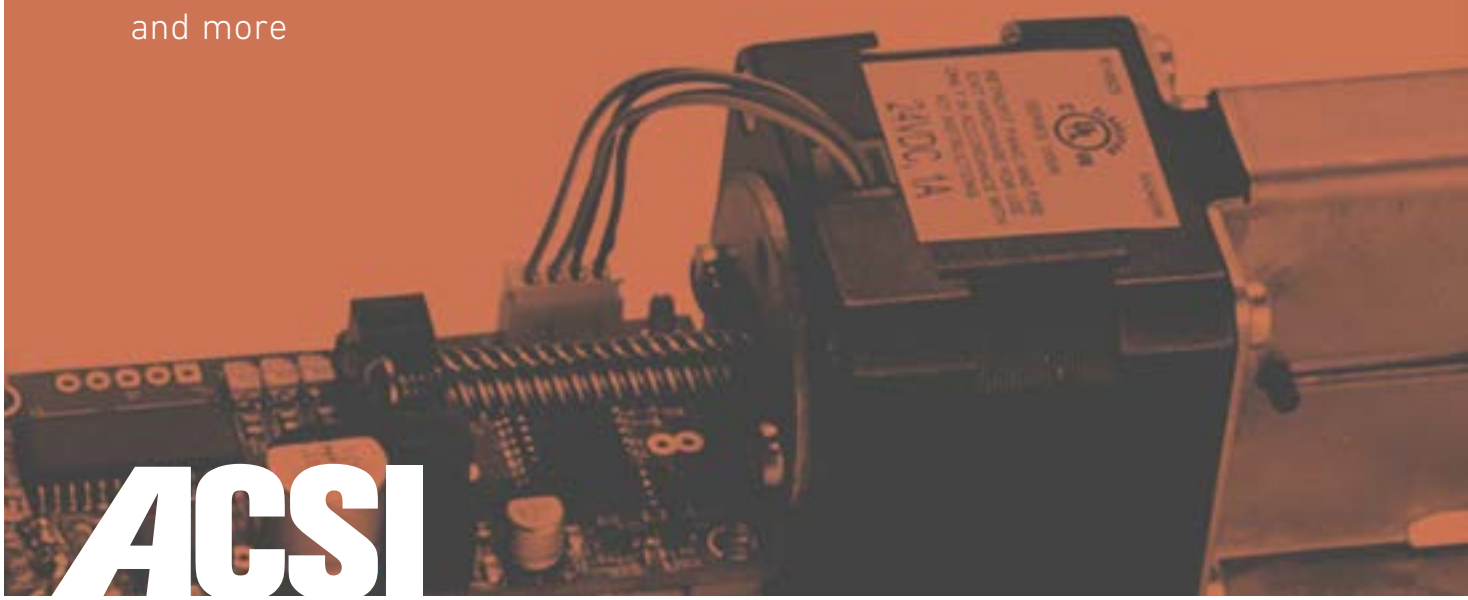

ACSI

2720 Clark Avenue
St. Louis, MO 63103
(314) 652-5588
(314) 652-2090 FAX
www.acsi-inc.com

1-800-753-5558

Series 1500 | Electric Exit Devices

You supply the exit device and ACSI supplies high quality UL Listed modifications to a wide range of manufacturers' exit devices. ACSI engineers and technicians are available to provide system design, wiring diagrams, and a variety of technical services.

1550-MD Electric Motor Latch Retraction

ACSI Series 1550-MD Electric Motor Latch Retraction modification/kit provides a remote means of locking or unlocking exit devices.

- Simultaneous electric latch retraction and dogging (push bar depressed)
- UL Listed for both panic and fire exit hardware
- Available for mortise, rim, concealed and surface vertical rod exit devices
- Field or factory installed
- Quiet operation
- Continuous duty rated
- Low power consumption
- 24VDC operation
  -ACSI Series 1400 power supplies recommended
- Interface with life-safety systems
- Non-polarized leads
- On-board diagnostic LEDs
- Automatic retry



1550K-MDS



1550K-MDV



1550K-MDC



1550K-MDF



1550K-MDT



1550K-MDD



1550K-MDP



1550K-MDH



1550K-MDO

Model	Manufacturer's Series
1550K-MDV	Von Duprin 33A/35A, 98/99
1550K-MDV22	Von Duprin 22
1550K-MDC	Corbin Russwin ED4000, ED5000, Yale 7000
1550K-MDD	Dorma 9000
1550K-MDT	Hager 4500, 4600 PDQ 6200 Stanley Commercial QED100, QED200, QED300
1550K-MDO	Falcon 1690, 1790 First Choice 3600, 3700
1550K-MDS	Sargent 80 Arrow 1000, 3000, 4000
1550K-MDP	Precision 2000, 5000
1550K-MDF	Falcon 24, 25
1550K-MDH	Design Hardware 1000
1550K-MDX	Dorex 9500
1550-MDA*	Adams Rite 3000, 8000
1550-MDR*	Regent 5700
1550-MDJ*	Jackson 20

**Not available as a field installable kit.*

1-800-753-5558

1550 Electric Solenoid Latch Retraction

ACSI Series 1550 Electric Solenoid Latch Retraction modification provides a remote means of locking or unlocking exit devices.

- UL Listed for both panic and fire exit hardware
- Available for mortise, rim, concealed and surface vertical rod exit devices
- Continuous duty rated
- Interface with life-safety systems
- Standard ACSI Series 1550 System includes:
  1) ACSI Series 1550 exit device modification
  2) ACSI Series 1406 or 1426 power supply (required)
  3) ACSI Series 1100 electric hinge (no special unsightly power transfer required)
- 1550K-VD is a field installable kit for Von Duprin 33A/35A and 98/99 exit devices

Note: Electrified vertical rod exit devices are UL Listed to operate properly on doors not exceeding 48 inches wide and 96 inches tall.

1560/1570 Electric Trim Control

ACSI Series 1560/1570 Electric Trim Control modification provides a remote means of locking or unlocking outside lever handle trims of exit devices.

- Fail Safe (Power Lock)
  - Outside trim is locked when power is applied and unlocked when power is removed. Trim control will unlock in the event of a power failure.
- Fail Secure (Power Unlock)
  - Outside trim is unlocked when power is applied and locked when power is removed. Trim control will lock in the event of a power failure.
- Continuous duty rated
- Low power consumption
- 24VDC, 24VAC, 12VDC, or 12VAC operation
  - ACSI Series 1400 power supplies recommended
- Interface with life-safety systems

1540 Electric Dogging

ACSI Series 1540 Electric Dogging modification provides quiet egress when electrically dogged. When energized, first time mechanical depression of the push bar will continuously hold the push bar depressed and the latch bolt retracted. When power is removed or interrupted, the push bar is released and the latch bolt will extend.

- UL Listed for both panic and fire exit hardware
- Available for mortise, rim, concealed and surface vertical rod exit devices
- Continuous duty rated
- Low power consumption
- 24VDC operation
  - ACSI Series 1400 power supplies recommended
- Interface with life-safety systems

1510/1520 Electric Mortise Exit Control

ACSI Series 1510/1520 Electric Mortise Exit Control modification provides a remote means of locking or unlocking mortise exit devices.

- UL Listed
- Fail Safe (Power Lock)
  - Outside trim is locked when power is applied and unlocked when power is removed. Lockset will unlock in the event of a power failure.
- Fail Secure (Power Unlock)
  - Outside trim is unlocked when power is applied and locked when power is removed. Lockset will lock in the event of a power failure.
- Continuous duty rated
- Low power consumption
- 24VDC, 24VAC, 12VDC, or 12VAC operation
  - ACSI Series 1400 power supplies recommended
- Interface with life-safety systems



1550K-VD-4



1570-996L-24V AC/DC

Electric Trim Control

ACSI stocks Von Duprin electrified 996L exit trim controls.

RE/VR 1560 996L 24VAC/DC 626	Von Duprin – Fail Safe
RE/VR 1560 996L 24VAC/DC 613	Von Duprin – Fail Safe
RE/VR 1570 996L 24VAC/DC 626	Von Duprin – Fail Secure
RE/VR 1570 996L 24VAC/DC 613	Von Duprin – Fail Secure

Note: Available in 12 volt

Electric Exit Device Modification Listing

Note: If you do not find the lock of your choice listed, please consult with our factory engineering staff. We may request that you send a sample for further evaluation.

Arrow	Corbin Russwin	Dorma	Falcon	Precision	Sargent	Von Duprin	Yale
1000, 3000	ED4000	9000	24*, 25*	2000*	80	33A/35A**	7000
4000	ED5000		1690*, 1790*	5000*		22*, 98/99**	
Adams Rite	**Design Hardware**	**Hager**	**Jackson**	**PDQ**	**Regent**	**Stanley Commercial**	
3000	1000	4500	20*	6200	5700	QED100, QED200, QED300	
8000		4600					
Dorex	**First Choice**						
9500*	3600*, 3700*						

**Available in 1550-MD (Motor Drive) only.*
*** Not available in Von Duprin 48 function.*

Solenoid Electric Latch Retraction Comparison Chart

Manufacturer	Latch Retraction Part #	Power Supply Part #	Latch Bolt Monitor Part #	Request-to-Exit Part #
ACSI	1550	1406	LM	AE
Von Duprin	EL	PS873	LX	RX
Yale	P	781N	S	B
Corbin Russwin	M94	781N	M91	M92
Precision	ELR	ELR150	LS	SS
Dorma	ES	ES100	LM	MS
Adams Rite	EL, LR	PS-LR	LM	M1
Hager	ELR, EL	2901/2902		RX

Series 1500 | Electric Exit Devices

How to Order

1 EXIT DEVICE	2 MODIFICATION #	3 LOCK PART #	4 OPERATING VOLTAGE	5 OPTIONS	6 QUICK CONNECT SYSTEM	7 HANDING
RE	1550-MD	FULL PART	24VDC	AE	QC1	LHR
VR	1550*	NUMBER	24VAC/DC	LM	QC2	RHR
ME	1560		12VDC		QC3	
	1570		12VAC/DC			
	1540					
	1510					
	1520					

Examples:

1 EXIT DEVICE	2 MODIFICATION #	3 LOCK PART #	4 OPERATING VOLTAGE	5 OPTIONS	6 QUICK CONNECT SYSTEM	7 HANDING
RE	1550-MD	8800 (SARGENT)		LM	QC2	RHR
ME	1520	9975 (VON DUPRIN)	12VAC/DC		QC3	LHR
VR	1540	7120 (YALE)	24VDC	AE	QC1	RHR

1. Exit Device

(Select type of lock to be modified)

RE	Rim Exit Device
VR	Vertical Rod Exit Device
ME	Mortise Exit Device

2. Modification Number

(Select type of lock modification required)

1550-MD	Motor Latch Retraction
1550*	Solenoid Latch Retraction
1560	Fail Safe Trim Control
1570	Fail Secure Trim Control
1540	Dogging
1510	Fail Safe Mortise Exit Control
1520	Fail Secure Mortise Exit Control

**ACSI UL Listed 1406 or 1426 Power Supply must be used with ACSI 1550 Solenoid Latch Retraction Modifications.*

3. Lock Part Number

Enter manufacturer's full lock part number

4. Operating Voltage

Required for 1510/1520/1560/1570 modifications

24VDC
24VAC/DC
12VDC
12VAC/DC

5. Options

AE	**Authorized Egress** Monitors the use of the push bar. The AE Switch can be used to: • Signal a control console when the push bar is depressed • Activate a door alarm • Control an electromagnetic lock for egress • Shunt a door alarm to allow egress
LM	**Latch Bolt Monitor** Monitors the full extension of the latch bolt or rods.

6. Quick Connect System

(Select type of system to be modified)

QC1	ACSI Quick Connect System
QC2	ASSA ElectroLynx® System
QC3	Allegion Connect System

7. Handing

RHR	Right Hand Reverse
LHR	Left Hand Reverse

Motor Electric Latch Retraction Comparison Chart

Manufacturer	Latch Retraction Part #	Power Supply Part #	Latch Bolt Monitor Part #	Request-to-Exit
ACSI	1550-MD	1420, 1440, 1451, 1452	LM	AE
Von Duprin	QEL	902	LX	RX
Sargent	56	3510	53	55
Dorma	MLR	PS532RF	LM	MS
Adams Rite	SE	PS-SE	LM	M1
Hager	MLR	2903, 2904	LM	RX
Corbin Russwin	MELR	BPS-24	M91	M92
Precision	MLR	RPSMLR2	LS	TS

Exit Device Switch Kits

ACSI Series K Switch Kits are field installed in exit devices. Series K Switch Kits include a SPDT (Single Pole Double Throw) switch assembly with long wire leads and easy-to-follow installation instructions. K Switch Kits may be used to:

- Provide instant release of magnetic locks for free egress
- Activate a door alarm
- Signal a control console when the push bar of an exit device is depressed
- Shunt a door alarm to allow free egress

Model	Manufacturer
K-100	Von Duprin 22, 33A/35A, 98/99
K-200	Von Duprin 22, 33A/35A, 98/99 (2-SPDT switches)
K-101	Von Duprin 55
K-102	Von Duprin 88
K-103	Sargent 80, Arrow 1000, 3000, 4000, Dorex 9500
K-203	Sargent 80, Arrow 1000, 3000, 4000, Dorex 9500 (1-DPDT switch)
K-104	Sargent 9600, 9700, 9800, 9900
K-105	Sargent 9300, 9400, 9500
K-106	Adams Rite 3000, 8000
K-107	Corbin Russwin 8000, Yale 2100
K-108	Jackson 1085, 1095
K-109	Corbin Russwin ED4000, ED5000, Yale 7000
K-110	Monarch 18, 19
K-111	Doromatic 990, 1090

Model	Manufacturer
K-112	Doromatic 1490, 1590
K-124	Precision 2000
K-125	Dorma 9000
K-126	Hager 4500, 4600, PDQ 6200, Stanley Commercial QED100, QED200, QED300
K-226	Hager 4500, 4600, PDQ 6200, Stanley Commercial QED100, QED200, QED300 (2-SPDT Switches)
K-128	Design Hardware 1000
K-129	Falcon 24, 25
K-130	Jackson 20
K-131	Falcon 1690, 1790
K-123	Latch Bolt Monitor for Von Duprin 33A/35A, 98/99
K-127	1550K-VD ELR Kit Latch Bolt Monitor for Von Duprin 33A/35A, 98/99

Electrical Specifications

1550-MD Motor Latch Retraction

- 24VDC, 1A Inrush, 400mA Holding

1550 Solenoid Latch Retraction

- Must use ACSI 1406 or 1426 Power Supply (see ACSI series 1400 catalog for output voltages)

1510/1520

- 12VAC/DC, 612mA
- 24VAC/DC, 330mA

1540

- 24VDC, 225mA

1560/1570

- 12VAC/DC, 612mA
- 24VAC/DC, 330mA

Series 1540 Typical Installation

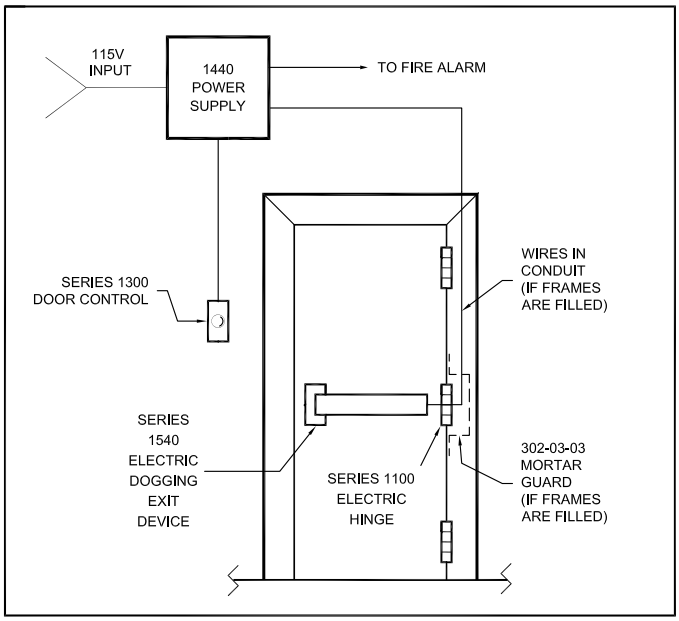

ACSI Automated Door Opening System

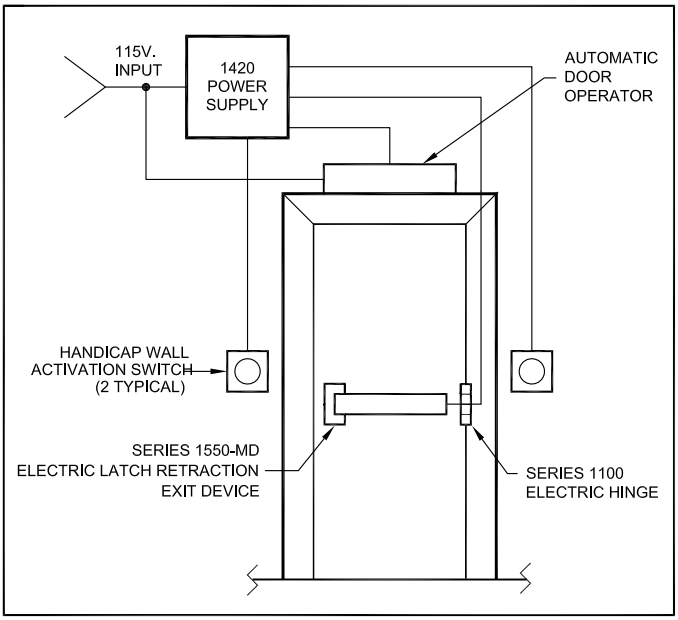

Series 1500

Electric Locks

Schlage
Corbin Russwin
Sargent
Yale
Best
Hager
Stanley Commercial
PDQ
Falcon
Arrow
Design Hardware
Tell
Baldwin
and more



ACSI

2720 Clark Avenue
St. Louis, MO 63103
(314) 652-5588
(314) 652-2090 FAX
www.acsi-inc.com

1-800-753-5558

Series 1500 | Electric Locks

ACSI supplies high quality UL Listed modifications to a wide range of manufacturers' locksets. Series 1500 electric locks provide safety and security for stairtower doors or controlled areas where both locking and latching are required. The Series 1500 locks allow remote electric locking or unlocking while conforming to life-safety codes. Series 1500 locks are available in motor-controlled or solenoid-controlled in both mortise and cylindrical locks.

Features

- UL Listed
- California State Fire Marshall approved
- Fail Safe (Power Lock)
  - Outside trim is locked when power is applied and unlocked when power is removed (storeroom function when energized). Lockset will unlock in the event of a power failure (passage function).
- Fail Secure (Power Unlock)
  - Outside trim is unlocked when power is applied and locked when power is removed. Lockset will lock in the event of a power failure.
- Simple user selectable fail safe/fail secure operation in motor-controlled locks
- Continuous duty rated
- Low power consumption
- 24VDC, 24VAC, 12VDC or 12VAC operation
  - Automatic 12V or 24V, AC or DC operating voltage for motor-controlled locks.
  - ACSI Series 1400 power supplies recommended
- When key cylinders are provided in the locks, the latch bolt may be momentarily retracted with key even though electrically locked. **Note:** Locks that are electrically unlocked may not be locked via the key cylinder.
- Wide variety of monitoring options are available
- Interface with life-safety systems

Applications

Doors in stairtowers, offices, classrooms, interlocks, elevator lobbies, laboratories, computer rooms, cashier stations, hospital equipment rooms, pharmaceutical storage rooms

Typical Installation

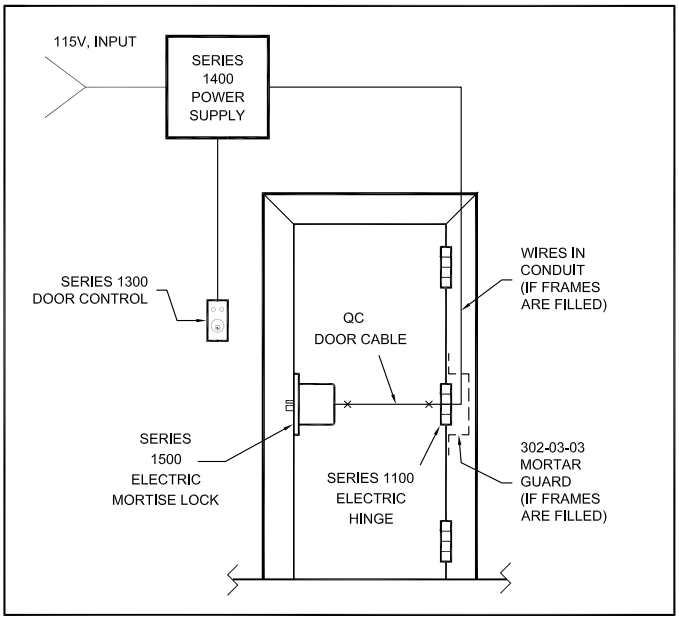

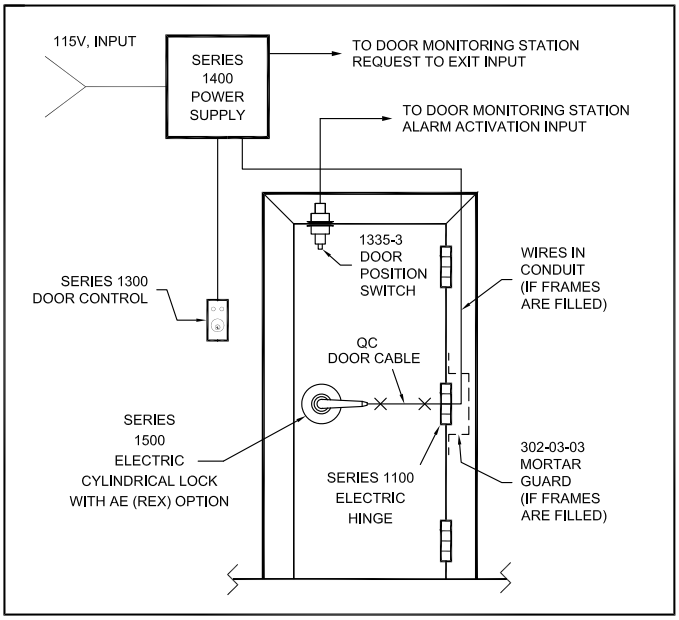

How to Order

1 LOCK TYPE	2 MODIFICATION #	3 OPTIONS	4 LOCKING	5 LOCK PART #	6 OPERATING VOLTAGE	7 QUICK CONNECT SYSTEM	8 HANDING
M	1520M	AE	1	FULL	12/24V	QC1	RH
C	1510M	LM	2	PART	24VDC	QC2	LH
MU	1520	SM		NUMBER	24VAC/DC	QC3	RHR
	1510	DM			12VDC		LHR
	1500	DMS			12VAC/DC		
		DPS					

Example:

LOCK TYPE	MODIFICATION #	OPTIONS	LOCKING	LOCK PART #	OPERATING VOLTAGE	QUICK CONNECT CABLE	HANDING
M	1520M	AE	1	L9070 (SCHLAGE)	12/24V	QC3	RH

1. Lock Type

(Select type of lock to be modified)

M	Mortise Lock
C	Cylindrical Lock
MU	Unit Lock

2. Modification Number

(Select type of lock to be modified)

1520M	Fail Secure Motor-Controlled*
1510M	Fail Safe Motor-Controlled*
1520	Fail Secure Solenoid-Controlled
1510	Fail Safe Solenoid-Controlled
1500	Monitor Only

**Factory ships Fail Secure as default (unless specified Fail Safe). Field selectable to Fail Safe.*

3. Options

AE	**Authorized Egress (Mortise or Cylindrical Lock)** Monitors the use of the INSIDE trim when the OUTSIDE trim is locked. The AE switch can be used to: • Shunt a door alarm to allow egress • Signal a control console when the trim is activated • Activate a door alarm • Control an electromagnetic lock for egress
LM	**Latch Bolt Monitor (Mortise Lock)** Monitors the full extension of the main latch.
SM	**Security Monitoring (Mortise Lock)** Monitors the locked or unlocked status and the dead latch status in series.
DM	**Deadbolt Monitor (Mortise Lock)** Monitors the full extension of the deadbolt.
DMS	**Deadbolt Monitor Secured (Mortise Lock)** Monitors the full extension of the deadbolt disabling the electrical control of a fail secure lockset locking the OUTSIDE trim. Retracting the deadbolt will enable the electrical control. Free egress at all times. • Uses include private rooms, restrooms, and lactation rooms.
DPS	**Door Position Sensor (Mortise Lock)** Monitors the door position. A magnetic sensor mounted in the mortise lock reacts to the proximity of a magnet mounted behind the ASA strike.
MK-10	**Authorized Egress Kit** Field installable for Schlage L series mortise lock.

How to Order (Cont.)

4. Locking

1	Standard control locks outside (secure side) trim.
2	Locks both sides – mortise locks only.

5. Lock Part No.

Distributors supply ACSI with mortise, cylindrical or unit locks for modification. Please supply the lock manufacturer's full part number.

Example: L9070, 8237, 8808, ND80, 3357, etc.

Note: Refer to the last page of this catalog section for a complete listing of locks required by ACSI.

6. Operating Voltage

12/24V	Motor-Controlled Locks, automatic 12V or 24V, AC or DC operating voltage
24VDC	Solenoid-Controlled Locks
24VAC/DC	Solenoid-Controlled Locks
12VDC	Solenoid-Controlled Locks
12VAC/DC	Solenoid-Controlled Locks

Note: Mortise locks can be supplied with pneumatic control. Consult factory.

7. Quick Connect System

QC1	ACSI Quick Connect System
QC2	ASSA ElectroLynx® System
QC3	Allegion Connect System

8. Handing

RH	Right Hand
LH	Left Hand
RHR	Right Hand Reverse
LHR	Left Hand Reverse

Accessories

1580-1	AC/DC Converter
1580-2	Voltage Regulator • Regulates source voltages up to 30VDC (35VAC) to a 24VDC output level • Works with AC or DC source voltages • Can be used with 24VAC/DC rated cylindrical or mortise locks up to 360mA. • UL Listed

Electric Mortise Lock Bodies

ACSI Stocks Electric Mortise Lock Bodies available in Schlage, Corbin Russwin, Sargent, Yale, Best and Falcon. The locks are available as motor-controlled or solenoid-controlled. Motor-controlled locks are field selectable for fail safe or fail secure and have automatic 12V or 24V, AC or DC operation. Solenoid-controlled locks must be specified as fail safe or fail secure and 12VAC/DC or 24VAC/DC. A variety of monitoring options are available.

Motor-Controlled			
M1510M	L9070B	12/24V	Schlage Fail Safe
M1510M	2055B	12/24V	Corbin Russwin Fail Safe
M1510M	8237B	12/24V	Sargent Fail Safe
M1510M	8808B	12/24V	Yale Fail Safe
M1510M	MA561B	12/24V	Falcon Fail Safe
M1520M	L9070B	12/24V	Schlage Fail Secure
M1520M	2055B	12/24V	Corbin Russwin Fail Secure
M1520M	8237B	12/24V	Sargent Fail Secure
M1520M	8808B	12/24V	Yale Fail Secure
M1520M	MA561B	12/24V	Falcon Fail Secure
Solenoid-Controlled			
M1510	L9070B	24VAC/DC	Schlage Fail Safe
M1510	2055B	24VAC/DC	Corbin Russwin Fail Safe
M1510	8237B	24VAC/DC	Sargent Fail Safe
M1510	8808B	24VAC/DC	Yale Fail Safe
M1510	45H7RB	24VAC/DC	Best Fail Safe
M1510	MA561B	24VAC/DC	Falcon Fail Safe
M1520	L9070B	24VAC/DC	Schlage Fail Secure
M1520	2055B	24VAC/DC	Corbin Russwin Fail Secure
M1520	8237B	24VAC/DC	Sargent Fail Secure
M1520	8808B	24VAC/DC	Yale Fail Secure
M1520	45H7RB	24VAC/DC	Best Fail Secure
M1520	MA561B	24VAC/DC	Falcon Fail Secure



Sargent M1520M



Corbin M1520M



Schlage M1520M



Yale M1520M



Falcon M1520M



Best M1520

Electrical Specifications

M1510M /M1520M

- 12/24V, 250mA Inrush, 10mA Holding

M1510 / M1520

- 12VAC/DC, 612mA
- 24VAC/DC, 330mA

MU1510 / MU1520

- 12VAC/DC, 612mA
- 24VAC/DC, 330mA

Series 1500 | Electric Locks

Electric Cylindrical Locks

ACSI Stocks Electric Cylindrical Locks available in Schlage, Corbin Russwin, Sargent and Yale. The locks are available as motor-controlled or solenoid-controlled. Motor-controlled locks are field selectable for fail safe or fail secure and have automatic 12V or 24V, AC or DC operation. Solenoid-controlled locks must be specified as fail safe or fail secure and 12VAC/DC or 24VAC/DC. Authorized Egress (Request-to-Exit) option is also available.

Motor-Controlled					
C1510M*	ND80B	12/24V			Schlage Fail Safe
C1510M	10G04B	12/24V	LL	626	Sargent Fail Safe
C1510M	3357B	12/24V	NZD	626	Corbin Russwin Fail Safe
C1510M	5405LNB	12/24V	AU	626	Yale Fail Safe
C1520M*	ND80B	12/24V			Schlage Fail Secure
C1520M	10G04B	12/24V	LL	626	Sargent Fail Secure
C1520M	3357B	12/24V	NZD	626	Corbin Russwin Fail Secure
C1520M	5405LNB	12/24V	AU	626	Yale Fail Secure
Solenoid-Controlled					
C1510*	ND80B	24VAC/DC			Schlage Fail Safe
C1510	10G04B	24VAC/DC	LL	626	Sargent Fail Safe
C1510	3357B	2VAC/DC	NZD	626	Corbin Russwin Fail Safe
C1510	5405LNB	24VAC/DC	AU	626	Yale Fail Safe
C1520*	ND80B	24VAC/DC			Schlage Fail Secure
C1520	10G04B	24VAC/DC	LL	626	Sargent Fail Secure
C1520	3357B	24VAC/DC	NZD	626	Corbin Russwin Fail Secure
C1520	5405LNB	24VAC/DC	AU	626	Yale Fail Secure

** Specify trim style, format and finish. Available in Rhodes, Sparta and Athens trim style. Finishes available in 626, 625 and 613.*



Schlage C1520



Corbin C1520M



Sargent C1520M



Yale C1520M

Electrical Specifications

C1510M / C1520M
• 12/24V, 250mA Inrush, 10mA Holding
C1510 / C1520
• 12VAC/DC, 250mA • 24VAC/DC, 150mA

Electric Lock Comparison Chart

ACSI	ARROW	BEST	CORBIN RUSSWIN	DESIGN HARDWARE	FALCON
M1510M/M1520M-1**			20906, 20907	E-M-07-FS/FSE	
M1510M/M1520M-2**			20914, 20915, 20932	E-M-30-FS/FSE	
M1510-1	A17-177, B17-177	EWEL	20903, 20910	E-M-07-FS	M851
M1510-2		WWEL	20901, 20920	E-M-30-FS	M811
M1520-1	A17-178, B17-178	EWEU	20905, 20930	E-M-07-FSE	M881
M1520-2		WWEU	20940	E-M-30-FSE	M821
C1510M/C1520M-1**				E-Z-86-FS/FSE	
C1510-1	Q12-177, H12-177	DEL	33903	E-Z-86-FS	T851
C1520-1	Q12-178, H12-178	DEU	33905	E-Z-86-FSE	T881
AE	RE	RQE	M92	REX	RX*
LM*	LM*	LS*	M91*	LM*	
SM*	SM*		M105*	SM*	
DM*					
DMS*					
DPS*		DS*			

***Motor-controlled*
**Available in Mortise only*

ACSI	HAGER	PDQ	SARGENT	SCHLAGE	STANLEY COMMERCIAL	YALE
M1510M/M1520M-1**	3880EL/EU	MR199A**	8270, 8271	L9090EL/EU L9092EL/EU L9094EL/EU		
M1510M/M1520M-2**		MR200	8272, 8273	L9091EL/EU L9093EL/EU L9095EL/EU		
M1510-1	3880EL		8270	L9080EL		8890
M1510-2			8272	L9082EL		9984-2
M1520-1	3880EU		8271	L9080EU		8891
M1520-2			8273	L9082EU		8895-2
C1510M/C1520M-1**	3480EL/EU			ND80EL/EU		
C1510-1	3480EL	GT199FS	10G70	ND80EL	QCL192	5490
C1520-1	3480EU	GT199FSC	10G71	ND80EU	QCL194	5491
AE	RX	REX	RX	RX	X	REX
LM*	LM*	LM*	LX*	LX*		LBM*
SM*						
DM*			DX*			
DMS*			DX*			
DPS*	DPM*					

***Motor-controlled*
**Available in Mortise only*

Electric Lock Modification Listing

Note: If you do not find the lock of your choice listed, please consult with our factory engineering staff. We may request that you send a sample for further evaluation.

Manufacturer	Mortise Locks	Cylindrical Locks	Unit Locks
Arrow	AM17, BM17	QL82	
Baldwin	6065*, 6065LS*		
Best	45H7R*		
Corbin Russwin	2055	3357	UT2557*
Design Hardware	M-05, M-13	Z-84	
Falcon	MA561, MA571	T561	
Hager	3850, 3856	3480	
PDQ	MR148*		
Sargent	8237, 8225	10G04	
Schlage	L9050, L9070 L9080** (see note below), L9453	ND80 ND94*	
Stanley Commercial	QM160*	QCL170	
Tell Manufacturing		LC2486	
Yale	8800, 8847	5405LN	

**Available in solenoid-controlled only*
***Schlage L9080 must be supplied with extra spring cage to compensate for lever sag of outside trim.*

Lock Schematics

AE – Authorized Egress

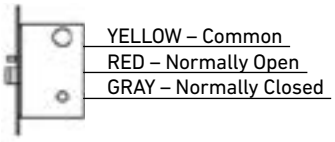

LM – Latch Bolt Monitor

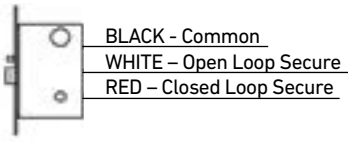

SM – Security Monitoring

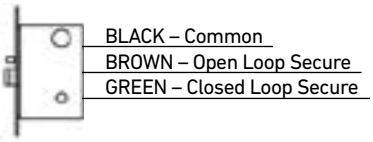

DM – Deadbolt Monitor

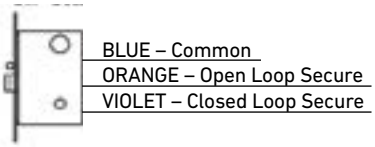

DPS – Door Position Sensor

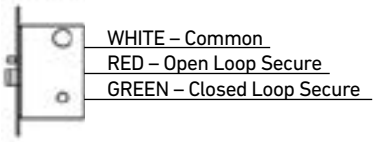

M1510 / M1520 / M1510M / M1520M
DMS – Deadbolt Monitor Secured

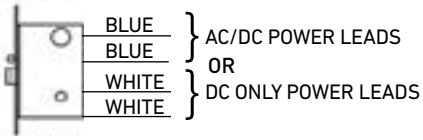

Red ty-wrap on leads designates 12V only.

AE – Authorized Egress

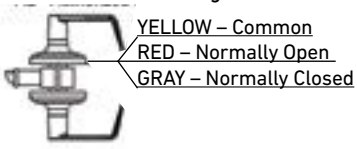

C1510 / C1520 / C1510M / C1520M



Red ty-wrap on leads designates 12V only.

Series 3700

Electromagnetic Locks

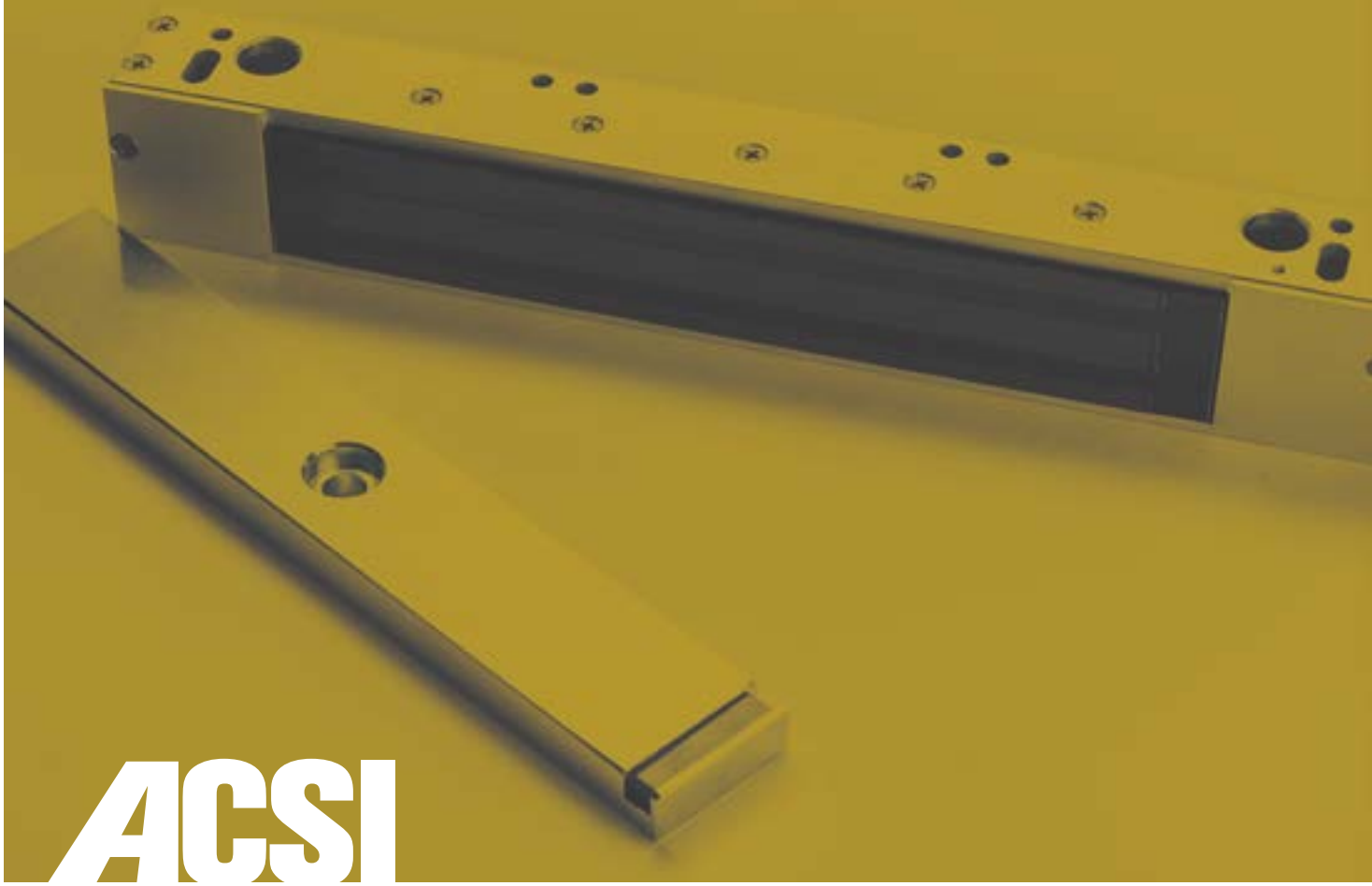

ACSI

2720 Clark Avenue
St. Louis, MO 63103
(314) 652-5588
(314) 652-2090 FAX
www.acsi-inc.com

1-800-753-5558

Series 3700 | Electromagnetic Locks

ACSI Series 3700 UL Listed Electromagnetic Locks combine high security features with fail safe operation and conform with life-safety codes. The Series 3700 is designed for single or pairs of outswing or inswing doors.

Features

- UL Listed
- Variety of models available
- Positive fail safe security
- No moving parts - maintenance free
- Low power consumption
- Built-in surge and spike protection
- Built-in door position sensor

Options

- Magnetic bond sensor
- Power LED
- Custom length housings
- Variety of architectural finishes
- Glass door brackets

Typical Installation

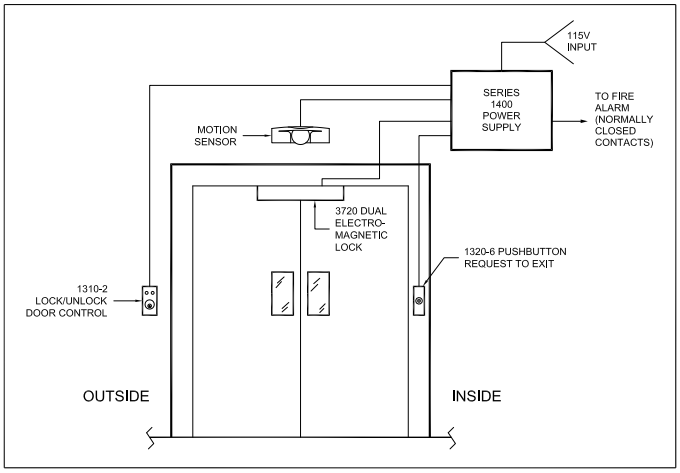

Electrical Specifications

- 12VDC, 500mA
- 24VDC, 250mA

How to Order

1. Model

3710	Single 1200 lb. magnetic lock (outswing)
3711	Single 1200 lb. magnetic lock with Z bracket (inswing)
3720	Double 1200 lb. magnetic lock (outswing)
3721	Double 1200 lb. magnetic lock with Z bracket (inswing)
3750	Single 1200 lb. magnetic lock for sliding doors
3760	Single 300 lb. magnetic lock
3770	Double 300 lb. magnetic lock
3780	Single 600 lb. magnetic lock
3790	Double 600 lb. magnetic lock
3795	Concealed magnetic shear lock

2. Operating Voltage

24VDC
12VDC

3. Finish

SA	Satin Aluminum
BA	Black Anodized
GA	Gold Anodized
DBN	Dark Brown Anodized
US3	Bright Brass
US4	Satin Brass
US26	Bright Chrome

4. Options

MBS	Magnetic bond sensor
L1	1 LED (green or red)
L2	2 LEDs (green and red)
FP1	Filler plate, single magnet*
FP2	Filler plate, double magnet*
GLB-1	1/2" glass door bracket
GLB-2	3/4" glass door bracket
AB-1	Angle bracket for single magnet (1"x1"x14")
AB-2	Angle bracket for double magnet (1"x1"x25")
AB-3	Angle bracket for single magnet (1-1/2"x2-5/8"x14")
AB-4	Angle bracket for double magnet (1-1/2"x2-5/8"x25")

** Specify 1/2" or 5/8" thick.*
Note: Please consult the factory for custom length decorative housings.

1-800-753-5558

Series 6100

Communicating Bath Door System

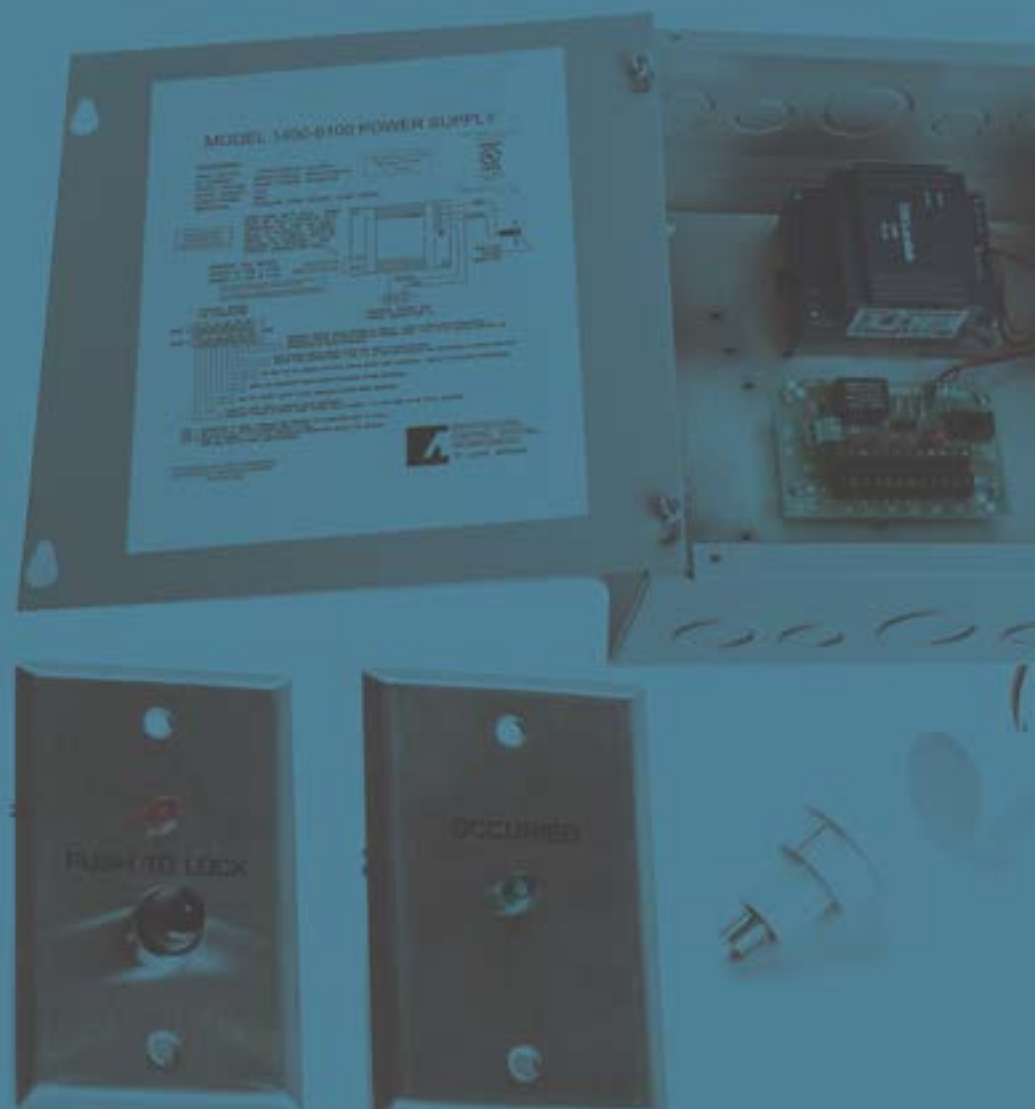

ACSI

2720 Clark Avenue
St. Louis, MO 63103
(314) 652-5588
(314) 652-2090 FAX
www.acsi-inc.com

1-800-753-5558

Series 6100 | Communicating Bath Door System

ACSI Series 6100 Communicating Bath Door System is designed to coordinate access to a common bathroom facility from adjoining rooms. This system allows more efficient utilization of floor space in facilities by eliminating the need for a bathroom in each room.

Features

- Fail safe system - doors will unlock when power is removed
- Free egress at all times
- User privacy
- Eliminates accidental lock-out from either room to the bathroom
- Mechanical key override allows personnel to enter during an emergency
- 2A load capacity
- Inputs available for optional emergency release switch when urgent unlocking of the door is required
- Convenient field wiring of system components

Options

- Located above outside doors for emergency release:
  - 1330-3 Emergency Release
  - 1320-1 Pushbutton Switch

Required Components

Item	Qty	Description
1	1 Each	1400-6100 Power Supply
2	2 Each	Door Position Sensors
3	2 Each	Pushbuttons with indicator marked "Push to Lock"
4	2 Each	Indicators marked "Occupied"
5	2 Each	Electric Hinges, Model 1104*
6	2 Each	M1510 or C1510 Fail Safe Locks*

** Electric hinges and electric locks are not included, but must be ordered with the Series 6100 system.*

Description of System Function

When the bathroom is not occupied, both doors are unlocked and all indicators are extinguished. Upon entering the bathroom from one of the rooms, the occupant depresses the inside pushbutton switch to lock both doors (both doors must be closed in order for them to lock). When the doors lock, the red indicators inside the bathroom indicate that both doors are locked from the outside. The green indicators outside the bathroom indicate that the bathroom is occupied.

Note: Both doors are always free egress and can be unlocked mechanically from the outside with a key. When the occupant exits either door, both doors automatically return to the unlocked condition and all indicators are extinguished.

Series 6100 | Communicating Bath Door System

How to Order

1 Model	2 Electric Locking Device	3 1104 Electric Hinge
6100	A or B	

1. 6100 System

6100	Communicating Bath Door System

2. Electric Locking Device

Distributors supply ACSI with mortise or cylindrical locks for modification. Please supply the lock manufacturer's full part number.
Example: L9070, 8237, 8808, ND80, 3357, etc.

A (2) M1510	Electric Mortise Locks
B (2) C1510	Electric Cylindrical Locks

3. 1104 Electric Hinges

Please specify manufacturer, weight, size and finish of the hinge required.
(2) Hager BB1279 4.5x4.5 26D 1104
(2) Stanley FBB191 5.0x4.5 10B 1104

Note: System may also be furnished with an emergency release device; i.e., 1330-3 Emergency Release or 1320-1 Pushbutton Switch.

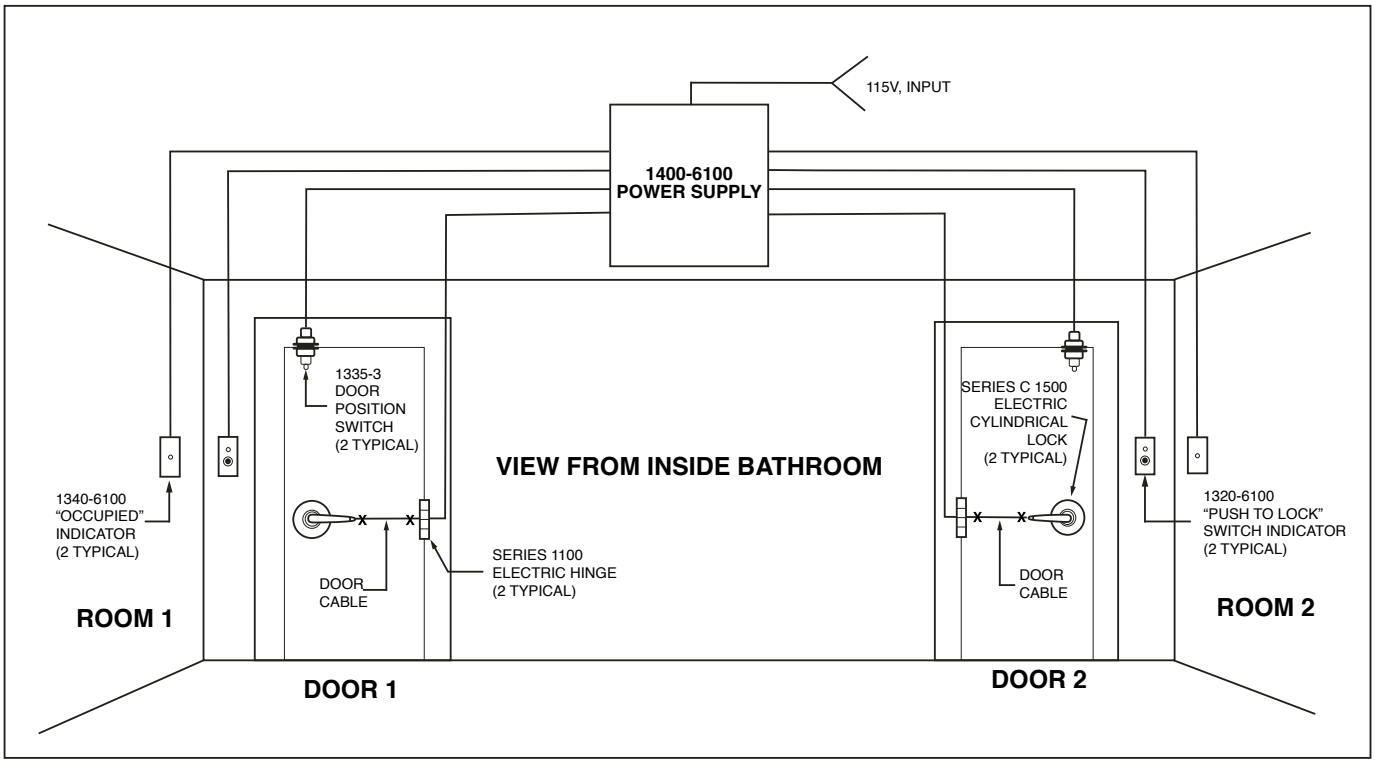

Series 8500

Gemini Locking Systems



ACSI

2720 Clark Avenue
St. Louis, MO 63103
(314) 652-5588
(314) 652-2090 FAX
www.acsi-inc.com

1-800-753-5558

Series 8500 | Gemini Locking Systems

ACSI Series 8500 Gemini Locking System provides safety and security for stairtower doors or controlled areas where both locking and latching are required. The Gemini system allows remote electric locking or unlocking while conforming to life-safety codes. The system consists of two components: a Gemini modified mortise lockset and a frame mounted Gemini operator.

Features

- UL Listed Gemini mortise lock - no special door prep
- UL Listed Gemini operator located in the frame
- Ability to work with a wide range of mortise lock manufacturers:
  - Arrow
  - Corbin Russwin
  - Schlage
- Fail Safe (Power Lock)
  - Outside trim is locked when power is applied and unlocked when power is removed (storeroom function when energized). Lockset will unlock in the event of a power failure (passage function).
- Fail Secure (Power Unlock)
  - Outside trim is unlocked when power is applied and locked when power is removed. Lockset will lock in the event of a power failure.
- 24VDC or 24VAC/DC
- Mechanical key override
  - When key cylinders are provided in the locks, the latch bolt may be momentarily retracted with key even though electrically locked. **Note:** Locks that are electrically unlocked may not be locked via the key cylinder.
- Easy installation: Gemini operator fits easily into 2" face frames. Only one wiring termination.
- Optional quick connect cable
- Continuous duty rated
- Heavy-duty stainless steel housing
- Security monitoring available
- Interface with life-safety systems

Series 8500 Typical Installation

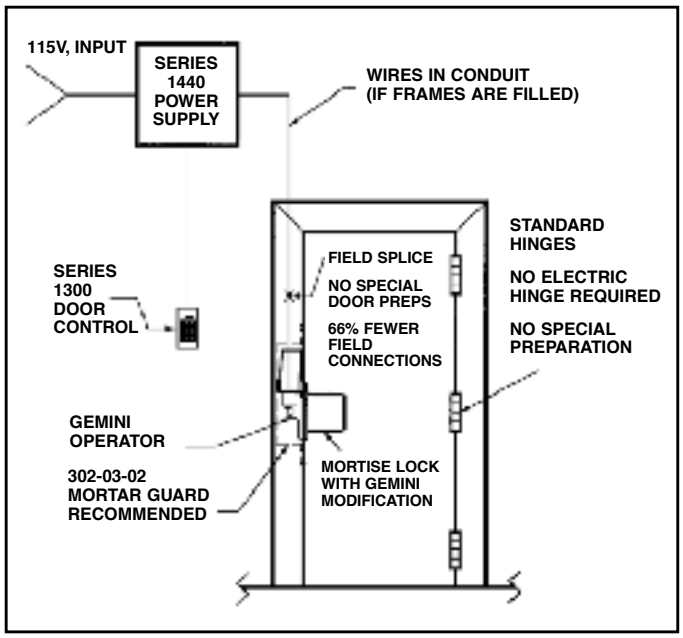



How to Order

1 GEMINI OPERATOR	2 LOCK TYPE	3 CONTROL MODE	4 OPERATING VOLTAGE	5 QUICK CONNECT CABLE	6 SECURITY MONITORING	7 FINISH	8 HANDING	9 LOCK PART #
8500	M1	PL	24VDC	QC	CLS	26D	LH	L9070
8500F	M2	PUL	24VAC/DC		OLS		RH	
							LHR	
							RHR	

Example:

GEMINI OPERATOR	LOCK TYPE	CONTROL MODE	OPERATING VOLTAGE	QUICK CONNECT CABLE	SECURITY MONITORING	FINISH	HANDING	LOCK PART #
8500	M1	PL	24VDC	QC	CLS	26D	LH	L9070

1. Gemini Operator

8500	The standard Gemini operator is designed for 2" face frame applications and fits a standard ANSI 4-7/8" frame prep.
8500F	Also designed for 2" face frame applications, this operator is supplied with an oversized strikeplate for easy installation in retrofit applications.

2. Lock Type

M1	Mortise lock with one side (lever or knob) locked
M2	Mortise lock with both sides (lever and knob) locked

3. Control Mode

PL	Power Lock (Fail Safe)
PUL	Power Unlock (Fail Secure)

4. Operating Voltage

24VDC
24VAC/DC

5. Quick Connect Cable

QC	An optional quick connect cable 10' in length with stripped wires at one end for splicing into an electrical box or power supply and with a connector on one end for quick connect to the Gemini operator is automatically supplied with a matching connector.

Note: Leave this space blank if not required.

6. Security Monitoring

CLS	Closed Loop Secure – Monitor • When lock is secure (latch in strike-operator in locked position), monitor loop is a closed circuit. The circuit opens if security is breached.
OLS	Open Loop Secure – Monitor • When lock is secure (latch in strike-operator in locked position), monitor loop is an open circuit. The circuit closes if security is breached.

Note: Leave this space blank if not required.

7. Finish

Specify US standard architectural hardware finish as required.

8. Handing

LH	Left Hand
RH	Right Hand
LHR	Left Hand Reverse
RHR	Right Hand Reverse

9. Lock Part Number

Distributors supply ACSI with mortise locks for modification.
Please supply the lock manufacturer's full part number.

Example: L9070, 2055, BM17

Note: Refer to the last page of this catalog section for a complete listing of locks required by ACSI.

Accessories

302-03-02	Gemini Mortar Guard, 15"

Gemini Lock Modification Listing (Indicates Locksets that are UL Listed)

Note: If you do not find the lock of your choice listed, please consult with our factory engineering staff. We may request that you send a sample for further evaluation.

Arrow	Corbin Russwin	Schlage
AM17	2055	L9050
BM17		L9070
		L9080*

**L9080 must be supplied with extra spring cage to compensate for lever sag of outside trim.*

Gemini Comparison Chart

ACSI-Gemini	SDC HiTower
Fail Safe	
8500-M1-PL	7550, 7540
8500-M2-PL	7530
8500-M1 or M2-PL*	7510, 7520
Fail Secure	
8500-M1-PUL	7570
8500-M2-PUL	7560

**Please consult the factory for proper part number.*

ACSI	Description	SDC
CLS, OLS	Monitoring	9A, 69A
QC	Quick Connect Cable	SC-10
302-03-02	Mortar Guard for 2" Face Frame	7500-EB-S

Electrical Specifications

Gemini Operator
• 24VAC/DC, 600mA
Monitoring Contact Rating
• 0.5A @ 30VDC


AHS
SS HARDWARE SU


AHS
ACCESS HARDWARE SUPPLY



ACCESS HARDWARE SUPPLY



ACCESS HARDWARE SUPPLY



ACCESS HARDWARE SUPPLY



ACCESS HARDWARE SUPPLY


AHS
SS HARDWARE SU


AHS
ACCESS HARDWARE SUPPLY



ACCESS HARDWARE SUPPLY



ACCESS HARDWARE SUPPLY



ACCESS HARDWARE SUPPLY



ACCESS HARDWARE SUPPLY


jlM
Wholesale
Security Door Hardware


jlm
Wholesale
Security Door Hardware


jlm
Wholesale
Security Door Hardware


jlm
Wholesale
Security Door Hardware


MAYFLOWE
Advanced Security Autho

MAYFLOWER
Your Advanced Security Authority


MAYFLOWE
Advanced Security Authc


MAYFLOWER
Your Advanced Security Authority


MIDW
WHOL
HARDV


MIDWEST
WHOLESALE
HARDWARE


MIDWEST
WHOLESALE
HARDWARE



MIDWEST
WHOLESALE
HARDWARE



MIDWEST
WHOLESALE
HARDWARE



MIDWEST WHOLESALE HARDWARE


MIDWEST
WHOLESALE
HARDWARE



MIDWEST
WHOLESALE
HARDWARE



MIDWEST
WHOLESALE
HARDWARE



MIDWEST
WHOLESALE
HARDWARE



MIDWEST WHOLESALE HARDWARE

CU

DIST

SECURITY
LOCK DISTRIBUTORS


SECURITY
SECURITY
LOCK DISTRIBUTORS



SECURITY LOCK DISTRIBUTORS



SECURITY LOCK DISTRIBUTORS



SECURITY LOCK DISTRIBUTORS

dited Lock S

Accredited Lock Supply

Accredited Lock Supply

edited Lock Su

Accredited Lock Supply


RON HARDWAR



AKRON HARDWARE™



AKRON HARDWARE™



AKRON HARDWARE™



AKRON HARDWARE™



AKRON HARDWARE™


RON HARDWAR


AKRON HARDWARE™



AKRON HARDWARE™



AKRON HARDWARE™



AKRON HARDWARE™



AKRON HARDWARE™


Hardware and Security Solu

Fairway

Architectural Hardware and Security Solutions

Fairway

Architectural Hardware and Security Solutions


Hardware and Security Solu

Fairway

Architectural Hardware and Security Solutions

Fairway

Architectural Hardware and Security Solutions

ardware

ardware

CU

DIST

SECURITY
LOCK DISTRIBUTORS


SECURITY
SECURITY
LOCK DISTRIBUTORS


SECURITY
SECURITY
LOCK DISTRIBUTORS


SECURITY
SECURITY
LOCK DISTRIBUTORS



SECURITY LOCK DISTRIBUTORS


otch Distributors, In



Top Notch Distributors, Inc.



Top Notch Distributors, Inc.


otch Distributors, In



Top Notch Distributors, Inc.



Top Notch Distributors, Inc.

Top Notch Distributors, Inc.

Top Notch Distributors, Inc.



Top Notch Distributors, Inc.

SERIES 1340 VISUAL INDICATORS

COVERS THE FOLLOWING MODELS:

- 1340-1 ONE INDICATOR, SINGLE GANG, ROUND LED (RED OR GREEN), WALL MOUNT
- 1340-1-2 TWO INDICATORS, SINGLE GANG, ROUND LED (RED AND GREEN), WALL MOUNT

ELECTRICAL SPECIFICATIONS

- LED INDICATORS RATED AT 20mA @ 24VDC

LED INDICATORS

- MOUNTS IN A SINGLE GANG WALL MOUNT BOX 2-1/8" DEEP.

RED OR GREEN LED WIRING

- RED WIRE LEAD IS (+) POSITIVE AND BLACK WIRE LEAD IS (-) NEGATIVE.



1340-1 INDICATOR SHOWN

ACSI ARCHITECTURAL CONTROL SYSTEMS INC.

2720 CLARK AVE., ST. LOUIS, MO 63103 (800) 753-5558

REV. 11/2017

SERIES 1340 AUDIBLE ALARMS

COVERS THE FOLLOWING MODELS:

- 1340-2 AUDIBLE ALARM, SINGLE GANG, WALL MOUNT
- 1340-3 HIGH SECURITY AUDIBLE ALARM, SINGLE GANG, WALL MOUNT

ELECTRICAL SPECIFICATIONS

- AUDIBLE ALARM RATED 3-16mA @ 4-28VDC (FILTERED),
  TONE FREQUENCY: 2900Hz, SOUND INTENSITY: 64-76dB

AUDIBLE ALARM

- THE AUDIBLE ALARM HAS POLORIZED WIRE LEADS
- RED WIRE LEAD IS (+) POSITIVE AND BLACK WIRE LEAD IS (-) NEGATIVE.
- MOUNTS IN A SINGLE GANG BOX WITH A DEPTH OF 2-1/8".



1340-2 AUDIBLE ALARM SHOWN



1340-3 AUDIBLE ALARM SHOWN

ACSI
ARCHITECTURAL
CONTROL SYSTEMS INC.

2720 CLARK AVE., ST. LOUIS, MO 63103 (800) 753-5558

ELECTRIC CYLINDRICAL LOCK INSTRUCTIONS
MOTOR-CONTROLLED ELECTRIC LOCKING/UNLOCKING

1510 - Fail Safe (Power Lock):
Outside trim is locked when power is applied and unlocked when power is removed. Lockset will unlock in the event of a power failure.

1520 - Fail Secure (Power Unlock):
Outside trim is unlocked when power is applied and locked when power is removed. Lockset will lock in the event of a power failure.

Key Function:
The latch bolt may be momentarily retracted with a key even though the lockset is electrically locked.

Electrical Specifications:
Voltage: 12-24V AC/DC (11V - 30V)
Current: 250mA MAX Inrush, 10mA MAX Holding
Non-polarized Leads

2-Conductor Wire Run	
Distance 12V/24V	**Wire Gauge**
125'/250'	22
200'/400'	20
300'/600'	18
500'/1000'	16
750'/1500'	14
1250'/2500'	12

Switch Slider Settings:
Yellow: Fail Secure
Green: Fail Safe

Note: Power must be cycled to the lock after a switch slider setting change.

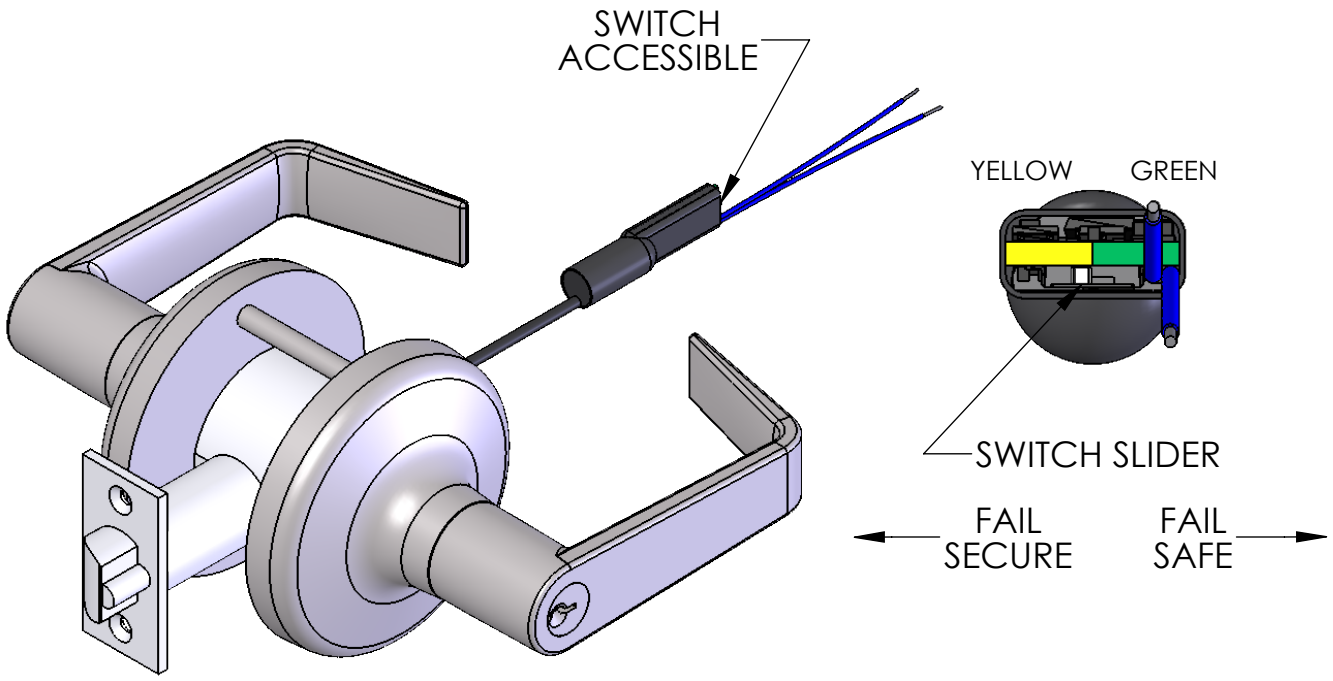

ELECTRIC MORTISE LOCK INSTRUCTIONS
MOTOR-CONTROLLED ELECTRIC LOCKING/UNLOCKING

1510 - Fail Safe (Power Lock):
Outside trim (or both outside and inside trim depending on the lock function) is locked when power is applied and unlocked when power is removed. Lockset will unlock in the event of a power failure.

1520 - Fail Secure (Power Unlock):
Outside trim (or both outside and inside trim depending on the lock function) is unlocked when power is applied and locked when power is removed. Lockset will lock in the event of a power failure.

Key Function:
The latch bolt may be momentarily retracted with a key even though the lockset is electrically locked.

Electrical Specifications:
Voltage: 12-24V AC/DC (11V - 30V)
Current: 250mA MAX Inrush, 10mA MAX Holding
Non-polarized Leads

2-Conductor Wire Run	
Distance 12V/24V	**Wire Gauge**
125'/250'	22
200'/400'	20
300'/600'	18
500'/1000'	16
750'/1500'	14
1250'/2500'	12

Switch Slider Settings:
Yellow: Fail Secure
Green: Fail Safe

Note: Power must be cycled to the lock after a switch slider setting change.

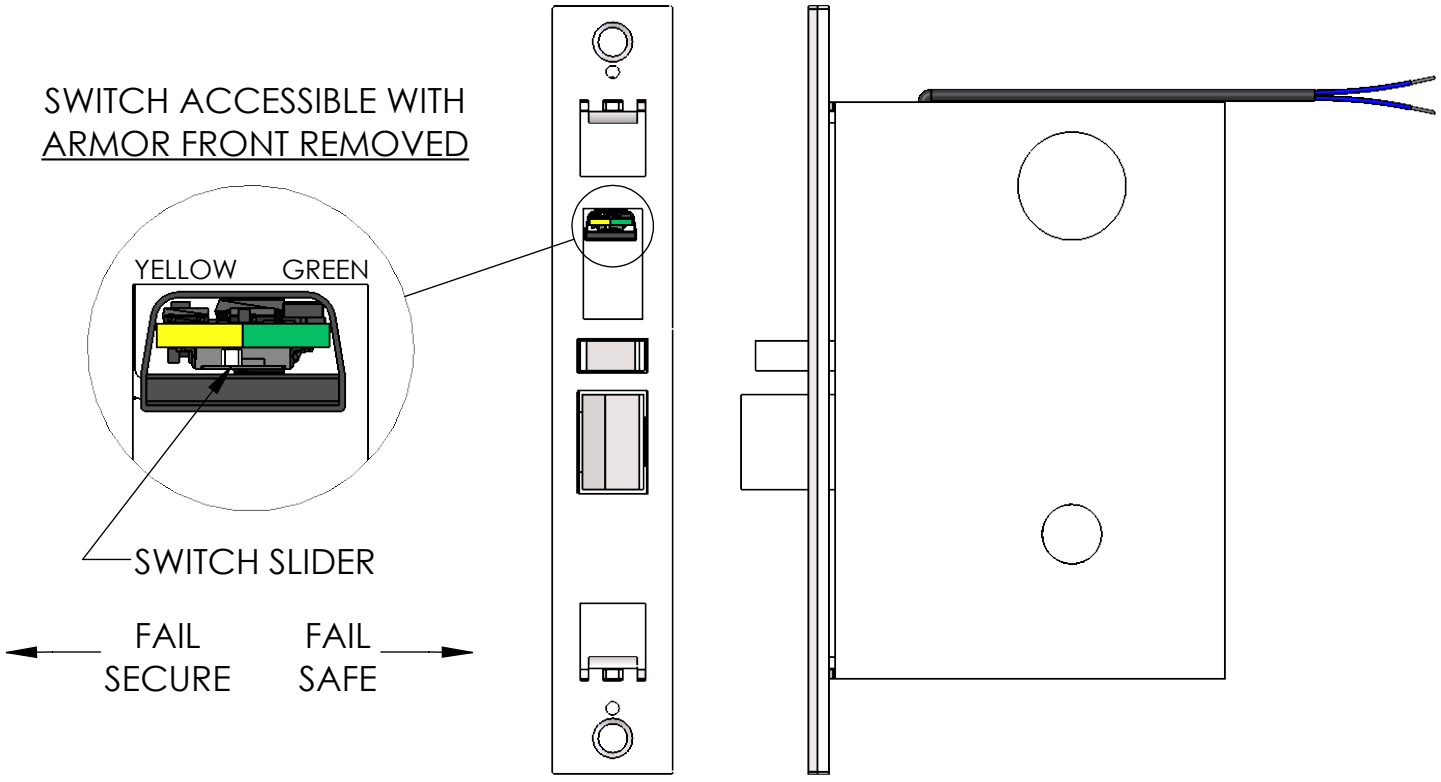

ELECTRIC CYLINDRICAL LOCK INSTRUCTIONS
ABOVE CONTROLLED ELECTRIC LOCKING HARDWARE

CYL – Fail Safe (Power Locks)

CUR – Fail Secure (Power Unlocks)

Door Functions

Installation Specifications

	Thickness of Door (Min/Max)	
	Standard	Heavy Gauge

Electrical Wiring Diagram

Under 7 hours must be supplied to the lock who is with 1 inter-setting change.



ELECTRIC CYLINDRICAL LOCK INSTRUCTIONS
MOTOR-CONTROLLED ELECTRIC LOCKING/UNLOCKING

1610 - Fail Safe (Power Lock):
Outside film is locked when power is applied and unlocked when power is removed. Lockset will unlock in the event of a power failure.

1620 - Fail Secure (Power Unlock):
Outside film is unlocked when power is applied and locked when power is removed. Lockset will lock in the event of a power failure.

Key Function:
The latch bolt may be momentarily retracted with a key even though the lockset is electrically locked.

Electrical Specifications:
Voltage: 12-24V AC/DC (11V - 30V)
Current: 250mA MAX Inrush, 10mA MAX Holding
Non-polarized Leads

Switch Slider Settings:
Yellow: Fail Secure
Green: Fail Safe

2-Conductor Wire Run	
Distance 12V-24V	Wire Gauge
[illegible]	[illegible]
[illegible]	[illegible]
[illegible]	[illegible]
[illegible]	[illegible]
[illegible]	[illegible]
[illegible]	[illegible]

Note: Power must be applied to the lock after a switch slider setting change.

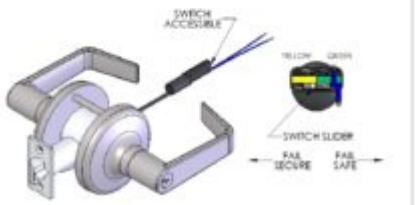

ELECTRIC CYLINDRICAL LOCK INSTRUCTIONS
MOTOR-CONTROLLED ELECTRIC LOCKING/UNLOCKING

1510 - Fail Safe (Power Lock):
Outside trim is locked when power is applied and unlocked when power is removed. Lockset will unlock in the event of a power failure.

1520 - Fail Secure (Power Unlock):
Outside trim is unlocked when power is applied and locked when power is removed. Lockset will lock in the event of a power failure.

Key Function:
The latch bolt may be momentarily retracted with a key even though the lockset is electrically locked.

Electrical Specifications:
Voltage: 12-24V AC/DC (11V - 30V)
Current: 250mA MAX Inrush, 10mA MAX Holding
Non-polarized Leads

2-Conductor Wire Run	
Distance 12V/24V	Wire Gauge
125'/250'	22
200'/400'	20
300'/600'	18
500'/1000'	16
750'/1500'	14
1250'/2500'	12

Switch Slider Settings:
Yellow: Fail Secure
Green: Fail Safe

Note: Power must be applied to the lock after a switch slider setting change.

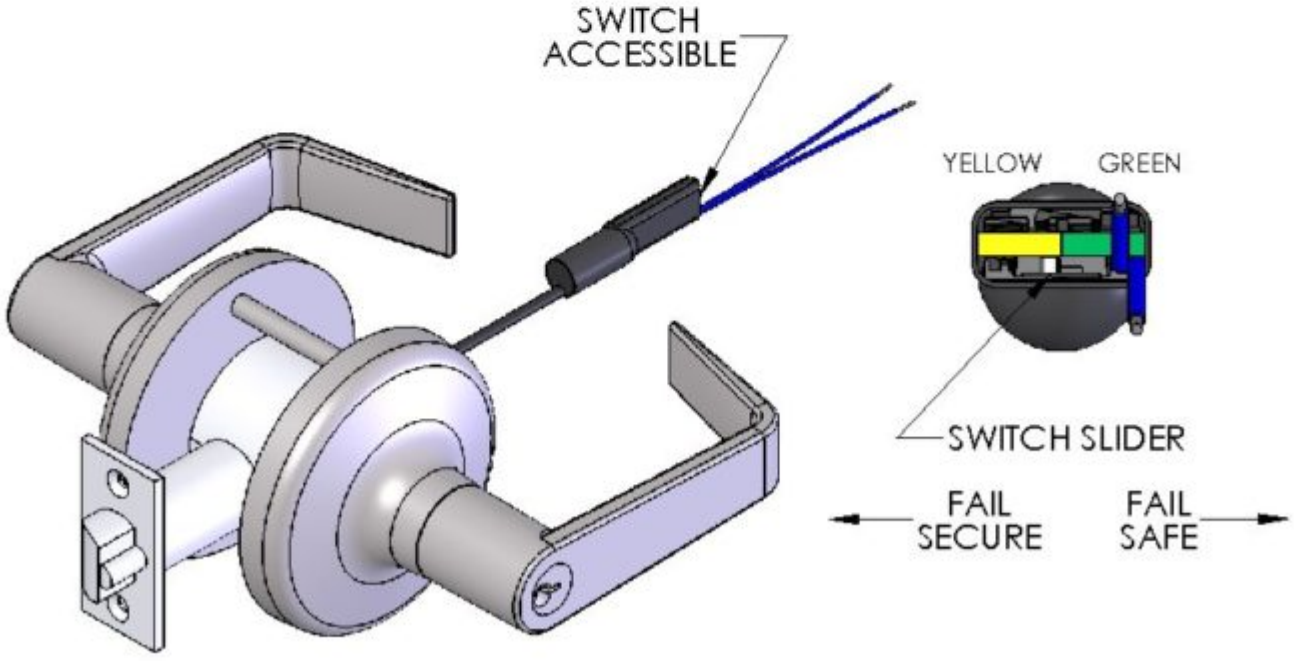

ELECTRIC CYLINDRICAL LOCK INSTRUCTIONS
MOTOR-CONTROLLED ELECTRIC LOCKING/UNLOCKING

1510 - Fail Safe (Power Lock):
Outside trim is locked when power is applied and unlocked when power is removed. Lockset will unlock in the event of a power failure.

1520 - Fail Secure (Power Unlock):
Outside trim is unlocked when power is applied and locked when power is removed. Lockset will lock in the event of a power failure.

Key Function:
The latch bolt may be momentarily retracted with a key even though the lockset is electrically locked.

Electrical Specifications:
Voltage: 12-24V AC/DC (11V - 30V)
Current: 250mA MAX Inrush, 10mA MAX Holding
Non-polarized Leads

2-Conductor Wire Run	
Distance 12V/24V	Wire Gauge
125'/250'	22
200'/400'	20
300'/600'	18
500'/1000'	16
750'/1500'	14
1250'/2500'	12

Switch Slider Settings:
Yellow: Fail Secure
Green: Fail Safe

Note: Power must be applied to the lock after a switch slider setting change.

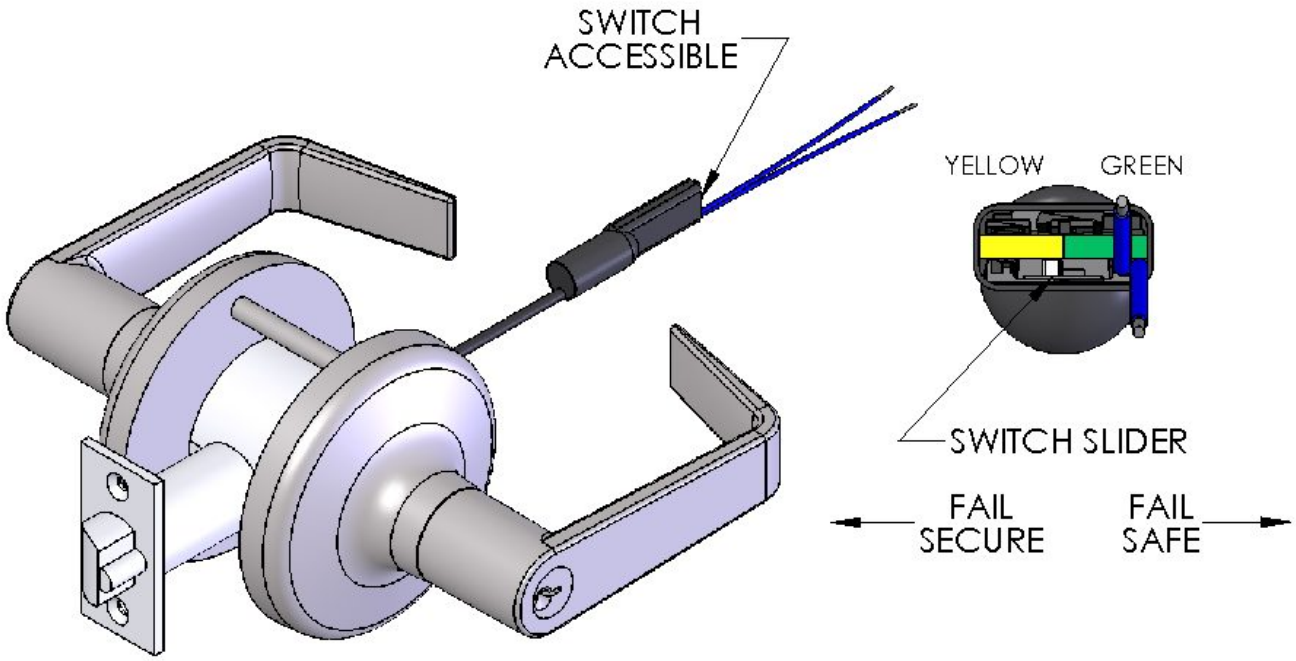

ELECTRIC CYLINDRICAL LOCK INSTRUCTIONS
MOTOR-CONTROLLED ELECTRIC LOCKING/UNLOCKING

1510 - Fail Safe (Power Lock):
Outside trim is locked when power is applied and unlocked when power is removed. Lockset will unlock in the event of a power failure.

1520 - Fail Secure (Power Unlock):
Outside trim is unlocked when power is applied and locked when power is removed. Lockset will lock in the event of a power failure.

Key Function:
The latch bolt may be momentarily retracted with a key even though the lockset is electrically locked.

Electrical Specifications:
Voltage: 12-24V AC/DC (11V - 30V)
Current: 250mA MAX Inrush, 10mA MAX Holding
Non-polarized Leads

2-Conductor Wire Run	
Distance 12V/24V	**Wire Gauge**
125'/250'	22
200'/400'	20
300'/600'	18
500'/1000'	16
750'/1500'	14
1250'/2500'	12

Switch Slider Settings:
Yellow: Fail Secure
Green: Fail Safe

Note: Power must be applied to the lock after a switch slider setting change.

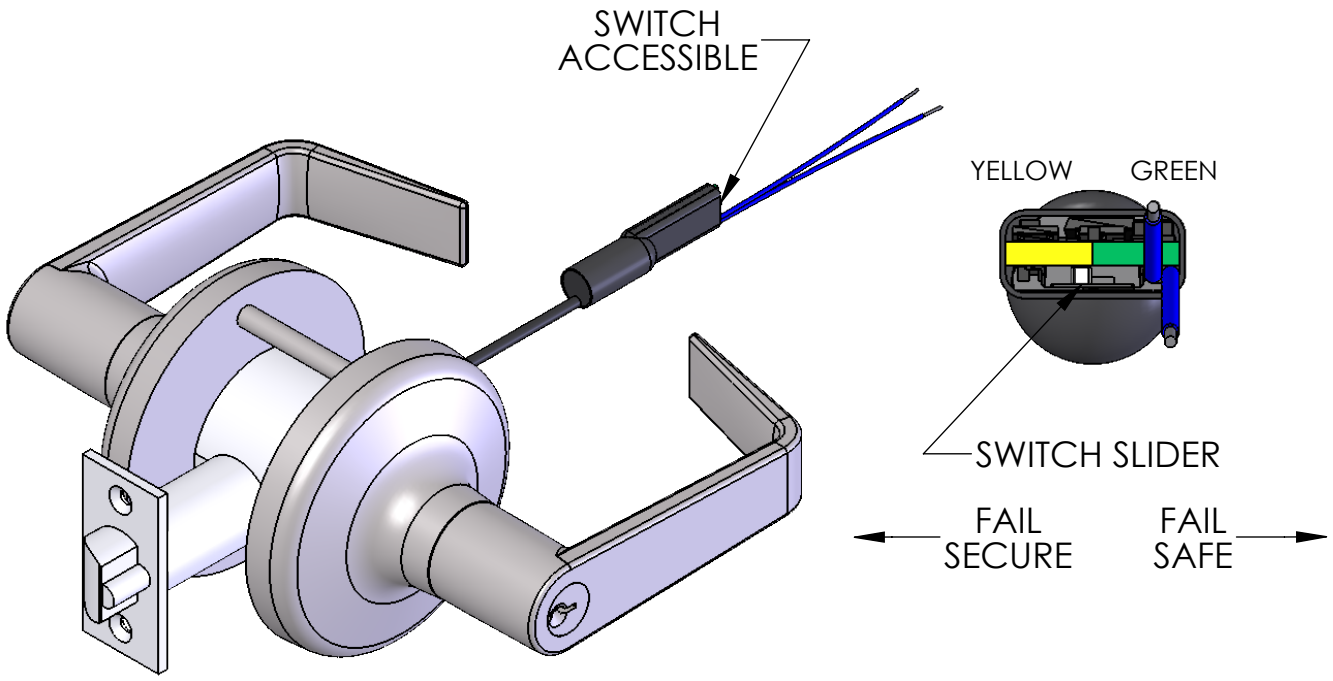



ELECTRIC EXIT DEVICE KIT INSTALLATION INSTRUCTIONS
MOTOR DRIVE ELECTRIC LATCH RETRACTION

1550K-MDO

FALCON 1690 AND 1790 SERIES
FIRST CHOICE 3600 AND 3700 SERIES



Electrical Input Requirements:
Inverter and Adjustable Power Supply
Voltage: (VDC) 0 - 28V
Current: 1A (4A@ inrush, 400mA (4A@ holding
For continuous usage.

PROVIDES SIMULTANEOUS ELECTRIC LATCH RETRACTION AND DOGGING (TOUCHBAR DEPRESSED)

Installation:

1. Separate the touchbar from the exit device.
2. Drill a 3/8" diameter hole through the chamber end cap and electrical channel for wire access from the power supply to the exit device.
3. Remove the manual dogging assembly from the device chamber and discard, but keep the screws.
4. Remove the screws that secure the rear touchbar anchor assembly to the device chamber for (P) 4010SL.
5. Carefully drill .1035 (#30) drill must be inside the chamber and the inside of dogging assembly.
6. Remove the pin of the rear touchbar anchor assembly enough to position the head of the connecting link towards the pin, then remove the pin to its original position.
7. Attach the rear touchbar anchor assembly to the device chamber.
8. Attach the motor bracket to the device chamber using the manual dogging assembly screws through the holes FIVE and not the inside of dogging assembly.
9. Attach the supplied spring between the connecting link and the fixed pin of the rear touchbar anchor assembly.
10. Attach the touchbar to the exit device.
11. Install the supplied hole plug into the manual dogging hole of the touchbar.
12. Apply the supplied technical assistance labels to the center case cover and the end cap.
Do not remove any regulatory labels adhered to the device.

3 Conductor Wire Size	
Distance	Wire Gauge
0'	18
100'	18
200'	16
300'	14
400'	14
500'	12

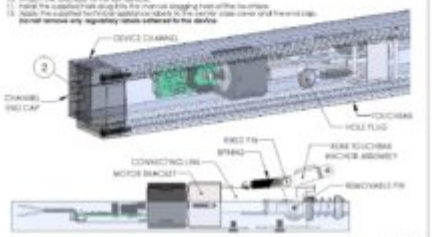

ELECTRIC EXIT DEVICE KIT INSTALLATION INSTRUCTIONS
MOTOR DRIVE ELECTRIC LATCH RETRACTION

1550K-MDO

FALCON 1690 AND 1790 SERIES
FIRST CHOICE 3600 AND 3700 SERIES

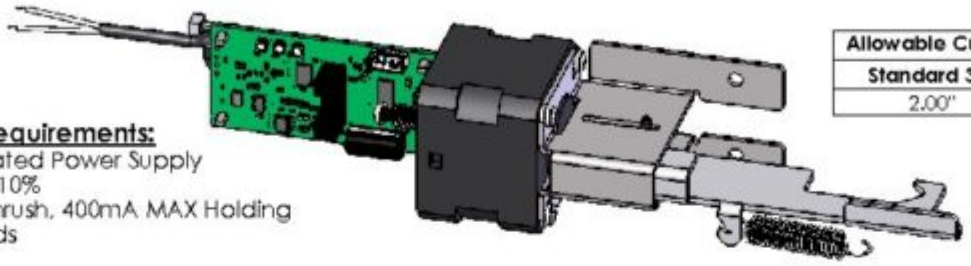

Allowable Cutoff From Device Length	
Standard 36"	Standard 48"
2.00"	2.00"

Electrical Input Requirements:
Filtered and Regulated Power Supply
Voltage: 24VDC ± 10%
Current: 1A MAX Inrush, 400mA MAX Holding
Non-polarized Leads

PROVIDES SIMULTANEOUS ELECTRIC LATCH RETRACTION AND DOGGING (TOUCHBAR DEPRESSED)

Installation:

1. Separate the touchbar from the exit device.
2. Drill a 3/8" diameter hole through the channel end cap and device channel for wire access from the power supply to the exit device.
3. Remove the manual dogging assembly from the device channel and discard, but keep the screws.
4. Remove the screws that secure the rear touchbar anchor assembly to the device channel for pin access.
5. Locate the 1550K-MDO Kit near the holes that secured the manual dogging assembly.
6. Remove the pin of the rear touchbar anchor assembly enough to position the hook of the connecting link forward of the pin, then return the pin to its original position.
7. Attach the rear touchbar anchor assembly to the device channel.
8. Attach the motor bracket to the device channel using the manual dogging assembly screws through the holes that secured the manual dogging assembly.
9. Attach the supplied spring between the connecting link and the fixed pin of the rear touchbar anchor assembly.
10. Attach the touchbar to the exit device.
11. Install the supplied hole plug into the manual dogging hole of the touchbar.
12. Apply the supplied technical assistance labels to the center case cover and the end cap.
    Do not remove any regulatory labels adhered to the device.

2-Conductor Wire Run	
Distance	Wire Gauge
70'	22
110'	20
180'	18
280'	16
450'	14
720'	12

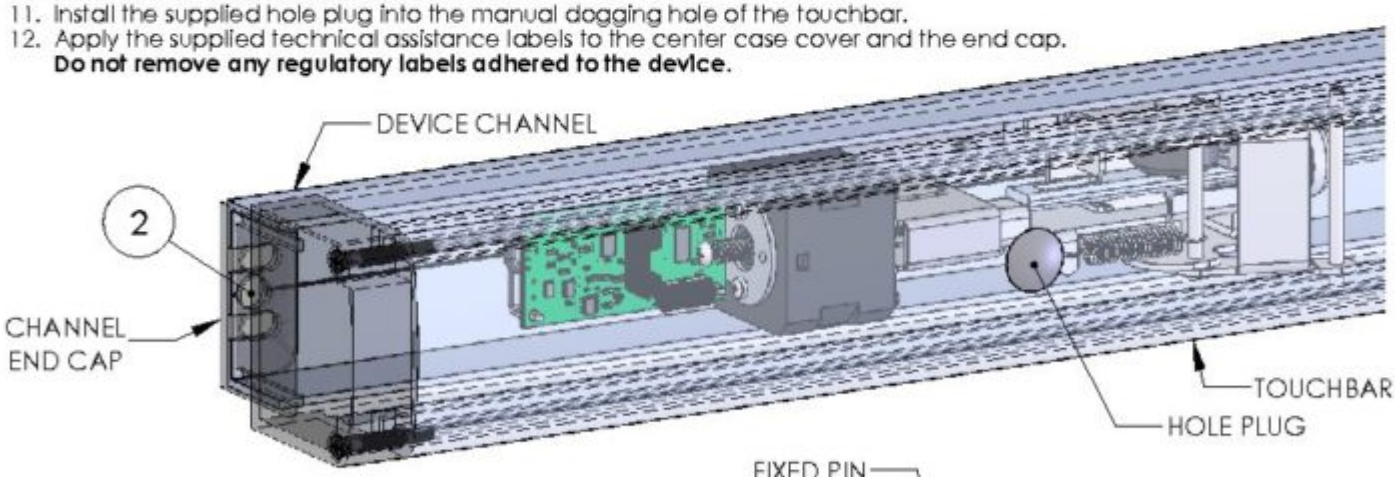

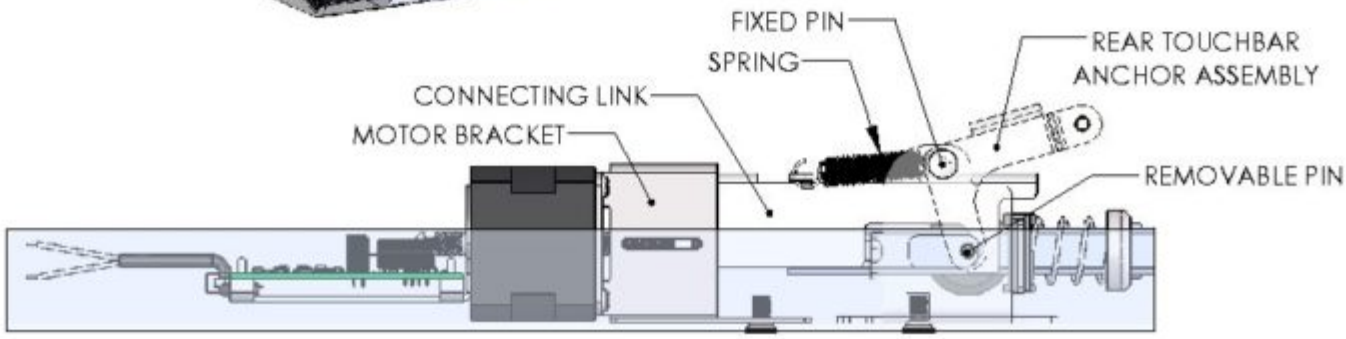

ELECTRIC EXIT DEVICE KIT INSTALLATION INSTRUCTIONS
MOTOR DRIVE ELECTRIC LATCH RETRACTION

1550K-MDO

FALCON 1690 AND 1790 SERIES
FIRST CHOICE 3600 AND 3700 SERIES

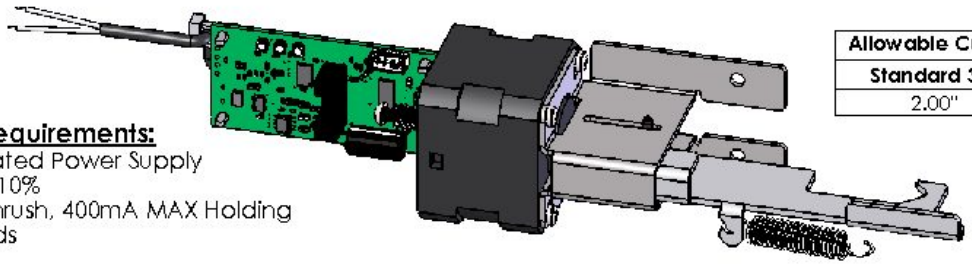

Allowable Cutoff From Device Length	
Standard 36"	Standard 48"
2.00"	2.00"

Electrical Input Requirements:
Filtered and Regulated Power Supply
Voltage: 24VDC ± 10%
Current: 1A MAX Inrush, 400mA MAX Holding
Non-polarized Leads

PROVIDES SIMULTANEOUS ELECTRIC LATCH RETRACTION AND DOGGING (TOUCHBAR DEPRESSED)

Installation:

1. Separate the touchbar from the exit device.
2. Drill a 3/8" diameter hole through the channel end cap and device channel for wire access from the power supply to the exit device.
3. Remove the manual dogging assembly from the device channel and discard, but keep the screws.
4. Remove the screws that secure the rear touchbar anchor assembly to the device channel for pin access.
5. Locate the 1550K-MDO Kit near the holes that secured the manual dogging assembly.
6. Remove the pin of the rear touchbar anchor assembly enough to position the hook of the connecting link forward of the pin, then return the pin to its original position.
7. Attach the rear touchbar anchor assembly to the device channel.
8. Attach the motor bracket to the device channel using the manual dogging assembly screws through the holes that secured the manual dogging assembly.
9. Attach the supplied spring between the connecting link and the fixed pin of the rear touchbar anchor assembly.
10. Attach the touchbar to the exit device.
11. Install the supplied hole plug into the manual dogging hole of the touchbar.
12. Apply the supplied technical assistance labels to the center case cover and the end cap. **Do not remove any regulatory labels adhered to the device.**

2-Conductor Wire Run	
Distance	Wire Gauge
70'	22
110'	20
180'	18
280'	16
450'	14
720'	12

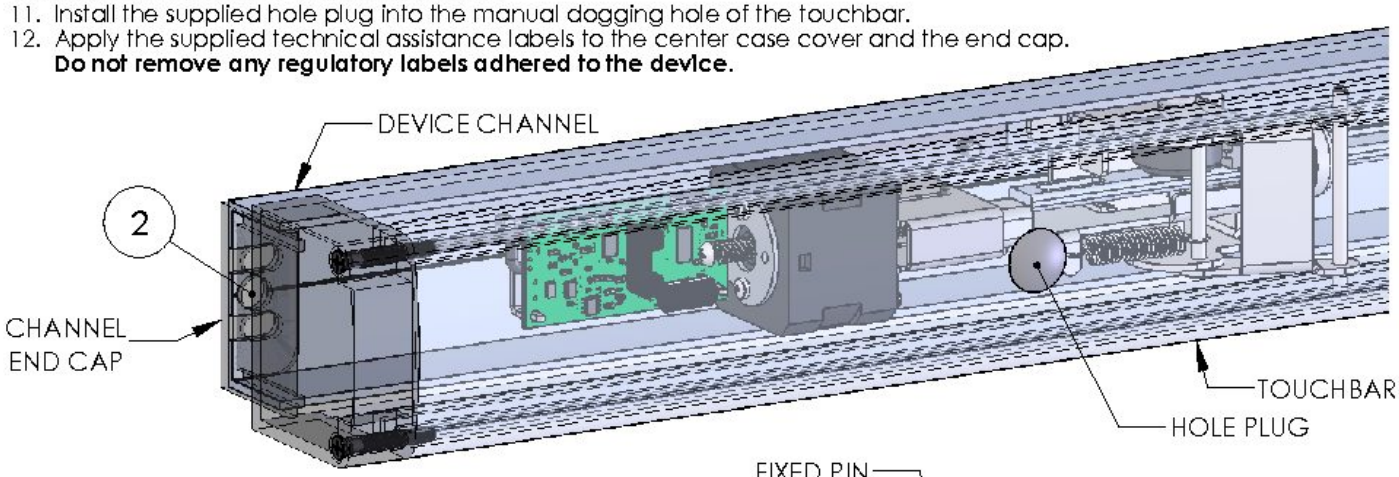

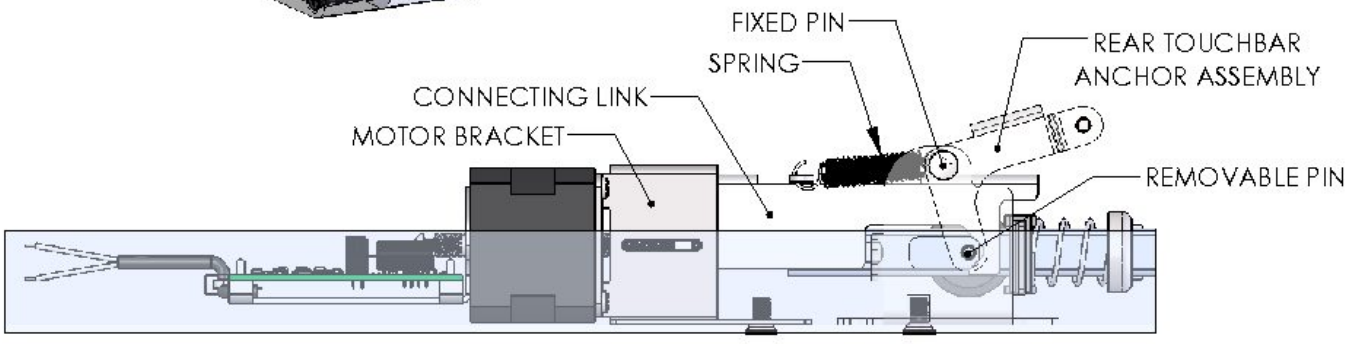

ELECTRIC EXIT DEVICE KIT INSTALLATION INSTRUCTIONS
MOTOR DRIVE ELECTRIC LATCH RETRACTION

1550K-MDO

FALCON 1690 AND 1790 SERIES
FIRST CHOICE 3600 AND 3700 SERIES

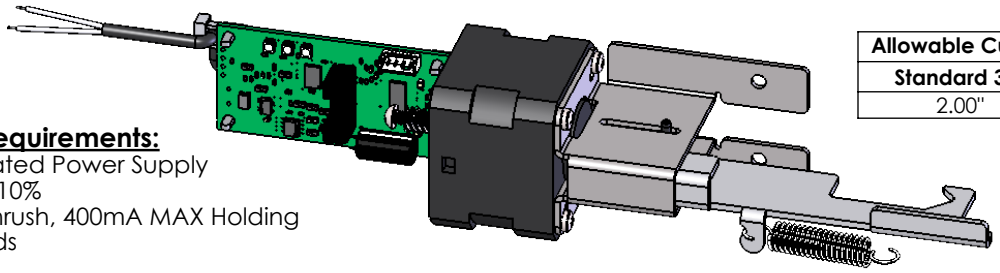

Allowable Cutoff From Device Length	
Standard 36"	**Standard 48"**
2.00"	2.00"

Electrical Input Requirements:
Filtered and Regulated Power Supply
Voltage: 24VDC ± 10%
Current: 1A MAX Inrush, 400mA MAX Holding
Non-polarized Leads

PROVIDES SIMULTANEOUS ELECTRIC LATCH RETRACTION AND DOGGING (TOUCHBAR DEPRESSED)

Installation:

1. Separate the touchbar from the exit device.
2. Drill a 3/8" diameter hole through the channel end cap and device channel for wire access from the power supply to the exit device.
3. Remove the manual dogging assembly from the device channel and discard, but keep the screws.
4. Remove the screws that secure the rear touchbar anchor assembly to the device channel for pin access.
5. Locate the 1550K-MDO Kit near the holes that secured the manual dogging assembly.
6. Remove the pin of the rear touchbar anchor assembly enough to position the hook of the connecting link forward of the pin, then return the pin to its original position.
7. Attach the rear touchbar anchor assembly to the device channel.
8. Attach the motor bracket to the device channel using the manual dogging assembly screws through the holes that secured the manual dogging assembly.
9. Attach the supplied spring between the connecting link and the fixed pin of the rear touchbar anchor assembly.
10. Attach the touchbar to the exit device.
11. Install the supplied hole plug into the manual dogging hole of the touchbar.
12. Apply the supplied technical assistance labels to the center case cover and the end cap.
    Do not remove any regulatory labels adhered to the device.

2-Conductor Wire Run	
Distance	**Wire Gauge**
70'	22
110'	20
180'	18
280'	16
450'	14
720'	12

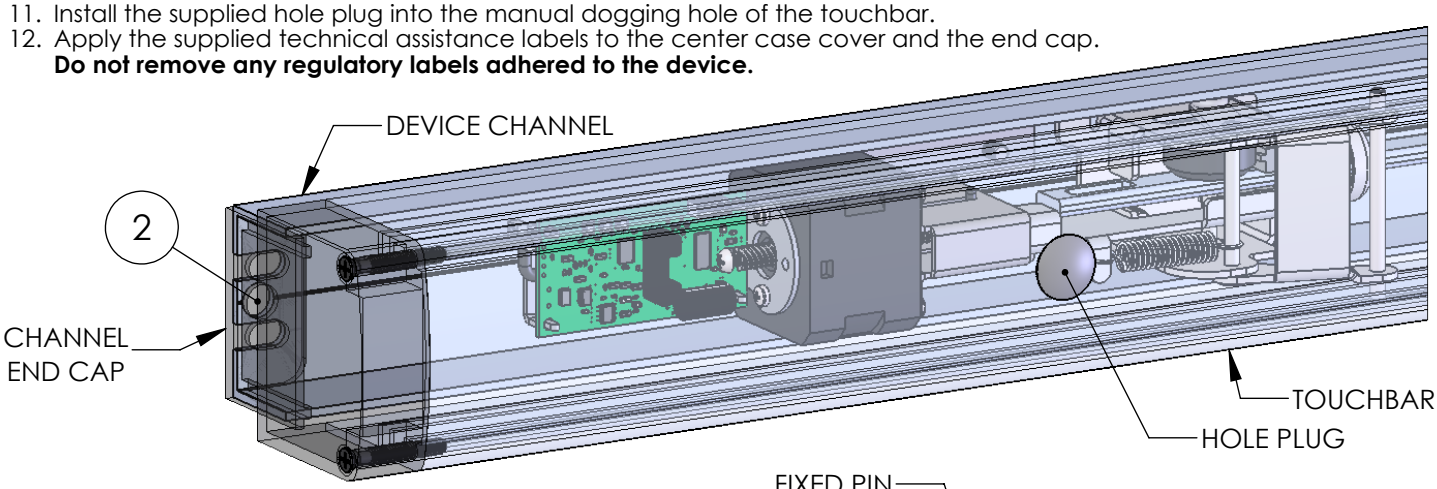

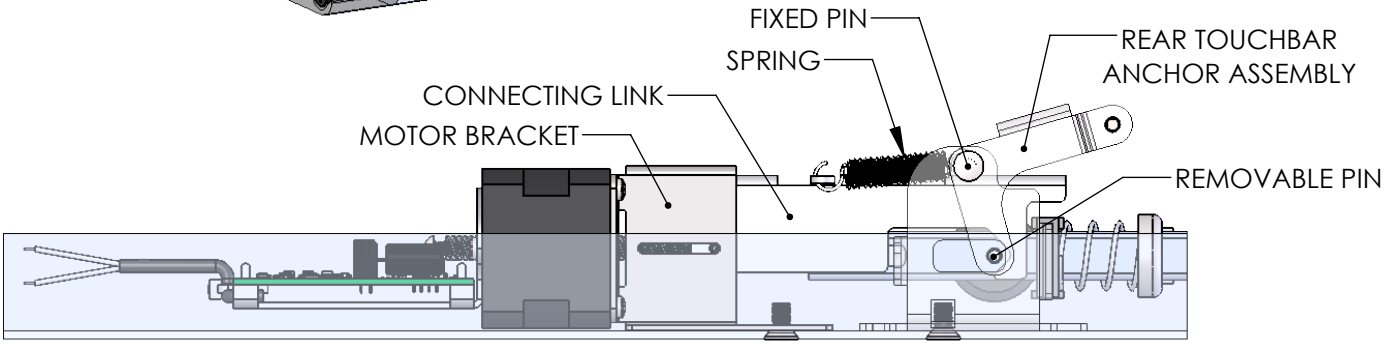

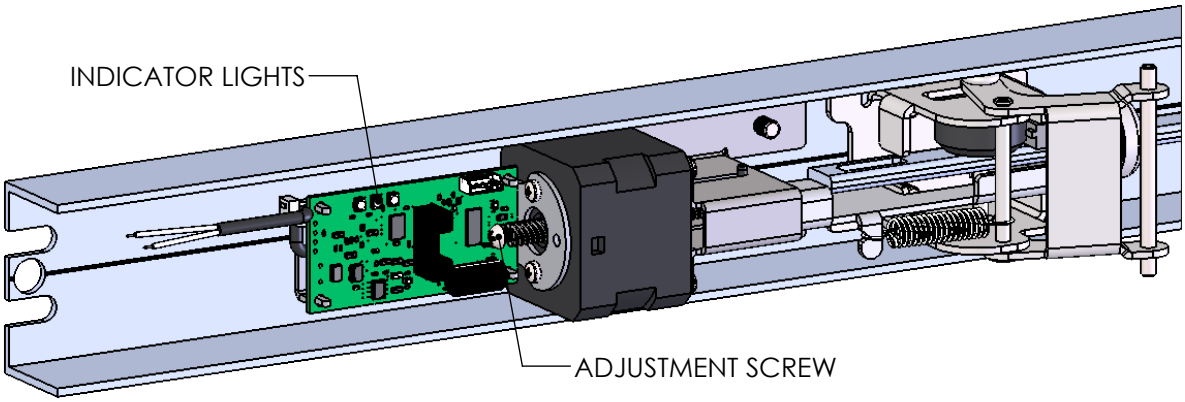

Motor Drive Electric Latch Retraction Adjustment:

1. Verify the device is properly adjusted for mechanical operation. Electric operation should not exceed the mechanical operation or there will be a high risk of damage to the device. **We suggest setting the latch retraction under electric operation at 1/16" less than the latch retraction under mechanical operation.**
2. Locate the adjustment screw in the rear of the motor assembly. Rotate the adjustment screw clockwise to increase the latch retraction or counterclockwise to decrease the latch retraction.

Onboard Indicator Light Assignments:

Maintain input power to the exit device and check the onboard indicator lights.
Remove input power before attempting a solution.

Green (Power)	Yellow (Sensor)	Red (Error)	Indication	Possible Solution
Off	Off	Off	No Power.	Connect the wiring between the power supply and the exit device.
On	On	Off	Normal Operation. The touchbar is retracted to the dogged position and dogged; the latch is retracted by default. The device is allowed 2 attempts.	
On	Off	On	Error in operation. The touchbar did not retract to the dogged position within 2 attempts.	Rotate the adjustment screw counterclockwise to decrease the latch retraction.
On	On	On	Error in operation. Without power being removed, the touchbar went from being dogged to unintentionally being extended, and then the touchbar did not retract to the dogged position within 2 attempts.	Clear the jam condition manually.
On	Blink	On	Error in operation. The touchbar did not extend from the dogged position when the power was last removed. The device will not attempt a retraction.	Clear the jam condition manually.
On	Simultaneous Blink		Error in operation. The input voltage dropped below the specification during operation.	Decrease the wire run or increase the wire gauge.
On	Alternating Blink		Error in operation. An electronics fault was detected.	An electronics replacement is required.

ELECTRIC MORTISE LOCK INSTRUCTIONS
MOTOR / SOLENOID ELECTRIC LOCKING VARIOMAG

ETL – 5x5 Mk (Power Latch)

ESM – 5x5 Mk (Motor/Check Strike)

Door Handing

Function	Handing

Function Specifications

Switch Adjustments

Note: Panel must be upgraded as the lock offers a unit in / door unlking change.



ELECTRIC MORTISE LOCK INSTRUCTIONS
MOTOR-CONTROLLED ELECTRIC LOCKING/UNLOCKING

1510 - Fail Safe (Power Lock):
Outside trim (or both outside and inside trim depending on the lock function) is locked when power is applied and unlocked when power is removed. Lockset will unlock in the event of a power failure.

1520 - Fail Secure (Power Unlock):
Outside trim (or both outside and inside trim depending on the lock function) is unlocked when power is applied and locked when power is removed. Lockset will lock in the event of a power failure.

Key Function:
The latch bolt may be momentarily retracted with a key even though the lockset is electrically locked.

Electrical Specifications:
Voltage: 12-24V AC/DC (11V - 30V)
Current: 250mA MAX Inrush, 10mA MAX Holding
Non-polarized Leads

2-Conductor Wire Run	
Distance 12V/24V	Wire Gauge
125/250	22
200/400	20
300/600	18
500/1000	16
750/1500	14
1000/2000	12

Switch Slider Settings:
Yellow: Fail Secure
Green: Fail Safe

Note: Power must be applied to the lock after a switch slider setting change.

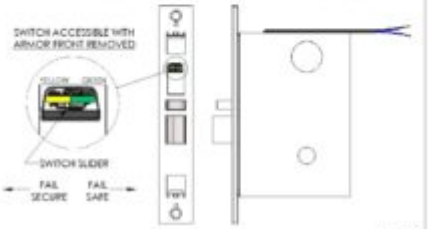

ELECTRIC MORTISE LOCK INSTRUCTIONS
MOTOR-CONTROLLED ELECTRIC LOCKING/UNLOCKING

1510 - Fail Safe (Power Lock):
Outside trim (or both outside and inside trim depending on the lock function) is locked when power is applied and unlocked when power is removed. Lockset will unlock in the event of a power failure.

1520 - Fail Secure (Power Unlock):
Outside trim (or both outside and inside trim depending on the lock function) is unlocked when power is applied and locked when power is removed. Lockset will lock in the event of a power failure.

Key Function:
The latch bolt may be momentarily retracted with a key even though the lockset is electrically locked.

Electrical Specifications:
Voltage: 12-24V AC/DC (11V - 30V)
Current: 250mA MAX Inrush, 10mA MAX Holding
Non-polarized Leads

Switch Slider Settings:
Yellow: Fail Secure
Green: Fail Safe

2-Conductor Wire Run	
Distance 12V/24V	Wire Gauge
125'/250'	22
200'/400'	20
300'/600'	18
500'/1000'	16
750'/1500'	14
1250'/2500'	12

Note: Power must be applied to the lock after a switch slider setting change.

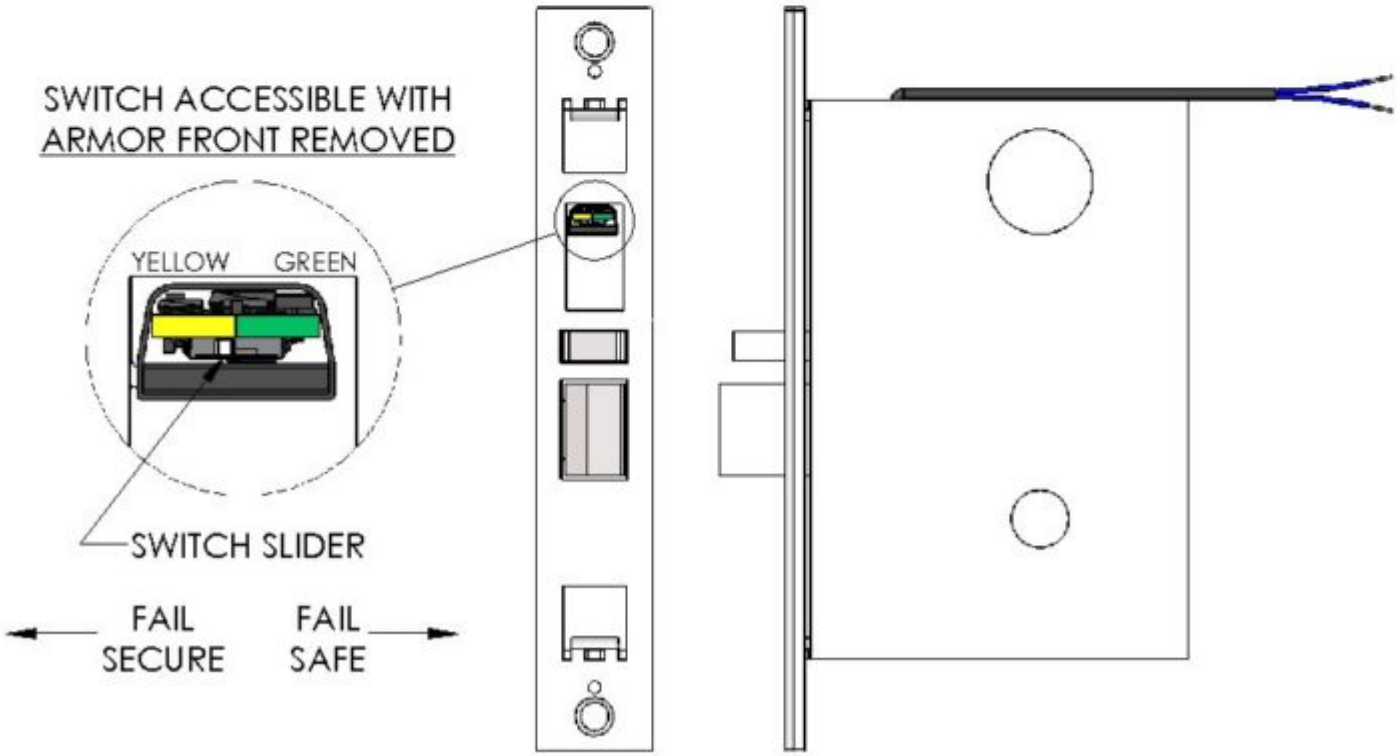

ELECTRIC MORTISE LOCK INSTRUCTIONS
MOTOR-CONTROLLED ELECTRIC LOCKING/UNLOCKING

1510 - Fail Safe (Power Lock):
Outside trim (or both outside and inside trim depending on the lock function) is locked when power is applied and unlocked when power is removed. Lockset will unlock in the event of a power failure.

1520 - Fail Secure (Power Unlock):
Outside trim (or both outside and inside trim depending on the lock function) is unlocked when power is applied and locked when power is removed. Lockset will lock in the event of a power failure.

Key Function:
The latch bolt may be momentarily retracted with a key even though the lockset is electrically locked.

Electrical Specifications:
Voltage: 12-24V AC/DC (11V - 30V)
Current: 250mA MAX Inrush, 10mA MAX Holding
Non-polarized Leads

2-Conductor Wire Run	
Distance 12V/24V	Wire Gauge
125'/250'	22
200'/400'	20
300'/600'	18
500'/1000'	16
750'/1500'	14
1250'/2500'	12

Switch Slider Settings:
Yellow: Fail Secure
Green: Fail Safe

Note: Power must be applied to the lock after a switch slider setting change.

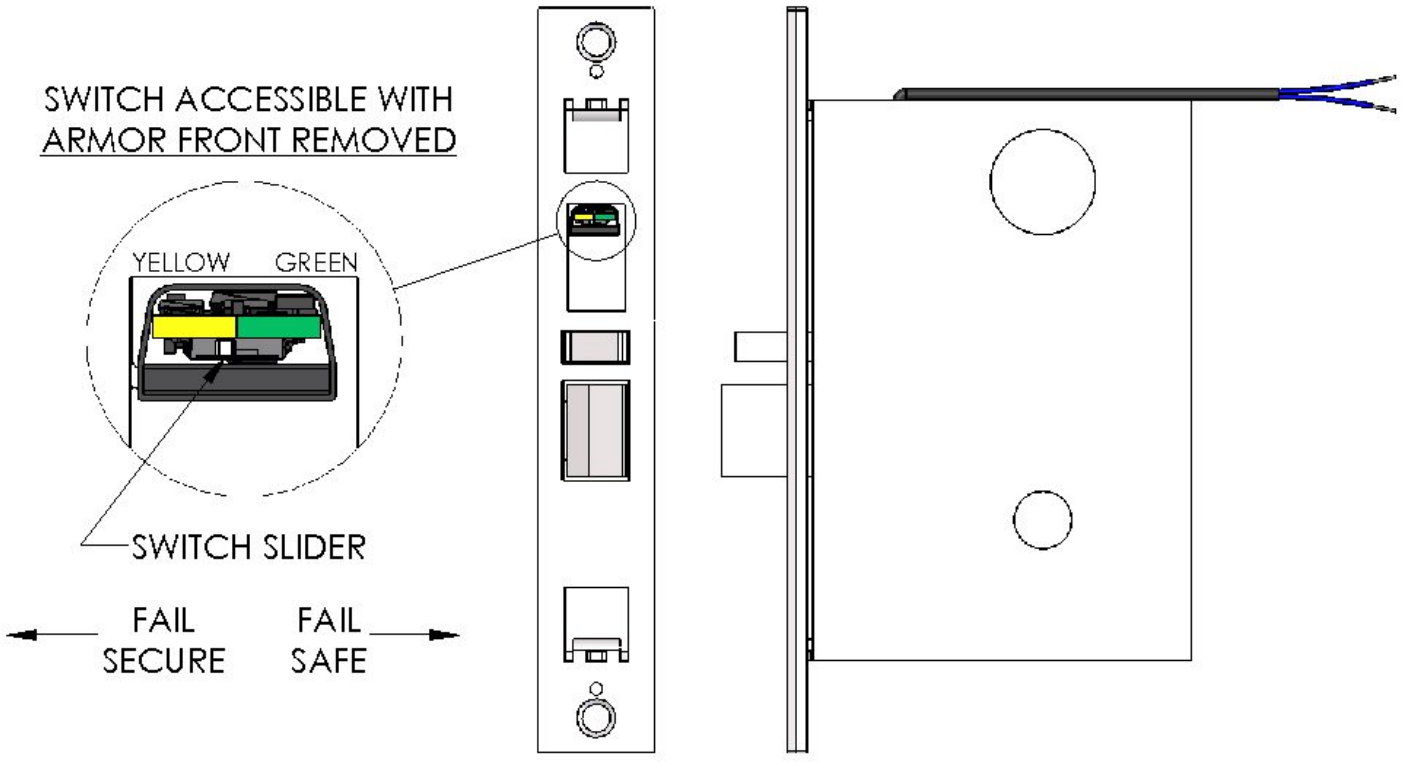

ELECTRIC MORTISE LOCK INSTRUCTIONS
MOTOR-CONTROLLED ELECTRIC LOCKING/UNLOCKING

1510 - Fail Safe (Power Lock):
Outside trim (or both outside and inside trim depending on the lock function) is locked when power is applied and unlocked when power is removed. Lockset will unlock in the event of a power failure.

1520 - Fail Secure (Power Unlock):
Outside trim (or both outside and inside trim depending on the lock function) is unlocked when power is applied and locked when power is removed. Lockset will lock in the event of a power failure.

Key Function:
The latch bolt may be momentarily retracted with a key even though the lockset is electrically locked.

Electrical Specifications:
Voltage: 12-24V AC/DC (11V - 30V)
Current: 250mA MAX Inrush, 10mA MAX Holding
Non-polarized Leads

2-Conductor Wire Run	
Distance 12V/24V	**Wire Gauge**
125'/250'	22
200'/400'	20
300'/600'	18
500'/1000'	16
750'/1500'	14
1250'/2500'	12

Switch Slider Settings:
Yellow: Fail Secure
Green: Fail Safe

Note: Power must be applied to the lock after a switch slider setting change.

