DWG NO	SH	REV

REVISIONS

ZONE	REV	FINISHES:	DATE	APPROVED
		PB,AB,BZ,10B & S		

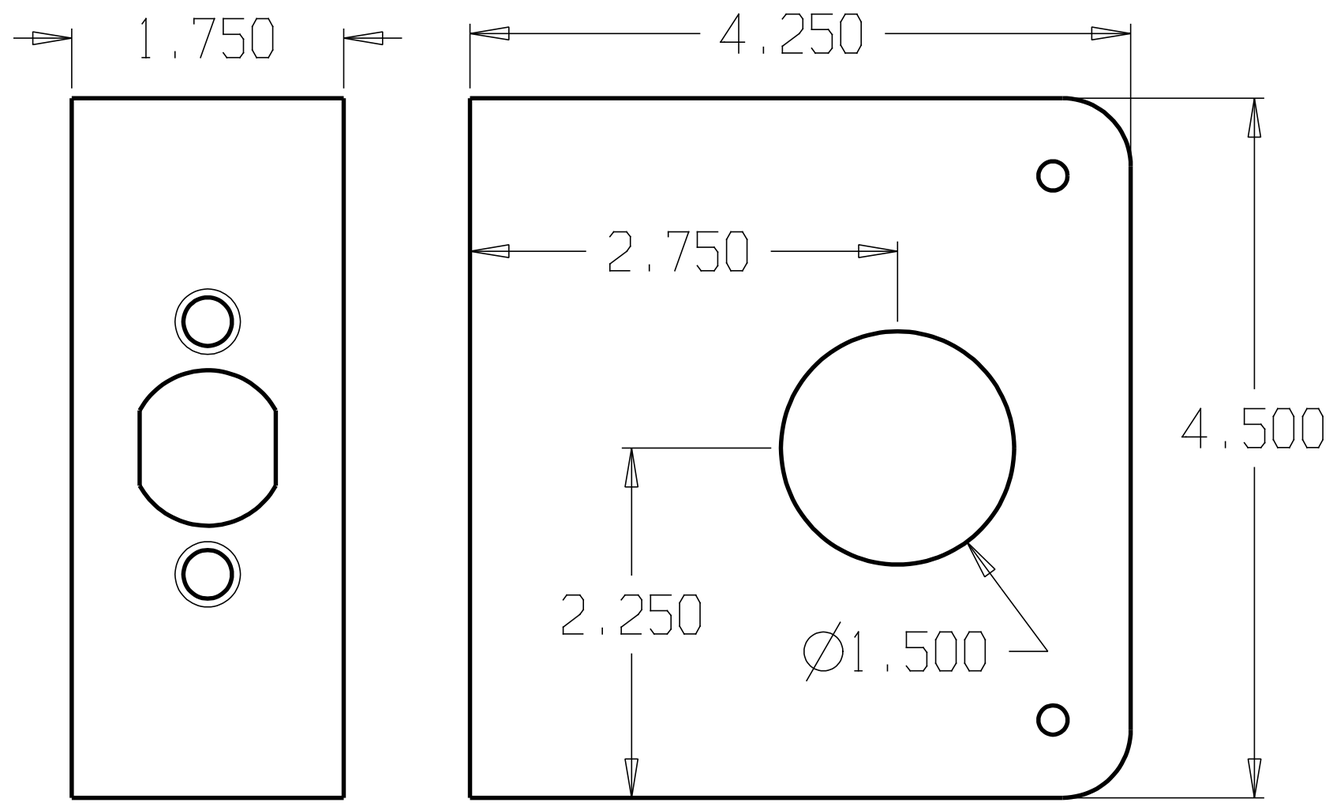

DON-JO MFG. INC.

DESIGNER		SIZE	DATE:	PART NO.	REV
		A	4/28/04	8-VF	
APPROVED		SCALE	RELEASE DATE	WEIGHT	SHEET